APOLLO G&N Specification
PS 1003733 Rev. A
Original Issue Date: 3/9/65
Release Authority: TDRR 17259
Class A Release

PROCUREMENT SPECIFICATION

FOR

ROPE MODULES B21 thru 24, B28 and B29

Record of Revisions

Date	Revision Letter	TDRR No.	Pages Revised	Approvals	
				MIT	NASA
5/18/65	A	19209	1,3,5,6,7,8,9,10,&11		

This specification consists of pages 1 to 14 inclusive.

APPROVALS	3/5/65 NASA/MSC	E C Hall 3/8/65 MIT/IL	2/4/65 2/5/65 Feb. 3 1965 RAY 2-4-65

RAY

3-3.1.6 Inhibit Test. Each and every core shall be addressed in succession. The output signal observed on the "test sense line" shall have the following characteristics. Figure 3 defines V_1 Peak and V_1 Min measurement areas.

V_1 Peak	NMT 230 mv
V_1 Min	NLT 75 mv

3-3.1.7 Dynamic Test. The contents of the Rope Module shall be compared to a programmed tape. The programmed tape shall address each core with the required input signal as defined in sections 3-3.1.2 and 3-3.1.5 and shall verify that each core contains the correct information.

3-3.1.7.1 The output signals shall have the following characteristics on Sense Lines Parity through Sign. See Figure 3.

V_1 Peak	NMT 160 mv
V_1 Min	NLT 50 mv
V_0	NMT 13 mv

3-3.2 Environmental Requirements. The module shall be operated in accordance with the requirements specified in sections 3-3.1.7 and 3-3.1.7.1 when the ambient temperatures are $0^\circ C \pm 2C^\circ$ and $70^\circ C \pm 2C^\circ$.

1003733 D

SYM	DESCRIPTION	DATE	APPROVAL
A	REVISED PER TDRR 13987	9 NOV 64	
B	REVISED PER TDRR 14342	64	
C	REVISED PER TDRR 15537		
D	REVISED PER TDRR 16879	65	

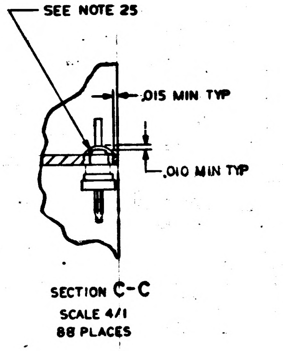

SEE NOTE 25
.015 MIN TYP
.010 MIN TYP

SECTION C-C
SCALE 4/1
88 PLACES

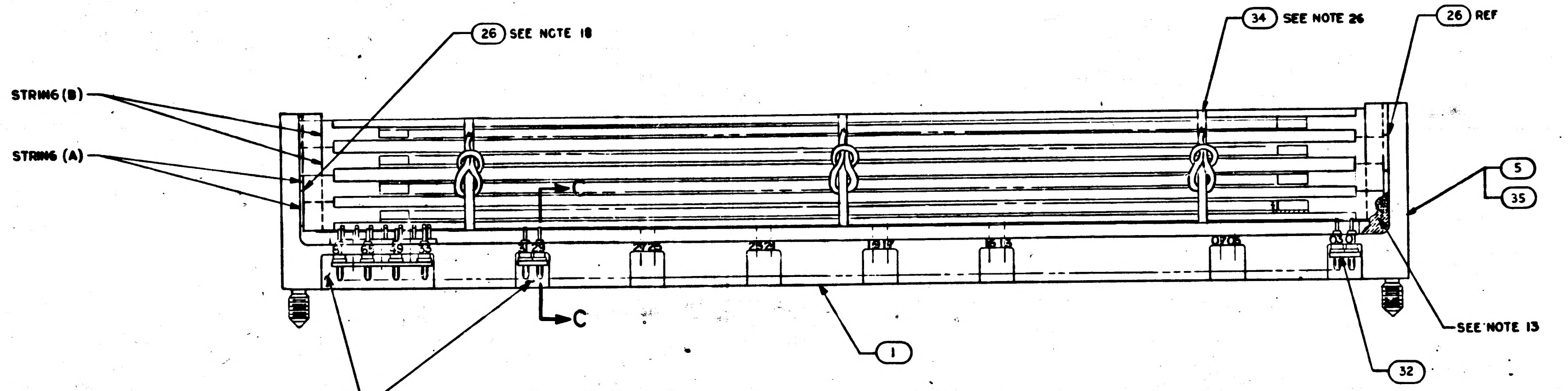

STRING (B)
STRING (A)
26 SEE NOTE 18
34 SEE NOTE 26
26 REF
5
35
C
C
1
32
SEE NOTE 13
SEE NOTE 12

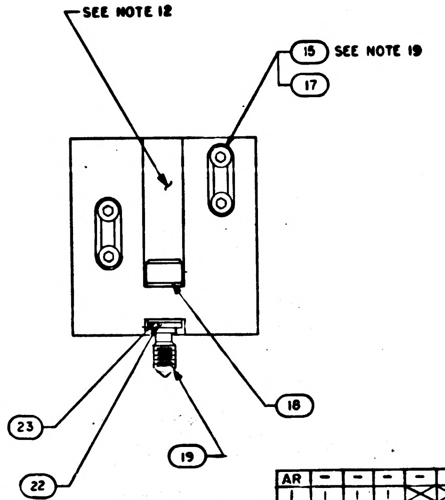

SEE NOTE 12
15 SEE NOTE 19
17
18
23
22
19

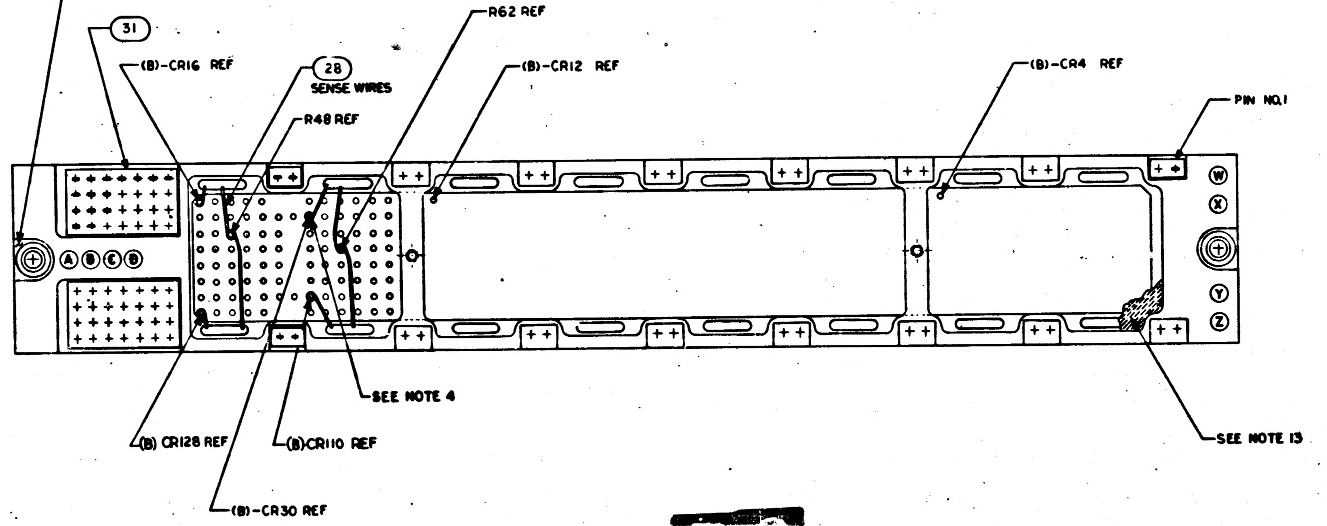

31
(B)-CR16 REF
28
SENSE WIRES
R48 REF
R62 REF
(B)-CR12 REF
(B)-CR4 REF
PIN NO.1
W
X
Y
Z
A B C D
SEE NOTE 4
SEE NOTE 13
(B) CR128 REF
(B)CR110 REF
(B)-CR30 REF

071	061	051	041	031	021	QTY 011	PART OR IDENTIFYING NO.	NOMENCLATURE OR DESCRIPTION	FIND NO.
AR	–	–	–	–	–	–	SEE NOTE 23	MODULE DECK NO. 0023	REF
1	1	1	1	╳	╳	╳	1003821-021	ROPE MEMORY MODULE SUBASSY	35
AR	AR	AR	AR	AR	AR	AR	1012507-C03	TAPE LACING	34
	~~512~~	~~512~~	~~512~~	╳	╳	╳	~~1006320~~	~~CORE, MAGNETIC~~	~~33~~
	AR			AR			SEE NOTE 23	MODULE DECK NO. 0018	REF
		AR			AR		SEE NOTE 23	MODULE DECK NO. 0020	REF
			AR			AR	SEE NOTE 23	MODULE DECK NO. 0019	REF
16	16	16	16	16	16	16	1004727	GASKET ROPE MODULE	32
2	2	2	2	2	2	2	1004726	GASKET ROPE MODULE	31
						╳	~~SEE NOTE 22~~	~~WIRE, ELECTRICAL~~	~~30~~
						╳	~~NAS-1331-24-8~~	~~WIRE, ELECTRICAL~~	~~29~~
AR	AR	AR	AR	AR	AR	AR	1006275-2	WIRE, ELECTRICAL	28
	~~2~~	~~2~~	~~2~~	~~2~~	~~2~~	~~2~~	~~1000093-2~~	~~SCREW, BUTTON HD~~	~~27~~
AR	AR	AR	AR	AR	AR	AR	1004623-2	SHIM	26
	~~AR~~	~~AR~~	~~AR~~	~~AR~~	~~AR~~	~~AR~~	~~1006776-22~~	~~SLEEVING~~	~~25~~
REF	REF	REF	REF	REF	REF	REF	1006144	SCHEMATIC	╳
	~~1~~	~~1~~	~~1~~	~~1~~	~~1~~	~~1~~	~~1004303~~	~~INSULATOR~~	~~24~~
2	2	2	2	2	2	2	1004546-3	WASHER, FLAT	23
2	2	2	2	2	2	2	MS16633-4015	RING, RETAINING, EXTERNAL "E"	22
						~~2~~	~~MS39086-100~~	~~PIN, SPRING~~	~~21~~
						~~2~~	~~1004207~~	~~SCREW, EJECTION DRIVE CYLINDER~~	~~20~~
2	2	2	2	2	2	2	1004579-1	SCREW, JACKING	19
2	2	2	2	2	2	2	1004546-1	WASHER, FLAT	18
8	8	8	8	8	8	8	1004237	WASHER, FLAT	17
						~~2~~	~~1000104-1~~	~~SCREW, FLAT HEAD~~	~~16~~
8	8	8	8	8	8	8	1006783-11	SCREW, BUTTON HEAD	15
	~~AR~~	~~AR~~	~~AR~~	~~AR~~	~~AR~~	~~AR~~	~~1006275-1~~	~~WIRE, ELECTRICAL~~	~~14~~
	~~AR~~	~~AR~~	~~AR~~	~~AR~~	~~AR~~	~~AR~~	~~1006757-1~~	~~WIRE, .010 X .020~~	~~13~~
	~~256~~	~~256~~	~~256~~	~~256~~	~~256~~	~~256~~	~~1006751~~	~~DIODE~~	~~12~~
	~~128~~	~~128~~	~~128~~	~~128~~	~~128~~	~~128~~	~~1006750-39~~	~~RESISTOR, FIXED 2K~~	~~11~~
	~~1~~	~~1~~	~~1~~	~~1~~	~~1~~	~~1~~	~~1003134~~	~~TERMINAL BOARD ASSEMBLY~~	~~10~~
	╳	╳	╳	~~512~~	~~512~~	~~512~~	~~1006298-1~~	~~CORE, MAGNETIC~~	~~9~~
						~~AR~~	~~1004117~~	~~PLUG, KEYING~~	~~8~~
						~~1~~	~~1004235-1~~	~~INSULATOR~~	~~7~~
	╳	╳	╳	~~1~~	~~1~~	~~1~~	~~1004235-3~~	~~INSULATOR~~	~~6~~
╳	╳	╳	╳	1	1	1	1003821-011	ROPE MEMORY MODULE SUB ASSY	5
	~~4~~	~~4~~	~~4~~	~~4~~	~~4~~	~~4~~	~~1004233~~	~~HOLDER, CORE~~	~~4~~
	~~1~~	~~1~~	~~1~~	~~1~~	~~1~~	~~1~~	~~1004232~~	~~HOLDER, COMPONENT~~	~~3~~
						~~1~~	~~1004238~~	~~COVER~~	~~2~~
	~~1~~	~~1~~	~~1~~	~~1~~	~~1~~	~~1~~	~~1003133~~	~~HEADER ASSEMBLY~~	~~1~~
B22	B29	B28	B21	B29	B28	B21	LIST OF MATERIALS		

1003733 D

1021103	
NEXT ASSY	USED ON
APPLICATION	

UNLESS OTHERWISE SPECIFIED
DIMENSIONS ARE IN INCHES
TOLERANCES ON
FRACTIONS ± DECIMALS ± ANGLES ±
DO NOT SCALE THIS DRAWING
MATERIAL —
HEAT TREATMENT —
FINAL FINISH —

MIT
INSTRUMENTATION LAB
CAMBRIDGE, MASS
DRAWN DATE
CHECKED
APPROVAL E.J. Burgin
APPROVAL Stephen C. [illegible] 28 Aug 64
NASA APPROVAL
MIT APPROVAL [illegible] 9/28/64

MANNED SPACECRAFT CENTER
HOUSTON, TEXAS

ROPE MEMORY MODULE ASSEMBLY

CODE IDENT NO. —
SIZE J
NASA DRAWING NO. 1003733
SCALE 2/1
WT
SHEET 1 OF 2

MASTER

F-2

1003733 SHEET 1 of 2

NOTICE — WHEN GOVERNMENT DRAWINGS, SPECIFICATIONS, OR OTHER DATA ARE USED FOR ANY PURPOSE OTHER THAN IN CONNECTION WITH A DEFINITELY RELATED GOVERNMENT PROCUREMENT OPERATION, THE UNITED STATES GOVERNMENT THEREBY INCURS NO RESPONSIBILITY NOR ANY OBLIGATION WHATSOEVER; AND THE FACT THAT THE GOVERNMENT MAY HAVE FORMULATED, FURNISHED, OR IN ANY WAY SUPPLIED THE SAID DRAWINGS, SPECIFICATIONS, OR OTHER DATA IS NOT TO BE REGARDED BY IMPLICATION OR OTHERWISE AS IN ANY MANNER LICENSING THE HOLDER OR ANY OTHER PERSON OR CORPORATION, OR CONVEYING ANY RIGHTS OR PERMISSION TO MANUFACTURE, USE, OR SELL ANY PATENTED INVENTION THAT MAY IN ANY WAY BE RELATED THERETO.

1003733

H2

D

C

B

A

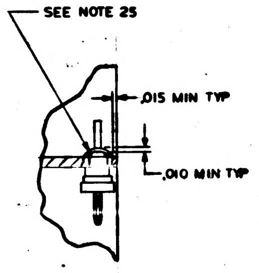

SECTION C-C
SCALE 4/1
88 PLACES

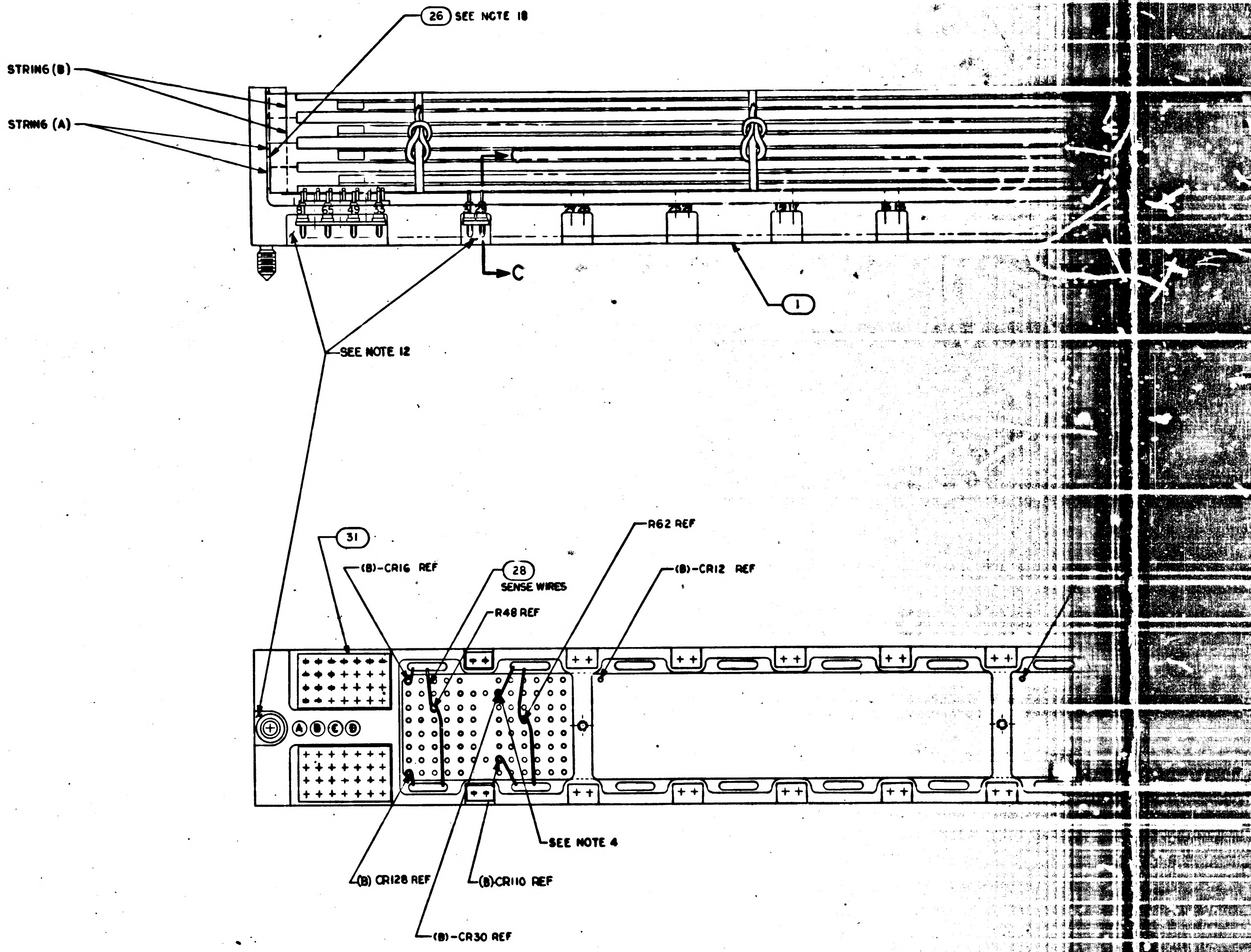

NOTES:

1. INTERPRET DRAWING IN ACCORDANCE WITH STANDARDS PRESCRIBED BY MIL-D-70327
~~2. ALL WELDED CONNECTIONS TO BE MADE PER ND 1002005 & ND 1002003~~
3. WIRE PER ND 1002029
4. ALL SOLDERING CONNECTIONS TO BE MADE PER ND 1002071 EXCEPT DO NOT TIN LEADS OF FIND NO. 28 & SOLDER WRAPS TO BE 2-4 TURNS USING FIND NO 28
~~5. BOND FIND NO. 10 TO FIND NO. 1 PER ND 1002004 TYPE I~~
~~6. BOND FIND NO. 9 OR 33 TO FIND NO. X PER ND 1002004 TYPE I~~
7. FILL KEYING HOLES AS INDICATED IN CHART WITH THERMALLY CONDUCTIVE EPOXY RESIN ND 1002183, DO NOT EVACUATE AFTER FILLING
~~8. WHITE DOT DENOTES LEAD TO BE CUT FOR FIRST LEVEL WIRING~~
~~9. BLACK DOT DENOTES LEAD TO BE CUT FOR SECOND LEVEL WIRING~~
~~10. K DENOTES CATHODE SIDE OF DIODE~~
11. AR DENOTES AS REQUIRED
12. INDICATED AREAS TO BE FREE OF ENCAPSULATING COMPOUND
13. ENCAPSULATE MODULE PER ND 1002226 INDICATED AREA ONLY
14. MARK .08/.10 HIGH PER ND 1002019 & ND 1002122, TYPE II, CLASS 2 USING WHITE MARKING INK 1006271-1
15. MARK .24/.26 HIGH PER ND 1002019 & ND 1002122, TYPE II, CLASS 1 USING WHITE MARKING INK 1006271-1
16. MARK APPROPRIATE MODULE NO. IN ACCORDANCE WITH "B" NO. AS SHOWN IN DASH NO. COL IN PARTS LIST
~~17. SELECT FIND NO. 12 NOTED "(A)" AND "(B)", EXAMPLE (A)-CR6 AND (B)-CR6, PER THE ELECTRICAL REQUIREMENTS: AT A FOWARD CURRENT OF 1.8 ma ± 2%, AND AT A FORWARD CURRENT OF 3.6 MA ± 2% THE VOLTAGE DROP ACROSS BOTH DIODES SHALL BE WITHIN [illegible] OF EACH OTHER~~
18. USE PART OF FIND NO. 26 TO ELIMINATE SPACE BETWEEN CORE HOLDERS AND INSIDE BOTH ENDS OF HEADER
19. ASSEMBLE FIND NO. 15 TO CORE HOLDERS USING MIL-S-40083 CLASS 31
~~20. WIRE PER WIRING DIAGRAM (SEE SHEET 4)~~
~~21. ENCAPSULATE MODULE PER ND 1002000 (BLACK POLYURETHANE FOAM) INDICATED AREAS ONLY~~
~~22. [illegible] TYPE S, 24 AWG AND TINNED~~
23. SENSE LINE WIRING PER MODULE DECK NO. DESIGNATED
24. MARK APPLICABLE PROGRAM NUMBER ONLY. DASH NUMBER NOT REQUIRED
25. SEAL TERMINALS & INSULATORS TO HEADER USING 1011541
26. WRAP & TIE AROUND WIRED ASSY APPROXIMATELY AS SHOWN WITH ONE WRAP OF FIND NO. 34

E1

1003733	SHEET 1 of 2

1003733 D

SYM	DESCRIPTION	DATE	APPROVAL
A	REVISED PER TDRR 13987	64	
B	REVISED PER TDRR 14343	64	
C	REVISED PER TDRR 15537	10	
D	REVIS_D PER TDRR 16879	65	

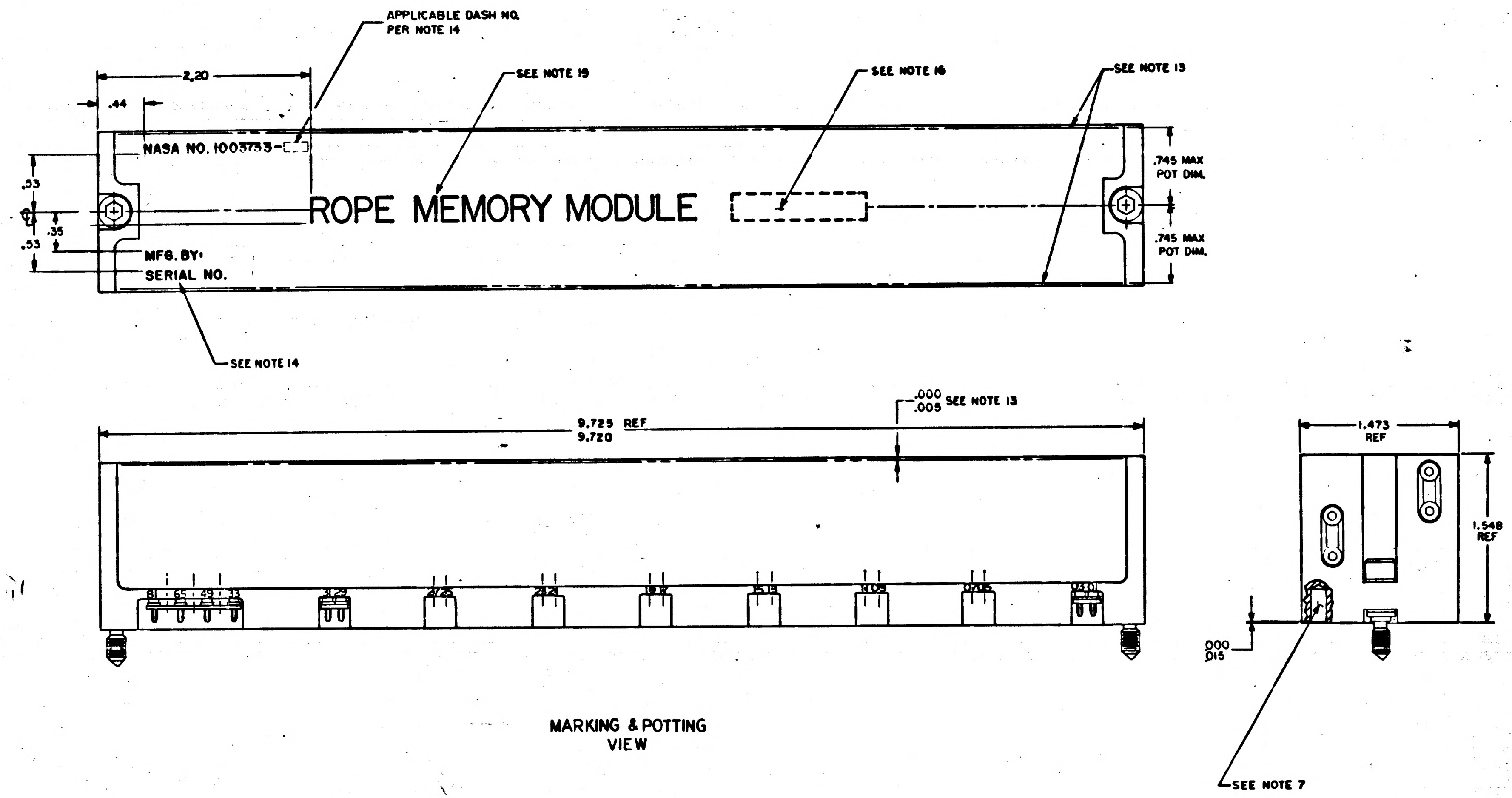
APPLICABLE DASH NO. PER NOTE 14
2.20
.44
SEE NOTE 19
SEE NOTE 16
SEE NOTE 13
NASA NO. 1003733-
ROPE MEMORY MODULE
MFG. BY:
SERIAL NO.
.53
.35
.53
.745 MAX POT DIM.
.745 MAX POT DIM.
SEE NOTE 14
9.725 REF
9.720
.000 .005 SEE NOTE 13
81 65 49 33
31 29
27 25
23 21
19 17
15 13
11 09
07 05
03 01
1.473 REF
1.548 REF
.000 .015
SEE NOTE 7

MARKING & POTTING VIEW

KEYING INFORMATION							
MODULE NO.	KEYING HOLES						
B21	A	B	Y	Z			
B28	B	D	Y	W			
B29	C	D	W	X			

F-2

MASTER

QTY REQD	PART OR IDENTIFYING NO.	NOMENCLATURE OR DESCRIPTION	FIND NO.

LIST OF MATERIALS

NEXT ASSY | USED ON
APPLICATION

UNLESS OTHERWISE SPECIFIED DIMENSIONS ARE IN INCHES
TOLERANCES ON
FRACTIONS ± DECIMALS ±.02 ANGLES ±
DO NOT SCALE THIS DRAWING
MATERIAL —
HEAT TREATMENT —
FINAL FINISH —

MIT INSTRUMENTATION LAB Cambridge, Mass.
DWG. NO. CONTRACT
DRAWN DATE
CHECKED
APPROVAL
APPROVAL
NASA APPROVAL
MIT APPROVAL

MANNED SPACECRAFT CENTER
HOUSTON, TEXAS

ROPE MEMORY MODULE
ASSEMBLY

CODE IDENT NO. — SIZE J NASA DRAWING NO. 1003733
SCALE 2/1 WT SHEET 2 OF 2

1003733 D

24

1003733 SHEET 2 of 2

NOTICE — WHEN GOVERNMENT DRAWINGS, SPECIFICATIONS, OR OTHER DATA ARE USED FOR ANY PURPOSE OTHER THAN IN CONNECTION WITH A DEFINITELY RELATED GOVERNMENT PROCUREMENT OPERATION, THE UNITED STATES GOVERNMENT THEREBY INCURS NO RESPONSIBILITY NOR ANY OBLIGATION WHATSOEVER; AND THE FACT THAT THE GOVERNMENT MAY HAVE FORMULATED, FURNISHED, OR IN ANY WAY SUPPLIED THE SAID DRAWINGS, SPECIFICATIONS OR OTHER DATA IS NOT TO BE REGARDED BY IMPLICATION OR OTHERWISE AS IN ANY MANNER LICENSING THE HOLDER OR ANY OTHER PERSON OR CORPORATION, OR CONVEYING ANY RIGHTS OR PERMISSION TO MANUFACTURE, USE, OR SELL ANY PATENTED INVENTION THAT MAY IN ANY WAY BE RELATED THERETO

1003733

1-2

D

C

B

A

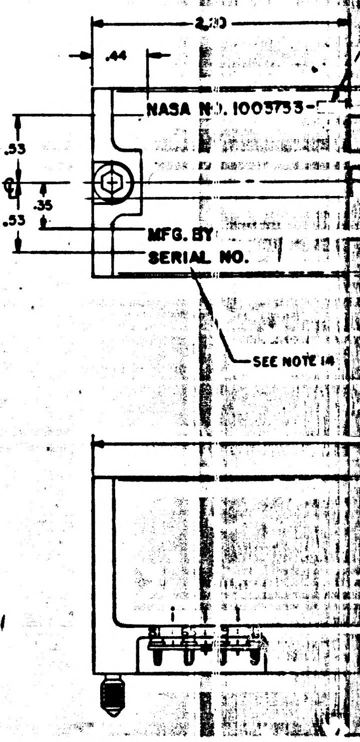

K YING INFOR			
MODUL NO.		K	
B2		A	B
B2		B	D
B2		C	D

F-1

B.H.

1003733 E

SYM	DESCRIPTION	DATE	APPROVAL
A	REVISED PER TDRR 13987	3 NOV 64	
B	REVISED PER TDRR 14342	64	
C	REVISED PER TDRR 15537		
D	REVISED PER TDRR 16879	65	
E	REVISED PER TDRR 17264	3/17/65	

REVISIONS 13/2P

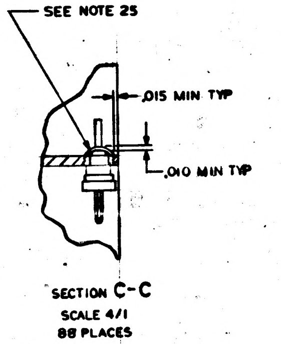

SEE NOTE 25
.015 MIN TYP
.010 MIN TYP

SECTION C-C
SCALE 4/1
88 PLACES

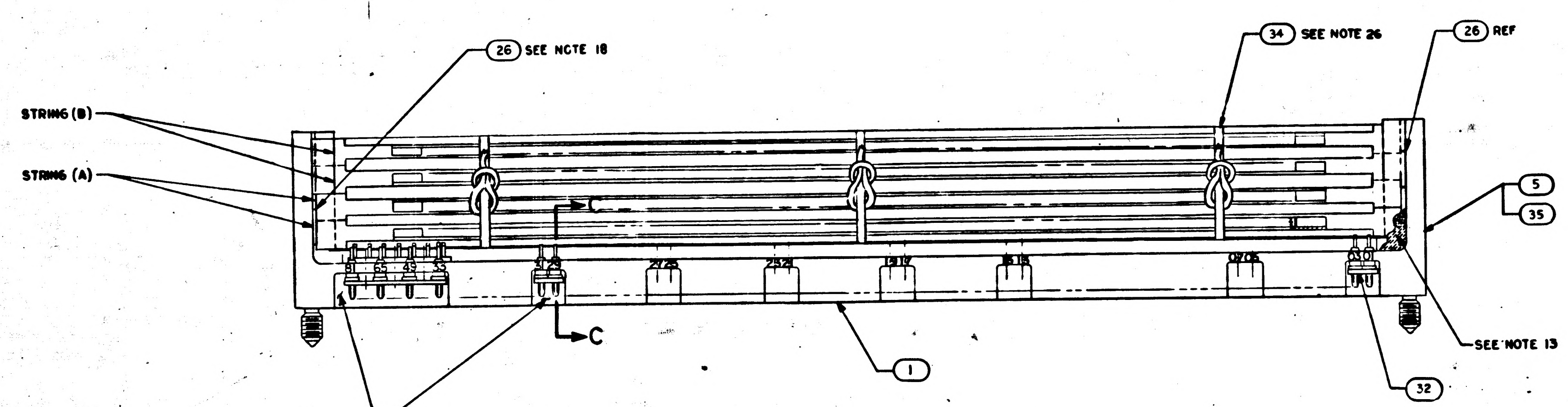

26 SEE NOTE 18
34 SEE NOTE 26
26 REF
STRING (B)
STRING (A)
5
35
C
1
32
SEE NOTE 13
SEE NOTE 12

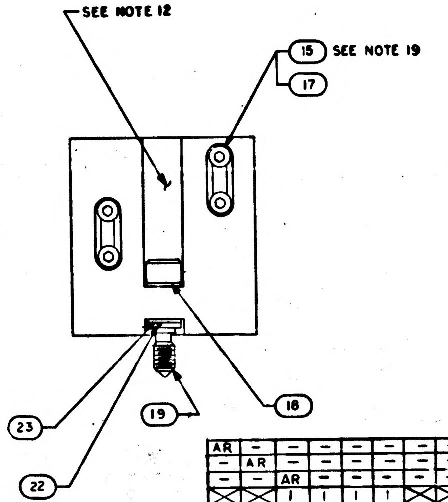

SEE NOTE 12
15 SEE NOTE 19
17
18
19
23
22

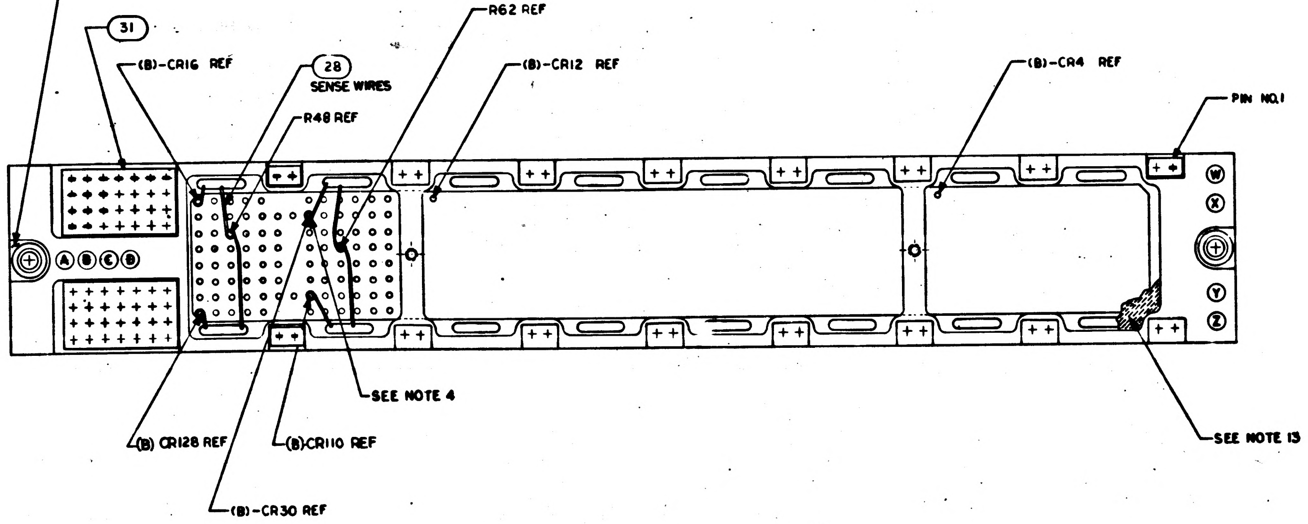

31
(B)-CR16 REF
28
SENSE WIRES
R48 REF
R62 REF
(B)-CR12 REF
(B)-CR4 REF
PIN NO.1
W
X
Y
Z
A B C D
SEE NOTE 4
(B) CR128 REF
(B)CR110 REF
(B)-CR30 REF
SEE NOTE 13

091	081	071	061	051	041	031	021	QTY 011	PART OR IDENTIFYING NO.	NOMENCLATURE OR DESCRIPTION	FIND NO.
AR	—	—	—	—	—	—	—	—	SEE NOTE 23	MODULE DECK NO. 0022	REF
—	AR	—	—	—	—	—	—	—	SEE NOTE 23	MODULE DECK NO. 0021	REF
—	—	AR	—	—	—	—	—	—	SEE NOTE 23	MODULE DECK NO. 0023	REF
☒	☒	1	1	1	1	☒	☒	☒	1003821-021	ROPE MEMORY MODULE SUBASSY	35
AR	AR	AR	AR	AR	AR	AR	AR	AR	1012507-003	TAPE LACING	34
			~~512~~	~~512~~	~~512~~	☒	☒	☒	~~1006320~~	~~CORE, MAGNETIC~~	~~33~~
—	—	—	AR	—	—	AR	—	—	SEE NOTE 23	MODULE DECK NO. 0018	REF
—	—	—	—	AR	—	—	AR	—	SEE NOTE 23	MODULE DECK NO. 0020	REF
—	—	—	—	—	AR	—	—	AR	SEE NOTE 23	MODULE DECK NO. 0019	REF
16	16	16	16	16	16	16	16	16	1004727	GASKET ROPE MODULE	32
2	2	2	2	2	2	2	2	2	1004726	GASKET ROPE MODULE	31
								☒	~~SEE NOTE 22~~	~~WIRE, ELECTRICAL~~	~~30~~
								☒	~~MAS-1391-24-8~~	~~WIRE, ELECTRICAL~~	~~29~~
AR	AR	AR	AR	AR	AR	AR	AR	AR	1006275-2	WIRE, ELECTRICAL	28
			~~2~~	~~2~~	~~2~~	~~2~~	~~2~~	~~2~~	~~1000093-2~~	~~SCREW, BUTTON HD~~	~~27~~
AR	AR	AR	AR	AR	AR	AR	AR	AR	1004623-2	SHIM	26
			~~AR~~	~~AR~~	~~AR~~	~~AR~~	~~AR~~	~~AR~~	~~1006776-22~~	~~SLEEVING~~	~~25~~
REF	REF	REF	REF	REF	REF	REF	REF	REF	1006144	SCHEMATIC	☒
			~~1~~	~~1~~	~~1~~	~~1~~	~~1~~	~~1~~	~~1004603~~	~~INSULATOR~~	~~24~~
2	2	2	2	2	2	2	2	2	1004546-3	WASHER, FLAT	23
2	2	2	2	2	2	2	2	2	MS16633-4015	RING, RETAINING, EXTERNAL "E"	22
								~~2~~	~~MS39086-100~~	~~PIN, SPRING~~	~~21~~
								~~2~~	~~1004207~~	~~SCREW, EJECTION DRIVE CYLINDER~~	~~20~~
2	2	2	2	2	2	2	2	2	1004579-1	SCREW, JACKING	19
2	2	2	2	2	2	2	2	2	1004546-1	WASHER, FLAT	18
8	8	8	8	8	8	8	8	8	1004237	WASHER, FLAT	17
								~~2~~	~~1000104-1~~	~~SCREW, FLAT HEAD~~	~~16~~
8	8	8	8	8	8	8	8	8	1006783-11	SCREW, BUTTON HEAD	15
			~~AR~~	~~AR~~	~~AR~~	~~AR~~	~~AR~~	~~AR~~	~~1006275-1~~	~~WIRE, ELECTRICAL~~	~~14~~
			~~AR~~	~~AR~~	~~AR~~	~~AR~~	~~AR~~	~~AR~~	~~1006757-1~~	~~WIRE, .010 X .020~~	~~13~~
			~~256~~	~~256~~	~~256~~	~~256~~	~~256~~	~~256~~	~~1006751~~	~~DIODE~~	~~12~~
			~~128~~	~~128~~	~~128~~	~~128~~	~~128~~	~~128~~	~~1006750-39~~	~~RESISTOR, FIXED 2K~~	~~11~~
			~~1~~	~~1~~	~~1~~	~~1~~	~~1~~	~~1~~	~~1003134~~	~~TERMINAL BOARD ASSEMBLY~~	~~10~~
			☒	☒	☒	~~512~~	~~512~~	~~512~~	~~1006298-1~~	~~CORE, MAGNETIC~~	~~9~~
								~~AR~~	~~1004117~~	~~PLUG, KEYING~~	~~8~~
								~~1~~	~~1004235-1~~	~~INSULATOR~~	~~7~~
			☒	☒	☒	~~1~~	~~1~~	~~1~~	~~1004235-3~~	~~INSULATOR~~	~~6~~
1	1	☒	☒	☒	☒	1	1	1	1003821-011	ROPE MEMORY MODULE SUB ASSY	5
			~~4~~	~~4~~	~~4~~	~~4~~	~~4~~	~~4~~	~~1004233~~	~~HOLDER, CORE~~	~~4~~
			~~1~~	~~1~~	~~1~~	~~1~~	~~1~~	~~1~~	~~1004232~~	~~HOLDER, COMPONENT~~	~~3~~
								~~1~~	~~1004236~~	~~COVER~~	~~2~~
			~~1~~	~~1~~	~~1~~	~~1~~	~~1~~	~~1~~	~~1003133~~	~~HEADER ASSEMBLY~~	~~1~~
B29	B28	B22	B29	B28	B21	B29	B28	B21	LIST OF MATERIALS		

1021103	
NEXT ASSY	USED ON
APPLICATION	

UNLESS OTHERWISE SPECIFIED
DIMENSIONS ARE IN INCHES
TOLERANCES ON
FRACTIONS ± DECIMALS ± ANGLES ±
DO NOT SCALE THIS DRAWING
MATERIAL —//—
HEAT TREATMENT —//—
FINAL FINISH —//—

MIT
INSTRUMENTATION LAB
CAMBRIDGE, MASS.
DRAWN: DATE:
CHECKED:
APPROVAL: E. J. Hall
APPROVAL:
NASA APPROVAL:
MIT APPROVAL:

MANNED SPACECRAFT CENTER
HOUSTON, TEXAS

ROPE MEMORY MODULE ASSEMBLY

CODE IDENT NO. —
SIZE J
NASA DRAWING NO. 1003733
SCALE 2/1
WT
SHEET 1 OF 2

MASTER

1003733 SHEET 1 OF 2 E

1003733 E

NOTICE — WHEN GOVERNMENT DRAWINGS, SPECIFICATIONS, OR OTHER DATA ARE USED FOR ANY PURPOSE OTHER THAN IN CONNECTION WITH A DEFINITELY RELATED GOVERNMENT PROCUREMENT OPERATION, THE UNITED STATES GOVERNMENT THEREBY INCURS NO RESPONSIBILITY NOR ANY OBLIGATION WHATSOEVER; AND THE FACT THAT THE GOVERNMENT MAY HAVE FORMULATED, FURNISHED, OR IN ANY WAY SUPPLIED THE SAID DRAWINGS, SPECIFICATIONS, OR OTHER DATA IS NOT TO BE REGARDED BY IMPLICATION OR OTHERWISE AS IN ANY MANNER LICENSING THE HOLDER OR ANY OTHER PERSON OR CORPORATION, OR CONVEYING ANY RIGHTS OR PERMISSION TO MANUFACTURE, USE, OR SELL ANY PATENTED INVENTION THAT MAY IN ANY WAY BE RELATED THERETO.

1003733

H2

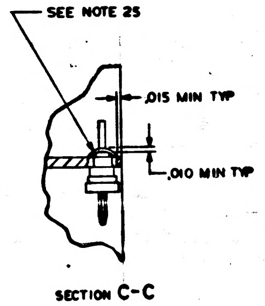

SECTION C-C
SCALE 4/1
88 PLACES

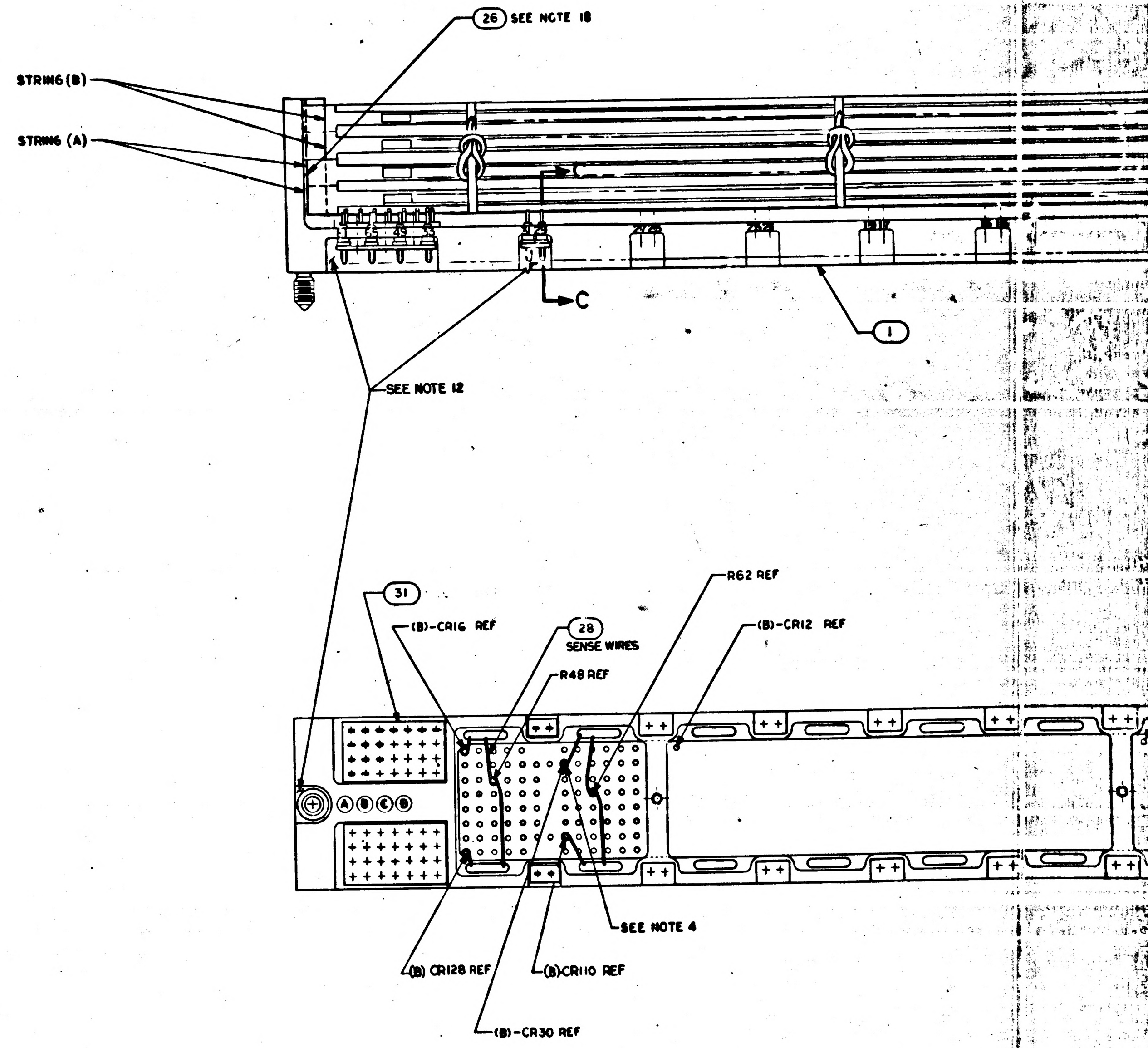

NOTES:

1. INTERPRET DRAWING IN ACCORDANCE WITH STANDARDS PRESCRIBED BY MIL-D-70327
2. ~~ALL WELDED CONNECTIONS TO BE MADE PER ND 1002005 & ND 1002003~~
3. WIRE PER ND 1002029
4. ALL SOLDERING CONNECTIONS TO BE MADE PER ND 1002071 EXCEPT DO NOT TIN LEADS OF FIND NO. 28 & SOLDER WRAPS TO BE 2-4 TURNS USING FIND NO 28
5. ~~BOND FIND NO. 10 TO FIND NO. 1 PER ND 1002004 TYPE I~~
6. ~~BOND FIND NO. [illegible] TO FIND NO. [illegible] PER ND 1002004 TYPE I~~
7. FILL KEYING HOLES AS INDICATED IN CHART WITH THERMALLY CONDUCTIVE EPOXY RESIN ND 1002183. DO NOT EVACUATE AFTER FILLING
8. ~~WHITE DOT DENOTES LEAD TO BE CUT FOR FIRST LEVEL WIRING~~
9. ~~BLACK DOT DENOTES LEAD TO BE CUT FOR SECOND LEVEL WIRING~~
10. ~~X DENOTES CATHODE SIDE OF DIODE~~
11. AR DENOTES AS REQUIRED
12. INDICATED AREAS TO BE FREE OF ENCAPSULATING COMPOUND
13. ENCAPSULATE MODULE PER ND 1002226 INDICATED AREA ONLY
14. MARK .08/.10 HIGH PER ND 1002019 & ND 1002122, TYPE II, CLASS 2 USING WHITE MARKING INK 1006271-1
15. MARK .24/.26 HIGH PER ND 1002019 & ND 1002122, TYPE II, CLASS 1 USING WHITE MARKING INK 1006271-1
16. MARK APPROPRIATE MODULE NO. IN ACCORDANCE WITH "B" NO. AS SHOWN IN DASH NO. COL IN PARTS LIST
17. ~~SELECT FIND NO. 12 NOTED "(A)" AND "(B)", EXAMPLE (A)-CR6 AND (B)-CR6, PER THE ELECTRICAL REQUIREMENTS: AT A FOWARD CURRENT OF 1.8 ma ± 2%, AND AT A FORWARD CURRENT OF 3.6 MA ± 2% THE VOLTAGE DROP ACROSS BOTH DIODES SHALL BE WITHIN [illegible] OF EACH OTHER~~
18. USE PART OF FIND NO. 26 TO ELIMINATE SPACE BETWEEN CORE HOLDERS AND INSIDE BOTH ENDS OF HEADER
19. ASSEMBLE FIND NO. 15 TO CORE HOLDERS USING MIL-S-40083 CLASS 31
20. ~~WIRE PER WIRING DIAGRAM (SEE SHEET 4)~~
21. ~~ENCAPSULATE MODULE PER ND 1002002 (BLACK POLYURETHANE FOAM) INDICATED AREAS ONLY~~
22. ~~[illegible] TYPE 3, 24 AWG AND TINNED~~
23. SENSE LINE WIRING PER MODULE DECK NO. DESIGNATED
24. MARK APPLICABLE PROGRAM NUMBER ONLY. DASH NUMBER NOT REQUIRED
25. SEAL TERMINALS & INSULATORS TO HEADER USING 1011541
26. WRAP & TIE AROUND WIRED ASSY APPROXIMATELY AS SHOWN WITH ONE WRAP OF FIND NO. 34

1003733 E

SYM	DESCRIPTION	DATE	APPROVAL
	REVISIONS 13125		
A	REVISED PER TDRR 13907	64	[illegible]
B	REVISED PER TDRR 14343	64	[illegible]
C	REVISED PER TDRR 15537	65	[illegible]
D	REVISED PER TDRR 16879	65	[illegible]
E	REVISED PER TDRR 17264	9/11/65	[illegible]

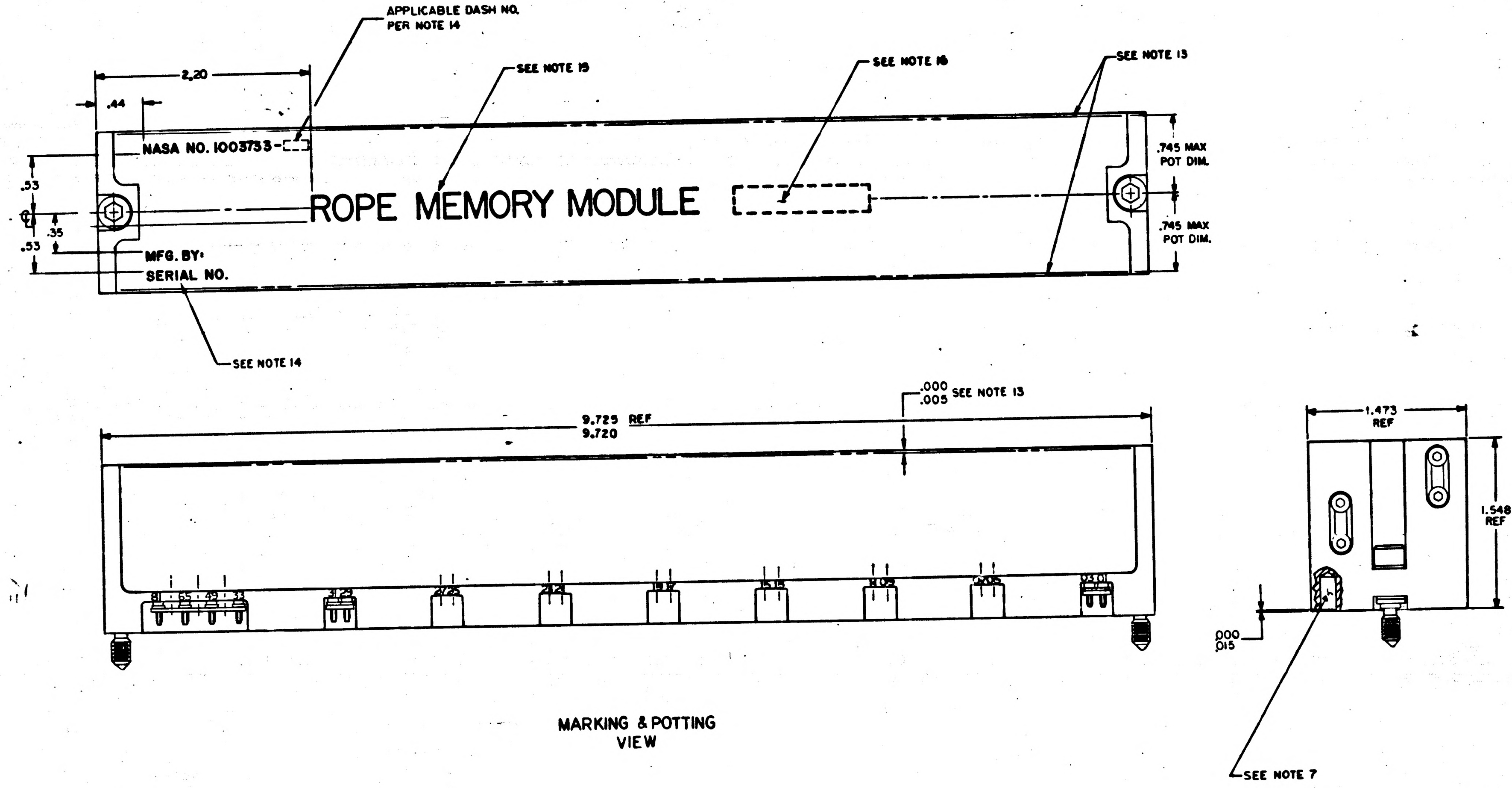
APPLICABLE DASH NO. PER NOTE 14
SEE NOTE 15
SEE NOTE 16
SEE NOTE 13
2.20
.44
NASA NO. 1003733-
ROPE MEMORY MODULE
MFG. BY:
SERIAL NO.
.53
.35
.53
.745 MAX POT DIM.
.745 MAX POT DIM.
SEE NOTE 14
9.725 REF
9.720
.000
.005 SEE NOTE 13
1.473 REF
1.548 REF
.000
.015
SEE NOTE 7

MARKING & POTTING VIEW

KEYING INFORMATION							
MODULE NO.	KEYING HOLES						
B21	A	B	Y	Z			
B28	B	D	Y	W			
B29	C	D	W	X			

QTY REQD	PART OR IDENTIFYING NO.	NOMENCLATURE OR DESCRIPTION	FIND NO.
LIST OF MATERIALS			

NEXT ASSY	USED ON
APPLICATION	

UNLESS OTHERWISE SPECIFIED
DIMENSIONS ARE IN INCHES
TOLERANCES ON
FRACTIONS ± DECIMALS ±.02 ANGLES ±
DO NOT SCALE THIS DRAWING
MATERIAL —
HEAT TREATMENT —
FINAL FINISH —

MIT
INSTRUMENTATION LAB
CAMBRIDGE, MASS
DRAWN DATE
CHECKED
APPROVAL E. J. [illegible] 9/23/64
APPROVAL [illegible] 23 Sept 64
NASA APPROVAL [illegible]
MIT APPROVAL [illegible]

MANNED SPACECRAFT CENTER
HOUSTON, TEXAS

ROPE MEMORY MODULE
ASSEMBLY

CODE IDENT NO. —
SIZE J
NASA DRAWING NO. 1003733
SCALE 2/1
WT
SHEET 2 OF 2

MASTER

1003733 E

1003733 SHEET 2 OF 2 E

NOTICE — WHEN GOVERNMENT DRAWINGS, SPECIFICATIONS, OR OTHER DATA ARE USED FOR ANY PURPOSE OTHER THAN IN CONNECTION WITH A DEFINITELY RELATED GOVERNMENT PROCUREMENT OPERATION, THE UNITED STATES GOVERNMENT THEREBY INCURS NO RESPONSIBILITY NOR ANY OBLIGATION WHATSOEVER; AND THE FACT THAT THE GOVERNMENT MAY HAVE FORMULATED, FURNISHED, OR IN ANY WAY SUPPLIED THE SAID DRAWINGS, SPECIFICATIONS, OR OTHER DATA IS NOT TO BE REGARDED BY IMPLICATION OR OTHERWISE AS IN ANY MANNER LICENSING THE HOLDER OR ANY OTHER PERSON OR CORPORATION, OR CONVEYING ANY RIGHTS OR PERMISSION TO MANUFACTURE, USE, OR SELL ANY PATENTED INVENTION THAT MAY IN ANY WAY BE RELATED THERETO.

1003733

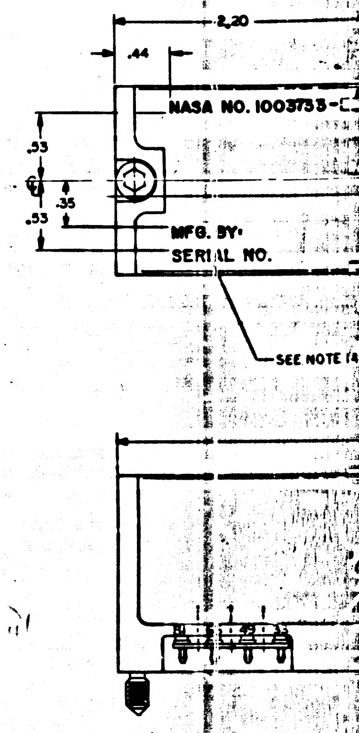

KEYING INFO

MODULE NO.		
B21	A	B
B28	B	D
B29	C	D

1003733 SHEET 2 of 2 E

REVISIONS 13/24			
SYM	DESCRIPTION	DATE	APPROVAL
A	REVISED PER TDRR 13987	9 NOV 64	
B	REVISED PER TDRR 14343	64	
C	REVISED PER TDRR 15537		
D	REVISED PER TDRR 16879	65	
E	REVISED PER TDRR 17264	3/11/65	
F	REVISED PER TDRR 18040		

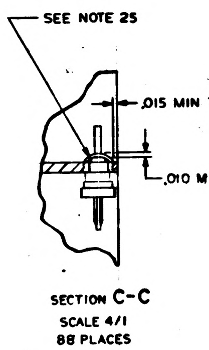
SEE NOTE 25
.015 MIN TYP
.010 MIN TYP

SECTION C-C
SCALE 4/1
88 PLACES

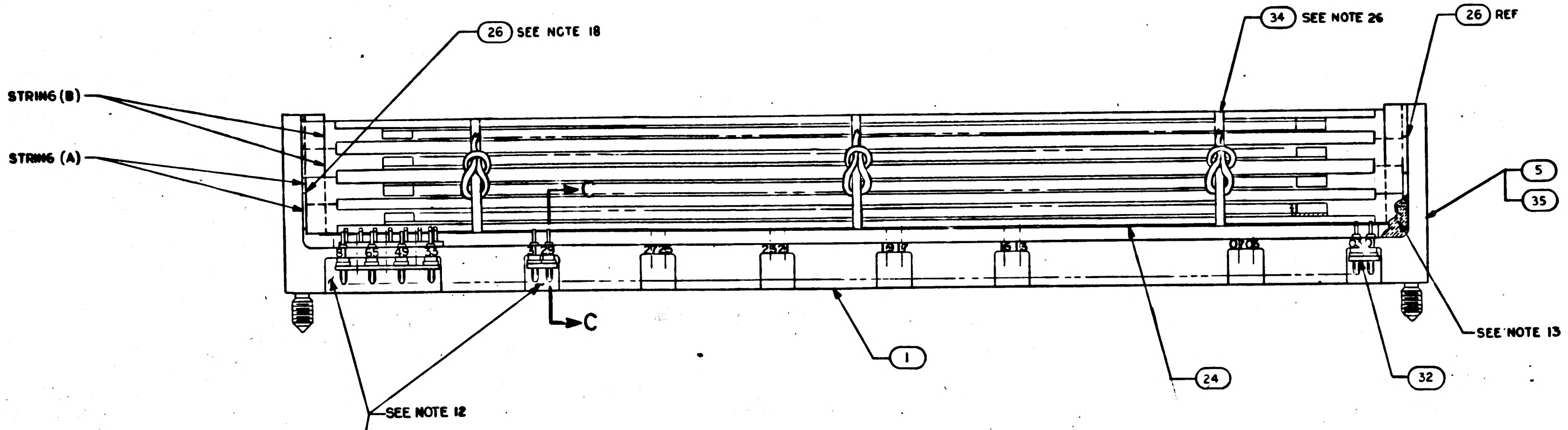
STRING (B)
STRING (A)
26 SEE NOTE 18
34 SEE NOTE 26
26 REF
5
35
C
C
1
24
32
SEE NOTE 13
SEE NOTE 12

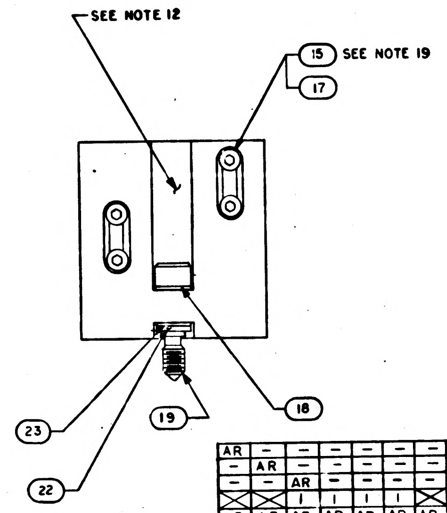
SEE NOTE 12
15 SEE NOTE 19
17
18
19
23
22

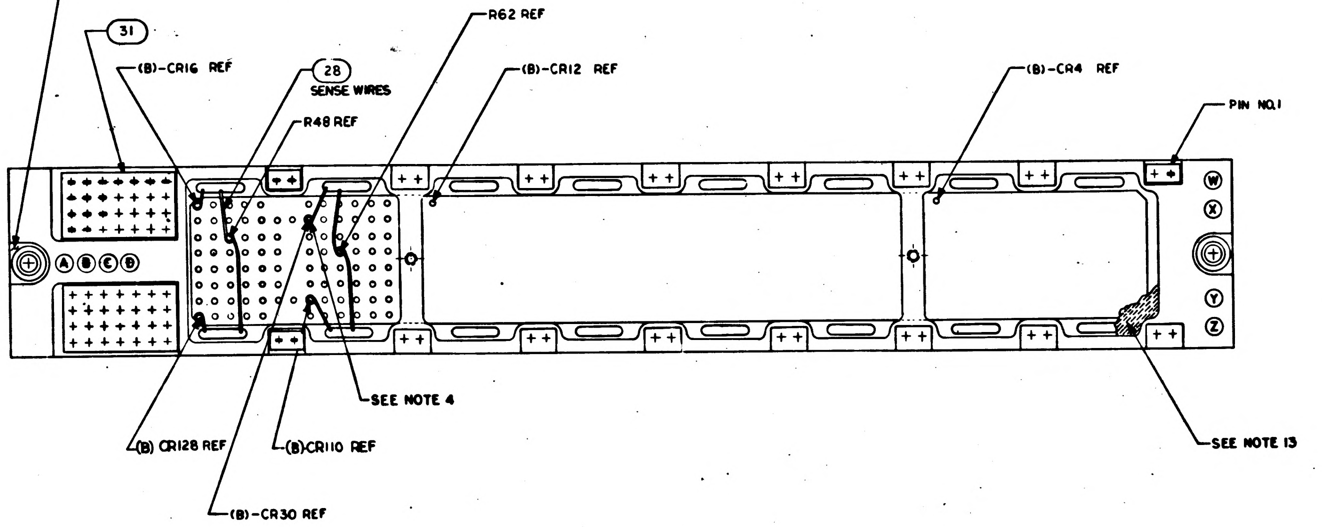
31
(B)-CR16 REF
28
SENSE WIRES
R48 REF
R62 REF
(B)-CR12 REF
(B)-CR4 REF
PIN NO.1
W
X
Y
Z
A B C D
SEE NOTE 4
(B) CR128 REF
(B)CR110 REF
(B)-CR30 REF
SEE NOTE 13

091	081	071	061	051	041	031	021	QTY 011	PART OR IDENTIFYING NO.	NOMENCLATURE OR DESCRIPTION	FIND NO.
AR	—	—	—	—	—	—	—	—	SEE NOTE 23	MODULE DECK NO. 0022	REF
—	AR	—	—	—	—	—	—	—	SEE NOTE 23	MODULE DECK NO. 0021	REF
—	—	AR	—	—	—	—	—	—	SEE NOTE 23	MODULE DECK NO. 0023	REF
X	X	1	1	1	1	X	X	X	1003821-021	ROPE MEMORY MODULE SUBASSY	35
AR	AR	AR	AR	AR	AR	AR	AR	AR	1012507-003	TAPE LACING	34
			~~512~~	~~512~~	~~512~~	X	X	X	~~1006320~~	~~CORE, MAGNETIC~~	~~33~~
—	—	—	AR	—	—	AR	—	—	SEE NOTE 23	MODULE DECK NO. 0018	REF
—	—	—	—	AR	—	—	AR	—	SEE NOTE 23	MODULE DECK NO. 0020	REF
—	—	—	—	—	AR	—	—	AR	SEE NOTE 23	MODULE DECK NO. 0019	REF
16	16	16	16	16	16	16	16	16	1004727	GASKET ROPE MODULE	32
2	2	2	2	2	2	2	2	2	1004726	GASKET ROPE MODULE	31
								X	~~SEE NOTE 22~~	~~WIRE, ELECTRICAL~~	~~30~~
								X	~~MAS×1391-24-9~~	~~WIRE, ELECTRICAL~~	~~29~~
AR	AR	AR	AR	AR	AR	AR	AR	AR	1006275-2	WIRE, ELECTRICAL	28
			~~2~~	~~2~~	~~2~~	~~2~~	~~2~~	~~2~~	~~1000093-2~~	~~SCREW, BUTTON HD~~	~~27~~
AR	AR	AR	AR	AR	AR	AR	AR	AR	1004623-2	SHIM	26
			~~AR~~	~~AR~~	~~AR~~	~~AR~~	~~AR~~	~~AR~~	~~1006776-22~~	~~SLEEVING~~	~~25~~
REF	REF	REF	REF	REF	REF	REF	REF	REF	1006144	SCHEMATIC	X
1	1	1	1	1	1	1	1	1	1004603	INSULATOR	24
2	2	2	2	2	2	2	2	2	1004546-3	WASHER, FLAT	23
2	2	2	2	2	2	2	2	2	MS16633-4015	RING, RETAINING, EXTERNAL "E"	22
								~~2~~	~~MS39086-100~~	~~PIN, SPRING~~	~~21~~
								~~2~~	~~1004207~~	~~SCREW, EJECTION DRIVE CYLINDER~~	~~20~~
2	2	2	2	2	2	2	2	2	1004579-1	SCREW, JACKING	19
2	2	2	2	2	2	2	2	2	1004546-1	WASHER, FLAT	18
8	8	8	8	8	8	8	8	8	1004237	WASHER, FLAT	17
								~~2~~	~~1000104-1~~	~~SCREW, FLAT HEAD~~	~~16~~
8	8	8	8	8	8	8	8	8	1006783-11	SCREW, BUTTON HEAD	15
			~~AR~~	~~AR~~	~~AR~~	~~AR~~	~~AR~~	~~AR~~	~~1006275-1~~	~~WIRE, ELECTRICAL~~	~~14~~
			~~AR~~	~~AR~~	~~AR~~	~~AR~~	~~AR~~	~~AR~~	~~1006757-1~~	~~WIRE, .010 X .020~~	~~13~~
			~~256~~	~~256~~	~~256~~	~~256~~	~~256~~	~~256~~	~~1006751~~	~~DIODE~~	~~12~~
			~~128~~	~~128~~	~~128~~	~~128~~	~~128~~	~~128~~	~~1006750-39~~	~~RESISTOR, FIXED 2K~~	~~11~~
			~~1~~	~~1~~	~~1~~	~~1~~	~~1~~	~~1~~	~~1003134~~	~~TERMINAL BOARD ASSEMBLY~~	~~10~~
			X	X	X	~~512~~	~~512~~	~~512~~	~~1006298-1~~	~~CORE, MAGNETIC~~	~~9~~
								~~AR~~	~~1004117~~	~~PLUG, KEYING~~	~~8~~
								~~1~~	~~1004235-1~~	~~INSULATOR~~	~~7~~
			X	X	X	~~1~~	~~1~~	~~1~~	~~1004235-3~~	~~INSULATION~~	~~6~~
1	1	X	X	X	X	1	1	1	1003821-011	ROPE MEMORY MODULE SUB ASSY	5
			~~4~~	~~4~~	~~4~~	~~4~~	~~4~~	~~4~~	~~1004233~~	~~HOLDER, CORE~~	~~4~~
			~~1~~	~~1~~	~~1~~	~~1~~	~~1~~	~~1~~	~~1004232~~	~~HOLDER, COMPONENT~~	~~3~~
								~~1~~	~~1004236~~	~~COVER~~	~~2~~
			~~1~~	~~1~~	~~1~~	~~1~~	~~1~~	~~1~~	~~1003133~~	~~HEADER ASSEMBLY~~	~~1~~
B29	B28	B22	B29	B28	B21	B29	B28	B21	LIST OF MATERIALS		

1003733 F

1021103	
NEXT ASSY	USED ON
APPLICATION	

UNLESS OTHERWISE SPECIFIED
DIMENSIONS ARE IN INCHES
TOLERANCES ON
FRACTIONS ± DECIMALS ± ANGLES ±
DO NOT SCALE THIS DRAWING
MATERIAL —//—
HEAT TREATMENT —//—
FINAL FINISH —//—

MIT
INSTRUMENTATION LAB
CAMBRIDGE, MASS
DRAWN DATE
CHECKED
APPROVAL E. J. [illegible]
APPROVAL Eldon C Hall 28 Aug 64
NASA APPROVAL [illegible]
MIT APPROVAL [illegible] 8/28/64

MANNED SPACECRAFT CENTER
HOUSTON, TEXAS

ROPE MEMORY MODULE ASSEMBLY

CODE IDENT NO. 80230
SIZE J
NASA DRAWING NO. 1003733
SCALE 2/1
WT
SHEET 1 OF 2

MASTER

1003733	F	SHEET 1 of 2

NOTICE — WHEN GOVERNMENT DRAWINGS, SPECIFICATIONS, OR OTHER DATA ARE USED FOR ANY PURPOSE OTHER THAN IN CONNECTION WITH A DEFINITELY RELATED GOVERNMENT PROCUREMENT OPERATION, THE UNITED STATES GOVERNMENT THEREBY INCURS NO RESPONSIBILITY NOR ANY OBLIGATION WHATSOEVER; AND THE FACT THAT THE GOVERNMENT MAY HAVE FORMULATED, FURNISHED, OR IN ANY WAY SUPPLIED THE SAID DRAWINGS, SPECIFICATIONS, OR OTHER DATA IS NOT TO BE REGARDED BY IMPLICATION OR OTHERWISE AS IN ANY MANNER LICENSING THE HOLDER OR ANY OTHER PERSON OR CORPORATION, OR CONVEYING ANY RIGHTS OR PERMISSION TO MANUFACTURE, USE, OR SELL ANY PATENTED INVENTION THAT MAY IN ANY WAY BE RELATED THERETO.

1003733

H2

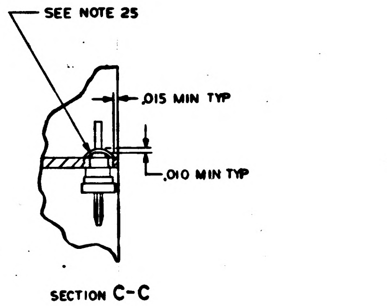

SECTION C-C
SCALE 4/1
88 PLACES

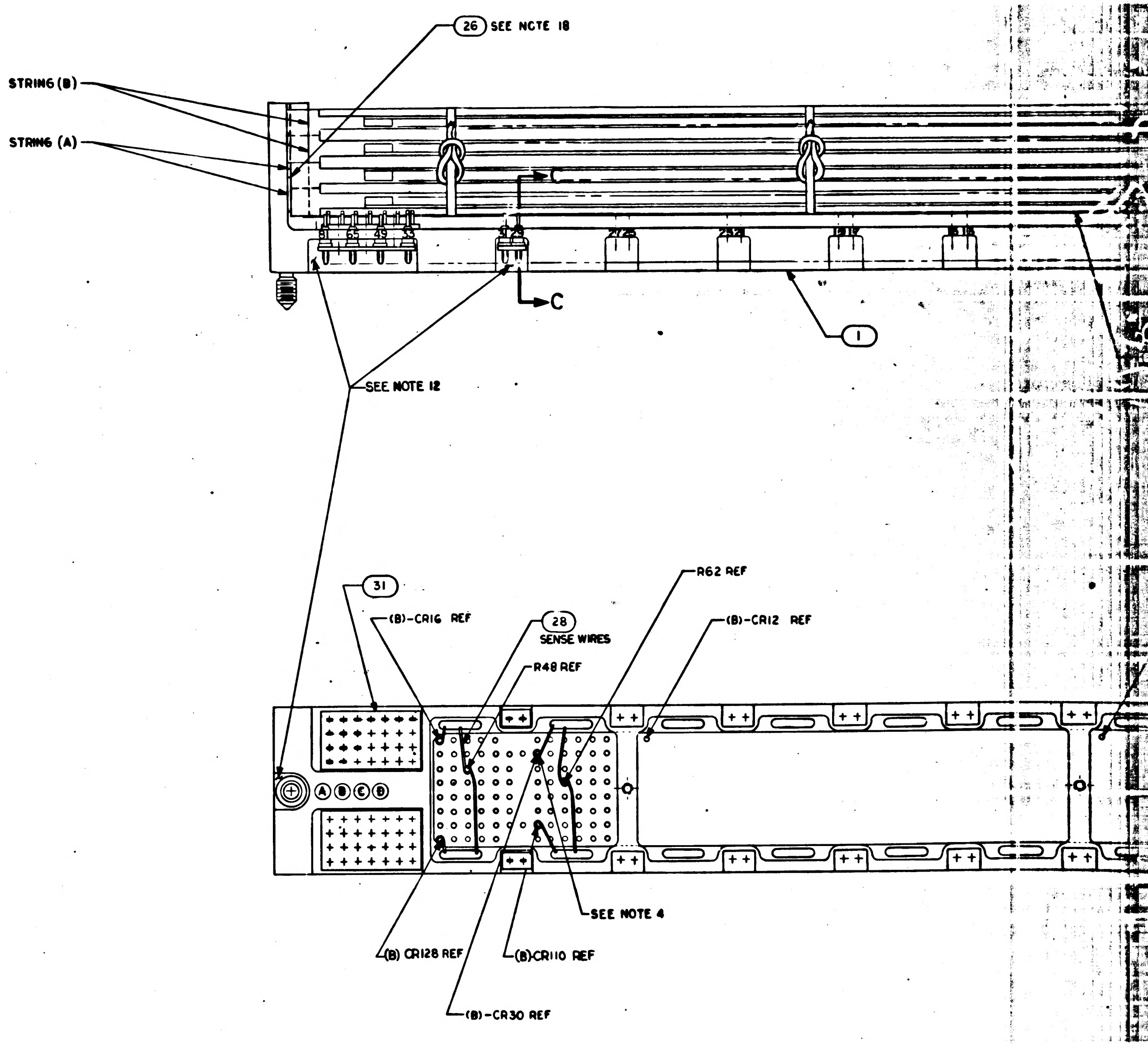

NOTES:

1. INTERPRET DRAWING IN ACCORDANCE WITH STANDARDS PRESCRIBED BY MIL-D-70327
~~2. ALL WELDED CONNECTIONS TO BE MADE PER ND 1002005 & ND 1002003~~
3. WIRE PER ND 1002029
4. ALL SOLDERING CONNECTIONS TO BE MADE PER ND 1002071 EXCEPT DO NOT TIN LEADS OF FIND NO. 28 & SOLDER WRAPS TO BE 2-4 TURNS USING FIND NO 28
~~5. BOND FIND NO. 10 TO FIND NO. 1 PER ND 1002004 TYPE I~~
~~6. BOND FIND NO. 9 OR 33 TO FIND NO. 2 PER ND 1002004 TYPE I~~
~~7. FILL KEYING HOLES AS INDICATED IN CHART WITH THERMALLY CONDUCTIVE EPOXY RESIN ND1002183 DO NOT EVACUATE AFTER FILLING~~
~~8. WHITE DOT DENOTES LEAD TO BE CUT FOR FIRST LEVEL WIRING~~
~~9. BLACK DOT DENOTES LEAD TO BE CUT FOR SECOND LEVEL WIRING~~
~~10. K DENOTES CATHODE SIDE OF DIODE~~
11. AR DENOTES AS REQUIRED
12. INDICATED AREAS TO BE FREE OF ENCAPSULATING COMPOUND
13. ENCAPSULATE MODULE PER ND 1002226 INDICATED AREA ONLY
14. MARK .08/.10 HIGH PER ND 1002019 & ND 1002122, TYPE II, CLASS 2 USING WHITE MARKING INK 1006271-1
15. MARK .24/.26 HIGH PER ND 1002019 & ND 1002122, TYPE II, CLASS 1 USING WHITE MARKING INK 1006271-1
16. MARK APPROPRIATE MODULE NO. IN ACCORDANCE WITH "B" NO. AS SHOWN IN DASH NO. COL IN PARTS LIST
~~17. SELECT FIND NO. 12 NOTED "(A)" AND "(B)", EXAMPLE (A)-CR6 AND (B)-CR6, PER THE ELECTRICAL REQUIREMENTS: AT A FOWARD CURRENT OF 1.8 ma ± 2%, AND AT A FORWARD CURRENT OF 3.6 ma ± 2% THE VOLTAGE DROP ACROSS BOTH DIODES SHALL BE WITHIN 1 MV OF EACH OTHER~~
18. USE PART OF FIND NO. 26 TO ELIMINATE SPACE BETWEEN CORE HOLDERS AND INSIDE BOTH ENDS OF HEADER
19. ASSEMBLE FIND NO. 15 TO CORE HOLDERS USING MIL-S-22473, GRADE HV
~~20. WIRE PER WIRING DIAGRAM (SEE SHEET 4)~~
~~21. ENCAPSULATE MODULE PER ND1002002 (BLACK POLYURETHANE FOAM) INDICATED AREAS ONLY~~
~~22. MIL-W-5086 TYPE [illegible], 24 AWG AND TINNED~~
23. SENSE LINE WIRING PER MODULE DECK NO. DESIGNATED
~~24. MARK APPLICABLE PROGRAM NUMBER ONLY, DASH NUMBER NOT REQUIRED~~
25. SEAL TERMINALS & INSULATORS TO HEADER PER 1002226
26. WRAP & TIE AROUND WIRED ASSY. APPROXIMATELY AS SHOWN WITH ONE WRAP OF FIND NO. 34

1003733	F	SHEET 1 OF 2

1003733 F

SYM	DESCRIPTION	DATE	APPROVAL
A	REVISED PER TDRR 13987	5 NOV 64	
B	REVISED PER TDRR 14343	64	
C	REVISED PER TDRR 15537	65	
D	REVISED PER TDRR 16879	65	
E	REVISED PER TDRR 17264	4/11/65	
F	REVISED PER TDRR 180[illegible]		

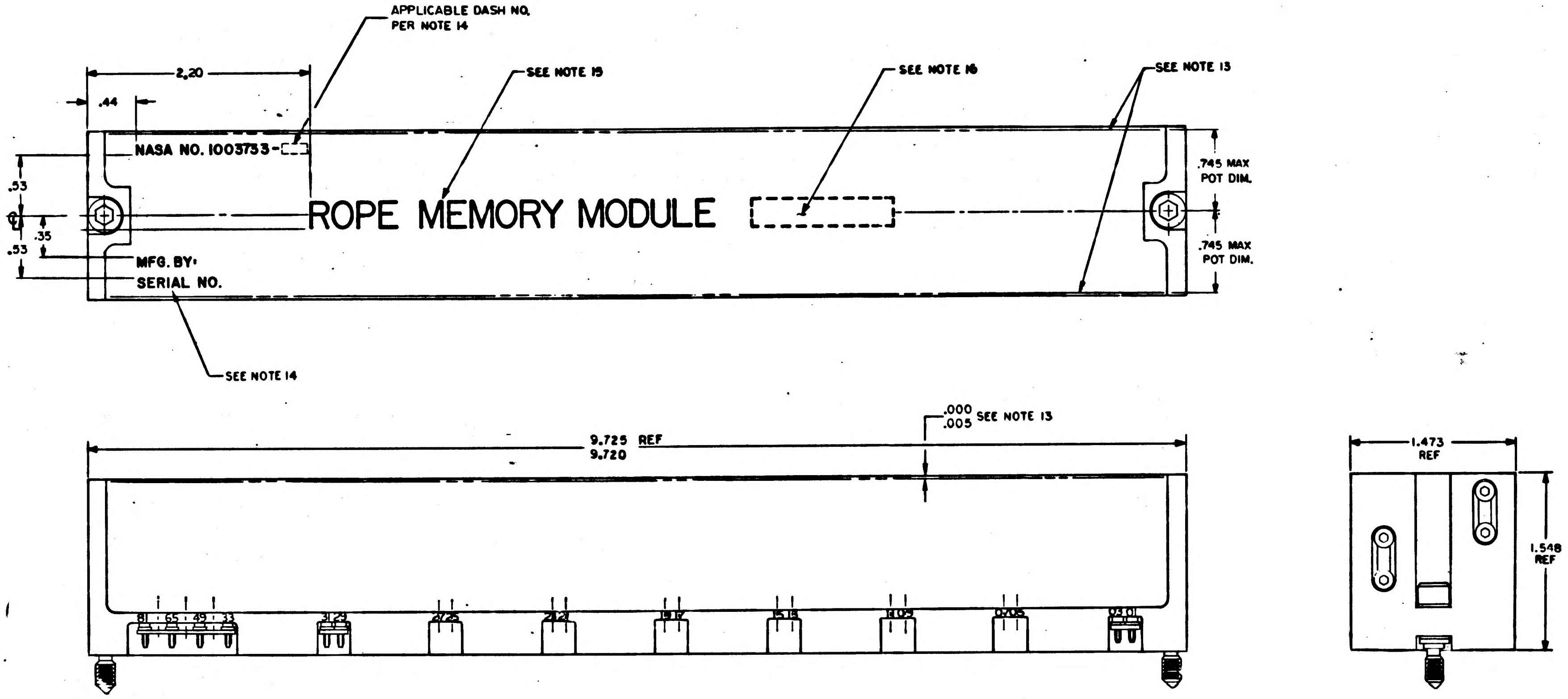
APPLICABLE DASH NO. PER NOTE 14
SEE NOTE 15
SEE NOTE 16
SEE NOTE 13
2.20
.44
NASA NO. 1003733-
ROPE MEMORY MODULE
MFG. BY:
SERIAL NO.
.53
.35
.53
.745 MAX POT DIM.
.745 MAX POT DIM.
SEE NOTE 14
9.725 REF
9.720
.000
.005 SEE NOTE 13
81 65 49 33
31 29
27 25
23 21
19 17
15 13
11 09
07 05
03 01
1.473 REF
1.548 REF

MARKING & POTTING VIEW

MASTER

QTY REQD	PART OR IDENTIFYING NO	NOMENCLATURE OR DESCRIPTION	FIND NO.

LIST OF MATERIALS

NEXT ASSY | USED ON
APPLICATION

UNLESS OTHERWISE SPECIFIED
DIMENSIONS ARE IN INCHES
TOLERANCES ON
FRACTIONS ± DECIMALS ±.02 ANGLES ±
DO NOT SCALE THIS DRAWING
MATERIAL —
HEAT TREATMENT —
FINAL FINISH —

MIT
INSTRUMENTATION LAB
CAMBRIDGE, MASS.
DRAWN DATE
CHECKED
APPROVAL E. J. Duggan 23 Sept 64
APPROVAL Eldon C. Hall 23 Sept 64
NASA APPROVAL
MIT APPROVAL

MANNED SPACECRAFT CENTER
HOUSTON, TEXAS

ROPE MEMORY MODULE
ASSEMBLY

CODE IDENT NO. 80230 | SIZE J | NASA DRAWING NO. 1003733
SCALE 2/1 | WT | SHEET 2 OF 2

1003733 F SHEET 2 OF 2

24

1003733 F

1003733

#2

NOTICE — WHEN GOVERNMENT DRAWINGS, SPECIFICATIONS, OR OTHER DATA ARE USED FOR ANY PURPOSE OTHER THAN IN CONNECTION WITH A DEFINITELY RELATED GOVERNMENT PROCUREMENT OPERATION, THE UNITED STATES GOVERNMENT THEREBY INCURS NO RESPONSIBILITY NOR ANY OBLIGATION WHATSOEVER, AND THE FACT THAT THE GOVERNMENT MAY HAVE FORMULATED, FURNISHED OR IN ANY WAY SUPPLIED THE SAID DRAWINGS, SPECIFICATIONS OR OTHER DATA IS NOT TO BE REGARDED BY IMPLICATION OR OTHERWISE AS IN ANY MANNER LICENSING THE HOLDER OR ANY OTHER PERSON OR CORPORATION, OR CONVEYING ANY RIGHTS OR PERMISSION TO MANUFACTURE, USE, OR SELL ANY PATENTED INVENTION THAT MAY IN ANY WAY BE RELATED THERETO

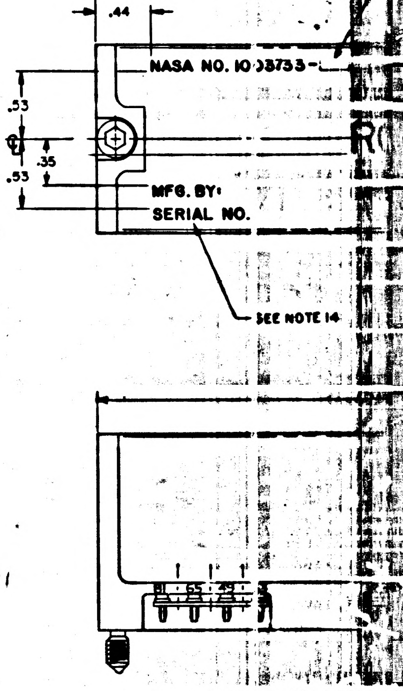

1003733 F SHEET 2 OF 2

SYM	DESCRIPTION	DATE	APPROVAL
A	REVISED PER TDRR 13987	3 NOV 64	
B	REVISED PER TDRR 14343		
C	REVISED PER TDRR 15537		
D	REVISED PER TDRR 16879		
E	REVISED PER TDRR 17264	3/17/65	
F	REVISED PER TDRR 18040		
G	REVISED PER TDRR 18697		

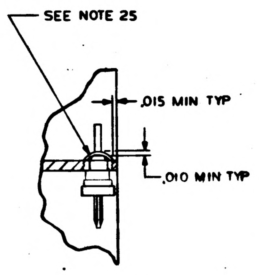

SEE NOTE 25
.015 MIN TYP
.010 MIN TYP

SECTION C-C
SCALE 4/1
88 PLACES

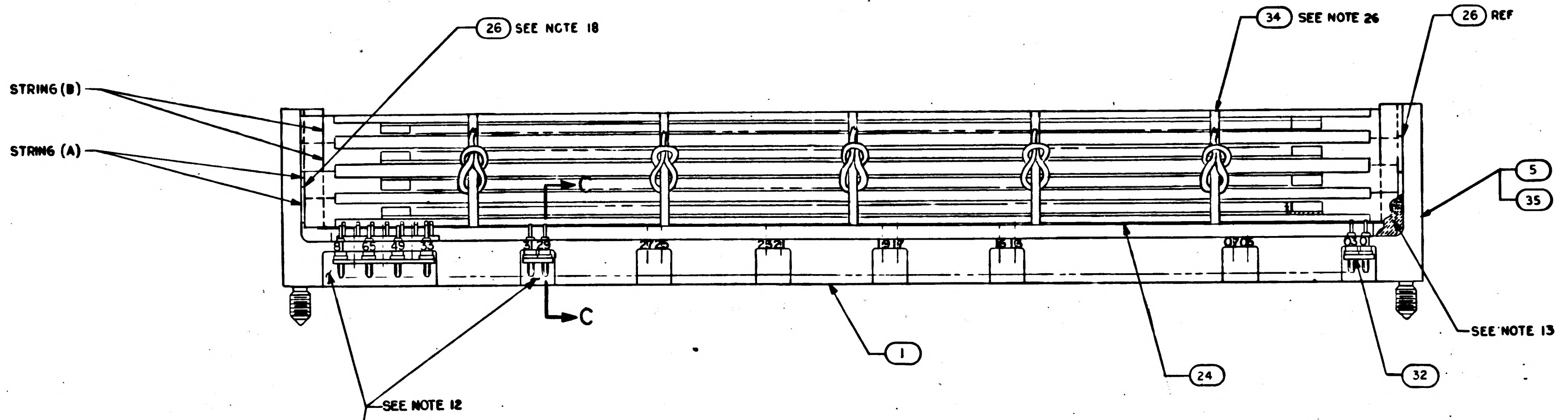

STRING (B)
STRING (A)
26 SEE NOTE 18
34 SEE NOTE 26
26 REF
5
35
C
C
1
24
32
SEE NOTE 13
SEE NOTE 12

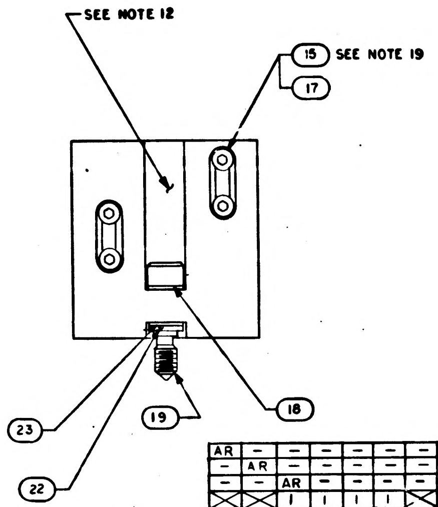

SEE NOTE 12
15 SEE NOTE 19
17
18
19
23
22

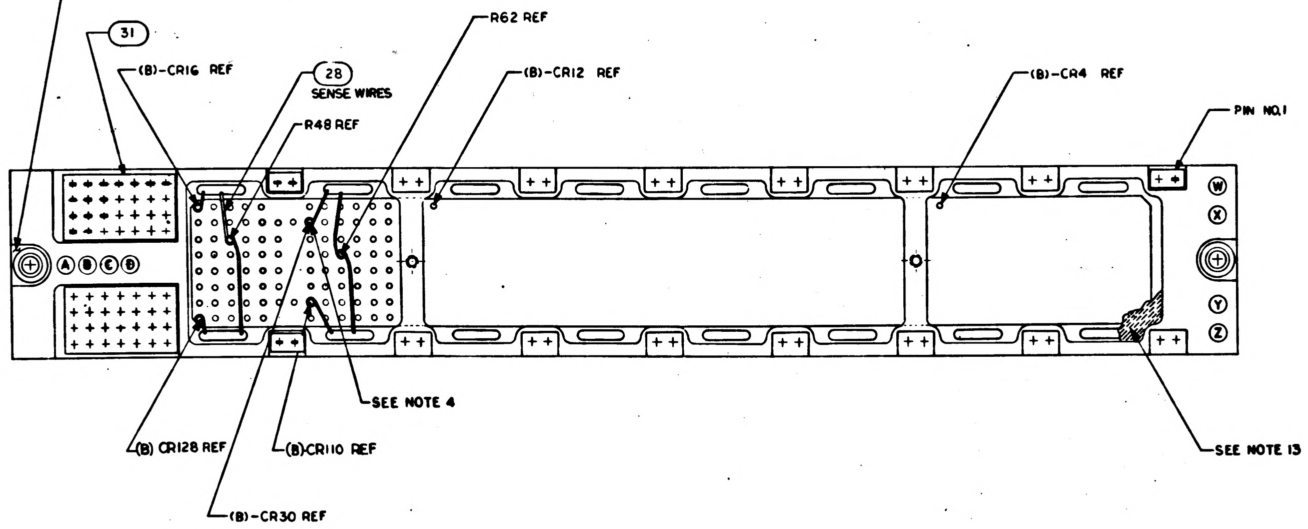

31
(B)-CR16 REF
28 SENSE WIRES
R48 REF
R62 REF
(B)-CR12 REF
(B)-CR4 REF
PIN NO.1
W
X
Y
Z
A B C D
SEE NOTE 4
(B) CR128 REF
(B)CR110 REF
(B)-CR30 REF
SEE NOTE 13

091	081	071	061	051	041	031	021	QTY 011	PART OR IDENTIFYING NO.	NOMENCLATURE OR DESCRIPTION	FIND NO.
AR	—	—	—	—	—	—	—	—	SEE NOTE 23	MODULE DECK NO. 0022	REF
—	AR	—	—	—	—	—	—	—	SEE NOTE 23	MODULE DECK NO. 0021	REF
—	—	AR	—	—	—	—	—	—	SEE NOTE 23	MODULE DECK NO. 0023	REF
☒	☒	1	1	1	1	☒	☒	☒	1003821-021	ROPE MEMORY MODULE SUBASSY	35
AR	AR	AR	AR	AR	AR	AR	AR	AR	1012507-003	TAPE LACING	34
			~~512~~	~~512~~	~~512~~	☒	☒	☒	~~1006320~~	~~CORE, MAGNETIC~~	~~33~~
—	—	—	AR	—	—	AR	—	—	SEE NOTE 23	MODULE DECK NO. 0018	REF
—	—	—	—	AR	—	—	AR	—	SEE NOTE 23	MODULE DECK NO. 0020	REF
—	—	—	—	—	AR	—	—	AR	SEE NOTE 23	MODULE DECK NO. 0019	REF
16	16	16	16	16	16	16	16	16	1004727	GASKET ROPE MODULE	32
2	2	2	2	2	2	2	2	2	1004726	GASKET ROPE MODULE	31
								☒	~~SEE NOTE 22~~	~~WIRE, ELECTRICAL~~	~~30~~
								☒	~~NAS-1331-24-8~~	~~WIRE, ELECTRICAL~~	~~29~~
AR	AR	AR	AR	AR	AR	AR	AR	AR	1006275-2	WIRE, ELECTRICAL	28
			~~2~~	~~2~~	~~2~~	~~2~~	~~2~~	~~2~~	~~1000093-2~~	~~SCREW, BUTTON HD~~	~~27~~
AR	AR	AR	AR	AR	AR	AR	AR	AR	1004623-2	SHIM	26
			~~AR~~	~~AR~~	~~AR~~	~~AR~~	~~AR~~	~~AR~~	~~1006776-22~~	~~SLEEVING~~	~~25~~
REF	REF	REF	REF	REF	REF	REF	REF	REF	1006144	SCHEMATIC	☒
1	1	1	1	1	1	1	1	1	1004603	INSULATOR	24
2	2	2	2	2	2	2	2	2	1004546-3	WASHER, FLAT	23
2	2	2	2	2	2	2	2	2	MS16633-4015	RING, RETAINING, EXTERNAL "E"	22
								~~2~~	~~MS39086-100~~	~~PIN, SPRING~~	~~21~~
								~~2~~	~~1004207~~	~~SCREW, EJECTION DRIVE CYLINDER~~	~~20~~
2	2	2	2	2	2	2	2	2	1004579-1	SCREW, JACKING	19
2	2	2	2	2	2	2	2	2	1004546-1	WASHER, FLAT	18
8	8	8	8	8	8	8	8	8	1004237	WASHER, FLAT	17
								~~2~~	~~1000104-1~~	~~SCREW, FLAT HEAD~~	~~16~~
8	8	8	8	8	8	8	8	8	1006783-11	SCREW, BUTTON HEAD	15
			~~AR~~	~~AR~~	~~AR~~	~~AR~~	~~AR~~	~~AR~~	~~1006275-1~~	~~WIRE, ELECTRICAL~~	~~14~~
			~~AR~~	~~AR~~	~~AR~~	~~AR~~	~~AR~~	~~AR~~	~~1006757-1~~	~~WIRE, .010 X .020~~	~~13~~
			~~256~~	~~256~~	~~256~~	~~256~~	~~256~~	~~256~~	~~1006751~~	~~DIODE~~	~~12~~
			~~128~~	~~128~~	~~128~~	~~128~~	~~128~~	~~128~~	~~1006750-39~~	~~RESISTOR, FIXED 2K~~	~~11~~
			~~1~~	~~1~~	~~1~~	~~1~~	~~1~~	~~1~~	~~1003134~~	~~TERMINAL BOARD ASSEMBLY~~	~~10~~
			☒	☒	☒	~~512~~	~~512~~	~~512~~	~~1006298-1~~	~~CORE, MAGNETIC~~	~~9~~
								~~AR~~	~~1004117~~	~~PLUG, KEYING~~	~~8~~
								~~1~~	~~1004235-1~~	~~INSULATOR~~	~~7~~
			☒	☒	☒	~~1~~	~~1~~	~~1~~	~~1004235-3~~	~~INSULATOR~~	~~6~~
1	1	☒	☒	☒	☒	1	1	1	1003821-011	ROPE MEMORY MODULE SUB ASSY	5
			~~4~~	~~4~~	~~4~~	~~4~~	~~4~~	~~4~~	~~1004233~~	~~HOLDER, CORE~~	~~4~~
			~~1~~	~~1~~	~~1~~	~~1~~	~~1~~	~~1~~	~~1004232~~	~~HOLDER, COMPONENT~~	~~3~~
								~~1~~	~~1004236~~	~~COVER~~	~~2~~
			~~1~~	~~1~~	~~1~~	~~1~~	~~1~~	~~1~~	~~1003135~~	~~HEADER ASSEMBLY~~	~~1~~
B29	B28	B22	B29	B28	B21	B29	B28	B21	LIST OF MATERIALS		

NEXT ASSY	USED ON
1021103	

APPLICATION

UNLESS OTHERWISE SPECIFIED
DIMENSIONS ARE IN INCHES
TOLERANCES ON
FRACTIONS ± DECIMALS ± ANGLES ±
DO NOT SCALE THIS DRAWING
MATERIAL —//—
HEAT TREATMENT —//—
FINAL FINISH —//—

MIT
INSTRUMENTATION LAB
CAMBRIDGE, MASS
DWG. NO. CONTRACT
DRAWN DATE
CHECKED
APPROVAL E. J. Duggan 8/26/64
APPROVAL Eldon C. Hall 28 Aug 64
NASA APPROVAL 9/4/64
MIT APPROVAL 8/28/64

MANNED SPACECRAFT CENTER
HOUSTON, TEXAS

ROPE MEMORY MODULE ASSEMBLY

CODE IDENT NO. 80230
SIZE J
NASA DRAWING NO. 1003733
SCALE 2/1
WT
SHEET 1 OF 2

1003733 G SHEET 1 of 2

MASTER

F-2

NOTICE — WHEN GOVERNMENT DRAWINGS, SPECIFICATIONS, OR OTHER DATA ARE USED FOR ANY PURPOSE OTHER THAN IN CONNECTION WITH A DEFINITELY RELATED GOVERNMENT PROCUREMENT OPERATION, THE UNITED STATES GOVERNMENT THEREBY INCURS NO RESPONSIBILITY NOR ANY OBLIGATION WHATSOEVER; AND THE FACT THAT THE GOVERNMENT MAY HAVE FORMULATED, FURNISHED, OR IN ANY WAY SUPPLIED THE SAID DRAWINGS, SPECIFICATIONS OR OTHER DATA IS NOT TO BE REGARDED BY IMPLICATION OR OTHERWISE AS IN ANY MANNER LICENSING THE HOLDER OR ANY OTHER PERSON OR CORPORATION, OR CONVEYING ANY RIGHTS OR PERMISSION TO MANUFACTURE, USE, OR SELL ANY PATENTED INVENTION THAT MAY IN ANY WAY BE RELATED THERETO.

1003733

H2

D

C

B

A

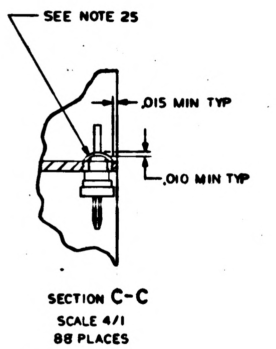

SECTION C-C
SCALE 4/1
88 PLACES

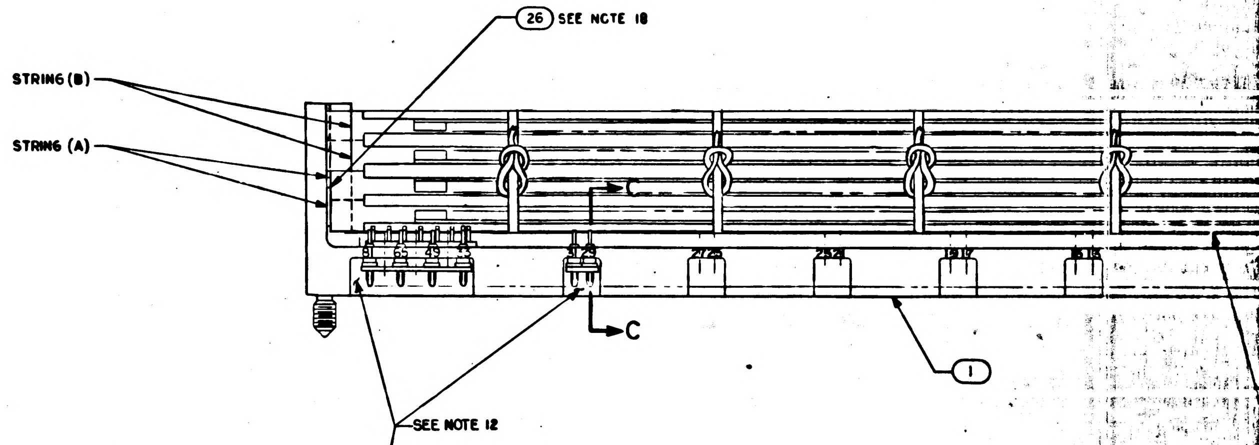

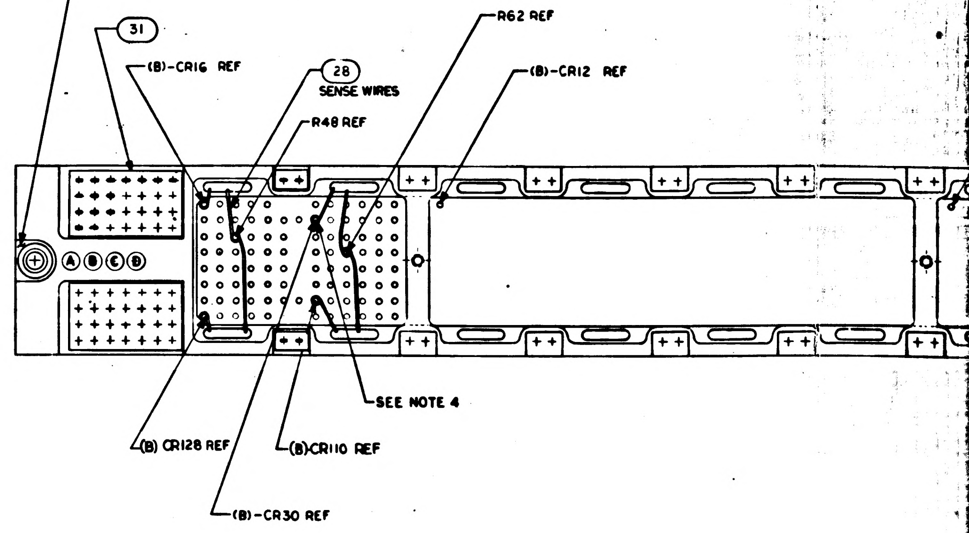

NOTES:

1. INTERPRET DRAWING IN ACCORDANCE WITH STANDARDS PRESCRIBED BY MIL-D-70327
2. ~~ALL WELDED CONNECTIONS TO BE MADE PER ND 1002005 & ND 1002003~~
3. WIRE PER ND 1002029
4. ALL SOLDERING CONNECTIONS TO BE MADE PER ND 1002071 USING SOLDER PER ND 1002075 EXCEPT DO NOT TIN LEADS OF FIND NO. 28 AND SOLDER WRAPS TO BE 2-4 TURNS USING FIND NO. 28
5. ~~BOND FIND NO. 10 TO FIND NO. 1 PER ND 1002004 TYPE I~~
6. ~~BOND FIND NO. 9 OR 33 TO FIND NO. X PER ND 1002004 TYPE I~~
7. ~~FILL KEYING HOLES AS INDICATED IN CHART WITH THERMALLY CONDUCTIVE EPOXY RESIN ND1002183 DO NOT EVACUATE AFTER FILLING~~
8. ~~WHITE DOT DENOTES LEAD TO BE CUT FOR FIRST LEVEL WIRING~~
9. ~~BLACK DOT DENOTES LEAD TO BE CUT FOR SECOND LEVEL WIRING~~
10. ~~K DENOTES CATHODE SIDE OF DIODE~~
11. AR DENOTES AS REQUIRED
12. INDICATED AREAS TO BE FREE OF ENCAPSULATING COMPOUND
13. ENCAPSULATE MODULE PER ND 1002226_ INDICATED AREA ONLY
14. MARK .08/.10 HIGH PER ND 1002019 & ND 1002122, TYPE II, CLASS 2 USING WHITE MARKING INK 1006271-1
15. MARK .24/.26 HIGH PER ND 1002019 & ND 1002122, TYPE II, CLASS 1 USING WHITE MARKING INK 1006271-1
16. MARK APPROPRIATE MODULE NO. IN ACCORDANCE WITH "B" NO. AS SHOWN IN DASH NO. COL. IN PARTS LIST
17. ~~SELECT FIND NO. 12 NOTED "(A)" AND "(B)", EXAMPLE (A)-CR6 AND (B)-CR6, PER THE ELECTRICAL REQUIREMENTS: AT A FOWARD CURRENT OF 1.8 ma ± 2%, AND AT A FORWARD CURRENT OF 3.6 ma ± 2% THE VOLTAGE DROP ACROSS BOTH DIODES SHALL BE WITHIN 1 MV OF EACH OTHER~~
18. USE PART OF FIND NO. 26 TO ELIMINATE SPACE BETWEEN CORE HOLDERS AND INSIDE BOTH ENDS OF HEADER
19. ASSEMBLE FIND NO. 15 TO CORE HOLDERS USING MIL-S-22473, GRADE HV
20. ~~WIRE PER WIRING DIAGRAM (SEE SHEET 4)~~
21. ~~ENCAPSULATE MODULE PER ND1002002 (BLACK POLYURETHANE FOAM) INDICATED AREAS ONLY~~
22. ~~MIL-W-3861 TYPE S, 24 AWG AND TINNED~~
23. SENSE LINE WIRING PER MODULE DECK NO. DESIGNATED
24. ~~MARK APPLICABLE PROGRAM NUMBER ONLY, DASH NUMBER NOT REQUIRED~~
25. SEAL TERMINALS & INSULATORS TO HEADER PER 1002226
26. WRAP & TIE AROUND WIRED ASSY APPROXIMATELY AS SHOWN WITH ONE WRAP OF FIND NO. 34

1003733	G	SHEET 1 of 2

REVISIONS 13124

SYM	DESCRIPTION	DATE	APPROVAL
A	REVISED PER TDRR 13987	3 NOV 64	
B	REVISED PER TDRR 14343	64	
C	REVISED PER TDRR 15537	10 JAN 65	
D	REVISED PER TDRR 16879	65	
E	REVISED PER TDRR 17264	9/11/65	
F	REVISED PER TDRR 18011		
G	REVISED PER TDRR 18697	65	

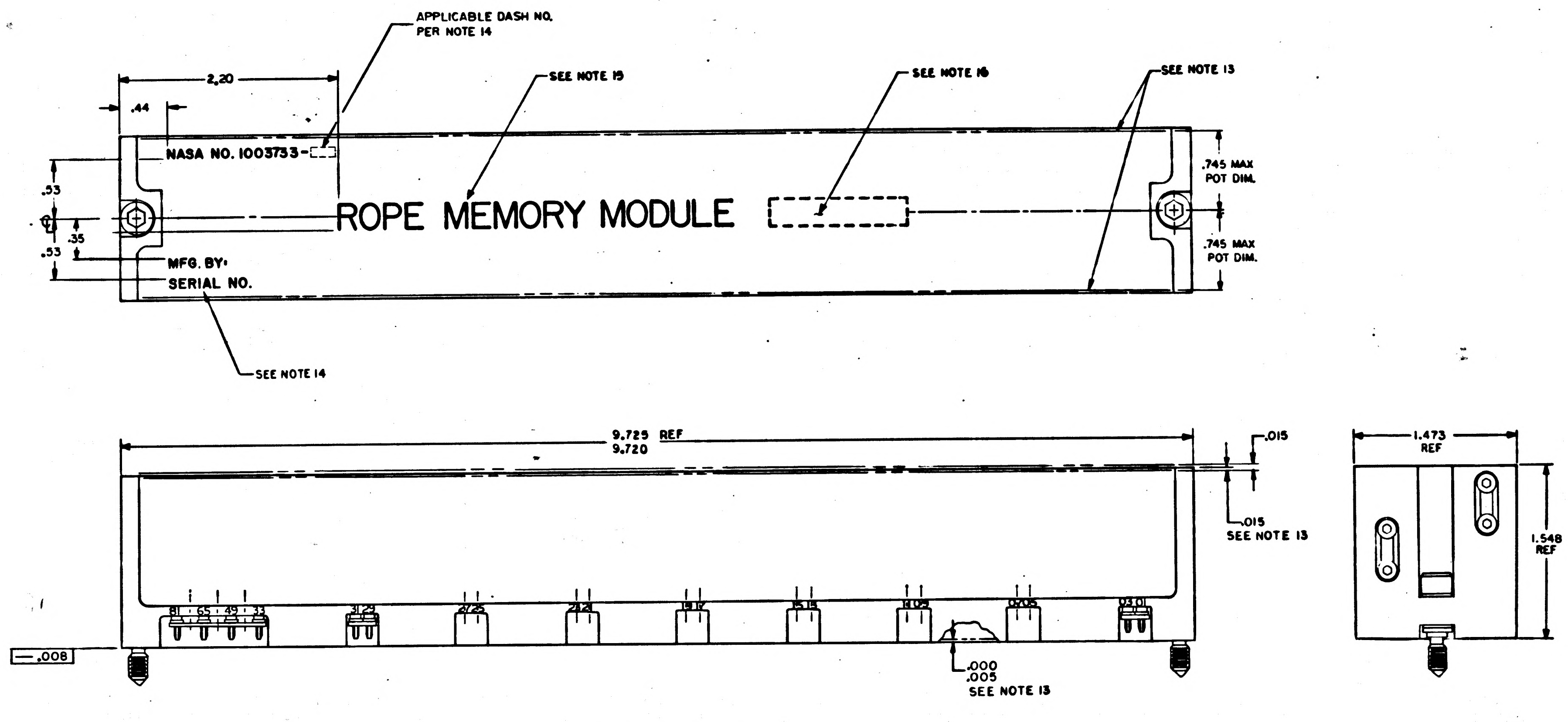

APPLICABLE DASH NO. PER NOTE 14
SEE NOTE 19
SEE NOTE 16
SEE NOTE 13
2.20
.44
NASA NO. 1003733-
ROPE MEMORY MODULE
MFG. BY:
SERIAL NO.
.53
.35
.53
.745 MAX POT DIM.
.745 MAX POT DIM.
SEE NOTE 14
9.725 REF
9.720
.015
.015 SEE NOTE 13
.008
.000 .005 SEE NOTE 13
1.473 REF
1.548 REF

MARKING & POTTING VIEW

MASTER

QTY REQD	PART OR IDENTIFYING NO.	NOMENCLATURE OR DESCRIPTION	FIND NO.

LIST OF MATERIALS

UNLESS OTHERWISE SPECIFIED DIMENSIONS ARE IN INCHES
TOLERANCES ON
FRACTIONS ± DECIMALS ±.02 ANGLES ±
DO NOT SCALE THIS DRAWING
MATERIAL —//—
HEAT TREATMENT —//—
FINAL FINISH —//—

NEXT ASSY | USED ON
APPLICATION

MIT INSTRUMENTATION LAB
CAMBRIDGE MASS
DWG NO. CONTRACT
DRAWN DATE
CHECKED
APPROVAL E. L. Duggan 23 Sept 64
APPROVAL Eldon C. Hall 23 Sept 64
NASA APPROVAL
MIT APPROVAL

MANNED SPACECRAFT CENTER
HOUSTON, TEXAS

ROPE MEMORY MODULE ASSEMBLY

CODE IDENT NO. 80230 | SIZE J | NASA DRAWING NO. 1003733
SCALE 2/1 | WT | SHEET 2 OF 2

24

E-2

NOTICE - WHEN GOVERNMENT DRAWINGS, SPECIFICATIONS, OR OTHER DATA ARE USED FOR ANY PURPOSE OTHER THAN IN CONNECTION WITH A DEFINITELY RELATED GOVERNMENT PROCUREMENT OPERATION, THE UNITED STATES GOVERNMENT THEREBY INCURS NO RESPONSIBILITY NOR ANY OBLIGATION WHATSOEVER; AND THE FACT THAT THE GOVERNMENT MAY HAVE FORMULATED, FURNISHED, OR IN ANY WAY SUPPLIED THE SAID DRAWINGS, SPECIFICATIONS, OR OTHER DATA IS NOT TO BE REGARDED BY IMPLICATION OR OTHERWISE AS IN ANY MANNER LICENSING THE HOLDER OR ANY OTHER PERSON OR CORPORATION, OR CONVEYING ANY RIGHTS OR PERMISSION TO MANUFACTURE, USE, OR SELL ANY PATENTED INVENTION THAT MAY IN ANY WAY BE RELATED THERETO.

1003733

H2

D

C

B

A

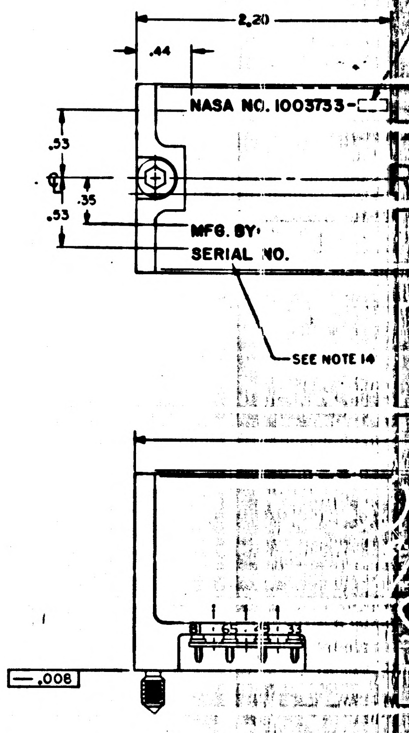

R.H.

1003733 G SHEET 2 OF 2

1003733 H

SYM	DESCRIPTION	DATE	APPROVAL
A	REVISED PER TDRR 13987	3 NOV 64	
B	REVISED PER TDRR 14343	64	
C	REVISED PER TDRR 15537		
D	REVISED PER TDRR 16879	65	
E	REVISED PER TDRR 17264	9/17/65	
F	REVISED PER TDRR 18040		
G	REVISED PER TDRR 18697		
H	REVISED PER TDRR 23139	15 SEP 65	

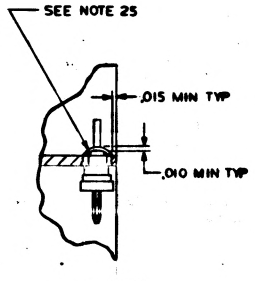

SECTION C-C
SCALE 4/1
88 PLACES

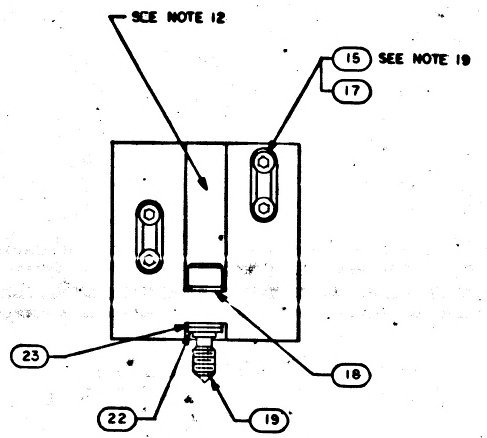

VIEW A-A

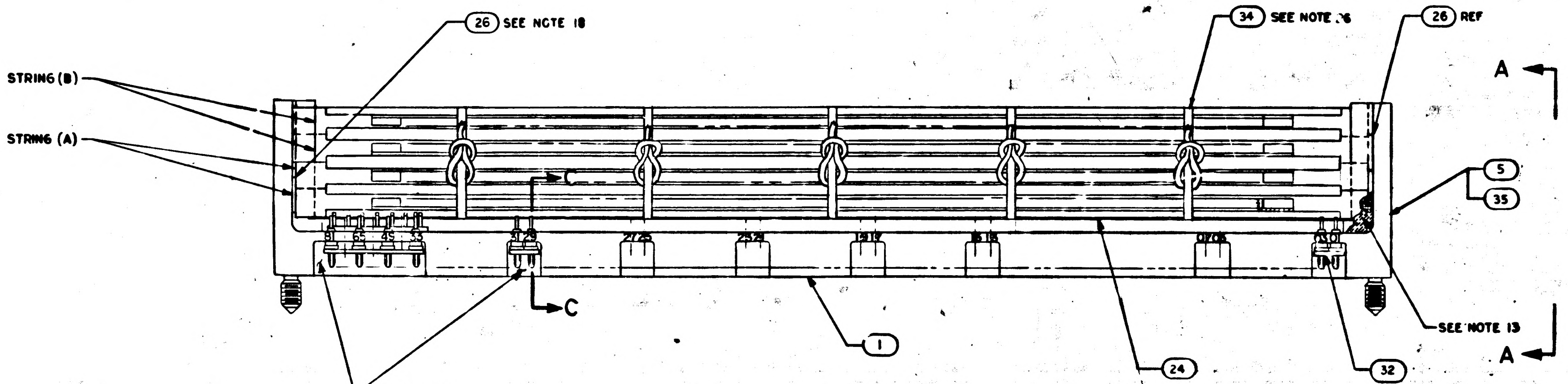

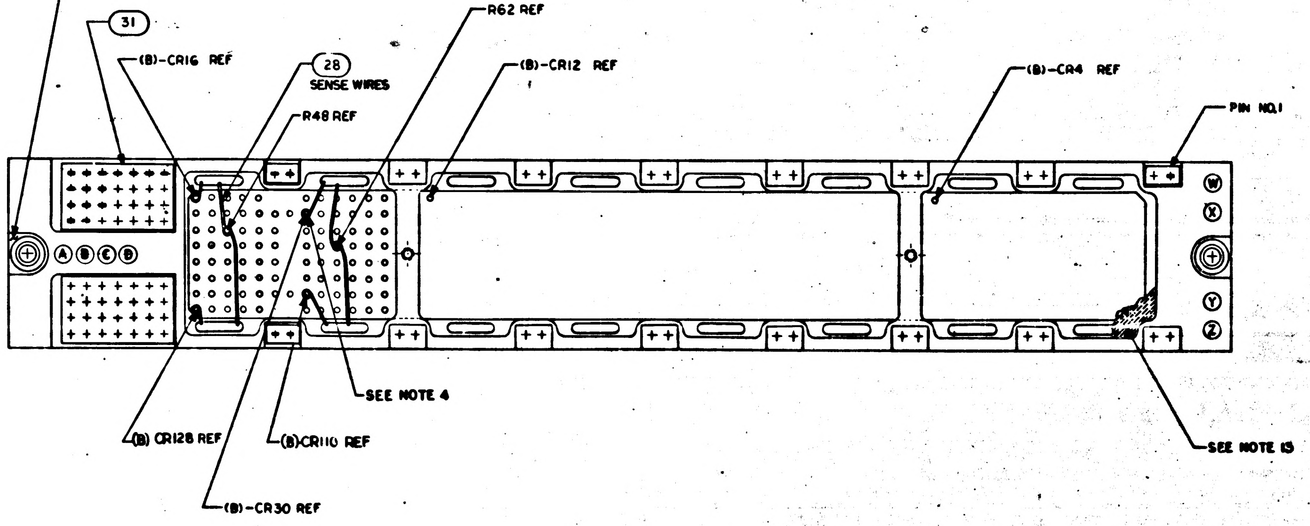

161	151	141	131	121	111	091	081	071	061	051	041	031	021	QTY 011	PART OR IDENTIFYING NO.	NOMENCLATURE OR DESCRIPTION	FIND NO.
AR	—	—	—	—	—	—	—	—	—	—	—	—	—	—	SEE NOTE 23	MODULE DECK NO. 0029	REF
—	AR	—	—	—	—	—	—	—	—	—	—	—	—	—	SEE NOTE 23	MODULE DECK NO. 0028	REF
—	—	AR	—	—	—	—	—	—	—	—	—	—	—	—	SEE NOTE 23	MODULE DECK NO. 0027	REF
—	—	—	AR	—	—	—	—	—	—	—	—	—	—	—	SEE NOTE 23	MODULE DECK NO. 0026	REF
—	—	—	—	AR	—	—	—	—	—	—	—	—	—	—	SEE NOTE 23	MODULE DECK NO. 0025	REF
—	—	—	—	—	AR	—	—	—	—	—	—	—	—	—	SEE NOTE 23	MODULE DECK NO. 0024	REF
—	—	—	—	—	—	AR	—	—	—	—	—	—	—	—	SEE NOTE 23	MODULE DECK NO. 0022	REF
—	—	—	—	—	—	—	AR	—	—	—	—	—	—	—	SEE NOTE 23	MODULE DECK NO. 0021	REF
—	—	—	—	—	—	—	—	AR	—	—	—	—	—	—	SEE NOTE 23	MODULE DECK NO. 0023	REF
X	X	X	X	X	X	X	X	1	1	1	1	X	X	X	1003821-021	ROPE MEMORY MODULE SUBASSY	35
AR	AR	AR	AR	AR	AR	AR	AR	AR	AR	AR	AR	AR	AR	AR	1012507-003	TAPE LACING	34
									~~512~~	~~512~~	~~512~~	X	X	X	~~1006320~~	~~CORE, MAGNETIC~~	~~33~~
—	—	—	—	—	—	—	—	—	AR	—	—	AR	—	—	SEE NOTE 23	MODULE DECK NO. 0018	REF
—	—	—	—	—	—	—	—	—	—	AR	—	—	AR	—	SEE NOTE 23	MODULE DECK NO. 0020	REF
—	—	—	—	—	—	—	—	—	—	—	AR	—	—	AR	SEE NOTE 23	MODULE DECK NO. 0019	REF
16	16	16	16	16	16	16	16	16	16	16	16	16	16	16	1004727	GASKET ROPE MODULE	32
2	2	2	2	2	2	2	2	2	2	2	2	2	2	2	1004726	GASKET ROPE MODULE	31
														X	~~SEE NOTE 22~~	~~WIRE, ELECTRICAL~~	~~30~~
														X	~~NAS-1391-24-9~~	~~WIRE, ELECTRICAL~~	~~29~~
AR	AR	AR	AR	AR	AR	AR	AR	AR	AR	AR	AR	AR	AR	AR	1006275-2	WIRE, ELECTRICAL	28
									~~2~~	~~2~~	~~2~~	~~2~~	~~2~~	~~2~~	~~1000093-2~~	~~SCREW, BUTTON HD~~	~~27~~
AR	AR	AR	AR	AR	AR	AR	AR	AR	AR	AR	AR	AR	AR	AR	1004623-2	SHIM	26
									~~AR~~	~~AR~~	~~AR~~	~~AR~~	~~AR~~	~~AR~~	~~1006776-22~~	~~SLEEVING~~	~~25~~
REF	REF	REF	REF	REF	REF	REF	REF	REF	REF	REF	REF	REF	REF	REF	1006144	SCHEMATIC	X
1	1	1	1	1	1	1	1	1	1	1	1	1	1	1	1004603	INSULATOR	24
2	2	2	2	2	2	2	2	2	2	2	2	2	2	2	1004546-3	WASHER, FLAT	23
2	2	2	2	2	2	2	2	2	2	2	2	2	2	2	MS16633-4015	RING, RETAINING, EXTERNAL "E"	22
														~~2~~	~~MS39086-100~~	~~PIN, SPRING~~	~~21~~
														~~2~~	~~1004207~~	~~SCREW, EJECTION DRIVE CYLINDER~~	~~20~~
2	2	2	2	2	2	2	2	2	2	2	2	2	2	2	1004579-1	SCREW, JACKING	19
2	2	2	2	2	2	2	2	2	2	2	2	2	2	2	1004546-1	WASHER, FLAT	18
8	8	8	8	8	8	8	8	8	8	8	8	8	8	8	1004237	WASHER, FLAT	17
														~~8~~	~~1000104-1~~	~~SCREW, FLAT HEAD~~	~~16~~
8	8	8	8	8	8	8	8	8	8	8	8	8	8	8	1006783-11	SCREW, BUTTON HEAD	15
									~~AR~~	~~AR~~	~~AR~~	~~AR~~	~~AR~~	~~AR~~	~~1006275-1~~	~~WIRE, ELECTRICAL~~	~~14~~
									~~AR~~	~~AR~~	~~AR~~	~~AR~~	~~AR~~	~~AR~~	~~1006757-1~~	~~WIRE, .010 X .020~~	~~13~~
									~~256~~	~~256~~	~~256~~	~~256~~	~~256~~	~~256~~	~~1006751~~	~~DIODE~~	~~12~~
									~~128~~	~~128~~	~~128~~	~~128~~	~~128~~	~~128~~	~~1006750-39~~	~~RESISTOR, FIXED 2K~~	~~11~~
									~~1~~	~~1~~	~~1~~	~~1~~	~~1~~	~~1~~	~~1003144~~	~~TERMINAL BOARD ASSEMBLY~~	~~10~~
									X	X	X	~~512~~	~~512~~	~~512~~	~~1006298-1~~	~~CORE, MAGNETIC~~	~~9~~
														~~AR~~	~~1004117~~	~~PLUG, KEYING~~	~~8~~
														~~1~~	~~1004235-1~~	~~INSULATOR~~	~~7~~
															~~1004235-3~~	~~INSULATOR~~	~~6~~
1	1	1	1	1	1	1	1	X	X	X	X	1	1	1	1003821-011	ROPE MEMORY MODULE SUB ASSY	5
									~~4~~	~~4~~	~~4~~	~~4~~	~~4~~	~~4~~	~~1004233~~	~~HOLDER, CORE~~	~~4~~
									~~1~~	~~1~~	~~1~~	~~1~~	~~1~~	~~1~~	~~1004232~~	~~HOLDER, COMPONENT~~	~~3~~
														~~1~~	~~1004238~~	~~COVER~~	~~2~~
									~~1~~	~~1~~	~~1~~	~~1~~	~~1~~	~~1~~	~~1003143~~	~~HEADER ASSEMBLY~~	~~1~~
B29	B28	B24	B23	B22	B21	B29	B28	B22	B29	B28	B21	B29	B28	B21	LIST OF MATERIALS		

NEXT ASSY	USED ON
1021103	

APPLICATION

UNLESS OTHERWISE SPECIFIED
DIMENSIONS ARE IN INCHES
TOLERANCES ON
FRACTIONS ± DECIMALS ± ANGLES ±
DO NOT SCALE THIS DRAWING
MATERIAL —//—
HEAT TREATMENT —//—
FINAL FINISH —//—

MIT
INSTRUMENTATION LAB
CAMBRIDGE, MASS.
DRAWN DATE
CHECKED
APPROVAL
APPROVAL
NASA APPROVAL
MIT APPROVAL

MANNED SPACECRAFT CENTER
HOUSTON, TEXAS

ROPE MEMORY MODULE ASSEMBLY

CODE IDENT NO. 80230
SIZE J
NASA DRAWING NO. 1003733
SCALE 2/1
WT
SHEET 1 OF 2

MASTER

TP# 1345

1003733 H SHEET 1 OF 2

NOTICE – WHEN GOVERNMENT DRAWINGS, SPECIFICATIONS, OR OTHER DATA ARE USED FOR ANY PURPOSE OTHER THAN IN CONNECTION WITH A DEFINITELY RELATED GOVERNMENT PROCUREMENT OPERATION, THE UNITED STATES GOVERNMENT THEREBY INCURS NO RESPONSIBILITY NOR ANY OBLIGATION WHATSOEVER; AND THE FACT THAT THE GOVERNMENT MAY HAVE FORMULATED, FURNISHED, OR IN ANY WAY SUPPLIED THE SAID DRAWINGS, SPECIFICATIONS, OR OTHER DATA IS NOT TO BE REGARDED BY IMPLICATION OR OTHERWISE AS IN ANY MANNER LICENSING THE HOLDER OR ANY OTHER PERSON OR CORPORATION, OR CONVEYING ANY RIGHTS OR PERMISSION TO MANUFACTURE, USE, OR SELL ANY PATENTED INVENTION THAT MAY IN ANY WAY BE RELATED THERETO.

1003733

H2

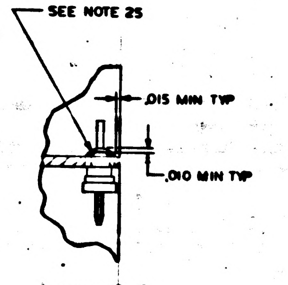

SECTION C-C
SCALE 4/1
88 PLACES

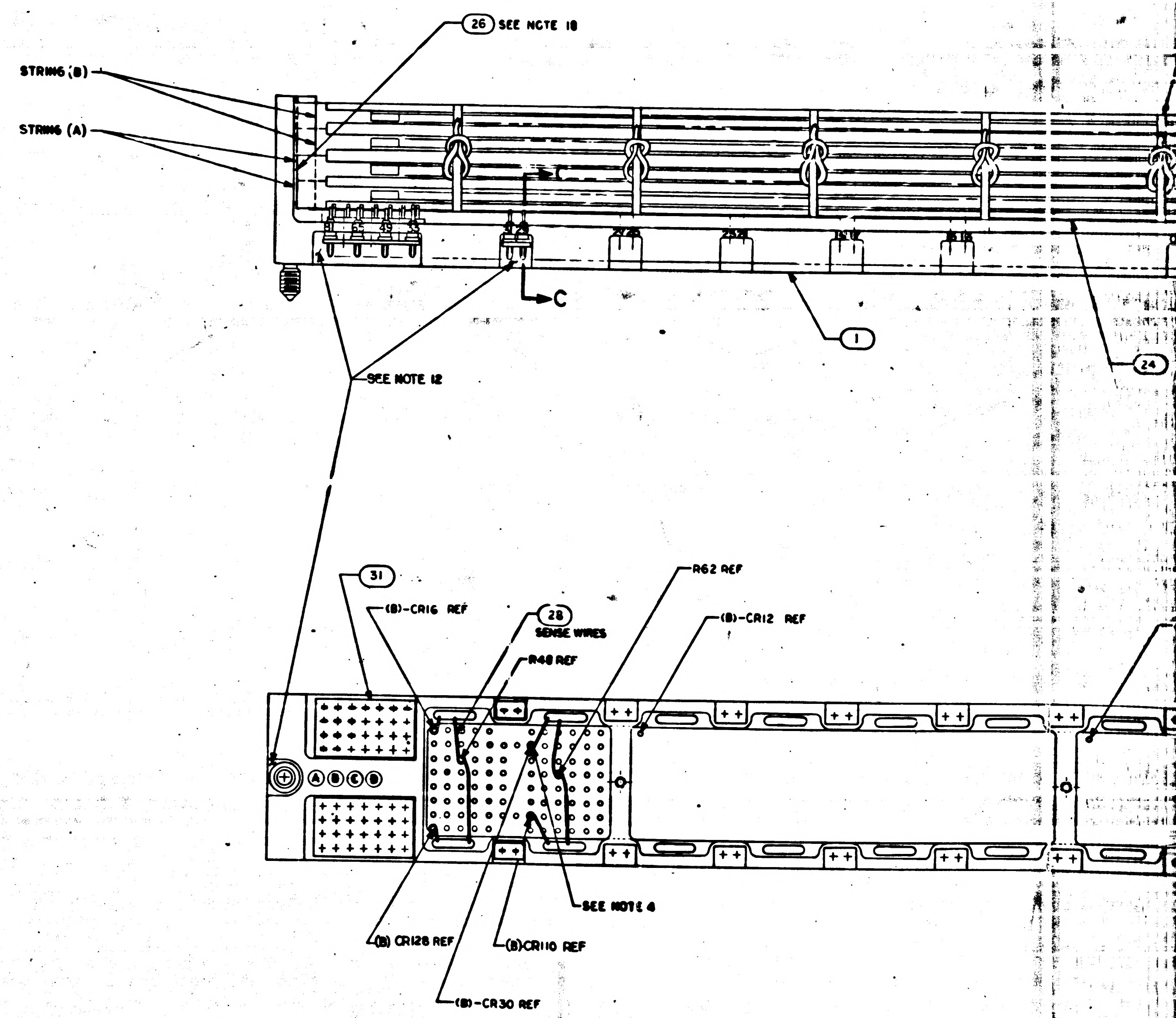

NOTES:

1. INTERPRET DRAWING IN ACCORDANCE WITH STANDARDS PRESCRIBED BY MIL-D-70327
2. ~~ALL WELDED CONNECTIONS TO BE MADE PER ND 1002005 & ND 1002003~~
3. WIRE PER ND 1002029
4. ALL SOLDERING CONNECTIONS TO BE MADE PER ND 1002071 USING SOLDER PER ND 1002075 EXCEPT DO NOT TIN LEADS OF FIND NO. 28 AND SOLDER WRAPS TO BE 2-4 TURNS USING FIND NO. 28
5. ~~BOND FIND NO. 10 TO FIND NO. 1 PER ND 1002004 TYPE I~~
6. ~~BOND FIND NO. 9 OR 33 TO FIND NO. 2 PER ND 1002004 TYPE I~~
7. ~~FILL KEYING HOLES AS INDICATED IN CHART WITH THERMALLY CONDUCTIVE EPOXY RESIN ND [illegible] DO NOT EVACUATE AFTER FILLING~~
8. ~~WHITE DOT DENOTES LEAD TO BE CUT FOR FIRST LEVEL WIRING~~
9. ~~BLACK DOT DENOTES LEAD TO BE CUT FOR SECOND LEVEL WIRING~~
10. ~~X DENOTES CATHODE SIDE OF DIODE~~
11. AR DENOTES AS REQUIRED
12. INDICATED AREAS TO BE FREE OF ENCAPSULATING COMPOUND
13. ENCAPSULATE MODULE PER ND 1002226 INDICATED AREA ONLY
14. MARK .08/.10 HIGH PER ND 1002019 & ND 1002122, TYPE II, CLASS 2 USING WHITE MARKING INK 1006271-1
15. MARK .24/.6 HIGH PER ND 1002019 & ND 1002122, TYPE II, CLASS 1 USING WHITE MARKING INK 1006271-1
16. MARK APPROPRIATE MODULE NO. IN ACCORDANCE WITH "B" NO. AS SHOWN IN DASH NO. COL IN PARTS LIST
17. ~~SELECT FIND NO. 12 NOTED "(A)" AND "(B)", EXAMPLE (A)-CR6 AND (B)-CR6, PER THE ELECTRICAL REQUIREMENTS: AT A FOWARD CURRENT OF 1.8 ma ± 2%, AND AT A FORWARD CURRENT OF 3.6 ma ± 2% THE VOLTAGE DROP ACROSS BOTH DIODES SHALL BE WITHIN [illegible] OF EACH OTHER~~
18. USE PART OF FIND NO. 26 TO ELIMINATE SPACE BETWEEN CORE HOLDERS AND INSIDE BOTH ENDS OF HEADER
19. ASSEMBLE FIND NO. 15 TO CORE HOLDERS USING MIL-S-22473, GRADE HV
20. ~~WIRE PER WIRING DIAGRAM (SEE SHEET 2)~~
21. ~~ENCAPSULATE MODULE PER ND 1002002 (BLACK POLYURETHANE FOAM) INDICATED AREAS ONLY~~
22. ~~MIL-W-3861 TYPE S, 24 AWG AND TINNED~~
23. SENSE LINE WIRING PER MODULE DECK NO. DESIGNATED
24. ~~MARK APPLICABLE PROGRAM NUMBER ONLY, DASH NUMBER NOT REQUIRED~~
25. SEAL TERMINALS & INSULATORS TO HEADER PER 1002226
26. WRAP & TIE AROUND WIRED ASSY APPROXIMATELY AS SHOWN WITH ONE WRAP OF FIND NO. 34

1003733 H

SYM	DESCRIPTION	DATE	APPROVAL
A	REVISED PER TDRR 13987	64	
B	REVISED PER TDRR 14343	64	
C	REVISED PER TDRR 15537	65	
D	REVISED PER TDRR 16079	65	
E	REVISED PER TDRR 17264	/65	
F	REVISED PER TDRR 18		
G	REVISED PER TDRR 18697	65	
H	REVISED PER TDRR 23139		

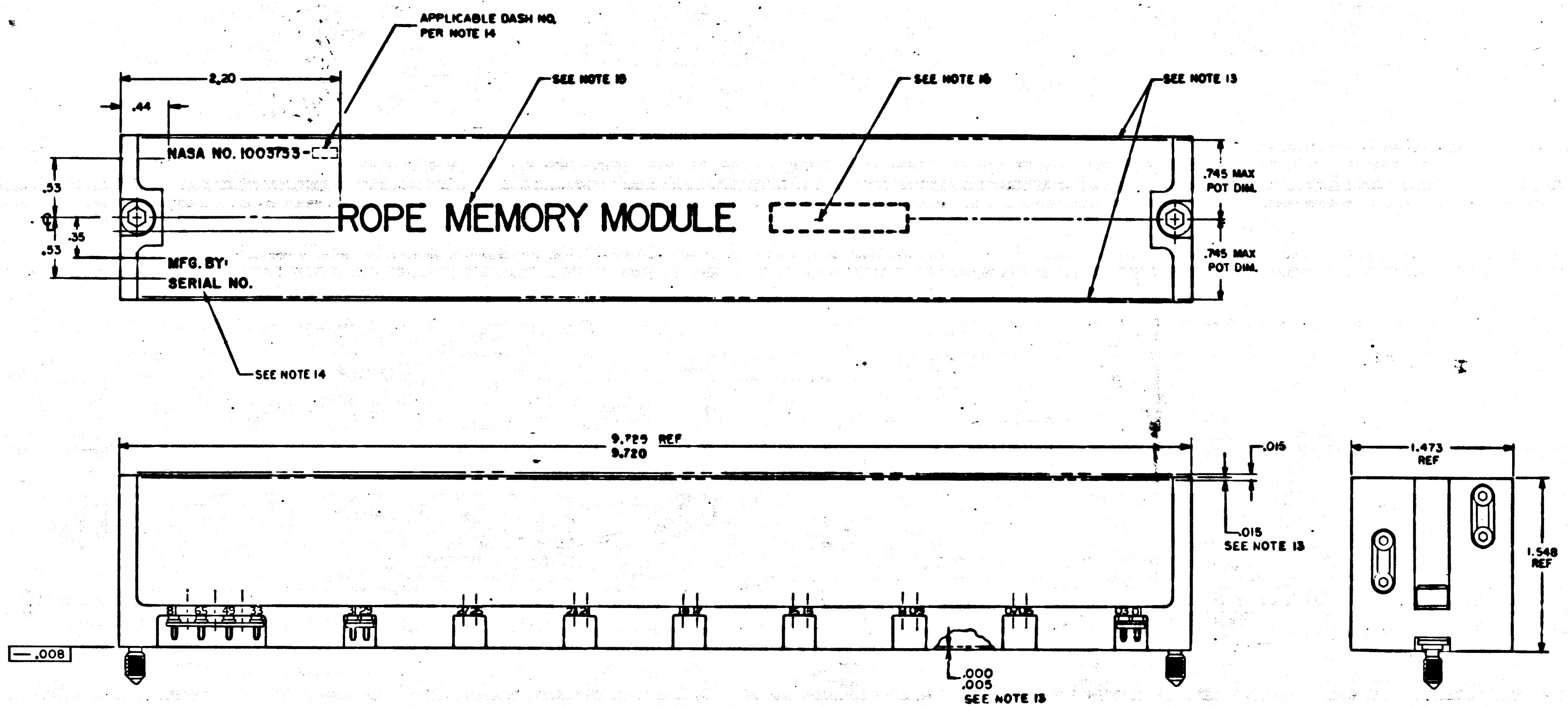
APPLICABLE DASH NO. PER NOTE 14
SEE NOTE 18
SEE NOTE 16
SEE NOTE 13
2.20
.44
NASA NO. 1003733-
ROPE MEMORY MODULE
.53
.35
.53
MFG. BY:
SERIAL NO.
.745 MAX POT DIM.
.745 MAX POT DIM.
SEE NOTE 14
9.729 REF
9.720
.015
.015 SEE NOTE 13
.008
.000
.005
SEE NOTE 13
1.473 REF
1.548 REF
81
65
49
33

MARKING & POTTING VIEW

QTY REQD	PART OR IDENTIFYING NO.	NOMENCLATURE OR DESCRIPTION	FIND NO.

LIST OF MATERIALS

UNLESS OTHERWISE SPECIFIED
DIMENSIONS ARE IN INCHES
TOLERANCES ON
FRACTIONS ± DECIMALS ±.02 ANGLES ±
DO NOT SCALE THIS DRAWING
MATERIAL —
HEAT TREATMENT —
FINAL FINISH —

NEXT ASSY | USED ON
APPLICATION

MIT INSTRUMENTATION LAB
CAMBRIDGE, MASS.
DRAWN DATE
CHECKED
APPROVAL
APPROVAL
NASA APPROVAL
MIT APPROVAL

MANNED SPACECRAFT CENTER
HOUSTON, TEXAS

ROPE MEMORY MODULE ASSEMBLY

CODE IDENT NO. 80230 SIZE J NASA DRAWING NO. 1003733
SCALE 2/1 WT SHEET 2 OF 2

MASTER

24

1003733 H SHEET 2 OF 2

NOTICE — WHEN GOVERNMENT DRAWINGS, SPECIFICATIONS, OR OTHER DATA ARE USED FOR ANY PURPOSE OTHER THAN IN CONNECTION WITH A DEFINITELY RELATED GOVERNMENT PROCUREMENT OPERATION, THE UNITED STATES GOVERNMENT THEREBY INCURS NO RESPONSIBILITY NOR ANY OBLIGATION WHATSOEVER; AND THE FACT THAT THE GOVERNMENT MAY HAVE FORMULATED, FURNISHED, OR IN ANY WAY SUPPLIED THE SAID DRAWINGS, SPECIFICATIONS OR OTHER DATA IS NOT TO BE REGARDED BY IMPLICATION OR OTHERWISE AS IN ANY MANNER LICENSING THE HOLDER OR ANY OTHER PERSON OR CORPORATION, OR CONVEYING ANY RIGHTS OR PERMISSION TO MANUFACTURE, USE, OR SELL ANY PATENTED INVENTION THAT MAY IN ANY WAY BE RELATED THERETO

1003733

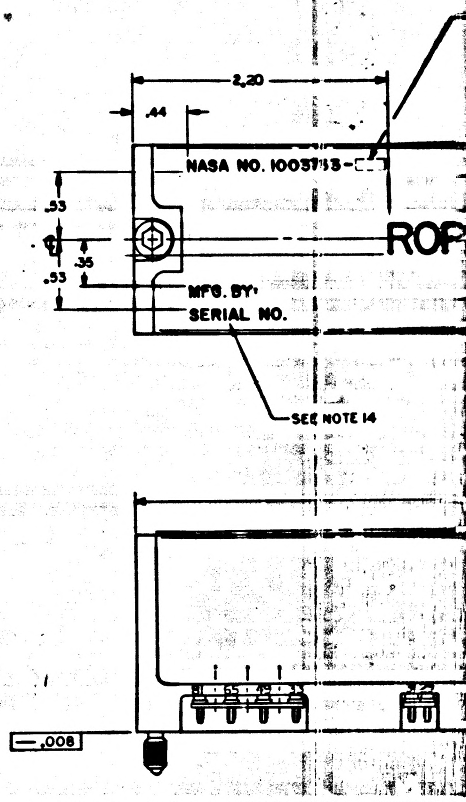

1003733 K

SYM	DESCRIPTION	DATE
A	REVISED PER TDRR 12987	3 NOV 64
B	REVISED PER TDRR 14342	11 Nov 64
C	REVISED PER TDRR 15537	10 Jan 65
D	REVISED PER TDRR 16879	2 Mar 65
E	REVISED PER TDRR 17264	3/17/65
F	REVISED PER TDRR 18040	
G	REVISED PER TDRR 18697	16 JUN 65
H	REVISED PER TDRR 23139	15 Oct 65
J	REVISED PER TDRR 23952	13 Jan 66
K	REVISED PER TDRR 25158	18 Jan 66

REVISIONS 13/28

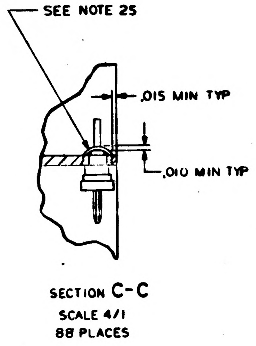

SECTION C-C
SCALE 4/1
88 PLACES

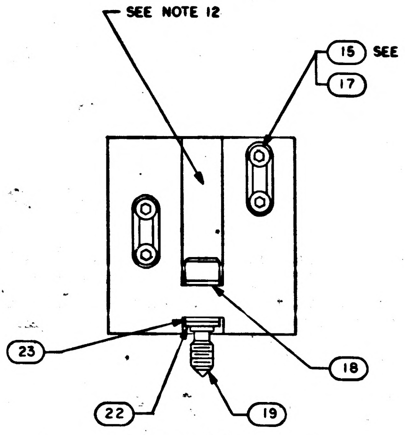

VIEW A-A

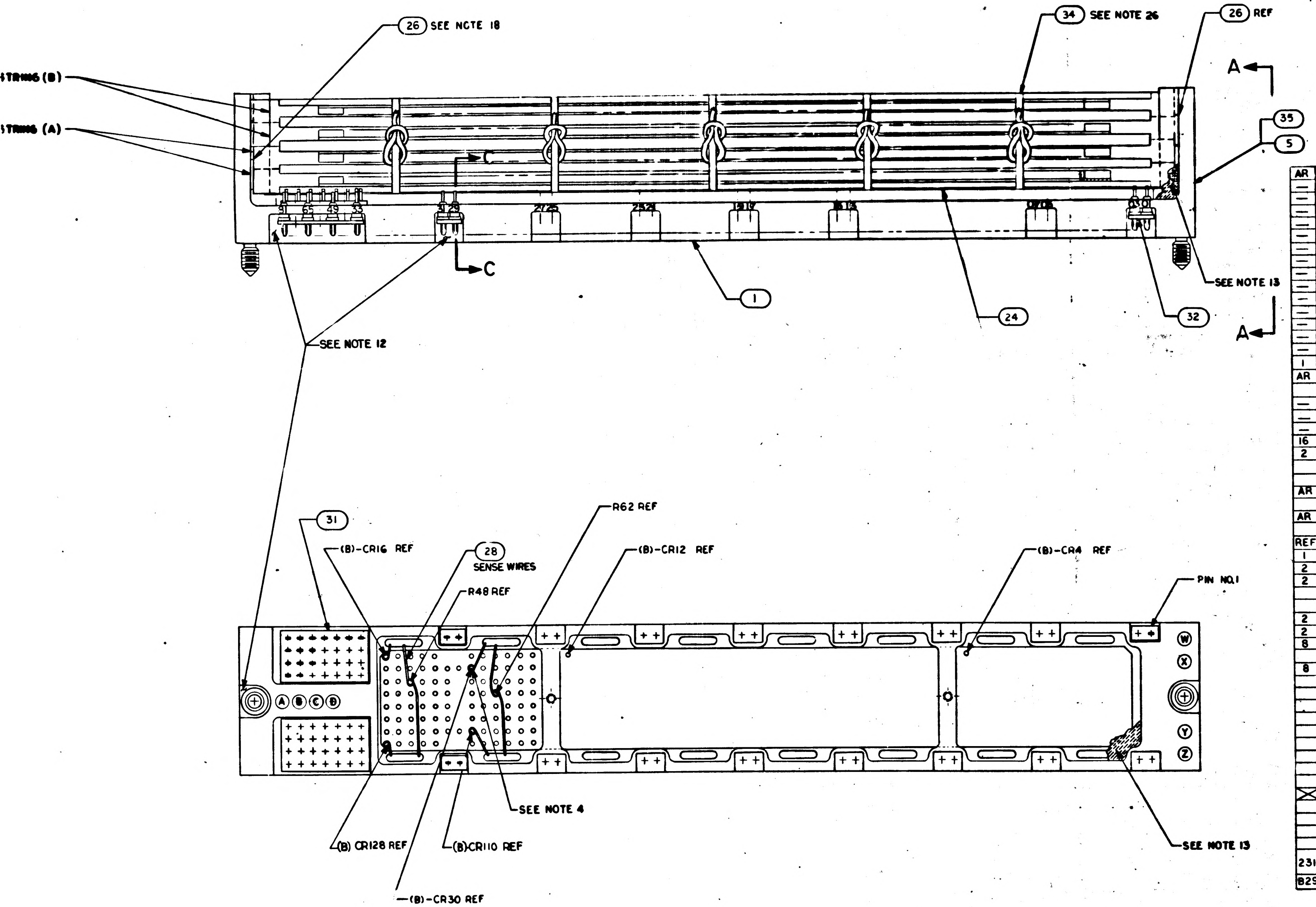

231	221	211	191	181	171	161	151	141	131	121	111	091	081	071	061	051	041	031	021	QTY 011	PART OR IDENTIFYING NO.	NOMENCLATURE OR DESCRIPTION	FIND NO.
AR	—	—	—	—	—	—	—	—	—	—	—	—	—	—	—	—	—	—	—	—	SEE NOTE 23	MODULE DECK NO. 0035	REF
—	AR	—	—	—	—	—	—	—	—	—	—	—	—	—	—	—	—	—	—	—	SEE NOTE 23	MODULE DECK NO. 0034	REF
—	—	AR	—	—	—	—	—	—	—	—	—	—	—	—	—	—	—	—	—	—	SEE NOTE 23	MODULE DECK NO. 0033	REF
—	—	—	AR	—	—	—	—	—	—	—	—	—	—	—	—	—	—	—	—	—	SEE NOTE 23	MODULE DECK NO. 0032	REF
—	—	—	—	AR	—	—	—	—	—	—	—	—	—	—	—	—	—	—	—	—	SEE NOTE 23	MODULE DECK NO. 0031	REF
—	—	—	—	—	AR	—	—	—	—	—	—	—	—	—	—	—	—	—	—	—	SEE NOTE 23	MODULE DECK NO. 0030	REF
—	—	—	—	—	—	AR	—	—	—	—	—	—	—	—	—	—	—	—	—	—	SEE NOTE 23	MODULE DECK NO. 0029	REF
—	—	—	—	—	—	—	AR	—	—	—	—	—	—	—	—	—	—	—	—	—	SEE NOTE 23	MODULE DECK NO. 0028	REF
—	—	—	—	—	—	—	—	AR	—	—	—	—	—	—	—	—	—	—	—	—	SEE NOTE 23	MODULE DECK NO. 0027	REF
—	—	—	—	—	—	—	—	—	AR	—	—	—	—	—	—	—	—	—	—	—	SEE NOTE 23	MODULE DECK NO. 0026	REF
—	—	—	—	—	—	—	—	—	—	AR	—	—	—	—	—	—	—	—	—	—	SEE NOTE 23	MODULE DECK NO. 0025	REF
—	—	—	—	—	—	—	—	—	—	—	AR	—	—	—	—	—	—	—	—	—	SEE NOTE 23	MODULE DECK NO. 0024	REF
—	—	—	—	—	—	—	—	—	—	—	—	AR	—	—	—	—	—	—	—	—	SEE NOTE 23	MODULE DECK NO. 0022	REF
—	—	—	—	—	—	—	—	—	—	—	—	—	AR	—	—	—	—	—	—	—	SEE NOTE 23	MODULE DECK NO. 0021	REF
—	—	—	—	—	—	—	—	—	—	—	—	—	—	AR	—	—	—	—	—	—	SEE NOTE 23	MODULE DECK NO. 0023	REF
1	1	1	1	1	1	1	1	1	1	1	1	X	X	1	1	1	1	X	X	X	1003821-021	ROPE MEMORY MODULE SUBASSY	35
AR	AR	AR	AR	AR	AR	AR	AR	AR	AR	AR	AR	AR	AR	AR	AR	AR	AR	AR	AR	AR	1012507-003	TAPE LACING	34
															~~512~~	~~512~~	~~512~~	X	X	X	~~1006320~~	~~CORE, MAGNETIC~~	~~33~~
—	—	—	—	—	—	—	—	—	—	—	—	—	—	—	AR	—	—	AR	—	—	SEE NOTE 23	MODULE DECK NO. 0018	REF
—	—	—	—	—	—	—	—	—	—	—	—	—	—	—	—	AR	—	—	AR	—	SEE NOTE 23	MODULE DECK NO. 0020	REF
—	—	—	—	—	—	—	—	—	—	—	—	—	—	—	—	—	AR	—	—	AR	SEE NOTE 23	MODULE DECK NO. 0019	REF
16	16	16	16	16	16	16	16	16	16	16	16	16	16	16	16	16	16	16	16	16	1004727	GASKET ROPE MODULE	32
2	2	2	2	2	2	2	2	2	2	2	2	2	2	2	2	2	2	2	2	2	1004726	GASKET ROPE MODULE	31
																				X	~~SEE NOTE 22~~	~~WIRE, ELECTRICAL~~	~~30~~
																				X	~~NAS-1391-24-9~~	~~WIRE, ELECTRICAL~~	~~29~~
AR	AR	AR	AR	AR	AR	AR	AR	AR	AR	AR	AR	AR	AR	AR	AR	AR	AR	AR	AR	AR	1006275-2	WIRE, ELECTRICAL	28
															~~2~~	~~2~~	~~2~~	~~2~~	~~2~~	~~2~~	~~1000093-2~~	~~SCREW, BUTTON HD~~	~~27~~
AR	AR	AR	AR	AR	AR	AR	AR	AR	AR	AR	AR	AR	AR	AR	AR	AR	AR	AR	AR	AR	1004623-2	SHIM	26
															~~AR~~	~~AR~~	~~AR~~	~~AR~~	~~AR~~	~~AR~~	~~1006776-22~~	~~SLEEVING~~	~~25~~
REF	REF	REF	REF	REF	REF	REF	REF	REF	REF	REF	REF	REF	REF	REF	REF	REF	REF	REF	REF	REF	1006144	SCHEMATIC	X
1	1	1	1	1	1	1	1	1	1	1	1	1	1	1	1	1	1	1	1	1	1004603	INSULATOR	24
2	2	2	2	2	2	2	2	2	2	2	2	2	2	2	2	2	2	2	2	2	1004546-3	WASHER, FLAT	23
2	2	2	2	2	2	2	2	2	2	2	2	2	2	2	2	2	2	2	2	2	MS16633-4015	RING, RETAINING, EXTERNAL "E"	22
																				~~2~~	~~MS39086-100~~	~~PIN, SPRING~~	~~21~~
																				~~2~~	~~1004207~~	~~SCREW, EJECTION DRIVE CYLINDER~~	~~20~~
2	2	2	2	2	2	2	2	2	2	2	2	2	2	2	2	2	2	2	2	2	1004579-1	SCREW, JACKING	19
2	2	2	2	2	2	2	2	2	2	2	2	2	2	2	2	2	2	2	2	2	1004546-1	WASHER, FLAT	18
8	8	8	8	8	8	8	8	8	8	8	8	8	8	8	8	8	8	8	8	8	1004237	WASHER, FLAT	17
																				~~2~~	~~1000104-1~~	~~SCREW, FLAT HEAD~~	~~16~~
8	8	8	8	8	8	8	8	8	8	8	8	8	8	8	8	8	8	8	8	8	1006783-11	SCREW, BUTTON HEAD	15
															~~AR~~	~~AR~~	~~AR~~	~~AR~~	~~AR~~	~~AR~~	~~1006275-1~~	~~WIRE ELECTRICAL~~	~~14~~
															~~AR~~	~~AR~~	~~AR~~	~~AR~~	~~AR~~	~~AR~~	~~1006757-1~~	~~WIRE, .010 X .020~~	~~13~~
															~~256~~	~~256~~	~~256~~	~~256~~	~~256~~	~~256~~	~~1006751~~	~~DIODE~~	~~12~~
															~~128~~	~~128~~	~~128~~	~~128~~	~~128~~	~~128~~	~~1006750-39~~	~~RESISTOR, FIXED 2K~~	~~11~~
															~~1~~	~~1~~	~~1~~	~~1~~	~~1~~	~~1~~	~~1003134~~	~~TERMINAL BOARD ASSEMBLY~~	~~10~~
															X	X	X	~~512~~	~~512~~	~~512~~	~~1006258-1~~	~~CORE, MAGNETIC~~	~~9~~
																				~~AR~~	~~1004117~~	~~PLUG, KEYING~~	~~8~~
																				~~1~~	~~1004235-1~~	~~INSULATOR~~	~~7~~
															X	X	X	~~1~~	~~1~~	~~1~~	~~1004235-3~~	~~INSULATOR~~	~~6~~
X	X	X	X	X	X	X	X	X	X	X	X	1	1	X	X	X	X	1	1	1	1003821-011	ROPE MEMORY MODULE SUB ASSY	5
															~~4~~	~~4~~	~~4~~	~~4~~	~~4~~	~~4~~	~~1004233~~	~~HOLDER, CORE~~	~~4~~
															~~1~~	~~1~~	~~1~~	~~1~~	~~1~~	~~1~~	~~1004232~~	~~HOLDER, COMPONENT~~	~~3~~
																				~~1~~	~~1004236~~	~~COVER~~	~~2~~
															~~1~~	~~1~~	~~1~~	~~1~~	~~1~~	~~1~~	~~1003133~~	~~HEADER ASSEMBLY~~	~~1~~
B29	B28	B24	B23	B22	B21	B29	B28	B24	B23	B22	B21	B29	B28	B22	B29	B28	B21	B29	B28	B21		LIST OF MATERIALS	

1003733 K

MASTER

NEXT ASSY	USED ON
1021103	
1021106	
APPLICATION	

UNLESS OTHERWISE SPECIFIED
DIMENSIONS ARE IN INCHES
TOLERANCES ON
FRACTIONS ± DECIMALS ± ANGLES ±
DO NOT SCALE THIS DRAWING
MATERIAL —//—
HEAT TREATMENT —//—
FINAL FINISH —//—

MIT
INSTRUMENTATION LAB
CAMBRIDGE, MASS.
DRAWN DATE
CHECKED
APPROVAL
APPROVAL
NASA APPROVAL
MIT APPROVAL

MANNED SPACECRAFT CENTER
HOUSTON, TEXAS

ROPE MEMORY MODULE ASSEMBLY

CODE IDENT NO. 80230 SIZE J NASA DRAWING NO. 1003733
SCALE 2/1 WT SHEET 1 OF 2

1003733 K	SHEET 1 OF 2

E-2

NOTICE — WHEN GOVERNMENT DRAWINGS, SPECIFICATIONS, OR OTHER DATA ARE USED FOR ANY PURPOSE OTHER THAN IN CONNECTION WITH A DEFINITELY RELATED GOVERNMENT PROCUREMENT OPERATION, THE UNITED STATES GOVERNMENT THEREBY INCURS NO RESPONSIBILITY NOR ANY OBLIGATION WHATSOEVER; AND THE FACT THAT THE GOVERNMENT MAY HAVE FORMULATED, FURNISHED, OR IN ANY WAY SUPPLIED THE SAID DRAWINGS, SPECIFICATIONS, OR OTHER DATA IS NOT TO BE REGARDED BY IMPLICATION OR OTHERWISE AS IN ANY MANNER LICENSING THE HOLDER OR ANY OTHER PERSON OR CORPORATION, OR CONVEYING ANY RIGHTS OR PERMISSION TO MANUFACTURE, USE, OR SELL ANY PATENTED INVENTION THAT MAY IN ANY WAY BE RELATED THERETO.

1003733

H2

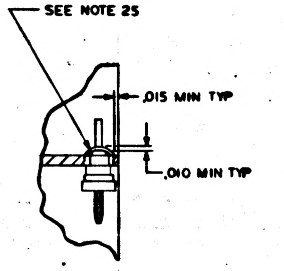

SECTION C-C
SCALE 4/1
88 PLACES

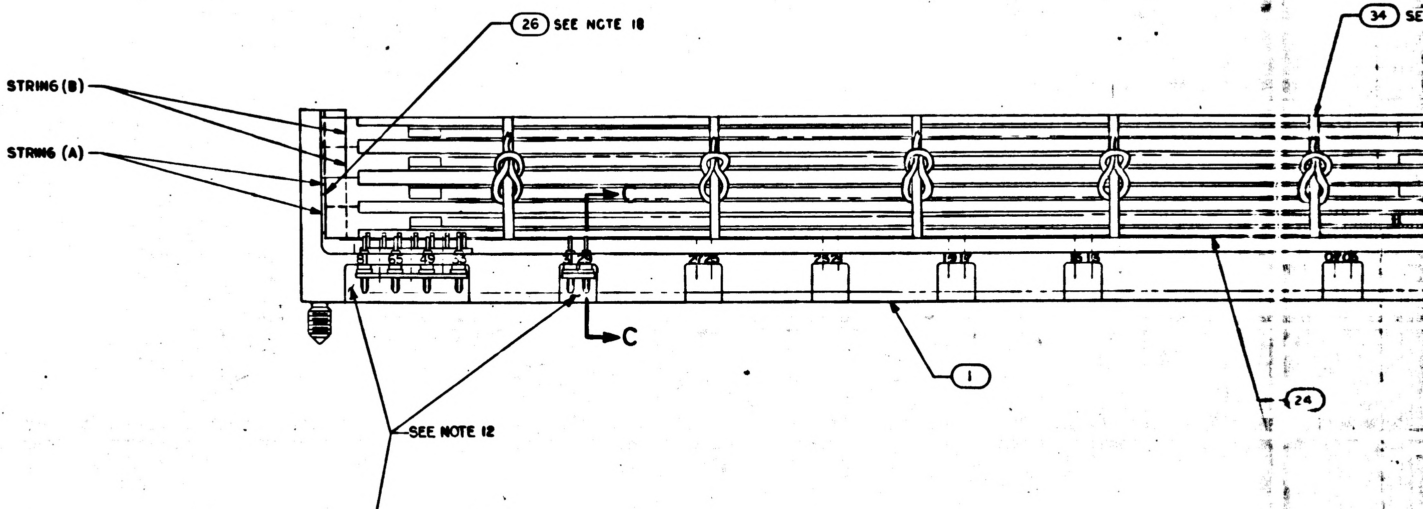

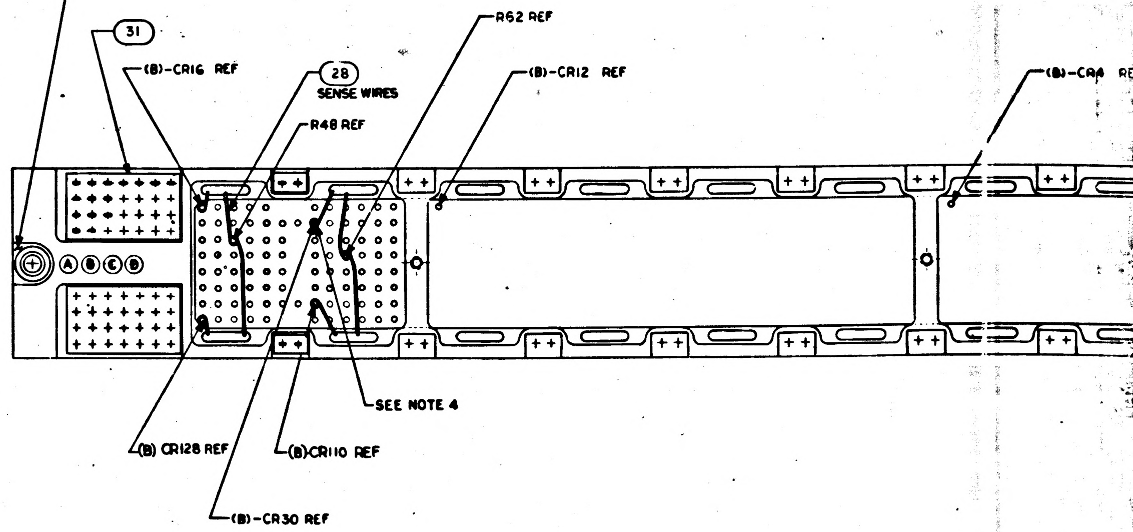

NOTES:

1. INTERPRET DRAWING IN ACCORDANCE WITH STANDARDS PRESCRIBED BY MIL-D-70327
~~2. ALL WELDED CONNECTIONS TO BE MADE PER ND 1002005 & ND 1002003~~
3. WIRE PER ND 1002029
4. ALL SOLDERING CONNECTIONS TO BE MADE PER ND 1002071 USING SOLDER PER ND 1002075 EXCEPT DO NOT TIN LEADS OF FIND NO. 28 AND SOLDER WRAPS TO BE 2-4 TURNS USING FIND NO. 28
~~5. BOND FIND NO. 10 TO FIND NO. 1 PER ND 1002004 TYPE I~~
~~6. BOND FIND NO. 9 OR 33 TO FIND NO. 1 PER ND 1002006 TYPE I~~
~~7. FILL KEYING HOLES AS INDICATED IN CHART WITH THERMALLY CONDUCTIVE EPOXY RESIN ND1002183 DO NOT EVACUATE AFTER FILLING~~
~~8. WHITE DOT DENOTES LEAD TO BE CUT FOR FIRST LEVEL WIRING~~
~~9. BLACK DOT DENOTES LEAD TO BE CUT FOR SECOND LEVEL WIRING~~
~~10. K DENOTES CATHODE SIDE OF DIODE~~
11. AR DENOTES AS REQUIRED
12. INDICATED AREAS TO BE FREE OF ENCAPSULATING COMPOUND
13. ENCAPSULATE MODULE PER ND 1002226 INDICATED AREA ONLY
14. MARK .08/.10 HIGH PER ND 1002019 & ND 1002122, TYPE II, CLASS 2 USING WHITE MARKING INK 1006271-1
15. MARK .24/.26 HIGH PER ND 1002019 & ND 1002122, TYPE II, CLASS 1 USING WHITE MARKING INK 1006271-1
16. MARK APPROPRIATE MODULE NO. IN ACCORDANCE WITH "B" NO. AS SHOWN IN DASH NO. COL IN PARTS LIST
~~17. SELECT FIND NO. 12 NOTED "(A)" AND (B), EXAMPLE (A)-CR6 AND (B)-CR6, PER THE ELECTRICAL REQUIREMENTS: AT A FOWARD CURRENT OF 1.8 ma ± 2%, AND AT A FORWARD CURRENT OF 3.6 MA ± 2% THE VOLTAGE DROP ACROSS BOTH DIODES SHALL BE WITHIN 1 MV OF EACH OTHER~~
18. USE PART OF FIND NO. 26 TO ELIMINATE SPACE BETWEEN CORE HOLDERS AND INSIDE BOTH ENDS OF HEADER
19. ASSEMBLE FIND NO. 15 TO CORE HOLDERS USING MIL-S-22473, GRADE HV
~~20. WIRE PER WIRING DIAGRAM (SEE SHEET 4)~~
~~21. ENCAPSULATE MODULE PER ND1002002 (BLACK POLYURETHANE FOAM) INDICATED AREAS ONLY~~
~~22. MIL-W-3861 TYPE S, 24 AWG AND TINNED~~
23. SENSE LINE WIRING PER MODULE DECK NO. DESIGNATED
~~24. MARK APPLICABLE PROGRAM NUMBER ONLY, DASH NUMBER NOT REQUIRED~~
25. SEAL TERMINALS & INSULATORS TO HEADER PER 10C2226
26. WRAP & TIE AROUND WIRED ASSY APPROXIMATELY AS SHOWN WITH ONE WRAP OF FIND NO. 34

1003733 K
SHEET 1 of 2

1003733 K

SYM	DESCRIPTION	DATE	APPROVAL
A	REVISED PER TDRR 13957	3 Nov 64	
B	REVISED PER TDRR 14343	64	WK
C	REVISED PER TDRR 15537	65	
D	REVISED PER TDRR 16879	65	
E	REVISED PER TDRR 17264	65	
F	REVISED PER TDRR		WK
G	REVISED PER TDRR 18697		
H	REVISED PER TDRR 23139	15 Sept 65	
J	REVISED PER TDRR 23952	15 Jan 66	WK
K	REVISED PER TDRR 25158	15 Jan 66	WK

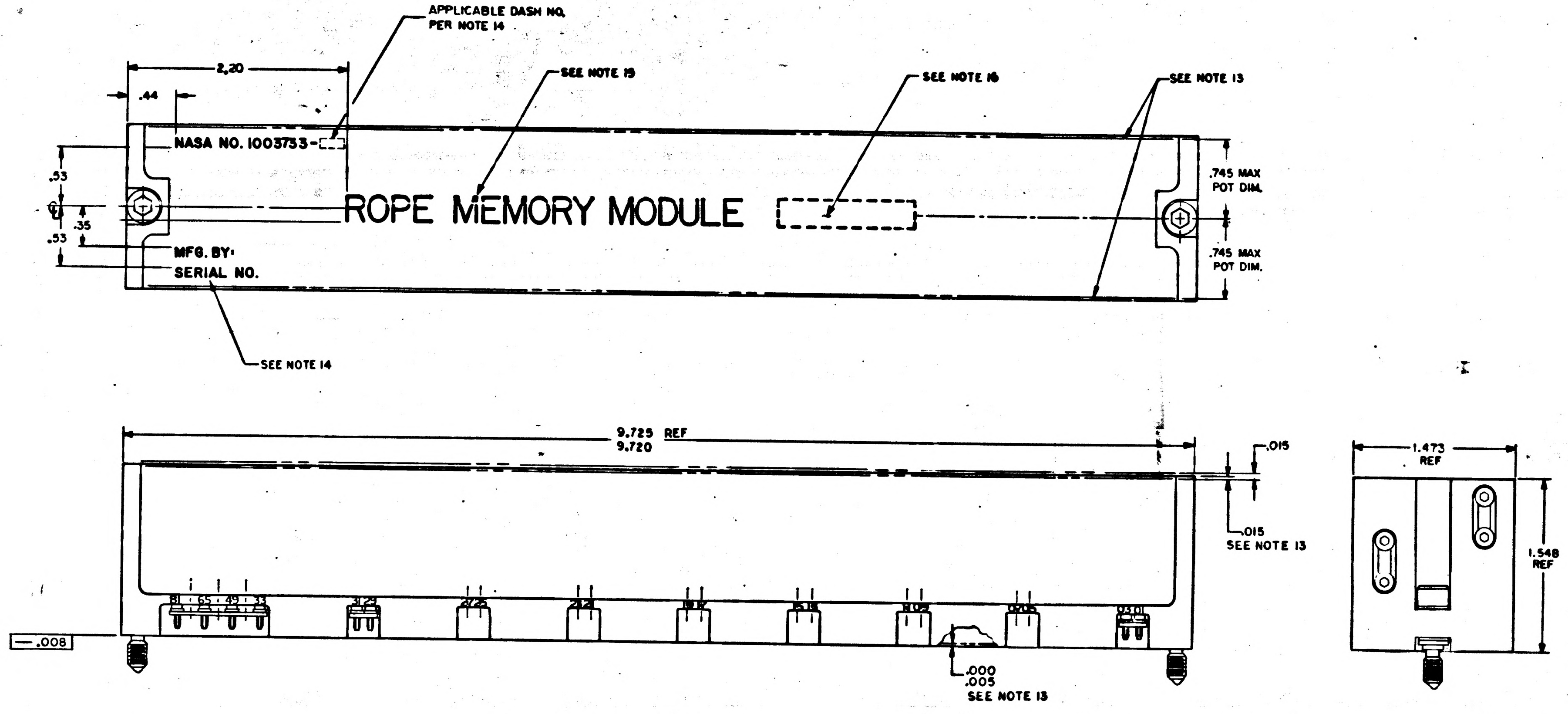
APPLICABLE DASH NO. PER NOTE 14
2.20
.44
SEE NOTE 19
SEE NOTE 16
SEE NOTE 13
NASA NO. 1003733-
.53
.35
.53
ROPE MEMORY MODULE
MFG. BY:
SERIAL NO.
.745 MAX POT DIM.
.745 MAX POT DIM.
SEE NOTE 14
9.725 REF
9.720
.015
.015 SEE NOTE 13
.008
81
65
49
33
31
25
27
23
21
17
.000
.005
SEE NOTE 13
1.473 REF
1.548 REF

MARKING & POTTING VIEW

MASTER

QTY REQD	PART OR IDENTIFYING NO.	NOMENCLATURE OR DESCRIPTION	FIND NO.

LIST OF MATERIALS

NEXT ASSY	USED ON
APPLICATION	

UNLESS OTHERWISE SPECIFIED
DIMENSIONS ARE IN INCHES
TOLERANCES ON
FRACTIONS ± DECIMALS ±.02 ANGLES ±
DO NOT SCALE THIS DRAWING
MATERIAL #
HEAT TREATMENT #
FINAL FINISH #

MIT
INSTRUMENTATION LAB
CAMBRIDGE, MASS
DWG. NO. CONTRACT
DRAWN DATE
CHECKED
APPROVAL
APPROVAL 29 Sept 64
NASA APPROVAL
MIT APPROVAL

MANNED SPACECRAFT CENTER
HOUSTON, TEXAS

ROPE MEMORY MODULE ASSEMBLY

CODE IDENT NO. 80230
SIZE J
NASA DRAWING NO. 1003733
SCALE 2/1
WT
SHEET 2 OF 2

1003733 K

24

1003733 K SHEET 2 of 2

E-2

NOTICE — WHEN GOVERNMENT DRAWINGS, SPECIFICATIONS, OR OTHER DATA ARE USED FOR ANY PURPOSE OTHER THAN IN CONNECTION WITH A DEFINITELY RELATED GOVERNMENT PROCUREMENT OPERATION THE UNITED STATES GOVERNMENT THEREBY INCURS NO RESPONSIBILITY NOR ANY OBLIGATION WHATSOEVER; AND THE FACT THAT THE GOVERNMENT MAY HAVE FORMULATED, FURNISHED, OR IN ANY WAY SUPPLIED THE SAID DRAWINGS, SPECIFICATIONS OR OTHER DATA IS NOT TO BE REGARDED BY IMPLICATION OR OTHERWISE AS IN ANY MANNER LICENSING THE HOLDER OR ANY OTHER PERSON OR CORPORATION, OR CONVEYING ANY RIGHTS OR PERMISSION TO MANUFACTURE, USE, OR SELL ANY PATENTED INVENTION THAT MAY IN ANY WAY BE RELATED THERETO.

1003733

K2

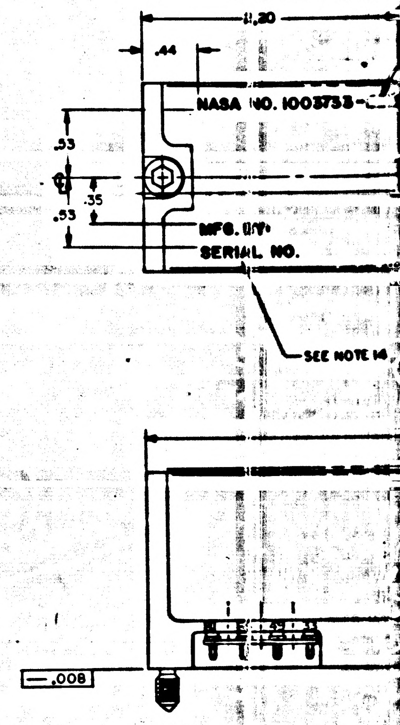

1003733 K SHEET 2 OF 2

1003733 L

SYM	DESCRIPTION	DATE	APPROVAL
A	REVISED PER TDRR 13987	3 NOV 64	
B	REVISED PER TDRR 14343	64	
C	REVISED PER TDRR 15537		
D	REVISED PER TDRR 16879	65	
E	REVISED PER TDRR 17264	3/17/65	
F	REVISED PER TDRR 18040		
G	REVISED PER TDRR 18697		
H	REVISED PER TDRR 23139		
J	REVISED PER TDRR 23952		
K	REVISED PER TDRR 25158		
L	REVISED PER TDRR 27076		

REVISIONS 13/28

D

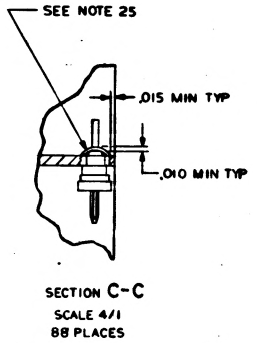

SECTION C-C
SCALE 4/1
88 PLACES

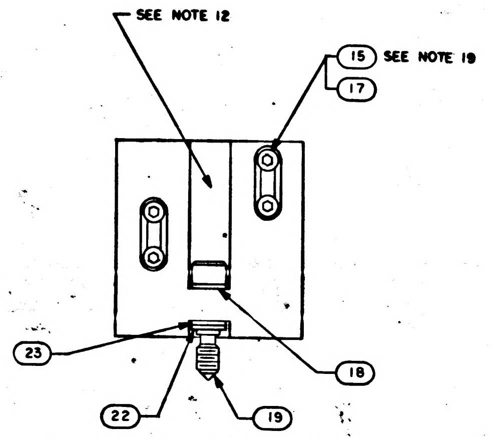

VIEW A-A

C

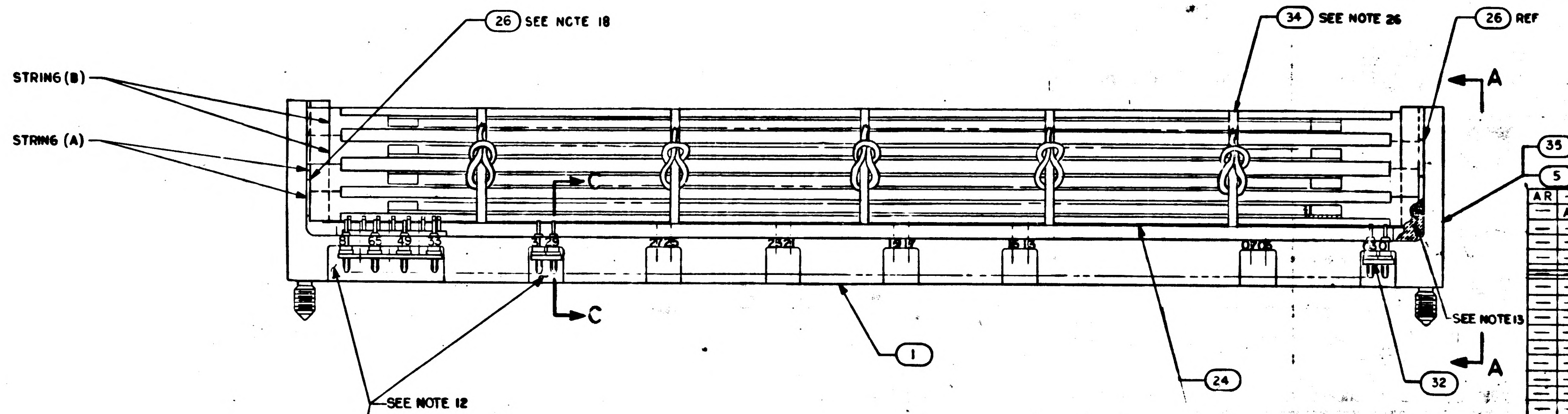

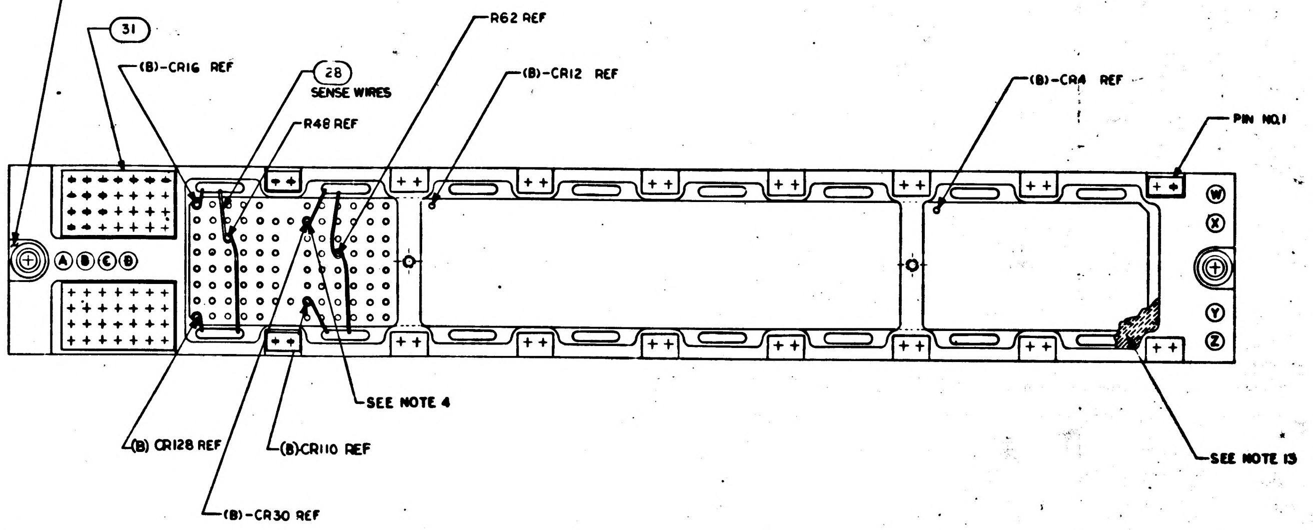

241	231	221	211	191	181	171	161	151	141	131	121	111	091	081	071	061	051	041	031	021	QTY 011	PART OR IDENTIFYING NO.	NOMENCLATURE OR DESCRIPTION	FIND NO.
AR	—	—	—	—	—	—	—	—	—	—	—	—	—	—	—	—	—	—	—	—	—	SEE NOTE 23	MODULE DECK NO. 0036	REF
—	AR	—	—	—	—	—	—	—	—	—	—	—	—	—	—	—	—	—	—	—	—	SEE NOTE 23	MODULE DECK NO. 0035	REF
—	—	AR	—	—	—	—	—	—	—	—	—	—	—	—	—	—	—	—	—	—	—	SEE NOTE 23	MODULE DECK NO. 0034	REF
—	—	—	AR	—	—	—	—	—	—	—	—	—	—	—	—	—	—	—	—	—	—	SEE NOTE 23	MODULE DECK NO. 0033	REF
—	—	—	—	AR	—	—	—	—	—	—	—	—	—	—	—	—	—	—	—	—	—	SEE NOTE 23	MODULE DECK NO. 0032	REF
—	—	—	—	—	~~AR~~	—	—	—	—	—	—	—	—	—	—	—	—	—	—	—	—	~~SEE NOTE 23~~	~~MODULE DECK NO. 0031~~	~~REF~~
—	—	—	—	—	—	AR	—	—	—	—	—	—	—	—	—	—	—	—	—	—	—	SEE NOTE 23	MODULE DECK NO. 0030	REF
—	—	—	—	—	—	—	AR	—	—	—	—	—	—	—	—	—	—	—	—	—	—	SEE NOTE 23	MODULE DECK NO. 0029	REF
—	—	—	—	—	—	—	—	AR	—	—	—	—	—	—	—	—	—	—	—	—	—	SEE NOTE 23	MODULE DECK NO. 0028	REF
—	—	—	—	—	—	—	—	—	AR	—	—	—	—	—	—	—	—	—	—	—	—	SEE NOTE 23	MODULE DECK NO. 0027	REF
—	—	—	—	—	—	—	—	—	—	AR	—	—	—	—	—	—	—	—	—	—	—	SEE NOTE 23	MODULE DECK NO. 0026	REF
—	—	—	—	—	—	—	—	—	—	—	AR	—	—	—	—	—	—	—	—	—	—	SEE NOTE 23	MODULE DECK NO. 0025	REF
—	—	—	—	—	—	—	—	—	—	—	—	AR	—	—	—	—	—	—	—	—	—	SEE NOTE 23	MODULE DECK NO. 0024	REF
—	—	—	—	—	—	—	—	—	—	—	—	—	AR	—	—	—	—	—	—	—	—	SEE NOTE 23	MODULE DECK NO. 0022	REF
—	—	—	—	—	—	—	—	—	—	—	—	—	—	AR	—	—	—	—	—	—	—	SEE NOTE 23	MODULE DECK NO. 0021	REF
—	—	—	—	—	—	—	—	—	—	—	—	—	—	—	AR	—	—	—	—	—	—	SEE NOTE 23	MODULE DECK NO. 0023	REF
1	1	1	1	1	1	1	1	1	1	1	1	1	X	X	1	1	1	1	X	X	X	1003821-021	ROPE MEMORY MODULE SUBASSY	35
AR	AR	AR	AR	AR	AR	AR	AR	AR	AR	AR	AR	AR	AR	AR	AR	AR	AR	AR	AR	AR	AR	1012507-003	TAPE LACING	34
																~~512~~	~~512~~	~~512~~	X	X	X	~~1006320~~	~~CORE, MAGNETIC~~	~~33~~
—	—	—	—	—	—	—	—	—	—	—	—	—	—	—	—	AR	—	—	AR	—	—	SEE NOTE 23	MODULE DECK NO. 0018	REF
—	—	—	—	—	—	—	—	—	—	—	—	—	—	—	—	—	AR	—	—	AR	—	SEE NOTE 23	MODULE DECK NO. 0020	REF
—	—	—	—	—	—	—	—	—	—	—	—	—	—	—	—	—	—	AR	—	—	AR	SEE NOTE 23	MODULE DECK NO. 0019	REF
16	16	16	16	16	16	16	16	16	16	16	16	16	16	16	16	16	16	16	16	16	16	1004727	GASKET ROPE MODULE	32
2	2	2	2	2	2	2	2	2	2	2	2	2	2	2	2	2	2	2	2	2	2	1004726	GASKET ROPE MODULE	31
																					X	~~SEE NOTE 22~~	~~WIRE, ELECTRICAL~~	~~30~~
																					X	~~NAS-1291-24-9~~	~~WIRE, ELECTRICAL~~	~~29~~
AR	AR	AR	AR	AR	AR	AR	AR	AR	AR	AR	AR	AR	AR	AR	AR	AR	AR	AR	AR	AR	AR	1006275-2	WIRE, ELECTRICAL	28
																~~2~~	~~2~~	~~2~~	~~2~~	~~2~~	~~2~~	~~1000093-2~~	~~SCREW, BUTTON HD~~	~~27~~
AR	AR	AR	AR	AR	AR	AR	AR	AR	AR	AR	AR	AR	AR	AR	AR	AR	AR	AR	AR	AR	AR	1004623-2	SHIM	26
																~~AR~~	~~AR~~	~~AR~~	~~AR~~	~~AR~~	~~AR~~	~~1006776-22~~	~~SLEEVING~~	~~25~~
REF	REF	REF	REF	REF	REF	REF	REF	REF	REF	REF	REF	REF	REF	REF	REF	REF	REF	REF	REF	REF	REF	1006144	SCHEMATIC	X
1	1	1	1	1	1	1	1	1	1	1	1	1	1	1	1	1	1	1	1	1	1	1004603	INSULATOR	24
2	2	2	2	2	2	2	2	2	2	2	2	2	2	2	2	2	2	2	2	2	2	1004546-3	WASHER, FLAT	23
2	2	2	2	2	2	2	2	2	2	2	2	2	2	2	2	2	2	2	2	2	2	MS16633-4015	RING, RETAINING, EXTERNAL "E"	22
																					~~2~~	~~MS39086-100~~	~~PIN, SPRING~~	~~21~~
																					~~2~~	~~1004207~~	~~SCREW, EJECTION DRIVE CYLINDER~~	~~20~~
2	2	2	2	2	2	2	2	2	2	2	2	2	2	2	2	2	2	2	2	2	2	1004579-1	SCREW, JACKING	19
2	2	2	2	2	2	2	2	2	2	2	2	2	2	2	2	2	2	2	2	2	2	1004546-1	WASHER, FLAT	18
8	8	8	8	8	8	8	8	8	8	8	8	8	8	8	8	8	8	8	8	8	8	1004237	WASHER, FLAT	17
																					~~2~~	~~1000104-1~~	~~SCREW, FLAT HEAD~~	~~16~~
8	8	8	8	8	8	8	8	8	8	8	8	8	8	8	8	8	8	8	8	8	8	1006783-11	SCREW, BUTTON HEAD	15
																~~AR~~	~~AR~~	~~AR~~	~~AR~~	~~AR~~	~~AR~~	~~1006275-1~~	~~WIRE, ELECTRICAL~~	~~14~~
																~~AR~~	~~AR~~	~~AR~~	~~AR~~	~~AR~~	~~AR~~	~~1006757-1~~	~~WIRE, .010 X .020~~	~~13~~
																~~256~~	~~256~~	~~256~~	~~256~~	~~256~~	~~256~~	~~1006751~~	~~DIODE~~	~~12~~
																~~128~~	~~128~~	~~128~~	~~128~~	~~128~~	~~128~~	~~1006750-39~~	~~RESISTOR, FIXED 2K~~	~~11~~
																~~1~~	~~1~~	~~1~~	~~1~~	~~1~~	~~1~~	~~1003134~~	~~TERMINAL BOARD ASSEMBLY~~	~~10~~
																X	X	X	~~512~~	~~512~~	~~512~~	~~1006298-1~~	~~CORE, MAGNETIC~~	~~9~~
																					~~AR~~	~~1004117~~	~~PLUG, KEYING~~	~~8~~
																					~~1~~	~~1004235-1~~	~~INSULATOR~~	~~7~~
																X	X	X	~~1~~	~~1~~	~~1~~	~~1004235-3~~	~~INSULATOR~~	~~6~~
X	X	X	X	X	X	X	X	X	X	X	X	X	1	1	X	X	X	X	1	1	1	1003821-011	ROPE MEMORY MODULE SUB ASSY	5
																~~4~~	~~4~~	~~4~~	~~4~~	~~4~~	~~4~~	~~1004233~~	~~HOLDER, CORE~~	~~4~~
																~~1~~	~~1~~	~~1~~	~~1~~	~~1~~	~~1~~	~~1004232~~	~~HOLDER, COMPONENT~~	~~3~~
																					~~1~~	~~1004236~~	~~COVER~~	~~2~~
																~~1~~	~~1~~	~~1~~	~~1~~	~~1~~	~~1~~	~~1003133~~	~~HEADER ASSEMBLY~~	~~1~~
B22	B29	B28	B24	B23	B22	B21	B29	B28	B24	B23	B22	B21	B29	B28	B22	B29	B28	B21	B29	B28	B21	LIST OF MATERIALS		

B

A

1003733 L

MASTER

NEXT ASSY	USED ON
1021103	
1021106	
APPLICATION	

UNLESS OTHERWISE SPECIFIED
DIMENSIONS ARE IN INCHES
TOLERANCES ON
FRACTIONS ± DECIMALS ± ANGLES ±
DO NOT SCALE THIS DRAWING
MATERIAL —//—
HEAT TREATMENT —//—
FINAL FINISH —//—

MIT
INSTRUMENTATION LAB
CAMBRIDGE, MASS
DRAWN DATE
CHECKED
APPROVAL
APPROVAL
NASA APPROVAL
MIT APPROVAL

MANNED SPACECRAFT CENTER
HOUSTON, TEXAS

ROPE MEMORY MODULE ASSEMBLY

CODE IDENT NO. 80230
SIZE J
NASA DRAWING NO. 1003733
SCALE 2/1
WT
SHEET 1 OF 2

1003733

H2

NOTICE — WHEN GOVERNMENT DRAWINGS, SPECIFICATIONS, OR OTHER DATA ARE USED FOR ANY PURPOSE OTHER THAN IN CONNECTION WITH A DEFINITELY RELATED GOVERNMENT PROCUREMENT OPERATION THE UNITED STATES GOVERNMENT THEREBY INCURS NO RESPONSIBILITY NOR ANY OBLIGATION WHATSOEVER; AND THE FACT THAT THE GOVERNMENT MAY HAVE FORMULATED, FURNISHED, OR IN ANY WAY SUPPLIED THE SAID DRAWINGS, SPECIFICATIONS OR OTHER DATA IS NOT TO BE REGARDED BY IMPLICATION OR OTHERWISE AS IN ANY MANNER LICENSING THE HOLDER OR ANY OTHER PERSON OR CORPORATION, OR CONVEYING ANY RIGHTS OR PERMISSION TO MANUFACTURE, USE, OR SELL ANY PATENTED INVENTION THAT MAY IN ANY WAY BE RELATED THERETO

D

C

B

A

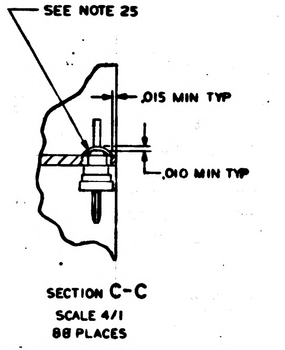

SECTION C-C
SCALE 4/1
88 PLACES

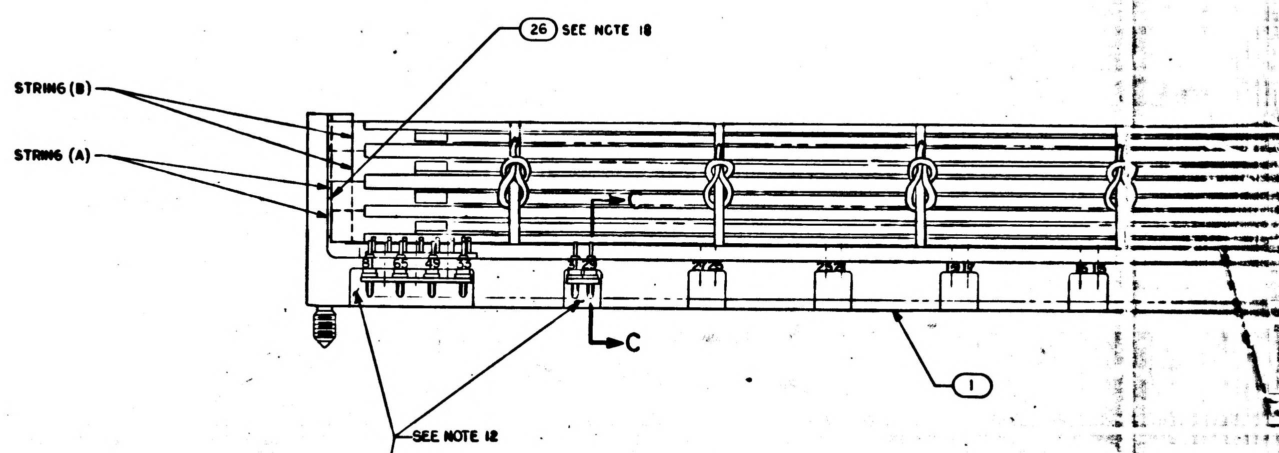

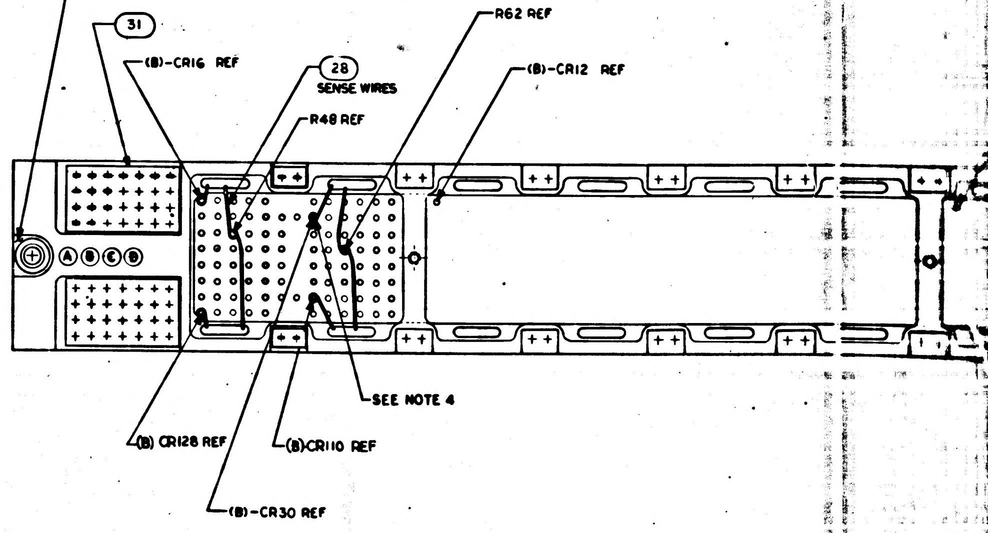

NOTES:

1. INTERPRET DRAWING IN ACCORDANCE WITH STANDARDS PRESCRIBED BY MIL-D-70327
~~2. ALL WELDED CONNECTIONS TO BE MADE PER ND 1002005 & ND 1002003~~
3. WIRE PER ND 1002029
4. ALL SOLDERING CONNECTIONS TO BE MADE PER ND 1002071 USING SOLDER PER ND1002075 EXCEPT DO NOT TIN LEADS OF FIND NO. 28 AND SOLDER WRAPS TO BE 2-4 TURNS USING FIND NO. 28
~~5. BOND FIND NO. 10 TO FIND NO. 1 PER ND 1002004 TYPE I~~
~~6. BOND FIND NO. 5 OR 33 TO FIND NO. 1 PER ND 1002004 TYPE I~~
~~7. FILL KEYING HOLES AS INDICATED IN CHART WITH THERMALLY CONDUCTIVE EPOXY RESIN ND100[illegible] DO NOT EVACUATE AFTER FILLING~~
~~8. WHITE DOT DENOTES LEAD TO BE CUT FOR FIRST LEVEL WIRING~~
~~9. BLACK DOT DENOTES LEAD TO BE CUT FOR SECOND LEVEL WIRING~~
~~10. K DENOTES CATHODE SIDE OF DIODE~~
11. AR DENOTES AS REQUIRED
12. INDICATED AREAS TO BE FREE OF ENCAPSULATING COMPOUND
13. ENCAPSULATE MODULE PER ND 1002226 INDICATED AREA ONLY
14. MARK .08/.10 HIGH PER ND 1002019 & ND 1002122, TYPE II, CLASS 2 USING WHITE MARKING INK 1006271-1
15. MARK .24/.26 HIGH PER ND 1002019 & ND 1002122, TYPE II, CLASS 1 USING WHITE MARKING INK 1006271-1
16. MARK APPROPRIATE MODULE NO. IN ACCORDANCE WITH "B" NO. AS SHOWN IN DASH NO. COL IN PARTS LIST
~~17. SELECT FIND NO. 12 NOTED "(A)" AND "(B)", EXAMPLE (A)-CR6 AND (B)-CR6, PER THE ELECTRICAL REQUIREMENTS: AT A FOWARD CURRENT OF 1.8 ma ± 2%, AND AT A FORWARD CURRENT OF 3.6 MA ± 2% THE VOLTAGE DROP ACROSS BOTH DIODES SHALL BE WITHIN [illegible] MV OF EACH OTHER~~
18. USE PART OF FIND NO. 26 TO ELIMINATE SPACE BETWEEN CORE HOLDERS AND INSIDE BOTH ENDS OF HEADER
19. ASSEMBLE FIND NO. 15 TO CORE HOLDERS USING MIL-S-22473, GRADE HV
~~20. WIRE PER WIRING DIAGRAM (SEE SHEET 4)~~
~~21. ENCAPSULATE MODULE PER ND1002002 (BLACK POLYURETHANE FOAM) INDICATED AREAS ONLY~~
~~22. MIL-W-[illegible] TYPE S, 24AWG AND TINNED~~
23. SENSE LINE WIRING PER MODULE DECK NO. DESIGNATED
~~24. MARK APPLICABLE PROGRAM NUMBER ONLY, DASH NUMBER NOT REQUIRED~~
25. SEAL TERMINALS & INSULATORS TO HEADER PER 1002226
26. WRAP & TIE AROUND WIRED ASSY APPROXIMATELY AS SHOWN WITH ONE WRAP OF FIND NO. 34

1003733 K

SYM	DESCRIPTION	DATE	APPROVAL
A	REVISED PER TDRR 13987	[illegible] 64	[illegible]
B	REVISED PER TDRR 14343	[illegible] 64	WK
C	REVISED PER TDRR 15537	[illegible] 65	[illegible]
D	REVISED PER TDRR 16879	[illegible] 65	[illegible]
E	REVISED PER TDRR 17264	[illegible]/65	[illegible]
F	REVISED PER TDRR [illegible]		WK
G	REVISED PER TDRR 18697	[illegible] 65	[illegible]
H	REVISED PER TDRR 23139	[illegible]	[illegible]
J	REVISED PER TDRR 23952	[illegible]	WK
K	REVISED PER TDRR 25158	[illegible]	WK
L	REVISED PER TDRR 27076	[illegible]/66	WK

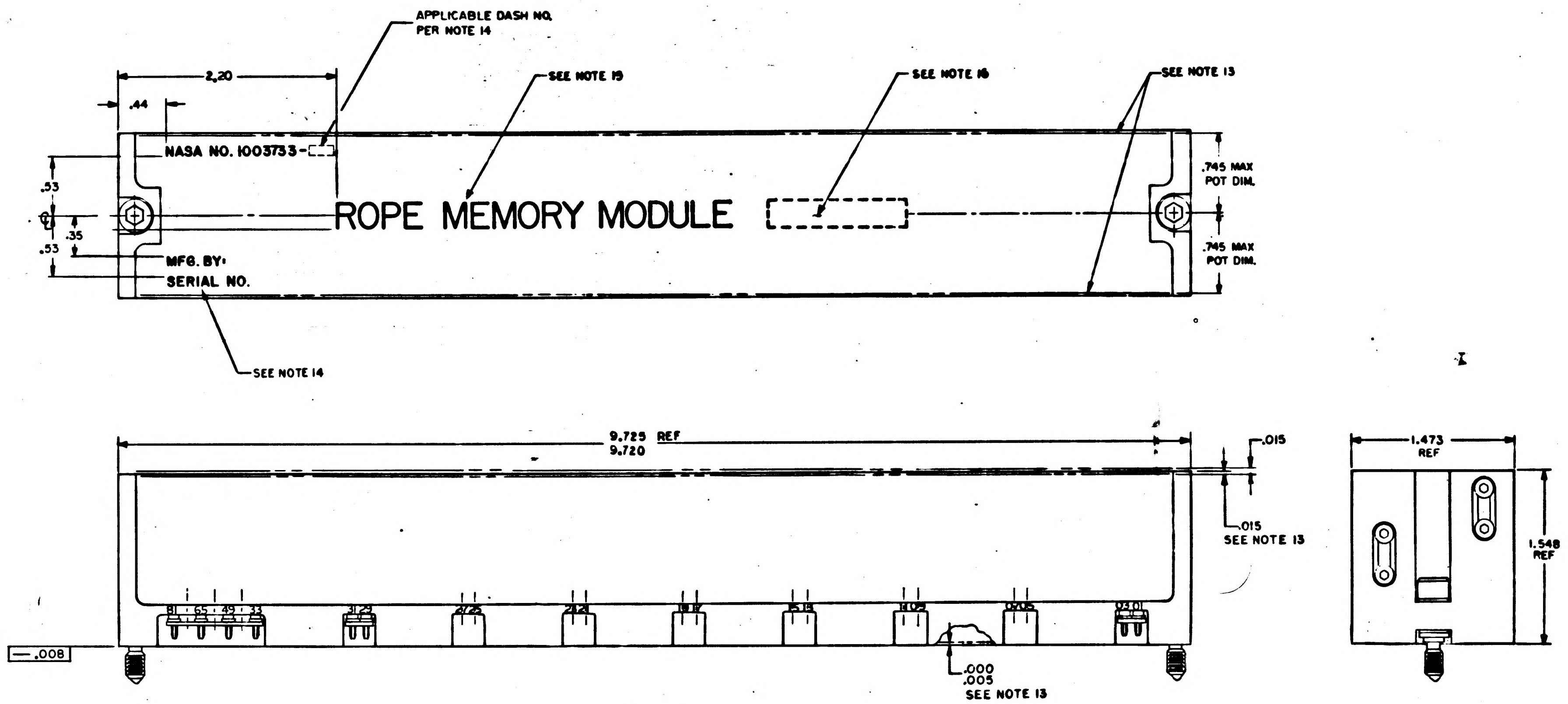
APPLICABLE DASH NO.
PER NOTE 14
SEE NOTE 19
SEE NOTE 16
SEE NOTE 13
2.20
.44
NASA NO. 1003733-
ROPE MEMORY MODULE
MFG. BY:
SERIAL NO.
.53
.35
.53
.745 MAX
POT DIM.
.745 MAX
POT DIM.
SEE NOTE 14
9.725 REF
9.720
.015
.015
SEE NOTE 13
81
65
49
33
.008
.000
.005
SEE NOTE 13
1.473
REF
1.548
REF

MARKING & POTTING VIEW

QTY REQD	PART OR IDENTIFYING NO	NOMENCLATURE OR DESCRIPTION	FIND NO.

LIST OF MATERIALS

NEXT ASSY	USED ON
APPLICATION	

UNLESS OTHERWISE SPECIFIED
DIMENSIONS ARE IN INCHES
TOLERANCES ON
FRACTIONS ± DECIMALS ±.02 ANGLES ±
DO NOT SCALE THIS DRAWING
MATERIAL —
HEAT TREATMENT —
FINAL FINISH —

MIT
INSTRUMENTATION LAB
CAMBRIDGE, MASS.
DRAWN Nessums DATE
CHECKED
APPROVAL E. J. [illegible]
APPROVAL [illegible] 28 Sept 64
NASA APPROVAL [illegible]
MIT APPROVAL [illegible]

MANNED SPACECRAFT CENTER
HOUSTON, TEXAS

ROPE MEMORY MODULE
ASSEMBLY

CODE IDENT NO. 80230
SIZE J
NASA DRAWING NO. 1003733
SCALE 2/1
WT
SHEET 2 OF 2

1003733 L SHEET 2 OF 2

1003733 L

24

F-2

NOTICE — WHEN GOVERNMENT DRAWINGS, SPECIFICATIONS, OR OTHER DATA ARE USED FOR ANY PURPOSE OTHER THAN IN CONNECTION WITH A DEFINITELY RELATED GOVERNMENT PROCUREMENT OPERATION, THE UNITED STATES GOVERNMENT THEREBY INCURS NO RESPONSIBILITY NOR ANY OBLIGATION WHATSOEVER; AND THE FACT THAT THE GOVERNMENT MAY HAVE FORMULATED, FURNISHED, OR IN ANY WAY SUPPLIED THE SAID DRAWINGS, SPECIFICATIONS, OR OTHER DATA IS NOT TO BE REGARDED BY IMPLICATION OR OTHERWISE AS IN ANY MANNER LICENSING THE HOLDER OR ANY OTHER PERSON OR CORPORATION, OR CONVEYING ANY RIGHTS OR PERMISSION TO MANUFACTURE, USE, OR SELL ANY PATENTED INVENTION THAT MAY IN ANY WAY BE RELATED THERETO.

1003733

μ2

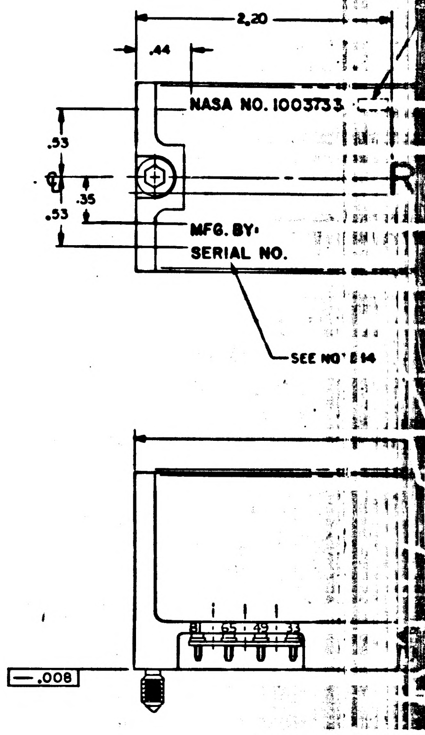

R.H.

1003733 L SHEET 2 OF 2

APOLLO G&N Specification
PS 1003733
Original Issue Date: 3/9/65
Release Authority: TDRR 17259
Class A Release

PROCUREMENT SPECIFICATION

FOR

ROPE MODULES B21 thru 24, B28 and B29

Record of Revisions

Date	Revision Letter	TDRR No.	Pages Revised	Approvals	
				MIT	NASA

This specification consists of pages 1 to 11 inclusive.

APPROVALS	3/8/65 NASA/MSC	Z C Hall 3/8/65 MIT/IL	BC D 2/4/65 2/5/65 Feb. 3 1965 RAY 2-4-65

PUBLICATIONS

NASA -

NPC 200-2	Quality Program Provisions for Space System Contractors
FTM 1003733	Final Test Methods for the Rope Modules B21 thru B24, B28 and B29

2.2 Conflicting Requirements. In the event of conflict between the requirements of the contract, this document, and the documents listed in this section, the requirements of the contract, this document and the documents listed in this section shall govern, in that order.

3. REQUIREMENTS

3-1 DESCRIPTION. The Rope Modules B21 thru B24, B28 and B29, individually consist of 512 cores which are threaded or bypassed by set, reset, inhibit and sense lines in such a manner that the same information wired into the cores is always available when the core is set.

3-2 GENERAL REQUIREMENTS

3-2.1 Qualification Test. A representative sample of the module shall be manufactured using the methods and procedures proposed for the production lot. These shall be submitted to the NASA Inspector for qualification test at an activity designated in the contract or by the procuring activity.

These qualification tests are conducted to determine whether or not the module is being produced in compliance with the requirements of the contract, specifications, and drawings. Failure of the module to meet these requirements may result in disqualification of the contractor as determined by NASA or the procuring activity.

Further production of the item by the contractor prior to approval of the procuring activity or the completion of the preproduction tests shall be at the contractor's risk. Requalification will be required at the discretion of NASA or the procuring activity in the event that: (a) the contractor has modified the item (b) the contractor has instituted a change in the material used or in his processing, or (c) the specification requirements for the item have been amended or revised sufficiently to affect the character of the item.

3-3.1 Functional Requirements. The module shall meet the following requirements under the conditions as specified below.

3-3.1.1 The module shall be exercised by a programmed tape and in conjunction with the following modules; Rope Sense Amplifiers B26 and B27, Rope Driver B32 and B33, Rope Strand Select B30, Strand Gate B31 and the Driver Service Module B7. The programmed tape shall generate inputs and verify that the core ropes are set, reset, inhibited, and sensed in a manner compatible with the programmed instructions.

3-3.1.2 The input signals shall have the following characteristics. See Figure 1.

	Parity & Inhibit Input *	Strobe Input
Amplitude (A)	225 ma ± 10%	NLT 0.5V
Rise Time (tr)	NMT 2.1 usec	--------
Fall Time (tf)	NMT 0.1 usec	--------
Pulse Width (PW)	5.7 usec ± 10%	1.0 usec ± 10%
Period (T)	MCT_1 16.4 usec ± 10%	--------------
	MCT_2 33.0 usec ± 10%	--------------
TD1	--------------------	3.2 usec ± 10%

	Set Input	Reset Input
Amplitude (A)	400 ma ± 10%	350 ma ± 10%
Rise Time (tr)	1.6 ± 0.4 usec	NMT 1.6 usec
Fall Time (tf)	NMT 0.5 usec	0.1 usec ± 10%
Pulse Width (PW)	4.0 usec ± 10%	4.0 usec ± 10%
TD2	2.0 usec ± 50%	--------------
TD3	--------------	6.0 usec ± 10%

* Parity and Inhibit inputs shall start NMT 0.1 usec apart.

3-3.1.3 The output signals shall have the following characteristics on Sense lines Parity thru Sign. See Figure 2.

a)	V1 Max	NMT 130 mv
b)	V1 Min	NLT 40 mv
c)	V0 Max	NMT 10 mv

3-3.2 Environmental Requirements. V0 Max shall be not more than 10 millivolts at 0° ± 2°C and not more than 13 millivolts at 70° ± 2°C when the module is subjected to these temperatures and stabilized at these temperatures for not less than 20 minutes.

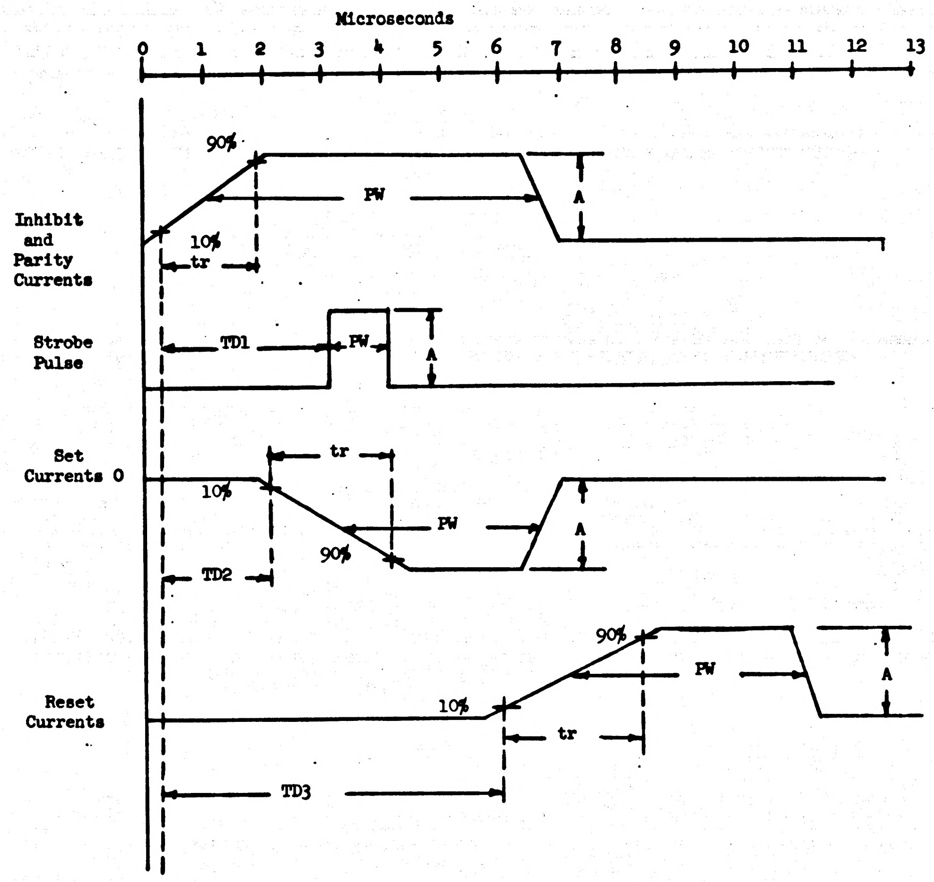
Microseconds
0
1
2
3
4
5
6
7
8
9
10
11
12
13
Inhibit and Parity Currents
90%
10%
tr
PW
A
Strobe Pulse
TD1
PW
A
Set Currents 0
tr
10%
90%
PW
A
TD2
Reset Currents
90%
10%
PW
tr
A
TD3

Rope Module Input Current Requirements

Figure #1

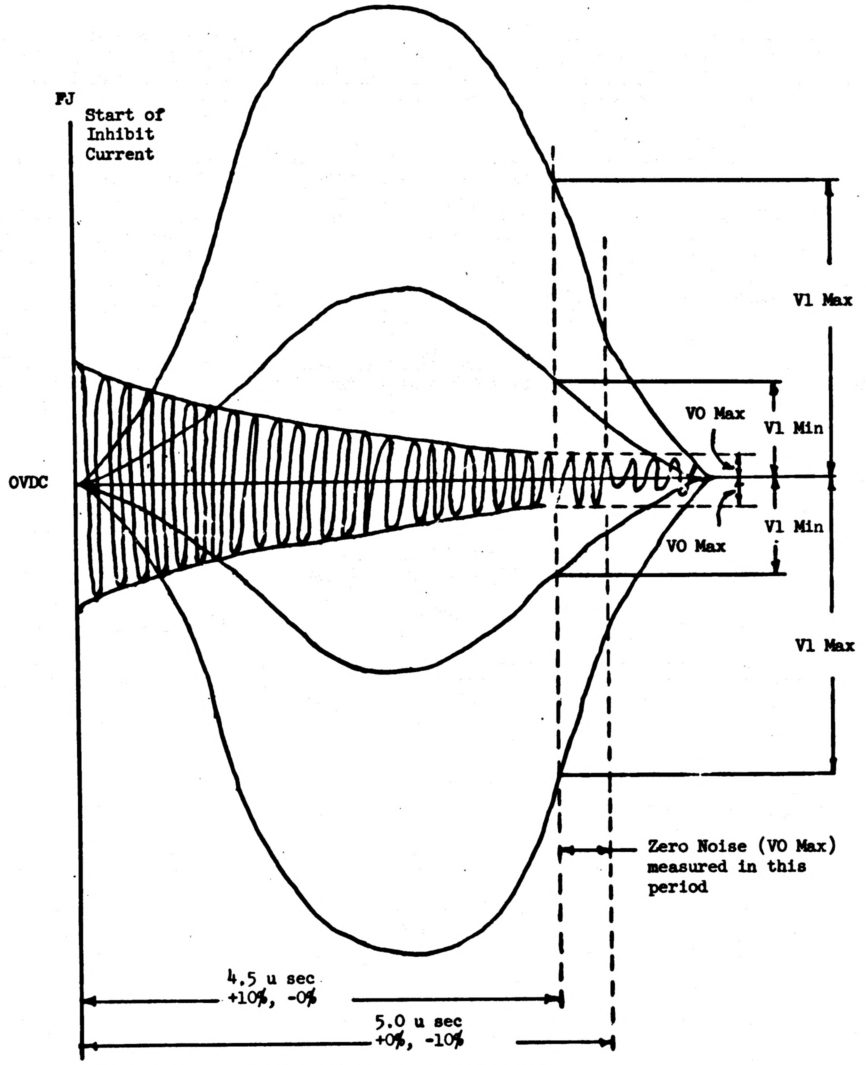
FJ
Start of
Inhibit
Current
OVDC
V1 Max
VO Max
V1 Min
VO Max
V1 Min
V1 Max
Zero Noise (VO Max)
measured in this
period
4.5 u sec
+10%, -0%
5.0 u sec
+0%, -10%

FIGURE #2 ROPE OUTPUT WAVEFORM CHARACTERISTICS

3-3.3 Service Life. The module design is intended to meet the following requirements.

3-3.3.1 Operating Life. The module is intended to meet performance specifications for at least 2000 hours operation, excluding the contractor's test time of the complete unit.

3-3.3.2 Shelf Life. The module is intended to have a shelf life of at least 3 years, without operation, at ambient room temperature after final acceptance at the contractor's plant when packaged in accordance with ND 1002214.

3-3.4 Design Characteristics

3-3.4.1 Interchangeability. Unless otherwise specified, the module shall be physically and functionally interchangeable without selection or fitting.

3-3.4.2 Reliability. The module shall be capable of meeting a maximum failure rate of 4.53 failures per million hours at a 90 percent confidence level.

4. QUALITY ASSURANCE PROVISIONS

4-1 GENERAL. Unless otherwise specified herein, the contractor is responsible for the performance of all inspection requirements prior to submission for NASA inspection and acceptance. Except as otherwise specified, the contractor may utilize his own facilities or any commercial laboratory acceptable to NASA. Inspection records of the examinations and tests shall be kept complete and available to NASA as specified in the contract or order.

4-1.1 Acceptance Tests. These tests shall be accomplished on each module being submitted for acceptance under the contract. Acceptance test data on each unit accepted must accompany shipment to the procuring activity. Acceptance tests shall be witnessed by the cognizant government inspector, a representative of the procuring activity, or as the procuring activity may direct in the procurement order. These tests are detailed in paragraph 4-2. Failure of the module to comply with these requirements shall result in rejection of the item or lot of items.

4-1.1.1 **NASA Acceptance Inspection.** The NASA acceptance inspection will be in accordance with FTM 1003133 for the Rope Modules B21 thru B24, B28 and B29.

4-1.2 Qualification and Requalification Tests. Qualification and Requalification tests shall be at a NASA-designated activity in accordance with NASA Document NPC 200-2, Quality Program Provisions for Space System Contractors, and such other documents as may be provided. These tests, as outlined in paragraph 4-3, shall be conducted after the award of the contract to determine that the product will meet all specified requirements.

Failure of the Module to comply with these requirements shall result in the rejection of the lot or the cessation of production, as determined by the procuring activity.

4-2 ACCEPTANCE TESTS.

4-2.1 Test Conditions. Unless otherwise specified herein, the module shall be subjected to tests under the following ambient conditions:

Temperature	25 ± 10°C
Relative Humidity	Not more than 90%
Barometric Pressure	28 to 32 in Hg

4-2.2 TESTS. The module shall be tested for the requirements as described in sections 3-3.1 and 3-3.2.

4-2.3 Visual and Mechanical Inspection. A comprehensive inspection shall be made of the module to determine the extent of compliance with the requirements of this specification and the applicable NASA drawing #1003733 and shall at least include determination of the following:

1. Size, dimension, weight, appearance, and markings
2. Finish, coatings, construction, markings, as applicable
3. Welding, soldering, and terminals, as applicable
4. Workmanship and cleanup

4-3 QUALIFICATION AND REQUALIFICATION TEST. Qualification and Requalification tests may be performed individually or when the module is assembled as part of the APOLLO Guidance Computer Subsystem. The tests shall be in accordance with the applicable paragraphs of specification ND-1002037 as directed by the procuring activity.

5. PREPARATION FOR DELIVERY

5-1 **GENERAL.** Unless otherwise specified by the procuring activity or the applicable detail specification, the assemblies shall be preserved, packaged, packed and marked in accordance with Specification ND-1002214.

6. NOTES

6-1 **INTENDED USE.** The Rope Modules B21 thru B24, B28 and B29 are intended for use in the APOLLO Guidance Computer.

NOTICE: When NASA drawings, specifications, or other data are used for any purpose other than in connection with a definitely related NASA procurement operation, the National Aeronautics and Space Administration thereby incurs no responsibility nor any obligation whatsoever; and the fact that NASA may have formulated, furnished, or in any way supplied the said drawings, specifications, or other data is not to be regarded by inplication or otherwise as in any manner licensing the holder or any other person or corporation, or conveying any rights or permission to manufacture, use, or sell any patented invention that may in any way be related thereto.

NOTICE — WHEN GOVERNMENT DRAWINGS, SPECIFICATIONS, OR OTHER DATA ARE USED FOR ANY PURPOSE OTHER THAN IN CONNECTION WITH A DEFINITELY RELATED GOVERNMENT PROCUREMENT OPERATION, THE UNITED STATES GOVERNMENT THEREBY INCURS NO RESPONSIBILITY NOR ANY OBLIGATION WHATSOEVER; AND THE FACT THAT THE GOVERNMENT MAY HAVE FORMULATED, FURNISHED, OR IN ANY WAY SUPPLIED THE SAID DRAWINGS, SPECIFICATIONS OR OTHER DATA IS NOT TO BE REGARDED BY IMPLICATION OR OTHERWISE AS IN ANY MANNER LICENSING THE HOLDER OR ANY OTHER PERSON OR CORPORATION, OR CONVEYING ANY RIGHTS OR PERMISSION TO MANUFACTURE, USE, OR SELL ANY PATENTED INVENTION THAT MAY IN ANY WAY BE RELATED THERETO.

REVISIONS 13673

SYM	ZONE	DESCRIPTION	DR	CHK	DATE	APPROVED

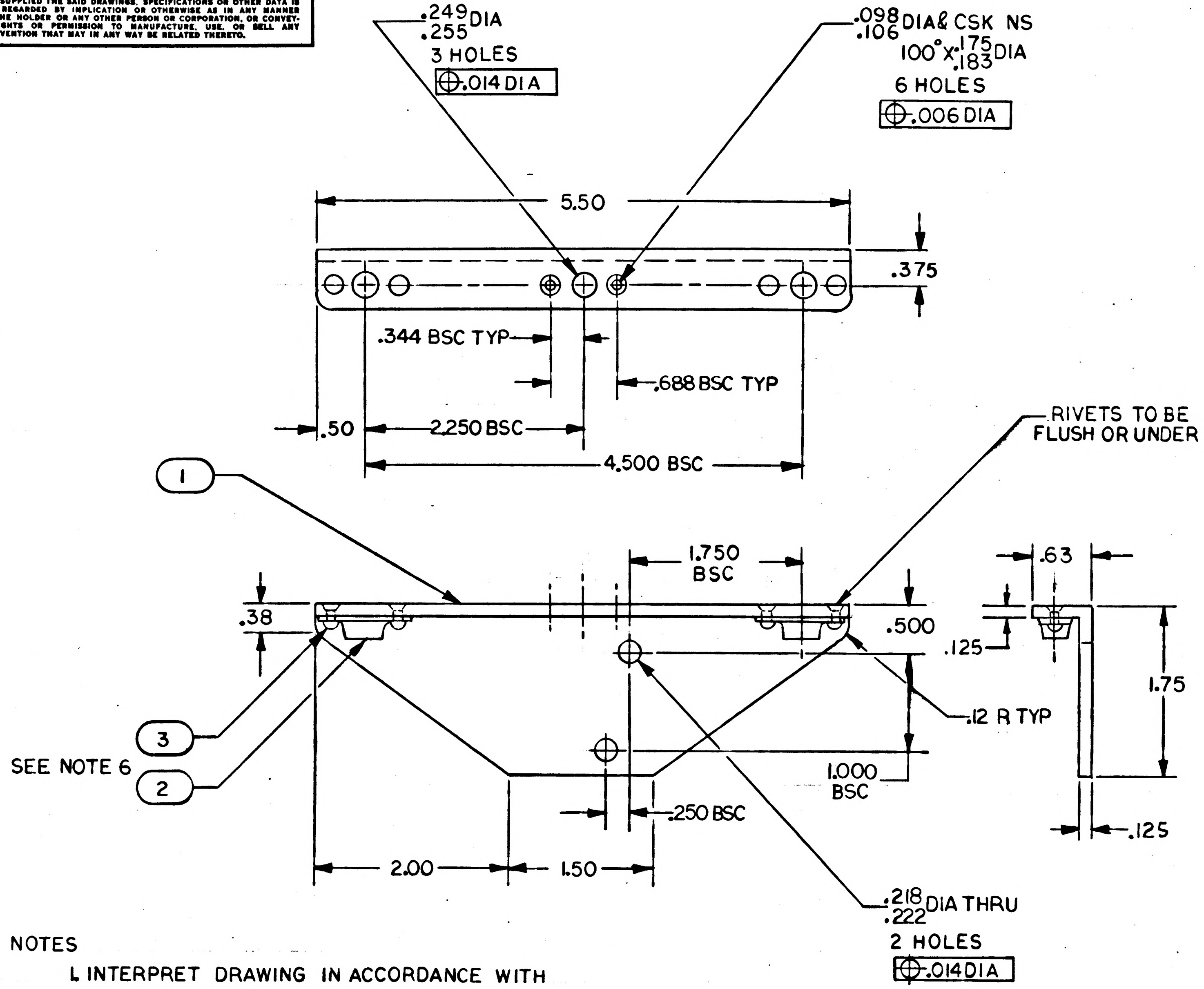

.249/.255 DIA
3 HOLES
⌖.014 DIA
.098/.106 DIA & CSK NS
100° X .175/.183 DIA
6 HOLES
⌖.006 DIA
5.50
.375
.344 BSC TYP
.688 BSC TYP
.50
2.250 BSC
4.500 BSC
RIVETS TO BE FLUSH OR UNDER
1
1.750 BSC
.63
.38
.500
.125
1.75
.12 R TYP
3
SEE NOTE 6
2
1.000 BSC
.250 BSC
.125
2.00
1.50
.218/.222 DIA THRU
2 HOLES
⌖.014 DIA

NOTES

1. INTERPRET DRAWING IN ACCORDANCE WITH STANDARDS PRESCRIBED BY MIL-D-70327
2. MATERIAL: ALUMINUM ALLOY, EXTRUDED ANGLE, 6063-T5 PER QQ-A-200/9
3. FINISH: PLATE (ELECTRODEPOSITED) ALL SURFACES PER QQ-C-320, CLASS 2, TYPE II, PLATING TO BE .0004 TO .0008 THICK, HARDNESS ROCKWELL C60 MIN. DIMENSIONS APPLY AFTER PLATING. SPECIFIED THICKNESS NOT REQUIRED IN ALL HOLES AS LONG AS PLATING IS CONTINUOUS THROUGH EACH HOLE.
4. SURFACE QUALITY $\sqrt{125}$ ALL OVER
5. REMOVE ALL BURRS AND BREAK SHARP EDGES .005/.015
6. ASSEMBLE FIND NO. 2 TO FIND NO. 1 USING FIND NO. 3 AFTER PLATING
7. IDENTIFY PER ND 1002019

QTY REQD	PART OR IDENTIFYING NO.	MATERIAL OR NOTES	NOMENCLATURE OR DESCRIPTION	FIND NO.
6	MS20426AD3-5		RIVET, COUNTERSUNK HEAD	3
3	NAS 686-C08M		NUT, FLOATING ANCHOR	2
1	1003734-001		FRONT PANEL MOUNT	1

LIST OF MATERIALS

NEXT ASSY	USED ON
1003700	

APPLICATION

UNLESS OTHERWISE SPECIFIED
DIMENSIONS ARE IN INCHES
CAPACITOR VALUES ARE IN µf
RESISTOR VALUES ARE IN OHMS
TOLERANCES ON
FRACTIONS ± —— DECIMALS .XXX ± .005 .XX ± .01 ANGLES ± 1/2°
DO NOT SCALE THIS DRAWING

MATERIAL
SEE NOTE 2

MIT
INSTRUMENTATION LAB
CAMBRIDGE, MASS.

DRAWN L. Pollini 8 OCT 64
CHECKED R. L. Kingsbury 19 OCT 64
APPROVED
APPROVED Eldon C Hall 9 Oct 64
APPROVED MIT 10/27/64
APPROVED MSC W J Rhine 10-28-64
DATE

MANNED SPACECRAFT CENTER
HOUSTON, TEXAS

FRONT PANEL MOUNT
ASSEMBLY
LEFT SIDE AGC

CODE IDENT NO. ——
SIZE C
DRAWING NO. 1003734
SCALE 1/1
SHEET 1 OF 1

MASTER

INCHES
0 1 2
PHOTOGRAPHIC SCALE ONLY

NOTICE — WHEN GOVERNMENT DRAWINGS, SPECIFICATIONS, OR OTHER DATA ARE USED FOR ANY PURPOSE OTHER THAN IN CONNECTION WITH A DEFINITELY RELATED GOVERNMENT PROCUREMENT OPERATION, THE UNITED STATES GOVERNMENT THEREBY INCURS NO RESPONSIBILITY NOR ANY OBLIGATION WHATSOEVER; AND THE FACT THAT THE GOVERNMENT MAY HAVE FORMULATED, FURNISHED, OR IN ANY WAY SUPPLIED THE SAID DRAWINGS, SPECIFICATIONS OR OTHER DATA IS NOT TO BE REGARDED BY IMPLICATION OR OTHERWISE AS IN ANY MANNER LICENSING THE HOLDER OR ANY OTHER PERSON OR CORPORATION, OR CONVEYING ANY RIGHTS OR PERMISSION TO MANUFACTURE, USE, OR SELL ANY PATENTED INVENTION THAT MAY IN ANY WAY BE RELATED THERETO.

REVISIONS 13673			
SYM	DESCRIPTION	DATE	APPROVAL

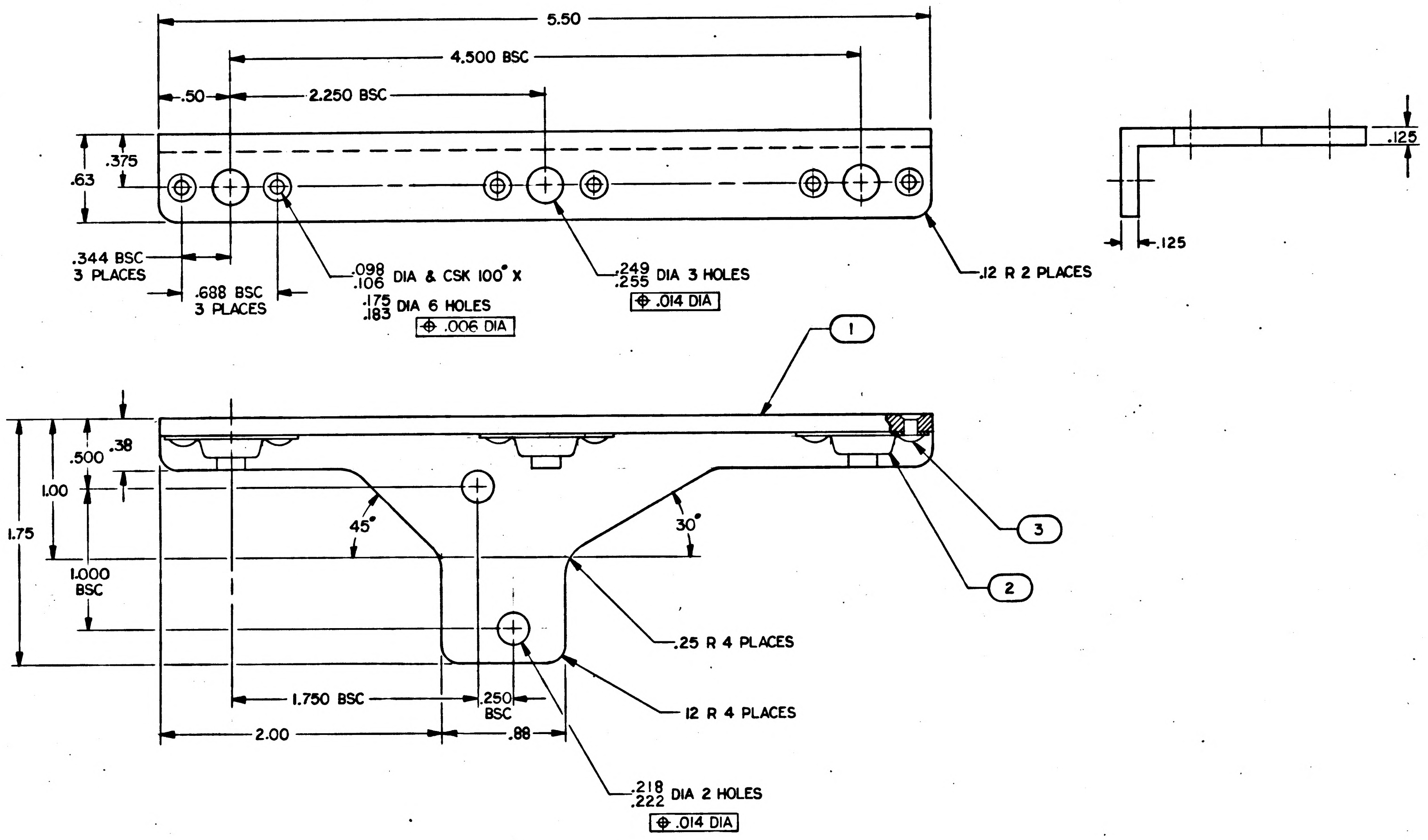

5.50
4.500 BSC
.50
2.250 BSC
.375
.63
.125
.344 BSC
3 PLACES
.688 BSC
3 PLACES
.098
.106 DIA & CSK 100° X
.175
.183 DIA 6 HOLES
⊕ .006 DIA
.249
.255 DIA 3 HOLES
⊕ .014 DIA
.12 R 2 PLACES
.125
1
.38
.500
1.00
1.75
1.000
BSC
45°
30°
3
2
.25 R 4 PLACES
12 R 4 PLACES
1.750 BSC
.250
BSC
2.00
.88
.218
.222 DIA 2 HOLES
⊕ .014 DIA

NOTES
1. INTERPRET DRAWING IN ACCORDANCE WITH STANDARDS PRESCRIBED BY MIL-D-70327
2. MATERIAL: ALUMINUM ALLOY, EXTRUDED ANGLE 6063-T5 PER QQ-A-200/9
3. FINISH: PLATE (ELECTRODEPOSITED) ALL SURFACES PER QQ-C-320, CLASS 2, TYPE II, PLATING TO BE .0004 TO .0008 THICK, HARDNESS ROCKWELL MIN C60. DIMENSIONS APPLY AFTER PLATING. SPECIFIED THICKNESS NOT REQUIRED IN ALL HOLES AS LONG AS PLATING IS CONTINUOUS THROUGH EACH HOLES
4. SURFACE QUALITY 125√ ALL OVER
5. REMOVE ALL BURRS AND BREAK SHARP EDGES .005/.015
6. ASSEMBLE FIND NO. 2 TO FIND NO. 1 USING FIND NO. 3 AFTER PLATING
7. IDENTIFY PER ND 1002019

QTY REQD	PART OR IDENTIFYING NO.	NOMENCLATURE OR DESCRIPTION	FIND NO.
6	MS20426AD3-5	RIVET, COUNTERSUNK HEAD	3
3	NAS 686-C08M	NUT, ANCHOR, FLOATING	2
1	1003735-001	FRONT PANEL MOUNT	1

LIST OF MATERIALS

NEXT ASSY	USED ON
1003700	

APPLICATION

UNLESS OTHERWISE SPECIFIED
DIMENSIONS ARE IN INCHES
TOLERANCES ON
FRACTIONS ± — DECIMALS XXX ± .005 XX ± .01 ANGLES ± 1/2°
DO NOT SCALE THIS DRAWING

MATERIAL SEE NOTE 2
HEAT TREATMENT —
FINAL FINISH SEE NOTE 3

MIT INSTRUMENTATION LAB
CAMBRIDGE, MASS.
DWG. NO. CONTRACT

DRAWN D.J. Pegini DATE Oct 64
CHECKED E. P. Rungaluy 9 oct 64
APPROVAL
APPROVAL Eldon C Hall 9 Oct 64
NASA APPROVAL W. J. Rhine 10-20-64
MIT APPROVAL 10/20/64

MANNED SPACECRAFT CENTER
HOUSTON, TEXAS

FRONT PANEL MOUNT
RIGHT SIDE
AGC

CODE IDENT NO. —— SIZE D NASA DRAWING NO. 1003735
SCALE 2/1 WT —— SHEET 1 OF 1

MASTER

INCHES

NOTICE — WHEN GOVERNMENT DRAWINGS, SPECIFICATIONS, OR OTHER DATA ARE USED FOR ANY PURPOSE OTHER THAN IN CONNECTION WITH A DEFINITELY RELATED GOVERNMENT PROCUREMENT OPERATION, THE UNITED STATES GOVERNMENT THEREBY INCURS NO RESPONSIBILITY NOR ANY OBLIGATION WHATSOEVER; AND THE FACT THAT THE GOVERNMENT MAY HAVE FORMULATED, FURNISHED, OR IN ANY WAY SUPPLIED THE SAID DRAWINGS, SPECIFICATIONS OR OTHER DATA IS NOT TO BE REGARDED BY IMPLICATION OR OTHERWISE AS IN ANY MANNER LICENSING THE HOLDER OR ANY OTHER PERSON OR CORPORATION, OR CONVEYING ANY RIGHTS OR PERMISSION TO MANUFACTURE, USE, OR SELL ANY PATENTED INVENTION THAT MAY IN ANY WAY BE RELATED THERETO.

REVISIONS 13827

SYM	ZONE	DESCRIPTION	DR	CHK	DATE	APPROVED

SIGNAL CHART

CONN PIN NO.	COLOR	SIGNAL
B60-107	BLK	+3B
B60-105	BRN	OVDC
B60-307	RED	+3B
B60-205	ORN	OVDC
B60-507	YEL	+3B
B60-405	GRN	OVDC
B60-506	BLU	+3B
B60-404	VIO	OVDC
B60-306	GY	+3B
B60-204	WHT	OVDC

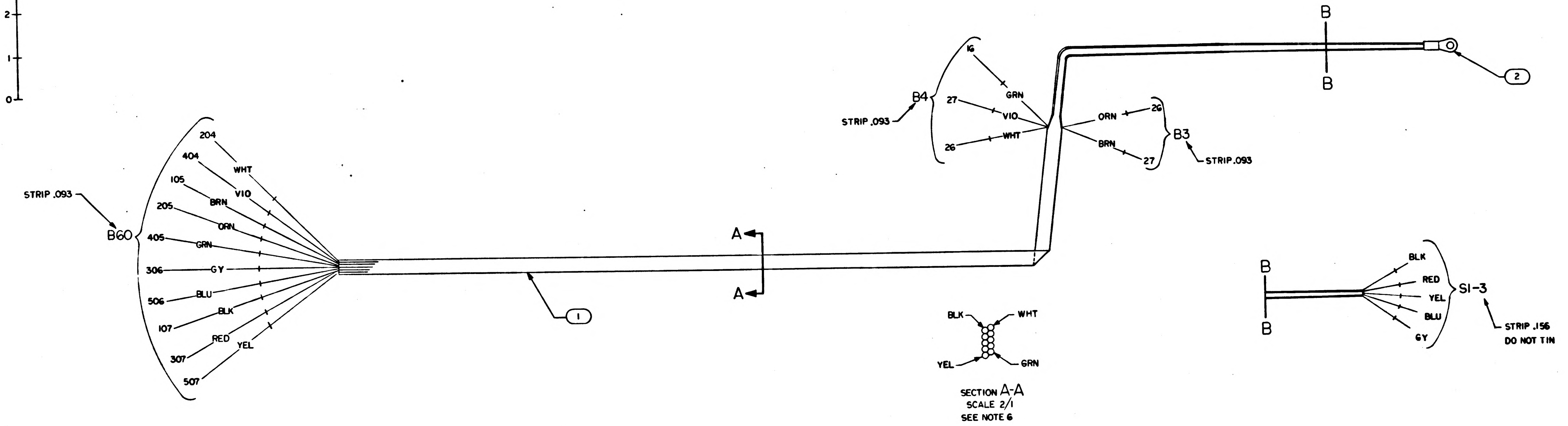

SECTION A-A
SCALE 2/1
SEE NOTE 6

NOTES:
1. INTERPRET DRAWING IN ACCORDANCE WITH STANDARDS PRESCRIBED BY MIL-D-70327
2. FOR SYMBOLS FABRICATION AND REQUIRED TESTS SEE ND1002032
3. AR DENOTES AS REQUIRED
4. IDENTIFY PER ND1002019
5. INSTALL FIND NO.2 PER ND1002019
6. FOLD FIND NO.1 AS SHOWN IN SECTION A-A

QTY REQD	PART OR IDENTIFYING NO.	MATERIAL OR NOTES	NOMENCLATURE OR DESCRIPTION	FIND NO.
1	MS25036-6		TERMINAL, LUG	2
AR	1006292-2		WIRE, ELECTRICAL, (FLAT CABLE)	1

LIST OF MATERIALS

NEXT ASSY	USED ON
1003701	

APPLICATION

UNLESS OTHERWISE SPECIFIED
DIMENSIONS ARE IN INCHES
CAPACITOR VALUES ARE IN µf
RESISTOR VALUES ARE IN OHMS
TOLERANCES ON
FRACTIONS ± — DECIMALS XXX± .060/.000 ANGLES ± —
DO NOT SCALE THIS DRAWING

MATERIAL —

MIT
INSTRUMENTATION LAB
CAMBRIDGE, MASS.

DRAWN T. Nelson 16 OCT 69
CHECKED 20 OCT 69
APPROVED
APPROVED Eldon C. Hall 20 Oct 69
APPROVED MIT
APPROVED MSC W. J. Rhine 10-24-69
DATE

MANNED SPACECRAFT CENTER
HOUSTON, TEXAS

FLAT CABLE A
(TRAY B)

CODE IDENT NO. —
SIZE E
DRAWING NO. 1003740
SCALE 1 / 1
SHEET 1 OF 1

1003740

MASTER

NOTICE – WHEN GOVERNMENT DRAWINGS, SPECIFICATIONS, OR OTHER DATA ARE USED FOR ANY PURPOSE OTHER THAN IN CONNECTION WITH A DEFINITELY RELATED GOVERNMENT PROCUREMENT OPERATION, THE UNITED STATES GOVERNMENT THEREBY INCURS NO RESPONSIBILITY NOR ANY OBLIGATION WHATSOEVER; AND THE FACT THAT THE GOVERNMENT MAY HAVE FORMULATED, FURNISHED, OR IN ANY WAY SUPPLIED THE SAID DRAWINGS, SPECIFICATIONS, OR OTHER DATA IS NOT TO BE REGARDED BY IMPLICATION OR OTHERWISE AS IN ANY MANNER LICENSING THE HOLDER OR ANY OTHER PERSON OR CORPORATION, OR CONVEYING ANY RIGHTS OR PERMISSION TO MANUFACTURE, USE, OR SELL ANY PATENTED INVENTION THAT MAY IN ANY WAY BE RELATED THERETO.

REVISIONS 13F27						
SYM	ZONE	DESCRIPTION	DR	CHK	DATE	APPROVED

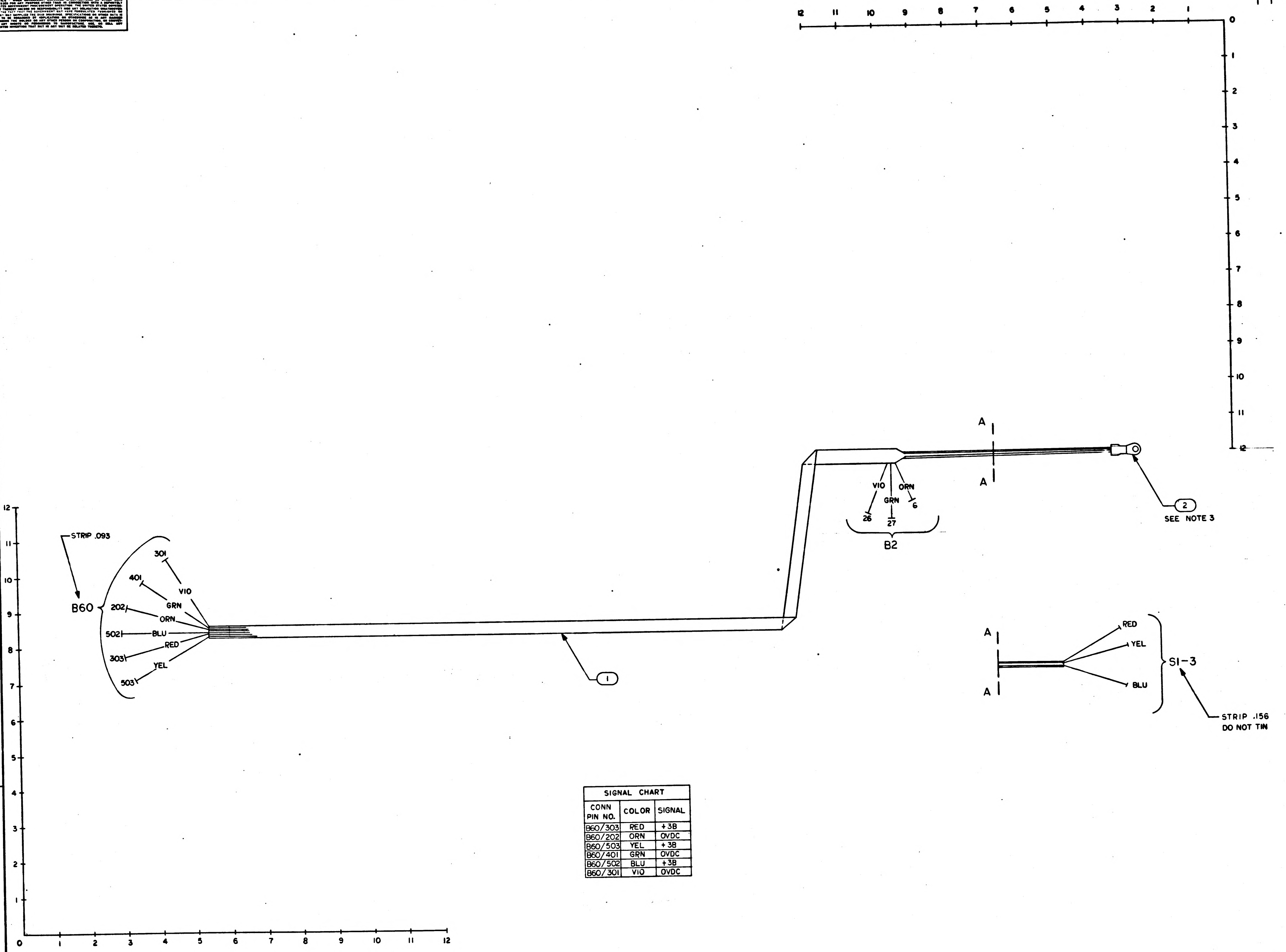

SIGNAL CHART		
CONN PIN NO.	COLOR	SIGNAL
B60/303	RED	+3B
B60/202	ORN	OVDC
B60/503	YEL	+3B
B60/401	GRN	OVDC
B60/502	BLU	+3B
B60/301	VIO	OVDC

NOTES:

1. INTERPRET DRAWING IN ACCORDANCE WITH STANDARDS PRESCRIBED BY MIL-D-70327
2. FOR SYMBOLS FABRICATION AND REQUIRED TESTS SEE ND 1002032
3. INSTALL FIND 2 PER ND 1002206
4. AR DENOTES AS REQUIRED
5. IDENTIFY PER ND 1002019

MASTER

1	MS25036-T		TERMINAL, LUG	2
AR	1006292-2		WIRE, ELECTRICAL (FLAT CABLE)	1
QTY REQD	PART OR IDENTIFYING NO.	MATERIAL OR NOTES	NOMENCLATURE OR DESCRIPTION	FIND NO.

LIST OF MATERIALS

1003701	
NEXT ASSY	USED ON
APPLICATION	

UNLESS OTHERWISE SPECIFIED
DIMENSIONS ARE IN INCHES
CAPACITOR VALUES ARE IN μf
RESISTOR VALUES ARE IN OHMS
TOLERANCES ON
FRACTIONS DECIMALS ANGLES
± –XXX ±.060 .000 ± —
DO NOT SCALE THIS DRAWING
MATERIAL

MIT
INSTRUMENTATION LAB
CAMBRIDGE, MASS.

DRAWN R. Romey 5 Oct 64
CHECKED 20 Oct 64
APPROVED
APPROVED Eldon C Hall 20 Oct 64
APPROVED MIT
APPROVED MSC W J Rhine 12-21-64
DATE

MANNED SPACECRAFT CENTER
HOUSTON, TEXAS

FLAT CABLE B
(TRAY B)

CODE IDENT NO.
SIZE E
DRAWING NO. 1003741
SCALE 1/1
SHEET 1 OF 1

1003741

NOTICE — WHEN GOVERNMENT DRAWINGS, SPECIFICATIONS, OR OTHER DATA ARE USED FOR ANY PURPOSE OTHER THAN IN CONNECTION WITH A DEFINITELY RELATED GOVERNMENT PROCUREMENT OPERATION, THE UNITED STATES GOVERNMENT THEREBY INCURS NO RESPONSIBILITY NOR ANY OBLIGATION WHATSOEVER; AND THE FACT THAT THE GOVERNMENT MAY HAVE FORMULATED, FURNISHED, OR IN ANY WAY SUPPLIED THE SAID DRAWINGS, SPECIFICATIONS OR OTHER DATA IS NOT TO BE REGARDED BY IMPLICATION OR OTHERWISE AS IN ANY MANNER LICENSING THE HOLDER OR ANY OTHER PERSON OR CORPORATION, OR CONVEYING ANY RIGHTS OR PERMISSION TO MANUFACTURE, USE, OR SELL ANY PATENTED INVENTION THAT MAY IN ANY WAY BE RELATED THERETO.

REVISIONS 13P27

SYM	DESCRIPTION	DATE	APPROVAL

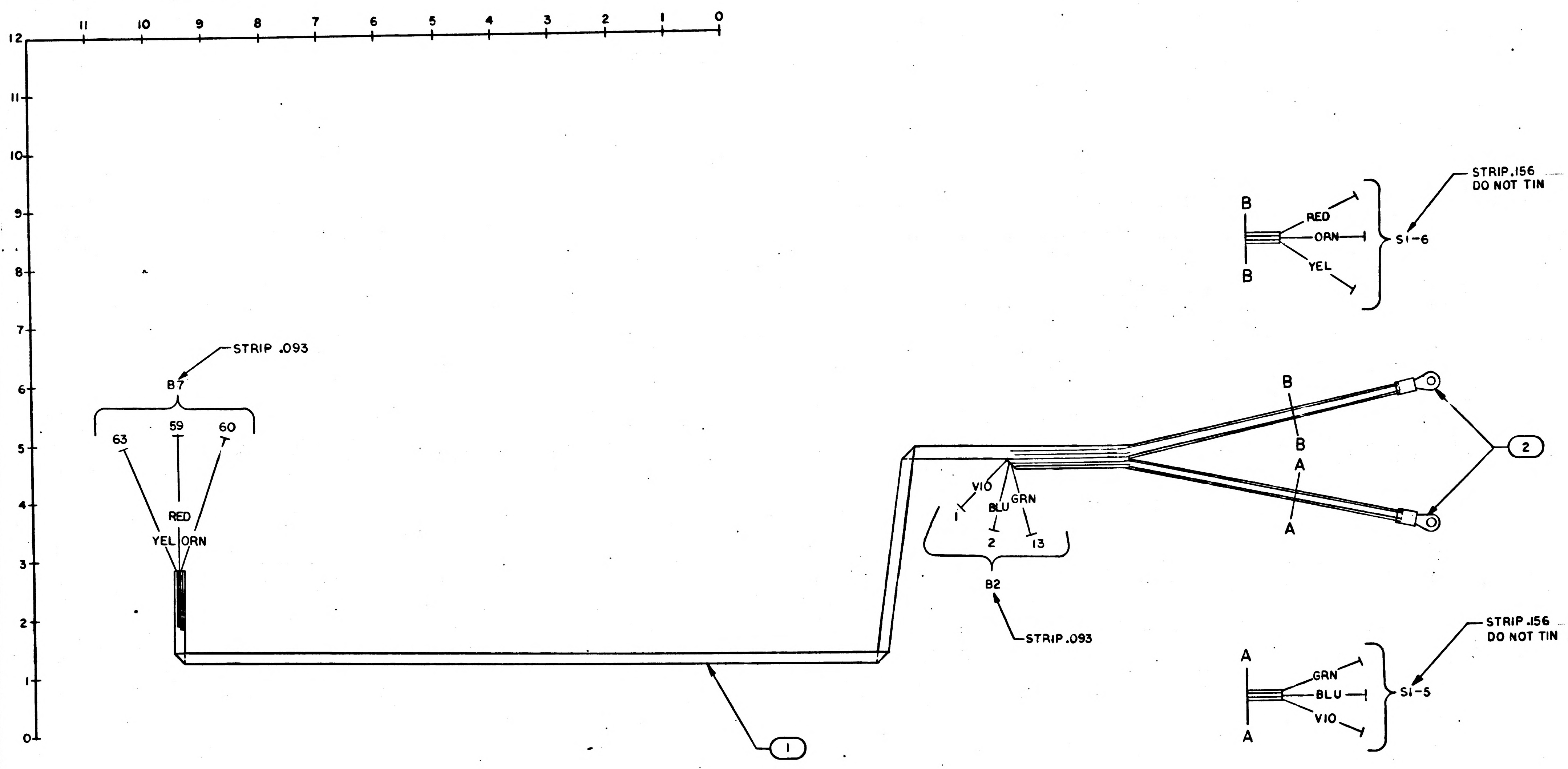

SIGNAL CHART		
CONN PIN NO.	COLOR	SIGNAL
B7 — 59	RED	B PLUS B
B7 — 60	ORN	B PLUS B
B7 — 63	YEL	B PLUS B
B2 — 13	GRN	B PLUS A
B2 — 2	BLU	B PLUS A
B2 — 1	VIO	B PLUS A

NOTES
1. INTERPRET DRAWING IN ACCORDANCE WITH STANDARDS PRESCRIBED BY MIL-D-70327
2. FOR SYMBOLS FABRICATION AND REQUIRED TEST SEE ND 1002032
3. INSTALL FIND NO. 2 PER ND 1002206
4. AR DENOTES AS REQUIRED
5. IDENTIFY PER ND 1002019

MASTER

QTY REQD	PART OR IDENTIFYING NO.	NOMENCLATURE OR DESCRIPTION	FIND NO.
2	MS25036-1	TERMINAL, LUG	2
AR	1006292-1	WIRE, ELECTRICAL, (FLAT CABLE)	1

LIST OF MATERIALS

NEXT ASSY	USED ON
1003701	

APPLICATION

UNLESS OTHERWISE SPECIFIED
DIMENSIONS ARE IN INCHES
TOLERANCES ON
FRACTIONS ± — DECIMALS .XXX ± .060 .000 ANGLES ± —
DO NOT SCALE THIS DRAWING
MATERIAL —
HEAT TREATMENT —
FINAL FINISH —

MIT
INSTRUMENTATION LAB
CAMBRIDGE, MASS.
DWG. NO. CONTRACT
DRAWN L. Pellini DATE 18OCT64
CHECKED 20OCT64
APPROVAL
APPROVAL Eldon C Hall 20 Oct 64
NASA APPROVAL W. J. Rhine 10-21-64
MIT APPROVAL 10/21/64

MANNED SPACECRAFT CENTER
HOUSTON, TEXAS

FLAT CABLE C
(TRAY B)

CODE IDENT NO. —
SIZE D
NASA DRAWING NO. 1003742
SCALE 1/1
WT —
SHEET 1 OF 1

NOTICE — WHEN GOVERNMENT DRAWINGS, SPECIFICATIONS, OR OTHER DATA ARE USED FOR ANY PURPOSE OTHER THAN IN CONNECTION WITH A DEFINITELY RELATED GOVERNMENT PROCUREMENT OPERATION, THE UNITED STATES GOVERNMENT THEREBY INCURS NO RESPONSIBILITY NOR ANY OBLIGATION WHATSOEVER; AND THE FACT THAT THE GOVERNMENT MAY HAVE FORMULATED, FURNISHED, OR IN ANY WAY SUPPLIED THE SAID DRAWINGS, SPECIFICATIONS OR OTHER DATA IS NOT TO BE REGARDED BY IMPLICATION OR OTHERWISE AS IN ANY MANNER LICENSING THE HOLDER OR ANY OTHER PERSON OR CORPORATION, OR CONVEYING ANY RIGHTS OR PERMISSION TO MANUFACTURE, USE, OR SELL ANY PATENTED INVENTION THAT MAY IN ANY WAY BE RELATED THERETO.

REVISIONS 13827			
SYM	DESCRIPTION	DATE	APPROVAL

SIGNAL CHART

CONN PIN NO.	COLOR	SIGNAL
B3-3	VIO	+3A
B3-1	GRN	
B3-14	BLU	
B4-1	RED	
B4-13	ORN	
B4-3	YEL	+3A

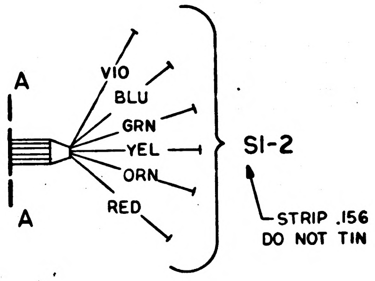

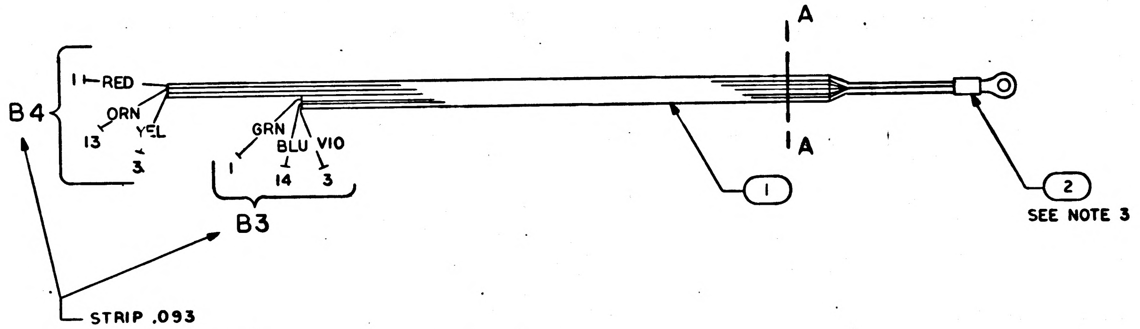

NOTES:
1. INTERPRET DRAWING IN ACCORDANCE WITH STANDARDS PRESCRIBED BY MIL-D-70327
2. FOR SYMBOLS FABRICATION AND REQUIRED TESTS SEE ND 1002032
3. INSTALL FIND 2 PER ND 1002206
4. AR DENOTES AS REQUIRED
5. IDENTIFY PER ND 1002019

MASTER

LIST OF MATERIALS

QTY REQD	PART OR IDENTIFYING NO.	NOMENCLATURE OR DESCRIPTION	FIND NO.
1	MS25036-6	TERMINAL, LUG	2
AR	1006292-1	WIRE ELECTRICAL (FLAT CABLE)	1

NEXT ASSY	USED ON
1003701	

APPLICATION

UNLESS OTHERWISE SPECIFIED DIMENSIONS ARE IN INCHES
TOLERANCES ON
FRACTIONS ± — DECIMALS XXX ±.060 .000 ANGLES ± —
DO NOT SCALE THIS DRAWING
MATERIAL
HEAT TREATMENT
FINAL FINISH

MIT INSTRUMENTATION LAB
CAMBRIDGE, MASS.
DWG. NO. CONTRACT
DRAWN J. Cowley DATE 19 OCT 64
CHECKED 20 OCT 64
APPROVAL
APPROVAL Eldon C. Hall 20 Oct 64
NASA APPROVAL W J Rhine 10-21-64
MIT APPROVAL 10/21/64

MANNED SPACECRAFT CENTER
HOUSTON, TEXAS

FLAT CABLE D
(TRAY B)

CODE IDENT NO. —
SIZE D
NASA DRAWING NO. 1003743
SCALE 1/1
WT —
SHEET 1 OF 1

NOTICE — WHEN GOVERNMENT DRAWINGS, SPECIFICATIONS, OR OTHER DATA ARE USED FOR ANY PURPOSE OTHER THAN IN CONNECTION WITH A DEFINITELY RELATED GOVERNMENT PROCUREMENT OPERATION, THE UNITED STATES GOVERNMENT THEREBY INCURS NO RESPONSIBILITY NOR ANY OBLIGATION WHATSOEVER; AND THE FACT THAT THE GOVERNMENT MAY HAVE FORMULATED, FURNISHED, OR IN ANY WAY SUPPLIED THE SAID DRAWINGS, SPECIFICATIONS OR OTHER DATA IS NOT TO BE REGARDED BY IMPLICATION OR OTHERWISE AS IN ANY MANNER LICENSING THE HOLDER OR ANY OTHER PERSON OR CORPORATION, OR CONVEYING ANY RIGHTS OR PERMISSION TO MANUFACTURE, USE, OR SELL ANY PATENTED INVENTION THAT MAY IN ANY WAY BE RELATED THERETO.

REVISIONS 13827			
SYM	DESCRIPTION	DATE	APPROVAL

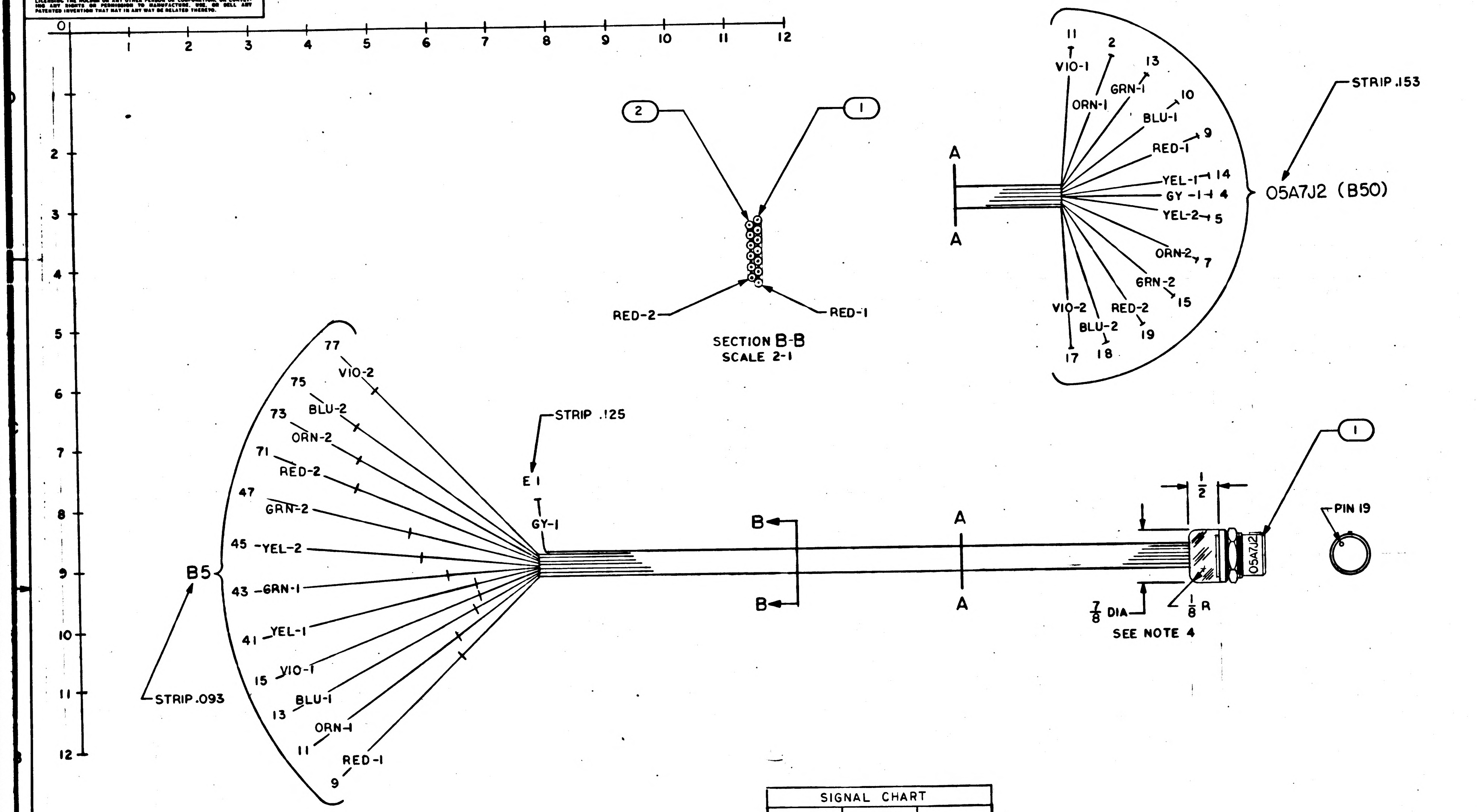

0
1
2
3
4
5
6
7
8
9
10
11
12
2
1
RED-2
RED-1
SECTION B-B
SCALE 2-1
A
A
11
VIO-1
2
ORN-1
GRN-1
13
10
BLU-1
9
RED-1
YEL-1 14
GY-1 4
YEL-2 5
ORN-2 7
GRN-2 15
VIO-2
RED-2
BLU-2
19
17
18
STRIP .153
05A7J2 (B50)
77
VIO-2
75
BLU-2
73
ORN-2
71
RED-2
47
GRN-2
45
YEL-2
B5
43
GRN-1
41
YEL-1
15
VIO-1
BLU-1
13
ORN-1
11
RED-1
9
STRIP .093
STRIP .125
E1
GY-1
B
B
A
A
1/2
1
05A7J2
PIN 19
7/8 DIA
1/8 R
SEE NOTE 4

SIGNAL CHART		
05A7J2 CONN PIN NO.	COLOR	SIGNAL
B50 - 4	GY	CASGND
-10	BLU	+28 BUF
-9	RED	
-2	ORN	
-11	VIO	
-7	ORN	+28 AUF
-17	VIO	
-18	BLU	
-19	RED	
-13	GRN	OVDC UF
-14	YEL	
-15	GRN	
B50 - 5	YEL	

NOTES:

1. INTERPRET DRAWING IN ACCORDANCE WITH STANDARDS PRESCRIBED BY MIL-D-70327
2. FOR SYMBOLS FABRICATION AND REQUIRED TESTS SEE ND 1002032
3. IDENTIFY PER ND 1002019
4. ENCAPSULATE INDICATED AREA PER ND 1002036
5. ✱ DENOTES LENGTH IN INCHES

MASTER

	QTY REQD	PART OR IDENTIFYING NO.	NOMENCLATURE OR DESCRIPTION	FIND NO.
✱	18	1006292-1	WIRE, ELECTRICAL, (FLAT CABLE)	3
✱	18	1006292-2	WIRE, ELECTRICAL, FLAT CABLE	2
	1	1006302-113	CONNECTOR, RECEPTACLE	1

LIST OF MATERIALS

NEXT ASSY	USED ON
1003701	

APPLICATION

UNLESS OTHERWISE SPECIFIED
DIMENSIONS ARE IN INCHES
TOLERANCES ON
FRACTIONS ± 1/64 DECIMALS ±.060 .000 ANGLES ± —
DO NOT SCALE THIS DRAWING
MATERIAL —
HEAT TREATMENT —
FINAL FINISH —

MIT
INSTRUMENTATION LAB
CAMBRIDGE, MASS
DWG. NO. CONTRACT
DRAWN A. D. Lee DATE 19 Oct 64
CHECKED L. L. Kruger January 20 1964
APPROVAL
APPROVAL Eldon C Hall 20 Oct 64
NASA APPROVAL W. J. Rhine 10-21-64
MIT APPROVAL 10/21/64

MANNED SPACECRAFT CENTER
HOUSTON, TEXAS

CONNECTOR & HARNESS ASSY (TRAY B)

CODE IDENT NO. —
SIZE D
NASA DRAWING NO. 1003744
SCALE 1/1
WT —
SHEET 1 OF 1

1003744

NOTICE — WHEN GOVERNMENT DRAWINGS, SPECIFICATIONS, OR OTHER DATA ARE USED FOR ANY PURPOSE OTHER THAN IN CONNECTION WITH A DEFINITELY RELATED GOVERNMENT PROCUREMENT OPERATION, THE UNITED STATES GOVERNMENT THEREBY INCURS NO RESPONSIBILITY NOR ANY OBLIGATION WHATSOEVER; AND THE FACT THAT THE GOVERNMENT MAY HAVE FORMULATED, FURNISHED, OR IN ANY WAY SUPPLIED THE SAID DRAWINGS, SPECIFICATIONS OR OTHER DATA IS NOT TO BE REGARDED BY IMPLICATION OR OTHERWISE AS IN ANY MANNER LICENSING THE HOLDER OR ANY OTHER PERSON OR CORPORATION, OR CONVEYING ANY RIGHTS OR PERMISSION TO MANUFACTURE, USE, OR SELL ANY PATENTED INVENTION THAT MAY IN ANY WAY BE RELATED THERETO.

REVISIONS 13827

SYM	DESCRIPTION	DATE	APPROVAL
▲	REVISED PER TDRR 14654 DR D.Q. Clement CHK		

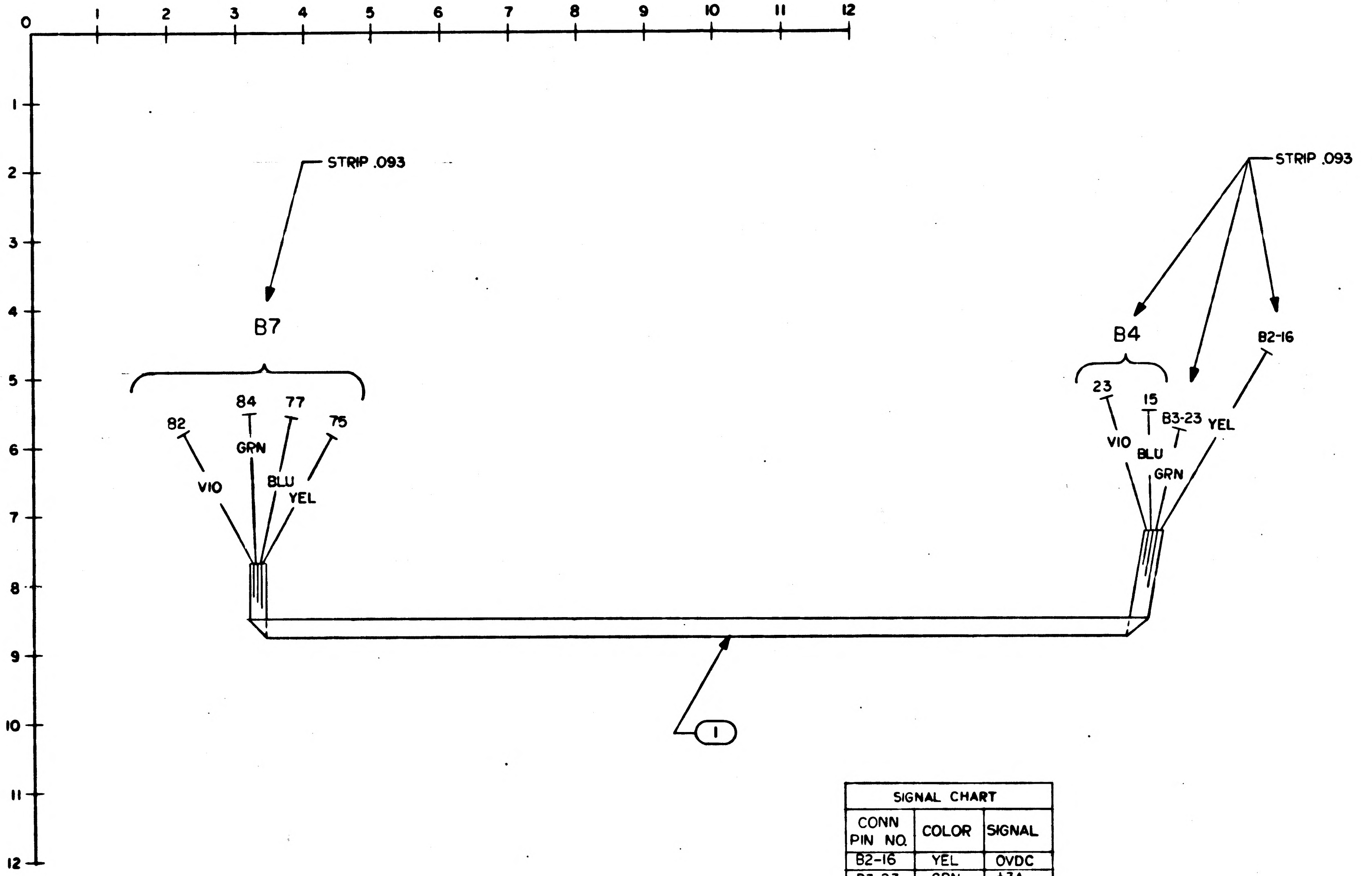

SIGNAL CHART		
CONN PIN NO.	COLOR	SIGNAL
B2-16	YEL	OVDC
B3-23	GRN	+3A
B4-15	BLU	OVDC
B4-23	VIO	+3A

NOTES:
1. INTERPRET DRAWING IN ACCORDANCE WITH STANDARDS PRESCRIBED BY MIL-D-70327
2. FOR SYMBOLS FABRICATION AND REQUIRED TEST SEE ND 1002032
3. AR DENOTES AS REQUIRED
4. IDENTIFY PER ND 1002019

LIST OF MATERIALS

QTY REQD	PART OR IDENTIFYING NO.	NOMENCLATURE OR DESCRIPTION	FIND NO.
AR	1006292-1	WIRE, ELECTRICAL (FLAT CABLE)	1

NEXT ASSY	USED ON
APPLICATION	

UNLESS OTHERWISE SPECIFIED
DIMENSIONS ARE IN INCHES
TOLERANCES ON
FRACTIONS ± DECIMALS XXX ±.060 .000 ANGLES ±
DO NOT SCALE THIS DRAWING
MATERIAL
HEAT TREATMENT
FINAL FINISH

MIT
INSTRUMENTATION LAB
CAMBRIDGE, MASS
DWG. NO. CONTRACT
DRAWN P. Toney DATE 29 Oct 69
CHECKED D.Q. Lee 30 OCT 69
APPROVAL
APPROVAL Ellen C Hall 30 Oct 69
NASA APPROVAL W J Rhine 10-31-69
MIT APPROVAL 10/31/69

MANNED SPACECRAFT CENTER
HOUSTON, TEXAS

FLAT CABLE F
(TRAY B)

CODE IDENT NO. —
SIZE D
NASA DRAWING NO. 1003745
SCALE 1/1
WT
SHEET 1 OF 1

MASTER

NOTICE — WHEN GOVERNMENT DRAWINGS, SPECIFICATIONS, OR OTHER DATA ARE USED FOR ANY PURPOSE OTHER THAN IN CONNECTION WITH A DEFINITELY RELATED GOVERNMENT PROCUREMENT OPERATION, THE UNITED STATES GOVERNMENT THEREBY INCURS NO RESPONSIBILITY NOR ANY OBLIGATION WHATSOEVER; AND THE FACT THAT THE GOVERNMENT MAY HAVE FORMULATED, FURNISHED, OR IN ANY WAY SUPPLIED THE SAID DRAWINGS, SPECIFICATIONS OR OTHER DATA IS NOT TO BE REGARDED BY IMPLICATION OR OTHERWISE AS IN ANY MANNER LICENSING THE HOLDER OR ANY OTHER PERSON OR CORPORATION, OR CONVEYING ANY RIGHTS OR PERMISSION TO MANUFACTURE, USE, OR SELL ANY PATENTED INVENTION THAT MAY IN ANY WAY BE RELATED THERETO.

REVISIONS 13827			
SYM	DESCRIPTION	DATE	APPROVAL

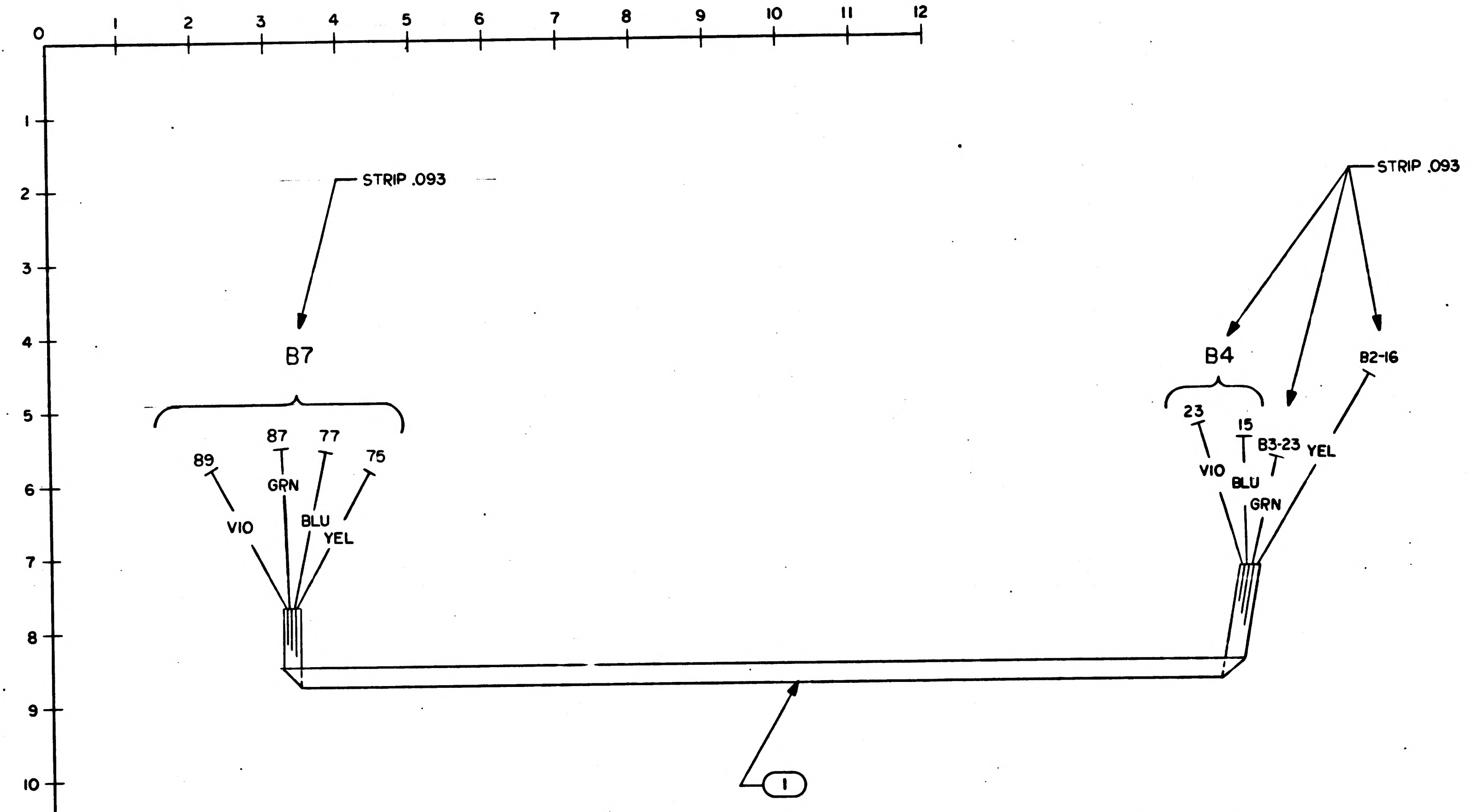

SIGNAL CHART		
CONN PIN NO.	COLOR	SIGNAL
B2-16	YEL	OVDC
B3-23	GRN	+3A
B4-15	BLU	OVDC
B4-23	VIO	+3A

NOTES:
1. INTERPRET DRAWING IN ACCORDANCE WITH STANDARDS PRESCRIBED BY MIL-D-70327
2. FOR SYMBOLS FABRICATION AND REQUIRED TEST SEE ND 1002032
3. AR DENOTES AS REQUIRED
4. IDENTIFY PER ND 1002019

QTY REQD	PART OR IDENTIFYING NO.	NOMENCLATURE OR DESCRIPTION	FIND NO.
AR	1006292-1	WIRE, ELECTRICAL (FLAT CABLE)	1

LIST OF MATERIALS

NEXT ASSY	USED ON

APPLICATION

UNLESS OTHERWISE SPECIFIED
DIMENSIONS ARE IN INCHES
TOLERANCES ON
FRACTIONS ± DECIMALS XXX ±.060 .000 ANGLES ±
DO NOT SCALE THIS DRAWING
MATERIAL
HEAT TREATMENT
FINAL FINISH

MIT
INSTRUMENTATION LAB
CAMBRIDGE, MASS
DWG. NO. CONTRACT
DRAWN P. Roney DATE 9 OCT 64
CHECKED R. Q. Lee 20 OCT 64
APPROVAL
APPROVAL [illegible] 20 Oct 64
NASA APPROVAL W J Rhine 10-21-64
MIT APPROVAL [illegible]

MANNED SPACECRAFT CENTER
HOUSTON, TEXAS

FLAT CABLE F
(TRAY B)

CODE IDENT NO. — SIZE D NASA DRAWING NO. 1003745
SCALE 1/1 WT SHEET 1 OF 1

MASTER

NOTICE — WHEN GOVERNMENT DRAWINGS, SPECIFICATIONS, OR OTHER DATA ARE USED FOR ANY PURPOSE OTHER THAN IN CONNECTION WITH A DEFINITELY RELATED GOVERNMENT PROCUREMENT OPERATION, THE UNITED STATES GOVERNMENT THEREBY INCURS NO RESPONSIBILITY NOR ANY OBLIGATION WHATSOEVER; AND THE FACT THAT THE GOVERNMENT MAY HAVE FORMULATED, FURNISHED, OR IN ANY WAY SUPPLIED THE SAID DRAWINGS, SPECIFICATIONS OR OTHER DATA IS NOT TO BE REGARDED BY IMPLICATION OR OTHERWISE AS IN ANY MANNER LICENSING THE HOLDER OR ANY OTHER PERSON OR CORPORATION, OR CONVEYING ANY RIGHTS OR PERMISSION TO MANUFACTURE, USE, OR SELL ANY PATENTED INVENTION THAT MAY IN ANY WAY BE RELATED THERETO.

1003756 A

REVISIONS 12765

SYM	DESCRIPTION	DATE	APPROVAL
A	REVISED PER TDRR 13258	18 OCT 64	10/14

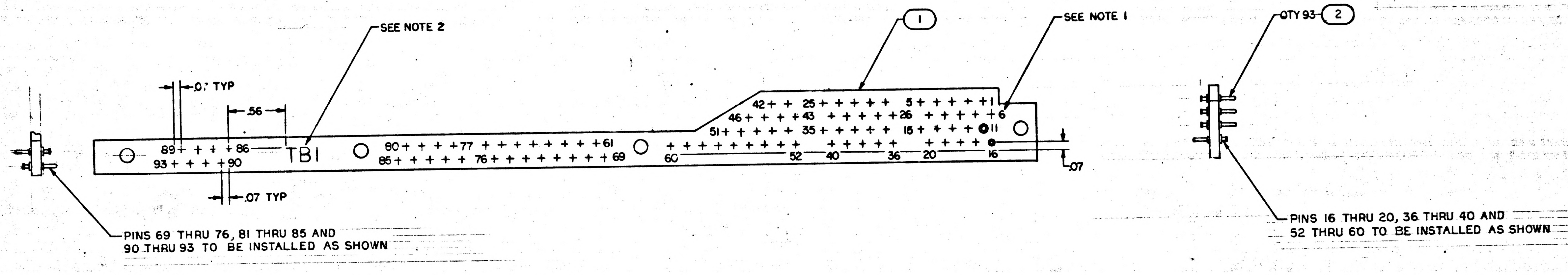

PINS 69 THRU 76, 81 THRU 85 AND
90 THRU 93 TO BE INSTALLED AS SHOWN

PINS 16 THRU 20, 36 THRU 40 AND
52 THRU 60 TO BE INSTALLED AS SHOWN

NOTES

1. MARK BOTH SIDES .083 HIGH WHITE PER ND1002019 AND ND 1002122, TYPE II, CLASS I USING MARKING INK 1006271-1
2. MARK BOTH SIDES .125 HIGH WHITE PER ND1002019 AND ND 1002122, TYPE II, CLASS I USING MARKING INK 1006271-1
3. SWAGE FIND NO. 2 TO FIND NO. 1
4. INTERPRET DRAWING IN ACCORDANCE WITH STANDARDS PRESCRIBED BY MIL-D-70327

MASTER

QTY REQD	PART OR IDENTIFYING NO.	NOMENCLATURE OR DESCRIPTION	FIND NO.
93	1006297-003	TERMINAL, FEEDTHRU	2
1	1004755	BOARD, TERMINAL	1

LIST OF MATERIALS

NEXT ASSY	USED ON
1003758	

APPLICATION

UNLESS OTHERWISE SPECIFIED DIMENSIONS ARE IN INCHES
TOLERANCES ON
FRACTIONS ± DECIMALS ±.03 ANGLES ±
DO NOT SCALE THIS DRAWING
MATERIAL
HEAT TREATMENT
FINAL FINISH

MIT INSTRUMENTATION LAB
CAMBRIDGE, MASS.
DWG. NO. CONTRACT
DRAWN DATE 12 AUG 64
CHECKED 12 Sept 64
APPROVAL Sept 15/64.
APPROVAL 21 Sept 64
NASA APPROVAL
MIT APPROVAL
MIT APPROVAL

MANNED SPACECRAFT CENTER
HOUSTON, TEXAS

TERMINAL BOARD ASSY (TB1)
AGC DSKY, NAV
100 SERIES

CODE IDENT NO. —
SIZE D
NASA DRAWING NO. 1003756
SCALE 2/1
WT
SHEET 1 OF 1

NOTICE — WHEN GOVERNMENT DRAWINGS, SPECIFICATIONS, OR OTHER DATA ARE USED FOR ANY PURPOSE OTHER THAN IN CONNECTION WITH A DEFINITELY RELATED GOVERNMENT PROCUREMENT OPERATION, THE UNITED STATES GOVERNMENT THEREBY INCURS NO RESPONSIBILITY NOR ANY OBLIGATION WHATSOEVER; AND THE FACT THAT THE GOVERNMENT MAY HAVE FORMULATED, FURNISHED, OR IN ANY WAY SUPPLIED THE SAID DRAWINGS, SPECIFICATIONS OR OTHER DATA IS NOT TO BE REGARDED BY IMPLICATION OR OTHERWISE AS IN ANY MANNER LICENSING THE HOLDER OR ANY OTHER PERSON OR CORPORATION, OR CONVEYING ANY RIGHTS OR PERMISSION TO MANUFACTURE, USE, OR SELL ANY PATENTED INVENTION THAT MAY IN ANY WAY BE RELATED THERETO

1003756 —

REVISIONS 12765			
SYM	DESCRIPTION	DATE	APPROVAL

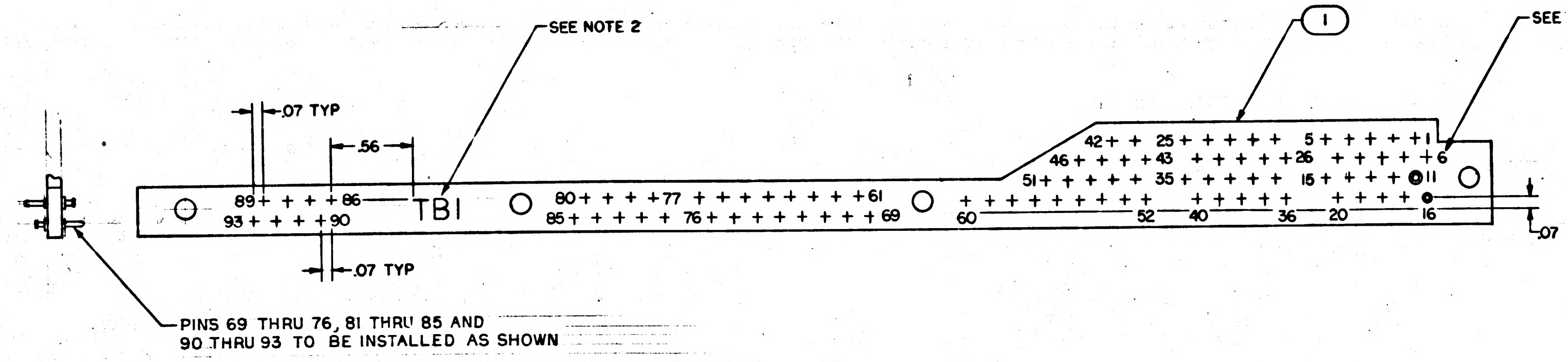

PINS 69 THRU 76, 81 THRU 85 AND
90 THRU 93 TO BE INSTALLED AS SHOWN

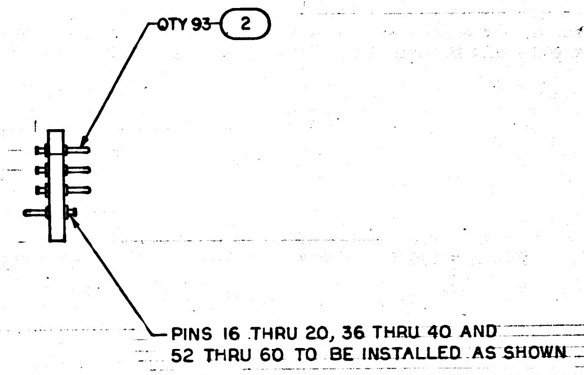

PINS 16 THRU 20, 36 THRU 40 AND
52 THRU 60 TO BE INSTALLED AS SHOWN

NOTES
1. MARK BOTH SIDES .083 HIGH WHITE PER ND1002019 AND ND1002122, TYPE II, CLASS I
2. MARK BOTH SIDES .125 HIGH WHITE PER ND1002019 AND ND1002122, TYPE II, CLASS I
3. SWAGE FIND NO.2 TO FIND NO.1
4. INTERPRET DRAWING IN ACCORDANCE WITH STANDARDS PRESCRIBED BY MIL-D-70327

MASTER

QTY REQD	PART OR IDENTIFYING NO.	NOMENCLATURE OR DESCRIPTION	FIND NO.
93	1006297	TERMINAL	2
1	1004755	BOARD, TERMINAL	1

LIST OF MATERIALS

NEXT ASSY	USED ON
1003758	

APPLICATION

UNLESS OTHERWISE SPECIFIED
DIMENSIONS ARE IN INCHES
TOLERANCES ON
FRACTIONS ± DECIMALS ±.03 ANGLES ±
DO NOT SCALE THIS DRAWING
MATERIAL
HEAT TREATMENT
FINAL FINISH

MIT
INSTRUMENTATION LAB
CAMBRIDGE, MASS.
DWG. NO. CONTRACT

DRAWN B. Jensen DATE 12AUG64
CHECKED R. Edwards 12 Sept 64
APPROVAL Jensen Sept 15/64.
APPROVAL Elton C Hall 21 Sept 64
NASA APPROVAL W J Rhine 9-22-64
MIT APPROVAL
MIT APPROVAL W Clapp 22 Sept 64

MANNED SPACECRAFT CENTER
HOUSTON, TEXAS

TERMINAL BOARD ASSY (TB1)
AGC DSKY, NAV
100 SERIES

CODE IDENT NO. —
SIZE D
NASA DRAWING NO. 1003756
SCALE 2/1
WT
SHEET 1 OF 1

INCHES

NOTICE — WHEN GOVERNMENT DRAWINGS, SPECIFICATIONS, OR OTHER DATA ARE USED FOR ANY PURPOSE OTHER THAN IN CONNECTION WITH A DEFINITELY RELATED GOVERNMENT PROCUREMENT OPERATION, THE UNITED STATES GOVERNMENT THEREBY INCURS NO RESPONSIBILITY NOR ANY OBLIGATION WHATSOEVER; AND THE FACT THAT THE GOVERNMENT MAY HAVE FORMULATED, FURNISHED, OR IN ANY WAY SUPPLIED THE SAID DRAWINGS, SPECIFICATIONS OR OTHER DATA IS NOT TO BE REGARDED BY IMPLICATION OR OTHERWISE AS IN ANY MANNER LICENSING THE HOLDER OR ANY OTHER PERSON OR CORPORATION, OR CONVEYING ANY RIGHTS OR PERMISSION TO MANUFACTURE, USE, OR SELL ANY PATENTED INVENTION THAT MAY IN ANY WAY BE RELATED THERETO.

1003757 A

REVISIONS 12765			
SYM	DESCRIPTION	DATE	APPROVAL
A	REVISED PER TDRR 13258	10 Oct 64	

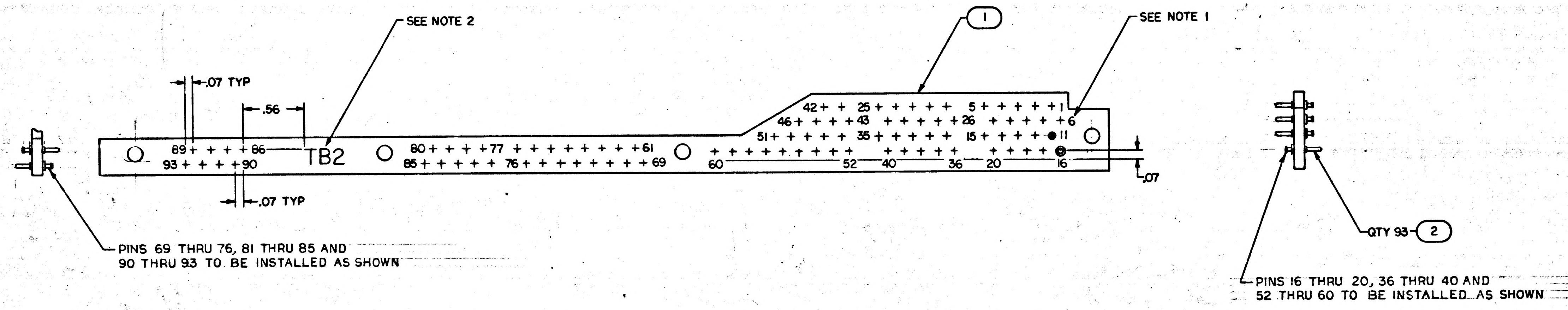

PINS 69 THRU 76, 81 THRU 85 AND 90 THRU 93 TO BE INSTALLED AS SHOWN

PINS 16 THRU 20, 36 THRU 40 AND 52 THRU 60 TO BE INSTALLED AS SHOWN

NOTES

1. MARK BOTH SIDES .083 HIGH WHITE PER ND1002019 AND ND 1002122, TYPE II, CLASS I USING MARKING INK 1006271-1
2. MARK BOTH SIDES .125 HIGH WHITE PER ND1002019 AND ND 1002122, TYPE II, CLASS I USING MARKING INK 1006271-1
3. SWAGE FIND NO.2 TO FIND NO.1
4. INTERPRET DRAWING IN ACCORDANCE WITH STANDARDS PRESCRIBED BY MIL-D-70327

MASTER

QTY REQD	PART OR IDENTIFYING NO.	NOMENCLATURE OR DESCRIPTION	FIND NO.
93	1006297-003	TERMINAL, FEEDTHRU	2
1	1004755	BOARD, TERMINAL	1

LIST OF MATERIALS

NEXT ASSY	USED ON
1003758	

APPLICATION

UNLESS OTHERWISE SPECIFIED DIMENSIONS ARE IN INCHES
TOLERANCES ON
FRACTIONS ± DECIMALS ±.03 ANGLES ±
DO NOT SCALE THIS DRAWING
MATERIAL
HEAT TREATMENT
FINAL FINISH

MIT INSTRUMENTATION LAB
CAMBRIDGE, MASS.
DWG. NO. CONTRACT
DRAWN B. Jensen DATE 3 AUG 64
CHECKED R. Edward 12 Sept 64
APPROVAL Hansen Sept 15 '64
APPROVAL Eldon C. Hall 21 Sept 64
NASA APPROVAL W. J. Rhine 9-22-64
MIT APPROVAL
MIT APPROVAL 22 Sept 64

MANNED SPACECRAFT CENTER
HOUSTON, TEXAS

TERMINAL BOARD ASSY (TB2)
AGC DSKY, NAV
100 SERIES

CODE IDENT NO. ——— SIZE D NASA DRAWING NO. 1003757
SCALE 2/1 WT SHEET 1 OF 1

1003757 A

1003757 –

SYM	DESCRIPTION	DATE	APPROVAL

REVISIONS 12765

NOTICE — WHEN GOVERNMENT DRAWINGS, SPECIFICATIONS, OR OTHER DATA ARE USED FOR ANY PURPOSE OTHER THAN IN CONNECTION WITH A DEFINITELY RELATED GOVERNMENT PROCUREMENT OPERATION, THE UNITED STATES GOVERNMENT THEREBY INCURS NO RESPONSIBILITY NOR ANY OBLIGATION WHATSOEVER; AND THE FACT THAT THE GOVERNMENT MAY HAVE FORMULATED, FURNISHED, OR IN ANY WAY SUPPLIED THE SAID DRAWINGS, SPECIFICATIONS OR OTHER DATA IS NOT TO BE REGARDED BY IMPLICATION OR OTHERWISE AS IN ANY MANNER LICENSING THE HOLDER OR ANY OTHER PERSON OR CORPORATION, OR CONVEYING ANY RIGHTS OR PERMISSION TO MANUFACTURE, USE, OR SELL ANY PATENTED INVENTION THAT MAY IN ANY WAY BE RELATED THERETO.

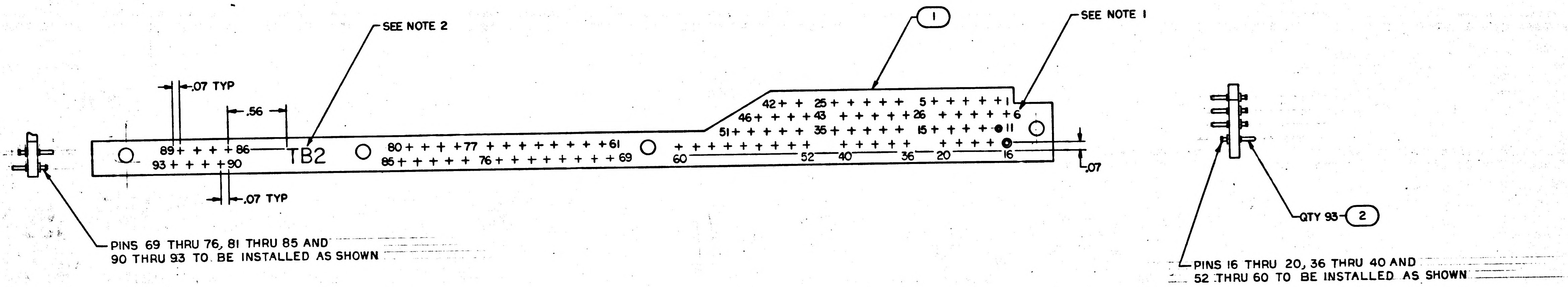

PINS 69 THRU 76, 81 THRU 85 AND 90 THRU 93 TO BE INSTALLED AS SHOWN

PINS 16 THRU 20, 36 THRU 40 AND 52 THRU 60 TO BE INSTALLED AS SHOWN

NOTES

1. MARK BOTH SIDES .083 HIGH WHITE PER ND1002019 AND ND 1002122, TYPE II, CLASS I
2. MARK BOTH SIDES .125 HIGH WHITE PER ND1002019 AND ND 1002122, TYPE II, CLASS I
3. SWAGE FIND NO.2 TO FIND NO.1
4. INTERPRET DRAWING IN ACCORDANCE WITH STANDARDS PRESCRIBED BY MIL-D-70327

MASTER

QTY REQD	PART OR IDENTIFYING NO.	NOMENCLATURE OR DESCRIPTION	FIND NO.
93	1006297	TERMINAL	2
1	1004755	BOARD, TERMINAL	1

LIST OF MATERIALS

NEXT ASSY	USED ON
1003758	

APPLICATION

UNLESS OTHERWISE SPECIFIED DIMENSIONS ARE IN INCHES
TOLERANCES ON
FRACTIONS ±
DECIMALS ±.03
ANGLES ±
DO NOT SCALE THIS DRAWING
MATERIAL
HEAT TREATMENT
FINAL FINISH

MIT INSTRUMENTATION LAB
CAMBRIDGE, MASS
DWG. NO.
CONTRACT
DRAWN B. Jensen DATE 13 AUG 64
CHECKED R. E. 12 Sept 64
APPROVAL Sept 15/64.
APPROVAL 21 Sept 64
NASA APPROVAL W. J.
MIT APPROVAL
MIT APPROVAL 22 Sept 64

MANNED SPACECRAFT CENTER
HOUSTON, TEXAS

TERMINAL BOARD ASSY (TB2)
AGC DSKY, NAV
100 SERIES

CODE IDENT NO. ——
SIZE D
NASA DRAWING NO. 1003757
SCALE 2/1
WT
SHEET 1 OF 1

1003757

INCHES

	1003758	A

REVISIONS 12763

SYM	DESCRIPTION	DATE	APPROVAL
A	REPLACED WITH CHANGES BY REV B PER TDRR 20558 DR CHK	/65	

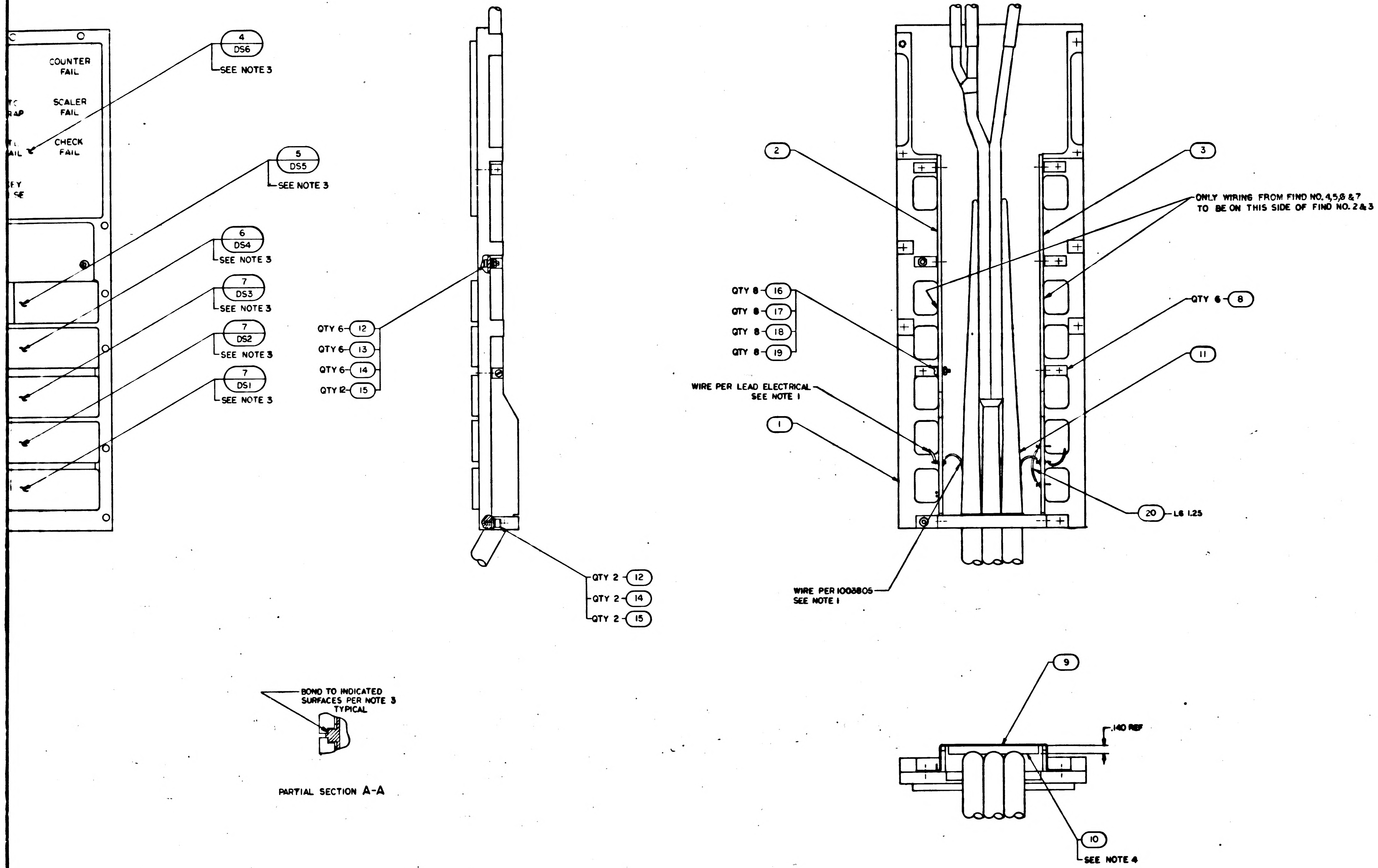

COUNTER FAIL
SCALER FAIL
CHECK FAIL
4 DS6 SEE NOTE 3
5 DS5 SEE NOTE 3
6 DS4 SEE NOTE 3
7 DS3 SEE NOTE 3
7 DS2 SEE NOTE 3
7 DS1 SEE NOTE 3
QTY 6 12
QTY 6 13
QTY 6 14
QTY 12 15
QTY 2 12
QTY 2 14
QTY 2 15
2
3
QTY 8 16
QTY 8 17
QTY 8 18
QTY 8 19
ONLY WIRING FROM FIND NO. 4,5,6 & 7 TO BE ON THIS SIDE OF FIND NO. 2 & 3
QTY 6 8
11
WIRE PER LEAD ELECTRICAL SEE NOTE 1
1
20 LG 1.25
WIRE PER 1003805 SEE NOTE 1
BOND TO INDICATED SURFACES PER NOTE 3 TYPICAL
PARTIAL SECTION A-A
9
.140 REF
10
SEE NOTE 4

Ⓐ REPLACED WITH CHANGES BY REV B

QTY REQD	PART OR IDENTIFYING NO.	NOMENCLATURE OR DESCRIPTION	FIND NO.
☒	1005750	INTERCONNECTION DIAGRAM	REF
* 1.0	1010416-11	WIRE, ELECTRICAL	20
8	NAS620C2	WASHER, FLAT	19
8	MS35337-77	WASHER, LOCK	18
8	NAS671C2	NUT, HEX, PLAIN	17
8	MS35233-4	SCREW, PAN HD	16
14	NAS620C4	WASHER, FLAT	15
8	MS35337-78	WASHER, LOCK	14
6	NAS671C4	NUT, HEX, PLAIN	13
8	MS16995-10	SCREW, CAP	12
1	1003805	WIRING HARNESS, BRANCHED	11
1	1004758	CUSHION, CABLE	10
1	1004757	BRACKET, CABLE	9
6	1004756	BRACKET	8
3	1003803	INDICATOR E/L ASSY (REG)	7
1	1003802	INDICATOR E/L ASSY (V-N)	6
1	1003801	INDICATOR E/L ASSY (PROG)	5
1	1003800	INDICATOR E/L ASSY (ALARM)	4
1	1003757	TERMINAL BOARD ASSY (TB2)	3
1	1003756	TERMINAL BOARD ASSY (TB1)	2
1	1004751	E/L FRAME	1

LIST OF MATERIALS

1003706	
NEXT ASSY	USED ON
APPLICATION	

UNLESS OTHERWISE SPECIFIED DIMENSIONS ARE IN INCHES
TOLERANCES ON
FRACTIONS ± DECIMALS ±.03 ANGLES ±
DO NOT SCALE THIS DRAWING
MATERIAL
HEAT TREATMENT
FINAL FINISH

MIT INSTRUMENTATION LAB
CAMBRIDGE MASS
DRAWN B. DATE 18 AUG 64
CHECKED 15
APPROVAL Sept 15 64
APPROVAL 21 Sept 64
NASA APPROVAL W. J. 9-22-64
MIT APPROVAL
MIT APPROVAL 22 Sept 64

MANNED SPACECRAFT CENTER
HOUSTON, TEXAS

E/L FRAME & HARNESS ASSY
AGC DSKY, NAV
100 SERIES

CODE IDENT NO. —— SIZE J NASA DRAWING NO. 1003758
SCALE 1/1 WT SHEET 1 OF 1

F 3 / 3

1003758	A	
A	REPLACED WITH REV B PER TDRR DR 4gl.agn CHK	

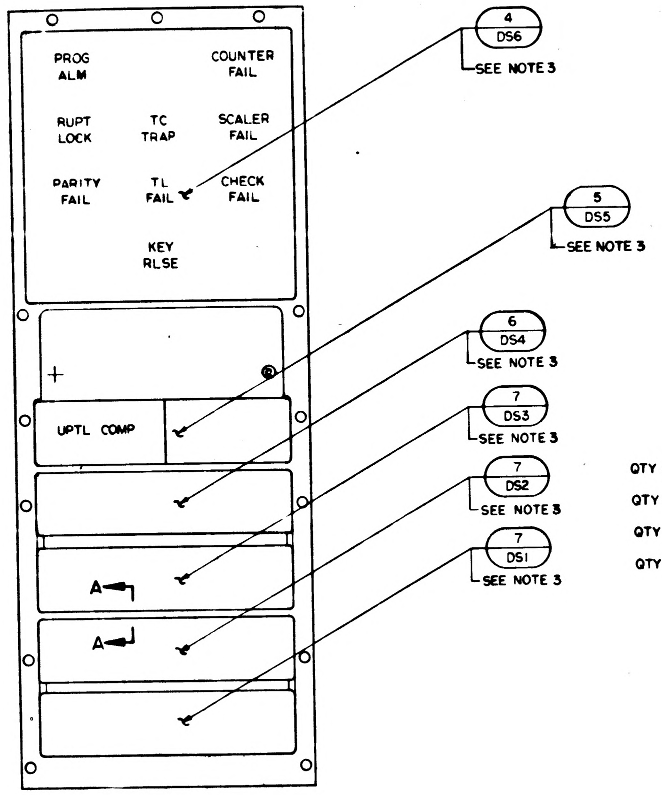

PROG ALM
COUNTER FAIL
RUPT LOCK
TC TRAP
SCALER FAIL
PARITY FAIL
TL FAIL
CHECK FAIL
KEY RLSE
UPTL COMP
A
A
4 DS6 SEE NOTE 3
5 DS5 SEE NOTE 3
6 DS4 SEE NOTE 3
7 DS3 SEE NOTE 3
7 DS2 SEE NOTE 3
7 DS1 SEE NOTE 3

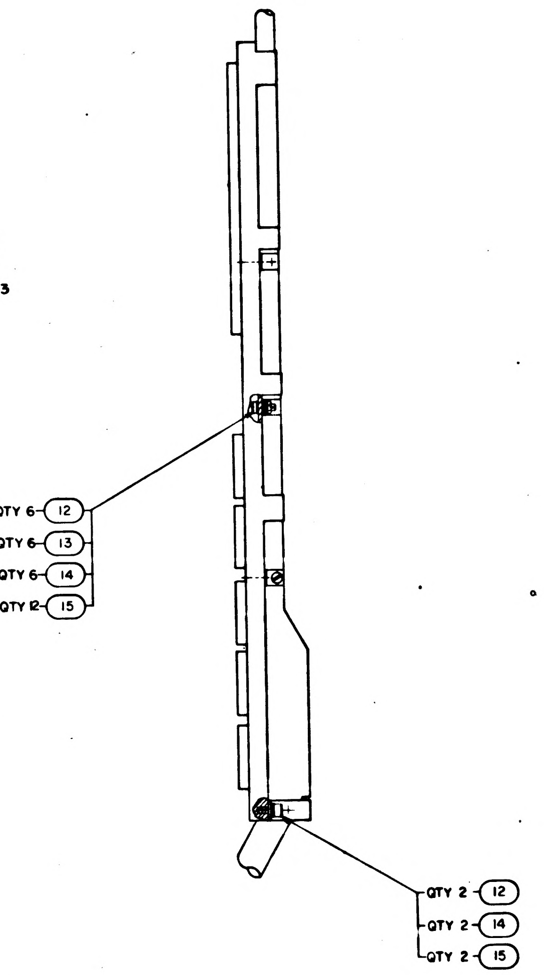

QTY 6 12
QTY 6 13
QTY 6 14
QTY 12 15
QTY 2 12
QTY 2 14
QTY 2 15

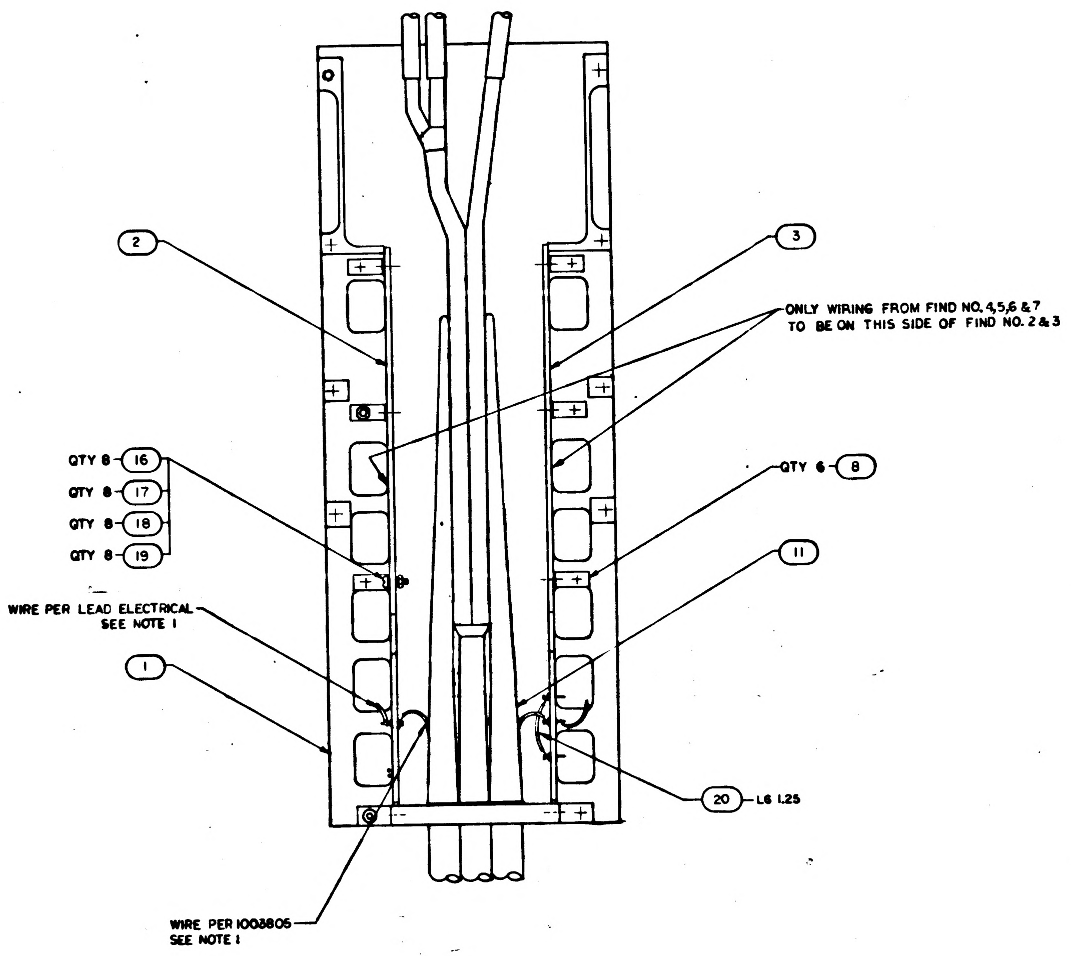

2
3
ONLY WIRING FROM FIND NO. 4,5,6 & 7 TO BE ON THIS SIDE OF FIND NO. 2 & 3
QTY 8 16
QTY 8 17
QTY 8 18
QTY 8 19
QTY 6 8
11
WIRE PER LEAD ELECTRICAL SEE NOTE 1
1
20 LG 1.25
WIRE PER 1003805 SEE NOTE 1

Ⓐ REPLACED WITH CHAN

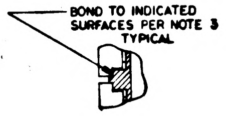

BOND TO INDICATED SURFACES PER NOTE 3 TYPICAL

PARTIAL SECTION A-A

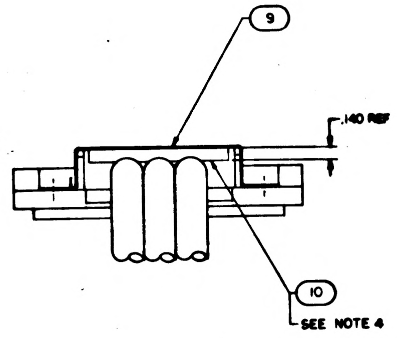

9
.140 REF
10
SEE NOTE 4

QTY REQD	PART OR IDENTIFYING NO.	
	1005750	INTERCONNEC
* 1.0	1010416-11	WIRE, ELECTR
8	NAS620C2	WASHER, FLA
8	MS35337-77	WASHER, LOC
8	NAS671C2	NUT, HEX PL
8	MS35233-4	SCREW, PAN
14	NAS620C4	WASHER, FL
8	MS35337-78	WASHER, LO
6	NAS671C4	NUT, HEX P
8	MS16995-10	SCREW, CAP
1	1003805	WIRING H
1	1004758	CUSHION,
1	1004757	BRACKET,
6	1004756	BRACKET
3	1003803	INDICATOR E
1	1003802	INDICATOR E
1	1003801	INDICATOR E
1	1003800	INDICATOR E
1	1003757	TERMINAL B
1	1003756	TERMINAL B
1	1004751	E/L FRAME

LIST OF MATERIALS

1003706	
NEXT ASSY	USED ON
APPLICATION	

UNLESS OTHERWISE SPECIFIED
DIMENSIONS ARE IN INCHES
TOLERANCES ON
FRACTIONS ± DECIMALS ±.03 ANGLES ±
DO NOT SCALE THIS DRAWING
MATERIAL
HEAT TREATMENT
FINAL FINISH

MIT
INSTRUMENTATION LAB
CAMBRIDGE, MASS
DRAWN B. Jensen DATE 18 AUG 64
CHECKED F. Edwards 15 Sept 64
APPROVAL Sept 15 '64
APPROVAL Sept 64
NASA APPROVAL W. J. 10-22-64
MIT APPROVAL
MIT APPROVAL 22 Sept 64

MANNED

E/L FRAME

CODE IDENT NO.
SCALE 1/1

MASTER

1003758 A F2/3

LEAD ELECTRICAL		
REFERENCE DESIGNATION	LEAD IDENT	CONNECT TO
DS1	N3	TB1-16
	F3	-17
	E3	-18
	E4	-19
	N2	-11
	J3	-12
	H3	-13
	F2	-14
	E2	-15
	N1	-6
	K1	-7
	M2	-8
	J2	-9
	H2	-10
	M1	-1
	J1	-2
	F1	-3
	H1	-4
	E1	TB1-5
	K2	TB2-16
	K3	-17
	M3	-18
	G1	-20
	N4	-11
	M4	-12
	J4	-13
	F4	-14
	H4	-15
	N5	-6
	M5	-7
	K4	-8
	H5	-9
	E5	-10
	B1	-1
	A1	-2
	K5	-3
	J5	-4
	F5	TB2-5
DS2	N3	TB1-36
	F3	-37
	E3	-38
	E4	-39
	N2	-31
	J3	-32
	H3	-33
	F2	-34
	E2	-35
	N1	-26
	K1	-27
	M2	-28
	J2	-29
	H2	-30
	M1	-21
	J1	-22
	F1	-23
	H1	-24
	E1	TB1-25
	K2	TB2-36
	K3	-37
	M3	-38
	G1	-40
	N4	-31
	M4	-32
	J4	-33
	F4	-34
	H4	-35
	N5	-26
	M5	-27
	K4	-28
	H5	-29
	E5	-30
	B1	-21
	A1	-22
	K5	-23
	J5	-24
	F5	TB2-25

LEAD ELECTRICAL		
REFERENCE DESIGNATION	LEAD IDENT	CONNECT TO
DS3	N3	TB1-52
	J2	-53
	J3	-54
	F2	-55
	H3	-56
	F3	-57
	E3	-58
	E4	-59
	N2	-47
	K1	-48
	M2	-49
	H2	-50
	E2	-51
	N1	-43
	J1	-44
	F1	-45
	E1	-46
	M1	-41
	H1	TB1-42
	K2	TB2-52
	M3	-53
	K3	-54
	M4	-55
	J4	-56
	H4	-57
	F4	-58
	G1	-60
	N4	-47
	M5	-48
	K4	-49
	H5	-50
	E5	-51
	N5	-43
	K5	-44
	J5	-45
	F5	-46
	B1	-41
	A1	TB2-42
DS4	G1	TB1-69
	K2	-70
	M2	-71
	J2	-72
	F2	-73
	H2	-74
	E2	-75
	N2	-61
	N1	-62
	K1	-63
	M1	-64
	J1	-65
	F1	-66
	H1	-67
	E1	TB1-68
	G2	TB2-69
	K3	-70
	M3	-71
	J3	-72
	F3	-73
	H3	-74
	E3	-75
	N3	-61
	N4	-62
	K4	-63
	M4	-64
	J4	-65
	F4	-66
	H4	-67
	E4	TB2-68

LEAD ELECTRICAL		
REFERENCE DESIGNATION	LEAD IDENT	CONNECT TO
DS5	K1	TB1-82
	J1	-83
	F1	-84
	E1	-85
	N2	-77
	N1	-78
	M1	-79
	H1	TB1-80
	G1	TB2-81
	K2	-82
	J2	-83
	F2	-84
	E2	-85
	S1	-77
	S2	-78
	M2	-79
	H2	TB2-80
DS6	S3A	TB1-90
	S11	-91
	S5	-92
	S4	-93
	S6	-86
	S3B	-87
	S7	-88
	S1	TB1-89
	S10A	TB2-90
	S9	-92
	S2	-93
	G5	-86
	S10B	-87
	S12	-88
	S8	TB2-89

FROM	TO
TB2-20	TB2-40
TB2-40	TB2-60
TB2-60	TB2-81
TB2-81	TB2-86
TB1-76	TB1-69

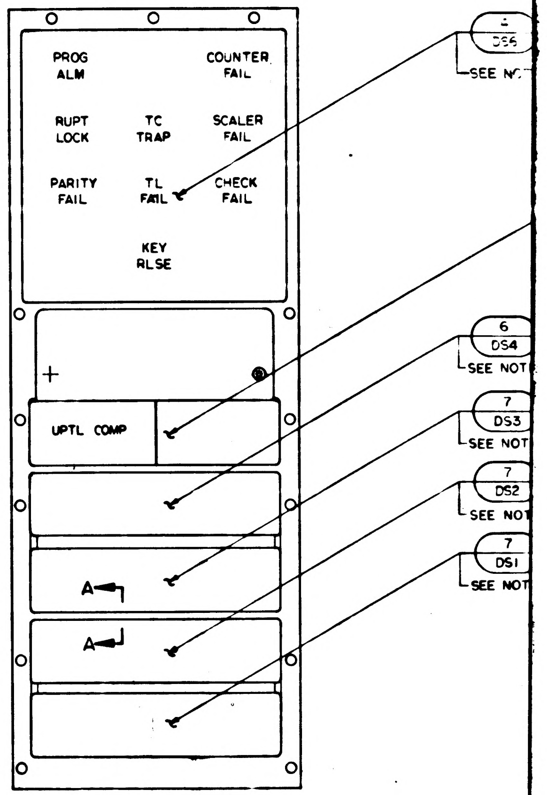

NOTES

1. SOLDER PER ND 1002071
2. INTERPRET DRAWING IN ACCORDANCE WITH STANDARDS PRESCRIBED BY MIL-D-70327
3. BOND FIND NO.4,5,6 & 7 TO FIND NO.1 PER ND1002004, TYPE II
4. BOND FIND NO. 10 TO FIND NO. 9 PER ND 1002151
5. * DENOTE LENGTH IN FEET

SYM	DESCRIPTION	DATE	APPROVED
B	REPLACES REV A WITH CHANGES PER TDRR 20558		

1003758 B

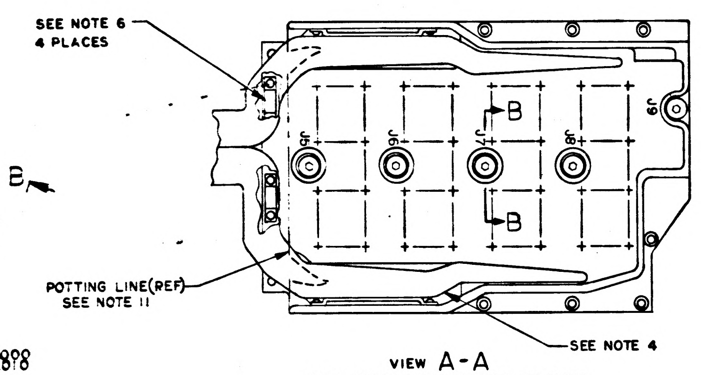
SEE NOTE 6
4 PLACES
J6
J7
J8
J9
B
B
POTTING LINE(REF)
SEE NOTE 11
SEE NOTE 4

VIEW A-A
VIEW SHOWN WITH POTTING REMOVED

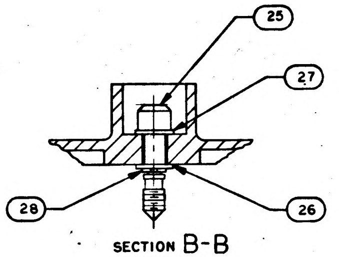

SECTION B-B
SCALE 2/1
5 PLACES

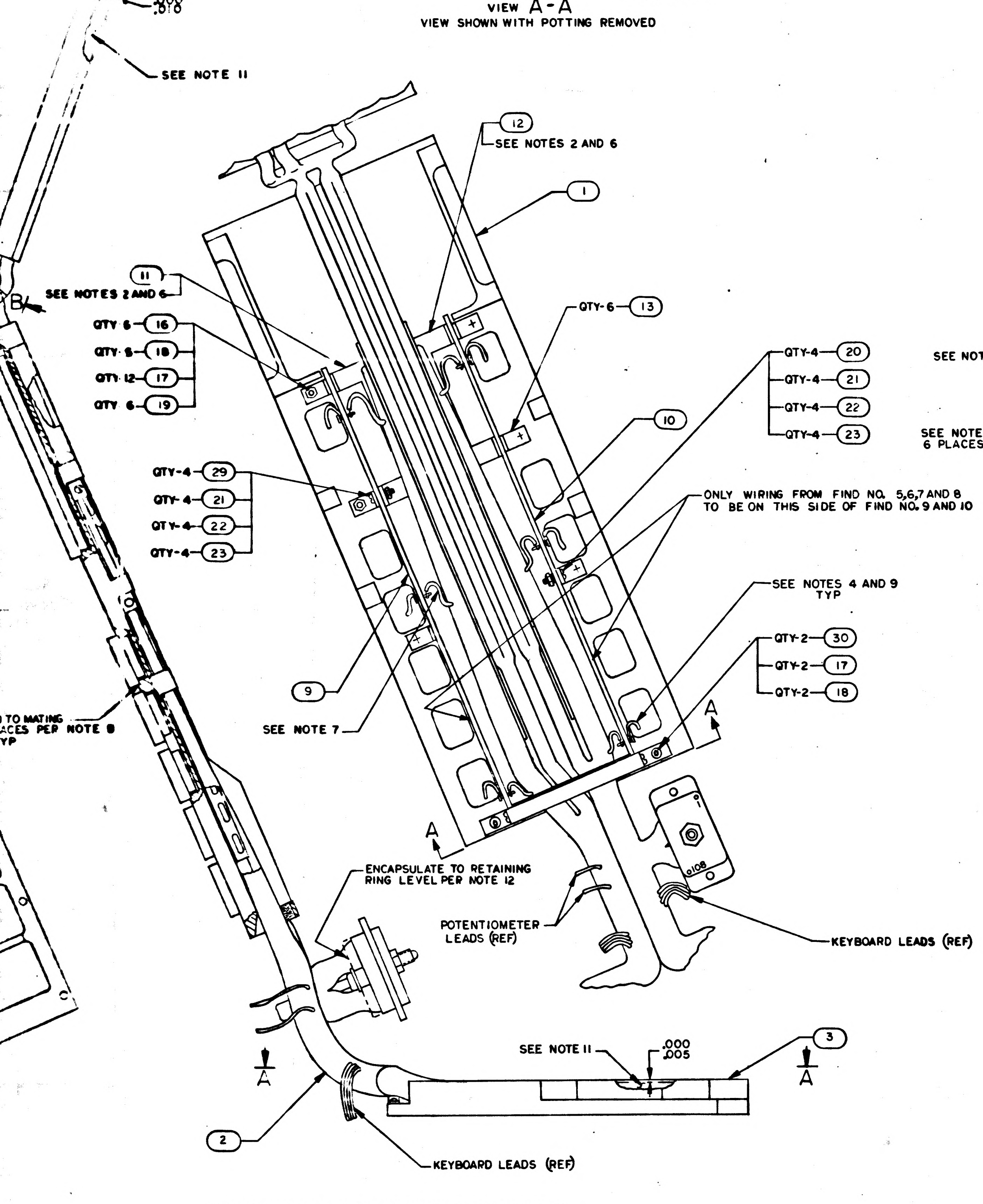
.000
.010
SEE NOTE 11
12
SEE NOTES 2 AND 6
1
11
SEE NOTES 2 AND 6
QTY-6 13
QTY 6 16
QTY 6 18
QTY 12 17
QTY 6 19
QTY-4 20
QTY-4 21
QTY-4 22
QTY-4 23
10
QTY-4 29
QTY-4 21
QTY-4 22
QTY-4 23
ONLY WIRING FROM FIND NO. 5,6,7 AND 8 TO BE ON THIS SIDE OF FIND NO. 9 AND 10
SEE NOTES 4 AND 9 TYP
QTY-2 30
QTY-2 17
QTY-2 18
9
SEE NOTE 7
TO MATING
ACES PER NOTE 8
YP
A
A
ENCAPSULATE TO RETAINING RING LEVEL PER NOTE 12
POTENTIOMETER LEADS (REF)
KEYBOARD LEADS (REF)
SEE NOTE 11
.000
.005
3
A
A
2
KEYBOARD LEADS (REF)

VIEW SHOWN WITH FIND NO 9 AND FIND NO 13 REMOVED

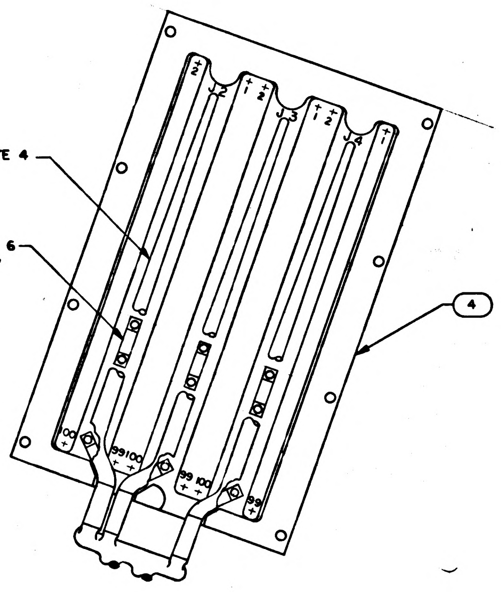
SEE NOTE 4
SEE NOTE 6
6 PLACES
4

VIEW B-B
VIEW SHOWN WITH POTTING REMOVED

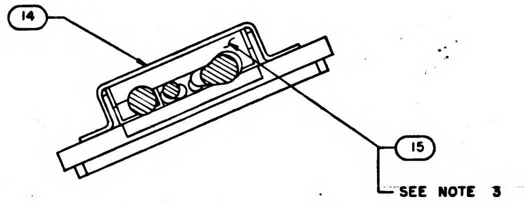
14
15
SEE NOTE 3

SECTION A-A

Ⓑ REPLACES REV A WITH CHANGES

QTY REQD	PART OR IDENTIFYING NO.	NOMENCLATURE OR DESCRIPTION	FIND NO.
2	MS16995-9	SCREW, CAP	30
4	MS35233-5	SCREW, PAN HD	29
5	MS16633-4015	RING, RETAINING	28
5	1004546-1	WASHER, FLAT	27
5	1004546-3	WASHER, FLAT	26
5	1004579-1	SCREW, JACKING	25
AR	1012507-003	TAPE, LACING	24
8	NAS671C2	NUT, HEX, PLAIN	23
8	MS35337-77	WASHER, LOCK	22
8	NAS620C2	WASHER, FLAT	21
4	MS35233-4	SCREW, PAN, HD	20
6	NAS671C4	NUT, HEX, PLAIN	19
8	MS35337-78	WASHER, LOCK	18
14	NAS620C4	WASHER, FLAT	17
6	MS16995-10	SCREW, CAP	16
1	1004758	CUSHION, CABLE	15
1	1004757	BRACKET, CABLE	14
6	1004756	BRACKET	13
1	1004854	BRACKET, CABLE, RH	12
1	1004853	BRACKET, CABLE, LH	11
1	1003757	TERMINAL BOARD ASSY (TB2)	10
1	1003756	TERMINAL BOARD ASSY (TB1)	9
1	1003800	INDICATOR, E/L ASSY (ALARM)	8
1	1003801	INDICATOR, E/L ASSY (PROG)	7
1	1003802	INDICATOR, E/L ASSY (V-N)	6
3	1003803	INDICATOR, E/L ASSY (REG)	5
1	1003531-011	PLATE, WIRE WRAP ASSY (DECODING)	4
1	1003822-011	PLATE, WIRE WRAP ASSY (RELAY)	3
1	1003805-011	WIRING HARNESS, BRANCHED	2
1	1004751	E/L FRAME	1

LIST OF MATERIALS

1003758 B

1003706	
NEXT ASSY	USED ON
APPLICATION	

UNLESS OTHERWISE SPECIFIED
DIMENSIONS ARE IN INCHES
TOLERANCES ON
DECIMALS .XX ±.03 DECIMALS .XXX ± ANGLES ±
DO NOT SCALE DRAWING
MATERIAL

MIT
INSTRUMENTATION LAB
Cambridge Mass

DRAWN J.A. DATE 19 AUG 65
CHECKED Hogan 25 Aug 65
APPROVAL B. Marsh 26 Aug 65
APPROVAL 27 Aug 65
NOT REQUIRED PER LETTER
NASA APPROVAL
MIT APPROVAL
MIT APPROVAL

MANNED SPACECRAFT CENTER
HOUSTON, TEXAS

E/L FRAME & HARNESS ASSY
AGC DSKY NAV
100 SERIES

CODE IDENT NO. 80230 SIZE J NASA DRAWING NO. 1003758
SCALE 1/1 WT SHEET 1 OF 1

3 H

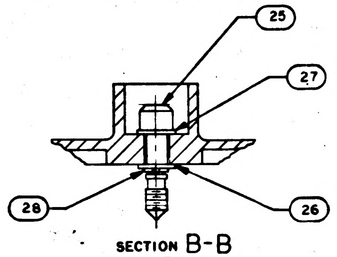

SECTION B-B
SCALE 2/1
5 PLACES

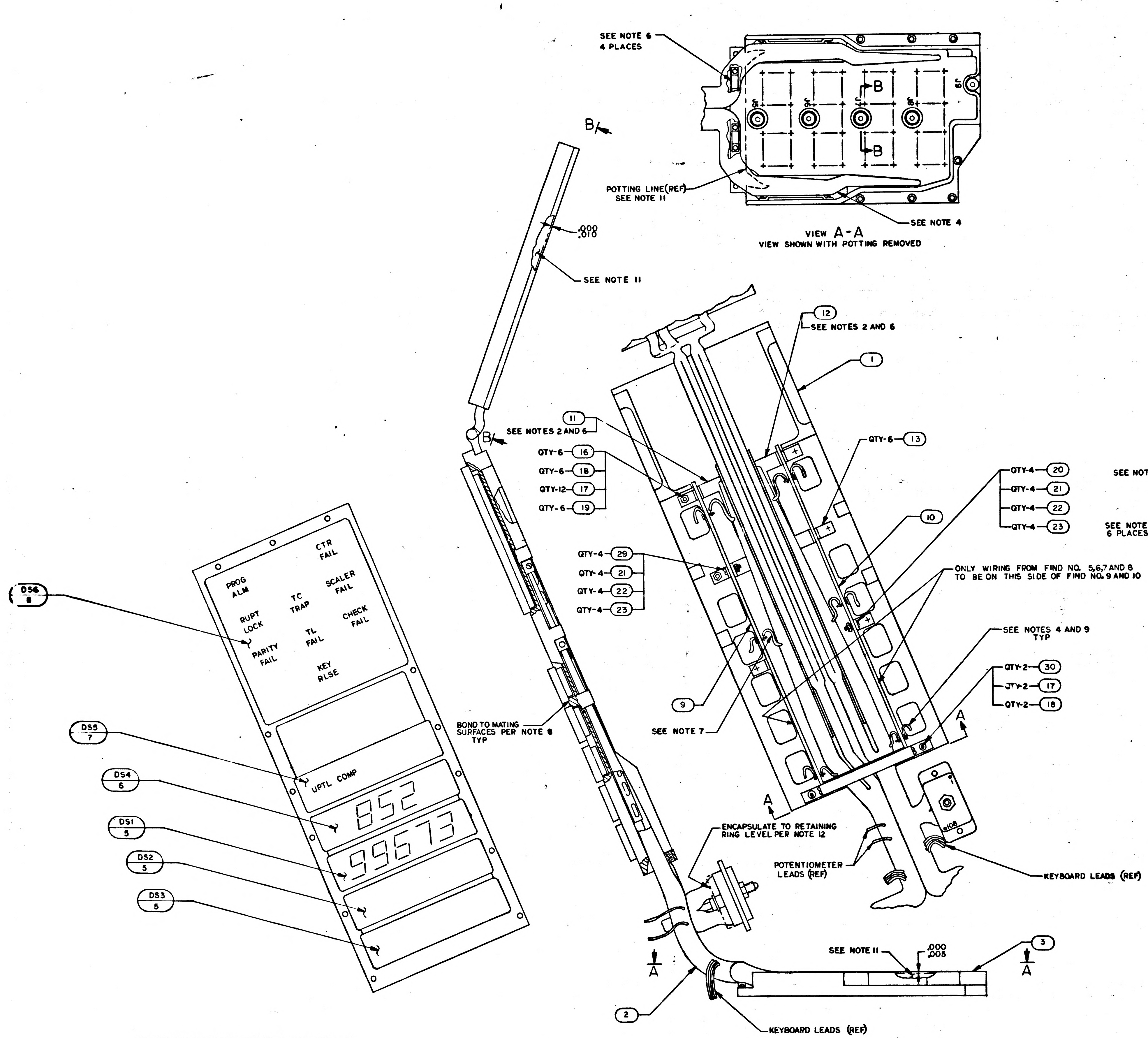
SEE NOTE 6
4 PLACES
J5
J6
J7
J8
J9
B
B
POTTING LINE(REF)
SEE NOTE 11
SEE NOTE 4
B
.000
.010
SEE NOTE 11
SEE NOTES 2 AND 6
B
12
SEE NOTES 2 AND 6
1
11
QTY-6 16
QTY-6 18
QTY-12 17
QTY-6 19
QTY-6 13
QTY-4 20
QTY-4 21
QTY-4 22
QTY-4 23
10
QTY-4 29
QTY-4 21
QTY-4 22
QTY-4 23
ONLY WIRING FROM FIND NO. 5,6,7 AND 8 TO BE ON THIS SIDE OF FIND NO. 9 AND 10
SEE NOTES 4 AND 9 TYP
QTY-2 30
QTY-2 17
QTY-2 18
A
9
SEE NOTE 7
A
DS6
8
PROG ALM
CTR FAIL
TC TRAP
SCALER FAIL
RUPT LOCK
CHECK FAIL
PARITY FAIL
TL FAIL
KEY RLSE
DS5
7
UPTL COMP
DS4
6
852
DS1
5
99673
DS2
5
DS3
5
BOND TO MATING SURFACES PER NOTE 8 TYP
ENCAPSULATE TO RETAINING RING LEVEL PER NOTE 12
POTENTIOMETER LEADS (REF)
KEYBOARD LEADS (REF)
SEE NOTE 11
.000
.005
3
A
A
2
KEYBOARD LEADS (REF)

VIEW A-A
VIEW SHOWN WITH POTTING REMOVED

VIEW SHOWN WITH FIND NO 9 AND FIND NO 13 REMOVED

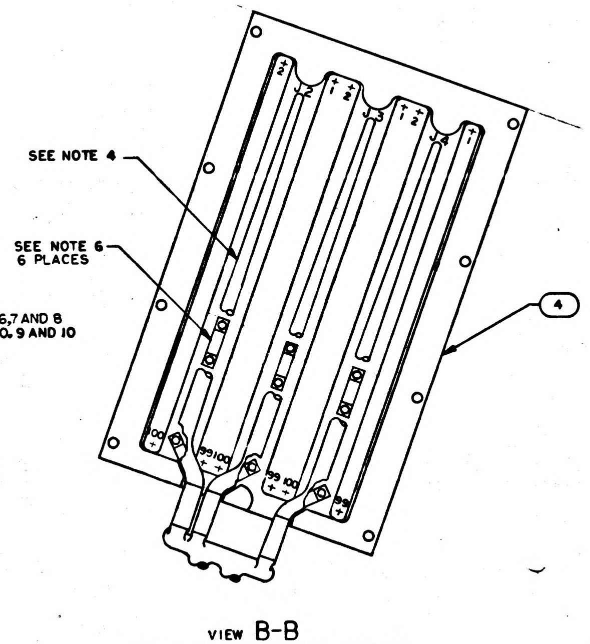
SEE NOTE 4
SEE NOTE 6
6 PLACES
4

VIEW B-B
VIEW SHOWN WITH POTTING REMOVED

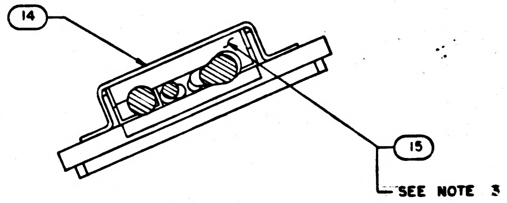
14
15
SEE NOTE 3

SECTION A-A

REFERENCE: INTERCONNECTION DIAGRAM 1005750

1003706	
NEXT ASSY	USED ON
APPLICATION	

.03

D

C

B

A

3H

LEAD ELECTRICAL		
REFERENCE DESIGNATION	LEAD IDENT	CONNECT TO
DS3	N3	TB1-16
	F3	↑ -17
	E3	-18
	E4	-19
	N2	-11
	J3	-12
	H3	-13
	F2	-14
	E2	-15
	N1	-6
	K1	-7
	M2	-8
	J2	-9
	H2	-10
	M1	-1
	J1	-2
	F1	-3
	H1	↓ -4
	E1	TB1-5
	K2	TB2-16
	K3	↑ -17
	M3	-18
	G1	-20
	N4	-11
	M4	-12
	J4	-13
	F4	-14
	H4	-15
	N5	-6
	M5	-7
	K4	-8
	H5	-9
	E5	-10
	B1	-1
	A1	-2
	K5	-3
	J5	↓ -4
	F5	TB2-5
DS2	N3	TB1-36
	F3	↑ -37
	E3	-38
	E4	-39
	N2	-31
	J3	-32
	H3	-33
	F2	-34
	E2	-35
	N1	-26
	K1	-27
	M2	-28
	J2	-29
	H2	-30
	M1	-21
	J1	-22
	F1	-23
	H1	↓ -24
	E1	TB1-25
	K2	TB2-36
	K3	↑ -37
	M3	-38
	G1	-40
	N4	-31
	M4	-32
	J4	-33
	F4	-34
	H4	-35
	N5	-26
	M5	-27
	K4	-28
	H5	-29
	E5	-30
	B1	-21
	A1	-22
	K5	-23
	J5	↓ -24
	F5	TB2-25

LEAD ELECTRICAL		
REFERENCE DESIGNATION	LEAD IDENT	CONNECT TO
DS1	N3	TB1-52
	J2	↑ -53
	J3	-54
	F2	-55
	H3	-56
	F3	-57
	E3	-58
	E4	-59
	N2	-47
	K1	-48
	M2	-49
	H2	-50
	E2	-51
	N1	-43
	J1	-44
	F1	-45
	E1	-46
	M1	↓ -41
	H1	TB1-42
	K2	TB2-52
	M3	↑ -53
	K3	-54
	M4	-55
	J4	-56
	H4	-57
	F4	-58
	G1	-60
	N4	-47
	M5	-48
	K4	-49
	H5	-50
	E5	-51
	N5	-43
	K5	-44
	J5	-45
	F5	-46
	B1	↓ -41
	A1	TB2-42
DS4	K2	TB1-70
	M2	↑ -71
	J2	-72
	F2	-73
	H2	-74
	E2	-75
	N2	-61
	N1	-62
	K1	-63
	M1	-64
	J1	-65
	F1	-66
	H1	↓ -67
	E1	TB1-68
	K3	TB2-70
	M3	↑ -71
	J3	-72
	F3	-73
	H3	-74
	E3	-75
	N3	-61
	N4	-62
	K4	-63
	M4	-64
	J4	-65
	F4	-66
	H4	↓ -67
	E4	TB2-68
	E6	TB1-69

LEAD ELECTRICAL		
REFERENCE DESIGNATION	LEAD IDENT	CONNECT TO
DS5	K1	TB1-82
	J1	↑ -83
	F1	-84
	E1	-85
	N2	-77
	N1	-78
	M1	↓ -79
	H1	TB1-80
	G1	TB2-81
	K2	↑ -82
	J2	-83
	F2	-84
	E2	-85
	S1	-77
	S2	-78
	M2	↓ -79
	H2	TB2-80
DS6	S3	TB1-90
	S11	↑ -91
	S5	-92
	S4	-93
	S6	-86
	S7	↓ -88
	S1	TB1-89
	S10A	TB2-90
	S9	↑ -92
	S2	-93
	G5	-86
	S12	↓ -88
	S8	TB2-89

COLOR CODE TYP DS1 THRU DS6		
LEAD IDENT	TRACER	BASIC
A1	RED	YEL
B1	BLK	YEL
G1	—	BLK
G5		BLK
E1	—	WHT
F1	RED	↑
H1	ORN	
J1	GRN	
K1	BLU	
M1	BRN	↓
N1	VIO	WHT
E2	WHT	RED
F2	—	↑
H2	ORN	
J2	GRN	
K2	BLU	
M2	BRN	↓
N2	VIO	RED
E3	WHT	ORN
F3	RED	↑
H3	—	
J3	GRN	
K3	BLU	
M3	BRN	↓
N3	VIO	ORN
E4	WHT	GRN
F4	RED	↑
H4	ORN	
J4	—	
K4	BLU	
M4	BRN	↓
N4	VIO	GRN
E5	WHT	BLU
F5	RED	↑
H5	ORN	
J5	GRN	
K5	—	
M5	BRN	↓
N5	VIO	BLU
S1	—	YEL
S2	GRN	YEL
S4	YEL	BLK
S5	ORN	YEL
S7	YEL	RED
S8	BLU	YEL
S9	VIO	YEL
S11	BRN	YEL
S12	GRY	YEL
S3	YELLOW SLEEVE	
S10	RED SLEEVE	
S6	BLK SLEEVE	
E6	—	BLK

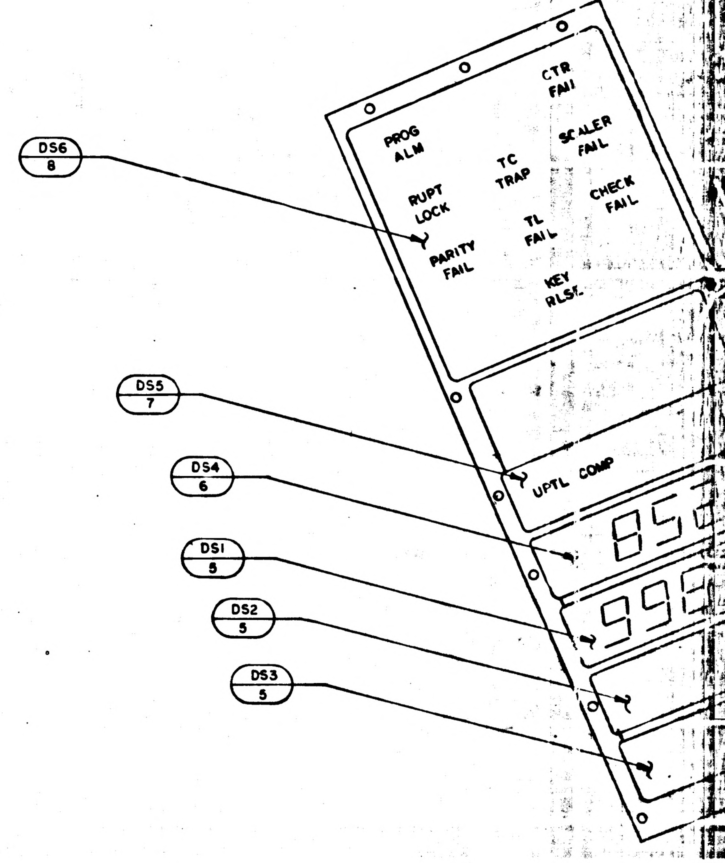

REFERENCE: INTERCONNECTION DIAGRAM :005750

NOTES

1. INTERPRET DRAWING IN ACCORDANCE WITH STANDARDS PRESCRIBED BY MIL-D-70327
2. BOND FIND NO. 11 AND 12 TO FIND NO. 1 IN ASSEMBLED POSITION PER ND1002004, TYPE II
3. BOND FIND NO. 15 TO FIND NO. 14 AS SHOWN PER MIL-A-5092, TYPE II
4. SOLDER FIND NO. 2 TO FIND NO. 3 AND 4 AND FIND NO. 5,6,7 AND 8 TO FIND NO. 9 AND 10 PER ND1002071 USING SOLDER PER ND1002075
5. WIRE PER ND1002032
6. LACE HARNESS TO RETAINING STRAPS AND BRACKETS IN APPROXIMATE POSITION SHOWN USING FIND NO. 24 AS REQUIRED
7. SOLDER FIND NO. 2 TO FIND NO. 9 AND 10 AS SHOWN PER ND1002071 EXCEPT SOLDER MATERIAL TO BE Sb5 PER QQ-S-571
8. BOND FIND NO. 5,6,7 AND 8 TO FIND NO. 1 PER ND1002004, TYPE II
9. DRESS AND TRIM AT ASSEMBLY. STRIP ALL LEADS .19 AND TIN TYPICAL FIND NO. 5,6,7 AND 8
10. AR DENOTES AS REQUIRED
11. ENCAPSULATE PER ND1002217
12. ENCAPSULATE INDICATED AREA PER ND1002009, METHOD E, WITH PRIMER

1003758 C

SYM	DESCRIPTION	DATE	APPROVED
B	REPLACES REV A WITH CHANGES PER TDRR 20558		
C	REVISED PER TDRR 24219 DR E. Uhring CHK Boy APPD		

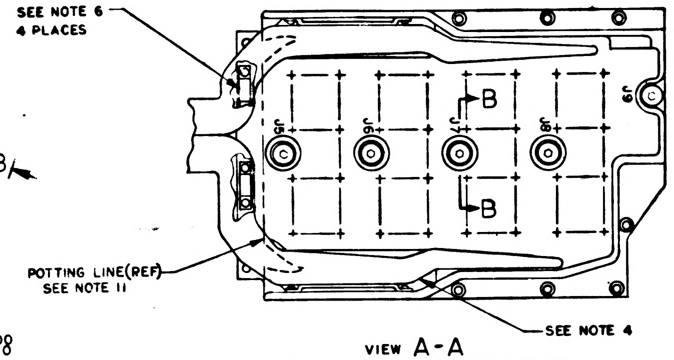
SEE NOTE 6
4 PLACES
B
B
POTTING LINE(REF)
SEE NOTE 11
SEE NOTE 4

VIEW A-A
VIEW SHOWN WITH POTTING REMOVED

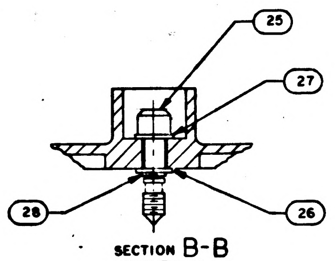

SECTION B-B
SCALE 2/1
5 PLACES

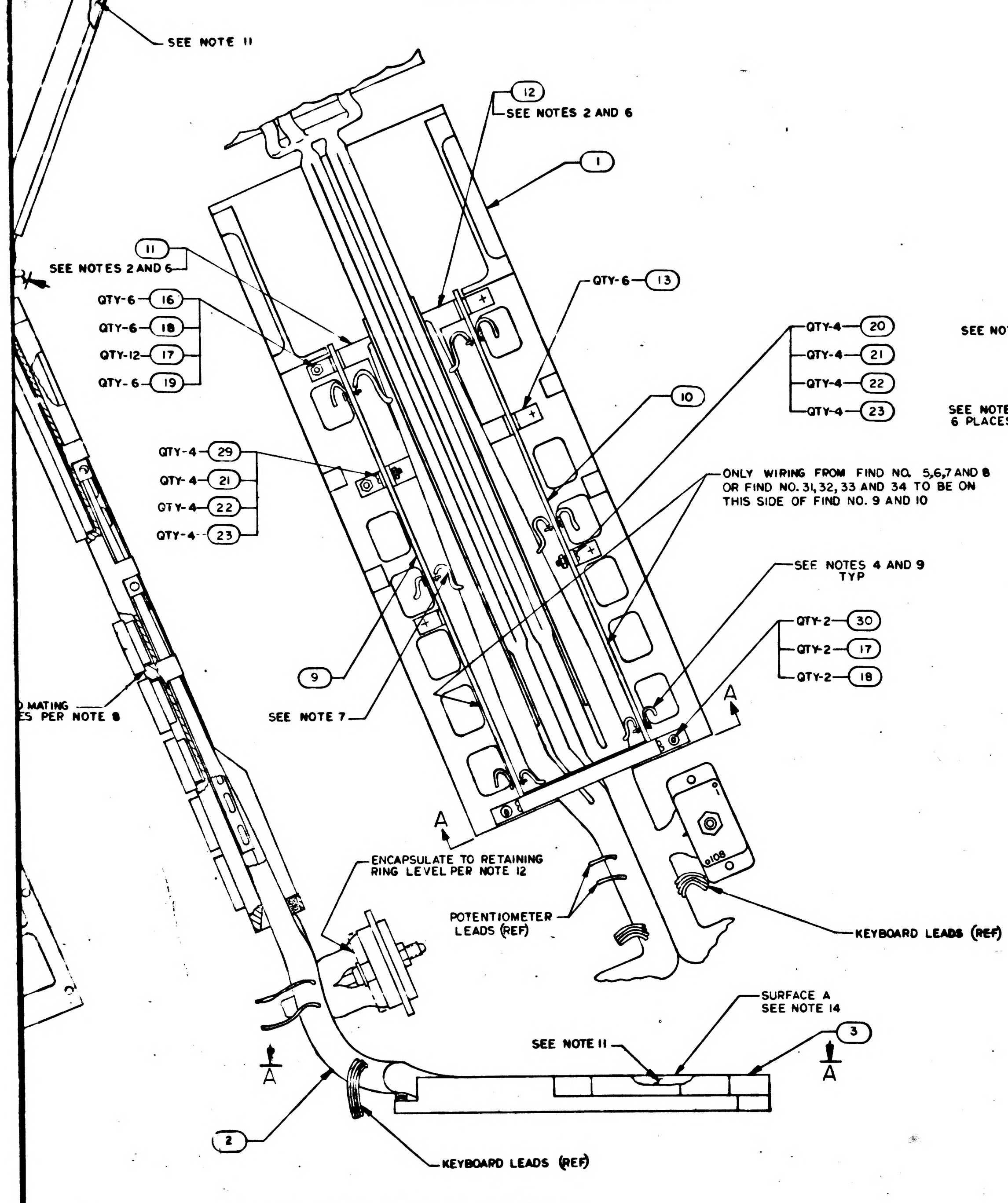
.000
.010
SEE NOTE 11
12
SEE NOTES 2 AND 6
1
11
SEE NOTES 2 AND 6
QTY-6 16
QTY-6 18
QTY-12 17
QTY-6 19
QTY-6 13
QTY-4 20
QTY-4 21
QTY-4 22
QTY-4 23
10
QTY-4 29
QTY-4 21
QTY-4 22
QTY-4 23
ONLY WIRING FROM FIND NO. 5,6,7 AND 8 OR FIND NO. 31,32,33 AND 34 TO BE ON THIS SIDE OF FIND NO. 9 AND 10
SEE NOTES 4 AND 9 TYP
QTY-2 30
QTY-2 17
QTY-2 18
9
SEE NOTE 7
MATING
ES PER NOTE 8
A
A
ENCAPSULATE TO RETAINING RING LEVEL PER NOTE 12
POTENTIOMETER LEADS (REF)
KEYBOARD LEADS (REF)
SURFACE A
SEE NOTE 14
SEE NOTE 11
3
A
A
2
KEYBOARD LEADS (REF)

VIEW SHOWN WITH FIND NO 9 AND FIND NO 13 REMOVED

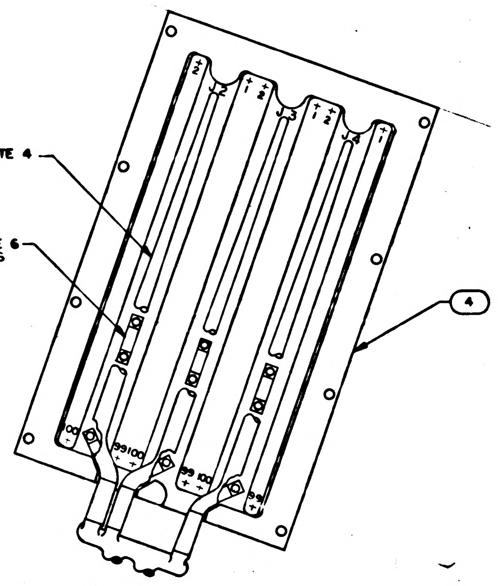
SEE NOTE 4
SEE NOTE 6
6 PLACES
4

VIEW B-B
VIEW SHOWN WITH POTTING REMOVED

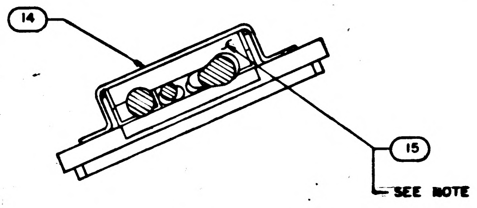
14
15
SEE NOTE 3

SECTION A-A

Ⓑ REPLACES REV A WITH CHANGES

QTY REQD	QTY REQD	PART OR IDENTIFYING NO.	NOMENCLATURE OR DESCRIPTION	FIND NO.
1		1003800-011	INDICATOR, E/L ASSY (ALARM)	34
1		1003801-011	INDICATOR, E/L ASSY (PROG)	33
1		1003802-011	INDICATOR, E/L ASSY (V-N)	32
3		1003803-011	INDICATOR, E/L ASSY (REG)	31
2	2	MS16995-9	SCREW, CAP	30
4	4	MS35233-5	SCREW, PAN HD	29
5	5	MS16633-4015	RING, RETAINING	28
5	5	1004546-1	WASHER, FLAT	27
5	5	1004546-3	WASHER, FLAT	26
5	5	1004579-1	SCREW, JACKING	25
AR	AR	1012507-003	TAPE, LACING	24
8	8	NAS671C2	NUT, HEX, PLAIN	23
8	8	MS35337-77	WASHER, LOCK	22
8	8	NAS620C2	WASHER, FLAT	21
4	4	MS35233-4	SCREW, PAN, HD	20
6	6	NAS671C4	NUT, HEX, PLAIN	19
8	8	MS35337-78	WASHER, LOCK	18
14	14	NAS620C4	WASHER, FLAT	17
6	6	MS16995-10	SCREW, CAP	16
1	1	1004758	CUSHION, CABLE	15
1	1	1004757	BRACKET, CABLE	14
6	6	1004756	BRACKET	13
1	1	1004854	BRACKET, CABLE, RH	12
1	1	1004853	BRACKET, CABLE, LH	11
1	1	1003757	TERMINAL BOARD ASSY (TB2)	10
1	1	1003756	TERMINAL BOARD ASSY (TB1)	9
	1	1003800-000	INDICATOR, E/L ASSY (ALARM)	8
	1	1003801-000	INDICATOR, E/L ASSY (PROG)	7
	1	1003802-000	INDICATOR, E/L ASSY (V-N)	6
	3	1003803-000	INDICATOR, E/L ASSY (REG)	5
1	1	1003531-011	PLATE, WIRE WRAP ASSY (DECODING)	4
1	1	1003822-011	PLATE, WIRE WRAP ASSY (RELAY)	3
1	1	1003805-011	WIRING HARNESS, BRANCHED	2
1	1	1004751	E/L FRAME	1
011	003	LIST OF MATERIALS		

1003706	
NEXT ASSY	USED ON
APPLICATION	

UNLESS OTHERWISE SPECIFIED
DIMENSIONS ARE IN INCHES
TOLERANCES ON
DECIMALS .XX ±.03 DECIMALS .XXX ± ANGLES ±
DO NOT SCALE DRAWING
MATERIAL

MIT INSTRUMENTATION LAB
CAMBRIDGE, MASS
DRAWN J.A. Zaffini DATE 19 AUG 65
CHECKED Hogan 25 Aug 65
APPROVAL
APPROVAL E. C. Hall 23 Aug 65
NOT REQUIRED PER LETTER NASA PP7 65-612
NASA APPROVAL
MIT APPROVAL
MIT APPROVAL

MANNED SPACECRAFT CENTER
HOUSTON, TEXAS

E/L FRAME & HARNESS ASSY
AGC DSKY NAV
100 SERIES

CODE IDENT NO. 80230 SIZE J NASA DRAWING NO. 1003758
SCALE 1/1 WT SHEET 1 OF 1

1003758 C

E 3 / 3

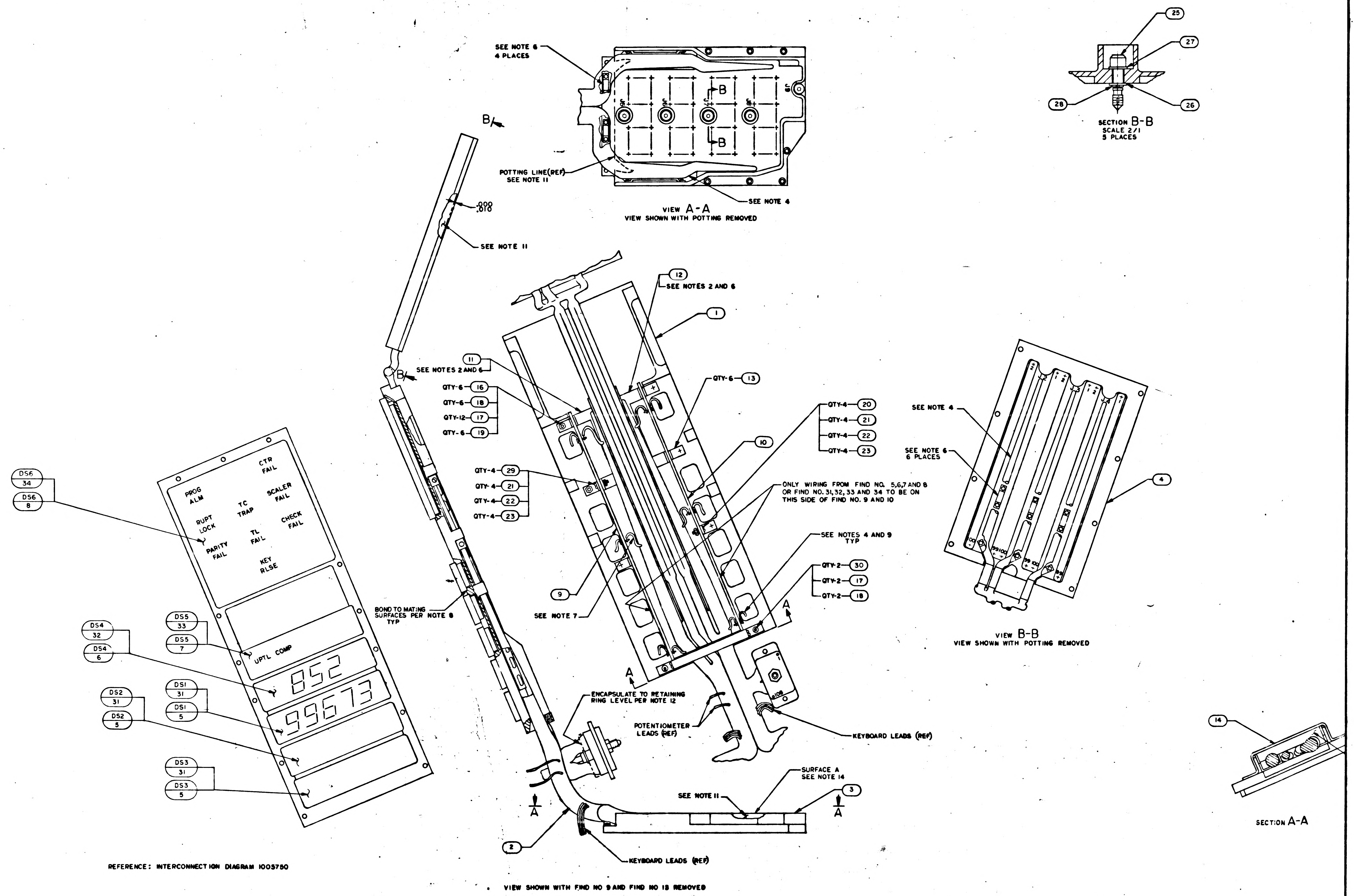
6
5
4
3
SEE NOTE 6
4 PLACES
B
B
POTTING LINE(REF)
SEE NOTE 11
SEE NOTE 4
VIEW A-A
VIEW SHOWN WITH POTTING REMOVED
25
27
28
26
SECTION B-B
SCALE 2/1
5 PLACES
B
.000
.010
SEE NOTE 11
12
SEE NOTES 2 AND 6
1
11
SEE NOTES 2 AND 6
QTY-6 16
QTY-6 18
QTY-12 17
QTY-6 19
QTY-6 13
QTY-4 20
QTY-4 21
QTY-4 22
QTY-4 23
10
QTY-4 29
QTY-4 21
QTY-4 22
QTY-4 23
ONLY WIRING FROM FIND NO. 5,6,7 AND 8
OR FIND NO. 31,32,33 AND 34 TO BE ON
THIS SIDE OF FIND NO. 9 AND 10
SEE NOTES 4 AND 9
TYP
QTY-2 30
QTY-2 17
QTY-2 18
9
SEE NOTE 7
A
A
SEE NOTE 4
SEE NOTE 6
6 PLACES
4
VIEW B-B
VIEW SHOWN WITH POTTING REMOVED
DS6 34
DS6 8
PROG ALM
CTR FAIL
TC TRAP
SCALER FAIL
RUPT LOCK
CHECK FAIL
PARITY FAIL
TL FAIL
KEY RLSE
UPTL COMP
852
99673
DS5 33
DS5 7
DS4 32
DS4 6
DS1 31
DS1 5
DS2 31
DS2 5
DS3 31
DS3 5
BOND TO MATING
SURFACES PER NOTE 8
TYP
ENCAPSULATE TO RETAINING
RING LEVEL PER NOTE 12
POTENTIOMETER
LEADS (REF)
KEYBOARD LEADS (REF)
SURFACE A
SEE NOTE 14
SEE NOTE 11
3
A
A
2
KEYBOARD LEADS (REF)
14
SECTION A-A

REFERENCE: INTERCONNECTION DIAGRAM 1003750

• VIEW SHOWN WITH FIND NO 9 AND FIND NO 13 REMOVED

LEAD ELECTRICAL

REFERENCE DESIGNATION	LEAD IDENT	CONNECT TO
DS3	N3	TB1-16
	F3	-17
	E3	-18
	E4	-19
	N2	-11
	J3	-12
	H3	-13
	F2	-14
	E2	-15
	N1	-6
	K1	-7
	M2	-8
	J2	-9
	H2	-10
	M1	-1
	J1	-2
	F1	-3
	H1	-4
	E1	TB1-5
	K2	TB2-16
	K3	-17
	M3	-18
	G1	-20
	N4	-11
	M4	-12
	J4	-13
	F4	-14
	H4	-15
	N5	-6
	M5	-7
	K4	-8
	H5	-9
	E5	-10
	B1	-1
	A1	-2
	K5	-3
	J5	-4
	F5	TB2-5
DS2	N3	TB1-36
	F3	-37
	E3	-38
	E4	-39
	N2	-31
	J3	-32
	H3	-33
	F2	-34
	E2	-35
	N1	-26
	K1	-27
	M2	-28
	J2	-29
	H2	-30
	M1	-21
	J1	-22
	F1	-23
	H1	-24
	E1	TB1-25
	K2	TB2-36
	K3	-37
	M3	-38
	G1	-40
	N4	-31
	M4	-32
	J4	-33
	F4	-34
	H4	-35
	N5	-26
	M5	-27
	K4	-28
	H5	-29
	E5	-30
	B1	-21
	A1	-22
	K5	-23
	J5	-24
	F5	TB2-25

LEAD ELECTRICAL

REFERENCE DESIGNATION	LEAD IDENT	CONNECT TO
DS1	N3	TB1-52
	J2	-53
	J3	-54
	F2	-55
	H3	-56
	F3	-57
	E3	-58
	E4	-59
	N2	-47
	K1	-48
	M2	-49
	H2	-50
	E2	-51
	N1	-43
	J1	-44
	F1	-45
	E1	-46
	M1	-41
	H1	TB1-42
	K2	TB2-52
	M3	-53
	K3	-54
	M4	-55
	J4	-56
	H4	-57
	F4	-58
	G1	-60
	N4	-47
	M5	-48
	K4	-49
	H5	-50
	E5	-51
	N5	-43
	K5	-44
	J5	-45
	F5	-46
	B1	-41
	A1	TB2-42
DS4	K2	TB1-70
	M2	-71
	J2	-72
	F2	-73
	H2	-74
	E2	-75
	N2	-61
	N1	-62
	K1	-63
	M1	-64
	J1	-65
	F1	-66
	H1	-67
	E1	TB1-68
	K3	TB2-70
	M3	-71
	J3	-72
	F3	-73
	H3	-74
	E3	-75
	N3	-61
	N4	-62
	K4	-63
	M4	-64
	J4	-65
	F4	-66
	H4	-67
	E4	TB2-68
	E6	TB1-69

LEAD ELECTRICAL

REFERENCE DESIGNATION	LEAD IDENT	CONNECT TO
DS5	K1	TB1-82
	J1	-83
	F1	-84
	E1	-85
	N2	-77
	N1	-78
	M1	-79
	H1	TB1-80
	G1	TB2-81
	K2	-82
	J2	-83
	F2	-84
	E2	-85
	S1	-77
	S2	-78
	M2	-79
	H2	TB2-80
DS6	S3	TB1-90
	S11	-91
	S5	-92
	S4	-93
	S6	-86
	S7	-88
	S1	TB1-89
	S10A	TB2-90
	S9	-92
	S2	-93
	G5	-86
	S12	-88
	S8	TB2-89

COLOR CODE
TYP DS1 THRU DS6

LEAD IDENT	TRACER	BASIC
A1	RED	YEL
B1	BLK	YEL
G1	—	BLK
G5		BLK
E1	—	WHT
F1	RED	
H1	ORN	
J1	GRN	
K1	BLU	
M1	BRN	
N1	VIO	WHT
E2	WHT	RED
F2	—	
H2	ORN	
J2	GRN	
K2	BLU	
M2	BRN	
N2	VIO	RED
E3	WHT	ORN
F3	RED	
H3	—	
J3	GRN	
K3	BLU	
M3	BRN	
N3	VIO	ORN
E4	WHT	GRN
F4	RED	
H4	ORN	
J4	—	
K4	BLU	
M4	BRN	
N4	VIO	GRN
E5	WHT	BLU
F5	RED	
H5	ORN	
J5	GRN	
K5	—	
M5	BRN	
N5	VIO	BLU
S1	—	YEL
S2	GRN	YEL
S4	YEL	BLK
S5	ORN	YEL
S7	YEL	RED
S8	BLU	YEL
S9	VIO	YEL
S11	BRN	YEL
S12	GRY	YEL
S3	YELLOW SLEEVE	
S10	RED SLEEVE	
S6	BLK SLEEVE	
E6	—	BLK

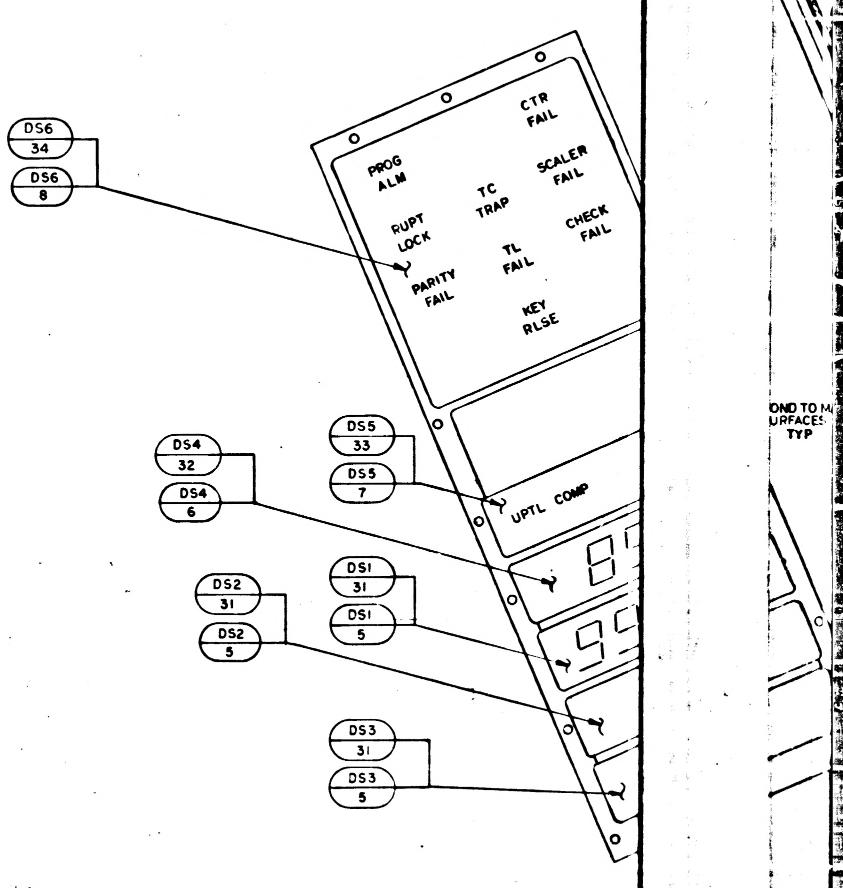

REFERENCE: INTERCONNECTION DIAGRAM 1005750

NOTES
1. INTERPRET DRAWING IN ACCORDANCE WITH STANDARDS PRESCRIBED BY MIL-D-70327
2. BOND FIND NO. 11 AND 12 TO FIND NO. 1 IN ASSEMBLED POSITION PER ND1002004, TYPE II
3. BOND FIND NO. 15 TO FIND NO. 14 AS SHOWN PER MIL-A-5092, TYPE II
4. SOLDER FIND NO. 2 TO FIND NO. 3 AND 4 AND FIND NO. 5,6,7 AND 8 OR FIND NO. 31, 32, 33 AND 34 TO FIND NO. 9 AND 10 PER ND1002071 USING SOLDER PER ND1002075
5. WIRE PER ND1002032
6. LACE HARNESS TO RETAINING STRAPS AND BRACKETS IN APPROXIMATE POSITION SHOWN USING FIND NO. 24 AS REQUIRED
7. SOLDER FIND NO. 2 TO FIND NO. 9 AND 10 AS SHOWN PER ND1002071 EXCEPT SOLDER MATERIAL TO BE Sb5 PER QQ-S-571
8. BOND FIND NO. 5,6,7 AND 8 OR FIND NO. 31,32,33 AND 34 TO FIND NO. 1 PER ND1002004, TYPE II
9. DRESS AND TRIM AT ASSEMBLY. STRIP ALL LEADS .19 AND TIN TYPICAL FIND NO. 5,6,7 AND 8 OR FIND NO. 31, 32, 33 AND 34
10. AR DENOTES AS REQUIRED
11. ENCAPSULATE PER ND1002217
12. ENCAPSULATE INDICATED AREA PER ND1002009, METHOD E, WITH PRIMER
13. THE ORIGINAL CONFIGURATION IS IDENTIFIED BY THE DRAWING NUMBER AND A -000 SUFFIX
14. POTTING TO BE .005 BELOW TO .010 ABOVE SURFACE A

LEAD ELECTRICAL		
REFERENCE DESIGNATION	LEAD IDENT	CONNECT TO
DS3	N3	TB1-16
	F3	↑ -17
	E3	-18
	E4	-19
	N2	-11
	J3	-12
	H3	-13
	F2	-14
	E2	-15
	N1	-6
	K1	-7
	M2	-8
	J2	-9
	H2	-10
	M1	-1
	J1	-2
	F1	-3
	H1	↓ -4
	E1	TB1-5
	K2	TB2-16
	K3	↑ -17
	M3	-18
	G1	-20
	N4	-11
	M4	-12
	J4	-13
	F4	-14
	H4	-15
	N5	-6
	M5	-7
	K4	-8
	H5	-9
	E5	-10
	B1	-1
	A1	-2
	K5	-3
	J5	↓ -4
	F5	TB2-5
DS2	N3	TB1-36
	F3	↑ -37
	E3	-38
	E4	-39
	N2	-31
	J3	-32
	H3	-33
	F2	-34
	E2	-35
	N1	-26
	K1	-27
	M2	-28
	J2	-29
	H2	-30
	M1	-21
	J1	-22
	F1	-23
	H1	↓ -24
	E1	TB1-25
	K2	TB2-36
	K3	↑ -37
	M3	-38
	G1	-40
	N4	-31
	M4	-32
	J4	-33
	F4	-34
	H4	-35
	N5	-26
	M5	-27
	K4	-28
	H5	-29
	E5	-30
	B1	-21
	A1	-22
	K5	-23
	J5	↓ -24
	F5	TB2-25

LEAD ELECTRICAL		
REFERENCE DESIGNATION	LEAD IDENT	CONNECT TO
DS1	N3	TB1-52
	J2	↑ -53
	J3	-54
	F2	-55
	H3	-56
	F3	-57
	E3	-58
	E4	-59
	N2	-47
	K1	-48
	M2	-49
	H2	-50
	E2	-51
	N1	-43
	J1	-44
	F1	-45
	E1	-46
	M1	↓ -41
	H1	TB1-42
	K2	TB2-52
	M3	↑ -53
	K3	-54
	M4	-55
	J4	-56
	H4	-57
	F4	-58
	G1	-60
	N4	-47
	M5	-48
	K4	-49
	H5	-50
	E5	-51
	N5	-43
	K5	-44
	J5	-45
	F5	-46
	B1	↓ -41
	A1	TB2-42
DS4	K2	TB1-70
	M2	↑ -71
	J2	-72
	F2	-73
	H2	-74
	E2	-75
	N2	-61
	N1	-62
	K1	-63
	M1	-64
	J1	-65
	F1	-66
	H1	↓ -67
	E1	TB1-68
	K3	TB2-70
	M3	↑ -71
	J3	-72
	F3	-73
	H3	-74
	E3	-75
	N3	-61
	N4	-62
	K4	-63
	M4	-64
	J4	-65
	F4	-66
	H4	↓ -67
	E4	TB2-68
	E6	TB1-69

LEAD ELECTRICAL		
REFERENCE DESIGNATION	LEAD IDENT	CONNECT TO
DS5	K1	TB1-82
	J1	↑ -83
	F1	-84
	E1	-85
	N2	-77
	N1	-78
	M1	↓ -79
	H1	TB1-80
	G1	TB2-81
	K2	↑ -82
	J2	-83
	F2	-84
	E2	-85
	S1	-77
	S2	-78
	M2	↓ -79
	H2	TB2-80
DS6	S3	TB1-90
	S11	↑ -91
	S5	-92
	S4	-93
	S6	-86
	S7	↓ -88
	S1	TB1-89
	S10A	TB2-90
	S9	↑ -92
	S2	-93
	G5	-86
	S12	↓ -88
	S8	TB2-89

COLOR CODE TYP DS1 THRU DS6		
LEAD IDENT	TRACER	BASIC
A1	RED	YEL
B1	BLK	YEL
G1	—	BLK
G5		BLK
E1	—	WHT
F1	RED	↑
H1	ORN	
J1	GRN	
K1	BLU	
M1	BRN	↓
N1	VIO	WHT
E2	WHT	RED
F2	—	↑
H2	ORN	
J2	GRN	
K2	BLU	
M2	BRN	↓
N2	VIO	RED
E3	WHT	ORN
F3	RED	↑
H3	—	
J3	GRN	
K3	BLU	
M3	BRN	↓
N3	VIO	ORN
E4	WHT	GRN
F4	RED	↑
H4	ORN	
J4	—	
K4	BLU	
M4	BRN	↓
N4	VIO	GRN
E5	WHT	BLU
F5	RED	↑
H5	ORN	
J5	GRN	
K5	—	
M5	BRN	↓
N5	VIO	BLU
S1	—	YEL
S2	GRN	YEL
S4	YEL	BLK
S5	ORN	YEL
S7	YEL	RED
S8	BLU	YEL
S9	VIO	YEL
S11	BRN	YEL
S12	GRY	YEL
B3	YELLOW SLEEVE	
S10	RED SLEEVE	
S6	BLK SLEEVE	
E6	—	BLK

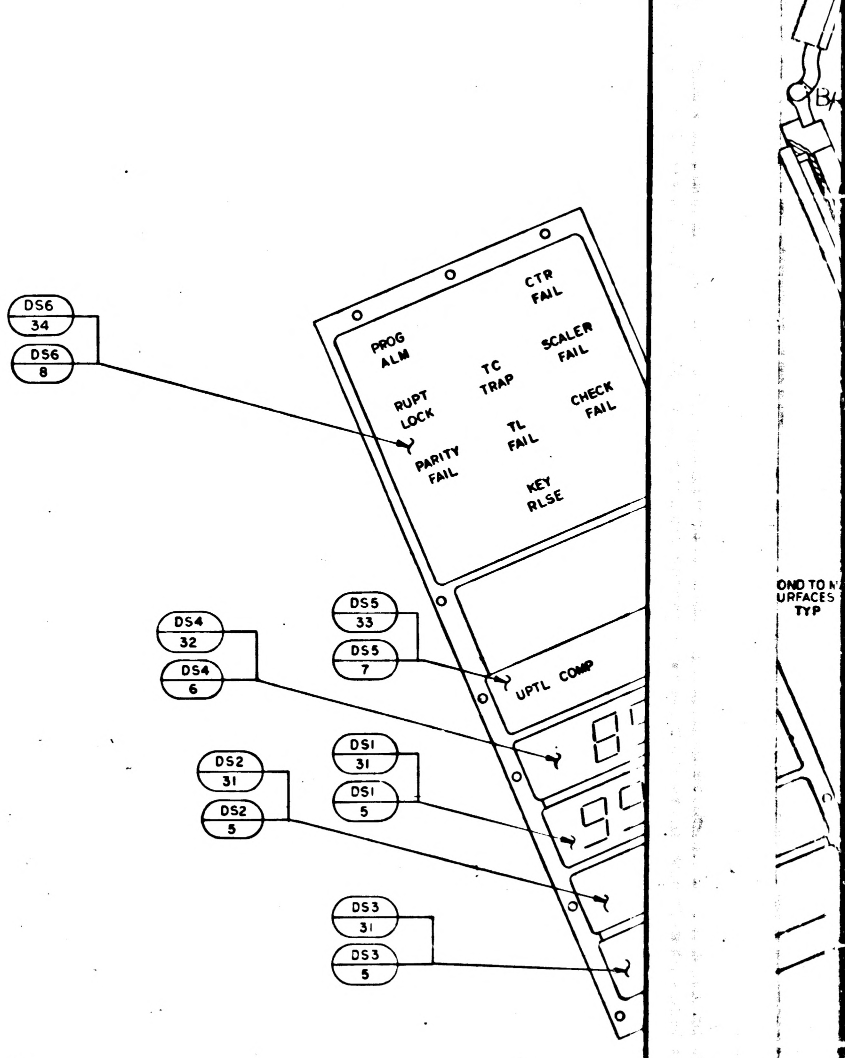

REFERENCE: INTERCONNECTION DIAGRAM 1005750

NOTES

1. INTERPRET DRAWING IN ACCORDANCE WITH STANDARDS PRESCRIBED BY MIL-D-70327
2. BOND FIND NO. 11 AND 12 TO FIND NO. 1 IN ASSEMBLED POSITION PER ND1002004, TYPE II
3. BOND FIND NO. 15 TO FIND NO. 14 AS SHOWN PER MIL-A-5092, TYPE II
4. SOLDER FIND NO. 2 TO FIND NO. 3 AND 4 AND FIND NO. 5,6,7 AND 8 OR FIND NO. 31,32,33 AND 34 TO FIND NO. 9 AND 10 PER ND1002071 USING SOLDER PER ND1002075
5. WIRE PER ND1002032
6. LACE HARNESS TO RETAINING STRAPS AND BRACKETS IN APPROXIMATE POSITION SHOWN USING FIND NO. 24 AS REQUIRED
7. SOLDER FIND NO. 2 TO FIND NO. 9 AND 10 AS SHOWN PER ND1002071 EXCEPT SOLDER MATERIAL TO BE Sb5 PER QQ-S-571
8. BOND FIND NO. 5,6,7 AND 8 OR FIND NO. 31,32,33 AND 34 TO FIND NO. 1 PER ND1002004, TYPE II
9. DRESS AND TRIM AT ASSEMBLY. STRIP ALL LEADS J9 AND TIN TYPICAL FIND NO. 5,6,7 AND 8 OR FIND NO. 31, 32, 33 AND 34
10. AR DENOTES AS REQUIRED
. ENCAPSULATE PER ND1002217
2. ENCAPSULATE INDICATED AREA PER ND1002009, METHOD E, WITH PRIMER
3. THE ORIGINAL CONFIGURATION IS IDENTIFIED BY THE DRAWING NUMBER AND A-000 SUFFIX
4. POTTING TO BE .005 BELOW TO .010 ABOVE SURFACE A

—	1003758

SYM	REVISIONS DESCRIPTION	2763 DATE	APPROVAL

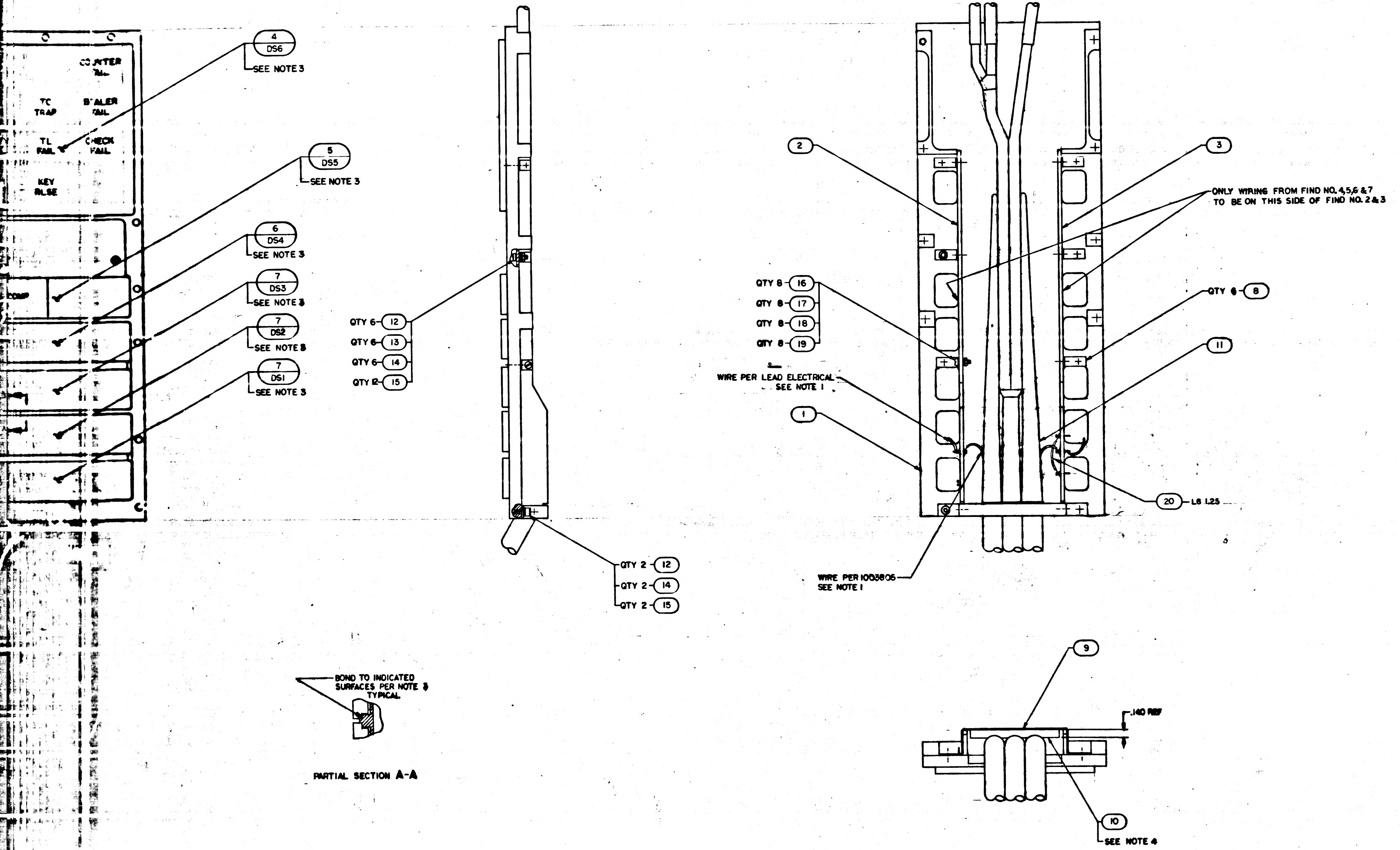
COUNTER FAIL
TC TRAP
B'ALER FAIL
TL FAIL
CHECK FAIL
KEY RLSE
COMP
4 DS6
SEE NOTE 3
5 DS5
SEE NOTE 3
6 DS4
SEE NOTE 3
7 DS3
SEE NOTE 3
7 DS2
SEE NOTE 3
7 DS1
SEE NOTE 3
QTY 6 12
QTY 6 13
QTY 6 14
QTY 12 15
QTY 2 12
QTY 2 14
QTY 2 15
2
3
ONLY WIRING FROM FIND NO. 4,5,6 & 7 TO BE ON THIS SIDE OF FIND NO. 2 & 3
QTY 8 16
QTY 8 17
QTY 8 18
QTY 8 19
QTY 6 8
11
WIRE PER LEAD ELECTRICAL SEE NOTE 1
1
20 LG 1.25
WIRE PER 1003805 SEE NOTE 1
BOND TO INDICATED SURFACES PER NOTE 3 TYPICAL
PARTIAL SECTION A-A
9
.140 REF
10
SEE NOTE 4

QTY REQD	PART OR IDENTIFYING NO.	NOMENCLATURE OR DESCRIPTION	FIND NO.
⨯	1005750	INTERCONNECTION DIAGRAM	REF
1.0	1010416-11	WIRE, ELECTRICAL	20
8	NAS620C2	WASHER, FLAT	19
8	MS35337-77	WASHER, LOCK	18
8	NAS671C2	NUT, HEX, PLAIN	17
8	MS35233-4	SCREW, PAN HD	16
14	NAS620C4	WASHER, FLAT	15
8	MS35337-78	WASHER, LOCK	14
6	NAS671C4	NUT, HEX, PLAIN	13
8	MS16995-10	SCREW, CAP	12
1	1003805	WIRING HARNESS, BRANCHED	11
1	1004758	CUSHION, CABLE	10
1	1004757	BRACKET, CABLE	9
6	1004756	BRACKET	8
3	1003803	INDICATOR E/L ASSY (REG)	7
1	1003802	INDICATOR E/L ASSY (V-N)	6
1	1003801	INDICATOR E/L ASSY (PROG)	5
1	1003800	INDICATOR E/L ASSY (ALARM)	4
1	1003757	TERMINAL BOARD ASSY (TB2)	3
1	1003756	TERMINAL BOARD ASSY (TB1)	2
1	1004751	E/L FRAME	1

LIST OF MATERIALS

1003706	
NEXT ASSY	USED ON
APPLICATION	

UNLESS OTHERWISE SPECIFIED
DIMENSIONS ARE IN INCHES
TOLERANCES ON
FRACTIONS ± DECIMALS ±.03 ANGLES ±
DO NOT SCALE THIS DRAWING
MATERIAL
HEAT TREATMENT
FINAL FINISH

MIT
INSTRUMENTATION LAB
CAMBRIDGE, MASS.

DRAWN B. Jensen DATE 18 AUG 64
CHECKED 15 Sept
APPROVAL Sept 64
APPROVAL C Hall 21 Sept 64
NASA APPROVAL 10-22-64
MIT APPROVAL
MIT APPROVAL 22 Sept 64

MANNED SPACECRAFT CENTER
HOUSTON, TEXAS

E/L FRAME & HARNESS ASSY
AGC DSKY, NAV
100 SERIES

CODE IDENT NO. —
SIZE J
NASA DRAWING NO. 1003758
SCALE 1/1
WT
SHEET 1 OF 1

1003758

MASTER

1003758

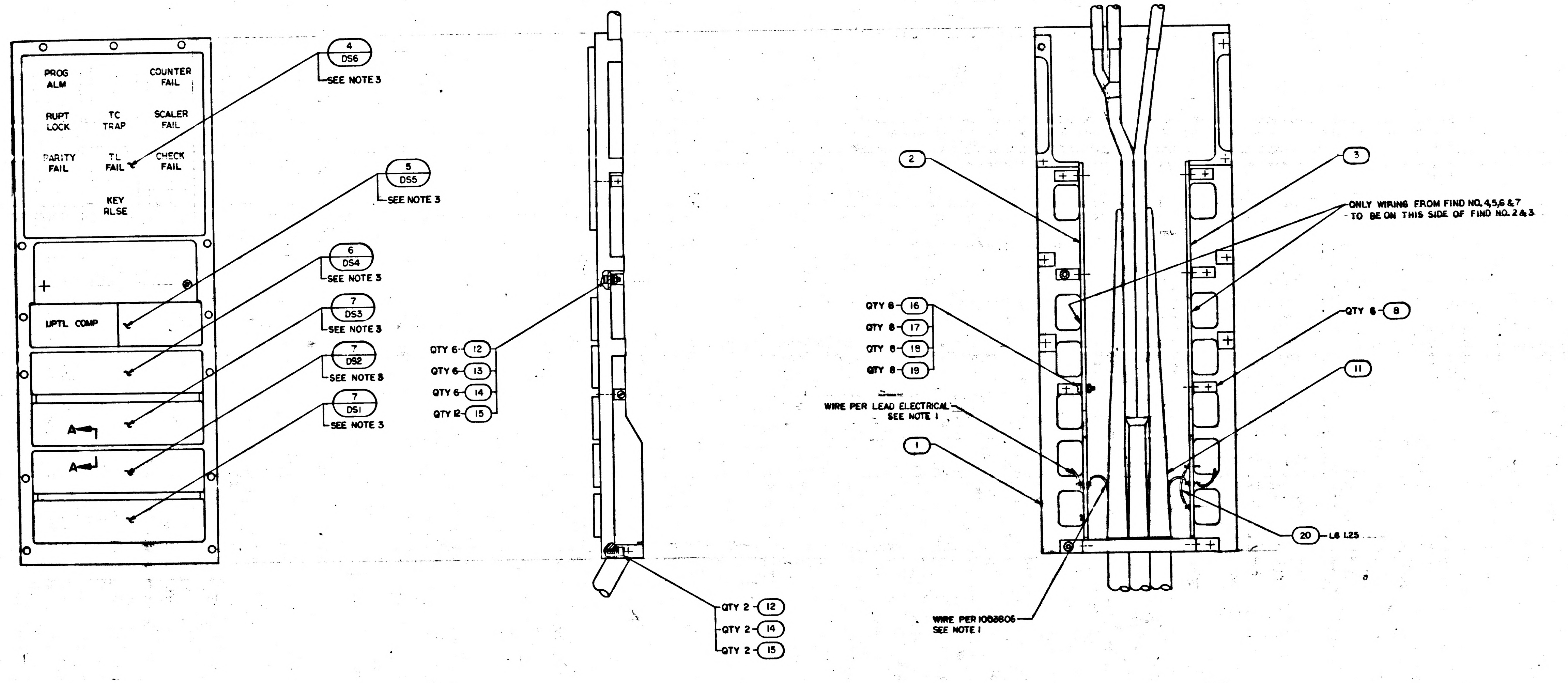
PROG ALM
COUNTER FAIL
RUPT LOCK
TC TRAP
SCALER FAIL
PARITY FAIL
TL FAIL
CHECK FAIL
KEY RLSE
UPTL COMP
4 DS6 SEE NOTE 3
5 DS5 SEE NOTE 3
6 DS4 SEE NOTE 3
7 DS3 SEE NOTE 3
7 DS2 SEE NOTE 3
7 DS1 SEE NOTE 3
QTY 6 12
QTY 6 13
QTY 6 14
QTY 12 15
QTY 2 12
QTY 2 14
QTY 2 15
2
3
ONLY WIRING FROM FIND NO. 4,5,6 & 7 TO BE ON THIS SIDE OF FIND NO. 2 & 3
QTY 8 16
QTY 8 17
QTY 8 18
QTY 8 19
QTY 6 8
WIRE PER LEAD ELECTRICAL SEE NOTE 1
1
11
20 LG 1.25
WIRE PER 1083806 SEE NOTE 1

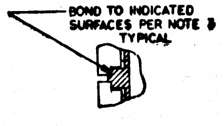
BOND TO INDICATED SURFACES PER NOTE 3 TYPICAL

PARTIAL SECTION A-A

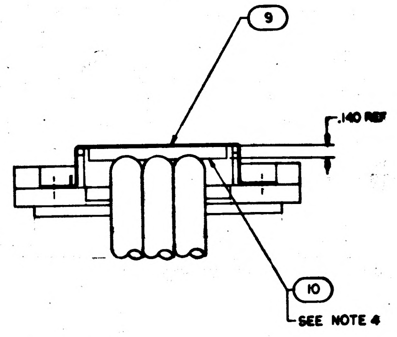
9
.140 REF
10
SEE NOTE 4

MASTER

QTY REQD	PART OR IDENTIFYING NO.	NOMENCLATURE OR DESCRIPTION
☒	1005750	INTERCONNECTION DIAGRA
1.0	1010416-11	WIRE, ELECTRICAL
8	NAS620C2	WASHER, FLAT
8	MS35337-77	WASHER, LOCK
8	NAS671C2	NUT, HEX, PLAIN
8	MS35233-4	SCREW, PAN HD
14	NAS620C4	WASHER, FLAT
8	MS35337-78	WASHER, LOCK
6	NAS671C4	NUT, HEX, PLAIN
8	MS16995-10	SCREW, CAP
1	1003805	WIRING HARNESS, BRA
1	1004758	CUSHION, CABLE
1	1004757	BRACKET, CABLE
6	1004756	BRACKET
3	1003803	INDICATOR E/L ASSY
1	[illegible]	INDICATOR E/L ASSY
1	1003801	INDICATOR E/L ASSY
1	1003800	INDICATOR E/L ASSY
1	1003757	TERMINAL BOARD ASSY
1	1003756	TERMINAL BOARD ASSY
1	1004751	E/L FRAME

LIST OF MATERIALS

1003706	
NEXT ASSY	USED ON
APPLICATION	

UNLESS OTHERWISE SPECIFIED DIMENSIONS ARE IN INCHES
TOLERANCES ON
FRACTIONS ± DECIMALS ±.03 ANGLES ±
DO NOT SCALE THIS DRAWING
MATERIAL
HEAT TREATMENT
FINAL FINISH

MIT
INSTRUMENTATION LAB
CAMBRIDGE, MASS.

DRAWN DATE
CHECKED
APPROVAL
APPROVAL
NASA APPROVAL 10-22-67
MIT APPROVAL
MIT APPROVAL

MANNED SPACECRAF
HOUSTON, TEXA

E/L FRAME & HA ESS
AGC DSKY,
100 SER

CODE IDENT NO.
SIZE J
100 75
SCALE 1/1

LEAD ELECTRICAL		
REFERENCE DESIGNATION	LEAD IDENT	CONNECT TO
DS1	N3	TB1-16
	F3	-17
	E3	-18
	E4	-19
	N2	-11
	J3	-12
	H3	-13
	F2	-14
	E2	-15
	N1	-6
	K1	-7
	M2	-8
	J2	-9
	H2	-10
	M1	-1
	J1	-2
	F1	-3
	H1	-4
	E1	TB1-5
	K2	TB2-16
	K3	-17
	M3	-18
	G1	-20
	N4	-11
	M4	-12
	J4	-13
	F4	-14
	H4	-15
	N5	-6
	M5	-7
	K4	-8
	H5	-9
	E5	-10
	B1	-1
	A1	-2
	K5	-3
	J5	-4
	F5	TB2-5
DS2	N3	TB1-36
	F3	-37
	E3	-38
	E4	-39
	N2	-31
	J3	-32
	H3	-33
	F2	-34
	E2	-35
	N1	-26
	K1	-27
	M2	-28
	J2	-29
	H2	-30
	M1	-21
	J1	-22
	F1	-23
	H1	-24
	E1	TB1-25
	K2	TB2-36
	K3	37
	M3	-38
	G1	-40
	N4	-31
	M4	-32
	J4	-33
	F4	-34
	H4	-35
	N5	-26
	M5	-27
	K4	-28
	H5	-29
	E5	-30
	B1	-21
	A1	-22
	K5	-23
	J5	-24
	F5	TB2-25

LEAD ELECTRICAL		
REFERENCE DESIGNATION	LEAD IDENT	CONNECT TO
DS3	N3	TB1-52
	J2	-53
	J3	-54
	F2	-55
	H3	-56
	F3	-57
	E3	-58
	E4	-59
	N2	-47
	K1	-48
	M2	-49
	H2	-50
	E2	-51
	N1	-43
	J1	-44
	F1	-45
	E1	-46
	M1	-41
	H1	TB1-42
	K2	TB2-52
	M3	-53
	K3	-54
	M4	-55
	J4	-56
	H4	-57
	F4	-58
	G1	-60
	N4	-47
	M5	-48
	K4	-49
	H5	-50
	E5	-51
	N5	-43
	K5	-44
	J5	-45
	F5	-46
	B1	-41
	A1	TB2-42
DS4	G1	TB1-69
	K2	-70
	M2	-71
	J2	-72
	F2	-73
	H2	-74
	E2	-75
	N2	-61
	N1	-62
	K1	-63
	M1	-64
	J1	-65
	F1	-66
	H1	-67
	E1	TB1-68
	G2	TB2-69
	K3	-70
	M3	-71
	J3	-72
	F3	-73
	H3	-74
	E3	-75
	N3	-61
	N4	-62
	K4	-63
	M4	-64
	J4	-65
	F4	-66
	H4	-67
	E4	TB2-68

LEAD ELECTRICAL		
REFERENCE DESIGNATION	LEAD IDENT	CONNECT TO
DS5	K1	TB1-82
	J1	-83
	F1	-84
	E1	-85
	N2	-77
	N1	-78
	M1	-79
	H1	TB1-80
	G1	TB2-81
	K2	-82
	J2	-83
	F2	-84
	E2	-85
	S1	-77
	S2	-78
	M2	-79
	H2	TB2-80
DS6	S3A	TB1-90
	S11	-91
	S5	-92
	S4	-93
	S6	-86
	S3B	-87
	S7	-88
	S1	TB1-89
	S10A	TB2-90
	S9	-92
	S2	-93
	G5	-86
	S10B	87
	S12	-88
	S8	TB2-89

FROM	TO
TB2-20	TB2-40
TB2-40	TB2-60
TB2-60	TB2-81
TB2-81	TB2-86
TB1-76	TB1-69

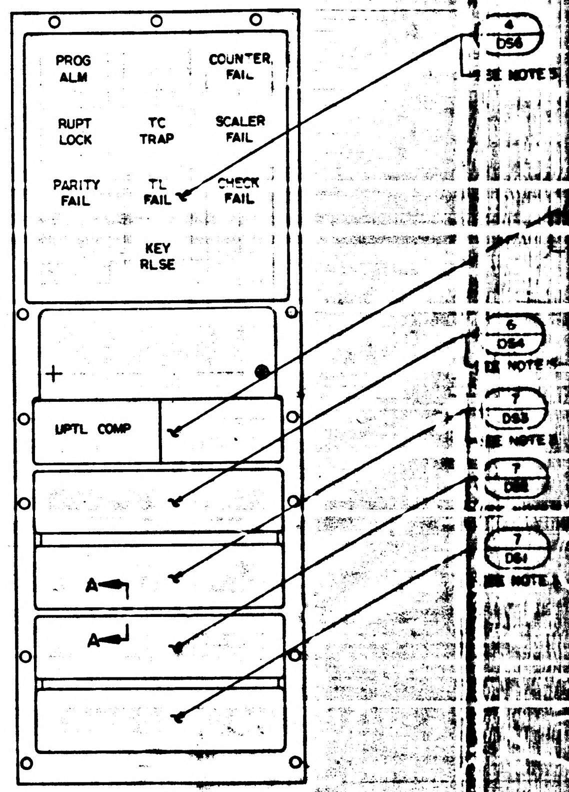
PROG
ALM
COUNTER
FAIL
RUPT
LOCK
TC
TRAP
SCALER
FAIL
PARITY
FAIL
TL
FAIL
CHECK
FAIL
KEY
RLSE
UPTL COMP
A
A
4
DS6
SEE NOTE 5
6
DS4
SEE NOTE 5
7
DS3
SEE NOTE 5
7
DS2
7
DS1
SEE NOTE 5

NOTES
1. SOLDER PER ND 1002071
2. INTERPRET DRAWING IN ACCORDANCE WITH STANDARDS PRESCRIBED BY MIL-D-70327
3. BOND FIND NO.4,5,6 & 7 TO FIND NO.1 PER ND1002004, TYPE II
4. BOND FIND NO. 10 TO FIND NO. 9 PER ND 1002151
5. ● DENOTE LENGTH IN FEET

NOTICE — WHEN GOVERNMENT DRAWINGS, SPECIFICATIONS, OR OTHER DATA ARE USED FOR ANY PURPOSE OTHER THAN IN CONNECTION WITH A DEFINITELY RELATED GOVERNMENT PROCUREMENT OPERATION, THE UNITED STATES GOVERNMENT THEREBY INCURS NO RESPONSIBILITY NOR ANY OBLIGATION WHATSOEVER; AND THE FACT THAT THE GOVERNMENT MAY HAVE FORMULATED, FURNISHED, OR IN ANY WAY SUPPLIED THE SAID DRAWINGS, SPECIFICATIONS OR OTHER DATA IS NOT TO BE REGARDED BY IMPLICATION OR OTHERWISE AS IN ANY MANNER LICENSING THE HOLDER OR ANY OTHER PERSON OR CORPORATION, OR CONVEYING ANY RIGHTS OR PERMISSION TO MANUFACTURE, USE, OR SELL ANY PATENTED INVENTION THAT MAY IN ANY WAY BE RELATED THERETO.

1003759 —

REVISIONS 13222			
SYM	DESCRIPTION	DATE	APPROVAL

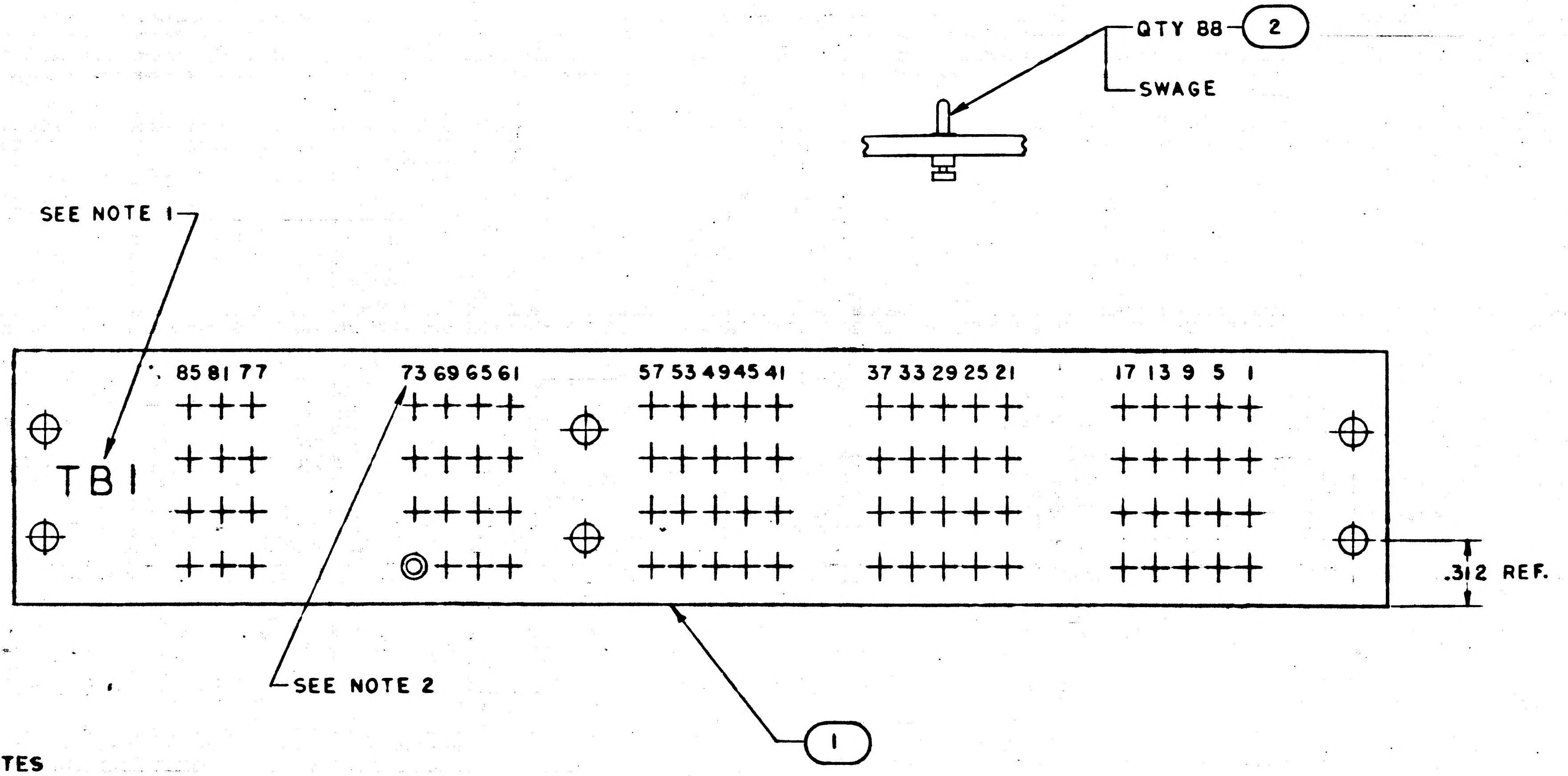

NOTES

1. MARK BOTH SIDES .125 HIGH WHITE CHARACTERS PER ND1002019 AND 1002122 TYPE II, CLASS I, USING MARKING INK PER 1006271-1 LOCATE APPROX. WHERE SHOWN
2. MARK BOTH SIDES .083 HIGH WHITE CHARACTERS PER ND1002019 AND 1002122 TYPE II, CLASS I, USING MARKING INK PER 1006271-1 LOCATE APPROX WHERE SHOWN
3. INTERPRET DRAWING IN ACCORDANCE WITH STANDARDS PRESCRIBED BY MIL-D-70327

QTY REQD	PART OR IDENTIFYING NO.	NOMENCLATURE OR DESCRIPTION	FIND NO.
88	1006297	TERMINAL, STUD	2
1	1004803	BOARD, TERMINAL	1

LIST OF MATERIALS

MASTER

NEXT ASSY	USED ON
1003809	

APPLICATION

UNLESS OTHERWISE SPECIFIED
DIMENSIONS ARE IN INCHES
TOLERANCES ON
FRACTIONS ± DECIMALS ± ANGLES ±
DO NOT SCALE THIS DRAWING
MATERIAL
HEAT TREATMENT
FINAL FINISH

MIT
INSTRUMENTATION LAB
CAMBRIDGE, MASS.
DWG. NO. CONTRACT
DRAWN P. Boudreau DATE 20 Aug 64
CHECKED [illegible] 15 Sept 64
APPROVAL [illegible] 9/22/64
APPROVAL Eldon C Hall 6 Oct 64
NASA APPROVAL W J Rhine 10-6-64
MIT APPROVAL
MIT APPROVAL [illegible] 6 Oct 64

MANNED SPACECRAFT CENTER
HOUSTON, TEXAS

TERMINAL BOARD ASSY
TB1
AGC DSKY MAIN 100 SERIES

CODE IDENT NO. —— SIZE C NASA DRAWING NO. 1003759
SCALE 2/1 WT SHEET 1 OF 1

INCHES
0 1 2
PHOTOGRAPHIC SCALE ONLY

NOTICE — WHEN GOVERNMENT DRAWINGS, SPECIFICATIONS, OR OTHER DATA ARE USED FOR ANY PURPOSE OTHER THAN IN CONNECTION WITH A DEFINITELY RELATED GOVERNMENT PROCUREMENT OPERATION, THE UNITED STATES GOVERNMENT THEREBY INCURS NO RESPONSIBILITY NOR ANY OBLIGATION WHATSOEVER; AND THE FACT THAT THE GOVERNMENT MAY HAVE FORMULATED, FURNISHED, OR IN ANY WAY SUPPLIED THE SAID DRAWINGS, SPECIFICATIONS OR OTHER DATA IS NOT TO BE REGARDED BY IMPLICATION OR OTHERWISE AS IN ANY MANNER LICENSING THE HOLDER OR ANY OTHER PERSON OR CORPORATION, OR CONVEYING ANY RIGHTS OR PERMISSION TO MANUFACTURE, USE, OR SELL ANY PATENTED INVENTION THAT MAY IN ANY WAY BE RELATED THERETO.

1003760 —

REVISIONS 13222

SYM	DESCRIPTION	DATE	APPROVAL

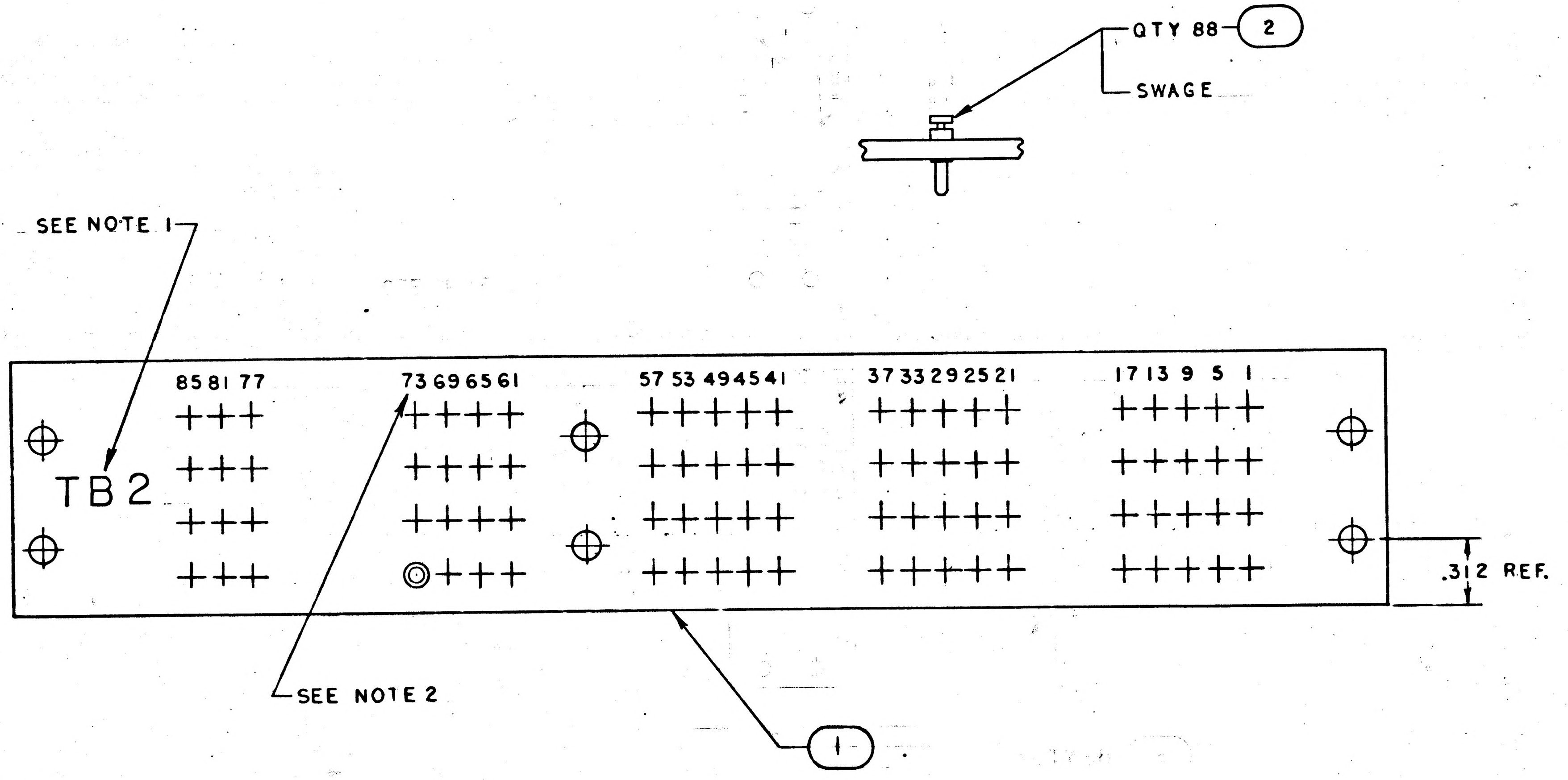

NOTES

1. MARK BOTH SIDES .125 HIGH WHITE PER ND1002019 AND 1002122 TYPE II, CLASS I, USING MARKING INK PER 1006271-1 LOCATE APPROX. WHERE SHOWN
2. MARK BOTH SIDES .083 HIGH WHITE PER ND1002019 AND 1002122 TYPE II, CLASS I, USING MARKING INK PER 1006271-1 LOCATE APPROX WHERE SHOWN
3. INTERPRET DRAWING IN ACCORDANCE WITH STANDARDS PRESCRIBED BY MIL-D-70327

QTY REQD	PART OR IDENTIFYING NO.	NOMENCLATURE OR DESCRIPTION	FIND NO.
88	1006297	TERMINAL, STUD	2
1	1004803	BOARD, TERMINAL	1

LIST OF MATERIALS

1003809	
NEXT ASSY	USED ON
APPLICATION	

UNLESS OTHERWISE SPECIFIED DIMENSIONS ARE IN INCHES
TOLERANCES ON
FRACTIONS ± DECIMALS ± ANGLES ±
DO NOT SCALE THIS DRAWING
MATERIAL
HEAT TREATMENT
FINAL FINISH

MASTER

MIT INSTRUMENTATION LAB
CAMBRIDGE, MASS.
DWG. NO. CONTRACT
DRAWN P. Boudreau DATE 24 Aug 64
CHECKED F. Lopez 15 Sept 64
APPROVAL K Jensen 9/22/64
APPROVAL
NASA APPROVAL W J Rhine 10-6-64
MIT APPROVAL
MIT APPROVAL W Kupfer 10/8/64

MANNED SPACECRAFT CENTER
HOUSTON, TEXAS

TERMINAL BOARD ASSY
TB2
AGC DSKY MAIN 100 SERIES

CODE IDENT NO.	SIZE	NASA DRAWING NO.
—	C	1003760

SCALE 2/1 WT SHEET 1 OF 1

INCHES
0 1 2
PHOTOGRAPHIC SCALE ONLY

NOTICE — WHEN GOVERNMENT DRAWINGS, SPECIFICATIONS, OR OTHER DATA ARE USED FOR ANY PURPOSE OTHER THAN IN CONNECTION WITH A DEFINITELY RELATED GOVERNMENT PROCUREMENT OPERATION, THE UNITED STATES GOVERNMENT THEREBY INCURS NO RESPONSIBILITY NOR ANY OBLIGATION WHATSOEVER; AND THE FACT THAT THE GOVERNMENT MAY HAVE FORMULATED, FURNISHED, OR IN ANY WAY SUPPLIED THE SAID DRAWINGS, SPECIFICATIONS, OR OTHER DATA IS NOT TO BE REGARDED BY IMPLICATION OR OTHERWISE AS IN ANY MANNER LICENSING THE HOLDER OR ANY OTHER PERSON OR CORPORATION, OR CONVEYING ANY RIGHTS OR PERMISSION TO MANUFACTURE, USE, OR SELL ANY PATENTED INVENTION THAT MAY IN ANY WAY BE RELATED THERETO

REVISIONS · 7 3386

SYM	DESCRIPTION	DATE	APPROVAL
A	REVISED PER TDRR 15647 DR. W Dunn CHK R. APPD	3/13/65	

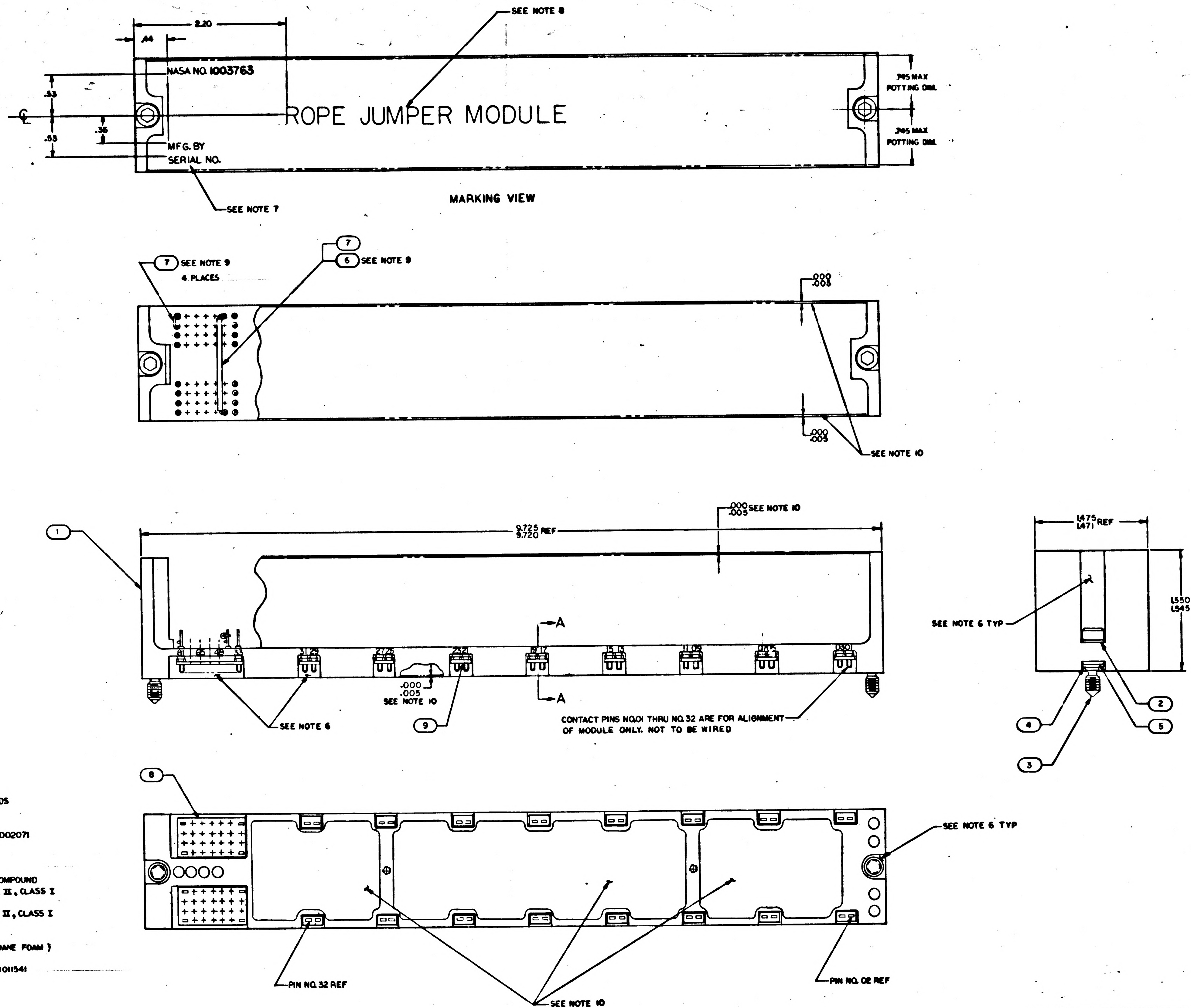
2.20
.44
NASA NO. 1003763
ROPE JUMPER MODULE
SEE NOTE 8
.53
.53
.36
MFG. BY
SERIAL NO.
SEE NOTE 7
.745 MAX POTTING DIM.
.745 MAX POTTING DIM.
MARKING VIEW
7 SEE NOTE 9
4 PLACES
7
6 SEE NOTE 9
.000
.005
SEE NOTE 10
1
9.725
9.720 REF
.000
.005 SEE NOTE 10
81
65
49
33
31 29
27 25
23 21
19 17
15 13
11 09
07 05
03 01
A
A
.000
.005
SEE NOTE 10
SEE NOTE 6
9
CONTACT PINS NO.01 THRU NO.32 ARE FOR ALIGNMENT OF MODULE ONLY. NOT TO BE WIRED
1.475
1.471 REF
1.550
1.545 REF
SEE NOTE 6 TYP
2
4
5
3
8
SEE NOTE 6 TYP
PIN NO. 32 REF
PIN NO. 02 REF
SEE NOTE 10

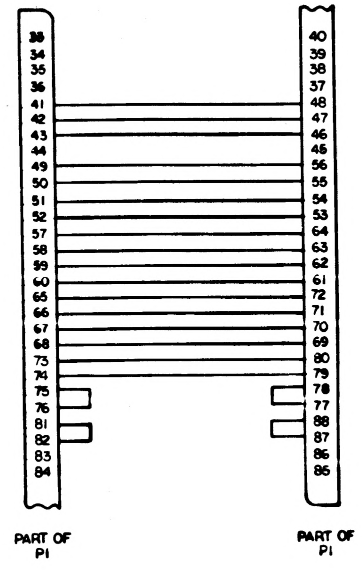
33
34
35
36
41
42
43
44
49
50
51
52
57
58
59
60
65
66
67
68
73
74
75
76
81
82
83
84
40
39
38
37
48
47
46
45
56
55
54
53
64
63
62
61
72
71
70
69
80
79
78
77
88
87
86
85
PART OF P1
PART OF P1

WIRING DIAGRAM

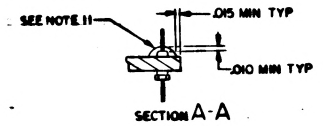
SEE NOTE 11
.015 MIN TYP
.010 MIN TYP

SECTION A-A

NOTES:

1. INTERPRET DRAWING IN ACCORDANCE WITH STANDARDS PRESCRIBED BY MIL-D-70327
2. WIRE PER ND1002029
3. ALL SOLDERING CONNECTIONS TO BE MADE PER ND1002071
4. QQ-W-343, TYPE S, 24 AWG AND TINNED
5. AR DENOTES AS REQUIRED
6. INDICATED AREAS TO BE FREE OF ENCAPSULATING COMPOUND
7. MARK $\frac{.08}{.10}$ HIGH PER ND1002019 & 1002122, TYPE II, CLASS I USING WHITE MARKING INK 1006271-1
8. MARK $\frac{.24}{.26}$ HIGH PER ND1002019 / 1002122, TYPE II, CLASS I USING WHITE MARKING INK 1006271-1
9. WIRE PER WIRING DIAGRAM
10. ENCAPSULATE MODULE PER ND1002002 (POLYURETHANE FOAM) INDICATED AREAS ONLY.
11. SEAL TERMINALS & INSULATORS TO FIND NO.1 USING 1011541

QTY REQD	PART OR IDENTIFYING NO.	NOMENCLATURE OR DESCRIPTION	FIND NO.
16	1004727	GASKET ROPE MODULE	9
2	1004726	GASKET ROPE MODULE	8
AR	SEE NOTE 4	WIRE, ELECTRICAL	7
AR	1006776-22	INSULATION, SLEEVING	6
2	1004546-3	WASHER, FLAT	5
2	MS16633-4015	RING, RETAINING, EXTERNAL "E"	4
2	1004579-1	SCREW, JACKING	3
2	1004546-1	WASHER, FLAT	2
1	1003135	HEADER ASSEMBLY	1

-011 LIST OF MATERIALS

NEXT ASSY	USED ON

APPLICATION

UNLESS OTHERWISE SPECIFIED
DIMENSIONS ARE IN INCHES
TOLERANCES ON
FRACTIONS ± — DECIMALS XX±.02 ANGLES ± —
DO NOT SCALE THIS DRAWING
MATERIAL —
HEAT TREATMENT —
FINAL FINISH —

MIT
INSTRUMENTATION LAB
CAMBRIDGE, MASS.
DRAWN G.F. Walsh DATE 4 Nov 64
CHECKED Edw. 4 Nov 64
APPROVAL
APPROVAL Eldon Hall
NASA APPROVAL W.G. Rhine 11-4-64
MIT APPROVAL W. Hamilton 4 Nov 64

MANNED SPACECRAFT CENTER
HOUSTON, TEXAS

ROPE JUMPER MODULE ASSEMBLY

CODE IDENT NO. —
SIZE E
NASA DRAWING NO 1003763
SCALE 2/1
WT —
SHEET 1 OF 1

1003763

NOTICE — WHEN GOVERNMENT DRAWINGS, SPECIFICATIONS, OR OTHER DATA ARE USED FOR ANY PURPOSE OTHER THAN IN CONNECTION WITH A DEFINITELY RELATED GOVERNMENT PROCUREMENT OPERATION, THE UNITED STATES GOVERNMENT THEREBY INCURS NO RESPONSIBILITY NOR ANY OBLIGATION WHATSOEVER; AND THE FACT THAT THE GOVERNMENT MAY HAVE FORMULATED, FURNISHED, OR IN ANY WAY SUPPLIED THE SAID DRAWINGS, SPECIFICATIONS, OR OTHER DATA IS NOT TO BE REGARDED BY IMPLICATION OR OTHERWISE AS IN ANY MANNER LICENSING THE HOLDER OR ANY OTHER PERSON OR CORPORATION, OR CONVEYING ANY RIGHTS OR PERMISSION TO MANUFACTURE, USE, OR SELL ANY PATENTED INVENTION THAT MAY IN ANY WAY BE RELATED THERETO

	REVISIONS		
SYM	DESCRIPTION	DATE	APPROVAL
A	REVISED PER TDRR 15647 DR. W. D CHK R.E. APPD	3/13/63	
B	REVISED PER TDRR 16706 DR. A. J. Bi CHK APPD		

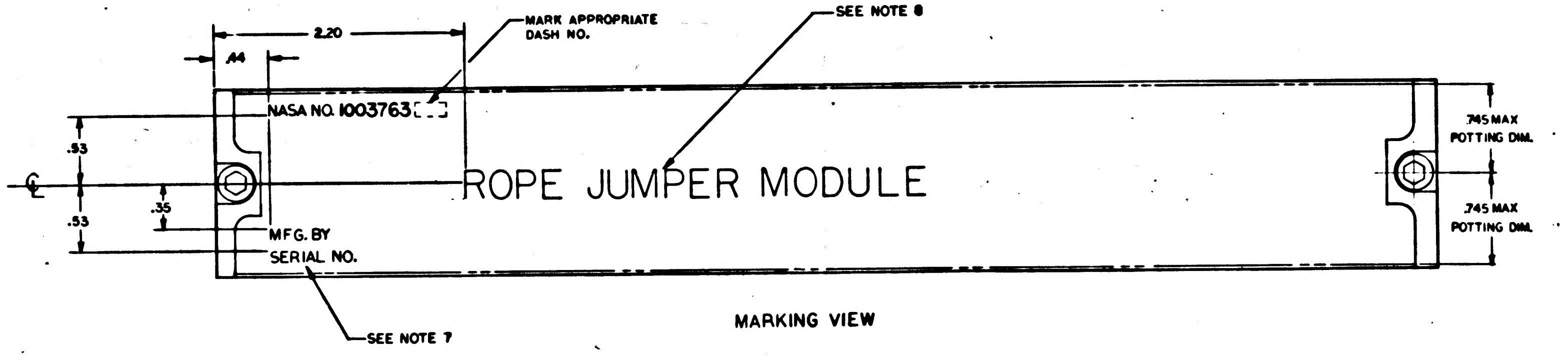
2.20
.44
MARK APPROPRIATE DASH NO.
SEE NOTE 8
NASA NO. 1003763[-]
ROPE JUMPER MODULE
.53
.53
.35
MFG. BY
SERIAL NO.
SEE NOTE 7
.745 MAX POTTING DIM.
.745 MAX POTTING DIM.

MARKING VIEW

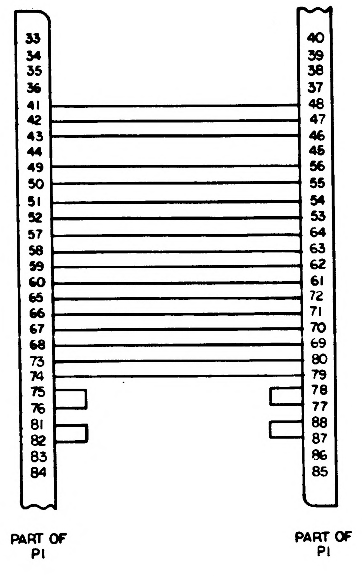
33
34
35
36
41
42
43
44
49
50
51
52
57
58
59
60
65
66
67
68
73
74
75
76
81
82
83
84
40
39
38
37
48
47
46
45
56
55
54
53
64
63
62
61
72
71
70
69
80
79
78
77
88
87
86
85
PART OF P1
PART OF P1

WIRING DIAGRAM

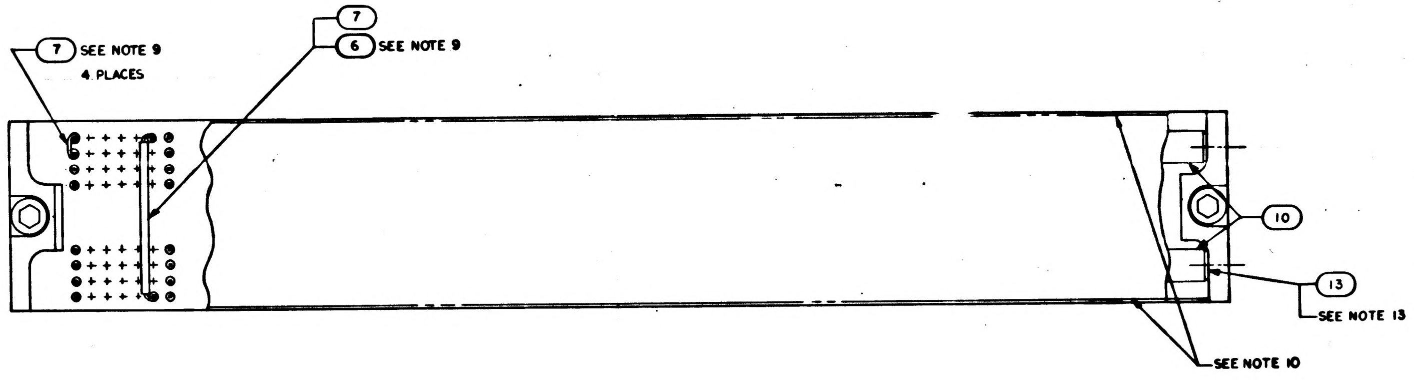
7 SEE NOTE 9
4 PLACES
7
6 SEE NOTE 9
10
13
SEE NOTE 13
SEE NOTE 10

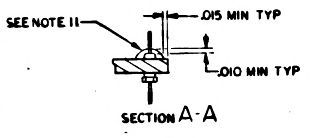
SEE NOTE 11
.015 MIN TYP
.010 MIN TYP

SECTION A-A

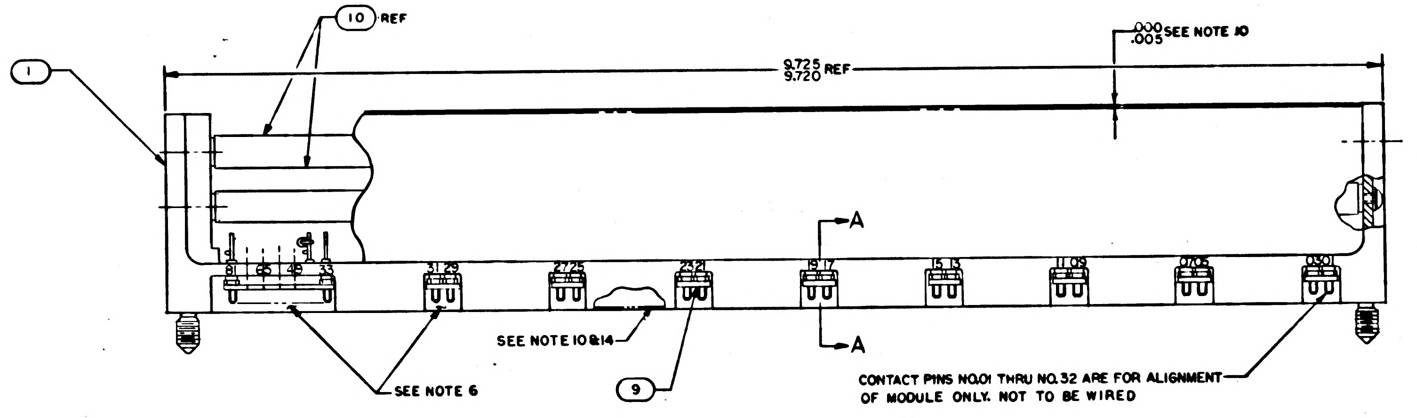
1
10 REF
9.725
9.720 REF
.000
.005 SEE NOTE 10
A
A
31 29
27 25
23 21
19 17
15 13
11 09
07 05
03 01
SEE NOTE 10&14
SEE NOTE 6
9
CONTACT PINS NO.01 THRU NO.32 ARE FOR ALIGNMENT OF MODULE ONLY. NOT TO BE WIRED

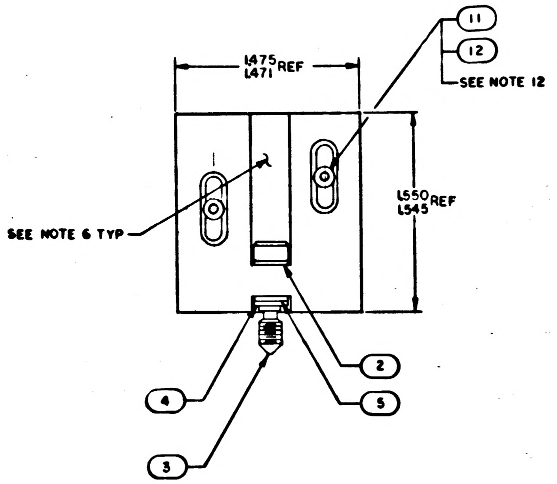
11
12
SEE NOTE 12
1.475
1.471 REF
1.550
1.545 REF
SEE NOTE 6 TYP
2
5
4
3

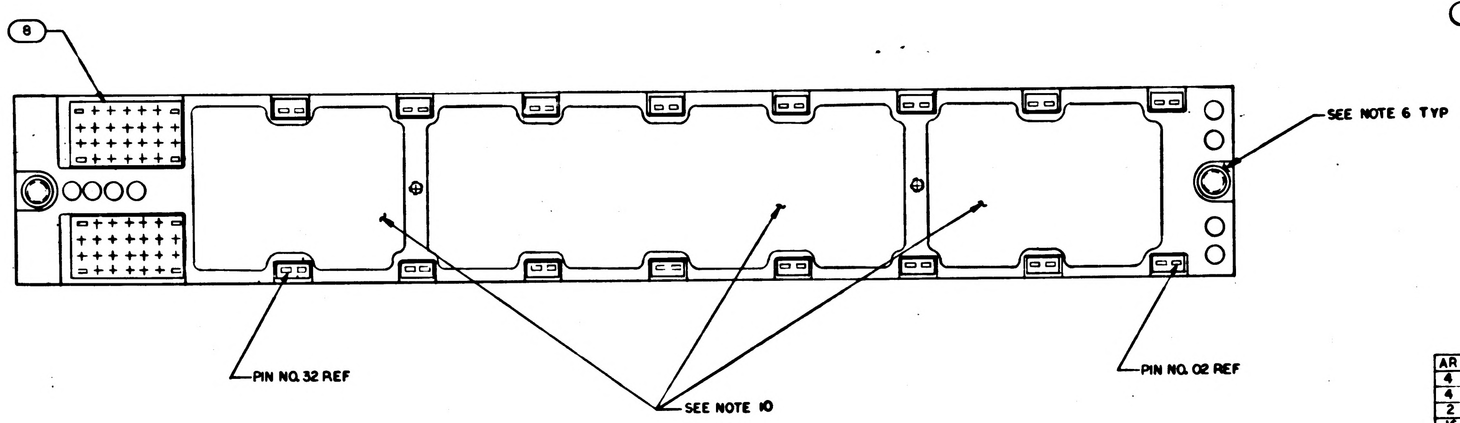
8
SEE NOTE 6 TYP
PIN NO. 32 REF
SEE NOTE 10
PIN NO. 02 REF

NOTES:

1. INTERPRET DRAWING IN ACCORDANCE WITH STANDARDS PRESCRIBED BY MIL-D-70327
2. WIRE PER ND1002029
3. ALL SOLDERING CONNECTIONS TO BE MADE PER ND1002071
4. QQ-W-343, TYPE S, 24 AWG AND TINNED
5. AR DENOTES AS REQUIRED
6. INDICATED AREAS TO BE FREE OF ENCAPSULATING COMPOUND
7. MARK $\frac{.08}{.10}$ HIGH PER ND1002019 & 1002122, TYPE II, CLASS I USING WHITE MARKING INK 1006271-1 SERIALIZE PER ND1002023
8. MARK $\frac{.24}{.26}$ HIGH PER ND1002019 / 1002122, TYPE II, CLASS I USING WHITE MARKING INK 1006271-1
9. WIRE PER WIRING DIAGRAM
10. ENCAPSULATE MODULE PER ND1002002 (POLYURETHANE FOAM) INDICATED AREAS ONLY
11. SEAL TERMINALS & INSULATORS TO FIND NO.1 USING 1011541
12. ASSEMBLE FIND NO.11 TO FIND NO.10 USING MIL-S-22473B, GRADE HV
13. USE PART OF FIND NO.13 TO ELIMINATE SPACE BETWEEN FIND NO.10 AND FIND NO.1, BOTH ENDS
14. ENCAPSULATING MATERIAL TO BE .005 BELOW FLUSH TO .005 ABOVE FLUSH WHERE INDICATED

QTY REQD	QTY REQD	PART OR IDENTIFYING NO.	NOMENCLATURE OR DESCRIPTION	FIND NO
AR	☒	1004623-2	SHIM	13
4	☒	1004237	WASHER, FLAT	12
4	☒	1006783-11	SCREW, BUTTON HEAD	11
2	☒	1004833	ROD, REINFORCING	10
16	16	1004727	GASKET ROPE MODULE	9
2	2	1004726	GASKET ROPE MODULE	8
AR	AR	SEE NOTE 4	WIRE, ELECTRICAL	7
AR	AR	1006776-22	INSULATION, SLEEVING	6
2	2	1004546-3	WASHER, FLAT	5
2	2	MS16633-4015	RING, RETAINING, EXTERNAL "E"	4
2	2	1004579-1	SCREW, JACKING	3
2	2	1004546-1	WASHER, FLAT	2
1	1	1003135	HEADER ASSEMBLY	1
-021	-011	LIST OF MATERIALS		

NEXT ASSY	USED ON
APPLICATION	

UNLESS OTHERWISE SPECIFIED
DIMENSIONS ARE IN INCHES
TOLERANCES ON
FRACTIONS ± — DECIMALS XX±.02 ANGLES ± —
DO NOT SCALE THIS DRAWING
MATERIAL
HEAT TREATMENT
FINAL FINISH

MIT
INSTRUMENTATION LAB
CAMBRIDGE, MASS
DWG NO. CONTRACT
DRAWN DATE 4 Nov 64
CHECKED
APPROVAL
APPROVAL
NASA APPROVAL 11-4-64
MIT APPROVAL 4 Nov 64

MANNED SPACECRAFT CENTER
HOUSTON, TEXAS

ROPE JUMPER MODULE
ASSEMBLY

CODE IDENT NO. —
SIZE E
NASA DRAWING NO 1003763
SCALE 2/1
WT
SHEET 1 OF 1

NOTICE — WHEN GOVERNMENT DRAWINGS, SPECIFICATIONS, OR OTHER DATA ARE USED FOR ANY PURPOSE OTHER THAN IN CONNECTION WITH A DEFINITELY RELATED GOVERNMENT PROCUREMENT OPERATION, THE UNITED STATES GOVERNMENT THEREBY INCURS NO RESPONSIBILITY NOR ANY OBLIGATION WHATSOEVER; AND THE FACT THAT THE GOVERNMENT MAY HAVE FORMULATED, FURNISHED, OR IN ANY WAY SUPPLIED THE SAID DRAWINGS, SPECIFICATIONS, OR OTHER DATA IS NOT TO BE REGARDED BY IMPLICATION OR OTHERWISE AS IN ANY MANNER LICENSING THE HOLDER OR ANY OTHER PERSON OR CORPORATION, OR CONVEYING ANY RIGHTS OR PERMISSION TO MANUFACTURE, USE, OR SELL ANY PATENTED INVENTION THAT MAY IN ANY WAY BE RELATED THERETO

REVISIONS 13486			
SYM	DESCRIPTION	DATE	APPROVAL

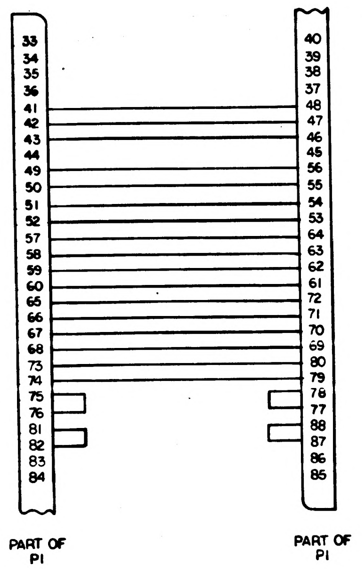
33
34
35
36
41
42
43
44
49
50
51
52
57
58
59
60
65
66
67
68
73
74
75
76
81
82
83
84
40
39
38
37
48
47
46
45
56
55
54
53
64
63
62
61
72
71
70
69
80
79
78
77
88
87
86
85
PART OF P1
PART OF P1

WIRING DIAGRAM

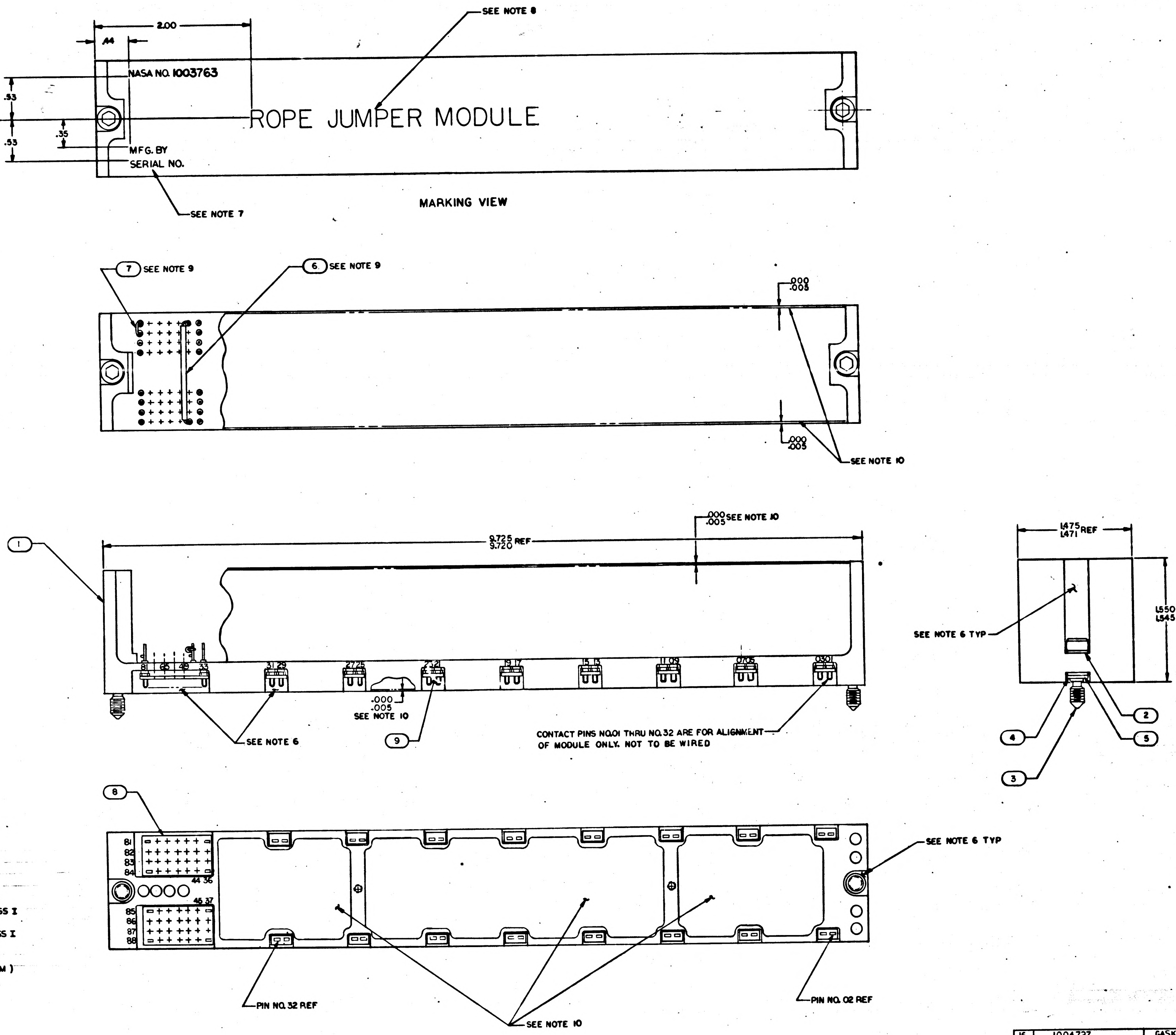
2.00
.44
.53
.53
.35
NASA NO. 1003763
ROPE JUMPER MODULE
MFG. BY
SERIAL NO.
SEE NOTE 8
SEE NOTE 7
MARKING VIEW
7 SEE NOTE 9
6 SEE NOTE 9
.000 .005
SEE NOTE 10
1
9.725 9.720 REF
.000 .005 SEE NOTE 10
31 29
27 25
23 21
19 17
15 13
11 09
07 05
03 01
.000 .005 SEE NOTE 10
9
SEE NOTE 6
CONTACT PINS NO.01 THRU NO.32 ARE FOR ALIGNMENT OF MODULE ONLY. NOT TO BE WIRED
1.475 1.471 REF
1.550 1.545 REF
SEE NOTE 6 TYP
2
4
5
3
8
81
82
83
84
85
86
87
88
44 36
46 37
SEE NOTE 6 TYP
PIN NO. 32 REF
PIN NO. 02 REF
SEE NOTE 10

NOTES:
1. INTERPRET DRAWING IN ACCORDANCE WITH STANDARDS PRESCRIBED BY MIL-D-70327
2. WIRE PER ND1002029
3. ALL SOLDERING CONNECTIONS TO BE MADE PER ND1002071
4. MIL-W-3861 TYPE S, 24 AWG AND TINNED
5. AR DENOTES AS REQUIRED
6. INDICATED AREAS TO BE FREE OF ENCAPSULATING COMPOUND
7. MARK .093 HIGH PER ND1002019 / 1002122, TYPE II, CLASS I USING WHITE MARKING INK 1006271-1
8. MARK .250 HIGH PER ND1002019 / 1002122, TYPE II, CLASS I USING WHITE MARKING INK 1006271-1
9. WIRE PER WIRING DIAGRAM
10. ENCAPSULATE MODULE PER ND1002002 (POLYURETHANE FOAM) INDICATED AREAS ONLY

QTY REQD	PART OR IDENTIFYING NO.	NOMENCLATURE OR DESCRIPTION	FIND NO.
16	1004727	GASKET ROPE MODULE	9
2	1004726	GASKET ROPE MODULE	8
AR	SEE NOTE 4	WIRE, ELECTRICAL	7
AR	NAS-1391-24-9	WIRE, ELECTRICAL	6
2	1004546-3	WASHER, FLAT	5
2	MS16633-4015	RING, RETAINING, EXTERNAL "E"	4
2	1004579-1	SCREW, JACKING	3
2	1004546-1	WASHER, FLAT	2
1	1003135	HEADER ASSEMBLY	1
-011	LIST OF MATERIALS		

MASTER

NEXT ASSY	USED ON
APPLICATION	

UNLESS OTHERWISE SPECIFIED
DIMENSIONS ARE IN INCHES
TOLERANCES ON
FRACTIONS ± —— DECIMALS .XX ± .02 ANGLES ± ——
DO NOT SCALE THIS DRAWING
MATERIAL ——
HEAT TREATMENT ——
FINAL FINISH ——

MIT
INSTRUMENTATION LAB
CAMBRIDGE, MASS
DWG. NO. CONTRACT
DRAWN J.F. Walsh DATE 4 Nov 64
CHECKED P. Lobani 4 NOV 64
APPROVAL
APPROVAL Eldon Hall
NASA APPROVAL W.G. Rhine 11-4-64
MIT APPROVAL
MANNED SPACECRAFT CENTER
HOUSTON, TEXAS

ROPE JUMPER MODULE
ASSEMBLY

CODE IDENT NO. ——
SIZE E
NASA DRAWING NO 1003763
SCALE 2/1
WT ——
SHEET 1 OF 1

1003763

NOTICE — WHEN GOVERNMENT DRAWINGS, SPECIFICATIONS, OR OTHER DATA ARE USED FOR ANY PURPOSE OTHER THAN IN CONNECTION WITH A DEFINITELY RELATED GOVERNMENT PROCUREMENT OPERATION, THE UNITED STATES GOVERNMENT THEREBY INCURS NO RESPONSIBILITY NOR ANY OBLIGATION WHATSOEVER; AND THE FACT THAT THE GOVERNMENT MAY HAVE FORMULATED, FURNISHED, OR IN ANY WAY SUPPLIED THE SAID DRAWINGS, SPECIFICATIONS OR OTHER DATA IS NOT TO BE REGARDED BY IMPLICATION OR OTHERWISE AS IN ANY MANNER LICENSING THE HOLDER OR ANY OTHER PERSON OR CORPORATION, OR CONVEYING ANY RIGHTS OR PERMISSION TO MANUFACTURE, USE, OR SELL ANY PATENTED INVENTION THAT MAY IN ANY WAY BE RELATED THERETO.

A 1003770

REVISIONS 12569

SYM	DESCRIPTION	DATE	APPROVAL
A	REPLACED WITH CHANGE BY REV B PER TDRR 13461	10/14/64	

DESCRIPTION	DWG. NO.
AGC ASSEMBLY	1003700
NAV. DSKY	1003706
MAIN DSKY	1003707

NOTES:

1. INTERPRET DRAWING IN ACCORDANCE WITH STANDARDS PRESCRIBED PER MIL-D-70327
2. TEST PER FTM 1003770

Ⓐ REPLACED WITH CHANGE BY REV B

QTY REQD	PART OR IDENTIFYING NO.	NOMENCLATURE OR DESCRIPTION	FIND NO.

LIST OF MATERIALS

NEXT ASSY	USED ON
APPLICATION	

UNLESS OTHERWISE SPECIFIED DIMENSIONS ARE IN INCHES
TOLERANCES ON
FRACTIONS ± DECIMALS ± ANGLES ±
DO NOT SCALE THIS DRAWING
MATERIAL
HEAT TREATMENT
FINAL FINISH

MIT
INSTRUMENTATION LAB
CAMBRIDGE, MASS.
DWG. NO. CONTRACT

DRAWN DATE 9/14/64
CHECKED
APPROVAL
APPROVAL 9/14/64
NASA APPROVAL 9/15/64
MIT APPROVAL 9/15/64

MANNED SPACECRAFT CENTER
HOUSTON, TEXAS

COMPUTER GROUP

CODE IDENT NO.
SIZE C
NASA DRAWING NO. 1003770
SCALE
WT
SHEET OF

MASTER

INCHES
0 1 2
PHOTOGRAPHIC SCALE ONLY

NOTICE – WHEN GOVERNMENT DRAWINGS, SPECIFICATIONS, OR OTHER DATA ARE USED FOR ANY PURPOSE OTHER THAN IN CONNECTION WITH A DEFINITELY RELATED GOVERNMENT PROCUREMENT OPERATION, THE UNITED STATES GOVERNMENT THEREBY INCURS NO RESPONSIBILITY NOR ANY OBLIGATION WHATSOEVER; AND THE FACT THAT THE GOVERNMENT MAY HAVE FORMULATED, FURNISHED, OR IN ANY WAY SUPPLIED THE SAID DRAWINGS, SPECIFICATIONS OR OTHER DATA IS NOT TO BE REGARDED BY IMPLICATION OR OTHERWISE AS IN ANY MANNER LICENSING THE HOLDER OR ANY OTHER PERSON OR CORPORATION, OR CONVEYING ANY RIGHTS OR PERMISSION TO MANUFACTURE, USE, OR SELL ANY PATENTED INVENTION THAT MAY IN ANY WAY BE RELATED THERETO.

REVISIONS

SYM	ZONE	DESCRIPTION	DR	CHK	DATE	APPROVED
B		REPLACES REV. A WITH CHANGES PER TDRR 13461				

COLUMN 1	COLUMN 2	COLUMN 3	COLUMN 4	COLUMN 5	COLUMN 6	COLUMN 7	
AGC SUBSYSTEM	AGC SUBSYSTEM NO. (REF)	AGC	NAV DSKY	MAIN DSKY	FTM	NAME PLATE INFORMATION (SEE NOTE 2)	
						SERIAL NO.	PART DASH NO.
1003770 – 011	120	1003700-011	1003551	1003484	1003770–011	RAY 110	1003770–011
1003770 – 011	117	1003700-011	1003551	1003484	1003770–011	RAY 120	1003770–011
1003770 – 011	112	1003700-011	1003551	1003484	1003770–011	RAY 130	1003770–011
1003770 – 011	110	1003700-011	1003706	1003707	1003770–011	RAY 140	1003770–011
1003770 – 021	109	1003700-021	1003706	1003707	1003770–021	RAY 170	1003770–021
↑	111	↑	↑	↑	↑	RAY 180	↑
	119					RAY 190	
	121					RAY 200	
	122					RAY 210	
	123					RAY 220	
	124					RAY 230	
	125					RAY 240	
	126					RAY 250	
↓	127	↓	↓	↓	↓	RAY 260	↓
1003770 – 021	128	1003700-021	1003706	1003707	1003770–021	RAY 270	1003770–021

NOTES:

1. INTERPRET DRAWING IN ACCORDANCE WITH STANDARDS PRESCRIBED BY MIL-D-70327
2. STAMP THE NAMEPLATES ON AGC MAIN DSKY AND NAV DSKY WITH PART NUMBER AND SERIAL NUMBER PER COLUMN 7
3. TEST PER FTM PER COLUMN 6

Ⓑ REPLACES REV. A WITH CHANGE

MASTER

QTY REQD	PART OR IDENTIFYING NO.	MATERIAL OR NOTES	NOMENCLATURE OR DESCRIPTION	FIND NO.

LIST OF MATERIALS

NEXT ASSY	USED ON

APPLICATION

UNLESS OTHERWISE SPECIFIED
DIMENSIONS ARE IN INCHES
CAPACITOR VALUES ARE IN μf
RESISTOR VALUES ARE IN OHMS
TOLERANCES ON
FRACTIONS ± —— DECIMALS ± —— ANGLES ± ——
DO NOT SCALE THIS DRAWING

MATERIAL ——

MIT
INSTRUMENTATION LAB
CAMBRIDGE, MASS.

DRAWN OCT-7-64
CHECKED
APPROVED
APPROVED Eldona Hall 9 Oct 64
APPROVED MIT 10/14/64
APPROVED MSC 10-14-64
DATE

MANNED SPACECRAFT CENTER
HOUSTON, TEXAS

APOLLO GUIDANCE
COMPUTER GROUP

CODE IDENT NO. ——
SIZE C
DRAWING NO. 1003770
SCALE ——
SHEET 1 OF 1

INCHES
0 1 2
PHOTOGRAPHIC SCALE ONLY

NOTICE – WHEN GOVERNMENT DRAWINGS, SPECIFICATIONS, OR OTHER DATA ARE USED FOR ANY PURPOSE OTHER THAN IN CONNECTION WITH A DEFINITELY RELATED GOVERNMENT PROCUREMENT OPERATION, THE UNITED STATES GOVERNMENT THEREBY INCURS NO RESPONSIBILITY NOR ANY OBLIGATION WHATSOEVER; AND THE FACT THAT THE GOVERNMENT MAY HAVE FORMULATED, FURNISHED, OR IN ANY WAY SUPPLIED THE SAID DRAWINGS, SPECIFICATIONS OR OTHER DATA IS NOT TO BE REGARDED BY IMPLICATION OR OTHERWISE AS IN ANY MANNER LICENSING THE HOLDER OR ANY OTHER PERSON OR CORPORATION, OR CONVEYING ANY RIGHTS OR PERMISSION TO MANUFACTURE, USE, OR SELL ANY PATENTED INVENTION THAT MAY IN ANY WAY BE RELATED THERETO.

REVISIONS

SYM	ZONE	DESCRIPTION	DR	CHK	DATE	APPROVED
B		REPLACES REV. A WITH CHANGES PER TDRR 13461				
Ⓜ C		REVISED PER TDRR 17236	a.J.B.		5/22/	

COLUMN 1	COLUMN 2	COLUMN 3	COLUMN 4	COLUMN 5	COLUMN 6	COLUMN 7	
AGC SUBSYSTEM	AGC SUBSYSTEM NO. (REF)	AGC	NAV DSKY	MAIN DSKY	FTM	NAME PLATE INFORMATION (SEE NOTE 2)	
						SERIAL NO.	PART DASH NO.
1003770 – 011	120	1003700-011	1003551	1003484	1003770-011	RAY 110	1003770-011
1003770 – 011	117	1003700-011	1003551	1003484	1003770-011	RAY 120	1003770-011
1003770 – 011	112	1003700-011	1003551	1003484	1003770-011	RAY 130	1003770-011
1003770 – 021	110	1003700-011	1003706	1003707	1003770-011	RAY 140	1003770-021
1003770 – 031	121	1003700-021	1003706	1003707	1003770-011	RAY 170	1003770-031
↑	111	↑	↑	↑	↑	RAY 180	↑
	109					RAY 190	
	122					RAY 200	
	SP#1						
	123					RAY 210	
	124					RAY 220	
	SP#2						
	125						
	126						
↓	127	↓	↓	↓	↓		↓
1003770-031	128	1003700-021	1003706	1003707	1003770-011		1003770-031
1003770-041	108	1003700-011	1003524	1003540	1003770-011	RAY 150	1003770-041
1003770-051	107	1003700-011	1003524	———	1003770-011	RAY 155	1003770-051

NOTES:

1. INTERPRET DRAWING IN ACCORDANCE WITH STANDARDS PRESCRIBED BY MIL-D-70327
2. STAMP THE NAMEPLATES ON AGC, MAIN DSKY AND NAV DSKY WITH PART NUMBER AND SERIAL NUMBER PER COLUMN 7
3. TEST PER FTM PER COLUMN 6

Ⓑ REPLACES REV. A WITH CHANGE

MASTER

QTY REQD	PART OR IDENTIFYING NO.	MATERIAL OR NOTES	NOMENCLATURE OR DESCRIPTION	FIND NO.

LIST OF MATERIALS

NEXT ASSY	USED ON

APPLICATION

UNLESS OTHERWISE SPECIFIED
DIMENSIONS ARE IN INCHES
CAPACITOR VALUES ARE IN µf
RESISTOR VALUES ARE IN OHMS
TOLERANCES ON
FRACTIONS ± —— DECIMALS ± —— ANGLES ± ——
DO NOT SCALE THIS DRAWING

MATERIAL ——

MIT
INSTRUMENTATION LAB
CAMBRIDGE, MASS.

DRAWN OCT-7-64
CHECKED
APPROVED
APPROVED Eldon C. Hall 9 Oct 64
APPROVED MIT D. Hoag 10/14/64
APPROVED MSC W J Rhine 10-14-64
DATE

MANNED SPACECRAFT CENTER
HOUSTON, TEXAS

APOLLO GUIDANCE COMPUTER GROUP

CODE IDENT NO. ——
SIZE C
DRAWING NO. 1003770
SCALE ——
SHEET 1 OF 1

NOTICE – WHEN GOVERNMENT DRAWINGS, SPECIFICATIONS, OR OTHER DATA ARE USED FOR ANY PURPOSE OTHER THAN IN CONNECTION WITH A DEFINITELY RELATED GOVERNMENT PROCUREMENT OPERATION, THE UNITED STATES GOVERNMENT THEREBY INCURS NO RESPONSIBILITY NOR ANY OBLIGATION WHATSOEVER; AND THE FACT THAT THE GOVERNMENT MAY HAVE FORMULATED, FURNISHED, OR IN ANY WAY SUPPLIED THE SAID DRAWINGS, SPECIFICATIONS OR OTHER DATA IS NOT TO BE REGARDED BY IMPLICATION OR OTHERWISE AS IN ANY MANNER LICENSING THE HOLDER OR ANY OTHER PERSON OR CORPORATION, OR CONVEYING ANY RIGHTS OR PERMISSION TO MANUFACTURE, USE, OR SELL ANY PATENTED INVENTION THAT MAY IN ANY WAY BE RELATED THERETO.

REVISIONS

SYM	ZONE	DESCRIPTION	DR	CHK	DATE	APPROVED
B		REPLACES REV. A WITH CHANGES PER TDRR 13461			10/[illegible]	
Ⓜ C		REVISED PER TDRR 17236	a.J.B.		3/22/65	
Ⓒ D		REVISED PER TDRR 18171	R.P.Z.		4/26/65	

COLUMN 1	COLUMN 2	COLUMN 3	COLUMN 4	COLUMN 5	COLUMN 6	COLUMN 7	
AGC SUBSYSTEM	AGC SUBSYSTEM NO. (REF)	AGC	NAV DSKY	MAIN DSKY	FTM	NAME PLATE INFORMATION (SEE NOTE 2)	
						SERIAL NO.	PART DASH NO.
1003770 – 011	120	1003700-011	1003551	1003484	1003770	RAY 110	1003770–011
1003770 – 011	117	1003700-011	1003551	1003484	1003770	RAY 120	1003770–011
1003770 – 011	112	1003700-011	1003551	1003484	1003770	RAY 130	1003770–011
1003770 – 021	110	1003700-011	1003706-011	1003707-011	1003770	RAY 140	1003770–021
1003770 – 031	121	1003700-021	1003706-011	1003707-011	1003770	RAY 170	1003770–031
↑	111	↑	↑	↑	↑	RAY 180	↑
	109					RAY 190	
	122					RAY 200	
	SP#1					RAY 205	
	123					RAY 210	
	124					RAY 220	
	SP#2					RAY 225	
	125						
	126						
↓	127	↓	↓	↓	↓		↓
1003770-031	128	1003700-021	1003706-011	1003707-011	1003770		1003770-031
1003770-041	108	1003700-011	1003524	1003540	1003770	RAY 150	1003770-041
1003770-051	107	1003700-011	1003524	1003553-011	1003770	RAY 155	1003770-051

NOTES:

1. INTERPRET DRAWING IN ACCORDANCE WITH STANDARDS PRESCRIBED BY MIL-D-70327
2. STAMP THE NAMEPLATES ON AGC, MAIN DSKY AND NAV DSKY WITH PART NUMBER AND SERIAL NUMBER PER COLUMN 7
3. TEST PER FTM PER COLUMN 6

Ⓑ REPLACES REV. A WITH CHANGE

QTY REQD	PART OR IDENTIFYING NO.	MATERIAL OR NOTES	NOMENCLATURE OR DESCRIPTION	FIND NO.

LIST OF MATERIALS

NEXT ASSY	USED ON

APPLICATION

UNLESS OTHERWISE SPECIFIED
DIMENSIONS ARE IN INCHES
CAPACITOR VALUES ARE IN µf
RESISTOR VALUES ARE IN OHMS
TOLERANCES ON
FRACTIONS ± — DECIMALS ± — ANGLES ± —
DO NOT SCALE THIS DRAWING

MATERIAL

MIT
INSTRUMENTATION LAB
CAMBRIDGE, MASS.

DRAWN OCT-7-64
CHECKED
APPROVED
APPROVED Eldon C. Hall 9 Oct 64
APPROVED MIT 10/14/64
APPROVED MSC 10-14-64
DATE

MANNED SPACECRAFT CENTER
HOUSTON, TEXAS

APOLLO GUIDANCE
COMPUTER GROUP

CODE IDENT NO. 80230
SIZE C
DRAWING NO. 1003770
SCALE —
SHEET 1 OF 1

STER

NOTICE – WHEN GOVERNMENT DRAWINGS, SPECIFICATIONS, OR OTHER DATA ARE USED FOR ANY PURPOSE OTHER THAN IN CONNECTION WITH A DEFINITELY RELATED GOVERNMENT PROCUREMENT OPERATION, THE UNITED STATES GOVERNMENT THEREBY INCURS NO RESPONSIBILITY NOR ANY OBLIGATION WHATSOEVER; AND THE FACT THAT THE GOVERNMENT MAY HAVE FORMULATED, FURNISHED, OR IN ANY WAY SUPPLIED THE SAID DRAWINGS, SPECIFICATIONS OR OTHER DATA IS NOT TO BE REGARDED BY IMPLICATION OR OTHERWISE AS IN ANY MANNER LICENSING THE HOLDER OR ANY OTHER PERSON OR CORPORATION, OR CONVEYING ANY RIGHTS OR PERMISSION TO MANUFACTURE, USE, OR SELL ANY PATENTED INVENTION THAT MAY IN ANY WAY BE RELATED THERETO.

REVISIONS

SYM	ZONE	DESCRIPTION	DR	CHK	DATE	APPROVED
B		REPLACES REV. A WITH CHANGES PER TDRR 13461				
C		REVISED PER TDRR 17236	a.J.B.		5/22/65	
D		REVISED PER TDRR 18171	R.P.Z.			
E		REVISED PER TDRR 20944	R.B.G.		9/13/65	

COLUMN 1	COLUMN 2	COLUMN 3	COLUMN 4	COLUMN 5	COLUMN 6	COLUMN 7	
AGC SUBSYSTEM	AGC SUBSYSTEM NO. (REF)	AGC	NAV DSKY	MAIN DSKY	FTM	NAME PLATE INFORMATION (SEE NOTE 2)	
						SERIAL NO.	PART DASH NO.
1003770 – 011	120	1003700-011	1003551	1003484-011	1003770	RAY 110	1003770–011
1003770 – 011	117	1003700-011	1003551	1003484-011	1003770	RAY 120	1003770–011
1003770 – 011	112	1003700-011	1003551	1003484-011	1003770	RAY 130	1003770–011
1003770 – 021	110	1003700-031	1003706-011	1003707-011	1003770	RAY 140	1003770–021
1003770 –031	121	1003700-021	1003706-011	1003707-011	1003770	RAY 170	1003770–031
	111					RAY 180	
	109					RAY 190	
	122					RAY 200	
	SP#1					RAY 205	
	123					RAY 210	
	124					RAY 220	
	SP#2					RAY 225	
	125						
	126						
	127						
1003770-031	128	1003700-021	1003706-011	1003707-011	1003770		1003770-031
1003770-041	108	1003700-011	1003524	1003540	1003770	RAY 150	1003770-041
1003770-051	107	1003700-011	1003524	1003553-011	1003770	RAY 155	1003770-051

NOTES:
1. INTERPRET DRAWING IN ACCORDANCE WITH STANDARDS PRESCRIBED BY MIL-D-70327
2. STAMP THE NAMEPLATES ON AGC, MAIN DSKY AND NAV DSKY WITH PART NUMBER AND SERIAL NUMBER PER COLUMN 7
3. TEST PER FTM PER COLUMN 6

Ⓑ REPLACES REV. A WITH CHANGE

QTY REQD	PART OR IDENTIFYING NO.	MATERIAL OR NOTES	NOMENCLATURE OR DESCRIPTION	FIND NO.

LIST OF MATERIALS

NEXT ASSY	USED ON

APPLICATION

UNLESS OTHERWISE SPECIFIED
DIMENSIONS ARE IN INCHES
CAPACITOR VALUES ARE IN µf
RESISTOR VALUES ARE IN OHMS
TOLERANCES ON
FRACTIONS ± — DECIMALS ± — ANGLES ± —
DO NOT SCALE THIS DRAWING

MATERIAL —

MIT
INSTRUMENTATION LAB
CAMBRIDGE, MASS.

DRAWN OCT-7-64
CHECKED
APPROVED
APPROVED Eldon C. Hall 9 Oct 64
APPROVED MIT R. Hagle 10/14/64
APPROVED MSC W J Rhine 10-14-64
DATE

MANNED SPACECRAFT CENTER
HOUSTON, TEXAS

APOLLO GUIDANCE COMPUTER GROUP

CODE IDENT NO. 80230
SIZE C
DRAWING NO. 1003770
SCALE —
SHEET 1 OF 1

NOTICE – WHEN GOVERNMENT DRAWINGS, SPECIFICATIONS, OR OTHER DATA ARE USED FOR ANY PURPOSE OTHER THAN IN CONNECTION WITH A DEFINITELY RELATED GOVERNMENT PROCUREMENT OPERATION, THE UNITED STATES GOVERNMENT THEREBY INCURS NO RESPONSIBILITY NOR ANY OBLIGATION WHATSOEVER; AND THE FACT THAT THE GOVERNMENT MAY HAVE FORMULATED, FURNISHED, OR IN ANY WAY SUPPLIED THE SAID DRAWINGS, SPECIFICATIONS OR OTHER DATA IS NOT TO BE REGARDED BY IMPLICATION OR OTHERWISE AS IN ANY MANNER LICENSING THE HOLDER OR ANY OTHER PERSON OR CORPORATION, OR CONVEYING ANY RIGHTS OR PERMISSION TO MANUFACTURE, USE, OR SELL ANY PATENTED INVENTION THAT MAY IN ANY WAY BE RELATED THERETO.

REVISIONS

SYM	ZONE	DESCRIPTION	DR	CHK	DATE	APPROVED
B		REPLACES REV. A WITH CHANGES PER TDRR 13461				
C		REVISED PER TDRR 17236	a.J.B.		5/22/65	
D		REVISED PER TDRR 18171	R.P.Z.			
E		REVISED PER TDRR 20944	R.B.G		5/13/65	
F		REVISED PER TDRR 22530	R.P.Z.		9/28/65	

COLUMN 1	COLUMN 2	COLUMN 3	COLUMN 4	COLUMN 5	COLUMN 6	COLUMN 7	
AGC SUBSYSTEM	AGC SUBSYSTEM NO. (REF)	AGC	NAV DSKY	MAIN DSKY	FTM	NAME PLATE INFORMATION (SEE NOTE 2)	
						SERIAL NO.	PART DASH NO.
1003770 – 011	120	1003700-011	1003551	1003484-011	1003770	RAY 110	1003770–011
1003770 – 011	117	1003700-011	1003551	1003484-011	1003770	RAY 120	1003770 – 011
1003770 – 011	112	1003700-011	1003551	1003484-011	1003770	RAY 130	1003770 – 011
1003770 – 021	110	1003700-031	1003706-011	1003707-011	1003770	RAY 140	1003770 – 021
1003770 – 031	121	1003700-021	1003706-011	1003707-011	1003770	RAY 170	1003770 – 031
1003770 – 031	111	1003700-021				RAY 180	1003770-031
1003770 – 061	109	1003700-041				RAY 190	1003770-061
	122					RAY 200	
	SP#1					RAY 205	
	123					RAY 210	
	124					RAY 220	
	SP#2					RAY 225	
	125						
	126						
	127						
1003770-061	128	1003700-041	1003706-011	1003707-011	1003770		1003770-061
1003770-041	108	1003700-011	1003524	1003540	1003770	RAY 150	1003770-041
1003770-051	107	1003700-011	1003524	1003553-011	1003770	RAY 155	1003770-051

Ⓑ REPLACES REV. A WITH CHANGE

NOTES:

1. INTERPRET DRAWING IN ACCORDANCE WITH STANDARDS PRESCRIBED BY MIL-D-70327
2. STAMP THE NAMEPLATES ON AGC, MAIN DSKY AND NAV DSKY WITH PART NUMBER AND SERIAL NUMBER PER COLUMN 7
3. TEST PER FTM PER COLUMN 6

MASTER

QTY REQD	PART OR IDENTIFYING NO.	MATERIAL OR NOTES	NOMENCLATURE OR DESCRIPTION	FIND NO.

LIST OF MATERIALS

NEXT ASSY	USED ON
APPLICATION	

UNLESS OTHERWISE SPECIFIED
DIMENSIONS ARE IN INCHES
CAPACITOR VALUES ARE IN µf
RESISTOR VALUES ARE IN OHMS
TOLERANCES ON
FRACTIONS ± — DECIMALS ± — ANGLES ± —
DO NOT SCALE THIS DRAWING

MATERIAL —

MIT
INSTRUMENTATION LAB
CAMBRIDGE, MASS.

DRAWN OCT-7-64
CHECKED
APPROVED
APPROVED Eldon C. Hall 9 Oct 64
APPROVED MIT 10/14/64
APPROVED MSC W J Rhine 10-19-64
DATE

MANNED SPACECRAFT CENTER
HOUSTON, TEXAS

APOLLO GUIDANCE COMPUTER GROUP

CODE IDENT NO. 80230
SIZE C
DRAWING NO. 1003770
SCALE —
SHEET 1 OF 1

NOTICE – WHEN GOVERNMENT DRAWINGS, SPECIFICATIONS, OR OTHER DATA ARE USED FOR ANY PURPOSE OTHER THAN IN CONNECTION WITH A DEFINITELY RELATED GOVERNMENT PROCUREMENT OPERATION, THE UNITED STATES GOVERNMENT THEREBY INCURS NO RESPONSIBILITY NOR ANY OBLIGATION WHATSOEVER: AND THE FACT THAT THE GOVERNMENT MAY HAVE FORMULATED, FURNISHED, OR IN ANY WAY SUPPLIED THE SAID DRAWINGS, SPECIFICATIONS OR OTHER DATA IS NOT TO BE REGARDED BY IMPLICATION OR OTHERWISE AS IN ANY MANNER LICENSING THE HOLDER OR ANY OTHER PERSON OR CORPORATION, OR CONVEYING ANY RIGHTS OR PERMISSION TO MANUFACTURE, USE, OR SELL ANY PATENTED INVENTION THAT MAY IN ANY WAY BE RELATED THERETO.

REVISIONS

SYM	ZONE	DESCRIPTION	DR	CHK	DATE	APPROVED
B		REPLACES REV. A WITH CHANGES PER TDRR 13461				
Ⓜ C		REVISED PER TDRR 17236	a.J.B.		3/22/65	
Ⓜ D		REVISED PER TDRR 18171	R.P.Z.		4/26/65	
E		REVISED PER TDRR 20944			7/13/65	R.F.
Ⓜ F		REVISED PER TDRR 22530	R.P.Z.	CAD	9/20/65	R.F.
Ⓜ G		REVISED PER TDRR 23986			12/7/65	R.F.

COLUMN 1	COLUMN 2	COLUMN 3	COLUMN 4	COLUMN 5	COLUMN 6	COLUMN 7	
AGC SUBSYSTEM	AGC SUBSYSTEM NO. (REF)	AGC	NAV DSKY	MAIN DSKY	FTM	NAME PLATE INFORMATION (SEE NOTE 2)	
						SERIAL NO.	PART DASH NO.
1003770 – 011	120	1003700-011	1003551	1003484-011	1003770	RAY 110	1003770–011
1003770 – 071	117	1003565-011	1003570-011	1003569-011	1003770	RAY 120	1003770–071
1003770 – 071	112	1003565-011	1003570-011	1003569-011	1003770	RAY 130	1003770–071
1003770 – 021	110	1003700-031	1003706-011	1003707-011	1003770	RAY 140	1003770–021
1003770 –031	121	1003700-021	1003706-011	1003707-011	1003770	RAY 170	1003770–031
1003770 –031	111	1003700-021	↑	↑	↑	RAY 180	1003770-031
1003770 - 061	109	1003700-041				RAY 190	1003770-061
↑	122	↑				RAY 200	↑
	SP#1					RAY 205	
	123					RAY 210	
	124					RAY 220	
	SP#2					RAY 225	
	125						
	126						
↓	127	↓	↓	↓	↓		↓
1003770-061	128	1003700-041	1003706-011	1003707-011	1003770		1003770-061
1003770-041	108	1003700-011	1003524	1003540	1003770	RAY 150	1003770-041
1003770-051	107	1003700-011	1003524	1003553-011	1003770	RAY 155	1003770-051

Ⓑ REPLACES REV. A WITH CHANGE

NOTES:

1. INTERPRET DRAWING IN ACCORDANCE WITH STANDARDS PRESCRIBED BY MIL-D-70327
2. STAMP THE NAMEPLATES ON AGC, MAIN DSKY AND NAV DSKY WITH PART NUMBER AND SERIAL NUMBER PER COLUMN 7
3. TEST PER FTM PER COLUMN 6

MA TER

QTY REQD	PART OR IDENTIFYING NO.	MATERIAL OR NOTES	NOMENCLATURE OR DESCRIPTION	FIND NO.

LIST OF MATERIALS

NEXT ASSY	USED ON

APPLICATION

UNLESS OTHERWISE SPECIFIED
DIMENSIONS ARE IN INCHES
CAPACITOR VALUES ARE IN µf
RESISTOR VALUES ARE IN OHMS
TOLERANCES ON
FRACTIONS ± — DECIMALS ± — ANGLES ± —
DO NOT SCALE THIS DRAWING

MATERIAL —

MIT
INSTRUMENTATION LAB
CAMBRIDGE, MASS.

DRAWN OCT-7-64
CHECKED
APPROVED
APPROVED Eldon C. Hall 9 Oct 64
APPROVED MIT R. Hall 10/14/64
APPROVED MSC W. J. Rhine 10-14-64
DATE

MANNED SPACECRAFT CENTER
HOUSTON, TEXAS

APOLLO GUIDANCE COMPUTER GROUP

CODE IDENT NO. 80230
SIZE C
DRAWING NO. 1003770
SCALE —
SHEET 1 OF 1

1003770 G

NOTICE — WHEN GOVERNMENT DRAWINGS, SPECIFICATIONS, OR OTHER DATA ARE USED FOR ANY PURPOSE OTHER THAN IN CONNECTION WITH A DEFINITELY RELATED GOVERNMENT PROCUREMENT OPERATION, THE UNITED STATES GOVERNMENT THEREBY INCURS NO RESPONSIBILITY NOR ANY OBLIGATION WHATSOEVER; AND THE FACT THAT THE GOVERNMENT MAY HAVE FORMULATED, FURNISHED, OR IN ANY WAY SUPPLIED THE SAID DRAWINGS, SPECIFICATIONS OR OTHER DATA IS NOT TO BE REGARDED BY IMPLICATION OR OTHERWISE AS IN ANY MANNER LICENSING THE HOLDER OR ANY OTHER PERSON OR CORPORATION, OR CONVEYING ANY RIGHTS OR PERMISSION TO MANUFACTURE, USE, OR SELL ANY PATENTED INVENTION THAT MAY IN ANY WAY BE RELATED THERETO.

REVISIONS

SYM	ZONE	DESCRIPTION	DR	CHK	DATE	APPROVED
B		REPLACES REV. A WITH CHANGES PER TDRR 13461			10/	
C		REVISED PER TDRR 17236	a.J.B.		3/22/	
D		REVISED PER TDRR 18171	R.P.Z.		4/26/65	
E		REVISED PER TDRR 20944			9/13/65	
F		REVISED PER TDRR 22530	R.P.Z.		9/20/65	
G		REVISED PER TDRR 23986			12/7/65	
H		REVISED PER TDRR 24216			12/14/65	

COLUMN 1	COLUMN 2	COLUMN 3	COLUMN 4	COLUMN 5	COLUMN 6	COLUMN 7	
AGC SUBSYSTEM	AGC SUBSYSTEM NO. (REF)	AGC	NAV DSKY	MAIN DSKY	FTM	NAME PLATE INFORMATION (SEE NOTE 2)	
						SERIAL NO.	PART DASH NO.
1003770 – 011	120	1003700-011	1003551	1003484-011	1003770	RAY 110	1003770–011
1003770 – 071	117	1003565-011	1003570-011	1003569-011	1003770	RAY 120	1003770–071
1003770– 071	112	1003565-011	1003570-011	1003569-011	1003770	RAY 130	1003770–071
1003770 – 021	110	1003700-031	1003706-011	1003707-011	1003770	RAY 140	1003770–021
1003770 –031	121	1003700-021	1003706-011	1003707-011	1003770	RAY 170	1003770–031
1003770 –031	111	1003700-021	1003706-011	1003707–011		RAY 180	1003770–031
1003770 –061	109	1003700-041	1003706-011	1003707–011		RAY 190	1003770–061
1003770–081	122		1003706-021	1003707-021		RAY 200	1003770 081
	SP#1					RAY 205	
	123					RAY 210	
	124					RAY 220	
	SP#2					RAY 225	
	125						
	126						
	127						
1003770-081	128	1003700-041	1003706-021	1003707-021	1003770		1003770-081
1003770-041	108	1003700-011	1003524	1003540	1003770	RAY 150	1003770-041
1003770-051	107	1003700-011	1003524	1003553-011	1003770	RAY 155	1003770-051

NOTES:

1. INTERPRET DRAWING IN ACCORDANCE WITH STANDARDS PRESCRIBED BY MIL-D-70327
2. STAMP THE NAMEPLATES ON AGC, MAIN DSKY AND NAV DSKY WITH PART NUMBER AND SERIAL NUMBER PER COLUMN 7
3. TEST PER FTM PER COLUMN 6

Ⓑ REPLACES REV. A WITH CHANGE

MASTER

QTY REQD	PART OR IDENTIFYING NO.	MATERIAL OR NOTES	NOMENCLATURE OR DESCRIPTION	FIND NO.

LIST OF MATERIALS

NEXT ASSY	USED ON

APPLICATION

UNLESS OTHERWISE SPECIFIED
DIMENSIONS ARE IN INCHES
CAPACITOR VALUES ARE IN µf
RESISTOR VALUES ARE IN OHMS
TOLERANCES ON
FRACTIONS ± — DECIMALS ± — ANGLES ± —
DO NOT SCALE THIS DRAWING

MATERIAL

MIT
INSTRUMENTATION LAB
CAMBRIDGE, MASS.

DRAWN OCT-7-64
CHECKED
APPROVED
APPROVED Eldon a Hall 9 Oct 64
APPROVED MIT R Hagle 10/14/64
APPROVED MSC W J Rhine 10-14-64
DATE

MANNED SPACECRAFT CENTER
HOUSTON, TEXAS

APOLLO GUIDANCE
COMPUTER GROUP

CODE IDENT NO. 80230
SIZE C
DRAWING NO. 1003770
SCALE —
SHEET 1 OF 1

NOTICE — WHEN GOVERNMENT DRAWINGS, SPECIFICATIONS, OR OTHER DATA ARE USED FOR ANY PURPOSE OTHER THAN IN CONNECTION WITH A DEFINITELY RELATED GOVERNMENT PROCUREMENT OPERATION, THE UNITED STATES GOVERNMENT THEREBY INCURS NO RESPONSIBILITY NOR ANY OBLIGATION WHATSOEVER; AND THE FACT THAT THE GOVERNMENT MAY HAVE FORMULATED, FURNISHED, OR IN ANY WAY SUPPLIED THE SAID DRAWINGS, SPECIFICATIONS OR OTHER DATA IS NOT TO BE REGARDED BY IMPLICATION OR OTHERWISE AS IN ANY MANNER LICENSING THE HOLDER OR ANY OTHER PERSON OR CORPORATION, OR CONVEYING ANY RIGHTS OR PERMISSION TO MANUFACTURE, USE, OR SELL ANY PATENTED INVENTION THAT MAY IN ANY WAY BE RELATED THERETO.

REVISIONS

SYM	ZONE	DESCRIPTION	DR	CHK	DATE	APPROVED
B		REPLACES REV. A WITH CHANGES PER TDRR 13461			10/	
C		REVISED PER TDRR 17236	a.J.B.		3/22/65	
D		REVISED PER TDRR 18171	R.P.Z.		4/26/65	
E		REVISED PER TDRR 20944	R.B.		8/13/65	
F		REVISED PER TDRR 22530	R.P.Z.		9/28/65	
G		REVISED PER TDRR 23986	J.P.T.		12/7/65	
H		REVISED PER TDRR 24216			12/14/65	
J		REVISED PER TDRR 24243			3 Jan 66	

COLUMN 1	COLUMN 2	COLUMN 3	COLUMN 4	COLUMN 5	COLUMN 6	COLUMN 7	
AGC SUBSYSTEM	AGC SUBSYSTEM NO. (REF)	AGC	NAV DSKY	MAIN DSKY	FTM	NAME PLATE INFORMATION (SEE NOTE 2)	
						SERIAL NO.	PART DASH NO.
1003770 – 011	120	1003700-011	1003551	1003484-011	1003770	RAY 110	1003770–011
1003770 – 071	117	1003565-011	1003570-011	1003569-011	1003770	RAY 120	1003770–071
1003770 – 071	112	1003565-011	1003570-011	1003569-011	1003770	RAY 130	1003770–071
1003770 – 021	110	1003700-031	1003706-011	1003707-011	1003770	RAY 140	1003770–021
1003770 – 031	121	1003700-021	1003706-011	1003707-011	1003770	RAY 170	1003770–031
1003770 – 031	111	1003700-021	1003706-011	1003707-011	↑	RAY 180	1003770–031
1003770 – 061	109	1003700-041	1003706-011	1003707-011		RAY 190	1003770-061
1003770-081	122	1003700-041	1003706-021	1003707-021		RAY 200	1003770-081
1003770-091	SP#1	1003700-051	1003706-031	1003707-031		RAY 205	1003770-091
↑	123	↑	↑	↑		RAY 210	↑
	124					RAY 220	
	SP#2					RAY 225	
	125						
	126						
↓	127	↓	↓	↓	↓		↓
1003770-091	128	1003700-051	1003706-031	1003707-031	1003770		1003770-091
1003770-041	108	1003700-011	1003524	1003540	1003770	RAY 150	1003770-041
1003770-051	107	1003700-011	1003524	1003553-011	1003770	RAY 155	1003770-051

NOTES:

1. INTERPRET DRAWING IN ACCORDANCE WITH STANDARDS PRESCRIBED BY MIL-D-70327
2. STAMP THE NAMEPLATES ON AGC, MAIN DSKY AND NAV DSKY WITH PART NUMBER AND SERIAL NUMBER PER COLUMN 7
3. TEST PER FTM PER COLUMN 6

Ⓑ REPLACES REV. A WITH CHANGE

QTY REQD	PART OR IDENTIFYING NO.	MATERIAL OR NOTES	NOMENCLATURE OR DESCRIPTION	FIND NO.

LIST OF MATERIALS

NEXT ASSY	USED ON

APPLICATION

UNLESS OTHERWISE SPECIFIED
DIMENSIONS ARE IN INCHES
CAPACITOR VALUES ARE IN µf
RESISTOR VALUES ARE IN OHMS
TOLERANCES ON
FRACTIONS ± — DECIMALS ± — ANGLES ± —
DO NOT SCALE THIS DRAWING

MATERIAL

MIT
INSTRUMENTATION LAB
CAMBRIDGE, MASS.

DRAWN OCT-7-64
CHECKED
APPROVED
APPROVED Eldon C. Hall 9 Oct 64
APPROVED MIT 10/14/64
APPROVED MSC 10-14-64
DATE

MANNED SPACECRAFT CENTER
HOUSTON, TEXAS

APOLLO GUIDANCE
COMPUTER GROUP

CODE IDENT NO. 80230
SIZE C
DRAWING NO. 1003770
SCALE —
SHEET 1 OF 1

NOTICE – WHEN GOVERNMENT DRAWINGS, SPECIFICATIONS, OR OTHER DATA ARE USED FOR ANY PURPOSE OTHER THAN IN CONNECTION WITH A DEFINITELY RELATED GOVERNMENT PROCUREMENT OPERATION, THE UNITED STATES GOVERNMENT THEREBY INCURS NO RESPONSIBILITY NOR ANY OBLIGATION WHATSOEVER; AND THE FACT THAT THE GOVERNMENT MAY HAVE FORMULATED, FURNISHED, OR IN ANY WAY SUPPLIED THE SAID DRAWINGS, SPECIFICATIONS OR OTHER DATA IS NOT TO BE REGARDED BY IMPLICATION OR OTHERWISE AS IN ANY MANNER LICENSING THE HOLDER OR ANY OTHER PERSON OR CORPORATION, OR CONVEYING ANY RIGHTS OR PERMISSION TO MANUFACTURE, USE, OR SELL ANY PATENTED INVENTION THAT MAY IN ANY WAY BE RELATED THERETO.

REVISIONS

SYM	ZONE	DESCRIPTION	DR	CHK	DATE	APPROVED
K		REPLACES REV J WITH CHANGES PER TDRR 24841				

	NAME PLATE INFO									
ITEM NO.	AGC SUB-SYS PART NO.	CONFIGURATION SERIAL NO.	AGC SYS NO. (REF)	COMPUTER PART NO.	NAV DSKY PART NO.	MAIN DSKY PART NO.	G/N DETECT MOD PART NO.	TEST SPECIFICATION	RETROFIT KIT NO.	REMARKS
1	1003770-011	RAY 110 120 130	120 117 112	1003700-011	1003551	1003484-011		FTM 1003770		INITIAL DESIGN
2	1003770-021	RAY 140	110	1003700-031	1003706-011	1003707-011		FTM 1003770		NEW DSKY DESIGN, LMA-37, VIB CUSHIONS
3	1003770-031	RAY 170 180	121 111	1003700-021	1003706-011	1003707-011		FTM 1003770		FLIGHT QUALIFIED MICROLOGIC
4	1003770-041	RAY 150	108	1003700-011	1003524	1003540		RIB 0104029	8104045	RETROFIT AGC 8 TO 108
5	1003770-051	RAY 155	107	1003700-011	1003524	1003553-011		RIB 0104033	8104048	RETROFIT AGC 20 TO 107 - UNMANNED S/C SIGNALS
6	1003770-061	RAY 190 170 180	109 121 111	1003700-041 1003700-041	1003706-011 1003706-011	1003707-011 1003707-011		FTM 1003770 RIB 0104041	 8104087	IMPROVED VIBRATION DAMPENING MATERIAL
7	1003770-071	RAY 120 130	117 112	1003565-011	1003570-011	1003569-011		RIB 0104060	8104120	UPDATE TO NEW ICD REQUIREMENTS
8	1003770-081	RAY 200	122	1003700-041	1003706-021	1003707-021		FTM 1003770		IMPROVED E/L LIGHTS
9	1003770-091	RAY 205 210 220 225	SP #1 123 124 SP #2	1003700-051	1003706-031	1003707-031		FTM 1003770		NEW ICD REQUIREMENTS, VIBRATION CLOSE-OUT PANEL GRND 0 VOLTS
10	1003770-101	RAY 140	110	1003700-061	1003706-011	1003707-011		RIB 0104041	8104087	IMPROVED VIBRATION DAMPENING MATERIAL
11	1003770-111	RAY 110	120	1003700-011	1003551	1003564-011	1003220-011	RIB 0104049	8104088	G&N FAILURE DETECT ASSY
12	1003770-121	RAY 150	108	1003700-011	1003524	1003561-011	1003220-011	RIB 0104049	8104088	G&N FAILURE DETECT ASSY
13	1003770-131	RAY 120 130	117 112	1003565-011	1003570-011	1003564-021	1003220-011	RIB 0104049	8104088	G&N FAILURE DETECT ASSY
14	1003770-141	RAY 190 170 180	109 121 111	1003700-041	1003706-011	1003563-011	1003220-011	RIB 0104049	8104088	G&N FAILURE DETECT ASSY
15	1003770-151	RAY 200	122	1003700-041	1003706-021	1003563-021	1003220-011	RIB 0104049	8104088	G&N FAILURE DETECT ASSY

Ⓚ REPLACES REV J WITH CHANGE

1003770

MASTER

QTY REQD	PART OR IDENTIFYING NO.	MATERIAL OR NOTES	NOMENCLATURE OR DESCRIPTION	FIND NO.

LIST OF MATERIALS

NEXT ASSY	USED ON
APPLICATION	

UNLESS OTHERWISE SPECIFIED
DIMENSIONS ARE IN INCHES
CAPACITOR VALUES ARE IN μf
RESISTOR VALUES ARE IN OHMS
TOLERANCES ON
FRACTIONS DECIMALS ANGLES
± ± ±
DO NOT SCALE THIS DRAWING

MATERIAL

MIT
INSTRUMENTATION LAB
CAMBRIDGE, MASS.

DRAWN Raul Machado 13 Dec 65
CHECKED
APPROVED
APPROVED Eldon C Hall 21 Dec 65
APPROVED MIT
A/C. METZGER
APPROVED MSC
DATE

MANNED SPACECRAFT CENTER
HOUSTON, TEXAS

APOLLO GUIDANCE
COMPUTER GROUP

CODE IDENT NO.	SIZE	DRAWING NO.
80230	C	1003770
SCALE NONE		SHEET 1 OF 2

NOTICE – WHEN GOVERNMENT DRAWINGS, SPECIFICATIONS, OR OTHER DATA ARE USED FOR ANY PURPOSE OTHER THAN IN CONNECTION WITH A DEFINITELY RELATED GOVERNMENT PROCUREMENT OPERATION, THE UNITED STATES GOVERNMENT THEREBY INCURS NO RESPONSIBILITY NOR ANY OBLIGATION WHATSOEVER; AND THE FACT THAT THE GOVERNMENT MAY HAVE FORMULATED, FURNISHED, OR IN ANY WAY SUPPLIED THE SAID DRAWINGS, SPECIFICATIONS OR OTHER DATA IS NOT TO BE REGARDED BY IMPLICATION OR OTHERWISE AS IN ANY MANNER LICENSING THE HOLDER OR ANY OTHER PERSON OR CORPORATION, OR CONVEYING ANY RIGHTS OR PERMISSION TO MANUFACTURE, USE, OR SELL ANY PATENTED INVENTION THAT MAY IN ANY WAY BE RELATED THERETO.

REVISIONS						
SYM	ZONE	DESCRIPTION	DR	CHK	DATE	APPROVED
K	—	THIS SHEET ADDED PER TDRR – 24841				

	NAME PLATE INFO									
ITEM NO.	AGC SUB-SYS PART NO.	CONFIGURATION SERIAL NO.	AGC SYS NO. (REF)	COMPUTER PART NO.	NAV DSKY PART NO.	MAIN DSKY PART NO.	G/N DETECT MOD PART NO.	TEST SPECIFICATION	RETROFIT KIT NO.	REMARKS
16	1003770-161	RAY 205 210 220 225	SP #1 123 124 SP #2	1003700-051	1003706-031	1003563-031	1003220-011	RIB 0104049	8104088	G&N FAILURE DETECT ASSY
17	1003770-171	RAY 140	110	1003700-061	1003706-011	1003563-011	1003220-011	RIB 0104049	8104088	G&N FAILURE DETECT ASSY
18	1003770-181	RAY 110	120	1003565-011	1003570-021	1003569-021		FTM 1003770	8104098	UPDATE TO NEW ICD REQUIREMENTS

Ⓚ THIS SHEET ADDED

1003770

MASTER

QTY REQD	PART OR IDENTIFYING NO.	MATERIAL OR NOTES	NOMENCLATURE OR DESCRIPTION	FIND NO.

LIST OF MATERIALS

NEXT ASSY	USED ON
APPLICATION	

UNLESS OTHERWISE SPECIFIED
DIMENSIONS ARE IN INCHES
CAPACITOR VALUES ARE IN μf
RESISTOR VALUES ARE IN OHMS
TOLERANCES ON
FRACTIONS DECIMALS ANGLES
± ± ±
DO NOT SCALE THIS DRAWING

MATERIAL

MIT
INSTRUMENTATION LAB
CAMBRIDGE, MASS.

MANNED SPACECRAFT CENTER
HOUSTON, TEXAS

		DATE
DRAWN	Raul Machado	13 Dec 65
CHECKED		
APPROVED		
APPROVED	Eldon C. Hall	21 Dec 65
APPROVED MIT	A. C. METZGER	22 Dec 65
APPROVED MSC		

APLLO GUIDANCE COMPUTER GROUP

CODE IDENT NO.	SIZE	DRAWING NO.
80230	C	1003770
SCALE NONE		SHEET 2 OF 2

NOTICE – WHEN GOVERNMENT DRAWINGS, SPECIFICATIONS, OR OTHER DATA ARE USED FOR ANY PURPOSE OTHER THAN IN CONNECTION WITH A DEFINITELY RELATED GOVERNMENT PROCUREMENT OPERATION, THE UNITED STATES GOVERNMENT THEREBY INCURS NO RESPONSIBILITY NOR ANY OBLIGATION WHATSOEVER; AND THE FACT THAT THE GOVERNMENT MAY HAVE FORMULATED, FURNISHED, OR IN ANY WAY SUPPLIED THE SAID DRAWINGS, SPECIFICATIONS OR OTHER DATA IS NOT TO BE REGARDED BY IMPLICATION OR OTHERWISE AS IN ANY MANNER LICENSING THE HOLDER OR ANY OTHER PERSON OR CORPORATION, OR CONVEYING ANY RIGHTS OR PERMISSION TO MANUFACTURE, USE, OR SELL ANY PATENTED INVENTION THAT MAY IN ANY WAY BE RELATED THERETO.

REVISIONS

SYM	ZONE	DESCRIPTION	DR	CHK	DATE	APPROVED
K		REPLACES REV J WITH CHANGES PER TDRR 24841				
L		REVISED PER TDRR 27326			4/6/66	

	NAME PLATE INFO									
ITEM NO.	AGC SUB-SYS PART NO.	CONFIGURATION SERIAL NO.	AGC SYS NO. (REF)	COMPUTER PART NO.	NAV DSKY PART NO.	MAIN DSKY PART NO.	G/N DETECT MOD PART NO.	TEST SPECIFICATION	RETROFIT KIT NO.	REMARKS
1	1003770-011	RAY 110 120 130	120 117 112	1003700-011	1003551	1003484-011		FTM 1003770		INITIAL DESIGN
2	1003770-021	RAY 140	110	1003700-031	1003706-011	1003707-011		FTM 1003770		NEW DSKY DESIGN, LMA-37, VIB CUSHIONS
3	1003770-031	RAY 170 180	121 111	1003700-021	1003706-011	1003707-011		FTM 1003770		FLIGHT QUALIFIED MICROLOGIC
4	1003770-041	RAY 150	108	1003700-011	1003524	1003540		RIB 0104029	8104045	RETROFIT AGC 8 TO 108
5	1003770-051	RAY 155	107	1003700-011	1003524	1003553-011		RIB 0104033	8104048	RETROFIT AGC 20 TO 107 - UNMANNED S/C SIGNALS
6	1003770-061	RAY 190 170 180	109 121 111	1003700-041 1003700-041	1003706-011 1003706-011	1003707-011 1003707-011		FTM 1003770 RIB 0104041	8104087	IMPROVED VIBRATION JAMPENING MATERIAL
7	1003770-071	RAY 120 130	117 112	1003565-011	1003570-011	1003569-011		RIB 0104060	8104120	UPDATE TO NEW ICD REQUIREMENTS
8	1003770-081	RAY 200	122	1003700-041	1003706-021	1003707-021		FTM 1003770		IMPROVED E/L LIGHTS
9	1003770-091	RAY 205 210 220 225	SP #1 123 124 SP #2	1003700-051	1003706-031	1003707-031		FTM 1003770		NEW ICD REQUIREMENTS, VIBRATION CLOSE-OUT PANEL GRND 0 VOLTS
10	1003770-101	RAY 140	110	1003700-061	1003706-011	1003707-011		RIB 0104041	8104087	IMPROVED VIBRATION DAMPENING MATERIAL
11	1003770-111	RAY 110	120	1003565-031	1003570-021	1003564-011	1003220-011	RIB 0104049	8104088	G&N FAILURE DETECT ASSY
12	1003770-121	RAY 150	108	1003700-011	1003524	1003561-011	1003220-011	RIB 0104049	8104088	G&N FAILURE DETECT ASSY
13	1003770-131	RAY 120 130	117 112	1003565-011	1003570-011	1003564-021	1003220-011	RIB 0104049	8104088	G&N FAILURE DETECT ASSY
14	1003770-141	RAY 190 170 180	109 121 111	1003700-041	1003706-011	1003563-011	1003220-011	RIB 0104049	8104088	G&N FAILURE DETECT ASSY
15	1003770-151	RAY 200	122	1003700-041	1003706-021	1003563-021	1003220-011	RIB 0104049	8104088	G&N FAILURE DETECT ASSY

(K) REPLACES REV J WITH CHANGE

1003770 L

MASTER

QTY REQD	PART OR IDENTIFYING NO.	MATERIAL OR NOTES	NOMENCLATURE OR DESCRIPTION	FIND NO.

LIST OF MATERIALS

NEXT ASSY	USED ON
APPLICATION	

UNLESS OTHERWISE SPECIFIED
DIMENSIONS ARE IN INCHES
CAPACITOR VALUES ARE IN µf
RESISTOR VALUES ARE IN OHMS
TOLERANCES ON
FRACTIONS ± DECIMALS ± ANGLES ±
DO NOT SCALE THIS DRAWING

MATERIAL

MIT
INSTRUMENTATION LAB
CAMBRIDGE, MASS.

DRAWN Raul Machado 13 Dec 65
CHECKED
APPROVED
APPROVED Eldon C Hall
APPROVED MIT A/C. METZGER
APPROVED MSC
DATE

MANNED SPACECRAFT CENTER
HOUSTON, TEXAS

APOLLO GUIDANCE COMPUTER GROUP

CODE IDENT NO. 80230
SIZE C
DRAWING NO. 1003770
SCALE NONE
SHEET 1 OF 2

NOTICE – WHEN GOVERNMENT DRAWINGS, SPECIFICATIONS, OR OTHER DATA ARE USED FOR ANY PURPOSE OTHER THAN IN CONNECTION WITH A DEFINITELY RELATED GOVERNMENT PROCUREMENT OPERATION, THE UNITED STATES GOVERNMENT THEREBY INCURS NO RESPONSIBILITY NOR ANY OBLIGATION WHATSOEVER; AND THE FACT THAT THE GOVERNMENT MAY HAVE FORMULATED, FURNISHED, OR IN ANY WAY SUPPLIED THE SAID DRAWINGS, SPECIFICATIONS OR OTHER DATA IS NOT TO BE REGARDED BY IMPLICATION OR OTHERWISE AS IN ANY MANNER LICENSING THE HOLDER OR ANY OTHER PERSON OR CORPORATION, OR CONVEYING ANY RIGHTS OR PERMISSION TO MANUFACTURE, USE, OR SELL ANY PATENTED INVENTION THAT MAY IN ANY WAY BE RELATED THERETO.

REVISIONS						
SYM	ZONE	DESCRIPTION	DR	CHK	DATE	APPROVED
K	—	THIS SHEET ADDED PER TDRR 24841				
L		REVISED PER TDRR 27326			4/6/66	

ITEM NO.	NAME PLATE INFO AGC SUB-SYS PART NO.	NAME PLATE INFO CONFIGURATION SERIAL NO.	AGC SYS NO. (REF)	COMPUTER PART NO.	NAV DSKY	MAIN DSKY PART NO.	G/N DETECT MOD PART NO.	TEST SPECIFICATION	RETROFIT KIT NO.	REMARKS
16	1003770-161	RAY 205, 170 210, 180 220, 190 225, 200	SP#1, 121 123, 111 124, 109 SP#2 122	1003700-051	1003706-031	1003563-031	1003220-011	RIB 0104049	8104088	G&N FAILURE DETECT ASSY
17	1003770-171	RAY 140	110	~~1003700-061~~ 1003565-021	~~1003706-011~~ 1003577-011	~~1003563-011~~ 1003563-041	1003220-011	RIB 0104049	8104088	G&N FAILURE DETECT ASSY
18	1003770-181	RAY 110	120	~~1003565-011~~ 1003565-031	1003570-021	1003569-021		~~FTM 1003770~~ 0104068	8104098 8104099	UPDATE TO NEW ICD REQUIREMENTS THERMAL TEST COVER
19	1003770-191	RAY 140	110	1003565-021	1003577-011	1003576-011		FTM 1003770	8104140	NEW IDC REQUIREMENTS GRD 0 VOLTS, POWER SWITCH MODULES

Ⓚ THIS SHEET ADDED

MASTER

QTY REQD	PART OR IDENTIFYING NO.	MATERIAL OR NOTES	NOMENCLATURE OR DESCRIPTION	FIND NO.

LIST OF MATERIALS

NEXT ASSY	USED ON
APPLICATION	

UNLESS OTHERWISE SPECIFIED
DIMENSIONS ARE IN INCHES
CAPACITOR VALUES ARE IN μf
RESISTOR VALUES ARE IN OHMS
TOLERANCES ON
FRACTIONS ± DECIMALS ± ANGLES ±
DO NOT SCALE THIS DRAWING

MATERIAL

MIT
INSTRUMENTATION LAB
CAMBRIDGE, MASS.

DRAWN Raul Machado 13 Dec 65
CHECKED
APPROVED
APPROVED Eldon C Hall 21 Dec 65
APPROVED MIT R. C. METZGER 22 Dec 65
APPROVED MSC
DATE

MANNED SPACECRAFT CENTER
HOUSTON, TEXAS

APOLLO GUIDANCE
COMPUTER GROUP

CODE IDENT NO. 80230
SIZE C
DRAWING NO. 1003770
SCALE NONE
SHEET 2 OF 2

1003770

MODERN BLUE PRINT CO. D-19550

NOTICE – WHEN GOVERNMENT DRAWINGS, SPECIFICATIONS, OR OTHER DATA ARE USED FOR ANY PURPOSE OTHER THAN IN CONNECTION WITH A DEFINITELY RELATED GOVERNMENT PROCUREMENT OPERATION, THE UNITED STATES GOVERNMENT THEREBY INCURS NO RESPONSIBILITY NOR ANY OBLIGATION WHATSOEVER; AND THE FACT THAT THE GOVERNMENT MAY HAVE FORMULATED, FURNISHED, OR IN ANY WAY SUPPLIED THE SAID DRAWINGS, SPECIFICATIONS OR OTHER DATA IS NOT TO BE REGARDED BY IMPLICATION OR OTHERWISE AS IN ANY MANNER LICENSING THE HOLDER OR ANY OTHER PERSON OR CORPORATION, OR CONVEYING ANY RIGHTS OR PERMISSION TO MANUFACTURE, USE, OR SELL ANY PATENTED INVENTION THAT MAY IN ANY WAY BE RELATED THERETO.

REVISIONS

SYM	ZONE	DESCRIPTION	DR	CHK	DATE	APPROVED
K		REPLACES REV J WITH CHANGES PER TDRR 24841				
L		REVISED PER TDRR 27326			4/6/66	
M		CHANGED PER TDRR 29702	J.W.R.	A.Z.	6/29/66	P. Rosen

	NAME PLATE INFO									
ITEM NO.	AGC SUB-SYS PART NO.	CONFIGURATION SERIAL NO.	AGC SYS NO. (REF)	COMPUTER PART NO.	NAV DSKY PART NO.	MAIN DSKY PART NO.	G/N DETECT MOD PART NO.	TEST SPECIFICATION	RETROFIT KIT NO.	REMARKS
1	1003770-011	RAY 110 120 130	120 117 112	1003700-011	1003551	1003484-011		FTM 1003770		INITIAL DESIGN
2	1003770-021	RAY 140	110	1003700-031	1003706-011	1003707-011		FTM 1003770		NEW DSKY DESIGN, LMA-37, VIB CUSHIONS
3	1003770-031	RAY 170 180	121 111	1003700-021	1003706-011	1003707-011		FTM 1003770		FLIGHT QUALIFIED MICROLOGIC
4	1003770-041	RAY 150	108	1003700-011	1003524	1003540		RIB 0104029	8104045	RETROFIT AGC 8 TO 108
5	1003770-051	RAY 155	107	1003700-011	1003524	1003553-011		RIB 0104033	8104048	RETROFIT AGC 20 TO 107 - UNMANNED S/C SIGNALS
6	1003770-061	RAY 190 170 180	109 121 111	1003700-041 1003700-041	1003706-011 1003706-011	1003707-011 1003707-011		FTM 1003770 RIB 0104041	8104087	IMPROVED VIBRATION DAMPENING MATERIAL
7	1003770-071	RAY 120 130	117 112	1003565-011	1003570-011	1003569-011		RIB 0104060	8104120	UPDATE TO NEW ICD REQUIREMENTS
8	1003770-081	RAY 200	122	1003700-041	1003706-021	1003707-021		FTM 1003770		IMPROVED E/L LIGHTS
9	1003770-091	RAY 205, 170 210, 180 220, 190 225, 200	SP#1, 121 123, 111 124, 109 SP#2, 122	1003700-051	1003706-031	1003707-031		FTM 1003770		NEW ICD REQUIREMENTS, VIBRATION CLOSE-OUT PANEL GRND 0 VOLTS
10	1003770-101	RAY 140	110	1003700-061	1003706-011	1003707-011		RIB 0104041	8104087	IMPROVED VIBRATION DAMPENING MATERIAL
11	1003770-111	RAY 110	~~120~~	1003565-031	1003570-021	1003564-011	1003220-011	RIB 0104049	8104088	G&N FAILURE DETECT ASSY
12	1003770-121	RAY 150	108	1003700-011	1003524	1003561-011	1003220-011	RIB 0104049	8104088	G&N FAILURE DETECT ASSY
13	1003770-131	RAY 120 130	117 112	1003565-011	1003570-011	1003564-021	1003220-011	RIB 0104049	8104088	G&N FAILURE DETECT ASSY
14	1003770-141	RAY 190 170 180	109 121 111	1003700-041	1003706-011	1003563-011	1003220-011	RIB 0104049	8104088	G&N FAILURE DETECT ASSY
15	1003770-151	RAY 200	122	1003700-041	1003706-021	1003563-021	1003220-011	RIB 0104049	8104088	G&N FAILURE DETECT ASSY

Ⓚ REPLACES REV J WITH CHANGE

1003770 M

QTY REQD	PART OR IDENTIFYING NO.	MATERIAL OR NOTES	NOMENCLATURE OR DESCRIPTION	FIND NO.

LIST OF MATERIALS

NEXT ASSY	USED ON
APPLICATION	

UNLESS OTHERWISE SPECIFIED
DIMENSIONS ARE IN INCHES
CAPACITOR VALUES ARE IN µf
RESISTOR VALUES ARE IN OHMS
TOLERANCES ON
FRACTIONS ± DECIMALS ± ANGLES ±
DO NOT SCALE THIS DRAWING

MATERIAL

MIT
INSTRUMENTATION LAB
CAMBRIDGE, MASS.

DRAWN Raul Machado 13 Dec 65
CHECKED
APPROVED
APPROVED Eldon C Hall
APPROVED MIT
A/C METZGER
APPROVED MSC
DATE

MANNED SPACECRAFT CENTER
HOUSTON, TEXAS

APOLLO GUIDANCE COMPUTER GROUP

CODE IDENT NO. 80230
SIZE C
DRAWING NO. 1003770
SCALE NONE
SHEET 1 OF 2

MODERN BLUE PRINT CO. D-19550

NOTICE – WHEN GOVERNMENT DRAWINGS, SPECIFICATIONS, OR OTHER DATA ARE USED FOR ANY PURPOSE OTHER THAN IN CONNECTION WITH A DEFINITELY RELATED GOVERNMENT PROCUREMENT OPERATION, THE UNITED STATES GOVERNMENT THEREBY INCURS NO RESPONSIBILITY NOR ANY OBLIGATION WHATSOEVER; AND THE FACT THAT THE GOVERNMENT MAY HAVE FORMULATED, FURNISHED, OR IN ANY WAY SUPPLIED THE SAID DRAWINGS, SPECIFICATIONS OR OTHER DATA IS NOT TO BE REGARDED BY IMPLICATION OR OTHERWISE AS IN ANY MANNER LICENSING THE HOLDER OR ANY OTHER PERSON OR CORPORATION, OR CONVEYING ANY RIGHTS OR PERMISSION TO MANUFACTURE, USE, OR SELL ANY PATENTED INVENTION THAT MAY IN ANY WAY BE RELATED THERETO.

REVISIONS

SYM	ZONE	DESCRIPTION	DR	CHK	DATE	APPROVED
K		THIS SHEET ADDED PER TDRR 24841				
L		REVISED PER TDRR 27326			4/6/66	
M		CHANGED PER TDRR 29702	S.W.R.		6/29/66	P. Rosen

	NAME PLATE INFO									
ITEM NO.	AGC SUB-SYS PART NO.	CONFIGURATION SERIAL NO.	AGC SYS NO. (REF)	COMPUTER PART NO.	NAV DSKY	MAIN DSKY PART NO.	G/N DETECT MOD PART NO.	TEST SPECIFICATION	RETROFIT KIT NO.	REMARKS
16	1003770-161	RAY 205, 170 210, 180 220, 190 225, 200	SP#1, 121 123, 111 124, 109 SP#2 122	1003700-051	1003706-031	1003563-031	1003220-011	RIB 0104049	8104088	G&N FAILURE DETECT ASSY
17	1003770-171	RAY 140	110	~~1003700-061~~ 1003565-021	~~1003706-011~~ 1003577-011	~~1003563-011~~ 1003563-041	1003220-011	RIB 0104049	8104088	G&N FAILURE DETECT ASSY
18	1003770-181	RAY 110	120	~~1003565-011~~ 1003565-031	1003570-021	1003569-021		~~FTM 1003770~~ 0104068	8104098 8104099	UPDATE TO NEW ICD REQUIREMENTS THERMAL TEST COVER
19	1003770-191	RAY 140	110	1003565-021	1003577-011	1003576-011		FTM 1003770	8104140	NEW IDC REQUIREMENTS GRD 0 VOLTS, POWER SWITCH MODULES

Ⓚ THIS SHEET ADDED

1003770 M

QTY REQD	PART OR IDENTIFYING NO.	MATERIAL OR NOTES	NOMENCLATURE OR DESCRIPTION	FIND NO.

LIST OF MATERIALS

NEXT ASSY	USED ON
APPLICATION	

UNLESS OTHERWISE SPECIFIED
DIMENSIONS ARE IN INCHES
CAPACITOR VALUES ARE IN μf
RESISTOR VALUES ARE IN OHMS
TOLERANCES ON
FRACTIONS ± DECIMALS ± ANGLES ±
DO NOT SCALE THIS DRAWING

MATERIAL

MIT
INSTRUMENTATION LAB
CAMBRIDGE, MASS.

DRAWN Raul Machado 13 Dec 65
CHECKED
APPROVED
APPROVED Eldon C Hall 21 Dec 65
APPROVED MIT 22 Dec 65
R. C. METZGER
APPROVED MSC
DATE

MANNED SPACECRAFT CENTER
HOUSTON, TEXAS

APOLLO GUIDANCE
COMPUTER GROUP

CODE IDENT NO. 80230
SIZE C
DRAWING NO. 1003770
SCALE NONE
SHEET 2 OF 2

MODERN BLUE PRINT CO. D-19550

NOTICE – WHEN GOVERNMENT DRAWINGS, SPECIFICATIONS, OR OTHER DATA ARE USED FOR ANY PURPOSE OTHER THAN IN CONNECTION WITH A DEFINITELY RELATED GOVERNMENT PROCUREMENT OPERATION, THE UNITED STATES GOVERNMENT THEREBY INCURS NO RESPONSIBILITY NOR ANY OBLIGATION WHATSOEVER; AND THE FACT THAT THE GOVERNMENT MAY HAVE FORMULATED, FURNISHED, OR IN ANY WAY SUPPLIED THE SAID DRAWINGS, SPECIFICATIONS OR OTHER DATA IS NOT TO BE REGARDED BY IMPLICATION OR OTHERWISE AS IN ANY MANNER LICENSING THE HOLDER OR ANY OTHER PERSON OR CORPORATION, OR CONVEYING ANY RIGHTS OR PERMISSION TO MANUFACTURE, USE, OR SELL ANY PATENTED INVENTION THAT MAY IN ANY WAY BE RELATED THERETO.

REVISIONS

ZONE	LTR	DESCRIPTION	DR	CHK	DATE	APPROVED
	N	REVISED PER TDRR 31515	SWR		10/21/66	F.S.L.

REVISIONS

SYM	ZONE	DESCRIPTION	DR	CHK	DATE	APPROVED
K		REPLACES REV J WITH CHANGES PER TDRR 24841				
L		REVISED PER TDRR 27326			4/6/66	
M		CHANGED PER TDRR 29702	J.W.R.		6/29/66	P. Rosen

	NAME PLATE INFO									
ITEM NO.	AGC SUB-SYS PART NO.	CONFIGURATION SERIAL NO.	AGC SYS NO. (REF)	COMPUTER PART NO.	NAV DSKY PART NO.	MAIN DSKY PART NO.	G/N DETECT MOD PART NO.	TEST SPECIFICATION	RETROFIT KIT NO.	REMARKS
1 1	1003770-011	RAY 110 120 130	120 117 112	1003700-011	1003551	1003484-011		FTM 1003770		INITIAL DESIGN
2	1003770-021	RAY 140	110	1003700-031	1003706-011	1003707-011		FTM 1003770		NEW DSKY DESIGN, LMA-37, VIB CUSHIONS
3	1003770-031	RAY 170 180	121 111	1003700-021	1003706-011	1003707-011		FTM 1003770		FLIGHT QUALIFIED MICROLOGIC
4	1003770-041	RAY 150	108	1003700-011	1003524	1003540		RIB 0104029	8104045	RETROFIT AGC 8 TO 108
5	1003770-051	RAY 155	107	1003700-011	1003524	1003553-011		RIB 0104033	8104048	RETROFIT AGC 20 TO 107 - UNMANNED S/C SIGNALS
6	1003770-061	RAY 190 170 180	109 121 111	1003700-041 1003700-041	1003706-011 1003706-011	1003707-011 1003707-011		FTM 1003770 RIB 0104041	 8104087	IMPROVED VIBRATION DAMPENING MATERIAL
7	1003770-071	RAY 120 130	117 112	1003565-011	1003570-011	1003569-011		RIB 0104060	8104120	UPDATE TO NEW ICD REQUIREMENTS
8	1003770-081	RAY 200	122	1003700-041	1003706-021	1003707-021		FTM 1003770		IMPROVED E/L LIGHTS
9	1003770-091	RAY 205, 170 210, 180 220, 190 225, 200	SP#1, 121 123, 111 124, 109 SP#2, 122	1003700-051	1003706-031	1003707-031		FTM 1003770		NEW ICD REQUIREMENTS, VIBRATION CLOSE-OUT PANEL GRND 0 VOLTS
10	1003770-101	RAY 140	110	1003700-061	1003706-011	1003707-011		RIB 0104041	8104087	IMPROVED VIBRATION DAMPENING MATERIAL
11	1003770-111	RAY 110	120	1003565-031	1003570-021	1003564-011	1003220-011	RIB 0104049	8104088	G&N FAILURE DETECT ASSY
12	1003770-121	RAY 150	108	1003700-011	1003524	1003561-011	1003220-011	RIB 0104049	8104088	G&N FAILURE DETECT ASSY
13	1003770-131	RAY 120 130	117 112	1003565-011	1003570-011	1003564-021	1003220-011	RIB 0104049	8104088	G&N FAILURE DETECT ASSY
14	1003770-141	RAY 190 170 180	109 121 111	1003700-041	1003706-011	1003563-011	1003220-011	RIB 0104049	8104088	G&N FAILURE DETECT ASSY
15	1003770-151	RAY 200	122	1003700-041	1003706-021	1003563-021	1003220-011	RIB 0104049	8104088	G&N FAILURE DETECT ASSY

Ⓚ REPLACES REV J WITH CHANGE

1003770 N

QTY REQD	PART OR IDENTIFYING NO.	MATERIAL OR NOTES	NOMENCLATURE OR DESCRIPTION	FIND NO.

LIST OF MATERIALS

NEXT ASSY	USED ON

APPLICATION

UNLESS OTHERWISE SPECIFIED
DIMENSIONS ARE IN INCHES
CAPACITOR VALUES ARE IN µf
RESISTOR VALUES ARE IN OHMS
TOLERANCES ON
FRACTIONS ± DECIMALS ± ANGLES ±
DO NOT SCALE THIS DRAWING

MATERIAL

MIT
INSTRUMENTATION LAB
CAMBRIDGE, MASS.

MANNED SPACECRAFT CENTER
HOUSTON, TEXAS

DRAWN Raul Machado 13 Dec 65
CHECKED
APPROVED
APPROVED Eldon C Hall 21 Dec 65
APPROVED MIT 22 Dec 65
A/C. METZCER
APPROVED MSC
DATE

APOLLO GUIDANCE COMPUTER GROUP

CODE IDENT NO. 80230
SIZE C
DRAWING NO. 1003770
SCALE NONE
SHEET 1 OF 2

NOTICE – WHEN GOVERNMENT DRAWINGS, SPECIFICATIONS, OR OTHER DATA ARE USED FOR ANY PURPOSE OTHER THAN IN CONNECTION WITH A DEFINITELY RELATED GOVERNMENT PROCUREMENT OPERATION, THE UNITED STATES GOVERNMENT THEREBY INCURS NO RESPONSIBILITY NOR ANY OBLIGATION WHATSOEVER; AND THE FACT THAT THE GOVERNMENT MAY HAVE FORMULATED, FURNISHED, OR IN ANY WAY SUPPLIED THE SAID DRAWINGS, SPECIFICATIONS OR OTHER DATA IS NOT TO BE REGARDED BY IMPLICATION OR OTHERWISE AS IN ANY MANNER LICENSING THE HOLDER OR ANY OTHER PERSON OR CORPORATION, OR CONVEYING ANY RIGHTS OR PERMISSION TO MANUFACTURE, USE, OR SELL ANY PATENTED INVENTION THAT MAY IN ANY WAY BE RELATED THERETO.

REVISIONS

SYM	ZONE	DESCRIPTION	DR	CHK	DATE	APPROVED
K		THIS SHEET ADDED PER TDRR 24841				
L		REVISED PER TDRR 27326	AJD		4/6/66	
M		REVISED PER TDRR 29702	SWR.	A.Z.	6/29/66	P. Rosen
N		REVISED PER TDRR 31515	SWR	A.K	10/31/66	T.E.R

	NAME PLATE INFO									
ITEM NO.	AGC SUB-SYS PART NO.	CONFIGURATION SERIAL NO.	AGC SYS NO. (REF)	COMPUTER PART NO.	NAV DSKY	MAIN DSKY PART NO.	G/N DETECT MOD PART NO.	TEST SPECIFICATION	RETROFIT KIT NO.	REMARKS
16	1003770-161	RAY 205, 170 210, 180 220, 190 225, 200	SP#1, 121 123, 111 124, 109 SP#2 122	1003700-051	1003706-031	1003563-031	1003220-011	RIB 0104049	8104088	G&N FAILURE DETECT ASSY
17	1003770-171	RAY 140	110	~~1003700-061~~ ~~1003565-021~~ 1003565-041	~~1003706-011~~ ~~1003577-011~~ 1003577-021	~~1003563-011~~ ~~1003563-041~~ 1003563-051	1003220-011	RIB 0104049	8104088	G&N FAILURE DETECT ASSY
18	1003770-181	RAY 110	120	~~1003565-011~~ 1003565-031	1003570-021	1003569-021		~~FTM 1003770~~ 0104068	8104098 8104099	UPDATE TO NEW ICD REQUIREMENTS THERMAL TEST COVER
19	1003770-191	RAY 140	110	1003565-021	1003577-011	1003576-011		FTM 1003770	8104140	NEW IDC REQUIREMENTS GRD 0 VOLTS, POWER SWITCH MODULES
20	1003770-201	RAY 140	110	1003565-041	1003577-021	1003576-021		RIB 0104078	8104208	UPDATE 110 VIB. FIXES, NEW FRONT CLOSE OUT PANEL, GUIDE PINS

Ⓚ THIS SHEET ADDED

1003770 N

QTY REQD	PART OR IDENTIFYING NO.	MATERIAL OR NOTES	NOMENCLATURE OR DESCRIPTION	FIND NO.

LIST OF MATERIALS

NEXT ASSY	USED ON

APPLICATION

UNLESS OTHERWISE SPECIFIED
DIMENSIONS ARE IN INCHES
CAPACITOR VALUES ARE IN µf
RESISTOR VALUES ARE IN OHMS
TOLERANCES ON
FRACTIONS ± DECIMALS ± ANGLES ±
DO NOT SCALE THIS DRAWING

MATERIAL

MIT
INSTRUMENTATION LAB
CAMBRIDGE, MASS.

DRAWN Raul Machado 13 Dec 65
CHECKED
APPROVED
APPROVED Eldon C Hall 21 Dec 65
APPROVED MIT W Kupfer 22 Dec 65 A. C. METZGER
APPROVED MSC
DATE

MANNED SPACECRAFT CENTER
HOUSTON, TEXAS

APOLLO GUIDANCE
COMPUTER GROUP

CODE IDENT NO. 80230
SIZE C
DRAWING NO. 1003770
SCALE NONE
SHEET 2 OF 2

MODERN BLUE PRINT CO. D-19550

NOTICE — WHEN GOVERNMENT DRAWINGS, SPECIFICATIONS, OR OTHER DATA ARE USED FOR ANY PURPOSE OTHER THAN IN CONNECTION WITH A DEFINITELY RELATED GOVERNMENT PROCUREMENT OPERATION, THE UNITED STATES GOVERNMENT THEREBY INCURS NO RESPONSIBILITY NOR ANY OBLIGATION WHATSOEVER; AND THE FACT THAT THE GOVERNMENT MAY HAVE FORMULATED, FURNISHED, OR IN ANY WAY SUPPLIED THE SAID DRAWINGS, SPECIFICATIONS OR OTHER DATA IS NOT TO BE REGARDED BY IMPLICATION OR OTHERWISE AS IN ANY MANNER LICENSING THE HOLDER OR ANY OTHER PERSON OR CORPORATION, OR CONVEYING ANY RIGHTS OR PERMISSION TO MANUFACTURE, USE, OR SELL ANY PATENTED INVENTION THAT MAY IN ANY WAY BE RELATED THERETO.

1003770

REVISIONS 12569			
SYM	DESCRIPTION	DATE	APPROVAL

DESCRIPTION	DWG. NO.
AGC ASSEMBLY	1003700
NAV. DSKY	1003706
MAIN DSKY	1003707

NOTES:

1. INTERPRET DRAWING IN ACCORDANCE WITH STANDARDS PRESCRIBED PER MIL-D-70327
2. TEST PER FTM 1003770

MASTER

QTY REQD	PART OR IDENTIFYING NO.	NOMENCLATURE OR DESCRIPTION	FIND NO.

LIST OF MATERIALS

NEXT ASSY	USED ON
APPLICATION	

UNLESS OTHERWISE SPECIFIED
DIMENSIONS ARE IN INCHES
TOLERANCES ON
FRACTIONS ± DECIMALS ± ANGLES ±
DO NOT SCALE THIS DRAWING
MATERIAL
HEAT TREATMENT
FINAL FINISH

MIT
INSTRUMENTATION LAB
CAMBRIDGE, MASS.
DWG. NO. CONTRACT

DRAWN Kanan DATE 9/14/64
CHECKED
APPROVAL
APPROVAL 9/14/64
NASA APPROVAL 9/15/64
MIT APPROVAL Halzel 9/15/64

MANNED SPACECRAFT CENTER
HOUSTON, TEXAS

COMPUTER GROUP

CODE IDENT NO.	SIZE	NASA DRAWING NO.
	C	1003770
SCALE	WT	SHEET OF

INCHES
0 1 2
PHOTOGRAPHIC SCALE ONLY

NOTICE – WHEN GOVERNMENT DRAWINGS, SPECIFICATIONS, OR OTHER DATA ARE USED FOR ANY PURPOSE OTHER THAN IN CONNECTION WITH A DEFINITELY RELATED GOVERNMENT PROCUREMENT OPERATION, THE UNITED STATES GOVERNMENT THEREBY INCURS NO RESPONSIBILITY NOR ANY OBLIGATION WHATSOEVER; AND THE FACT THAT THE GOVERNMENT MAY HAVE FORMULATED, FURNISHED, OR IN ANY WAY SUPPLIED THE SAID DRAWINGS, SPECIFICATIONS OR OTHER DATA IS NOT TO BE REGARDED BY IMPLICATION OR OTHERWISE AS IN ANY MANNER LICENSING THE HOLDER OR ANY OTHER PERSON OR CORPORATION, OR CONVEYING ANY RIGHTS OR PERMISSION TO MANUFACTURE, USE, OR SELL ANY PATENTED INVENTION THAT MAY IN ANY WAY BE RELATED THERETO.

1003777

REVISIONS 17565

SYM	ZONE	DESCRIPTION	DR	CHK	DATE	APPROVED

DESCRIPTION	DWG. NO.
AGC ASSEMBLY	1003700
NAV. DSKY	1003706
MAIN DSKY	1003707
WIRING HARNESS	1005707

NOTES:

1. INTERPRET DRAWING IN ACCORDANCE WITH STANDARDS PRESCRIBED PER MIL-D-70327

MASTER

QTY REQD	PART OR IDENTIFYING NO.	MATERIAL OR NOTES	NOMENCLATURE OR DESCRIPTION	FIND NO.

LIST OF MATERIALS

NEXT ASSY	USED ON
APPLICATION	

UNLESS OTHERWISE SPECIFIED
DIMENSIONS ARE IN INCHES
CAPACITOR VALUES ARE IN µf
RESISTOR VALUES ARE IN OHMS
TOLERANCES ON
FRACTIONS DECIMALS ANGLES
± ± ±
DO NOT SCALE THIS DRAWING

MATERIAL

MIT
INSTRUMENTATION LAB
CAMBRIDGE, MASS.

DRAWN Karen 9/10/64
CHECKED
APPROVED
APPROVED Eldon C Hall 9/14/64
APPROVED MIT D Hoag 9/15/64
APPROVED MSC 9/16/64
DATE

MANNED SPACECRAFT CENTER
HOUSTON, TEXAS

APOLLO GUIDANCE COMPUTER SUB SYSTEM

CODE IDENT NO.
SIZE C
DRAWING NO. 1003777
SCALE
SHEET OF

INCHES
0 1 2
PHOTOGRAPHIC SCALE

1003797

REVISIONS

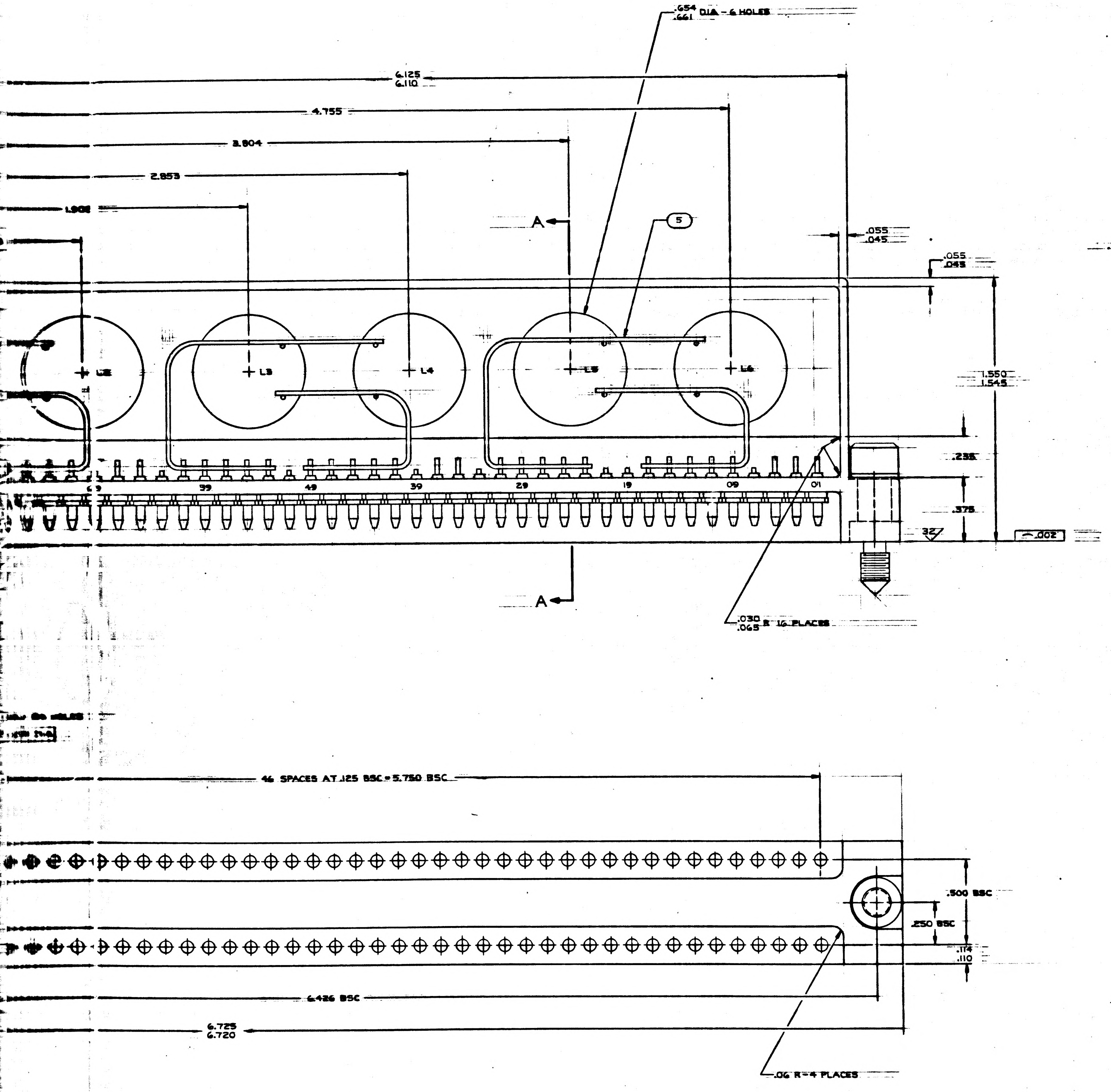

.654
.661 DIA - 6 HOLES
6.125
6.110
4.755
3.804
2.853
1.902
A
5
.055
.045
.055
.045
L2
L3
L4
L5
L6
1.550
1.545
.235
.375
69
59
49
39
29
19
09
01
32
.002
A
.030
.065 R 16 PLACES
46 SPACES AT .125 BSC = 5.750 BSC
.500 BSC
.250 BSC
.114
.110
6.426 BSC
6.725
6.720
.06 R - 4 PLACES

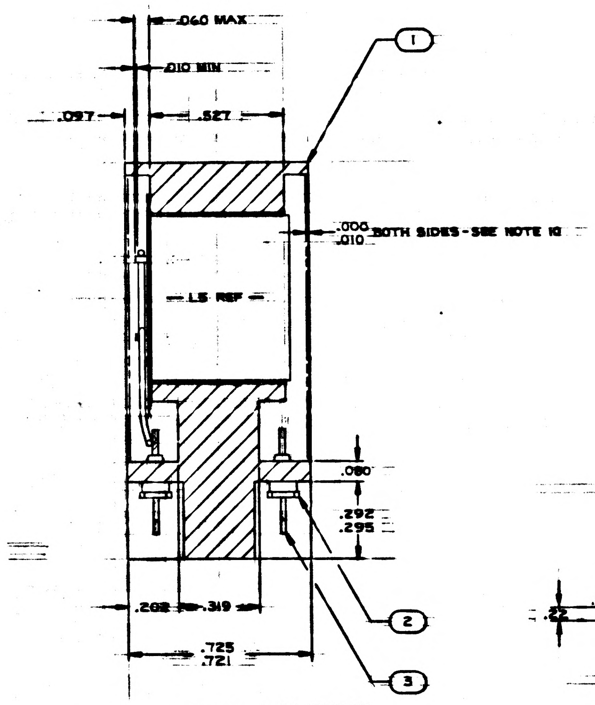

.060 MAX
.010 MIN
.097
.527
1
.000
.010 BOTH SIDES - SEE NOTE 10
L5 REF
.080
.292
.295
.202
.319
.725
.721
2
3

SECTION A-A

FOR INFORMATION ONLY

CLASS B RELEASE TDR No. 09791 DATE 6/2/64

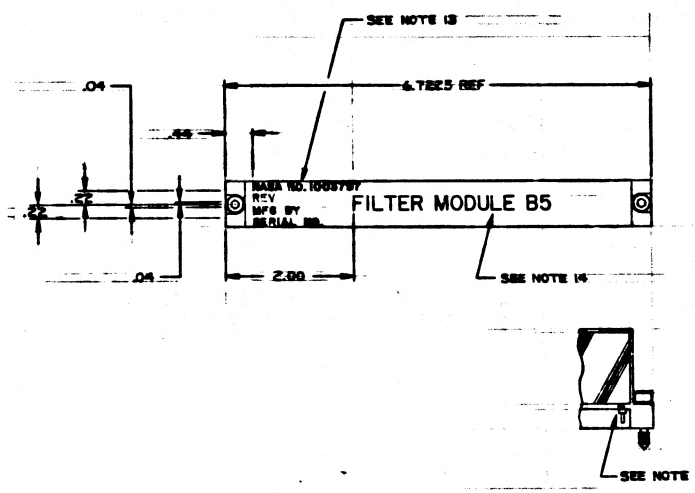

SEE NOTE 13
.04
6.7825 REF
.44
.22
.22
NASA NO. 1003797
REV
MFG BY
SERIAL NO.
FILTER MODULE B5
.04
2.00
SEE NOTE 14
SEE NOTE 12

MARKING VIEW
SCALE 1/1

2	MS16633-4015	RING RETAINING EXTERNAL "E"	9
2	1004546-3	WASHER, FLAT	8
2	1004546-1	WASHER, FLAT	7
2	1004579-1	SCREW, JACKING	6
AR	1006757-23	WIRE, ELEC .025 DIA	5
1		INSULATOR	4
94	1006782-1	CONTACT, WRAPOST, MALE MIN	3
94	1006775	INSULATOR, WRAPOST, MALE MIN	2
1	1003797-1	HEADER HOUSING	1
QTY REQD	PART OR IDENTIFYING NO.	NOMENCLATURE OR DESCRIPTION	FIND NO.

LIST OF MATERIALS

1003797

NEXT ASSY	USED ON	UNLESS OTHERWISE SPECIFIED DIMENSIONS ARE IN INCHES TOLERANCES ON FRACTIONS ± DECIMALS XXX ±.005 XX .02 ANGLES ± DO NOT SCALE THIS DRAWING	MIT INSTRUMENTATION LAB CAMBRIDGE, MASS.	MANNED SPACECRAFT CENTER HOUSTON, TEXAS
APPLICATION		MATERIAL SEE NOTE 2	DRAWN Ed Pomerleau DATE 29 May 64 CHECKED APPROVAL APPROVAL [illegible]	DESIGN LAYOUT FILTER MODULE
		HEAT TREATMENT —//— FINAL FINISH —//—	NASA APPROVAL [illegible] 6/2/64 MIT APPROVAL [illegible] 6/2/64	CODE IDENT NO. SIZE J NASA DRAWING NO. 1003797 SCALE 4/1 WT SHEET 1 OF 1

MASTER

2H

WHEN GOVERNMENT DRAWINGS, SPECIFICATIONS, OR OTHER DATA ARE USED FOR ANY PURPOSE OTHER THAN IN CONNECTION WITH A DEFINITELY RELATED GOVERNMENT PROCUREMENT OPERATION, THE UNITED STATES GOVERNMENT THEREBY INCURS NO RESPONSIBILITY NOR ANY OBLIGATION WHATSOEVER; AND THE FACT THAT THE GOVERNMENT MAY HAVE FORMULATED, FURNISHED, OR IN ANY WAY SUPPLIED THE SAID DRAWINGS, SPECIFICATIONS OR OTHER DATA IS NOT TO BE REGARDED BY IMPLICATION OR OTHERWISE AS IN ANY MANNER LICENSING THE HOLDER OR ANY OTHER PERSON OR CORPORATION, OR CONVEYING ANY RIGHTS OR PERMISSION TO MANUFACTURE, USE, OR SELL ANY PATENTED INVENTION THAT MAY IN ANY WAY BE RELATED THERETO.

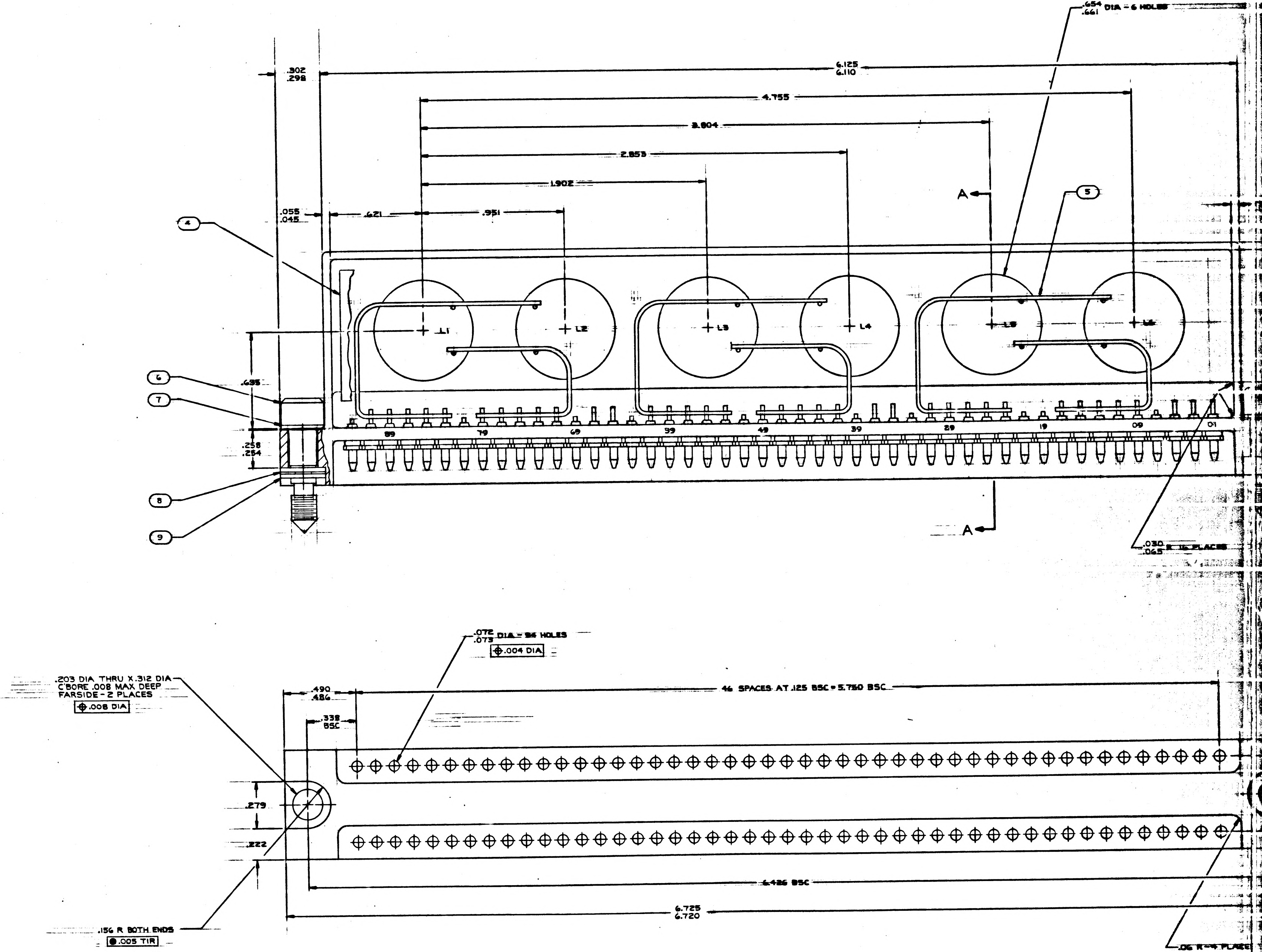
.654
.661 DIA - 6 HOLES
.302
.298
6.125
6.110
4.755
3.804
2.853
1.902
.055
.045
.421
.951
A
5
4
6
7
8
9
L1
L2
L3
L4
L5
L6
.495
.258
.254
89
79
69
59
49
39
29
19
09
01
A
.030
.045 R 16 PLACES
.072
.073 DIA - 94 HOLES
.004 DIA
.203 DIA THRU X .312 DIA
C'BORE .008 MAX DEEP
FARSIDE - 2 PLACES
.008 DIA
.490
.486
46 SPACES AT .125 BSC = 5.750 BSC
.338
BSC
.279
.222
6.426 BSC
6.725
6.720
.156 R BOTH ENDS
.005 TIR
.06 R - 4 PLACES

NOTES
1. INTERPRET DRAWING IN ACCORDANCE WITH STANDARDS PRESCRIBED BY MIL-D-70327
2. MATERIAL: MAGNESIUM ALLOY ZK-60A-T5 PER QQ-M-31A
3. UNLESS OTHERWISE SPECIFIED ALL FILLETS AND RADII .005-.020
4. UNLESS OTHERWISE SPECIFIED √125 ALL OVER
5. REMOVE ALL BURRS AND BREAK SHARP EDGES .005-.020
6. FINISH: ANODIZE PER MIL-M-45202, TYPE I, CLASS C
7. AR DENOTES AS REQUIRED
8. WELD PER ND 1002005
9. ASSEMBLE FIND NO. 2 TO FIND NO. 3 PER ND1002136
10. ENCAPSULATE PER ND1002002
11. STAKE PER ND 1002009
12. MARK .060/.080 HIGH WHITE CHARACTERS PER ND1002019 AND ND1002122 TYPE II CLASS I
13. MARK .093 HIGH WHITE CHARACTERS PER ND1002019 AND ND1002122 TYPE II CLASS I
14. MARK .250 HIGH WHITE CHARACTERS PER ND1002019 AND ND1002122 TYPE II CLASS I

1003798	REVISIONS			
	SYM	DESCRIPTION	DATE	APPROVAL

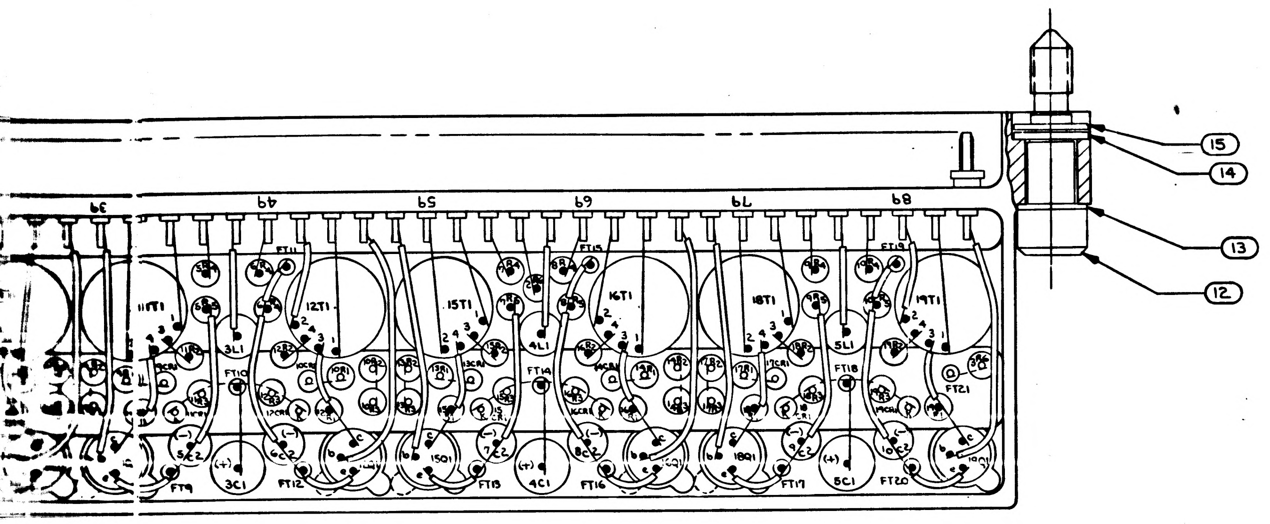

15
14
13
12
FT11
11T1
12T1
15T1
16T1
18T1
19T1
3L1
4L1
5L1
3C1
4C1
5C1
FT12
FT13
FT16
FT17
FT20
FT21

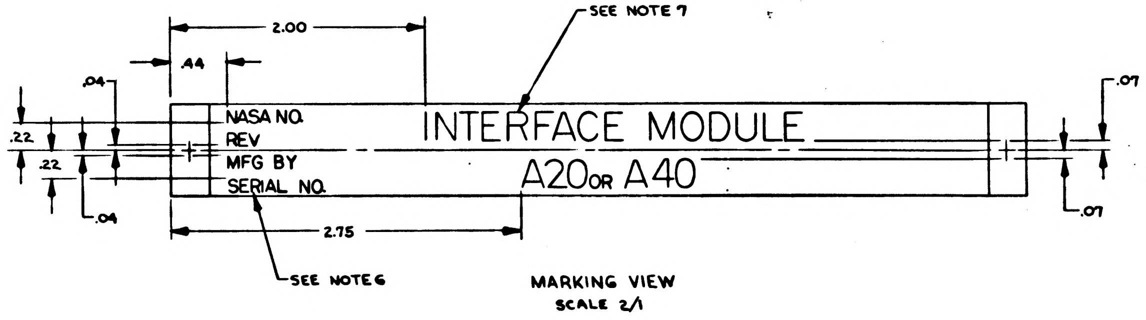

2.00
.44
.04
.22
.22
.04
.07
.07
2.75
SEE NOTE 7
SEE NOTE 6
NASA NO.
REV
MFG BY
SERIAL NO.
INTERFACE MODULE
A20 OR A40

MARKING VIEW
SCALE 2/1

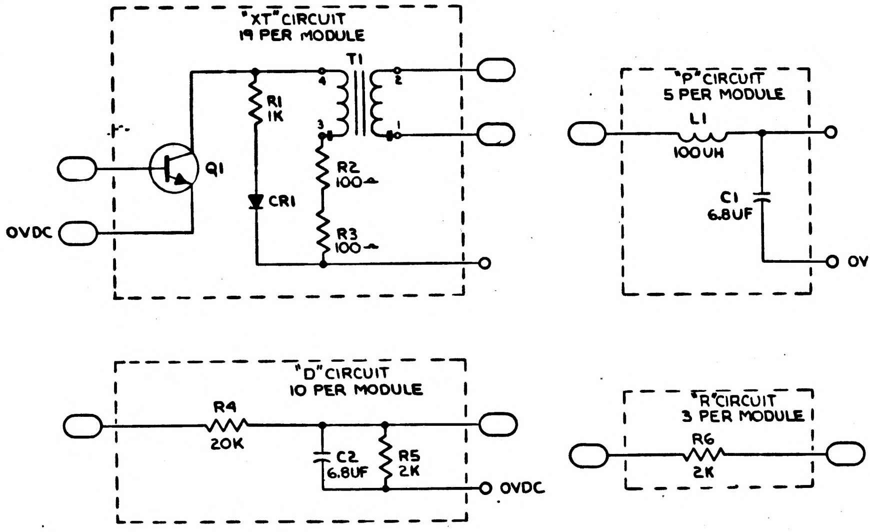

"XT" CIRCUIT
19 PER MODULE
T1
R1
1K
R2
100Ω
R3
100Ω
CR1
Q1
OVDC
"P" CIRCUIT
5 PER MODULE
L1
100UH
C1
6.8UF
OVDC
"D" CIRCUIT
10 PER MODULE
R4
20K
C2
6.8UF
R5
2K
OVDC
"R" CIRCUIT
3 PER MODULE
R6
2K

FOR INFORMATION ONLY

CLASS B RELEASE TDR No. 09792 DATE 6/2/64

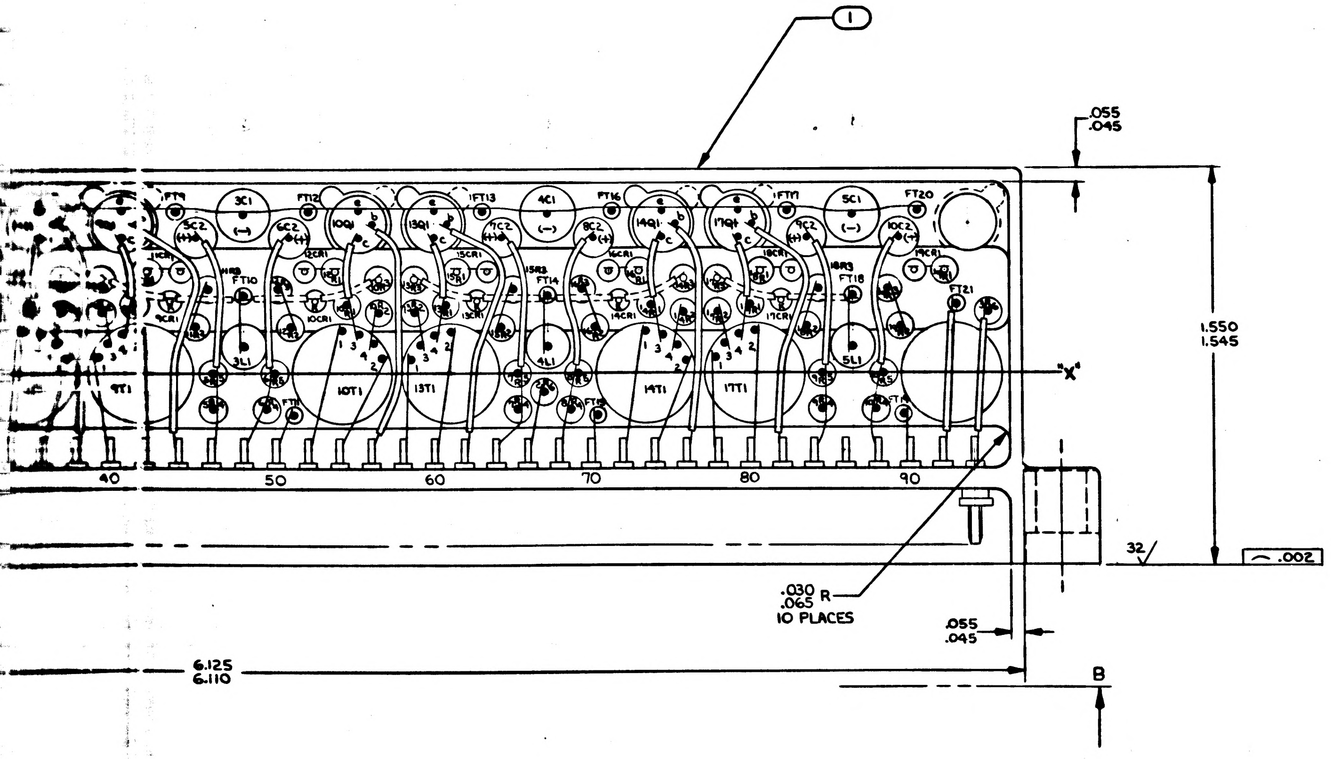

1
.055
.045
1.550
1.545
"X"
32
⌒ .002
.030
.065 R
10 PLACES
.055
.045
6.125
6.110
B
40
50
60
70
80
90

REF		SCHEMATIC	☒
			16
2	MS16633-4015	RING, RETAINING	15
2	1004546-3	WASHER, FLAT	14
2	1004546-1	WASHER, FLAT	13
2	1004579-1	SCREW, JACKING	12
AR	1006776-22	INSULATION, SLEEVING	11
AR	1006757-1	WIRE, ELECTRICAL	10
AR	1006757-8	WIRE, ELECTRICAL	9
94	1006775	INSULATOR, WRAPOST	8
94	1006782-1	CONTACT, WRAPOST	7
19		INSULATOR, TRANSISTOR	6
1		INSULATOR	5
1		INSULATOR	4
1		INSULATOR	3
1		INSULATOR	2
1		HEADER, HOUSING	1
QTY REQD	PART OR IDENTIFYING NO.	NOMENCLATURE OR DESCRIPTION	FIND NO.

LIST OF MATERIALS

NEXT ASSY	USED ON	UNLESS OTHERWISE SPECIFIED DIMENSIONS ARE IN INCHES TOLERANCES ON FRACTIONS ± — DECIMALS .XX ±.01 .XXX ±.005 ANGLES ±1° DO NOT SCALE THIS DRAWING	MIT INSTRUMENTATION LAB CAMBRIDGE, MASS	MANNED SPACECRAFT CENTER HOUSTON, TEXAS
APPLICATION		MATERIAL SEE NOTE 2A	DRAWN J Brigham DATE 5/29/64 CHECKED APPROVAL APPROVAL Eldon C Hall	DESIGN LAYOUT INTERFACE MODULE A20-A40
		HEAT TREATMENT —	NASA APPROVAL	CODE IDENT NO. — SIZE — NASA DRAWING NO. 1003798
		FINAL FINISH SEE NOTE 2B	MIT APPROVAL 6/2/64	SCALE 4/1 WT SHEET 1 OF 1

MASTER

1003798

③

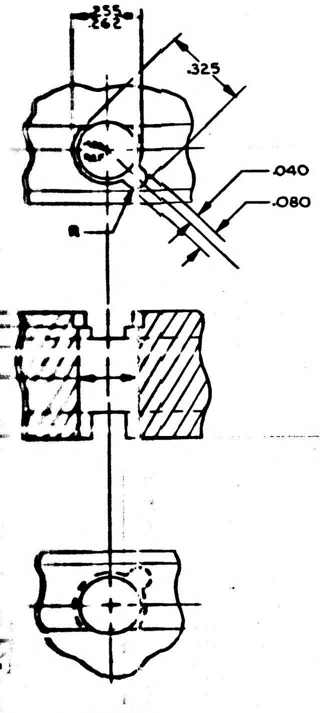

.255
.262
.325
.040
.080
REF
R

DETAIL B
1 PLACE

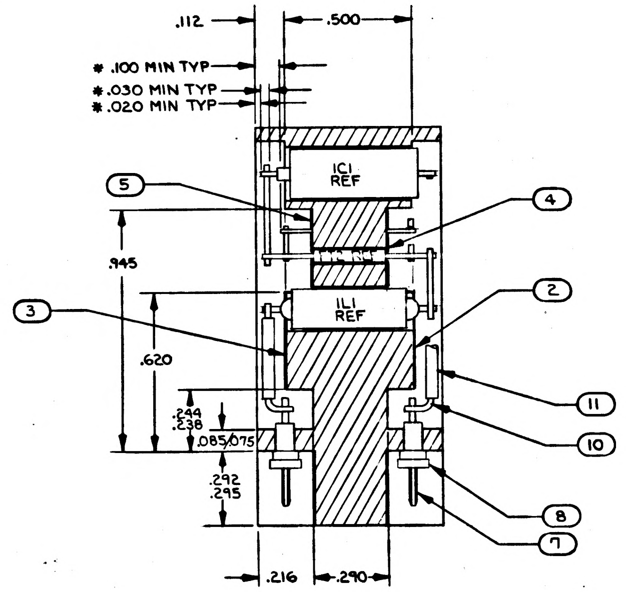

.112
.500
* .100 MIN TYP
* .030 MIN TYP
* .020 MIN TYP
1C1
REF
1L1
REF
.945
.620
.244
.238
.085
.075
.292
.295
.216
.290
5
4
3
2
11
10
8
7

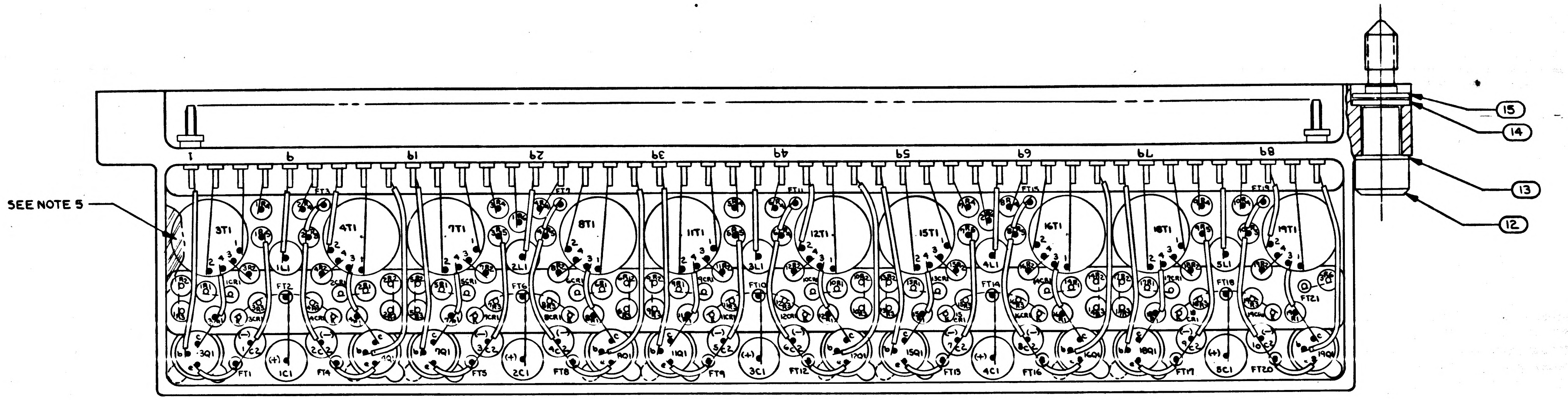

SEE NOTE 5
1
9
19
29
39
49
59
69
79
89
15
14
13
12

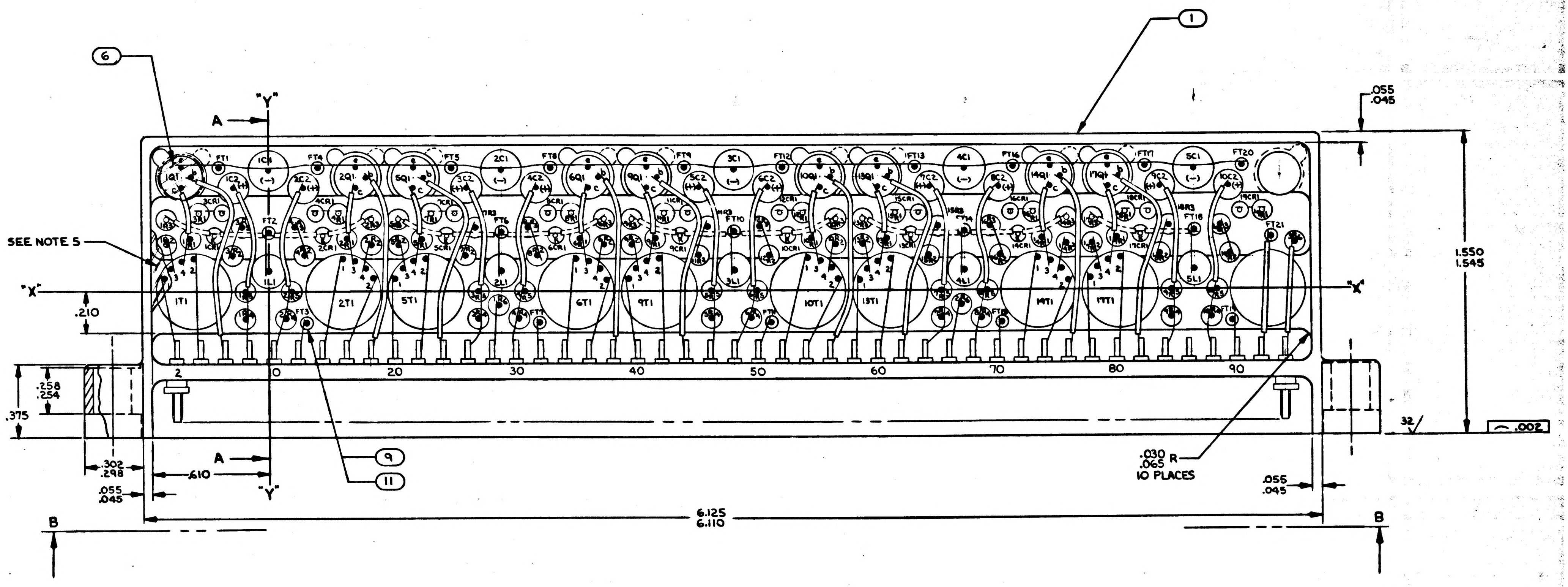

1
6
A
"Y"
SEE NOTE 5
"X"
.210
"X"
.055
.045
1.550
1.545
.258
.254
.375
2
10
20
30
40
50
60
70
80
90
32
.002
A
"Y"
.302
.298
.610
9
11
.055
.045
.030 R
.065
10 PLACES
.055
.045
6.125
6.110
B
B

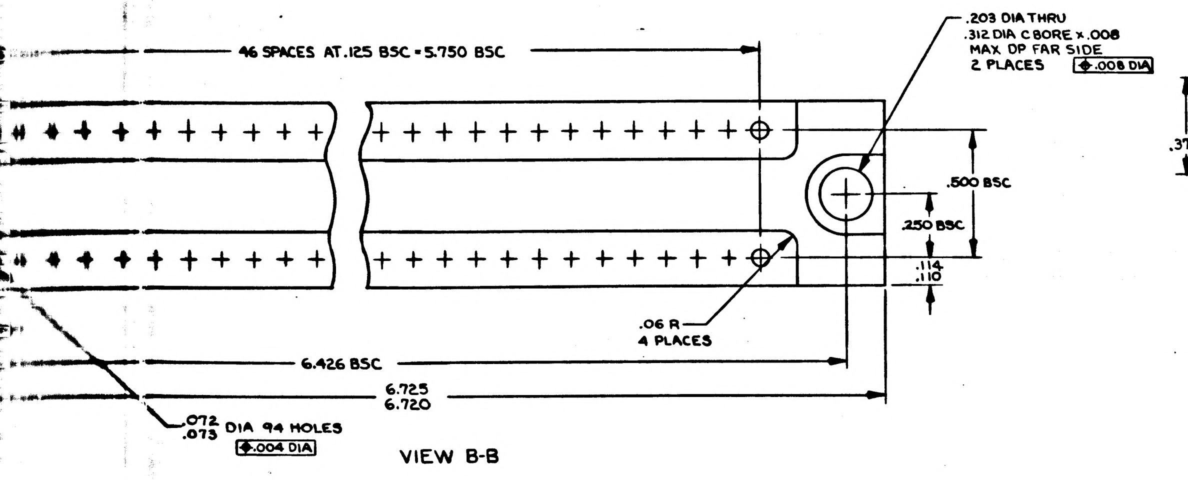

46 SPACES AT .125 BSC = 5.750 BSC
.203 DIA THRU
.312 DIA C'BORE x .008
MAX DP FAR SIDE
2 PLACES
.008 DIA
.500 BSC
.250 BSC
.114
.110
.06 R
4 PLACES
6.426 BSC
6.725
6.720
.072
.073 DIA 94 HOLES
.004 DIA

VIEW B-B

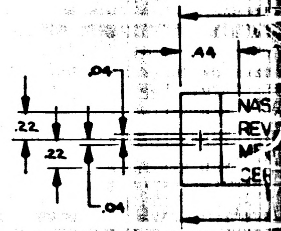

.04
.44
.22
.22
.04
NAS
REV
MF
CEF

INCHES

F-2

REF DES	"X"	"Y"	HOLE IDENT	PART NUMBER
1R1	−.405	.270	A	1006750−32
2R1	.405	.270		
3R1	−.360	.400		
4R1	.360	.400		
5R1	.795	.270		
6R1	1.605	.270		
7R1	.840	.400		
8R1	1.560	.400		
9R1	1.995	.270		
10R1	2.805	.270		
11R1	2.040	.400		
12R1	2.760	.400		
13R1	3.195	.270		
14R1	4.005	.270		
15R1	3.240	.400		
16R1	3.960	.400		
17R1	4.395	.270		
18R1	4.440	.400		
19R1	5.160	.400		−32
1R2	−.530	.240		−8
2R2	.530	.240		
3R2	−.185	.185		
4R2	.185	.185		
5R2	.670	.240		
6R2	1.730	.240		
7R2	1.015	.185		
8R2	1.385	.185		
9R2	1.870	.240		
10R2	2.930	.240		
11R2	2.215	.185		
12R2	2.585	.185		
13R2	3.070	.240		
14R2	4.130	.240		
15R2	3.415	.185		
16R2	3.785	.185		
17R2	4.270	.240		
18R2	4.615	.185		
19R2	4.985	.185		
1R3	−.530	.370		
2R3	.530	.370		
3R3	−.135	.330		
4R3	.135	.330		
5R3	.670	.370		
6R3	1.730	.370		
7R3	1.065	.330		
8R3	1.335	.330		
9R3	1.870	.370		
10R3	1.930	.370		
11R3	2.265	.330		
12R3	2.535	.330		
13R3	3.070	.370		
14R3	3.130	.370		
15R3	3.465	.330		
16R3	3.735	.330		
17R3	4.270	.370		
18R3	4.665	.330		
19R3	4.935	.330		−8
1R4	−.120	−.140		−63
2R4	.090			
3R4	1.080			
4R4	1.290			
5R4	2.280			
6R4	2.490			
7R4	3.480			
8R4	3.690			
9R4	4.680			
10R4	4.890	−.140		−63
1R5	−.120	.000		−39
2R5	.120			
3R5	1.080			
4R5	1.320			
5R5	2.280			
6R5	2.520			
7R5	3.480			
8R5	3.720			
9R5	4.680			
10R5	4.920	.000		
1R6	1.185	−.070		
2R6	3.585	−.070		
3R6	5.330	.240	A	1006750−39
1L1	.000	.105	B	1010406−6
2L1	1.200	.105	B	
3L1	2.400	.105	B	
4L1	3.600	.105	B	
5L1	4.800	.105	B	1010406−6
1C1	.000	.620	C	1006755−79
2C1	1.200	.620	C	
3C1	2.400	.620	C	
4C1	3.600	.620	C	
5C1	4.800	.620	C	1006755−79

REF DES	"X"	"Y"	HOLE IDENT	PART NUMBER
1C2	−.180	.530	D	1006755−2
2C2	.180			
3C2	1.020			
4C2	1.380			
5C2	2.220			
6C2	2.580			
7C2	3.420			
8C2	3.780			
9C2	4.620			
10C2	4.980	.530	D	1006755−2
1CR1	−.280	.285	E	1006751
2CR1	.280	.285		
3CR1	−.240	.400		
4CR1	.240	.400		
5CR1	.920	.285		
6CR1	1.480	.285		
7CR1	.960	.400		
8CR1	1.440	.400		
9CR1	2.120	.285		
10CR1	2.680	.285		
11CR1	2.160	.400		
12CR1	2.640	.400		
13CR1	3.320	.285		
14CR1	3.880	.285		
15CR1	3.360	.400		
16CR1	3.840	.400		
17CR1	4.520	.285		
18CR1	4.560	.400		
19CR1	5.040	.400	E	1006751
1T1	−.385	.000	F	1006762
2T1	.385			
3T1	−.385			
4T1	.385			
5T1	.815			
6T1	1.585			
7T1	.815			
8T1	1.585			
9T1	2.015			
10T1	2.785			
11T1	2.015			
12T1	2.785			
13T1	3.215			
14T1	3.985			
15T1	3.215			
16T1	3.985			
17T1	4.415			
18T1	4.415			
19T1	5.185	.000	F	1006762
1Q1	−.450	.585	G	1003520−1
2Q1	.450			
3Q1	−.450			
4Q1	.450			
5Q1	.750			
6Q1	1.650			
7Q1	.750			
8Q1	1.650			
9Q1	1.950			
10Q1	2.850			
11Q1	1.950			
12Q1	2.850			
13Q1	3.150			
14Q1	4.050			
15Q1	3.150			
16Q1	4.050			
17Q1	4.350			
18Q1	4.350			
19Q1	5.250	.585	G	1003520−1
FT1	−.255	.635	H	FIND NO 9 & 11
FT2	.000	.305		
FT3	.195	−.160		
FT4	.255	.635		
FT5	.945	.635		
FT6	1.200	.305		
FT7	1.395	−.160		
FT8	1.455	.635		
FT9	2.145	.635		
FT10	2.400	.305		
FT11	2.595	−.160		
FT12	2.655	.635		
FT13	3.345	.635		
FT14	3.600	.305		
FT15	3.795	−.160		
FT16	3.855	.635		
FT17	4.545	.635		
FT18	4.800	.305		
FT19	4.995	−.160		
FT20	5.055	.635		
FT21	5.205	.270	H	FIND NO 9 & 10

HOLE IDENT		
LETTER	HOLE DIA	QTY
A	.100/.104	80
B	.168/.172	5
C	.203/.207	5
D	.152/.156	10
E	.081/.085	19
F	.382/.389	10
G	SEE DETAIL A & B	10
H	.058/.062	21

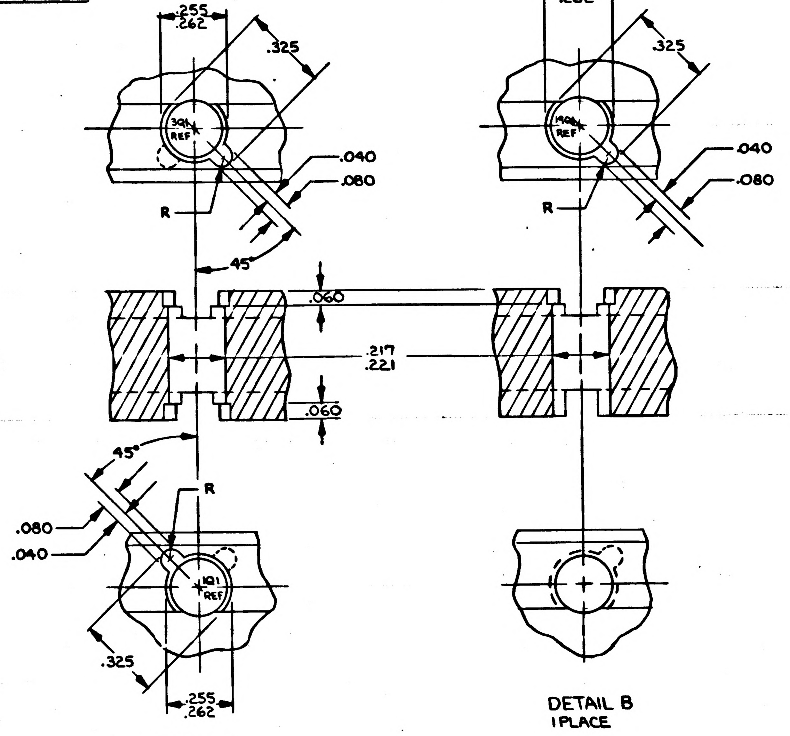

DETAIL A
9 PLACES

DETAIL B
1 PLACE

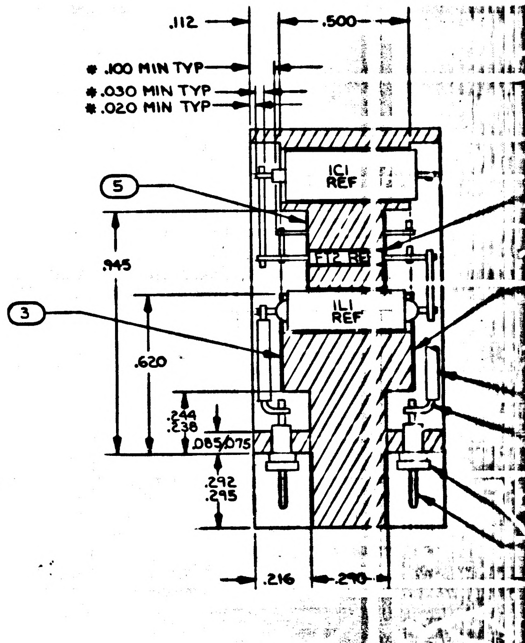

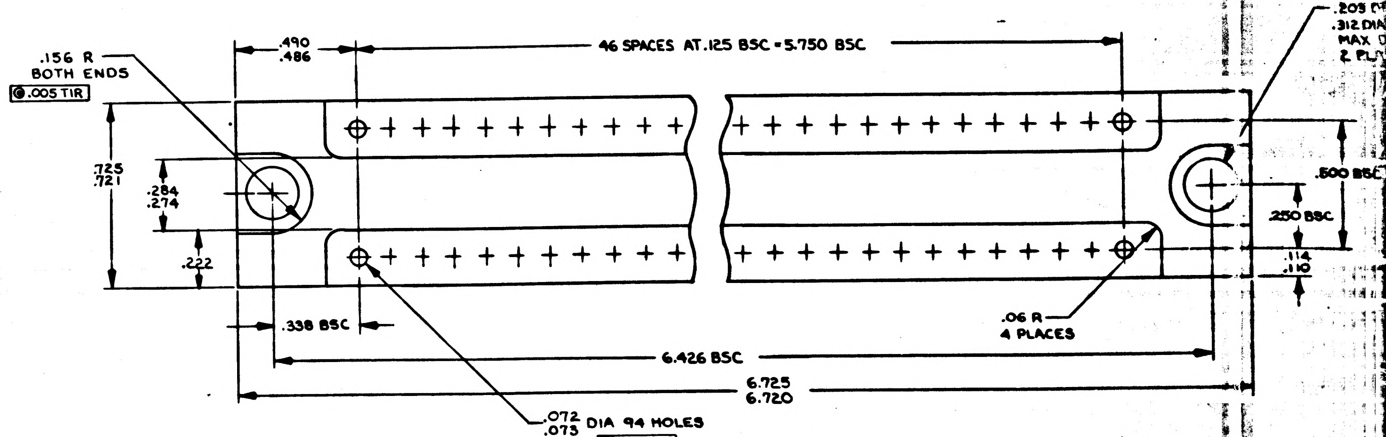

VIEW B-B

NOTES:
1. INTERPRET DWG IN ACCORDANCE WITH STANDARDS PRESCRIBED BY MIL-D-70327
2. NOTES FOR FIND NO. 1
  A. MATL: MAG ALLOY ZK60A-T5 PER QQ-M-31
  B. FINISH: ANODIZE PER MIL-M-45202 TYPE I CLASS C
  C. ALL SURFACES 125/ UNLESS OTHERWISE SPECIFIED
  D. REMOVE BURRS & BREAK SHARP EDGES .005/.015
  E. ALL FILLETS & RADII TO BE .005/.020 UNLESS OTHERWISE SPECIFIED

3. ALL CONNECTIONS TO BE MADE BY WELDING PER ND 1002005 & ND 1002003
4. STAKE ALL RESISTORS, CAPACITORS, & TRANSFORMERS PER ND 1002009
5. ENCAPSULATE MODULE PER ND1002002 (BLACK POLYURETHANE FOAM)

6. MARK .093 HIGH WHITE CHARACTERS PER ND 1002122 TYPE II CLASS I PER ND 1002019 & SERIALIZE PER ND1002023
7. MARK .250 HIGH WHITE CHARACTERS PER ND 1002122 TYPE II CLASS I PER ND 1002019
8. ○ WHITE DOT & DOTTED LEADS INDICATE LOWER LEVEL WIRING
9. ● BLACK DOT & SOLID LEADS INDICATE UPPER LEVEL WIRING
10. FT DENOTES FEED THRU
11. AR DENOTES AS REQUIRED
12. * DENOTES DIMS THAT DO NOT PERTAIN TO FIND NO. 1

37

1003799	REVISIONS

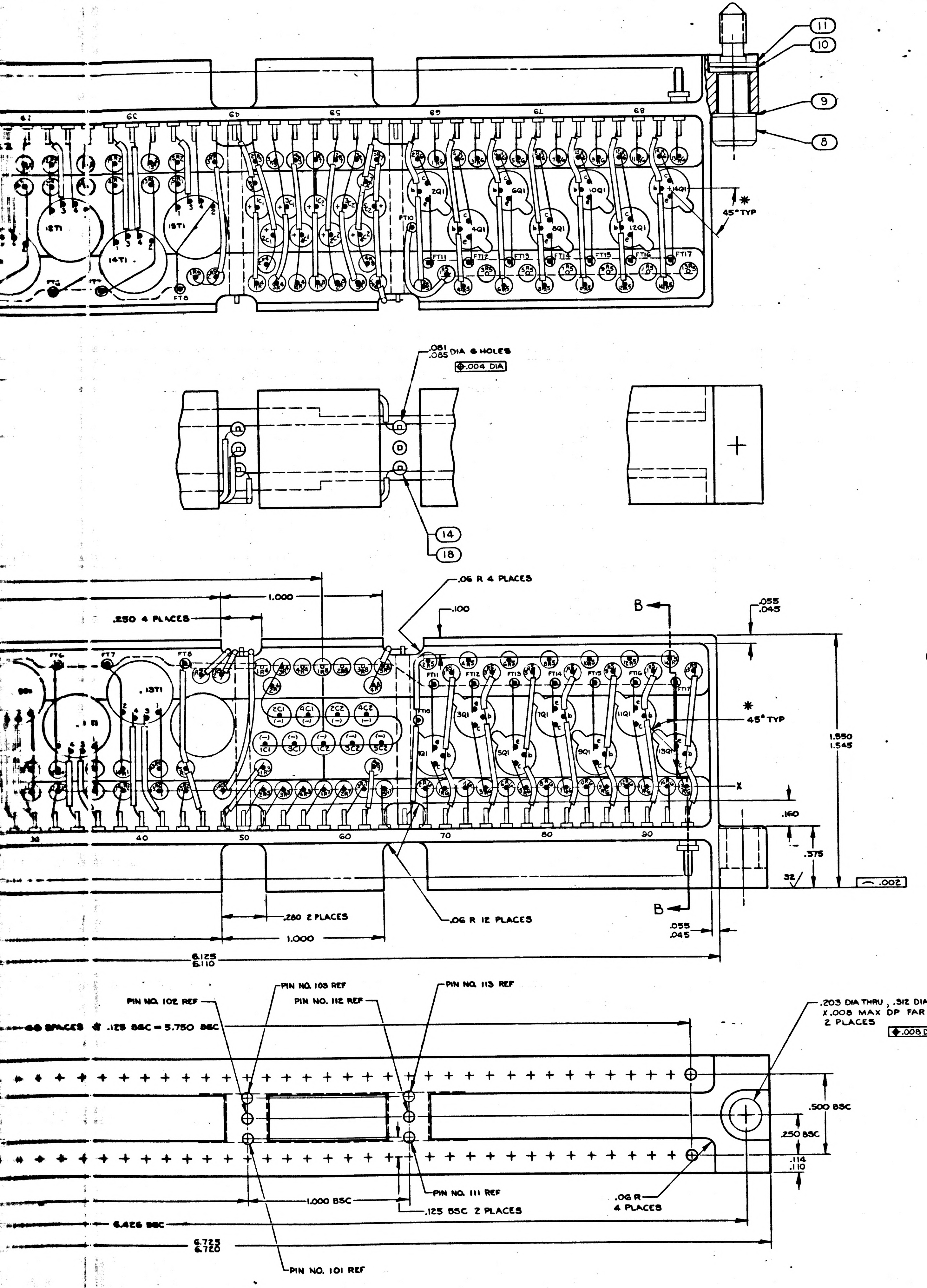
11
10
9
8
45° TYP
.081
.085 DIA 6 HOLES
.004 DIA
14
18
1.000
.250 4 PLACES
.06 R 4 PLACES
.100
B
.055
.045
45° TYP
1.550
1.545
X
.160
.375
32
.002
.280 2 PLACES
1.000
.06 R 12 PLACES
.055
.045
6.125
6.110
PIN NO. 102 REF
PIN NO. 103 REF
PIN NO. 112 REF
PIN NO. 113 REF
48 SPACES @ .125 BSC = 5.750 BSC
.203 DIA THRU, .312 DIA CBORE
X .008 MAX DP FAR SIDE
2 PLACES
.008 DIA
.500 BSC
.250 BSC
.114
.110
PIN NO. 111 REF
1.000 BSC
.125 BSC 2 PLACES
.06 R
4 PLACES
6.426 BSC
6.725
6.720
PIN NO. 101 REF
30
40
50
60
70
80
90

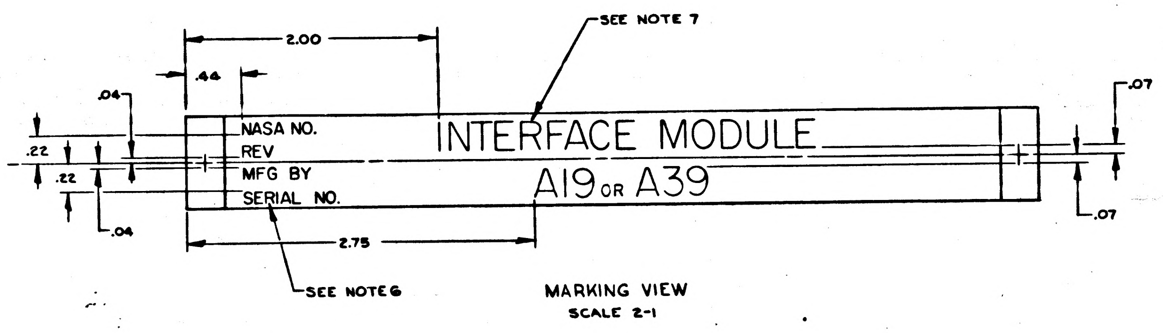
SEE NOTE 7
2.00
.44
.04
.22
.22
NASA NO.
REV
MFG BY
SERIAL NO.
INTERFACE MODULE
A19 OR A39
.04
2.75
SEE NOTE 6
.07
.07

MARKING VIEW
SCALE 2-1

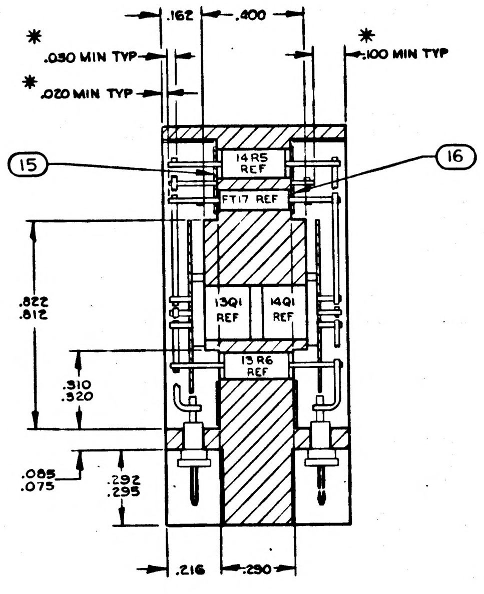
.162
.400
.030 MIN TYP
.020 MIN TYP
.100 MIN TYP
15
16
14R5 REF
FT17 REF
.822
.812
13Q1 REF
14Q1 REF
15R6 REF
.310
.320
.085
.075
.292
.295
.216
.290

SECTION B-B

FOR INFORMATION ONLY

CLASS B RELEASE TDR No. 09792 DATE 6/2/64

REF		SCHEMATIC	
AR	1006776-20	INSULATION, SLEEVING	18
AR	1006826-12	TAPE, INSULATION	17
1		INSULATOR	16
1		INSULATOR	15
6	1006782-5	CONTACT, WRAPOST	14
1		INSULATOR	13
1		INSULATOR	12
2	MS16633-4015	RING, RETAINING	11
2	1004546-3	WASHER, FLAT	10
2	1004546-1	WASHER, FLAT	9
2	1004579-1	SCREW, JACKING	8
AR	1006879	COMPOUND, THERMOCONDUCTIVE	7
AR	1006776-22	INSULATION, SLEEVING	6
AR	1006757-1	WIRE, ELECTRICAL	5
AR	1006757-8	WIRE, ELECTRICAL	4
100	1006775	INSULATOR, WRAPOST	3
94	1006782-1	CONTACT, WRAPOST	2
1		HEADER, HOUSING	1
QTY REQD	PART OR IDENTIFYING NO.	NOMENCLATURE OR DESCRIPTION	FIND NO.

LIST OF MATERIALS

1003799

NEXT ASSY	USED ON
APPLICATION	

UNLESS OTHERWISE SPECIFIED
DIMENSIONS ARE IN INCHES
TOLERANCES ON
FRACTIONS DECIMALS ANGLES
.XX ±.02 .XXX±.005 ±2°
DO NOT SCALE THIS DRAWING
MATERIAL SEE NOTE 2A
HEAT TREATMENT —
FINAL FINISH SEE NOTE 2B

MIT
INSTRUMENTATION LAB
CAMBRIDGE, MASS
DRAWN C W Johnson DATE
CHECKED
APPROVAL
APPROVAL
NASA APPROVAL 6/4/64
MIT APPROVAL 6/4/64

MANNED SPACECRAFT CENTER
HOUSTON, TEXAS

DESIGN LAYOUT
INTERFACE MODULE
A19 OR A39

CODE IDENT NO. | SIZE J | NASA DRAWING NO. 1003799
SCALE 4-1 | WT | SHEET 1 OF 1

1003799

MASTER

F3

(34)

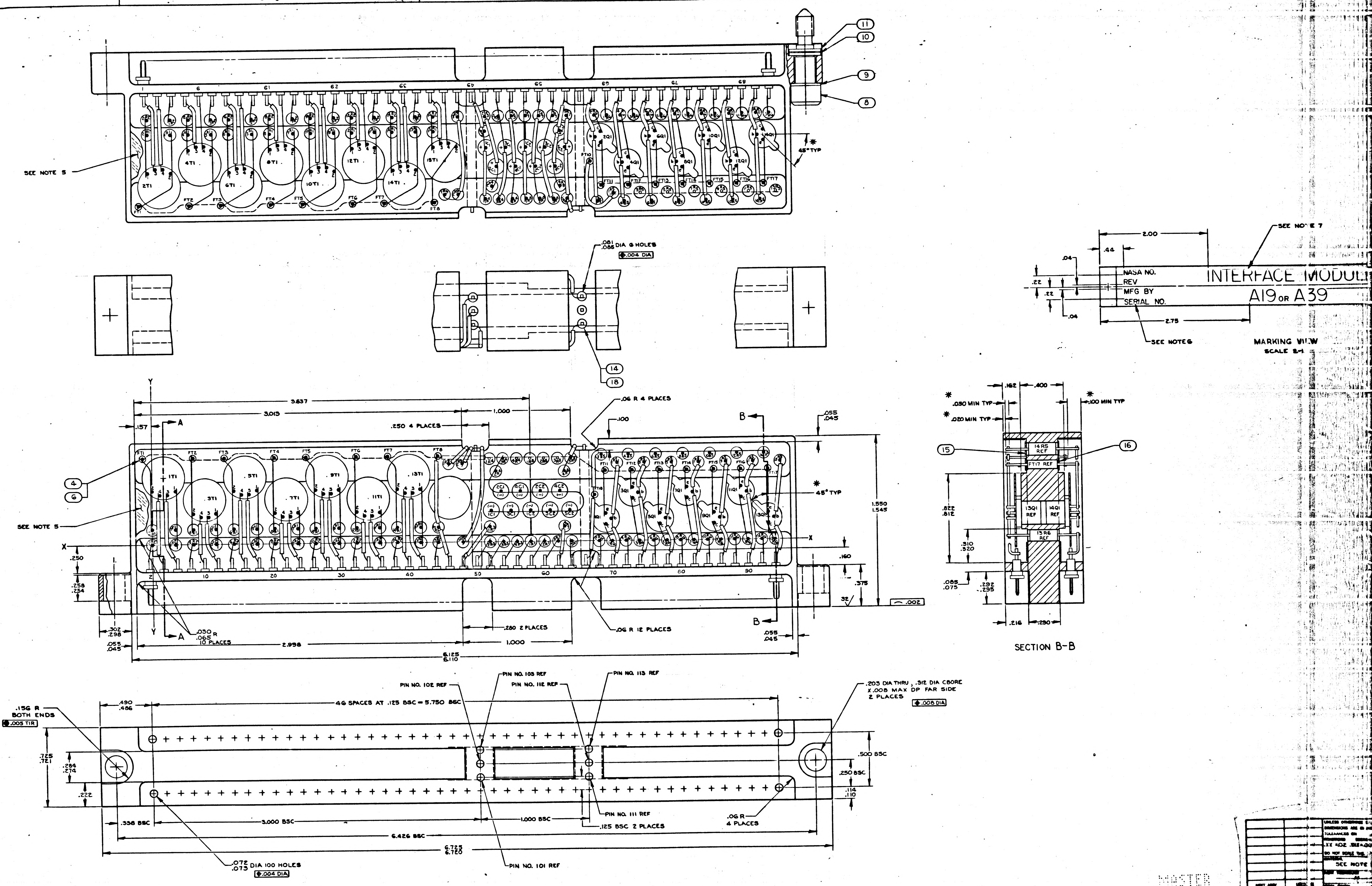
5
4
3
2
11
10
9
8
SEE NOTE 5
45° TYP
.081
.086 DIA 6 HOLES
.004 DIA
14
18
SEE NOTE 7
2.00
.44
.04
.22
.22
.04
NASA NO.
REV
MFG BY
SERIAL NO.
INTERFACE MODUL
A19 OR A39
2.75
SEE NOTE 6
MARKING VIEW
SCALE 2-1
Y
A
3.637
3.015
1.000
.250 4 PLACES
.06 R 4 PLACES
.100
B
.055
.045
.157
4
6
SEE NOTE 5
X
.250
.258
.254
45° TYP
1.550
1.545
.160
.375
32
.002
.302
.298
.055
.045
.030 R
.065
10 PLACES
2.998
.280 2 PLACES
1.000
.06 R 12 PLACES
6.125
6.110
7
12
5
6
.162
.400
.030 MIN TYP
.020 MIN TYP
.100 MIN TYP
15
16
14R5 REF
FT17 REF
.822
.812
13Q1 REF
14Q1 REF
13R6 REF
.310
.320
.085
.075
.292
.295
.216
.290
SECTION B-B
PIN NO. 102 REF
PIN NO. 103 REF
PIN NO. 112 REF
PIN NO. 113 REF
.203 DIA THRU, .312 DIA CBORE
X .008 MAX DP FAR SIDE
2 PLACES
.008 DIA
.156 R
BOTH ENDS
.005 TIR
.490
.486
46 SPACES AT .125 BSC = 5.750 BSC
.725
.721
.284
.274
.222
.500 BSC
.250 BSC
.114
.110
.338 BSC
3.000 BSC
1.000 BSC
PIN NO. 111 REF
.125 BSC 2 PLACES
.06 R
4 PLACES
6.426 BSC
6.725
6.720
.072
.075 DIA 100 HOLES
.004 DIA
PIN NO. 101 REF

MASTER

UNLESS OTHERWISE
DIMENSIONS ARE IN
TOLERANCES ON
.XX ±.02 .XXX±.00
DO NOT SCALE THE
MATERIAL
SEE NOTE

SEE NOTE

NEXT ASSY	USED ON
APPLICATION	

1003799

[illegible]

15 Y CIRCUITS

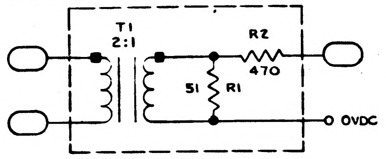

4 D CIRCUITS

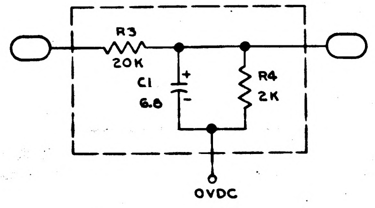

14 T CIRCUITS

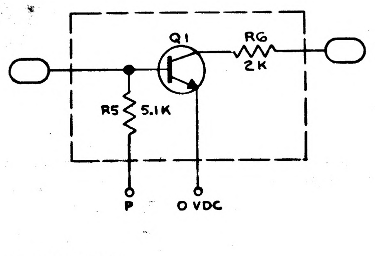

5 S CIRCUITS

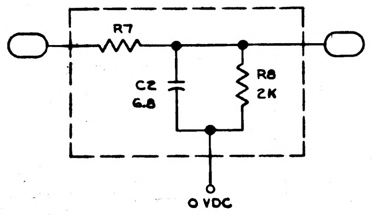

3 R CIRCUITS

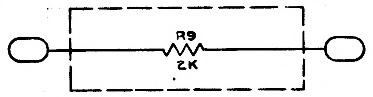

REF DES	X DIM	Y DIM	HOLE IDENT	PART NUMBER
1R1	.210	.136	A	1006750-1
2R1	.000			
3R1	.584			
4R1	.374			
5R1	.960			
6R1	.748			
7R1	1.335			
8R1	1.125			
9R1	1.710			
10R1	1.500			
11R1	2.085			
12R1	1.875			
13R1	2.460			
14R1	2.250	.136		
15R1	2.625	.000		1006750-1
1R2	.210			1006750-24
2R2	.000			
3R2	.584			
4R2	.374			
5R2	.960			
6R2	.748			
7R2	1.335			
8R2	1.125			
9R2	1.710			
10R2	1.500			
11R2	2.085			
12R2	1.875			
13R2	2.460			
14R2	2.250	.000		
15R2	2.625	.136		1006750-24
1R3	3.105	.136		1006750-63
2R3	3.105	.000		1006750-63
3R3	3.230			1006750-63
4R3	3.355			1006750-63
R7	3.480			1006750-
2R7	3.605			
3R7	3.730			
5R7	3.855	.000		
4R7	3.792	.136		1006750-
R4	3.105	.755		1006750-39
2R4	3.167	.640		
3R4	3.230	.755		
4R4	3.355			
1R8	3.480			
2R8	3.605			
3R8	3.730			
5R8	3.855	.755		
4R8	3.792	.640		1006750-39
1R5	4.277	.710		1006750-49
2R5	4.132	.785		
3R5	4.527	.710		
4R5	4.382	.785		
5R5	4.777	.710		
6R5	4.632	.785		
7R5	5.027	.710		
8R5	4.882	.785		
9R5	5.277	.710		
10R5	5.132	.785		
11R5	5.527	.710		
12R5	5.382	.785		
13R5	5.777	.710		
14R5	5.632	.785		1006750-49
1R6	4.229	.000		1006750-39
2R6	4.105			
3R6	4.479			
4R6	4.355			
5R6	4.729			
6R6	4.605			
7R6	4.979			
8R6	4.855			
9R6	5.229			
10R6	5.105			
11R6	5.479			
12R6	5.355			
13R6	5.729			
14R6	5.605	.000		
1R9	2.730	.710		
2R9	2.855	.710		
3R9	2.855	.000	A	1006750-39

NO FT 9

REF DES	X DIM	Y DIM	HOLE IDENT	PART NUMBER
1C1	3.120	.285	B	1006755-2
2C1	3.210	.460		
3C1	3.300	.285		
4C1	3.390	.460		
1C2	3.480	.285		
2C2	3.570	.460		
3C2	3.660	.285		
4C2	3.750	.460		
5C2	3.840	.285	B	1006755-2
1Q1	4.167	.200	C	1003520-1
2Q1	4.167	.200		
3Q1	4.417	.435		
4Q1	4.417	.435		
5Q1	4.667	.200		
6Q1	4.667	.200		
7Q1	4.917	.435		
8Q1	4.917	.435		
9Q1	5.167	.200		
10Q1	5.167	.200		
11Q1	5.417	.435		
12Q1	5.417	.435		
13Q1	5.667	.200		
14Q1	5.667	.200	C	1003520-1
1T1	.105	.610	D	1006762-2
2T1	.105	.610		
3T1	.480	.405		
4T1	.480	.405		
5T1	.855	.610		
6T1	.855	.610		
7T1	1.230	.405		
8T1	1.230	.405		
9T1	1.605	.610		
10T1	1.605	.610		
11T1	1.980	.405		
12T1	1.980	.405		
13T1	2.355	.610		
14T1	2.355	.610		
15T1	2.720	.405	D	1006762-2
FT1	-.085	.785	E	FIND NO. 4 & 6
FT2	.375			
FT3	.665			
FT4	1.125			
FT5	1.415			
FT6	1.875			
FT7	2.165			
FT8	2.625	.785		
FT10	4.045	.420		
FT11	4.167	.640		
FT12	4.417			
FT13	4.667			
FT14	4.917			
FT15	5.167			
FT16	5.417			
FT17	5.667	.640	E	FIND NO. 4 & 6

HOLE IDENT

LETTER	HOLE DIA	QTY
A	.100/.104	79
B	.153/.157	9
C	.216/.220	7
D	.382/.389	8
E	.058/.062	16

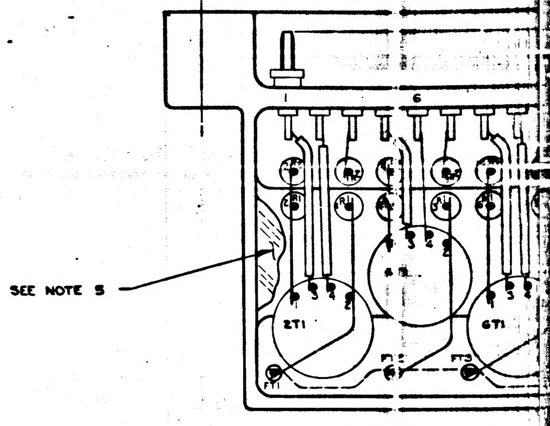

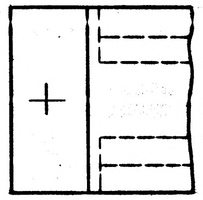

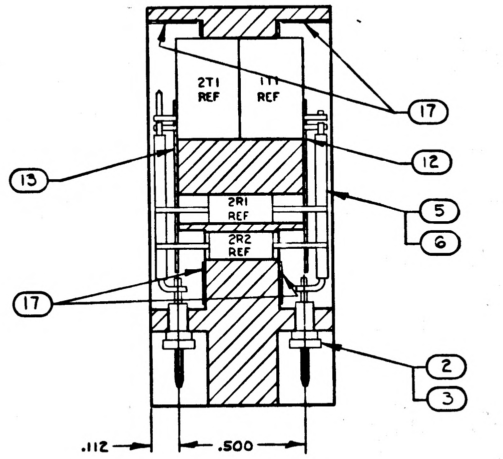

SECTION A-A

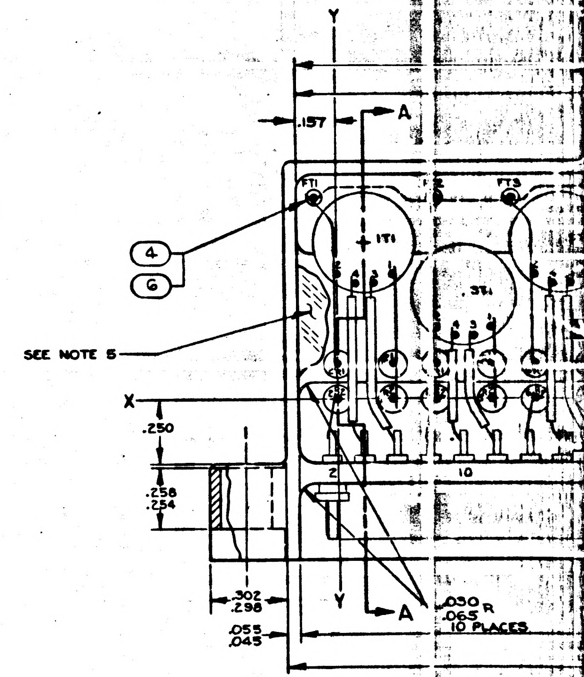

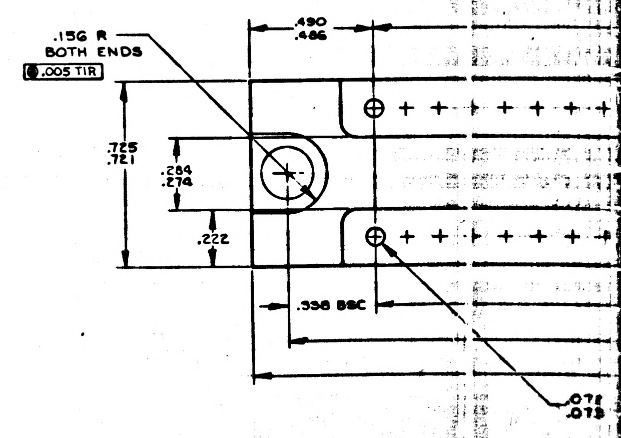

NOTES

1. INTERPRET DWG IN ACCORDANCE WITH STANDARDS PRESCRIBED BY MIL-D-70327
2. NOTES FOR FIND NO. 1
   - A. MATL: MAG ALLOY ZK60A-T5 PER QQ-M-31
   - B. FINISH: ANODIZE PER MIL-M-45202 TYPE I CLASS C
   - C. ALL SURFACES 125√ UNLESS OTHERWISE SPECIFIED
   - D. REMOVE BURRS & BREAK SHARP EDGES .005/.015
   - E. ALL FILLETS & RADII TO BE .005/.020 UNLESS OTHERWISE SPECIFIED

3. ALL CONNECTIONS TO BE MADE BY WELDING PER ND1002005 & ND1002003
4. STAKE ALL RESISTORS, CAPACITORS & TRANSFORMERS PER ND 1002009
5. ENCAPSULATE MODULE PER ND1002002 (BLACK POLYURETHANE FOAM)
6. MARK .093 HIGH WHITE CHARACTERS PER ND 1002122 TYPE II CLASS I PER ND 1002019 & SERIALIZE PER ND1002023
7. MARK .250 HIGH WHITE CHARACTERS PER ND 1002122 TYPE II CLASS I PER ND 1002019
8. ○ WHITE DOT & DOTTED LEADS INDICATE LOWER LEVEL WIRING
9. ● BLK DOT & SOLID LEADS INDICATE UPPER LEVEL WIRING
10. APPLY FIND NO. 7 TO INTERFACES PRIOR TO ASSEMBLY
11. FT DENOTES FEED THRU
12. AR DENOTES AS REQUIRED
13. ✳ DENOTES DIMS THAT DO NOT PERTAIN TO FIND NO. 1

3H

NOTICE — WHEN GOVERNMENT DRAWINGS, SPECIFICATIONS, OR OTHER DATA ARE USED FOR ANY PURPOSE OTHER THAN IN CONNECTION WITH A DEFINITELY RELATED GOVERNMENT PROCUREMENT OPERATION, THE UNITED STATES GOVERNMENT THEREBY INCURS NO RESPONSIBILITY NOR ANY OBLIGATION WHATSOEVER; AND THE FACT THAT THE GOVERNMENT MAY HAVE FORMULATED, FURNISHED, OR IN ANY WAY SUPPLIED THE SAID DRAWINGS, SPECIFICATIONS OR OTHER DATA IS NOT TO BE REGARDED BY IMPLICATION OR OTHERWISE AS IN ANY MANNER LICENSING THE HOLDER OR ANY OTHER PERSON OR CORPORATION, OR CONVEYING ANY RIGHTS OR PERMISSION TO MANUFACTURE, USE, OR SELL ANY PATENTED INVENTION THAT MAY IN ANY WAY BE RELATED THERETO.

1003800 A

REVISIONS 12765			
SYM	DESCRIPTION	DATE	APPROVAL
A	REVISED PER TDRR 13433 DR G. Sapha CHK Cull RTM	9/22/64	VaC

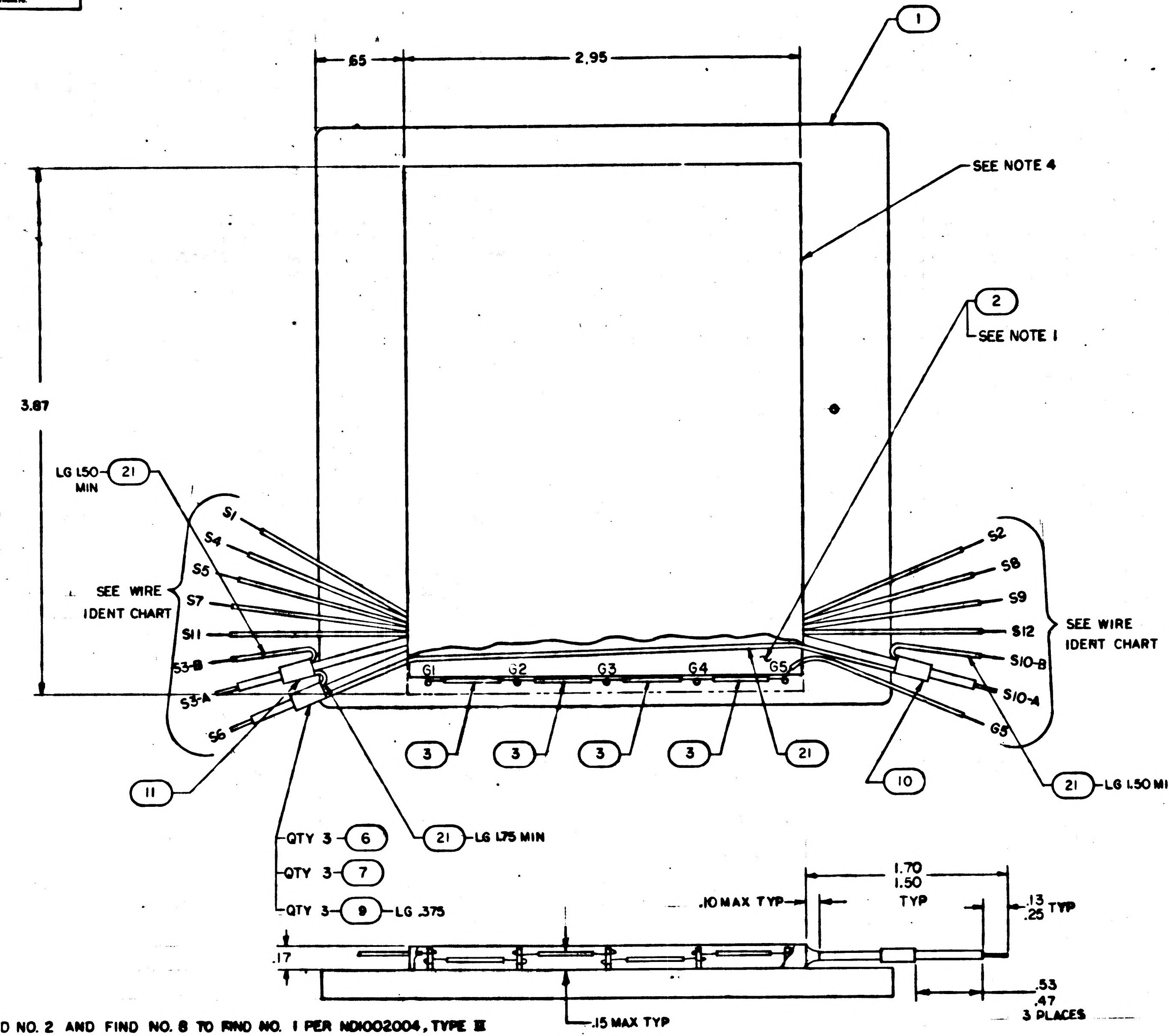

1
.65
2.95
SEE NOTE 4
2
SEE NOTE 1
3.87
LG 1.50 MIN
21
S1
S4
S5
S7
S11
S3-B
S3-A
S6
SEE WIRE IDENT CHART
S2
S8
S9
S12
S10-B
S10-A
G5
SEE WIRE IDENT CHART
G1
G2
G3
G4
G5
3
3
3
3
21
10
11
21
LG 1.50 MIN
QTY 3 - 6
21 - LG 1.75 MIN
QTY 3 - 7
QTY 3 - 9 - LG .375
1.70
1.50
TYP
.10 MAX TYP
.13
.25 TYP
.17
.53
.47
3 PLACES
.15 MAX TYP

WIRE IDENT CHART			
LEAD DESIGNATION	FIND NO.	COLOR CODE (REF)	
		BASIC	TRACER
S1	12	YEL	—
S2	13	YEL	GRN
S4	14	BLK	YEL
S5	15	YEL	ORN
S7	16	RED	YEL
S8	17	YEL	BLU
S9	18	YEL	VIO
S11	19	YEL	BRN
S12	20	YEL	GRY
S3 B	21	GRY	—
S10-B	21	GRY	—
G5	3	BLK	—
S3-A	5&11	YELLOW SLEEVING	
S6	5&9	BLACK SLEEVING	
S10-A	5&10	RED SLEEVING	

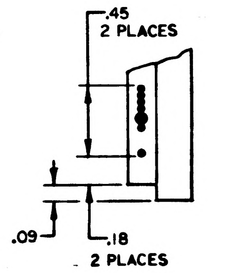

.45
2 PLACES
.09
.18
2 PLACES

NOTES

1. BOND FIND NO. 2 AND FIND NO. 8 TO FIND NO. 1 PER ND1002004, TYPE III
2. SOLDER PER ND 1002071
3. ~~MARK EACH WIRE WITH ITS INDIVIDUAL PIN LETTER & NUMBER PER ND 1002019~~
4. ENCAPSULATE AREA SHOWN PER ND 1002036, CURING CYCLE A
5. ~~ALL WIRES TO BE FIND NO. 4 UNLESS OTHERWISE SPECIFIED~~
6. ✱ DENOTES LENGTH IN FEET
7. INTERPRET DRAWING IN ACCORDANCE WITH STANDARDS PRESCRIBED BY MIL-D-70327
8. SLEEVING PER MIL-I-23053, CLASS 2, SIZE 14
   COLOR BLK FOR FIND NO. 9, COLOR RED FOR FIND NO. 10,
   COLOR YEL FOR FIND NO. 11

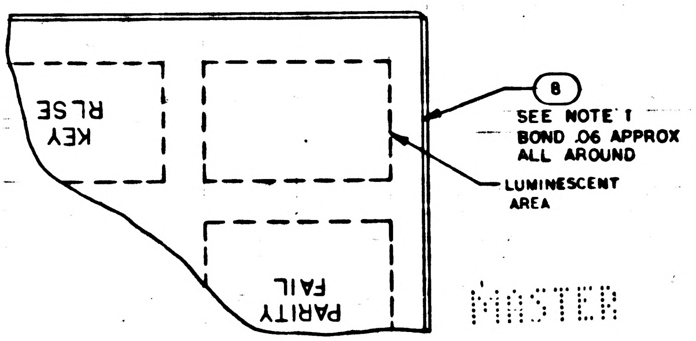

KEY RLSE
PARITY FAIL
8
SEE NOTE 1
BOND .06 APPROX ALL AROUND
LUMINESCENT AREA

MASTER

	QTY REQD	PART OR IDENTIFYING NO.	NOMENCLATURE OR DESCRIPTION	FIND NO.
	☒	1005750	INTERCONNECTION DIAGRAM	REF
✱	1.0	1010416-19	WIRE, ELECTRICAL	21
✱	.5	1010416-187	WIRE, ELECTRICAL	20
✱	.5	1010416-123	WIRE, ELECTRICAL	19
✱	.5	1010416-178	WIRE, ELECTRICAL	18
✱	.5	1010416-169	WIRE, ELECTRICAL	17
✱	.5	1010416-149	WIRE, ELECTRICAL	16
✱	.5	1010416-141	WIRE, ELECTRICAL	15
✱	.5	1010416-147	WIRE, ELECTRICAL	14
✱	.5	1010416-160	WIRE, ELECTRICAL	13
✱	.5	1010416-15	WIRE, ELECTRICAL	12
✱	.04	SEE NOTE 8	SLEEVING, INSULATION	11
✱	.04	SEE NOTE 8	SLEEVING, INSULATION	10
✱	.04	SEE NOTE 8	SLEEVING, INSULATION	9
	1	1004811	INSULATOR, FRONT, ALARM DISPLAY	8
	3	1000242-1	FERRULE, ELECTRICAL	7
	3	1000243-1	FERRULE, ELECTRICAL	6
✱	1.5	1010778-1	WIRE, SHIELDED	5
~~✱~~	~~3.0~~	~~1010416-10~~	~~WIRE, ELECTRICAL~~	~~4~~
✱	.5	1010416-11	WIRE, ELECTRICAL	3
	1	1004815	BOARD, INSULATOR	2
	1	1006745	INDICATOR E/L (ALARM)	1

LIST OF MATERIALS

1003758	
NEXT ASSY	USED ON
APPLICATION	

UNLESS OTHERWISE SPECIFIED
DIMENSIONS ARE IN INCHES
TOLERANCES ON
FRACTIONS ± DECIMALS ±.01 ANGLES ±
DO NOT SCALE THIS DRAWING
MATERIAL
HEAT TREATMENT
FINAL FINISH

MIT
INSTRUMENTATION LAB
CAMBRIDGE, MASS.
DWG. NO. CONTRACT
DRAWN B Jensen DATE 26AUG64
CHECKED R. Edwards
APPROVAL Sept 1964
APPROVAL
NASA APPROVAL W. J. Rhine 9-22-64
MIT APPROVAL
MIT APPROVAL 22 Sept 64

MANNED SPACECRAFT CENTER
HOUSTON, TEXAS

INDICATOR E/L ASSY (ALARM)
AGC DSKY, NAV
100 SERIES

CODE IDENT NO. —— SIZE D NASA DRAWING NO. 1003800
SCALE 2/1 WT SHEET 1 OF 1

NOTICE — WHEN GOVERNMENT DRAWINGS, SPECIFICATIONS, OR OTHER DATA ARE USED FOR ANY PURPOSE OTHER THAN IN CONNECTION WITH A DEFINITELY RELATED GOVERNMENT PROCUREMENT OPERATION, THE UNITED STATES GOVERNMENT THEREBY INCURS NO RESPONSIBILITY NOR ANY OBLIGATION WHATSOEVER; AND THE FACT THAT THE GOVERNMENT MAY HAVE FORMULATED, FURNISHED, OR IN ANY WAY SUPPLIED THE SAID DRAWINGS, SPECIFICATIONS OR OTHER DATA IS NOT TO BE REGARDED BY IMPLICATION OR OTHERWISE AS IN ANY MANNER LICENSING THE HOLDER OR ANY OTHER PERSON OR CORPORATION, OR CONVEYING ANY RIGHTS OR PERMISSION TO MANUFACTURE, USE, OR SELL ANY PATENTED INVENTION THAT MAY IN ANY WAY BE RELATED THERETO.

1003800 B

REVISIONS 12765			
SYM	DESCRIPTION	DATE	APPROVAL
A	REVISED PER TDRR 13433 DR CHK RTM	10/22/64	
B	REVISED PER TDRR 14277 DR CHK	12/16/64	

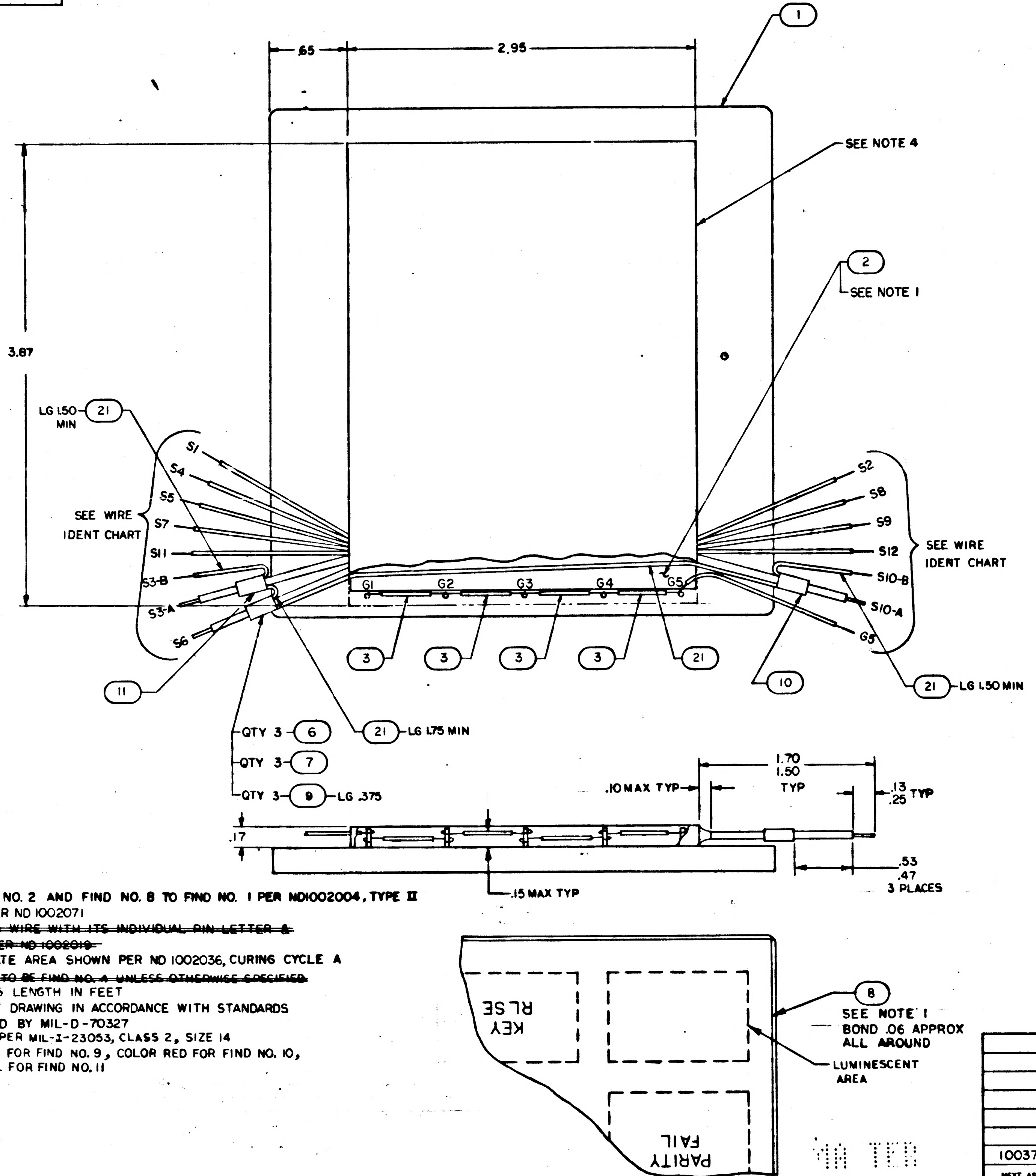

1
.65
2.95
SEE NOTE 4
2
SEE NOTE 1
3.87
LG 1.50 MIN
21
S1
S4
S5
S7
S11
S3-B
S3-A
S6
SEE WIRE IDENT CHART
S2
S8
S9
S12
S10-B
S10-A
G5
SEE WIRE IDENT CHART
G1
G2
G3
G4
G5
3
3
3
3
21
10
21
LG 1.50 MIN
11
QTY 3
6
QTY 3
7
QTY 3
9
LG .375
21
LG 1.75 MIN
1.70
1.50
TYP
.10 MAX TYP
.13
.25
TYP
.17
.53
.47
3 PLACES
.15 MAX TYP
KEY RLSE
PARITY FAIL
8
SEE NOTE 1
BOND .06 APPROX ALL AROUND
LUMINESCENT AREA

WIRE IDENT CHART			
LEAD DESIGNATION	FIND NO.	COLOR CODE (REF)	
		BASIC	TRACER
S1	12	YEL	——
S2	13	YEL	GRN
S4	14	BLK	YEL
S5	15	YEL	ORN
S7	16	RED	YEL
S8	17	YEL	BLU
S9	18	YEL	VIO
S11	19	YEL	BRN
S12	20	YEL	GRY
S3-B	21	GRY	——
S10-B	21	GRY	——
G5	3	BLK	——
S3-A	5&11	YELLOW SLEEVING	
S6	5&9	BLACK SLEEVING	
S10-A	5&10	RED SLEEVING	

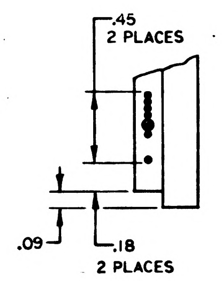

.45
2 PLACES
.09
.18
2 PLACES

NOTES
1. BOND FIND NO. 2 AND FIND NO. 8 TO FIND NO. 1 PER ND1002004, TYPE II
2. SOLDER PER ND 1002071
3. ~~MARK EACH WIRE WITH ITS INDIVIDUAL PIN LETTER & NUMBER PER ND 1002019~~
4. ENCAPSULATE AREA SHOWN PER ND 1002036, CURING CYCLE A
5. ~~ALL WIRES TO BE FIND NO. 4 UNLESS OTHERWISE SPECIFIED~~
6. ✱ DENOTES LENGTH IN FEET
7. INTERPRET DRAWING IN ACCORDANCE WITH STANDARDS PRESCRIBED BY MIL-D-70327
8. SLEEVING PER MIL-I-23053, CLASS 2, SIZE 14
COLOR BLK FOR FIND NO. 9, COLOR RED FOR FIND NO. 10, COLOR YEL FOR FIND NO. 11

	QTY REQD	PART OR IDENTIFYING NO.	NOMENCLATURE OR DESCRIPTION	FIND NO.
	☒	1005750	INTERCONNECTION DIAGRAM	REF
✱	1.0	1010416-19	WIRE, ELECTRICAL	21
✱	.5	1010416-187	WIRE, ELECTRICAL	20
✱	.5	1010416-123	WIRE, ELECTRICAL	19
✱	.5	1010416-178	WIRE, ELECTRICAL	18
✱	.5	1010416-169	WIRE, ELECTRICAL	17
✱	.5	1010416-149	WIRE, ELECTRICAL	16
✱	.5	1010416-141	WIRE, ELECTRICAL	15
✱	.5	1010416-147	WIRE, ELECTRICAL	14
✱	.5	1010416-160	WIRE, ELECTRICAL	13
✱	.5	1010416-15	WIRE, ELECTRICAL	12
✱	.04	SEE NOTE 8	SLEEVING, INSULATION	11
✱	.04	SEE NOTE 8	SLEEVING, INSULATION	10
✱	.04	SEE NOTE 8	SLEEVING, INSULATION	9
	1	1004811	INSULATOR, FRONT, ALARM DISPLAY	8
	3	1000242-1	FERRULE, ELECTRICAL	7
	3	1000243-1	FERRULE, ELECTRICAL	6
✱	1.5	1010778-1	WIRE, SHIELDED	5
~~✱~~	~~3.0~~	~~1010416-10~~	~~WIRE, ELECTRICAL~~	~~4~~
✱	.5	1010416-11	WIRE, ELECTRICAL	3
	1	1004815	BOARD, INSULATOR	2
	1	1006308	INDICATOR E/L (ALARM)	1

LIST OF MATERIALS

1003758	
NEXT ASSY	USED ON
APPLICATION	

UNLESS OTHERWISE SPECIFIED
DIMENSIONS ARE IN INCHES
TOLERANCES ON
FRACTIONS ± DECIMALS ±.01 ANGLES ±
DO NOT SCALE THIS DRAWING
MATERIAL
HEAT TREATMENT
FINAL FINISH

MIT
INSTRUMENTATION LAB
CAMBRIDGE, MASS.
DWG NO. CONTRACT
DRAWN B Jensen DATE 26AUG64
CHECKED
APPROVAL Sept 15 '64
APPROVAL
NASA APPROVAL 9-22-64
MIT APPROVAL
MIT APPROVAL 22 Sept 64

MANNED SPACECRAFT CENTER
HOUSTON, TEXAS

INDICATOR E/L ASSY (ALARM)
AGC DSKY, NAV
100 SERIES

CODE IDENT NO. ——
SIZE D
NASA DRAWING NO. 1003800
SCALE 2/1
WT
SHEET 1 OF 1

NOTICE — WHEN GOVERNMENT DRAWINGS, SPECIFICATIONS, OR OTHER DATA ARE USED FOR ANY PURPOSE OTHER THAN IN CONNECTION WITH A DEFINITELY RELATED GOVERNMENT PROCUREMENT OPERATION, THE UNITED STATES GOVERNMENT THEREBY INCURS NO RESPONSIBILITY NOR ANY OBLIGATION WHATSOEVER; AND THE FACT THAT THE GOVERNMENT MAY HAVE FORMULATED, FURNISHED, OR IN ANY WAY SUPPLIED THE SAID DRAWINGS, SPECIFICATIONS OR OTHER DATA IS NOT TO BE REGARDED BY IMPLICATION OR OTHERWISE AS IN ANY MANNER LICENSING THE HOLDER OR ANY OTHER PERSON OR CORPORATION, OR CONVEYING ANY RIGHTS OR PERMISSION TO MANUFACTURE, USE, OR SELL ANY PATENTED INVENTION THAT MAY IN ANY WAY BE RELATED THERETO.

1003800 C

REVISIONS 12765

SYM	DESCRIPTION	DATE	APPROVAL
A	REVISED PER TDRR 13433 DR CHK RTM	10/22/64	
B	REVISED PER TDRR 14277 DR CHK	12/11/64	
C	REVISED PER TDRR 15648 DR A.J. Eison CHK JCJ	2/9/65	

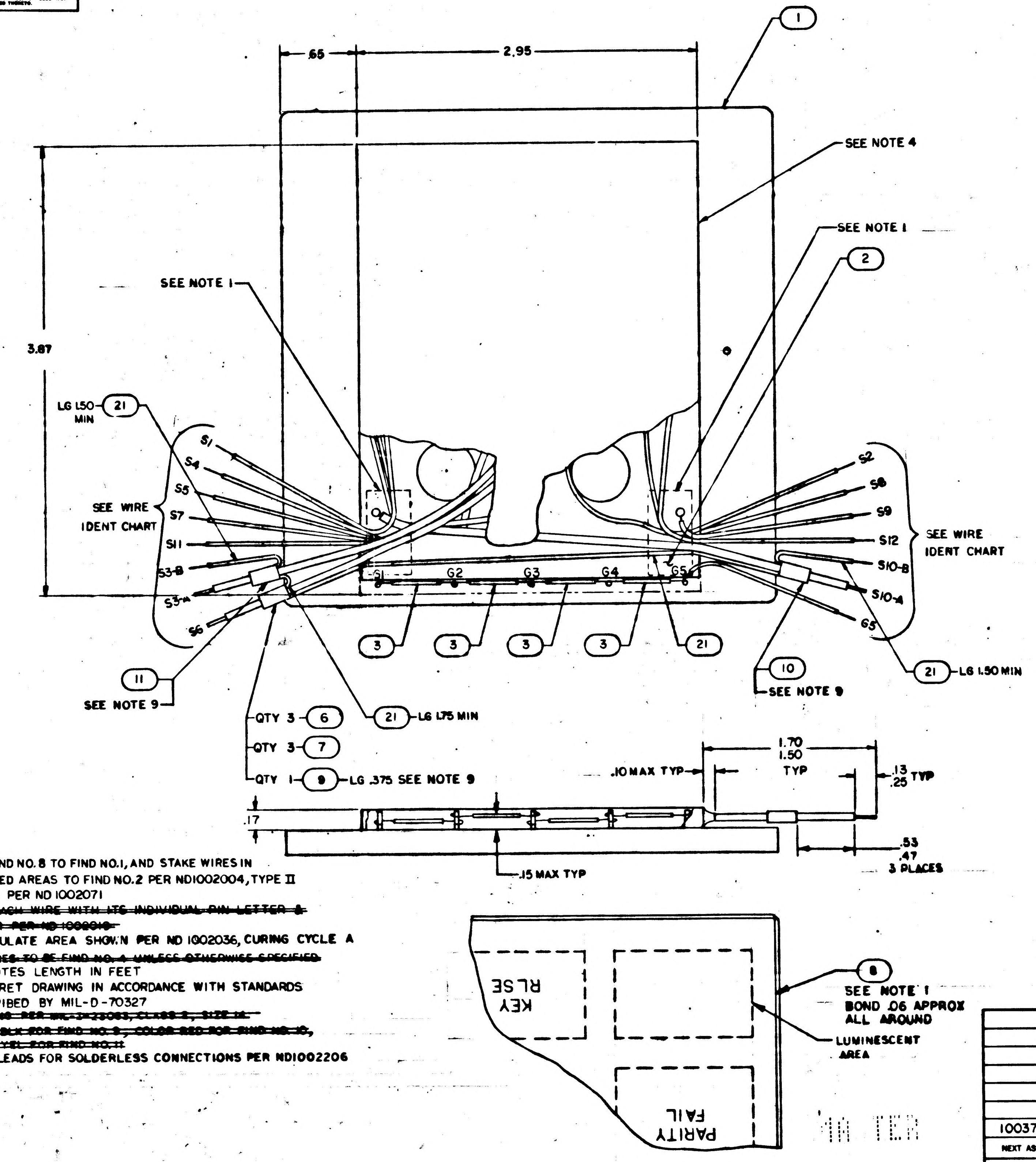
1
2
.65
2.95
SEE NOTE 4
SEE NOTE 1
SEE NOTE 1
3.87
LG 1.50 MIN 21
S1
S4
S5
S7
S11
S3-B
S3-A
S6
SEE WIRE IDENT CHART
S2
S8
S9
S12
S10-B
S10-A
G5
SEE WIRE IDENT CHART
S1
G2
G3
G4
G5
3
3
3
3
21
11 SEE NOTE 9
10 SEE NOTE 9
21 LG 1.50 MIN
QTY 3 6
QTY 3 7
QTY 1 9 LG .375 SEE NOTE 9
21 LG 1.75 MIN
.10 MAX TYP
1.70
1.50
TYP
.13
.25 TYP
.17
.53
.47
3 PLACES
.15 MAX TYP
KEY RLSE
PARITY FAIL
8 SEE NOTE 1
BOND .06 APPROX ALL AROUND
LUMINESCENT AREA

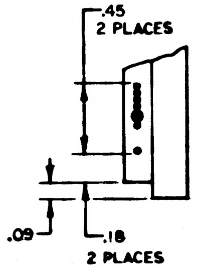
.45
2 PLACES
.09
.18
2 PLACES

WIRE IDENT CHART			
LEAD DESIGNATION	FIND NO.	COLOR CODE (REF)	
		BASIC	TRACER
S1	12	YEL	——
S2	13	YEL	GRN
S4	14	BLK	YEL
S5	15	YEL	ORN
S7	16	RED	YEL
S8	17	YEL	BLU
S9	18	YEL	VIO
S11	19	YEL	BRN
S12	20	YEL	GRY
S3-B	21	GRY	——
S10-B	21	GRY	——
G5	3	BLK	——
S3-A	5&11	YELLOW SLEEVING	
S6	5&9	BLACK SLEEVING	
S10-A	5&10	RED SLEEVING	

NOTES
1. BOND FIND NO. 8 TO FIND NO.1, AND STAKE WIRES IN INDICATED AREAS TO FIND NO.2 PER ND1002004, TYPE II
2. SOLDER PER ND 1002071
3. ~~MARK EACH WIRE WITH ITS INDIVIDUAL PIN LETTER & NUMBER PER ND 1002010~~
4. ENCAPSULATE AREA SHOWN PER ND 1002036, CURING CYCLE A
5. ~~ALL WIRES TO BE FIND NO. 4 UNLESS OTHERWISE SPECIFIED~~
6. ✱ DENOTES LENGTH IN FEET
7. INTERPRET DRAWING IN ACCORDANCE WITH STANDARDS PRESCRIBED BY MIL-D-70327
8. ~~SLEEVING PER MIL-I-23053, CLASS 2, SIZE 16 COLOR BLK FOR FIND NO. 9, COLOR RED FOR FIND NO. 10, COLOR YEL FOR FIND NO. 11~~
9. CRIMP LEADS FOR SOLDERLESS CONNECTIONS PER ND1002206

	QTY REQD	PART OR IDENTIFYING NO.	NOMENCLATURE OR DESCRIPTION	FIND NO.
	☒	1005750	INTERCONNECTION DIAGRAM	REF
✱	1.0	1010416-19	WIRE, ELECTRICAL	21
✱	.5	1010416-187	WIRE, ELECTRICAL	20
✱	.5	1010416-123	WIRE, ELECTRICAL	19
✱	.5	1010416-178	WIRE, ELECTRICAL	18
✱	.5	1010416-169	WIRE, ELECTRICAL	17
✱	.5	1010416-149	WIRE, ELECTRICAL	16
✱	.5	1010416-141	WIRE, ELECTRICAL	15
✱	.5	1010416-147	WIRE, ELECTRICAL	14
✱	.5	1010416-160	WIRE, ELECTRICAL	13
✱	.5	1010416-15	WIRE, ELECTRICAL	12
✱	.04	1006322-107	SLEEVING, INSULATION	11
✱	.04	1006322-82	SLEEVING, INSULATION	10
✱	.04	1006322-32	SLEEVING, INSULATION	9
	1	1004811	INSULATOR, FRONT, ALARM DISPLAY	8
	3	1000242-1	FERRULE, ELECTRICAL	7
	3	1000243-1	FERRULE, ELECTRICAL	6
✱	1.5	1010778-1	WIRE, SHIELDED	5
~~✱~~	~~3.0~~	~~1010416-10~~	~~WIRE, ELECTRICAL~~	~~4~~
✱	.5	1010416-11	WIRE, ELECTRICAL	3
	1	1004815	BOARD, INSULATOR	2
	1	1006745	INDICATOR E/L (ALARM)	1

LIST OF MATERIALS

1003758	
NEXT ASSY	USED ON
APPLICATION	

UNLESS OTHERWISE SPECIFIED
DIMENSIONS ARE IN INCHES
TOLERANCES ON
FRACTIONS ± DECIMALS ±.01 ANGLES ±
DO NOT SCALE THIS DRAWING
MATERIAL
HEAT TREATMENT
FINAL FINISH

MIT
INSTRUMENTATION LAB
CAMBRIDGE, MASS
DWG. NO. CONTRACT
DRAWN B. Jensen DATE 10 AUG 64
CHECKED R. Edwards 10 Sept 64
APPROVAL Sept 64
APPROVAL 21 Sept 64
NASA APPROVAL W. J. Rhine 9-22-64
MIT APPROVAL
MIT APPROVAL 22 Sept 64

MANNED SPACECRAFT CENTER
HOUSTON, TEXAS

INDICATOR E/L ASSY (ALARM)
AGC DSKY, NAV
100 SERIES

CODE IDENT NO. ——
SIZE D
NASA DRAWING NO. 1003800
SCALE 2/1
WT
SHEET 1 OF 1

NOTICE — WHEN GOVERNMENT DRAWINGS, SPECIFICATIONS, OR OTHER DATA ARE USED FOR ANY PURPOSE OTHER THAN IN CONNECTION WITH A DEFINITELY RELATED GOVERNMENT PROCUREMENT OPERATION, THE UNITED STATES GOVERNMENT THEREBY INCURS NO RESPONSIBILITY NOR ANY OBLIGATION WHATSOEVER; AND THE FACT THAT THE GOVERNMENT MAY HAVE FORMULATED, FURNISHED, OR IN ANY WAY SUPPLIED THE SAID DRAWINGS, SPECIFICATIONS OR OTHER DATA IS NOT TO BE REGARDED BY IMPLICATION OR OTHERWISE AS IN ANY MANNER LICENSING THE HOLDER OR ANY OTHER PERSON OR CORPORATION, OR CONVEYING ANY RIGHTS OR PERMISSION TO MANUFACTURE, USE, OR SELL ANY PATENTED INVENTION THAT MAY IN ANY WAY BE RELATED THERETO.

1003800 D

REVISIONS 12765			
SYM	DESCRIPTION	DATE	APPROVAL
A	REVISED PER TDRR 13433 DR CHK RTM	10/22/64	
B	REVISED PER TDRR 14277 DR D.Q. CHK BTM	12/16/64	
C	REVISED PER TDRR 15648 DR A.J. Dixon CHK JCJ BTM	2/9/65	
D	REVISED PER TDRR 19229 DR M. Ripley CHK R.M.E.	6/10/65	

WIRE IDENT CHART			
LEAD DESIGNATION	FIND NO.	COLOR CODE (REF)	
		BASIC	TRACER
S1	12	YEL	—
S2	13	YEL	GRN
S4	14	BLK	YEL
S5	15	YEL	ORN
S7	16	RED	YEL
S8	17	YEL	BLU
S9	18	YEL	VIO
S11	19	YEL	BRN
S12	20	YEL	GRY
S3-B	21	GRY	—
S10-B	21	GRY	—
G5	3	BLK	—
S3-A	5&11	YELLOW SLEEVING	
S6	5&9	BLACK SLEEVING	
S10-A	5&10	RED SLEEVING	

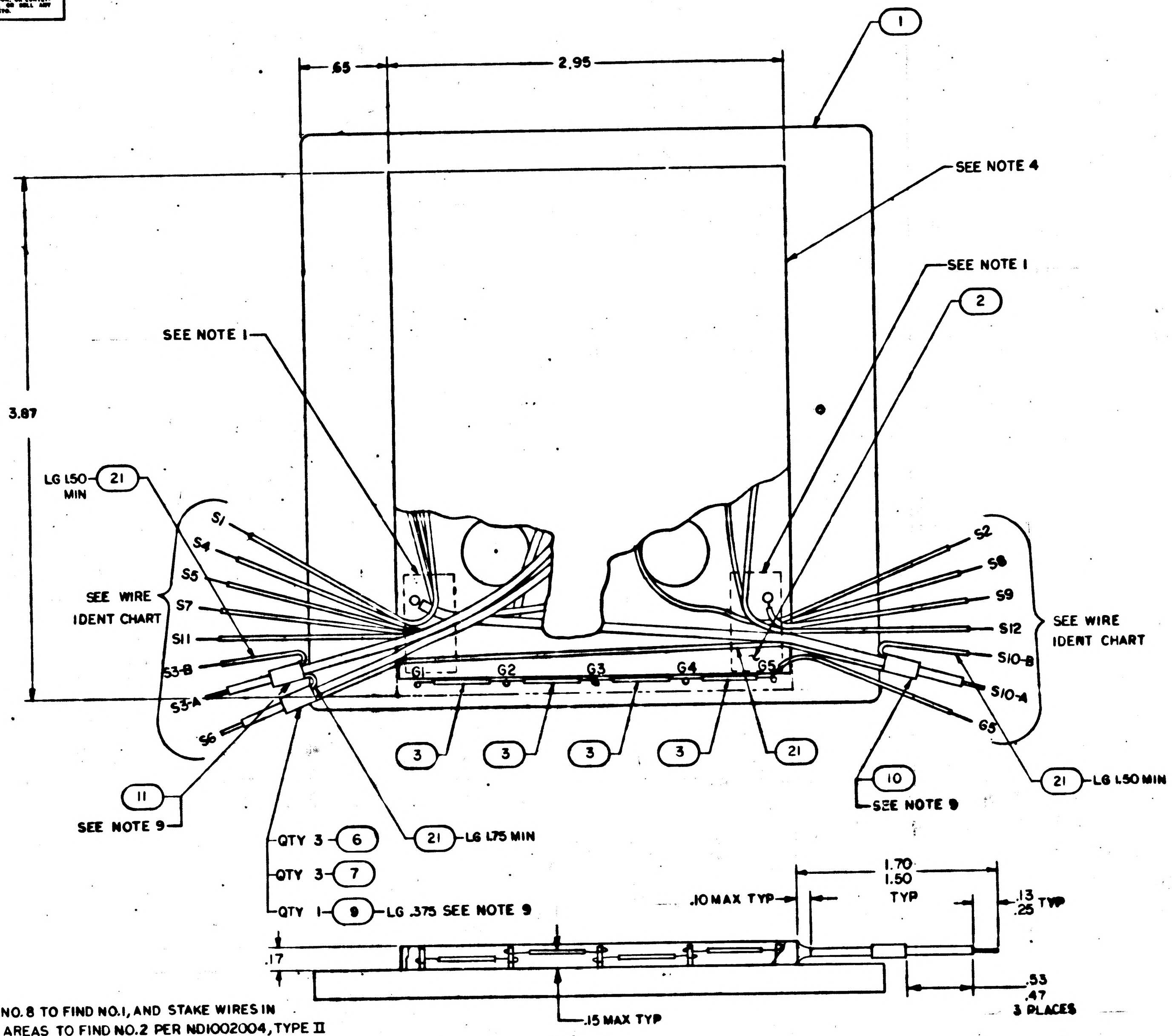

①
.65
2.95
SEE NOTE 4
SEE NOTE 1
②
SEE NOTE 1
3.87
LG 1.50 MIN ㉑
S1
S4
S5
S7
S11
S3-B
S3-A
S6
SEE WIRE IDENT CHART
S2
S8
S9
S12
S10-B
S10-A
G5
SEE WIRE IDENT CHART
G1
G2
G3
G4
G5
③
③
③
③
㉑
⑩ SEE NOTE 9
㉑ LG 1.50 MIN
⑪ SEE NOTE 9
㉑ LG 1.75 MIN
QTY 3 ⑥
QTY 3 ⑦
QTY 1 ⑨ LG .375 SEE NOTE 9
1.70
1.50
TYP
.10 MAX TYP
.13
.25 TYP
.17
.15 MAX TYP
.53
.47
3 PLACES

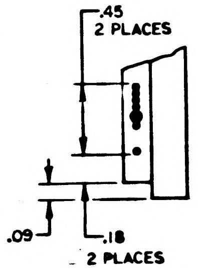

.45
2 PLACES
.09
.18
2 PLACES

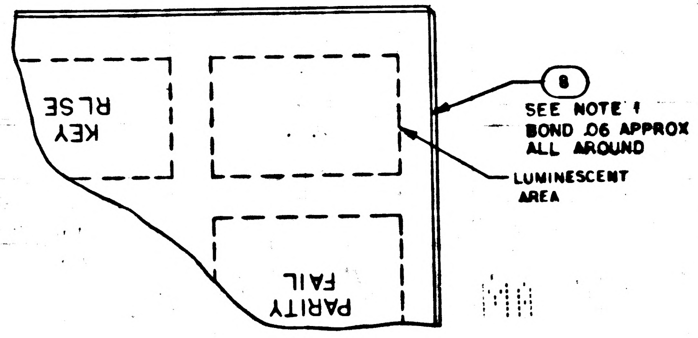

KEY RLSE
PARITY FAIL
⑧
SEE NOTE 1
BOND .06 APPROX ALL AROUND
LUMINESCENT AREA

NOTES

1. BOND FIND NO. 8 TO FIND NO. 1, AND STAKE WIRES IN INDICATED AREAS TO FIND NO. 2 PER ND1002004, TYPE II
2. SOLDER PER ND 1002071
3. ~~MARK EACH WIRE WITH ITS INDIVIDUAL PIN LETTER & NUMBER PER ND 1002019~~
4. ENCAPSULATE AREA SHOWN PER ND 1002036, CURING CYCLE A
5. ~~ALL WIRES TO BE FIND NO. 4 UNLESS OTHERWISE SPECIFIED~~
6. * DENOTES LENGTH IN FEET
7. INTERPRET DRAWING IN ACCORDANCE WITH STANDARDS PRESCRIBED BY MIL-D-70327
8. ~~SLEEVING PER MIL-I-23053, CLASS 2, SIZE 18 COLOR BLK FOR FIND NO. 9, COLOR RED FOR FIND NO. 10, COLOR YEL FOR FIND NO. 11~~
9. CRIMP LEADS FOR SOLDERLESS CONNECTIONS PER ND1002206

	QTY REQD	PART OR IDENTIFYING NO.	NOMENCLATURE OR DESCRIPTION	FIND NO.
	☒	1005750	INTERCONNECTION DIAGRAM	REF
*	4.0	1010416-19	WIRE, ELECTRICAL	21
*	.5	1010416-187	WIRE, ELECTRICAL	20
*	.5	1010416-123	WIRE, ELECTRICAL	19
*	.5	1010416-178	WIRE, ELECTRICAL	18
*	.5	1010416-169	WIRE, ELECTRICAL	17
*	.5	1010416-149	WIRE, ELECTRICAL	16
*	.5	1010416-141	WIRE, ELECTRICAL	15
*	.5	1010416-147	WIRE, ELECTRICAL	14
*	.5	1010416-160	WIRE, ELECTRICAL	13
*	.5	1010416-15	WIRE, ELECTRICAL	12
*	.04	1006322-107	SLEEVING, INSULATION	11
*	.04	1006322-82	SLEEVING, INSULATION	10
*	.04	1006322-32	SLEEVING, INSULATION	9
	1	1004856	INSULATOR, FRONT, ALARM DISPLAY	8
	3	1000242-1	FERRULE, ELECTRICAL	7
	3	1000243-1	FERRULE, ELECTRICAL	6
*	1.5	1010778-1	WIRE, SHIELDED	5
~~*~~	~~3.0~~	~~1010416-10~~	~~WIRE, ELECTRICAL~~	~~4~~
*	.5	1010416-11	WIRE, ELECTRICAL	3
	1	1004815	BOARD, INSULATOR	2
	1	1006745	INDICATOR E/L (ALARM)	1

LIST OF MATERIALS

1003758	
NEXT ASSY	USED ON
APPLICATION	

UNLESS OTHERWISE SPECIFIED
DIMENSIONS ARE IN INCHES
TOLERANCES ON
FRACTIONS ± DECIMALS ±.01 ANGLES ±
DO NOT SCALE THIS DRAWING
MATERIAL
HEAT TREATMENT
FINAL FINISH

MIT
INSTRUMENTATION LAB
CAMBRIDGE, MASS.
DWG. NO. CONTRACT
DRAWN B. Jensen DATE 26AUG64
CHECKED
APPROVAL Sept 1964
APPROVAL
NASA APPROVAL 9-22-64
MIT APPROVAL
MIT APPROVAL

MANNED SPACECRAFT CENTER
HOUSTON, TEXAS

INDICATOR E/L ASSY (ALARM)
AGC DSKY, NAV
100 SERIES

CODE IDENT NO. —
SIZE D
NASA DRAWING NO. 1003800
SCALE 2/1
WT
SHEET 1 OF 1

NOTICE — WHEN GOVERNMENT DRAWINGS, SPECIFICATIONS, OR OTHER DATA ARE USED FOR ANY PURPOSE OTHER THAN IN CONNECTION WITH A DEFINITELY RELATED GOVERNMENT PROCUREMENT OPERATION, THE UNITED STATES GOVERNMENT THEREBY INCURS NO RESPONSIBILITY NOR ANY OBLIGATION WHATSOEVER; AND THE FACT THAT THE GOVERNMENT MAY HAVE FORMULATED, FURNISHED, OR IN ANY WAY SUPPLIED THE SAID DRAWINGS, SPECIFICATIONS OR OTHER DATA IS NOT TO BE REGARDED BY IMPLICATION OR OTHERWISE AS IN ANY MANNER LICENSING THE HOLDER OR ANY OTHER PERSON OR CORPORATION, OR CONVEYING ANY RIGHTS OR PERMISSION TO MANUFACTURE, USE, OR SELL ANY PATENTED INVENTION THAT MAY IN ANY WAY BE RELATED THERETO.

1003800 E

REVISIONS 12765			
SYM	DESCRIPTION	DATE	APPROVAL
A	REVISED PER TDRR 13433 DR CHK RTM	11/23/64	
B	REVISED PER TDRR 14277 DR D.Q. CHK	12/16/64	
C	REVISED PER TDRR 15648 DR A.J. Bison CHK JCJ	2/9/65	
D	REVISED PER TDRR 19229 DR M. Ripley CHK	6/14/65	
E	REVISED PER TDRR 20558 DR M. Ripley CHK	8/26/65	

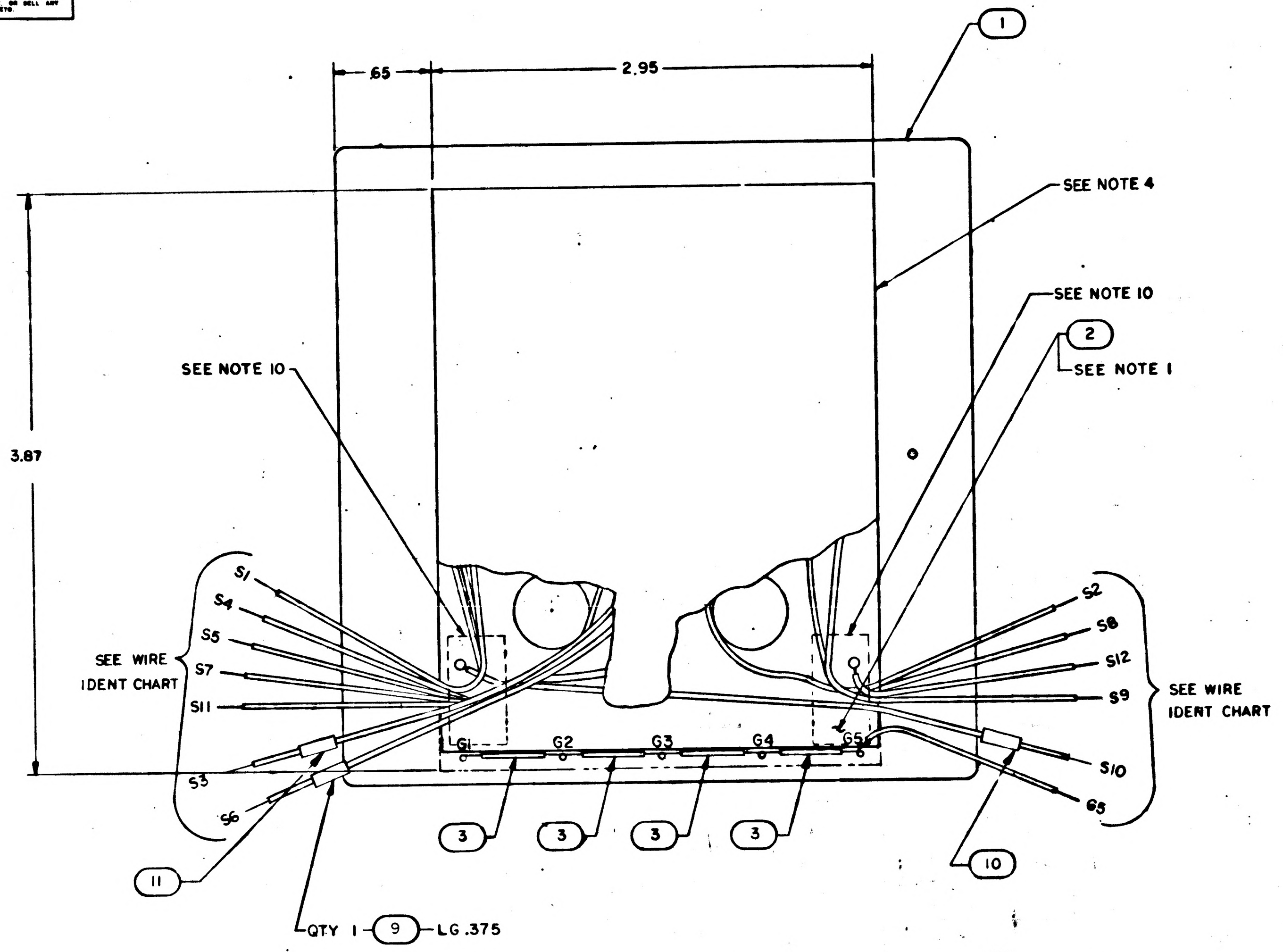

WIRE IDENT CHART			
LEAD DESIGNATION	FIND NO.	COLOR CODE (REF)	
		BASIC	TRACER
S1	12	YEL	—
S2	13	YEL	GRN
S4	14	BLK	YEL
S5	15	YEL	ORN
S7	16	RED	YEL
S8	17	YEL	BLU
S9	18	YEL	VIO
S11	19	YEL	BRN
S12	20	YEL	GRY
~~S3-B~~	~~21~~	~~GRY~~	~~—~~
~~S10-B~~	~~21~~	~~GRY~~	~~—~~
G5	3	BLK	—
S3	22&11	YELLOW SLEEVING	
S6	22&9	BLACK SLEEVING	
S10	22&10	RED SLEEVING	

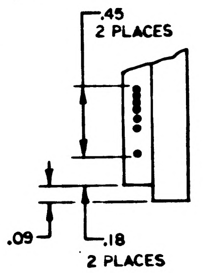

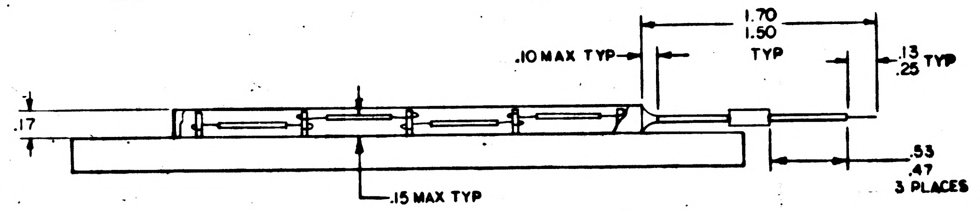

NOTES
1. BOND FIND NO. 8 & FIND NO. 2 TO FIND NO. 1 PER ND1002004, TYPE II OR TYPE V
2. SOLDER PER ND 1002071 USING SOLDER PER ND1002075
3. ~~MARK EACH WIRE WITH ITS INDIVIDUAL PIN LETTER & NUMBER PER ND 1002019~~
4. ENCAPSULATE AREA SHOWN PER ND 1002236, CURE SCHEDULE A
5. ~~ALL WIRES TO BE FIND NO. 4 UNLESS OTHERWISE SPECIFIED~~
6. * DENOTES LENGTH IN FEET
7. INTERPRET DRAWING IN ACCORDANCE WITH STANDARDS PRESCRIBED BY MIL-D-70327
8. ~~SLEEVING PER MIL-I-23053, CLASS 2, SIZE 14 COLOR BLK FOR FIND NO. 9, COLOR RED FOR FIND NO. 10, COLOR YEL FOR FIND NO. 11~~
~~9. CRIMP LEADS FOR SOLDERLESS CONNECTIONS PER ND1002206~~
10. STAKE WIRES IN INDICATED AREAS TO FIND NO. 2 PER ND1002004 TYPE V
11. IDENTIFY WITH DRAWING NUMBER AND REVISION PER ND1002019

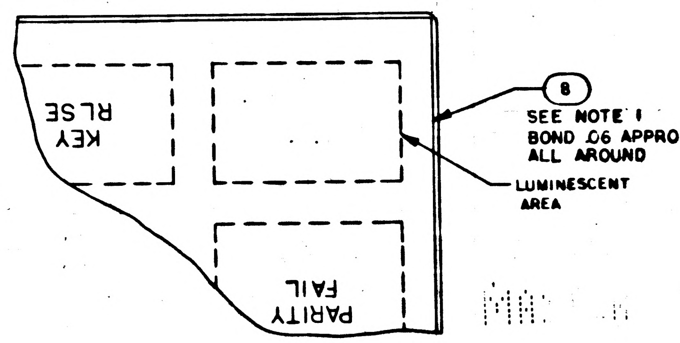

	QTY REQD	PART OR IDENTIFYING NO.	NOMENCLATURE OR DESCRIPTION	FIND NO.
	☒	1005750	INTERCONNECTION DIAGRAM	REF
*	1.5	1010416-20	WIRE, ELECTRICAL	22
~~*~~	~~1.0~~	~~1010416-19~~	~~WIRE, ELECTRICAL~~	~~21~~
*	.5	1010416-187	WIRE, ELECTRICAL	20
*	.5	1010416-123	WIRE, ELECTRICAL	19
*	.5	1010416-178	WIRE, ELECTRICAL	18
*	.5	1010416-169	WIRE, ELECTRICAL	17
*	.5	1010416-149	WIRE, ELECTRICAL	16
*	.5	1010416-141	WIRE, ELECTRICAL	15
*	.5	1010416-147	WIRE, ELECTRICAL	14
*	.5	1010416-160	WIRE, ELECTRICAL	13
*	.5	1010416-15	WIRE, ELECTRICAL	12
*	.04	1006322-103	SLEEVING, INSULATION	11
*	.04	1006322-078	SLEEVING, INSULATION	10
*	.04	1006322-028	SLEEVING, INSULATION	9
	1	1004856	INSULATOR, FRONT, ALARM DISPLAY	8
	~~3~~	~~1000242-1~~	~~FERRULE, ELECTRICAL~~	~~7~~
	~~3~~	~~1000243-1~~	~~FERRULE, ELECTRICAL~~	~~6~~
~~*~~	~~1.5~~	~~1010778-1~~	~~WIRE, SHIELDED~~	~~5~~
~~*~~	~~3.0~~	~~1010416-10~~	~~WIRE, ELECTRICAL~~	~~4~~
*	.5	1010416-11	WIRE, ELECTRICAL	3
	1	1004815	BOARD, INSULATOR	2
	1	1006745	INDICATOR E/L (ALARM)	1

LIST OF MATERIALS

1003758	
NEXT ASSY	USED ON
APPLICATION	

UNLESS OTHERWISE SPECIFIED
DIMENSIONS ARE IN INCHES
TOLERANCES ON
FRACTIONS ± DECIMALS ±.01 ANGLES ±
DO NOT SCALE THIS DRAWING
MATERIAL
HEAT TREATMENT
FINAL FINISH

MIT
INSTRUMENTATION LAB
CAMBRIDGE, MASS.
DWG. NO. CONTRACT
DRAWN B. Jansen DATE 26AUG64
CHECKED
APPROVAL Sept 15/64
APPROVAL
NASA APPROVAL 9-22-64
MIT APPROVAL
MIT APPROVAL

MANNED SPACECRAFT CENTER
HOUSTON, TEXAS

INDICATOR E/L ASSY (ALARM)
AGC DSKY, NAV
100 SERIES

CODE IDENT NO. 80230
SIZE D
NASA DRAWING NO. 1003800
SCALE 2/1
WT
SHEET 1 OF 1

NOTICE — WHEN GOVERNMENT DRAWINGS, SPECIFICATIONS, OR OTHER DATA ARE USED FOR ANY PURPOSE OTHER THAN IN CONNECTION WITH A DEFINITELY RELATED GOVERNMENT PROCUREMENT OPERATION, THE UNITED STATES GOVERNMENT THEREBY INCURS NO RESPONSIBILITY NOR ANY OBLIGATION WHATSOEVER; AND THE FACT THAT THE GOVERNMENT MAY HAVE FORMULATED, FURNISHED, OR IN ANY WAY [illegible] OTHER DATA IS NOT TO BE REGARDED BY IMPLICATION OR OTHERWISE AS IN ANY MANNER LICENSING THE HOLDER OR ANY OTHER PERSON OR CORPORATION, OR CONVEYING ANY RIGHTS OR PERMISSION TO MANUFACTURE, USE, OR SELL ANY PATENTED INVENTION THAT MAY IN ANY WAY BE RELATED THERETO.

1003800 —

SYM	DESCRIPTION	DATE	APPROVAL
	REVISIONS 12765		

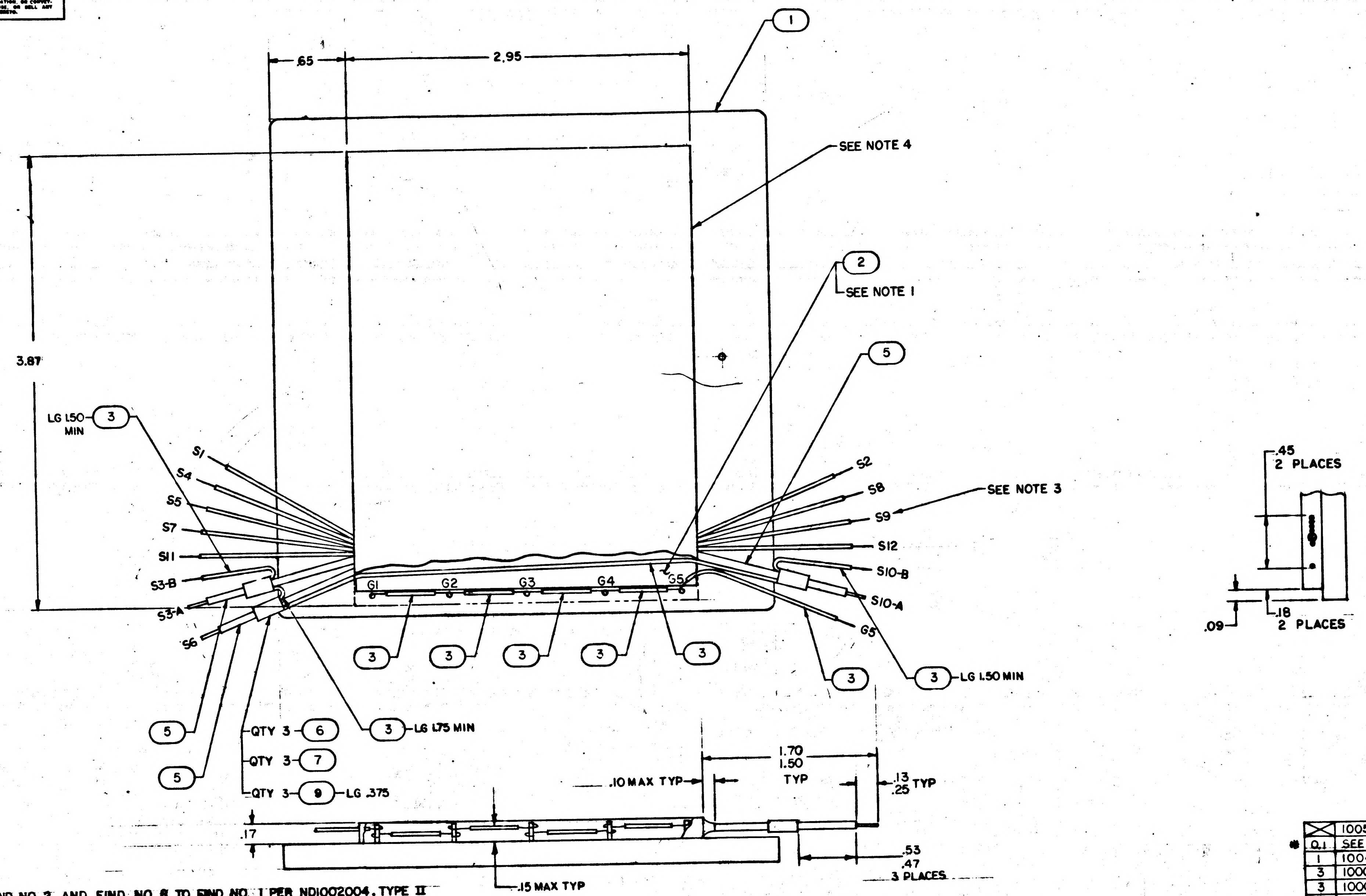

1
.65
2.95
SEE NOTE 4
2
SEE NOTE 1
5
3.87
LG 1.50 MIN
3
S1
S4
S5
S7
S11
S3-B
S3-A
S6
S2
S8
SEE NOTE 3
S9
S12
S10-B
S10-A
G5
G1
G2
G3
G4
G5
3
3
3
3
3
3
3 LG 1.50 MIN
5
5
QTY 3 6
QTY 3 7
QTY 3 9 LG .375
3 LG 1.75 MIN
.45
2 PLACES
.18
2 PLACES
.09
1.70
1.50
TYP
.10 MAX TYP
.13
.25 TYP
.17
.53
.47
3 PLACES
.15 MAX TYP

NOTES
1. BOND FIND NO. 2 AND FIND NO. 8 TO FIND NO. 1 PER ND1002004, TYPE II
2. SOLDER PER ND 1002071
3. MARK EACH WIRE WITH ITS INDIVIDUAL PIN LETTER & NUMBER PER ND 1002019
4. ENCAPSULATE AREA SHOWN PER ND 1002036, CURING CYCLE A
5. ALL WIRES TO BE FIND NO. 4 UNLESS OTHERWISE SPECIFIED
6. ✱ DENOTES LENGTH IN FEET
7. INTERPRET DRAWING IN ACCORDANCE WITH STANDARDS PRESCRIBED BY MIL-D-70327
8. SLEEVING PER MIL-I-23053, CLASS 2, COLOR BLACK, SIZE NO. 14

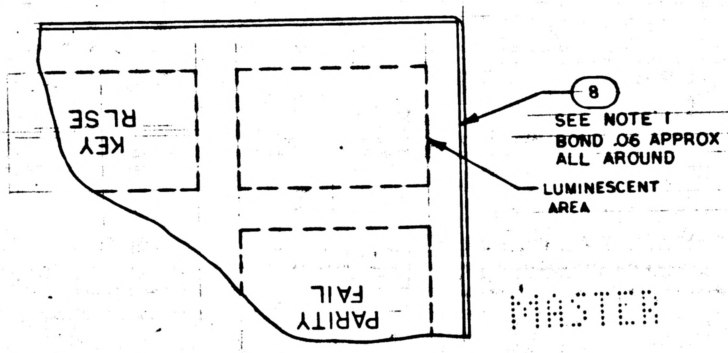

KEY RLSE
PARITY FAIL
8
SEE NOTE 1
BOND .06 APPROX ALL AROUND
LUMINESCENT AREA

MASTER

	QTY REQD	PART OR IDENTIFYING NO.	NOMENCLATURE OR DESCRIPTION	FIND NO.
	☒	1005750	INTERCONNECTION DIAGRAM	REF
✱	0.1	SEE NOTE 8	SLEEVING, INSULATION	9
	1	1004811	INSULATOR, FRONT, ALARM DISPLAY	8
	3	1000242-1	FERRULE, ELECTRICAL	7
	3	1000243-1	FERRULE, ELECTRICAL	6
✱	1.5	1010778-1	WIRE, SHIELDED	5
✱	3.0	1010416-10	WIRE, ELECTRICAL	4
✱	1.2	1010416-11	WIRE, ELECTRICAL	3
	1	1004815	BOARD, INSULATOR	2
	1	1006745	INDICATOR E/L (ALARM)	1

LIST OF MATERIALS

1003758	
NEXT ASSY	USED ON
APPLICATION	

UNLESS OTHERWISE SPECIFIED
DIMENSIONS ARE IN INCHES
TOLERANCES ON
FRACTIONS ± DECIMALS ±.01 ANGLES ±
DO NOT SCALE THIS DRAWING
MATERIAL
HEAT TREATMENT
FINAL FINISH

MIT
INSTRUMENTATION LAB
CAMBRIDGE, MASS.
DWG. NO. CONTRACT
DRAWN B. Jansen DATE 26AUG64
CHECKED R. Edwards 10 Sept 64
APPROVAL Sept 8/64
APPROVAL 21 Sept 64
NASA APPROVAL W. J. Rhine 9-22-64
MIT APPROVAL
MIT APPROVAL 22 Sept 64

MANNED SPACECRAFT CENTER
HOUSTON, TEXAS

INDICATOR E/L ASSY (ALARM)
AGC DSKY, NAV
100 SERIES

CODE IDENT NO. —
SIZE D
NASA DRAWING NO. 1003800
SCALE 2/1 WT SHEET 1 OF 1

INCHES

NOTICE — WHEN GOVERNMENT DRAWINGS, SPECIFICATIONS, OR OTHER DATA ARE USED FOR ANY PURPOSE OTHER THAN IN CONNECTION WITH A DEFINITELY RELATED GOVERNMENT PROCUREMENT OPERATION, THE UNITED STATES GOVERNMENT THEREBY INCURS NO RESPONSIBILITY NOR ANY OBLIGATION WHATSOEVER; AND THE FACT THAT THE GOVERNMENT MAY HAVE FORMULATED, FURNISHED, OR IN ANY WAY SUPPLIED THE SAID DRAWINGS, SPECIFICATIONS OR OTHER DATA IS NOT TO BE REGARDED BY IMPLICATION OR OTHERWISE AS IN ANY MANNER LICENSING THE HOLDER OR ANY OTHER PERSON OR CORPORATION, OR CONVEYING ANY RIGHTS OR PERMISSION TO MANUFACTURE, USE, OR SELL ANY PATENTED INVENTION THAT MAY IN ANY WAY BE RELATED THERETO.

1003801 A

REVISIONS 12765			
SYM	DESCRIPTION	DATE	APPROVAL
A	REVISED PER TDRR 13433 DR Lepke CHK	11/24/64	

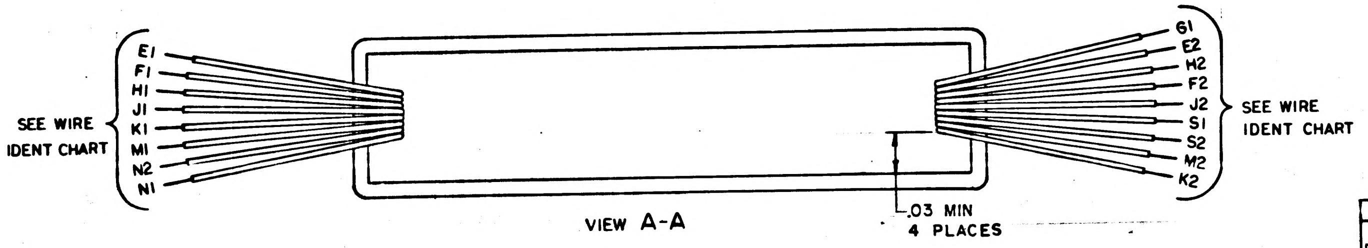
E1
F1
H1
J1
K1
M1
N2
N1
SEE WIRE IDENT CHART
G1
E2
H2
F2
J2
S1
S2
M2
K2
SEE WIRE IDENT CHART
VIEW A-A
.03 MIN 4 PLACES

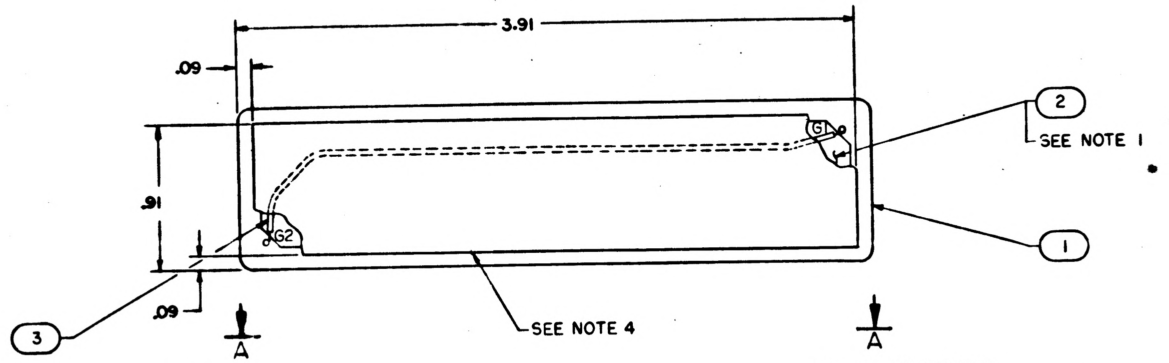
3.91
.09
.91
.09
G1
G2
2
SEE NOTE 1
1
3
SEE NOTE 4
A
A

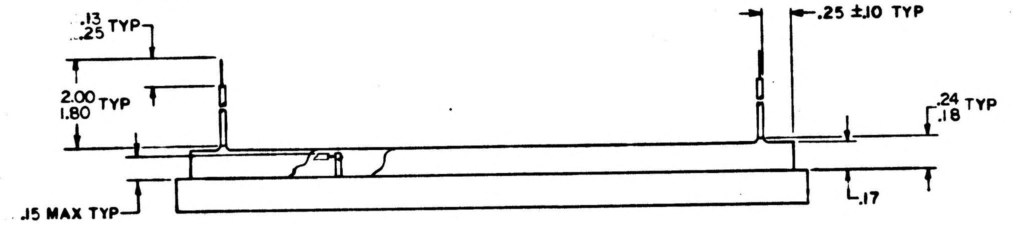
.13
.25 TYP
2.00
1.80 TYP
.25 ±.10 TYP
.24
.18 TYP
.15 MAX TYP
.17

WIRE IDENT CHART			
LEAD DESIGNATION	FIND NO.	COLOR CODE (REF)	
		BASIC	TRACER
E1	4	WHT	—
F1	6	↕	RED
H1	7		ORN
J1	8		GRN
K1	9		BLU
M1	10		BRN
N1	11	WHT	VIO
E2	12	RED	WHT
F2	13	↕	—
H2	14		ORN
J2	15		GRN
K2	16		BLU
M2	17		BRN
N2	18	RED	VIO
S1	19	YEL	—
S2	20	YEL	GRN
G1	3	BLK	—

NOTES
1. BOND FIND NO. 2 & FIND NO.5 TO FIND NO.1 PER ND1002004, TYPE II
2. SOLDER PER ND 1002071
~~3. MARK EACH WIRE WITH ITS INDIVIDUAL PIN LETTER & NUMBER PER ND 1002019~~
4. ENCAPSULATE AREA SHOWN PER ND 1002036, CURING CYCLE A
5. INTERPRET DRAWING IN ACCORDANCE WITH STANDARDS PRESCRIBED BY MIL-D-70327
~~6. ALL WIRES TO BE FIND NO.4 UNLESS OTHERWISE SPECIFIED~~
7. ● DENOTES LENGTH IN FEET
8. AFTER LOCATING FIND NO.5 AS SPECIFIED, TRIM TO DIMENSION SHOWN

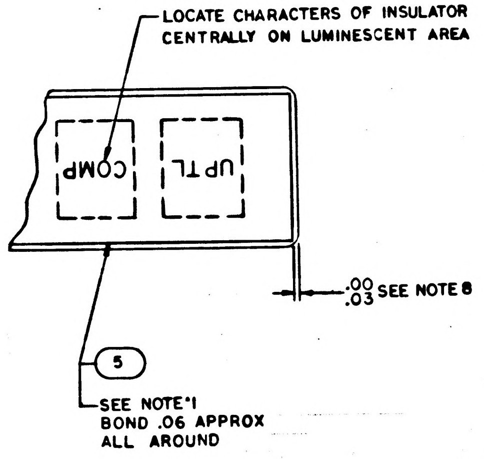
LOCATE CHARACTERS OF INSULATOR CENTRALLY ON LUMINESCENT AREA
COMP
UPTL
.00
.03 SEE NOTE 8
5
SEE NOTE 1
BOND .06 APPROX ALL AROUND

MASTER

	QTY REQD	PART OR IDENTIFYING NO.	NOMENCLATURE OR DESCRIPTION	FIND NO.
	☒	1005750	INTERCONNECTION DIAGRAM	REF
●	.7	1010416-160	WIRE, ELECTRICAL	20
●	.7	1010416-15	WIRE, ELECTRICAL	19
●	.7	1010416-176	WIRE, ELECTRICAL	18
●	.7	1010416-121	WIRE, ELECTRICAL	17
●	.7	1010416-167	WIRE, ELECTRICAL	16
●	.7	1010416-158	WIRE, ELECTRICAL	15
●	.7	1010416-140	WIRE, ELECTRICAL	14
●	.7	1010416-13	WIRE, ELECTRICAL	13
●	.7	1010416-194	WIRE, ELECTRICAL	12
●	.7	1010416-182	WIRE, ELECTRICAL	11
●	.7	1010416-128	WIRE, ELECTRICAL	10
●	.7	1010416-173	WIRE, ELECTRICAL	9
●	.7	1010416-164	WIRE, ELECTRICAL	8
●	.7	1010416-146	WIRE, ELECTRICAL	7
●	.7	1010416-137	WIRE, ELECTRICAL	6
	1	1004809	INSULATOR, FRONT, PROGRAM DISPLAY	5
●	.7	1010416-20	WIRE, ELECTRICAL	4
●	0.7	1010416-11	WIRE, ELECTRICAL	3
	1	1004813	BOARD, INSULATOR	2
	1	1006744	INDICATOR E/L (PROG)	1

LIST OF MATERIALS

1003758	
NEXT ASSY	USED ON
APPLICATION	

UNLESS OTHERWISE SPECIFIED DIMENSIONS ARE IN INCHES
TOLERANCES ON
FRACTIONS ± DECIMALS ±.01 ANGLES ±
DO NOT SCALE THIS DRAWING
MATERIAL
HEAT TREATMENT
FINAL FINISH

MIT INSTRUMENTATION LAB
CAMBRIDGE, MASS.
DWG. NO. CONTRACT
DRAWN B Jensen DATE 25AUG64
CHECKED P. Edwards 9 Sept 64
APPROVAL Sept 15/64
APPROVAL
NASA APPROVAL W J Rhine 9-22-64
MIT APPROVAL
MIT APPROVAL 22 Sept 64

MANNED SPACECRAFT CENTER
HOUSTON, TEXAS

INDICATOR E/L ASSY (PROG)
AGC DSKY, NAV & MAIN
100 SERIES

CODE IDENT NO. —— SIZE D NASA DRAWING NO. 1003801
SCALE 2/1 WT SHEET 1 OF 1

NOTICE — WHEN GOVERNMENT DRAWINGS, SPECIFICATIONS, OR OTHER DATA ARE USED FOR ANY PURPOSE OTHER THAN IN CONNECTION WITH A DEFINITELY RELATED GOVERNMENT PROCUREMENT OPERATION, THE UNITED STATES GOVERNMENT THEREBY INCURS NO RESPONSIBILITY NOR ANY OBLIGATION WHATSOEVER, AND THE FACT THAT THE GOVERNMENT MAY HAVE FORMULATED, FURNISHED, OR IN ANY WAY SUPPLIED THE SAID DRAWINGS, SPECIFICATIONS OR OTHER DATA IS NOT TO BE REGARDED BY IMPLICATION OR OTHERWISE AS IN ANY MANNER LICENSING THE HOLDER OR ANY OTHER PERSON OR CORPORATION, OR CONVEYING ANY RIGHTS OR PERMISSION TO MANUFACTURE, USE, OR SELL ANY PATENTED INVENTION THAT MAY IN ANY WAY BE RELATED THERETO.

1003801 | B

REVISIONS			12765
SYM	DESCRIPTION	DATE	APPROVAL
A	REVISED PER TDRR 13433 DR G. Sepka CHK	11/24/64	
B	REVISED PER TDRR 14277 DR D.A. Clermont CHK	12/4/64	

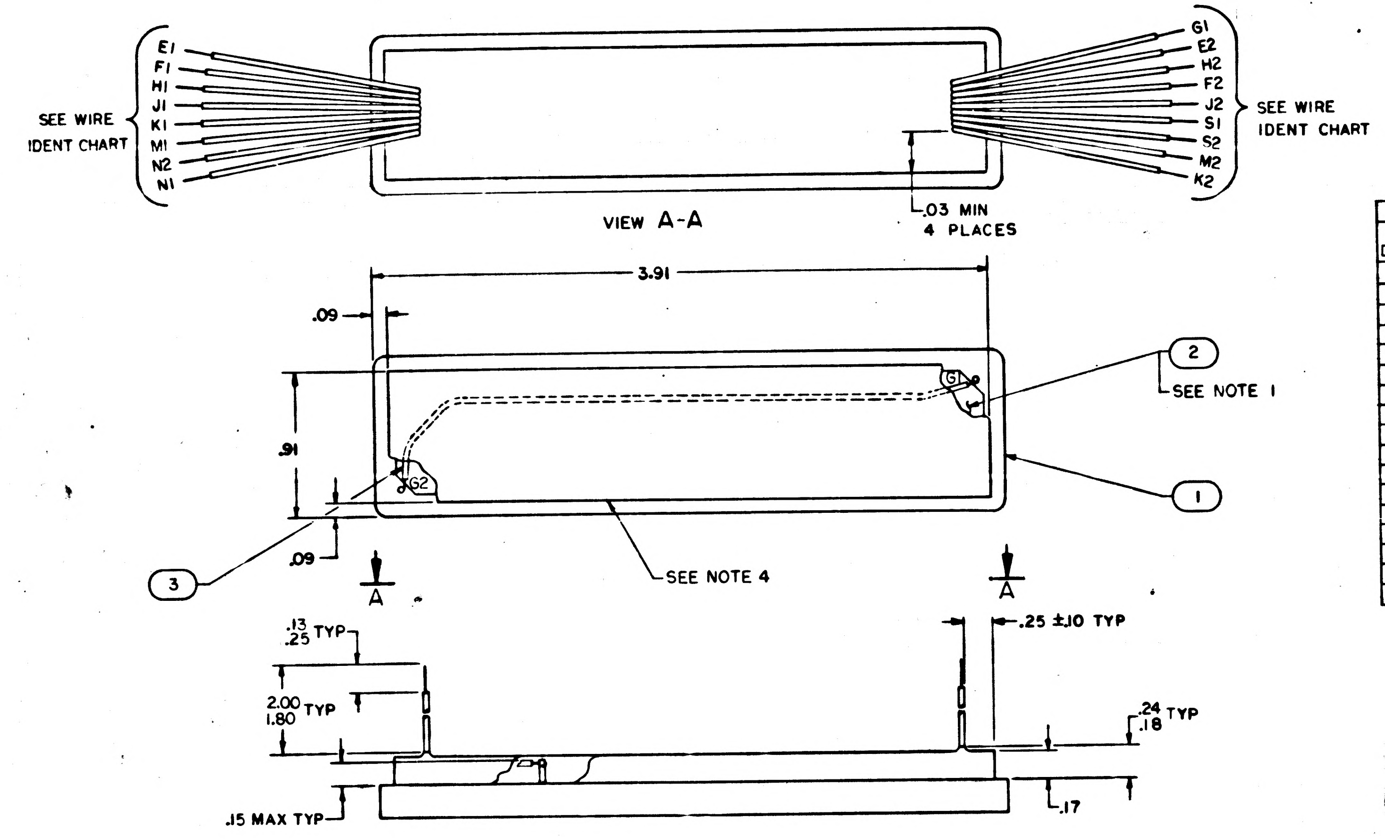
E1
F1
H1
J1
K1
M1
N2
N1
SEE WIRE IDENT CHART
G1
E2
H2
F2
J2
S1
S2
M2
K2
SEE WIRE IDENT CHART
VIEW A-A
.03 MIN 4 PLACES
3.91
.09
G1
G2
.91
.09
2
SEE NOTE 1
1
3
SEE NOTE 4
A
A
.13 .25 TYP
.25 ±.10 TYP
2.00 1.80 TYP
.24 .18 TYP
.15 MAX TYP
.17

WIRE IDENT CHART			
LEAD DESIGNATION	FIND NO.	COLOR CODE (REF)	
		BASIC	TRACER
E1	4	WHT	—
F1	6	↑	RED
H1	7		ORN
J1	8		GRN
K1	9		BLU
M1	10	↓	BRN
N1	11	WHT	VIO
E2	12	RED	WHT
F2	13	↑	—
H2	14		ORN
J2	15		GRN
K2	16		BLU
M2	17	↓	BRN
N2	18	RED	VIO
S1	19	YEL	—
S2	20	YEL	GRN
G1	3	BLK	—

NOTES
1. BOND FIND NO. 2 & FIND NO.5 TO FIND NO.1 PER ND1002004, TYPE II
2. SOLDER PER ND 1002071
~~3. MARK EACH WIRE WITH ITS INDIVIDUAL PIN LETTER & NUMBER PER ND 1002019~~
4. ENCAPSULATE AREA SHOWN PER ND 1002036, CURING CYCLE A
5. INTERPRET DRAWING IN ACCORDANCE WITH STANDARDS PRESCRIBED BY MIL-D-70327
6. ~~ALL WIRES TO BE FIND NO.4 UNLESS OTHERWISE SPECIFIED~~
7. ✱ DENOTES LENGTH IN FEET
8. AFTER LOCATING FIND NO.5 AS SPECIFIED, TRIM TO DIMENSION SHOWN

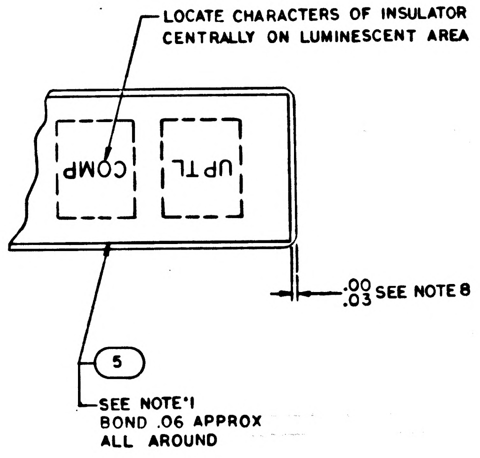
LOCATE CHARACTERS OF INSULATOR CENTRALLY ON LUMINESCENT AREA
COMP
UPTL
.00 .03 SEE NOTE 8
5
SEE NOTE 1 BOND .06 APPROX ALL AROUND

MASTER

	QTY REQD	PART OR IDENTIFYING NO.	NOMENCLATURE OR DESCRIPTION	FIND NO.
	☒	1005750	INTERCONNECTION DIAGRAM	REF
✱	.7	1010416-160	WIRE, ELECTRICAL	20
✱	.7	1010416-15	WIRE, ELECTRICAL	19
✱	.7	1010416-176	WIRE, ELECTRICAL	18
✱	.7	1010416-121	WIRE, ELECTRICAL	17
✱	.7	1010416-167	WIRE, ELECTRICAL	16
✱	.7	1010416-158	WIRE, ELECTRICAL	15
✱	.7	1010416-140	WIRE, ELECTRICAL	14
✱	.7	1010416-13	WIRE, ELECTRICAL	13
✱	.7	1010416-194	WIRE, ELECTRICAL	12
✱	.7	1010416-182	WIRE, ELECTRICAL	11
✱	.7	1010416-128	WIRE, ELECTRICAL	10
✱	.7	1010416-173	WIRE, ELECTRICAL	9
✱	.7	1010416-164	WIRE, ELECTRICAL	8
✱	.7	1010416-146	WIRE, ELECTRICAL	7
✱	.7	1010416-137	WIRE, ELECTRICAL	6
	1	1004809	INSULATOR, FRONT, PROGRAM DISPLAY	5
✱	.7	1010416-20	WIRE, ELECTRICAL	4
✱	0.7	1010416-11	WIRE, ELECTRICAL	3
	1	1004813	BOARD, INSULATOR	2
	1	1006307	INDICATOR E/L (PROG)	1

LIST OF MATERIALS

1003758	
NEXT ASSY	USED ON
APPLICATION	

UNLESS OTHERWISE SPECIFIED
DIMENSIONS ARE IN INCHES
TOLERANCES ON
FRACTIONS ± DECIMALS ±.01 ANGLES ±
DO NOT SCALE THIS DRAWING
MATERIAL
HEAT TREATMENT
FINAL FINISH

MIT
INSTRUMENTATION LAB
CAMBRIDGE, MASS
DWG. NO. CONTRACT
DRAWN B. Jensen DATE 25AUG64
CHECKED R. Edwards 9 Sept 64
APPROVAL Sept 15 64
APPROVAL E. C. Hall 21 Sept 64
NASA APPROVAL W.J. Rhine 9-22-64
MIT APPROVAL
MIT APPROVAL 22 Sept 64

MANNED SPACECRAFT CENTER
HOUSTON, TEXAS

INDICATOR E/L ASSY (PROG)
AGC DSKY, NAV & MAIN
100 SERIES

CODE IDENT NO. —— SIZE D NASA DRAWING NO. 1003801
SCALE 2/1 WT SHEET 1 OF 1

NOTICE — WHEN GOVERNMENT DRAWINGS, SPECIFICATIONS, OR OTHER DATA ARE USED FOR ANY PURPOSE OTHER THAN IN CONNECTION WITH A DEFINITELY RELATED GOVERNMENT PROCUREMENT OPERATION, THE UNITED STATES GOVERNMENT THEREBY INCURS NO RESPONSIBILITY NOR ANY OBLIGATION WHATSOEVER; AND THE FACT THAT THE GOVERNMENT MAY HAVE FORMULATED, FURNISHED, OR IN ANY WAY SUPPLIED THE SAID DRAWINGS, SPECIFICATIONS OR OTHER DATA IS NOT TO BE REGARDED BY IMPLICATION OR OTHERWISE AS IN ANY MANNER LICENSING THE HOLDER OR ANY OTHER PERSON OR CORPORATION, OR CONVEYING ANY RIGHTS OR PERMISSION TO MANUFACTURE, USE, OR SELL ANY PATENTED INVENTION THAT MAY IN ANY WAY BE RELATED THERETO.

1003801 C

REVISIONS 12745

SYM	DESCRIPTION	DATE	APPROVAL
A	REVISED PER TDRR 13433 DR G. Sepka CHK	11/24/64	
B	REVISED PER TDRR 14277 DR D.A. Clermont CHK	12/16/64	
C	REVISED PER TDRR 15648 DR CHK	2/9/65	

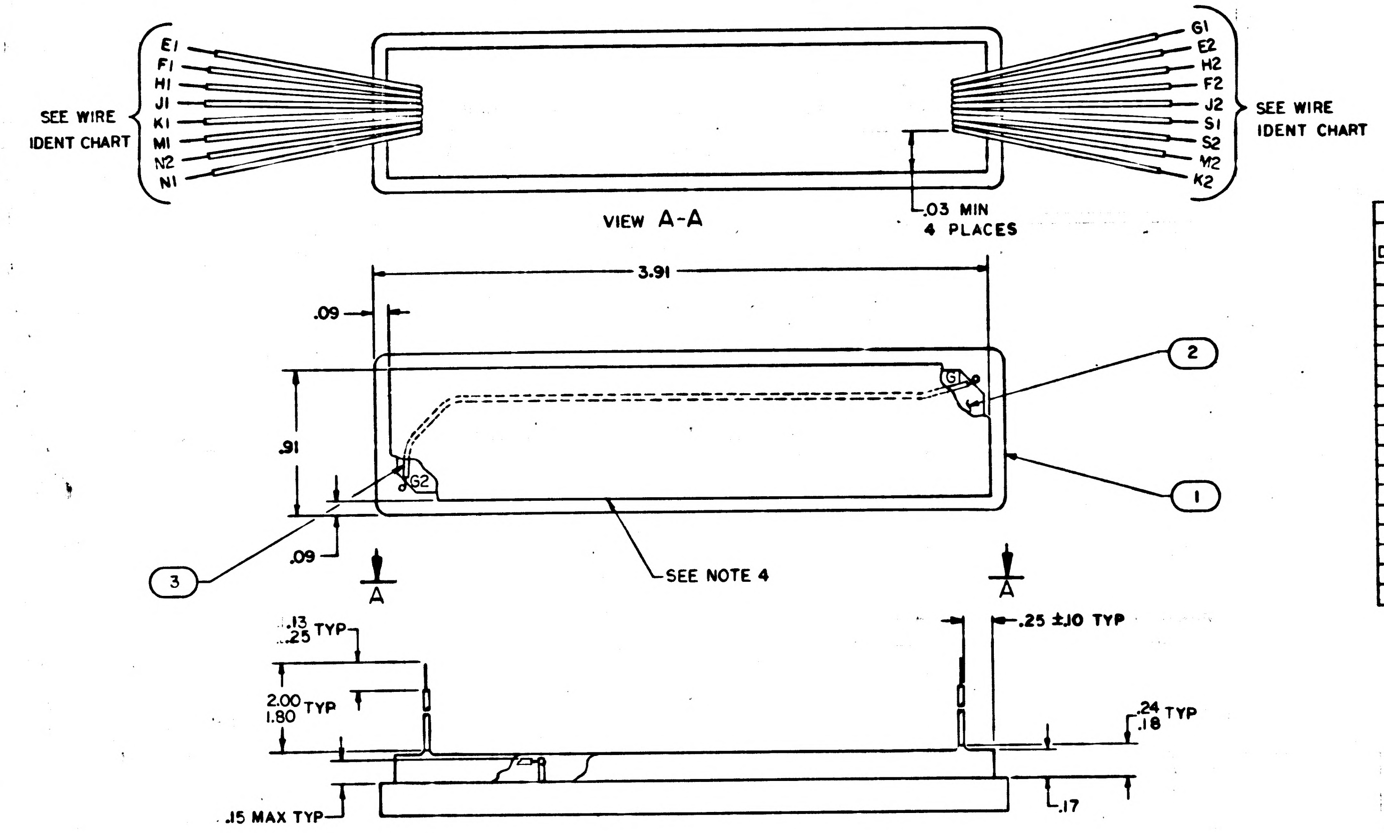

WIRE IDENT CHART			
LEAD DESIGNATION	FIND NO.	COLOR CODE (REF)	
		BASIC	TRACER
E1	4	WHT	—
F1	6	↑	RED
H1	7		ORN
J1	8		GRN
K1	9		BLU
M1	10	↓	BRN
N1	11	WHT	VIO
E2	12	RED	WHT
F2	13	↑	—
H2	14		ORN
J2	15		GRN
K2	16		BLU
M2	17	↓	BRN
N2	18	RED	VIO
S1	19	YEL	—
S2	20	YEL	GRN
G1	3	BLK	—

NOTES
1. BOND FIND NO.5 TO FIND NO.1 PER ND1002004, TYPE II
2. SOLDER PER ND 1002071
3. ~~MARK EACH WIRE WITH ITS INDIVIDUAL PIN LETTER & NUMBER PER ND 1002019~~
4. ENCAPSULATE AREA SHOWN PER ND 1002036, CURING CYCLE A
5. INTERPRET DRAWING IN ACCORDANCE WITH STANDARDS PRESCRIBED BY MIL-D-70327
6. ~~ALL WIRES TO BE FIND NO.4 UNLESS OTHERWISE IFIED~~
7. ● DENOTES LENGTH IN FEET
8. AFTER LOCATING FIND NO.5 AS SPECIFIED, TRIM TO DIMENSION SHOWN

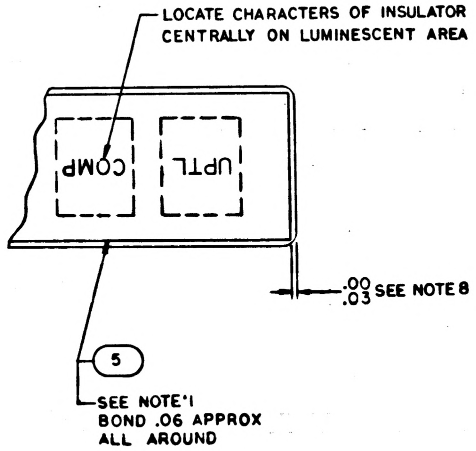
LOCATE CHARACTERS OF INSULATOR CENTRALLY ON LUMINESCENT AREA
COMP
UPTL
.00 .03 SEE NOTE 8
5
SEE NOTE 1
BOND .06 APPROX ALL AROUND

	QTY REQD	PART OR IDENTIFYING NO.	NOMENCLATURE OR DESCRIPTION	FIND NO.
	☒	1005750	INTERCONNECTION DIAGRAM	REF
*	.7	1010416-160	WIRE, ELECTRICAL	20
*	.7	1010416-15	WIRE, ELECTRICAL	19
*	.7	1010416-176	WIRE, ELECTRICAL	18
*	.7	1010416-121	WIRE, ELECTRICAL	17
*	.7	1010416-167	WIRE, ELECTRICAL	16
*	.7	1010416-158	WIRE, ELECTRICAL	15
*	.7	1010416-140	WIRE, ELECTRICAL	14
*	.7	1010416-13	WIRE, ELECTRICAL	13
*	.7	1010416-194	WIRE, ELECTRICAL	12
*	.7	1010416-182	WIRE, ELECTRICAL	11
*	.7	1010416-128	WIRE, ELECTRICAL	10
*	.7	1010416-173	WIRE, ELECTRICAL	9
*	.7	1010416-164	WIRE, ELECTRICAL	8
*	.7	1010416-146	WIRE, ELECTRICAL	7
*	.7	1010416-137	WIRE, ELECTRICAL	6
	1	1004809	INSULATOR, FRONT, PROGRAM DISPLAY	5
●	.7	1010416-20	WIRE, ELECTRICAL	4
●	0.7	1010416-11	WIRE, ELECTRICAL	3
	1	1004813	BOARD, INSULATOR	2
	1	1006744	INDICATOR E/L (PROG)	1

LIST OF MATERIALS

NEXT ASSY	USED ON
1003758	

APPLICATION

UNLESS OTHERWISE SPECIFIED DIMENSIONS ARE IN INCHES
TOLERANCES ON
FRACTIONS ± DECIMALS ±.01 ANGLES ±
DO NOT SCALE THIS DRAWING
MATERIAL
HEAT TREATMENT
FINAL FINISH

MIT INSTRUMENTATION LAB
CAMBRIDGE, MASS
DWG. NO. CONTRACT
DRAWN B Jensen DATE 25AUG64
CHECKED R. Edwards 9 Apr 64
APPROVAL Sept 15 64
APPROVAL
NASA APPROVAL 9-22-64
MIT APPROVAL
MIT APPROVAL 22 Sep 64

MANNED SPACECRAFT CENTER
HOUSTON, TEXAS

INDICATOR E/L ASSY (PROG)
AGC DSKY, NAV & MAIN
100 SERIES

CODE IDENT NO. ——
SIZE D
NASA DRAWING NO. 1003801
SCALE 2/1
WT
SHEET 1 OF 1

NOTICE — WHEN GOVERNMENT DRAWINGS, SPECIFICATIONS, OR OTHER DATA ARE USED FOR ANY PURPOSE OTHER THAN IN CONNECTION WITH A DEFINITELY RELATED GOVERNMENT PROCUREMENT OPERATION, THE UNITED STATES GOVERNMENT THEREBY INCURS NO RESPONSIBILITY NOR ANY OBLIGATION WHATSOEVER; AND THE FACT THAT THE GOVERNMENT MAY HAVE FORMULATED, FURNISHED, OR IN ANY WAY SUPPLIED THE SAID DRAWINGS, SPECIFICATIONS OR OTHER DATA IS NOT TO BE REGARDED BY IMPLICATION OR OTHERWISE AS IN ANY MANNER LICENSING THE HOLDER OR ANY OTHER PERSON OR CORPORATION, OR CONVEYING ANY RIGHTS OR PERMISSION TO MANUFACTURE, USE, OR SELL ANY PATENTED INVENTION THAT MAY IN ANY WAY BE RELATED THERETO.

D 1003801

REVISIONS 12765			
SYM	DESCRIPTION	DATE	APPROVAL
A	REVISED PER TDRR 13433 DR G. Sepka CHK [illegible] RTM	11/24/64	HWC
B	REVISED PER TDRR 14277 DR D.A. Clermont CHK CWW DM	12/16/64	HWC
C	REVISED PER TDRR 15648 DR A.J. Bison CHK JCJ DM	2/9/65	HWC
D	REVISED PER TDRR 17248 DR [illegible] CHK R.W.S. DM	3/22/65	HWC

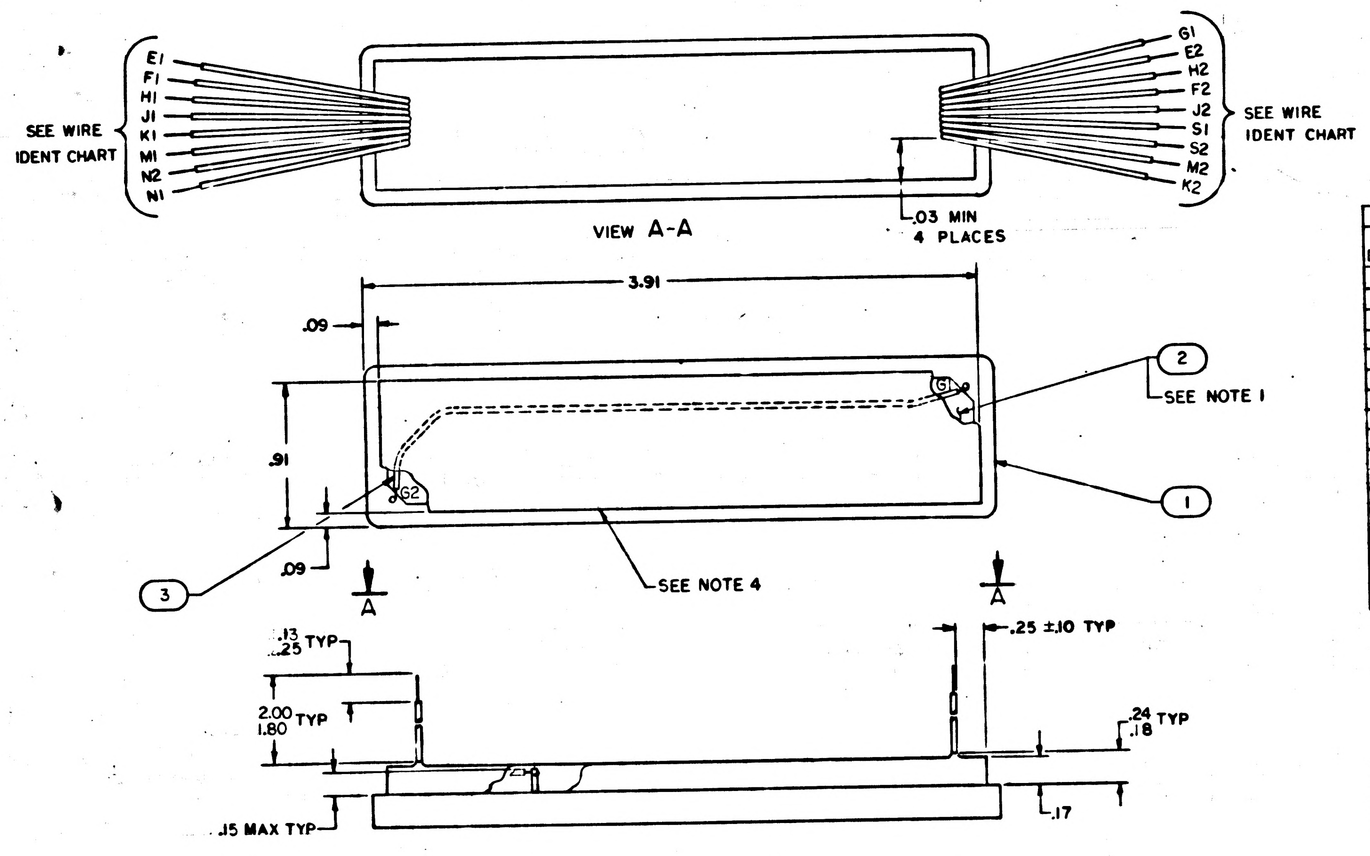

WIRE IDENT CHART			
LEAD DESIGNATION	FIND NO.	COLOR CODE (REF)	
		BASIC	TRACER
E1	4	WHT	—
F1	6	↑	RED
H1	7		ORN
J1	8		GRN
K1	9		BLU
M1	10	↓	BRN
N1	11	WHT	VIO
E2	12	RED	WHT
F2	13	↑	—
H2	14		ORN
J2	15		GRN
K2	16		BLU
M2	17	↓	BRN
N2	18	RED	VIO
S1	19	YEL	—
S2	20	YEL	GRN
G1	3	BLK	—

NOTES
1. BOND FIND NO.5 AND FIND NO.2 TO FIND NO.1 PER ND1002004, TYPE II OR TYPE V
2. SOLDER PER ND 1002071
3. ~~MARK EACH WIRE WITH ITS INDIVIDUAL PIN LETTER & NUMBER PER ND 1002019~~
4. ENCAPSULATE AREA SHOWN PER ND 1002036, CURING CYCLE A
5. INTERPRET DRAWING IN ACCORDANCE WITH STANDARDS PRESCRIBED BY MIL-D-70327
6. ~~ALL WIRES TO BE FIND NO.4 UNLESS OTHERWISE SPECIFIED~~
7. ● DENOTES LENGTH IN FEET
8. AFTER LOCATING FIND NO.5 AS SPECIFIED, TRIM TO DIMENSION SHOWN

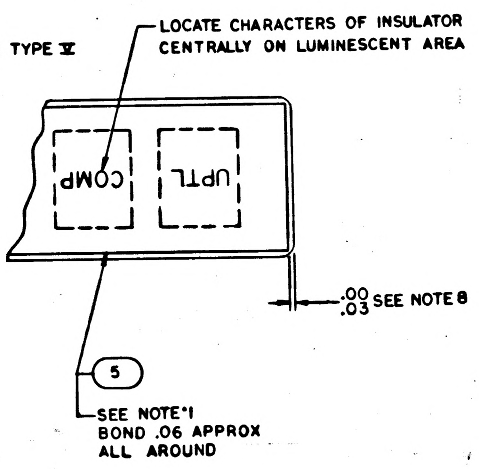

	QTY REQD	PART OR IDENTIFYING NO.	NOMENCLATURE OR DESCRIPTION	FIND NO.
	☒	1005750	INTERCONNECTION DIAGRAM	REF
*	.7	1010416-160	WIRE, ELECTRICAL	20
*	.7	1010416-15	WIRE, ELECTRICAL	19
*	.7	1010416-176	WIRE, ELECTRICAL	18
*	.7	1010416-121	WIRE, ELECTRICAL	17
*	.7	1010416-167	WIRE, ELECTRICAL	16
*	.7	1010416-158	WIRE, ELECTRICAL	15
*	.7	1010416-140	WIRE, ELECTRICAL	14
*	.7	1010416-13	WIRE, ELECTRICAL	13
*	.7	1010416-194	WIRE, ELECTRICAL	12
*	.7	1010416-182	WIRE, ELECTRICAL	11
*	.7	1010416-128	WIRE, ELECTRICAL	10
*	.7	1010416-173	WIRE, ELECTRICAL	9
*	.7	1010416-164	WIRE, ELECTRICAL	8
*	.7	1010416-146	WIRE, ELECTRICAL	7
*	.7	1010416-137	WIRE, ELECTRICAL	6
	1	1004809	INSULATOR, FRONT, PROGRAM DISPLAY	5
*	.7	1010416-20	WIRE, ELECTRICAL	4
*	0.7	1010416-11	WIRE, ELECTRICAL	3
	1	1004813	BOARD, INSULATOR	2
	1	1006744	INDICATOR E/L (PROG)	1

LIST OF MATERIALS

NEXT ASSY	USED ON
1003758	

APPLICATION

UNLESS OTHERWISE SPECIFIED
DIMENSIONS ARE IN INCHES
TOLERANCES ON
FRACTIONS ± DECIMALS ±.01 ANGLES ±
DO NOT SCALE THIS DRAWING
MATERIAL
HEAT TREATMENT
FINAL FINISH

MIT
INSTRUMENTATION LAB
CAMBRIDGE, MASS.
MFG. NO. CONTRACT
DRAWN B. Jensen DATE 25AUG64
CHECKED R. Edwards 9 Sept 64
APPROVAL [illegible] Sept 15/64
APPROVAL [illegible] 21 Sept 64
NASA APPROVAL W.J. Rhine 9-22-64
MIT APPROVAL
MIT APPROVAL [illegible] 22 Sept 64

MANNED SPACECRAFT CENTER
HOUSTON, TEXAS

INDICATOR E/L ASSY (PROG)
AGC DSKY, NAV & MAIN 100 SERIES

CODE IDENT NO. ——— SIZE D NASA DRAWING NO. 1003801
SCALE 2/1 WT SHEET 1 OF 1

NOTICE – WHEN GOVERNMENT DRAWINGS, SPECIFICATIONS OR OTHER DATA ARE USED FOR ANY PURPOSE OTHER THAN IN CONNECTION WITH A DEFINITELY RELATED GOVERNMENT PROCUREMENT OPERATION, THE UNITED STATES GOVERNMENT THEREBY INCURS NO RESPONSIBILITY NOR ANY OBLIGATION WHATSOEVER; AND THE FACT THAT THE GOVERNMENT MAY HAVE FORMULATED, FURNISHED OR IN ANY WAY SUPPLIED THE SAID DRAWINGS, SPECIFICATIONS OR OTHER DATA IS NOT TO BE REGARDED BY IMPLICATION OR OTHERWISE AS IN ANY MANNER LICENSING THE HOLDER OR ANY OTHER PERSON OR CORPORATION, OR CONVEYING ANY RIGHTS OR PERMISSION TO MANUFACTURE, USE, OR SELL ANY PATENTED INVENTION THAT MAY IN ANY WAY BE RELATED THERETO.

1003801 E

SYM	DESCRIPTION	DATE	APPROVAL
	REVISIONS 12765		
A	REVISED PER TDRR 13433 DR G. Sepka CHK	11/24/64	
B	REVISED PER TDRR 14277 DR D.A. Clermont CHK	12/16/64	
C	REVISED PER TDRR 15648 DR O.J. Bisson CHK JCJ	2/9/65	
D	REVISED PER TDRR 17248 DR CHK R.H.S.	3/24/65	
E	REVISED PER TDRR 19229 DR M. Ripley CHK R.H.E.	6/11/65	

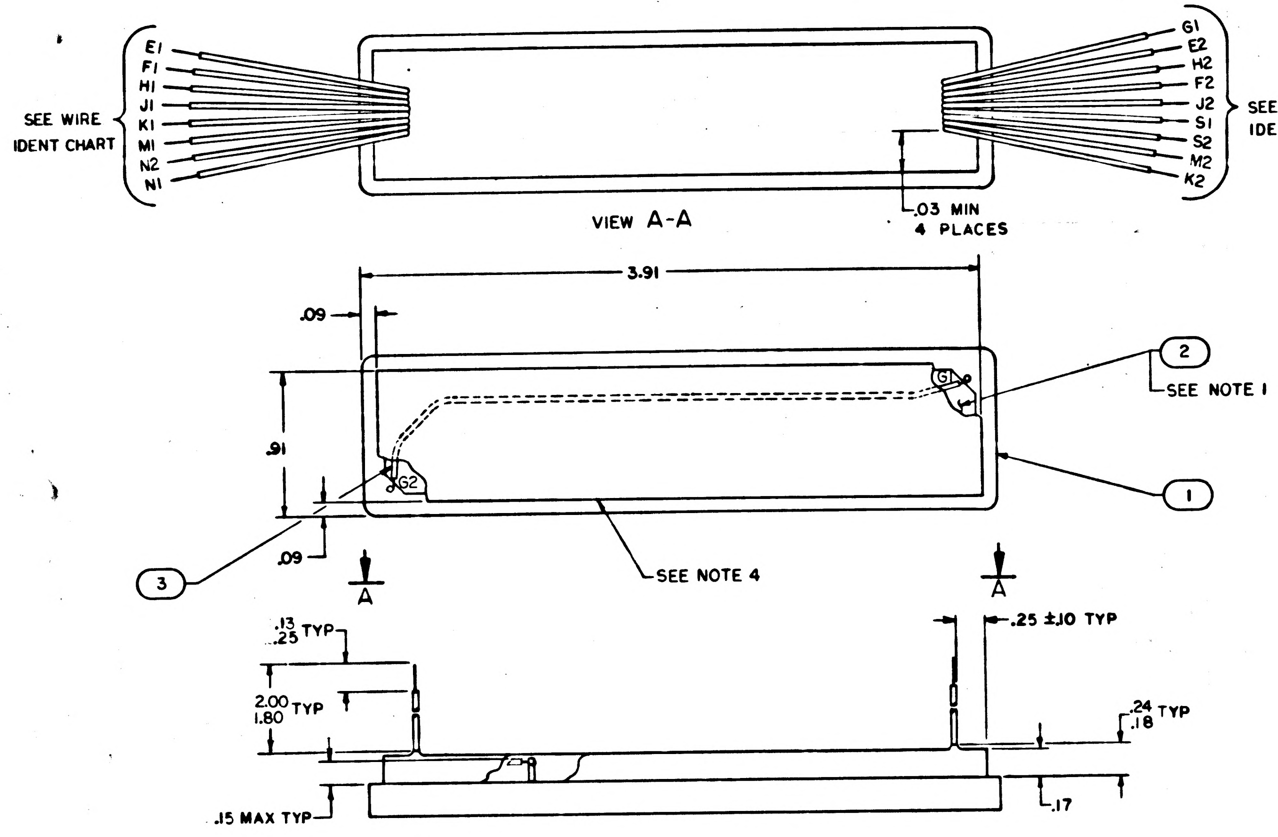

LEAD DESIGNATION	FIND NO.	COLOR CODE (REF) BASIC	COLOR CODE (REF) TRACER
E1	4	WHT	—
F1	6	↕	RED
H1	7	↕	ORN
J1	8	↕	GRN
K1	9	↕	BLU
M1	10	↕	BRN
N1	11	WHT	VIO
E2	12	RED	WHT
F2	13	↕	—
H2	14	↕	ORN
J2	15	↕	GRN
K2	16	↕	BLU
M2	17	↕	BRN
N2	18	RED	VIO
S1	19	YEL	—
S2	20	YEL	GRN
G1	3	BLK	—

NOTES
1. BOND FIND NO.5 AND FIND NO.2 TO FIND NO.1 PER ND1002004, TYPE II OR TYPE V
2. SOLDER PER ND 1002071
3. ~~MARK EACH WIRE WITH ITS INDIVIDUAL PIN LETTER & NUMBER PER ND 1002019~~
4. ENCAPSULATE AREA SHOWN PER ND 1002036, CURING CYCLE A
5. INTERPRET DRAWING IN ACCORDANCE WITH STANDARDS PRESCRIBED BY MIL-D-70327
6. ~~ALL WIRES TO BE FIND NO.4 UNLESS OTHERWISE SPECIFIED~~
7. ● DENOTES LENGTH IN FEET
8. AFTER LOCATING FIND NO.5 AS SPECIFIED, TRIM TO DIMENSION SHOWN

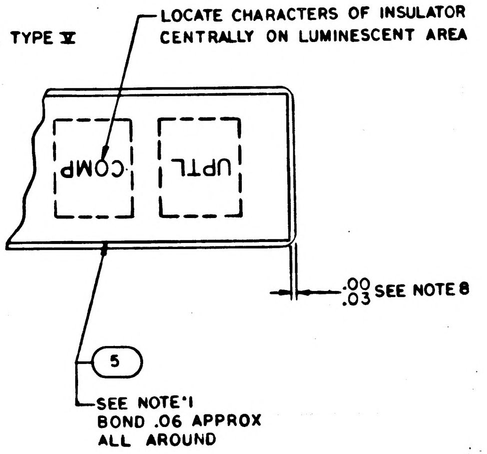
LOCATE CHARACTERS OF INSULATOR CENTRALLY ON LUMINESCENT AREA
COMP
UPTL
.00 .03 SEE NOTE 8
5
SEE NOTE 1 BOND .06 APPROX ALL AROUND

	QTY REQD	PART OR IDENTIFYING NO.	NOMENCLATURE OR DESCRIPTION	FIND NO.
	☒	1005750	INTERCONNECTION DIAGRAM	REF
*	.7	1010416-160	WIRE, ELECTRICAL	20
*	.7	1010416-15	WIRE, ELECTRICAL	19
*	.7	1010416-176	WIRE, ELECTRICAL	18
*	.7	1010416-121	WIRE, ELECTRICAL	17
*	.7	1010416-167	WIRE, ELECTRICAL	16
*	.7	1010416-158	WIRE, ELECTRICAL	15
*	.7	1010416-140	WIRE, ELECTRICAL	14
*	.7	1010416-13	WIRE, ELECTRICAL	13
*	.7	1010416-194	WIRE, ELECTRICAL	12
*	.7	1010416-182	WIRE, ELECTRICAL	11
*	.7	1010416-128	WIRE, ELECTRICAL	10
*	.7	1010416-173	WIRE, ELECTRICAL	9
*	.7	1010416-164	WIRE, ELECTRICAL	8
*	.7	1010416-146	WIRE, ELECTRICAL	7
*	.7	1010416-137	WIRE, ELECTRICAL	6
	1	1004857	INSULATOR, FRONT, PROGRAM DISPLAY	5
●	.7	1010416-20	WIRE, ELECTRICAL	4
●	0.7	1010416-11	WIRE, ELECTRICAL	3
	1	1004813	BOARD, INSULATOR	2
	1	1006744	INDICATOR E/L (PROG)	1

LIST OF MATERIALS

1003758	
NEXT ASSY	USED ON
APPLICATION	

UNLESS OTHERWISE SPECIFIED DIMENSIONS ARE IN INCHES
TOLERANCES ON
FRACTIONS ± DECIMALS ±.01 ANGLES ±
DO NOT SCALE THIS DRAWING
MATERIAL
HEAT TREATMENT
FINAL FINISH

MIT INSTRUMENTATION LAB
CAMBRIDGE, MASS.
DWG. NO. CONTRACT
DRAWN B. Jessen DATE 25AUG64
CHECKED R. Edwards 9 Sept 64
APPROVAL Sept 15/64
APPROVAL 21 Sept 64
NASA APPROVAL W.J. Rhine 9-22-64
MIT APPROVAL
MIT APPROVAL 22 Sept 64

MANNED SPACECRAFT CENTER
HOUSTON, TEXAS

INDICATOR E/L ASSY (PROG)
AGC DSKY, NAV & MAIN
100 SERIES

CODE IDENT NO. ———
SIZE D
NASA DRAWING NO. 1003801
SCALE 2/1
WT
SHEET 1 OF 1

NOTICE — WHEN GOVERNMENT DRAWINGS, SPECIFICATIONS, OR OTHER DATA ARE USED FOR ANY PURPOSE OTHER THAN IN CONNECTION WITH A DEFINITELY RELATED GOVERNMENT PROCUREMENT OPERATION, THE UNITED STATES GOVERNMENT THEREBY INCURS NO RESPONSIBILITY NOR ANY OBLIGATION WHATSOEVER, AND THE FACT THAT THE GOVERNMENT MAY HAVE FORMULATED, FURNISHED, OR IN ANY WAY SUPPLIED THE SAID DRAWINGS, SPECIFICATIONS OR OTHER DATA IS NOT TO BE REGARDED BY IMPLICATION OR OTHERWISE AS IN ANY MANNER LICENSING THE HOLDER OR ANY OTHER PERSON OR CORPORATION, OR CONVEYING ANY RIGHTS OR PERMISSION TO MANUFACTURE, USE, OR SELL ANY PATENTED INVENTION THAT MAY IN ANY WAY BE RELATED THERETO.

1003801 F

REVISIONS 12765			
SYM	DESCRIPTION	DATE	APPROVAL
A	REVISED PER TDRR 13433 DR G. Sepka CHK [illegible] RTM	11/24/64	[illegible]
B	REVISED PER TDRR 14277 DR D.A. Clermont CHK CWW OM	12/16/64	[illegible]
C	REVISED PER TDRR 15648 DR A.J. Bisson CHK JCJ OM	2/9/65	[illegible]
D	REVISED PER TDRR 17248 DR D. Belanger CHK R.H.S. OM	3/24/65	[illegible]
E	REVISED PER TDRR 19229 DR M. Ripley CHK R.H.S. OM	6/11/65	[illegible]
F	REVISED PER TDRR 20558 DR M. Ripley CHK L. Gaser OM	9/26/65	[illegible]

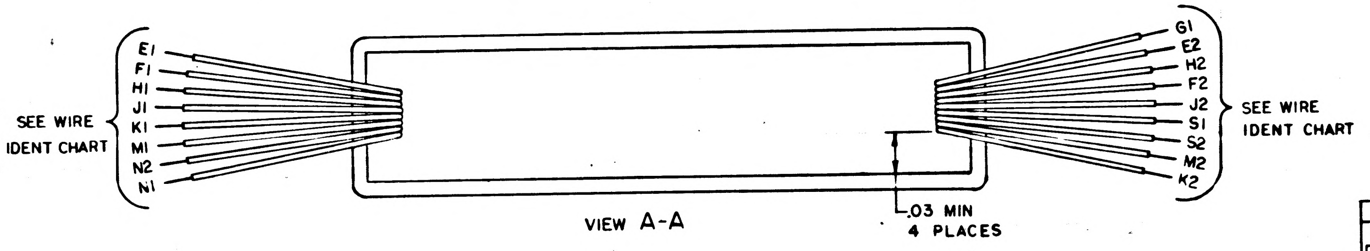

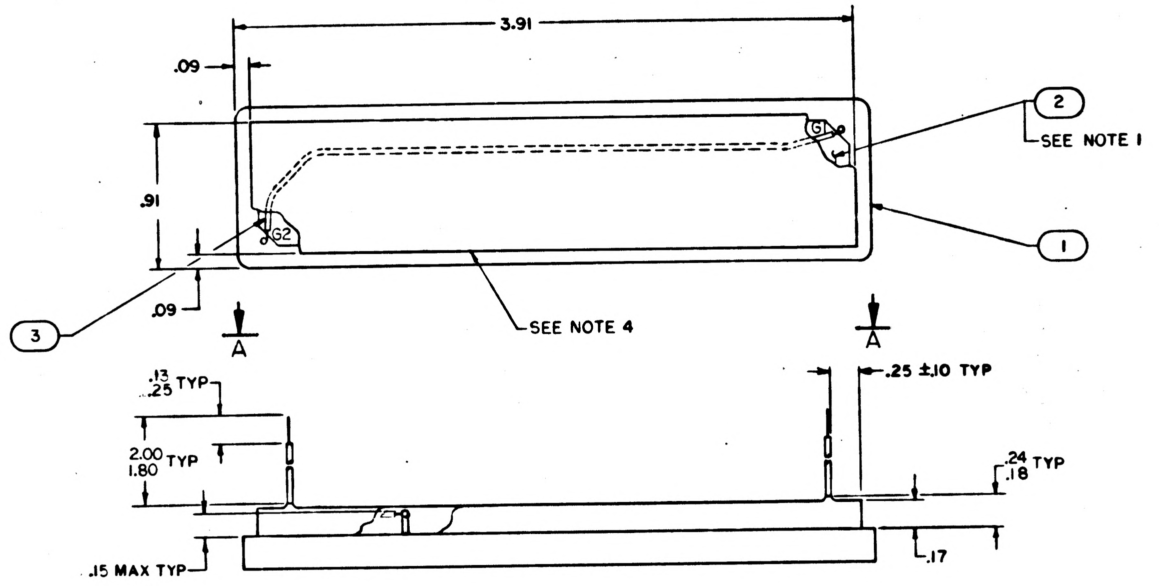

WIRE IDENT CHART			
LEAD DESIGNATION	FIND NO.	COLOR CODE (REF)	
		BASIC	TRACER
E1	4	WHT	—
F1	6	↑	RED
H1	7		ORN
J1	8		GRN
K1	9		BLU
M1	10	↓	BRN
N1	11	WHT	VIO
E2	12	RED	WHT
F2	13	↑	—
H2	14		ORN
J2	15		GRN
K2	16		BLU
M2	17	↓	BRN
N2	18	RED	VIO
S1	19	YEL	—
S2	20	YEL	GRN
G1	3	BLK	—

NOTES
1. BOND FIND NO.5 AND FIND NO.2 TO FIND NO.1 PER ND1002004, TYPE II OR TYPE V
2. SOLDER PER ND 1002071 USING SOLDER PER ND1002075
~~3. MARK EACH WIRE WITH ITS INDIVIDUAL PIN LETTER & NUMBER PER ND 1002019~~
4. ENCAPSULATE AREA SHOWN PER ND 1002236, CURE SCHEDULE A
5. INTERPRET DRAWING IN ACCORDANCE WITH STANDARDS PRESCRIBED BY MIL-D-70327
6. ~~ALL WIRES TO BE FIND NO.4 UNLESS OTHERWISE SPECIFIED~~
7. ✱ DENOTES LENGTH IN FEET
8. AFTER LOCATING FIND NO.5 AS SPECIFIED, TRIM TO DIMENSION SHOWN
9. IDENTIFY WITH DRAWING NUMBER AND REVISION PER ND1002019

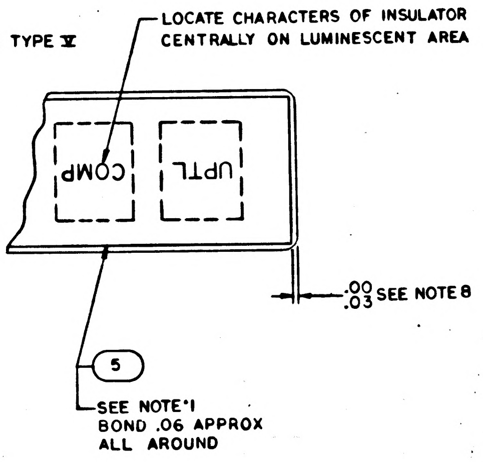
LOCATE CHARACTERS OF INSULATOR CENTRALLY ON LUMINESCENT AREA
COMP
UPTL
.00
.03 SEE NOTE 8
5
SEE NOTE 1
BOND .06 APPROX ALL AROUND

	QTY REQD	PART OR IDENTIFYING NO.	NOMENCLATURE OR DESCRIPTION	FIND NO.
	☒	1005750	INTERCONNECTION DIAGRAM	REF
✱	.7	1010416-160	WIRE, ELECTRICAL	20
✱	.7	1010416-15	WIRE, ELECTRICAL	19
✱	.7	1010416-176	WIRE, ELECTRICAL	18
✱	.7	1010416-121	WIRE, ELECTRICAL	17
✱	.7	1010416-167	WIRE, ELECTRICAL	16
✱	.7	1010416-158	WIRE, ELECTRICAL	15
✱	.7	1010416-140	WIRE, ELECTRICAL	14
✱	.7	1010416-13	WIRE, ELECTRICAL	13
✱	.7	1010416-194	WIRE, ELECTRICAL	12
✱	.7	1010416-182	WIRE, ELECTRICAL	11
✱	.7	1010416-128	WIRE, ELECTRICAL	10
✱	.7	1010416-173	WIRE, ELECTRICAL	9
✱	.7	1010416-164	WIRE, ELECTRICAL	8
✱	.7	1010416-146	WIRE, ELECTRICAL	7
✱	.7	1010416-137	WIRE, ELECTRICAL	6
	1	1004857	INSULATOR, FRONT, PROGRAM DISPLAY	5
✱	.7	1010416-20	WIRE, ELECTRICAL	4
✱	0.7	1010416-11	WIRE, ELECTRICAL	3
	1	1004813	BOARD, INSULATOR	2
	1	1006744	INDICATOR E/L (PROG)	1

LIST OF MATERIALS

NEXT ASSY	USED ON
1003809	
1003758	

APPLICATION

UNLESS OTHERWISE SPECIFIED DIMENSIONS ARE IN INCHES
TOLERANCES ON
FRACTIONS ± DECIMALS ±.01 ANGLES ±
DO NOT SCALE THIS DRAWING
MATERIAL
HEAT TREATMENT
FINAL FINISH

MIT
INSTRUMENTATION LAB
CAMBRIDGE, MASS.
DWG. NO. CONTRACT
DRAWN B. Jensen DATE 25AUG64
CHECKED R. Edwards 9 Sept 64
APPROVAL [illegible] Sept 15/64
APPROVAL [illegible] 21 Sept 64
NASA APPROVAL W.J. Rhine 9-22-64
MIT APPROVAL
MIT APPROVAL [illegible] 22 Sept 64

MANNED SPACECRAFT CENTER
HOUSTON, TEXAS

INDICATOR E/L ASSY (PROG)
AGC DSKY, NAV & MAIN 100 SERIES

CODE IDENT NO. 80230
SIZE D
NASA DRAWING NO. 1003801
SCALE 2/1
WT
SHEET 1 OF 1

NOTICE — WHEN GOVERNMENT DRAWINGS, SPECIFICATIONS, OR OTHER DATA ARE USED FOR ANY PURPOSE OTHER THAN IN CONNECTION WITH A DEFINITELY RELATED GOVERNMENT PROCUREMENT OPERATION THE UNITED STATES GOVERNMENT THEREBY INCURS NO RESPONSIBILITY NOR ANY OBLIGATION WHATSOEVER AND THE FACT THAT THE GOVERNMENT MAY HAVE FORMULATED, FURNISHED, OR IN ANY WAY SUPPLIED THE SAID DRAWINGS, SPECIFICATIONS OR OTHER DATA IS NOT TO BE REGARDED BY IMPLICATION OR OTHERWISE AS IN ANY MANNER LICENSING THE HOLDER OR ANY OTHER PERSON OR CORPORATION, OR CONVEYING ANY RIGHTS OR PERMISSION TO MANUFACTURE, USE, OR SELL ANY PATENTED INVENTION THAT MAY IN ANY WAY BE RELATED THERETO

1003801 G

REVISIONS 12765			
SYM	DESCRIPTION	DATE	APPROVAL
A	REVISED PER TDRR 13433 DR G. Sepka CHK	11/24/64	
B	REVISED PER TDRR 14277 DR D.A. Clermont CHK	12/16/64	
C	REVISED PER TDRR 15648 DR A.J. Bisson CHK	2/9/65	
D	REVISED PER TDRR 17248 DR CHK	3/24/65	
E	REVISED PER TDRR 19229 DR M. Ripley CHK	6/11/65	
F	REVISED PER TDRR 20558 DR M. Ripley CHK	8/26/65	
G	REVISED PER TDRR 20560 DR W. Brown CHK	9/14/65	

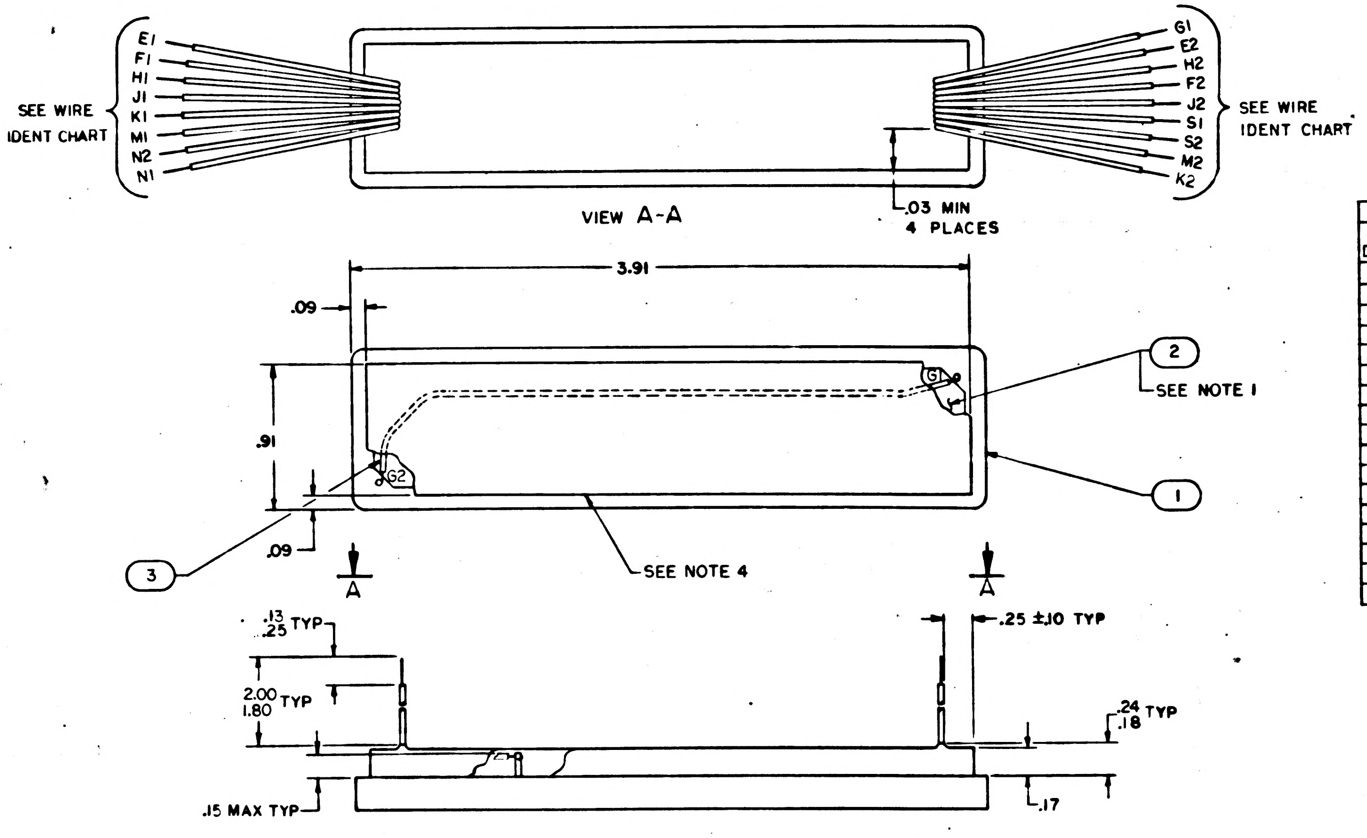

WIRE IDENT CHART			
LEAD DESIGNATION	FIND NO.	COLOR CODE (REF)	
		BASIC	TRACER
E1	4	WHT	—
F1	6	↑	RED
H1	7		ORN
J1	8		GRN
K1	9		BLU
M1	10	↓	BRN
N1	11	WHT	VIO
E2	12	RED	WHT
F2	13	↑	—
H2	14		ORN
J2	15		GRN
K2	16		BLU
M2	17	↓	BRN
N2	18	RED	VIO
S1	19	YEL	—
S2	20	YEL	GRN
G1	3	BLK	—

NOTES
1. BOND FIND NO.5 AND FIND NO.2 TO FIND NO.1 PER ND1002004, TYPE II OR TYPE V
2. SOLDER PER ND 1002071 USING SOLDER PER ND1002075
3. ~~MARK EACH WIRE WITH ITS INDIVIDUAL PIN LETTER & NUMBER PER ND 1002019~~
4. ENCAPSULATE AREA SHOWN PER ND 1002236, CURE SCHEDULE A
5. INTERPRET DRAWING IN ACCORDANCE WITH STANDARDS PRESCRIBED BY MIL-D-70327
6. ~~ALL WIRES TO BE FIND NO.4 UNLESS OTHERWISE SPECIFIED~~
7. ✱ DENOTES LENGTH IN FEET
8. AFTER LOCATING FIND NO.5 AS SPECIFIED, TRIM TO DIMENSION SHOWN
9. IDENTIFY WITH DRAWING NUMBER AND REVISION PER ND1002019

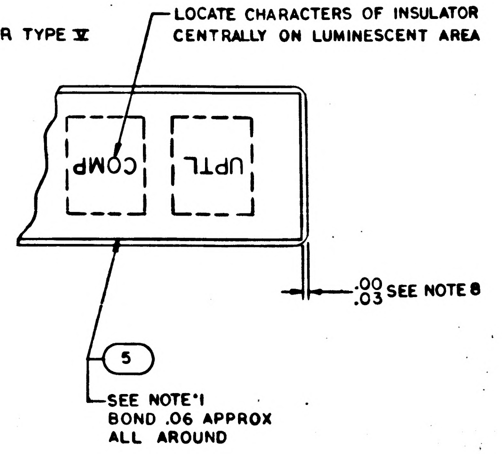
LOCATE CHARACTERS OF INSULATOR CENTRALLY ON LUMINESCENT AREA
COMP
UPTL
.00 .03 SEE NOTE 8
5
SEE NOTE 1
BOND .06 APPROX ALL AROUND

MASTER

	QTY REQD	PART OR IDENTIFYING NO.	NOMENCLATURE OR DESCRIPTION	FIND NO.
	☒	1005750	INTERCONNECTION DIAGRAM	REF
✱	.7	1010416-160	WIRE, ELECTRICAL	20
✱	.7	1010416-15	WIRE, ELECTRICAL	19
✱	.7	1010416-176	WIRE, ELECTRICAL	18
✱	.7	1010416-121	WIRE, ELECTRICAL	17
✱	.7	1010416-167	WIRE, ELECTRICAL	16
✱	.7	1010416-158	WIRE, ELECTRICAL	15
✱	.7	1010416-140	WIRE, ELECTRICAL	14
✱	.7	1010416-13	WIRE, ELECTRICAL	13
✱	.7	1010416-194	WIRE, ELECTRICAL	12
✱	.7	1010416-182	WIRE, ELECTRICAL	11
✱	.7	1010416-128	WIRE, ELECTRICAL	10
✱	.7	1010416-173	WIRE, ELECTRICAL	9
✱	.7	1010416-164	WIRE, ELECTRICAL	8
✱	.7	1010416-146	WIRE, ELECTRICAL	7
✱	.7	1010416-137	WIRE, ELECTRICAL	6
	1	1004809	INSULATOR, FRONT, PROGRAM DISPLAY	5
✱	.7	1010416-20	WIRE, ELECTRICAL	4
✱	0.7	1010416-11	WIRE, ELECTRICAL	3
	1	1004813	BOARD, INSULATOR	2
	1	1006744	INDICATOR E/L (PROG)	1

LIST OF MATERIALS

NEXT ASSY	USED ON
1003809	
1003758	

APPLICATION

UNLESS OTHERWISE SPECIFIED
DIMENSIONS ARE IN INCHES
TOLERANCES ON
FRACTIONS ± DECIMALS ±.01 ANGLES ±
DO NOT SCALE THIS DRAWING
MATERIAL
HEAT TREATMENT
FINAL FINISH

MIT
INSTRUMENTATION LAB
CAMBRIDGE, MASS
DWG. NO. CONTRACT
DRAWN B. Jensen DATE 25AUG64
CHECKED 9 Sept 64
APPROVAL Sept 15/64
APPROVAL 21 Sept 64
NASA APPROVAL 9-22-64
MIT APPROVAL
MIT APPROVAL 22 Sept 64

MANNED SPACECRAFT CENTER
HOUSTON, TEXAS

INDICATOR E/L ASSY (PROG)
AGC DSKY, NAV & MAIN
ICO SERIES

CODE IDENT NO. 80230 SIZE D NASA DRAWING NO. 1003801
SCALE 2/1 WT SHEET 1 OF 1

1003801 G

NOTICE — WHEN GOVERNMENT DRAWINGS, SPECIFICATIONS, OR OTHER DATA ARE USED FOR ANY PURPOSE OTHER THAN IN CONNECTION WITH A DEFINITELY RELATED GOVERNMENT PROCUREMENT OPERATION, THE UNITED STATES GOVERNMENT THEREBY INCURS NO RESPONSIBILITY NOR ANY OBLIGATION WHATSOEVER; AND THE FACT THAT THE GOVERNMENT MAY HAVE FORMULATED, FURNISHED, OR IN ANY WAY SUPPLIED THE SAID DRAWINGS, SPECIFICATIONS OR OTHER DATA IS NOT TO BE REGARDED BY IMPLICATION OR OTHERWISE AS IN ANY MANNER LICENSING THE HOLDER OR ANY OTHER PERSON OR CORPORATION, OR CONVEYING ANY RIGHTS OR PERMISSION TO MANUFACTURE, USE, OR SELL ANY PATENTED INVENTION THAT MAY IN ANY WAY BE RELATED THERETO.

— 1003801

SYM	REVISIONS DESCRIPTION	DATE	APPROVAL
	12765		

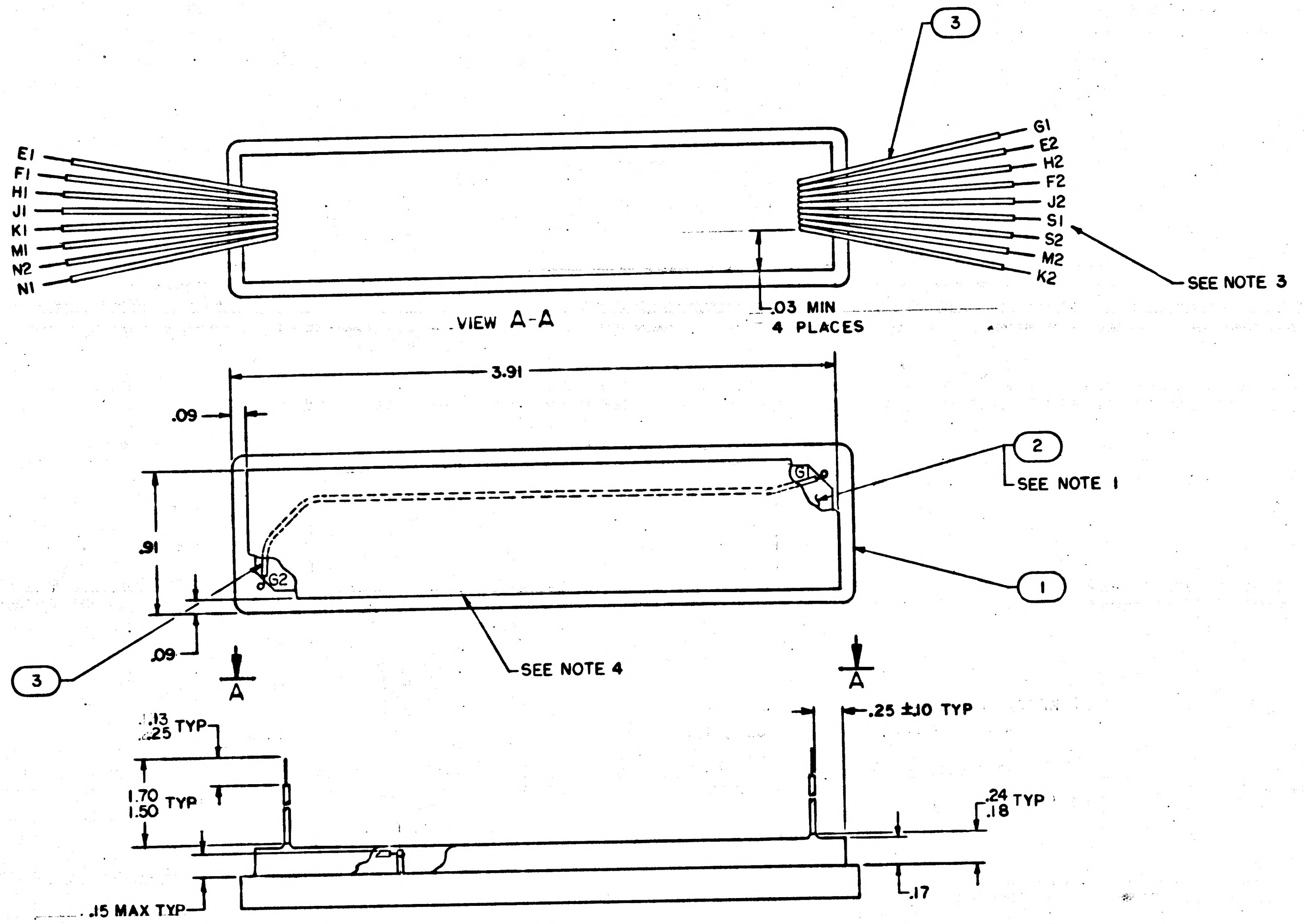

3
E1
F1
H1
J1
K1
M1
N2
N1
G1
E2
H2
F2
J2
S1
S2
M2
K2
SEE NOTE 3
VIEW A-A
.03 MIN
4 PLACES
3.91
.09
2
SEE NOTE 1
G1
.91
G2
1
.09
3
SEE NOTE 4
A
A
.13
.25 TYP
.25 ±.10 TYP
1.70
1.50 TYP
.24
.18 TYP
.15 MAX TYP
.17

NOTES
1. BOND FIND NO. 2 & FIND NO.5 TO FIND NO.1 PER ND1002004, TYPE II
2. SOLDER PER ND 1002071
3. MARK EACH WIRE WITH ITS INDIVIDUAL PIN LETTER & NUMBER PER ND 1002019
4. ENCAPSULATE AREA SHOWN PER ND 1002036, CURING CYCLE A
5. INTERPRET DRAWING IN ACCORDANCE WITH STANDARDS PRESCRIBED BY MIL-D-70327
6. ALL WIRES TO BE FIND NO.4 UNLESS OTHERWISE SPECIFIED
7. ● DENOTES LENGTH IN FEET
8. AFTER LOCATING FIND NO.5 AS SPECIFIED, TRIM TO DIMENSION SHOWN

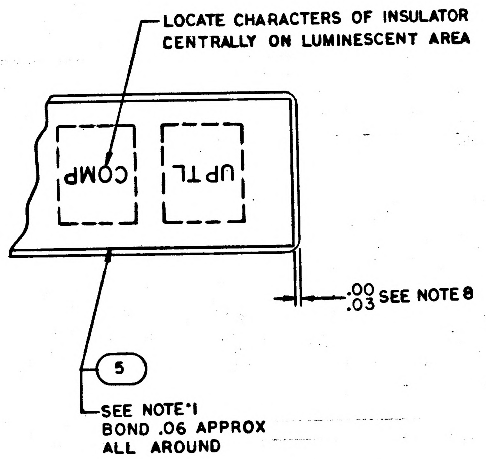

LOCATE CHARACTERS OF INSULATOR CENTRALLY ON LUMINESCENT AREA
COMP
UPTL
.00
.03 SEE NOTE 8
5
SEE NOTE 1
BOND .06 APPROX
ALL AROUND

MASTER

QTY REQD	PART OR IDENTIFYING NO.	NOMENCLATURE OR DESCRIPTION	FIND NO.
☒	1005750	INTERCONNECTION DIAGRAM	REF
1	1004809	INSULATOR, FRONT, PROGRAM DISPLAY	5
● 6	1010416-10	WIRE, ELECTRICAL	4
● 0.7	1010416-11	WIRE, ELECTRICAL	3
1	1004813	BOARD, INSULATOR	2
1	1006744	INDICATOR E/L (PROG)	1

LIST OF MATERIALS

NEXT ASSY	USED ON
1003758	

APPLICATION

UNLESS OTHERWISE SPECIFIED DIMENSIONS ARE IN INCHES
TOLERANCES ON
FRACTIONS ± DECIMALS ±.01 ANGLES ±
DO NOT SCALE THIS DRAWING
MATERIAL
HEAT TREATMENT
FINAL FINISH

MIT INSTRUMENTATION LAB
CAMBRIDGE, MASS.
DWG. NO. CONTRACT
DRAWN B. Jensen DATE 25AUG64
CHECKED R. Edwards 9 Sept 64
APPROVAL Johnson Sept 15/64
APPROVAL E. C. Hall 18 Sept 64
NASA APPROVAL W J Rhine 9-22-64
MIT APPROVAL
MIT APPROVAL Kupfer 22 Sept 64

MANNED SPACECRAFT CENTER
HOUSTON, TEXAS

INDICATOR E/L ASSY (PROG)
AGC DSKY, NAV & MAIN
100 SERIES

CODE IDENT NO. —
SIZE D
NASA DRAWING NO. 1003801
SCALE 2/1
WT
SHEET 1 OF 1

1003801

INCHES
0 1/2 1

NOTICE — WHEN GOVERNMENT DRAWINGS, SPECIFICATIONS, OR OTHER DATA ARE USED FOR ANY PURPOSE OTHER THAN IN CONNECTION WITH A DEFINITELY RELATED GOVERNMENT PROCUREMENT OPERATION, THE UNITED STATES GOVERNMENT THEREBY INCURS NO RESPONSIBILITY NOR ANY OBLIGATION WHATSOEVER, AND THE FACT THAT THE GOVERNMENT MAY HAVE FORMULATED, FURNISHED, OR IN ANY WAY SUPPLIED THE SAID DRAWINGS, SPECIFICATIONS OR OTHER DATA IS NOT TO BE REGARDED BY IMPLICATION OR OTHERWISE AS IN ANY MANNER LICENSING THE HOLDER OR ANY OTHER PERSON OR CORPORATION, OR CONVEYING ANY RIGHTS OR PERMISSION TO MANUFACTURE, USE, OR SELL ANY PATENTED INVENTION THAT MAY IN ANY WAY BE RELATED THERETO

1003802 A

REVISIONS		2765	
SYM	DESCRIPTION	DATE	APPROVAL
A	REVISED PER TDRR 13433 DR CHK RTM	11/23/64	

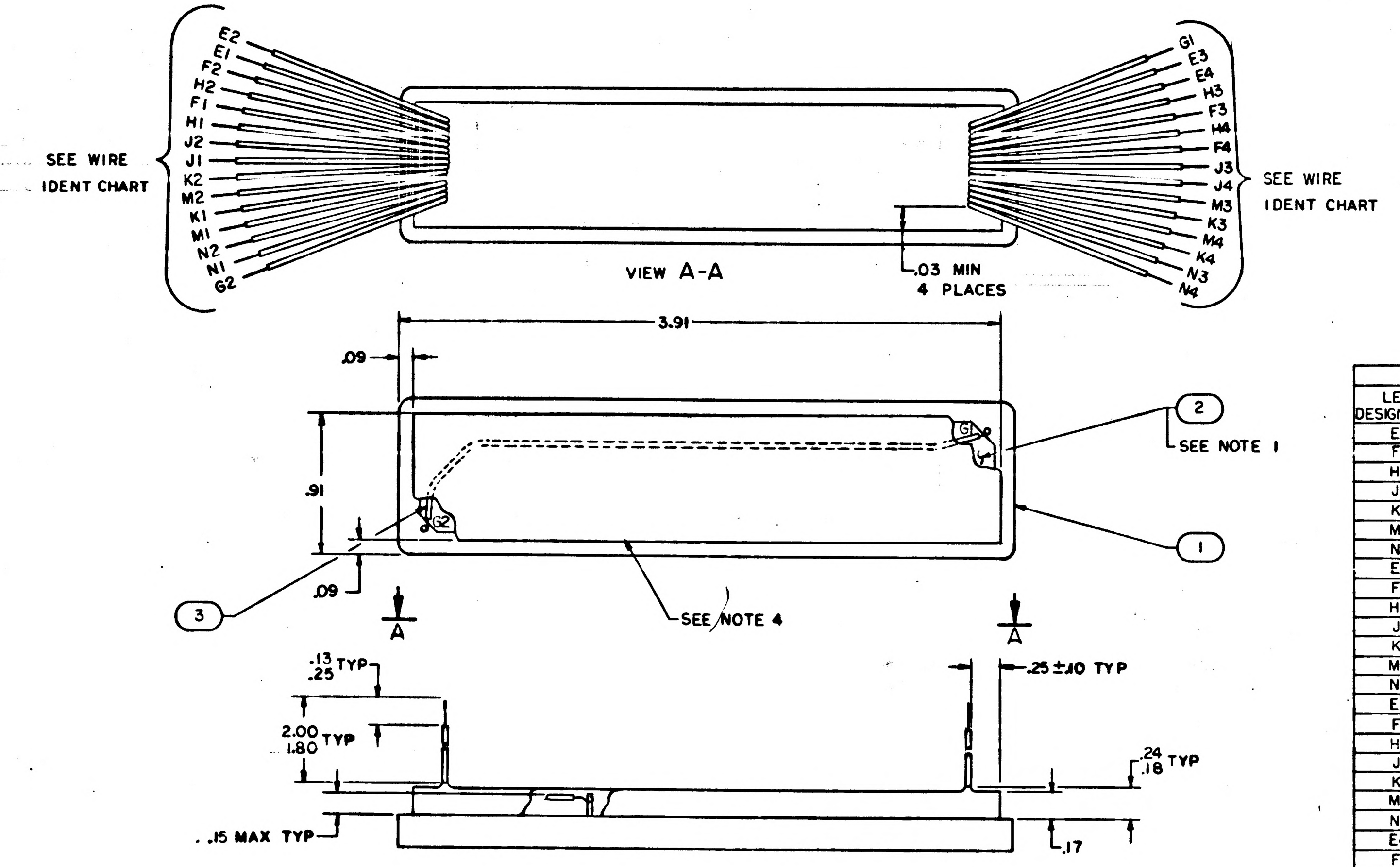

WIRE IDENT CHART			
LEAD DESIGNATION	FIND NO.	COLOR CODE (REF)	
		BASIC	TRACER
E1	4	WHT	——
F1	5	↑	RED
H1	6		ORN
J1	7		GRN
K1	8		BLU
M1	9	↓	BRN
N1	10	WHT	VIO
E2	11	RED	WHT
F2	12	↑	——
H2	13		ORN
J2	14		GRN
K2	15		BLU
M2	16	↓	BRN
N2	17	RED	VIO
E3	18	ORN	WHT
F3	19	↑	RED
H3	20		——
J3	21		GRN
K3	22		BLU
M3	23	↓	BRN
N3	24	ORN	VIO
E4	25	GRN	WHT
F4	26	↑	RED
H4	27		ORN
J4	28		——
K4	29		BLU
M4	30	↓	BRN
N4	31	GRN	VIO
G1	3	BLK	——
G2	3	BLK	——

NOTES
1. BOND FIND NO. 2 TO FIND NO. 1 PER ND1002004, TYPE II
2. SOLDER PER ND 1002071
3. ~~MARK EACH WIRE WITH ITS INDIVIDUAL PIN LETTER & NUMBER PER ND 1002019~~
4. ENCAPSULATE AREA SHOWN PER ND1002036, CURING CYCLE A
5. INTERPRET DRAWING IN ACCORDANCE WITH STANDARDS PRESCRIBED BY MIL-D-70327
6. ~~ALL WIRES TO BE FIND NO.4 UNLESS OTHERWISE SPECIFIED~~
7. ✱ DENOTES LENGTH IN FEET

	QTY REQD	PART OR IDENTIFYING NO.	NOMENCLATURE OR DESCRIPTION	FIND NO.
	╳	1005750	INTERCONNECTION DIAGRAM	REF
✱	.7	1010416-179	WIRE, ELECTRICAL	31
✱	.7	1010416-124	WIRE, ELECTRICAL	30
✱	.7	1010416-170	WIRE, ELECTRICAL	29
✱	.7	1010416-16	WIRE, ELECTRICAL	28
✱	.7	1010416-142	WIRE, ELECTRICAL	27
✱	.7	1010416-133	WIRE, ELECTRICAL	26
✱	.7	1010416-197	WIRE, ELECTRICAL	25
✱	.7	1010416-177	WIRE, ELECTRICAL	24
✱	.7	1010416-122	WIRE, ELECTRICAL	23
✱	.7	1010416-168	WIRE, ELECTRICAL	22
✱	.7	1010416-159	WIRE, ELECTRICAL	21
✱	.7	1010416-14	WIRE, ELECTRICAL	20
✱	.7	1010416-131	WIRE, ELECTRICAL	19
✱	.7	1010416-195	WIRE, ELECTRICAL	18
✱	.7	1010416-176	WIRE, ELECTRICAL	17
✱	.7	1010416-121	WIRE, ELECTRICAL	16
✱	.7	1010416-167	WIRE, ELECTRICAL	15
✱	.7	1010416-158	WIRE, ELECTRICAL	14
✱	.7	1010416-140	WIRE, ELECTRICAL	13
✱	.7	1010416-13	WIRE, ELECTRICAL	12
✱	.7	1010416-194	WIRE, ELECTRICAL	11
✱	.7	1010416-182	WIRE, ELECTRICAL	10
✱	.7	1010416-128	WIRE, ELECTRICAL	9
✱	.7	1010416-173	WIRE, ELECTRICAL	8
✱	.7	1010416-164	WIRE, ELECTRICAL	7
✱	.7	1010416-146	WIRE, ELECTRICAL	6
✱	.7	1010416-137	WIRE, ELECTRICAL	5
✱	.7	1010416-20	WIRE, ELECTRICAL	4
✱	0.9	1010416-11	WIRE, ELECTRICAL	3
	1	1004812	BOARD, INSULATOR	2
	1	1006740	INDICATOR E/L (V-N)	1

LIST OF MATERIALS

MASTER

1003758	
NEXT ASSY	USED ON
APPLICATION	

UNLESS OTHERWISE SPECIFIED
DIMENSIONS ARE IN INCHES
TOLERANCES ON
FRACTIONS ± DECIMALS ±.01 ANGLES ±
DO NOT SCALE THIS DRAWING
MATERIAL
HEAT TREATMENT
FINAL FINISH

MIT
INSTRUMENTATION LAB
CAMBRIDGE, MASS.
DRAWN B. Jay DATE 24AUG64
CHECKED
APPROVAL Sept 15/64
APPROVAL 21 Sept 64
NASA APPROVAL W J Rhine 4-22-69
MIT APPROVAL
MIT APPROVAL

MANNED SPACECRAFT CENTER
HOUSTON, TEXAS

INDICATOR E/L ASSY (V-N)
AGC DSKY, NAV & MAIN
100 SERIES

CODE IDENT NO. ——
SIZE D
NASA DRAWING NO. 1003802
SCALE 2/1
WT
SHEET 1 OF 1

1003802 B

NOTICE -- WHEN GOVERNMENT DRAWINGS, SPECIFICATIONS, OR OTHER DATA ARE USED FOR ANY PURPOSE OTHER THAN IN CONNECTION WITH A DEFINITELY RELATED GOVERNMENT PROCUREMENT OPERATION, THE UNITED STATES GOVERNMENT THEREBY INCURS NO RESPONSIBILITY NOR ANY OBLIGATION WHATSOEVER; AND THE FACT THAT THE GOVERNMENT MAY HAVE FORMULATED, FURNISHED, OR IN ANY WAY SUPPLIED THE SAID DRAWINGS, SPECIFICATIONS OR OTHER DATA IS NOT TO BE REGARDED BY IMPLICATION OR OTHERWISE AS IN ANY MANNER LICENSING THE HOLDER OR ANY OTHER PERSON OR CORPORATION, OR CONVEYING ANY RIGHTS OR PERMISSION TO MANUFACTURE, USE, OR SELL ANY PATENTED INVENTION THAT MAY IN ANY WAY BE RELATED THERETO.

REVISIONS			2765
SYM	DESCRIPTION	DATE	APPROVAL
A	REVISED PER TDRR 13433 DR CHK RTM	11/23/64	
B	REVISED PER TDRR 14277 DR CHK	12/14/64	

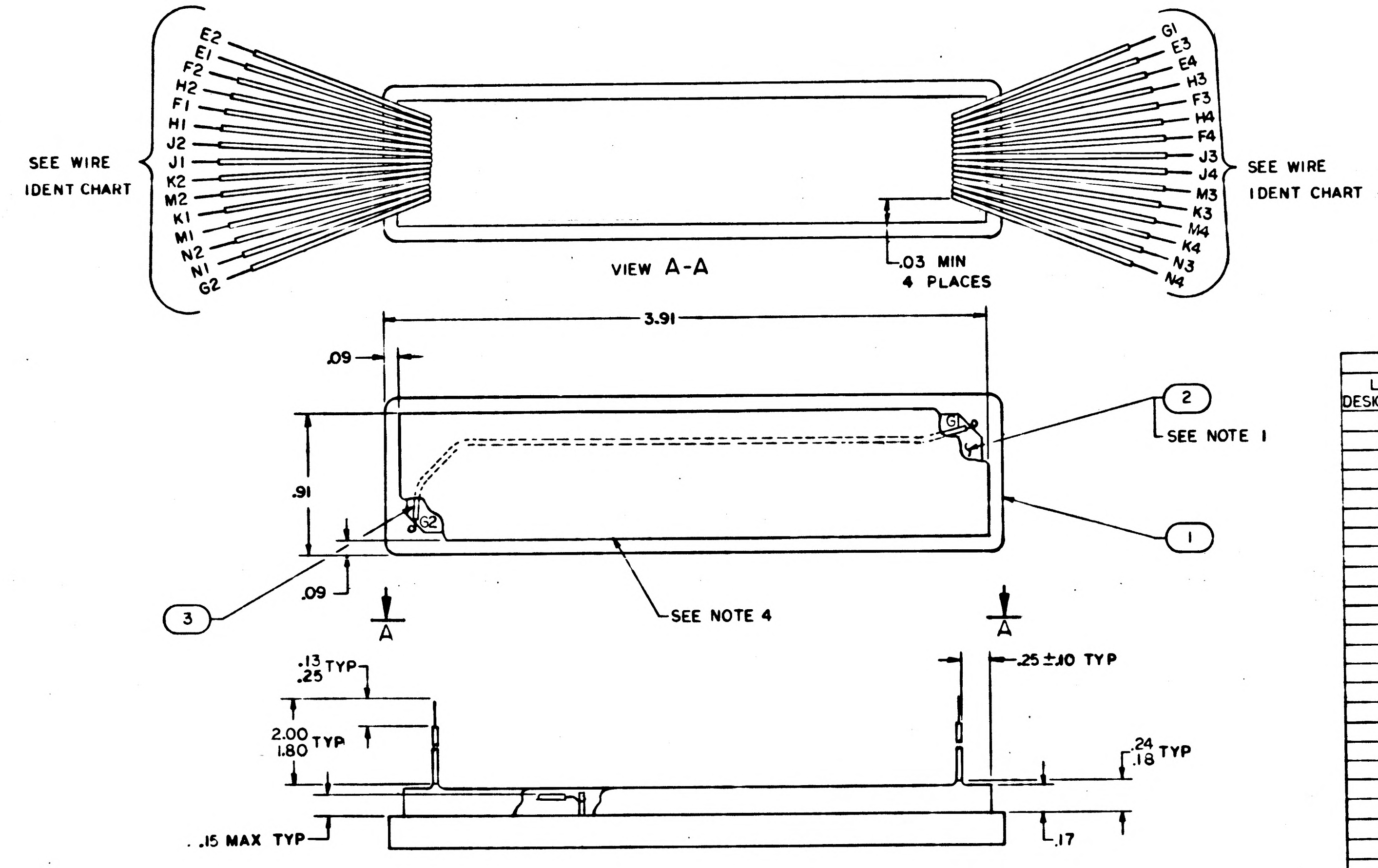

WIRE IDENT CHART			
LEAD DESIGNATION	FIND NO.	COLOR CODE (REF)	
		BASIC	TRACER
E1	4	WHT	—
F1	5	↑	RED
H1	6		ORN
J1	7		GRN
K1	8		BLU
M1	9	↓	BRN
N1	10	WHT	VIO
E2	11	RED	WHT
F2	12	↑	—
H2	13		ORN
J2	14		GRN
K2	15		BLU
M2	16	↓	BRN
N2	17	RED	VIO
E3	18	ORN	WHT
F3	19	↑	RED
H3	20		—
J3	21		GRN
K3	22		BLU
M3	23	↓	BRN
N3	24	ORN	VIO
E4	25	GRN	WHT
F4	26	↑	RED
H4	27		ORN
J4	28		—
K4	29		BLU
M4	30	↓	BRN
N4	31	GRN	VIO
G1	3	BLK	—
G2	3	BLK	—

NOTES
1. BOND FIND NO. 2 TO FIND NO. 1 PER ND1002004, TYPE II
2. SOLDER PER ND1002071
3. ~~MARK EACH WIRE WITH ITS INDIVIDUAL PIN LETTER & NUMBER PER ND1002019~~
4. ENCAPSULATE AREA SHOWN PER ND1002036, CURING CYCLE A
5. INTERPRET DRAWING IN ACCORDANCE WITH STANDARDS PRESCRIBED BY MIL-D-70327
6. ~~ALL WIRES TO BE FIND NO.4 UNLESS OTHERWISE SPECIFIED~~
7. ✱ DENOTES LENGTH IN FEET

	QTY REQD	PART OR IDENTIFYING NO.	NOMENCLATURE OR DESCRIPTION	FIND NO.
	☒	1005750	INTERCONNECTION DIAGRAM	REF
✱	.7	1010416-179	WIRE, ELECTRICAL	31
✱	.7	1010416-124	WIRE, ELECTRICAL	30
✱	.7	1010416-170	WIRE, ELECTRICAL	29
✱	.7	1010416-16	WIRE, ELECTRICAL	28
✱	.7	1010416-142	WIRE, ELECTRICAL	27
✱	.7	1010416-133	WIRE, ELECTRICAL	26
✱	.7	1010416-197	WIRE, ELECTRICAL	25
✱	.7	1010416-177	WIRE, ELECTRICAL	24
✱	.7	1010416-122	WIRE, ELECTRICAL	23
✱	.7	1010416-168	WIRE, ELECTRICAL	22
✱	.7	1010416-159	WIRE, ELECTRICAL	21
✱	.7	1010416-14	WIRE, ELECTRICAL	20
✱	.7	1010416-131	WIRE, ELECTRICAL	19
✱	.7	1010416-195	WIRE, ELECTRICAL	18
✱	.7	1010416-176	WIRE, ELECTRICAL	17
✱	.7	1010416-121	WIRE, ELECTRICAL	16
✱	.7	1010416-167	WIRE, ELECTRICAL	15
✱	.7	1010416-158	WIRE, ELECTRICAL	14
✱	.7	1010416-140	WIRE, ELECTRICAL	13
✱	.7	1010416-13	WIRE, ELECTRICAL	12
✱	.7	1010416-194	WIRE, ELECTRICAL	11
✱	.7	1010416-182	WIRE, ELECTRICAL	10
✱	.7	1010416-128	WIRE, ELECTRICAL	9
✱	.7	1010416-173	WIRE, ELECTRICAL	8
✱	.7	1010416-164	WIRE, ELECTRICAL	7
✱	.7	1010416-146	WIRE, ELECTRICAL	6
✱	.7	1010416-137	WIRE, ELECTRICAL	5
✱	.7	1010416-20	WIRE, ELECTRICAL	4
✱	0.9	1010416-11	WIRE, ELECTRICAL	3
	1	1004812	BOARD, INSULATOR	2
	1	1006306	INDICATOR E/L (V-N)	1

LIST OF MATERIALS

MASTER

1003758	
NEXT ASSY	USED ON
APPLICATION	

UNLESS OTHERWISE SPECIFIED
DIMENSIONS ARE IN INCHES
TOLERANCES ON
FRACTIONS ± DECIMALS ±.01 ANGLES ±
DO NOT SCALE THIS DRAWING
MATERIAL
HEAT TREATMENT
FINAL FINISH

MIT
INSTRUMENTATION LAB
CAMBRIDGE, MASS.
DWG. NO. CONTRACT
DRAWN DATE 24AUG64
CHECKED
APPROVAL Sept 15/64
APPROVAL
NASA APPROVAL W J Rhine 9-22-64
MIT APPROVAL
MIT APPROVAL

MANNED SPACECRAFT CENTER
HOUSTON, TEXAS

INDICATOR E/L ASSY (V-N)
AGC DSKY, NAV & MAIN
100 SERIES

CODE IDENT NO. —
SIZE D
NASA DRAWING NO. 1003802
SCALE 2/1
WT
SHEET 1 OF 1

NOTICE — WHEN GOVERNMENT DRAWINGS, SPECIFICATIONS, OR OTHER DATA ARE USED FOR ANY PURPOSE OTHER THAN IN CONNECTION WITH A DEFINITELY RELATED GOVERNMENT PROCUREMENT OPERATION, THE UNITED STATES GOVERNMENT THEREBY INCURS NO RESPONSIBILITY NOR ANY OBLIGATION WHATSOEVER; AND THE FACT THAT THE GOVERNMENT MAY HAVE FORMULATED, FURNISHED, OR IN ANY WAY SUPPLIED THE SAID DRAWINGS, SPECIFICATIONS OR OTHER DATA IS NOT TO BE REGARDED BY IMPLICATION OR OTHERWISE AS IN ANY MANNER LICENSING THE HOLDER OR ANY OTHER PERSON OR CORPORATION, OR CONVEYING ANY RIGHTS OR PERMISSION TO MANUFACTURE, USE, OR SELL ANY PATENTED INVENTION THAT MAY IN ANY WAY BE RELATED THERETO.

1003802 C

REVISIONS		2765	
SYM	DESCRIPTION	DATE	APPROVAL
A	REVISED PER TDRR 13433 DR CHK RTM	11/23/64	
B	REVISED PER TDRR 14277 DR D.A. Clement CHK	12/14/64	
C	REVISED PER TDRR 15648 DR A. J. Dixon CHK JCJ	2/8/65	

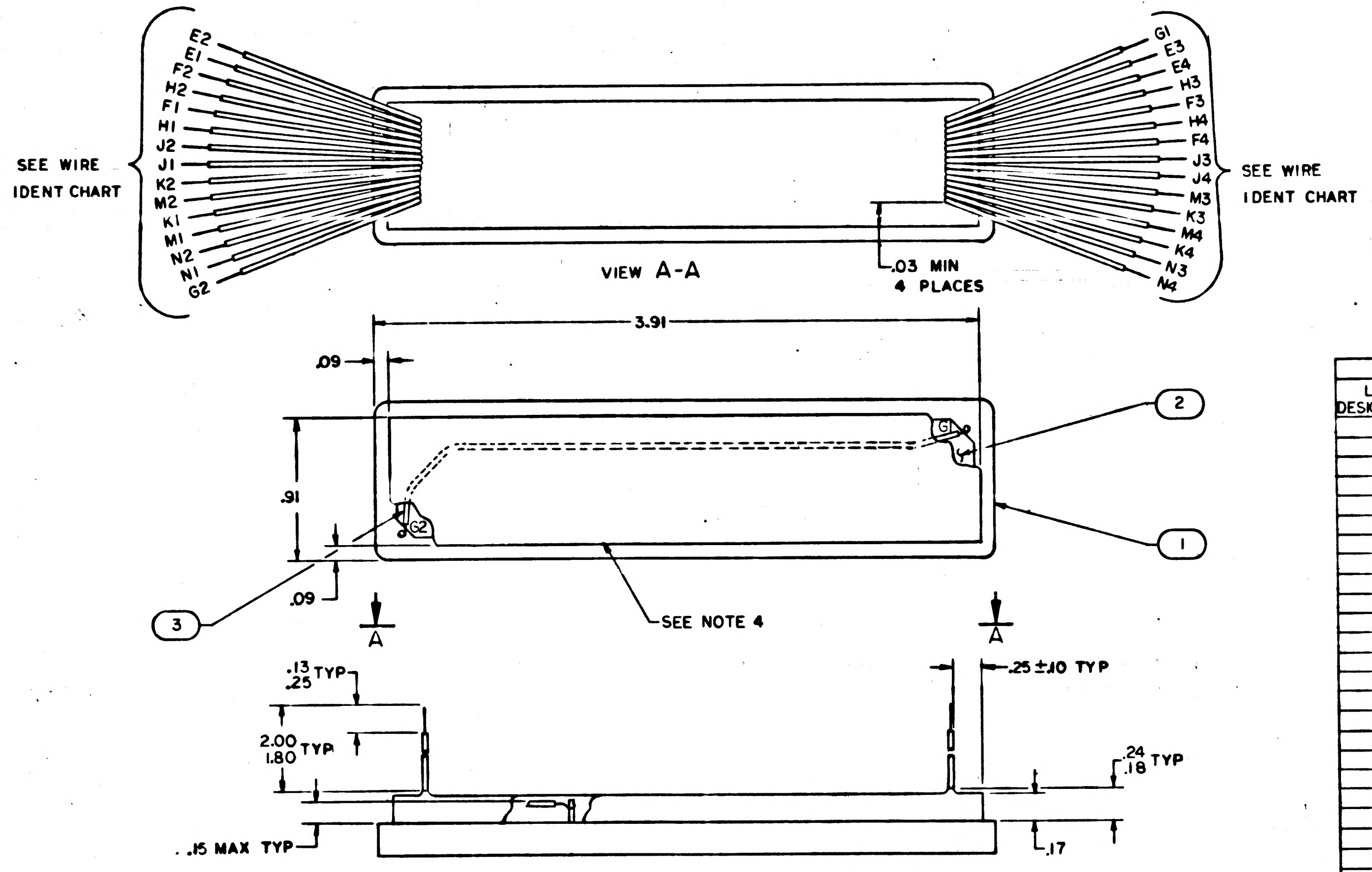

WIRE IDENT CHART			
LEAD DESIGNATION	FIND NO.	COLOR CODE (REF)	
		BASIC	TRACER
E1	4	WHT	—
F1	5	↑	RED
H1	6	│	ORN
J1	7	│	GRN
K1	8	│	BLU
M1	9	↓	BRN
N1	10	WHT	VIO
E2	11	RED	WHT
F2	12	↑	—
H2	13	│	ORN
J2	14	│	GRN
K2	15	│	BLU
M2	16	↓	BRN
N2	17	RED	VIO
E3	18	ORN	WHT
F3	19	↑	RED
H3	20	│	—
J3	21	│	GRN
K3	22	│	BLU
M3	23	↓	BRN
N3	24	ORN	VIO
E4	25	GRN	WHT
F4	26	↑	RED
H4	27	│	ORN
J4	28	│	—
K4	29	│	BLU
M4	30	↓	BRN
N4	31	GRN	VIO
G1	3	BLK	—
G2	3	BLK	—

NOTES

1. ~~BOND FIND NO. 2 TO FIND NO. 1 PER ND1002004, TYPE II~~
2. SOLDER PER ND 1002071
3. ~~MARK EACH WIRE WITH ITS INDIVIDUAL PIN LETTER & NUMBER PER ND 1002019~~
4. ENCAPSULATE AREA SHOWN PER ND 1002036, CURING CYCLE A
5. INTERPRET DRAWING IN ACCORDANCE WITH STANDARDS PRESCRIBED BY MIL-D-70327
6. ~~ALL WIRES TO BE FIND NO. 4 UNLESS OTHERWISE SPECIFIED~~
7. ✱ DENOTES LENGTH IN FEET

	☒	1005750	INTERCONNECTION DIAGRAM	REF
✱	.7	1010416-179	WIRE, ELECTRICAL	31
✱	.7	1010416-124	WIRE, ELECTRICAL	30
✱	.7	1010416-170	WIRE, ELECTRICAL	29
✱	.7	1010416-16	WIRE, ELECTRICAL	28
✱	.7	1010416-142	WIRE, ELECTRICAL	27
✱	.7	1010416-133	WIRE, ELECTRICAL	26
✱	.7	1010416-197	WIRE, ELECTRICAL	25
✱	.7	1010416-177	WIRE, ELECTRICAL	24
✱	.7	1010416-122	WIRE, ELECTRICAL	23
✱	.7	1010416-168	WIRE, ELECTRICAL	22
✱	.7	1010416-159	WIRE, ELECTRICAL	21
✱	.7	1010416-14	WIRE, ELECTRICAL	20
✱	.7	1010416-131	WIRE, ELECTRICAL	19
✱	.7	1010416-195	WIRE, ELECTRICAL	18
✱	.7	1010416-176	WIRE, ELECTRICAL	17
✱	.7	1010416-121	WIRE, ELECTRICAL	16
✱	.7	1010416-167	WIRE, ELECTRICAL	15
✱	.7	1010416-158	WIRE, ELECTRICAL	14
✱	.7	1010416-140	WIRE, ELECTRICAL	13
✱	.7	1010416-13	WIRE, ELECTRICAL	12
✱	.7	1010416-194	WIRE, ELECTRICAL	11
✱	.7	1010416-182	WIRE, ELECTRICAL	10
✱	.7	1010416-128	WIRE, ELECTRICAL	9
✱	.7	1010416-173	WIRE, ELECTRICAL	8
✱	.7	1010416-164	WIRE, ELECTRICAL	7
✱	.7	1010416-146	WIRE, ELECTRICAL	6
✱	.7	1010416-137	WIRE, ELECTRICAL	5
✱	.7	1010416-20	WIRE, ELECTRICAL	4
✱	0.9	1010416-11	WIRE, ELECTRICAL	3
	1	1004812	BOARD, INSULATOR	2
	1	1006740	INDICATOR E/L (V-N)	1
	QTY REQD	PART OR IDENTIFYING NO.	NOMENCLATURE OR DESCRIPTION	FIND NO.

LIST OF MATERIALS

1003758	
NEXT ASSY	USED ON
APPLICATION	

UNLESS OTHERWISE SPECIFIED
DIMENSIONS ARE IN INCHES
TOLERANCES ON
FRACTIONS ± DECIMALS ±.01 ANGLES ±
DO NOT SCALE THIS DRAWING
MATERIAL
HEAT TREATMENT
FINAL FINISH

MIT
INSTRUMENTATION LAB
CAMBRIDGE, MASS.
DWG. NO. CONTRACT
DRAWN B. Jensen DATE 24AUG64
CHECKED
APPROVAL Sept 15/64
APPROVAL 21 Sept 64
NASA APPROVAL 4-22-64
MIT APPROVAL
MIT APPROVAL

MANNED SPACECRAFT CENTER
HOUSTON, TEXAS

INDICATOR E/L ASSY (V-N)
AGC DSKY, NAV & MAIN
100 SERIES

CODE IDENT NO.	SIZE	NASA DRAWING NO.
—	D	1003802

SCALE 2/1 WT SHEET 1 OF 1

NOTICE — WHEN GOVERNMENT DRAWINGS, SPECIFICATIONS, OR OTHER DATA ARE USED FOR ANY PURPOSE OTHER THAN IN CONNECTION WITH A DEFINITELY RELATED GOVERNMENT PROCUREMENT OPERATION, THE UNITED STATES GOVERNMENT THEREBY INCURS NO RESPONSIBILITY NOR ANY OBLIGATION WHATSOEVER; AND THE FACT THAT THE GOVERNMENT MAY HAVE FORMULATED, FURNISHED, OR IN ANY WAY SUPPLIED THE SAID DRAWINGS, SPECIFICATIONS OR OTHER DATA IS NOT TO BE REGARDED BY IMPLICATION OR OTHERWISE AS IN ANY MANNER LICENSING THE HOLDER OR ANY OTHER PERSON OR CORPORATION, OR CONVEYING ANY RIGHTS OR PERMISSION TO MANUFACTURE, USE, OR SELL ANY PATENTED INVENTION THAT MAY IN ANY WAY BE RELATED THERETO.

1003802 D

REVISIONS			2765
SYM	DESCRIPTION	DATE	APPROVAL
A	REVISED PER TDRR 13433 DR G. Lyske CHK All RTM	11/24/64	
B	REVISED PER TDRR 14277 DR D.A. Clement CHK All BM	12/16/64	
C	REVISED PER TDRR 15648 DR A. J. Bison CHK JCJ BM.	2/8/65	
D	REVISED PER TDRR 20558 DR M. Riffley CHK Lloyez BM	8/26/65	

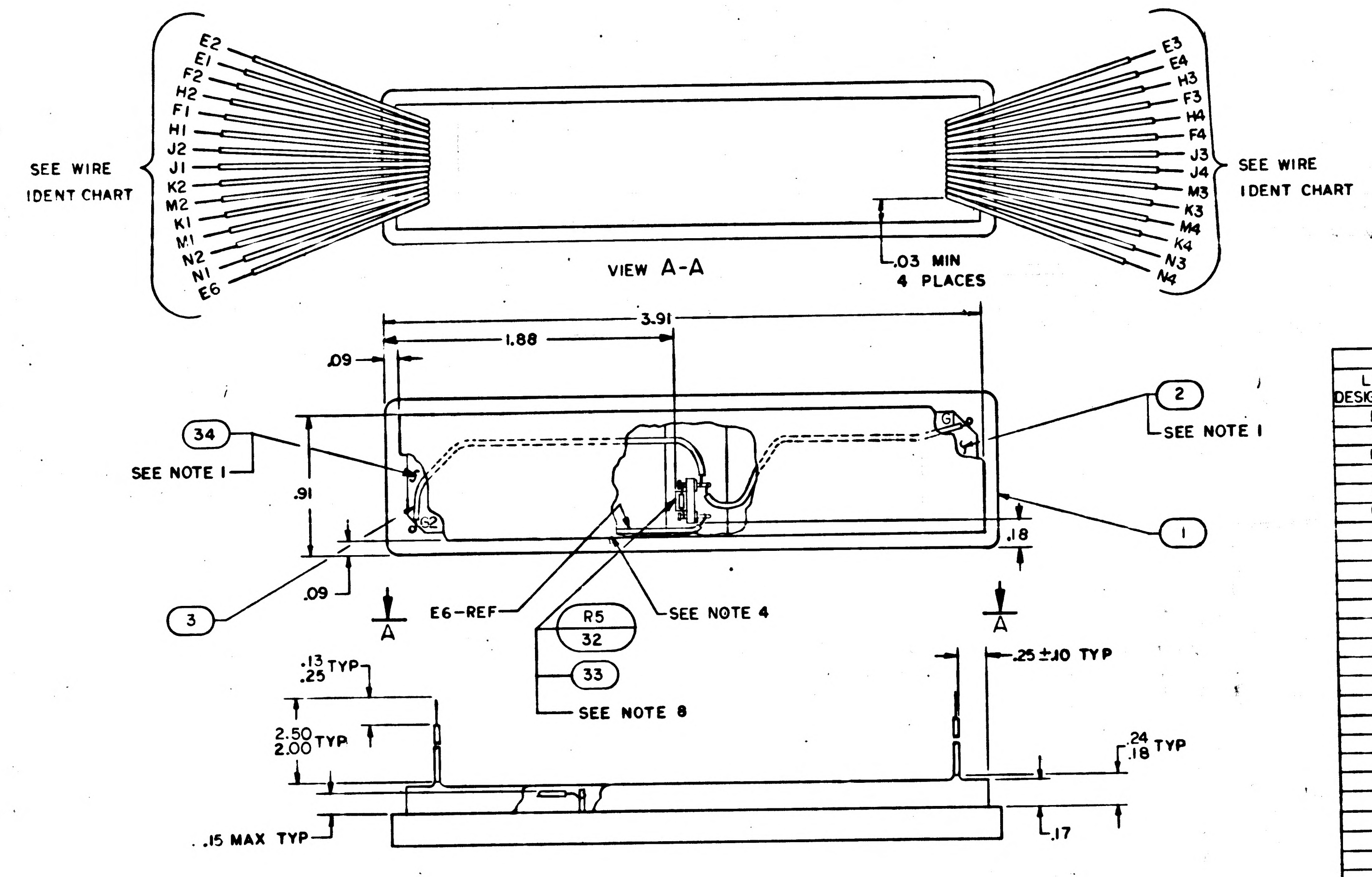

NOTES

1. BOND FIND NO. 2 AND FIND NO. 34 TO FIND NO 1 PER ND1002004 TYPE II OR TYPE V
2. SOLDER PER ND 1002071 USING SOLDER PER ND1002075
3. ~~MARK EACH WIRE WITH ITS INDIVIDUAL PIN LETTER & NUMBER PER ND 1002019~~
4. ENCAPSULATE AREA SHOWN PER ND 1002236, CURE SCHEDULE A
5. INTERPRET DRAWING IN ACCORDANCE WITH STANDARDS PRESCRIBED BY MIL-D-70327
6. ~~ALL WIRES TO BE FIND NO. 4 UNLESS OTHERWISE SPECIFIED~~
7. * DENOTES LENGTH IN FEET
8. BOND FIND NO. 32 TO FIND NO. 33, AND FIND NO. 33 TO FIND NO. 2 PER ND1002004, TYPE II
9. IDENTIFY WITH DRAWING NUMBER AND REVISION PER ND1002019

WIRE IDENT CHART			
LEAD DESIGNATION	FIND NO.	COLOR CODE (REF)	
		BASIC	TRACER
E1	4	WHT	—
F1	5	↑	RED
H1	6		ORN
J1	7		GRN
K1	8		BLU
M1	9	↓	BRN
N1	10	WHT	VIO
E2	11	RED	WHT
F2	12	↑	—
H2	13		ORN
J2	14		GRN
K2	15		BLU
M2	16	↓	BRN
N2	17	RED	VIO
E3	18	ORN	WHT
F3	19	↑	RED
H3	20		—
J3	21		GRN
K3	22		BLU
M3	23	↓	BRN
N3	24	ORN	VIO
E4	25	GRN	WHT
F4	26	↑	RED
H4	27		ORN
J4	28		—
K4	29		BLU
M4	30	↓	BRN
N4	31	GRN	VIO
~~G1~~	~~3~~	~~BLK~~	~~—~~
~~G2~~	~~3~~	~~BLK~~	~~—~~
E6	3	BLK	—

	QTY REQD	PART OR IDENTIFYING NO.	NOMENCLATURE OR DESCRIPTION	FIND NO.
	☒	1005753	INTERCONNECTION DIAGRAM	REF
	☒	1005750	INTERCONNECTION DIAGRAM	REF
	1	1004862	BOARD, INSULATOR	34
	1	1004823-011	HOLDER, COMPONENT	33
	1	1006750-72	RESISTOR	32
*	.7	1010416-179	WIRE, ELECTRICAL	31
*	.7	1010416-124	WIRE, ELECTRICAL	30
*	.7	1010416-170	WIRE, ELECTRICAL	29
*	.7	1010416-16	WIRE, ELECTRICAL	28
*	.7	1010416-142	WIRE, ELECTRICAL	27
*	.7	1010416-133	WIRE, ELECTRICAL	26
*	.7	1010416-197	WIRE, ELECTRICAL	25
*	.7	1010416-177	WIRE, ELECTRICAL	24
*	.7	1010416-122	WIRE, ELECTRICAL	23
*	.7	1010416-168	WIRE, ELECTRICAL	22
*	.7	1010416-159	WIRE, ELECTRICAL	21
*	.7	1010416-14	WIRE, ELECTRICAL	20
*	.7	1010416-131	WIRE, ELECTRICAL	19
*	.7	1010416-195	WIRE, ELECTRICAL	18
*	.7	1010416-176	WIRE, ELECTRICAL	17
*	.7	1010416-121	WIRE, ELECTRICAL	16
*	.7	1010416-167	WIRE, ELECTRICAL	15
*	.7	1010416-158	WIRE, ELECTRICAL	14
*	.7	1010416-140	WIRE, ELECTRICAL	13
*	.7	1010416-13	WIRE, ELECTRICAL	12
*	.7	1010416-194	WIRE, ELECTRICAL	11
*	.7	1010416-182	WIRE, ELECTRICAL	10
*	.7	1010416-128	WIRE, ELECTRICAL	9
*	.7	1010416-173	WIRE, ELECTRICAL	8
*	.7	1010416-164	WIRE, ELECTRICAL	7
*	.7	1010416-146	WIRE, ELECTRICAL	6
*	.7	1010416-137	WIRE, ELECTRICAL	5
*	.7	1010416-20	WIRE, ELECTRICAL	4
*	0.9	1010416-11	WIRE, ELECTRICAL	3
	1	1004863	BOARD, INSULATOR	2
	1	1006740	INDICATOR E/L (V-N)	1

LIST OF MATERIALS

NEXT ASSY	USED ON
1003809	
1003758	

APPLICATION

UNLESS OTHERWISE SPECIFIED DIMENSIONS ARE IN INCHES
TOLERANCES ON
FRACTIONS ± DECIMALS ±.01 ANGLES ±
DO NOT SCALE THIS DRAWING
MATERIAL
HEAT TREATMENT
FINAL FINISH

MIT INSTRUMENTATION LAB
CAMBRIDGE, MASS.
DRAWN B. Jansen DATE 24 AUG 64
CHECKED R. Edwards 9 Sept 64
APPROVAL Sept 15/64
APPROVAL 21 Sept 64
NASA APPROVAL W J Rhine 9-22-64
MIT APPROVAL
MIT APPROVAL

MANNED SPACECRAFT CENTER
HOUSTON, TEXAS

INDICATOR E/L ASSY (V-N)
AGC DSKY, NAV & MAIN
100 SERIES

CODE IDENT NO. 80230
SIZE D
NASA DRAWING NO. 1003802
SCALE 2/1
WT
SHEET 1 OF 1

NOTICE — WHEN GOVERNMENT DRAWINGS, SPECIFICATIONS, OR OTHER DATA ARE USED FOR ANY PURPOSE OTHER THAN IN CONNECTION WITH A DEFINITELY RELATED GOVERNMENT PROCUREMENT OPERATION THE UNITED STATES GOVERNMENT THEREBY INCURS NO RESPONSIBILITY NOR ANY OBLIGATION WHATSOEVER; AND THE FACT THAT THE GOVERNMENT MAY HAVE FORMULATED, FURNISHED, OR IN ANY WAY SUPPLIED THE SAID DRAWINGS, SPECIFICATIONS OR OTHER DATA IS NOT TO BE REGARDED BY IMPLICATION OR OTHERWISE AS IN ANY MANNER LICENSING THE HOLDER OR ANY OTHER PERSON OR CORPORATION, OR CONVEYING ANY RIGHTS OR PERMISSION TO MANUFACTURE, USE, OR SELL ANY PATENTED INVENTION THAT MAY IN ANY WAY BE RELATED THERETO.

SYM	DESCRIPTION	DATE	APPROVAL
	REVISIONS 12765		

1003802 –

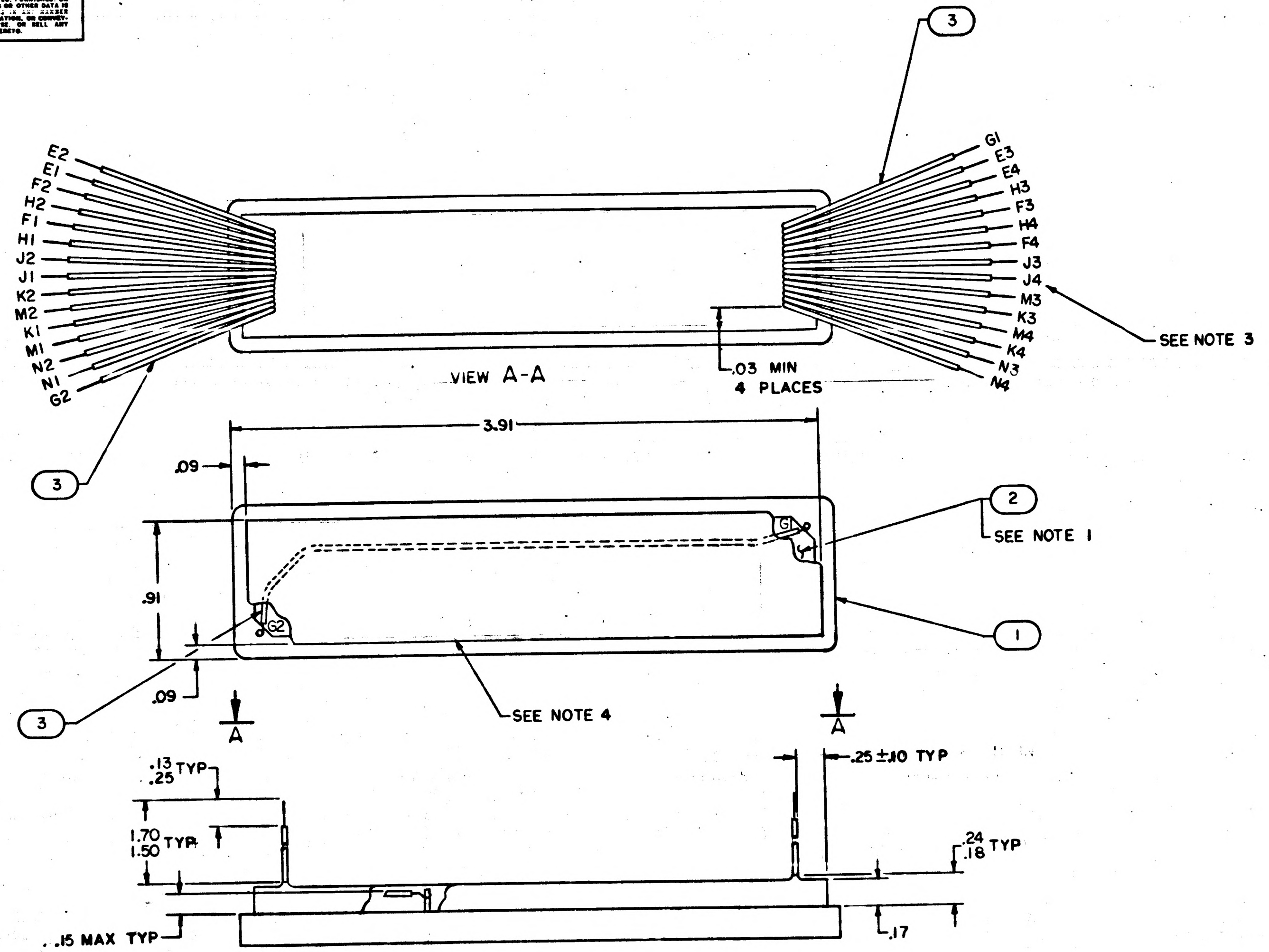

NOTES
1. BOND FIND NO. 2 TO FIND NO. 1 PER ND 1002004, TYPE II
2. SOLDER PER ND 1002071
3. MARK EACH WIRE WITH ITS INDIVIDUAL PIN LETTER & NUMBER PER ND 1002019
4. ENCAPSULATE AREA SHOWN PER ND 1002036, CURING CYCLE A
5. INTERPRET DRAWING IN ACCORDANCE WITH STANDARDS PRESCRIBED BY MIL-D-70327
6. ALL WIRES TO BE FIND NO.4 UNLESS OTHERWISE SPECIFIED
7. ● DENOTES LENGTH IN FEET

	QTY REQD	PART OR IDENTIFYING NO.	NOMENCLATURE OR DESCRIPTION	FIND NO.
	☒	1005750	INTERCONNECTION DIAGRAM	REF
●	10	1010416-10	WIRE, ELECTRICAL	4
●	0.9	1010416-11	WIRE, ELECTRICAL	3
	1	1004812	BOARD, INSULATOR	2
	1	1006740	INDICATOR E/L (V-N)	1

LIST OF MATERIALS

NEXT ASSY	USED ON
1003758	

APPLICATION

UNLESS OTHERWISE SPECIFIED
DIMENSIONS ARE IN INCHES
TOLERANCES ON
FRACTIONS ± DECIMALS ±.01 ANGLES ±
DO NOT SCALE THIS DRAWING
MATERIAL
HEAT TREATMENT
FINAL FINISH

MIT
INSTRUMENTATION LAB
CAMBRIDGE, MASS.
DWG. NO. CONTRACT
DRAWN B. Jensen DATE 24 AUG 64
CHECKED R. Edwards 9 Sept 64
APPROVAL Sept 15/64
APPROVAL 21 Sept 64
NASA APPROVAL W J Rhine 9-22-64
MIT APPROVAL
MIT APPROVAL 22 Sept 64

MANNED SPACECRAFT CENTER
HOUSTON, TEXAS

INDICATOR E/L ASSY (V-N)
AGC DSKY, NAV & MAIN
100 SERIES

CODE IDENT NO. ——
SIZE D
NASA DRAWING NO. 1003802
SCALE 2/1
WT
SHEET 1 OF 1

MASTER

1003802 –

NOTICE — WHEN GOVERNMENT DRAWINGS, SPECIFICATIONS, OR OTHER DATA ARE USED FOR ANY PURPOSE OTHER THAN IN CONNECTION WITH A DEFINITELY RELATED GOVERNMENT PROCUREMENT OPERATION THE UNITED STATES GOVERNMENT THEREBY INCURS NO RESPONSIBILITY NOR ANY OBLIGATION WHATSOEVER; AND THE FACT THAT THE GOVERNMENT MAY HAVE FORMULATED, FURNISHED, OR IN ANY WAY SUPPLIED THE SAID DRAWINGS, SPECIFICATIONS OR OTHER DATA IS NOT TO BE REGARDED BY IMPLICATION OR OTHERWISE AS IN ANY MANNER LICENSING THE HOLDER OR ANY OTHER PERSON OR CORPORATION, OR CONVEYING ANY RIGHTS OR PERMISSION TO MANUFACTURE, USE, OR SELL ANY PATENTED INVENTION THAT MAY IN ANY WAY BE RELATED THERETO.

REVISIONS 12765			
SYM	DESCRIPTION	DATE	APPROVAL
A	REVISED PER TDRR 13433 DR CHK RTM	11/24/64	

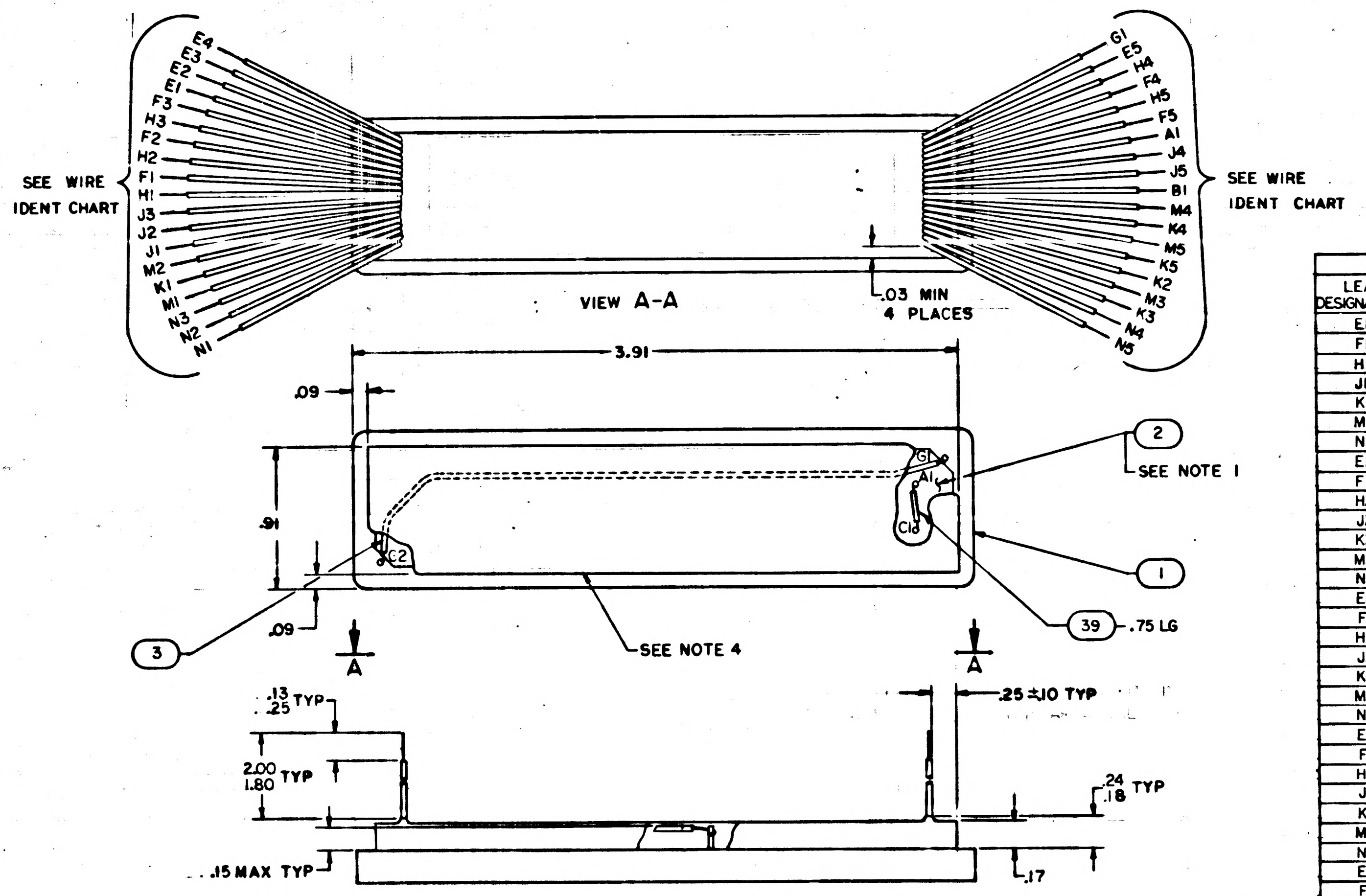

WIRE IDENT CHART			
LEAD DESIGNATION	FIND NO.	COLOR CODE (REF)	
		BASIC	TRACER
E1	4	WHT	—
F1	5	↑	RED
H1	6		ORN
J1	7		GRN
K1	8		BLU
M1	9	↓	BRN
N1	10	WHT	VIO
E2	11	RED	WHT
F2	12	↑	—
H2	13		ORN
J2	14		GRN
K2	15		BLU
M2	16	↓	BRN
N2	17	RED	VIO
E3	18	ORN	WHT
F3	19	↑	RED
H3	20		—
J3	21		GRN
K3	22		BLU
M3	23	↓	BRN
N3	24	ORN	VIO
E4	25	GRN	WHT
F4	26	↑	RED
H4	27		ORN
J4	28		—
K4	29		BLU
M4	30	↓	BRN
N4	31	GRN	VIO
E5	32	BLU	WHT
F5	33	↑	RED
H5	34		ORN
J5	35		GRN
K5	36		—
M5	37	↓	BRN
N5	38	BLU	VIO
A1	39	YEL	RED
B1	40	YEL	BLK
G1	3	BLK	—

NOTES
1. BOND FIND NO. 2 TO FIND NO. 1 PER ND 1002004, TYPE II
2. SOLDER PER ND 1002071
~~3. MARK EACH WIRE WITH ITS INDIVIDUAL PIN LETTER & NUMBER PER ND 1002019~~
4. ENCAPSULATE AREA SHOWN PER ND 1002036, CURING CYCLE A
5. INTERPRET DRAWING IN ACCORDANCE WITH STANDARDS PRESCRIBED BY MIL-D-70327
~~6. ALL WIRES TO BE FIND NO. 4 UNLESS OTHERWISE SPECIFIED~~
7. ✱ DENOTES LENGTH IN FEET

	QTY REQD	PART OR IDENTIFYING NO.	NOMENCLATURE OR DESCRIPTION	FIND NO.
	☒	1005750	INTERCONNECTION DIAGRAM	REF
✱	.7	1010416-114	WIRE, ELECTRICAL	40
✱	.7	1010416-132	WIRE, ELECTRICAL	39
✱	.7	1010416-180	WIRE, ELECTRICAL	38
✱	.7	1010416-125	WIRE, ELECTRICAL	37
✱	.7	1010416-17	WIRE, ELECTRICAL	36
✱	.7	1010416-161	WIRE, ELECTRICAL	35
✱	.7	1010416-143	WIRE, ELECTRICAL	34
✱	.7	1010416-134	WIRE, ELECTRICAL	33
✱	.7	1010416-198	WIRE, ELECTRICAL	32
✱	.7	1010416-179	WIRE, ELECTRICAL	31
✱	.7	1010416-124	WIRE, ELECTRICAL	30
✱	.7	1010416-170	WIRE, ELECTRICAL	29
✱	.7	1010416-16	WIRE, ELECTRICAL	28
✱	.7	1010416-142	WIRE, ELECTRICAL	27
✱	.7	1010416-133	WIRE, ELECTRICAL	26
✱	.7	1010416-197	WIRE, ELECTRICAL	25
✱	.7	1010416-177	WIRE, ELECTRICAL	24
✱	.7	1010416-122	WIRE, ELECTRICAL	23
✱	.7	1010416-168	WIRE, ELECTRICAL	22
✱	.7	1010416-159	WIRE, ELECTRICAL	21
✱	.7	1010416-14	WIRE, ELECTRICAL	20
✱	.7	1010416-131	WIRE, ELECTRICAL	19
✱	.7	1010416-195	WIRE, ELECTRICAL	18
✱	.7	1010416-176	WIRE, ELECTRICAL	17
✱	.7	1010416-121	WIRE, ELECTRICAL	16
✱	.7	1010416-167	WIRE, ELECTRICAL	15
✱	.7	1010416-158	WIRE, ELECTRICAL	14
✱	.7	1010416-140	WIRE, ELECTRICAL	13
✱	.7	1010416-13	WIRE, ELECTRICAL	12
✱	.7	1010416-194	WIRE, ELECTRICAL	11
✱	.7	1010416-182	WIRE, ELECTRICAL	10
✱	.7	1010416-128	WIRE, ELECTRICAL	9
✱	.7	1010416-173	WIRE, ELECTRICAL	8
✱	.7	1010416-164	WIRE, ELECTRICAL	7
✱	.7	1010416-146	WIRE, ELECTRICAL	6
✱	.7	1010416-137	WIRE, ELECTRICAL	5
✱	.7	1010416-20	WIRE, ELECTRICAL	4
✱	0.7	1010416-11	WIRE, ELECTRICAL	3
	1	1004814	BOARD, INSULATOR	2
	1	1006739	INDICATOR E/L (REGISTER)	1

LIST OF MATERIALS

MASTER

NEXT ASSY	USED ON
1003758	

APPLICATION

UNLESS OTHERWISE SPECIFIED
DIMENSIONS ARE IN INCHES
TOLERANCES ON
FRACTIONS ± DECIMALS ±.01 ANGLES ±
DO NOT SCALE THIS DRAWING
MATERIAL
HEAT TREATMENT
FINAL FINISH

MIT
INSTRUMENTATION LAB
CAMBRIDGE, MASS.
DWG. NO. CONTRACT
DRAWN B. Jansen DATE 21 AUG 64
CHECKED R. Edmonds 9 Sept 64
APPROVAL Sept 15 '64
APPROVAL
NASA APPROVAL W. J. Rhine 9-22-64
MIT APPROVAL
MIT APPROVAL 23 Sept 64

MANNED SPACECRAFT CENTER
HOUSTON, TEXAS

INDICATOR E/L ASSY (REG)
AGC DSKY, NAV & MAIN
100 SERIES

CODE IDENT NO. —
SIZE D
NASA DRAWING NO. 1003803
SCALE 2/1
WT
SHEET 1 OF 1

NOTICE — WHEN GOVERNMENT DRAWINGS, SPECIFICATIONS, OR OTHER DATA ARE USED FOR ANY PURPOSE OTHER THAN IN CONNECTION WITH A DEFINITELY RELATED GOVERNMENT PROCUREMENT OPERATION, THE UNITED STATES GOVERNMENT THEREBY INCURS NO RESPONSIBILITY NOR ANY OBLIGATION WHATSOEVER, AND THE FACT THAT THE GOVERNMENT MAY HAVE FORMULATED, FURNISHED, OR IN ANY WAY SUPPLIED THE SAID DRAWINGS, SPECIFICATIONS OR OTHER DATA IS NOT TO BE REGARDED BY IMPLICATION OR OTHERWISE AS IN ANY MANNER LICENSING THE HOLDER OR ANY OTHER PERSON OR CORPORATION, OR CONVEYING ANY RIGHTS OR PERMISSION TO MANUFACTURE, USE, OR SELL ANY PATENTED INVENTION THAT MAY IN ANY WAY BE RELATED THERETO.

1003803 B

REVISIONS 12765			
SYM	DESCRIPTION	DATE	APPROVAL
A	REVISED PER TDRR 13433 DR Ldyka CHK RTM	11/24/64	
B	REVISED PER TDRR 14277 DR J.Q. Clement CHK	12/16/64	

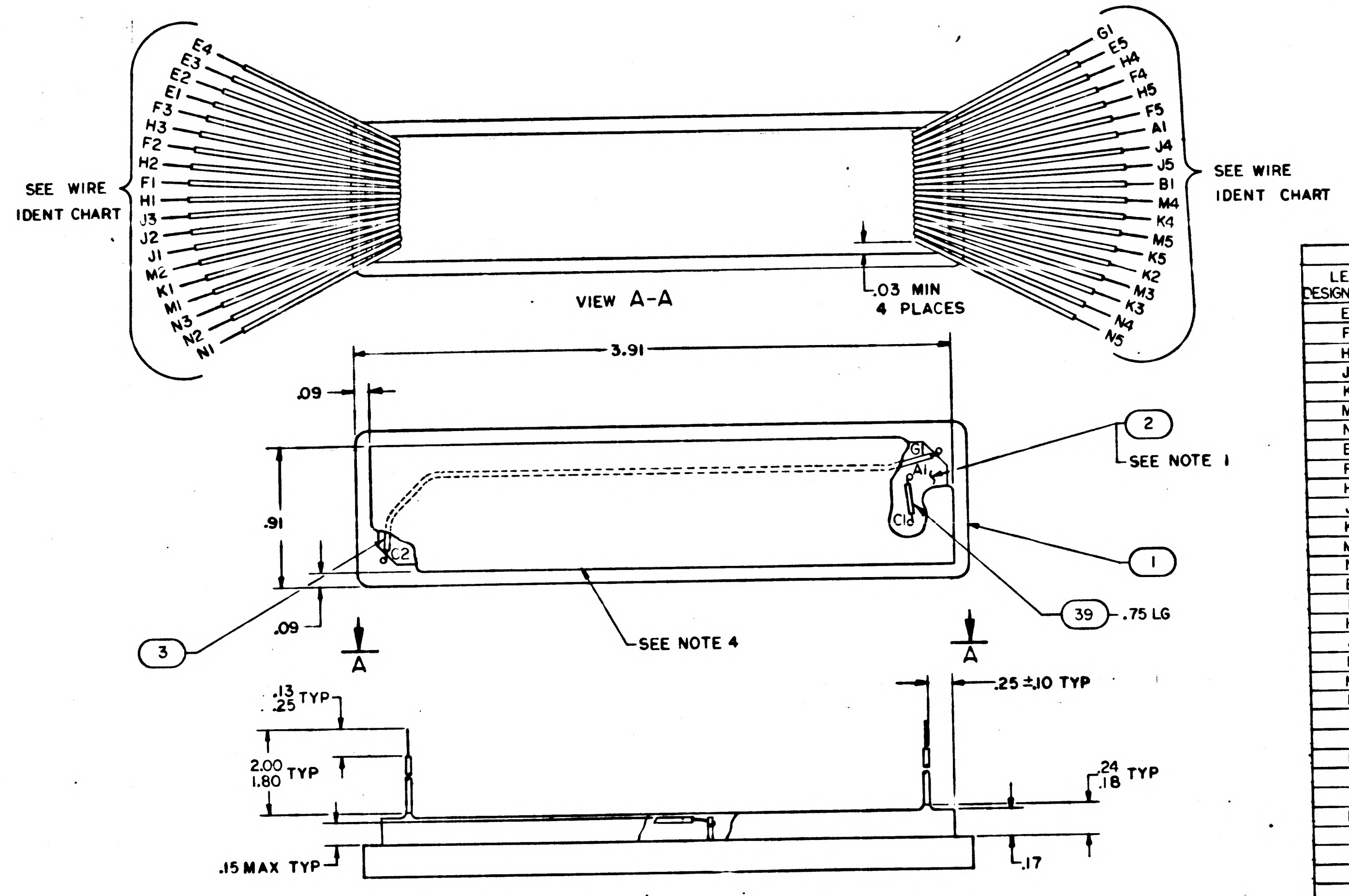

WIRE IDENT CHART			
LEAD DESIGNATION	FIND NO.	COLOR CODE (REF)	
		BASIC	TRACER
E1	4	WHT	—
F1	5	↑	RED
H1	6		ORN
J1	7		GRN
K1	8		BLU
M1	9	↓	BRN
N1	10	WHT	VIO
E2	11	RED	WHT
F2	12	↑	—
H2	13		ORN
J2	14		GRN
K2	15		BLU
M2	16	↓	BRN
N2	17	RED	VIO
E3	18	ORN	WHT
F3	19	↑	RED
H3	20		—
J3	21		GRN
K3	22		BLU
M3	23	↓	BRN
N3	24	ORN	VIO
E4	25	GRN	WHT
F4	26	↑	RED
H4	27		ORN
J4	28		—
K4	29		BLU
M4	30	↓	BRN
N4	31	GRN	VIO
E5	32	BLU	WHT
F5	33	↑	RED
H5	34		ORN
J5	35		GRN
K5	36		—
M5	37	↓	BRN
N5	38	BLU	VIO
A1	39	YEL	RED
B1	40	YEL	BLK
G1	3	BLK	—

	☒	1005750	INTERCONNECTION DIAGRAM	REF
*	.7	1010416-114	WIRE, ELECTRICAL	40
*	.7	1010416-132	WIRE, ELECTRICAL	39
*	.7	1010416-180	WIRE, ELECTRICAL	38
*	.7	1010416-125	WIRE, ELECTRICAL	37
*	.7	1010416-17	WIRE, ELECTRICAL	36
*	.7	1010416-161	WIRE, ELECTRICAL	35
*	.7	1010416-143	WIRE, ELECTRICAL	34
*	.7	1010416-134	WIRE, ELECTRICAL	33
*	.7	1010416-198	WIRE, ELECTRICAL	32
*	.7	1010416-179	WIRE, ELECTRICAL	31
*	.7	1010416-124	WIRE, ELECTRICAL	30
*	.7	1010416-170	WIRE, ELECTRICAL	29
*	.7	1010416-16	WIRE, ELECTRICAL	28
*	.7	1010416-142	WIRE, ELECTRICAL	27
*	.7	1010416-133	WIRE, ELECTRICAL	26
*	.7	1010416-197	WIRE, ELECTRICAL	25
*	.7	1010416-177	WIRE, ELECTRICAL	24
*	.7	1010416-122	WIRE, ELECTRICAL	23
*	.7	1010416-168	WIRE, ELECTRICAL	22
*	.7	1010416-159	WIRE, ELECTRICAL	21
*	.7	1010416-14	WIRE, ELECTRICAL	20
*	.7	1010416-131	WIRE, ELECTRICAL	19
*	.7	1010416-195	WIRE, ELECTRICAL	18
*	.7	1010416-176	WIRE, ELECTRICAL	17
*	.7	1010416-121	WIRE, ELECTRICAL	16
*	.7	1010416-167	WIRE, ELECTRICAL	15
*	.7	1010416-158	WIRE, ELECTRICAL	14
*	.7	1010416-140	WIRE, ELECTRICAL	13
*	.7	1010416-13	WIRE, ELECTRICAL	12
*	.7	1010416-194	WIRE, ELECTRICAL	11
*	.7	1010416-182	WIRE, ELECTRICAL	10
*	.7	1010416-128	WIRE, ELECTRICAL	9
*	.7	1010416-173	WIRE, ELECTRICAL	8
*	.7	1010416-164	WIRE, ELECTRICAL	7
*	.7	1010416-146	WIRE, ELECTRICAL	6
*	.7	1010416-137	WIRE, ELECTRICAL	5
*	.7	1010416-20	WIRE, ELECTRICAL	4
*	0.7	1010416-11	WIRE, ELECTRICAL	3
	1	1004814	BOARD, INSULATOR	2
	1	1006305	INDICATOR E/L (REGISTER)	1
	QTY REQD	PART OR IDENTIFYING NO.	NOMENCLATURE OR DESCRIPTION	FIND NO.

LIST OF MATERIALS

NOTES
1. BOND FIND NO. 2 TO FIND NO. 1 PER ND1002004, TYPE II
2. SOLDER PER ND1002071
3. ~~MARK EACH WIRE WITH ITS INDIVIDUAL PIN LETTER & NUMBER PER ND1002019~~
4. ENCAPSULATE AREA SHOWN PER ND1002036, CURING CYCLE A
5. INTERPRET DRAWING IN ACCORDANCE WITH STANDARDS PRESCRIBED BY MIL-D-70327
6. ~~ALL WIRES TO BE FIND NO.4 UNLESS OTHERWISE SPECIFIED~~
7. * DENOTES LENGTH IN FEET

MASTER

1003758	
NEXT ASSY	USED ON
APPLICATION	

UNLESS OTHERWISE SPECIFIED
DIMENSIONS ARE IN INCHES
TOLERANCES ON
FRACTIONS ± DECIMALS ±.01 ANGLES ±
DO NOT SCALE THIS DRAWING
MATERIAL
HEAT TREATMENT
FINAL FINISH

MIT
INSTRUMENTATION LAB
CAMBRIDGE, MASS.
DWG. NO. CONTRACT
DRAWN B Jensen DATE 21 AUG 64
CHECKED P. Edmonds 9 Sept 64
APPROVAL Klemson Sept 15/64
APPROVAL
NASA APPROVAL W J Rhine 9-22-64
MIT APPROVAL
MIT APPROVAL 22 Sept 64

MANNED SPACECRAFT CENTER
HOUSTON, TEXAS

INDICATOR E/L ASSY (REG)
AGC DSKY, NAV & MAIN
100 SERIES

CODE IDENT NO. —— SIZE D NASA DRAWING NO. 1003803
SCALE 2/1 WT SHEET 1 OF 1

NOTICE — WHEN GOVERNMENT DRAWINGS, SPECIFICATIONS, OR OTHER DATA ARE USED FOR ANY PURPOSE OTHER THAN IN CONNECTION WITH A DEFINITELY RELATED GOVERNMENT PROCUREMENT OPERATION, THE UNITED STATES GOVERNMENT THEREBY INCURS NO RESPONSIBILITY NOR ANY OBLIGATION WHATSOEVER; AND THE FACT THAT THE GOVERNMENT MAY HAVE FORMULATED, FURNISHED, OR IN ANY WAY SUPPLIED THE SAID DRAWINGS, SPECIFICATIONS OR OTHER DATA IS NOT TO BE REGARDED BY IMPLICATION OR OTHERWISE AS IN ANY MANNER LICENSING THE HOLDER OR ANY OTHER PERSON OR CORPORATION, OR CONVEYING ANY RIGHTS OR PERMISSION TO MANUFACTURE, USE, OR SELL ANY PATENTED INVENTION THAT MAY IN ANY WAY BE RELATED THERETO.

1003803 C

SYM	DESCRIPTION	DATE	APPROVAL
A	REVISED PER TDRR 13433 DR CHK RTM	11/23/64	HWC
B	REVISED PER TDRR 14277 DR J.Q. Clermont CHK BM	12/16/64	HWC
C	REVISED PER TDRR 15648 DR A.J. Bison CHK JCJ BM	2/9/65	HWC

REVISIONS 12765

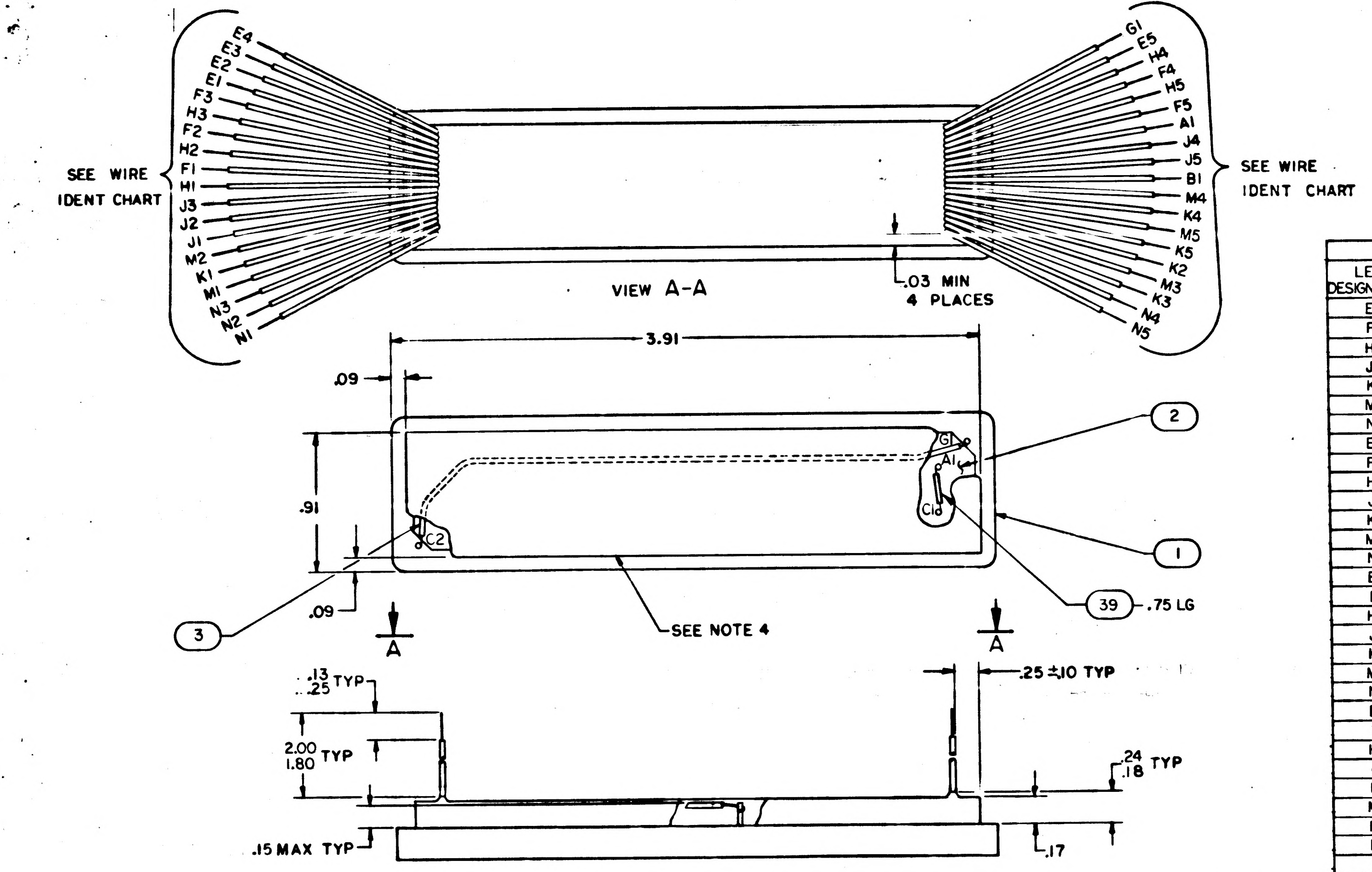

WIRE IDENT CHART			
LEAD DESIGNATION	FIND NO.	COLOR CODE (REF)	
		BASIC	TRACER
E1	4	WHT	—
F1	5		RED
H1	6		ORN
J1	7		GRN
K1	8		BLU
M1	9		BRN
N1	10	WHT	VIO
E2	11	RED	WHT
F2	12		—
H2	13		ORN
J2	14		GRN
K2	15		BLU
M2	16		BRN
N2	17	RED	VIO
E3	18	ORN	WHT
F3	19		RED
H3	20		—
J3	21		GRN
K3	22		BLU
M3	23		BRN
N3	24	ORN	VIO
E4	25	GRN	WHT
F4	26		RED
H4	27		ORN
J4	28		—
K4	29		BLU
M4	30		BRN
N4	31	GRN	VIO
E5	32	BLU	WHT
F5	33		RED
H5	34		ORN
J5	35		GRN
K5	36		—
M5	37		BRN
N5	38	BLU	VIO
A1	39	YEL	RED
B1	40	YEL	BLK
G1	3	BLK	—

NOTES

1. ~~BOND FIND NO. 2 TO FIND NO. 1 PER ND1002004, TYPE II~~
2. SOLDER PER ND 1002071
3. ~~MARK EACH WIRE WITH ITS INDIVIDUAL PIN LETTER & NUMBER PER ND 1002019~~
4. ENCAPSULATE AREA SHOWN PER ND 1002036, CURING CYCLE A
5. INTERPRET DRAWING IN ACCORDANCE WITH STANDARDS PRESCRIBED BY MIL-D-70327
6. ~~ALL WIRES TO BE FIND NO. 4 UNLESS OTHERWISE SPECIFIED~~
7. ✱ DENOTES LENGTH IN FEET

	QTY REQD	PART OR IDENTIFYING NO.	NOMENCLATURE OR DESCRIPTION	FIND NO.
	☒	1005750	INTERCONNECTION DIAGRAM	REF
✱	.7	1010416-114	WIRE, ELECTRICAL	40
✱	.7	1010416-132	WIRE, ELECTRICAL	39
✱	.7	1010416-180	WIRE, ELECTRICAL	38
✱	.7	1010416-125	WIRE, ELECTRICAL	37
✱	.7	1010416-17	WIRE, ELECTRICAL	36
✱	.7	1010416-161	WIRE, ELECTRICAL	35
✱	.7	1010416-143	WIRE, ELECTRICAL	34
✱	.7	1010416-134	WIRE, ELECTRICAL	33
✱	.7	1010416-198	WIRE, ELECTRICAL	32
✱	.7	1010416-179	WIRE, ELECTRICAL	31
✱	.7	1010416-124	WIRE, ELECTRICAL	30
✱	.7	1010416-170	WIRE, ELECTRICAL	29
✱	.7	1010416-16	WIRE, ELECTRICAL	28
✱	.7	1010416-142	WIRE, ELECTRICAL	27
✱	.7	1010416-133	WIRE, ELECTRICAL	26
✱	.7	1010416-197	WIRE, ELECTRICAL	25
✱	.7	1010416-177	WIRE, ELECTRICAL	24
✱	.7	1010416-122	WIRE, ELECTRICAL	23
✱	.7	1010416-168	WIRE, ELECTRICAL	22
✱	.7	1010416-159	WIRE, ELECTRICAL	21
✱	.7	1010416-14	WIRE, ELECTRICAL	20
✱	.7	1010416-131	WIRE, ELECTRICAL	19
✱	.7	1010416-195	WIRE, ELECTRICAL	18
✱	.7	1010416-176	WIRE, ELECTRICAL	17
✱	.7	1010416-121	WIRE, ELECTRICAL	16
✱	.7	1010416-167	WIRE, ELECTRICAL	15
✱	.7	1010416-158	WIRE, ELECTRICAL	14
✱	.7	1010416-140	WIRE, ELECTRICAL	13
✱	.7	1010416-13	WIRE, ELECTRICAL	12
✱	.7	1010416-194	WIRE, ELECTRICAL	11
✱	.7	1010416-182	WIRE, ELECTRICAL	10
✱	.7	1010416-128	WIRE, ELECTRICAL	9
✱	.7	1010416-173	WIRE, ELECTRICAL	8
✱	.7	1010416-164	WIRE, ELECTRICAL	7
✱	.7	1010416-146	WIRE, ELECTRICAL	6
✱	.7	1010416-137	WIRE, ELECTRICAL	5
✱	.7	1010416-20	WIRE, ELECTRICAL	4
✱	0.7	1010416-11	WIRE, ELECTRICAL	3
	1	1004814	BOARD, INSULATOR	2
	1	1006739	INDICATOR E/L (REGISTER)	1

LIST OF MATERIALS

1003758	
NEXT ASSY	USED ON
APPLICATION	

UNLESS OTHERWISE SPECIFIED DIMENSIONS ARE IN INCHES
TOLERANCES ON
FRACTIONS ± DECIMALS ±.01 ANGLES ±
DO NOT SCALE THIS DRAWING
MATERIAL
HEAT TREATMENT
FINAL FINISH

MIT INSTRUMENTATION LAB
CAMBRIDGE, MASS.
DWG. NO. CONTRACT
DRAWN B. Jensen DATE 21 AUG 64
CHECKED R. Edwards 9 Sept 64
APPROVAL Sept 15/64
APPROVAL
NASA APPROVAL W J Rhine 9-22-64
MIT APPROVAL
MIT APPROVAL 22 Sept 64

MANNED SPACECRAFT CENTER
HOUSTON, TEXAS

INDICATOR E/L ASSY (REG)
AGC DSKY, NAV & MAIN
100 SERIES

CODE IDENT NO. —— SIZE D NASA DRAWING NO. 1003803
SCALE 2/1 WT SHEET 1 OF 1

NOTICE — WHEN GOVERNMENT DRAWINGS SPECIFICATIONS, OR OTHER DATA ARE USED FOR ANY PURPOSE OTHER THAN IN CONNECTION WITH A DEFINITELY RELATED GOVERNMENT PROCUREMENT OPERATION, THE UNITED STATES GOVERNMENT THEREBY INCURS NO RESPONSIBILITY NOR ANY OBLIGATION WHATSOEVER; AND THE FACT THAT THE GOVERNMENT MAY HAVE FORMULATED, FURNISHED, OR IN ANY WAY SUPPLIED THE SAID DRAWINGS, SPECIFICATIONS OR OTHER DATA IS NOT TO BE REGARDED BY IMPLICATION OR OTHERWISE AS IN ANY MANNER LICENSING THE HOLDER OR ANY OTHER PERSON OR CORPORATION, OR CONVEYING ANY RIGHTS OR PERMISSION TO MANUFACTURE, USE, OR SELL ANY PATENTED INVENTION THAT MAY IN ANY WAY BE RELATED THERETO.

1003803 D

REVISIONS 12765			
SYM	DESCRIPTION	DATE	APPROVAL
A	REVISED PER TDRR 13433 DR CHK RTM	11/23/64	
B	REVISED PER TDRR 14277 DR D.Q. Clermont CHK BJM	12/16/64	
C	REVISED PER TDRR 15648 DR CHK JCJ BJM	2/4/65	
D	REVISED PER TDRR 17248 DR CHK BJM	3/22/65	

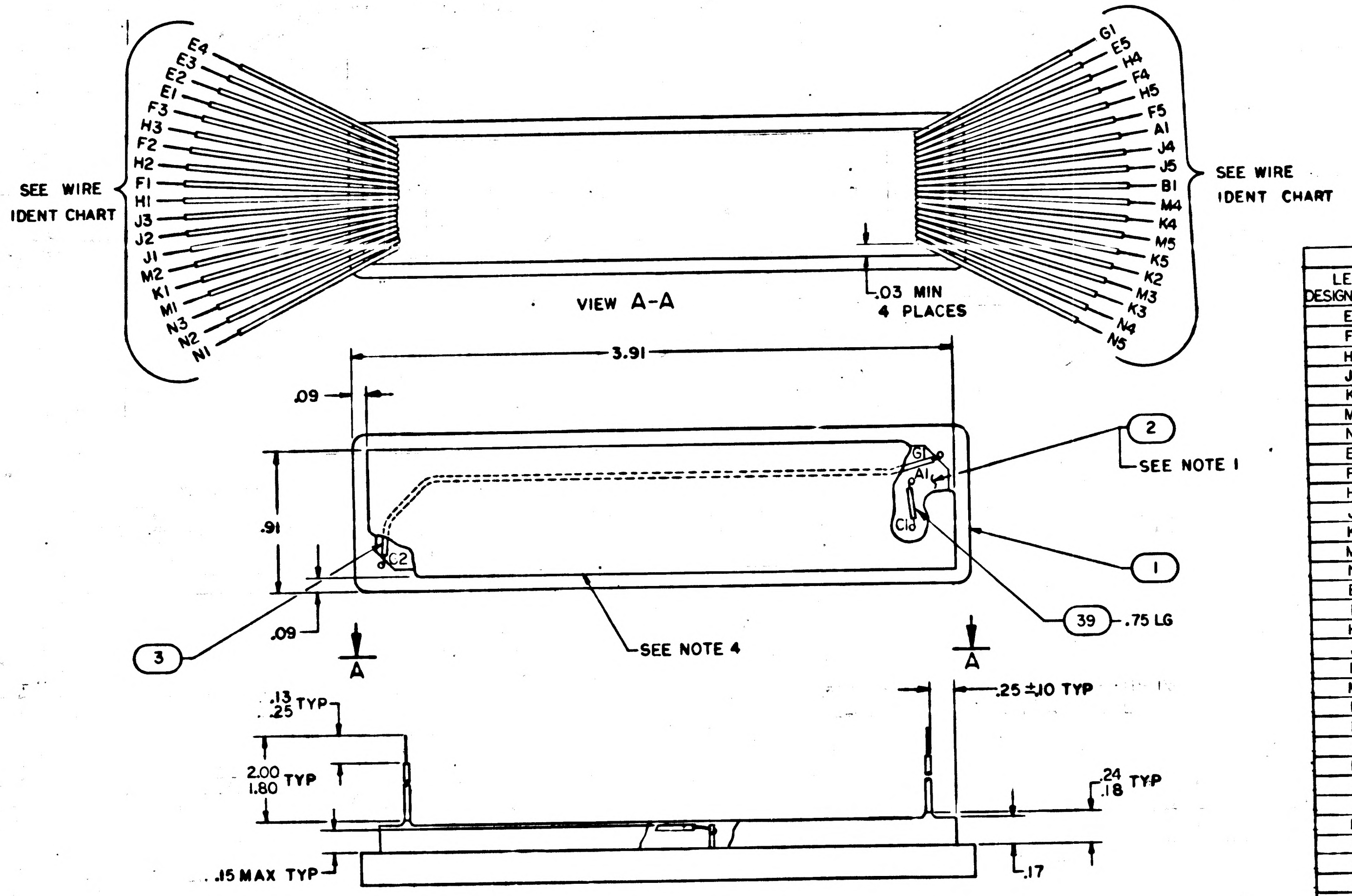

WIRE IDENT CHART			
LEAD DESIGNATION	FIND NO.	COLOR CODE (REF)	
		BASIC	TRACER
E1	4	WHT	—
F1	5	↑	RED
H1	6		ORN
J1	7		GRN
K1	8		BLU
M1	9	↓	BRN
N1	10	WHT	VIO
E2	11	RED	WHT
F2	12	↑	—
H2	13		ORN
J2	14		GRN
K2	15		BLU
M2	16	↓	BRN
N2	17	RED	VIO
E3	18	ORN	WHT
F3	19	↑	RED
H3	20		—
J3	21		GRN
K3	22		BLU
M3	23	↓	BRN
N3	24	ORN	VIO
E4	25	GRN	WHT
F4	26	↑	RED
H4	27		ORN
J4	28		—
K4	29		BLU
M4	30	↓	BRN
N4	31	GRN	VIO
E5	32	BLU	WHT
F5	33	↑	RED
H5	34		ORN
J5	35		GRN
K5	36		—
M5	37	↓	BRN
N5	38	BLU	VIO
A1	39	YEL	RED
B1	40	YEL	BLK
G1	3	BLK	—

NOTES
1. BOND FIND NO. 2 TO FIND NO. 1 PER ND1002004, TYPE II OR TYPE V
2. SOLDER PER ND 1002071
~~3. MARK EACH WIRE WITH ITS INDIVIDUAL PIN LETTER & NUMBER PER ND 1002019~~
4. ENCAPSULATE AREA SHOWN PER ND1002036, CURING CYCLE A
5. INTERPRET DRAWING IN ACCORDANCE WITH STANDARDS PRESCRIBED BY MIL-D-70327
~~6. ALL WIRES TO BE FIND NO. 4 UNLESS OTHERWISE SPECIFIED~~
7. ✱ DENOTES LENGTH IN FEET

	QTY REQD	PART OR IDENTIFYING NO.	NOMENCLATURE OR DESCRIPTION	FIND NO.
	☒	1005750	INTERCONNECTION DIAGRAM	REF
✱	.7	1010416-114	WIRE, ELECTRICAL	40
✱	.7	1010416-132	WIRE, ELECTRICAL	39
✱	.7	1010416-180	WIRE, ELECTRICAL	38
✱	.7	1010416-125	WIRE, ELECTRICAL	37
✱	.7	1010416-17	WIRE, ELECTRICAL	36
✱	.7	1010416-161	WIRE, ELECTRICAL	35
✱	.7	1010416-143	WIRE, ELECTRICAL	34
✱	.7	1010416-134	WIRE, ELECTRICAL	33
✱	.7	1010416-198	WIRE, ELECTRICAL	32
✱	.7	1010416-179	WIRE, ELECTRICAL	31
✱	.7	1010416-124	WIRE, ELECTRICAL	30
✱	.7	1010416-170	WIRE, ELECTRICAL	29
✱	.7	1010416-16	WIRE, ELECTRICAL	28
✱	.7	1010416-142	WIRE, ELECTRICAL	27
✱	.7	1010416-133	WIRE, ELECTRICAL	26
✱	.7	1010416-197	WIRE, ELECTRICAL	25
✱	.7	1010416-177	WIRE, ELECTRICAL	24
✱	.7	1010416-122	WIRE, ELECTRICAL	23
✱	.7	1010416-168	WIRE, ELECTRICAL	22
✱	.7	1010416-159	WIRE, ELECTRICAL	21
✱	.7	1010416-14	WIRE, ELECTRICAL	20
✱	.7	1010416-131	WIRE, ELECTRICAL	19
✱	.7	1010416-195	WIRE, ELECTRICAL	18
✱	.7	1010416-176	WIRE, ELECTRICAL	17
✱	.7	1010416-121	WIRE, ELECTRICAL	16
✱	.7	1010416-167	WIRE, ELECTRICAL	15
✱	.7	1010416-158	WIRE, ELECTRICAL	14
✱	.7	1010416-140	WIRE, ELECTRICAL	13
✱	.7	1010416-13	WIRE, ELECTRICAL	12
✱	.7	1010416-194	WIRE, ELECTRICAL	11
✱	.7	1010416-182	WIRE, ELECTRICAL	10
✱	.7	1010416-128	WIRE, ELECTRICAL	9
✱	.7	1010416-173	WIRE, ELECTRICAL	8
✱	.7	1010416-164	WIRE, ELECTRICAL	7
✱	.7	1010416-146	WIRE, ELECTRICAL	6
✱	.7	1010416-137	WIRE, ELECTRICAL	5
✱	.7	1010416-20	WIRE, ELECTRICAL	4
✱	0.7	1010416-11	WIRE, ELECTRICAL	3
	1	1004814	BOARD, INSULATOR	2
	1	1006739	INDICATOR E/L (REGISTER)	1

LIST OF MATERIALS

1003758	
NEXT ASSY	USED ON
APPLICATION	

UNLESS OTHERWISE SPECIFIED
DIMENSIONS ARE IN INCHES
TOLERANCES ON
FRACTIONS ± DECIMALS ±.01 ANGLES ±
DO NOT SCALE THIS DRAWING
MATERIAL
HEAT TREATMENT
FINAL FINISH

MIT
INSTRUMENTATION LAB
CAMBRIDGE, MASS.
DWG. NO. CONTRACT
DRAWN B Jensen DATE 21 AUG 64
CHECKED 9.5.64
APPROVAL Sept 15/64
APPROVAL
NASA APPROVAL W J Rhine 9-22-64
MIT APPROVAL
MIT APPROVAL 23 Sept 64

MANNED SPACECRAFT CENTER
HOUSTON, TEXAS

INDICATOR E/L ASSY (REG)
AGC DSKY, NAV & MAIN
100 SERIES

CODE IDENT NO. —
SIZE D
NASA DRAWING NO. 1003803
SCALE 2/1
WT
SHEET 1 OF 1

NOTICE — WHEN GOVERNMENT DRAWINGS, SPECIFICATIONS, OR OTHER DATA ARE USED FOR ANY PURPOSE OTHER THAN IN CONNECTION WITH A DEFINITELY RELATED GOVERNMENT PROCUREMENT OPERATION, THE UNITED STATES GOVERNMENT THEREBY INCURS NO RESPONSIBILITY NOR ANY OBLIGATION WHATSOEVER, AND THE FACT THAT THE GOVERNMENT MAY HAVE FORMULATED, FURNISHED, OR IN ANY WAY SUPPLIED THE SAID DRAWINGS, SPECIFICATIONS OR OTHER DATA IS NOT TO BE REGARDED BY IMPLICATION OR OTHERWISE AS IN ANY MANNER LICENSING THE HOLDER OR ANY OTHER PERSON OR CORPORATION, OR CONVEYING ANY RIGHTS OR PERMISSION TO MANUFACTURE, USE, OR SELL ANY PATENTED INVENTION THAT MAY IN ANY WAY BE RELATED THERETO.

1003803 E

REVISIONS 12765			
SYM	DESCRIPTION	DATE	APPROVAL
A	REVISED PER TDRR 13433 DR CHK RTM	11/23/64	
B	REVISED PER TDRR 14277 DR D. A. Clermont CHK	12/16/64	
C	REVISED PER TDRR 15648 DR G. J. Bison CHK JCJ	2/9/65	
D	REVISED PER TDRR 17248 DR D. CHK	3/22/65	
E	REVISED PER TDRR 20558 DR R. Ripley CHK	8/26/65	

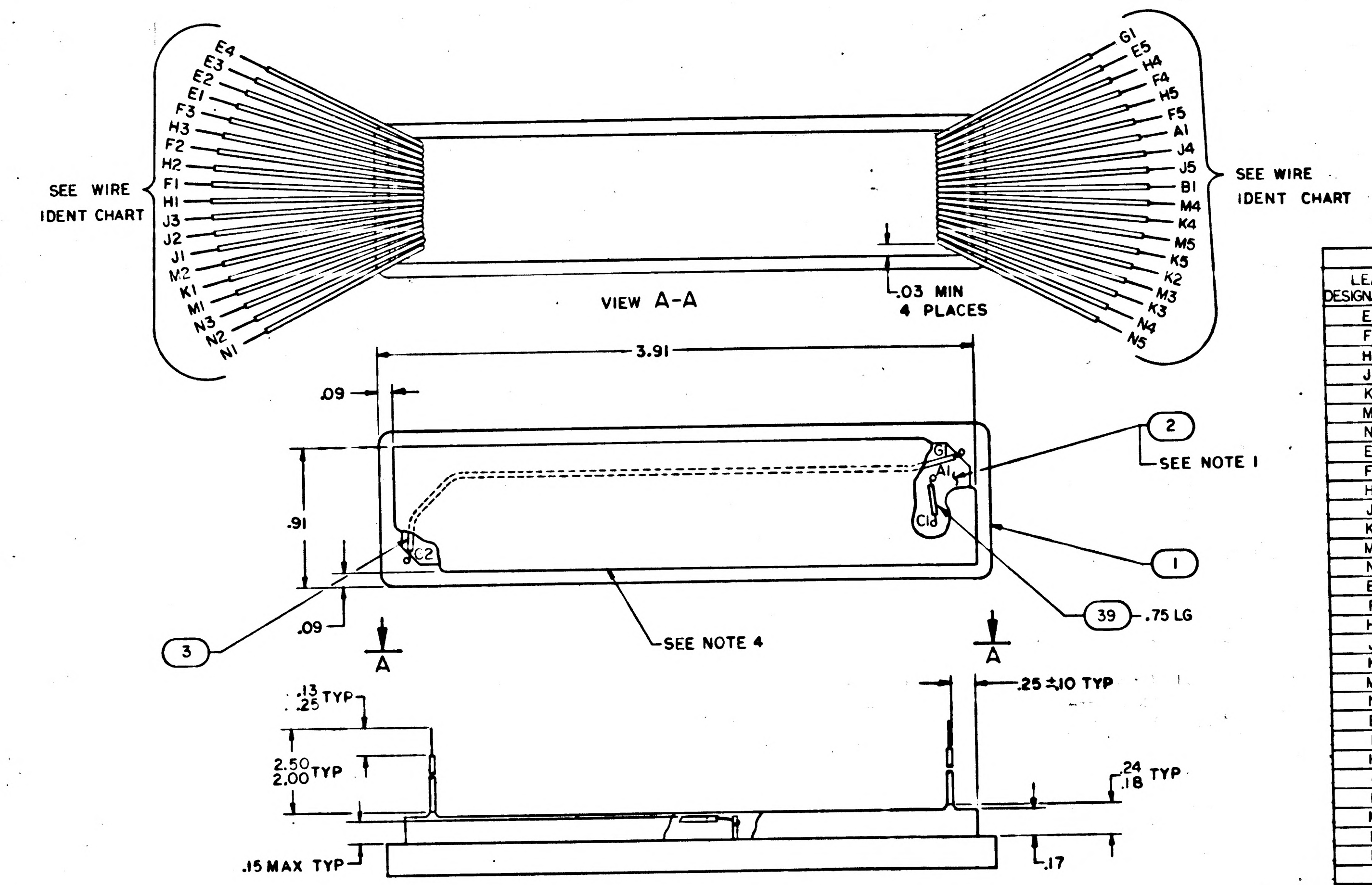

WIRE IDENT CHART			
LEAD DESIGNATION	FIND NO.	COLOR CODE (REF)	
		BASIC	TRACER
E1	4	WHT	—
F1	5	↑	RED
H1	6		ORN
J1	7		GRN
K1	8		BLU
M1	9	↓	BRN
N1	10	WHT	VIO
E2	11	RED	WHT
F2	12	↑	—
H2	13		ORN
J2	14		GRN
K2	15		BLU
M2	16	↓	BRN
N2	17	RED	VIO
E3	18	ORN	WHT
F3	19	↑	RED
H3	20		—
J3	21		GRN
K3	22		BLU
M3	23	↓	BRN
N3	24	ORN	VIO
E4	25	GRN	WHT
F4	26	↑	RED
H4	27		ORN
J4	28		—
K4	29		BLU
M4	30	↓	BRN
N4	31	GRN	VIO
E5	32	BLU	WHT
F5	33	↑	RED
H5	34		ORN
J5	35		GRN
K5	36		—
M5	37	↓	BRN
N5	38	BLU	VIO
A1	39	YEL	RED
B1	40	YEL	BLK
G1	3	BLK	—

NOTES
1. BOND FIND NO. 2 TO FIND NO. 1 PER ND1002004, TYPE II OR TYPE V
2. SOLDER PER ND1002071 USING SOLDER PER ND1002075
~~3. MARK EACH WIRE WITH ITS INDIVIDUAL PIN LETTER & NUMBER PER ND1002019~~
4. ENCAPSULATE AREA SHOWN PER ND1002236, CURE SCHEDULE A
5. INTERPRET DRAWING IN ACCORDANCE WITH STANDARDS PRESCRIBED BY MIL-D-70327
~~6. ALL WIRES TO BE FIND NO.4 UNLESS OTHERWISE SPECIFIED~~
7. * DENOTES LENGTH IN FEET
8. IDENTIFY WITH DRAWING NUMBER AND REVISION PER ND1002019

	QTY REQD	PART OR IDENTIFYING NO.	NOMENCLATURE OR DESCRIPTION	FIND NO.
	☒	1005750	INTERCONNECTION DIAGRAM	REF
*	.7	1010416-114	WIRE, ELECTRICAL	40
*	.7	1010416-132	WIRE, ELECTRICAL	39
*	.7	1010416-180	WIRE, ELECTRICAL	38
*	.7	1010416-125	WIRE, ELECTRICAL	37
*	.7	1010416-17	WIRE, ELECTRICAL	36
*	.7	1010416-161	WIRE, ELECTRICAL	35
*	.7	1010416-143	WIRE, ELECTRICAL	34
*	.7	1010416-134	WIRE, ELECTRICAL	33
*	.7	1010416-198	WIRE, ELECTRICAL	32
*	.7	1010416-179	WIRE, ELECTRICAL	31
*	.7	1010416-124	WIRE, ELECTRICAL	30
*	.7	1010416-170	WIRE, ELECTRICAL	29
*	.7	1010416-16	WIRE, ELECTRICAL	28
*	.7	1010416-142	WIRE, ELECTRICAL	27
*	.7	1010416-133	WIRE, ELECTRICAL	26
*	.7	1010416-197	WIRE, ELECTRICAL	25
*	.7	1010416-177	WIRE, ELECTRICAL	24
*	.7	1010416-122	WIRE, ELECTRICAL	23
*	.7	1010416-168	WIRE, ELECTRICAL	22
*	.7	1010416-159	WIRE, ELECTRICAL	21
*	.7	1010416-14	WIRE, ELECTRICAL	20
*	.7	1010416-131	WIRE, ELECTRICAL	19
*	.7	1010416-195	WIRE, ELECTRICAL	18
*	.7	1010416-176	WIRE, ELECTRICAL	17
*	.7	1010416-121	WIRE, ELECTRICAL	16
*	.7	1010416-167	WIRE, ELECTRICAL	15
*	.7	1010416-158	WIRE, ELECTRICAL	14
*	.7	1010416-140	WIRE, ELECTRICAL	13
*	.7	1010416-13	WIRE, ELECTRICAL	12
*	.7	1010416-194	WIRE, ELECTRICAL	11
*	.7	1010416-182	WIRE, ELECTRICAL	10
*	.7	1010416-128	WIRE, ELECTRICAL	9
*	.7	1010416-173	WIRE, ELECTRICAL	8
*	.7	1010416-164	WIRE, ELECTRICAL	7
*	.7	1010416-146	WIRE, ELECTRICAL	6
*	.7	1010416-137	WIRE, ELECTRICAL	5
*	.7	1010416-20	WIRE, ELECTRICAL	4
*	0.7	1010416-11	WIRE, ELECTRICAL	3
	1	1004814	BOARD, INSULATOR	2
	1	1006739-1	INDICATOR E/L (REGISTER)	1

LIST OF MATERIALS

NEXT ASSY	USED ON
1003809	
1003758	

APPLICATION

UNLESS OTHERWISE SPECIFIED
DIMENSIONS ARE IN INCHES
TOLERANCES ON
FRACTIONS ± DECIMALS ±.01 ANGLES ±
DO NOT SCALE THIS DRAWING
MATERIAL
HEAT TREATMENT
FINAL FINISH

MIT INSTRUMENTATION LAB
CAMBRIDGE, MASS.
DWG. NO. CONTRACT
DRAWN B. Jensen DATE 21AUG64
CHECKED R. Edwards 9 Sept 64
APPROVAL Sept 13/64
APPROVAL 8 Sept 64
NASA APPROVAL W J R 9-22-64
MIT APPROVAL
MIT APPROVAL 23 Sept 64

MANNED SPACECRAFT CENTER
HOUSTON, TEXAS

INDICATOR E/L ASSY (REG)
AGC DSKY, NAV & MAIN
100 SERIES

CODE IDENT NO. 80230
SIZE D
NASA DRAWING NO. 1003803
SCALE 2/1
WT
SHEET 1 OF 1

NOTICE — WHEN GOVERNMENT DRAWINGS, SPECIFICATIONS, OR OTHER DATA ARE USED FOR ANY PURPOSE OTHER THAN IN CONNECTION WITH A DEFINITELY RELATED GOVERNMENT PROCUREMENT OPERATION, THE UNITED STATES GOVERNMENT THEREBY INCURS NO RESPONSIBILITY NOR ANY OBLIGATION WHATSOEVER; AND THE FACT THAT THE GOVERNMENT MAY HAVE FORMULATED, FURNISHED, OR IN ANY WAY SUPPLIED THE SAID DRAWINGS, SPECIFICATIONS OR OTHER DATA IS NOT TO BE REGARDED BY IMPLICATION OR OTHERWISE AS IN ANY MANNER LICENSING THE HOLDER OR ANY OTHER PERSON OR CORPORATION, OR CONVEYING ANY RIGHTS OR PERMISSION TO MANUFACTURE, USE, OR SELL ANY PATENTED INVENTION THAT MAY IN ANY WAY BE RELATED THERETO.

1003803 —

SYM	DESCRIPTION	DATE	APPROVAL

REVISIONS 12765

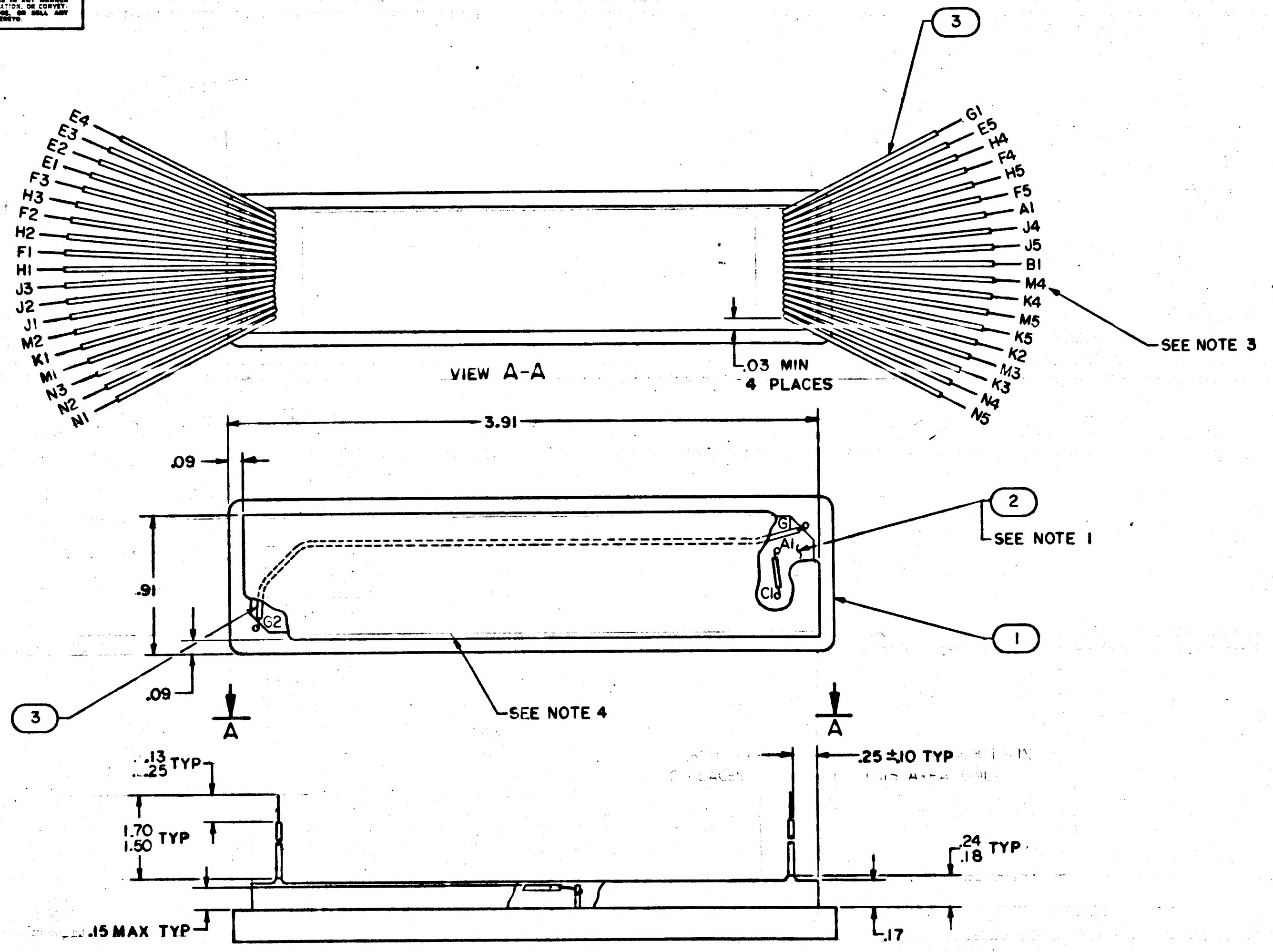

3
E4
E3
E2
E1
F3
H3
F2
H2
F1
H1
J3
J2
J1
M2
K1
M1
N3
N2
N1
G1
E5
H4
F4
H5
F5
A1
J4
J5
B1
M4
K4
M5
K5
K2
M3
K3
N4
N5
SEE NOTE 3
VIEW A-A
.03 MIN
4 PLACES
3.91
.09
2
SEE NOTE 1
G1
A1
C1
.91
G2
1
3
.09
SEE NOTE 4
A
A
.13
.25 TYP
.25 ±.10 TYP
1.70
1.50 TYP
.24
.18 TYP
.15 MAX TYP
.17

NOTES

1. BOND FIND NO. 2 TO FIND NO. 1 PER ND 1002004, TYPE II
2. SOLDER PER ND 1002071
3. MARK EACH WIRE WITH ITS INDIVIDUAL PIN LETTER & NUMBER PER ND 1002019
4. ENCAPSULATE AREA SHOWN PER ND 1002036, CURING CYCLE A
5. INTERPRET DRAWING IN ACCORDANCE WITH STANDARDS PRESCRIBED BY MIL-D-70327
6. ALL WIRES TO BE FIND NO. 4 UNLESS OTHERWISE SPECIFIED
7. ✱ DENOTES LENGTH IN FEET

QTY REQD	PART OR IDENTIFYING NO.	NOMENCLATURE OR DESCRIPTION	FIND NO.
☒	1005750	INTERCONNECTION DIAGRAM	REF
✱ 8.0	1010416-10	WIRE, ELECTRICAL	4
✱ 0.7	1010416-11	WIRE, ELECTRICAL	3
1	1004814	BOARD, INSULATOR	2
1	1006739	INDICATOR E/L (REGISTER)	1

LIST OF MATERIALS

MASTER

NEXT ASSY	USED ON
1003758	

APPLICATION

UNLESS OTHERWISE SPECIFIED
DIMENSIONS ARE IN INCHES
TOLERANCES ON
FRACTIONS ± DECIMALS ±.01 ANGLES ±
DO NOT SCALE THIS DRAWING
MATERIAL
HEAT TREATMENT
FINAL FINISH

MIT
INSTRUMENTATION LAB
CAMBRIDGE, MASS.
DWG. NO. CONTRACT

DRAWN B Jensen DATE 21 AUG 64
CHECKED P. Edmonds 9 Sept 64
APPROVAL Sept 15 64
APPROVAL 21 Sept 64
NASA APPROVAL W J Rhine 9-22-64
MIT APPROVAL
MIT APPROVAL 23 Sept 64

MANNED SPACECRAFT CENTER
HOUSTON, TEXAS

INDICATOR E/L ASSY (REG)
AGC DSKY, NAV & MAIN
100 SERIES

CODE IDENT NO. —
SIZE D
NASA DRAWING NO. 1003803
SCALE 2/1
WT
SHEET 1 OF 1

1003803

1003805	A

REVISIONS 12763			
SYM	DESCRIPTION	DATE	APPROVAL
A	REVISED PER TDRR 14477 DR	12/14/	

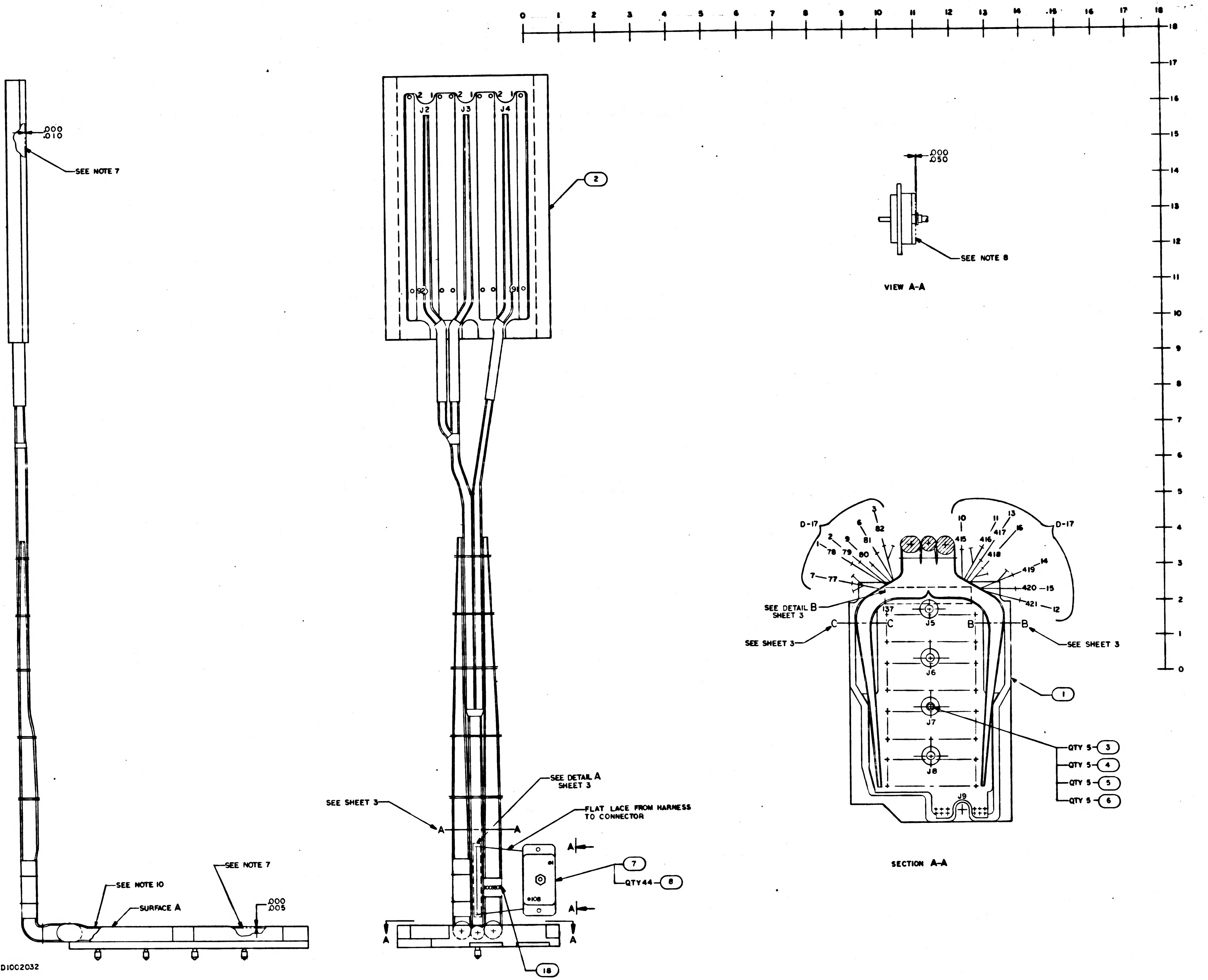

.000
.010
SEE NOTE 7
SEE NOTE 10
SURFACE A
SEE NOTE 7
.000
.005
J2
J3
J4
2
SEE SHEET 3
A
A
SEE DETAIL A SHEET 3
FLAT LACE FROM HARNESS TO CONNECTOR
7
QTY 44
8
#108
18
A
A
.000
.050
SEE NOTE 8
VIEW A-A
D-17
D-17
SEE DETAIL B SHEET 3
SEE SHEET 3
SEE SHEET 3
J5
J6
J7
J8
J9
137
1
QTY 5 3
QTY 5 4
QTY 5 5
QTY 5 6
SECTION A-A

NOTES
1. FOR SYMBOLS FABRICATION AND REQUIRED TEST SEE ND1002032
2. SOLDER PER ND1002071
3. STRIP ALL LEADS .19 & TIN
4. # DENOTES LENGTH IN FEET
5. TERMINATE SHIELDS OF FIND NO.9 AT FIND NO.1 WITHIN HARNESS JUST BEFORE POINT OF BREAKOUT WITH .37 OF NO. 13
6. MIL-I-23053, CLASS II, COLOR BLK, FOR FIND NO.12 SIZE NO.14, FOR FIND NO.11 SIZE NO.5, FOR FIND NO.13 SIZE NO.16
7. ENCAPSULATE INDICATED AREAS PER ND1002217
8. ENCAPSULATE INDICATED AREAS USING SILASTIC RUBBER PER ND1002009 METHOD E
9. INTERPRET DRAWING IN ACCORDANCE WITH STANDARDS PRESCRIBED BY MIL-D-70327
10. FLAT LACE SIDE OF HARNESS TO ALLOW TRUNK TO LIE BELOW SURFACE A

FOR LIST OF MATERIALS SEE SHEET 3

QTY REQD	PART OR IDENTIFYING NO.	NOMENCLATURE OR DESCRIPTION

LIST OF MATERIALS

1003758		
NEXT ASSY	USED ON	
APPLICATION		

UNLESS OTHERWISE SPECIFIED DIMENSIONS ARE IN INCHES
TOLERANCES ON
FRACTIONS ± DECIMALS ± ANGLES ±
DO NOT SCALE THIS DRAWING
MATERIAL
HEAT TREATMENT
FINAL FINISH

MIT INSTRUMENTATION LAB
CAMBRIDGE, MASS
DRAWN DATE
CHECKED
APPROVAL
APPROVAL
NASA APPROVAL W J 9-22-64
MIT APPROVAL
MIT APPROVAL

MANNED SPACECRAFT CENT
HOUSTON, TEXAS

WIRING HARNESS, BRANCHED
AGC DSKY, NAV
100 SERIES

CODE IDENT NO.	SIZE	NASA DRAWING NO.
—	J	1003805

SCALE 1/1 WT SHEET OF 3

[illegible]

REV	DESCRIPTION	DATE	APPROVED
A	REVISED PER TDRR 14477 DR CHK	11/14/68	

REVISIONS 12765

ASSEMBLY INFORMATION CHART

	FROM		DESCRIPTION			TO		
REMARKS	DESTINATION	RUN NO.	COLOR	AWG	FIND NO.	RUN NO.	DESTINATION	REMARKS
	J5-122	505	WHT	28	17	187	J2-50	
	J2-58	186				504	J5-106	
	J5-67	513				239	J4-98	
	J4-50	243				552	J5-77	
	J5-50	527				251	J4-15	
	J4-11	250				541	J5-12	
	J5-26	515				231	J3-77	
	J3-85	232				530	J5-30	
	J5-5	514				214	J3-60	
	J3-58	215				529	J5-9	
	J5-8	525				244	J4-14	
	J4-8	245				539	J5-74	
	J5-75	544				192	J2-6	
	J2-8	191				49	J7-62	
	J7-99	35				200	J2-23	
	J2-3	194				547	J5-34	
	J5-14	551				246	J4-6	
	J4-3	248				558	J5-99	
	J5-58	560				217	J3-18	
	J3-14	218				577	J5-62	
	J5-104	578				225	J3-15	
	J3-23	228				568	J5-39	
	J5-20	575				241	J4-60	
	J4-58	242				564	J5-38	
	J5-37	559				183	J2-98	
	J2-90	184				584	J5-84	
	J5-103	573				208	J2-93	
	J2-85	205				15	J6-77	
	J6-84	17				211	J2-99	
	J2-77	204				511	J5-108	
	J5-24	509				182	J2-100	
	J2-60	185				479	J6-26	
	J6-103	11				213	J3-90	
	J3-50	216				497	J6-108	
	J6-37	22				235	J3-93	
	J3-99	238				37	J7-103	
	J7-50	454				224	J3-11	
	J3-3	222				60	J7-12	
	J7-8	447				219	J3-8	
	J3-6	220				462	J7-74	
	J7-84	41				212	J3-98	
	J7-14	61				189	J2-18	
	J2-14	190				47	J7-58	
	J7-39	55				197	J2-15	
	J2-11	196				38	J7-104	
	J7-37	54				240	J4-90	
	J4-93	255				73	J8-84	
	J9-6	422				418		
		418	WHT	28	17	203	J2-69	
	J4-9	249	WHT	26	15	257	J1-28	
	J1-14	258				193	J2-1	
	J2-91	207				259	J1-40	
	J1-60	260				247	J4-1	
	J4-17	252				263	J1-29	
	J1-51	264				254	J4-91	
	J1-41	266				206	J2-89	
	J2-19	199				267	J1-61	
	J1-2	268				510	J5-87	
	J2-9	195				269	J1-30	
	J1-16	270				229	J3-29	
	J4-95	256				271	J1-42	
	J1-62	274				221	J3-1	
	J5-22	502				275	J1-3	
	J1-31	276				198	J2-17	
	J3-97	237				277	J1-53	
	J1-73	278				226	J3-17	
	J9-7	425				279	J1-71	
	J1-17	280				202	J2-41	
	J3-95	236				281	J1-43	
	J1-63	282				223	J3-9	
	J7-111	471				283	J1-4	
	J1-32	284				210	J2-97	
	J3-19	227				286	J1-74	
	J1-18	287				201	J2-29	
	J3-89	233				288	J1-44	
	J1-64	289				253	J4-89	
	J7-126	473				290	J1-5	
	J1-65	291				500	J6-127	
	J3-91	234				292	J1-33	
	J1-19	293				209	J2-95	
	J7-107	470				294	J1-6	
	J1-7	295				446	J7-1	
	J6-89	493				296	J1-66	
	J1-21	297				520	J5-127	
	J5-85	503				298	J1-8	
	J1-22	299				517	J5-89	
	J5-105	585				300	J1-9	
	J1-34	301				79		
	J6-111	498				302	J1-67	
	J1-23	303				507	J5-23	
	J5-120	579				304	J1-10	
	J1-35	305				421		
	J5-123	508				306	J1-24	
	J1-11	307				464	J7-87	
		415				308	J1-36	
	J1-25	310				491	J8-64	
	J5-2	506				311	J1-47	
	J1-12	312				463	J7-85	
		80				313	J1-37	
	J1-57	314				419		
	J3-41	230	WHT	26	15	265	J1-15	

ASSEMBLY INFORMATION CHART

	FROM		DESCRIPTION			TO		
REMARKS	DESTINATION	RUN NO.	COLOR	AWG	FIND NO.	RUN NO.	DESTINATION	REMARKS
		419	WHT	26	15	272		
		273				424	J9-3	
	J5-1	501				315	J1-26	
	J1-48	316				81		
	J7-22	451				317	J1-13	
	J1-38	318				420		
		78				320	J1-49	
	J1-39	321				417		
	J9-4	423	WHT	26	15	322	J1-59	
	J5-134	570	BLK	26	16	82		
		82				262	J1-1	
	J1-82	261				77		
		77				309	J1-56	
	J1-58	319				416		
		416				285	J1-69	
		77	BLK	26	16	188	J2-28	
*		179	SHLD	28	14	27	J7-136	
	J7-132	64				176		*
*		174				46	J7-57	
	J8-136	66				178		*
*		180				2	J6-132	
	J6-136	3				177		*
*		175				580	J5-136	
	J8-128	76				163		*
*		164				26	J6-128	
	J7-41	56				126		*
*		125				576	J5-41	
	J5-101	566				127		*
*		106				51	J7-31	
	J7-98	34				104		*
*		105				535	J5-31	
	J5-110	518				83		*
*		85				23	J6-41	
	J7-110	29				84		*
	J8-98	69				147		*
*		148	SHLD	28	14	9	J6-98	
		86	BLK	26	16	103		
		107				124		
		128				162		
		165				173		
		181				172		
		149				146		
		145	BLK	26	16	65	J8-132	
	J6-29	21	WHT	28	17	171		
		170				7	J6-93	
	J6-51	18				169		
		168				12	J6-72	
	J6-92	6				167		
		169				13	J6-73	
	J8-79	72				159		
		158				71	J8-76	
	J8-15	75				155		
		154				70	J8-100	
	J8-55	74				151		
		150				68	J8-97	
	J6-79	16				161		
		160				14	J6-76	
	J6-15	24				157		
		156				10	J6-100	
	J6-55	19				153		
		152				8	J6-97	
	J5-60	569				142		
		143				572	J5-61	
	J5-121	586				137		
		140				565	J5-59	
	J5-63	583				134		
		135				571	J5-19	
	J5-119	574				132		
		133				581	J5-21	
	J5-42	582				129		
		130				1	J5-137	
	J7-121	31				141		
		144				48	J7-61	
	J7-63	50				138		
		139				63	J7-21	
	J7-137	28				131		
		136				57	J7-42	
	J7-76	39				120		
		123				40	J7-79	
	J7-33	53				115		
		116				62	J7-15	
	J7-100	36				112		
		114				59	J7-10	
	J7-54	44				110		
		111				52	J7-32	
	J7-55	45				108		
		109				33	J7-97	
	J5-10	534				121		
		122				542	J5-33	
	J5-32	538				118		
		119				526	J5-29	
	J5-95	540				113		
		117				543	J5-54	
	J8-121	67				98		
		97				32	J7-90	
	J7-49	43				92		
		96				42	J7-47	
	J7-112	30				100		
		101				58	J7-4	
	J6-137	4	WHT	28	17	89		

ASSEMBLY INFORMATION CHART

	FROM		DESCRIPTION			TO		
REMARKS	DESTINATION	RUN NO.	COLOR	AWG	FIND NO.	RUN NO.	DESTINATION	REMARKS
		90	WHT	28	17	20	J6-83	
	J6-21	25				93		
		94				5	J6-121	
	J5-49	521				87		
		88				522	J5-70	
	J5-47	516				91		
		95				519	J5-90	
	J5-112	523				99		
		102	WHT	28	17	512	J5-4	
	J6-57	487	SHLD	28	14	325		*
*		324				557	J5-57	
	J5-132	563				336		*
*		335				492	J6-67	
	J6-31	480				352		*
*		351				430	J8-31	
	J7-13	448				372		*
*		369				465	J7-91	
	J7-101	469				370		*
*		371				553	J5-98	
	J5-128	524				390		*
*		389				476	J6-13	
	J6-91	494				392		*
*		391				474	J7-128	
	J8-41	433				411		*
*		410				546	J5-13	
	J5-96	545				413		*
*		412	SHLD	28	14	496	J8-101	
	J9-8	426	BLK	26	16	414		
		403				393		
		388				373		
		368				337		
		334				326		
		323				327		
		350	BLK	26	16	353		
	J8-73	440	WHT	28	17	333		
		332				441	J8-92	
	J8-72	439				331		
		330				435	J8-51	
	J8-93	442				329		
		328				429	J8-29	
	J8-52	436				347		
		346				443	J8-95	
	J8-54	437				343		
		342				431	J8-32	
	J8-10	427				339		
		338				432	J8-33	
	J6-52	485				349		
		348				495	J6-95	
	J6-54	486				345		
		344				481	J6-32	
	J6-10	475				341		
		340				482	J6-33	
	J7-36	453				360		
		359				449	J7-18	
	J7-59	457				355		
		354				458	J7-60	
	J7-119	472				367		
		358				450	J7-19	
	J5-18	567				366		
		365				550	J5-97	
	J5-55	548				364		
		363				562	J5-100	
	J5-36	556				362		
		361				555	J5-15	
	J5-76	549				357		
		356				561	J5-79	
	J7-72	460				385		
		384				456	J7-52	
	J7-73	461				383		
		380				468	J7-95	
	J7-92	466				379		
		378				467	J7-93	
	J7-51	455				375		
		374				452	J7-29	
	J5-52	536				387		
		386				532	J5-72	
	J5-73	537				382		
		381				528	J5-92	
	J5-51	531				377		
		376				533	J5-93	
	J7-70	459				406		
		405				499	J6-119	
	J6-18	477				408		
		404				483	J6-36	
	J6-42	484				401		
		400				478	J6-19	
	J6-60	489				396		
		395				490	J6-61	
	J6-59	488				399		
		398				554	J5-114	
	J8-119	444				403		
		402				445	J8-137	
	J8-63	438				397		
		394				428	J8-21	
	J8-42	434	WHT	28	17	407		

INTERNAL GROUND SHEATH CONNECTIONS

FROM	TO	LENGTH	FIND NO.
83	84	.75	16
84	85	.75	
104	105	.75	
105	106	.75	
125	126	.75	
126	127	.75	
147	148	.75	
163	164	.75	
174	175	.75	
175	176		
176	177		
177	178		
178	179		
179	180	.75	
324	325	.75	
335	336	.75	
351	352	.75	
369	370	.75	
370	371	.75	
371	372	.75	
389	390	.75	
390	391	.75	
391	392	.75	
410	411	.75	
411	412	.75	
412	413	.75	16

NOTES

1. * SEE GROUND SHEATH CONNECTION CHART

FOR LIST OF MATERIALS SEE SHEET 3

QTY REQD	PART OR IDENTIFYING NO.	NOMENCLATURE OR DESCRIPTION	FIND NO

LIST OF MATERIALS

NEXT ASSY	USED ON

APPLICATION

UNLESS OTHERWISE SPECIFIED
DIMENSIONS ARE IN INCHES
TOLERANCES ON
FRACTIONS ± DECIMALS ± ANGLES ±
DO NOT SCALE THIS DRAWING
MATERIAL
HEAT TREATMENT
FINAL FINISH

MIT
INSTRUMENTATION LAB
CAMBRIDGE, MASS.

DRAWN P. Bergeron DATE 11 Sep 64
CHECKED 15 Sep 64
APPROVAL Sept 64
APPROVAL 21 Sept 64
NASA APPROVAL 9-22-64
MIT APPROVAL
MIT APPROVAL 22 Sept 64

MANNED SPACECRAFT CENTER
HOUSTON, TEXAS

WIRING HARNESS, BRANCHED
AGC DSKY, NAV
100 SERIES

CODE IDENT NO. —— SIZE J NASA DRAWING NO. 1003805

SCALE NONE WT SHEET 2 OF 3

		REVISIONS 12765		
	SYM	DESCRIPTION	DATE	APPROVED
Ⓐ	A	REVISED PER TDRR14477 DR CHK	12/14/64	

1003805 A

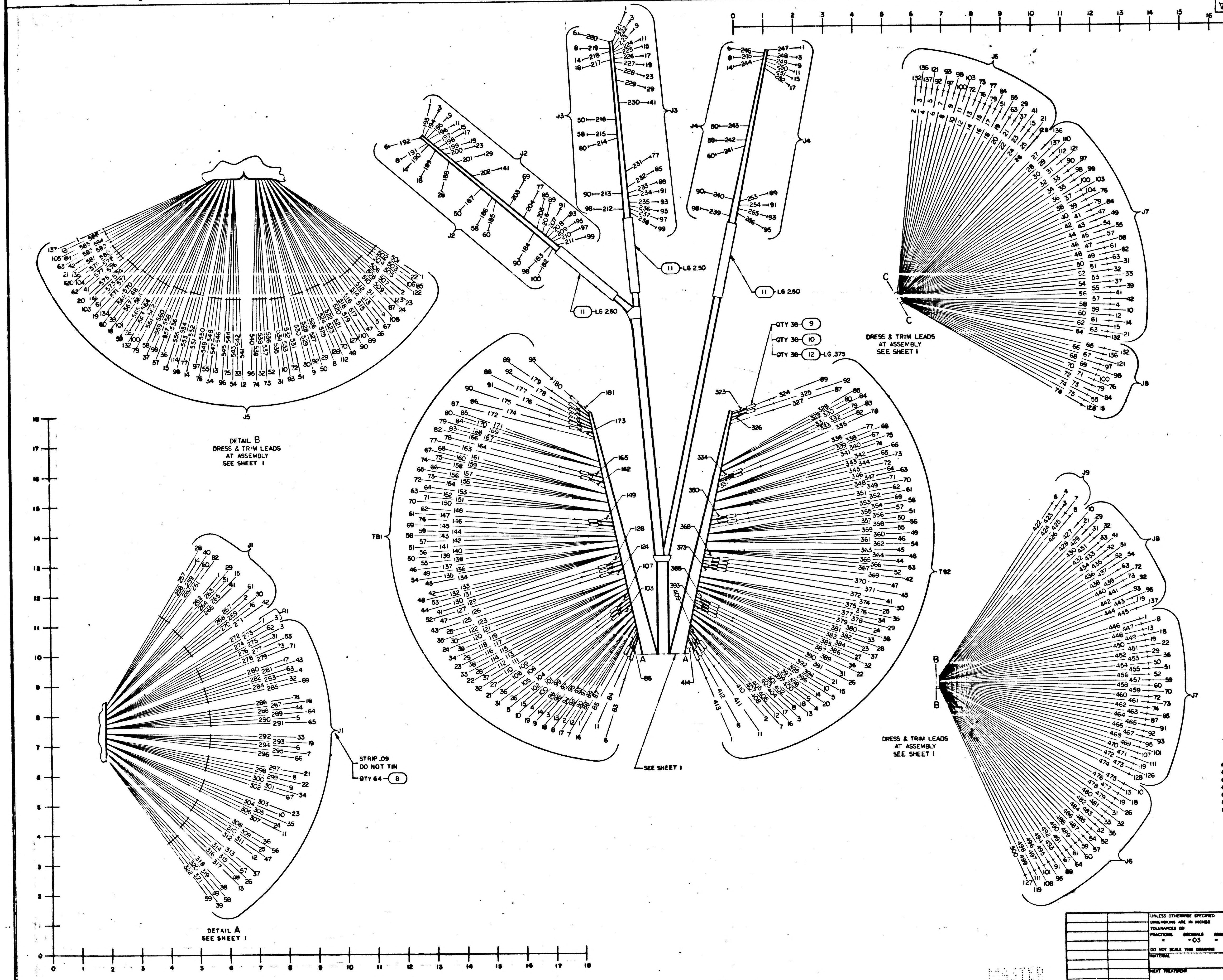
J3
J4
J2
J5
DETAIL B
DRESS & TRIM LEADS
AT ASSEMBLY
SEE SHEET 1
(11)-LG 2.50
QTY 38-(9)
QTY 38-(10)
QTY 38-(12)-LG .375
TB1
TB2
A
SEE SHEET 1
J6
J7
J8
J9
J1
R1
C
DRESS & TRIM LEADS
AT ASSEMBLY
SEE SHEET 1
B
STRIP .09
DO NOT TIN
QTY 64-(8)
DETAIL A
SEE SHEET 1
0 1 2 3 4 5 6 7 8 9 10 11 12 13 14 15 16 17 18

MASTER

				FIND NO
	AR	1012507-003	TAPE, LACING	20
	AR	1012507-001	TAPE, LACING	19
	1	MS18035-1	STRAP, CABLE IDENT	18
*	750	1010416-10	WIRE, ELECTRICAL, STRD, INSUL, AWG 28	17
*	55	1010416-11	WIRE, ELECTRICAL, STRD, INSUL, AWG 26	16
*	85	1010416-20	WIRE, ELECTRICAL, STRD, INSUL, AWG 26	15
*	75	1010778-1	WIRE SHIELDED, TEFLON	14
*	1.5	SEE NOTE 6	SLEEVING	13
*	1.5	SEE NOTE 6	SLEEVING	12
*	.7	SEE NOTE 6	SLEEVING	
	38	1000243-1	FERRULE, ELECTRICAL CONDUCTOR	10
	38	1000242-1	FERRULE, ELECTRICAL CONDUCTOR	9
	108	1010738-5	CONTACT, MALE	8
	1	1010825-1	CONNECTOR, PLUG, ELECTRICAL	7
	5	MS 6633-4015	RING, RETAINING	6
	5	1004546-1	WASHER, FLAT	5
	5	1004546-3	WASHER, FLAT	4
	5	1004579-1	SCREW, JACKING	3
	1	1003531	DECODING PLATE WIREWRAP ASSY	2
	1	1003535	PLATE, WIREWRAP ASSY-REL	1
	QTY REQD	PART OR IDENTIFYING NO.	NOMENCLATURE OR DESCRIPTION	FIND NO

LIST OF MATERIALS

NEXT ASSY	USED ON
APPLICATION	

UNLESS OTHERWISE SPECIFIED
DIMENSIONS ARE IN INCHES
TOLERANCES ON
FRACTIONS ± DECIMALS ±.03 ANGLES ±
DO NOT SCALE THIS DRAWING
MATERIAL
HEAT TREATMENT
FINAL FINISH

MIT
INSTRUMENTATION LAB
CAMBRIDGE, MASS
DRAWN B. Jaquam DATE 4SEP64
CHECKED 15 Sep 64
APPROVAL Sept 1964
APPROVAL Eldon C Hall 21 Sept 64
NASA APPROVAL W J Rhine 09-22-64
MIT APPROVAL
MIT APPROVAL 22 Sept 64

MANNED SPACECRAFT CENTER
HOUSTON, TEXAS

WIRING HARNESS, BRANCHED
AGC DSKY, NAV
100 SERIES

CODE IDENT NO. SIZE J NASA DRAWING NO 1003805
SCALE 1/1 WT SHEET 3 OF 3

1003805 B

SYM	DESCRIPTION	DATE	APPROVAL
A	REVISED PER TDRR 14477 DR D.W.Ci... CHK OW	12/16/64	
B	REPLACED WITH CHANGES BY REV C PER TDRR 20558 DR CHK	9/24/65	

REVISIONS 12763

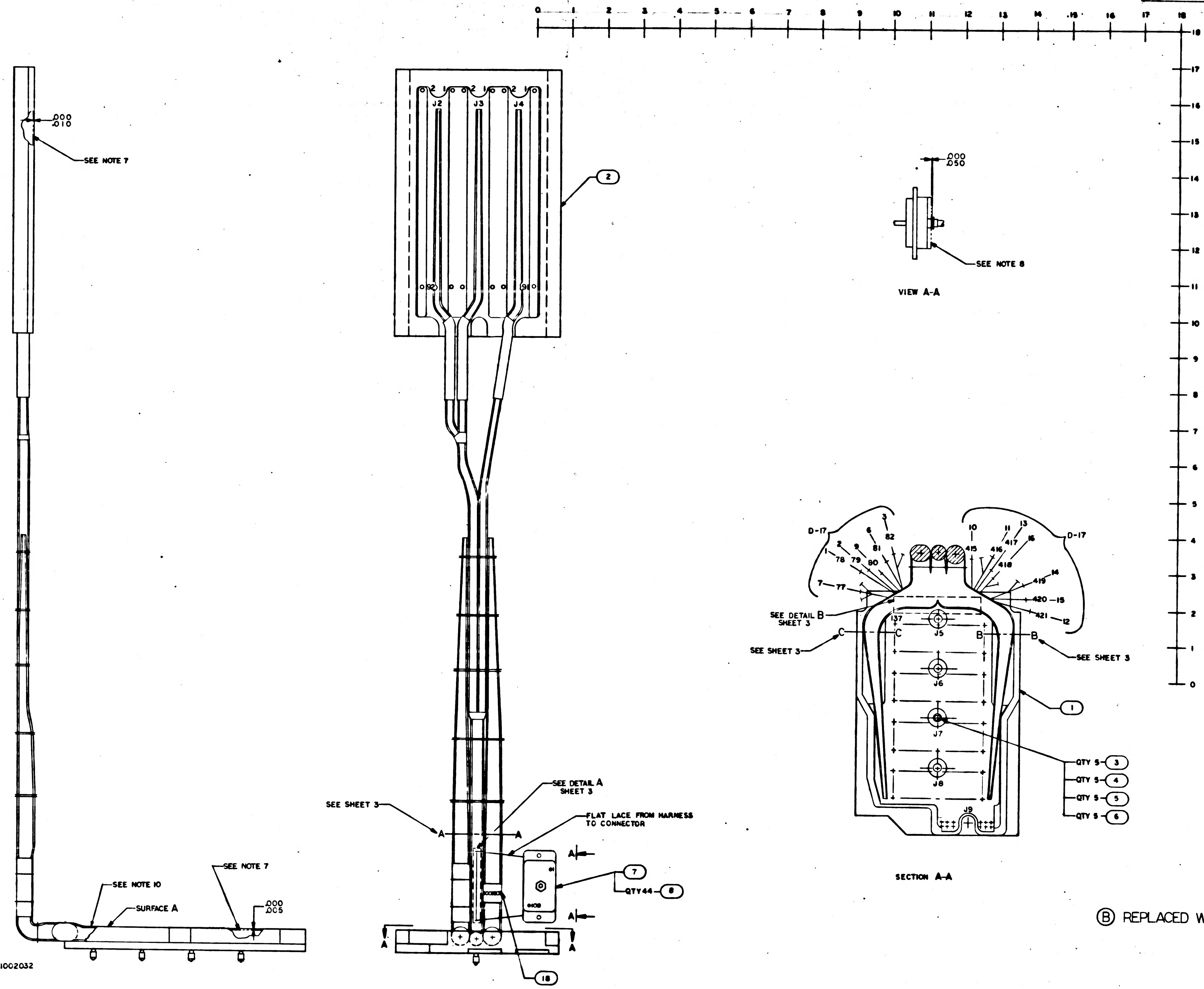
.000
.010
SEE NOTE 7
2
J2
J3
J4
.000
.050
SEE NOTE 8
VIEW A-A
D-17
3
82
6
81
2
9
80
78
79
1
7
77
10
415
11
417
13
16
416
418
14
419
420
15
421
12
SEE DETAIL B SHEET 3
137
C
J5
B
SEE SHEET 3
J6
J7
J8
J9
1
QTY 5 3
QTY 5 4
QTY 5 5
QTY 5 6
SECTION A-A
SEE DETAIL A SHEET 3
FLAT LACE FROM HARNESS TO CONNECTOR
A
7
QTY44 8
18
SEE NOTE 10
SURFACE A
.000
.005

Ⓑ REPLACED WITH CHANGES BY REV C

NOTES
1. FOR SYMBOLS FABRICATION AND REQUIRED TEST SEE ND1002032
2. SOLDER PER ND1002071
3. STRIP ALL LEADS J9 & TIN
4. * DENOTES LENGTH IN FEET
5. TERMINATE SHIELDS OF FIND NO.9 AT FIND NO.1 WITHIN HARNESS JUST BEFORE POINT OF BREAKOUT WITH .37 OF NO. 13
6. MIL-I-23053, CLASS II, COLOR BLK, FOR FIND NO.12 SIZE NO.14, FOR FIND NO.11 SIZE NO.5, FOR FIND NO.13 SIZE NO.16
7. ENCAPSULATE INDICATED AREAS PER ND1002217
8. ENCAPSULATE INDICATED AREAS USING SILASTIC RUBBER PER ND1002009 METHOD E
9. INTERPRET DRAWING IN ACCORDANCE WITH STANDARDS PRESCRIBED BY MIL-D-70327
10. FLAT LACE SIDE OF HARNESS TO ALLOW TRUNK TO LIE BELOW SURFACE A

MASTER

FOR LIST OF MATERIALS SEE SHEET 3

QTY REQD	PART OR IDENTIFYING NO.	NOMENCLATURE OR DESCRIPTION	FIND NO

LIST OF MATERIALS

NEXT ASSY	USED ON
1003758	

APPLICATION

UNLESS OTHERWISE SPECIFIED
DIMENSIONS ARE IN INCHES
TOLERANCES ON
FRACTIONS ± DECIMALS ± ANGLES ±
DO NOT SCALE THIS DRAWING
MATERIAL
HEAT TREATMENT
FINAL FINISH

MIT
INSTRUMENTATION LAB
CAMBRIDGE, MASS

DRAWN DATE
CHECKED
APPROVAL
APPROVAL
NASA APPROVAL W.J. 9-22-64
MIT APPROVAL
MIT APPROVAL 22 64

MANNED SPACECRAFT CENTER
HOUSTON, TEXAS

WIRING HARNESS, BRANCHED
AGC DSKY, NAV
100 SERIES

CODE IDENT NO. —
SIZE J
NASA DRAWING NO. 1003805
SCALE 1/1
WT
SHEET 1 OF 3

1003805 B

SYM	DESCRIPTION	DATE	APPROVAL
A	REVISED PER TDRR 14477 DR CHK		
B	REPLACED WITH CHANGES BY REV C PER TDRR 20558 DR CHK		

ASSEMBLY INFORMATION CHART

FROM			DESCRIPTION			TO		
REMARKS	DESTINATION	RUN NO	COLOR	AWG	FIND NO	RUN NO	DESTINATION	REMARKS
	J5-122	505	WHT	28	17	187	J2-50	
	J2-58	186				504	J5-106	
	J5-67	513				239	J4-98	
	J4-50	243				552	J5-77	
	J5-50	527				251	J4-15	
	J4-11	250				541	J5-12	
	J5-26	515				231	J3-77	
	J3-85	232				530	J5-30	
	J5-5	514				214	J3-60	
	J3-58	215				529	J5-9	
	J5-6	525				244	J4-14	
	J4-8	245				539	J5-74	
	J5-75	544				192	J2-6	
	J2-8	191				49	J7-62	
	J7-99	35				200	J2-23	
	J2-3	194				547	J5-34	
	J5-14	551				246	J4-6	
	J4-3	248				558	J5-99	
	J5-58	560				217	J3-18	
	J3-4	218				577	J5-62	
	J5-104	578				225	J3-15	
	J3-23	228				568	J5-39	
	J5-20	575				241	J4-60	
	J4-58	242				564	J5-38	
	J5-37	559				183	J2-98	
	J2-90	184				584	J5-84	
	J5-103	573				208	J2-93	
	J2-85	205				15	J6-77	
	J6-84	17				211	J2-99	
	J2-77	204				511	J5-108	
	J5-24	509				182	J2-100	
	J2-60	185				479	J6-26	
	J6-103	11				213	J3-90	
	J3-50	216				497	J6-108	
	J6-37	22				235	J3-93	
	J3-99	238				37	J7-103	
	J7-50	454				224	J3-11	
	J3-3	222				60	J7-12	
	J7-8	447				219	J3-8	
	J3-6	220				462	J7-74	
	J7-84	41				212	J3-98	
	J7-14	61				189	J2-18	
	J2-14	190				47	J7-58	
	J7-39	55				197	J2-15	
	J2-11	196				38	J7-104	
	J7-37	54				240	J4-90	
	J4-93	255				73	J8-84	
	J9-6	422				418		
		418	WHT	28	17	203	J2-69	
	J4-9	249	WHT	26	15	257	J1-28	
	J1-14	258				193	J2-1	
	J2-91	207				259	J1-40	
	J1-60	260				247	J4-1	
	J4-17	252				263	J1-29	
	J1-51	264				254	J4-91	
	J1-41	266				206	J2-89	
	J2-19	199				267	J1-61	
	J1-2	268				510	J5-87	
	J2-9	195				269	J1-30	
	J1-16	270				229	J3-29	
	J4-95	256				271	J1-42	
	J1-62	274				221	J3-1	
	J5-22	502				275	J1-3	
	J1-31	276				198	J2-17	
	J3-97	237				277	J1-53	
	J1-73	278				226	J3-17	
	J9-7	425				279	J1-71	
	J1-17	280				202	J2-41	
	J3-95	236				281	J1-43	
	J1-63	282				223	J3-9	
	J7-111	471				283	J1-4	
	J1-32	284				210	J2-97	
	J3-19	227				286	J1-74	
	J1-18	287				201	J2-29	
	J3-89	233				288	J1-44	
	J1-64	289				253	J4-89	
	J7-126	473				290	J1-5	
	J1-65	291				500	J6-127	
	J3-91	234				292	J1-33	
	J1-19	293				209	J2-95	
	J7-107	470				294	J1-6	
	J1-7	295				446	J7-1	
	J6-89	493				296	J1-66	
	J1-21	297				520	J5-127	
	J5-85	503				298	J1-8	
	J1-22	299				517	J5-89	
	J5-105	585				300	J1-9	
	J1-34	301				79		
	J6-111	498				302	J1-67	
	J1-23	303				507	J5-23	
	J5-120	579				304	J1-10	
	J1-35	305				421		
	J5-123	508				306	J1-24	
	J1-11	307				464	J7-87	
		415				308	J1-36	
	J1-25	310				491	J8-64	
	J5-2	506				311	J1-47	
	J1-12	312				463	J7-85	
		80				313	J1-37	
	J1-57	314				419		
	J3-4	230	WHT	26	15	265	J1-15	

ASSEMBLY INFORMATION CHART

FROM			DESCRIPTION			TO		
REMARKS	DESTINATION	RUN NO	COLOR	AWG	FIND NO	RUN NO	DESTINATION	REMARKS
		419	WHT	26	15	272		
		273				424	J9-3	
	J5-1	501				315	J1-26	
	J1-48	316				81		
	J7-22	451				317	J1-13	
	J1-38	318				420		
		78				320	J1-40	
	J1-39	321				417		
	J9-4	423	WHT	26	15	322	J1-59	
	J5-134	570	BLK	26	16	82		
		82				262	J1-1	
	J1-82	261				77		
		77				309	J1-56	
	J1-58	319				416		
		416				285	J1-69	
		77	BLK	26	16	188	J2-28	
*		179	SHLD	28	14	27	J7-136	
	J7-132	64				176		*
*		174				46	J7-57	
	J8-136	66				178		*
*		180				2	J6-132	
	J6-136	3				177		*
*		175				580	J5-136	
	J8-128	76				163		*
*		164				26	J6-128	
	J7-41	56				126		*
*		125				576	J5-41	
	J5-101	566				127		*
*		106				51	J7-31	
	J7-98	34				104		*
*		105				535	J5-31	
	J5-110	518				83		*
*		85				23	J6-41	
	J7-110	29				84		*
	J8-98	69				147		*
*		148	SHLD	28	14	9	J6-98	
		86	BLK	26	16	103		
		107				124		
		128				162		
		165				173		
		181				172		
		149				146		
		145	BLK	26	16	65	J8-132	
	J6-29	21	WHT	28	17	171		
		170				7	J6-93	
	J6-51	18				169		
		168				12	J6-72	
	J6-92	6				167		
		166				13	J6-73	
	J8-79	72				159		
		158				71	J8-76	
	J8-15	75				155		
		154				70	J8-100	
	J8-55	74				151		
		150				68	J8-97	
	J6-79	16				161		
		160				14	J8-76	
	J6-15	24				157		
		156				10	J6-100	
	J6-55	19				153		
		152				8	J6-97	
	J5-60	569				142		
		143				572	J5-61	
	J5-121	586				137		
		140				565	J5-59	
	J5-63	583				134		
		135				571	J5-19	
	J5-119	574				132		
		133				581	J5-21	
	J5-42	582				129		
		130				1	J5-137	
	J7-121	31				141		
		144				48	J7-61	
	J7-63	50				138		
		139				63	J7-21	
	J7-137	28				131		
		136				57	J7-42	
	J7-76	39				120		
		123				40	J7-79	
	J7-33	53				115		
		116				62	J7-15	
	J7-100	36				112		
		114				59	J7-10	
	J7-54	44				110		
		111				52	J7-32	
	J7-55	45				108		
		109				33	J7-97	
	J5-10	534				121		
		122				542	J5-33	
	J5-32	538				118		
		119				526	J5-29	
	J5-95	540				113		
		117				543	J5-54	
	J8-121	67				98		
		97				32	J7-90	
	J7-49	43				92		
		96				42	J7-47	
	J7-112	30				100		
		101				58	J7-4	
	J6-137	4	WHT	28	17	89		

ASSEMBLY INFORMATION CHART

FROM			DESCRIPTION			TO		
REMARKS	DESTINATION	RUN NO	COLOR	AWG	FIND NO	RUN NO	DESTINATION	REMARKS
		90	WHT	28	17	20	J6-63	
	J6-21	25				93		
		94				5	J6-121	
	J5-49	521				87		
		88				522	J5-70	
	J5-47	516				91		
		95				519	J5-90	
	J5-112	523				99		
		102	WHT	28	17	512	J5-4	
	J6-57	487	SHLD	28	14	325		*
*		324				557	J5-57	
	J5-132	563				336		*
*		335				492	J6-67	
	J6-31	480				352		*
*		351				430	J8-31	
	J7-13	448				372		*
*		369				465	J7-91	
	J7-101	469				370		*
*		371				553	J5-98	
	J5-128	524				390		*
*		389				476	J6-13	
	J6-91	494				392		*
*		391				474	J7-128	
	J8-41	433				411		*
*		410				546	J5-13	
	J5-96	545				413		*
*		412	SHLD	28	14	496	J6-101	
	J9-8	426	BLK	26	16	414		
		409				393		
		388				373		
		368				337		
		334				326		
		323				327		
		350	BLK	26	16	353		
	J8-73	440	WHT	28	17	333		
		332				441	J8-92	
	J8-72	439				331		
		330				435	J8-51	
	J8-93	442				329		
		328				429	J8-29	
	J8-52	436				347		
		346				443	J8-95	
	J8-54	437				343		
		342				431	J8-32	
	J8-10	427				339		
		338				432	J8-33	
	J6-52	485				349		
		348				495	J6-95	
	J6-54	486				345		
		344				481	J6-32	
	J6-10	475				341		
		340				482	J6-33	
	J7-36	453				360		
		359				449	J7-18	
	J7-59	457				355		
		354				458	J7-60	
	J7-119	472				367		
		358				450	J7-19	
	J5-18	567				366		
		365				550	J5-97	
	J5-55	548				364		
		363				562	J5-100	
	J5-36	556				362		
		361				555	J5-15	
	J5-76	549				357		
		356				561	J5-79	
	J7-72	460				385		
		384				456	J7-52	
	J7-73	461				383		
		380				468	J7-95	
	J7-92	466				379		
		378				467	J7-93	
	J7-51	455				375		
		374				452	J7-29	
	J5-52	536				387		
		386				532	J5-72	
	J5-73	537				382		
		381				528	J5-92	
	J5-51	531				377		
		376				533	J5-93	
	J7-70	459				406		
		405				499	J6-119	
	J6-18	477				408		
		404				483	J6-36	
	J8-42	484				401		
		400				478	J6-19	
	J6-60	489				396		
		395				490	J6-61	
	J6-59	488				399		
		398				554	J5-114	
	J8-119	444				403		
		402				445	J8-137	
	J8-63	438				397		
		394				428	J8-21	
	J8-42	434	WHT	28	17	407		

INTERNAL GROUND SHEATH CONNECTIONS

FROM	TO	LENGTH	FIND NO.
83	84	.75	16
84	85	.75	
104	105	.75	
105	106	.75	
125	126	.75	
126	127	.75	
147	148	.75	
163	164	.75	
174	175	.75	
175	176		
176	177		
177	178		
178	179		
179	180	.75	
324	325	.75	
335	336	.75	
351	352	.75	
369	370	.75	
370	371	.75	
371	372	.75	
389	390	.75	
390	391	.75	
391	392	.75	
410	411	.75	
411	412	.75	
412	413	.75	16

Ⓑ REPLACED WITH CHANGES BY REV C

NOTES

1. * SEE GROUND SHEATH CONNECTION CHART

FOR LIST OF MATERIALS SEE SHEET 3

QTY REQD	PART OR IDENTIFYING NO.	NOMENCLATURE OR DESCRIPTION	FIND NO

LIST OF MATERIALS

NEXT ASSY	USED ON

APPLICATION

UNLESS OTHERWISE SPECIFIED
DIMENSIONS ARE IN INCHES
TOLERANCES ON
FRACTIONS ± DECIMALS ± ANGLES ±
DO NOT SCALE THIS DRAWING
MATERIAL
HEAT TREATMENT
FINAL FINISH

MIT
INSTRUMENTATION LAB
CAMBRIDGE, MASS

DRAWN P. Bergeron DATE Sep 64
CHECKED
APPROVAL
APPROVAL
NASA APPROVAL 9-28-64
MIT APPROVAL
MIT APPROVAL

MANNED SPACECRAFT CENTER
HOUSTON, TEXAS

WIRING HARNESS, BRANCHED
AGC DSKY, NAV
100 SERIES

CODE IDENT NO. ——— SIZE J NASA DRAWING NO 1003805

SCALE NONE SHEET 2 OF 3

MASTER

1003805 B

SYM	DESCRIPTION	DATE	APPROVAL
A	REVISED PER TDRR 14477 DR CHK	12/14/64	
B	REPLACED WITH CHANGES BY REV C PER TDRR 20558 DR CHK	2/4/65	

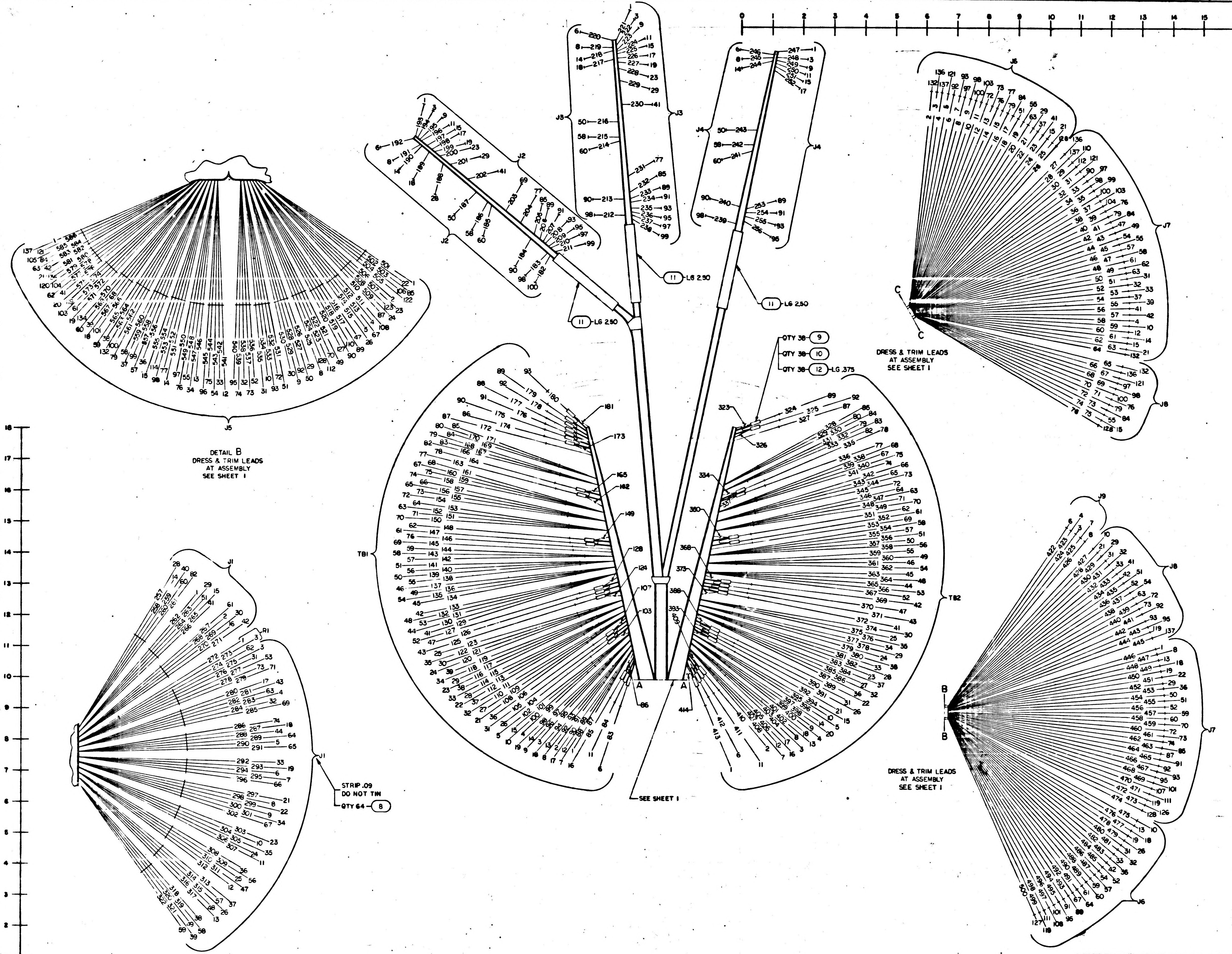

J2
J3
J4
J5
J6
J7
J8
J9
J1
TB1
TB2
11 LG 2.50
QTY 38 9
QTY 38 10
QTY 38 12 LG .375
DRESS & TRIM LEADS AT ASSEMBLY SEE SHEET 1
DETAIL B
DRESS & TRIM LEADS AT ASSEMBLY SEE SHEET 1
STRIP .09 DO NOT TIN
QTY 64 8
SEE SHEET 1
A
B
C
R1

DETAIL A
SEE SHEET 1

Ⓑ REPLACED WITH CHANGES BY REV C

MASTER

	QTY REQD	PART OR IDENTIFYING NO.	NOMENCLATURE OR DESCRIPTION	FIND NO
	AR	1012507-003	TAPE, LACING	20
	AR	1012507-001	TAPE, LACING	19
	1	MS18035-1	STRAP, CABLE IDENT	18
*	750	1010416-10	WIRE, ELECTRICAL, STRD, INSUL, AWG 28	17
*	55	1010416-11	WIRE, ELECTRICAL, STRD, INSUL, AWG 26	16
*	85	1010416-20	WIRE, ELECTRICAL, STRD, INSUL, AWG 26	15
*	75	1010778-1	WIRE, SHIELDED, TEFLON	14
*	1.5	SEE NOTE 6	SLEEVING	13
*	1.5	SEE NOTE 6	SLEEVING	12
*	.7	SEE NOTE 6	SLEEVING	11
	38	1000243-1	FERRULE, ELECTRICAL CONDUCTOR	10
	38	1000242-1	FERRULE, ELECTRICAL CONDUCTOR	9
	108	1010738-5	CONTACT, MALE	8
	1	1010825-1	CONNECTOR, PLUG, ELECTRICAL	7
	5	MS 6633-4015	RING, RETAINING	6
	5	1004546-1	WASHER, FLAT	5
	5	1004546-3	WASHER, FLAT	4
	5	1004579-1	SCREW, JACKING	[illegible]
	1	1003531	DECODING PLATE WIREWRAP ASSY	[illegible]
	1	1003535	PLATE, WIREWRAP ASSY-RELAY HOUSING	[illegible]

LIST OF MATERIALS

NEXT ASSY	USED ON

APPLICATION

UNLESS OTHERWISE SPECIFIED
DIMENSIONS ARE IN INCHES
TOLERANCES ON
FRACTIONS ± DECIMALS ±.03 ANGLES ±
DO NOT SCALE THIS DRAWING
MATERIAL
HEAT TREATMENT
FINAL FINISH

MIT
INSTRUMENTATION LAB
CAMBRIDGE, MASS

DRAWN B. Jo[illegible] DATE 4SEP64
CHECKED C. Coggins 15 Sept 64
APPROVAL [illegible] Sept 1964
APPROVAL [illegible] 21 Sept 64
NASA APPROVAL 9-22-64
MIT APPROVAL
MIT APPROVAL 22 Sept 64

MANNED SPACECRAFT CENTER
HOUSTON, TEXAS

WIRING HARNESS, BRANCHED
AGC DSKY, NAV
100 SERIES

CODE IDENT NO. —
SIZE J
NASA DRAWING NO. 1003805
SCALE 1/1
WT
SHEET 2 OF 2

1003805 —

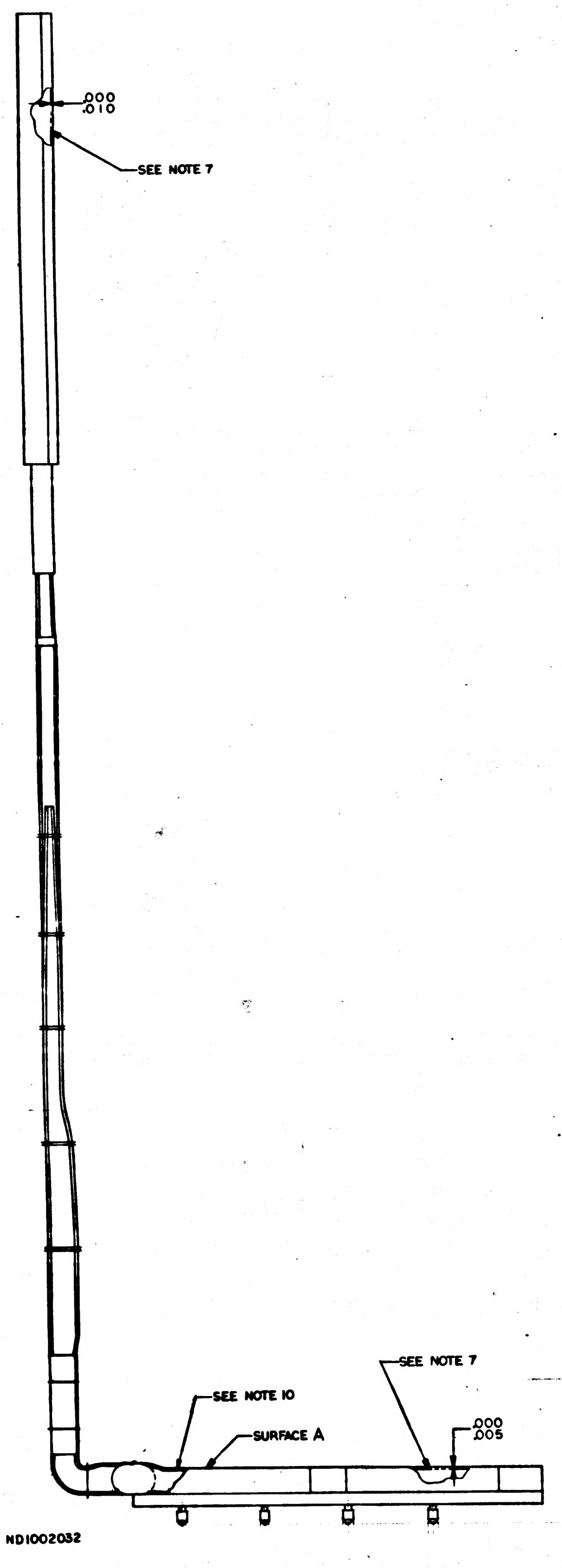
.000
.010
SEE NOTE 7
SEE NOTE 10
SURFACE A
SEE NOTE 7
.000
.005

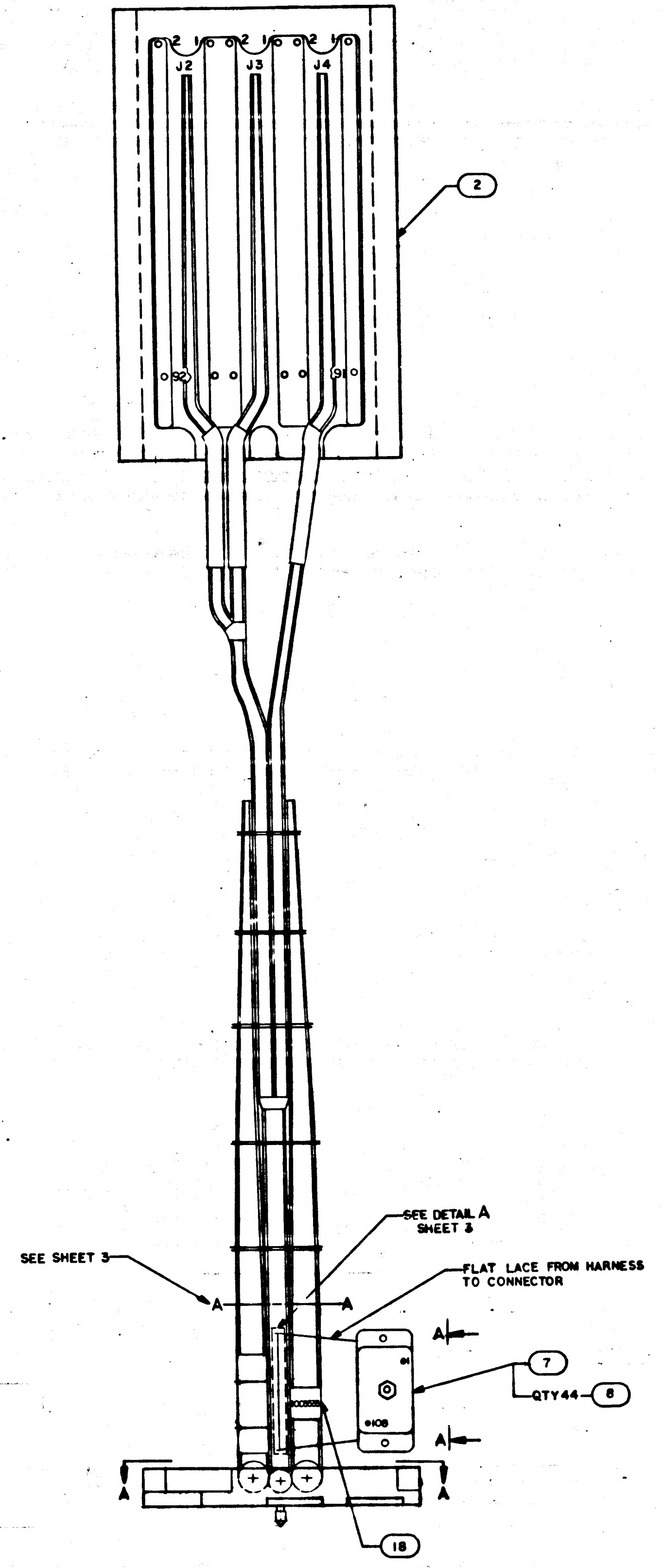
J2
J3
J4
2
SEE SHEET 3
A
A
SEE DETAIL A
SHEET 3
FLAT LACE FROM HARNESS
TO CONNECTOR
7
QTY44
8
18
A
A

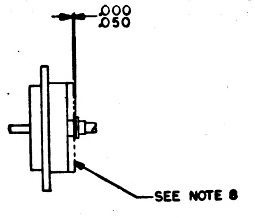
.000
.050
SEE NOTE 8

VIEW A-A

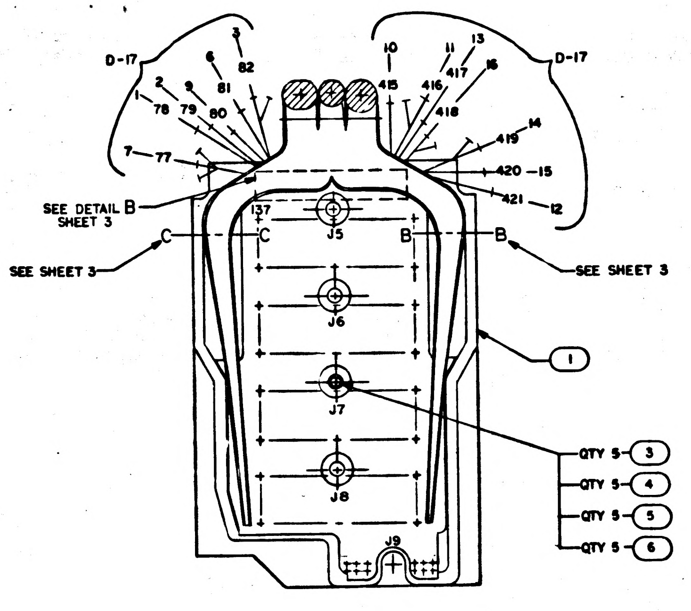
D-17
D-17
SEE DETAIL B
SHEET 3
SEE SHEET 3
SEE SHEET 3
J5
J6
J7
J8
J9
137
1
QTY 5
3
QTY 5
4
QTY 5
5
QTY 5
6

SECTION A-A

NOTES
1. FOR SYMBOLS FABRICATION AND REQUIRED TEST SEE ND1002032
2. SOLDER PER ND1002071
3. STRIP ALL LEADS .19 & TIN
4. # DENOTES LENGTH IN FEET
5. TERMINATE SHIELDS OF FIND NO.9 AT FIND NO.1 WITHIN HARNESS JUST BEFORE POINT OF BREAKOUT WITH .37 OF NO. 13
6. MIL-I-23053, CLASS II, COLOR BLK, FOR FIND NO. 12 SIZE NO. 14, FOR FIND NO. 11 SIZE NO. 5, FOR FIND NO. 13 SIZE NO. 16
7. ENCAPSULATE INDICATED AREAS PER ND1002217
8. ENCAPSULATE INDICATED AREAS USING SILASTIC RUBBER PER ND1002009 METHOD E
9. INTERPRET DRAWING IN ACCORDANCE WITH STANDARDS PRESCRIBED BY MIL-D-70327
10. FLAT LACE SIDE OF HARNESS TO ALLOW TRUNK TO LIE BELOW SURFACE A

MASTER

FOR LIST OF MATERIALS SEE SHEET 3

QTY REQD	PART OR IDENTIFYING NO.	NOMENCLATURE OR DESCRIPTION

LIST OF MATERIALS

NEXT ASSY	USED ON
1003758	

APPLICATION

UNLESS OTHERWISE SPECIFIED DIMENSIONS ARE IN INCHES
TOLERANCES ON
FRACTIONS ± DECIMALS ± ANGLES ±
DO NOT SCALE THIS DRAWING
MATERIAL
HEAT TREATMENT
FINAL FINISH

MIT
INSTRUMENTATION LAB
CAMBRIDGE, MASS
DRAWN K. Moody DATE
CHECKED
APPROVAL
APPROVAL
NASA APPROVAL
MIT APPROVAL

MANNED SPACECRAFT CENTER
HOUSTON, TEXAS

WIRING HARNESS, BRANCHED
AGC DSKY, NAV
100 SERIES

CODE IDENT NO. — SIZE J NASA DRAWING NO. 1003805
SCALE 1/1 WT

1003805

1003805 -

ASSEMBLY INFORMATION CHART

	FROM		DESCRIPTION			TO		
REMARKS	DESTINATION	RUN NO	COLOR	AWG	FIND NO	RUN NO	DESTINATION	REMARKS
	J5-122	505	WHT	28	17	187	J2-50	
	J2-58	186				504	J5-106	
	J5-67	513				239	J4-98	
	J4-50	243				552	J5-77	
	J5-50	527				251	J4-15	
	J4-11	250				541	J5-12	
	J5-26	515				231	J3-77	
	J3-85	232				530	J5-30	
	J5-5	514				214	J3-60	
	J3-58	215				529	J5-9	
	J5-8	525				244	J4-14	
	J4-8	245				539	J5-74	
	J5-75	544				192	J2-6	
	J2-8	191				49	J7-62	
	J7-99	35				200	J2-23	
	J2-3	194				547	J5-34	
	J5-14	551				246	J4-6	
	J4-3	248				558	J5-99	
	J5-58	560				217	J3-18	
	J3-4	218				577	J5-62	
	J5-104	578				225	J3-15	
	J3-23	228				568	J5-39	
	J5-20	575				241	J4-60	
	J4-58	242				564	J5-38	
	J5-37	559				183	J2-98	
	J2-90	184				584	J5-84	
	J5-103	573				208	J2-93	
	J2-85	205				15	J6-77	
	J6-84	17				211	J2-99	
	J2-77	204				511	J5-108	
	J5-24	509				182	J2-100	
	J2-60	185				479	J6-26	
	J6-103	11				213	J3-90	
	J3-50	216				497	J6-108	
	J6-37	22				235	J3-93	
	J3-99	238				37	J7-103	
	J7-50	454				224	J3-11	
	J3-3	222				60	J7-12	
	J7-8	447				219	J3-8	
	J3-6	220				462	J7-74	
	J7-84	41				212	J3-98	
	J7-14	61				189	J2-18	
	J2-14	190				47	J7-58	
	J7-39	55				197	J2-15	
	J2-11	196				38	J7-104	
	J7-37	54				240	J4-90	
	J4-93	255				73	J8-84	
	J9-6	422				418		
		418	WHT	28	17	203	J2-69	
	J4-9	249	WHT	26	15	257	J1-28	
	J1-14	258				193	J2-1	
	J2-91	207				259	J1-40	
	J1-60	260				247	J4-1	
	J4-17	252				263	J1-29	
	J1-51	264				254	J4-91	
	J1-41	266				206	J2-89	
	J2-19	199				267	J1-61	
	J1-2	268				510	J5-87	
	J2-9	195				269	J1-30	
	J1-16	270				229	J3-29	
	J4-95	256				271	J1-42	
	J1-62	274				221	J3-1	
	J5-22	502				275	J1-3	
	J1-31	276				198	J2-17	
	J3-97	237				277	J1-53	
	J1-73	278				226	J3-17	
	J9-7	425				279	J1-71	
	J1-17	280				202	J2-41	
	J3-95	236				281	J1-43	
	J1-63	[illegible]				223	J3-9	
	J7-111	471				283	J1-4	
	J1-32	284				210	J2-97	
	J3-19	227				286	J1-74	
	J1-18	287				201	J2-29	
	J3-89	233				288	J1-44	
	J1-64	289				253	J4-89	
	J7-126	473				290	J1-5	
	J1-65	291				500	J6-127	
	J3-91	234				292	J1-33	
	J1-19	293				209	J2-95	
	J7-107	470				294	J1-6	
	J1-7	295				446	J7-1	
	J6-89	493				296	J1-66	
	J1-21	297				520	J5-127	
	J5-85	503				298	J1-8	
	J1-22	299				517	J5-89	
	J5-105	585				300	J1-9	
	J1-34	301				79		
	J6-111	498				302	J1-67	
	J1-23	303				507	J5-23	
	J5-120	579				304	J1-10	
	J1-35	305				421		
	J5-123	508				306	J1-24	
	J1-11	307				464	J7-87	
		415				308	J1-36	
	J1-25	310				491	J6-64	
	J5-2	506				311	J1-47	
	J1-12	312				463	J7-85	
		80				313	J1-37	
	J1-57	314				419		
	J3-41	230	WHT	26	15	265	J1-15	

ASSEMBLY INFORMATION CHART

	FROM		DESCRIPTION			TO		
REMARKS	DESTINATION	RUN NO	COLOR	AWG	FIND NO	RUN NO	DESTINATION	REMARKS
		419	WHT	26	15	272		
		273				424	J9-3	
	J5-1	501				315	J1-26	
	J1-48	316				81		
	J7-22	451				317	J1-13	
	J1-38	318				420		
		78				320	J1-49	
	J1-39	321				417		
	J9-4	423	WHT	26	15	322	J1-59	
	J5-134	570	BLK	26	16	82		
		82				262	J1-1	
	J1-82	261				77		
		77				309	J1-56	
	J1-58	319				416		
		416				285	J1-69	
		77	BLK	26	16	188	J2-28	
*		179	SHLD	28	14	27	J7-136	
	J7-132	64				176		*
*		174				46	J7-57	
	J8-136	66				178		*
*		180				2	J6-132	
	J6-136	3				177		*
*		175				580	J5-136	
	J8-128	76				163		*
*		164				26	J6-128	
	J7-41	56				126		*
*		125				576	J5-41	
	J5-101	566				127		*
*		106				51	J7-31	
	J7-98	34				104		*
*		105				535	J5-31	
	J5-110	518				83		*
*		85				23	J6-41	
	J7-110	29				84		*
	J8-98	69				147		*
*		148	SHLD	28	14	9	J6-98	
		86	BLK	26	16	103		
		107				124		
		128				162		
		165				173		
		181				172		
		149				146		
		145	BLK	26	16	65	J8-132	
	J6-29	21	WHT	28	17	171		
		170				7	J6-93	
	J6-51	18				169		
		168				12	J6-72	
	J6-92	6				167		
		166				13	J6-73	
	J8-79	72				159		
		158				71	J8-76	
	J8-15	75				155		
		154				70	J8-100	
	J8-55	74				151		
		150				68	J8-97	
	J6-79	16				161		
		160				14	J6-76	
	J6-15	24				157		
		156				10	J6-100	
	J6-55	19				153		
		152				8	J6-97	
	J5-60	569				142		
		143				572	J5-61	
	J5-121	586				137		
		140				565	J5-59	
	J5-63	583				134		
		135				571	J5-19	
	J5-119	574				132		
		133				581	J5-21	
	J5-42	582				129		
		130				1	J5-137	
	J7-121	31				141		
		144				48	J7-61	
	J7-63	50				138		
		139				63	J7-21	
	J7-137	28				131		
		136				57	J7-42	
	J7-76	39				120		
		123				40	J7-79	
	J7-33	53				115		
		116				62	J7-15	
	J7-100	36				112		
		114				59	J7-10	
	J7-54	44				110		
		111				52	J7-32	
	J7-55	45				108		
		109				33	J7-87	
	J5-10	534				121		
		122				542	J5-33	
	J5-32	538				118		
		119				526	J5-29	
	J5-95	540				113		
		117				543	J5-54	
	J8-121	67				98		
		97				32	J7-90	
	J7-49	43				92		
		96				42	J7-47	
	J7-112	30				100		
		101				58	J7-4	
	J6-137	4	WHT	28	17	89		

ASSEMBLY INFORMATION CHART

	FROM		DESCRIPTION			TO		
REMARKS	DESTINATION	RUN NO	COLOR	AWG	FIND NO	RUN NO	DESTINATION	REMARKS
		90	WHT	28	17	20	J6-63	
	J6-21	25				93		
		94				5	J6-121	
	J5-49	521				87		
		88				522	J5-70	
	J5-47	516				91		
		95				519	J5-90	
	J5-112	523				99		
		102	WHT	28	17	512	J5-4	
	J6-57	487	SHLD	28	14	325		*
*		324				557	J5-57	
	J5-132	563				336		*
*		335				492	J6-67	
	J6-31	480				352		*
*		351				430	J8-31	
	J7-13	448				372		*
*		369				465	J7-91	
	J7-101	469				370		*
*		371				553	J5-98	
	J5-128	524				390		*
*		389				476	J6-13	
	J6-91	494				392		*
*		391				474	J7-128	
	J8-41	433				411		*
*		410				546	J5-13	
	J5-96	545				413		*
*		412	SHLD	28	14	496	J6-101	
	J9-8	426	BLK	26	16	414		
		409				393		
		388				373		
		368				337		
		334				326		
		323				327		
		350	BLK	26	16	353		
	J8-73	440	WHT	28	17	333		
		332				441	J8-92	
	J8-72	439				331		
		330				435	J8-51	
	J8-93	442				329		
		328				429	J8-29	
	J8-52	436				347		
		346				443	J8-95	
	J8-54	437				343		
		342				431	J8-32	
	J8-10	427				339		
		338				432	J8-33	
	J6-52	485				349		
		348				495	J6-95	
	J6-54	486				345		
		344				481	J6-32	
	J6-10	475				341		
		340				482	J6-33	
	J7-36	453				360		
		359				449	J7-18	
	J7-59	457				355		
		354				458	J7-60	
	J7-119	472				367		
		358				450	J7-19	
	J5-18	567				366		
		365				550	J5-97	
	J5-55	548				364		
		363				562	J5-100	
	J5-36	556				362		
		361				555	J5-15	
	J5-76	549				357		
		356				561	J5-79	
	J7-72	460				385		
		384				456	J7-52	
	J7-73	461				383		
		380				468	J7-95	
	J7-92	466				379		
		378				467	J7-93	
	J7-51	455				375		
		374				452	J7-29	
	J5-52	536				387		
		386				532	J5-72	
	J5-73	537				382		
		381				528	J5-92	
	J5-51	531				377		
		376				533	J5-93	
	J7-70	459				406		
		405				499	J6-119	
	J6-18	477				408		
		404				483	J6-36	
	J6-42	484				401		
		400				478	J6-19	
	J6-60	489				396		
		395				490	J6-61	
	J6-59	488				399		
		398				554	J5-114	
	J8-119	444				403		
		402				445	J8-137	
	J8-63	438				397		
		394				428	J8-21	
	J8-42	434	WHT	28	17	407		

INTERNAL GROUND SHEATH CONNECTIONS

FROM	TO	LENGTH	FIND NO.
83	84	.75	16
84	85	.75	
104	105	.75	
105	106	.75	
125	126	.75	
126	127	.75	
147	148	.75	
163	164	.75	
174	175	.75	
175	176		
176	177		
177	178		
178	179		
179	180	.75	
324	325	.75	
335	336	.75	
351	352	.75	
369	370	.75	
370	371	.75	
371	372	.75	
389	390	.75	
390	391	.75	
391	392	.75	
410	411	.75	
411	412	.75	
412	413	.75	16

NOTES
1. * SEE GROUND SHEATH CONNECTION CHART

MASTER

FOR LIST OF MATERIALS SEE SHEET 3

QTY REQD	PART OR IDENTIFYING NO.	NOMENCLATURE OR DESCRIPTION	FIND NO.

LIST OF MATERIALS

UNLESS OTHERWISE SPECIFIED
DIMENSIONS ARE IN INCHES
TOLERANCES ON
FRACTIONS ± DECIMALS ± ANGLES ±
DO NOT SCALE THIS DRAWING
MATERIAL
HEAT TREATMENT
FINAL FINISH
USED ON
APPLICATION

MIT
INSTRUMENTATION LAB
CAMBRIDGE, MASS.

DRAWN R. B[illegible] DATE 11 Sep 64
CHECKED [illegible] 15 Sep 64
APPROVED [illegible]
APPROVAL [illegible] Sept 64
NASA APPROVAL [illegible] 9-22-64
MIT APPROVAL
MIT APPROVAL [illegible]

MANNED SPACECRAFT CENTER
HOUSTON, TEXAS

WIRING HARNESS, BRANCHED
AGC DSKY, NAV
100 SERIES

CODE IDENT NO. ——
SIZE J
NASA DRAWING NO. 1003805
SCALE NONE
WT
SHEET 2 OF 3

1003805 | -

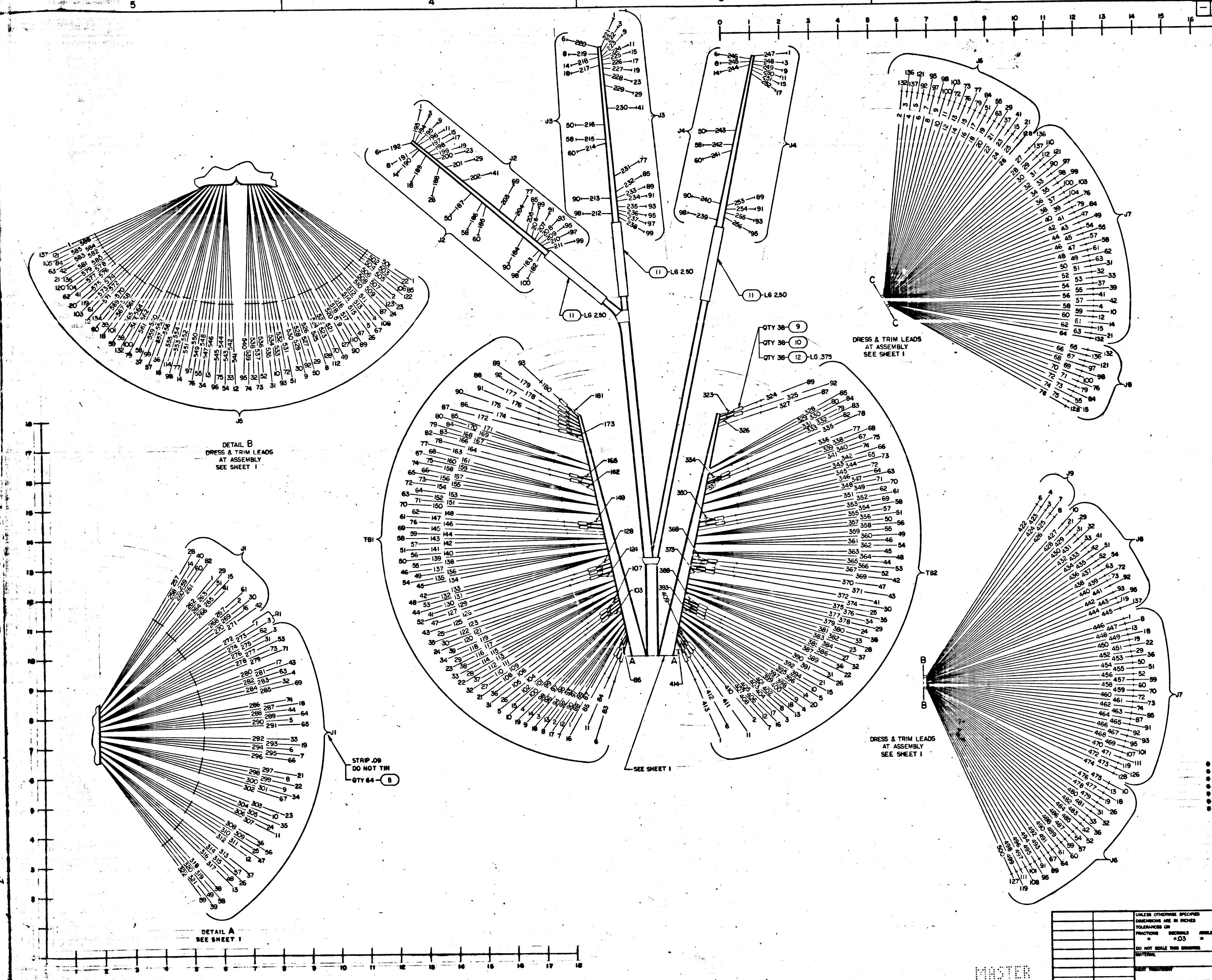
J1
J2
J3
J4
J5
J6
J7
J8
J9
TB1
TB2
L6 2.50
QTY 38 - 9
QTY 38 - 10
QTY 38 - 12 - LG .375
DRESS & TRIM LEADS AT ASSEMBLY SEE SHEET 1
DETAIL B DRESS & TRIM LEADS AT ASSEMBLY SEE SHEET 1
DETAIL A SEE SHEET 1
SEE SHEET 1
STRIP .09 DO NOT TIN
QTY 64 - 8
A
B
C
MASTER

	QTY REQD	PART OR IDENTIFYING NO.	NOMENCLATURE OR DESCRIPTION	FIND NO.
	1	MS18035-1	STRAP, CABLE IDENT	18
●	750	1010416-10	WIRE, ELECTRICAL, STRD, INSUL, AWG 28	17
●	55	1010416-11	WIRE, ELECTRICAL, STRD, INSUL, AWG 26	16
●	85	1010416-20	WIRE, ELECTRICAL, STRD, INSUL, AWG 26	15
●	75	1010778-1	WIRE, SHIELDED, TEFLON	14
●	1.5	SEE NOTE 6	SLEEVING	13
●	1.5	SEE NOTE 6	SLEEVING	12
●	7	SEE NOTE 6	SLEEVING	11
	38	1000243-1	FERRULE, ELECTRICAL CONDUCTOR	10
	38	1000242-1	FERRULE, ELECTRICAL CONDUCTOR	9
	108	1010738-1	CONTACT, MALE	8
	1	1010347-1	CONNECTOR, PLUG, ELECTRICAL	7
	5	MS 6633-4015	RING, RETAINING	6
	5	1004546-1	WASHER, FLAT	5
	5	1004546-3	WASHER, FLAT	4
	5	1004579-1	SCREW, JACKING	3
	1	1003531	DECODING PLATE [illegible] ASSY	2
	1	1003535	PLATE, WIREWRAP ASSY-RELAY HOUSING	1

LIST OF MATERIALS

NEXT ASSY	USED ON
APPLICATION	

UNLESS OTHERWISE SPECIFIED DIMENSIONS ARE IN INCHES
TOLERANCES ON
FRACTIONS ± DECIMALS ±.03 ANGLES ±
DO NOT SCALE THIS DRAWING
MATERIAL
HEAT TREATMENT
FINAL FINISH

MIT
INSTRUMENTATION LAB
Cambridge, Mass.

DRAWN B. Jagannan DATE 4 SEP 64
CHECKED C. Cyganski 15 Sep 64
APPROVAL [illegible] Sept 1964
APPROVAL [illegible] 14 Sept 64
NASA APPROVAL [illegible] 09-22-67
MIT APPROVAL
MIT APPROVAL W. Kuhn 22 Sept 64

MANNED SPACECRAFT CENTER
HOUSTON, TEXAS

WIRING HARNESS, BRANCHED
AGC DSKY, NAV
100 SERIES

CODE IDENT NO. —
SIZE J
NASA DRAWING NO. 1003805
SCALE 1/1
WT
SHEET 3 OF 3

SYM	DESCRIPTION	DATE	APPROVAL
A	CHANGED PER TDRR 13438 DR R. Zimbard CHK QTM	12/30/64	

REVISIONS 12765

NOTICE — WHEN GOVERNMENT DRAWINGS, SPECIFICATIONS OR OTHER DATA ARE USED FOR ANY PURPOSE OTHER THAN IN CONNECTION WITH A DEFINITELY RELATED GOVERNMENT PROCUREMENT OPERATION, THE UNITED STATES GOVERNMENT THEREBY INCURS NO RESPONSIBILITY NOR ANY OBLIGATION WHATSOEVER AND THE FACT THAT THE GOVERNMENT MAY HAVE FORMULATED, FURNISHED OR IN ANY WAY SUPPLIED THE SAID DRAWINGS, SPECIFICATIONS OR OTHER DATA IS NOT TO BE REGARDED BY IMPLICATION OR OTHERWISE AS IN ANY MANNER LICENSING THE HOLDER OR ANY OTHER PERSON OR CORPORATION, OR CONVEYING ANY RIGHTS OR PERMISSION TO MANUFACTURE, USE OR SELL ANY PATENTED INVENTION THAT MAY IN ANY WAY BE RELATED THERETO

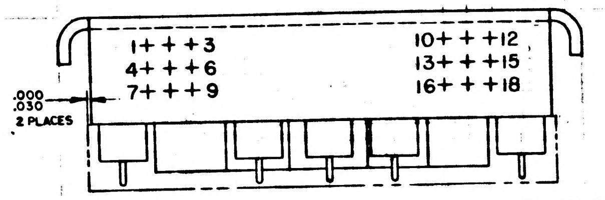
1+ + +3
4+ + +6
7+ + +9
10+ + +12
13+ + +15
16+ + +18
.000
.030
2 PLACES

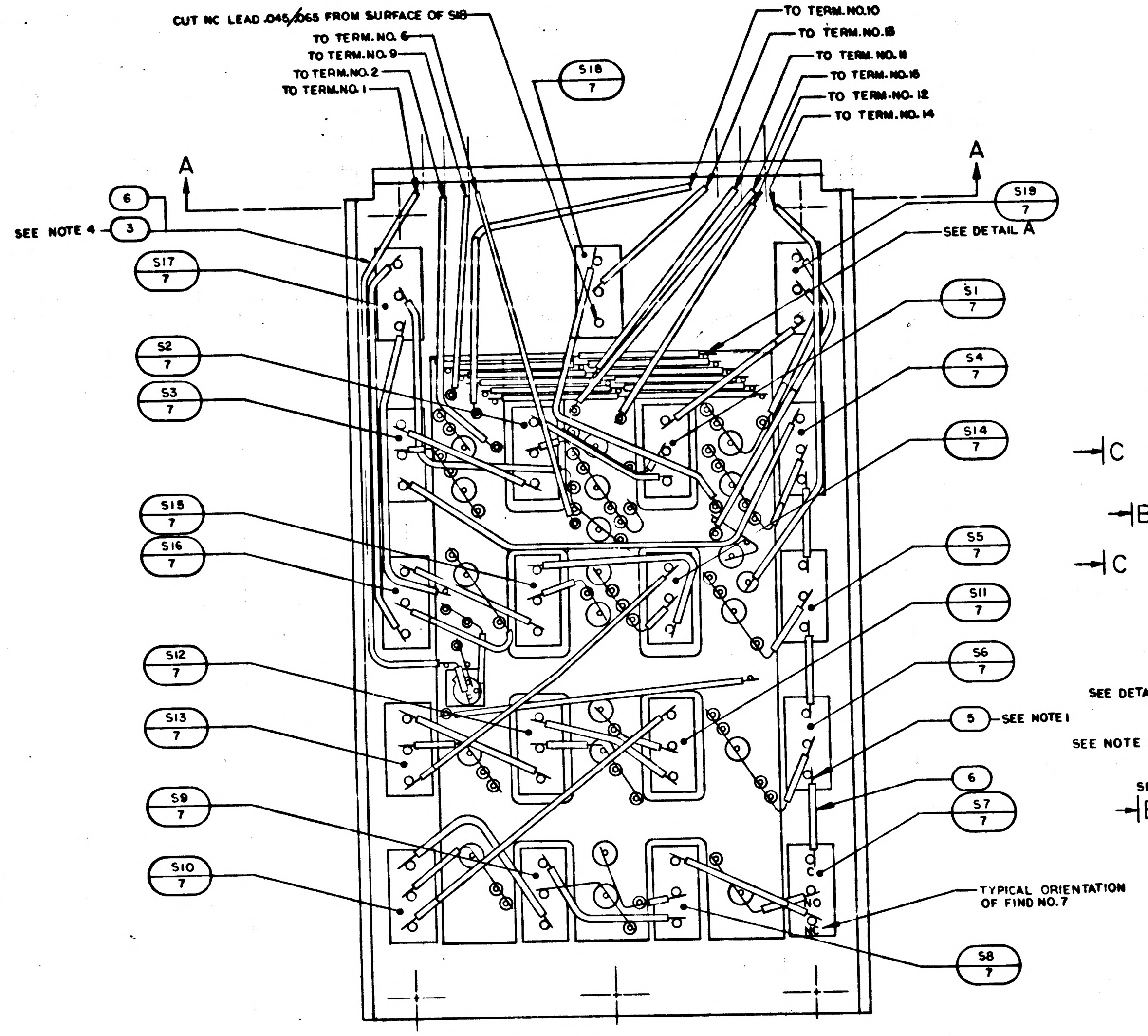
CUT NC LEAD .045/.065 FROM SURFACE OF S18
TO TERM. NO. 6
TO TERM. NO. 9
TO TERM. NO. 2
TO TERM. NO. 1
TO TERM. NO. 10
TO TERM. NO. 13
TO TERM. NO. 11
TO TERM. NO. 16
TO TERM. NO. 12
TO TERM. NO. 14
A
A
S18 7
S19 7
6
SEE NOTE 4
3
SEE DETAIL A
S17 7
S1 7
S2 7
S4 7
S3 7
S14 7
S18 7
S16 7
S5 7
S11 7
S12 7
S6 7
5
SEE NOTE 1
S13 7
6
S9 7
S7 7
S10 7
TYPICAL ORIENTATION OF FIND NO. 7
S8 7

VIEW A-A
SHOWN WITH POTTING REMOVED
SCALE 2/1

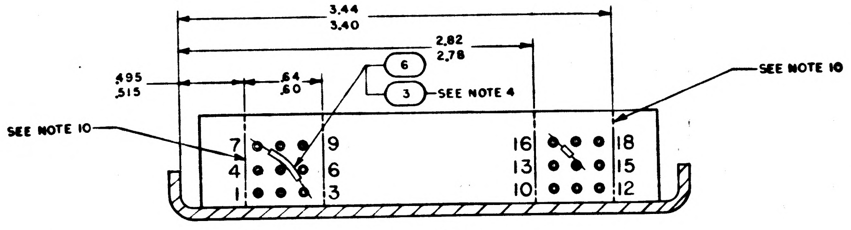
3.44
3.40
2.82
2.78
.64
.60
.495
.515
6
3
SEE NOTE 4
SEE NOTE 10
SEE NOTE 10
7 9
4 6
1 3
16 18
13 15
10 12

SECTION A-A

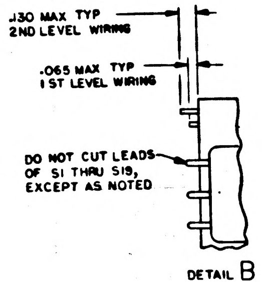
.130 MAX TYP
2ND LEVEL WIRING
.065 MAX TYP
1ST LEVEL WIRING
DO NOT CUT LEADS OF S1 THRU S19, EXCEPT AS NOTED

DETAIL B
SCALE 2/1

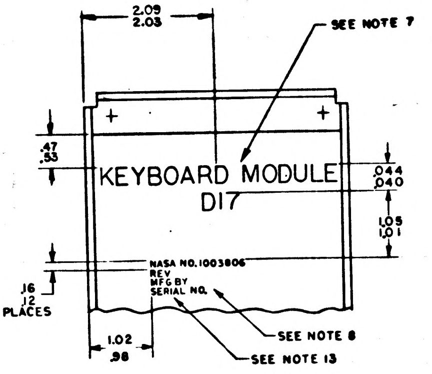
2.09
2.03
SEE NOTE 7
.47
.33
KEYBOARD MODULE
D17
.044
.040
1.05
1.01
NASA NO. 1003806
REV
MFG BY
SERIAL NO.
.16
.12
3 PLACES
SEE NOTE 8
1.02
.98
SEE NOTE 13

VIEW C-C

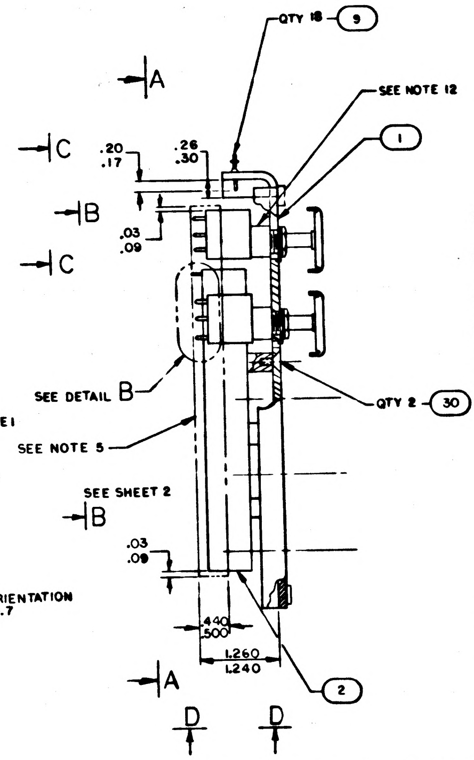
QTY 18 9
SEE NOTE 12
1
A
C
B
C
.20
.17
.26
.30
.03
.09
SEE DETAIL B
QTY 2 30
SEE NOTE 5
SEE SHEET 2
B
.03
.09
.440
.500
1.260
1.240
A
2
D
D

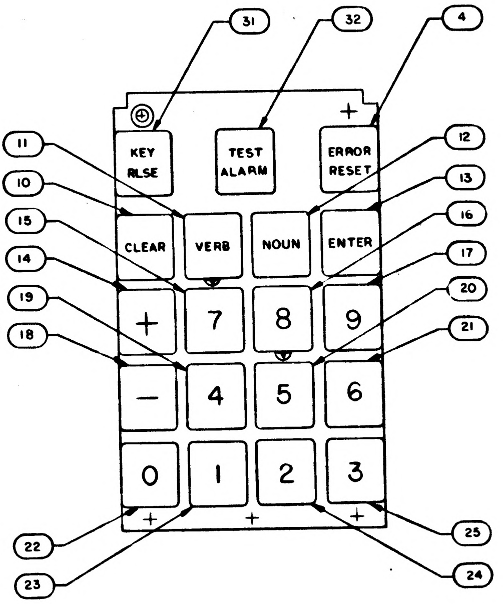
31
32
4
KEY RLSE
TEST ALARM
ERROR RESET
11
12
10
13
15
16
14
17
19
20
18
21
CLEAR
VERB
NOUN
ENTER
+
7
8
9
−
4
5
6
0
1
2
3
22
23
25
24

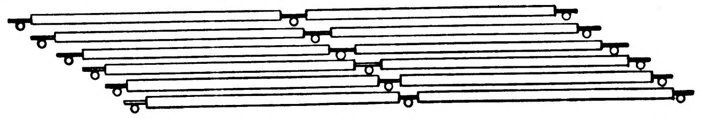

DETAIL A
FOR CLARITY ONLY
SCALE 4/1

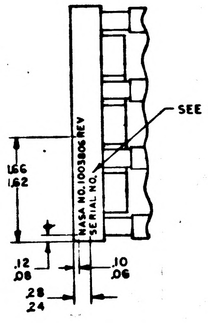
SEE NOTE 8 & 13
NASA NO. 1003806 REV
SERIAL NO.
1.66
1.62
.12
.08
.10
.06
.28
.24

VIEW D-D

NOTES:

1. ALL CONNECTIONS TO BE MADE BY WELDING PER ND1002005 WHEN USING FIND NO. 5
2. WIRING STANDARDS FOR WELDED UNITS IN ACCORDANCE WITH ND1002003
3. STAKE COMPONENTS TO FIND NO. 2 PER ND1002004
4. SOLDER ALL CONNECTIONS TO FIND NO. 9 PER ND1002071
5. ENCAPSULATE MODULE PER ND1002036 TO DIMENSIONS SHOWN
6. * DENOTES LENGTH IN FEET
7. MARK .250 HIGH WHITE PER ND1002019 & ND1002122 TYPE II CLASS 2, USING MARKING INK DWG. NO. 1006271-1
8. SERIALIZE PER ND1002023
9. BRUSH COAT THIS SURFACE PER ND1002009 TO A MINIMUM HEIGHT OF .015 ABOVE COMPONENT LEADS & FEEDTHRUS
10. ENCAPSULATE THIS AREA PER ND1002217
11. INTERPRET DRAWING IN ACCORDANCE WITH STANDARDS PRESCRIBED BY MIL-D-70327
12. FIND NO. 7 SHALL MEET THE FOLLOWING ACTUATION REQUIREMENTS BEFORE AND AFTER ENCAPSULATION PER NOTE 5:
    - PRE TRAVEL: .093 MIN/.188 MAX
    - OVER TRAVEL: .060 MIN
13. MARK .093 HIGH WHITE PER ND1002019 AND ND1002122 TYPE II CLASS 1 USING MARKING INK 1006271-1

QTY REQD	PART OR IDENTIFYING NO.	NOMENCLATURE OR DESCRIPTION	FIND NO.
	1006160	SCHEMATIC	REF
1	1010406-7	COIL, RF, CHOKE	38
6	1006750-1	RESISTOR, FIXED FILM	37
1	1004605	INSULATOR, PLATE	36
1	1006750-56	RESISTOR, FIXED FILM	35
1	1006752	TRANSISTOR, SILICON, TYPE NPN	34
2	1006750-32	RESISTOR, FIXED FILM	33
1	1004602-17	BUTTON, KEYBOARD	32
1	1004602-19	BUTTON, KEYBOARD	31
2	MS35200-12	SCREW, FLAT HEAD	30
1	1006755-79	CAPACITOR, FIXED TANTALUM	29
45	1006751	SEMI-CONDUCTOR DEVICE DIODE	28
19	1006755-57	CAPACITOR, FIXED, TANTALUM	27
2	1006750-39	RESISTOR, FIXED FILM	26
1	1004602-16	BUTTON, KEYBOARD	25
1	1004602-15	BUTTON, KEYBOARD	24
1	1004602-14	BUTTON, KEYBOARD	23
1	1004602-13	BUTTON, KEYBOARD	22
1	1004602-12	BUTTON, KEYBOARD	21
1	1004602-11	BUTTON, KEYBOARD	20
1	1004602-10	BUTTON, KEYBOARD	19
1	1004602-9	BUTTON, KEYBOARD	18
1	1004602-8	BUTTON, KEYBOARD	17
1	1004602-7	BUTTON, KEYBOARD	16
1	1004602-6	BUTTON, KEYBOARD	15
1	1004602-5	BUTTON, KEYBOARD	14
1	1004602-4	BUTTON, KEYBOARD	13
1	1004602-3	BUTTON, KEYBOARD	12
1	1004602-2	BUTTON, KEYBOARD	11
1	1004602-1	BUTTON, KEYBOARD	10
18	1006784-9	TERMINAL FEED THRU	9
1	1006777-24	CAPACITOR FIXED CERAMIC	8
19	1006738	SWITCH, PUSH	7
* 93	1006776-21	INSULATION, SLEEVING	6
* 12.0	1006757-1	WIRE ELECTRICAL, .010 X .020	5
1	1004602-18	BUTTON, KEYBOARD	4
* 8.5	1006757-13	WIRE, ELECTRICAL, .020 DIA	3
1	1004596	BLOCK, COMPONENT	2
1	1004800	PANEL, FRONT	1

LIST OF MATERIALS

NEXT ASSY	USED ON
1003706	

APPLICATION

UNLESS OTHERWISE SPECIFIED
DIMENSIONS ARE IN INCHES
TOLERANCES ON
FRACTIONS ± DECIMALS ± ANGLES ±
DO NOT SCALE THIS DRAWING
MATERIAL
HEAT TREATMENT
FINAL FINISH

MIT
INSTRUMENTATION LAB
CAMBRIDGE, MASS.
DWG NO
CONTRACT
DRAWN J. Manning DATE 9/6/64
CHECKED R. Edwards 15 Sept 64
APPROVAL Sept 15 64
APPROVAL
NASA APPROVAL 12-22-64
MIT APPROVAL
MIT APPROVAL 22 Dec 64

MANNED SPACECRAFT CENTER
HOUSTON, TEXAS

KEYBOARD MODULE ASSEMBLY (D17)
AGC DSKY, NAV 100 SERIES

CODE IDENT NO. —
SIZE E
NASA DRAWING NO. 1003806
SCALE 1/1
WT
SHEET 1 OF 2

NOTICE — WHEN GOVERNMENT DRAWINGS, SPECIFICATIONS, OR OTHER DATA ARE USED FOR ANY PURPOSE OTHER THAN IN CONNECTION WITH A DEFINITELY RELATED GOVERNMENT PROCUREMENT OPERATION, THE UNITED STATES GOVERNMENT THEREBY INCURS NO RESPONSIBILITY NOR ANY OBLIGATION WHATSOEVER; AND THE FACT THAT THE GOVERNMENT MAY HAVE FORMULATED, FURNISHED, OR IN ANY WAY SUPPLIED THE SAID DRAWINGS, SPECIFICATIONS, OR OTHER DATA IS NOT TO BE REGARDED BY IMPLICATION OR OTHERWISE AS IN ANY MANNER LICENSING THE HOLDER OR ANY OTHER PERSON OR CORPORATION, OR CONVEYING ANY RIGHTS OR PERMISSION TO MANUFACTURE, USE, OR SELL ANY PATENTED INVENTION THAT MAY IN ANY WAY BE RELATED THERETO.

1003806 A

REVISIONS 2 ⅙5

SYM	DESCRIPTION	DATE	APPROVAL
A	CHANGED PER TDRR 13438 DR R. [illegible] CHK [illegible]	10/30/64	

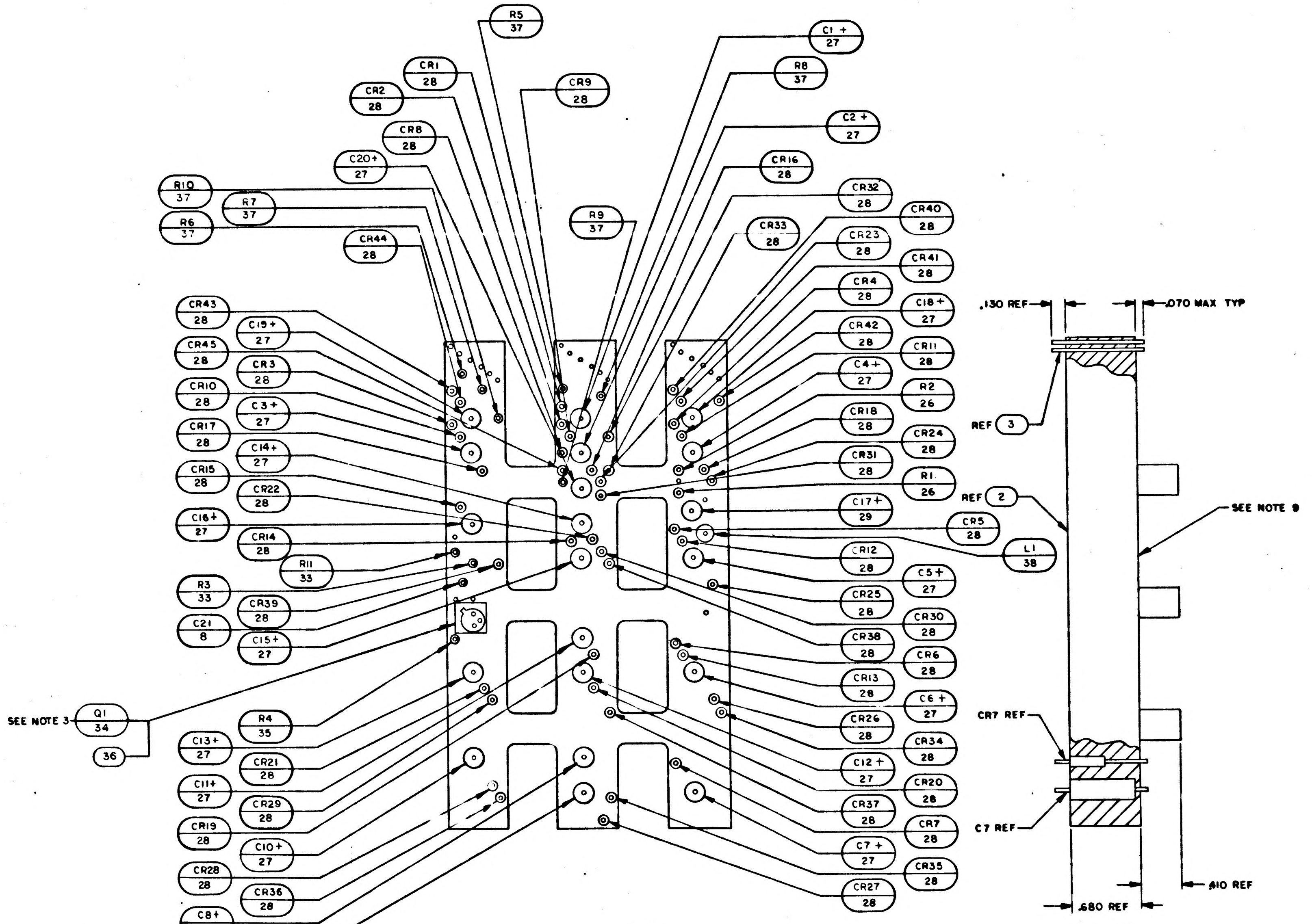

R5 37
CR1 28
CR9 28
CR2 28
CR8 28
C20+ 27
R10 37
R7 37
R6 37
CR44 28
R9 37
C1 + 27
R8 37
C2 + 27
CR16 28
CR32 28
CR33 28
CR40 28
CR23 28
CR41 28
CR4 28
C18+ 27
CR42 28
CR11 28
C4+ 27
R2 26
CR18 28
CR24 28
CR31 28
R1 26
C17+ 29
CR5 28
L1 38
CR12 28
C5+ 27
CR25 28
CR30 28
CR38 28
CR6 28
CR13 28
C6 + 27
CR26 28
CR34 28
C12 + 27
CR20 28
CR37 28
CR7 28
C7 + 27
CR35 28
CR27 28
CR43 28
C19+ 27
CR45 28
CR3 28
CR10 28
C3+ 27
CR17 28
C14+ 27
CR15 28
CR22 28
C16+ 27
CR14 28
R11 33
R3 33
CR39 28
C21 8
C15+ 27
SEE NOTE 3
Q1 34
36
R4 35
C13+ 27
CR21 28
C11+ 27
CR29 28
CR19 28
C10+ 27
CR28 28
CR36 28
C8+ 27
C9+ 27
.130 REF
.070 MAX TYP
REF 3
REF 2
SEE NOTE 9
CR7 REF
C7 REF
.680 REF
.810 REF

PARTIAL VIEW B-B
SHOWN BEFORE ASSEMBLY
TO FIND NO.7 & 1

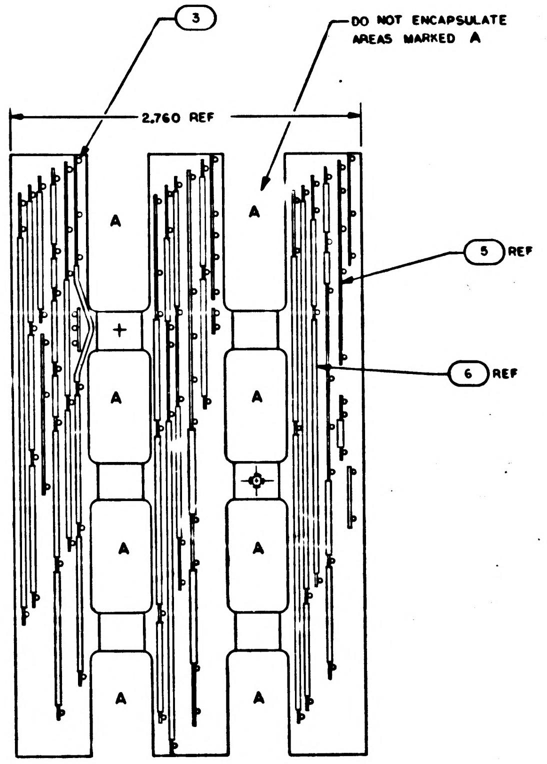

3
DO NOT ENCAPSULATE
AREAS MARKED A
2.760 REF
A
+
5 REF
6 REF

CATHODES (FIND NO.28) THIS
SIDE TYP 45 PLACES

QTY REQD	PART OR IDENTIFYING NO.	NOMENCLATURE OR DESCRIPTION	FIND NO.

LIST OF MATERIALS

1003706	
NEXT ASSY	USED ON
APPLICATION	

UNLESS OTHERWISE SPECIFIED
DIMENSIONS ARE IN INCHES
TOLERANCES ON
FRACTIONS ± DECIMALS ± ANGLES ±
DO NOT SCALE THIS DRAWING
MATERIAL
HEAT TREATMENT
FINAL FINISH

MIT
INSTRUMENTATION LAB
CAMBRIDGE, MASS
DWG NO CONTRACT
DRAWN [illegible] DATE 9/7/64
CHECKED [illegible] 15 Sept 64
APPROVAL [illegible] Sept 1964
APPROVAL [illegible] 21 Sept 64
NASA APPROVAL [illegible] 9-22-64
MIT APPROVAL
MIT APPROVAL [illegible]

MANNED SPACECRAFT CENTER
HOUSTON, TEXAS

KEYBOARD MODULE
ASSEMBLY (D17)
AGC DSKY, NAV 100 SERIES

CODE IDENT NO. —— SIZE E NASA DRAWING NO. 1003806
SCALE 2/1 WT SHEET 2 OF 2

1003806 B

SYM	DESCRIPTION	DATE	APPROVAL
A	CHANGED PER TDRR 13438 DR R. Lunford CHK QTM	10/30/64	
B	CHANGED PER TDRR 17249 DR CHK	5/5/65	

REVISIONS 12765

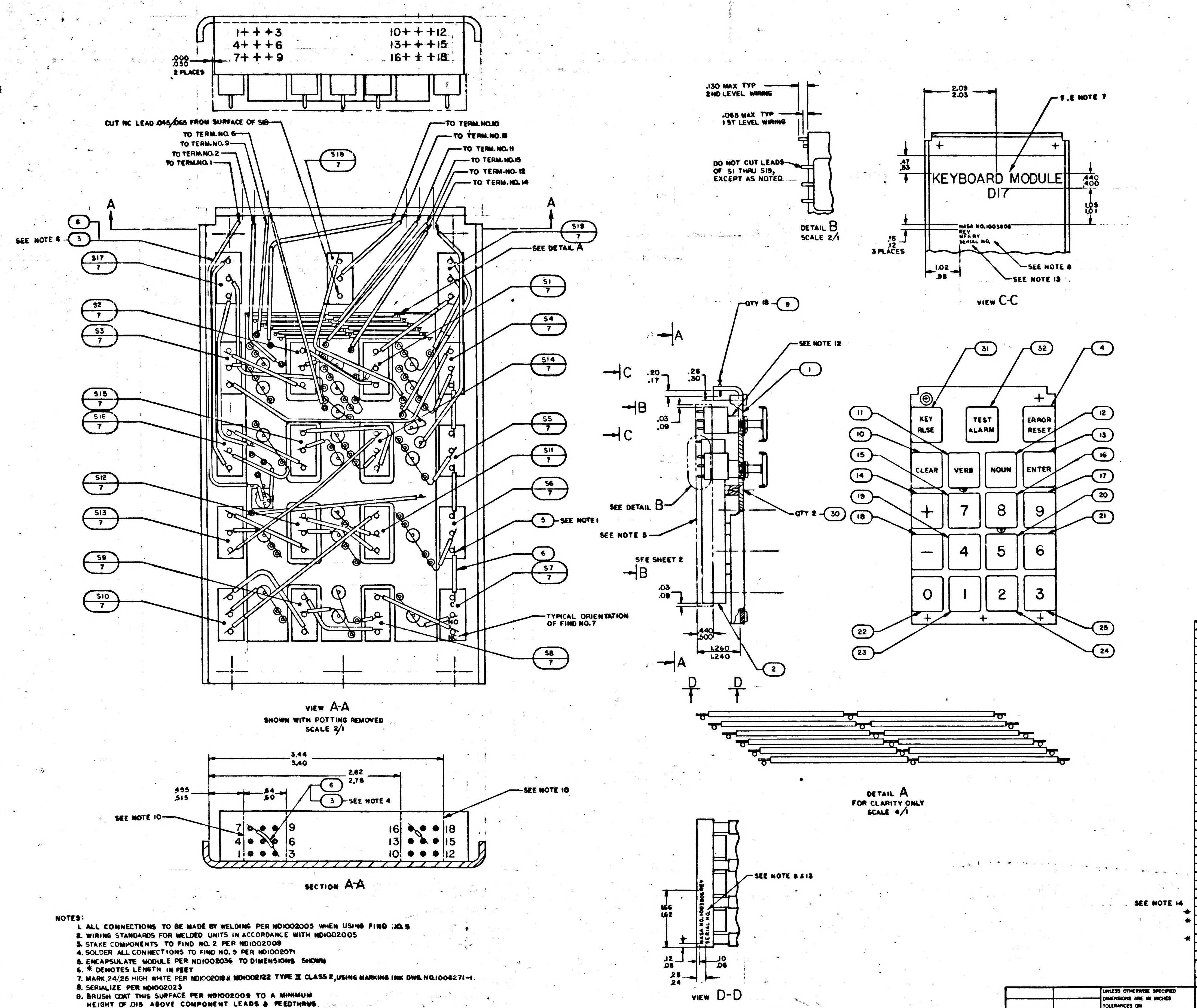
1+ + +3
4+ + +6
7+ + +9
10+ + +12
13+ + +15
16+ + +18
.000
.030
2 PLACES
CUT NC LEAD .045/.065 FROM SURFACE OF S18
TO TERM. NO. 6
TO TERM. NO. 9
TO TERM. NO. 2
TO TERM. NO. 1
TO TERM. NO. 10
TO TERM. NO. 18
TO TERM. NO. 11
TO TERM. NO. 15
TO TERM. NO. 12
TO TERM. NO. 14
A
A
SEE NOTE 4
6
3
S18 7
S19 7
SEE DETAIL A
S17 7
S1 7
S2 7
S3 7
S4 7
S14 7
S15 7
S16 7
S5 7
S11 7
S12 7
S6 7
S13 7
5 SEE NOTE 1
6
S9 7
S7 7
S10 7
TYPICAL ORIENTATION OF FIND NO. 7
S8 7
3.44
3.40
2.82
2.78
.495
.515
.64
.60
6
3 SEE NOTE 4
SEE NOTE 10
SEE NOTE 10
7 9 16 18
4 6 13 15
1 3 10 12
.130 MAX TYP 2ND LEVEL WIRING
.065 MAX TYP 1ST LEVEL WIRING
DO NOT CUT LEADS OF S1 THRU S19, EXCEPT AS NOTED
2.09
2.03
SEE NOTE 7
.47
.53
KEYBOARD MODULE
D17
.440
.400
1.05
1.01
NASA NO. 1003806
REV
MFG BY
SERIAL NO.
.16
.12
3 PLACES
1.02
.98
SEE NOTE 8
SEE NOTE 13
QTY 18 9
SEE NOTE 12
1
A
C
B
C
.20
.17
.26
.30
.03
.09
SEE DETAIL B
QTY 2 30
SEE NOTE 5
SEE SHEET 2
B
.03
.09
.440
.500
1.260
1.240
A
2
D
D
31
32
4
KEY RLSE
TEST ALARM
ERROR RESET
CLEAR
VERB
NOUN
ENTER
+
7
8
9
−
4
5
6
0
1
2
3
11
10
15
14
19
18
12
13
16
17
20
21
22
23
25
24
SEE NOTE 8 & 13
NASA NO. 1003806 REV
SERIAL NO.
1.66
1.62
.12
.08
.10
.06
.28
.24

VIEW A-A
SHOWN WITH POTTING REMOVED
SCALE 2/1

DETAIL B
SCALE 2/1

VIEW C-C

DETAIL A
FOR CLARITY ONLY
SCALE 4/1

SECTION A-A

VIEW D-D

NOTES:

1. ALL CONNECTIONS TO BE MADE BY WELDING PER ND1002005 WHEN USING FIND .10.5
2. WIRING STANDARDS FOR WELDED UNITS IN ACCORDANCE WITH ND1002005
3. STAKE COMPONENTS TO FIND NO. 2 PER ND1002009
4. SOLDER ALL CONNECTIONS TO FIND NO. 9 PER ND1002071
5. ENCAPSULATE MODULE PER ND1002036 TO DIMENSIONS SHOWN
6. * DENOTES LENGTH IN FEET
7. MARK .24/.26 HIGH WHITE PER ND1002019 & ND1002122 TYPE III CLASS 2, USING MARKING INK DWG. NO. 1006271-1.
8. SERIALIZE PER ND1002023
9. BRUSH COAT THIS SURFACE PER ND1002009 TO A MINIMUM HEIGHT OF .015 ABOVE COMPONENT LEADS & FEEDTHRUS.
10. ENCAPSULATE THIS AREA PER ND1002217
11. INTERPRET DRAWING IN ACCORDANCE WITH STANDARDS PRESCRIBED BY MIL-D-70327
12. FIND NO. 7 SHALL MEET THE FOLLOWING ACTUATION REQUIREMENTS BEFORE AND AFTER ENCAPSULATION PER NOTE 5:
    - PRE TRAVEL: .093 MIN/.188 MAX
    - OVER TRAVEL: .060 MIN
13. MARK .08/.10 HIGH WHITE PER ND1002019 AND ND1002122 TYPE II CLASS I USING MARKING INK 1006271-1
14. MOUNTING TORQUE ON FIND NO. 7 TO BE 17-19 IN LBS
15. BOND FIND NO. 38 TO FIND NO. 2 PER ND1002004
16. WORKMANSHIP FABRICATION AND INSPECTION REQUIREMENTS PER ND1002068

QTY REQD	PART OR IDENTIFYING NO.	NOMENCLATURE OR DESCRIPTION	FIND NO
	1006160	SCHEMATIC	REF
1	1010406-7	COIL, RF, CHOKE	38
6	1006750-1	RESISTOR, FIXED FILM	37
1	1004605	INSULATOR, PLATE	36
1	1006750-56	RESISTOR, FIXED FILM	35
1	1006752	TRANSISTOR, SILICON, TYPE NPN	34
2	1006750-32	RESISTOR, FIXED FILM	33
1	1004602-17	BUTTON, KEYBOARD	32
1	1004602-19	BUTTON, KEYBOARD	31
2	MS35200-12	SCREW, FLAT HEAD	30
1	1006755-79	CAPACITOR, FIXED TANTALUM	29
45	1006751	SEMI-CONDUCTOR DEVICE DIODE	28
19	1006755-57	CAPACITOR, FIXED, TANTALUM	27
2	1006750-39	RESISTOR, FIXED FILM	26
1	1004602-16	BUTTON, KEYBOARD	25
1	1004602-15	BUTTON, KEYBOARD	24
1	1004602-14	BUTTON, KEYBOARD	23
1	1004602-13	BUTTON, KEYBOARD	22
1	1004602-12	BUTTON, KEYBOARD	21
1	1004602-11	BUTTON, KEYBOARD	20
1	1004602-10	BUTTON, KEYBOARD	19
1	1004602-9	BUTTON, KEYBOARD	18
1	1004602-8	BUTTON, KEYBOARD	17
1	1004602-7	BUTTON, KEYBOARD	16
1	1004602-6	BUTTON, KEYBOARD	15
1	1004602-5	BUTTON, KEYBOARD	14
1	1004602-4	BUTTON, KEYBOARD	13
1	1004602-3	BUTTON, KEYBOARD	12
1	1004602-2	BUTTON, KEYBOARD	11
1	1004602-1	BUTTON, KEYBOARD	10
18	1006784-9	TERMINAL FEED THRU	9
1	1006777-24	CAPACITOR FIXED CERAMIC	8
SEE NOTE 14 19	1006738	SWITCH, PUSH	7
* 93	1006776-21	INSULATION, SLEEVING	6
* 12.0	1006757-1	WIRE ELECTRICAL, .010 X .020	5
1	1004602-18	BUTTON, KEYBOARD	4
* 8.5	1006757-13	WIRE, ELECTRICAL, .020 DIA	3
1	1004596	BLOCK, COMPONENT	2
1	1004800	PANEL, FRONT	1

LIST OF MATERIALS

NEXT ASSY	USED ON
1003706	

APPLICATION

UNLESS OTHERWISE SPECIFIED
DIMENSIONS ARE IN INCHES
TOLERANCES ON
FRACTIONS ± DECIMALS ± ANGLES ±
DO NOT SCALE THIS DRAWING
MATERIAL
HEAT TREATMENT
FINAL FINISH

MIT
INSTRUMENTATION LAB
CAMBRIDGE, MASS
JOB NO. CONTRACT
DRAWN John Manning DATE 9/6/64
CHECKED R. Edwards 15 Sept 64
APPROVAL Sept 15/64
APPROVAL 21 Sept 64
NASA APPROVAL W. J. 22-64
MIT APPROVAL
MIT APPROVAL

MANNED SPACECRAFT CENTER
HOUSTON, TEXAS

KEYBOARD MODULE ASSEMBLY (D17)
AGC DSKY, NAV 100 SERIES

CODE IDENT NO. ——— SIZE E NASA DRAWING NO. 1003806
SCALE 1/1 WT SHEET 1 OF 2

SYM	DESCRIPTION	DATE	APPROVAL
A	CHANGED PER TDRR 13438 DR R. [illegible] CHK [illegible]	10/30/64	[illegible]
B	CHANGED PER TDRR 17249 DR [illegible] CHK [illegible]	5/5/65	[illegible]

REVISIONS 2/65

NOTICE — WHEN GOVERNMENT DRAWINGS, SPECIFICATIONS, OR OTHER DATA ARE USED FOR ANY PURPOSE OTHER THAN IN CONNECTION WITH A DEFINITELY RELATED GOVERNMENT PROCUREMENT OPERATION, THE UNITED STATES GOVERNMENT THEREBY INCURS NO RESPONSIBILITY NOR ANY OBLIGATION WHATSOEVER, AND THE FACT THAT THE GOVERNMENT MAY HAVE FORMULATED, FURNISHED, OR IN ANY WAY SUPPLIED THE SAID DRAWINGS, SPECIFICATIONS, OR OTHER DATA IS NOT TO BE REGARDED BY IMPLICATION OR OTHERWISE AS IN ANY MANNER LICENSING THE HOLDER OR ANY OTHER PERSON OR CORPORATION, OR CONVEYING ANY RIGHTS OR PERMISSION TO MANUFACTURE, USE, OR SELL ANY PATENTED INVENTION THAT MAY IN ANY WAY BE RELATED THERETO.

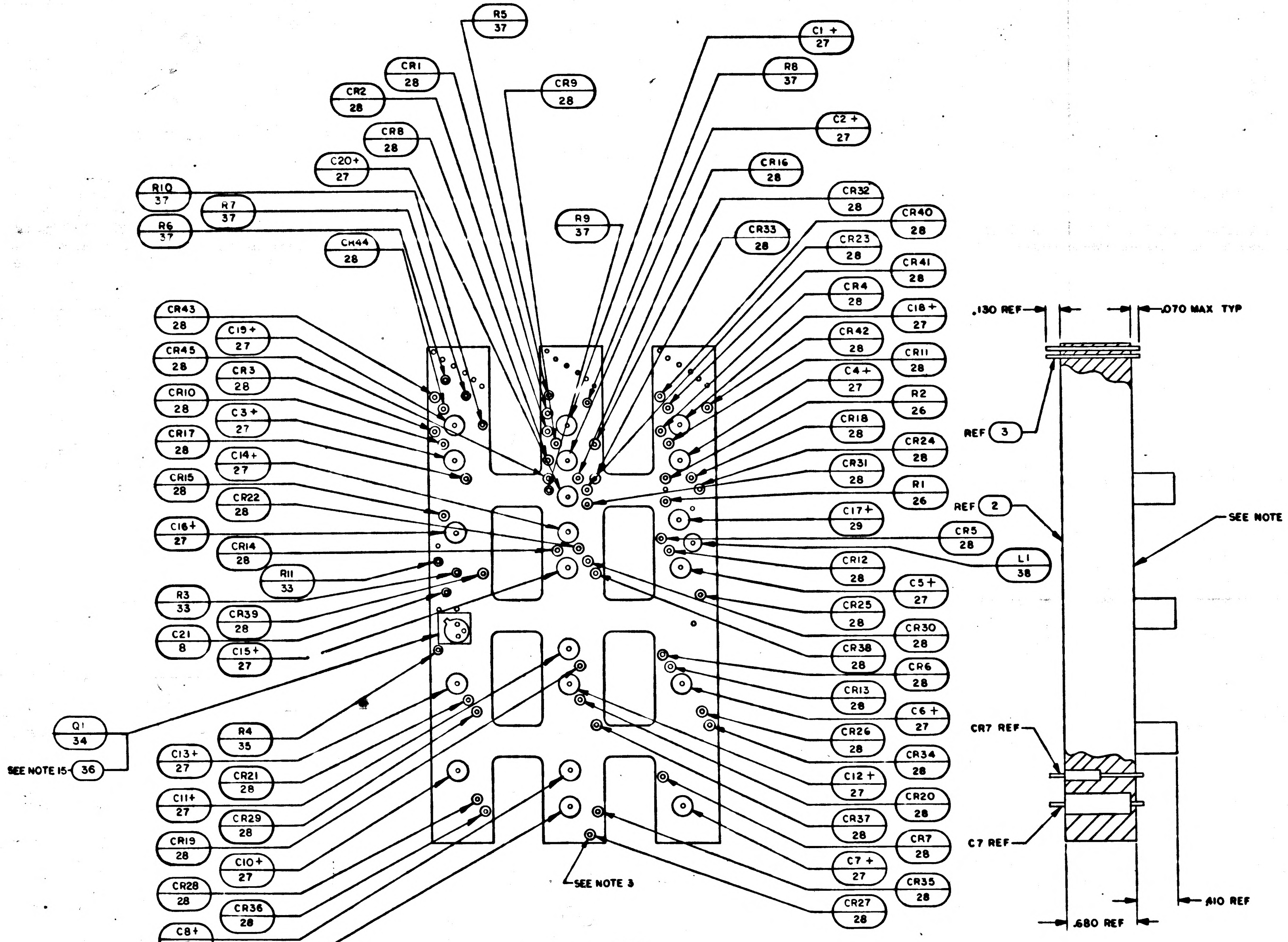
R5 37
CR1 28
CR2 28
CR9 28
CR8 28
C20+ 27
R10 37
R7 37
R6 37
CH44 28
R9 37
C1 + 27
R8 37
C2 + 27
CR16 28
CR32 28
CR33 28
CR40 28
CR23 28
CR41 28
CR4 28
C18 + 27
CR42 28
CR11 28
C4 + 27
R2 26
CR18 28
CR24 28
CR31 28
R1 26
C17+ 29
CR5 28
L1 38
CR12 28
C5 + 27
CR25 28
CR30 28
CR38 28
CR6 28
CR13 28
C6 + 27
CR26 28
CR34 28
C12 + 27
CR20 28
CR37 28
CR7 28
C7 + 27
CR35 28
CR27 28
CR43 28
C19 + 27
CR45 28
CR3 28
CR10 28
C3 + 27
CR17 28
C14+ 27
CR15 28
CR22 28
C16+ 27
CR14 28
R11 33
R3 33
CR39 28
C21 8
C15+ 27
Q1 34
SEE NOTE 15 36
R4 35
C13+ 27
CR21 28
C11+ 27
CR29 28
CR19 28
C10 + 27
CR28 28
CR36 28
C8+ 27
C9 + 27
SEE NOTE 3
.130 REF
.070 MAX TYP
REF 3
REF 2
SEE NOTE 9
CR7 REF
C7 REF
.410 REF
.680 REF

PARTIAL VIEW B-B
SHOWN BEFORE ASSEMBLY
TO FIND NO.7 & 1

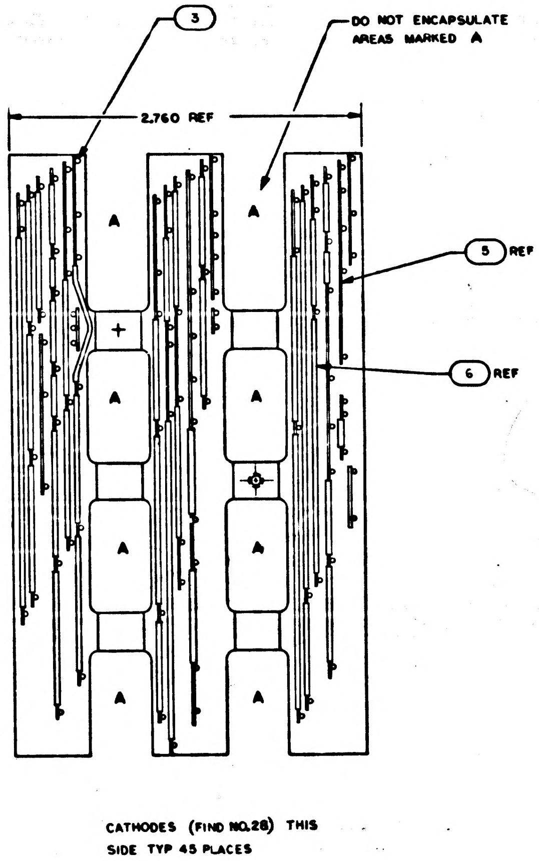
3
DO NOT ENCAPSULATE AREAS MARKED A
2.760 REF
A
+
5 REF
6 REF

CATHODES (FIND NO.28) THIS SIDE TYP 45 PLACES

QTY REQD	PART OR IDENTIFYING NO.	NOMENCLATURE OR DESCRIPTION	FIND NO.

LIST OF MATERIALS

1003706	
NEXT ASSY	USED ON
APPLICATION	

UNLESS OTHERWISE SPECIFIED
DIMENSIONS ARE IN INCHES
TOLERANCES ON
FRACTIONS ± DECIMALS ± ANGLES ±
DO NOT SCALE THIS DRAWING
MATERIAL
HEAT TREATMENT
FINAL FINISH

MIT
INSTRUMENTATION LAB
CAMBRIDGE, MASS
DWG. NO. CONTRACT
DRAWN L. Manning DATE 9/1/64
CHECKED [illegible]
APPROVAL [illegible] Sept 1964
APPROVAL Eldon C. Hall 21 Sept 64
NASA APPROVAL [illegible] 9-22-64
MIT APPROVAL
MIT APPROVAL [illegible] 22 Sept 64

MANNED SPACECRAFT CENTER
HOUSTON, TEXAS

KEYBOARD MODULE ASSEMBLY (D17)
AGC DSKY, NAV 100 SERIES

CODE IDENT NO. —— SIZE E NASA DRAWING NO. 1003806
SCALE 2/1 WT SHEET 2 OF 2

1003806 C

SYM	DESCRIPTION	DATE	APPROVAL
A	CHANGED PER TDRR 13438 DR R. Lunford CHK RTM	10/30/64	
B	CHANGED PER TDRR 17249 DR CHK	5/5/65	
C	CHANGED PER TDRR 20563 DR CHK		

REVISIONS 12765

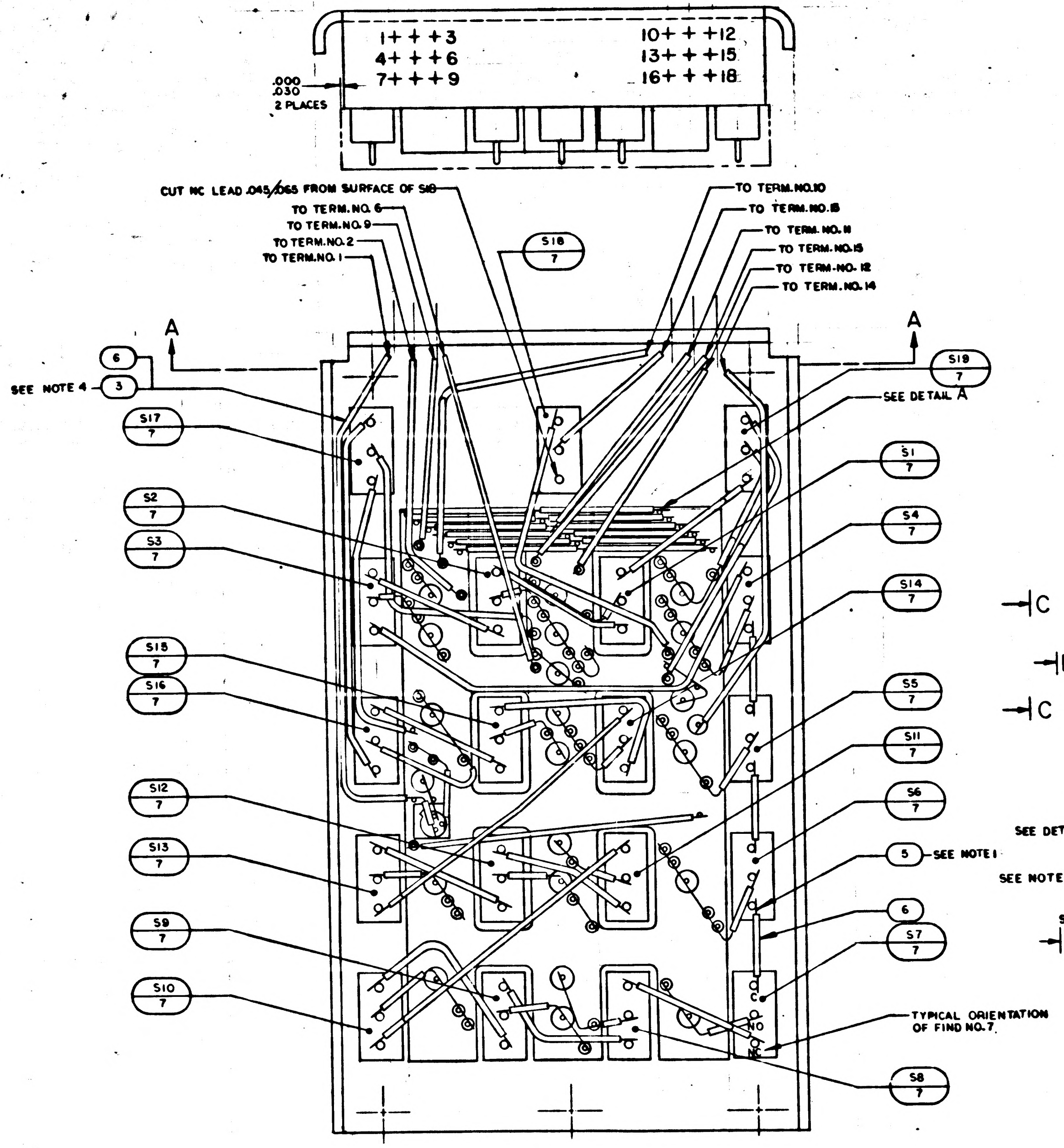

1+ + +3
4+ + +6
7+ + +9
10+ + +12
13+ + +15
16+ + +18
.000
.030
2 PLACES
CUT NC LEAD .045/.065 FROM SURFACE OF S18
TO TERM. NO. 6
TO TERM. NO. 9
TO TERM. NO. 2
TO TERM. NO. 1
TO TERM. NO. 10
TO TERM. NO. 18
TO TERM. NO. 11
TO TERM. NO. 15
TO TERM. NO. 12
TO TERM. NO. 14
A
A
SEE NOTE 4
6
3
S18 7
S19 7
SEE DETAIL A
S17 7
S1 7
S2 7
S3 7
S4 7
S14 7
S15 7
S16 7
S5 7
S11 7
S12 7
S6 7
S13 7
5 SEE NOTE 1
6
S9 7
S7 7
S10 7
TYPICAL ORIENTATION OF FIND NO. 7
S8 7

VIEW A-A
SHOWN WITH POTTING REMOVED
SCALE 2/1

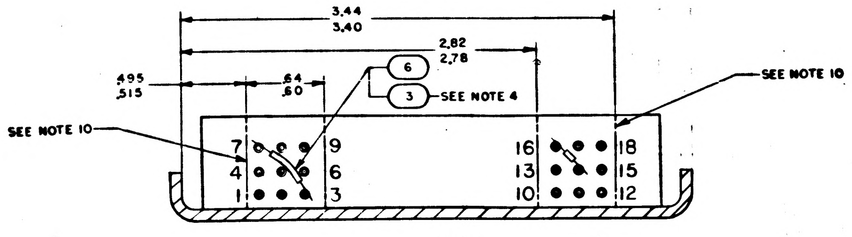

3.44
3.40
2.82
2.78
.495
.515
.64
.60
6
3 SEE NOTE 4
SEE NOTE 10
SEE NOTE 10
7 9
4 6
1 3
16 18
13 15
10 12

SECTION A-A

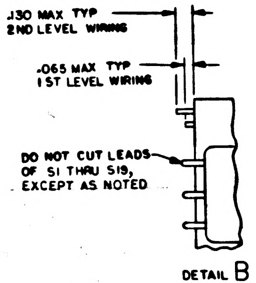

.130 MAX TYP
2ND LEVEL WIRING
.065 MAX TYP
1 ST LEVEL WIRING
DO NOT CUT LEADS OF S1 THRU S19, EXCEPT AS NOTED

DETAIL B
SCALE 2/1

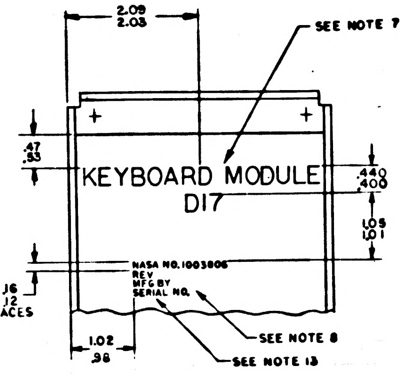

2.09
2.03
SEE NOTE 7
.47
.53
KEYBOARD MODULE
D17
.440
.400
1.05
1.01
NASA NO. 1003806
REV
MFG BY
SERIAL NO.
.16
.12
3 PLACES
SEE NOTE 8
1.02
.98
SEE NOTE 13

VIEW C-C

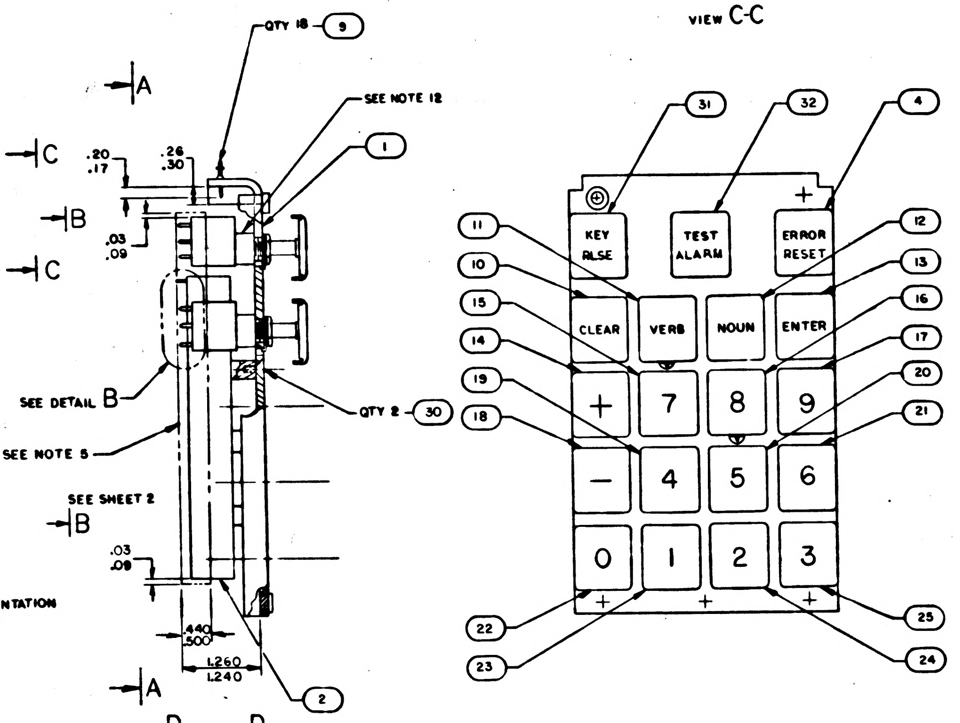

QTY 18 9
SEE NOTE 12
1
A
C
.20
.17
.26
.30
B
.03
.09
C
SEE DETAIL B
SEE NOTE 5
QTY 2 30
SEE SHEET 2
B
.03
.08
.440
.500
1.260
1.240
A
2
31
32
4
KEY RLSE
TEST ALARM
ERROR RESET
11
12
10
13
15
16
14
17
19
20
18
21
CLEAR
VERB
NOUN
ENTER
+
7
8
9
−
4
5
6
0
1
2
3
22
25
23
24

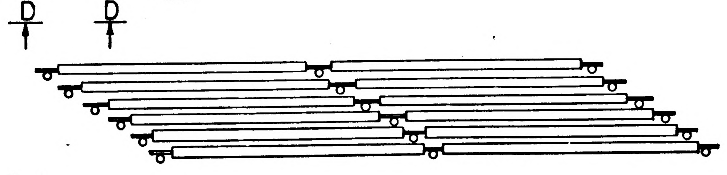

DETAIL A
FOR CLARITY ONLY
SCALE 4/1

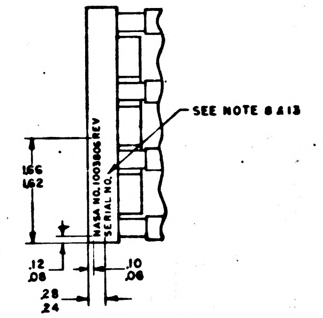

SEE NOTE 8 & 13
NASA NO. 1003806 REV
SERIAL NO.
1.66
1.62
.12
.08
.10
.06
.28
.24

VIEW D-D

NOTES:

1. ALL CONNECTIONS TO BE MADE BY WELDING PER ND1002005 WHEN USING FIND NO. 5
~~2. WIRING STANDARDS FOR WELDED UNITS IN ACCORDANCE WITH ND1002005~~
3. STAKE COMPONENTS TO FIND NO. 2 PER ND1002009 METHOD A
4. SOLDER ALL CONNECTIONS TO FIND NO. 9 PER ND1002071
5. ENCAPSULATE MODULE PER ND1002036 TO DIMENSIONS SHOWN
6. * DENOTES LENGTH IN FEET
7. MARK .24/.26 HIGH WHITE PER ND1002019 & ND1002122 TYPE II CLASS 2, USING MARKING INK DWG. NO. 1006271-1
8. SERIALIZE PER ND1002023
9. BRUSH COAT THIS SURFACE PER ND1002009 METHOD B TO A MINIMUM HEIGHT OF .015 ABOVE COMPONENT LEADS & FEEDTHRUS.
10. ENCAPSULATE THIS AREA PER ND1002217
11. INTERPRET DRAWING IN ACCORDANCE WITH STANDARDS PRESCRIBED BY MIL-D-70327
12. FIND NO. 7 SHALL MEET THE FOLLOWING ACTUATION REQUIREMENTS BEFORE AND AFTER ENCAPSULATION PER NOTE 5:
    PRE TRAVEL: .093 MIN/.188 MAX
    OVER TRAVEL: .060 MIN
13. MARK .08/.10 HIGH WHITE PER ND1002019 AND ND1002122 TYPE II CLASS 1 USING MARKING INK 1006271-1
14. MOUNTING TORQUE ON FIND NO. 7 TO BE 17-19 IN LBS
15. BOND FIND NO. 36 TO FIND NO. 2 PER ND1002004 TYPE V
16. WORKMANSHIP FABRICATION AND INSPECTION REQUIREMENTS PER ND1002069

	QTY REQD	PART OR IDENTIFYING NO.	NOMENCLATURE OR DESCRIPTION	FIND NO.
	☒	1005784	SCHEMATIC	REF
	1	1010406-7	COIL, RF, CHOKE	38
	6	1006750-1	RESISTOR, FIXED FILM	37
	1	1004605	INSULATOR, PLATE	36
	1	1006750-56	RESISTOR, FIXED FILM	35
	1	1006752	TRANSISTOR, SILICON, TYPE NPN	34
	2	1006750-32	RESISTOR, FIXED FILM	33
	1	1004602-17	BUTTON, KEYBOARD	32
	1	1004602-19	BUTTON, KEYBOARD	31
	2	MS35200-12	SCREW, FLAT HEAD	30
	2	1006755-79	CAPACITOR, FIXED TANTALUM	29
	45	1006751	SEMI-CONDUCTOR DEVICE DIODE	28
	19	1006755-57	CAPACITOR, FIXED, TANTALUM	27
	2	1006750-39	RESISTOR, FIXED FILM	26
	1	1004602-16	BUTTON, KEYBOARD	25
	1	1004602-15	BUTTON, KEYBOARD	24
	1	1004602-14	BUTTON, KEYBOARD	23
	1	1004602-13	BUTTON, KEYBOARD	22
	1	1004602-12	BUTTON, KEYBOARD	21
	1	1004602-11	BUTTON, KEYBOARD	20
	1	1004602-10	BUTTON, KEYBOARD	19
	1	1004602-9	BUTTON, KEYBOARD	18
	1	1004602-8	BUTTON, KEYBOARD	17
	1	1004602-7	BUTTON, KEYBOARD	16
	1	1004602-6	BUTTON, KEYBOARD	15
	1	1004602-5	BUTTON, KEYBOARD	14
	1	1004602-4	BUTTON, KEYBOARD	13
	1	1004602-3	BUTTON, KEYBOARD	12
	1	1004602-2	BUTTON, KEYBOARD	11
	1	1004602-1	BUTTON, KEYBOARD	10
	18	1006784-9	TERMINAL FEED THRU	9
	~~1~~	~~1006777-24~~	~~CAPACITOR FIXED CERAMIC~~	8
SEE NOTE 14	19	1006738	SWITCH, PUSH	7
*	93	1006776-21	INSULATION, SLEEVING	6
*	12.0	1006757-1	WIRE ELECTRICAL, .010 X .020	5
	1	1004602-18	BUTTON, KEYBOARD	4
*	8.5	1006757-13	WIRE, ELECTRICAL, .020 DIA	3
	1	1004761	BLOCK, COMPONENT	2
	1	1004800	PANEL, FRONT	1

LIST OF MATERIALS

1003706	
NEXT ASSY	USED ON
APPLICATION	

UNLESS OTHERWISE SPECIFIED
DIMENSIONS ARE IN INCHES
TOLERANCES ON
FRACTIONS ± DECIMALS ± ANGLES ±
DO NOT SCALE THIS DRAWING
MATERIAL
HEAT TREATMENT
FINAL FINISH

MIT
INSTRUMENTATION LAB
CAMBRIDGE, MASS
DWG NO. CONTRACT
DRAWN Manning DATE 9/6/64
CHECKED R. Edwards 15 Sept 64
APPROVAL Sept 15 64
APPROVAL
NASA APPROVAL 9-22-64
MIT APPROVAL
MIT APPROVAL

MANNED SPACECRAFT CENTER
HOUSTON, TEXAS

KEYBOARD MODULE
ASSEMBLY (D17)
AGC DSKY, NAV 100 SERIES

CODE IDENT NO. 80230 SIZE E NASA DRAWING NO. 1003806
SCALE 1/1 WT SHEET 1 OF 2

1003806

NOTICE — WHEN GOVERNMENT DRAWINGS, SPECIFICATIONS, OR OTHER DATA ARE USED FOR ANY PURPOSE OTHER THAN IN CONNECTION WITH A DEFINITELY RELATED GOVERNMENT PROCUREMENT OPERATION, THE UNITED STATES GOVERNMENT THEREBY INCURS NO RESPONSIBILITY NOR ANY OBLIGATION WHATSOEVER; AND THE FACT THAT THE GOVERNMENT MAY HAVE FORMULATED, FURNISHED, OR IN ANY WAY SUPPLIED THE SAID DRAWINGS, SPECIFICATIONS, OR OTHER DATA IS NOT TO BE REGARDED BY IMPLICATION OR OTHERWISE AS IN ANY MANNER LICENSING THE HOLDER OR ANY OTHER PERSON OR CORPORATION, OR CONVEYING ANY RIGHTS OR PERMISSION TO MANUFACTURE, USE, OR SELL ANY PATENTED INVENTION THAT MAY IN ANY WAY BE RELATED THERETO.

1003806 C

REVISIONS		2	
SYM	DESCRIPTION	DATE	APPROVAL
A	CHANGED PER TDRR 13438 DR R. [illegible] CHK [illegible]	10/30/64	[illegible]
B	CHANGED PER TDRR 17249 DR [illegible] CHK [illegible]	5/5/65	[illegible]
C	CHANGED PER TDRR 20563 DR J.P. [illegible] CHK R.A.B.	[illegible]	[illegible]

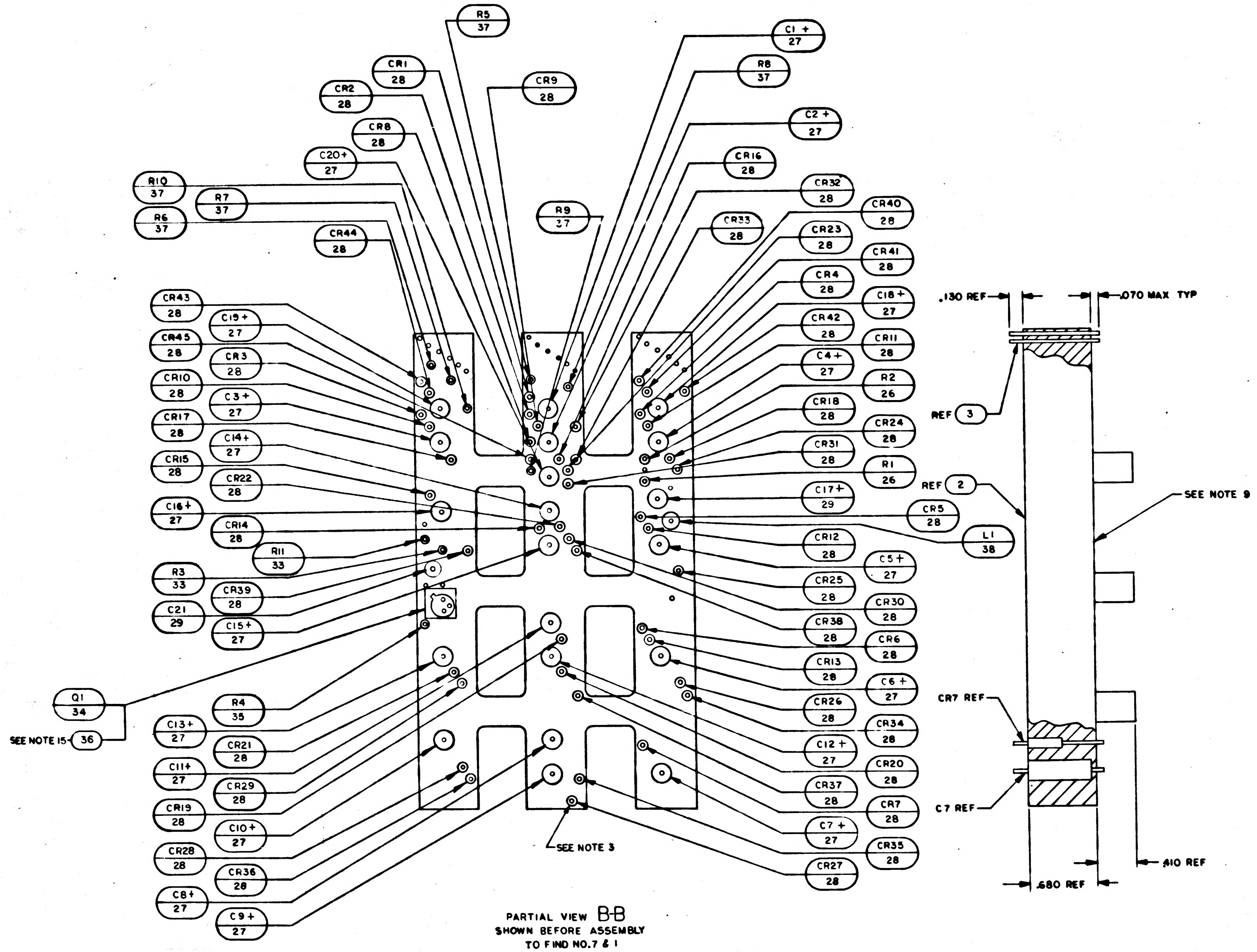
R5 37
CR1 28
CR9 28
C1 + 27
R8 37
CR2 28
C2 + 27
CR8 28
C20 + 27
CR16 28
R10 37
R7 37
R6 37
R9 37
CR33 28
CR32 28
CR40 28
CR44 28
CR23 28
CR41 28
CR4 28
CR43 28
C19 + 27
C18 + 27
CR45 28
CR3 28
CR42 28
CR11 28
CR10 28
C3 + 27
C4 + 27
R2 26
CR17 28
CR18 28
C14 + 27
CR24 28
CR15 28
CR31 28
CR22 28
R1 26
C16 + 27
C17 + 29
CR5 28
CR14 28
L1 38
R11 33
CR12 28
R3 33
C5 + 27
CR25 28
CR39 28
CR30 28
C21 29
CR38 28
C15 + 27
CR6 28
CR13 28
C6 + 27
Q1 34
CR26 28
R4 35
SEE NOTE 15 36
CR34 28
C13 + 27
CR21 28
C12 + 27
CR20 28
C11 + 27
CR29 28
CR37 28
CR7 28
CR19 28
C10 + 27
C7 + 27
CR35 28
SEE NOTE 3
CR28 28
CR27 28
CR36 28
C8 + 27
C9 + 27
.130 REF
.070 MAX TYP
REF 3
REF 2
SEE NOTE 9
CR7 REF
C7 REF
.410 REF
.680 REF

PARTIAL VIEW B-B
SHOWN BEFORE ASSEMBLY
TO FIND NO.7 & 1

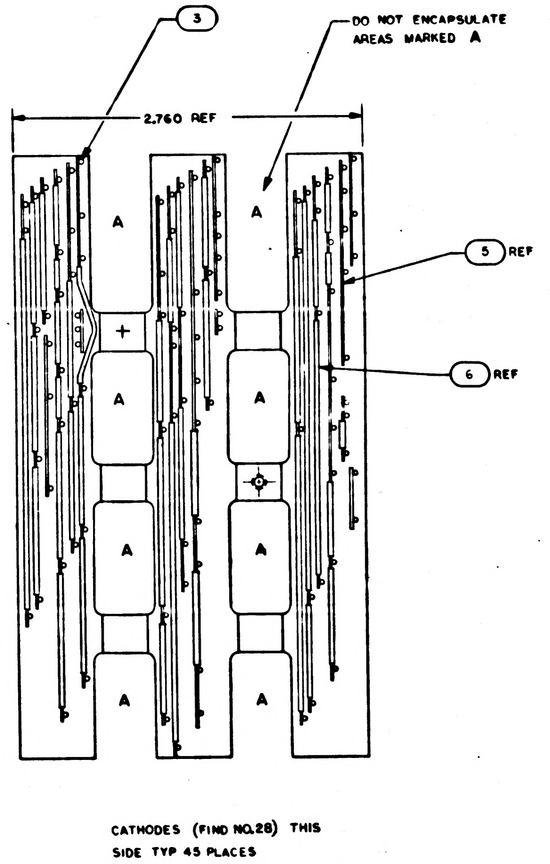
3
DO NOT ENCAPSULATE AREAS MARKED A
2.760 REF
A
+
5 REF
6 REF

CATHODES (FIND NO.28) THIS
SIDE TYP 45 PLACES

MASTER

QTY REQD	PART OR IDENTIFYING NO.	NOMENCLATURE OR DESCRIPTION	FIND NO.
LIST OF MATERIALS			

1003706	
NEXT ASSY	USED ON
APPLICATION	

UNLESS OTHERWISE SPECIFIED
DIMENSIONS ARE IN INCHES
TOLERANCES ON
FRACTIONS ± DECIMALS ± ANGLES ±
DO NOT SCALE THIS DRAWING
MATERIAL
HEAT TREATMENT
FINAL FINISH

MIT
INSTRUMENTATION LAB
CAMBRIDGE, MASS
DWG NO CONTRACT
DRAWN [illegible] DATE 9/7/64
CHECKED [illegible]
APPROVAL [illegible] Sept 15 64
APPROVAL [illegible] 21 Sept 64
NASA APPROVAL [illegible] 9-22-64
MIT APPROVAL
MIT APPROVAL [illegible]

MANNED SPACECRAFT CENTER
HOUSTON, TEXAS

KEYBOARD MODULE
ASSEMBLY (D17)
AGC DSKY, NAV 100 SERIES

CODE IDENT NO.	SIZE	NASA DRAWING NO.
80230	E	1003806

SCALE 2/1 WT SHEET 2 OF 2

1003806 C

NOTICE — WHEN GOVERNMENT DRAWINGS, SPECIFICATIONS, OR OTHER DATA ARE USED FOR ANY PURPOSE OTHER THAN IN CONNECTION WITH A DEFINITELY RELATED GOVERNMENT PROCUREMENT OPERATION, THE UNITED STATES GOVERNMENT THEREBY INCURS NO RESPONSIBILITY NOR ANY OBLIGATION WHATSOEVER, AND THE FACT THAT THE GOVERNMENT MAY HAVE FORMULATED, FURNISHED, OR IN ANY WAY SUPPLIED THE SAID DRAWINGS, SPECIFICATIONS, OR OTHER DATA IS NOT TO BE REGARDED BY IMPLICATION OR OTHERWISE AS IN ANY MANNER LICENSING THE HOLDER OR ANY OTHER PERSON OR CORPORATION, OR CONVEYING ANY RIGHTS OR PERMISSION TO MANUFACTURE, USE, OR SELL ANY PATENTED INVENTION THAT MAY IN ANY WAY BE RELATED THERETO.

1003806 -

SYM	REVISIONS DESCRIPTION	DATE	APPROVAL
	12765		

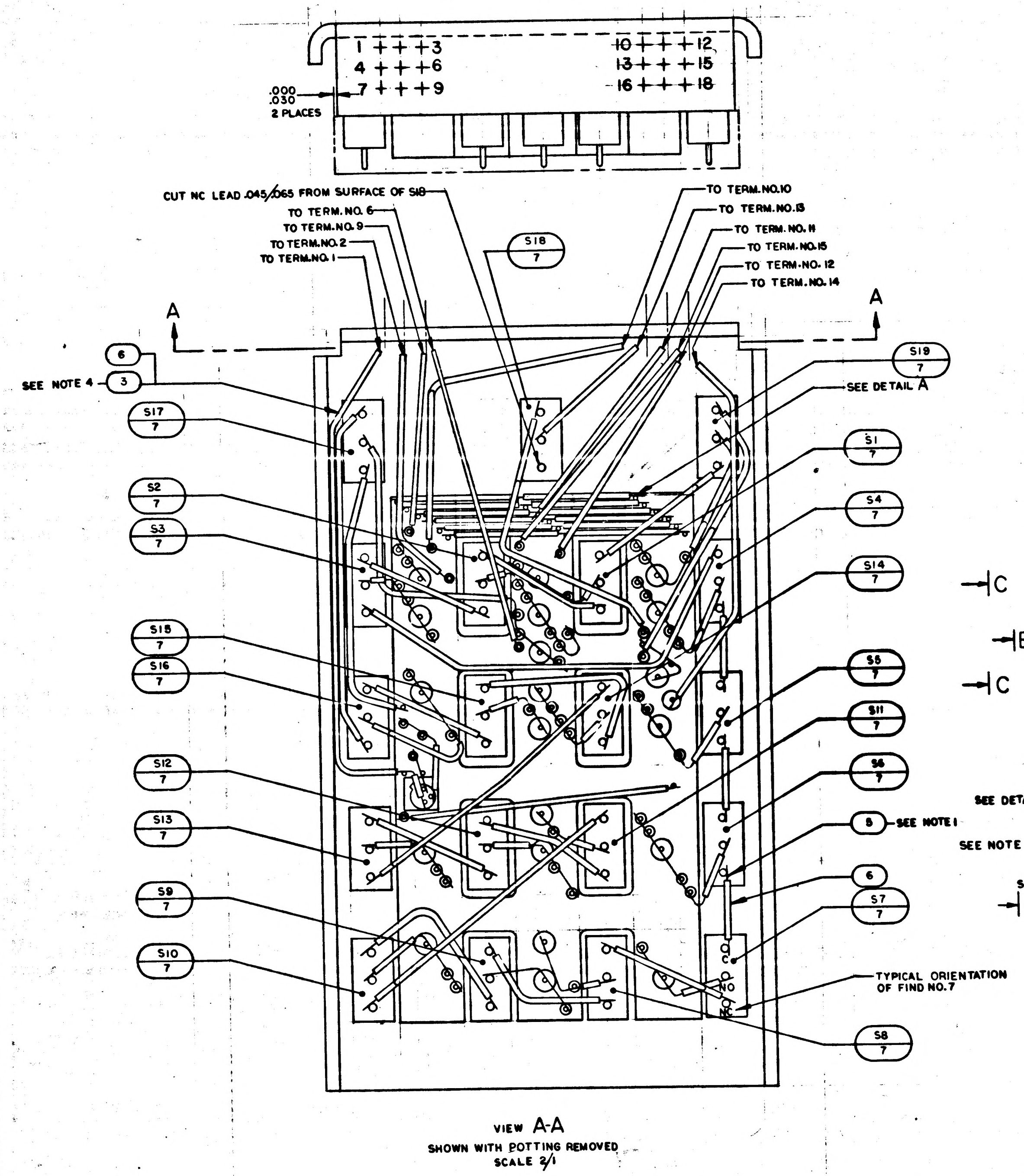

.000
.030
2 PLACES
1 + + + 3
4 + + + 6
7 + + + 9
10 + + + 12
13 + + + 15
16 + + + 18
CUT NC LEAD .045/.065 FROM SURFACE OF S18
TO TERM. NO. 6
TO TERM. NO. 9
TO TERM. NO. 2
TO TERM. NO. 1
TO TERM. NO. 10
TO TERM. NO. 13
TO TERM. NO. 11
TO TERM. NO. 15
TO TERM. NO. 12
TO TERM. NO. 14
A
A
S18 7
S19 7
SEE DETAIL A
6
SEE NOTE 4 3
S17 7
S1 7
S2 7
S3 7
S4 7
S14 7
S15 7
S16 7
S5 7
S11 7
S12 7
S6 7
S13 7
5 SEE NOTE 1
6
S9 7
S7 7
S10 7
TYPICAL ORIENTATION OF FIND NO. 7
S8 7

VIEW A-A
SHOWN WITH POTTING REMOVED
SCALE 2/1

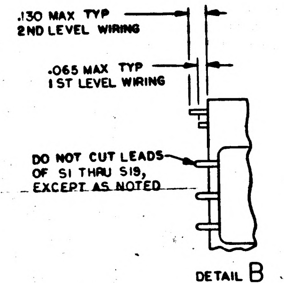

.130 MAX TYP
2ND LEVEL WIRING
.065 MAX TYP
1ST LEVEL WIRING
DO NOT CUT LEADS OF S1 THRU S19, EXCEPT AS NOTED

DETAIL B
SCALE 2/1

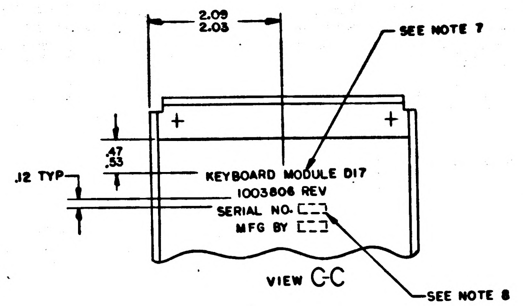

2.09
2.03
SEE NOTE 7
.47
.53
.12 TYP
KEYBOARD MODULE D17
1003806 REV
SERIAL NO.
MFG BY
SEE NOTE 8

VIEW C-C

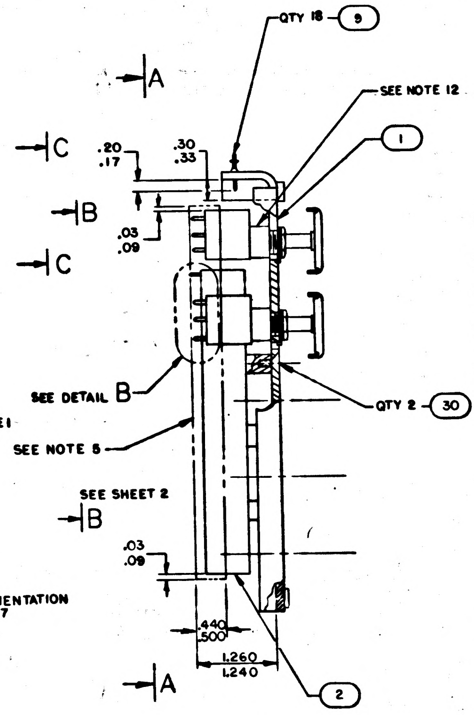

QTY 18 9
A
SEE NOTE 12
1
C
.20
.17
.30
.33
B
.03
.09
C
SEE DETAIL B
QTY 2 30
SEE NOTE 5
SEE SHEET 2
B
.03
.09
.440
.500
1.260
1.240
A
2

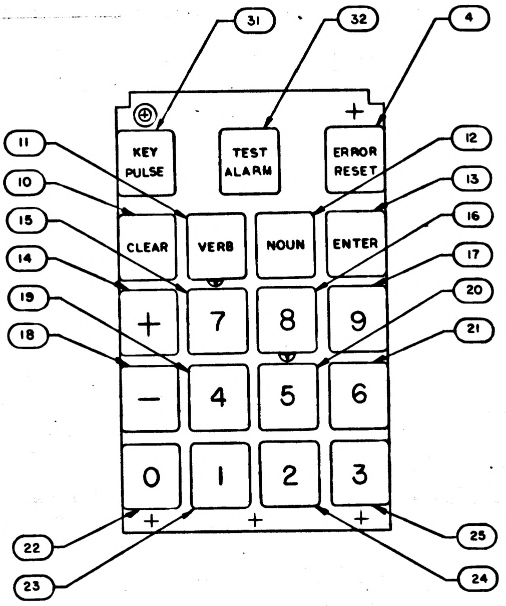

31
32
4
KEY PULSE
TEST ALARM
ERROR RESET
11
12
10
13
CLEAR
VERB
NOUN
ENTER
15
16
14
17
+
7
8
9
19
20
18
21
−
4
5
6
0
1
2
3
22
25
23
24

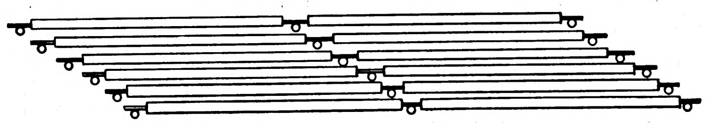

DETAIL A
FOR CLARITY ONLY
SCALE 4/1

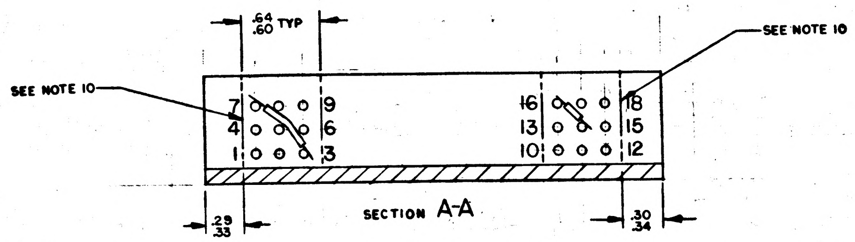

.64
.60 TYP
SEE NOTE 10
SEE NOTE 10
7 9
4 6
1 3
16 18
13 15
10 12
.29
.33
.30
.34

SECTION A-A

NOTES:

1. ALL CONNECTIONS TO BE MADE BY WELDING PER ND1002005 WHEN USING FIND NO. 5
2. WIRING STANDARDS FOR WELDED UNITS IN ACCORDANCE WITH ND1002003
3. STAKE COMPONENTS TO FIND NO. 2 PER ND1002004
4. SOLDER ALL CONNECTIONS TO FIND NO. 9 PER ND1002071
5. ENCAPSULATE MODULE PER ND1002036 TO DIMENSIONS SHOWN
6. * DENOTES LENGTH IN FEET
7. MARK .12 HIGH WHITE PER ND1002019 & ND1002122, TYPE II, CLASS I USING MARKING INK DWG NO. 1006271-1
8. SERIALIZE PER ND1002023
9. BRUSH COAT THIS SURFACE PER ND1002009 TO A MINIMUM HEIGHT OF .015 ABOVE COMPONENT LEADS & FEEDTHRUS
10. ENCAPSULATE THIS AREA PER ND1002217
11. INTERPRET DRAWING IN ACCORDANCE WITH STANDARDS PRESCRIBED BY MIL-D-70327
12. FIND NO. 7 SHALL MEET THE FOLLOWING ACTUATION REQUIREMENTS BEFORE AND AFTER ENCAPSULATION PER NOTE 5:
    PRE TRAVEL: .093 MIN/.188 MAX
    OVER TRAVEL: .060 MIN

	QTY REQD	PART OR IDENTIFYING NO.	NOMENCLATURE OR DESCRIPTION	FIND NO.
	☒	1006160	SCHEMATIC	REF
	1	1010406-7	COIL, RF, CHOKE	38
	6	1006750-1	RESISTOR, FIXED FILM	37
	1	1004605	INSULATOR, PLATE	36
	1	1006750-56	RESISTOR, FIXED FILM	35
	1	1006752	TRANSISTOR, SILICON, TYPE NPN	34
	2	1006750-32	RESISTOR, FIXED FILM	33
	1	1004602-17	BUTTON, KEYBOARD	32
	1	1004602-19	BUTTON, KEYBOARD	31
	2	MS35200-12	SCREW, FLAT HEAD	30
	1	1006755-79	CAPACITOR, FIXED TANTALUM	29
	45	1006751	SEMI-CONDUCTOR DEVICE DIODE	28
	19	1006755-57	CAPACITOR, FIXED, TANTALUM	27
	2	1006750-39	RESISTOR, FIXED FILM	26
	1	1004602-16	BUTTON, KEYBOARD	25
	1	1004602-15	BUTTON, KEYBOARD	24
	1	1004602-14	BUTTON, KEYBOARD	23
	1	1004602-13	BUTTON, KEYBOARD	22
	1	1004602-12	BUTTON, KEYBOARD	21
	1	1004602-11	BUTTON, KEYBOARD	20
	1	1004602-10	BUTTON, KEYBOARD	19
	1	1004602-9	BUTTON, KEYBOARD	18
	1	1004602-8	BUTTON, KEYBOARD	17
	1	1004602-7	BUTTON, KEYBOARD	16
	1	1004602-6	BUTTON, KEYBOARD	15
	1	1004602-5	BUTTON, KEYBOARD	14
	1	1004602-4	BUTTON, KEYBOARD	13
	1	1004602-3	BUTTON, KEYBOARD	12
	1	1004602-2	BUTTON, KEYBOARD	11
	1	1004602-1	BUTTON, KEYBOARD	10
	18	1006784-9	TERMINAL FEED THRU	9
	1	1006777-24	CAPACITOR FIXED CERAMIC	8
	19	1006738	SWITCH, PUSH	7
*	93	1006776-21	INSULATION, SLEEVING	6
*	12.0	1006757-1	WIRE ELECTRICAL, .010 X .020	5
	1	1004602-18	BUTTON, KEYBOARD	4
*	8.5	1006757-13	WIRE, ELECTRICAL, .020 DIA	3
	1	1004596	BLOCK, COMPONENT	2
	1	1004800	PANEL, FRONT	1

LIST OF MATERIALS

NEXT ASSY	USED ON
1003706	

APPLICATION

UNLESS OTHERWISE SPECIFIED
DIMENSIONS ARE IN INCHES
TOLERANCES ON
FRACTIONS ± DECIMALS ± ANGLES ±
DO NOT SCALE THIS DRAWING
MATERIAL
HEAT TREATMENT
FINAL FINISH

MIT
INSTRUMENTATION LAB
CAMBRIDGE, MASS
DWG. NO. CONTRACT
DRAWN John Manning DATE 9/4/64
CHECKED R. Edwards 15 Sept 64
APPROVAL Benson Sept 15 '64
APPROVAL Eldon C. Hall 21 Sept 64
NASA APPROVAL W. J. Rhine 9-22-64
MIT APPROVAL
MIT APPROVAL 22 Sept 64

MANNED SPACECRAFT CENTER
HOUSTON, TEXAS

KEYBOARD MODULE ASSEMBLY (D17)
AGC DSKY, NAV 100 SERIES

CODE IDENT NO. —
SIZE E
NASA DRAWING NO. 1003806
SCALE 1/1
WT
SHEET 1 OF 2

MASTER

1003806

NOTICE — WHEN GOVERNMENT DRAWINGS, SPECIFICATIONS, OR OTHER DATA ARE USED FOR ANY PURPOSE OTHER THAN IN CONNECTION WITH A DEFINITELY RELATED GOVERNMENT PROCUREMENT OPERATION, THE UNITED STATES GOVERNMENT THEREBY INCURS NO RESPONSIBILITY NOR ANY OBLIGATION WHATSOEVER; AND THE FACT THAT THE GOVERNMENT MAY HAVE FORMULATED, FURNISHED, OR IN ANY WAY SUPPLIED THE SAID DRAWINGS, SPECIFICATIONS OR OTHER DATA IS NOT TO BE REGARDED BY IMPLICATION OR OTHERWISE AS IN ANY MANNER LICENSING THE HOLDER OR ANY OTHER PERSON OR CORPORATION, OR CONVEYING ANY RIGHTS OR PERMISSION TO MANUFACTURE, USE, OR SELL ANY PATENTED INVENTION THAT MAY IN ANY WAY BE RELATED THERETO.

1003806 -

SYM	DESCRIPTION	DATE	APPROVAL

REVISIONS 2 & 5

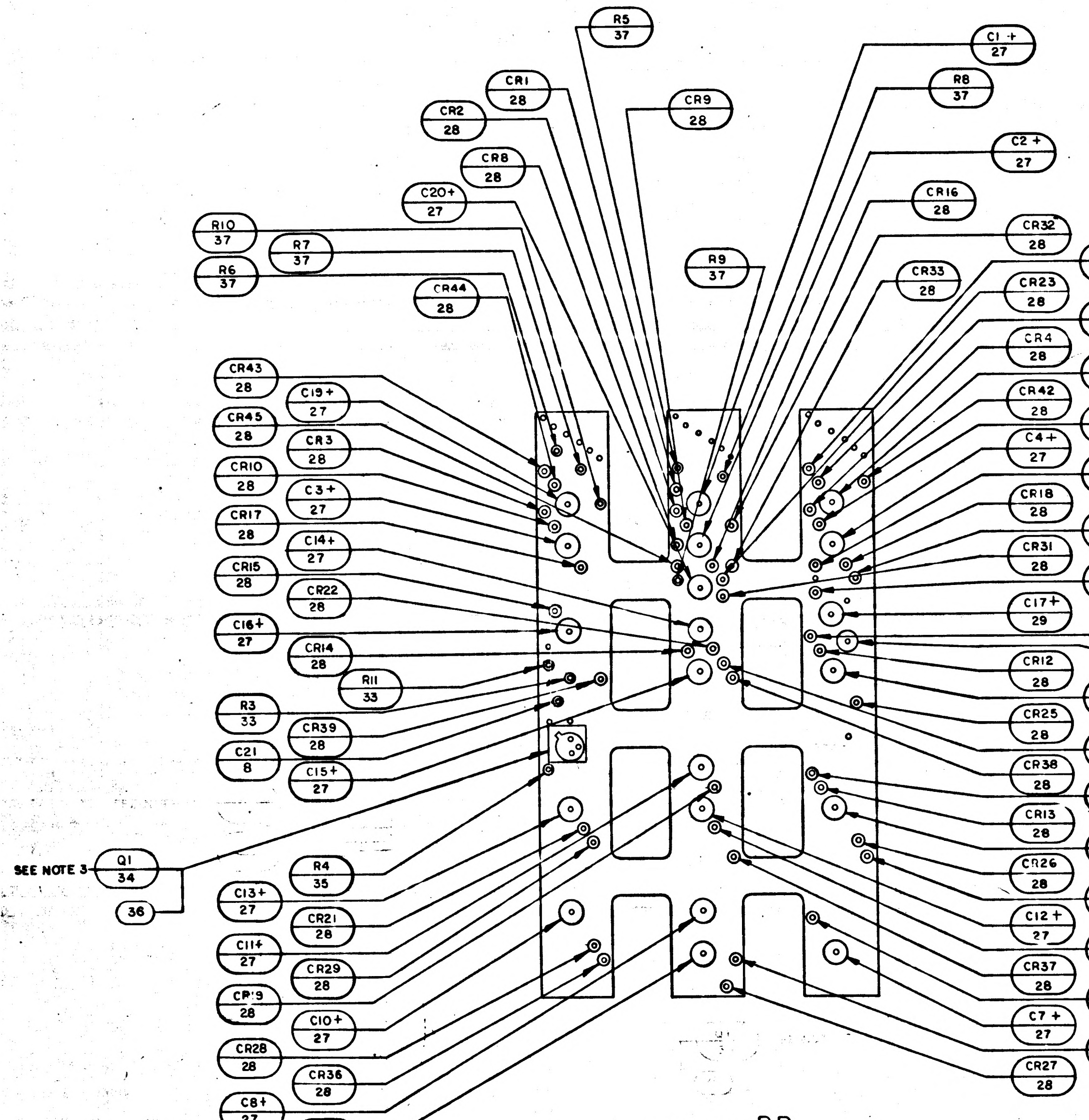
R5 37
CR1 28
CR2 28
CR9 28
CR8 28
C20+ 27
R10 37
R7 37
R6 37
CR44 28
R9 37
C1+ 27
R8 37
C2+ 27
CR16 28
CR32 28
CR33 28
CR40 28
CR23 28
CR41 28
CR4 28
C18+ 27
CR42 28
CR11 28
C4+ 27
R2 26
CR18 28
CR24 28
CR31 28
R1 26
C17+ 29
CR5 28
L1 38
CR12 28
C5+ 27
CR25 28
CR30 28
CR38 28
CR6 28
CR13 28
C6+ 27
CR26 28
CR34 28
C12+ 27
CR20 28
CR37 28
CR7 28
C7+ 27
CR35 28
CR27 28
CR43 28
C19+ 27
CR45 28
CR3 28
CR10 28
C3+ 27
CR17 28
C14+ 27
CR15 28
CR22 28
C16+ 27
CR14 28
R11 33
R3 33
CR39 28
C21 8
C15+ 27
SEE NOTE 3
Q1 34
36
R4 35
C13+ 27
CR21 28
C11+ 27
CR29 28
CR19 28
C10+ 27
CR28 28
CR36 28
C8+ 27
C9+ 27

PARTIAL VIEW B-B
SHOWN BEFORE ASSEMBLY
TO FIND NO.7 & 1

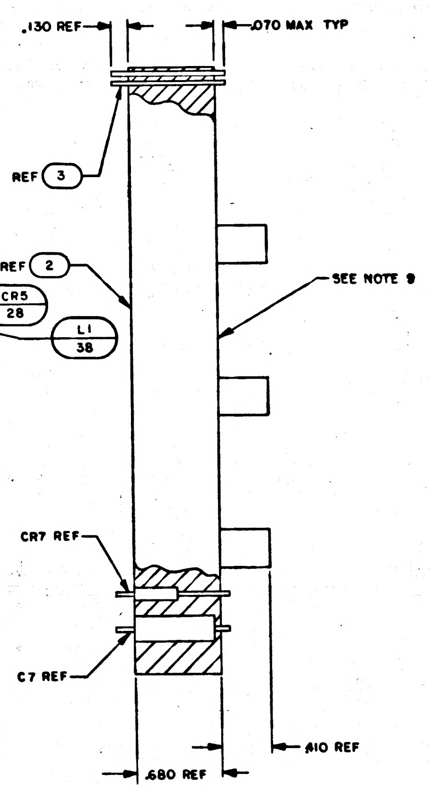
.130 REF
.070 MAX TYP
REF 3
REF 2
SEE NOTE 9
CR7 REF
C7 REF
.410 REF
.680 REF

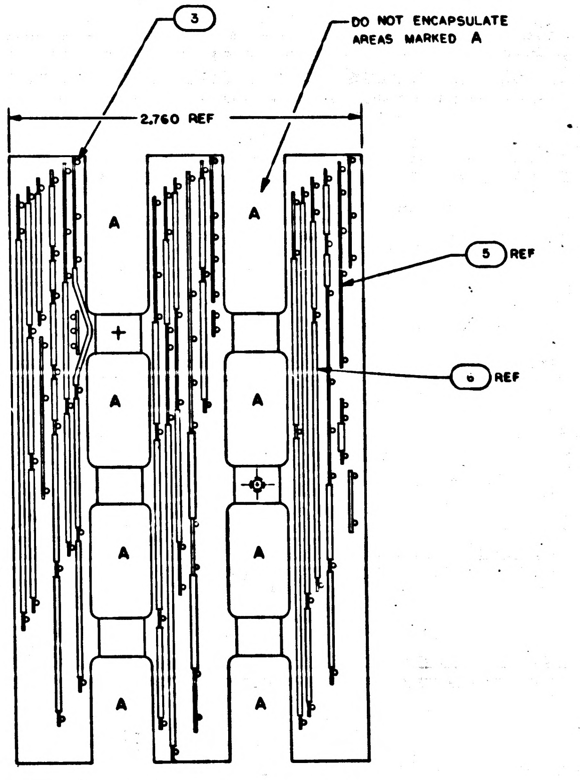
3
DO NOT ENCAPSULATE AREAS MARKED A
2.760 REF
A
+
5 REF
6 REF

CATHODES (FIND NO.28) THIS
SIDE TYP 45 PLACES

MASTER

QTY REQD	PART OR IDENTIFYING NO.	NOMENCLATURE OR DESCRIPTION	FIND NO.

LIST OF MATERIALS

1003706	
NEXT ASSY	USED ON

APPLICATION

UNLESS OTHERWISE SPECIFIED
DIMENSIONS ARE IN INCHES
TOLERANCES ON
FRACTIONS ± DECIMALS ± ANGLES ±
DO NOT SCALE THIS DRAWING
MATERIAL
HEAT TREATMENT
FINAL FINISH

MIT
INSTRUMENTATION LAB
CAMBRIDGE, MASS.
DWG. NO. CONTRACT
DRAWN J. Martin DATE 8/7/64
CHECKED
APPROVAL
APPROVAL
NASA APPROVAL W. J. Rhine 2-26-64
MIT APPROVAL
MIT APPROVAL

MANNED SPACECRAFT CENTER
HOUSTON, TEXAS

KEYBOARD MODULE
ASSEMBLY (D17)
AGC DSKY, NAV 100 SERIES

CODE IDENT NO. —
SIZE E
NASA DRAWING NO. 1003806
SCALE 2/1
WT
SHEET 2 OF 2

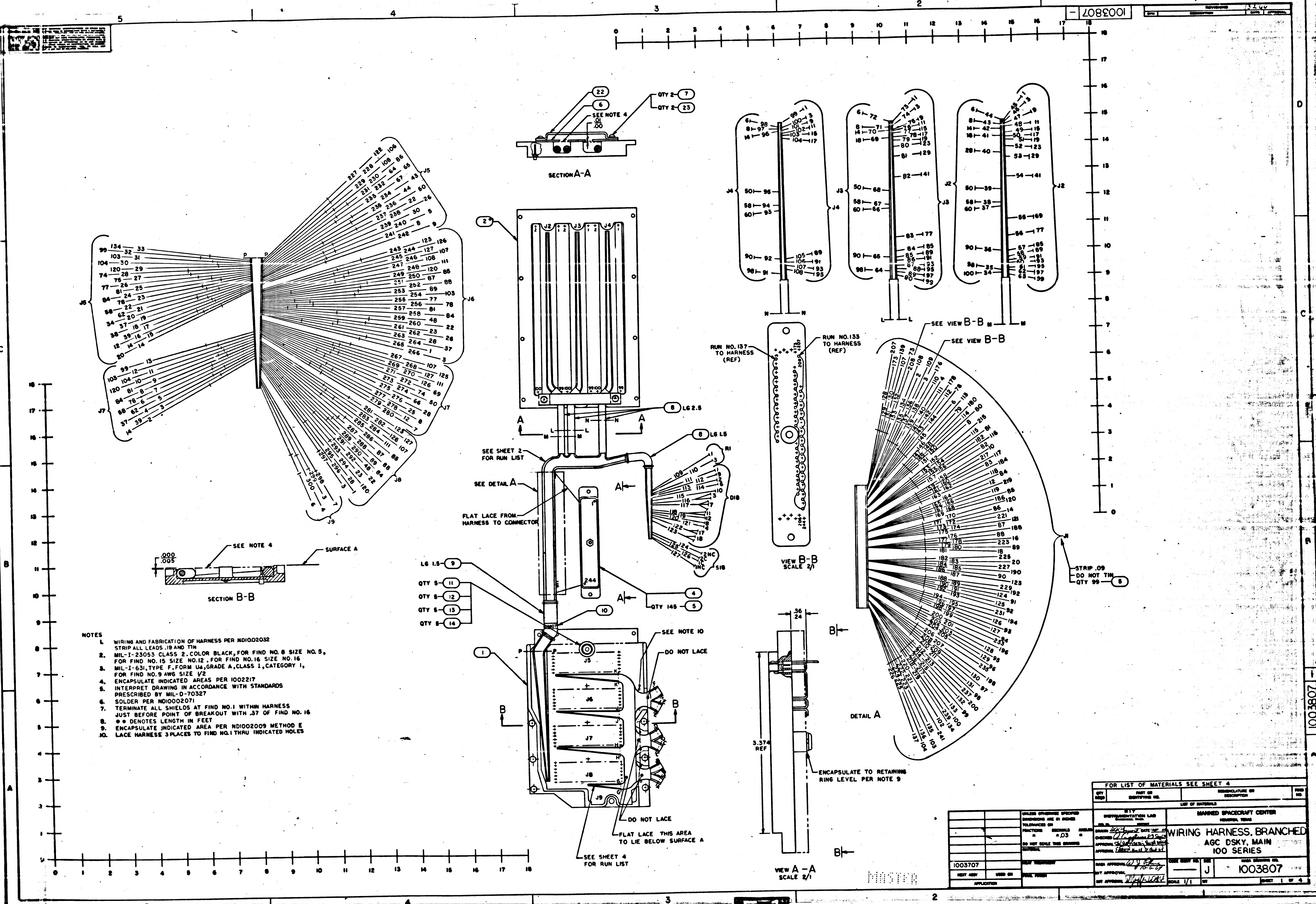
SECTION A-A
SEE NOTE 4
QTY 2 - 7
QTY 2 - 23
SECTION B-B
SURFACE A
SEE NOTE 4
J2
J3
J4
J5
J6
J7
J8
J9
R1
D18
S18
LG 2.5
LG 1.5
LG 1.5
SEE SHEET 2 FOR RUN LIST
SEE DETAIL A
FLAT LACE FROM HARNESS TO CONNECTOR
QTY 145
QTY 5
SEE NOTE 10
DO NOT LACE
DO NOT LACE
FLAT LACE THIS AREA TO LIE BELOW SURFACE A
SEE SHEET 4 FOR RUN LIST
RUN NO. 137 TO HARNESS (REF)
RUN NO. 133 TO HARNESS (REF)
VIEW B-B SCALE 2/1
SEE VIEW B-B
SEE VIEW B-B
STRIP .09
DO NOT TIN
QTY 99
DETAIL A
3.374 REF
ENCAPSULATE TO RETAINING RING LEVEL PER NOTE 9
VIEW A-A SCALE 2/1
MASTER

NOTES

1. WIRING AND FABRICATION OF HARNESS PER ND1002032
   STRIP ALL LEADS .19 AND TIN
2. MIL-I-23053 CLASS 2. COLOR BLACK, FOR FIND NO. 8 SIZE NO. 5, FOR FIND NO. 15 SIZE NO. 12, FOR FIND NO. 16 SIZE NO. 16
3. MIL-I-631, TYPE F, FORM Ua, GRADE A, CLASS 1, CATEGORY 1, FOR FIND NO. 9 AWG SIZE 1/2
4. ENCAPSULATE INDICATED AREAS PER 1002217
5. INTERPRET DRAWING IN ACCORDANCE WITH STANDARDS PRESCRIBED BY MIL-D-70327
6. SOLDER PER ND1002071
7. TERMINATE ALL SHIELDS AT FIND NO. 1 WITHIN HARNESS JUST BEFORE POINT OF BREAKOUT WITH .37 OF FIND NO. 16
8. ✱✱ DENOTES LENGTH IN FEET
9. ENCAPSULATE INDICATED AREA PER ND1002009 METHOD E
10. LACE HARNESS 3 PLACES TO FIND NO. 1 THRU INDICATED HOLES

FOR LIST OF MATERIALS SEE SHEET 4

QTY REQD	PART OR IDENTIFYING NO.	NOMENCLATURE OR DESCRIPTION	FIND NO.

LIST OF MATERIALS

1003707	
NEXT ASSY	USED ON
APPLICATION	

UNLESS OTHERWISE SPECIFIED DIMENSIONS ARE IN INCHES
TOLERANCES ON
FRACTIONS ± DECIMALS ±.03 ANGLES ±
DO NOT SCALE THIS DRAWING
MATERIAL
HEAT TREATMENT
FINAL FINISH

MIT INSTRUMENTATION LAB
CAMBRIDGE, MASS.
DRAWN DGChamrost DATE Sep 64
CHECKED A. Coggins 29 Sep 64
APPROVAL S Robinson Sept 30 64
APPROVAL E Hall 7 Oct 64
NASA APPROVAL W. J. [illegible] 10-6-64
MIT APPROVAL

MANNED SPACECRAFT CENTER
HOUSTON, TEXAS

WIRING HARNESS, BRANCHED
AGC DSKY, MAIN
100 SERIES

CODE IDENT NO. —— SIZE J NASA DRAWING NO. 1003807
SCALE 1/1 WT SHEET 1 OF 4

ASSY INFORMATION CHART

	FROM		DESCRIPTION			TO		
REMARKS	DESTINATION	RUN NO	COLOR	AWG	FIND NO	RUN NO	DESTINATION	REMARKS
	J1-235	206	WHT	26	19	45	J2-1	
	J2-9	47				182	J1-225	
	J1-227	184				50	J2-17	
	J2-19	5				188	J1-229	
	J1-176	138				53	J2-29	
	J2-4[illegible]	54				221	J1-241	
	J1-180	148				58	J2-89	
	J2-9[illegible]	59				142	J1-178	
	J1-182	155				61	J2-95	
	J2-97	62				162	J1-184	
	J1-23[illegible]	94				73	J3-1	
	J3-9	75				200	J1-233	
	J1-215	152				78	J3-17	
	J3-19	79				159	J1-217	
	J1-239	218				81	J3-29	
	J3-4	82				212	J1-237	
	J1-199	176				85	J3-89	
	J3-9	86				169	J1-186	
	J1-190	185				88	J3-95	
	J3-97	89				189	J1-192	
	J1-219	166				99	J4 1	
	J4-9	101				173	J1-221	
	J1-223	179				104	J4-17	
	J4-89	105				[illegible]	J1-196	
	J1-194	195				106	J4-91	
	J4-95	108				213	J1-200	
	J1-16	178				111		
		112				165	J1-12	
	J1-6	145				113		
		114				181	J1-18	
	J1-10	158	WHT	26	19	115		
		116	BLK	26	3	129	J1-173	
	J1-207	128				117		
		117				133	J1-208	
	J1-2	135				118		
		118	BLK	26	3	137	J1-3	
	J1-8	151	WHT	26	19	119		
		121				172	J1-14	
	J1-139	130				122		
		124				144	J1-78	
	J1-79	147				125		
		126				140	J1-4	
	J1-20	183				232	J5-65	
	J5-22	237				203	J1-95	
	J1-88	177				249	J6-120	
	J6-91	257				180	J1-89	
	J1-90	186				256	J6-78	
	J1-98	211				267	J7-107	
	J7-125	268				157	J1-82	
	J1-100	217				269	J7-127	
	J7-111	270				205	J1-96	
	J1-97	209				271	J7-126	
	J7-69	272				150	J1-80	
	J1-83	161				275	J7-66	
	J7-28	276				215	J1-99	
	J1-81	154				277	J7-25	
	J7-7	280				164	J1-84	
	J1-94	199				294	J8-120	
	J9-7	298				207	J1-198	
	J1-73	132				[illegible]	[illegible]	
	J1-85	168				29	J5-120	
	J5-81	26				171	J1-86	
	J1-87	175				23	J5-78	
	J7-120	10				191	J1-91	
	J1-92	193				9	J7-81	
	J7-78	7				197	J1-93	
	J2-69	55				123		
		123				110		
		120	WHT	26	19	127		
		117	BLK	26	3	40	J2-28	
	J5-122	227	WHT	26	19	39	J2-50	
	J5-106	228				38	J2-58	
	J5-108	229				56	J2-77	
	J5-86	230				34	J2-100	
	J5-67	233				91	J4-98	
	J5-50	236				103	J4-15	
	J5-26	238	WHT	26	19	83	J3-77	

ASSY INFORMATION CHART

	FROM		DESCRIPTION			TO		
REMARKS	DESTINATION	RUN NO	COLOR	AWG	FIND NO	RUN NO	DESTINATION	REMARKS
	J5-30	239	WHT	26	19	84	J3-85	
	J5-5	240				66	J3-60	
	J5-8	241				96	J4-14	
	J5-9	242				67	J3-58	
	J6-108	247				68	J3-50	
	J6-103	254				65	J3-90	
	J6-77	255				57	J2-85	
	J6-84	258				63	J2-99	
	J6-26	262				37	J2-60	
	J6-37	264				87	J3-93	
	J7-74	273				72	J3-6	
	J7-50	274				76	J3-11	
	J7-8	278				71	J3-8	
	J7-12	279				74	J3-3	
	J8-84	290				107	J4-93	
	J9-3	299				109		
	J9-6	1	WHT	26	19	122		
	J5-134	33	BLK	26	3	116		
	J5-99	32	WHT	28	20	100	J4-3	
	J5-103	31				60	J2-93	
	J5-104	30				77	J3-15	
	J5-74	28				97	J4 8	
	J5-75	27				44	J2-6	
	J5-77	26				95	J4-50	
	J5-84	24				36	J2-90	
	J5-58	22				69	J3-18	
	J5-62	21				70	J3-14	
	J5-34	20				46	J2-3	
	J5-37	19				36	J2-98	
	J5-38	18				94	J4-58	
	J5-39	17				80	J3-23	
	J5-12	16				102	J4-11	
	J5-14	15				98	J4-6	
	J5-20	14				93	J4-60	
	J7-99	13				52	J2-23	
	J7-103	12				90	J3-99	
	J7-104	11				48	J2-11	
	J7-84	8				64	J3-98	
	J7-58	6				42	J2-14	
	J7-62	5				43	J2-8	
	J7-37	4				92	J4-90	
	J7-39	3				49	J2-15	
	J7-14	2	WHT	28	20	41	J2-18	
	J5-64	231	WHT	26	19	225	J1-104	
	J5-43	234				223	J1-103	
	J5-44	235				220	J1-102	
	J6-123	243				163	J1-118	
	J6-126	244				141	J1-111	
	J6-127	245				136	J1-109	
	J6-107	246				149	J1-114	
	J6-111	248				134	J1-108	
	J6-85	250				174	J1-121	
	J6-87	251				167	J1-119	
	J6-88	252				146	J1-113	
	J6-89	253				143	J1-112	
	J6-48	259				139	J1-110	
	J6-22	260				170	J1-120	
	J6-23	261				153	J1-115	
	J6-28	263				131	J1-107	
	J6-1	265				160	J1-117	
	J6-3	266				156	J1-116	
	J8-123	281				219	J1-134	
	J8-127	282				192	J1-125	
	J8-107	284				208	J1-130	
	J8-111	285				190	J1-124	
	J8-85	286				226	J1-137	
	J8-87	287				222	J1-135	
	J8-88	288				204	J1-129	
	J8-89	289				202	J1-128	
	J8-22	292				224	J1-136	
	J8-23	293				210	J1-131	
	J8-28	295				187	J1-123	
	J8-1	296				216	J1-133	
	J8-3	297				214	J1-132	
	J8-48	291				196	J1-126	
	J8-126	283	WHT	26	19	198	J1-127	

CONNECTOR JUMPER LIST

		DESCRIPTION				
REMARKS	FROM	COLOR	AWG	FIND NO	TO	REMARKS
CABLE GROUP III REF	J1-21	WHT	26	19	J1-19	
	J1-19				J1-17	
	J1-17				J1-15	
	J1-15				J1-13	
	J1-13				J1-11	
	J1-11				J1-9	
	J1-9				J1-7	
	J1-7				J1-5	
	J1-5				J1-3	WITH RUN NO.137
CABLE GROUP II REF	J1-177				J1-179	
	J1-179				J1-181	
	J1-181				J1-183	
	J1-183				J1-185	
	J1-185				J1-187	
	J1-187				J1-189	
	J1-189				J1-191	
	J1-191				J1-193	
	J1-193				J1-195	
	J1-195				J1-197	
	J1-197				J1-199	
	J1-199				J1-201	
	J1-201				J1-242	
	J1-242				J1-240	
	J1-240				J1-238	
	J1-238				J1-236	
	J1-236				J1-234	
	J1-234				J1-232	
	J1-232				J1-230	
	J1-230				J1-228	
	J1-228				J1-226	
	J1-226				J1-224	
	J1-224				J1-222	
	J1-222				J1-220	
	J1-220				J1-218	
	J1-218				J1-216	
	J1-216	WHT	26	19	J1-208	WITH RUN NO.133

FOR LIST OF MATERIALS SEE SHEET 4

QTY REQD	PART OR IDENTIFYING NO.	NOMENCLATURE OR DESCRIPTION	FIND NO

LIST OF MATERIALS

NEXT ASSY	USED ON
APPLICATION	

UNLESS OTHERWISE SPECIFIED
DIMENSIONS ARE IN INCHES
TOLERANCES ON
FRACTIONS ± DECIMALS ± ANGLES ±
DO NOT SCALE THIS DRAWING
MATERIAL
HEAT TREATMENT
FINAL FINISH

MIT
INSTRUMENTATION LAB
CAMBRIDGE, MASS

DRAWN
CHECKED
APPROVAL
APPROVAL
NASA APPROVAL
MIT APPROVAL
MIT APPROVAL

MANNED SPACECRAFT CENTER
HOUSTON, TEXAS

WIRING HARNESS, BRANCHED
AGC DSKY, MAIN
100 SERIES

CODE IDENT NO.	SIZE	NASA DRAWING NO
—	J	1003807
SCALE NONE	WT	SHEET 2 OF 4

MASTER

1003807

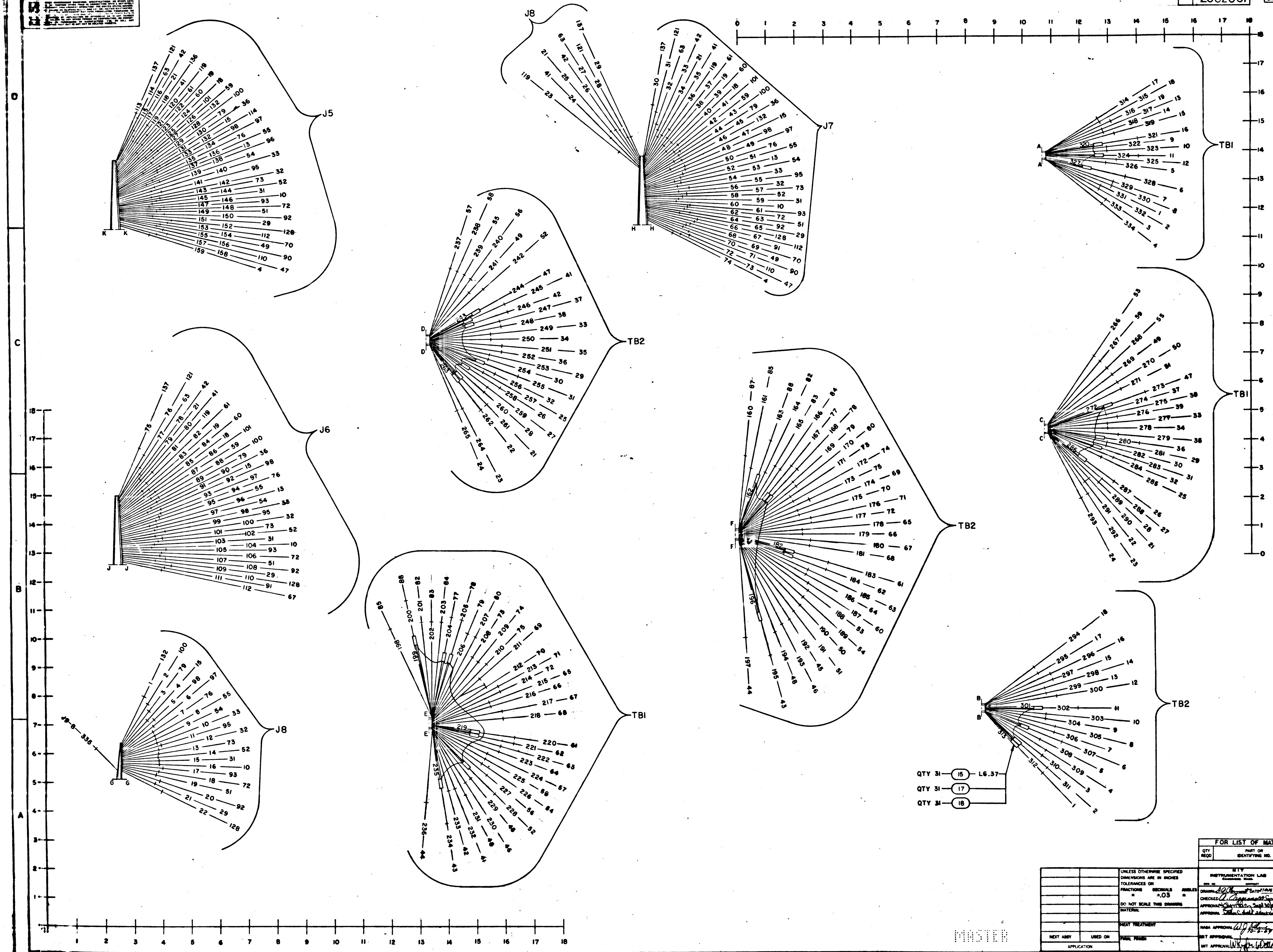
J5
J6
J7
J8
J8
TB1
TB2
TB1
TB2
TB1
TB2
K K
J J
G G
H H
D D
E E
F F
A A
C C
B B
J8-6-336
QTY 31 — 15 — L6.37
QTY 31 — 17
QTY 31 — 18

FOR LIST OF MATERIALS SEE SHEET 4

QTY REQD	PART OR IDENTIFYING NO.	NOMENCLATURE OR DESCRIPTION	FIND NO.

LIST OF MATERIALS

UNLESS OTHERWISE SPECIFIED
DIMENSIONS ARE IN INCHES
TOLERANCES ON
FRACTIONS ± DECIMALS ±.03 ANGLES ±
DO NOT SCALE THIS DRAWING
MATERIAL
HEAT TREATMENT
FINAL FINISH

NEXT ASSY | USED ON
APPLICATION

MIT
INSTRUMENTATION LAB
CAMBRIDGE, MASS.

DRAWN D.Q. Clement DATE 27 AUG 64
CHECKED A. Cappucci 29 Sept
APPROVAL Sept 30 64
APPROVAL
NASA APPROVAL W.J. 10-6-64
MIT APPROVAL
MIT APPROVAL

MANNED SPACECRAFT CENTER
HOUSTON, TEXAS

WIRING HARNESS, BRANCHED
AGC DSKY, MAIN
100 SERIES

CODE IDENT NO. | SIZE J | NASA DRAWING NO. 1003807
SCALE 1/1 | WT | SHEET 3 OF

MASTER

REVISIONS 13266			
SYM	DESCRIPTION	DATE	APPROVAL

1003807 -

ASSY INFORMATION CHART

REMARKS	FROM DESTINATION	FROM RUN NO.	DESCRIPTION COLOR	DESCRIPTION AWG	DESCRIPTION FIND NO.	TO RUN NO.	TO DESTINATION	REMARKS
		304	WHT	28	20	87	J6-59	
	J6-18	85				306		
		308				84	J6-60	
	J6-36	90				310		
		309				83	J6-19	
	J6-61	82				303		
		300				26	J8-42	
	J8-21	25				297		
		296				69	J7-70	
	J7-49	70				330		
		329				154	J5-70	
	J5-112	153				334		
		333				156	J5-90	
	J5-49	155				331		
		332				158	J5-47	
	J5-4	159				326		
		325				75	J6-137	
	J6-121	76				315		
		314				77	J6-63	
	J6-42	78				294		
		295				81	J6-119	
	J6-21	79				317		
		316				28	J8-121	
	J8-63	27				298		
		299				29	J8-137	
	J7-137	30				266		
		267				37	J7-61	
	J7-119	36				242		
		241				45	J7-36	
	J7-15	47				292		
		293				50	J7-76	
	J7-97	49				288		
		289				141	J5-95	
	J5-32	142				278		
		279				140	J5-33	
	J5-54	139				281		
		282				146	J5-10	
	J8-93	147				251		
	J8-100	2				214		
		215				88	J6-100	
	J6-79	89				218		
		217				94	J6-76	
	J6-56	95				223		
		222				93	J6-97	
	J6-15	91				216		
		213				8	J8-55	
	J8-76	7				209		
		208				4	J8-15	
	J8-97	6				212		
		210				3	J8-79	
	J8-54	9				178		
		177				97	J6-54	
	J6-33	98				173		
		175				102	J6-52	
	J6-73	101				201		
		198				109	J6-29	
	J6-92	108				202		
		206				106	J6-72	
	J6-51	107				203		
		207				105	J6-93	
	J6-10	104				172		
		171				100	J6-32	
	J6-95	99				176		
		179				12	J8-32	
	J8-95	11				186		
		185				14	J8-52	
	J8-73	13				164		
		161				21	J8-29	
	J8-92	20				165		
		166				19	J8-51	
	J8-72	18				169		
		170				17	J8-93	
	J8-10	16				180		
		181				10	J8-33	
	J8-119	23				305		
		252				144	J5-52	
	J5-73	143				260		
		259				62	J7-72	
	J7-93	61				253		
		254				65	J7-29	
	J7-92	64				265		
		264				57	J7-73	
	J7-32	56				274		
		275	WHT	28	20	54	J7-33	

ASSY INFORMATION CHART

REMARKS	FROM DESTINATION	FROM RUN NO.	DESCRIPTION COLOR	DESCRIPTION AWG	DESCRIPTION FIND NO.	TO RUN NO.	TO DESTINATION	REMARKS
	J7-95	55	WHT	28	20	248		
		247				58	J7-52	
	J7-10	60				277		
		276				151	J5-29	
	J5-92	150				249		
		250				149	J5-51	
	J5-72	148				256		
		257				63	J7-51	
	J7-19	38				240		
		239				40	J7-18	
	J7-60	39				238		
		237				42	J7-59	
	J7-100	43				291		
		290				51	J7-55	
	J7-54	53				284		
		285				44	J7-79	
	J7-21	34				270		
		271				31	J7-121	
	J7-63	32				268		
		269				33	J7-42	
	J7-112	67				323		
		322				73	J7-47	
	J7-90	71				318		
		319				74	J7-4	
	J5-137	113				236		
		233				117	J5-21	
	J5-42	116				232		
		231				120	J5-119	
	J5-61	121				225		
		224				123	J5-60	
	J5-19	122				226		
		227				126	J5-59	
	J5-18	124				188		
		189				130	J5-36	
	J5-15	131				193		
		192				128	J5-100	
	J5-79	129				191		
		190				135	J5-76	
	J5-97	134				197		
		194				136	J5-55	
	J5-63	115				229		
		230	WHT	28	20	114	J5-121	
	J8-98	5	SHLD	28	21	220		●
●		221				92	J6-98	
	J6-13	96				262		●
●		261				111	J6-91	
	J6-67	112				168		●
●		167				127	J5-132	
	J5-101	125				228		●
●		234				119	J5-41	
	J5-136	118				163		●
●		195				133	J5-98	
	J5-13	137				311		●
●		312				138	J5-96	
	J5-31	145				283		●
●		287				48	J7-98	
	J7-132	46				200		●
●		204				22	J8-128	
	J8-31	15				184		●
●		183				103	J6-31	
	J6-128	110				205		●
●		328				157	J5-110	
	J5-128	152				255		●
●		258				66	J7-128	
	J7-31	59				280		●
●		273				35	J7-41	
	J7-101	41				244		●
●		245				52	J7-13	
	J7-91	68				246		●
●		302				24	J8-41	
	J7-110	72				324		●
●		321				80	J6-41	
	J6-101	86	SHLD	28	21	307		●
	J8-132	1	BLK	26	3	211		
		211				219		
		174				182		
	J5-114	132				187		
	J9-8	335				327		
		320				313		
		301				286		
		272				263		
		243				235		
		199				196		
		162	BLK	26	3	160		

INTERNAL GROUND SHEATH CONNECTIONS

FROM	TO	LENGTH	FIND NO.
328	324	2.00	3
324	321	1.50	
312	311	1.50	
311	307	2.00	
307	302	2.00	
287	283	2.00	
283	280	1.75	
280	273	2.50	
262	261	1.50	
261	258	1.75	
258	255	2.00	
255	246	2.50	
246	245	1.75	
245	244	1.75	
234	228	2.00	
228	205	5.00	
205	204	1.75	
204	200	2.50	
221	220	1.75	
195	168	5.00	
168	167	1.50	
167	163	2.00	
184	183	1.75	3

● SEE GROUND SHEATH CONNECTION CHART

LIST OF MATERIALS

	QTY REQD	PART OR IDENTIFYING NO.	NOMENCLATURE OR DESCRIPTION	FIND NO.
	2	MS15795-303	WASHER, FLAT	23
	1	1004630	BRACKET, CABLE SUPPORT	22
**	35	1010778-1	WIRE, ELECTRICAL, SHLD, AWG 28	21
**	200	1010416-10	WIRE, ELECTRICAL, STRD, AWG 28	20
**	200	1010416-20	WIRE, ELECTRICAL, STRD, AWG 26	19
	31	1000243-1	FERRULE, ELECTRICAL CONDUCTOR	18
	31	1000242-1	FERRULE, ELECTRICAL CONDUCTOR	17
**	1.5	SEE NOTE 2 & 7	SLEEVING	16
**	1.5	SEE NOTE 2	SLEEVING	15
	5	1004546-1	WASHER, FLAT	14
	5	1004546-2	WASHER, FLAT	13
	5	1004579-2	SCREW, JACKING	12
	5	MS16633-4015	RING, RETAINING	11
	1	MS18035-1	STRAP, CABLE ID	10
**	.125	SEE NOTE 3	SLEEVING	9
**	.75	SEE NOTE 2	SLEEVING	8
	2	MS35216-13	SCREW, PAN HD	7
	1	1004582	PLATE, CABLE SUPPORT	6
	244	1010738-1	CONTACT, (PIN)	5
	1	1006268-1	CONNECTOR, PLUG	4
**	20	1010416-11	WIRE, ELECTRICAL, STRD, AWG 26	3
	1	1003547	CONN PL, WIRE WRAP ASSY (DECODING)	2
	1	1003810	CONN PL, WIRE WRAP ASSY (RELAY)	1

NEXT ASSY	USED ON
APPLICATION	

UNLESS OTHERWISE SPECIFIED
DIMENSIONS ARE IN INCHES
TOLERANCES ON
FRACTIONS ± DECIMALS ±.03 ANGLES ±
DO NOT SCALE THIS DRAWING

MATERIAL

HEAT TREATMENT

FINAL FINISH

MIT
INSTRUMENTATION LAB
CAMBRIDGE, MASS

DRAWN DATE 9-30-64
CHECKED
APPROVAL Sept 30 64
APPROVAL
NASA APPROVAL
MIT APPROVAL
MIT APPROVAL

MANNED SPACECRAFT CENTER
HOUSTON, TEXAS

WIRING HARNESS, BRANCHED
AGC DSKY, MAIN
100 SERIES

CODE IDENT NO.	SIZE	NASA DRAWING NO.
—	J	1003807
SCALE NONE	WT	SHEET 4 OF 4

1003807

(14)

MASTER

1003809 A

SYM	DESCRIPTION	DATE	APPROVAL
A	REPLACED WITH CHANGES BY REV B PER TDRR 20558 DR CHK		

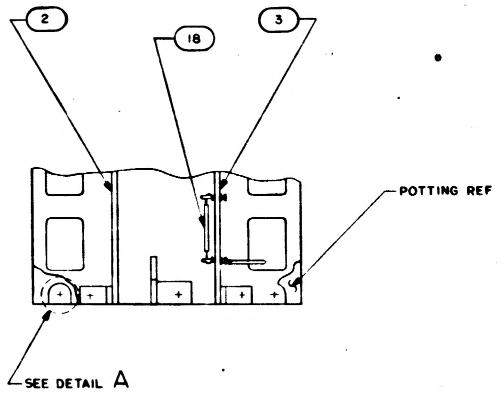

2
18
3
POTTING REF
SEE DETAIL A

VIEW SHOWN WITH FIND NO.7 REMOVED

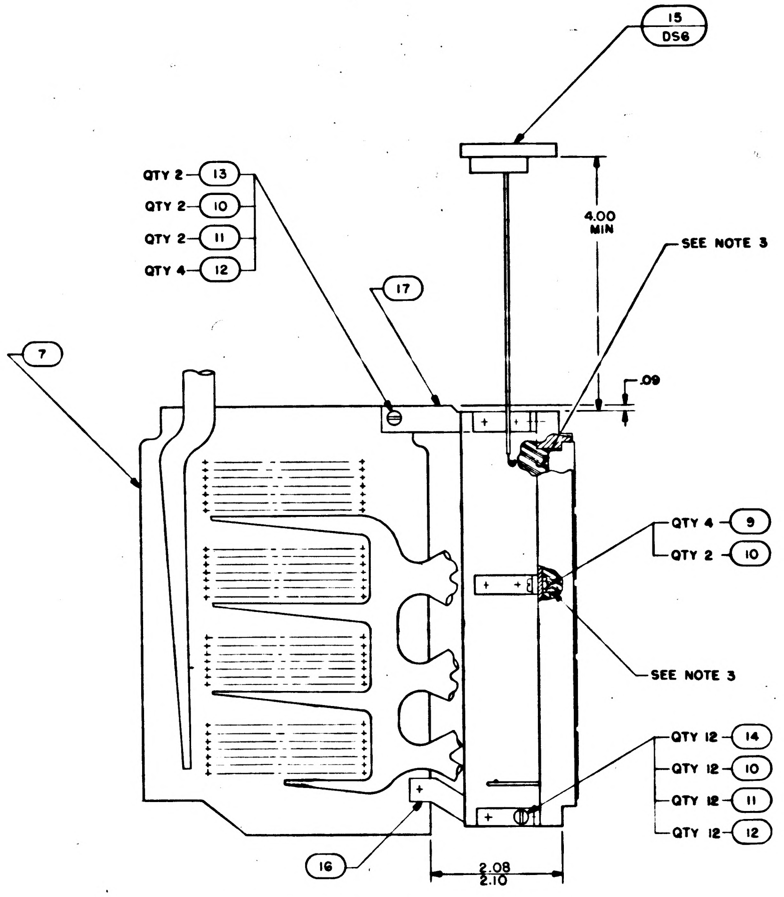

15
DS6
QTY 2 13
QTY 2 10
QTY 2 11
QTY 4 12
4.00 MIN
SEE NOTE 3
17
7
.09
QTY 4 9
QTY 2 10
SEE NOTE 3
QTY 12 14
QTY 12 10
QTY 12 11
QTY 12 12
16
2.08
2.10

VIEW SHOWN WITH POTTING PARTIALLY REMOVED

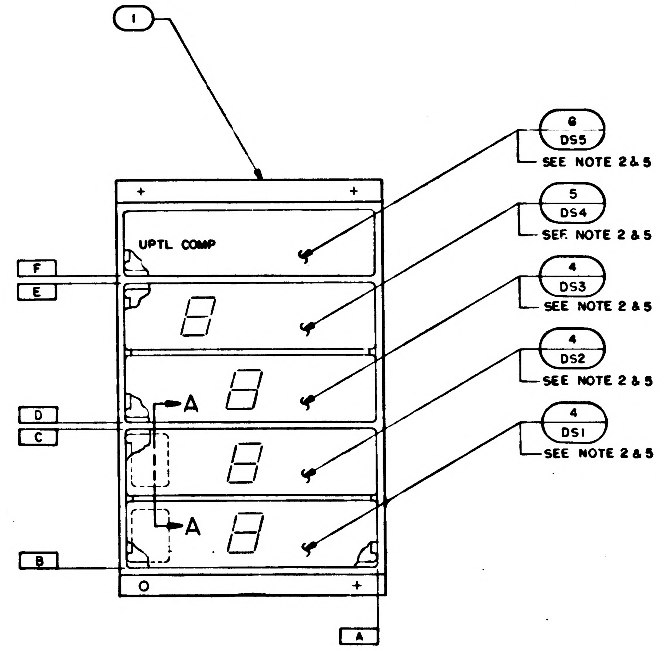

1
6
DS5
SEE NOTE 2 & 5
5
DS4
SEE NOTE 2 & 5
4
DS3
SEE NOTE 2 & 5
4
DS2
SEE NOTE 2 & 5
4
DS1
SEE NOTE 2 & 5
UPTL COMP
F
E
D
C
A
A
B
A

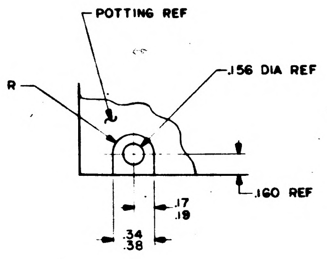

POTTING REF
.156 DIA REF
R
.160 REF
.17
.19
.34
.38

DETAIL A
SCALE 2/1
4 PLACES

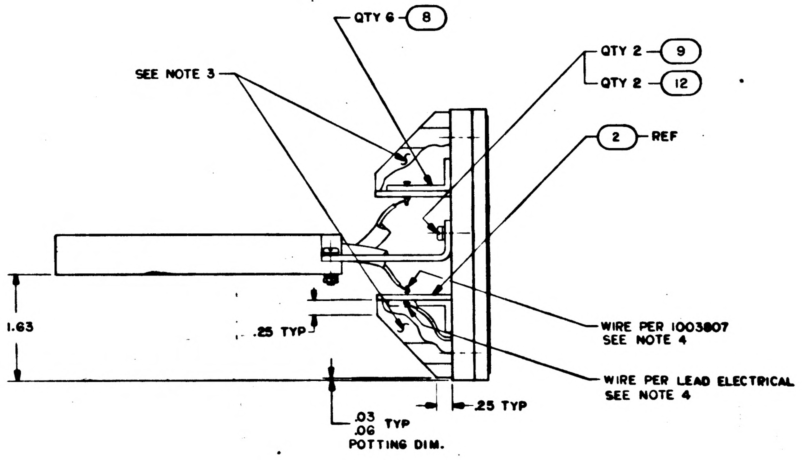

QTY 6 8
SEE NOTE 3
QTY 2 9
QTY 2 12
2 REF
1.63
.25 TYP
WIRE PER 1003807
SEE NOTE 4
WIRE PER LEAD ELECTRICAL
SEE NOTE 4
.03
.06
TYP
POTTING DIM.
.25 TYP

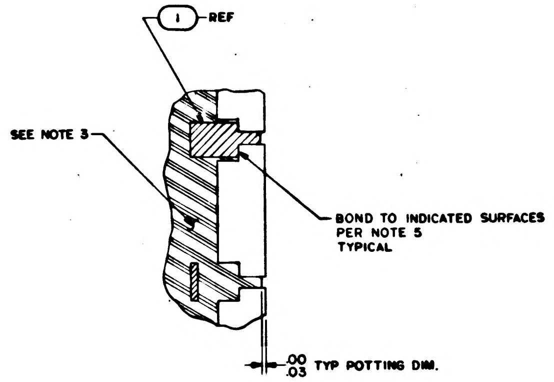

1 REF
SEE NOTE 3
BOND TO INDICATED SURFACES
PER NOTE 5
TYPICAL
.00
.03
TYP POTTING DIM.

SECTION A-A
SCALE 2/1

Ⓐ PLACED WITH CHANGES BY REV B

REFERENCE: INTERCONNECTION DIAGRAM 1005753

	QTY REQD	PART OR IDENTIFYING NO.	NOMENCLATURE OR DESCRIPTION	FIND NO.
*	.75	1010416	WIRE, ELECTRICAL (26 AWG BLK)	18
	1	1004817	BRACKET, E/L PLATE	17
	1	1004818	BRACKET, CONN. PLATE	16
	1	1003804	INDICATOR E/L ASSY (ALARM II)	15
	12	MS35233-14	SCREW, PAN HEAD	14
	2	MS35233-17	SCREW, PAN HEAD	13
	18	NAS620-4	WASHER, FLAT	12
	14	MS35337-78	WASHER, LOCK	11
	14	NAS671-C4	NUT, HEX, PLAIN	10
	6	MS35233-13	SCREW, PAN HEAD	9
	6	1004801	BRACKET, TERMINAL BOARD	8
	1	1003807	WIRING HARNESS BRANCHED	7
	1	1003801	INDICATOR E/L ASSY (PROGRAM	6
	1	1003802	INDICATOR E/L ASSY (VERB-NOUN)	5
	3	1003803	INDICATOR E/L ASSY (REGISTER)	4
	1	1003760	TERMINAL BOARD ASSY (TB2)	3
	1	1003759	TERMINAL BOARD ASSY (TB1)	2
	1	1004802	FRAME, E/L	1

LIST OF MATERIALS

1003809 A

NEXT ASSY	USED ON
1003707	

APPLICATION

UNLESS OTHERWISE SPECIFIED
DIMENSIONS ARE IN INCHES
TOLERANCES ON
FRACTIONS ± DECIMALS ±.03 ANGLES ±
DO NOT SCALE THIS DRAWING
MATERIAL
HEAT TREATMENT
FINAL FINISH

MIT
INSTRUMENTATION LAB
CAMBRIDGE MASS

DRAWN P. Bondurant DATE 8 Sept 66
CHECKED 28 Sept 66
APPROVAL Sept 30 66
APPROVAL
NASA APPROVAL 10-6-66
MIT APPROVAL
MIT APPROVAL

MANNED SPACECRAFT CENTER
HOUSTON, TEXAS

E/L FRAME & HARNESS ASSY
AGC DSKY MAIN 100 SERIES

CODE IDENT NO. —— SIZE J NASA DRAWING NO. 1003809
SCALE 1/1 WT SHEET 1 OF 1

MASTER

F 2/2

LEAD ELECTRICAL

REFERENCE DESIGNATION	LEAD IDENT	CONNECT TO
DS1	E1	TB1 - 5
	E2	-15
	E3	-18
	E4	-19
	H1	- 4
	H2	-10
	H3	-13
	F1	- 3
	F2	-14
	F3	-17
	J1	- 2
	J2	- 9
	J3	-12
	M1	- 1
	M2	- 8
	K1	- 7
	N1	- 6
	N2	-11
	N3	TB1 -16
	E5	TB2 - 10
	H4	-15
	H5	- 9
	F4	-14
	F5	- 5
	A1	- 2
	J4	-13
	J5	- 4
	B1	- 1
	M3	-18
	M4	-12
	M5	- 7
	K2	-16
	K3	-17
	K4	- 8
	K5	- 3
	N4	-11
	N5	- 6
	G1	TB2 -20
DS2	E3	TB1 -38
	E1	-25
	E2	-35
	E4	-39
	H1	-24
	H2	-30
	H3	-33
	F1	-23
	F2	-34
	F3	-37
	J1	-22
	J2	-29
	J3	-32
	M1	-21
	M2	-28
	K1	-27
	N1	-26
	N2	-31
	N3	TB1 -36
	E5	TB2 -30
	H4	-35
	H5	-29
	F4	-34
	F5	-25
	A1	-22
	J4	-33
	J5	-24
	B1	-21
	M3	-38
	M4	-32
	M5	-27
	K2	-36
	K3	-37
	K4	-28
	K5	-23
	N4	-31
	N5	-26
	G1	TB2-40

LEAD ELECTRICAL

REFERENCE DESIGNATION	LEAD IDENT	CONNECT TO
DS3	E1	TB1 -46
	E2	-51
	E3	-58
	E4	-59
	H1	-42
	H2	-50
	H3	-56
	F1	-45
	F2	-55
	F3	-57
	J1	-44
	J2	-53
	J3	-54
	M1	-41
	M2	-49
	K1	-48
	N1	-43
	N2	-47
	N3	TB1 -52
	G1	TB2-60
	E5	-51
	H4	-57
	H5	-50
	F4	-58
	F5	-46
	A1	-42
	J4	-56
	J5	-45
	B1	-41
	M3	-53
	M4	-55
	M5	-48
	K2	-52
	K3	-54
	K4	-49
	K5	-44
	N4	-47
	N5	TB2-43
DS4	G2	TB1-69
	E1	-68
	E2	-75
	H1	-67
	H2	-74
	F1	-66
	F2	-73
	J1	-65
	J2	-72
	M1	-64
	M2	-71
	K1	-63
	K2	-70
	N1	-62
	N2	TB1 -61
	E3	TB2 - 75
	E4	-68
	H3	-74
	H4	-67
	F3	-73
	F4	-66
	J3	-72
	J4	-65
	M3	-71
	M4	-64
	K3	-70
	K4	-63
	N3	-61
	N4	-62
	G1	TB2-69

LEAD ELECTRICAL

REFERENCE DESIGNATION	LEAD IDENT	CONNECT TO
DS5	E1	TB1-85
	H1	-80
	F1	-84
	J1	-83
	M1	-79
	K1	-82
	N1	-78
	N2	TB1 -77
	E2	TB2-85
	H2	-80
	F2	-84
	J2	-83
	M2	-79
	K2	-82
	S1	-77
	S2	-78
	G1	TB2-81
DS6	S1	TB1 -88
	S2-A	TB2-88
	S2-B	TB2-87
	G2	TB2-86

FROM	TO
TB2-20	TB2-40
TB2-40	TB2-60
TB2-60	TB2-81
TB2-81	TB2-86

COLOR CODE

LEAD IDENT	STRIPE	BASE
E1	———	WHITE
F1	RED	
H1	ORANGE	
J1	GREEN	
K1	BLUE	
M1	BROWN	
N1	VIOLET	WHITE
E2	WHITE	RED
F2	———	
H2	ORANGE	
J2	GREEN	
K2	BLUE	
M2	BROWN	
N2	VIOLET	RED
E3	WHITE	ORANGE
F3	RED	
H3	———	
J3	GREEN	
K3	BLUE	
M3	BROWN	
N3	VIOLET	ORANGE
E4	WHITE	GREEN
F4	RED	
H4	ORANGE	
J4	———	
K4	BLUE	
M4	BROWN	
N4	VIOLET	GREEN
E5	WHITE	BLUE
F5	RED	
H5	ORANGE	
J5	GREEN	
K5	———	
M5	BROWN	
N5	VIOLET	BLUE
A1	RED	YELLOW
B1	BLACK	YELLOW
(DS5) S1	———	YELLOW
S2	GREEN	YELLOW
S2-B	———	GRAY
G1	———	BLACK
G2	———	BLACK
(DS6) S1	YELLOW BAND	
S2-A	RED BAND	

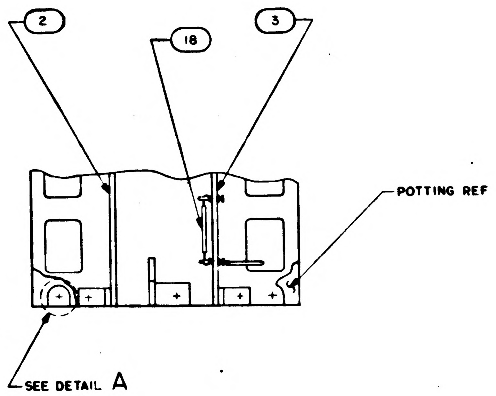

VIEW SHOWN WITH FIND NO.7 REMOVED

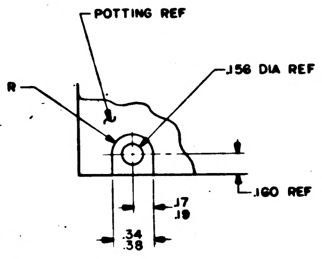

DETAIL A
SCALE 2/1
4 PLACES

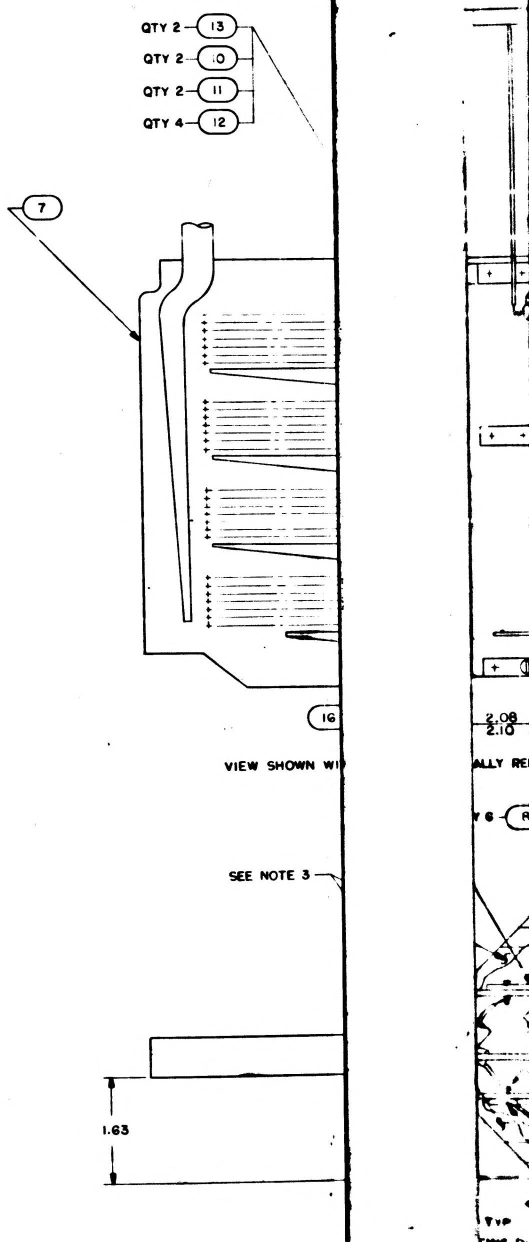

VIEW SHOWN WI

REFERENCE: INTER

NOTES

1. INTERPRET DRAWING IN ACCORDANCE WITH STANDARDS PRESCRIBED BY MIL-D-70327
2. BOND FIND NO. 4, 5 & 6 TO FIND NO. 1 PER ND 1002004, TYPE II
3. ENCAPSULATE PER ND 1002217
4. SOLDER PER ND 1002071
5. NO GAP PERMISSIBLE BETWEEN RESPECTIVE LIGHT DS1 THRU DS5 AND SURFACES A, B, C, D, E & F
6. * DENOTES LENGTH IN FEET
7. WIRING PER ND100203. STRIP ALL LEADS .19 AND TIN

1003809 B

SYM	DESCRIPTION	DATE	APPROVAL
B	REPLACES REV A WITH CHANGES PER TDRR 20558		

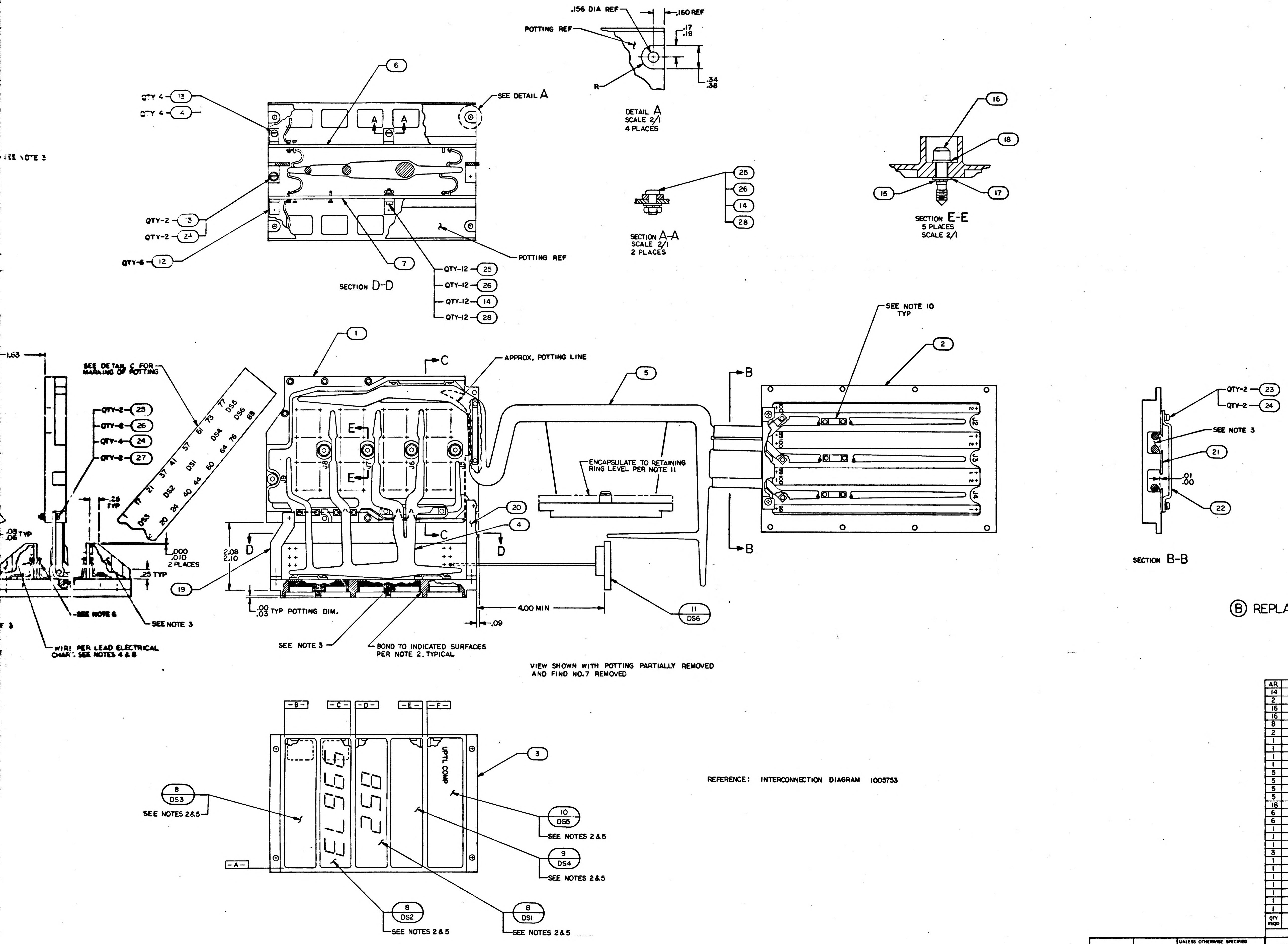

.156 DIA REF
.160 REF
POTTING REF
.17
.19
R
.34
.38
DETAIL A
SCALE 2/1
4 PLACES
SECTION A-A
SCALE 2/1
2 PLACES
25
26
14
28
16
18
15
17
SECTION E-E
5 PLACES
SCALE 2/1
QTY 4 13
QTY 4 4
6
SEE DETAIL A
A
A
QTY-2 13
QTY-2 24
QTY-6 12
7
POTTING REF
SECTION D-D
QTY-12 25
QTY-12 26
QTY-12 14
QTY-12 28
SEE NOTE 3
1.63
SEE DETAIL C FOR MARKING OF POTTING
QTY-2 25
QTY-2 26
QTY-4 24
QTY-2 27
.25 TYP
.03 TYP
.06
.000
.010
2 PLACES
.25 TYP
SEE NOTE 6
SEE NOTE 3
WIRE PER LEAD ELECTRICAL CHAR: SEE NOTES 4 & 8
1
C
APPROX. POTTING LINE
5
E
E
J9 J8 J7 J6 J5
20
4
C
D
D
2.08
2.10
19
.00
.03 TYP POTTING DIM.
SEE NOTE 3
BOND TO INDICATED SURFACES PER NOTE 2, TYPICAL
ENCAPSULATE TO RETAINING RING LEVEL PER NOTE 11
4.00 MIN
.09
11
DS6
SEE NOTE 10 TYP
2
B
B
J2 J3 J4
QTY-2 23
QTY-2 24
SEE NOTE 3
21
.01
.00
22
SECTION B-B
VIEW SHOWN WITH POTTING PARTIALLY REMOVED AND FIND NO.7 REMOVED
-B- -C- -D- -E- -F-
-A-
3
UPTL COMP
8
DS3
SEE NOTES 2&5
10
DS5
SEE NOTES 2&5
9
DS4
SEE NOTES 2&5
8
DS2
SEE NOTES 2&5
8
DS1
SEE NOTES 2&5

Ⓑ REPLACES REV A WITH CHANGES

REFERENCE: INTERCONNECTION DIAGRAM 1005753

3H

QTY REQD	PART OR IDENTIFYING NO.	NOMENCLATURE OR DESCRIPTION	FIND NO
AR	1012507-003	TAPE, LACING	29
14	MS35233 -15	SCREW, PAN HEAD	28
2	MS35233 -18	SCREW, PAN HEAD	27
16	MS35337 -78	WASHER, LOCK	26
16	NAS671C4	NUT, HEX, PLAIN	25
8	MS15795 -803	WASHER, FLAT	24
2	MS35216 -13	SCREW, PAN HEAD	23
1	1004630	BRACKET, CABLE SUPPORT	22
1	1004582	PLATE, CABLE SUPPORT	21
1	1004817	BRACKET, E/L FRAME	20
1	1004818	BRACKET, CONN PLATE	19
5	1004546-1	WASHER, FLAT	18
5	1004546-3	WASHER, FLAT	17
5	1004579-1	SCREW, JACKING	16
5	MS16633 -4015	RING, RETAINING	15
18	NAS620C4	WASHER, FLAT	14
6	MS35233-13	SCREW, PAN HEAD	13
6	1004801	BRACKET, TERMINAL BOARD	12
1	1003804	INDICATOR E/L ASSY (ALARM II)	11
1	1003801	INDICATOR E/L ASSY (PROGRAM)	10
1	1003802	INDICATOR E/L ASSY (VERB-NOUN)	9
3	1003803	INDICATOR E/L ASSY (REGISTER)	8
1	1003760	TERMINAL BOARD ASSY (TB2)	7
1	1003759	TERMINAL BOARD ASSY (TB1)	6
1	1003826 -011	WIRING HARNESS, CABLE B	5
1	1003825 -011	WIRING HARNESS, CABLE A	4
1	1004802	FRAME, E/L	3
1	1003547 -011	CONN PL, WIRE WRAP ASSY (DECODING)	2
1	1003810 -011	CONN PL, WIRE WRAP ASSY (RELAY)	1

LIST OF MATERIALS

1003707	
NEXT ASSY	USED ON
APPLICATION	

UNLESS OTHERWISE SPECIFIED DIMENSIONS ARE IN INCHES
TOLERANCES ON
FRACTIONS ± DECIMALS ±.03 ANGLES ±
DO NOT SCALE THIS DRAWING
MATERIAL
HEAT TREATMENT
FINAL FINISH

M I T
INSTRUMENTATION LAB
CAMBRIDGE, MASS
DWG NO. CONTRACT
DRAWN B.J. Pepin DATE
CHECKED
APPROVAL 26 Aug 65
APPROVAL Eldon C Hall 7 Sept 65
NOT REQUIRED PER LETTER
NASA APPROVAL
MIT APPROVAL
MIT APPROVAL

MANNED SPACECRAFT CENTER
HOUSTON, TEXAS

E/L FRAME & HARNESS ASSY
AGC DSKY MAIN 100 SERIES

CODE IDENT NO. 80230
SIZE J
NASA DRAWING NO. 1003809
SCALE 1/1
WT
SHEET 1 OF 1

1003809 B

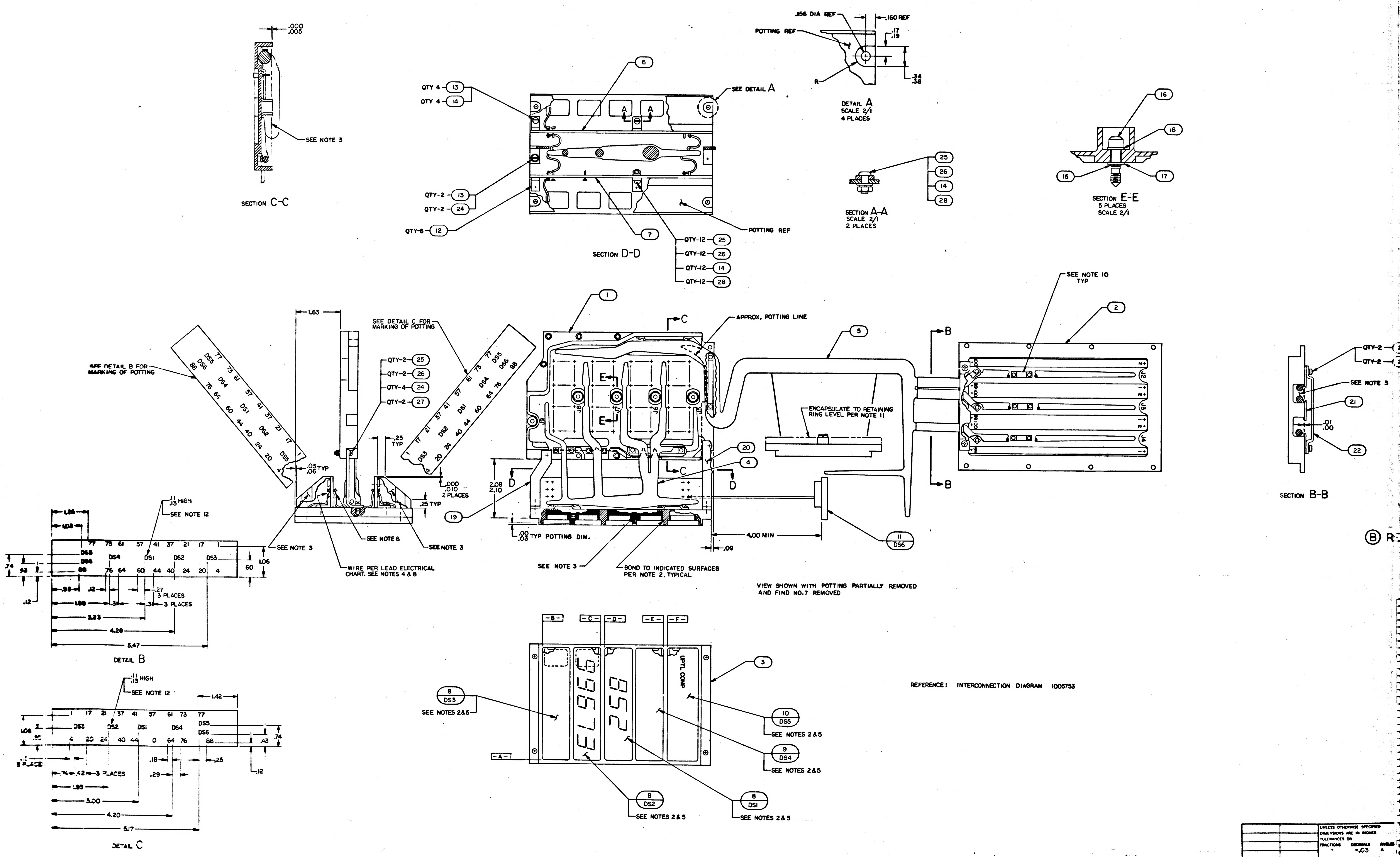
.000
.005
SEE NOTE 3
SECTION C-C
QTY 4 — 13
QTY 4 — 14
6
SEE DETAIL A
A
A
QTY-2 — 13
QTY-2 — 24
QTY-6 — 12
7
POTTING REF
QTY-12 — 25
QTY-12 — 26
QTY-12 — 14
QTY-12 — 28
SECTION D-D
.156 DIA REF
.160 REF
POTTING REF
.17
.19
R
.34
.38
DETAIL A
SCALE 2/1
4 PLACES
25
26
14
28
SECTION A-A
SCALE 2/1
2 PLACES
16
18
15
17
SECTION E-E
5 PLACES
SCALE 2/1
1.63
SEE DETAIL C FOR MARKING OF POTTING
SEE DETAIL B FOR MARKING OF POTTING
QTY-2 — 25
QTY-2 — 26
QTY-4 — 24
QTY-2 — 27
.25 TYP
.03
.06 TYP
.000
.010
2 PLACES
.25 TYP
SEE NOTE 6
SEE NOTE 3
SEE NOTE 3
WIRE PER LEAD ELECTRICAL CHART. SEE NOTES 4 & 8
1
C
APPROX. POTTING LINE
E
E
J8
J7
J6
J5
J9
20
4
C
D
D
2.08
2.10
19
.00
.03 TYP POTTING DIM.
SEE NOTE 3
BOND TO INDICATED SURFACES PER NOTE 2, TYPICAL
5
ENCAPSULATE TO RETAINING RING LEVEL PER NOTE 11
4.00 MIN
.09
11
DS6
B
B
SEE NOTE 10
TYP
2
J2
J3
J4
VIEW SHOWN WITH POTTING PARTIALLY REMOVED AND FIND NO.7 REMOVED
QTY-2 — 23
QTY-2 — 24
SEE NOTE 3
21
.01
.00
22
SECTION B-B
.11
.13 HIGH
SEE NOTE 12
1.26
1.03
77 73 61 57 41 37 21 17 1
DS5
DS6
DS4
DS1
DS2
DS3
88 76 64 60 44 40 24 20 4
.74
.93
.12
60
1.06
.93
.12
.27
3 PLACES
1.98
.31
.31 — 3 PLACES
3.23
4.28
5.47
DETAIL B
.11
.13 HIGH
SEE NOTE 12
1.42
1 17 21 37 41 57 61 73 77
DS3
DS2
DS1
DS4
DS5
DS6
4 20 24 40 44 0 64 76 88
1.06
.90
.43
.74
3 PLACE
.74
.42 — 3 PLACES
.18
.29
.25
.12
1.93
3.00
4.20
5.17
DETAIL C
-B-
-C-
-D-
-E-
-F-
-A-
UPTL COMP
3
8
DS3
SEE NOTES 2&5
10
DS5
SEE NOTES 2&5
9
DS4
SEE NOTES 2&5
8
DS2
SEE NOTES 2&5
8
DS1
SEE NOTES 2&5
5
4
3
2

REFERENCE: INTERCONNECTION DIAGRAM 1005753

Ⓑ REPLACES RE

AR	1012507 — 0
14	MS35233 —
2	MS35233 —
16	MS35337 —
16	NAS671C4
8	MS15795 —
2	MS35216 —
1	1004630
1	1004582
1	1004817
1	1004818
5	1004546 — 1
5	1004546 — 3
5	1004579 —
5	MS16633 —
18	NAS620C4
6	MS35233 —
6	1004801
1	1003804
1	1003801
1	1003802
3	1003803
1	1003760
1	1003759
1	1003826 —
1	1003825 —
	1004802
	1003547 —
1	1003810 —
QTY REQD	PART OR IDENTIFYING

MIT
INSTRUMENTATION
CAMBRIDGE, MASS.

1003707	
NEXT ASSY	USED ON
APPLICATION	

UNLESS OTHERWISE SPECIFIED
DIMENSIONS ARE IN INCHES
TOLERANCES ON
FRACTIONS ± DECIMALS ±.03 ANGLES ±
DO NOT SCALE THIS DRAWING
MATERIAL
HEAT TREATMENT
FINAL FINISH

DRAWN
CHECKED
APPROVAL
APPROVAL

1003809 B

1003809

NOTICE - WHEN GOVERNMENT DRAWINGS, SPECIFICATIONS, OR OTHER DATA ARE USED FOR ANY PURPOSE OTHER THAN IN CONNECTION WITH A DEFINITELY RELATED GOVERNMENT PROCUREMENT OPERATION, THE UNITED STATES GOVERNMENT THEREBY INCURS NO RESPONSIBILITY NOR ANY OBLIGATION WHATSOEVER; AND THE FACT THAT THE GOVERNMENT MAY HAVE FORMULATED, FURNISHED, OR IN ANY WAY SUPPLIED THE SAID DRAWINGS, SPECIFICATIONS, OR OTHER DATA IS NOT TO BE REGARDED BY IMPLICATION OR OTHERWISE AS IN ANY MANNER LICENSING THE HOLDER OR ANY OTHER PERSON OR CORPORATION, OR CONVEYING ANY RIGHTS OR PERMISSION TO MANUFACTURE, USE, OR SELL ANY PATENTED INVENTION THAT MAY IN ANY WAY BE RELATED THERETO.

1003809

34

LEAD ELECTRICAL

REFERENCE DESIGNATION	LEAD IDENT	CONNECT TO
DS3	E1	TB1 -5
	E2	↑ -15
	E3	-18
	E4	-19
	H1	-4
	H2	-10
	H3	-13
	F1	-3
	F2	-14
	F3	-17
	J1	-2
	J2	-9
	J3	-12
	M1	-1
	M2	-8
	K1	-7
	N1	-6
	N2	↓ -11
	N3	TB1 -16
	E5	TB2 -10
	H4	↑ -15
	H5	-9
	F4	-14
	F5	-5
	A1	-2
	J4	-13
	J5	-4
	B1	-1
	M3	-18
	M4	-12
	M5	-7
	K2	-16
	K3	-17
	K4	-8
	K5	-3
	N4	-11
	N5	↓ -6
	G1	TB2 -20
DS2	E3	TB1 -38
	E1	↑ -25
	E2	-35
	E4	-39
	H1	-24
	H2	-30
	H3	-33
	F1	-23
	F2	-34
	F3	-37
	J1	-22
	J2	-29
	J3	-32
	M1	-21
	M2	-28
	K1	-27
	N1	-26
	N2	↓ -31
	N3	TB1 -36
	E5	TB2 -30
	H4	↑ -35
	H5	-29
	F4	-34
	F5	-25
	A1	-22
	J4	-33
	J5	-24
	B1	-21
	M3	-38
	M4	-32
	M5	-27
	K2	-36
	K3	-37
	K4	-28
	K5	-23
	N4	-31
	N5	↓ -26
	G1	TB2 -40

LEAD ELECTRICAL

REFERENCE DESIGNATION	LEAD IDENT	CONNECT TO
DS1	E1	TB1 -46
	E2	↑ -51
	E3	-58
	E4	-59
	H1	-42
	H2	-50
	H3	-56
	F1	-45
	F2	-55
	F3	-57
	J1	-44
	J2	-53
	J3	-54
	M1	-41
	M2	-49
	K1	-48
	N1	-43
	N2	↓ -47
	N3	TB1 -52
	G1	TB2 -60
	E5	↑ -51
	H4	-57
	H5	-50
	F4	-58
	F5	-46
	A1	-42
	J4	-56
	J5	-45
	B1	-41
	M3	-53
	M4	-55
	M5	-48
	K2	-52
	K3	-54
	K4	-49
	K5	-44
	N4	↓ -47
	N5	TB2 -43
DS4	E1	TB1 -68
	E2	↑ -75
	H1	-67
	H2	-74
	F1	-66
	F2	-73
	J1	-65
	J2	-72
	M1	-64
	M2	-71
	K1	-63
	K2	-70
	N1	↓ -62
	N2	TB1 -61
	E3	TB2 -75
	E4	↑ -68
	H3	-74
	H4	-67
	F3	-73
	F4	-66
	J3	-72
	J4	-65
	M3	-71
	M4	-64
	K3	-70
	K4	-63
	N3	↓ -61
	N4	TB2 -62
	E6	TB1 -69

LEAD ELECTRICAL

REFERENCE DESIGNATION	LEAD IDENT	CONNECT TO
DS5	E1	TB1 -85
	H1	↑ -80
	F1	-84
	J1	-83
	M1	-79
	K1	-82
	N1	↓ -78
	N2	TB1 -77
	E2	TB2 -85
	H2	↑ -80
	F2	-84
	J2	-83
	M2	-79
	K2	-82
	S1	-77
	S2	↓ -78
	G1	TB2 -81
DS6	S1	TB1 -88
	S2	TB2 -88
	G2	TB2 -86

FROM	TO

COLOR CODE

LEAD IDENT	STRIPE	BASE
E1	—	WHITE
F1	RED	↑
H1	ORANGE	
J1	GREEN	
K1	BLUE	
M1	BROWN	↓
N1	VIOLET	WHITE
E2	WHITE	RED
F2	—	↑
H2	ORANGE	
J2	GREEN	
K2	BLUE	
M2	BROWN	↓
N2	VIOLET	RED
E3	WHITE	ORANGE
F3	RED	↑
H3	—	
J3	GREEN	
K3	BLUE	
M3	BROWN	↓
N3	VIOLET	ORANGE
E4	WHITE	GREEN
F4	RED	↑
H4	ORANGE	
J4	—	
K4	BLUE	
M4	BROWN	↓
N4	VIOLET	GREEN
E5	WHITE	BLUE
F5	RED	↑
H5	ORANGE	
J5	GREEN	
K5	—	
M5	BROWN	↓
N5	VIOLET	BLUE
A1	RED	YELLOW
B1	BLACK	YELLOW
(DS5) S1	—	YELLOW
S2	GREEN	YELLOW
G1	—	BLACK
G2	—	BLACK
(DS6) S1	YELLOW BAND	
S2	RED BAND	
E6	—	BLACK

NOTES

1. INTERPRET DRAWING IN ACCORDANCE WITH STANDARDS PRESCRIBED BY MIL-D-70327
2. BOND FIND NO. 8, 9 & 10 TO FIND NO. 3 PER ND1002004, TYPE II
3. ENCAPSULATE PER ND1002217
4. SOLDER FIND NO. 4 TO FIND NO. 1, FIND NO. 5 TO FIND NO. 1 & FIND NO. 2, LEADS FROM FIND NO. 8, 9, 10, & 11 TO FIND NO. 6 & FIND NO. 7 PER ND1002071 USING SOLDER PER ND1002075
5. NO GAP PERMISSIBLE BETWEEN RESPECTIVE LIGHT DS1 THRU DS5 AND SURFACES A, B, C, D, E, & F
6. SOLDER FIND NO. 4 TO FIND NO. 6 AND FIND NO. 7 PER ND1002071 EXCEPT SOLDER TO BE Sb5 PER QQ-S-571
7. WIRING PER ND1002032
8. DRESS AND TRIM AT ASSEMBLY, STRIP ALL LEADS .19 AND TIN TYP FIND NO. 8, 9, 10, & 11
9. AR DENOTES AS REQUIRED
10. LACE HARNESS TO RETAINING STRAPS WITH FIND NO. 29 AS REQUIRED
11. ENCAPSULATE INDICATED AREA PER ND1002009 METHOD E WITH PRIMER
12. MARK WHITE CHARACTERS AS SHOWN PER ND1002019, TYPE II, CLASS I, USING AS INK 006338 DILUTED WITH 40 ±5% (BY WEIGHT) TOLUOL PER FED-SPEC TT-T-571

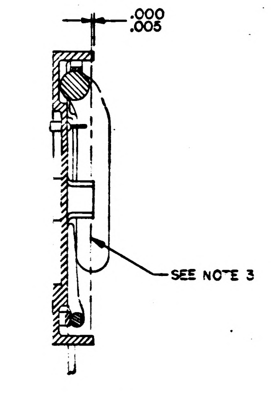
.000
.005
SEE NOTE 3

SECTION C-C

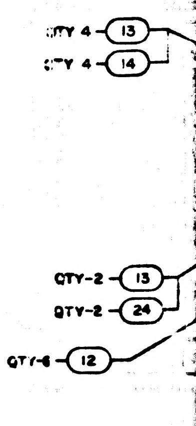
QTY 4 13
QTY 4 14
QTY-2 13
QTY-2 24
QTY-6 12

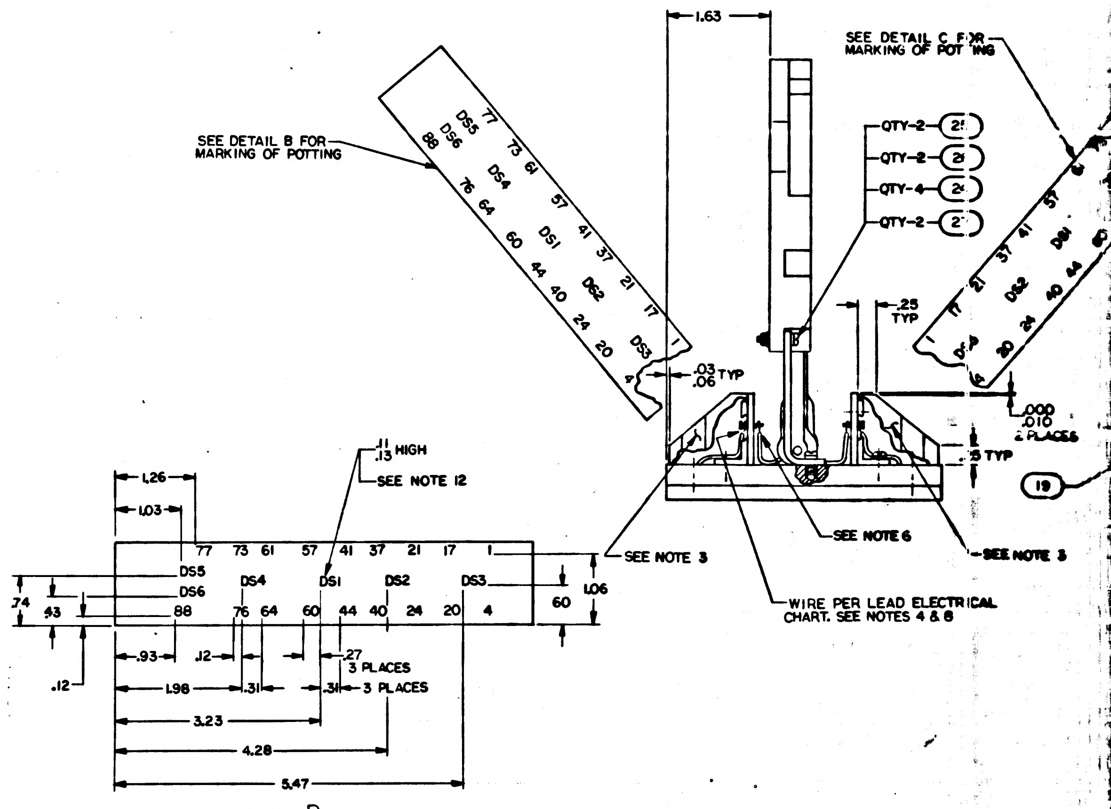
1.63
SEE DETAIL C FOR MARKING OF POTTING
SEE DETAIL B FOR MARKING OF POTTING
77 DS5 DS6 88 73 61 DS4 76 64 57 DS1 60 41 37 44 40 DS2 21 17 24 20 DS3 1 4
QTY-2 25
QTY-2 26
QTY-4 26
QTY-2 27
.25 TYP
.03 .06 TYP
.000 .010 2 PLACES
.5 TYP
19
SEE NOTE 6
SEE NOTE 3
SEE NOTE 3
WIRE PER LEAD ELECTRICAL CHART. SEE NOTES 4 & 8
.11 .13 HIGH
SEE NOTE 12
1.26
1.03
77 73 61 57 41 37 21 17 1
DS5
DS6
DS4
DS1
DS2
DS3
88 76 64 60 44 40 24 20 4
.74
.43
.12
.60
1.06
.93
.12
.27 3 PLACES
1.98
.31
.31 3 PLACES
3.23
4.28
5.47

DETAIL B

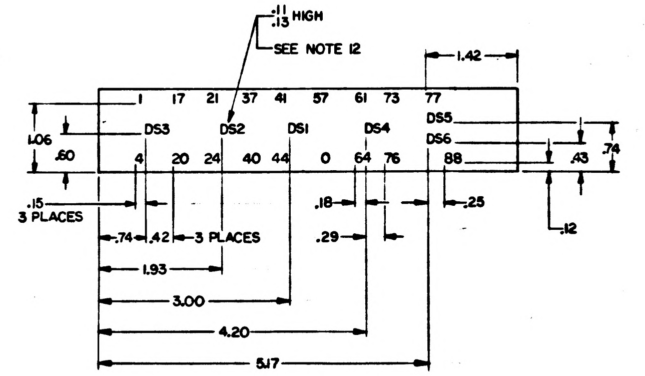
.11 .13 HIGH
SEE NOTE 12
1.42
1 17 21 37 41 57 61 73 77
DS3
DS2
DS1
DS4
DS5
DS6
4 20 24 40 44 0 64 76 88
1.06
.60
.74
.43
.12
.15 3 PLACES
.74
.42
3 PLACES
.18
.29
.25
1.93
3.00
4.20
5.17

DETAIL C

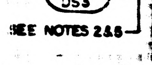
8
DS3
SEE NOTES 2&5

1003809 B

1003809 -

REVISIONS		
DESCRIPTION	DATE	APPROVAL

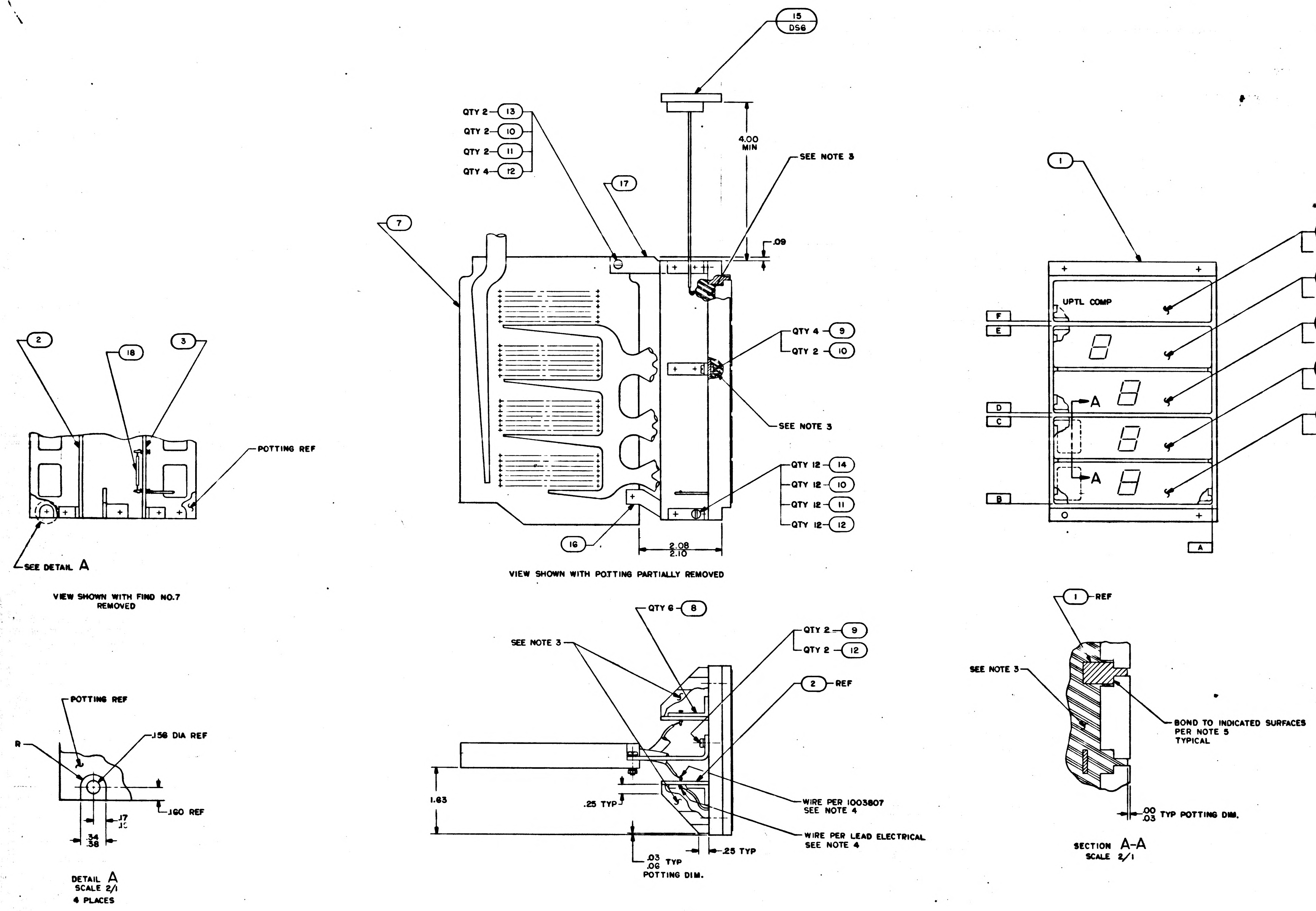
15
DS6
4.00 MIN
SEE NOTE 3
QTY 2 13
QTY 2 10
QTY 2 11
QTY 4 12
17
7
.09
QTY 4 9
QTY 2 10
SEE NOTE 3
QTY 12 14
QTY 12 10
QTY 12 11
QTY 12 12
16
2.08
2.10
VIEW SHOWN WITH POTTING PARTIALLY REMOVED
2
18
3
POTTING REF
SEE DETAIL A
VIEW SHOWN WITH FIND NO.7 REMOVED
1
UPTL COMP
F
E
D
C
B
A
6 DS5 SEE NOTE 2&5
5 DS4 SEE NOTE 2&5
4 DS3 SEE NOTE 2&5
4 DS2 SEE NOTE 2&5
4 DS1 SEE NOTE 2&5
POTTING REF
R
.156 DIA REF
.160 REF
.17
.34
.38
DETAIL A
SCALE 2/1
4 PLACES
QTY 6 8
SEE NOTE 3
QTY 2 9
QTY 2 12
2 REF
1.83
.25 TYP
WIRE PER 1003807 SEE NOTE 4
WIRE PER LEAD ELECTRICAL SEE NOTE 4
.03 .06 TYP POTTING DIM.
.25 TYP
1 REF
SEE NOTE 3
BOND TO INDICATED SURFACES PER NOTE 5 TYPICAL
.00 .03 TYP POTTING DIM.
SECTION A-A
SCALE 2/1

REFERENCE: INTERCONNECTION DIAGRAM 1005753

QTY REQD	PART OR IDENTIFYING NO.	NOMENCLATURE OR DESCRIPTION	FIND NO.
* .75	1010416	WIRE, ELECTRICAL (28 AWG BLK)	18
1	1004817	BRACKET, E/L PLATE	17
1	1004818	BRACKET, CONN. PLATE	16
1	1003804	INDICATOR E/L ASSY (ALARM II)	15
12	MS35233-14	SCREW, PAN HEAD	14
2	MS35233-17	SCREW, PAN HEAD	13
18	NAS620-4	WASHER, FLAT	12
14	MS35337-78	WASHER, LOCK	11
14	NAS671-C4	NUT, HEX, PLAIN	10
6	MS35233-13	SCREW, PAN HEAD	9
6	1004801	BRACKET, TERMINAL BOARD	8
1	1003807	WIRING HARNESS BRANCHED	7
1	1003801	INDICATOR E/L ASSY (PROGRAM)	6
1	1003802	INDICATOR E/L ASSY (VERB-NOUN)	5
3	1003803	INDICATOR E/L ASSY (REGISTER)	4
1	1003760	TERMINAL BOARD ASSY (TB2)	3
1	1003759	TERMINAL BOARD ASSY (TB1)	2
1	1004802	FRAME, E/L	1

LIST OF MATERIALS

1003707	
NEXT ASSY	USED ON
APPLICATION	

UNLESS OTHERWISE SPECIFIED DIMENSIONS ARE IN INCHES
TOLERANCES ON
FRACTIONS ± DECIMALS ±.03 ANGLES ±
DO NOT SCALE THIS DRAWING
MATERIAL
HEAT TREATMENT
FINAL FINISH

MIT
INSTRUMENTATION LAB
CAMBRIDGE, MASS
DRAWN R. Boudreau DATE 8 Sept 64
CHECKED 29 Sept 64
APPROVAL Sept 30/64
APPROVAL John C. Hall 2 Oct 64
NASA APPROVAL 10-6-64
MIT APPROVAL
MIT APPROVAL

MANNED SPACECRAFT CENTER
HOUSTON, TEXAS

E/L FRAME & HARNESS ASSY
AGC DSKY MAIN 100 SERIES

CODE IDENT NO. —— SIZE J NASA DRAWING NO. 1003809
SCALE 1/1 WT SHEET 1 OF 1

MASTER

LEAD ELECTRICAL

REFERENCE DESIGNATION	LEAD IDENT	CONNECT TO
DS1	E1	TB1 - 5
	E2	-15
	E3	-18
	E4	-19
	H1	-4
	H2	-10
	H3	-13
	F1	-3
	F2	-14
	F3	-17
	J1	-2
	J2	-9
	J3	-12
	M1	-1
	M2	-8
	K1	-7
	N1	-6
	N2	-11
	N3	TB1 -16
	E5	TB2 -10
	H4	-15
	H5	-9
	F4	-14
	F5	-5
	A1	-2
	J4	-13
	J5	-4
	B1	-1
	M3	-18
	M4	-12
	M5	-7
	K2	-16
	K3	-17
	K4	-8
	K5	-3
	N4	-11
	N5	-6
	G1	TB2 -20
DS2	E3	TB1 -38
	E1	-25
	E2	-35
	E4	-39
	H1	-24
	H2	-30
	H3	-33
	F1	-23
	F2	-34
	F3	-37
	J1	-22
	J2	-29
	J3	-32
	M1	-21
	M2	-28
	K1	-27
	N1	-26
	N2	-31
	N3	TB1 -36
	E5	TB2 -30
	H4	-35
	H5	-29
	F4	-34
	F5	-25
	A1	-22
	J4	-33
	J5	-24
	B1	-21
	M3	-38
	M4	-32
	M5	-27
	K2	-36
	K3	-37
	K4	-28
	K5	-23
	N4	-31
	N5	-26
	G1	TB2-40

LEAD ELECTRICAL

REFERENCE DESIGNATION	LEAD IDENT	CONNECT TO
DS3	E1	TB1-46
	E2	-51
	E3	-58
	E4	-59
	H1	-42
	H2	-50
	H3	-56
	F1	-45
	F2	-55
	F3	-57
	J1	-44
	J2	-53
	J3	-54
	M1	-41
	M2	-49
	K1	-48
	N1	-43
	N2	-47
	N3	TB1-52
	G1	TB2-60
	E5	-51
	H4	-57
	H5	-50
	F4	-58
	F5	-46
	A1	-42
	J4	-56
	J5	-45
	B1	-41
	M3	-53
	M4	-55
	M5	-48
	K2	-52
	K3	-54
	K4	-49
	K5	-44
	N4	-47
	N5	TB2-43
DS4	G2	TB1-69
	E1	-68
	E2	-75
	H1	-67
	H2	-74
	F1	-66
	F2	-73
	J1	-65
	J2	-72
	M1	-64
	M2	-71
	K1	-63
	K2	-70
	N1	-62
	N2	TB1 -61
	E3	TB2-75
	E4	-68
	H3	-74
	H4	-67
	F3	-73
	F4	-66
	J3	-72
	J4	-65
	M3	-71
	M4	-64
	K3	-70
	K4	-63
	N3	-61
	N4	-62
	G1	TB2-69

LEAD ELECTRICAL

REFERENCE DESIGNATION	LEAD IDENT	CONNECT TO
DS5	E1	TB1-85
	H1	-80
	F1	-84
	J1	-83
	M1	-79
	K1	-82
	N1	-78
	N2	TB1 -77
	E2	TB2-85
	H2	-80
	F2	-84
	J2	-83
	M2	-79
	K2	-82
	S1	-77
	S2	-78
	G1	TB2-81
DS6	S1	TB1-88
	S2-A	TB2-88
	S2-B	TB2-87
	G2	TB2-86

FROM	TO
TB2-20	TB2-40
TB2-40	TB2-60
TB2-60	TB2-81
TB2-81	TB2-86

COLOR CODE

LEAD IDENT	STRIPE	BASE
E1	—	WHITE
F1	RED	
H1	ORANGE	
J1	GREEN	
K1	BLUE	
M1	BROWN	
N1	VIOLET	WHITE
E2	WHITE	RED
F2	—	
H2	ORANGE	
J2	GREEN	
K2	BLUE	
M2	BROWN	
N2	VIOLET	RED
E3	WHITE	ORANGE
F3	RED	
H3	—	
J3	GREEN	
K3	BLUE	
M3	BROWN	
N3	VIOLET	ORANGE
E4	WHITE	GREEN
F4	RED	
H4	ORANGE	
J4	—	
K4	BLUE	
M4	BROWN	
N4	VIOLET	GREEN
E5	WHITE	BLUE
F5	RED	
H5	ORANGE	
J5	GREEN	
K5	—	
M5	BROWN	
N5	VIOLET	BLUE
A1	RED	YELLOW
B1	BLACK	YELLOW
(DS5) S1	—	YELLOW
S2	GREEN	YELLOW
S2-B	—	GRAY
G1	—	BLACK
G2	—	BLACK
(DS6) S1	YELLOW BAND	
S2-A	RED BAND	

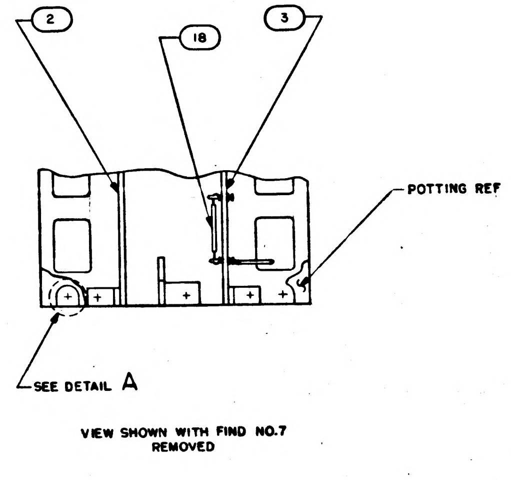

VIEW SHOWN WITH FIND NO.7
REMOVED

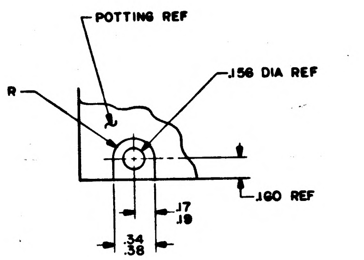

DETAIL A
SCALE 2/1
4 PLACES

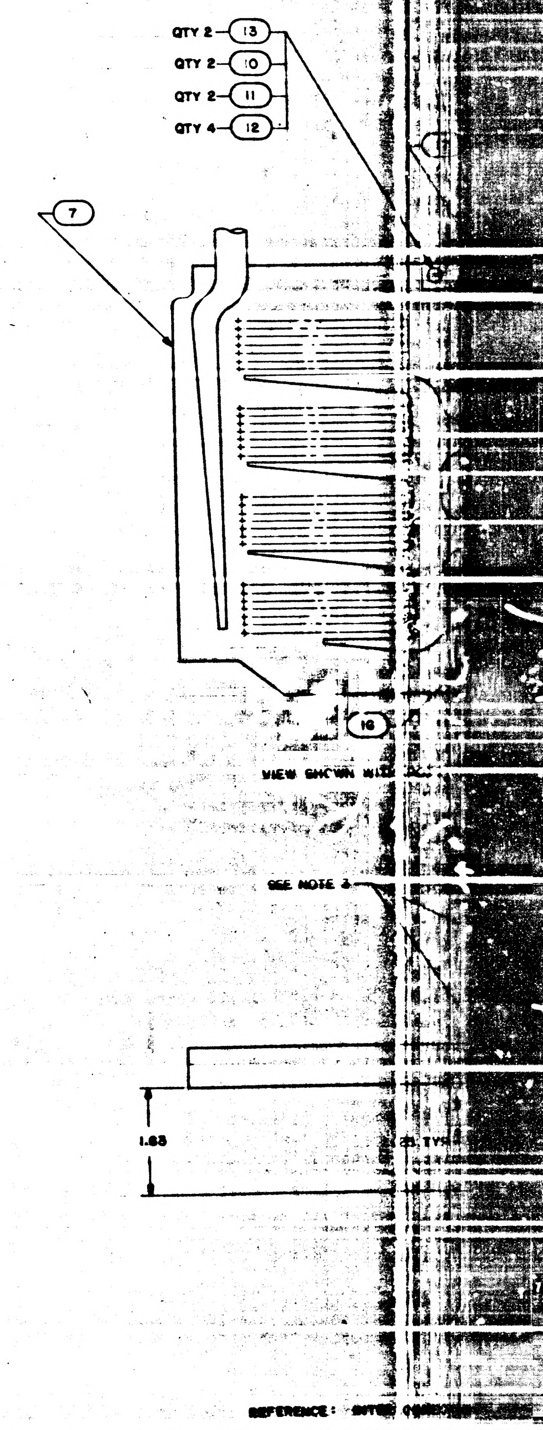

NOTES

1. INTERPRET DRAWING IN ACCORDANCE WITH STANDARDS PRESCRIBED BY MIL-D-70327
2. BOND FIND NO. 4,5 & 6 TO FIND NO. 1 PER ND 1002004, TYPE II
3. ENCAPSULATE PER ND 1002217
4. SOLDER PER ND 1002071
5. NO GAP PERMISSIBLE BETWEEN RESPECTIVE LIGHT DS1 THRU DS5 AND SURFACES A,B,C,D,E & F
6. # DENOTES LENGTH IN FEET
7. WIRING PER ND100203. STRIP ALL LEADS .19 AND TIN

84

REVISIONS 13232			
SYM	DESCRIPTION	DATE	APPROVAL

WIRING LEGEND				
FROM	COLOR	AWG	FIND NO.	TO
J5-102	WHITE	30	2	J5-83
J5-83	↑	↑	↑	J5-80
J5-80				J5-56
J5-56				J5-53
J5-53				J5-71
J5-71				J5-11
J5-11				J5-35
J5-35				J6-102
J6-102				J6-83
J6-83				J6-80
J6-80				J6-56
J6-56				J6-53
J6-53				J6-71
J6-71				J6-46
J6-46				J6-11
J6-11				J6-35
J6-35				J7-102
J7-102				J7-83
J7-83				J7-80
J7-80				J7-35
J7-35				J7-11
J7-11				J7-56
J7-56				J7-71
J7-71				J7-27
J7-27				J8-71
J8-71				J8-56
J8-56				J8-11
J8-11				J8-35
J8-35				J8-80
J8-80				J8-83
J8-83				J9-10
J5-46				J8-103
J8-105				J7-16
J7-16				J7-82
J7-82				J7-105
J7-105				J6-16
J6-16				J6-82
J6-82				J6-105
J6-105				J5-16
J5-16				J5-82
J5-82				J5-105
J5-105				J5-85
J7-68				J7-109
J7-109				J7-24
*J7-7				J7-68
*J5-104				J6-104
*J5-39				J6-39
*J5-58				J6-58
*J5-99				J6-99
*J5-62				J6-62
*J5-14				J6-14
*J5-38				J7-38
J7-38				J7-5
*J5-77				J7-77
J7-77				J8-9
*J5-12				J6-12
*J5-74				J6-74
*J5-30				J7-30
J7-30				J6-5
*J5-34				J6-34
J6-34				J7-34
J7-34				J8-34
*J5-75				J6-75
J6-75				J7-75
J7-75				J8-75
*J5-50				J6-50
*J5-8				J6-8
*J5-5				J5-45
J5-45				J7-45
*J6-91				J6-96
*J5-96				J5-91
*J5-65				J6-125
J6-125				J6-69
J6-69	↓	↓	↓	J6-66
J6-66	WHITE	30	2	J6-25

* INDICATES WIREWRAP MUST BE ON FIRST LEVEL

WIRING LEGEND				
FROM	COLOR	AWG	FIND NO.	TO
J6-25	WHITE	30	2	J6-2
J6-2	↑	↑	↑	J8-125
J8-125				J8-69
J8-69				J8-66
J8-66				J8-25
J8-25				J8-2
*J5-20				J7-20
J7-20				J7-9
*J5-26				J6-9
J6-9				J7-26
*J5-106				J6-122
J6-122				J7-106
*J7-127				J7-89
J7-89				J7-23
J7-23				J8-105
*J5-86				J6-124
J6-124				J6-109
J6-109				J6-68
J6-68				J6-24
J6-24				J6-7
J6-7				J8-124
J8-124				J8-109
J8-109				J8-68
J8-68				J8-24
J8-24				J8-7
*J5-9				J6-20
J6-20				J8-20
*J6-108				J6-38
J6-38				J8-38
*J6-77				J7-108
J7-108				J8-77
*J5-108				J6-30
J6-30				J8-30
*J6-26				J9-26
J8-26				J8-5
*J5-122				J6-106
J6-106				J8-106
*J5-136				J6-136
J6-136				J6-57
J6-57				J6-132
J6-132				J7-136
J7-136				J7-57
J7-57				J8-136
*J7-74				J8-74
*J7-13				J7-6
*J7-50				J8-50
*J7-8				J8-8
*J7-104				J8-104
*J5-134				J5-116
J5-116				J5-17
J5-17				J6-134
J6-134				J6-116
J6-116				J6-17
J6-17				J7-134
J7-134				J7-116
J7-116				J7-17
J7-17				J8-134
J8-134				J8-116
J8-116				J8-17
J8-17				J9-1
*J7-39				J8-39
*J7-58				J8-58
*J7-99				J8-99
*J7-14				J8-14
*J7-12				J8-12
*J5-114				J5-117
J5-117				J6-114
J6-114				J6-117
J6-117				J7-114
J7-114				J7-117
J7-117				J8-114
J8-114				J8-117
J8-117				J8-133
J8-133	↓	↓	↓	J9-2
*J7-62	WHITE	30	2	J8-62

WIRING LEGEND				
FROM	COLOR	AWG	FIND NO.	TO
J5-94	WHITE	30	2	J5-113
J7-94	↑	↑	↑	J7-113
J6-94				J8-94
J8-94				J8-40
J8-113				J8-81
*J7-28				J7-48
J7-48				J7-88
J7-88				J8-118
J8-118				J7-115
J7-115				J7-40
J7-40				J7-118
J7-118				J6-115
J6-115				J6-40
J6-40				J6-118
J6-118				J5-115
J5-115				J5-40
J5-40	↓	↓	↓	J5-118
J5-118	WHITE	30	2	J5-87

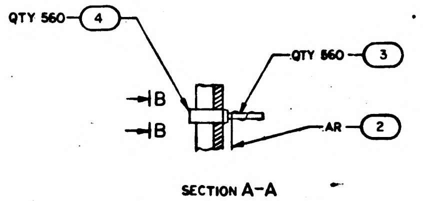

SECTION A-A

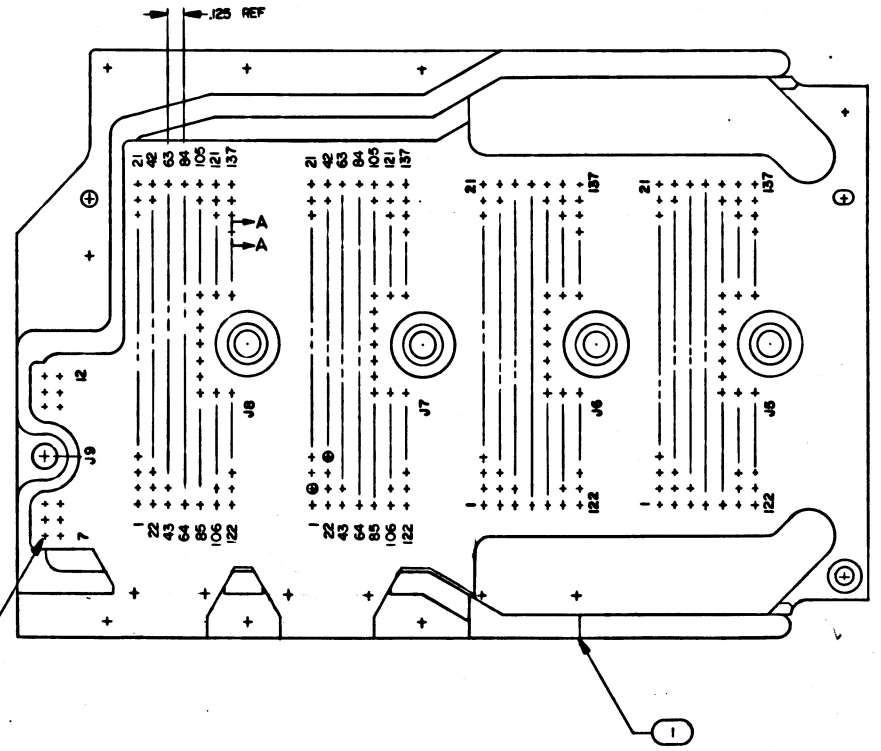

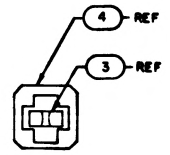

VIEW B-B
SCALE 10/1
560 PLACES

NOTES

1. WIRE PER ND1002031
2. AR DENOTES AS REQUIRED
3. INTERPRET DRAWING IN ACCORDANCE WITH STANDARDS PRESCRIBED BY MIL-D-70327
4. ROUTE WIRES PER 1004575

QTY REQD	PART OR IDENTIFYING NO.	NOMENCLATURE OR DESCRIPTION	FIND NO.
560	1006774	INSULATOR, WRAPOST FEMALE	4
560	1006781-4	CONTACT, WRAPOST FEMALE	3
AR	1006732	WIRE, ELECTRICAL	2
1	1004810	PLATE, CONN. RELAY HOUSING	1

LIST OF MATERIALS

1003807	
NEXT ASSY	USED ON
APPLICATION	

UNLESS OTHERWISE SPECIFIED
DIMENSIONS ARE IN INCHES
TOLERANCES ON
FRACTIONS ± DECIMALS ± ANGLES ±
DO NOT SCALE THIS DRAWING
MATERIAL
HEAT TREATMENT
FINAL FINISH

MIT
INSTRUMENTATION LAB
CAMBRIDGE, MASS
DWG. NO. CONTRACT

DRAWN J. L. Leonard DATE Apr 64
CHECKED L. Hagan 16 Sept 64
APPROVAL E. K. Sonsen 9/22/64
APPROVAL E. C. Hall 6 Oct 64
NASA APPROVAL W. J. 10-6-64
MIT APPROVAL
MIT APPROVAL W. Kupfer 6 Oct 64

MANNED SPACECRAFT CENTER
HOUSTON, TEXAS

CONNECTOR PLATE
WIRE WRAP ASSY., RELAY MODULE
AGC DSKY MAIN 100 SERIES

CODE IDENT NO. ——
SIZE E
NASA DRAWING NO. 1003810
SCALE NONE
WT
SHEET 1 OF 1

MASTER

		REVISIONS 4667		
SYM	DESCRIPTION		DATE	APPROVAL
A	REVISED PER TDRR 17241 DR A. J. Burr CHK		3/24/6	

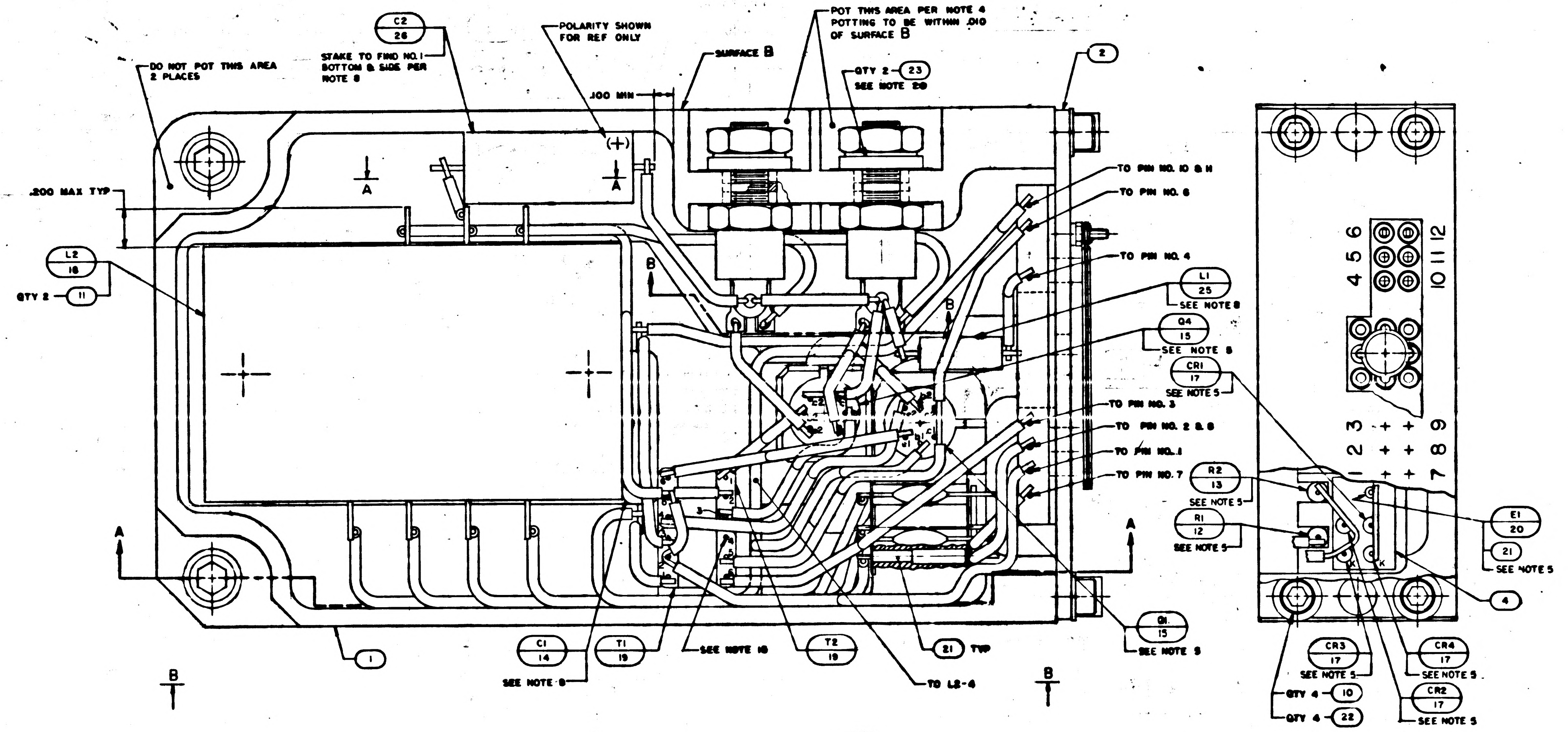

DO NOT POT THIS AREA 2 PLACES
C2 26
STAKE TO FIND NO.1 BOTTOM & SIDE PER NOTE 8
POLARITY SHOWN FOR REF ONLY
SURFACE B
.100 MIN
POT THIS AREA PER NOTE 4 POTTING TO BE WITHIN .010 OF SURFACE B
QTY 2 23
SEE NOTE 20
2
.200 MAX TYP
A
(+)
L2 18
QTY 2 11
B
TO PIN NO. 10 & 11
TO PIN NO. 6
TO PIN NO. 4
L1 25
SEE NOTE 8
Q4 15
SEE NOTE 8
CR1 17
SEE NOTE 5
TO PIN NO. 3
TO PIN NO. 2 & 8
TO PIN NO. 1
TO PIN NO. 7
R2 13
SEE NOTE 5
R1 12
SEE NOTE 5
C1 14
SEE NOTE 8
T1 19
SEE NOTE 10
T2 19
21 TYP
TO L2-4
1
Q1 15
SEE NOTE 8
4 5 6
10 11 12
1 2 3
7 8 9
E1 20
21
SEE NOTE 5
4
CR3 17
SEE NOTE 5
CR4 17
SEE NOTE 5
CR2 17
SEE NOTE 5
QTY 4 10
QTY 4 22

CHART A		CHART B	
PART NO.	VALUE	PART NO.	VALUE
1006750-19	300	1006750-41	2400
-22	390	-42	2700
-25	510	-43	3000
-27	620	-44	3300
-28	680	-45	3600
-29	750	-46	3900
-30	820	-47	4300
-31	910	1006750-48	4700
-32	1000		
-34	1200		
1006750-36	1500		

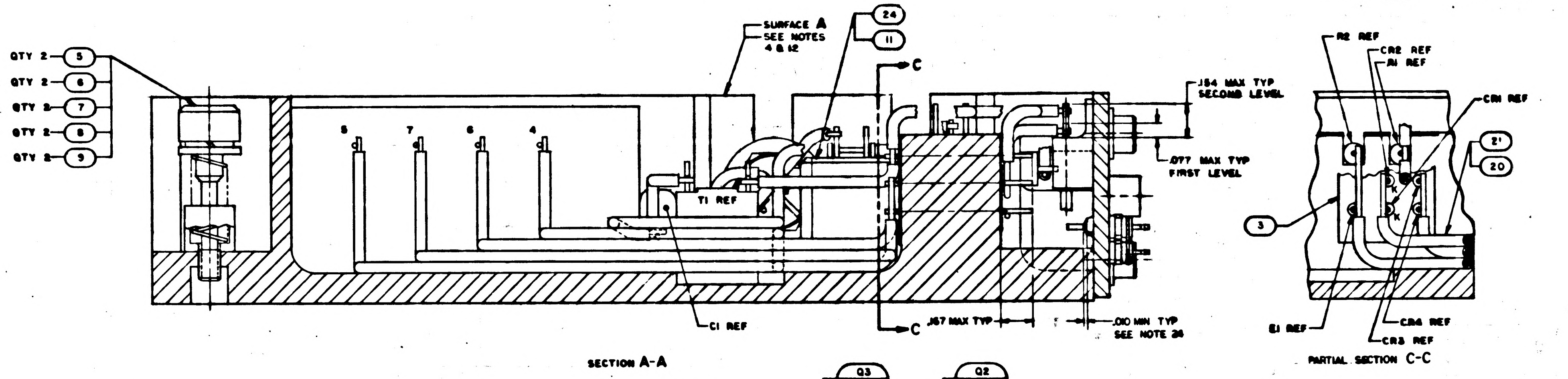

QTY 2 5
QTY 2 6
QTY 2 7
QTY 2 8
QTY 2 9
SURFACE A SEE NOTES 4 & 12
24
11
C
.154 MAX TYP SECOND LEVEL
.077 MAX TYP FIRST LEVEL
T1 REF
C1 REF
.167 MAX TYP
.010 MIN TYP SEE NOTE 24
C
R2 REF
CR2 REF
R1 REF
CR1 REF
21
20
3
E1 REF
CR4 REF
CR3 REF

SECTION A-A

PARTIAL SECTION C-C

NOTES

1. INTERPRET DRAWING IN ACCORDANCE WITH STANDARDS PRESCRIBED BY MIL-D-70327
2. WELD PER ND1002005
3. SOLDER PER ND1002071
4. ENCAPSULATE PER ND1002002
5. STAKE PER ND1002009
6. MOUNTING TORQUE OF FIND NO. 16 TO BE 8-15 IN-LBS
7. NEW MICA WASHERS TO BE INSTALLED EACH TIME FIND NO. 16 IS DISASSEMBLED
8. BOND FIND NO. 19 & 14 TOGETHER & TO FIND NO. 1, AND FIND NO. 25 & 26 TO FIND NO. 1 PER ND 1002004 TYPE I
9. ●BLACK DOT DENOTES LEAD TO CUT FOR SECOND LEVEL WIRING
10. MARK .05/.35 HIGH WHITE PER ND1002019 AND ND1002122 TYPE II, CLASS 2, USING MARKING INK 1006271-1
11. MARK .08/.10 HIGH WHITE PER ND1002019 AND ND1002122 TYPE II, CLASS 2, USING MARKING INK 1006271-1
12. POTTING TO BE WITHIN .010 OF SURFACE A
13. ALL VIEWS SHOWN WITH POTTING REMOVED FOR CLARITY
14. SERIALIZE PER ND1002023
15. PIN 4 TO BE CUT .010 TO .015 FROM SURFACE OF T1 ONLY
16. K DENOTES CATHODE SIDE OF DIODE
17. ● DENOTES LENGTH IN FEET
18. VALUE OF FIND NO. 13 TO BE DETERMINED AND INSTALLED AT UNIT TEST. SELECT R2 FROM CHART A
19. VALUE OF FIND NO. 12 TO BE DETERMINED AND INSTALLED AT UNIT TEST. SELECT R1 FROM CHART B
20. REPLACE FLAT WASHER SUPPLIED WITH FIND NO. 16, WITH A FIND NO. 22
21. RESISTOR VALUES ARE EXPRESSED IN OHMS UNLESS OTHERWISE SPECIFIED
22. ~~FIND NO. 23 TO BE PRESS FITTED TO DIM. SHOWN~~

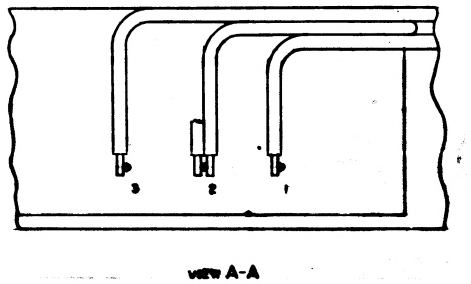

VIEW A-A

23. ~~FILL WITH THERMALLY CONDUCTING RESIN PER ND1002002, DO NOT EVACUATE AFTER FILLING~~
24. SEAL AROUND CONTACT PIN & INSULATORS PER ND 1002004, TYPE II
25. AR DENOTES AS REQUIRED
26. WORKMANSHIP, FABRICATION, AND INSPECTION REQUIREMENTS PER ND1002069

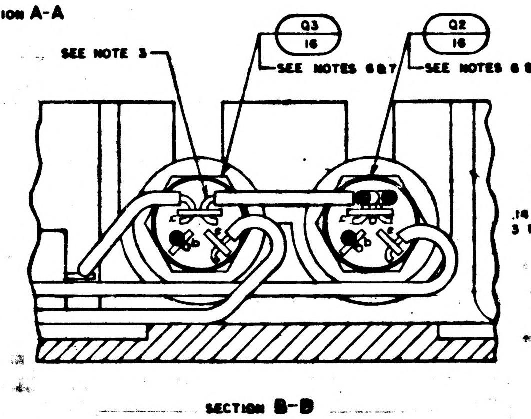

SEE NOTE 3
Q3 16
SEE NOTES 6 & 7
Q2 16
SEE NOTES 6 & 7

SECTION B-B

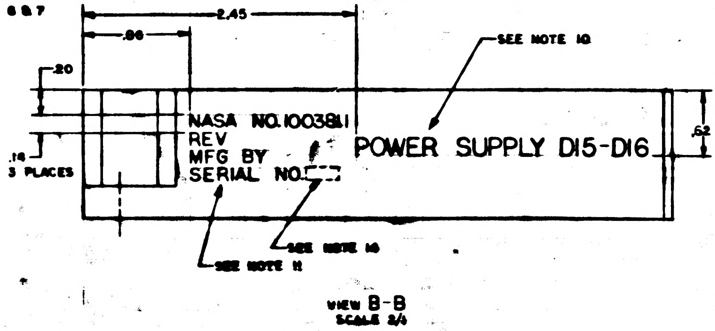

2.45
.96
.20
.14 3 PLACES
SEE NOTE 10
NASA NO.1003811
REV
MFG BY
SERIAL NO.
POWER SUPPLY D15-D16
.62
SEE NOTE 14
SEE NOTE 11

VIEW B-B
SCALE 2/1

QTY REQD	PART OR IDENTIFYING NO.	NOMENCLATURE OR DESCRIPTION	FIND NO.
REF	1005756	SCHEMATIC, ELECTRICAL	
~~1~~	~~1004663~~	~~RECEPTACLE, TEST POINT~~	~~28~~
1	1004652	GASKET	27
1	1006755-134	CAPACITOR, FIXED, TANTALUM	26
1	1010406-7	COIL, RF CHOKE	25
1	1004820-011	HOLDER, COMPONENT	24
2	MS15795-806	WASHER, FLAT	23
4	MS15795-803	WASHER, FLAT	22
● 5.0	1006776-22	INSULATION SLEEVING	21
● 5.0	1006757-13	WIRE, ELECTRICAL	20
2	1010291-4	TRANSFORMER, AUDIO	19
1	1006726	SATURABLE REACTOR	18
4	1006751	SEMICONDUCTOR DEVICE, DIODE	17
2	1010269-2	TRANSISTOR, 2 AMP SILICON	16
2	1010376-1	TRANSISTOR, SILICON	15
1	1006793-19	CAPACITOR, FIXED GLASS DIELECTRIC	14
1	SEE NOTE 18	RESISTOR, FIXED FILM, 1/4 W	13
1	SEE NOTE 19	RESISTOR, FIXED FILM, 1/4 W	12
3	1010477-12	SCREW, FLAT	11
4	MS16995-9	SCREW, SOCKET HEAD	10
2	1004592	CUP, SPRING	9
2	MS35337-79	WASHER, LOCK	8
2	1004546-2	WASHER, FLAT	7
2	MS24565-32	SPRING, COIL	6
2	1004583	SCREW, CAPTIVE	5
1	1004595	INSULATOR, FRONT	4
1	1004821	INSULATOR, BACK	3
1	1003450	CONNECTOR PLATE ASSY	2
1	1004819-011	HOUSING	1
-011	LIST OF MATERIALS		

NEXT ASSY	USED ON
1003707	
1003706	

APPLICATION

UNLESS OTHERWISE SPECIFIED DIMENSIONS ARE IN INCHES
TOLERANCES ON
FRACTIONS ± DECIMALS ± ANGLES ±
DO NOT SCALE THIS DRAWING
MATERIAL
HEAT TREATMENT
FINAL FINISH

MIT INSTRUMENTATION LAB
CAMBRIDGE, MASS
DWG BY CONTRACT
DRAWN DATE
CHECKED
APPROVAL
APPROVAL
NASA APPROVAL
MIT APPROVAL
MIT APPROVAL

MANNED SPACECRAFT CENTER
HOUSTON, TEXAS

POWER SUPPLY ASSY
AGC DSKY, NAV & MAIN
100 SERIES

CODE IDENT NO. —— SIZE J NASA DRAWING NO. 1003811
SCALE 4/1 WT SHEET 1 OF 1

1003811 A

SYM	DESCRIPTION	DATE	APPROVAL
A	REVISED PER TDRR 17241 DR A. J. Bian CHK	2/24/6	
B	REVISED PER TDRR 20090 DR M. Riley CHK		

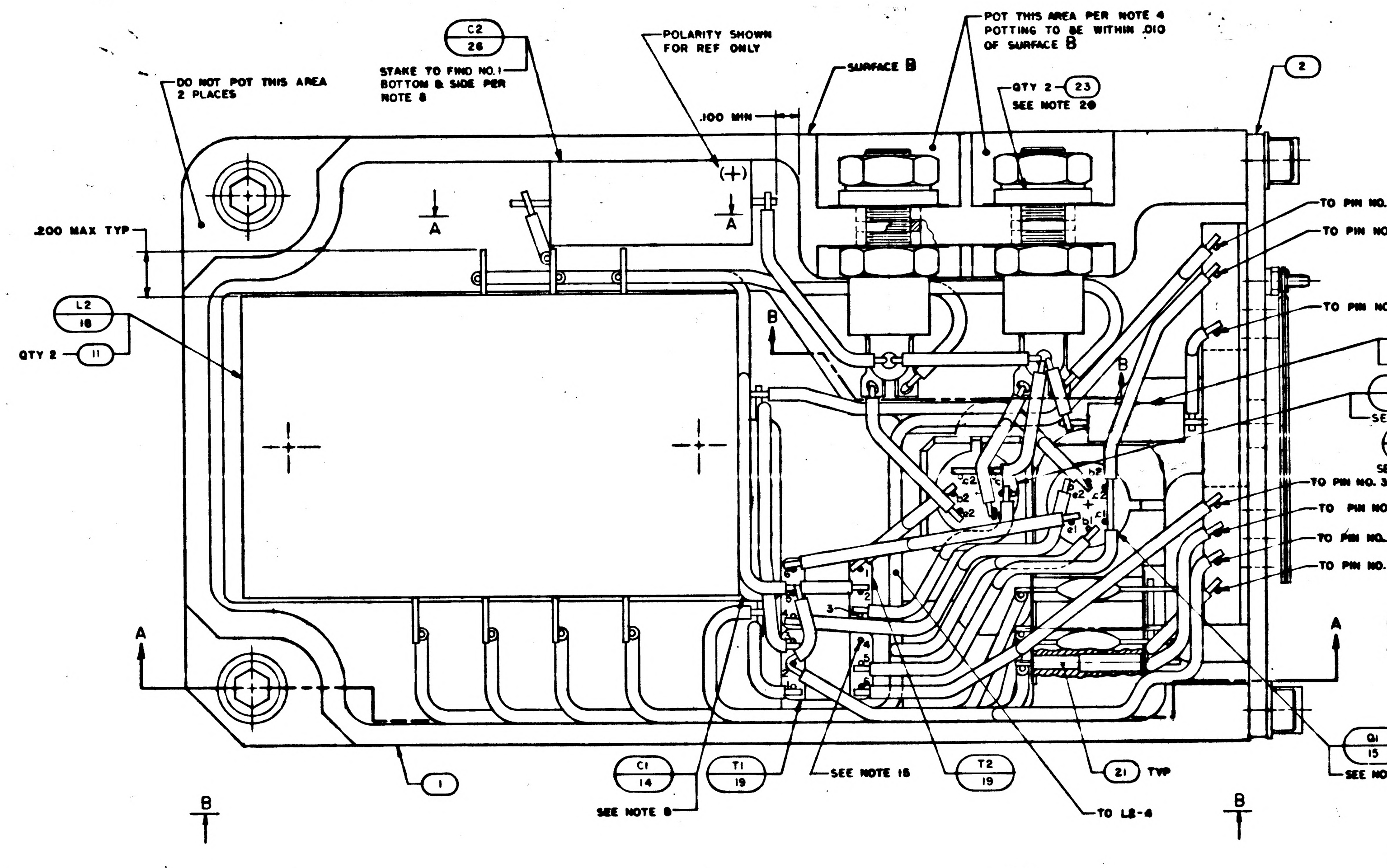
DO NOT POT THIS AREA 2 PLACES
C2 26
STAKE TO FIND NO. 1 BOTTOM & SIDE PER NOTE 8
POLARITY SHOWN FOR REF ONLY
.100 MIN
SURFACE B
POT THIS AREA PER NOTE 4 POTTING TO BE WITHIN .010 OF SURFACE B
QTY 2 23 SEE NOTE 20
2
.200 MAX TYP
L2 18
QTY 2 11
A
B
TO PIN NO. 10 & 11
TO PIN NO. 6
TO PIN NO. 4
L1 25 SEE NOTE 8
Q4 15 SEE NOTE 5
CR1 17 SEE NOTE 5
TO PIN NO. 3
TO PIN NO. 2 & 8
TO PIN NO. 1
TO PIN NO. 7
1
C1 14 SEE NOTE 8
T1 19
SEE NOTE 15
T2 19
21 TYP
TO L2-4
Q1 15 SEE NOTE 5

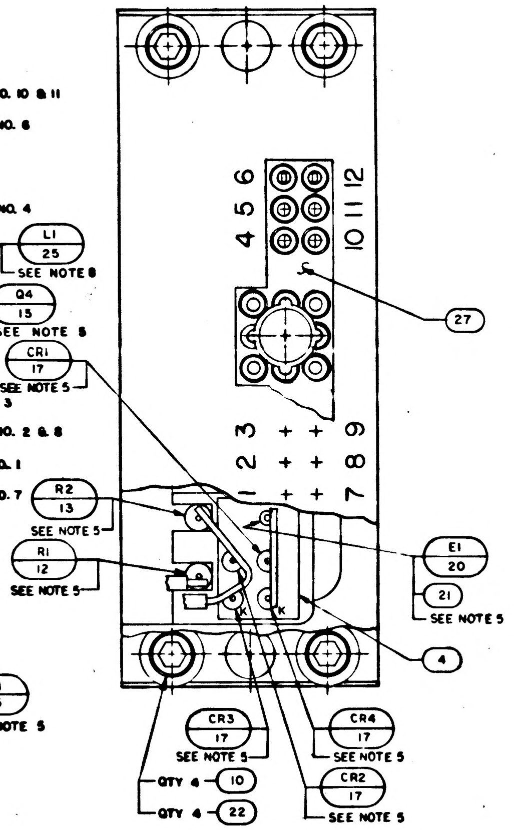
4 5 6
10 11 12
27
3 2 1
+ + +
9 8 7
R2 13 SEE NOTE 5
R1 12 SEE NOTE 5
E1 20
21 SEE NOTE 5
4
CR3 17 SEE NOTE 5
CR4 17 SEE NOTE 5
CR2 17 SEE NOTE 5
QTY 4 10
QTY 4 22

CHART A		CHART B	
PART NO.	VALUE	PART NO.	VALUE
1006750-19	300	1006750-41	2400
-22	390	-42	2700
-25	510	-43	3000
-27	620	-44	3300
-28	680	-45	3600
-29	750	-46	3900
-30	820	-47	4300
-31	910	1006750-48	4700
-32	1000		
-34	1200		
1006750-36	1500		

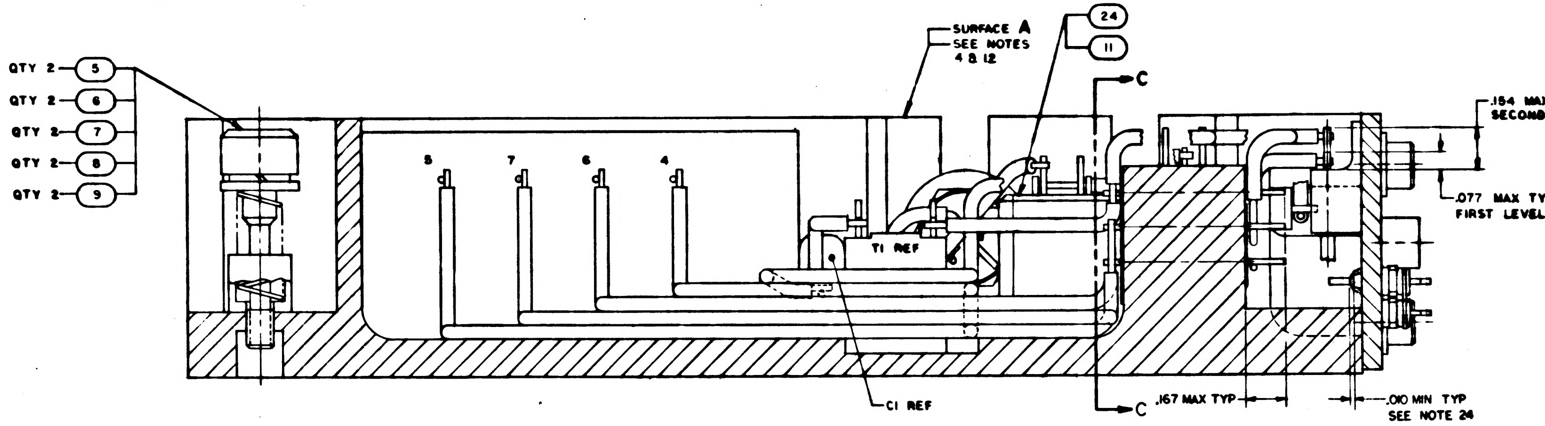
SURFACE A SEE NOTES 4 & 12
24
11
QTY 2 5
QTY 2 6
QTY 2 7
QTY 2 8
QTY 2 9
C
.154 MAX TYP SECOND LEVEL
.077 MAX TYP FIRST LEVEL
5 7 6 4
T1 REF
C1 REF
.167 MAX TYP
.010 MIN TYP SEE NOTE 24
C

SECTION A-A

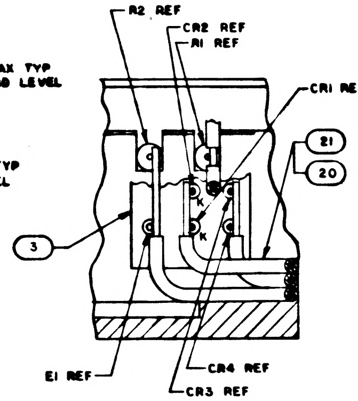
R2 REF
CR2 REF
R1 REF
CR1 REF
21
20
3
E1 REF
CR4 REF
CR3 REF

PARTIAL SECTION C-C

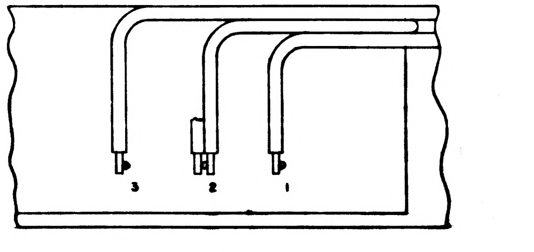

VIEW A-A

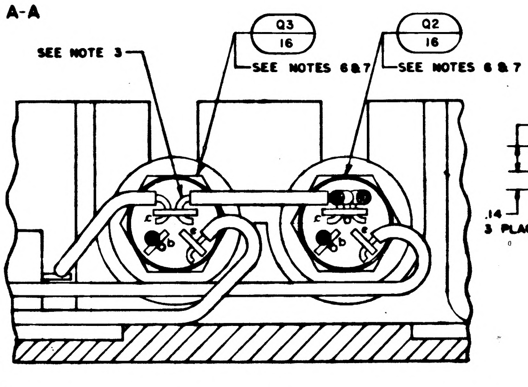
SEE NOTE 3
Q3 16 SEE NOTES 6 & 7
Q2 16 SEE NOTES 6 & 7

SECTION B-B

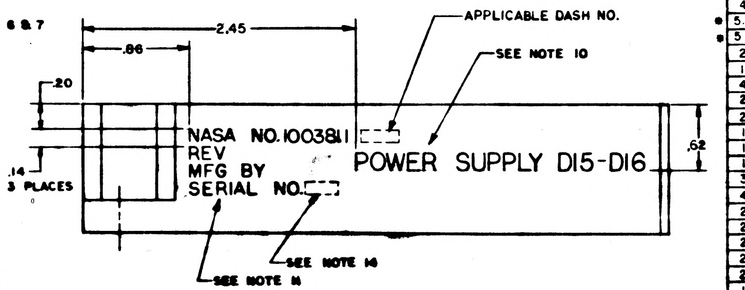
APPLICABLE DASH NO.
SEE NOTE 10
2.45
.86
.20
NASA NO. 1003811
REV
MFG BY
SERIAL NO.
POWER SUPPLY D15-D16
.62
.14 3 PLACES
SEE NOTE 14
SEE NOTE 11

VIEW B-B
SCALE 2/1

NOTES

1. INTERPRET DRAWING IN ACCORDANCE WITH STANDARDS PRESCRIBED BY MIL-D-70327
2. WELD PER ND1002005
3. SOLDER PER ND1002071
4. ENCAPSULATE PER ND1002002
5. STAKE PER ND1002009
6. MOUNTING TORQUE OF FIND NO. 16 TO BE 8-15 IN-LBS
7. NEW MICA WASHERS TO BE INSTALLED EACH TIME FIND NO. 16 IS DISASSEMBLED
8. BOND FIND NO. 19 & 14 TOGETHER & TO FIND NO. 1, AND FIND NO. 25 & 26 TO FIND NO. 1 PER ND 1002004, TYPE I OR TYPE V
9. ●BLACK DOT DENOTES LEAD TO CUT FOR SECOND LEVEL WIRING
10. MARK .115/.135 HIGH WHITE PER ND1002019 AND ND1002122 TYPE II, CLASS 2, USING MARKING INK 1006271-1
11. MARK .08/.10 HIGH WHITE PER ND1002019 AND ND1002122 TYPE II, CLASS 2, USING MARKING INK 1006271-1
12. POTTING TO BE WITHIN .010 OF SURFACE A
13. ALL VIEWS SHOWN WITH POTTING REMOVED FOR CLARITY
14. SERIALIZE PER ND1002023
15. PIN 4 TO BE CUT .010 TO .015 FROM SURFACE OF T1 ONLY
16. K DENOTES CATHODE SIDE OF DIODE
17. * DENOTES LENGTH IN FEET
18. VALUE OF FIND NO. 13 TO BE DETERMINED AND INSTALLED AT UNIT TEST. SELECT R2 FROM CHART A
19. VALUE OF FIND NO. 12 TO BE DETERMINED AND INSTALLED AT UNIT TEST. SELECT R1 FROM CHART B
20. REPLACE FLAT WASHER SUPPLIED WITH FIND NO. 16, WITH FIND NO. 23
21. RESISTOR VALUES ARE EXPRESSED IN OHMS UNLESS OTHERWISE SPECIFIED
~~22. FIND NO. 26 TO BE PRESS FITTED TO DIM. SHOWN~~
~~23. FILL WITH THERMALLY CONDUCTIVE RESIN PER ND1002 [illegible], DO NOT EVACUATE AFTER FILLING~~
24. SEAL AROUND CONTACT PIN & INSULATORS PER ND 1002004, TYPE VI
25. AR DENOTES AS REQUIRED
26. WORKMANSHIP, FABRICATION, AND INSPECTION REQUIREMENTS PER ND1002069

REF	1005756	SCHEMATIC, ELECTRICAL	
~~1~~	~~1004653~~	~~RECEPTACLE, TEST POINT~~	~~28~~
1	1004652	GASKET	27
1	1006755-134	CAPACITOR, FIXED, TANTALUM	26
1	1010406-7	COIL, RF CHOKE	25
1	1004820-011	HOLDER, COMPONENT	24
2	MS15795-808	WASHER, FLAT	23
4	MS15795-803	WASHER, FLAT	22
* 5.0	1006776-22	INSULATION SLEEVING	21
* 5.0	1006757-13	WIRE, ELECTRICAL	20
2	1010291-4	TRANSFORMER, AUDIO	19
1	1006726	SATURABLE REACTOR	18
4	1006751	SEMICONDUCTOR DEVICE, DIODE	17
2	1010269-2	TRANSISTOR, 2 AMP SILICON	16
2	1010376-1	TRANSISTOR, SILICON	15
1	1006793-19	CAPACITOR, FIXED GLASS DIELECTRIC	14
1	SEE NOTE 18	RESISTOR, FIXED FILM, .4 W	13
1	SEE NOTE 19	RESISTOR, FIXED FILM, .4 W	12
3	1010477-12	SCREW, FLAT	11
4	MS16995-9	SCREW, SOCKET HEAD	10
2	1004592	CUP, SPRING	9
2	MS35337-79	WASHER, LOCK	8
2	1004546-2	WASHER, FLAT	7
2	MS24585-32	SPRING, COIL	6
2	1004583	SCREW, CAPTIVE	5
1	1004595	INSULATOR, FRONT	4
1	1004821	INSULATOR, BACK	3
1	1003450	CONNECTOR PLATE ASSY	2
1	1004819-011	HOUSING	1
QTY REQD	PART OR IDENTIFYING NO.	NOMENCLATURE OR DESCRIPTION	FIND NO
-011	LIST OF MATERIALS		

NEXT ASSY	USED ON
1003707	
1003706	
APPLICATION	

UNLESS OTHERWISE SPECIFIED
DIMENSIONS ARE IN INCHES
TOLERANCES ON
FRACTIONS ± DECIMALS ± ANGLES ±
DO NOT SCALE THIS DRAWING
MATERIAL
HEAT TREATMENT
FINAL FINISH

MIT
INSTRUMENTATION LAB
CAMBRIDGE, MASS
DRAWN DATE
CHECKED
APPROVAL
APPROVAL
NASA APPROVAL
MIT APPROVAL
MIT APPROVAL

MANNED SPACECRAFT CENTER
HOUSTON, TEXAS

POWER SUPPLY ASSY
AGC DSKY, NAV & MAIN
100 SERIES

CODE IDENT NO 80230
SIZE J
NASA DRAWING NO. 1003811
SCALE 4/1
WT
SHEET 1 OF 1

REVISIONS 14667			
SYM	DESCRIPTION	DATE	APPROVAL

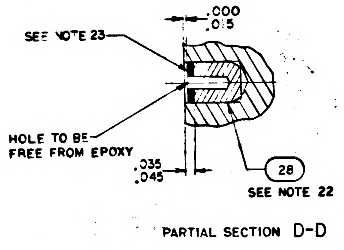
SEE NOTE 23
.000
.015
HOLE TO BE FREE FROM EPOXY
.035
.045
28
SEE NOTE 22

PARTIAL SECTION D-D

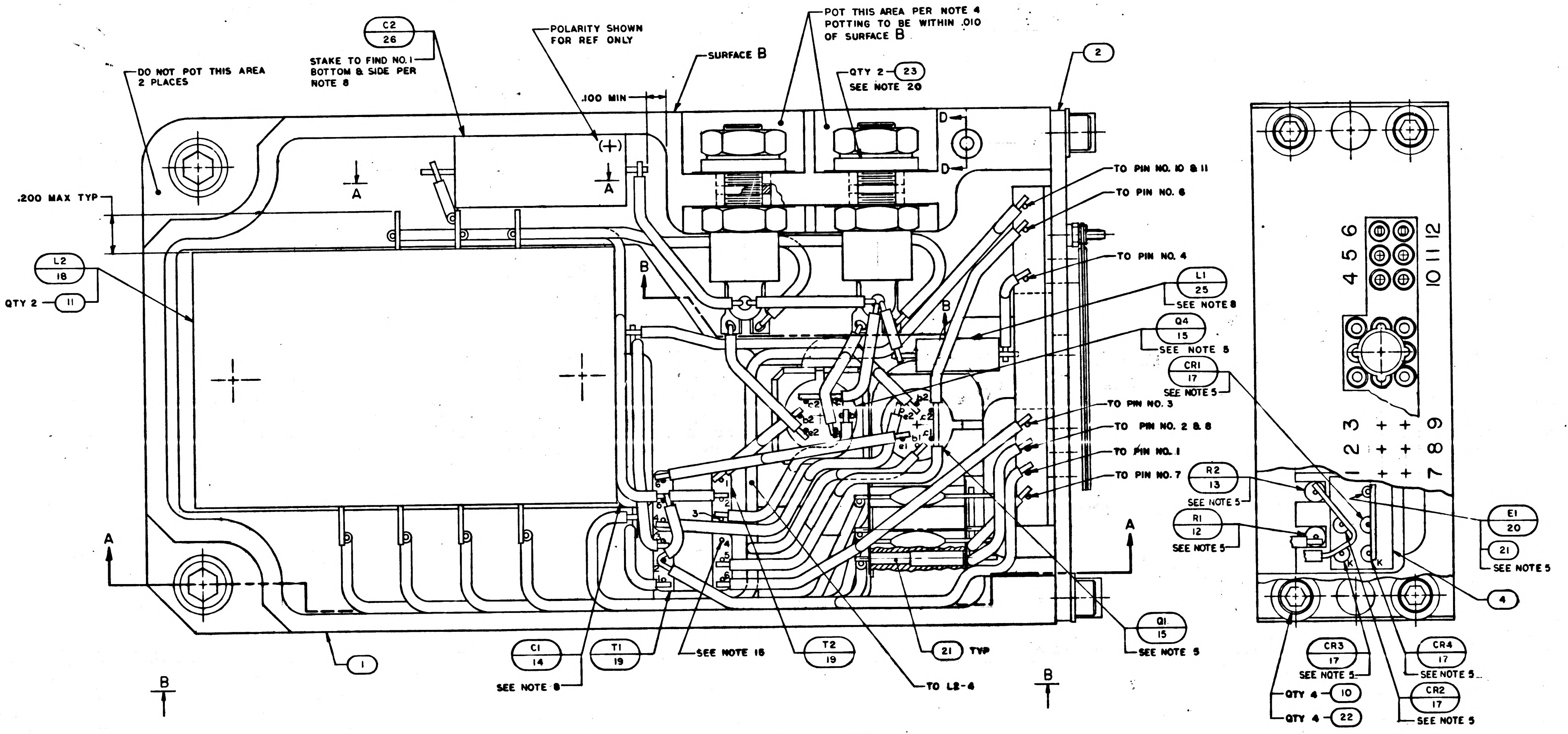
DO NOT POT THIS AREA 2 PLACES
C2
26
STAKE TO FIND NO. 1 BOTTOM & SIDE PER NOTE 8
POLARITY SHOWN FOR REF ONLY
(+)
.100 MIN
SURFACE B
POT THIS AREA PER NOTE 4 POTTING TO BE WITHIN .010 OF SURFACE B
QTY 2
23
SEE NOTE 20
2
D
D
A
A
.200 MAX TYP
L2
18
QTY 2
11
B
B
TO PIN NO. 10 & 11
TO PIN NO. 6
TO PIN NO. 4
L1
25
SEE NOTE 8
Q4
15
SEE NOTE 5
CR1
17
SEE NOTE 5
TO PIN NO. 3
TO PIN NO. 2 & 8
TO PIN NO. 1
TO PIN NO. 7
R2
13
SEE NOTE 5
R1
12
SEE NOTE 5
E1
20
21
SEE NOTE 5
4
A
A
1
C1
14
SEE NOTE 8
T1
19
SEE NOTE 15
T2
19
21 TYP
TO L2-4
Q1
15
SEE NOTE 5
B
B
4 5 6
10 11 12
1 2 3
7 8 9
CR3
17
SEE NOTE 5
CR4
17
SEE NOTE 5
CR2
17
SEE NOTE 5
QTY 4
10
QTY 4
22

CHART A		CHART B	
PART NO.	VALUE	PART NO.	VALUE
1006750-19	300	1006750-41	2400
-22	390	-42	2700
-25	510	-43	3000
-27	620	-44	3300
-28	680	-45	3600
-29	750	-46	3900
-30	820	-47	4300
-31	910	1006750-48	4700
-32	1000		
-34	1200		
1006750-36	1500		

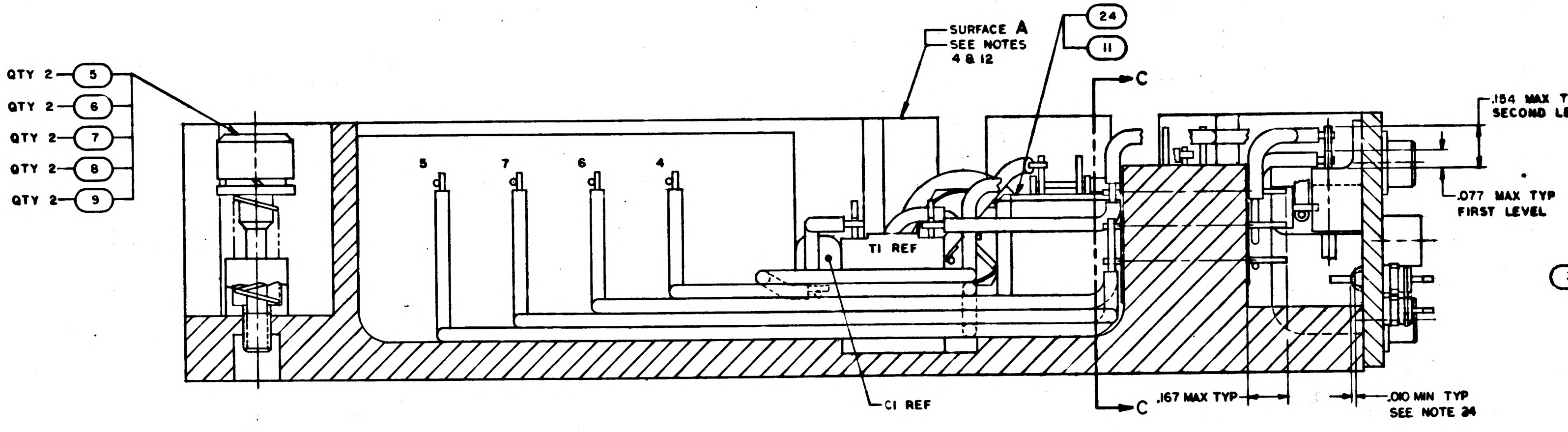
QTY 2
5
QTY 2
6
QTY 2
7
QTY 2
8
QTY 2
9
SURFACE A
SEE NOTES 4 & 12
24
11
C
5
7
6
4
T1 REF
.154 MAX TYP SECOND LEVEL
.077 MAX TYP FIRST LEVEL
C1 REF
C
.167 MAX TYP
.010 MIN TYP SEE NOTE 24

SECTION A-A

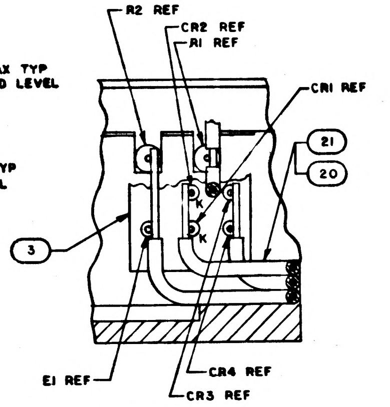
R2 REF
CR2 REF
R1 REF
CR1 REF
21
20
3
K
E1 REF
CR4 REF
CR3 REF

PARTIAL SECTION C-C

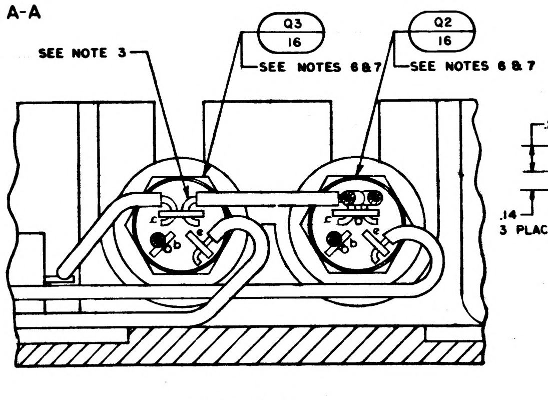
SEE NOTE 3
Q3
16
SEE NOTES 6 & 7
Q2
16
SEE NOTES 6 & 7

SECTION B-B

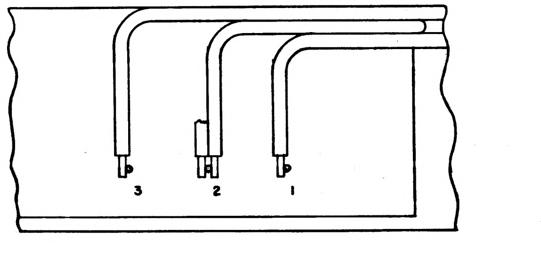

VIEW A-A

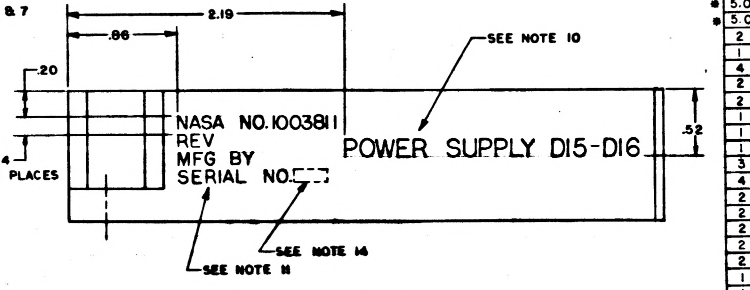
2.19
.86
.20
.14
3 PLACES
NASA NO. 1003811
REV
MFG BY
SERIAL NO.
POWER SUPPLY D15-D16
.52
SEE NOTE 10
SEE NOTE 14
SEE NOTE 11

VIEW B-B
SCALE 2/1

REF	1005756	SCHEMATIC, ELECTRICAL	
1	1004663	RECEPTACLE, TEST POINT	28
1	1004652	GASKET	27
1	1006755-134	CAPACITOR, FIXED, TANTALUM	26
1	1010406-7	COIL, RF CHOKE	25
1	1004820-011	HOLDER, COMPONENT	24
2	MS15795-808	WASHER, FLAT	23
4	MS15795-803	WASHER, FLAT	22
● 5.0	1006776-22	INSULATION SLEEVING	21
● 5.0	1006757-13	WIRE, ELECTRICAL	20
2	1010291-4	TRANSFORMER, AUDIO	19
1	1006726	SATURABLE REACTOR	18
4	1006751	SEMICONDUCTOR DEVICE, DIODE	17
2	1010269-2	TRANSISTOR, 2 AMP SILICON	16
2	1010376-1	TRANSISTOR, SILICON	15
1	1006793-19	CAPACITOR, FIXED GLASS DIELECTRIC	14
1	SEE NOTE 18	RESISTOR, FIXED FILM, 1/4 W	13
1	SEE NOTE 19	RESISTOR, FIXED FILM, 1/4 W	12
3	1010477-12	SCREW, FLAT	11
4	MS16995-9	SCREW, SOCKET HEAD	10
2	1004592	CUP, SPRING	9
2	MS35337-79	WASHER, LOCK	8
2	1004546-2	WASHER, FLAT	7
2	MS24585-32	SPRING, COIL	6
2	1004583	SCREW, CAPTIVE	5
1	1004595	INSULATOR, FRONT	4
1	1004821	INSULATOR, BACK	3
1	1003450	CONNECTOR PLATE ASSY	2
1	1004819-011	HOUSING	1
QTY REQD	PART OR IDENTIFYING NO.	NOMENCLATURE OR DESCRIPTION	FIND NO.
-011	LIST OF MATERIALS		

NOTES
1. INTERPRET DRAWING IN ACCORDANCE WITH STANDARDS PRESCRIBED BY MIL-D-70327
2. WELD PER ND1002003 AND ND1002005
3. SOLDER PER ND1002071
4. ENCAPSULATE PER ND1002002
5. STAKE PER ND1002009
6. MOUNTING TORQUE OF FIND NO. 16 TO BE 8-15 IN-LBS
7. NEW MICA WASHERS TO BE INSTALLED EACH TIME FIND NO. 16 IS DISASSEMBLED
8. BOND FIND NO. 19 & 14 TOGETHER & TO FIND NO. 1, AND FIND NO. 25 & 26 TO FIND NO. 1 PER ND 1002004 TYPE I
9. ●BLACK DOT DENOTES LEAD TO CUT FOR SECOND LEVEL WIRING
10. MARK .125 HIGH WHITE PER ND1002019 AND ND1002122 TYPE II, CLASS 2, USING MARKING INK 1006271-1
11. MARK .093 HIGH WHITE PER ND1002019 AND ND1002122 TYPE II, CLASS 2, USING MARKING INK 1006271-1
12. POTTING TO BE WITHIN .010 OF SURFACE A
13. ALL VIEWS SHOWN WITH POTTING REMOVED FOR CLARITY
14. SERIALIZE PER ND1002023
15. PIN 4 TO BE CUT .010 TO .015 FROM SURFACE OF T1 ONLY
16. K DENOTES CATHODE SIDE OF DIODE
17. ● DENOTES LENGTH IN FEET
18. VALUE OF FIND NO. 13 TO BE DETERMINED AND INSTALLED AT UNIT TEST. SELECT R2 FROM CHART A
19. VALUE OF FIND NO. 12 TO BE DETERMINED AND INSTALLED AT UNIT TEST. SELECT R1 FROM CHART B
20. REPLACE FLAT WASHER SUPPLIED WITH FIND NO. 16, WITH FIND NO. 23
21. RESISTOR VALUES ARE EXPRESSED IN OHMS UNLESS OTHERWISE SPECIFIED
22. FIND NO. 28 TO BE PRESS FITTED TO DIM. SHOWN
23. FILL WITH THERMALLY CONDUCTIVE RESIN PER ND1002183, DO NOT EVACUATE AFTER FILLING
24. SEAL AROUND CONTACT PIN & INSULATORS PER ND 1002004, TYPE VI
25. AR DENOTES AS REQUIRED

1003707	
1003706	
NEXT ASSY	USED ON
APPLICATION	

UNLESS OTHERWISE SPECIFIED
DIMENSIONS ARE IN INCHES
TOLERANCES ON
FRACTIONS ± DECIMALS ± ANGLES ±
DO NOT SCALE THIS DRAWING
MATERIAL
HEAT TREATMENT
FINAL FINISH

MIT
INSTRUMENTATION LAB
CAMBRIDGE, MASS
DWG NO
CONTRACT
DRAWN D.Q. Clement DATE 16 MAR 64
CHECKED R. Edwards 17 Mar 64
APPROVAL
APPROVAL
NASA APPROVAL
MIT APPROVAL
MIT APPROVAL

MANNED SPACECRAFT CENTER
HOUSTON, TEXAS

POWER SUPPLY ASSY
AGC DSKY, NAV & MAIN
100 SERIES

CODE IDENT NO. —
SIZE J
NASA DRAWING NO. 1003811
SCALE 4/1
WT
SHEET 1 OF

MASTER

SYM	DESCRIPTION	DATE	APPROVAL
A	REVISED PER TDRR 16353 DR [illegible] CHK [illegible]	3/[illegible]	[illegible]

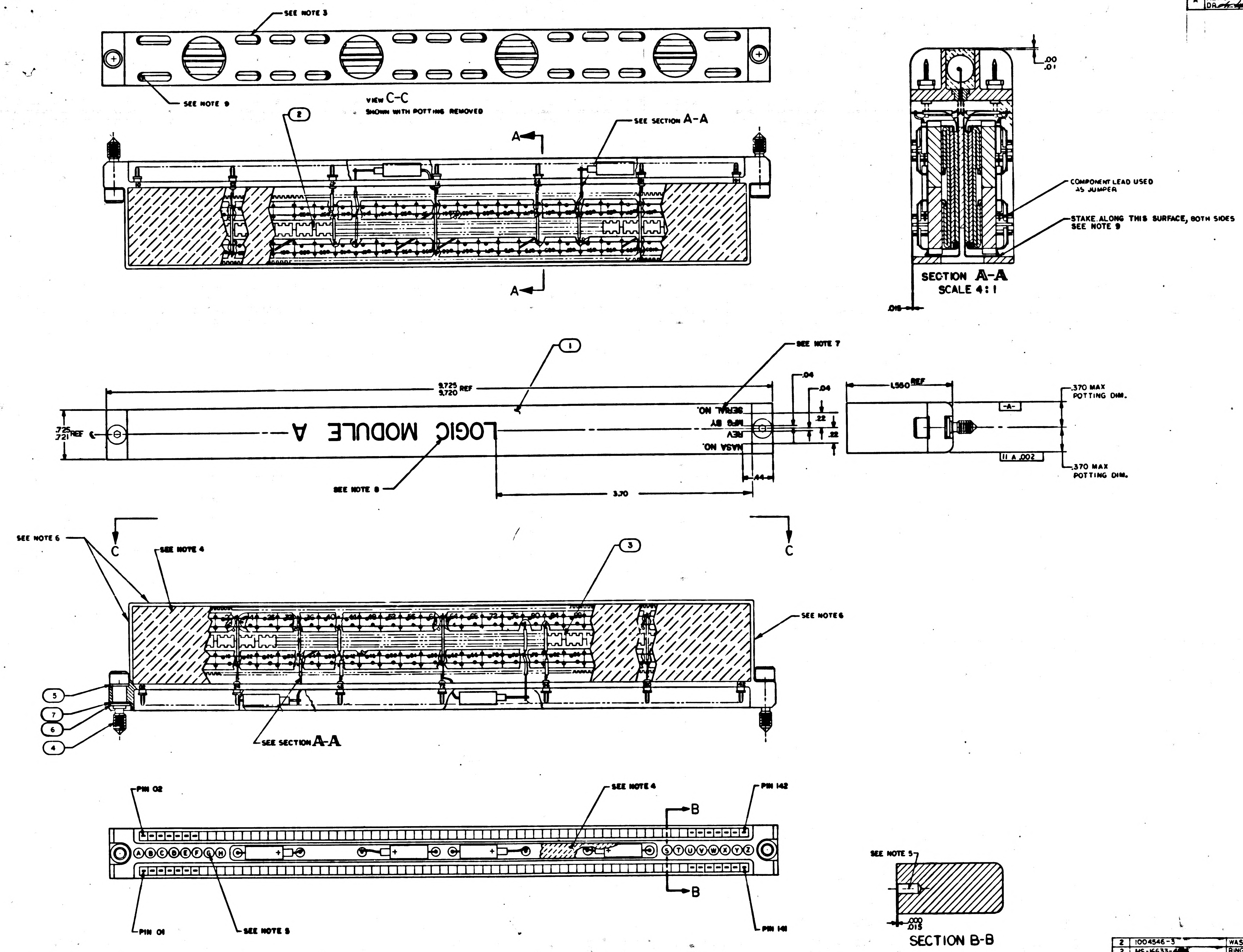

SEE NOTE 3
SEE NOTE 9
VIEW C-C
SHOWN WITH POTTING REMOVED
2
SEE SECTION A-A
A
.00
.01
COMPONENT LEAD USED AS JUMPER
STAKE ALONG THIS SURFACE, BOTH SIDES
SEE NOTE 9
SECTION A-A
SCALE 4:1
.015
1
SEE NOTE 7
3.725
3.720
REF
.04
.04
.22
.22
1.560 REF
-A-
.370 MAX POTTING DIM.
SERIAL NO.
MFG BY
REV
NASA NO.
LOGIC MODULE A
.725
.721
REF
SEE NOTE 8
3.70
.44
11 A .002
.370 MAX POTTING DIM.
C
C
SEE NOTE 6
SEE NOTE 4
3
SEE NOTE 6
5
7
6
4
SEE SECTION A-A
PIN 02
SEE NOTE 4
PIN 142
B
A B C D E F G H
S T U V W X Y Z
B
PIN 01
SEE NOTE 5
PIN 141
SEE NOTE 5
.000
.015
SECTION B-B

NOTES:

1. INTERPRET DWG IN ACCORDANCE WITH STANDARDS PRESCRIBED BY MIL-D-70327
2. WELD PER ND 1002005 & ND 1002003
3. POTTING MATERIAL IN SLOTS AND HOLES TO BE .005 ABOVE FLUSH TO .010 BELOW FLUSH
4. ENCAPSULATE WITH POLYURETHANE FOAM PER ND 1002002 (BLACK)
5. FILL KEYING POSITIONS INDICATED BY CHART WITH THERMALLY CONDUCTIVE EPOXY RESIN PER ND 1002188. DO NOT EVACUATE AFTER FILLING
6. SPRAY COAT TOP SURFACE AND ENDS PER ND 1002040 FLAT BLACK
7. MARK .08/.10 HIGH WHT PER ND1002019 AND ND 1002122 TYPE II CLASS I, SERIALIZE PER ND1002023, USING MARKING INK 1006271-1
8. MARK .24/.26 HIGH WHT PER ND 1002019 AND ND 1002122 TYPE II CLASS I. USING MARKING INK 1006271-1
9. STAKE FIND NO. 2 & 3 TO FIND NO. 1 PER ND1002004, FLOW STAKING COMPOUND PARTIALLY INTO SLOTS

QTY REQD	PART OR IDENTIFYING NO.	NOMENCLATURE OR DESCRIPTION	FIND NO
2	1004546-3	WASHER, FLAT	7
2	MS-16633-4[illegible]	RING, RETAINING, EXTERNAL "E"	6
2	1004546-1	WASHER, FLAT	5
2	1004579-1	SCREW, JACKING	4
1	SEE CHART	MICRO LOGIC MODULE, SUB-ASS. (EVEN)	3
1	SEE CHART	MICRO LOGIC MODULE, SUB-ASSY (ODD)	2
1	1003110	HEADER HOUSING ASSEMBLY	1

LIST OF MATERIALS

NEXT ASSY	USED ON
1003700	

APPLICATION

UNLESS OTHERWISE SPECIFIED
DIMENSIONS ARE IN INCHES
TOLERANCES ON
FRACTIONS ± —
DECIMALS ±.03
ANGLES ± —
DO NOT SCALE THIS DRAWING
MATERIAL —
HEAT TREATMENT —
FINAL FINISH —

MIT
INSTRUMENTATION LAB
CAMBRIDGE, MASS.
DRAWN [illegible] DATE [illegible]
CHECKED [illegible] 21 Dec 64
APPROVAL
APPROVAL E C Hall [illegible]
NASA APPROVAL [illegible] 12-29-64
MIT APPROVAL [illegible] 22 Dec 64

MANNED SPACECRAFT CENTER
HOUSTON, TEXAS

LOGIC MODULE ASSY
(TABULATED)

CODE IDENT NO. —
SIZE E
NASA DRAWING NO. 1003812
SCALE 2/1
WT
SHEET 1 OF 2

REVISIONS			
SYM	DESCRIPTION	DATE	APPROVAL
★	REVISED PER TDRR 16353 DR [illegible] CHK [illegible]	[illegible]	

-15137

MODULE NO.	PART NO.	REV	EVEN	ODD	REF FLOW	REF WIRING	KEY POSITIONS
A17	1003812-1	–	1003813-2	1003814-2	1006543	1006123	ACDESTUY
A18	1003812-2	–	1003813-3	1003814-3	1006542	1006122	AFGHVWXY
A21	1003812-3	–	1003813-4	1003814-4	1006556	1006136	AEFGUVWY
A22	1003812-4	–	1003813-5	1003814-5	1006553	1006133	ACDFSTVY
A23	1003812-5	–	1003813-6	1003814-6	1006545	1006125	ACDGSTWY
A24	1003812-6	–	1003813-7	1003814-7	1006555	1006135	ACDHSTXY
A25	1003812-7	–	1003813-8	1003814-8	1006554	1006134	ACEFSUVY
A26	1003812-8	–	1003813-9	1003814-9	1006549	1006129	ACEGSUWY
A27	1003812-9	–	1003813-10	1003814-10	1006544	1006124	ACEHSUXY
A28	1003812-10	–	1003813-11	1003814-11	1006552	1006132	ACFGSVWY
A29	1003812-11	–	1003813-12	1003814-12	1005763	1005761	ACFHSVXY
A30-A31	1003812-12	–	1003813-13	1003814-13	1006548	1006128	ACGHSWXY
A32	1003812-13	–	1003813-14	1003814-14	1006546	1006126	ADEGTUWY
A33-A34	1003812-14	–	1003813-15	1003814-15	1006547	1006127	ADEHTUXY
A35	1003812-15	–	1003813-16	1003814-16	1006541	1006121	ADFGTVWY
A36	1003812-16	–	1003813-17	1003814-17	1006557	1006137	ADFHTVXY
A37	1003812-17	–	1003813-18	1003814-18	1006550	1006130	ADGHTWXY
A38	1003812-18	–	1003813-19	1003814-19	1006551	1006131	AEFHUVXY

MASTER

QTY REQD	PART OR IDENTIFYING NO.	NOMENCLATURE OR DESCRIPTION	FIND NO

LIST OF MATERIALS

UNLESS OTHERWISE SPECIFIED
DIMENSIONS ARE IN INCHES
TOLERANCES ON
FRACTIONS ± DECIMALS ± ANGLES ±
DO NOT SCALE THIS DRAWING
MATERIAL
HEAT TREATMENT
FINAL FINISH

NEXT ASSY | USED ON
APPLICATION

MIT
INSTRUMENTATION LAB
CAMBRIDGE, MASS.
DRAWN [illegible] DATE [illegible]
CHECKED [illegible]
APPROVAL
APPROVAL E C [illegible]
NASA APPROVAL [illegible] 2-28-64
MIT APPROVAL [illegible] 22 [illegible]

MANNED SPACECRAFT CENTER
HOUSTON, TEXAS

LOGIC MODULE ASSY
(TABULATED)

CODE IDENT NO. —
SIZE E
NASA DRAWING NO. 1003812
SCALE
WT
SHEET 2 OF 2

SYM	DESCRIPTION	DATE	APPROVAL
A	REVISED PER TDRR 16353 DR CHK R.A.S.	3/24/65	HAC
B	REVISED PER TDRR 16956 DP Buchanan CHK APPD	4/15/65	

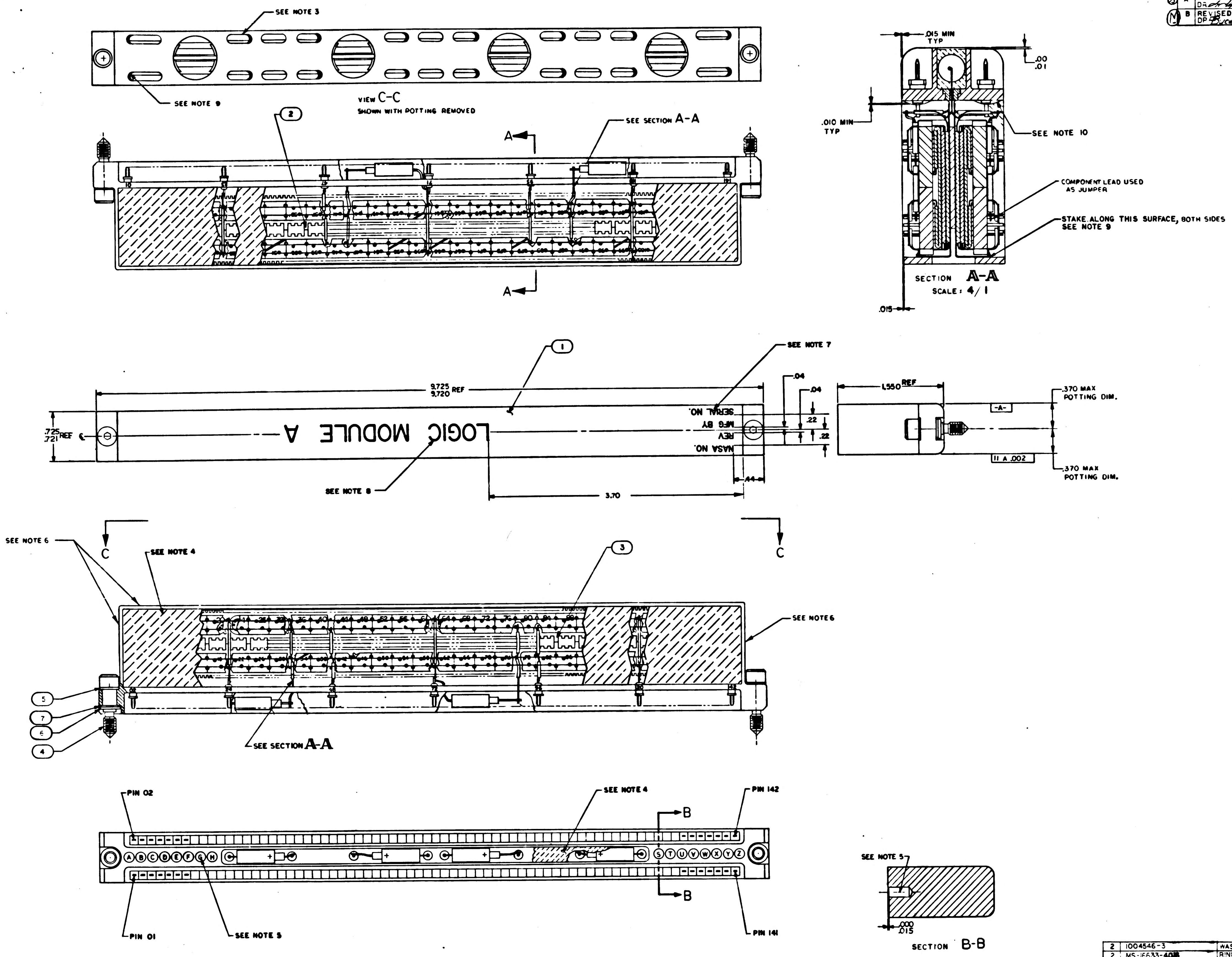

SEE NOTE 3
SEE NOTE 9
VIEW C-C
SHOWN WITH POTTING REMOVED
2
SEE SECTION A-A
A
A
.015 MIN
TYP
.00
.01
.010 MIN
TYP
SEE NOTE 10
COMPONENT LEAD USED AS JUMPER
STAKE ALONG THIS SURFACE, BOTH SIDES
SEE NOTE 9
SECTION A-A
SCALE: 4/1
.015
1
SEE NOTE 7
9.725
9.720 REF
.04
.04
.22
.22
.725
.721 REF
LOGIC MODULE A
SERIAL NO.
MFG BY
REV
NASA NO.
SEE NOTE 8
.44
3.70
1.550 REF
.370 MAX
POTTING DIM.
-A-
II A .002
.370 MAX
POTTING DIM.
SEE NOTE 6
SEE NOTE 4
C
C
3
SEE NOTE6
5
7
6
4
SEE SECTION A-A
PIN 02
SEE NOTE 4
PIN 142
B
B
A B C D E F G H
S T U V W X Y Z
PIN 01
SEE NOTE 5
PIN 141
SEE NOTE 5
.000
.015
SECTION B-B

NOTES:

1. INTERPRET DWG IN ACCORDANCE WITH STANDARDS PRESCRIBED BY MIL-D-70327
2. WELD PER ND 1002005 & ND1002003
3. POTTING MATERIAL IN SLOTS AND HOLES TO BE .005 ABOVE FLUSH TO .010 BELOW FLUSH
4. ENCAPSULATE WITH POLYURETHANE FOAM PER ND 1002002 (BLACK)
5. FILL KEYING POSITIONS INDICATED BY CHART WITH THERMALLY CONDUCTIVE EPOXY RESIN PER ND 1002183. DO NOT EVACUATE AFTER FILLING
6. SPRAY COAT TOP SURFACE AND ENDS PER ND 1002040 FLAT BLACK
7. MARK .08/.10 HIGH WHT PER ND1002019 AND ND 1002122 TYPE II CLASS I, SERIALIZE PER ND1002023, USING MARKING INK 1006271-1
8. MARK .24/.26 HIGH WHT PER ND 1002019 AND ND 1002122 TYPE II CLASS I. USING MARKING INK 1006271-1
9. STAKE FIND NO. 2 & 3 TO FIND NO. 1 PER ND1002004, TYPE II, FLOW STAKING COMPOUND PARTIALLY INTO SLOTS
10. SEAL INSULATORS & TERMINALS TO HEADER PER ND 1002004 TYPE VI
11. WORKMANSHIP, FABRICATION AND INSPECTION REQUIREMENTS PER ND 1002069 EXCEPT TWIST LEADS AS SHOWN

QTY REQD	PART OR IDENTIFYING NO.	NOMENCLATURE OR DESCRIPTION	FIND NO
2	1004546-3	WASHER, FLAT	7
2	MS-16633-4018	RING, RETAINING, EXTERNAL "E"	6
2	1004546-1	WASHER, FLAT	5
2	1004579-1	SCREW, JACKING	4
1	SEE CHART	MICRO LOGIC MODULE, SUB-ASSY (EVEN)	3
1	SEE CHART	MICRO LOGIC MODULE, SUB-ASSY (ODD)	2
1	1003110	HEADER HOUSING ASSEMBLY	1

LIST OF MATERIALS

NEXT ASSY	USED ON
1003700	

APPLICATION

UNLESS OTHERWISE SPECIFIED
DIMENSIONS ARE IN INCHES
TOLERANCES ON
FRACTIONS ± — DECIMALS ±.03 ANGLES ± —
DO NOT SCALE THIS DRAWING
MATERIAL —
HEAT TREATMENT —
FINAL FINISH —

MIT
INSTRUMENTATION LAB
CAMBRIDGE, MASS
DRAWN DATE
CHECKED
APPROVAL
APPROVAL E C Hall
NASA APPROVAL 12-29-64
MIT APPROVAL 22 Dec 64

MANNED SPACECRAFT CENTER
HOUSTON, TEXAS

LOGIC MODULE ASSY
(TABULATED)

CODE IDENT NO. —
SIZE E
NASA DRAWING NO. 1003812
SCALE 2/1
WT
SHEET 1 OF 2

REVISIONS			
SYM	DESCRIPTION	DATE	APPROVAL
A	REVISED PER TDRR 16353 DR CHK	3/24/65	
B	REVISED PER TDRR 16956 DR CHK APPD	4/15/65	

MODULE NO.	PART NO.	REV	EVEN	ODD	REF FLOW	REF WIRING	KEY POSITIONS
A17	1003812-1	B	1003813-2	1003814-2	1006543	1006123	ACDESTUY
A18	1003812-2	↑	1003813-3	1003814-3	1006542	1006122	AFGHVWXY
A21	1003812-3		1003813-4	1003814-4	1006556	1006136	AEFGUVWY
A22	1003812-4		1003813-5	1003814-5	1006553	1006133	ACDFSTVY
A23	1003812-5		1003813-6	1003814-6	1006545	1006125	ACDGSTWY
A24	1003812-6		1003813-7	1003814-7	1006555	1006135	ACDHSTXY
A25	1003812-7		1003813-8	1003814-8	1006554	1006134	ACEFSUVY
A26	1003812-8		1003813-9	1003814-9	1006549	1006129	ACEGSUWY
A27	1003812-9		1003813-10	1003814-10	1006544	1006124	ACEHSUXY
A28	1003812-10		1003813-11	1003814-11	1006552	1006132	ACFGSVWY
A29	1003812-11		1003813-12	1003814-12	1005763	1005761	ACFHSVXY
A30-A31	1003812-12		1003813-13	1003814-13	1006548	1006128	ACGHSWXY
A32	1003812-13		1003813-14	1003814-14	1006546	1006126	ADEGTUWY
A33-A34	1003812-14		1003813-15	1003814-15	1006547	1006127	ADEHTUXY
A35	1003812-15		1003813-16	1003814-16	1006541	1006121	ADFGTVWY
A36	1003812-16		1003813-17	1003814-17	1006557	1006137	ADFHTVXY
A37	1003812-17	↓	1003813-18	1003814-18	1006550	1006130	ADGHTWXY
A38	1003812-18	B	1003813-19	1003814-19	1006551	1006131	AEFHUVXY

MASTER

QTY REQD	PART OR IDENTIFYING NO.	NOMENCLATURE OR DESCRIPTION	FIND NO

LIST OF MATERIALS

NEXT ASSY	USED ON
APPLICATION	

UNLESS OTHERWISE SPECIFIED
DIMENSIONS ARE IN INCHES
TOLERANCES ON
FRACTIONS ± DECIMALS ± ANGLES ±
DO NOT SCALE THIS DRAWING
MATERIAL
HEAT TREATMENT
FINAL FINISH

MIT
INSTRUMENTATION LAB
CAMBRIDGE, MASS
DRAWN DATE
CHECKED
APPROVAL
APPROVAL E C
NASA APPROVAL 2-20-64
MIT APPROVAL 22

MANNED SPACECRAFT CENTER
HOUSTON, TEXAS

LOGIC MODULE ASSY
(TABULATED)

CODE IDENT NO. —
SIZE E
NASA DRAWING NO. 1003812
SCALE
WT
SHEET 2 OF 2

SYM	REVISIONS DESCRIPTION	DATE	APPROVAL

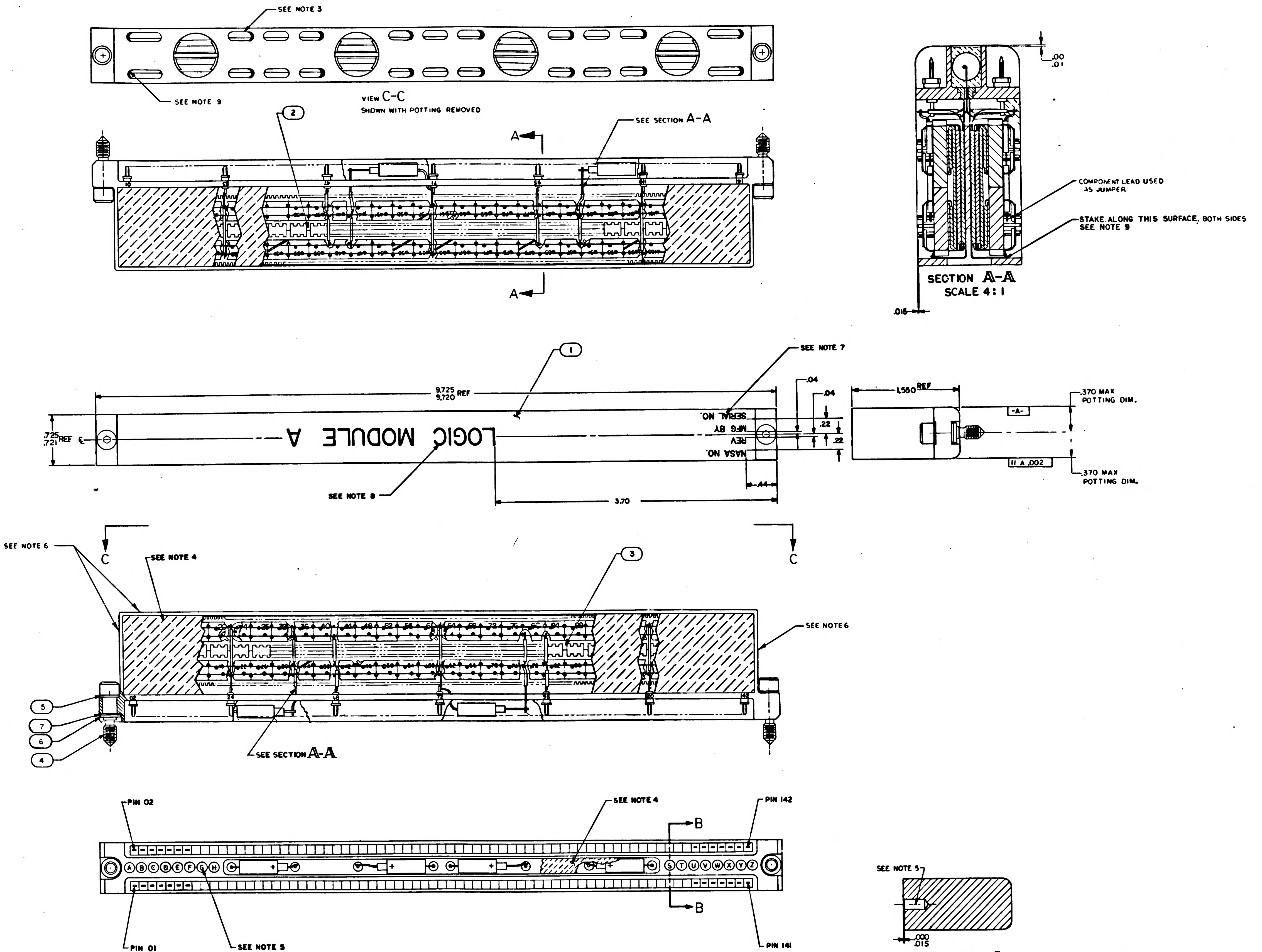
SEE NOTE 3
SEE NOTE 9
VIEW C-C
SHOWN WITH POTTING REMOVED
2
SEE SECTION A-A
A
A
.00
.01
COMPONENT LEAD USED AS JUMPER
STAKE ALONG THIS SURFACE, BOTH SIDES SEE NOTE 9
SECTION A-A
SCALE 4:1
.015
1
SEE NOTE 7
9.725
9.720
REF
.04
.04
L.550 REF
.725
.721
REF
SERIAL NO.
MFG BY
REV
NASA NO.
LOGIC MODULE A
.22
.22
-A-
.370 MAX POTTING DIM.
.370 MAX POTTING DIM.
II A .002
SEE NOTE 8
.44
3.70
C
C
SEE NOTE 6
SEE NOTE 4
3
SEE NOTE 6
5
7
6
4
SEE SECTION A-A
PIN 02
SEE NOTE 4
B
PIN 142
A B C D E F G H
S T U V W X Y Z
B
PIN 01
SEE NOTE 5
PIN 141
SEE NOTE 5
.000
.015
SECTION B-B

NOTES:

1. INTERPRET DWG IN ACCORDANCE WITH STANDARDS PRESCRIBED BY MIL-D-70327
2. WELD PER ND 1002005
3. POTTING MATERIAL IN SLOTS AND HOLES TO BE .005 ABOVE FLUSH TO .010 BELOW FLUSH
4. ENCAPSULATE WITH POLYURETHANE FOAM PER ND 1002002 (BLACK)
5. FILL KEYING POSITIONS INDICATED BY CHART WITH THERMALLY CONDUCTIVE EPOXY RESIN PER ND 1002183
6. SPRAY COAT TOP SURFACE AND ENDS PER ND 1002040 FLAT BLACK
7. MARK .093 HIGH WHITE PER ND1002019 AND ND 1002122 TYPE II CLASS I, SERIALIZE PER ND1002023, USING MARKING INK 1006271-1
8. MARK .250 HIGH WHITE. PER ND 1002019 AND ND 1002122 TYPE II CLASS I, USING MARKING INK 1006271-1
9. STAKE FIND NO. 2 & 3 TO FIND NO. 1 PER ND1002004, FLOW STAKING COMPOUND PARTIALLY INTO SLOTS

MASTER

QTY REQD	PART OR IDENTIFYING NO.	NOMENCLATURE OR DESCRIPTION	FIND NO.
2	1004546-3	WASHER, FLAT	7
2	MS-16633-4016	RING, RETAINING, EXTERNAL "E"	6
2	1004546-1	WASHER, FLAT	5
2	1004579-1	SCREW, JACKING	4
1	SEE CHART	MICRO LOGIC MODULE, SUB-ASSY (EVEN)	3
1	SEE CHART	MICRO LOGIC MODULE, SUB-ASSY (ODD)	2
1	1003110	HEADER HOUSING ASSEMBLY	1

LIST OF MATERIALS

NEXT ASSY	USED ON
1003700	

APPLICATION

UNLESS OTHERWISE SPECIFIED DIMENSIONS ARE IN INCHES
TOLERANCES ON
FRACTIONS ± — DECIMALS ±.05 ANGLES ± —
DO NOT SCALE THIS DRAWING
MATERIAL —
HEAT TREATMENT —
FINAL FINISH —

MIT
INSTRUMENTATION LAB
CAMBRIDGE, MASS
DWG NO. CONTRACT
DRAWN [illegible] DATE [illegible]
CHECKED [illegible] 21 Dec 64
APPROVAL
APPROVAL E C Hall [illegible]
NASA APPROVAL [illegible] 12-29-64
MIT APPROVAL [illegible] 22 Dec 64

MANNED SPACECRAFT CENTER
HOUSTON, TEXAS

LOGIC MODULE ASSY
(TABULATED)

CODE IDENT NO. —
SIZE E
NASA DRAWING NO. 1003812
SCALE 2/1
WT
SHEET 1 OF 2

REVISIONS

SYM	DESCRIPTION	DATE	APPROVAL

MODULE NO.	PART NO.	REV	EVEN	ODD	REF FLOW	REF WIRING	KEY POSITIONS
A17	1003812-1	–	1003813-2	1003814-2	1006543	1006123	ACDESTUY
A18	1003812-2	–	1003813-3	1003814-3	1006542	1006122	AFGHVWXY
A21	1003812-3	–	1003813-4	1003814-4	1006556	1006136	AEFGUVWY
A22	1003812-4	–	1003813-5	1003814-5	1006553	1006133	ACDFSTVY
A23	1003812-5	–	1003813-6	1003814-6	1006545	1006125	ACDGSTWY
A24	1003812-6	–	1003813-7	1003814-7	1006555	1006135	ACDHSTXY
A25	1003812-7	–	1003813-8	1003814-8	1006554	1006134	ACEFSUVY
A26	1003812-8	–	1003813-9	1003814-9	1006549	1006129	ACEGSUWY
A27	1003812-9	–	1003813-10	1003814-10	1006544	1006124	ACEHSUXY
A28	1003812-10	–	1003813-11	1003814-11	1006552	1006132	ACFGSVWY
A29	1003812-11	–	1003813-12	1003814-12	1006559	1006139	ACFHSVXY
A30-A31	1003812-12	–	1003813-13	1003814-13	1006548	1006128	ACGHSWXY
A32	1003812-13	–	1003813-14	1003814-14	1006546	1006126	ADEGTUWY
A33-A34	1003812-14	–	1003813-15	1003814-15	1006547	1006127	ADEHTUXY
A35	1003812-15	–	1003813-16	1003814-16	1006541	1006121	ADFGTVWY
A36	1003812-16	–	1003813-17	1003814-17	1006557	1006137	ADFHTVXY
A37	1003812-17	–	1003813-18	1003814-18	1006550	1006130	ADGHTWXY
A38	1003812-18	–	1003813-19	1003814-19	1006551	1006131	AEFHUVXY

QTY REQD	PART OR IDENTIFYING NO.	NOMENCLATURE OR DESCRIPTION	FIND NO.

LIST OF MATERIALS

NEXT ASSY | USED ON
APPLICATION

UNLESS OTHERWISE SPECIFIED
DIMENSIONS ARE IN INCHES
TOLERANCES ON
FRACTIONS ± DECIMALS ± ANGLES ±
DO NOT SCALE THIS DRAWING
MATERIAL
HEAT TREATMENT
FINAL FINISH

MIT
INSTRUMENTATION LAB
CAMBRIDGE MASS
DWG NO CONTRACT
DRAWN DATE 21 Dec 64
CHECKED 21 Dec
APPROVAL
APPROVAL E C
NASA APPROVAL W J 12-29-64
MIT APPROVAL 22 Dec 64

MANNED SPACECRAFT CENTER
HOUSTON, TEXAS

LOGIC MODULE ASSY
(TABULATED)

CODE IDENT NO. —
SIZE E
NASA DRAWING NO. 1003812
SCALE
WT
SHEET 2 OF 2

MASTER

SYM	DESCRIPTION	DATE	APPROVAL
A	REVISED PER TDRR 16353 DR CHK	2/24/65	

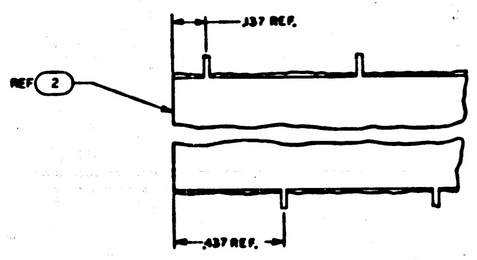
.137 REF.
REF ②
.137 REF.

SECTION A-A

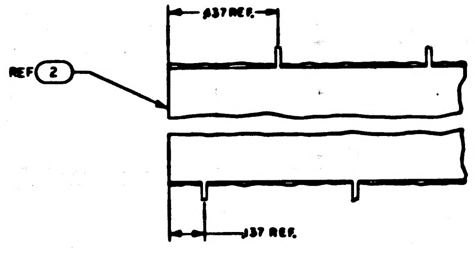
.137 REF.
REF ②
.137 REF.

SECTION B-B

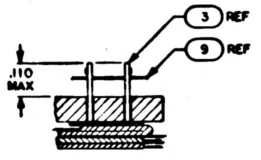
③ REF
⑨ REF
.110 MAX

SECTION D-D
TYP FOR ALL LOCATIONS
OF FIND NO. 3

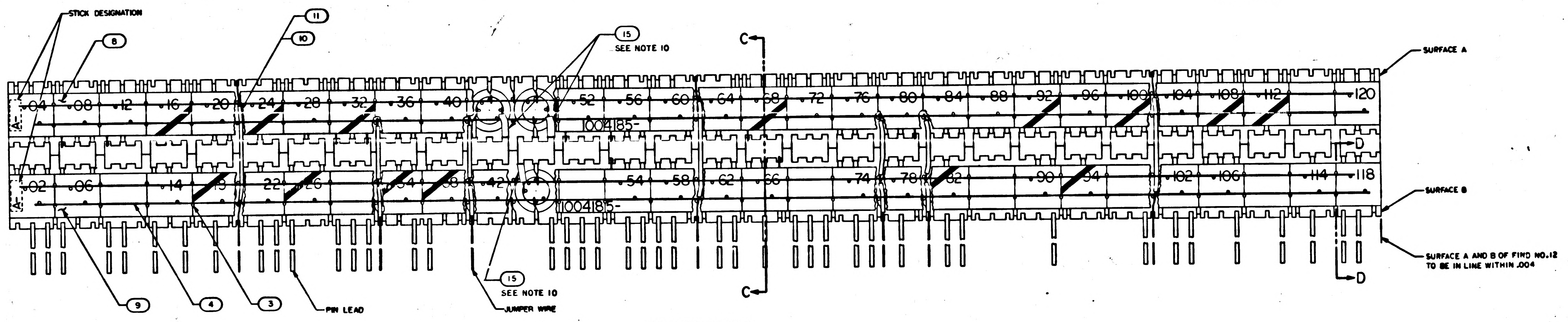
STICK DESIGNATION
⑧
⑪
⑩
⑮
SEE NOTE 10
C
SURFACE A
04
08
12
16
20
24
28
32
36
40
52
56
60
64
68
72
76
80
84
88
92
96
100
104
108
112
120
1004185-
D
02
06
14
18
22
26
34
38
42
54
58
62
66
74
78
82
90
94
102
106
114
118
1004185-
SURFACE B
SURFACE A AND B OF FIND NO.12 TO BE IN LINE WITHIN .004
⑨
④
③
PIN LEAD
⑮
SEE NOTE 10
JUMPER WIRE
C
D

VIEWS SHOWN ARE OF NO
SPECIFIC MODULE. JUMPER
WIRES ARE TYPICAL

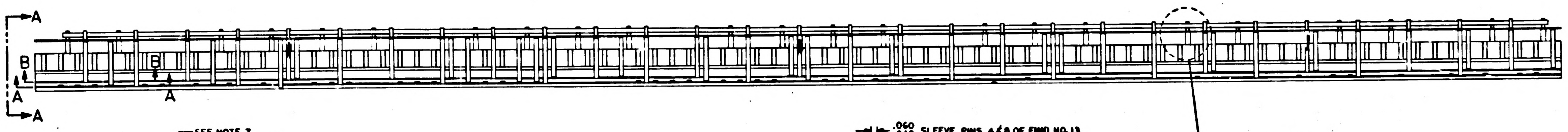

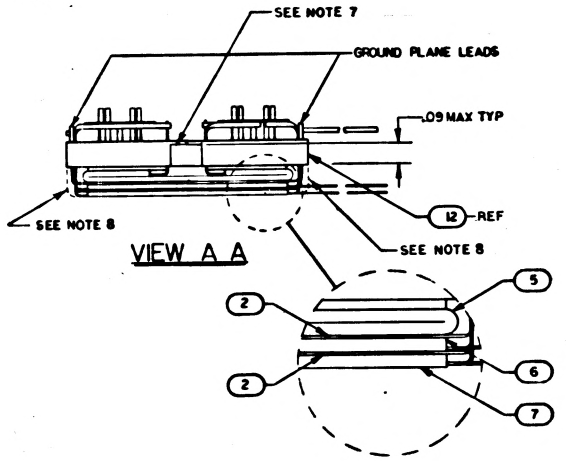
SEE NOTE 7
GROUND PLANE LEADS
.09 MAX TYP
⑫ REF
SEE NOTE 8
SEE NOTE 8
VIEW A A
②
⑤
②
⑥
⑦

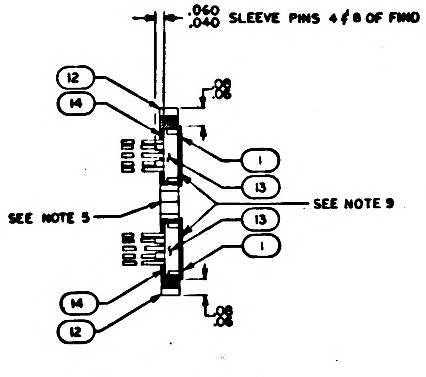
.060
.040 SLEEVE PINS 4 & 8 OF FIND NO. 13
⑫
⑭
.08
.06
①
⑬
SEE NOTE 9
SEE NOTE 5
⑬
①
⑭
⑫
.08
.06

SECTION C-C
FIND NO. 2 THRU 11
REMOVED FOR CLARITY
SCALE: NONE

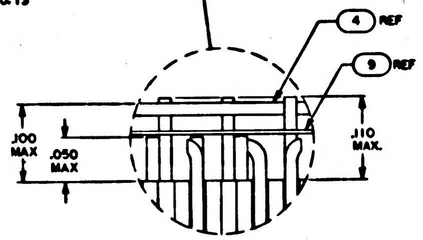
④ REF
⑨ REF
.100 MAX
.050 MAX
.110 MAX.

QTY REQD	PART OR IDENTIFYING NO.	NOMENCLATURE OR DESCRIPTION	FIND NO
AR	1006776-22	INSULATION, SLEEVING	15
SEE CHART	1004627	INSULATOR	14
SEE CHART	1004300	MICRO-NOR GATE (TO-47)	13
2	1004658	HOUSING, MICROLOGIC	12
AR	1006757-8	WIRE, ELECTRICAL .020 DIA	11
AR	1006776-21	INSULATION, SLEEVING	10
1	SEE CHART	INSULATOR, STICK	9
1	SEE CHART	INSULATOR, STICK	8
1	SEE CHART	.800 MATRIX ASSEMBLY (6)	7
1	SEE CHART	.800 MATRIX ASSEMBLY (4)	6
1	SEE CHART	1.400 MATRIX ASSEMBLY (2)	5
AR	1006757-7	WIRE ELECTRICAL NICKEL .005 X .020	4
AR	1015402	WIRE ELECTRICAL KOVAR	3
SEE CHART	1004100	GROUND PLANE	2
AR	1006826-3	INSULATION TAPE, ELECTRICAL	1

LIST OF MATERIALS

NOTES:
1. INTERPRET DWG IN ACCORDANCE WITH STANDARDS PRESCRIBED BY MIL-D-70327
2. WELD PER ND1002005 & ND1002003
3. AR DENOTES AS REQUIRED
4. ☒ IN TABLE I SIGNIFIES FIND NO. 13 AND FIND NO. 14 TO BE OMITTED IN THIS POSITION
5. BOND HOUSING, FIND NO. 12, TOGETHER PER ND1002004 ORIENTING AS SHOWN
6. IDENTIFY PER ND1002019
7. FILL CAVITY BETWEEN FIND NO. 12 PER ND1002009 AS SHOWN
8. SEAL EDGE OF ASSY PER ND1002009
9. STAKE FIND NO. 13 TO FIND NO. 1 USING MIL-A-5092 TYPE II
10. SLEEVE LEADS TO TERMINALS OF FIND NO. 13 AS SHOWN, TYP ALL FIND NO. 13
11. GENERAL INSULATION REQUIREMENTS: FOR CLEARANCE LESS THAN .020 BETWEEN CONDUCTIVE MATERIALS, APPLY .010 MIN INSULATION TO ONE CONDUCTOR USING SCD 1006776 OR ND 1002004

NEXT ASSY	USED ON
1003815	

APPLICATION

UNLESS OTHERWISE SPECIFIED
DIMENSIONS ARE IN INCHES
TOLERANCES ON
FRACTIONS ± — DECIMALS ± — ANGLES ± —
DO NOT SCALE THIS DRAWING
MATERIAL —
HEAT TREATMENT —
FINAL FINISH —

MIT
INSTRUMENTATION LAB
CAMBRIDGE, MASS

DRAWN DATE JAN
CHECKED
APPROVAL
APPROVAL
NASA APPROVAL W. J. 8-21-64
MIT APPROVAL

MANNED SPACECRAFT CENTER
HOUSTON, TEXAS

MICRO-LOGIC MODULE
SUB ASSEMBLY (TABULATED) (EVEN)

CODE IDENT NO. —
SIZE E
NASA DRAWING NO. 1003813
SCALE 4/1
WT
SHEET 1 OF 2

6 | 5 | 4 | 3 | 2 | 1

15137

ZONE	SYM	DESCRIPTION	DR	CHK	DATE	APPROVED
	A	REVISED PER TDRR 16353 DR [illegible] CHK [illegible]			[illegible]	[illegible]

TABLE I

TABLE INDICATES LOADING OF HOUSING MODULES (FIND NO. 12) WITH MICRO NOR GATES (FIND NO. 13)
SEE NOTE 4

MODULE NO. POSITION NO.	A1-A16	A17	A18	A21	A22	A23	A24	A25	A26	A27	A28	A29	A30-A31	A32	A33-A34	A35	A36	A37	A38
02																	X		
04																			
06										X				X					X
08																			
10	X				X	X	X												X
12			X			X													
14			X																
16	X		X																
18	X					X			X										
20																			
22																			
24																			
26						X													
28																			
30			X	X			X												
32																			
34																			
36																			
38						X										X			X
40					X	X								X					
42																			
44																			
46						X			X										
48					X														
50	X			X		X	X	X											
52																			
54																			
56																	X		
58																	X		
60			X																
62					X											X			
64																			
66			X					X									X		
68															X				
70			X	X	X		X			X									
72																			
74					X												X		
76															X				
78					X														
80																			
82					X														
84																			
86			X		X		X												
88																			
90					X			X											
92																			
94					X														
96						X													
98			X		X		X												
100																			
102					X							X							
104																			
106			X		X	X													
108																			
110				X	X		X												
112																	X		
114				X									X						
116						X	X										X		
118				X									X						
120																			

CHART I

									SEE TABLE I FOR POSITION OF THESE COMPONENTS	
MODULE NO.	INSULATOR FIND NO. 8	INSULATOR FIND NO. 9	MATRIX 2 FIND NO. 5	MATRIX 4 FIND NO. 6	MATRIX 6 FIND NO. 7	PART NO.	REV	QUANTITY OF FIND NO. 2	QUANTITY OF FIND NO. 13	QUANTITY OF FIND NO. 14
A1-A16	1004170-4	1004170-2	1003063 -1	1003064-1	X	1003813 -1	A	1	56	56
A17	1004173-4	1004173-2	1003063 -7	1003064-13	X	1003813 -2	A	1	60	60
A18	1004172-4	1004172-2	1003063 -41	1003064-88	X	1003813 -3	A	1	50	50
A21	1004186-4	1004186-2	1003063 -33	1003064-65	1003064-66	1003813 -4	A	2	54	54
A22	1004183-4	1004183-2	1003063 -43	1003064-90	X	1003813 -5	A	1	45	45
A23	1004175-4	1004175-2	1003063 -11	1003064-57	X	1003813 -6	A	1	49	49
A24	1004185-4	1004185-2	1003063 -31	1003064-61	1003064-62	1003813 -7	A	2	52	52
A25	1004184-4	1004184-2	1003063 -29	1003064-21	X	1003813 -8	A	1	57	57
A26	1004179-4	1004179-2	1003063 -39	1003064-37	X	1003813-9	A	1	58	58
A27	1004174-4	1004174-2	1003063 -45	1003064-17	X	1003813-10	A	1	58	58
A28	1004182-4	1004182-2	1003063 -47	1003064-93	X	1003813-11	A	1	60	60
A29	1004826-4	1004826-2	1003063-51	1003064-97	X	1003813-12	A	1	59	59
A30-A31	1004178-4	1004178-2	1003063-17	1003064-33	X	1003813-13	A	1	58	58
A32	1004176-4	1004176-2	1003063 -13	1003064-25	X	1003813-14	A	1	58	58
A33-A34	1004177-4	1004177-2	1003063 -15	1003064-29	X	1003813-15	A	1	58	58
A35	1004171-4	1004171-2	1003063 -3	1003064-5	X	1003813-16	A	1	58	58
A36	1004187-4	1004187-2	1003063 -35	1003064-77	X	1003813-17	A	1	53	53
A37	1004180-4	1004180-2	1003063 -21	1003064-41	X	1003813-18	A	1	60	60
A38	1004181-4	1004181-2	1003063 -44	1003064-91	X	1003813-19	A	1	57	57

QTY REQD	PART OR IDENTIFYING NO.	NOMENCLATURE OR DESCRIPTION	FIND NO

LIST OF MATERIALS

NEXT ASSY	USED ON
APPLICATION	

UNLESS OTHERWISE SPECIFIED
DIMENSIONS ARE IN INCHES
TOLERANCES ON
FRACTIONS DECIMALS ANGLES
± ± ±
DO NOT SCALE THIS DRAWING
MATERIAL
HEAT TREATMENT
FINAL FINISH

M I T
INSTRUMENTATION LAB
Cambridge, Mass

DRAWN [illegible] DATE [illegible]
CHECKED [illegible]
APPROVAL
APPROVAL [illegible]
NASA APPROVAL [illegible] 12-28-62
MIT APPROVAL [illegible]

MANNED SPACECRAFT CENTER
HOUSTON, TEXAS

MICRO-LOGIC MODULE
SUB ASSEMBLY (TABULATED)(EVEN)

CODE IDENT NO. — SIZE E NASA DRAWING NO. 1003813
SCALE WT SHEET 2 OF 2

MASTER

6 | 5 | 4 | 3 | 2 | 1

1003813

SYM	DESCRIPTION	DATE	APPROVAL
A	REVISED PER TDRR 16353 DR CHK	2/24/65	
B	REVISED PER TDRR 18628A DR CHK	3/12/65	

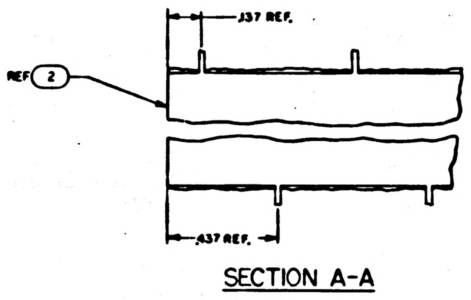

.137 REF.
REF ②
.137 REF.

SECTION A-A

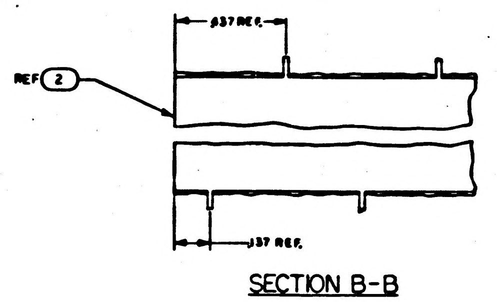

.137 REF.
REF ②
.137 REF.

SECTION B-B

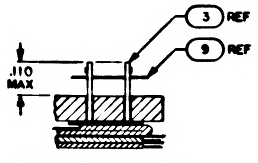

③ REF
⑨ REF
.110 MAX

SECTION D-D

TYP FOR ALL LOCATIONS OF FIND NO. 3

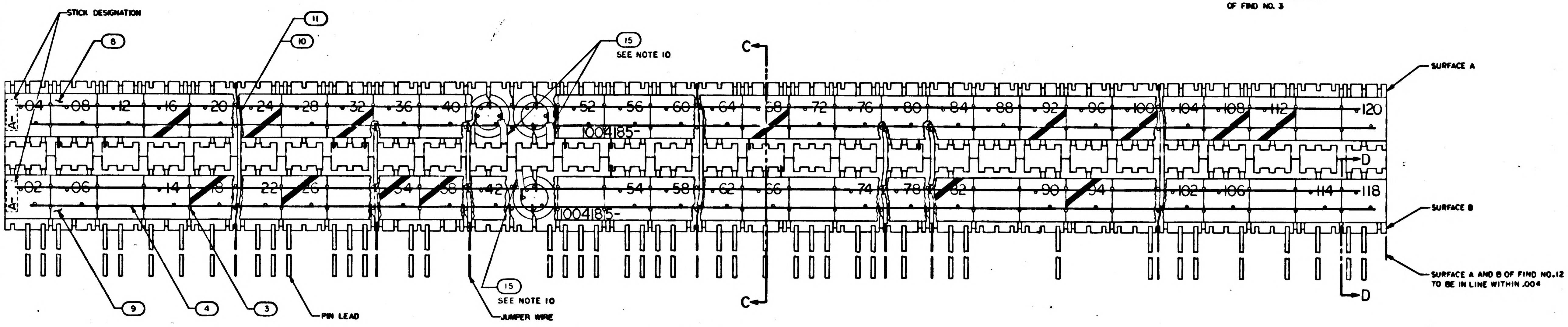

STICK DESIGNATION
⑧
⑪
⑩
⑮
SEE NOTE 10
C
SURFACE A
04
08
12
16
20
24
28
32
36
40
52
56
60
64
68
72
76
80
84
88
92
96
100
104
108
112
120
1004185-
D
02
06
14
18
22
26
34
38
42
54
58
62
66
74
78
82
90
94
102
106
114
118
1004185-
SURFACE B
SURFACE A AND B OF FIND NO.12 TO BE IN LINE WITHIN .004
D
⑨
④
③
PIN LEAD
⑮
SEE NOTE 10
JUMPER WIRE
C

VIEWS SHOWN ARE OF NO SPECIFIC MODULE. JUMPER WIRES ARE TYPICAL.

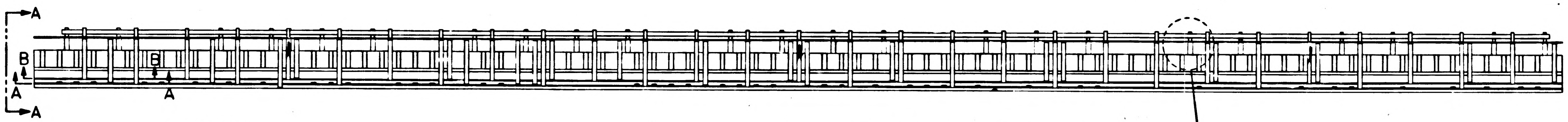

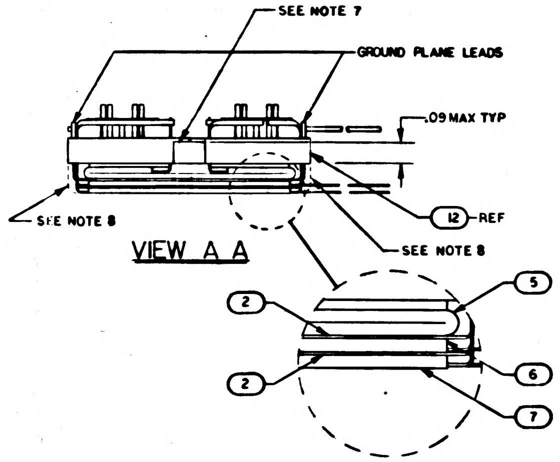

SEE NOTE 7
GROUND PLANE LEADS
.09 MAX TYP
SEE NOTE 8
⑫ REF
SEE NOTE 8
②
⑤
②
⑥
⑦

VIEW A A

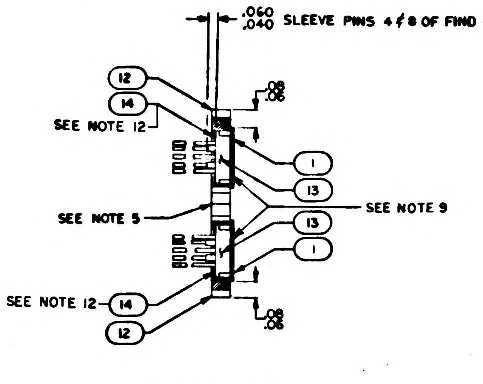

.060
.040
SLEEVE PINS 4 & 8 OF FIND NO.13
⑫
⑭
SEE NOTE 12
.08
.06
①
⑬
SEE NOTE 5
⑬
SEE NOTE 9
①
SEE NOTE 12
⑭
⑫
.08
.06

SECTION C-C

FIND NO. 2 THRU 11 REMOVED FOR CLARITY

SCALE: NONE

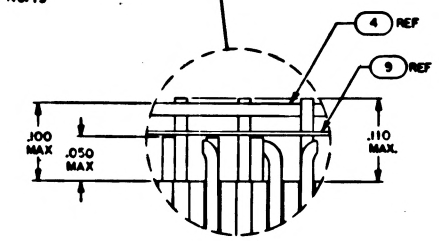

④ REF
⑨ REF
.100 MAX
.050 MAX
.110 MAX.

QTY REQD	PART OR IDENTIFYING NO.	NOMENCLATURE OR DESCRIPTION	FIND NO
AR	1006776-22	INSULATION, SLEEVING	15
SEE CHART	1004951	INSULATOR	14
SEE CHART	1004300	MICRO-NOR GATE (TO-47)	13
2	1004658	HOUSING, MICROLOGIC	12
AR	1006757-8	WIRE, ELECTRICAL .020 DIA	11
AR	1006776-21	INSULATION, SLEEVING	10
1	SEE CHART	INSULATOR, STICK	9
1	SEE CHART	INSULATOR, STICK	8
1	SEE CHART	.800 MATRIX ASSEMBLY (6)	7
1	SEE CHART	.800 MATRIX ASSEMBLY (4)	6
1	SEE CHART	1.400 MATRIX ASSEMBLY (2)	5
AR	1006757-7	WIRE ELECTRICAL NICKEL .005 X .020	4
AR	1015402	WIRE ELECTRICAL KOVAR	3
SEE CHART	1004100	GROUND PLANE	2
AR	1006826-3	INSULATION TAPE, ELECTRICAL	1

LIST OF MATERIALS

NOTES:

1. INTERPRET DWG IN ACCORDANCE WITH STANDARDS PRESCRIBED BY MIL-D-70327
2. WELD PER ND1002005
3. AR DENOTES AS REQUIRED
4. ☒ IN TABLE I SIGNIFIES FIND NO. 13 AND FIND NO. 14 TO BE OMITTED IN THIS POSITION
5. BOND HOUSING, FIND NO. 12, TOGETHER PER ND1002004, TYPE II OR V ORIENTING AS SHOWN
6. IDENTIFY WITH DRAWING NO. AND REVISION PER ND1002019
7. FILL CAVITY BETWEEN FIND NO. 12 PER ND1002009 METHOD B AS SHOWN
8. SEAL EDGE OF ASSY PER ND1002009 METHOD B
9. STAKE FIND NO. 13 TO FIND NO. 1 USING MIL-A-5092 TYPE II
10. SLEEVE LEADS TO TERMINALS OF FIND NO. 13 AS SHOWN, TYP ALL FIND NO. 13
11. ~~GENERAL INSULATION REQUIREMENTS: FOR CLEARANCE LESS THAN .020 BETWEEN CONDUCTIVE MATERIALS, APPLY .010 MIN INSULATION TO ONE CONDUCTOR USING SCD 1006776 OR ND 1002004~~
12. CURE FIND NO. 14 TO FIND NO. 13 AT 190°F ± 5°F FOR 1/2 HOUR
13. WORKMANSHIP, FABRICATION, AND INSPECTION REQUIREMENTS PER ND1002069

MASTER

1003815	
NEXT ASSY	USED ON
APPLICATION	

UNLESS OTHERWISE SPECIFIED DIMENSIONS ARE IN INCHES
TOLERANCES ON
FRACTIONS ± DECIMALS ± ANGLES ±
DO NOT SCALE THIS DRAWING
MATERIAL
HEAT TREATMENT
FINAL FINISH

MIT INSTRUMENTATION LAB
CAMBRIDGE MASS
DRAWN DATE
CHECKED
APPROVAL
APPROVAL
NASA APPROVAL
MIT APPROVAL

MANNED SPACECRAFT CENTER
HOUSTON, TEXAS

MICRO-LOGIC MODULE
SUB ASSEMBLY (TABULATED) (EVEN)

CODE IDENT NO. —
SIZE E
NASA DRAWING NO. 1003813
SCALE 4/1
WT
SHEET 1 OF 2

ZONE	SYM	DESCRIPTION	DR	CHK	DATE	APPROVED
		REVISIONS				15179
	A	REVISED PER TDRR 16353 DR CHK			3/23/65	
	B	REVISED PER TDRR 18628A DR J.Q. Clement CHK			5/29/65	

TABLE I

TABLE INDICATES LOADING OF HOUSING MODULES (FIND NO. 12) WITH MICRO NOR GATES (FIND NO. 13) SEE NOTE 4

MODULE NO. POSITION NO.	A1-A16	A17	A18	A21	A22	A23	A24	A25	A26	A27	A28	A29	A30-A31	A32	A33-A34	A35	A36	A37	A38
02																	X		
04																			
06										X				X					X
08																			
10	X				X	X	X												X
12			X			X													
14			X																
16	X		X																
18	X					X			X										
20																			
22																			
24																			
26						X													
28																			
30			X	X			X												
32																			
34																			
36																			
38						X										X			X
40					X	X								X					
42																			
44																			
46						X			X										
48					X														
50	X			X		X	X	X											
52																			
54																			
56																	X		
58																	X		
60			X																
62					X											X			
64																			
66			X					X									X		
68															X				
70			X	X	X		X			X									
72																			
74					X												X		
76															X				
78					X														
80																			
82					X														
84																			
86			X		X		X												
88																			
90					X			X											
92																			
94					X														
96						X													
98			X		X		X												
100																			
102					X							X							
104																			
106			X		X	X													
108																			
110				X	X		X												
112																	X		
114				X									X						
116						X	X										X		
118				X									X						
120																			

CHART I

MODULE NO.	INSULATOR FIND NO.8	INSULATOR FIND NO.9	MATRIX 2 FIND NO. 5	MATRIX 4 FIND NO.6	MATRIX 6 FIND NO. 7	PART NO.	REV	QUANTITY OF FIND NO. 2	SEE TABLE I FOR POSITION OF THESE COMPONENTS	
									QUANTITY OF FIND NO. 13	QUANTITY OF FIND NO. 14
A1-A16	1004170-4	1004170-2	1003063-1	1003064-1	X	1003813-1	B	1	56	56
A17	1004173-4	1004173-2	1003063-7	1003064-13	X	1003813-2	B	1	60	60
A18	1004172-4	1004172-2	1003063-41	1003064-88	X	1003813-3	B	1	50	50
A21	1004186-4	1004186-2	1003063-33	1003064-65	1003064-66	1003813-4	B	2	54	54
A22	1004183-4	1004183-2	1003063-43	1003064-90	X	1003813-5	B	1	45	45
A23	1004175-4	1004175-2	1003063-11	1003064-57	X	1003813-6	B	1	49	49
A24	1004185-4	1004185-2	1003063-31	1003064-61	1003064-62	1003813-7	B	2	52	52
A25	1004184-4	1004184-2	1003063-29	1003064-21	X	1003813-8	C	1	57	57
A26	1004179-4	1004179-2	1003063-39	1003064-37	X	1003813-9	B	1	58	58
A27	1004174-4	1004174-2	1003063-45	1003064-17	X	1003813-10	B	1	58	58
A28	1004182-4	1004182-2	1003063-47	1003064-98	X	1003813-11	B	1	60	60
A29	1004826-4	1004826-2	1003063-51	1003064-97	X	1003813-12	B	1	59	59
A30-A31	1004178-4	1004178-2	1003063-17	1003064-33	X	1003813-13	B	1	58	58
A32	1004176-4	1004176-2	1003063-13	1003064-25	X	1003813-14	B	1	58	58
A33-A34	1004177-4	1004177-2	1003063-15	1003064-29	X	1003813-15	B	1	58	58
A35	1004171-4	1004171-2	1003063-3	1003064-5	X	1003813-16	B	1	58	58
A36	1004187-4	1004187-2	1003063-35	1003064-77	X	1003813-17	B	1	53	53
A37	1004180-4	1004180-2	1003063-21	1003064-41	X	1003813-18	B	1	60	60
A38	1004181-4	1004181-2	1003063-44	1003064-91	X	1003813-19	B	1	57	57

MASTER

QTY REQD	PART OR IDENTIFYING NO.	NOMENCLATURE OR DESCRIPTION	FIND NO.

LIST OF MATERIALS

NEXT ASSY	USED ON
APPLICATION	

UNLESS OTHERWISE SPECIFIED
DIMENSIONS ARE IN INCHES
TOLERANCES ON
FRACTIONS ± DECIMALS ± ANGLES ±
DO NOT SCALE THIS DRAWING
MATERIAL
HEAT TREATMENT
FINAL FINISH

MIT
INSTRUMENTATION LAB
CAMBRIDGE, MASS
DRAWN DATE
CHECKED
APPROVAL
APPROVAL
NASA APPROVAL 12-29-64
MIT APPROVAL 22 Dec 64

MANNED SPACECRAFT CENTER
HOUSTON, TEXAS

MICRO-LOGIC MODULE
SUB ASSEMBLY (TABULATED)(EVEN)

CODE IDENT NO. SIZE E NASA DRAWING NO. 1003813
SCALE WT SHEET 2 OF 2

SYM	DESCRIPTION	DATE	APPROVAL
A	REVISED PER TDRR 16353 DR CHK	2/20/65	
B	REVISED PER TDRR 18628A DR D.A. CHK	3/23/65	
C	REVISED PER TDRR 20564 DR J.P. Leonard CHK R.B.	4/16/65	

REVISIONS 15777

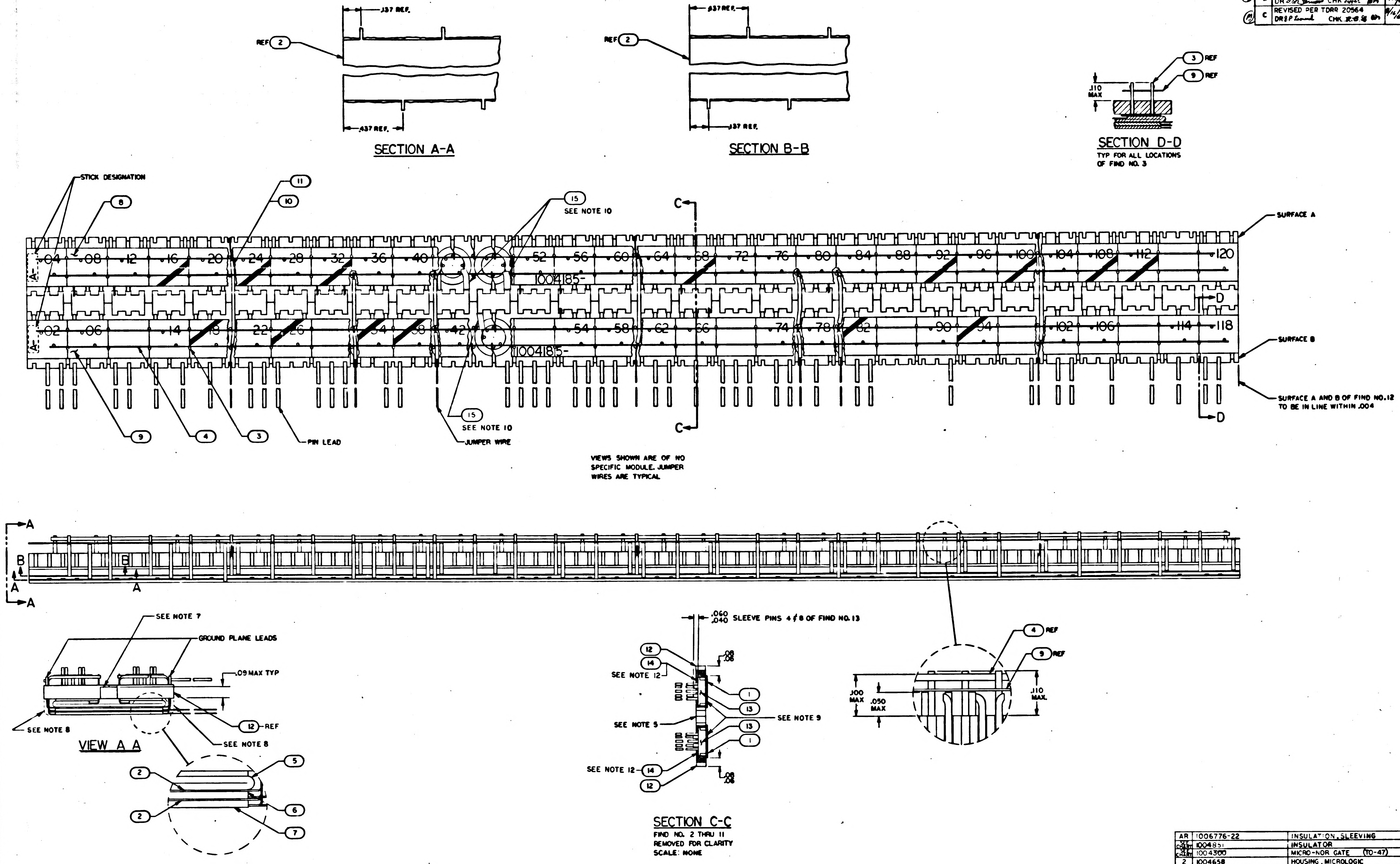
.137 REF.
REF 2
SECTION A-A
SECTION B-B
3 REF
9 REF
.110 MAX
SECTION D-D
TYP FOR ALL LOCATIONS OF FIND NO. 3
STICK DESIGNATION
8
11
10
15
SEE NOTE 10
C
SURFACE A
SURFACE B
SURFACE A AND B OF FIND NO.12 TO BE IN LINE WITHIN .004
D
04 08 12 16 20 24 28 32 36 40 52 56 60 64 68 72 76 80 84 88 92 96 100 104 108 112 120
02 06 14 18 22 26 34 38 42 54 58 62 66 74 78 82 90 94 102 106 114 118
1004185-
A
B
9
4
3
PIN LEAD
JUMPER WIRE
VIEWS SHOWN ARE OF NO SPECIFIC MODULE. JUMPER WIRES ARE TYPICAL
SEE NOTE 7
GROUND PLANE LEADS
.09 MAX TYP
12 REF
SEE NOTE 8
VIEW A A
2
5
6
7
.060 .040 SLEEVE PINS 4 & 8 OF FIND NO.13
.08 .06
12
14
SEE NOTE 12
1
13
SEE NOTE 5
SEE NOTE 9
4 REF
9 REF
.100 MAX
.050 MAX
.110 MAX.
SECTION C-C
FIND NO. 2 THRU 11 REMOVED FOR CLARITY
SCALE: NONE

NOTES:

1. INTERPRET DWG IN ACCORDANCE WITH STANDARDS PRESCRIBED BY MIL-D-70327
2. WELD PER ND1002005
3. AR DENOTES AS REQUIRED
4. ⊠ IN TABLE I SIGNIFIES FIND NO. 13 AND FIND NO. 14 TO BE OMITTED IN THIS POSITION
5. BOND HOUSING, FIND NO. 12, TOGETHER PER ND1002004, TYPE II OR V ORIENTING AS SHOWN
6. IDENTIFY WITH DRAWING NO. AND REVISION PER ND1002019
7. FILL CAVITY BETWEEN FIND NO. 12 PER ND1002009 METHOD B AS SHOWN
8. SEAL EDGE OF ASSY PER ND1002009 METHOD B
9. STAKE FIND NO. 13 TO FIND NO. 1 USING MIL-A-5092 TYPE II
10. SLEEVE LEADS TO TERMINALS OF FIND NO. 13 AS SHOWN, TYP ALL FIND NO. 13
11. ~~GENERAL INSULATION REQUIREMENTS: FOR CLEARANCE LESS THAN .020 BETWEEN CONDUCTIVE MATERIALS, APPLY .010 MIN INSULATION TO ONE CONDUCTOR USING SCD 1006776 OR ND 1002004~~
12. CURE FIND NO. 14 TO FIND NO. 13 AT 190°F ± 5°F FOR 1/2 HOUR
13. WORKMANSHIP, FABRICATION, AND INSPECTION REQUIREMENTS PER ND1002069

MASTER

QTY REQD	PART OR IDENTIFYING NO.	NOMENCLATURE OR DESCRIPTION	FIND NO
AR	1006776-22	INSULATION, SLEEVING	15
SEE CHART	1004851	INSULATOR	14
SEE CHART	1004300	MICRO-NOR GATE (TO-47)	13
2	1004658	HOUSING, MICROLOGIC	12
AR	1006757-8	WIRE, ELECTRICAL .020 DIA	11
AR	1006776-21	INSULATION, SLEEVING	10
1	SEE CHART	INSULATOR, STICK	9
1	SEE CHART	INSULATOR, STICK	8
1	SEE CHART	.800 MATRIX ASSEMBLY (6)	7
1	SEE CHART	.800 MATRIX ASSEMBLY (4)	6
1	SEE CHART	1.400 MATRIX ASSEMBLY (2)	5
AR	1006757-7	WIRE ELECTRICAL NICKEL .005 X .020	4
AR	1015402	WIRE ELECTRICAL KOVAR	3
SEE CHART	1004100	GROUND PLANE	2
AR	1006826-3	INSULATION TAPE, ELECTRICAL	1

LIST OF MATERIALS

NEXT ASSY	USED ON
1003812	
1003815	

APPLICATION

UNLESS OTHERWISE SPECIFIED DIMENSIONS ARE IN INCHES
TOLERANCES ON
FRACTIONS ± — DECIMALS ± — ANGLES ± —
DO NOT SCALE THIS DRAWING
MATERIAL —
HEAT TREATMENT —
FINAL FINISH —

MIT
INSTRUMENTATION LAB
CAMBRIDGE MASS
DWG NO CONTRACT
DRAWN DATE
CHECKED 64
APPROVAL
APPROVAL
NASA APPROVAL W. J.
MIT APPROVAL 64

MANNED SPACECRAFT CENTER
HOUSTON, TEXAS

MICRO-LOGIC MODULE
SUB ASSEMBLY (TABULATED) (EVEN)

CODE IDENT NO. 80230
SIZE E
NASA DRAWING NO 1003813
SCALE 4/1
WT
SHEET OF 2

	REVISIONS					15179
ZONE	SYM	DESCRIPTION	DR	CHK	DATE	APPROVED
	A	REVISED PER TDRR 16353 DR CHK			5/27/65	
	B	REVISED PER TDRR 18628A DR CHK			5/27/65	
	C	REVISED PER TDRR 20564 DR CHK			8/16/65	

TABLE I

TABLE INDICATES LOADING OF HOUSING MODULES (FIND NO. 12) WITH MICRO NOR GATES (FIND NO.13)
SEE NOTE 4

MODULE NO. / POSITION NO.	A1-A16	A17	A18	A21	A22	A23	A24	A25	A26	A27	A28	A29	A30-A31	A32	A33-A34	A35	A36	A37	A38
02																	X		
04																			
06										X				X					X
08																			
10	X				X	X	X												X
12			X			X													
14			X																
16	X		X																
18	X					X			X										
20																			
22																			
24																			
26						X													
28																			
30			X	X			X												
32																			
34																			
36																			
38						X										X			X
40					X	X								X					
42																			
44																			
46						X			X										
48					X														
50	X			X		X	X	X											
52																			
54																			
56																	X		
58																	X		
60			X																
62					X											X			
64																			
66			X					X									X		
68															X				
70			X	X	X		X			X									
72																			
74					X												X		
76															X				
78					X														
80																			
82					X														
84																			
86			X		X		X												
88																			
90					X			X											
92																			
94					X														
96						X													
98			X		X		X												
100																			
102					X							X							
104																			
106			X		X	X													
108																			
110				X	X		X												
112																	X		
114				X									X						
116						X	X										X		
118				X									X						
120																			

CHART I

									SEE TABLE I FOR POSITION OF THESE COMPONENTS	
MODULE NO.	INSULATOR FIND NO. 8	INSULATOR FIND NO. 9	MATRIX 2 FIND NO. 5	MATRIX 4 FIND NO. 6	MATRIX 6 FIND NO. 7	PART NO.	REV	QUANTITY OF FIND NO. 2	QUANTITY OF FIND NO. 13	QUANTITY OF FIND NO. 14
A1-A16	1004170-4	1004170-2	1003063-1	1003064-1		1003813-1	B	1	56	56
A17	1004173-4	1004173-2	1003063-7	1003064-13		1003813-2	B	1	60	60
A18	1004172-4	1004172-2	1003063-41	1003064-88		1003813-3	B	1	50	50
A21	1004186-4	1004186-2	1003063-33	1003064-65	1003064-66	1003813-4	B	2	54	54
A22	1004183-4	1004183-2	1003063-43	1003064-90		1003813-5	B	1	45	45
A23	1004175-4	1004175-2	1003063-11	1003064-57		1003813-6	B	1	49	49
A24	1004185-4	1004185-2	1003063-31	1003064-61	1003064-62	1003813-7	B	2	52	52
A25	1004184-4	1004184-2	1003063-29	1003064-21		1003813-8	B	1	57	57
A26	1004179-4	1004179-2	1003063-39	1003064-37		1003813-9	B	1	58	58
A27	1004174-4	1004174-2	1003063-45	1003064-17		1003813-10	B	1	58	58
A28	1004182-4	1004182-2	1003063-47	1003064-93		1003813-11	B	1	60	60
A29	1004826-4	1004826-2	1003063-51	1003064-97		1003813-12	B	1	59	59
A30-A31	1004178-4	1004178-2	1003063-17	1003064-33		1003813-13	B	1	58	58
A32	1004176-4	1004176-2	1003063-13	1003064-25		1003813-14	B	1	58	58
A33-A34	1004177-4	1004177-2	1003063-15	1003064-29		1003813-15	B	1	58	58
A35	1004171-4	1004171-2	1003063-3	1003064-5		1003813-16	B	1	58	58
A36	1004187-4	1004187-2	1003063-35	1003064-77		1003813-17	B	1	53	53
A37	1004180-4	1004180-2	1003063-53	1003064-99		1003813-18	C	1	60	60
A38	1004181-4	1004181-2	1003063-44	1003064-91		1003813-19	B	1	57	57

MASTER

QTY REQD	PART OR IDENTIFYING NO.	NOMENCLATURE OR DESCRIPTION	FIND NO.
	LIST OF MATERIALS		

NEXT ASSY	USED ON
APPLICATION	

UNLESS OTHERWISE SPECIFIED
DIMENSIONS ARE IN INCHES
TOLERANCES ON
FRACTIONS ± DECIMALS ± ANGLES ±
DO NOT SCALE THIS DRAWING
MATERIAL
HEAT TREATMENT
FINAL FINISH

MIT INSTRUMENTATION LAB
CAMBRIDGE, MASS
DRAWN DATE
CHECKED
APPROVAL
APPROVAL
NASA APPROVAL 12-27-64
MIT APPROVAL 22 Dec 64

MANNED SPACECRAFT CENTER
HOUSTON, TEXAS

MICRO-LOGIC MODULE
SUB ASSEMBLY (TABULATED)(EVEN)

CODE IDENT NO. 80230
SIZE E
NASA DRAWING NO. 1003813
SCALE
WT
SHEET 2 OF 2

REVISIONS			
LTR	DESCRIPTION	DATE	APPROVAL

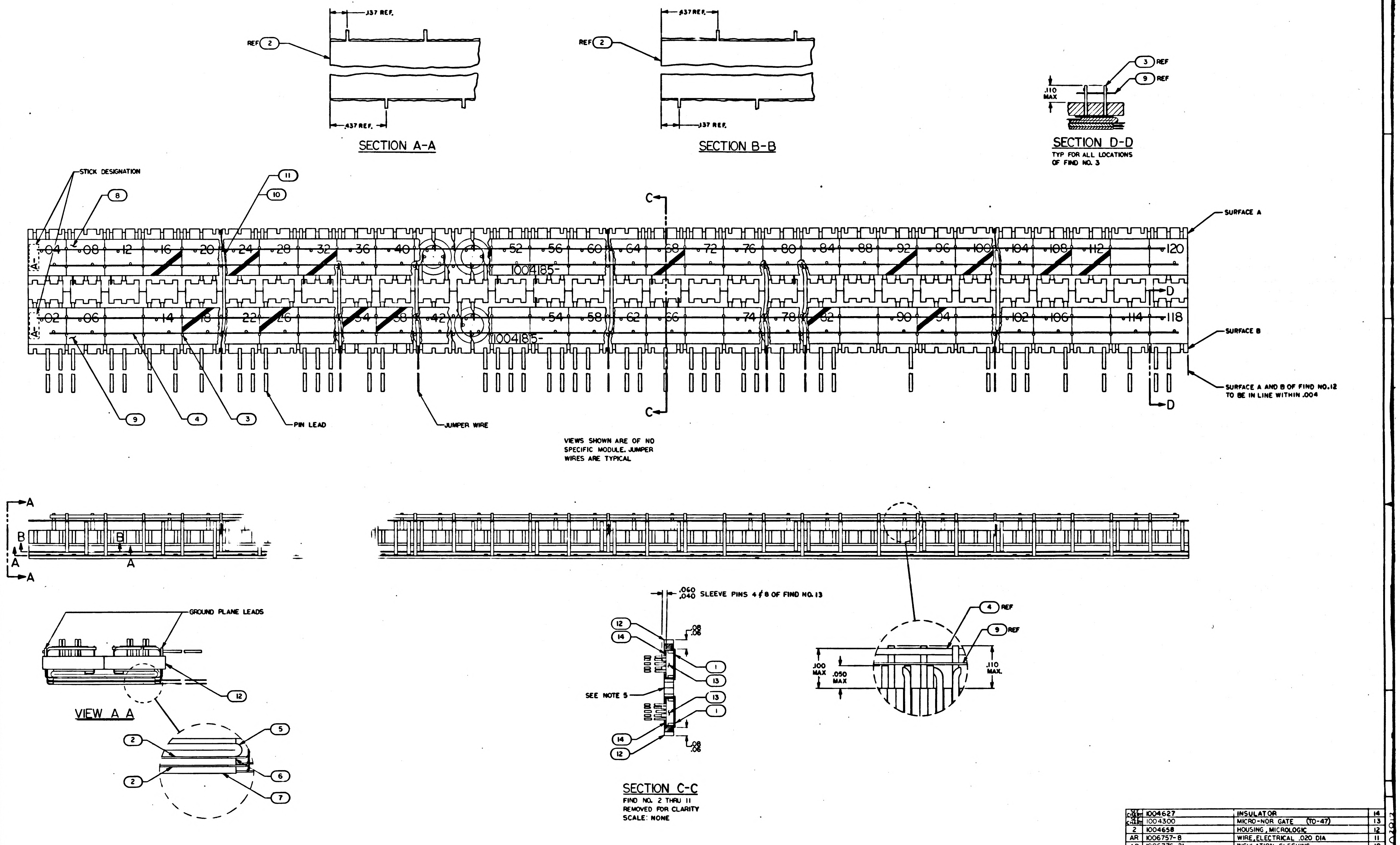
.137 REF.
REF 2
.437 REF.
SECTION A-A
.137 REF.
REF 2
.137 REF.
SECTION B-B
3 REF
9 REF
.110 MAX
SECTION D-D
TYP FOR ALL LOCATIONS OF FIND NO. 3
STICK DESIGNATION
8
11
10
04 08 12 16 20 24 28 32 36 40 52 56 60 64 68 72 76 80 84 88 92 96 100 104 108 112 120
1004185-
02 06 14 18 22 26 34 38 42 54 58 62 66 74 78 82 90 94 102 106 114 118
1004185-
A-
C
D
SURFACE A
SURFACE B
SURFACE A AND B OF FIND NO.12 TO BE IN LINE WITHIN .004
9
4
3
PIN LEAD
JUMPER WIRE
VIEWS SHOWN ARE OF NO SPECIFIC MODULE. JUMPER WIRES ARE TYPICAL
A
B
GROUND PLANE LEADS
12
VIEW A A
2
5
6
7
.060
.040
SLEEVE PINS 4 & 8 OF FIND NO. 13
12
14
.08
.06
1
13
SEE NOTE 5
SECTION C-C
FIND NO. 2 THRU 11 REMOVED FOR CLARITY
SCALE: NONE
4 REF
9 REF
.100 MAX
.050 MAX
.110 MAX.

NOTES:
1. INTERPRET DWG IN ACCORDANCE WITH STANDARDS PRESCRIBED BY MIL-D-70327
2. WELD PER ND1002005
3. AR DENOTES AS REQUIRED
4. ⊠ IN TABLE I SIGNIFIES FIND NO. 13 AND FIND NO. 14 TO BE OMITTED IN THIS POSITION
5. BOND HOUSING, FIND NO. 12, TOGETHER PER ND1002004 ORIENTING AS SHOWN
6. IDENTIFY PER ND1002019

QTY REQD	PART OR IDENTIFYING NO.	NOMENCLATURE OR DESCRIPTION	FIND NO
SEE CHART	1004627	INSULATOR	14
SEE CHART	1004300	MICRO-NOR GATE (TO-47)	13
2	1004658	HOUSING, MICROLOGIC	12
AR	1006757-8	WIRE, ELECTRICAL .020 DIA	11
AR	1006776-21	INSULATION, SLEEVING	10
1	SEE CHART	INSULATOR, STICK	9
1	SEE CHART	INSULATOR, STICK	8
1	SEE CHART	.800 MATRIX ASSEMBLY (6)	7
1	SEE CHART	.800 MATRIX ASSEMBLY (4)	6
1	SEE CHART	1.400 MATRIX ASSEMBLY (2)	5
AR	1006757-7	WIRE ELECTRICAL NICKEL .005 X .020	4
AR	1015402	WIRE ELECTRICAL KOVAR	3
SEE CHART	1004100	GROUND PLANE	2
AR	1006826-3	INSULATION TAPE, ELECTRICAL	1

LIST OF MATERIALS

1003815	
NEXT ASSY	USED ON
APPLICATION	

UNLESS OTHERWISE SPECIFIED DIMENSIONS ARE IN INCHES
TOLERANCES ON
FRACTIONS ± — DECIMALS ± — ANGLES ± —
DO NOT SCALE THIS DRAWING
MATERIAL —
HEAT TREATMENT —
FINAL FINISH —

MIT
INSTRUMENTATION LAB
CAMBRIDGE MASS
DWG NO CONTRACT
DRAWN [illegible] DATE [illegible]
CHECKED [illegible] Dec 64
APPROVAL
APPROVAL [illegible] 12/22
NASA APPROVAL W. J. [illegible] 12-29-64
MIT APPROVAL [illegible] 23 Dec 64

MANNED SPACECRAFT CENTER
HOUSTON, TEXAS

MICRO-LOGIC MODULE
SUB ASSEMBLY (TABULATED) (EVEN)

CODE IDENT NO. —
SIZE E
NASA DRAWING NO. 1003813
SCALE 4/1
WT
SHEET OF 2

MASTER

REVISIONS						
ZONE	SYM	DESCRIPTION	BR	CHK	DATE	APPROVED

15177

TABLE I

TABLE INDICATES LOADING OF HOUSING MODULES (FIND NO. 12) WITH MICRO NOR GATES (FIND NO. 13) SEE NOTE 4

MODULE NO. POSITION NO.	A1-A16	A17	A18	A21	A22	A23	A24	A25	A26	A27	A28	A29	A30-A31	A32	A33-A34	A35	A36	A37	A38
02																	X		
04																			
06										X				X					X
08																			
10	X				X	X	X												X
12			X			X													
14			X																
16	X		X																
18	X					X			X										
20																			
22																			
24																			
26						X													
28																			
30			X	X			X												
32																			
34																			
36																			
38						X										X			X
40					X	X								X					
42																			
44																			
46						X			X										
48					X														
50	X			X		X	X	X											
52																			
54																			
56																	X		
58																	X		
60			X																
62					X											X			
64																			
66			X					X									X		
68															X				
70			X	X	X		X			X									
72																			
74					X												X		
76															X				
78					X														
80																			
82					X														
84																			
86			X		X		X												
88																			
90					X			X											
92																			
94					X														
96						X													
98			X		X		X												
100																			
102					X														
104																			
106			X		X	X													
108																			
110				X	X		X												
112																	X		
114				X									X				X		
116						X	X										X		
118				X									X						
120																			

CHART I

MODULE NO.	INSULATOR FIND NO. 8	INSULATOR FIND NO. 9	MATRIX 2 FIND NO. 5	MATRIX 4 FIND NO. 6	MATRIX 6 FIND NO. 7	PART NO.	REV	QUANTITY OF FIND NO. 2	SEE TABLE I FOR POSITION OF THESE COMPONENTS	
									QUANTITY OF FIND NO. 13	QUANTITY OF FIND NO. 14
A1-A16	1004170-4	1004170-2	1003063-1	1003064-1	X	1003813-1	—	1	56	56
A17	1004173-4	1004173-2	1003063-7	1003064-13	X	1003813-2	—	1	60	60
A18	1004172-4	1004172-2	1003063-41	1003064-88	X	1003813-3	—	1	50	50
A21	1004186-4	1004186-2	1003063-33	1003064-65	1003064-66	1003813-4	—	2	54	54
A22	1004183-4	1004183-2	1003063-43	1003064-90	X	1003813-5	—	1	45	45
A23	1004175-4	1004175-2	1003063-11	1003064-57	X	1003813-6	—	1	49	49
A24	1004185-4	1004185-2	1003063-31	1003064-61	1003064-62	1003813-7	—	2	52	52
A25	1004184-4	1004184-2	1003063-29	1003064-21	X	1003813-8	—	1	57	57
A26	1004179-4	1004179-2	1003063-39	1003064-37	X	1003813-9	—	1	58	58
A27	1004174-4	1004174-2	1003063-45	1003064-17	X	1003813-10	—	1	58	58
A28	1004182-4	1004182-2	1003063-47	1003064-93	X	1003813-11	—	1	60	60
A29	1004189-4	1004189-2	1003063-50	1003064-96	X	1003813-12	—	1	60	60
A30-A31	1004178-4	1004178-2	1003063-17	1003064-33	X	1003813-13	—	1	58	58
A32	1004176-4	1004176-2	1003063-13	1003064-25	X	1003813-14	—	1	58	58
A33-A34	1004177-4	1004177-2	1003063-15	1003064-29	X	1003813-15	—	1	58	58
A35	1004171-4	1004171-2	1003063-3	1003064-5	X	1003813-16	—	1	58	58
A36	1004187-4	1004187-2	1003063-35	1003064-77	X	1003813-17	—	1	53	53
A37	1004180-4	1004180-2	1003063-21	1003064-41	X	1003813-18	—	1	60	60
A38	1004181-4	1004181-2	1003063-44	1003064-91	X	1003813-19	—	1	57	57

QTY REQD	PART OR IDENTIFYING NO.	NOMENCLATURE OR DESCRIPTION	FIND NO.

LIST OF MATERIALS

NEXT ASSY	USED ON
APPLICATION	

UNLESS OTHERWISE SPECIFIED
DIMENSIONS ARE IN INCHES
TOLERANCES ON
FRACTIONS ± DECIMALS ± ANGLES ±
DO NOT SCALE THIS DRAWING
MATERIAL
HEAT TREATMENT
FINAL FINISH

MIT
INSTRUMENTATION LAB
CAMBRIDGE, MASS.
DWG. NO. CONTRACT
DRAWN Paul DATE
CHECKED
APPROVAL
APPROVAL 12/13
NASA APPROVAL 12-29-64
MIT APPROVAL 22 Dec 64

MANNED SPACECRAFT CENTER
HOUSTON, TEXAS

MICRO-LOGIC MODULE
SUB ASSEMBLY (TABULATED)(EVEN)

CODE IDENT NO.	SIZE	NASA DRAWING NO.
—	E	1003813
SCALE	WT	SHEET 2 OF 2

REVISIONS			
SYM	DESCRIPTION	DATE	APPROVAL
A	REVISED PER TDRR 16353 DR CHK	3/22/65	

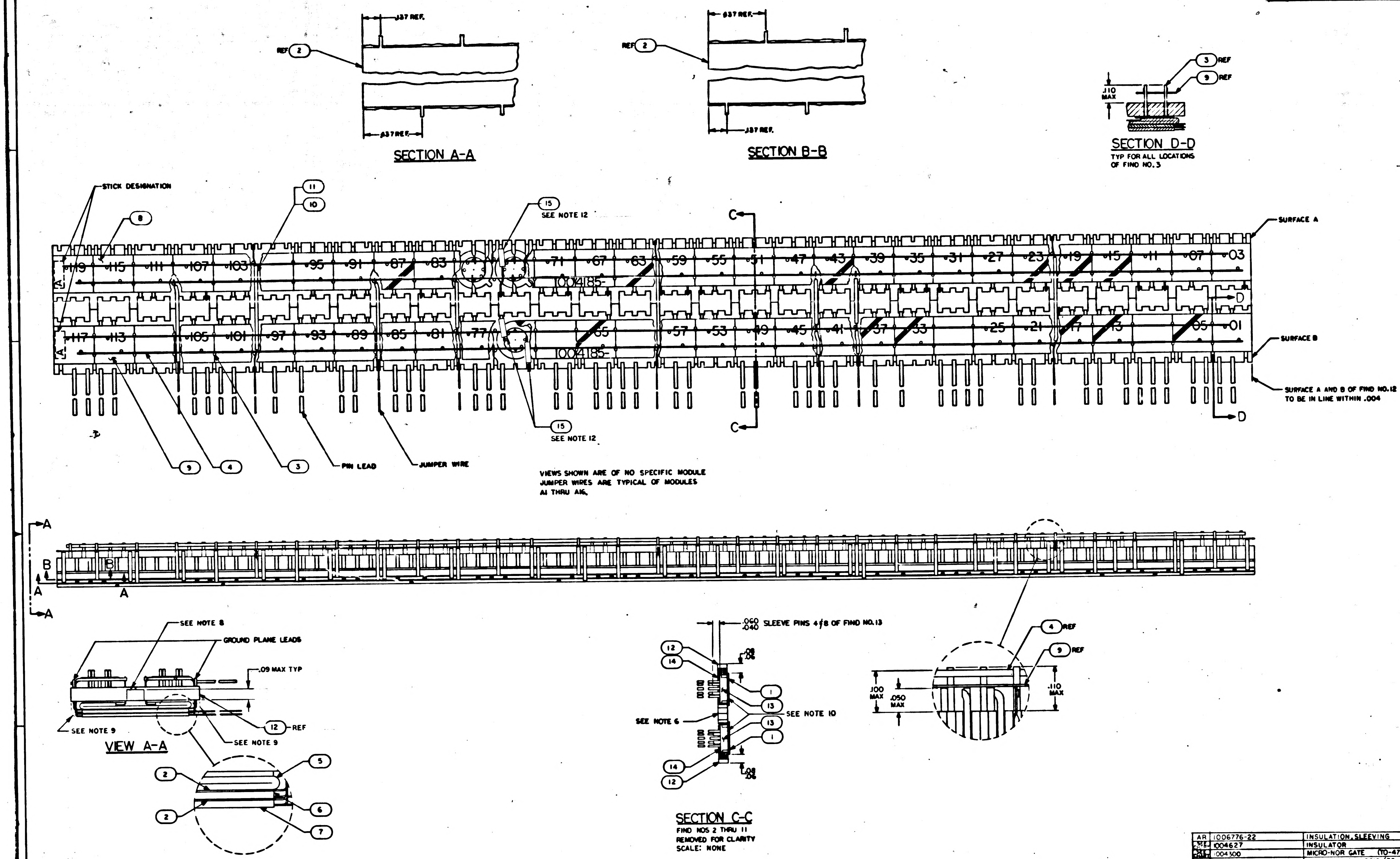

.037 REF.
REF 2
SECTION A-A
SECTION B-B
3 REF
9 REF
.110 MAX
SECTION D-D
TYP FOR ALL LOCATIONS OF FIND NO. 3
STICK DESIGNATION
8
11
10
15
SEE NOTE 12
C
SURFACE A
SURFACE B
SURFACE A AND B OF FIND NO. 12 TO BE IN LINE WITHIN .004
D
1004185
119 115 111 107 103 95 91 87 83 71 67 63 59 55 51 47 43 39 35 31 27 23 19 15 11 07 03
117 113 105 101 97 93 89 85 81 77 65 57 53 49 45 41 37 33 25 21 17 13 05 01
A
9
4
3
PIN LEAD
JUMPER WIRE
VIEWS SHOWN ARE OF NO SPECIFIC MODULE JUMPER WIRES ARE TYPICAL OF MODULES A1 THRU A16.
B
B1
SEE NOTE 8
GROUND PLANE LEADS
.09 MAX TYP
12 REF
SEE NOTE 9
VIEW A-A
2
5
6
7
.050 .040 SLEEVE PINS 4 / 8 OF FIND NO. 13
12
14
1
13
SEE NOTE 6
SEE NOTE 10
.08 .06
SECTION C-C
FIND NOS 2 THRU 11 REMOVED FOR CLARITY SCALE: NONE
4 REF
9 REF
.100 MAX
.050 MAX
.110 MAX

QTY REQD	PART OR IDENTIFYING NO.	NOMENCLATURE OR DESCRIPTION	FIND NO
AR	1006776-22	INSULATION, SLEEVING	15
SEE CHART	1004627	INSULATOR	14
SEE CHART	1004300	MICRO-NOR GATE (TO-47)	13
2	1004658	HOUSING, MICROLOGIC (TO-47)	12
AR	1006757-8	WIRE, ELECTRICAL .020 DIA	11
AR	1006776-21	INSULATION, SLEEVING	10
1	SEE CHART I	INSULATOR, STICK	9
1	SEE CHART I	INSULATOR, STICK	8
1	SEE CHART I	.800 MATRIX ASSEMBLY (7)	7
1	SEE CHART I	.800 MATRIX ASSEMBLY (5)	6
1	SEE CHART I	1.400 MATRIX ASSEMBLY (3)	5
AR	1006757-7	WIRE, ELECTRICAL NICKEL .005 X.020	4
AR	1015402	WIRE, ELECTRICAL KOVAR	3
SEE CHART	1004100	GROUND PLANE	2
AR	1006826-3	INSULATION TAPE, ELECTRICAL	1

LIST OF MATERIALS

NOTES:

1. INTERPRET DRAWING IN ACCORDANCE WITH STANDARDS PRESCRIBED BY MIL-D-70327
2. WELD PER ND1002005 & ND1002003
3. AR DENOTES AS REQUIRED
4. CUT 3V BUSS BETWEEN GATES 87 AND 83
5. ▭ IN TABLE I SIGNIFIES FIND NO. 13 AND FIND NO. 14 TO BE OMITTED IN THIS POSITION
6. BOND HOUSINGS, FIND NO. 12 TOGETHER PER ND1002004, ORIENTING AS SHOWN
7. IDENTIFY PER ND1002019
8. FILL CAVITIES BETWEEN FIND NO. 12 PER ND1002009 AS SHOWN
9. SEAL EDGES OF ASSY PER ND1002009
10. STAKE FIND NO. 13 TO FIND NO. 1 PER MIL-A-5092 TYPE II
11. GENERAL INSULATION REQUIREMENTS: FOR CLEARANCE LESS THAN .020 BETWEEN CONDUCTIVE MATERIALS, APPLY .010 MIN. INSULATION TO ONE CONDUCTOR USING SCD 1006776 OR ND 1002004
12. SLEEVE LEADS TO TERMINALS OF FIND NO. 13 AS SHOWN, TYP ALL FIND NO. 13

NEXT ASSY	USED ON
1003812	
1003815	

APPLICATION

UNLESS OTHERWISE SPECIFIED DIMENSIONS ARE IN INCHES
TOLERANCES ON
FRACTIONS ± DECIMALS ± ANGLES ±
DO NOT SCALE THIS DRAWING
MATERIAL
HEAT TREATMENT
FINAL FINISH

MIT
INSTRUMENTATION LAB
CAMBRIDGE, MASS
DRAWN DATE
CHECKED
APPROVAL
APPROVAL E C Hall 12/23
NASA APPROVAL 12-29-64
MIT APPROVAL

MANNED SPACECRAFT CENTER
HOUSTON, TEXAS

MICRO LOGIC MODULE
SUB ASSEMBLY (ODD)
(TABULATED)

CODE IDENT NO.	SIZE	NASA DRAWING NO.
—	E	1003814

SCALE 4/1 WT SHEET OF 3

SYM	DESCRIPTION	DATE	APPROVAL
A	REVISED PER TDRR 16353 DR. CHK	3/24/65	

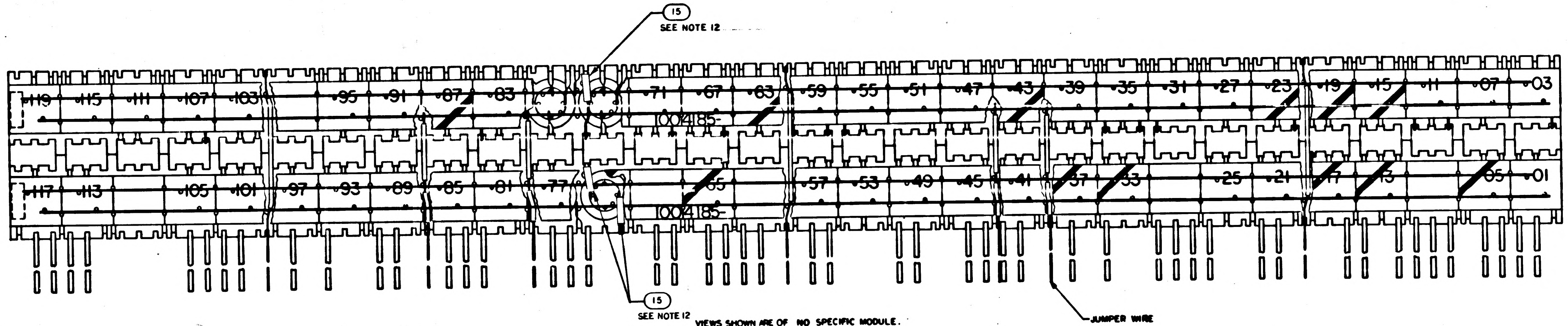
15
SEE NOTE 12
119
115
111
107
103
95
91
87
83
71
67
63
59
55
51
47
43
39
35
31
27
23
19
15
11
07
03
1004185-
117
113
105
101
97
93
89
85
81
77
65
57
53
49
45
41
37
33
25
21
17
13
05
01
1004185-
15
SEE NOTE 12
JUMPER WIRE

VIEWS SHOWN ARE OF NO SPECIFIC MODULE.
JUMPER WIRES ARE TYPICAL OF MODULES
A17, A18, A21 THRU A38

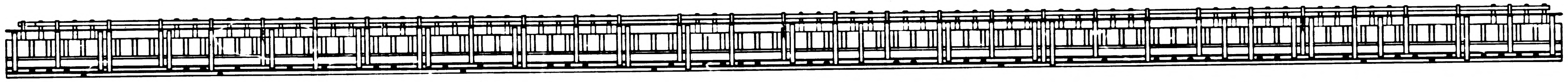

QTY REQD	PART OR IDENTIFYING NO.	NOMENCLATURE OR DESCRIPTION	FIND NO.

LIST OF MATERIALS

UNLESS OTHERWISE SPECIFIED
DIMENSIONS ARE IN INCHES
TOLERANCES ON
FRACTIONS ± DECIMALS ± ANGLES ±
DO NOT SCALE THIS DRAWING
MATERIAL
HEAT TREATMENT
FINAL FINISH

NEXT ASSY | USED ON
APPLICATION

MIT
INSTRUMENTATION LAB
CAMBRIDGE, MASS
DRAWN DATE
CHECKED
APPROVAL
APPROVAL E C Hall
NASA APPROVAL W. J. 12-28-64
MIT APPROVAL

MANNED SPACECRAFT CENTER
HOUSTON, TEXAS

MICRO LOGIC MODULE
SUB ASSEMBLY (ODD)
(TABULATED)

CODE IDENT NO. —— | SIZE E | NASA DRAWING NO. 1003814
SCALE | WT | SHEET 2 OF 3

REVISIONS			15177
SYM	DESCRIPTION	DATE	APPROVAL
A	REVISED PER TDRR 16353 DR [illegible] CHK [illegible]	[illegible]	MWC

TABLE I

TABLE INDICATES LOADING OF HOUSING MODULES (FIND NO.12) WITH MICRO NOR GATES (FIND NO.13)
SEE NOTE 5

	MODULE NO.	A1-A16	A17	A18	A21	A22	A23	A24	A25	A26	A27	A28	A29	A30-A31	A32	A33-A34	A35	A36	A37	A38					
POSITION NO.	01						X								X										
	03						X								X					X					
	05								X																
	07																								
	09			X			X	X					X												
	11						X																		
	13						X																		
	15						X																		
	17									X															
	19																								
	21		X				X						X												
	23															X									
	25			X																					
	27														X										
	29						X	X					X												
	31																								
	33						X																		
	35																								
	37						X																		
	39						X																		
	41						X						X												
	43															X									
	45																								
	47																	X							
	49			X																					
	51																								
	53												X												
	55																								
	57																								
	59																								
	61							X																	
	63																								
	65																								
	67																								
	69		X	X		X		X																	
	71																								
	73		X							X		X													
	75						X																		
	77																	X							
	79						X									X									
	81						X																		
	83																								
	85						X																		
	87						X																		
	89		X		X		X												X						
	91																								
	93		X									X													
	95																								
	97											X													
	99							X																	
	101											X													
	103														X			X							
	105													X				X							
	107						X																		
	109			X				X				X			X		X								
	101																								
	113				X							X	X		X										
	115																								
	117											X			X										
	119				X										X										

CHART I

									SEE TABLE I FOR POSITION OF THESE COMPONENTS	
MODULE NO.	INSULATOR FIND NO. 8	INSULATOR FIND NO. 9	MATRIX 3 FIND NO. 5	MATRIX 5 FIND NO. 6	MATRIX 7 FIND NO. 7	PART NO.	REV	QUANTITY OF FIND NO. 2	QUANTITY OF FIND NO. 13	QUANTITY OF FIND NO. 14
A1-A16	1004170-3	1004170-1	1003063-2	1003064-3	X	1003814-1	A	1	60	60
A17	1004173-3	1004173-1	1003063-8	1003064-92	X	1003814-2	A	1	55	55
A18	1004172-3	1004172-1	1003063-42	1003064-89	X	1003814-3	A	1	55	55
A21	1004186-3	1004186-5	1003063-49	1003064-95	1003064-68	1003814-4	A	2	57	57
A22	1004183-3	1004183-1	1003063-28	1003064-55	1003064-56	1003814-5	A	2	59	59
A23	1004175-3	1004175-1	1003063-12	1003064-59	X	1003814-6	A	1	41	41
A24	1004185-3	1004185-1	1003063-32	1003064-63	1003064-64	1003814-7	A	2	54	54
A25	1004184-3	1004184-1	1003063-30	1003064-23	X	1003814-8	A	1	59	59
A26	1004179-3	1004179-1	1003063-20	1003064-39	X	1003814-9	A	1	58	58
A27	1004174-3	1004174-1	1003063-46	1003064-19	X	1003814-10	A	1	60	60
A28	1004182-3	1004182-1	1003063-48	1003064-94	X	1003814-11	A	1	53	53
A29	1004826-5	1004826-1	1003063-52	1003064-98	X	1003814-12	A	1	54	54
A30-A31	1004178-3	1004178-1	1003063-18	1003064-35	X	1003814-13	A	1	59	59
A32	1004176-3	1004176-1	1003063-14	1003064-27	X	1003814-14	A	1	52	52
A33-A34	1004177-3	1004177-1	1003063-16	1003064-31	X	1003814-15	A	1	57	57
A35	1004171-3	1004171-1	1003063-4	1003064-7	X	1003814-16	A	1	59	59
A36	1004187-3	1004187-1	1003063-40	1003064-78	X	1003814-17	A	1	56	56
A37	1004180-3	1004180-1	1003063-22	1003064-76	X	1003814-18	A	1	59	59
A38	1004181-3	1004181-1	1003063-24	1003064-47	X	1003814-19	A	1	59	59

MASTER

QTY REQD	PART OR IDENTIFYING NO.	NOMENCLATURE OR DESCRIPTION	FIND NO

LIST OF MATERIALS

NEXT ASSY	USED ON

APPLICATION

UNLESS OTHERWISE SPECIFIED
DIMENSIONS ARE IN INCHES
TOLERANCES ON
FRACTIONS ± DECIMALS ± ANGLES ±
DO NOT SCALE THIS DRAWING
MATERIAL
HEAT TREATMENT
FINAL FINISH

MIT
INSTRUMENTATION LAB
CAMBRIDGE, MASS.
DRAWN [illegible] DATE [illegible]
CHECKED [illegible]
APPROVAL
APPROVAL E C Hall [illegible]
NASA APPROVAL [illegible] 2-28-[illegible]
MIT APPROVAL [illegible]

MANNED SPACECRAFT CENTER
HOUSTON, TEXAS

MICRO LOGIC MODULE SUB ASSEMBLY (ODD)
(TABULATED)

CODE IDENT NO. —
SIZE E
NASA DRAWING NO. 1003814
SCALE
WT
SHEET 3 OF 3

SYM	DESCRIPTION	DATE	APPROVAL
A	REVISED PER TDRR 16353 DR CHK R.M.E.	3/22/65	
B	REVISED PER TDRR 18628A DR D.O Clement CHK Alger	/65	

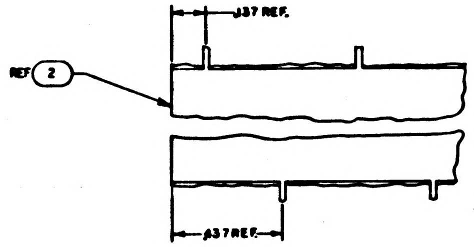

.137 REF.
REF 2
.137 REF.

SECTION A-A

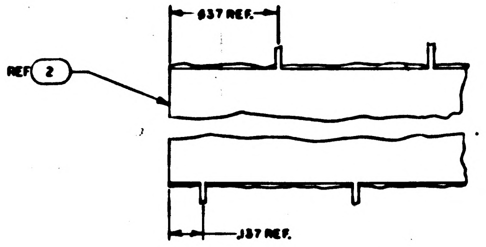

.137 REF.
REF 2
.137 REF.

SECTION B-B

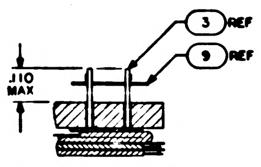

3 REF
9 REF
.110 MAX

SECTION D-D

TYP FOR ALL LOCATIONS OF FIND NO. 3

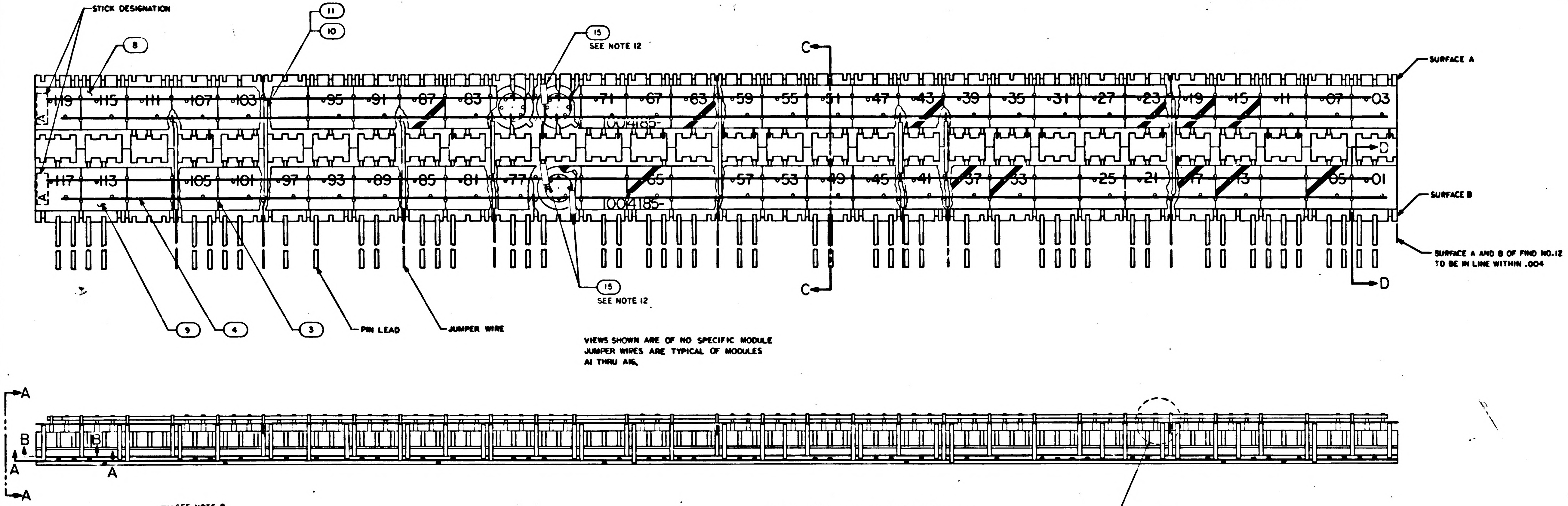

STICK DESIGNATION
8
11
10
15
SEE NOTE 12
C
SURFACE A
119 115 111 107 103 95 91 87 83 71 67 63 59 55 51 47 43 39 35 31 27 23 19 15 11 07 03
1004185-
D
117 113 105 101 97 93 89 85 81 77 65 57 53 49 45 41 37 33 25 21 17 13 05 01
1004185-
A
SURFACE B
SURFACE A AND B OF FIND NO.12 TO BE IN LINE WITHIN .004
C
D
15
SEE NOTE 12
9
4
3
PIN LEAD
JUMPER WIRE
A
B
B
A
A
A

VIEWS SHOWN ARE OF NO SPECIFIC MODULE
JUMPER WIRES ARE TYPICAL OF MODULES
A1 THRU A16.

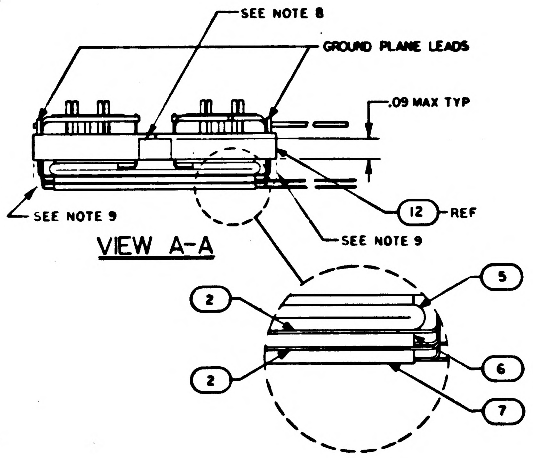

SEE NOTE 8
GROUND PLANE LEADS
.09 MAX TYP
SEE NOTE 9
12 REF
SEE NOTE 9
2
5
2
6
7

VIEW A-A

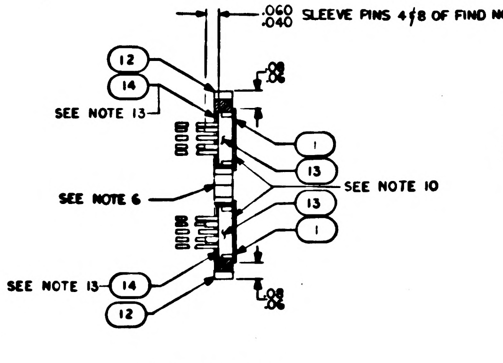

.060
.040
SLEEVE PINS 4 & 8 OF FIND NO.13
12
14
SEE NOTE 13
.06
1
13
SEE NOTE 10
SEE NOTE 6
13
1
SEE NOTE 13
14
12
.06

SECTION C-C

FIND NOS 2 THRU 11
REMOVED FOR CLARITY
SCALE: NONE

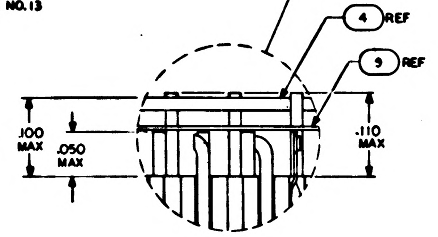

4 REF
9 REF
.100 MAX
.050 MAX
.110 MAX

NOTES:

1. INTERPRET DRAWING IN ACCORDANCE WITH STANDARDS PRESCRIBED BY MIL-D-70327
2. WELD PER ND1002005
3. AR DENOTES AS REQUIRED
4. CUT 3V BUSS BETWEEN GATES 87 AND 83
5. ▭ IN TABLE I SIGNIFIES FIND NO.13 AND FIND NO.14 TO BE OMITTED IN THIS POSITION
6. BOND HOUSINGS, FIND NO. 12 TOGETHER PER ND1002004, TYPE II OR V ORIENTING AS SHOWN
7. IDENTIFY WITH DRAWING NO. AND REVISION PER ND1002019
8. FILL CAVITIES BETWEEN FIND NO. 12 PER ND1002009 METHOD B AS SHOWN
9. SEAL EDGES OF ASSY PER ND1002009 METHOD B
10. STAKE FIND NO.13 TO FIND NO.1 USING MIL-A-5092 TYPE II
11. ~~GENERAL INSULATION REQUIREMENTS: FOR CLEARANCE LESS THAN .020 BETWEEN CONDUCTIVE MATERIALS, APPLY .010 MIN. INSULATION TO ONE CONDUCTOR USING SCD 1006776 OR ND 1002004~~
12. SLEEVE LEADS TO TERMINALS OF FIND NO.13 AS SHOWN, TYP ALL FIND NO.13
13. CURE FIND NO.14 TO FIND NO. 13 AT 190°F ± 5°F FOR 1/2 HOUR
14. WORKMANSHIP, FABRICATION, AND INSPECTION REQUIREMENTS PER ND1002069

MASTER

QTY REQD	PART OR IDENTIFYING NO.	NOMENCLATURE OR DESCRIPTION	FIND NO
AR	1006776-22	INSULATION, SLEEVING	15
SEE CHART	1004851	INSULATOR	14
SEE CHART	1004300	MICRO-NOR GATE (TO-47)	13
2	1004658	HOUSING, MICROLOGIC (TO-47)	12
AR	1006757-8	WIRE, ELECTRICAL .020 DIA	11
AR	1006776-21	INSULATION, SLEEVING	10
1	SEE CHART I	INSULATOR, STICK	9
1	SEE CHART I	INSULATOR, STICK	8
1	SEE CHART I	.800 MATRIX ASSEMBLY (7)	7
1	SEE CHART I	.800 MATRIX ASSEMBLY (5)	6
1	SEE CHART I	1.400 MATRIX ASSEMBLY (3)	5
AR	1006757-7	WIRE, ELECTRICAL NICKEL .005 X.020	4
AR	1015402	WIRE, ELECTRICAL KOVAR	3
SEE CHART	1004100	GROUND PLANE	2
AR	1006826-3	INSULATION TAPE, ELECTRICAL	1

LIST OF MATERIALS

NEXT ASSY	USED ON
1003812	
1003815	

APPLICATION

UNLESS OTHERWISE SPECIFIED
DIMENSIONS ARE IN INCHES
TOLERANCES ON
FRACTIONS ± DECIMALS ± ANGLES ±
DO NOT SCALE THIS DRAWING
MATERIAL
HEAT TREATMENT
FINAL FINISH

MIT
INSTRUMENTATION LAB
CAMBRIDGE, MASS
DWG NO CONTRACT

DRAWN DATE
CHECKED 21 Dec 64
APPROVAL
APPROVAL E C Hall 12/22
NASA APPROVAL 12-28-64
MIT APPROVAL 22 Dec 64

MANNED SPACECRAFT CENTER
HOUSTON, TEXAS

MICRO LOGIC MODULE
SUB ASSEMBLY (ODD)
(TABULATED)

CODE IDENT NO. —— SIZE E NASA DRAWING NO. 1003814
SCALE 4/1 WT SHEET 1 OF 3

	REVISIONS		
SYM	DESCRIPTION	DATE	APPROVAL
A	REVISED PER TDRR 16353 DR CHK R.M.S.	24/63	
B	REVISED PER TDRR 18628 DR CHK	63	

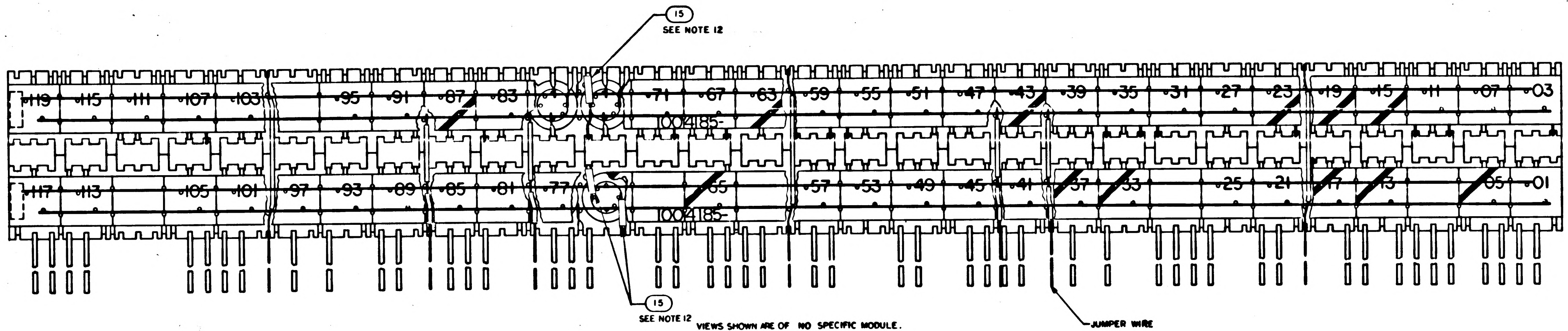

15
SEE NOTE 12
119
115
111
107
103
95
91
87
83
71
67
63
59
55
51
47
43
39
35
31
27
23
19
15
11
07
03
1004185-
117
113
105
101
97
93
89
85
81
77
65
57
53
49
45
41
37
33
25
21
17
13
05
01
1004185-
15
SEE NOTE 12
JUMPER WIRE

VIEWS SHOWN ARE OF NO SPECIFIC MODULE.
JUMPER WIRES ARE TYPICAL OF MODULES
A17, A18, A21 THRU A38

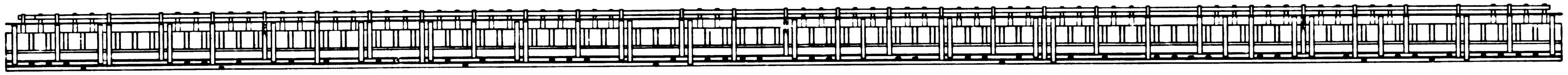

QTY REQD	PART OR IDENTIFYING NO.	NOMENCLATURE OR DESCRIPTION	FIND NO

LIST OF MATERIALS

NEXT ASSY	USED ON
APPLICATION	

UNLESS OTHERWISE SPECIFIED
DIMENSIONS ARE IN INCHES
TOLERANCES ON
FRACTIONS ± DECIMALS ± ANGLES ±
DO NOT SCALE THIS DRAWING
MATERIAL
HEAT TREATMENT
FINAL FINISH

MIT
INSTRUMENTATION LAB
CAMBRIDGE, MASS
DRAWN DATE
CHECKED
APPROVAL
APPROVAL E C
NASA APPROVAL 12-22-64
MIT APPROVAL

MANNED SPACECRAFT CENTER
HOUSTON, TEXAS

MICRO LOGIC MODULE
SUB ASSEMBLY (ODD)
(TABULATED)

CODE IDENT NO —
SIZE E
NASA DRAWING NO. 1003814
SCALE
WT
SHEET 2 OF 3

LD

	REVISIONS		15177
SYM	DESCRIPTION	DATE	APPROVAL
A	REVISED PER TDRR 16358 DR CHK		MWC
B	REVISED PER TDRR 18628 A DR CHK		

TABLE I

TABLE INDICATES LOADING OF HOUSING MODULES (FIND NO.12) WITH MICRO NOR GATES (FIND NO.13) SEE NOTE 5

	MODULE NO.	A1-A16	A17	A18	A21	A22	A23	A24	A25	A26	A27	A28	A29	A30-A31	A32	A33-A34	A35	A36	A37	A38					
POSITION NO.	01						X								X										
	03						X								X					X					
	05								X																
	07																								
	09			X			X	X					X												
	11						X																		
	13						X																		
	15						X																		
	17									X															
	19																								
	21		X				X						X												
	23															X									
	25			X																					
	27																								
	29						X	X					X		X										
	31																								
	33						X																		
	35																								
	37						X																		
	39						X																		
	41						X						X												
	43															X									
	45																								
	47																								
	49			X														X							
	51																								
	53												X												
	55																								
	57																								
	59																								
	61							X																	
	63																								
	65																								
	67																								
	69		X	X		X		X																	
	71																								
	73		X							X		X													
	75						X																		
	77																	X							
	79						X									X									
	81						X																		
	83																								
	85						X																		
	87						X																		
	89		X		X		X												X						
	91																								
	93		X									X													
	95																								
	97											X													
	99							X																	
	101											X													
	103														X			X							
	105													X				X							
	107						X																		
	109			X				X				X			X		X								
	101																								
	113				X							X	X		X										
	115																								
	117											X			X										
	119				X										X										

CHART I

MODULE NO.	INSULATOR FIND NO. 8	INSULATOR FIND NO. 9	MATRIX 3 FIND NO. 5	MATRIX 5 FIND NO. 6	MATRIX 7 FIND NO. 7	PART NO.	REV	QUANTITY OF FIND NO. 2	SEE TABLE I FOR POSITION OF THESE COMPONENTS QUANTITY OF FIND NO. 13	QUANTITY OF FIND NO. 14
A1-A16	1004170-3	1004170-1	1003063-2	1003064-3		1003814-1	B	1	60	60
A17	1004173-3	1004173-1	1003063-8	1003064-92		1003814-2	B	1	55	55
A18	1004172-3	1004172-1	1003063-42	1003064-89		1003814-3	B	1	55	55
A21	1004186-3	1004186-5	1003063-49	1003064-95	1003064-68	1003814-4	B	2	57	57
A22	1004183-3	1004183-1	1003063-28	1003064-55	1003064-56	1003814-5	B	2	59	59
A23	1004175-3	1004175-1	1003063-12	1003064-59		1003814-6	B	1	41	41
A24	1004185-3	1004185-1	1003063-32	1003064-63	1003064-64	1003814-7	B	2	54	54
A25	1004184-3	1004184-1	1003063-30	1003064-23		1003814-8	B	1	59	59
A26	1004179-3	1004179-1	1003063-20	1003064-39		1003814-9	B	1	58	58
A27	1004174-3	1004174-1	1003063-46	1003064-19		1003814-10	B	1	60	60
A28	1004182-3	1004182-1	1003063-48	1003064-94		1003814-11	B	1	53	53
A29	1004826-5	1004826-1	1003063-52	1003064-98		1003814-12	B	1	54	54
A30-A31	1004178-3	1004178-1	1003063-18	1003064-35		1003814-13	B	1	59	59
A32	1004176-3	1004176-1	1003063-14	1003064-27		1003814-14	B	1	52	52
A33-A34	1004177-3	1004177-1	1003063-16	1003064-31		1003814-15	B	1	57	57
A35	1004171-3	1004171-1	1003063-4	1003064-7		1003814-16	B	1	59	59
A36	1004187-3	1004187-1	1003063-40	1003064-78		1003814-17	B	1	56	56
A37	1004180-3	1004180-1	1003063-22	1003064-76		1003814-18	B	1	59	59
A38	1004181-3	1004181-1	1003063-24	1003064-47		1003814-19	B	1	59	59

QTY REQD	PART OR IDENTIFYING NO.	NOMENCLATURE OR DESCRIPTION	FIND NO.

LIST OF MATERIALS

NEXT ASSY	USED ON

APPLICATION

UNLESS OTHERWISE SPECIFIED DIMENSIONS ARE IN INCHES
TOLERANCES ON
FRACTIONS ± DECIMALS ± ANGLES ±
DO NOT SCALE THIS DRAWING
MATERIAL
HEAT TREATMENT
FINAL FINISH

MIT INSTRUMENTATION LAB
CAMBRIDGE, MASS.
DRAWN
CHECKED
APPROVAL
APPROVAL E C Hall
NASA APPROVAL
MIT APPROVAL

MANNED SPACECRAFT CENTER
HOUSTON, TEXAS

MICRO LOGIC MODULE
SUB ASSEMBLY (ODD)
(TABULATED)

CODE IDENT NO. —
SIZE E
NASA DRAWING NO 1003814
SCALE
WT
SHEET 3 OF 3

MASTER

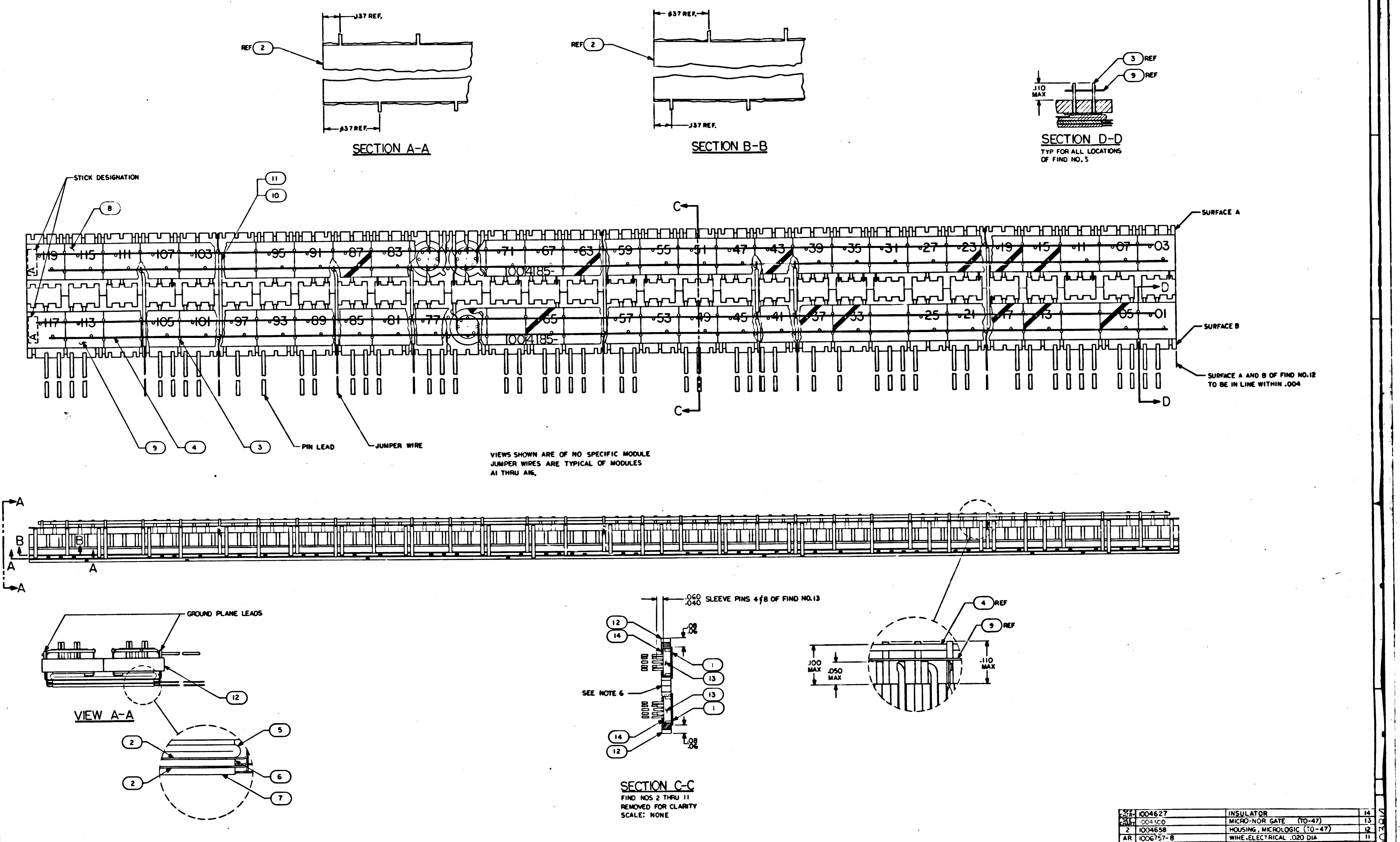

.037 REF.
REF 2
SECTION A-A
SECTION B-B
SECTION D-D
TYP FOR ALL LOCATIONS OF FIND NO. 3
3 REF
9 REF
.110 MAX
STICK DESIGNATION
8
11
10
SURFACE A
SURFACE B
SURFACE A AND B OF FIND NO. 12 TO BE IN LINE WITHIN .004
1004185-
C
D
9
4
3
PIN LEAD
JUMPER WIRE
VIEWS SHOWN ARE OF NO SPECIFIC MODULE
JUMPER WIRES ARE TYPICAL OF MODULES A1 THRU A16.
A
B
GROUND PLANE LEADS
12
VIEW A-A
2
5
6
7
.060 .040 SLEEVE PINS 4 & 8 OF FIND NO. 13
.08 .06
14
1
13
SEE NOTE 6
SECTION C-C
FIND NOS 2 THRU 11 REMOVED FOR CLARITY
SCALE: NONE
4 REF
9 REF
.100 MAX
.050 MAX
.110 MAX

SEE CHART	1004627	INSULATOR	14
SEE CHART	1004300	MICRO-NOR GATE (TO-47)	13
2	1004658	HOUSING, MICROLOGIC (TO-47)	12
AR	1006757-8	WIRE, ELECTRICAL .020 DIA	11
AR	1006776-21	INSULATION, SLEEVING	10
1	SEE CHART I	INSULATOR, STICK	9
1	SEE CHART I	INSULATOR, STICK	8
1	SEE CHART I	.800 MATRIX ASSEMBLY (7)	7
1	SEE CHART I	.800 MATRIX ASSEMBLY (5)	6
1	SEE CHART I	1.400 MATRIX ASSEMBLY (3)	5
AR	1006757-7	WIRE, ELECTRICAL NICKEL .005 X .020	4
AR	1015402	WIRE, ELECTRICAL KOVAR	3
SEE CHART	1004100	GROUND PLANE	2
AR	1006826-3	INSULATION TAPE, ELECTRICAL	1
QTY REQD	PART OR IDENTIFYING NO.	NOMENCLATURE OR DESCRIPTION	FIND NO

LIST OF MATERIALS

NOTES:

1. INTERPRET DRAWING IN ACCORDANCE WITH STANDARDS PRESCRIBED BY MIL-D-70327
2. WELD PER ND1002005
3. AR DENOTES AS REQUIRED
4. CUT 3V BUSS BETWEEN GATES 87 AND 83
5. ☒ IN TABLE I SIGNIFIES FIND NO. 13 AND FIND NO. 14 TO BE OMITTED IN THIS POSITION
6. BOND HOUSINGS, FIND NO. 12 TOGETHER PER ND1002004, ORIENTING AS SHOWN
7. IDENTIFY PER ND1002019

MASTER

1003812	
1003815	
NEXT ASSY	USED ON
APPLICATION	

UNLESS OTHERWISE SPECIFIED
DIMENSIONS ARE IN INCHES
TOLERANCES ON
FRACTIONS ± DECIMALS ± ANGLES ±
DO NOT SCALE THIS DRAWING
MATERIAL
HEAT TREATMENT
FINAL FINISH

MIT
INSTRUMENTATION LAB
CAMBRIDGE, MASS
DWG NO CONTRACT
DRAWN DATE 10 Dec
CHECKED 21 Dec 64
APPROVAL
APPROVAL E C Hall 12/22
NASA APPROVAL 12-29-64
MIT APPROVAL 22 Dec 64

MANNED SPACECRAFT CENTER
HOUSTON, TEXAS

MICRO LOGIC MODULE SUB ASSEMBLY (ODD) (TABULATED)

CODE IDENT NO. —— SIZE E NASA DRAWING NO. 1003814
SCALE 4/1 WT SHEET 1 OF 3

REVISIONS			
SYM	DESCRIPTION	DATE	APPROVAL

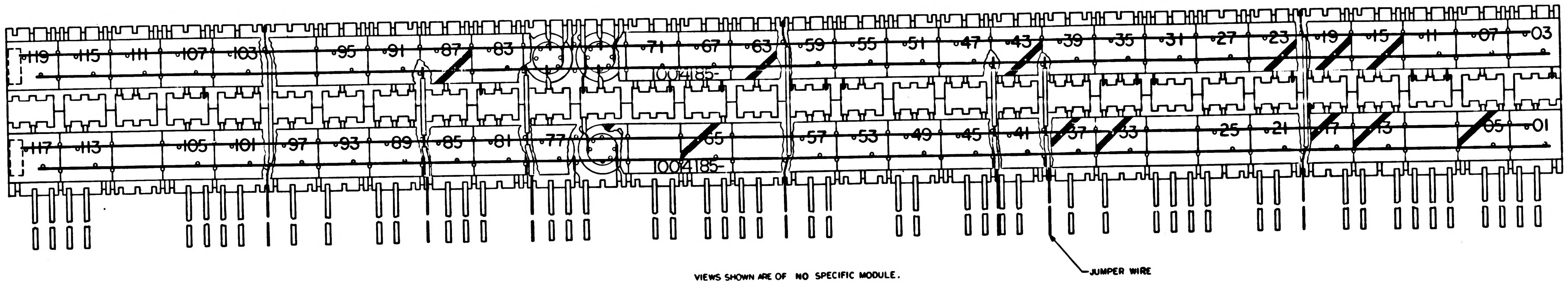

119
115
111
107
103
95
91
87
83
71
67
63
1004185-
59
55
51
47
43
39
35
31
27
23
19
15
11
07
03
117
113
105
101
97
93
89
85
81
77
65
1004185-
57
53
49
45
41
37
33
25
21
17
13
05
01
JUMPER WIRE

VIEWS SHOWN ARE OF NO SPECIFIC MODULE.
JUMPER WIRES ARE TYPICAL OF MODULES
A17, A18, A21 THRU A38

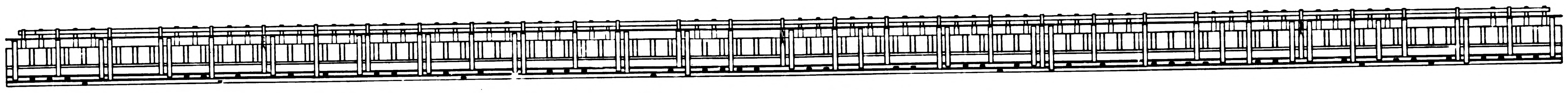

MASTER

QTY REQD	PART OR IDENTIFYING NO.	NOMENCLATURE OR DESCRIPTION	FIND NO.

LIST OF MATERIALS

NEXT ASSY	USED ON

APPLICATION

UNLESS OTHERWISE SPECIFIED
DIMENSIONS ARE IN INCHES
TOLERANCES ON
FRACTIONS ± DECIMALS ± ANGLES ±
DO NOT SCALE THIS DRAWING
MATERIAL
HEAT TREATMENT
FINAL FINISH

MIT
INSTRUMENTATION LAB
CAMBRIDGE, MASS
DWG NO. CONTRACT
DRAWN [illegible] DATE 18 Dec 64
CHECKED [illegible] 21 Dec 64
APPROVAL
APPROVAL E C Hall [illegible] 12/22
NASA APPROVAL W J [illegible] 12-29-64
MIT APPROVAL [illegible] 22 Dec 64

MANNED SPACECRAFT CENTER
HOUSTON, TEXAS

MICRO LOGIC MODULE
SUB ASSEMBLY (ODD)
(TABULATED)

CODE IDENT NO.	SIZE	NASA DRAWING NO.
—	E	1003814
SCALE	WT	SHEET 2 OF 3

LD

REVISIONS			
SYM	DESCRIPTION	DATE	APPROVAL

15/77

TABLE I

TABLE INDICATES LOADING OF HOUSING MODULES
(FIND NO.12) WITH MICRO NOR GATES (FIND NO.13)
SEE NOTE 5

MODULE NO.		A1-A16	A17	A18	A21	A22	A23	A24	A25	A26	A27	A28	A29	A30-A31	A32	A33-A34	A35	A36	A37	A38					
POSITION NO.	01						X								X										
	03						X								X					X					
	05								X																
	07																								
	09			X			X	X					X												
	11						X																		
	13						X																		
	15						X																		
	17									X															
	19																								
	21		X				X						X												
	23															X									
	25			X																					
	27																								
	29						X	X					X		X										
	31																								
	33						X																		
	35																								
	37						X																		
	39						X																		
	41						X						X												
	43															X									
	45																								
	47																								
	49			X														X							
	51																								
	53												X												
	55																								
	57																								
	59																								
	61							X																	
	63																								
	65																								
	67																								
	69		X	X		X		X																	
	71																								
	73		X							X		X													
	75						X																		
	77																	X							
	79						X						X			X									
	81						X																		
	83																								
	85						X																		
	87						X																		
	89		X		X		X												X						
	91																								
	93		X									X													
	95																								
	97											X													
	99							X																	
	101											X													
	103														X			X							
	105													X				X							
	107						X																		
	109			X				X				X			X		X								
	101																								
	113				X							X			X										
	115																								
	117											X			X										
	119				X										X										

CHART I

MODULE NO.	INSULATOR FIND NO.8	INSULATOR FIND NO.9	MATRIX 3 FIND NO. 5	MATRIX 5 FIND NO. 6	MATRIX 7 FIND NO. 7	PART NO.	REV	QUANTITY OF FIND NO.2	SEE TABLE I FOR POSITION OF THESE COMPONENTS	
									QUANTITY OF FIND NO.13	QUANTITY OF FIND NO.14
A1-A16	1004170-3	1004170-1	1003063-2	1003064-3	X	1003814-1	–	1	60	60
A17	1004173-3	1004173-1	1003063-8	1003064-92	X	1003814-2	–	1	55	55
A18	1004172-3	1004172-1	1003063-42	1003064-89	X	1003814-3	–	1	55	55
A21	1004186-3	1004186-5	1003063-49	1003064-95	1003064-68	1003814-4	–	2	57	57
A22	1004183-3	1004183-1	1003063-28	1003064-55	1003064-56	1003814-5	–	2	59	59
A23	1004175-3	1004175-1	1003063-12	1003064-59	X	1003814-6	–	1	41	41
A24	1004185-3	1004185-1	1003063-32	1003064-63	1003064-64	1003814-7	–	2	54	54
A25	1004184-3	1004184-1	1003063-30	1003064-23	X	1003814-8	–	1	59	59
A26	1004179-3	1004179-1	1003063-20	1003064-39	X	1003814-9	–	1	58	58
A27	1004174-3	1004174-1	1003063-46	1003064-19	X	1003814-10	–	1	60	60
A28	1004182-3	1004182-1	1003063-48	1003064-94	X	1003814-11	–	1	53	53
A29	1004189-5	1004189-1	1003063-38	1003064-75	X	1003814-12	–	1	54	54
A30-A31	1004178-3	1004178-1	1003063-18	1003064-35	X	1003814-13	–	1	59	59
A32	1004176-3	1004176-1	1003063-14	1003064-27	X	1003814-14	–	1	52	52
A33-A34	1004177-3	1004177-1	1003063-16	1003064-31	X	1003814-15	–	1	57	57
A35	1004171-3	1004171-1	1003063-4	1003064-7	X	1003814-16	–	1	59	59
A36	1004187-3	1004187-1	1003063-40	1003064-78	X	1003814-17	–	1	56	56
A37	1004180-3	1004180-1	1003063-22	1003064-76	X	1003814-18	–	1	59	59
A38	1004181-3	1004181-1	1003063-24	1003064-47	X	1003814-19	–	1	59	59

MASTER

QTY REQD	PART OR IDENTIFYING NO.	NOMENCLATURE OR DESCRIPTION	FIND NO

LIST OF MATERIALS

NEXT ASSY	USED ON

APPLICATION

UNLESS OTHERWISE SPECIFIED
DIMENSIONS ARE IN INCHES
TOLERANCES ON
FRACTIONS ± DECIMALS ± ANGLES ±
DO NOT SCALE THIS DRAWING
MATERIAL
HEAT TREATMENT
FINAL FINISH

MIT
INSTRUMENTATION LAB
CAMBRIDGE, MASS
DWG NO. CONTRACT
DRAWN DATE
CHECKED
APPROVAL
APPROVAL E C Hall
NASA APPROVAL
12-29-64
MIT APPROVAL

MANNED SPACECRAFT CENTER
HOUSTON, TEXAS

MICRO LOGIC MODULE
SUB ASSEMBLY (ODD)
(TABULATED)

CODE IDENT NO. —
SIZE E
NASA DRAWING NO. 1003814
SCALE
WT
SHEET 3 OF 3

1003814

REVISIONS

SYM	DESCRIPTION	DATE	APPROVAL

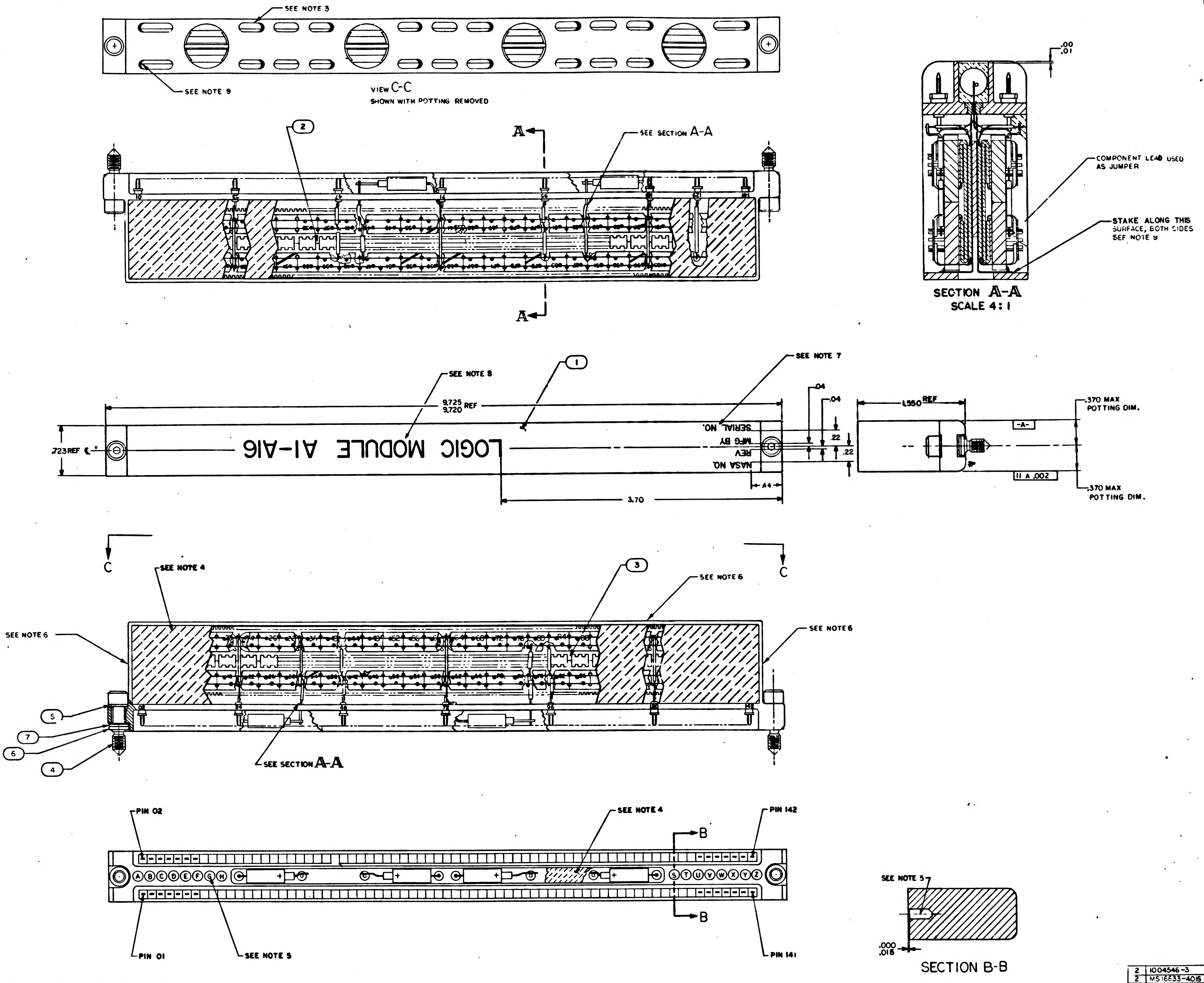
SEE NOTE 3
SEE NOTE 9
VIEW C-C
SHOWN WITH POTTING REMOVED
2
SEE SECTION A-A
A
A
.00
.01
COMPONENT LEAD USED AS JUMPER
STAKE ALONG THIS SURFACE, BOTH SIDES SEE NOTE 9
SECTION A-A
SCALE 4:1
SEE NOTE 8
1
SEE NOTE 7
9.725
9.720 REF
.723 REF
LOGIC MODULE A1-A16
SERIAL NO.
MFG BY
REV
NASA NO.
.44
3.70
.04
.04
.22
.22
1.550 REF
-A-
.370 MAX POTTING DIM.
.370 MAX POTTING DIM.
A .002
C
C
SEE NOTE 4
3
SEE NOTE 6
SEE NOTE 6
SEE NOTE 6
5
7
6
4
SEE SECTION A-A
PIN 02
SEE NOTE 4
PIN 142
B
B
A B C D E F G H
S T U V W X Y Z
PIN 01
SEE NOTE 5
PIN 141
SEE NOTE 5
.000
.015
SECTION B-B

NOTES:

1. INTERPRET DWG IN ACCORDANCE WITH STANDARDS PRESCRIBED BY MIL-D-70327
2. WELD PER ND 1002005
3. POTTING MATERIAL IN SLOTS AND HOLES TO BE .005 ABOVE FLUSH TO .010 BELOW FLUSH
4. ENCAPSULATE WITH POLYURETHANE FOAM PER ND 1002002 (BLACK)
5. FILL KEYING POSITIONS INDICATED BY CHART WITH THERMALLY CONDUCTIVE EPOXY RESIN PER ND1002183
6. SPRAY COAT TO SURFACE AND ENDS PER ND 1002004 FLAT BLACK
7. MARK .093 HIGH WHITE PER ND1002019 AND ND1002122 TYPE II CLASS I, SERIALIZE PER ND 1002023, USING MARKING INK 1006271-1
8. MARK .250 HIGH WHITE PER ND1002019 AND ND1002122 TYPE II CLASS I, USING MARKING INK 1006271-1
9. STAKE FIND NO. 2 & 3 TO FIND NO. 1 PER ND 1002004, FLOW STAKING COMPOUND PARTIALLY INTO SLOTS

QTY REQD	PART OR IDENTIFYING NO.	NOMENCLATURE OR DESCRIPTION	FIND NO.
2	1004546-3	WASHER, FLAT	7
2	MS16633-4015	RING, RETAINING, EXTERNAL "E"	6
2	1004546-1	WASHER, FLAT	5
2	1004579-1	SCREW, JACKING	4
1	1003813-1	MICRO LOGIC MODULE, SUB-ASSY (EVEN)	3
1	1003814-1	MICRO LOGIC MODULE, SUB-ASSY (ODD)	2
1	1003110	HEADER HOUSING ASSEMBLY	1

LIST OF MATERIALS

NEXT ASSY	USED ON
1003700	

APPLICATION

UNLESS OTHERWISE SPECIFIED
DIMENSIONS ARE IN INCHES
TOLERANCES ON
FRACTIONS ± — DECIMALS ±.03 ANGLES ± —
DO NOT SCALE THIS DRAWING
MATERIAL —
HEAT TREATMENT —
FINAL FINISH —

MIT
INSTRUMENTATION LAB
CAMBRIDGE, MASS
DWG NO. CONTRACT
DRAWN [illegible] DATE 21 Dec 64
CHECKED [illegible] Dec 64
APPROVAL
APPROVAL E C Hall Dec 12/22
NASA APPROVAL W. J. [illegible] 12-28-64
MIT APPROVAL [illegible] 22 Dec 64

MANNED SPACECRAFT CENTER
HOUSTON, TEXAS

LOGIC MODULE ASSY
NO. A1-A16

CODE IDENT NO. —
SIZE E
NASA DRAWING NO. 1003815
SCALE 2/1
WT
SHEET 1 OF 2

MASTER

REVISIONS			
SYM	DESCRIPTION	DATE	APPROVAL

PART NO.	REV	EVEN	ODD	REF FLOW	REF WIRING	KEY POSITIONS
1003815-1	—	1003813-1	1003814-1	1006540	1006120	ADEFTUVY

MASTER

QTY REQD	PART OR IDENTIFYING NO.	NOMENCLATURE OR DESCRIPTION	FIND NO

LIST OF MATERIALS

NEXT ASSY	USED ON
APPLICATION	

UNLESS OTHERWISE SPECIFIED
DIMENSIONS ARE IN INCHES
TOLERANCES ON
FRACTIONS DECIMALS ANGLES
DO NOT SCALE THIS DRAWING
MATERIAL
HEAT TREATMENT
FINAL FINISH

MIT
INSTRUMENTATION LAB
CAMBRIDGE, MASS
DWG NO CONTRACT
DRAWN DATE
CHECKED
APPROVAL
APPROVAL
NASA APPROVAL 2-25-64
MIT APPROVAL

MANNED SPACECRAFT CENTER
HOUSTON, TEXAS

LOGIC MODULE ASSY
NO. A1-A16

CODE IDENT NO.
SIZE E
NASA DRAWING NO 1003815
SCALE
WT
SHEET 2 OF 2

SYM	DESCRIPTION	DATE	APPROVAL
A	REVISED PER TDRR 19999 DR. CHK. APPD.	25 JUN 65	

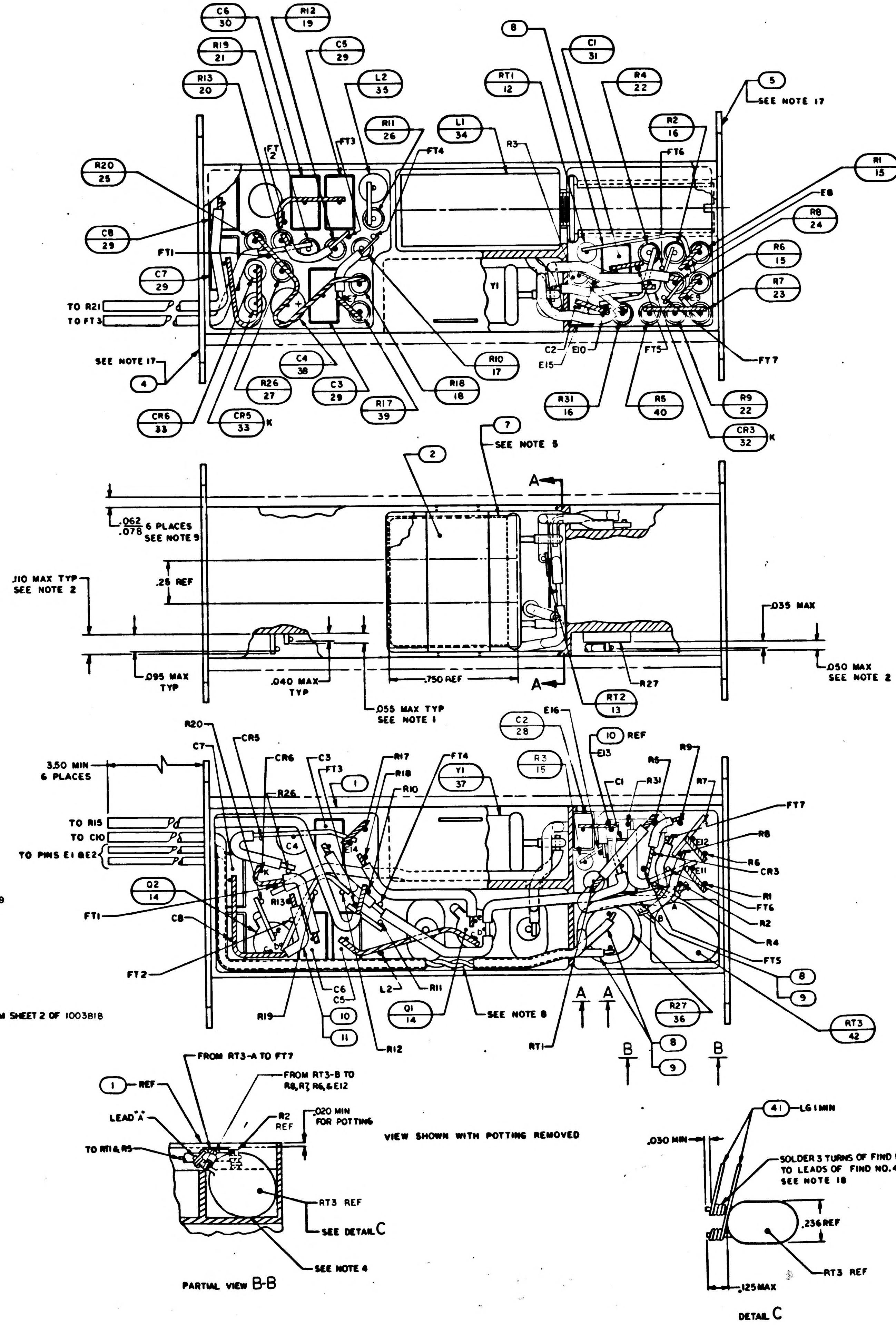
C6 30
R12 19
R19 21
C5 29
R13 20
L2 35
R11 26
L1 34
8
C1 31
RT1 12
R4 22
5
SEE NOTE 17
R2 16
R1 15
R20 25
FT 2
FT3
FT4
R3
FT6
E8
R8 24
C8 29
FT1
R6 15
C7 29
Y1
R7 23
TO R21
TO FT3
SEE NOTE 17
4
C4 38
R26 27
C3 29
R17 39
R18 18
R10 17
C2
E10
E15
FT5
FT7
R31 16
R5 40
R9 22
CR6 33
CR5 33 K
CR3 32 K
2
7
SEE NOTE 5
A
.062 .078 6 PLACES SEE NOTE 9
.110 MAX TYP SEE NOTE 2
.25 REF
.035 MAX
.095 MAX TYP
.040 MAX TYP
.750 REF
.055 MAX TYP SEE NOTE 1
RT2 13
R27
.050 MAX SEE NOTE 2
C2 28
E16
10 REF
E13
R3 15
Y1 37
3.50 MIN 6 PLACES
TO R15
TO C10
TO PINS E1 & E2
R20
CR5
C7
CR6
C3
R17
FT4
R18
R10
R26
FT3
1
R5
R9
FT7
C1
R31
R7
R8
R6
CR3
R1
FT6
R2
R4
FT5
8
9
Q2 14
FT1
C8
R13
FT2
C6
C5
10
11
R19
L2
R11
Q1 14
R12
SEE NOTE 8
RT1
A A
B B
R27 36
RT3 42
1 REF
LEAD "A"
TO RT1 & R5
FROM RT3-A TO FT7
FROM RT3-B TO R8, R7, R6, & E12
R2 REF
.020 MIN FOR POTTING
VIEW SHOWN WITH POTTING REMOVED
RT3 REF
SEE DETAIL C
SEE NOTE 4
.030 MIN
41 LG 1 MIN
SOLDER 3 TURNS OF FIND NO. 43 TO LEADS OF FIND NO. 42 SEE NOTE 18
.236 REF
RT3 REF
.125 MAX

PARTIAL VIEW B-B

DETAIL C

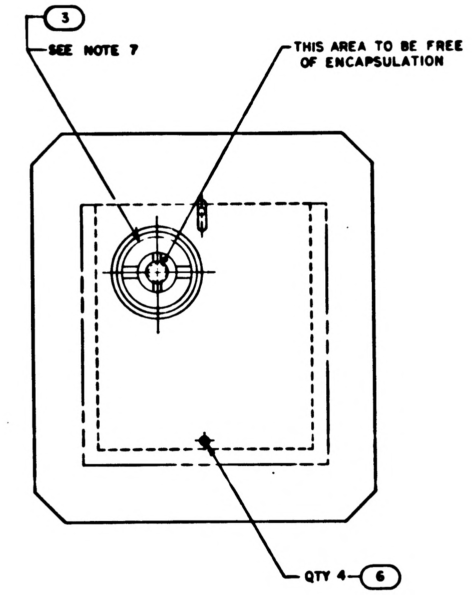
3
SEE NOTE 7
THIS AREA TO BE FREE OF ENCAPSULATION
QTY 4
6

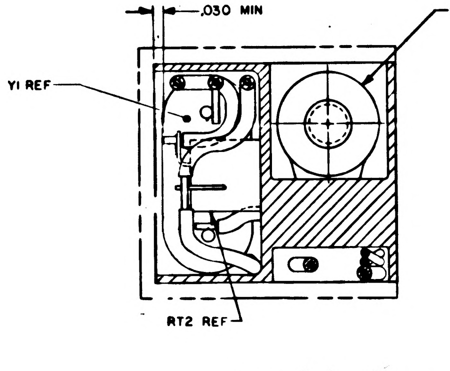
.030 MIN
L1
Y1 REF
RT2 REF

SECTION A-A

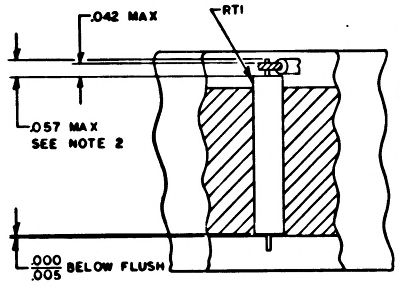
.042 MAX
RT1
.057 MAX SEE NOTE 2
.000 .005 BELOW FLUSH

VIEW A-A

NOTES
1. WHITE DOT INDICATES LEAD TO BE CUT FOR FIRST LEVEL WIRING
2. BLACK DOT INDICATES LEAD TO BE CUT TO DIMENSION SHOWN FOR SECOND LEVEL WIRING
3. WIRING STANDARDS FOR WELDED UNITS IN ACCORDANCE WITH ND 1002005
4. STAKE ALL FEED THROUGHS AND ALL COMPONENTS EXCEPT FIND NO.31 AND FIND NO.37 PER ND 1002009
5. OVERLAP ENDS OF FIND NO. 7 APPROXIMATELY .25 INCH AT CRYSTAL SURFACES CLOSEST TO FIND NO. 2
6. IDENTIFY WITH NASA DWG NO. PER ND 1002019
7. REMOVE AND DISCARD EXISTING NUT ON FIND NO. 34 AND REPLACE WITH FIND NO. 3
8. TWIST LEADS AS SHOWN 4 TIMES PER INCH
9. ENCAPSULATE CAVITIES OF FIND NO.1 TO DIMENSION SHOWN USING RTV11 PER ND1002009
10. AR DENOTES AS REQUIRED
11. K DENOTES CATHODE SIDE OF DIODE
12. THESE PARTS TO BE PART OF KIT ASSEMBLY DWG. NO. 1003538 AND NOMINAL VALUES TO BE SELECTED FROM SHEET 2 OF 1003818
13. INTERPRET DRAWING IN ACCORDANCE WITH STANDARDS PRESCRIBED BY MIL-D-70327
14. SOLDER PER ND 1002071
15. FIND NO.7, ALUMINUM BACKED ADHESIVE PER MIL-T-11291 .765/.735 WIDE
16. WHEN THE VALUE OF R8 IS 0 OHMS USE .020 DIA NICKEL WIRE, FIND NO. 10
17. BOND FIND NO.4 AND FIND NO.5 TO FIND NO.1 PER ND 1002004
18. WORKMANSHIP, FABRICATION, AND INSPECTION REQUIREMENTS PER ND 1002069

QTY REQD	PART OR IDENTIFYING NO.	NOMENCLATURE OR DESCRIPTION	FIND NO.
☒	1006140	SCHEMATIC	REF
1	1006291	THERMISTOR	42
AR	1006757-24	WIRE, ELECTRICAL .010 DIA	41
1	SEE NOTE 12	RESISTOR, FIXED FILM	40
1	SEE NOTE 12	RESISTOR, FIXED, FILM	39
1	1006755-31	CAPACITOR, FIXED, TANTALUM	38
1	SEE NOTE 12	CRYSTAL UNIT, QUARTZ	37
1	1006714	RESISTOR, FIXED, WW	36
1	1010406-12	COIL, RF, CHOKE	35
1	1006846	COIL, RF, VARIABLE	34
2	1006751	SEMICONDUCTOR DEVICE, DIODE	33
1	SEE NOTE 12	SEMICONDUCTOR DEVICE, VAR CAP	32
1	SEE NOTE 12	CAPACITOR, FIXED	31
1	1006793-83	CAPACITOR, FIXED	30
4	1006793-87	CAPACITOR, FIXED	29
1	SEE NOTE 12	CAPACITOR, FIXED	28
1	1006750-56	RESISTOR, FIXED, FILM	27
1	1006750-39	RESISTOR, FIXED, FILM	26
1	1006750-1	RESISTOR, FIXED, FILM	25
1	SEE NOTE 12	RESISTOR, FIXED, FILM	24
1	SEE NOTE 12	RESISTOR, FIXED, FILM	23
2	SEE NOTE 12	RESISTOR, FIXED, FILM	22
1	1006750-60	RESISTOR, FIXED, FILM	21
1	1006750-42	RESISTOR, FIXED, FILM	20
1	1006750-82	RESISTOR, FIXED, FILM	19
1	1006750-8	RESISTOR, FIXED, FILM	18
1	1006750-82	RESISTOR, FIXED, FILM	17
2	SEE NOTE 12	RESISTOR, FIXED, FILM	16
3	SEE NOTE 12	RESISTOR, FIXED, FILM	15
2	1006752	TRANSISTOR, SILICON	14
1	SEE NOTE 12	THERMISTOR	13
1	1006715-1	THERMISTOR	12
AR	1006776-22	INSULATION, SLEEVING	11
AR	1006757-8	WIRE, ELECTRICAL, .020 DIA	10
AR	1006776-25	INSULATION, SLEEVING	9
AR	1006757-12	WIRE, ELECTRICAL, .010 DIA	8
AR	SEE NOTE 15	TAPE, ADHESIVE, AL BACKED	7
4	1004544	PIN, GUIDE	6
1	1004555	END PLATE, RIGHT	5
1	1004558	END PLATE, LEFT	4
1	1004556	NUT, SLEEVE	3
1	1004557	SPRING, LEAF	2
1	1004840	HOLDER, COMPONENT	1

LIST OF MATERIALS

NEXT ASSY	USED ON
1003527	

APPLICATION

UNLESS OTHERWISE SPECIFIED
DIMENSIONS ARE IN INCHES
TOLERANCES ON
FRACTIONS ± DECIMALS ± ANGLE ±
DO NOT SCALE THIS DRAWING
MATERIAL
HEAT TREATMENT
FINAL FINISH

MIT
INSTRUMENTATION LAB
CAMBRIDGE MASS
DWG. NO. CONTRACT
DRAWN P. Bucurelas DATE 1 MAR 65
CHECKED R. Church 1 June 65
APPROVAL B. Marsh 1 June 65
APPROVAL Eldon C Hall 3 June 65
NASA APPROVAL
MIT APPROVAL
MIT APPROVAL 8 June 65

MANNED SPACECRAFT CENTER
HOUSTON, TEXAS

COMPONENT ASSEMBLY
OSCILLATOR STAGE
AGC OSCILLATOR

CODE IDENT NO. 80230
SIZE J
NASA DRAWING NO. 1003818
SCALE 4/1
WT
SHEET 1 OF 2

1003818 A

1003818 A

REVISIONS			
SYM	DESCRIPTION	DATE	APPROVAL
A	REVISED PER TDRR 19999 DR. CHK. APPD.	29JAN65	

CHART A FIND NO.16
REF R31

DASH NO.	OHMS ±2%
1006750 - 56	10K
-140	10.5K
-57	11K
-141	11.5K
-58	12K
-142	12.5K
-59	13K
-143	14K
-60	15K
-144	15.5K
-61	16K
-145	17K
-62	18K
-146	19K
-63	20K
-147	21K
-64	22K
-148	23K
-65	24K
-149	25.5K
-66	27K
-150	28.5K
-67	30K
-151	31.5K
-68	33K
-152	34.5K
-69	36K
-153	37.5K
-70	39K
-154	41K
1006750 - 71	43K

CHART B FIND NO.15
REF R1

DASH NO.	OHMS ±2%
1006750 - 52	6.8K
-136	7.15K
-53	7.5K
-137	7.85K
-54	8.2K
-138	8.65K
-55	9.1K
-139	9.55K
-56	10K
-140	10.5K
-57	11K
-141	11.5K
-58	12K
-142	12.5K
-59	13K
-143	14K
-60	15K
-144	15.5K
-61	16K
-145	17K
-62	18K
-146	19K
-63	20K
-147	21K
1006750 - 64	22K

CHART C FIND NO.16
REF R2

DASH NO.	OHMS ±2%	DASH NO.	OHMS ±2%
1006750 - 56	10K	1006750 - 157	53.5K
- 140	10.5K	- 74	56K
- 57	11K	- 158	59K
- 141	11.5K	- 75	62K
- 58	12K	- 159	65K
- 142	12.5K	- 76	68K
- 59	13K	- 160	71.5K
- 143	14K	- 77	75K
- 60	15K	- 161	78.5K
- 144	15.5K	- 78	82K
- 61	16K	- 162	86.5K
- 145	17K	- 79	91K
- 62	18K	- 163	95.5K
- 146	19K	- 80	100K
- 63	20K	- 164	105K
- 147	21K	- 81	110K
- 64	22K	- 165	115K
- 148	23K	- 82	120K
- 65	24K	- 166	125K
- 149	25.5K	- 83	130K
- 66	27K	- 167	140K
- 150	28.5K	1006750 - 84	150K
- 67	30K		
- 151	31.5K		
- 68	33K		
- 152	34.5K		
- 69	36K		
- 153	37.5K		
- 70	39K		
- 154	41K		
- 71	43K		
- 155	45K		
- 72	47K		
- 156	49K		
1006750 - 73	51K		

CHART F FIND NO.39
REF R17

DASH NO.	OHMS ±2%
1006750 - 55	9.1K
-56	10K
-57	11K
-58	12K
-59	13K
1006750 - 60	15K

CHART H FIND NO.13
REF RT2

DASH NO.	OHMS ±2%
1006712 - 1	500
1006712 - 2	1000
1006712 - 3	5000

CHART G
FIND NO.28

DASH NO.	VALUE UUF
1006793 - 37	10
- 38	11
- 39	12
- 40	13
- 41	15
- 42	16
- 43	18
- 44	20
- 45	22
- 46	24
- 47	27
- 48	30
- 49	33
- 50	36
- 51	39
- 52	43
- 53	47
- 54	51
- 55	56
- 56	62
- 57	68
- 58	75
- 59	82
- 60	91
1006793 - 61	100

CHART D FIND NO.15 & FIND NO. 23
REF R3 & R7

DASH NO.	OHMS ±2%	DASH NO.	OHMS ±2%	DASH NO.	OHMS ±2%
1006750 - 25	510	1006750 - 43	3 K	1006750 - 143	14 K
- 109	535	- 127	3.15K	- 60	15 K
- 26	560	- 44	3.3K	- 144	15.5K
- 110	590	- 128	3.45K	- 61	16 K
- 27	620	- 45	3.6K	- 145	17 K
- 111	650	- 129	3.75K	- 62	18 K
- 28	680	- 46	3.9K	- 146	19 K
- 112	715	- 130	4.1K	- 63	20K
- 29	750	- 47	4.3K	- 147	21K
- 113	785	- 131	4.5K	- 64	22K
- 30	820	- 48	4.7K	- 148	23K
- 114	865	- 132	4.9K	- 65	24K
- 31	910	- 49	5.1K	- 149	25.5K
- 115	955	- 133	5.35K	- 66	27K
- 32	1K	- 50	5.6K	- 150	28.5K
- 116	1.05K	- 134	5.9K	- 67	30K
- 33	1.1K	- 51	6.2K	- 151	31.5K
- 117	1.15K	- 135	6.5K	- 68	33K
- 34	1.2K	- 52	6.8K	- 152	34.5K
- 118	1.25K	- 136	7.15K	- 69	36K
- 35	1.3K	- 53	7.5K	- 153	37.5K
- 119	1.4K	- 137	7.85K	- 70	39K
- 36	1.5K	- 54	8.2K	- 154	41K
- 120	1.55K	- 138	8.65K	- 71	43K
- 37	1.6K	- 55	9.1K	- 155	45K
- 121	1.7K	- 139	9.55K	- 72	47K
- 38	1.8K	- 56	10K	- 156	49K
- 122	1.9K	- 140	10.5K	- 73	51K
- 39	2.0K	- 57	11K	- 157	53.5K
- 123	2.1K	- 141	11.5K	- 74	56K
- 40	2.2K	- 58	12K	- 158	59K
- 124	2.3K	- 142	12.5K	1006750 - 75	62K
- 41	2.4K	1006750 - 59	13K		
- 125	2.55K				
- 42	2.7K				
1006750 - 126	2.85K				

CHART E FIND NO.15 & FIND NO.40
REF R6 & R5

DASH NO.	OHMS ±2%	DASH NO.	OHMS ±2%
1006750 - 32	1K	1006750 - 51	6.2K
- 116	1.05K	- 135	6.5K
- 33	1.1K	- 52	6.8K
- 117	1.15K	- 136	7.15K
- 34	1.2K	- 53	7.5K
- 118	1.25K	- 137	7.85K
- 35	1.3K	- 54	8.2K
- 119	1.4K	- 138	8.65K
- 36	1.5K	- 55	9.1K
- 120	1.55K	- 139	9.55K
- 37	1.6K	- 56	10K
- 121	1.7K	- 140	10.5K
- 38	1.8K	- 57	11K
- 122	1.9K	- 141	11.5K
- 39	2.0K	- 58	12K
- 123	2.1K	- 142	12.5K
- 40	2.2K	- 59	13K
- 124	2.3K	- 143	14K
- 41	2.4K	- 60	15K
- 125	2.55K	- 144	15.5K
- 42	2.7K	- 61	16K
- 126	2.85K	- 145	17K
- 43	3K	- 62	18K
- 127	3.15K	- 146	19K
- 44	3.3K	- 63	20K
- 128	3.45K	- 147	21K
- 45	3.6K	- 64	22K
- 129	3.75K	- 148	23K
- 46	3.9K	- 65	24K
- 130	4.1K	- 149	25.5K
- 47	4.3K	- 66	27K
- 131	4.5K	- 150	28.5K
- 48	4.7K	- 67	30K
- 132	4.9K	- 151	31.5K
- 49	5.1K	1006750 - 68	33K
- 133	5.35K		
- 50	5.6K		
1006750 - 134	5.9K		

CHART J FIND NO.24
REF R8

DASH NO.	OHMS ±2%	DASH NO.	OHMS ±2%
1006750 - 25	510	1006750 - 43	3K
- 109	535	- 127	3.15K
- 26	560	- 44	3.3K
- 110	590	- 128	3.45K
- 27	620	- 45	3.6K
- 111	650	- 129	3.75K
- 28	680	- 46	3.9K
- 112	715	- 130	4.1K
- 29	750	- 47	4.3K
- 113	785	- 131	4.5K
- 30	820	- 48	4.7K
- 114	865	- 132	4.9K
- 31	910	- 49	5.1K
- 115	955	- 133	5.35K
- 32	1K	- 50	5.6K
- 116	1.05K	- 134	5.9K
- 33	1.1K	- 51	6.2K
- 117	1.15K	- 135	6.5K
- 34	1.2K	- 52	6.8K
- 118	1.25K	- 136	7.15K
- 35	1.3K	- 53	7.5K
- 119	1.4K	- 137	7.85K
- 36	1.5K	- 54	8.2K
- 120	1.55K	- 138	8.65K
- 37	1.6K	- 55	9.1K
- 121	1.7K	- 139	9.55K
- 38	1.8K	- 56	10K
- 122	1.9K	- 140	10.5K
- 39	2.0K	- 57	11K
- 123	2.1K	- 141	11.5K
- 40	2.2K	1006750 - 58	12K
- 124	2.3K	1006757 - 8	0
- 41	2.4K		
- 125	2.55K		
- 42	2.7K		
1006750 - 126	2.85K		

Ⓐ THIS SHEET ADDED

QTY REQD	PART OR IDENTIFYING NO.	NOMENCLATURE OR DESCRIPTION	FIND NO

LIST OF MATERIALS

NEXT ASSY	USED ON
APPLICATION	

UNLESS OTHERWISE SPECIFIED
DIMENSIONS ARE IN INCHES
TOLERANCES ON
FRACTIONS ± DECIMALS ± ANGLES ±
DO NOT SCALE THIS DRAWING
MATERIAL
HEAT TREATMENT
FINAL FINISH

MIT
INSTRUMENTATION LAB
CAMBRIDGE, MASS
DWG. NO. CONTRACT
DRAWN P. Bucu DATE 17 MAR 65
CHECKED R. Edwards 29 Mar 65
APPROVAL
APPROVAL
NASA APPROVAL
MIT APPROVAL

MANNED SPACECRAFT CENTER
HOUSTON, TEXAS

COMPONENT ASSEMBLY
OSCILLATOR STAGE
AGC OSCILLATOR

CODE IDENT NO. 80230
SIZE J
NASA DRAWING NO. 003818
SCALE NONE
WT
SHEET 2 OF 2

1003818 A

REVISIONS			
SYM	DESCRIPTION	DATE	APPROVAL

1003818 -I

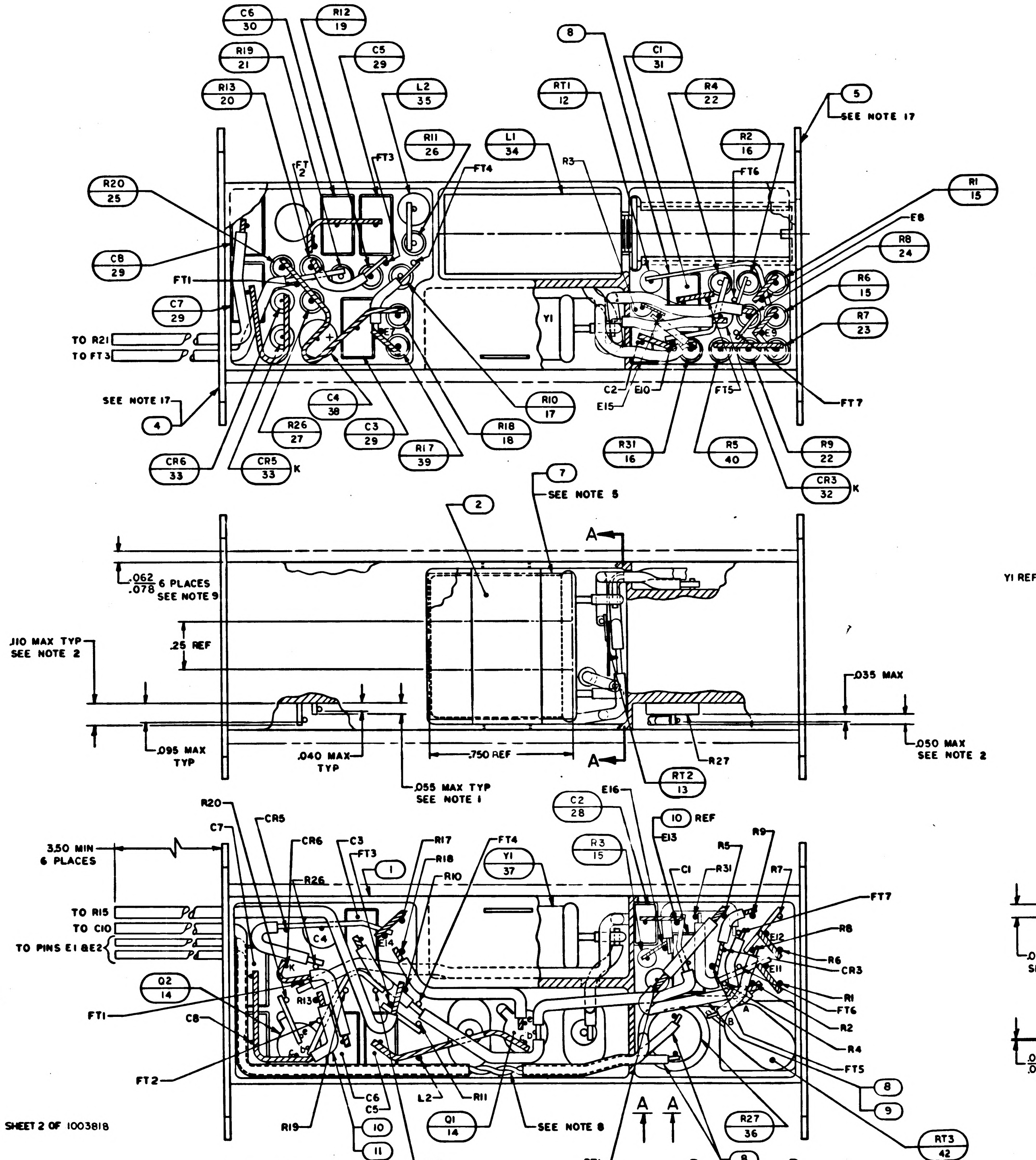

C6 30
R12 19
R19 21
C5 29
R13 20
L2 35
R11 26
L1 34
R20 25
C8 29
C7 29
FT1
FT2
FT3
FT4
TO R21
TO FT3
SEE NOTE 17
4
C4 38
R26 27
C3 29
R17 39
R18 18
R10 17
CR6 33
CR5 33
K
Y1
8
C1 31
RT1 12
R4 22
5
SEE NOTE 17
R2 16
FT6
R3
R1 15
E8
R8 24
R6 15
R7 23
C2
E10
E15
FT5
FT7
R31 16
R5 40
R9 22
CR3 32
2
7
SEE NOTE 5
A
.062 .078 6 PLACES SEE NOTE 9
.25 REF
.110 MAX TYP SEE NOTE 2
.035 MAX
.095 MAX TYP
.040 MAX TYP
.750 REF
.055 MAX TYP SEE NOTE 1
RT2 13
R27
.050 MAX SEE NOTE 2
3.50 MIN 6 PLACES
TO R15
TO C10
TO PINS E1 &E2
Q2 14
C2 28
E16
10 REF
E13
R3 15
Y1 37
1
R9
R5
R31
R7
FT7
R8
R6
CR3
R1
FT6
R2
R4
FT5
8
9
RT3 42
R27 36
A
B
RT1
Q1 14
SEE NOTE 8
R12
R11
L2
C6
C5
10
11
R19
FT2
C8
FT1
R13
E12
E11
E14

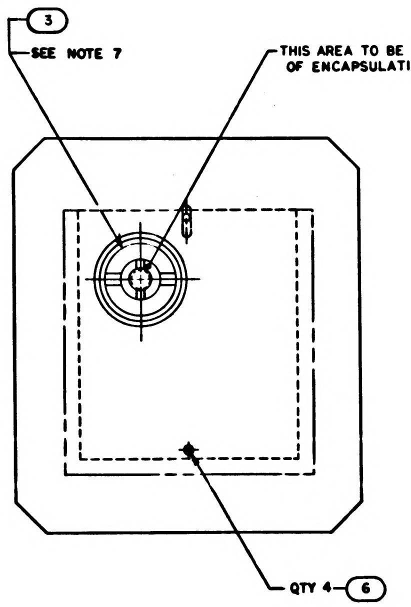

3
SEE NOTE 7
THIS AREA TO BE FREE OF ENCAPSULATION
QTY 4 6

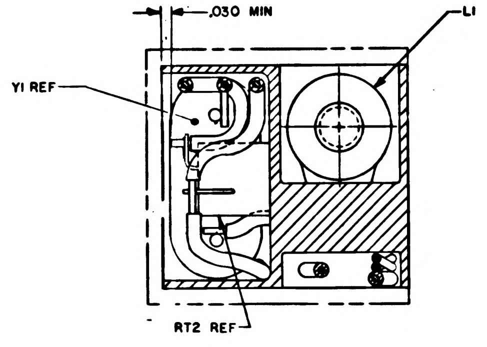

.030 MIN
L1
Y1 REF
RT2 REF

SECTION A-A

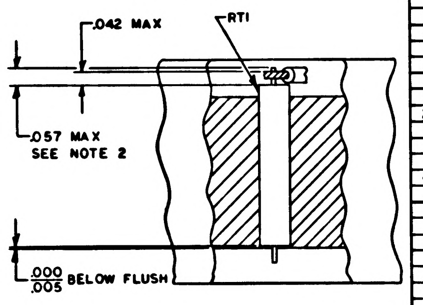

.042 MAX
RT1
.057 MAX
SEE NOTE 2
.000 .005 BELOW FLUSH

VIEW A-A

NOTES

1. WHITE DOT INDICATES LEAD TO BE CUT FOR FIRST LEVEL WIRING
2. BLACK DOT INDICATES LEAD TO BE CUT TO DIMENSION SHOWN FOR SECOND LEVEL WIRING
3. WIRING STANDARDS FOR WELDED UNITS IN ACCORDANCE WITH ND 1002005
4. STAKE ALL FEED THROUGHS AND ALL COMPONENTS EXCEPT FIND NO.31 AND FIND NO.37 PER ND 1002009
5. OVERLAP ENDS OF FIND NO. 7 APPROXIMATELY .25 INCH AT CRYSTAL SURFACES CLOSEST TO FIND NO. 2
6. IDENTIFY WITH NASA DWG NO. PER ND 1002019
7. REMOVE AND DISCARD EXISTING NUT ON FIND NO. 34 AND REPLACE WITH FIND NO. 3
8. TWIST LEADS AS SHOWN 4 TIMES PER INCH
9. ENCAPSULATE CAVITIES OF FIND NO. 1 TO DIMENSION SHOWN USING RTV11 PER ND 1002009
10. AR DENOTES AS REQUIRED
11. K DENOTES CATHODE SIDE OF DIODE
12. THESE PARTS TO BE PART OF KIT ASSEMBLY DWG. NO. 1003538 AND NOMINAL VALUES TO BE SELECTED FROM SHEET 2 OF 1003818
13. INTERPRET DRAWING IN ACCORDANCE WITH STANDARDS PRESCRIBED BY MIL-D-70327
14. SOLDER PER ND 1002071
15. FIND NO.7, ALUMINUM BACKED ADHESIVE PER MIL-T-11291 .765/.735 WIDE
16. WHEN THE VALUE OF R8 IS 0 OHMS USE .020 DIA NICKEL WIRE, FIND NO. 10
17. BOND FIND NO.4 AND FIND NO.5 TO FIND NO.1 PER ND 1002004
18. WORKMANSHIP, FABRICATION, AND INSPECTION REQUIREMENTS PER ND 1002069

VIEW SHOWN WITH POTTING REMOVED

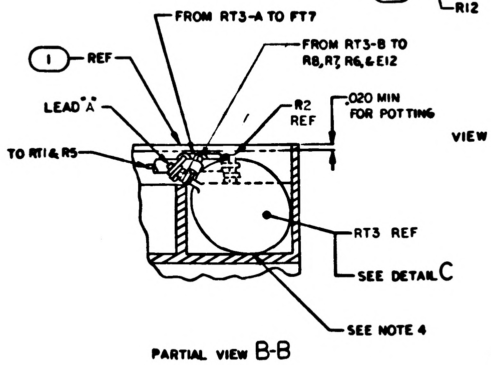

FROM RT3-A TO FT7
1 REF
FROM RT3-B TO R8, R7, R6, & E12
LEAD "A"
R2 REF
.020 MIN FOR POTTING
TO RT1 & R5
RT3 REF
SEE DETAIL C
SEE NOTE 4

PARTIAL VIEW B-B

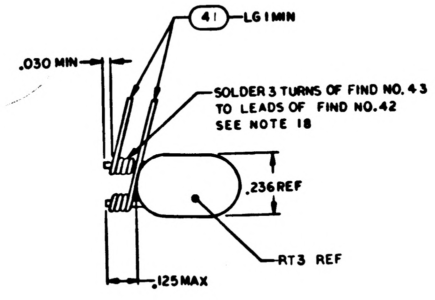

41 LG 1 MIN
.030 MIN
SOLDER 3 TURNS OF FIND NO. 43 TO LEADS OF FIND NO. 42 SEE NOTE 18
.236 REF
RT3 REF
.125 MAX

DETAIL C

⨉	1006140	SCHEMATIC	REF
1	1006291	THERMISTOR	42
AR	1006757-24	WIRE ELECTRICAL .010 DIA	41
1	SEE NOTE 12	RESISTOR, FIXED FILM	40
1	SEE NOTE 12	RESISTOR, FIXED, FILM	39
1	1006755-31	CAPACITOR, FIXED, TANTALUM	38
1	SEE NOTE 12	CRYSTAL UNIT, QUARTZ	37
1	1006714	RESISTOR, FIXED, WW	36
1	1010406-12	COIL, RF, CHOKE	35
1	1006846	COIL, RF, VARIABLE	34
2	1006751	SEMICONDUCTOR DEVICE, DIODE	33
1	SEE NOTE 12	SEMICONDUCTOR DEVICE, VAR CAP	32
1	SEE NOTE 12	CAPACITOR, FIXED	31
1	1006793-83	CAPACITOR, FIXED	30
4	1006793-87	CAPACITOR, FIXED	29
1	SEE NOTE 12	CAPACITOR, FIXED	28
1	1006750-56	RESISTOR, FIXED, FILM	27
1	1006750-39	RESISTOR, FIXED, FILM	26
1	1006750-1	RESISTOR, FIXED, FILM	25
1	SEE NOTE 12	RESISTOR, FIXED, FILM	24
1	SEE NOTE 12	RESISTOR, FIXED, FILM	23
2	SEE NOTE 12	RESISTOR, FIXED, FILM	22
1	1006750-60	RESISTOR, FIXED, FILM	21
1	1006750-42	RESISTOR, FIXED, FILM	20
1	1006750-82	RESISTOR, FIXED, FILM	19
1	1006750-8	RESISTOR, FIXED, FILM	18
1	1006750-82	RESISTOR, FIXED, FILM	17
2	SEE NOTE 12	RESISTOR, FIXED, FILM	16
3	SEE NOTE 12	RESISTOR, FIXED, FILM	15
2	1006752	TRANSISTOR, SILICON	14
1	SEE NOTE 12	THERMISTOR	13
1	1006715-1	THERMISTOR	12
AR	1006776-22	INSULATION, SLEEVING	11
AR	1006757-8	WIRE, ELECTRICAL, .020 DIA	10
AR	1006776-25	INSULATION, SLEEVING	9
AR	1006757-12	WIRE, ELECTRICAL, .010 DIA	8
AR	SEE NOTE 15	TAPE, ADHESIVE, AL BACKED	7
4	1004544	PIN, GUIDE	6
1	1004555	END PLATE, RIGHT	5
1	1004558	END PLATE, LEFT	4
1	1004556	NUT, SLEEVE	3
1	1004557	SPRING, LEAF	2
1	1004840	HOLDER, COMPONENT	1
QTY REQD	PART OR IDENTIFYING NO.	NOMENCLATURE OR DESCRIPTION	FIND NO.

LIST OF MATERIALS

1003527	
NEXT ASSY	USED ON
APPLICATION	

UNLESS OTHERWISE SPECIFIED DIMENSIONS ARE IN INCHES
TOLERANCES ON
FRACTIONS ± DECIMALS ± ANGLE ±
DO NOT SCALE THIS DRAWING
MATERIAL
HEAT TREATMENT
FINAL FINISH

MIT
INSTRUMENTATION LAB
CAMBRIDGE, MASS.
DWG. NO. CONTRACT

DRAWN P Bucuvalas DATE 17 MAR 65
CHECKED R Edwards 1 June 65
APPROVAL B Marsh 1 JUNE 65
APPROVAL Eldon C Hall 7 June 65
NASA APPROVAL 4/65
MIT APPROVAL
MIT APPROVAL 8 June 65

MANNED SPACECRAFT CENTER
HOUSTON, TEXAS

COMPONENT ASSEMBLY
OSCILLATOR STAGE
AGC OSCILLATOR

CODE IDENT NO. —— SIZE J NASA DRAWING NO. 1003818
SCALE 4/1 WT SHEET 1 OF 2

1003818 -I

F2 1003818-1

REVISIONS			
SYM	DESCRIPTION	DATE	APP

NOTICE — WHEN GOVERNMENT DRAWINGS, SPECIFICATIONS, OR OTHER DATA ARE USED FOR ANY PURPOSE OTHER THAN IN CONNECTION WITH A DEFINITELY RELATED GOVERNMENT PROCUREMENT OPERATION, THE UNITED STATES GOVERNMENT THEREBY INCURS NO RESPONSIBILITY NOR ANY OBLIGATION WHATSOEVER; AND THE FACT THAT THE GOVERNMENT MAY HAVE FORMULATED, FURNISHED, OR IN ANY WAY SUPPLIED THE SAID DRAWINGS, SPECIFICATIONS OR OTHER DATA IS NOT TO BE REGARDED BY IMPLICATION OR OTHERWISE AS IN ANY MANNER LICENSING THE HOLDER OR ANY OTHER PERSON OR CORPORATION, OR CONVEYING ANY RIGHTS OR PERMISSION TO MANUFACTURE, USE, OR SELL ANY PATENTED INVENTION THAT MAY IN ANY WAY BE RELATED THERETO.

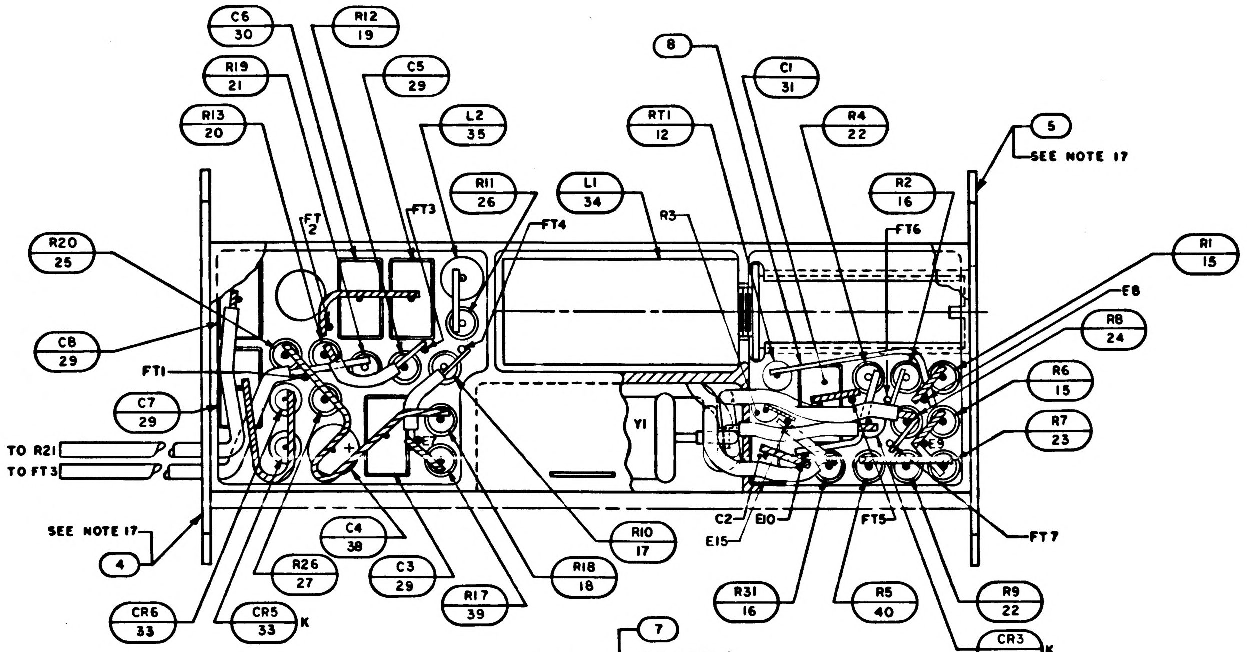
C6 30
R12 19
R19 21
C5 29
R13 20
L2 35
RT1 12
8
C1 31
R4 22
5
SEE NOTE 17
R11 26
L1 34
R3
R2 16
FT6
R1 15
FT 2
FT3
FT4
R20 25
E8
R8 24
C8 29
FT1
R6 15
C7 29
Y1
R7 23
TO R21
TO FT3
E7
E9
C2
E10
E15
FT5
FT7
SEE NOTE 17
4
C4 38
R10 17
R26 27
C3 29
R18 18
R17 39
R31 16
R5 40
R9 22
CR6 33
CR5 33 K
CR3 32 K

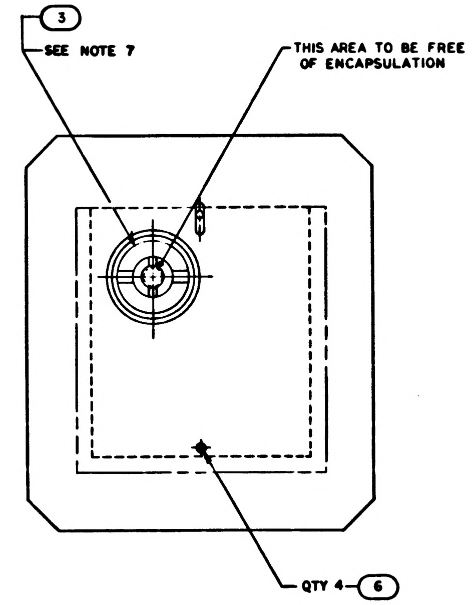
3
SEE NOTE 7
THIS AREA TO BE FREE OF ENCAPSULATION
QTY 4
6

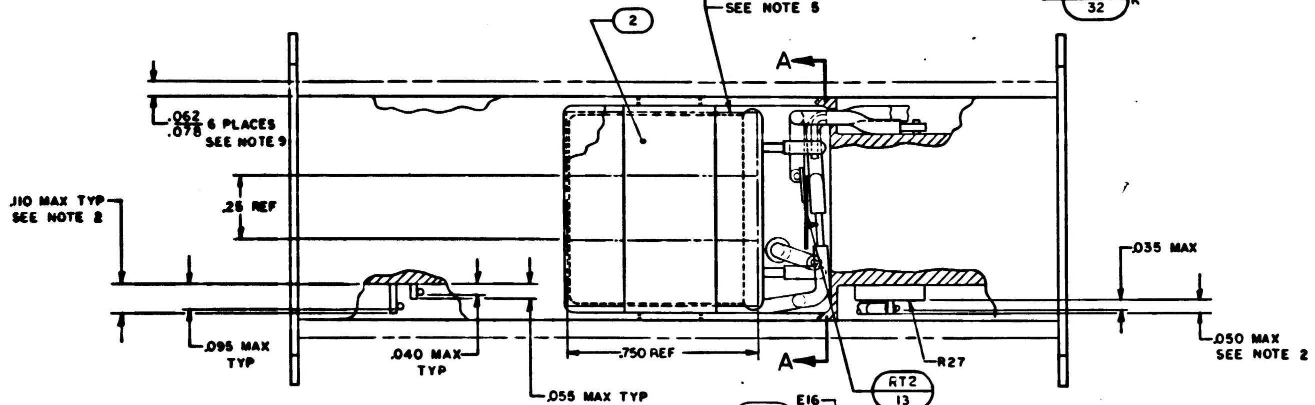
2
7
SEE NOTE 5
A
.062
.078 6 PLACES
SEE NOTE 9
.110 MAX TYP
SEE NOTE 2
.25 REF
.035 MAX
.095 MAX
TYP
.040 MAX
TYP
.750 REF
A
R27
.050 MAX
SEE NOTE 2
.055 MAX TYP
SEE NOTE 1
RT2 13

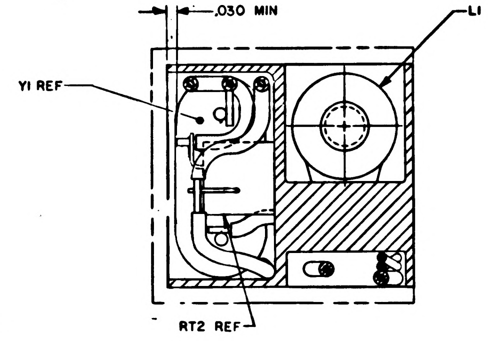
.030 MIN
L1
Y1 REF
RT2 REF

SECTION A-A

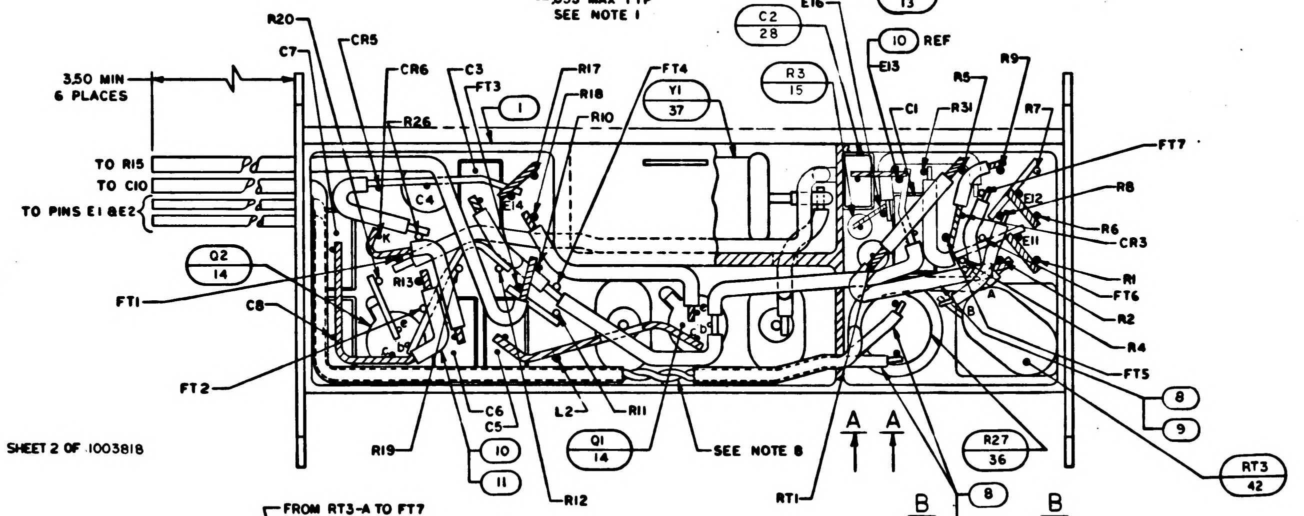
R20
C7
CR5
CR6
C3
FT3
R17
R18
R10
FT4
Y1 37
R3 15
C2 28
E16
10 REF
E13
R5
R9
C1
R31
R7
FT7
R8
R6
CR3
R1
FT6
R2
R4
FT5
8
9
3.50 MIN
6 PLACES
1
R26
TO R15
TO C10
TO PINS E1 & E2
C4
E14
E12
E11
K
Q2 14
FT1
R13
C8
FT2
A
B
R19
C6
C5
10
11
L2
R11
Q1 14
R12
SEE NOTE 8
RT1
A
A
B
B
8
9
R27 36
RT3 42

VIEW SHOWN WITH POTTING REMOVED

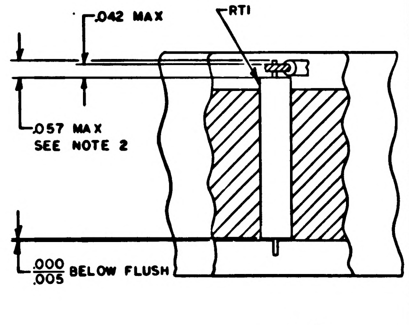
.042 MAX
RT1
.057 MAX
SEE NOTE 2
.000
.005 BELOW FLUSH

VIEW A-A

NOTES
1. WHITE DOT INDICATES LEAD TO BE CUT FOR FIRST LEVEL WIRING
2. BLACK DOT INDICATES LEAD TO BE CUT TO DIMENSION SHOWN FOR SECOND LEVEL WIRING
3. WIRING STANDARDS FOR WELDED UNITS IN ACCORDANCE WITH ND 1002005
4. STAKE ALL FEED THROUGHS AND ALL COMPONENTS EXCEPT FIND NO.31 AND FIND NO.37 PER ND1002009
5. OVERLAP ENDS OF FIND NO. 7 APPROXIMATELY .25 INCH AT CRYSTAL SURFACES CLOSEST TO FIND NO. 2
6. IDENTIFY WITH NASA DWG NO. PER ND1002019
7. REMOVE AND DISCARD EXISTING NUT ON FIND NO. 34 AND REPLACE WITH FIND NO. 3
8. TWIST LEADS AS SHOWN 4 TIMES PER INCH
9. ENCAPSULATE CAVITIES OF FIND NO.1 TO DIMENSION SHOWN USING RTV11 PER ND1002009
10. AR DENOTES AS REQUIRED
11. K DENOTES CATHODE SIDE OF DIODE
12. THESE PARTS TO BE PART OF KIT ASSEMBLY DWG. NO. 1003538 AND NOMINAL VALUES TO BE SELECTED FROM SHEET 2 OF 1003818
13. INTERPRET DRAWING IN ACCORDANCE WITH STANDARDS PRESCRIBED BY MIL-D-70327
14. SOLDER PER ND1002071
15. FIND NO.7, ALUMINUM BACKED ADHESIVE PER MIL-T-11291 .765/.735 WIDE
16. WHEN THE VALUE OF R8 IS O OHMS USE .020 DIA NICKEL WIRE, FIND NO. 10
17. BOND FIND NO.4 AND FIND NO.5 TO FIND NO.1 PER ND1002004
18. WORKMANSHIP, FABRICATION, AND INSPECTION REQUIREMENTS PER ND1002069

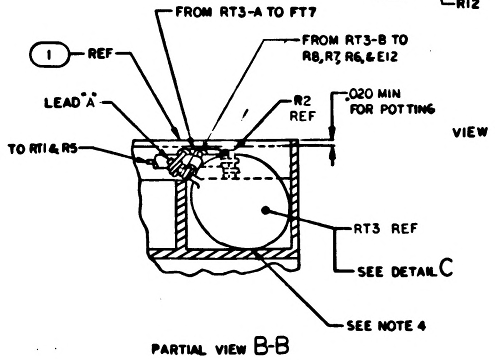
FROM RT3-A TO FT7
1 REF
FROM RT3-B TO R8, R7, R6, & E12
LEAD "A"
R2 REF
.020 MIN FOR POTTING
TO RT1 & R5
RT3 REF
SEE DETAIL C
SEE NOTE 4

PARTIAL VIEW B-B

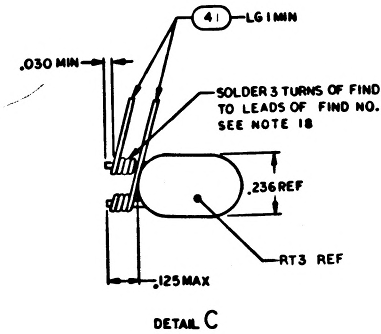
41
LG 1 MIN
.030 MIN
SOLDER 3 TURNS OF FIND NO. 43 TO LEADS OF FIND NO. 42
SEE NOTE 18
.236 REF
RT3 REF
.125 MAX

DETAIL C

QTY REQD	PART OR IDENTIFYING NO.	NOMENCLATURE OR DESCRIPTION
╳	1006140	SCHEMATIC
1	1006291	THERMISTOR
AR	1006757-24	WIRE, ELECTRICAL .010 DIA
1	SEE NOTE 12	RESISTOR, FIXED, FILM
1	SEE NOTE 12	RESISTOR, FIXED, FILM
1	1006755-31	CAPACITOR, FIXED, TANTALUM
1	SEE NOTE 12	CRYSTAL UNIT, QUARTZ
1	1006714	RESISTOR, FIXED, WW
1	1010406-12	COIL, RF, CHOKE
1	1006846	COIL, RF, VARIABLE
2	1006751	SEMICONDUCTOR DEVICE, DIODE
1	SEE NOTE 12	SEMICONDUCTOR DEVICE, VAR CAP
1	SEE NOTE 12	CAPACITOR, FIXED
1	1006793-83	CAPACITOR, FIXED
4	1006793-87	CAPACITOR, FIXED
1	SEE NOTE 12	CAPACITOR, FIXED
1	1006750-56	RESISTOR, FIXED, FILM
1	1006750-39	RESISTOR, FIXED, FILM
1	1006750-1	RESISTOR, FIXED, FILM
1	SEE NOTE 12	RESISTOR, FIXED, FILM
1	SEE NOTE 12	RESISTOR, FIXED, FILM
2	SEE NOTE 12	RESISTOR, FIXED, FILM
1	1006750-60	RESISTOR, FIXED, FILM
1	1006750-42	RESISTOR, FIXED, FILM
1	1006750-82	RESISTOR, FIXED, FILM
1	1006750-8	RESISTOR, FIXED, FILM
1	1006750-82	RESISTOR, FIXED, FILM
2	SEE NOTE 12	RESISTOR, FIXED, FILM
3	SEE NOTE 12	RESISTOR, FIXED, FILM
2	1006752	TRANSISTOR, SILICON
1	SEE NOTE 12	THERMISTOR
1	1006715-1	THERMISTOR
AR	1006776-22	INSULATION, SLEEVING
AR	1006757-8	WIRE, ELECTRICAL .020 DIA
AR	1006776-25	INSULATION, SLEEVING
AR	1006757-12	WIRE, ELECTRICAL .010 DIA
AR	SEE NOTE 15	TAPE, ADHESIVE, AL BACKED
4	1004544	PIN, GUIDE
1	1004555	END PLATE, RIGHT
1	1004558	END PLATE, LEFT
1	1004556	NUT, SLEEVE
1	1004557	SPRING, LEAF
1	1004840	HOLDER, COMPONENT

LIST OF MATERIALS

1003527	
NEXT ASSY	USED ON
APPLICATION	

UNLESS OTHERWISE SPECIFIED
DIMENSIONS ARE IN INCHES
TOLERANCES ON
FRACTIONS ± DECIMALS ± ANGLE ±
DO NOT SCALE THIS DRAWING
MATERIAL
HEAT TREATMENT
FINAL FINISH

MIT
INSTRUMENTATION LAB
CAMBRIDGE, MASS.
DRAWN P Bezuwalas DATE 7 APR 65
CHECKED R Edwards 1 June 65
APPROVAL B March 1 JUNE 65
APPROVAL Sheldon C Hall 5 June 65
NASA APPROVAL
MIT APPROVAL
MIT APPROVAL 8 June 65

MANNED SPACECRAFT CENTER
HOUSTON, TEXAS

COMPONENT ASSEMBLY
OSCILLATOR STAGE
AGC OSCILLATOR

CODE IDENT NO. —
SIZE J
NASA DRAWING NO. 1003818
SCALE 4/1
WT
SHEET 1

1003818	-

SYM	DESCRIPTION	DATE	APPROVAL

CHART A FIND NO.16 REF R31

DASH NO.	OHMS ±2%
1006750 - 56	10K
-140	10.5K
-57	11K
-141	11.5K
-58	12K
-142	12.5K
-59	13K
-143	14K
-60	15K
-144	15.5K
-61	16K
-145	17K
-62	18K
-146	19K
-63	20K
-147	21K
-64	22K
-148	23K
-65	24K
-149	25.5K
-66	27K
-150	28.5K
-67	30K
-151	31.5K
-68	33K
-152	34.5K
-69	36K
-153	37.5K
-70	39K
-154	41K
1006750 - 71	43K

CHART B FIND NO.15 REF R1

DASH NO.	OHMS ±2%
1006750 - 52	6.8K
-136	7.15K
-53	7.5K
-137	7.85K
-54	8.2K
-138	8.65K
-55	9.1K
-139	9.55K
-56	10K
-140	10.5K
-57	11K
-141	11.5K
-58	12K
-142	12.5K
-59	13K
-143	14K
-60	15K
-144	15.5K
-61	16K
-145	17K
-62	18K
-146	19K
-63	20K
-147	21K
1006750 - 64	22K

CHART C FIND NO.16 REF R2

DASH NO.	OHMS ±2%	DASH NO.	OHMS ±2%
1006750 - 56	10K	1006750 - 157	53.5K
-140	10.5K	-74	56K
-57	11K	-158	59K
-141	11.5K	-75	62K
-58	12K	-159	65K
-142	12.5K	-76	68K
-59	13K	-160	71.5K
-143	14K	-77	75K
-60	15K	-161	78.5K
-144	15.5K	-78	82K
-61	16K	-162	86.5K
-145	17K	-79	91K
-62	18K	-163	95.5K
-146	19K	-80	100K
-63	20K	-164	105K
-147	21K	-81	110K
-64	22K	-165	115K
-148	23K	-82	120K
-65	24K	-166	125K
-149	25.5K	-83	130K
-66	27K	-167	140K
-150	28.5K	1006750 - 84	150K
-67	30K		
-151	31.5K		
-68	33K		
-152	34.5K		
-69	36K		
-153	37.5K		
-70	39K		
-154	41K		
-71	43K		
-155	45K		
-72	47K		
-156	49K		
1006750 - 73	51K		

CHART F FIND NO.39 REF R17

DASH NO.	OHMS ±2%
1006750 - 55	9.1K
-56	10K
-57	11K
-58	12K
-59	13K
1006750 - 60	15K

CHART H FIND NO.13 REF RT2

DASH NO.	OHMS ±2%
1006712 - 1	500
1006712 - 2	1000
1006712 - 3	5000

CHART G FIND NO.28

DASH NO.	VALUE UUF
1006793 - 37	10
-38	11
-39	12
-40	13
-41	15
-42	16
-43	18
-44	20
-45	22
-46	24
-47	27
-48	30
-49	33
-50	36
-51	39
-52	43
-53	47
-54	51
-55	56
-56	62
-57	68
-58	75
-59	82
-60	91
1006793 - 61	100

CHART D FIND NO.15 REF R3

DASH NO.	OHMS ±2%	DASH NO.	OHMS ±2%	DASH NO.	OHMS ±2%
1006750 - 25	510	1006750 - 43	3K	1006750 - 143	14K
-109	535	-127	3.15K	-60	15K
-26	560	-44	3.3K	-144	15.5K
-110	590	-128	3.45K	-61	16K
-27	620	-45	3.6K	-145	17K
-111	650	-129	3.75K	-62	18K
-28	680	-46	3.9K	-146	19K
-112	715	-130	4.1K	-63	20K
-29	750	-47	4.3K	-147	21K
-113	785	-131	4.5K	-64	22K
-30	820	-48	4.7K	-148	23K
-114	865	-132	4.9K	-65	24K
-31	910	-49	5.1K	-149	25.5K
-115	955	-133	5.35K	-66	27K
-32	1K	-50	5.6K	-150	28.5K
-116	1.05K	-134	5.9K	-67	30K
-33	1.1K	-51	6.2K	-151	31.5K
-117	1.15K	-135	6.5K	-68	33K
-34	1.2K	-52	6.8K	-152	34.5K
-118	1.25K	-136	7.15K	-69	36K
-35	1.3K	-53	7.5K	-153	37.5K
-119	1.4K	-137	7.85K	-70	39K
-36	1.5K	-54	8.2K	-154	41K
-120	1.55K	-138	8.65K	-71	43K
-37	1.6K	-55	9.1K	-155	45K
-121	1.7K	-139	9.55K	-72	47K
-38	1.8K	-56	10K	-156	49K
-122	1.9K	-140	10.5K	-73	51K
-39	2.0K	-57	11K	-157	53.5K
-123	2.1K	-141	11.5K	-74	56K
-40	2.2K	-58	12K	-158	59K
-124	2.3K	-142	12.5K	1006750 - 75	62K
-41	2.4K	1006750 - 59	13K		
-125	2.55K				
-42	2.7K				
1006750 - 126	2.85K				

CHART E FIND NO.15 REF R6

DASH NO.	OHMS ±2%	DASH NO.	OHMS ±2%
1006750 - 32	1K	1006750 - 51	6.2K
-116	1.05K	-135	6.5K
-33	1.1K	-52	6.8K
-117	1.15K	-136	7.15K
-34	1.2K	-53	7.5K
-118	1.25K	-137	7.85K
-35	1.3K	-54	8.2K
-119	1.4K	-138	8.65K
-36	1.5K	-55	9.1K
-120	1.55K	-139	9.55K
-37	1.6K	-56	10K
-121	1.7K	-140	10.5K
-38	1.8K	-57	11K
-122	1.9K	-141	11.5K
-39	2.0K	-58	12K
-123	2.1K	-142	12.5K
-40	2.2K	-59	13K
-124	2.3K	-143	14K
-41	2.4K	-60	15K
-125	2.55K	-144	15.5K
-42	2.7K	-61	16K
-126	2.85K	-145	17K
-43	3K	-62	18K
-127	3.15K	-146	19K
-44	3.3K	-63	20K
-128	3.45K	-147	21K
-45	3.6K	-64	22K
-129	3.75K	-148	23K
-46	3.9K	-65	24K
-130	4.1K	-149	25.5K
-47	4.3K	-66	27K
-131	4.5K	-150	28.5K
-48	4.7K	-67	30K
-132	4.9K	-151	31.5K
-49	5.1K	1006750 - 68	33K
-133	5.35K		
-50	5.6K		
1006750 - 134	5.9K		

CHART J FIND NO.24 REF R8

DASH NO.	OHMS ±2%	DASH NO.	OHMS ±2%
1006750 - 25	510	1006750 - 43	3K
-109	535	-127	3.15K
-26	560	-44	3.3K
-110	590	-128	3.45K
-27	620	-45	3.6K
-111	650	-129	3.75K
-28	680	-46	3.9K
-112	715	-130	4.1K
-29	750	-47	4.3K
-113	785	-131	4.5K
-30	820	-48	4.7K
-114	865	-132	4.9K
-31	910	-49	5.1K
-115	955	-133	5.35K
-32	1K	-50	5.6K
-116	1.05K	-134	5.9K
-33	1.1K	-51	6.2K
-117	1.15K	-135	6.5K
-34	1.2K	-52	6.8K
-118	1.25K	-136	7.15K
-35	1.3K	-53	7.5K
-119	1.4K	-137	7.85K
-36	1.5K	-54	8.2K
-120	1.55K	-138	8.65K
-37	1.6K	-55	9.1K
-121	1.7K	-139	9.55K
-38	1.8K	-56	10K
-122	1.9K	-140	10.5K
-39	2.0K	-57	11K
-123	2.1K	-141	11.5K
-40	2.2K	1006750 - 58	12K
-124	2.3K	1006757 - 8	0
-41	2.4K		
-125	2.55K		
-42	2.7K		
1006750 - 126	2.85K		

Ⓐ THIS SHEET ADDED

QTY REQD	PART OR IDENTIFYING NO.	NOMENCLATURE OR DESCRIPTION	FIND NO

LIST OF MATERIALS

UNLESS OTHERWISE SPECIFIED
DIMENSIONS ARE IN INCHES
TOLERANCES ON
FRACTIONS ± DECIMALS ± ANGLES ±
DO NOT SCALE THIS DRAWING
MATERIAL
HEAT TREATMENT
FINAL FINISH

NEXT ASSY | USED ON
APPLICATION

MIT
INSTRUMENTATION LAB
CAMBRIDGE, MASS

DRAWN R. Bucinske DATE 17 MAR 65
CHECKED R. Edwards 29 Mar 65
APPROVAL
APPROVAL
NASA APPROVAL
MIT APPROVAL

MANNED SPACECRAFT CENTER
HOUSTON, TEXAS

COMPONENT ASSEMBLY
OSCILLATOR STAGE
AGC OSCILLATOR

CODE IDENT NO. —— | SIZE J | NASA DRAWING NO. 1003818
SCALE NONE | WT | SHEET 2 OF 2

1003818	-

1003818

[illegible]

1003818 -

REVISIONS

DESCRIPTION

CHART A FIND NO.16 REF R31	
DASH NO.	OHMS ±2%
1006750 - 56	10K
-140	10.5K
-57	11 K
-141	11.5K
-58	12 K
-142	12.5K
-59	13 K
-143	14 K
-60	15 K
-144	15.5K
-61	16 K
-145	17 K
-62	18K
-146	19K
-63	20K
-147	21K
-64	22K
-148	23K
-65	24K
-149	25.5K
-66	27K
-150	28.5K
-67	30K
-151	31.5K
-68	33K
-152	34.5K
-69	36 K
-153	37.5K
-70	39K
-154	41K
1006750 - 71	43K

CHART B FIND NO.15 REF R1	
DASH NO.	OHMS ±2%
1006750 - 52	6.8 K
-136	7.15 K
-53	7.5 K
-137	7.85K
-54	8.2 K
-138	8.65K
-55	9.1 K
-139	9.55 K
-56	10 K
-140	10.5K
-57	11 K
-141	11.5K
-58	12 K
-142	12.5K
-59	13 K
-143	14 K
-60	15 K
-144	15.5K
-61	16K
-145	17K
-62	18K
-146	19K
-63	20K
-147	21K
1006750 - 64	22K

CHART C FIND NO.16 REF R2			
DASH NO.	OHMS ±2%	DASH NO.	OHMS ±2%
1006750 - 56	10 K	1006750 - 157	53.5K
- 140	10.5K	- 74	56 K
- 57	11 K	- 158	59 K
- 141	11.5K	- 75	62 K
- 58	12 K	- 159	65 K
- 142	12.5K	- 76	68 K
- 59	13 K	- 160	71.5 K
- 143	14K	- 77	75 K
- 60	15K	- 161	78.5K
- 144	15.5K	- 78	82 K
- 61	16 K	- 162	86.5K
- 145	17 K	- 79	91 K
- 62	18K	- 163	95.5K
- 146	19K	- 80	100K
- 63	20K	- 164	105K
- 147	21 K	- 81	110K
- 64	22K	- 165	115K
- 148	23 K	- 82	120K
- 65	24K	- 166	125K
- 149	25.5K	- 83	130K
- 66	27 K	- 167	140K
- 150	28.5K	1006750 - 84	150K
- 67	30K		
- 151	31.5K		
- 68	33K		
- 152	34.5K		
- 69	36 K		
- 153	37.5K		
- 70	39K		
- 154	41 K		
- 71	43 K		
- 155	45K		
- 72	47K		
- 156	49K		
1006750 - 73	51 K		

CHART F FIND NO.39 REF R17	
DASH NO.	OHMS ±2%
1006750 - 55	9.1K
-56	10K
-57	11K
-58	12 K
-59	13 K
1006750 - 60	15 K

CHART H FIND NO.13 REF RT2	
DASH NO.	OHMS ±2%
1006712 - 1	500
1006712 - 2	1000
1006712 - 3	5000

CHART G FIND NO.28	
DASH NO.	VALUE UUF
1006793 - 37	10
- 38	11
- 39	12
- 40	13
- 41	15
- 42	16
- 43	18
- 44	20
- 45	22
- 46	24
- 47	27
- 48	30
- 49	33
- 50	36
- 51	39
- 52	43
- 53	47
- 54	51
- 55	56
- 56	62
- 57	68
- 58	75
- 59	82
- 60	91
1006793 - 61	100

CHART D FIND NO.15 REF R3					
DASH NO.	OHMS ±2%	DASH NO.	OHMS ±2%	DASH NO.	OHMS ±2%
1006750 - 25	510	1006750 - 43	3 K	1006750 - 143	14 K
- 109	535	- 127	3.15K	- 60	15 K
- 26	560	- 44	3.3 K	- 144	15.5K
- 110	590	- 128	3.45K	- 61	16 K
- 27	620	- 45	3.6 K	- 145	17 K
- 111	650	- 129	3.75K	- 62	18 K
- 28	680	- 46	3.9 K	- 146	19 K
- 112	715	- 130	4.1 K	- 63	20K
- 29	750	- 47	4.3 K	- 147	21K
- 113	785	- 131	4.5K	- 64	22K
- 30	820	- 48	4.7K	- 148	23K
- 114	865	- 132	4.9K	- 65	24K
- 31	910	- 49	5.1K	- 149	25.5K
- 115	955	- 133	5.35K	- 66	27K
- 32	1 K	- 50	5.6K	- 150	28.5K
- 116	1.05K	- 134	5.9K	- 67	30K
- 33	1.1K	- 51	6.2K	- 151	31.5 K
- 117	1.15K	- 135	6.5K	- 68	33K
- 34	1.2 K	- 52	6.8K	- 152	34.5K
- 118	1.25K	- 136	7.15K	- 69	36K
- 35	1.3 K	- 53	7.5K	- 153	37.5K
- 119	1.4K	- 137	7.85K	- 70	39 K
- 36	1.5K	- 54	8.2 K	- 154	41 K
- 120	1.55K	- 138	8.65K	- 71	43K
- 37	1.6 K	- 55	9.1 K	- 155	45K
- 121	1.7 K	- 139	9.55K	- 72	47K
- 38	1.8K	- 56	10 K	- 156	49K
- 122	1.9K	- 140	10.5 K	- 73	51K
- 39	2.0K	- 57	11 K	- 157	53.5K
- 123	2.1 K	- 141	11.5K	- 74	56K
- 40	2.2K	- 58	12 K	- 158	59K
- 124	2.3K	- 142	12.5 K	1006750 - 75	62K
- 41	2.4K	1006750 - 59	13 K		
- 125	2.55K				
- 42	2.7K				
1006750 - 126	2.85K				

CHART E FIND NO.15 REF R6			
DASH NO.	OHMS ±2%	DASH NO.	OHMS ±2%
1006750 - 32	1 K	1006750 - 51	6.2 K
- 116	1.05K	- 135	6.5 K
- 33	1.1 K	- 52	6.8 K
- 117	1.15K	- 136	7.15 K
- 34	1.2K	- 53	7.5 K
- 118	1.25K	- 137	7.85K
- 35	1.3 K	- 54	8.2 K
- 119	1.4K	- 138	8.65 K
- 36	1.5 K	- 55	9.1 K
- 120	1.55 K	- 139	9.55K
- 37	1.6 K	- 56	10 K
- 121	1.7K	- 140	10.5K
- 38	1.8K	- 57	11 K
- 122	1.9K	- 141	11.5 K
- 39	2.0K	- 58	12 K
- 123	2.1K	- 142	12.5K
- 40	2.2K	- 59	13 K
- 124	2.3K	- 143	14 K
- 41	2.4K	- 60	15 K
- 125	2.55K	- 144	15.5K
- 42	2.7K	- 61	16K
- 126	2.85K	- 145	17K
- 43	3 K	- 62	18K
- 127	3.15K	- 146	19K
- 44	3.3K	- 63	20K
- 128	3.45K	- 147	21K
- 45	3.6K	- 64	22K
- 129	3.75K	- 148	23K
- 46	3.9K	- 65	24K
- 130	4.1K	- 149	25.5K
- 47	4.3K	- 66	27K
- 131	4.5K	- 150	28.5K
- 48	4.7K	- 67	30K
- 132	4.9K	- 151	31.5K
- 49	5.1K	1006750 - 68	33K
- 133	5.35K		
- 50	5.6K		
1006750 - 134	5.9K		

CHART J FIND NO.24 REF R8			
DASH NO.	OHMS ±2%	DASH NO.	OHMS ±2%
1006750 - 25	510	1006750 - 43	3 K
- 109	535	- 127	3.15K
- 26	560	- 44	3.3 K
- 110	590	- 128	3.45K
- 27	620	- 45	3.6 K
- 111	650	- 129	3.75K
- 28	680	- 46	3.9K
- 112	715	- 130	4.1K
- 29	750	- 47	4.3K
- 113	785	- 131	4.5K
- 30	820	- 48	4.7K
- 114	865	- 132	4.9K
- 31	910	- 49	5.1K
- 115	955	- 133	5.35K
- 32	1 K	- 50	5.6K
- 116	1.05K	- 134	5.9K
- 33	1.1 K	- 51	6.2K
- 117	1.15K	- 135	6.5K
- 34	1.2K	- 52	6.8K
- 118	1.25K	- 136	7.15K
- 35	1.3 K	- 53	7.5K
- 119	1.4K	- 137	7.85K
- 36	1.5K	- 54	8.2K
- 120	1.55K	- 138	8.65K
- 37	1.6 K	- 55	9.1K
- 121	1.7K	- 139	9.55K
- 38	1.8K	- 56	10K
- 122	1.9K	- 140	10.5K
- 39	2.0K	- 57	11 K
- 123	2.1K	- 141	11.5K
- 40	2.2K	1006750 - 58	12K
- 124	2.3K	1006757 - 8	0
- 41	2.4K		
- 125	2.55 K		
- 42	2.7K		
1006750 - 126	2.85K		

Ⓐ THIS SHEET ADDED

QTY REQD	PART OR IDENTIFYING NO.	NOMENCLATURE O DESCRIPTION

LIST OF MATERIALS

NEXT ASSY	USED ON
APPLICATION	

UNLESS OTHERWISE SPECIFIED
DIMENSIONS ARE IN INCHES
TOLERANCES ON
FRACTIONS ± DECIMALS ± ANGLES ±
DO NOT SCALE THIS DRAWING
MATERIAL
HEAT TREATMENT
FINAL FINISH

M I T
INSTRUMENTATION LAB
CAMBRIDGE, MASS.

DRAWN Bucj... DATE 17
CHECKED R. Edward 29 ...65
APPROVAL
APPROVAL
NASA APPROVAL
MIT APPROVAL

MANNED SPACECRAFT
HOUSTON, TEXAS

COMPONENT A
OSCILLATOR
AGC OSCIL

CODE IDENT NO. ——
SIZE J
100
SCALE NONE
WT

1003818 -

1003819 A

SYM	DESCRIPTION	DATE	APPROVAL
A	REVISED PER TDRR 20567 DR Kuchif CHK		

REVISIONS 20

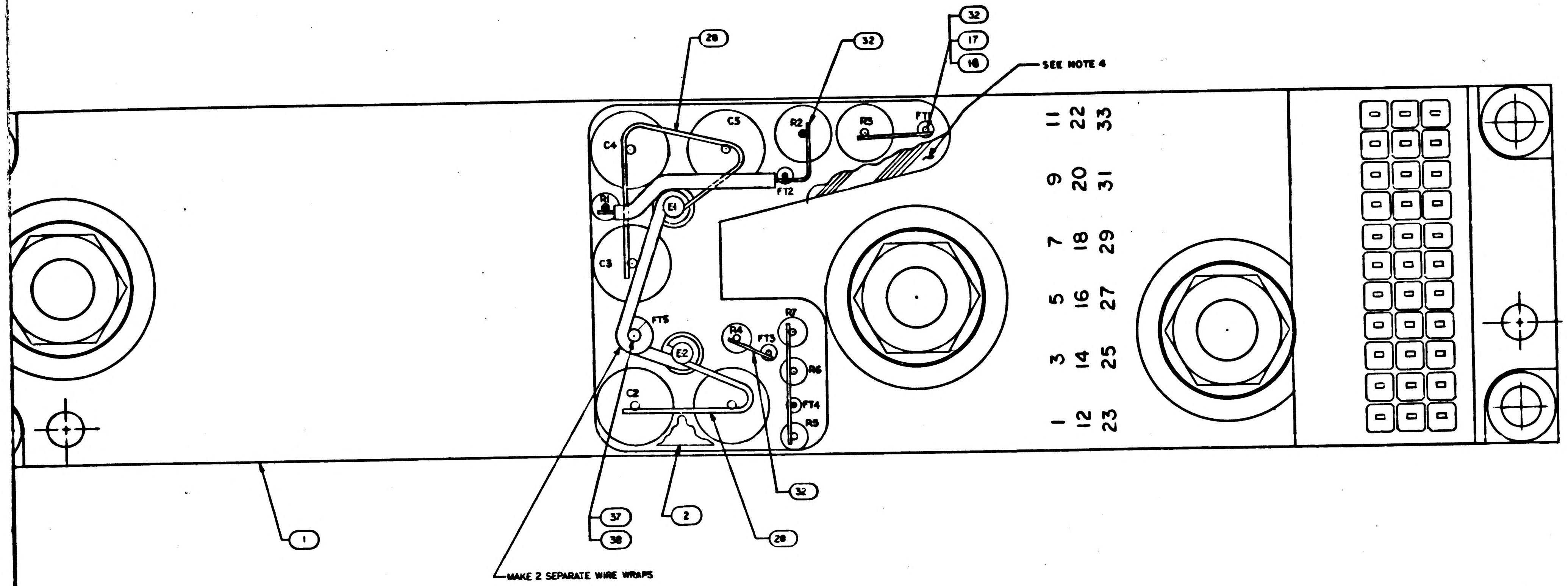

28
32
32
17
18
SEE NOTE 4
C4
C5
R2
R3
FT1
R1
E1
FT2
C3
FT5
E2
R4
FT3
R7
R6
FT4
R5
C2
11 22 33
9 20 31
7 18 29
5 16 27
3 14 25
1 12 23
37
38
2
28
32
1
MAKE 2 SEPARATE WIRE WRAPS

3H

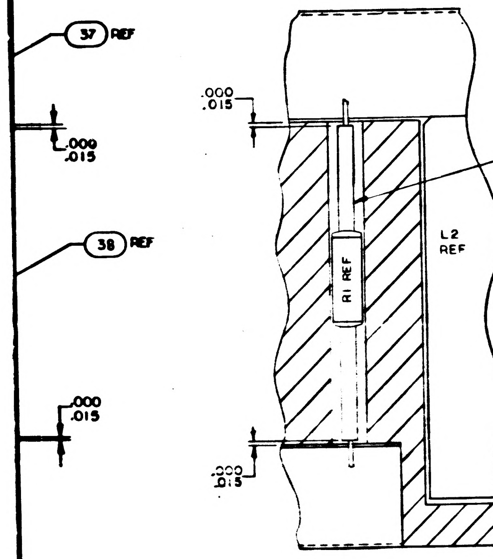

37 REF
38 REF
.000
.015
.000
.015
.000
.015
.000
.015
18 REF
L2 REF
R1 REF

SECTION H-H
TYP ALL COMPONENTS
EXCEPT TRANSISTORS

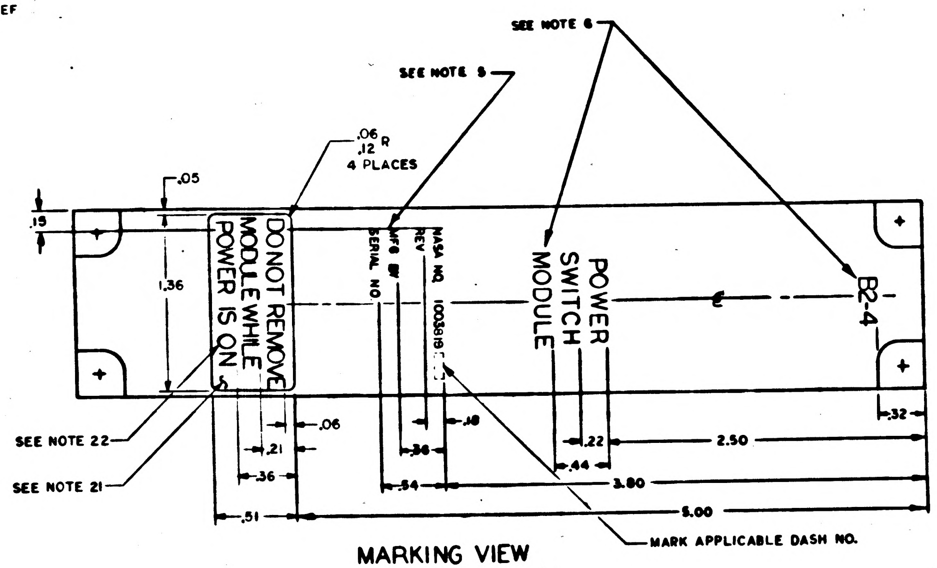

SEE NOTE 6
SEE NOTE 5
.06
.12 R
4 PLACES
.05
.15
1.36
DO NOT REMOVE MODULE WHILE POWER IS ON
NASA NO. 1003819
REV
MFG BY
SERIAL NO
POWER SWITCH MODULE
B2-4
SEE NOTE 22
SEE NOTE 21
.06
.21
.36
.51
.18
.36
.54
.22
.44
2.50
3.80
5.00
.32
MARK APPLICABLE DASH NO.

MARKING VIEW
SCALE 2/1

QTY REQD	PART OR IDENTIFYING NO.	NOMENCLATURE OR DESCRIPTION	FIND NO.
☒	1006097	SCHEMATIC	REF
1	MS20364-428A	NUT, SELF LOCKING THIN	42
A/R	1006879	SILICONE COMPOUND THERMOCONDUCTIVE	41
4	MS16633-4015	RING, RETAINING EXTERNAL E	40
4	1004546-3	WASHER, FLAT	39
A/R	1006776 - 16	INSULATION SLEEVING	38
A/R	QQ-W-343, TYPE S, #16	WIRE ELEC	37
4	1006708	TERMINAL STUD	36
2	1006755-133	CAPACITOR	35
1	1006755-79	CAPACITOR	34
A/R	1006776 - 21	INSULATION SLEEVING	33
A/R	1006757 - 14	WIRE, ELEC .010 X.020	32
6	1008024 - 3	WASHER, INSULATOR	31
1	1004215-3	INSULATOR	30
A/R	1006776 - 20	INSULATION SLEEVING	29
A/R	1006757 - 21	WIRE, ELEC .032 DIA	28
A/R	1006806 9	INSULATION TAPE	27
	~~1004284~~	~~DECAL~~	26
3	1008071 - 5	WASHER	25
6	1008024 - 4	WASHER, INSULATOR	24
1	1008021 - 2	BUSHING, INSULATOR	23
2	1008021-3	BUSHING, INSULATOR	22
2	1004822	LUG, SOLDER	21
4	1004546 - 1	WASHER, FLAT	20
4	1004579 - 1	SCREW, JACKING	19
A/R	1006776 - 22	INSULATION, SLEEVING	18
A/R	1006757 - 13	WIRE, ELEC .020 DIA	17
2	MS20364B428A	NUT	16
1	1006827	TRANSISTOR	15
1	1003089-2	TRANSISTOR, POTTED	14
1	1006800	INDUCTOR	13
1	1006798	INDUCTOR	12
2	1006300	SEMICONDUCTOR DEVICE	11
5	1006755 - 134	CAPACITOR	10
1	1006715 - 2	RESISTOR	9
2	1006750 - 56	RESISTOR	8
1	1006788 - 6	RESISTOR	7
1	1010389 - 51	RESISTOR	6
1	1010389 - 43	RESISTOR	5
1	1006750 - 12	RESISTOR	4
1	1004215-1	INSULATOR	3
1	1004215-2	INSULATOR	2
1	1003124-011	HEADER HOUSING ASSY	1

011 LIST OF MATERIALS

NEXT ASSY	USED ON
1003700	

APPLICATION

UNLESS OTHERWISE SPECIFIED
DIMENSIONS ARE IN INCHES
TOLERANCES ON
FRACTIONS ± DECIMALS ±.02 ANGLES ±
DO NOT SCALE THIS DRAWING
MATERIAL
HEAT TREATMENT
FINAL FINISH

MIT
INSTRUMENTATION LAB
CAMBRIDGE, MASS
DRAWN DATE 2APR65
CHECKED R. Edwards
APPROVAL
APPROVAL Eldon C. Hall
NASA APPROVAL
MIT APPROVAL

MANNED SPACECRAFT CENTER
HOUSTON, TEXAS

POWER SWITCH MODULE
ASSEMBLY B2-4
AGC POWER SUPPLY

CODE IDENT NO. 80230
SIZE J
NASA DRAWING NO. 1003819
SCALE 5/1
WT
SHEET 1 OF 1

1003819 A

F3 / 3

SEE NOTE 19

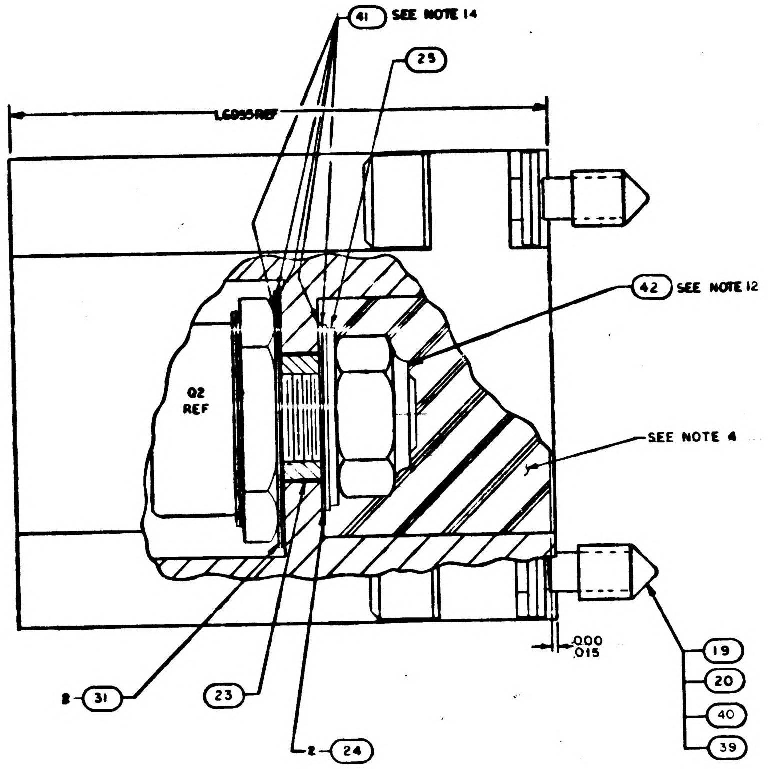
41 SEE NOTE 14
25
L.6095 REF
42 SEE NOTE 12
Q2 REF
SEE NOTE 4
.000 .015
19
20
40
39
2-31
23
2-24

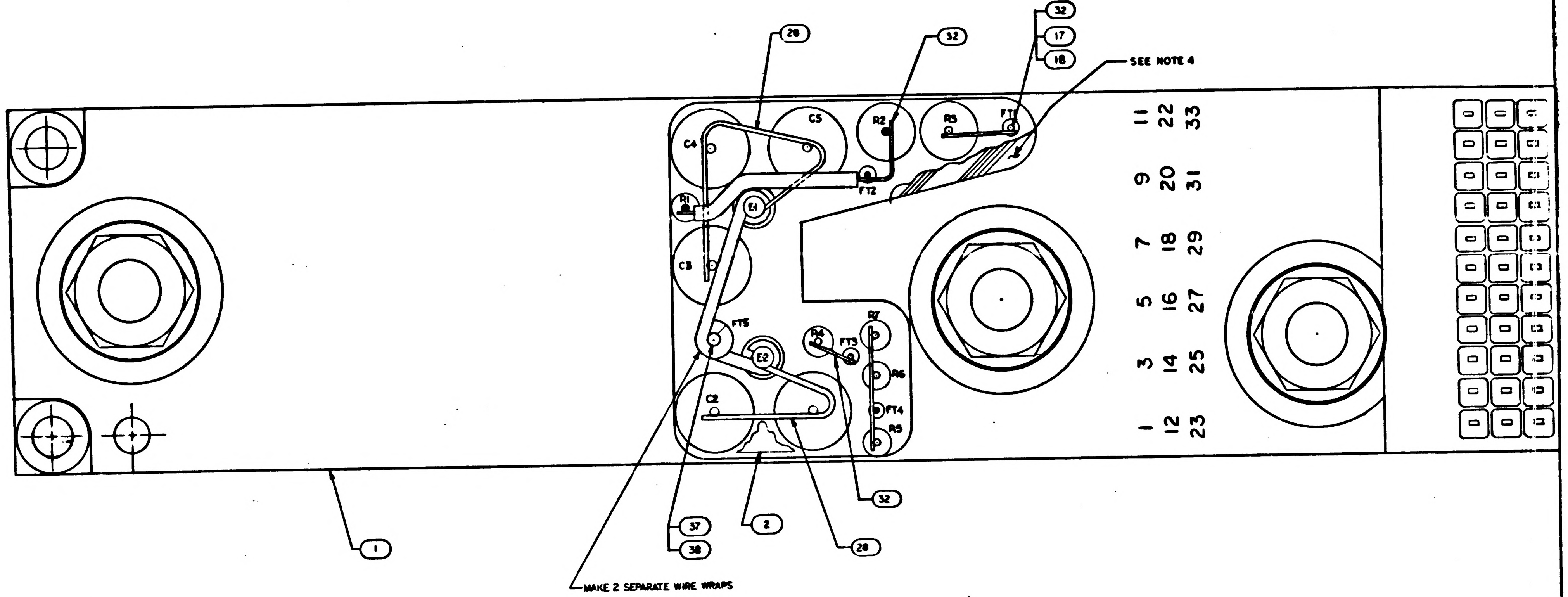
28
32
32
17
18
SEE NOTE 4
C4
C5
R2
R5
FT1
FT2
R1
E1
C3
FT5
R4
FT3
R7
E2
R6
C2
FT4
R5
1 3 5 7 9 11
12 14 16 18 20 22
23 25 27 29 31 33
32
37
38
2
28
1
MAKE 2 SEPARATE WIRE WRAPS

37

41

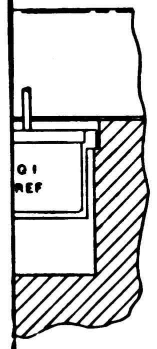

TION C-C

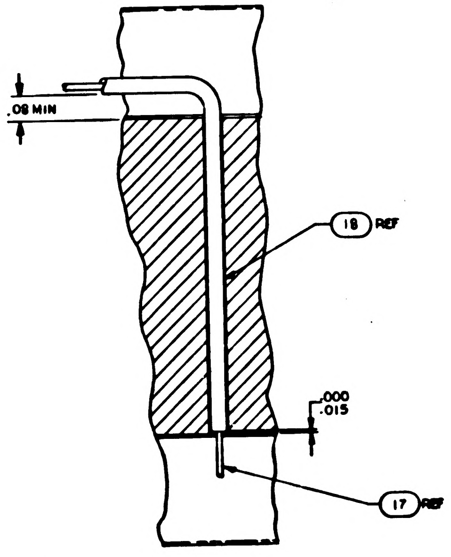
.08 MIN
18 REF
.000 .015
17 REF

SECTION D-D

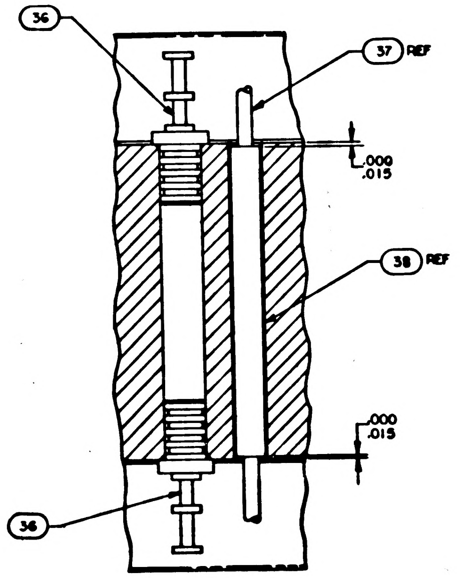
36
37 REF
.000 .015
38 REF
.000 .015
36

SECTION E-E

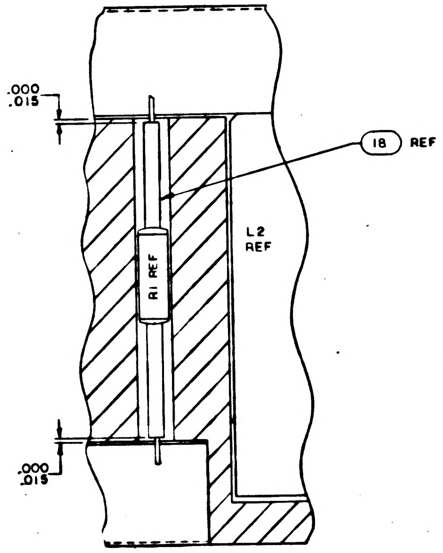
.000 .015
18 REF
L2 REF
R1 REF
.000 .015

SECTION H-H
TYP ALL COMPONENTS
EXCEPT TRANSISTORS

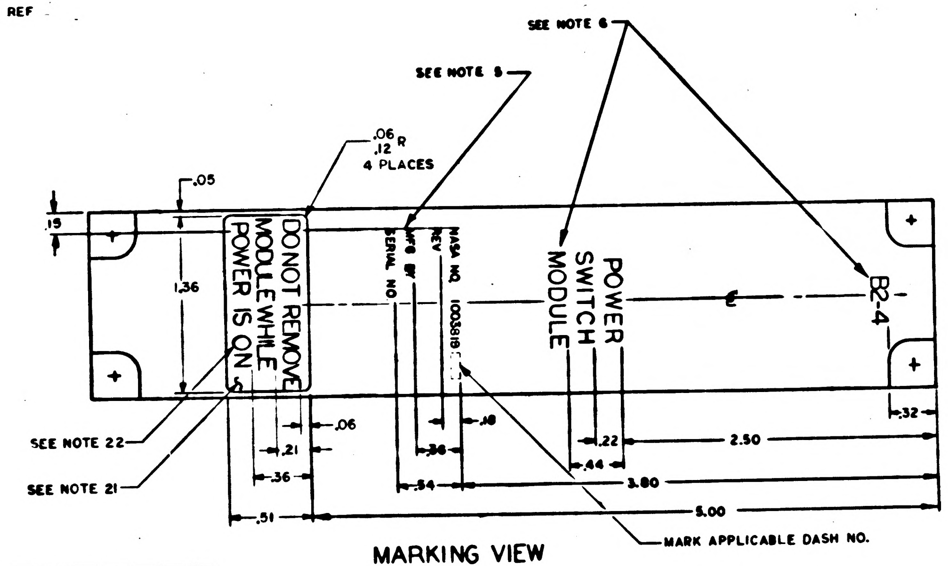
SEE NOTE 6
SEE NOTE 5
.06 .12 R
4 PLACES
.05
.15
1.36
DO NOT REMOVE
MODULE WHILE
POWER IS ON
NASA NO. 1003819
REV
MFG BY
SERIAL NO
POWER
SWITCH
MODULE
B2-4
SEE NOTE 22
SEE NOTE 21
.06
.21
.36
.51
.18
.38
.54
.22
.44
2.50
3.80
5.00
.32
MARK APPLICABLE DASH NO.

MARKING VIEW
SCALE 2/1

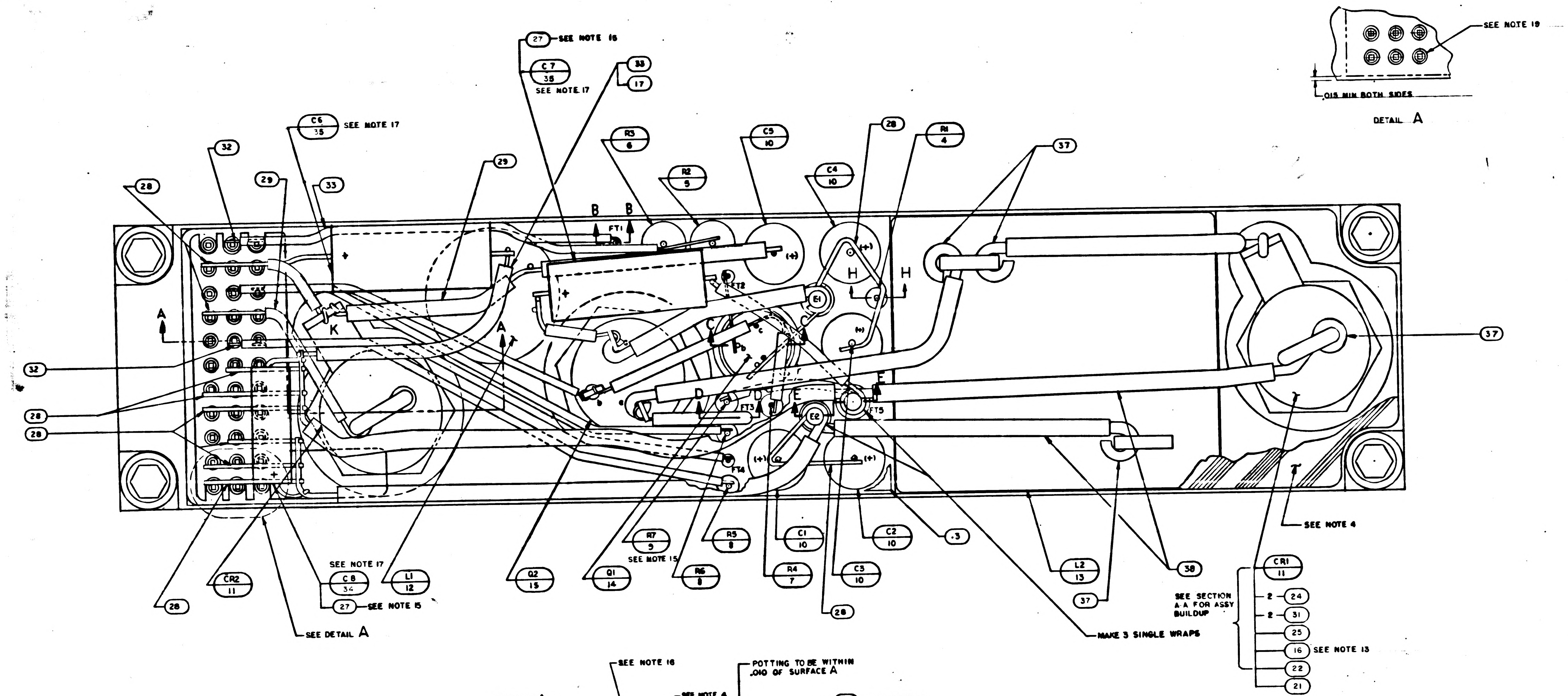
27 SEE NOTE 16
C7 35 SEE NOTE 17
33
17
C6 35 SEE NOTE 17
32
29
33
28
R3 6
R2 5
C9 10
C4 10
28
R1 4
37
B B
FT1
FT2
H H
E1
A
K
D D
E
F
FT3
FT4
FT5
E2
(+)
37
32
28
28
CR2 11
SEE NOTE 17
C8 34
27 SEE NOTE 15
L1 12
Q2 15
Q1 14
R7 9
SEE NOTE 15
R6 8
R5 8
C1 10
R4 7
C2 10
C3 10
3
28
L2 13
37
38
SEE NOTE 4
CR1 11
SEE SECTION A-A FOR ASSY BUILDUP
2 24
2 31
25
16 SEE NOTE 13
22
21
MAKE 3 SINGLE WRAPS
SEE DETAIL A
SEE NOTE 19
.015 MIN BOTH SIDES

DETAIL A

3rd

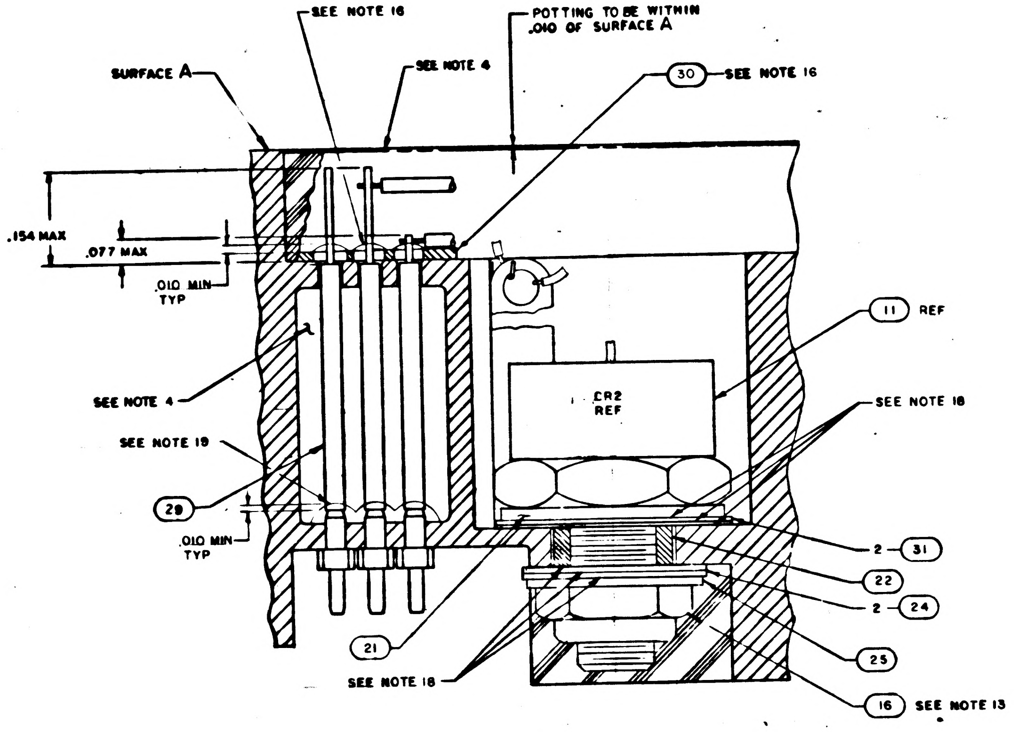
SEE NOTE 16
POTTING TO BE WITHIN .010 OF SURFACE A
SURFACE A
SEE NOTE 4
30 SEE NOTE 16
.154 MAX
.077 MAX
.010 MIN TYP
11 REF
CR2 REF
SEE NOTE 4
SEE NOTE 18
SEE NOTE 19
29
.010 MIN TYP
2 31
22
2 24
21
25
SEE NOTE 18
16 SEE NOTE 13

SECTION A-A

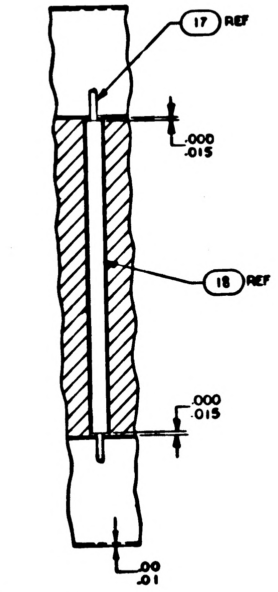
17 REF
.000
.015
18 REF
.000
.015
.00
.01

SECTION B-B

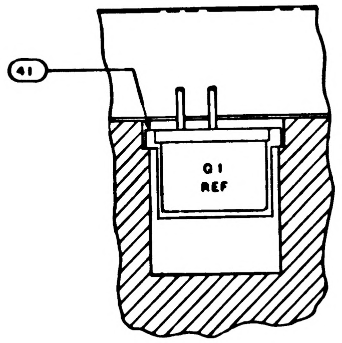

SECTION C-C

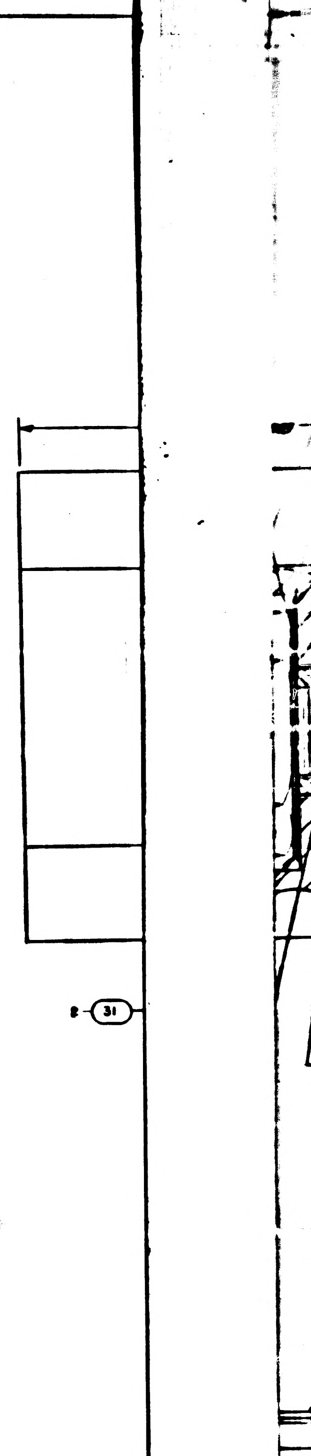

NOTES
1. INTERPRET DRAWING IN ACCORDANCE WITH STANDARDS PRESCRIBED BY MIL D-70327
2. ALL WELDED CONNECTIONS TO BE MADE PER ND1002005
3. K INDICATES CATHODE SIDE OF DIODE
4. ENCAPSULATE MODULE PER ND1002002 BLACK POLYURETHANE FOAM
5. MARK .05/.07 HIGH WHITE PER ND1002019 AND ND1002122 TYPE II CLASS 1, USING MARKING INK 1006271-1 SERIALIZE PER ND1002023
6. MARK .115/135 HIGH WHITE PER ND1002019 AND ND1002122 TYPE II CLASS 1, USING MARKING INK 1006271-1
7. STAKE FIND NO 4 THRU 10 & 12 THRU 14 PER ND1002009
8. AR DENOTES AS REQUIRED
9. ALL WRAPPED LEADS TO BE SOLDERED PER ND1002071 EXCEPT AS SHOWN
10. ● BLACK DOT INDICATES LEAD TO BE CUT AT SECOND LEVEL
11. ○ WHITE DOT INDICATES LEAD TO BE CUT AT FIRST LEVEL
12. MOUNTING TORQUE FOR Q2 10/12 INCH POUNDS
13. MOUNTING TORQUE FOR CR1 AND CR2 TO BE 25/30 INCH POUNDS
14. APPLY FIND NO 41 AS SHOWN TO MOUNTING INTERFACES OF Q2 & Q1 BEFORE ASSEMBLY
15. FIND NO. 9, 34 & 35 TO BE WRAPPED WITH ONE LAYER OF FIND NO. 27
16. STAKE FIND NO. 30 TO FIND NO. 1 & SEAL OPENINGS FOR FEED THRU WIRES AS SHOWN PER ND1002004 TYPE VI
17. STAKE FIND NO. 34 & 35 PER ND1002004 TYPE VI
18. APPLY FIND NO. 41 ON SURFACES SHOWN ONLY TYP CR1 & CR2
19. SEAL TERMINALS AND INSULATORS TO HEADER AS SHOWN USING ND1002004 TYPE VI
20. UNLESS OTHERWISE SPECIFIED ALL WIRING SHALL BE IN ACCORDANCE WITH ND1002069
21. BACKGROUND TO BE RED USING MARKING INK 1006271-9
22. MARK .08/.10 HIGH WHITE CHARACTERS PER ND1002019 AND ND1002122, TYPE II, CLASS 2 USING INK 1006271-1 CENTRALIZE AS SHOWN

1003819 A E1/3

SYM	DESCRIPTION	DATE	APPROVAL
A	REVISED PER TDRR 20567 DR CHK		
B	REVISED PER TDRR 20572 DR CHK		

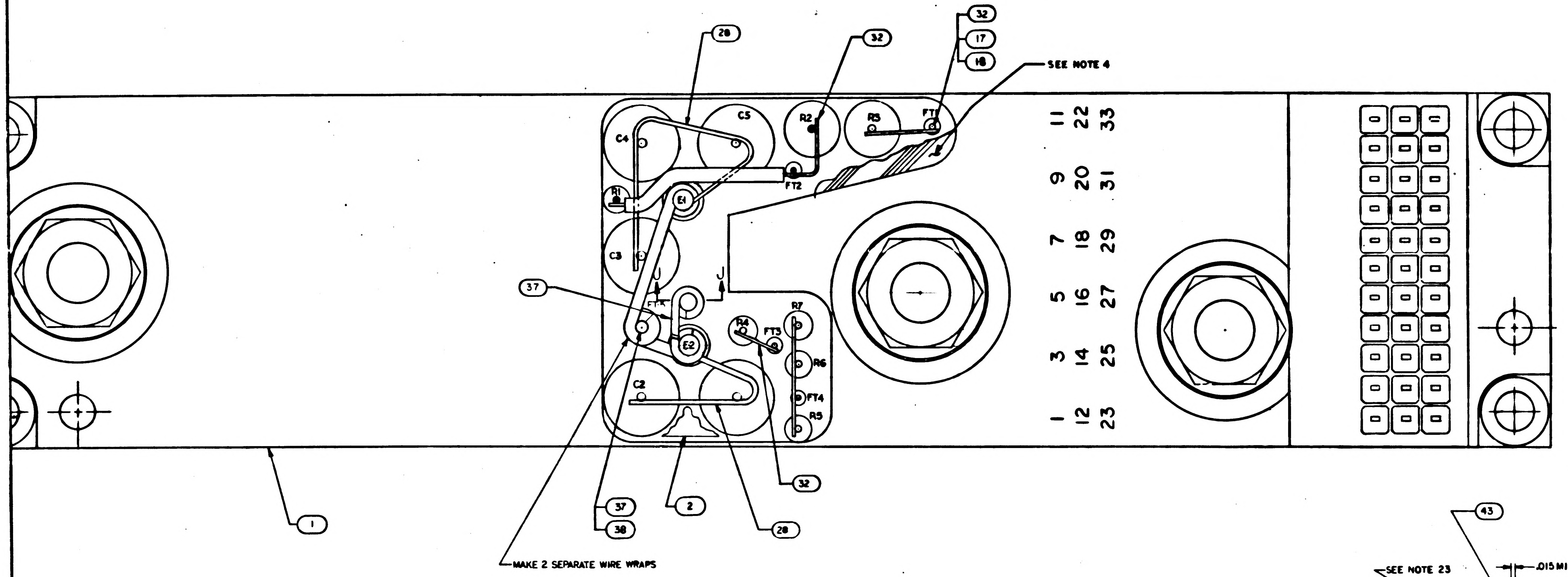

28
32
32
17
18
SEE NOTE 4
C4
C5
R2
R3
FT1
FT2
R1
E1
C3
J
37
E2
R4
FT3
R7
R6
FT4
R5
C2
1 3 5 7 9 11
12 14 16 18 20 22
23 25 27 29 31 33
1
37
38
2
28
32
MAKE 2 SEPARATE WIRE WRAPS

3H

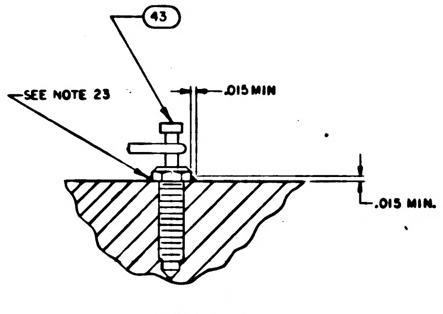

43
SEE NOTE 23
.015 MIN
.015 MIN.

SECTION J-J

	1006097	SCHEMATIC	REF
1	1004615-4	TERMINAL	43
1	MS20364-428A	NUT, SELF LOCKING THIN	42
A/R	1006879	SILICONE COMPOUND THERMOCONDUCTIVE	41
4	MS16633-4015	RING, RETAINING EXTERNAL E	40
4	1004546-3	WASHER, FLAT	39
A/R	1006776 - 16	INSULATION SLEEVING	38
A/R	QQ-W-343, TYPE S, #16	WIRE ELEC	37
4	1006708	TERMINAL STUD	36
2	1006755-133	CAPACITOR	35
1	1006755-79	CAPACITOR	34
A/R	1006776 - 21	INSULATION SLEEVING	33
A/R	1006757 - 14	WIRE, ELEC .010 X.020	32
6	1008024 - 3	WASHER, INSULATOR	31
1	1004215-3	INSULATOR	30
A/R	1006776 - 20	INSULATION SLEEVING	29
A/R	1006757 - 21	WIRE, ELEC .032 DIA	28
A/R	1006806 9	INSULATION TAPE	27
~~1~~	~~1004284~~	~~DECAL~~	26
3	1008071 - 5	WASHER	25
6	1008024 - 4	WASHER, INSULATOR	24
1	1008021 - 2	BUSHING, INSULATOR	23
2	1008021-3	BUSHING, INSULATOR	22
2	1004822	LUG. SOLDER	21
4	1004546 - 1	WASHER, FLAT	20
4	1004579 - 1	SCREW, JACKING	19
A/R	1006776 - 22	INSULATION, SLEEVING	18
A/R	1006757 - 13	WIRE, ELEC .020 DIA	17
2	MS20364B428A	NUT	16
1	1006827	TRANSISTOR	15
1	1003089-2	TRANSISTOR, POTTED	14
1	1006800	INDUCTOR	13
1	1006798	INDUCTOR	12
2	1006300	SEMICONDUCTOR DEVICE	11
5	1006755 - 134	CAPACITOR	10
1	1006715 - 2	RESISTOR	9
2	1006750 - 56	RESISTOR	8
1	1006788 - 6	RESISTOR	7
1	1010389 - 51	RESISTOR	6
1	1010389 - 43	RESISTOR	5
1	1006750 - 12	RESISTOR	4
1	1004215-1	INSULATOR	3
1	1004215-2	INSULATOR	2
1	1003124-011	HEADER HOUSING ASSY	1
QTY REQD	PART OR IDENTIFYING NO.	NOMENCLATURE OR DESCRIPTION	FIND NO.
011	LIST OF MATERIALS		

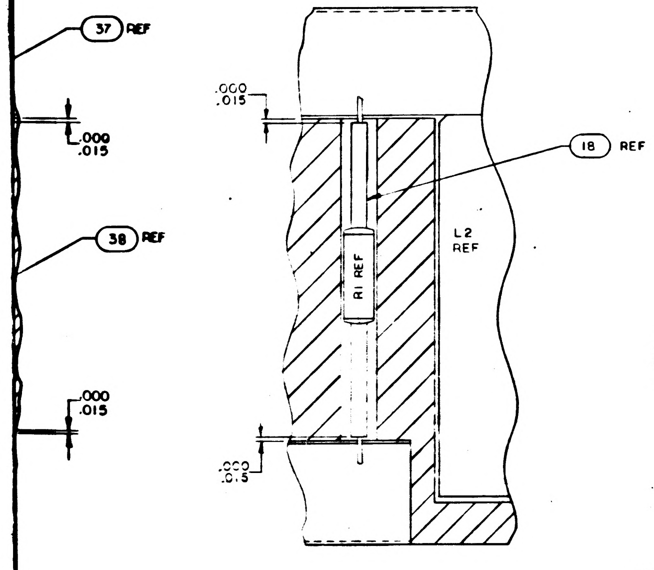

37 REF
38 REF
.000
.015
.009
.015
18 REF
L2
REF
R1 REF
.000
.015
.000
.015
J

SECTION H-H

TYP ALL COMPONENTS EXCEPT TRANSISTORS

SEE NOTE 22

SEE NOTE 21

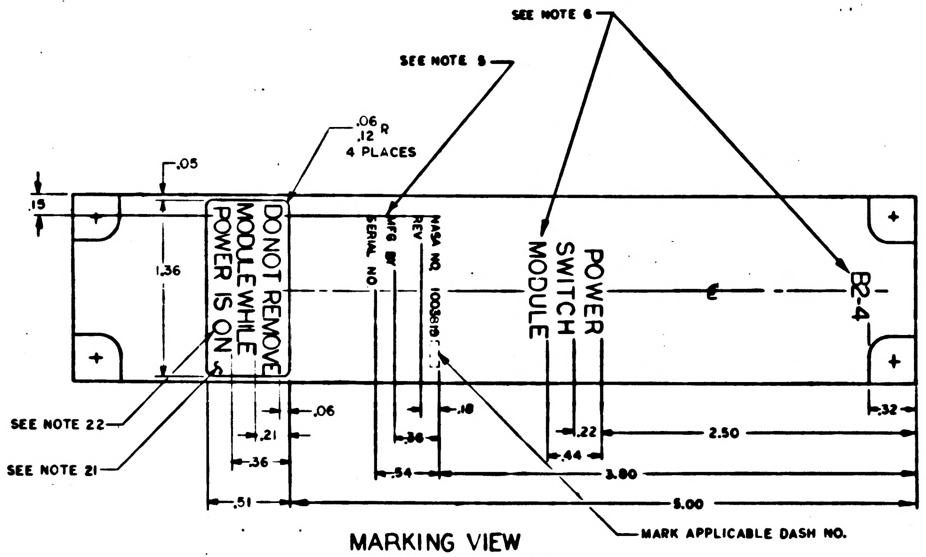

SEE NOTE 6
SEE NOTE 5
.06 R
.12
4 PLACES
.05
.15
1.36
DO NOT REMOVE
MODULE WHILE
POWER IS ON
SERIAL NO
MFG BY
REV
NASA NO. 1003819
POWER
SWITCH
MODULE
B2-4
.06
.21
.36
.51
.36
.54
.18
.22
.44
2.50
3.00
5.00
.32
MARK APPLICABLE DASH NO.

MARKING VIEW
SCALE 2/1

1003700	
NEXT ASSY	USED ON
APPLICATION	

UNLESS OTHERWISE SPECIFIED
DIMENSIONS ARE IN INCHES
TOLERANCES ON
FRACTIONS ± DECIMALS ±.02 ANGLES ±
DO NOT SCALE THIS DRAWING
MATERIAL
HEAT TREATMENT
FINAL FINISH

MIT
INSTRUMENTATION LAB
CAMBRIDGE, MASS
DWG NO. CONTRACT
DRAWN DATE 2APR65
CHECKED R. Edward 27 Apr 65
APPROVAL
APPROVAL Eldon C Hall 27 Apr 65
NASA APPROVAL
MIT APPROVAL

MANNED SPACECRAFT CENTER
HOUSTON, TEXAS

POWER SWITCH MODULE
ASSEMBLY B2-4
AGC POWER SUPPLY

CODE IDENT NO. 80230 | SIZE J | NASA DRAWING NO. 1003819
SCALE 5/1 | WT | SHEET 1 OF 1

E3/3

SEE NOTE 19

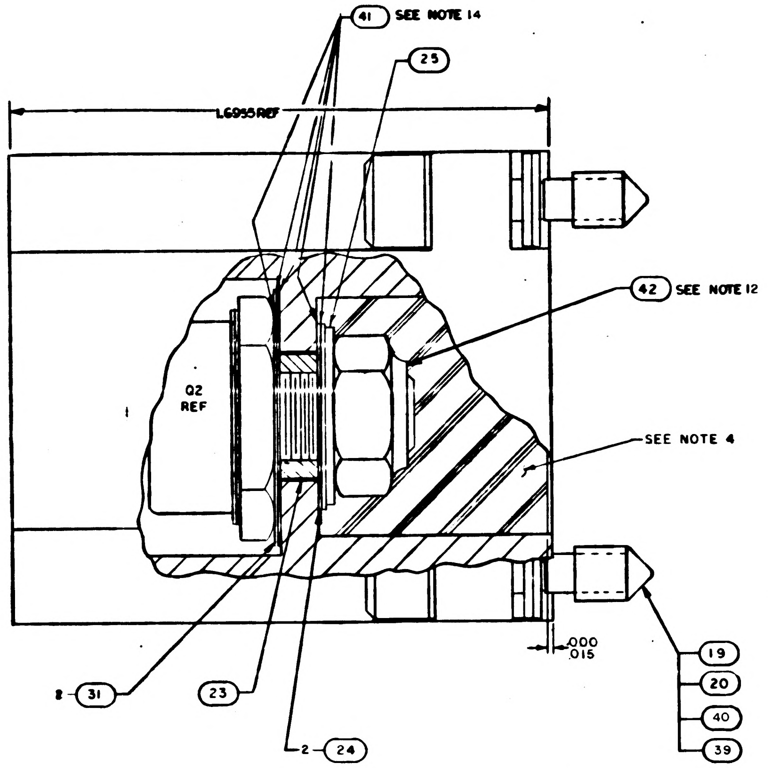
41 SEE NOTE 14
25
L.6955 REF
42 SEE NOTE 12
Q2 REF
SEE NOTE 4
.000 .015
2 31
23
2 24
19
20
40
39

37

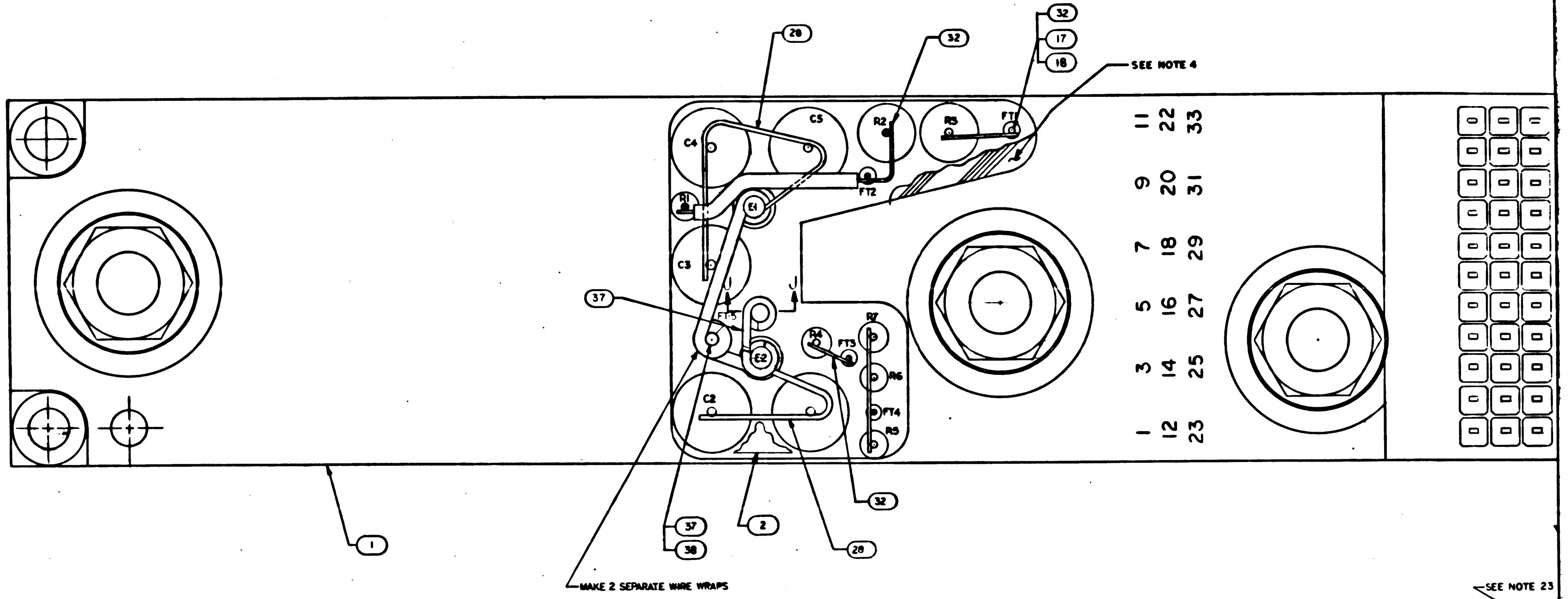
28
32
32
17
18
SEE NOTE 4
C4
C5
R2
R5
FT1
FT2
R1
E1
C3
37
FT5
J
E2
R4
FT3
R7
R6
FT4
R3
C2
11 22 33
9 20 31
7 18 29
5 16 27
3 14 25
1 12 23
1
37
38
2
28
32
MAKE 2 SEPARATE WIRE WRAPS

SEE NOTE 23

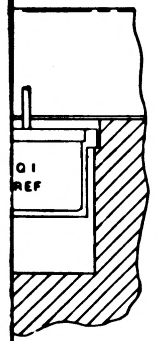

TION C-C

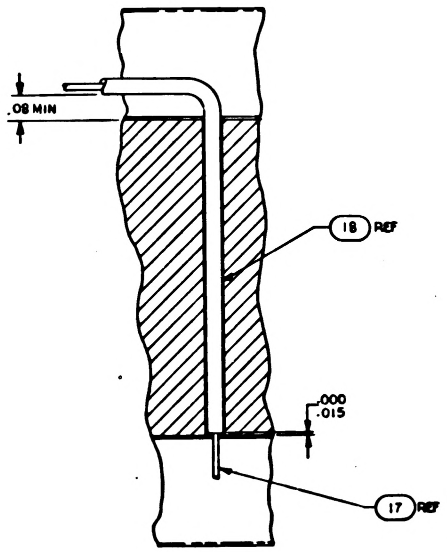
.08 MIN
18 REF
.000 .015
17 REF

SECTION D-D

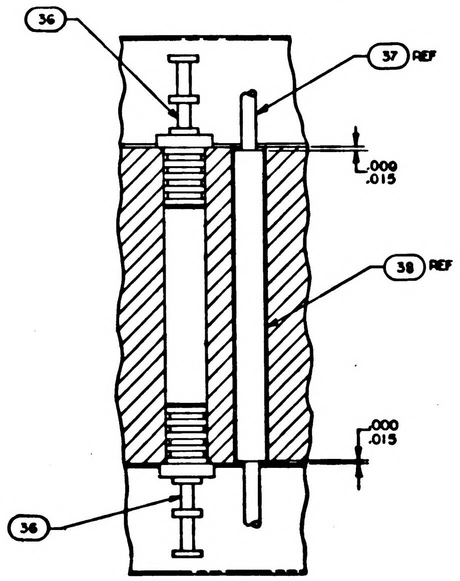
36
37 REF
.000 .015
38 REF
.000 .015
36

SECTION E-E

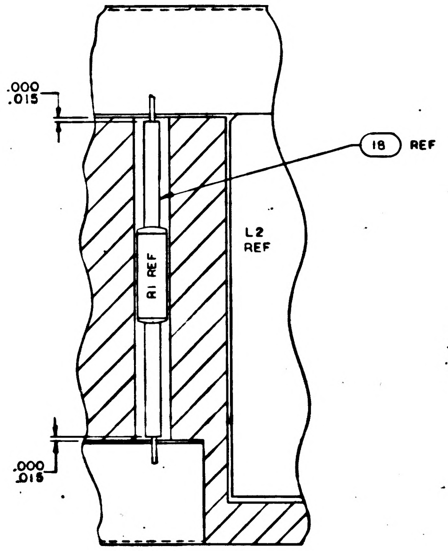
.000 .015
18 REF
L2 REF
R1 REF
.000 .015

SECTION H-H
TYP ALL COMPONENTS
EXCEPT TRANSISTORS

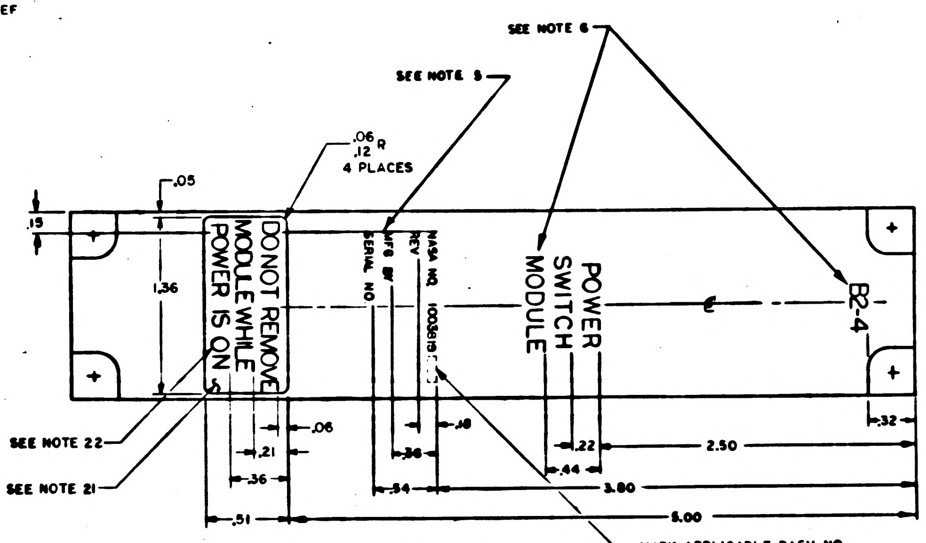
SEE NOTE 6
SEE NOTE 5
.06 .12 R
4 PLACES
.05
.15
1.36
DO NOT REMOVE MODULE WHILE POWER IS ON
NASA NO. 1003819-
REV
MFG BY
SERIAL NO
POWER SWITCH MODULE
B2-4
SEE NOTE 22
SEE NOTE 21
.06
.21
.36
.51
.18
.36
.54
.22
.44
2.50
3.80
5.00
.32
MARK APPLICABLE DASH NO.

MARKING VIEW
SCALE 2/1

NOTICE - WHEN GOVERNMENT DRAWINGS, SPECIFICATIONS, OR OTHER DATA ARE USED FOR ANY PURPOSE OTHER THAN IN CONNECTION WITH A DEFINITELY RELATED GOVERNMENT PROCUREMENT OPERATION, THE UNITED STATES GOVERNMENT THEREBY INCURS NO RESPONSIBILITY NOR ANY OBLIGATION WHATSOEVER; AND THE FACT THAT THE GOVERNMENT MAY HAVE FORMULATED, FURNISHED, OR IN ANY WAY SUPPLIED THE SAID DRAWINGS, SPECIFICATIONS, OR OTHER DATA IS NOT TO BE REGARDED BY IMPLICATION OR OTHERWISE AS IN ANY MANNER LICENSING THE HOLDER OR ANY OTHER PERSON OR CORPORATION, OR CONVEYING ANY RIGHTS OR PERMISSION TO MANUFACTURE, USE, OR SELL ANY PATENTED INVENTION THAT MAY IN ANY WAY BE RELATED THERETO.

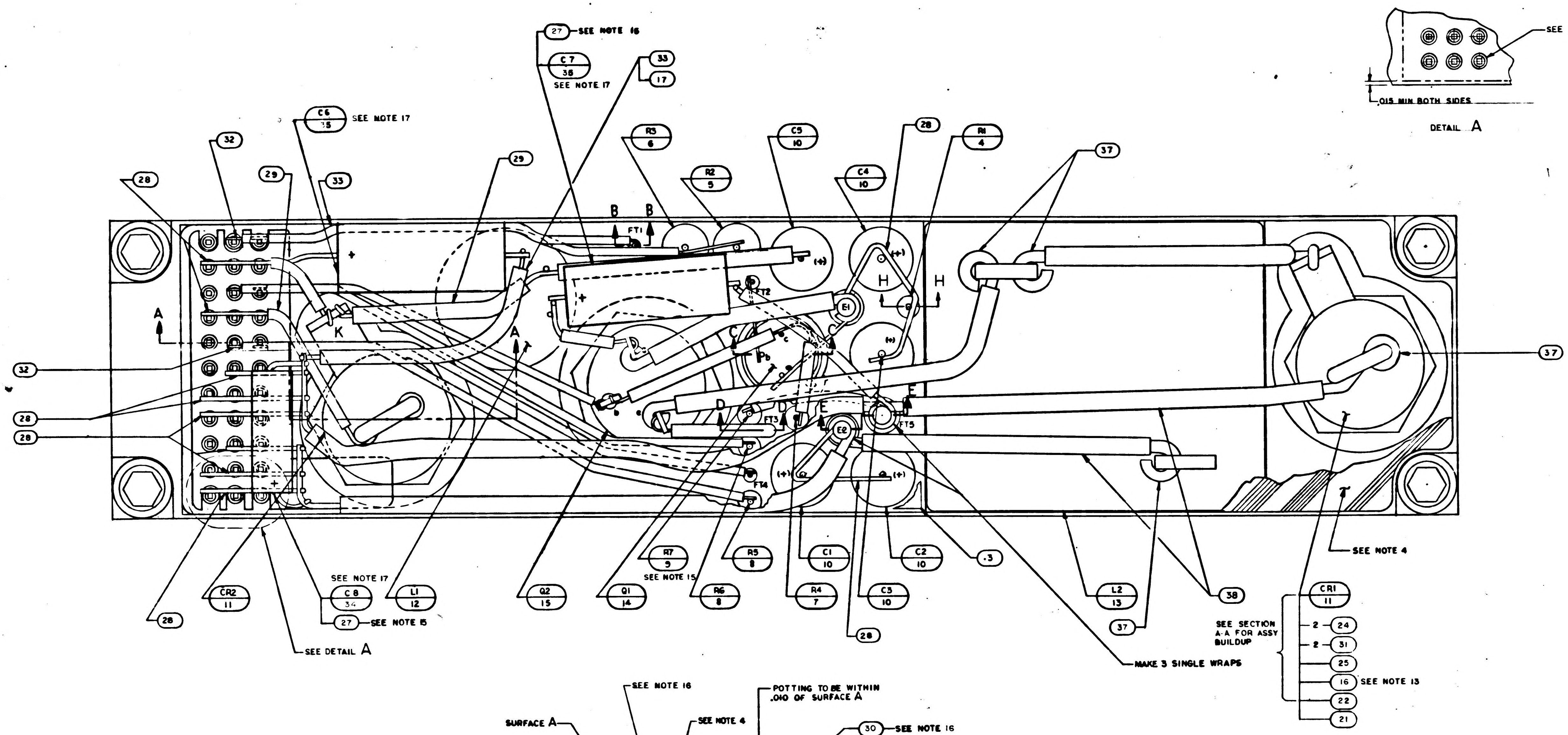
27 SEE NOTE 16
C7 36 SEE NOTE 17
33
17
C6 35 SEE NOTE 17
32
29
33
28
29
R3 6
R2 5
C5 10
C4 10
28
R1 4
37
B B
FT1
H H
(+)
E1
C
FT2
K
A
A
32
28
28
D
E
FT3
E2
FT4
FT5
37
SEE NOTE 4
R7 9 SEE NOTE 15
R5 8
C1 10
C2 10
3
R6 8
R4 7
C3 10
Q2 15
Q1 14
L1 12
SEE NOTE 17
C8 34
27 SEE NOTE 15
CR2 11
28
SEE DETAIL A
L2 13
38
37
MAKE 3 SINGLE WRAPS
28
CR1 11
SEE SECTION A-A FOR ASSY BUILDUP
2-24
2-31
25
16 SEE NOTE 13
22
21
SEE NOTE 19
.015 MIN BOTH SIDES
DETAIL A

3H

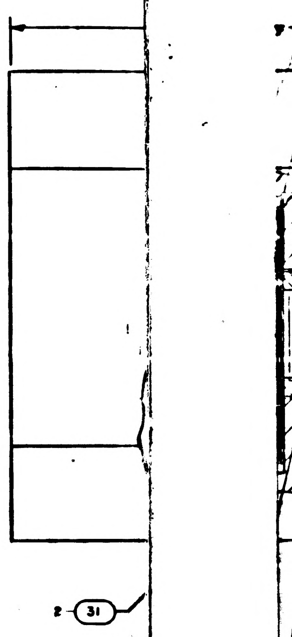

NOTES

1. INTERPRET DRAWING IN ACCORDANCE WITH STANDARDS PRESCRIBED BY MIL D-70327
2. ALL WELDED CONNECTIONS TO BE MADE PER ND1002005
3. K INDICATES CATHODE SIDE OF DIODE
4. ENCAPSULATE MODULE PER ND1002002 BLACK POLYURETHANE FOAM
5. MARK .05/.07 HIGH WHITE PER ND1002019 AND ND1002122 TYPE II CLASS I, USING MARKING INK 1006271-1 SERIALIZE PER ND1002023
6. MARK .115/.135 HIGH WHITE PER ND1002019 AND ND1002122 TYPE II CLASS I, USING MARKING INK 1006271-1
7. STAKE FIND NO 4 THRU 10 & 12 THRU 14 PER ND1002009
8. AR DENOTES AS REQUIRED
9. ALL WRAPPED LEADS TO BE SOLDERED PER ND1002071 EXCEPT AS SHOWN
10. ● BLACK DOT INDICATES LEAD TO BE CUT AT SECOND LEVEL
11. ○ WHITE DOT INDICATES LEAD TO BE CUT AT FIRST LEVEL
12. MOUNTING TORQUE FOR Q2 10/12 INCH POUNDS
13. MOUNTING TORQUE FOR CR1 AND CR2 TO BE 25/30 INCH POUNDS
14. APPLY FIND NO 41 AS SHOWN TO MOUNTING INTERFACES OF Q2 & Q1 BEFORE ASSEMBLY
15. FIND NO. 5, 34 & 35 TO BE WRAPPED WITH ONE LAYER OF FIND NO. 27
16. STAKE FIND NO. 30 TO FIND NO 1 & SEAL OPENINGS FOR FEED THRU WIRES AS SHOWN PER ND1002004 TYPE VI
17. STAKE FIND NO. 34 & 35 PER ND1002004 TYPE VI
18. APPLY FIND NO. 41 ON SURFACES SHOWN ONLY TYP CR1 & CR2
19. SEAL TERMINALS AND INSULATORS TO HEADER AS SHOWN USING ND1002004 TYPE VI
20. UNLESS OTHERWISE SPECIFIED ALL WIRING SHALL BE IN ACCORDANCE WITH ND1002069
21. BACKGROUND TO BE RED USING MARKING INK 1006271-9
22. MARK .08/.10 HIGH WHITE CHARACTERS PER ND1002019 AND ND1002122, TYPE II, CLASS 2 USING INK 1006271-1 CENTRALIZE AS SHOWN
23. SEAL FIND NO 43 TO FIND NO 1 AS SHOWN PER ND1002004 TYPE VI

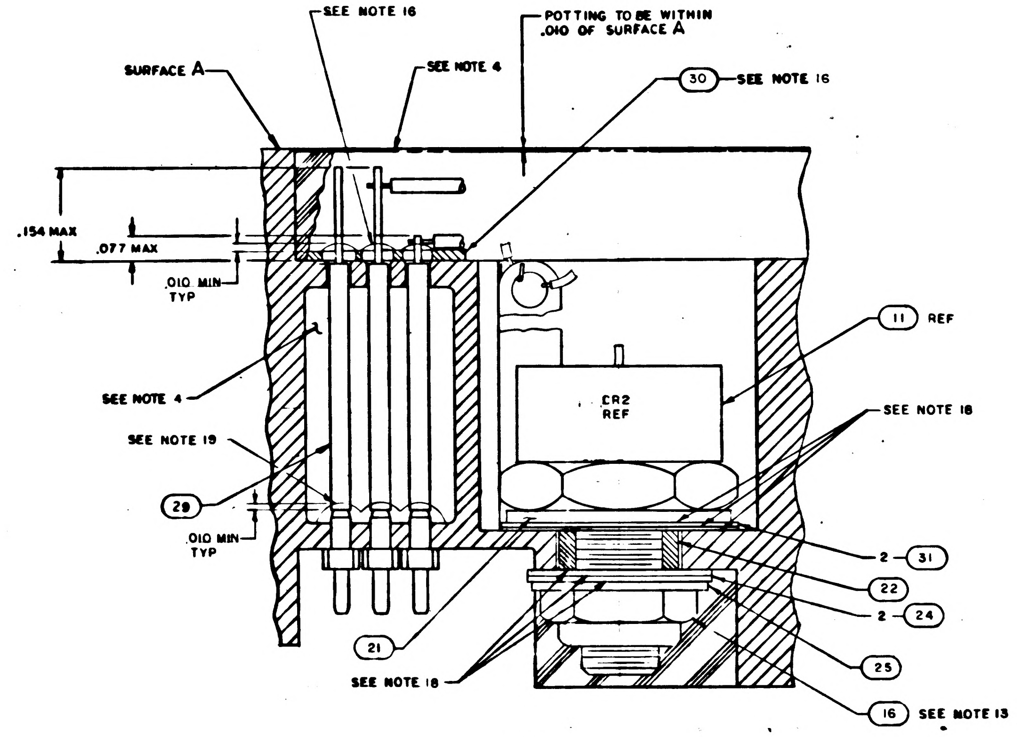
SEE NOTE 16
POTTING TO BE WITHIN .010 OF SURFACE A
SURFACE A
SEE NOTE 4
30 SEE NOTE 16
.154 MAX
.077 MAX
.010 MIN TYP
11 REF
SEE NOTE 4
CR2 REF
SEE NOTE 18
SEE NOTE 19
29
.010 MIN TYP
2-31
22
2-24
21
25
SEE NOTE 18
16 SEE NOTE 13

SECTION A-A

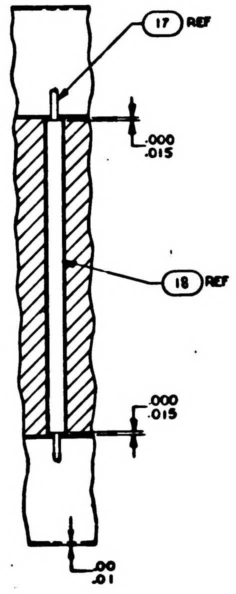
17 REF
.000 .015
18 REF
.000 .015
.00 .01

SECTION B-B

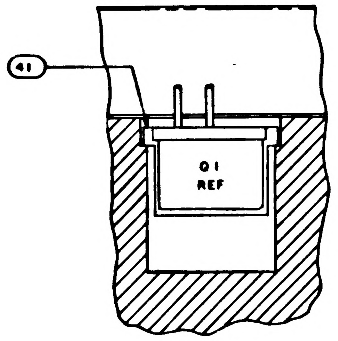

SECTION C-C

1003819 B E1/3

	1003819	-

SYM	REVISIONS DESCRIPTION	DATE	APPROVAL

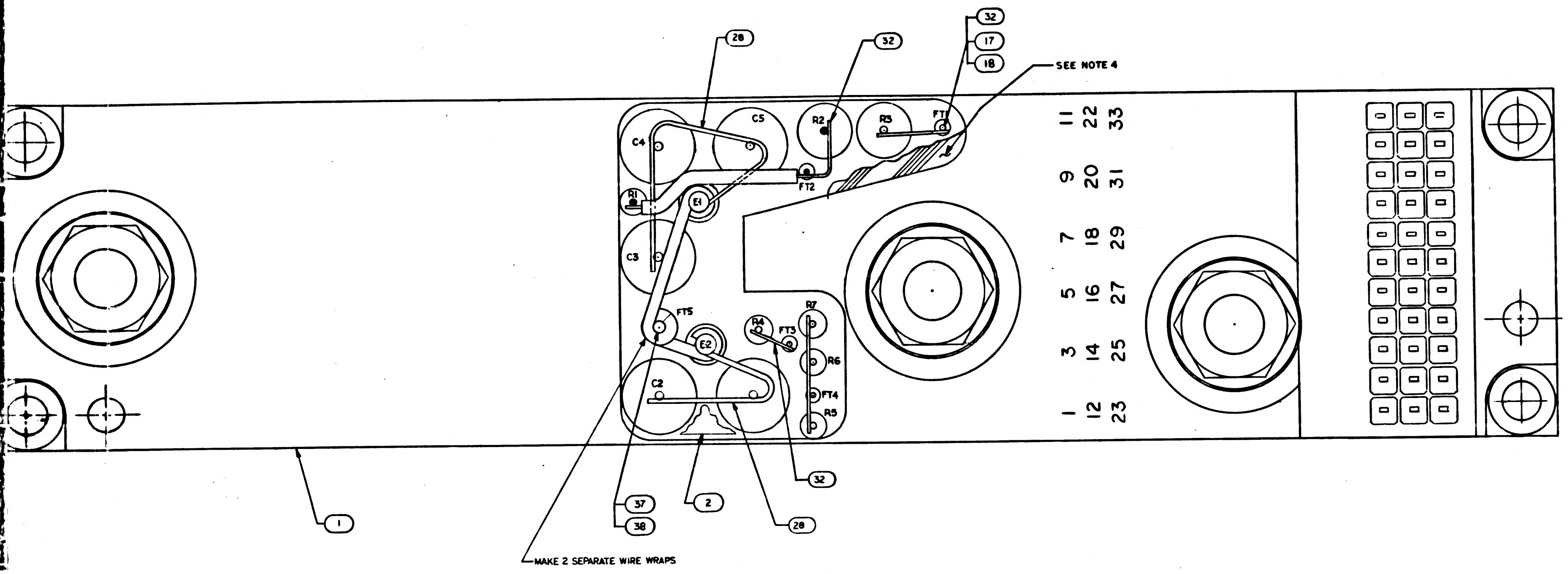

32
17
18
SEE NOTE 4
28
32
C4
C5
R2
R3
FT1
FT2
R1
E1
C3
FT5
E2
R4
FT3
R7
R6
FT4
R5
C2
11 22 33
9 20 31
7 18 29
5 16 27
3 14 25
1 12 23
1
37
38
2
32
28
MAKE 2 SEPARATE WIRE WRAPS

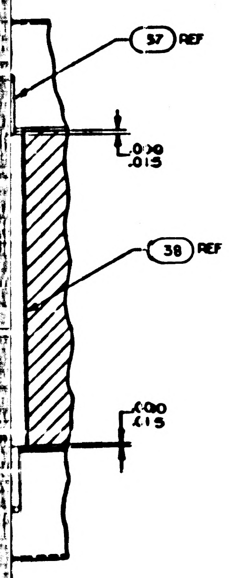

37 REF
.000
.015
38 REF
.000
.015

-E

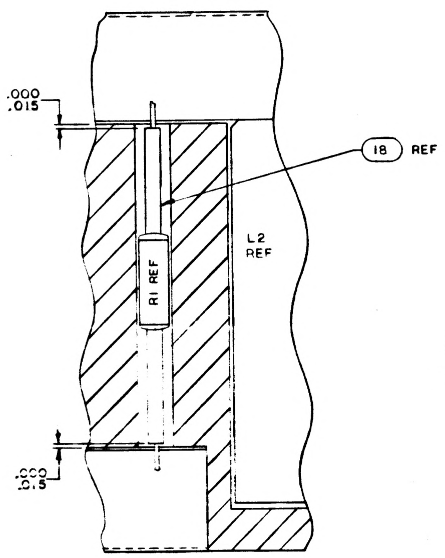

.000
.015
18 REF
L2
REF
R1 REF
.000
.015

SECTION H-H

TYP ALL COMPONENTS EXCEPT TRANSISTORS

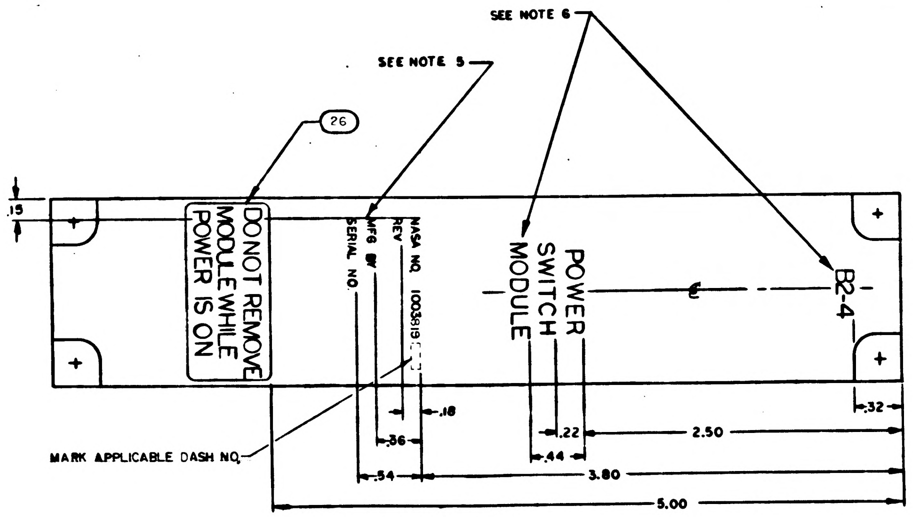

SEE NOTE 6
SEE NOTE 5
26
.15
DO NOT REMOVE MODULE WHILE POWER IS ON
NASA NO. 1003819
REV
MFG BY
SERIAL NO.
POWER SWITCH MODULE
B2-4
MARK APPLICABLE DASH NO.
.18
.36
.54
.22
.44
2.50
3.80
.32
5.00

MARKING VIEW

SCALE 2/1

3H

QTY REQD	PART OR IDENTIFYING NO.	NOMENCLATURE OR DESCRIPTION	FIND NO.
☒	1006097	SCHEMATIC	REF
1	MS20364-428A	NUT, SELF LOCKING THIN	42
A/R	1006879	SILICONE COMPOUND THERMOCONDUCTIVE	41
4	MS16633-4015	RING, RETAINING EXTERNAL E	40
4	1004546-3	WASHER, FLAT	39
A/R	1006776 - 16	INSULATION SLEEVING	38
A/R	QQ-W-343, TYPE S, #16	WIRE ELEC	37
4	1006708	TERMINAL STUD	36
2	1006755-133	CAPACITOR	35
1	1006755-79	CAPACITOR	34
A/R	1006776 - 21	INSULATION SLEEVING	33
A/R	1006757 - 14	WIRE, ELEC .010 X.020	32
6	1008024 - 3	WASHER, INSULATOR	31
1	1004215-3	INSULATOR	30
A/R	1006776 - 20	INSULATION SLEEVING	29
A/R	1006757 - 21	WIRE, ELEC .032 DIA	28
A/R	1006806-9	INSULATION TAPE	27
1	1004284	DECAL	26
3	1008071 - 5	WASHER	25
6	1008024 - 4	WASHER, INSULATOR	24
1	1008021 - 2	BUSHING, INSULATOR	23
2	1008021-3	BUSHING, INSULATOR	22
2	1004822	LUG. SOLDER	21
4	1004546 - 1	WASHER, FLAT	20
4	1004579 - 1	SCREW, JACKING	19
A/R	1006776 - 22	INSULATION, SLEEVING	18
A/R	1006757 - 13	WIRE, ELEC .020 DIA	17
2	MS20364B428A	NUT	16
1	1006827	TRANSISTOR	15
1	1003089-2	TRANSISTOR, POTTED	14
1	1006800	INDUCTOR	13
1	1006798	INDUCTOR	12
2	1006300	SEMICONDUCTOR DEVICE	11
5	1006755 - 134	CAPACITOR	10
1	1006715 - 2	RESISTOR	9
2	1006750 - 56	RESISTOR	8
1	1006788 - 6	RESISTOR	7
1	1010389 - 51	RESISTOR	6
1	1010389 - 43	RESISTOR	5
1	1006750 - 12	RESISTOR	4
1	1004215-1	INSULATOR	3
1	1004215-2	INSULATOR	2
1	1003124-011	HEADER HOUSING ASSY	1
011	LIST OF MATERIALS		

1003700	
NEXT ASSY	USED ON
APPLICATION	

UNLESS OTHERWISE SPECIFIED DIMENSIONS ARE IN INCHES
TOLERANCES ON
FRACTIONS ± DECIMALS ±.02 ANGLES ±
DO NOT SCALE THIS DRAWING
MATERIAL
HEAT TREATMENT
FINAL FINISH

MIT INSTRUMENTATION LAB CAMBRIDGE, MASS
DWG NO CONTRACT
DRAWN DATE 12 APR 65
CHECKED R. Edward 23 Apr 65
APPROVAL
APPROVAL Eldon C Hall 27 Apr 65
NASA APPROVAL
MIT APPROVAL

MANNED SPACECRAFT CENTER
HOUSTON, TEXAS

POWER SWITCH MODULE ASSEMBLY B2-4
AGC POWER SUPPLY

CODE IDENT NO. 80230 SIZE J NASA DRAWING NO. 1003819
SCALE 5/1 WT SHEET 1 OF 1

10038	-

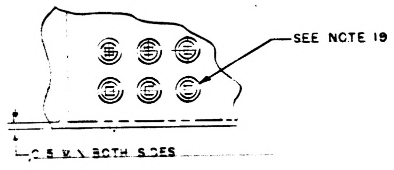
SEE NOTE 19
C S W X BOTH SIDES

DETAIL A

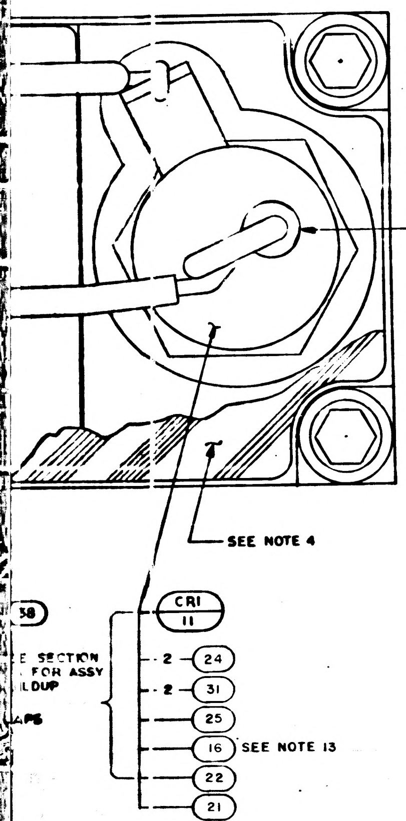
37
SEE NOTE 4
38
E SECTION
FOR ASSY
LDUP
CR1
11
2 24
2 31
25
16 SEE NOTE 13
22
21

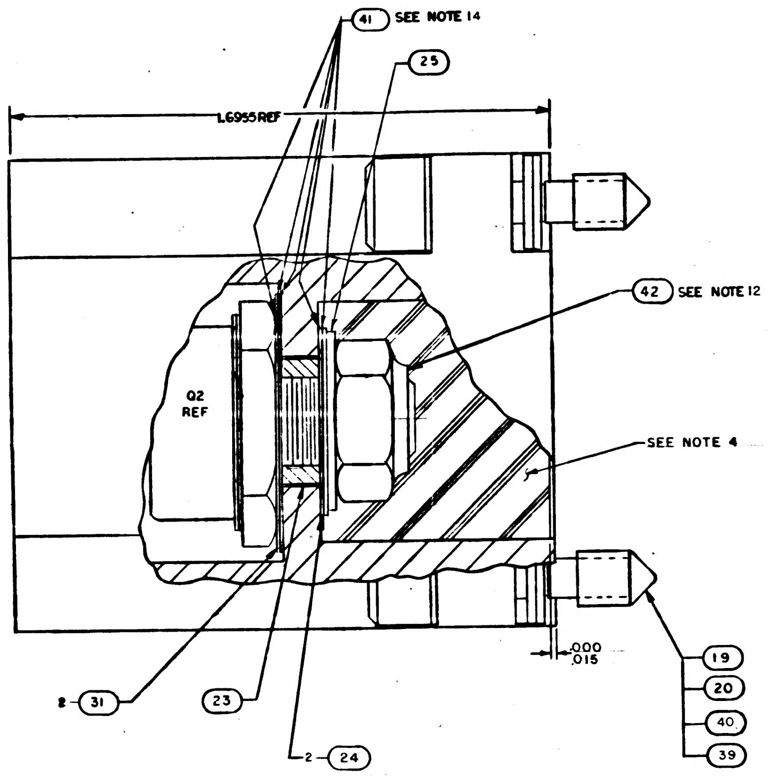
41 SEE NOTE 14
25
L6955 REF
42 SEE NOTE 12
SEE NOTE 4
Q2
REF
.000
.015
19
20
40
39
2 31
23
2 24

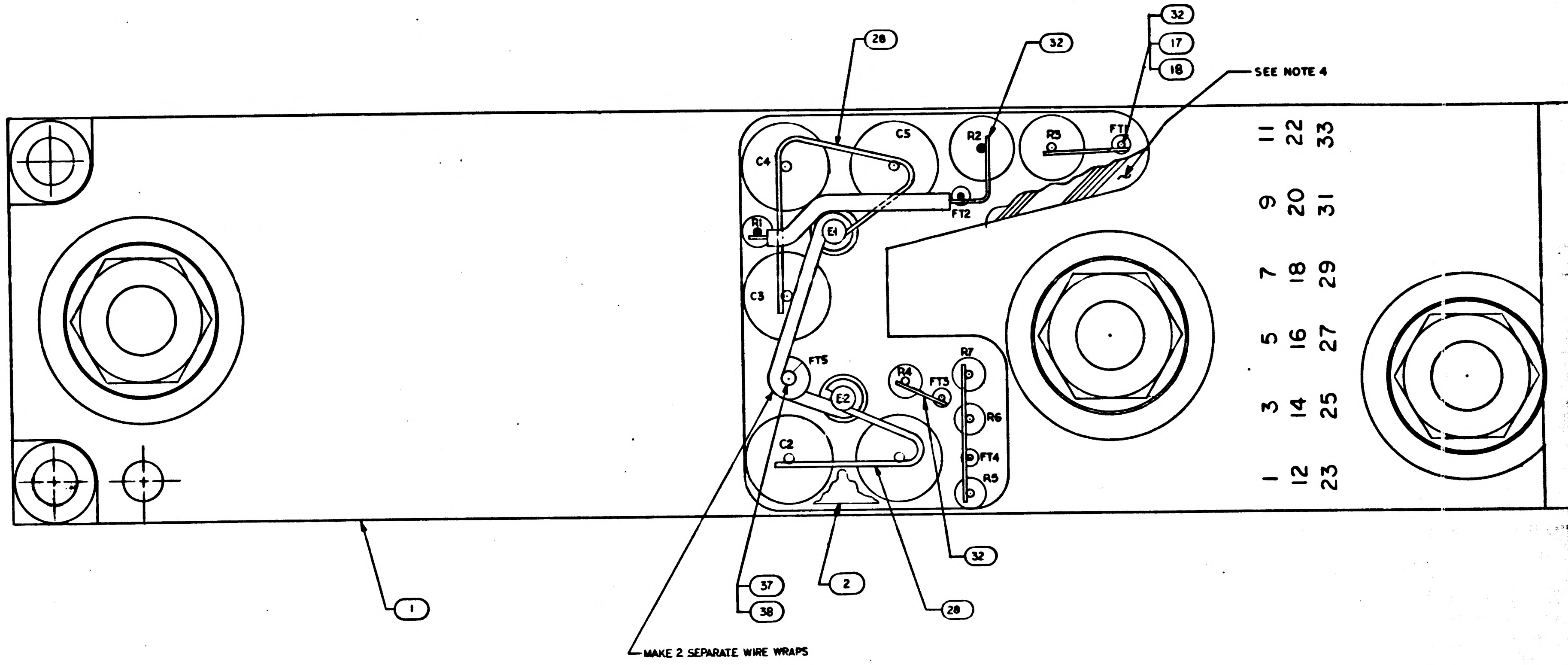
28
32
32
17
18
SEE NOTE 4
C4
C5
R2
R3
FT1
FT2
R1
E1
C3
FT5
E2
R4
FT3
R7
R6
FT4
R5
C2
11 22 33
9 20 31
7 18 29
5 16 27
3 14 25
1 12 23
1
37
38
2
28
32
MAKE 2 SEPARATE WIRE WRAPS

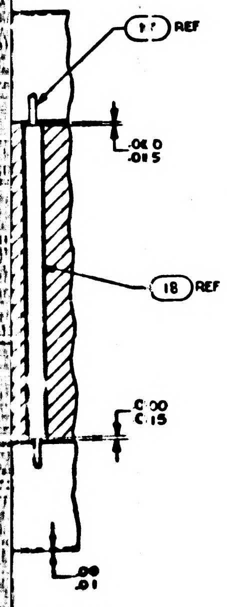
17 REF
.010
.015
18 REF
.000
.015
.00
.01

ION B-B

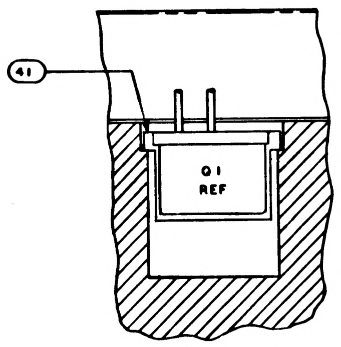

SECTION C-C

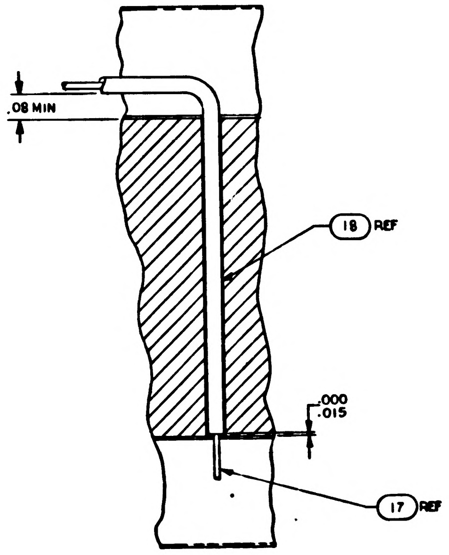
.08 MIN
18 REF
.000
.015
17 REF

SECTION D-D

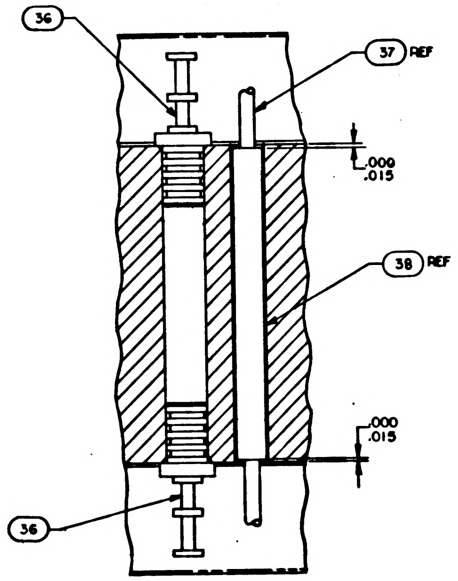
36
37 REF
.000
.015
38 REF
.000
.015
36

SECTION E-E

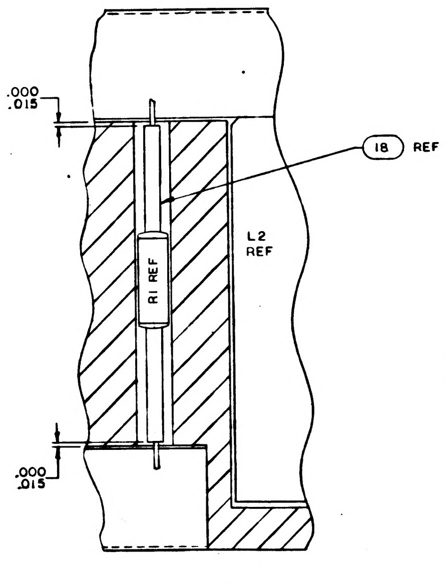
.000
.015
18 REF
R1 REF
L2
REF
.000
.015

SECTION H-H

TYP ALL COMPONENTS
EXCEPT TRANSISTORS

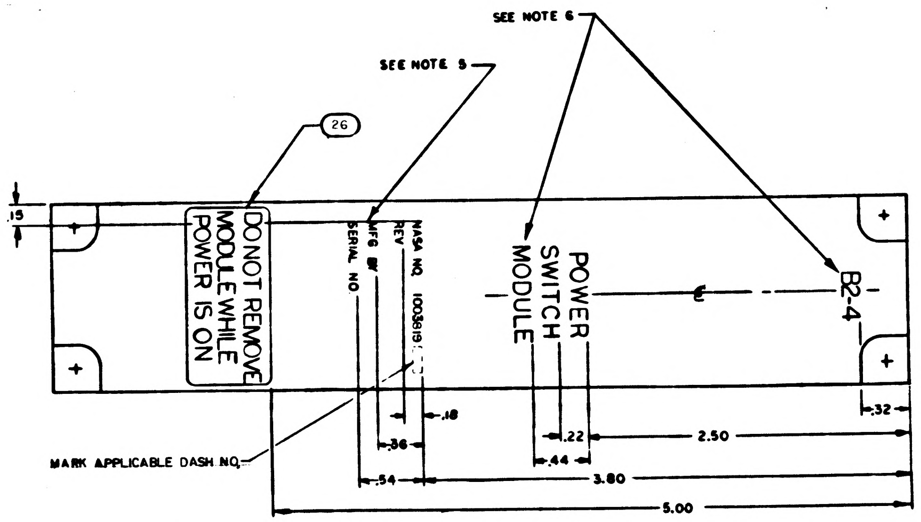
SEE NOTE 6
SEE NOTE 5
26
.15
DO NOT REMOVE
MODULE WHILE
POWER IS ON
NASA NO 1003819
MFG BY
REV
SERIAL NO
POWER
SWITCH
MODULE
B2-4
MARK APPLICABLE DASH NO.
.18
.36
.54
.22
.44
2.50
3.80
5.00
.32

MARKING VIEW

SCALE 2/1

NOTICE – WHEN GOVERNMENT DRAWINGS, SPECIFICATIONS, OR OTHER DATA ARE USED FOR ANY PURPOSE OTHER THAN IN CONNECTION WITH A DEFINITELY RELATED GOVERNMENT PROCUREMENT OPERATION, THE UNITED STATES GOVERNMENT THEREBY INCURS NO RESPONSIBILITY NOR ANY OBLIGATION WHATSOEVER; AND THE FACT THAT THE GOVERNMENT MAY HAVE FORMULATED, FURNISHED, OR IN ANY WAY SUPPLIED THE SAID DRAWINGS, SPECIFICATIONS, OR OTHER DATA IS NOT TO BE REGARDED BY IMPLICATION OR OTHERWISE AS IN ANY MANNER LICENSING THE HOLDER OR ANY OTHER PERSON OR CORPORATION, OR CONVEYING ANY RIGHTS OR PERMISSION TO MANUFACTURE, USE, OR SELL ANY PATENTED INVENTION THAT MAY IN ANY WAY BE RELATED THERETO

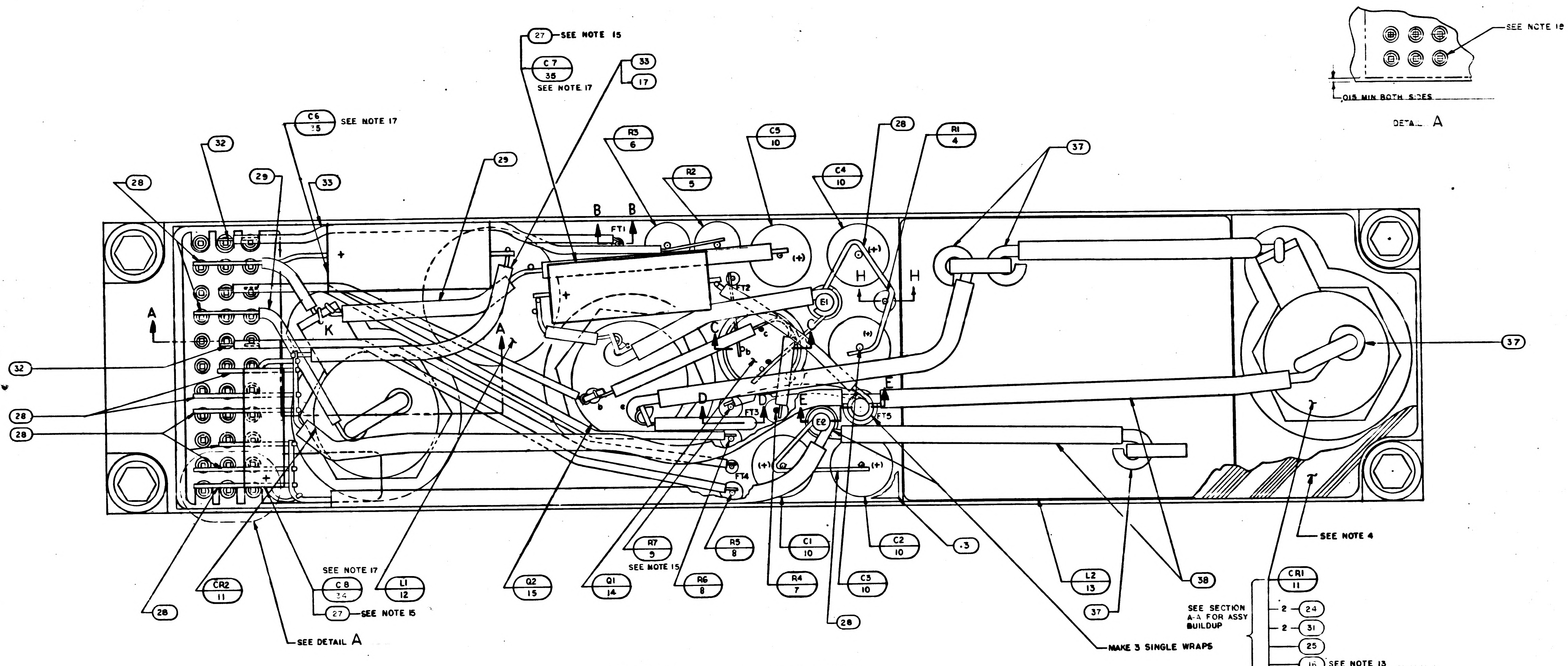
27 SEE NOTE 15
C7 / 35 SEE NOTE 17
33
17
C6 / 35 SEE NOTE 17
32
29
33
28
29
R3 / 6
R2 / 5
C5 / 10
C4 / 10
28
R1 / 4
37
B
FT1
FT2
H
E1
A
K
C
D
E
FT3
FT4
FT5
E2
(+)
37
32
28
28
CR2 / 11
28
SEE DETAIL A
SEE NOTE 17
C8 / 34
27 SEE NOTE 15
L1 / 12
Q2 / 15
Q1 / 14
R7 / 9
SEE NOTE 15
R5 / 8
R6 / 8
C1 / 10
R4 / 7
C2 / 10
C3 / 10
28
3
L2 / 13
37
38
MAKE 3 SINGLE WRAPS
SEE NOTE 4
CR1 / 11
SEE SECTION A-A FOR ASSY BUILDUP
2 – 24
2 – 31
25
16 SEE NOTE 13
22
21
SEE NOTE 18
.015 MIN BOTH SIDES
DETAIL A

3H

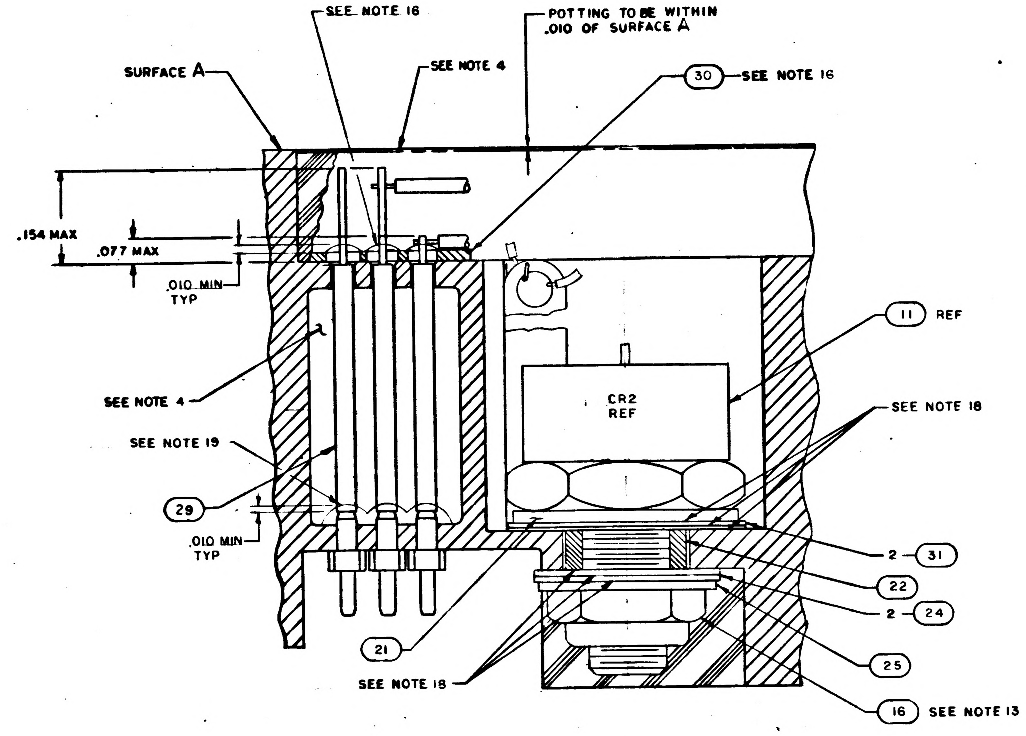
SEE NOTE 16
POTTING TO BE WITHIN .010 OF SURFACE A
SURFACE A
SEE NOTE 4
30 SEE NOTE 16
.154 MAX
.077 MAX
.010 MIN TYP
11 REF
CR2 REF
SEE NOTE 4
SEE NOTE 18
SEE NOTE 19
29
.010 MIN TYP
2 – 31
22
2 – 24
21
25
SEE NOTE 18
16 SEE NOTE 13

SECTION A-A

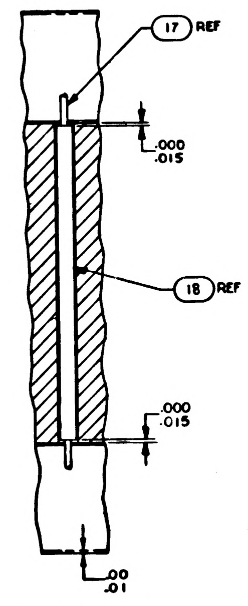
17 REF
.000
.015
18 REF
.000
.015
.00
.01

SECTION B-B

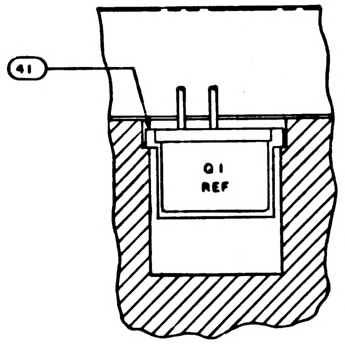

SECTION C-C

NOTES

1. INTERPRET DRAWING IN ACCORDANCE WITH STANDARDS PRESCRIBED BY MIL D-70327
2. ALL WELDED CONNECTIONS TO BE MADE PER ND1002005
3. K INDICATES CATHODE SIDE OF DIODE
4. ENCAPSULATE MODULE PER ND1002002 BLACK POLYURETHANE FOAM
5. MARK .05/.07 HIGH WHITE PER ND1002019 AND ND1002122 TYPE II CLASS I, USING MARKING INK 1006271-1 SERIALIZE PER ND1002023
6. MARK .115/135 HIGH WHITE PER ND1002019 AND ND1002122 TYPE II CLASS I, USING MARKING INK 1006271-1
7. STAKE FIND NO 4 THRU 10 & 12 THRU 14 PER ND1002009
8. AR DENOTES AS REQUIRED
9. ALL WRAPPED LEADS TO BE SOLDERED PER ND1002071 EXCEPT AS SHOWN
10. ● BLACK DOT INDICATES LEAD TO BE CUT AT SECOND LEVEL
11. ○ WHITE DOT INDICATES LEAD TO BE CUT AT FIRST LEVEL
12. MOUNTING TORQUE FOR Q2 10/12 INCH POUNDS
13. MOUNTING TORQUE FOR CR1 AND CR2 TO BE 25/30 INCH POUNDS
14. APPLY FIND NO. 41 AS SHOWN TO MOUNTING INTERFACES OF Q2 & Q1 BEFORE ASSEMBLY
15. FIND NO. 9, 34 & 35 TO BE WRAPPED WITH ONE LAYER OF FIND NO. 27
16. STAKE FIND NO. 30 TO FIND NO. 1 & SEAL OPENINGS FOR FEED THRU WIRES AS SHOWN PER ND1002004 TYPE VI
17. STAKE FIND NO. 34 & 35 PER ND1002004 TYPE VI
18. APPLY FIND NO. 41 ON SURFACES SHOWN ONLY TYP CR1 & CR2
19. SEAL TERMINALS AND INSULATORS TO HEADER AS SHOWN USING ND1002004 TYPE VI
20. UNLESS OTHERWISE SPECIFIED ALL WIRING SHALL BE IN ACCORDANCE WITH ND1002069

1003819 —

		REVISIONS		
SYM		DESCRIPTION	DATE	APPROVAL
A		REVISED PER TDRR 18039 DR CHK		

1003821 A

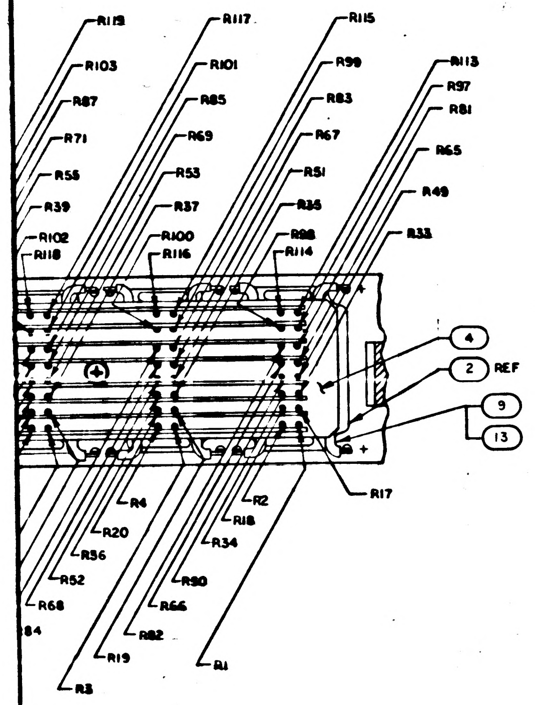

R119
R117
R115
R103
R101
R99
R113
R97
R81
R87
R85
R83
R71
R69
R67
R65
R55
R53
R51
R49
R39
R37
R35
R102
R100
R98
R33
R118
R116
R114
4
2 REF
9
13
R4
R2
R18
R17
R20
R34
R36
R52
R90
R68
R66
84
R82
R19
R1
R3

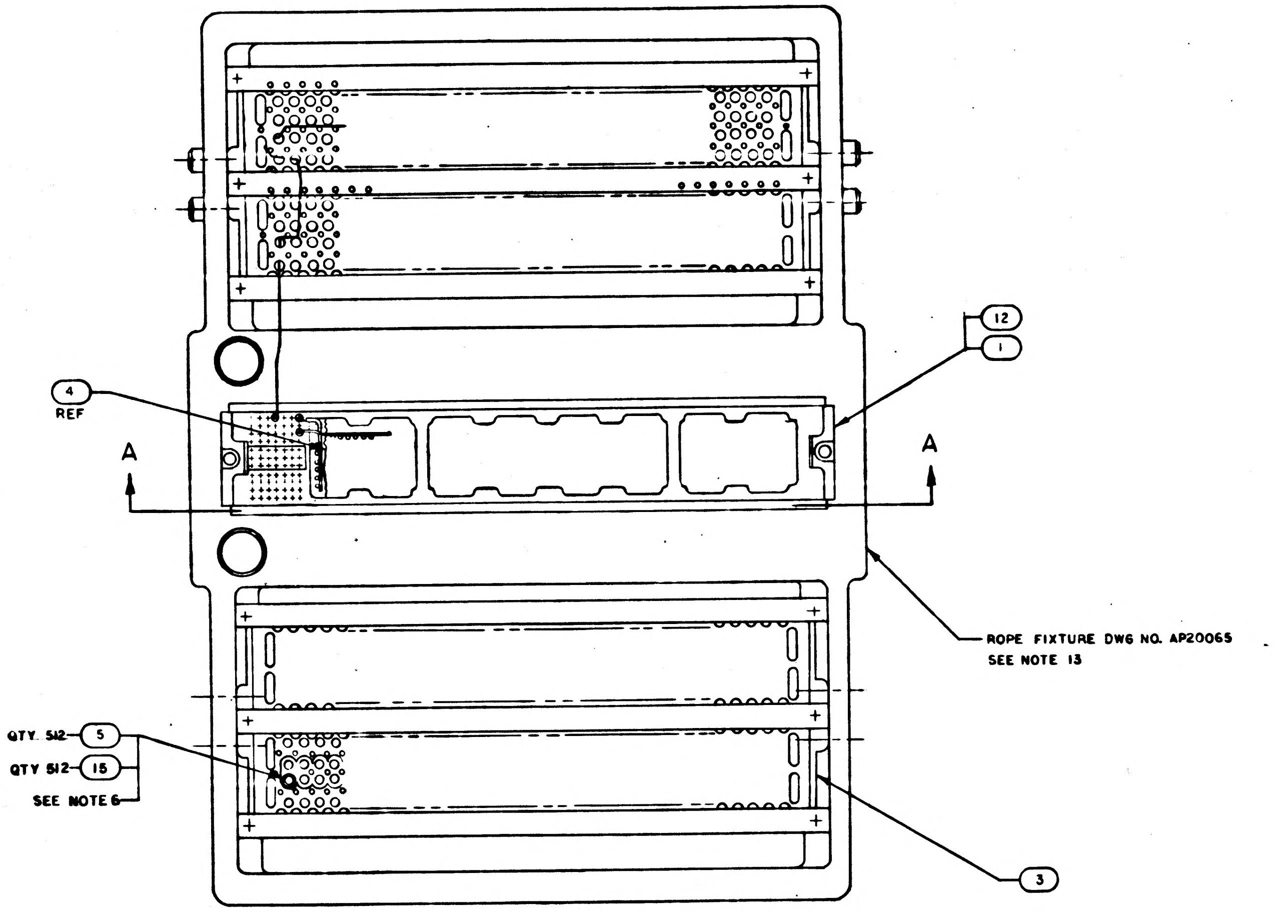

12
1
4
REF
A
A
ROPE FIXTURE DWG NO. AP20065
SEE NOTE 13
QTY. 512 5
QTY 512 15
SEE NOTE 6
3

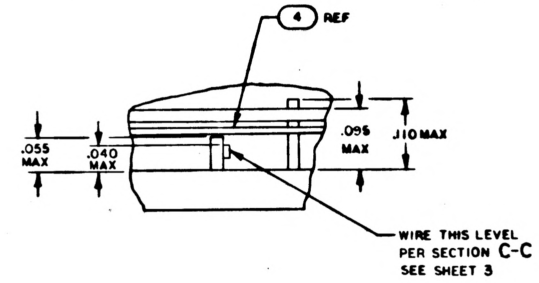

4 REF
.055 MAX
.040 MAX
.095 MAX
.110 MAX
WIRE THIS LEVEL
PER SECTION C-C
SEE SHEET 3

DETAIL A
SCALE: 10/1

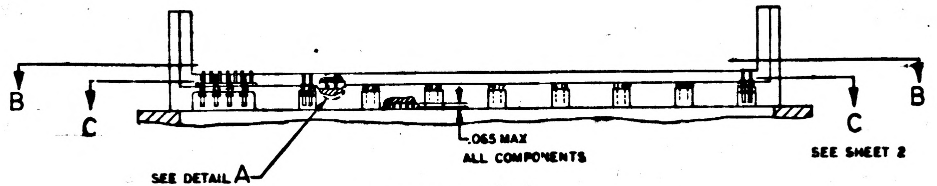

B
C
C
B
.065 MAX
ALL COMPONENTS
SEE SHEET 2
SEE DETAIL A

PARTIAL SECTION A-A

QTY 021	QTY 011	PART OR IDENTIFYING NO.	NOMENCLATURE OR DESCRIPTION	FIND NO.
☒	☒	1006144	SCHEMATIC	REF
512	☒	1006320-001	CORE, MAGNETIC	15
2	2	1000093-2	SCREW, BUTTON HD	14
AR	AR	1006776-22	SLEEVING	13
☒	1	1003135-011	HEADER, ASSY	12
2	2	1004237	WASHER, FLAT	11
AR	AR	1006275-1	WIRE, ELECTRICAL	10
AR	AR	1006757-1	WIRE, 010 X 020	9
256	256	1006751	DIODE	8
128	128	1006750-39	RESISTOR, FIXED 2K	7
1	1	1003134	TERMINAL BOARD ASSEMBLY	6
☒	512	1006298-1	CORE, MAGNETIC	5
1	1	1004235-3	INSULATOR	4
4	4	1004233	HOLDER, CORE	3
1	1	1004232	HOLDER, COMPONENT	2
1	☒	1003135	HEADER ASSEMBLY	1

LIST OF MATERIALS

1003821 A

NEXT ASSY	USED ON
1003133	
1003733	

APPLICATION

UNLESS OTHERWISE SPECIFIED
DIMENSIONS ARE IN INCHES
TOLERANCES ON
FRACTIONS ± DECIMALS ± ANGLES ±
DO NOT SCALE THIS DRAWING
MATERIAL —
HEAT TREATMENT —
FINAL FINISH —

MIT
INSTRUMENTATION LAB
CAMBRIDGE, MASS
DRAWN DATE 9
CHECKED 12 Feb 65
APPROVAL
APPROVAL
NASA APPROVAL
MIT APPROVAL

MANNED SPACECRAFT CENTER
HOUSTON, TEXAS

ROPE MEMORY MODULE SUBASSEMBLY

CODE IDENT NO. 80230
SIZE J
NASA DRAWING NO. 1003821
SCALE 1/1
WT
SHEET 1 OF 3

1003821 A SH OF 3

[illegible]

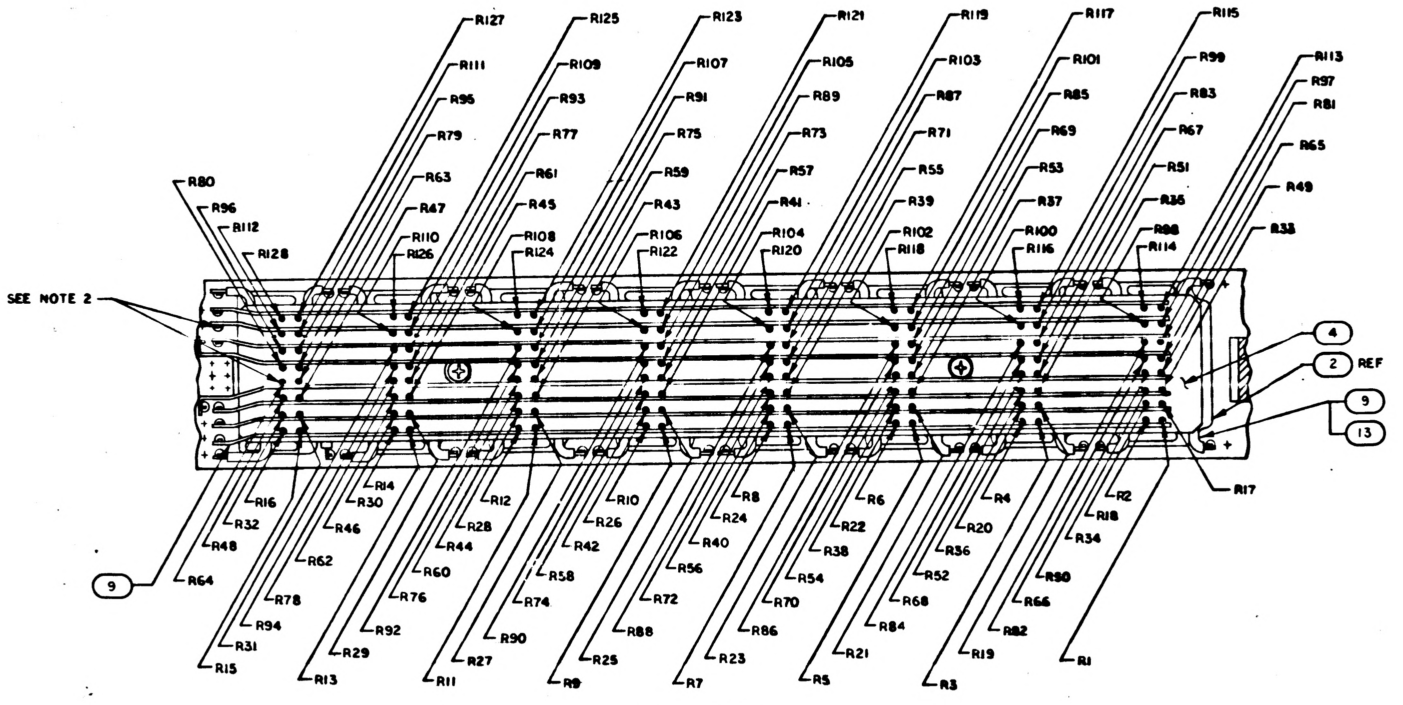
R127
R125
R123
R121
R119
R117
R115
R111
R109
R107
R105
R103
R101
R99
R113
R97
R81
R95
R93
R91
R89
R87
R85
R83
R79
R77
R75
R73
R71
R69
R67
R65
R63
R61
R59
R57
R55
R53
R51
R49
R80
R47
R45
R43
R41
R39
R37
R35
R96
R112
R110
R108
R106
R104
R102
R100
R98
R33
R128
R126
R124
R122
R120
R118
R116
R114
SEE NOTE 2
4
2
REF
9
13
R17
R14
R16
R30
R12
R10
R8
R6
R4
R2
R32
R46
R28
R26
R24
R22
R20
R18
R48
R44
R42
R40
R38
R36
R34
R62
R60
R58
R56
R54
R52
R50
9
R64
R78
R76
R74
R72
R70
R68
R66
R94
R92
R90
R88
R86
R84
R82
R31
R29
R27
R25
R23
R21
R19
R1
R15
R13
R11
R9
R7
R5
R3

PARTIAL SECTION B-B

FIND NO. 12 NOT SHOWN

SCALE: 2/1

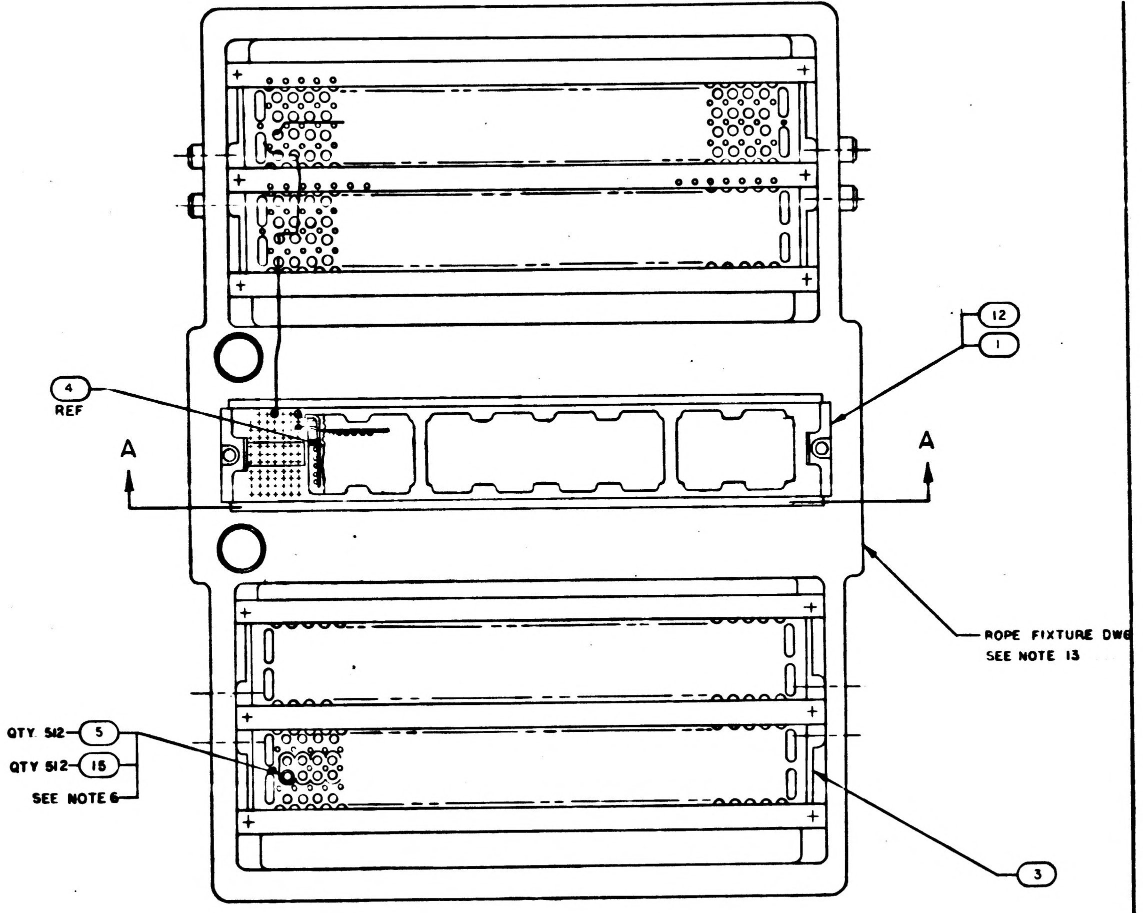
12
1
4
REF
A
A
ROPE FIXTURE DWG
SEE NOTE 13
QTY 512
5
QTY 512
15
SEE NOTE 6
3

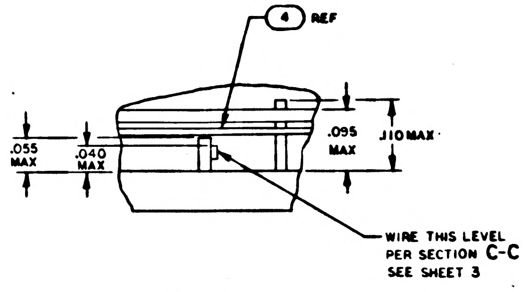
4
REF
.055
MAX
.040
MAX
.095
MAX
.110 MAX
WIRE THIS LEVEL
PER SECTION C-C
SEE SHEET 3

DETAIL A

SCALE: 10/1

NOTES

1. ALL CONNECTIONS USING FIND NO.10 TO BE MADE BY SOLDERING PER ND1002071. DO NOT TIN LEADS. SOLDER WRAPS TO BE 2 TO 4 TURNS
2. ALL CONNECTIONS USING FIND NO. 9 TO BE MADE BY WELDING PER ND1002005
3. INHIBIT WIRE PER TABLE SHOWN ON SHEET 3 AND PER ND1002029
4. INTERPRET DRAWING IN ACCORDANCE WITH STANDARDS PRESCRIBED BY MIL-D-70327
5. BOND FIND NO. 6 TO FIND NO. 1 PER ND1002004 TYPE I
6. BOND FIND NO. 5 ~~AND~~ .FIND NO. 15 TO FIND NO. 3 USING EPOXY ADHESIVE PER ND1002219
7. WHITE DOT DENOTES LEAD TO BE CUT FOR FIRST LEVEL WIRING
8. BLACK DOT DENOTES LEAD TO BE CUT FOR SECOND LEVEL WIRING
9. K DENOTES CATHODE SIDE OF DIODE
10. AR DENOTES AS REQUIRED
11. SELECT FIND NO. 8 NOTED (A) AND (B), EXAMPLE (A)-CR6 (B)-CR6, PER THE ELECTRICAL REQUIREMENTS: AT A FORWARD CURRENT OF 1.8 Ma ±2%, AND AT A FORWARD CURRENT OF 3.6 Ma ±2% THE VOLTAGE DROP ACROSS BOTH DIODES SHALL BE WITHIN 1 Mv OF EACH OTHER
12. ASSEMBLE FIND NO. 14 TO FIND NO. 1 USING MIL-S-22473 GRADE HV
13. THIS ASSEMBLY IS TO BE STORED WITH ROPE FIXTURE DWG NO. AP20065
14. STAKE FIND NO. 7 AND FIND NO. 8 TO FIND NO. 2 PER ND1002009, METHOD C OR D
15. UNLESS OTHERWISE SPECIFIED ALL WIRING SHALL BE IN ACCORDANCE WITH ND 1002069

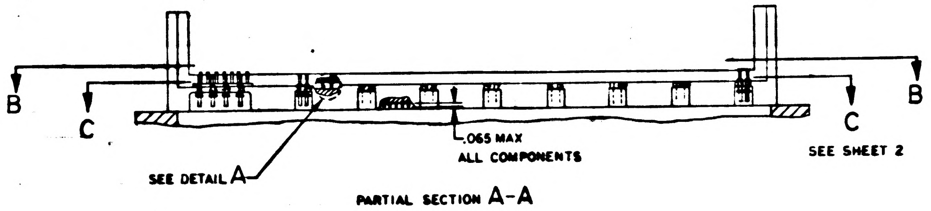
B
C
B
C
.065 MAX
ALL COMPONENTS
SEE SHEET 2
SEE DETAIL A

PARTIAL SECTION A-A

REFERENCES

1. ROPE FIXTURE DWG NO. AP20065

REVISIONS 1225			
SYM	DESCRIPTION	DATE	APPROVAL
A	REVISED PER TDRR 18039 DR R. Luckard CHK		

1003821 A

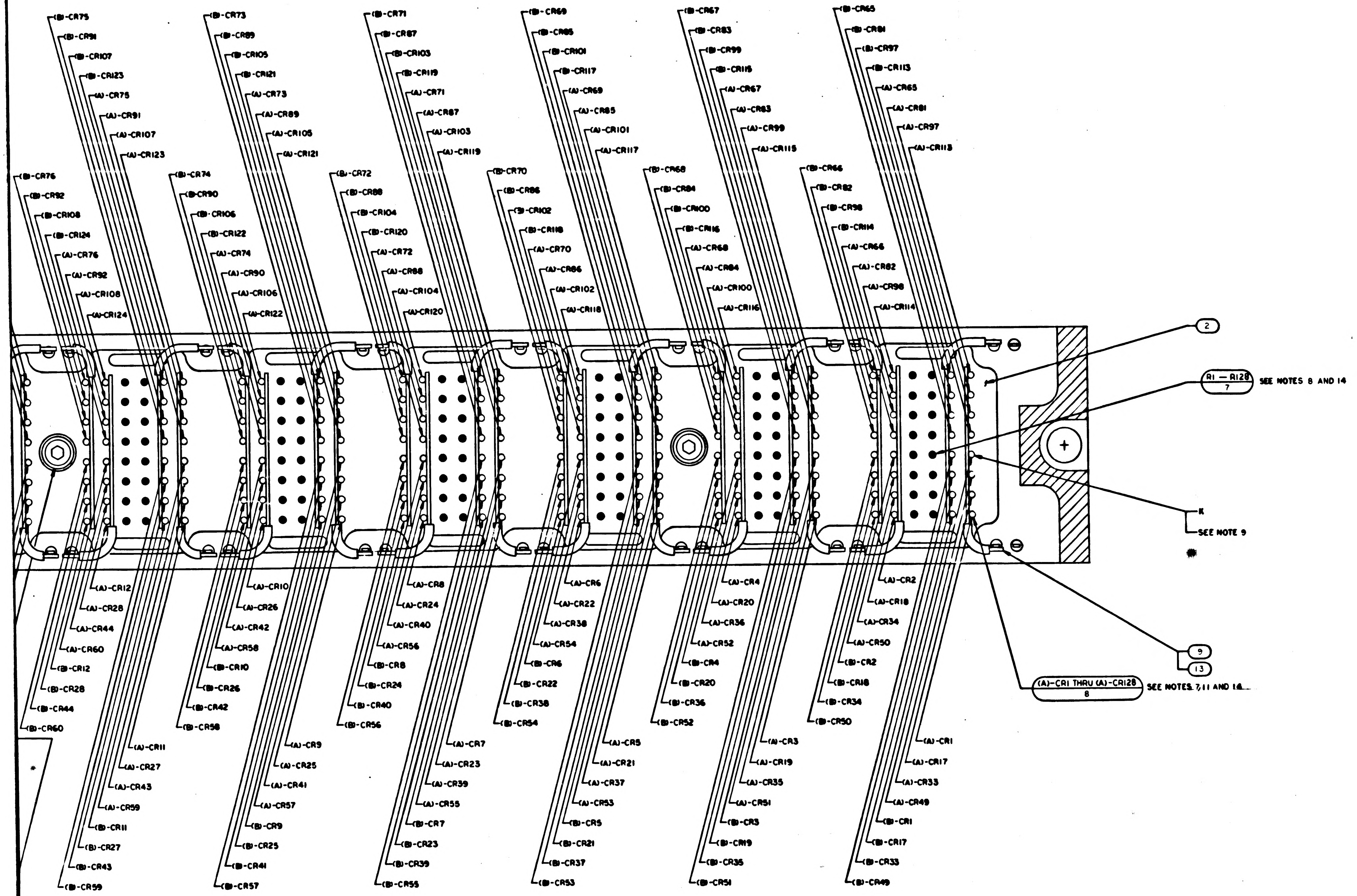

(B)-CR75
(B)-CR91
(B)-CR107
(B)-CR123
(A)-CR75
(A)-CR91
(A)-CR107
(A)-CR123
(B)-CR73
(B)-CR89
(B)-CR105
(B)-CR121
(A)-CR73
(A)-CR89
(A)-CR105
(A)-CR121
(B)-CR71
(B)-CR87
(B)-CR103
(B)-CR119
(A)-CR71
(A)-CR87
(A)-CR103
(A)-CR119
(B)-CR69
(B)-CR85
(B)-CR101
(B)-CR117
(A)-CR69
(A)-CR85
(A)-CR101
(A)-CR117
(B)-CR67
(B)-CR83
(B)-CR99
(B)-CR115
(A)-CR67
(A)-CR83
(A)-CR99
(A)-CR115
(B)-CR65
(B)-CR81
(B)-CR97
(B)-CR113
(A)-CR65
(A)-CR81
(A)-CR97
(A)-CR113
(B)-CR76
(B)-CR92
(B)-CR108
(B)-CR124
(A)-CR76
(A)-CR92
(A)-CR108
(A)-CR124
(B)-CR74
(B)-CR90
(B)-CR106
(B)-CR122
(A)-CR74
(A)-CR90
(A)-CR106
(A)-CR122
(B)-CR72
(B)-CR88
(B)-CR104
(B)-CR120
(A)-CR72
(A)-CR88
(A)-CR104
(A)-CR120
(B)-CR70
(B)-CR86
(B)-CR102
(B)-CR118
(A)-CR70
(A)-CR86
(A)-CR102
(A)-CR118
(B)-CR68
(B)-CR84
(B)-CR100
(B)-CR116
(A)-CR68
(A)-CR84
(A)-CR100
(A)-CR116
(B)-CR66
(B)-CR82
(B)-CR98
(B)-CR114
(A)-CR66
(A)-CR82
(A)-CR98
(A)-CR114
2
R1 — R128 7 SEE NOTES 8 AND 14
K SEE NOTE 9
9
13
(A)-CR1 THRU (A)-CR128 8 SEE NOTES 7,11 AND 14
(A)-CR12
(A)-CR28
(A)-CR44
(A)-CR60
(B)-CR12
(B)-CR28
(B)-CR44
(B)-CR60
(A)-CR10
(A)-CR26
(A)-CR42
(A)-CR58
(B)-CR10
(B)-CR26
(B)-CR42
(B)-CR58
(A)-CR8
(A)-CR24
(A)-CR40
(A)-CR56
(B)-CR8
(B)-CR24
(B)-CR40
(B)-CR56
(A)-CR6
(A)-CR22
(A)-CR38
(A)-CR54
(B)-CR6
(B)-CR22
(B)-CR38
(B)-CR54
(A)-CR4
(A)-CR20
(A)-CR36
(A)-CR52
(B)-CR4
(B)-CR20
(B)-CR36
(B)-CR52
(A)-CR2
(A)-CR18
(A)-CR34
(A)-CR50
(B)-CR2
(B)-CR18
(B)-CR34
(B)-CR50
(A)-CR11
(A)-CR27
(A)-CR43
(A)-CR59
(B)-CR11
(B)-CR27
(B)-CR43
(B)-CR59
(A)-CR9
(A)-CR25
(A)-CR41
(A)-CR57
(B)-CR9
(B)-CR25
(B)-CR41
(B)-CR57
(A)-CR7
(A)-CR23
(A)-CR39
(A)-CR55
(B)-CR7
(B)-CR23
(B)-CR39
(B)-CR55
(A)-CR5
(A)-CR21
(A)-CR37
(A)-CR53
(B)-CR5
(B)-CR21
(B)-CR37
(B)-CR53
(A)-CR3
(A)-CR19
(A)-CR35
(A)-CR51
(B)-CR3
(B)-CR19
(B)-CR35
(B)-CR51
(A)-CR1
(A)-CR17
(A)-CR33
(A)-CR49
(B)-CR1
(B)-CR17
(B)-CR33
(B)-CR49

① ④ SEE NOTE 12

SECTION C-C

ALL CATHODES NEARSIDE FOR FIND NO. 8
VIEW SHOWN WITH COMPONENT
OUTLINE REMOVED FOR CLARITY

QTY REQD	PART OR IDENTIFYING NO.	NOMENCLATURE OR DESCRIPTION	FIND NO.

LIST OF MATERIALS

		UNLESS OTHERWISE SPECIFIED DIMENSIONS ARE IN INCHES TOLERANCES ON FRACTIONS ± DECIMALS ± ANGLES ±	MIT INSTRUMENTATION LAB CAMBRIDGE MASS	MANNED SPACECRAFT CENTER HOUSTON, TEXAS
		DO NOT SCALE THIS DRAWING	DRAWN Lieske DATE 9/28/65 CHECKED R.E. 12/8/65 APPROVAL APPROVAL 3/5/65	ROPE MEMORY MODULE SUBASSEMBLY
		MATERIAL — // —		
		HEAT TREATMENT — // —	NASA APPROVAL	CODE IDENT NO. 80230 SIZE J NASA DRAWING NO. 1003821
NEXT ASSY	USED ON	FINAL FINISH — // —	MIT APPROVAL 3/4/65	SCALE 4/1 WT SHEET 2 OF 3
APPLICATION				

1003821 A SHEET 2 OF 3

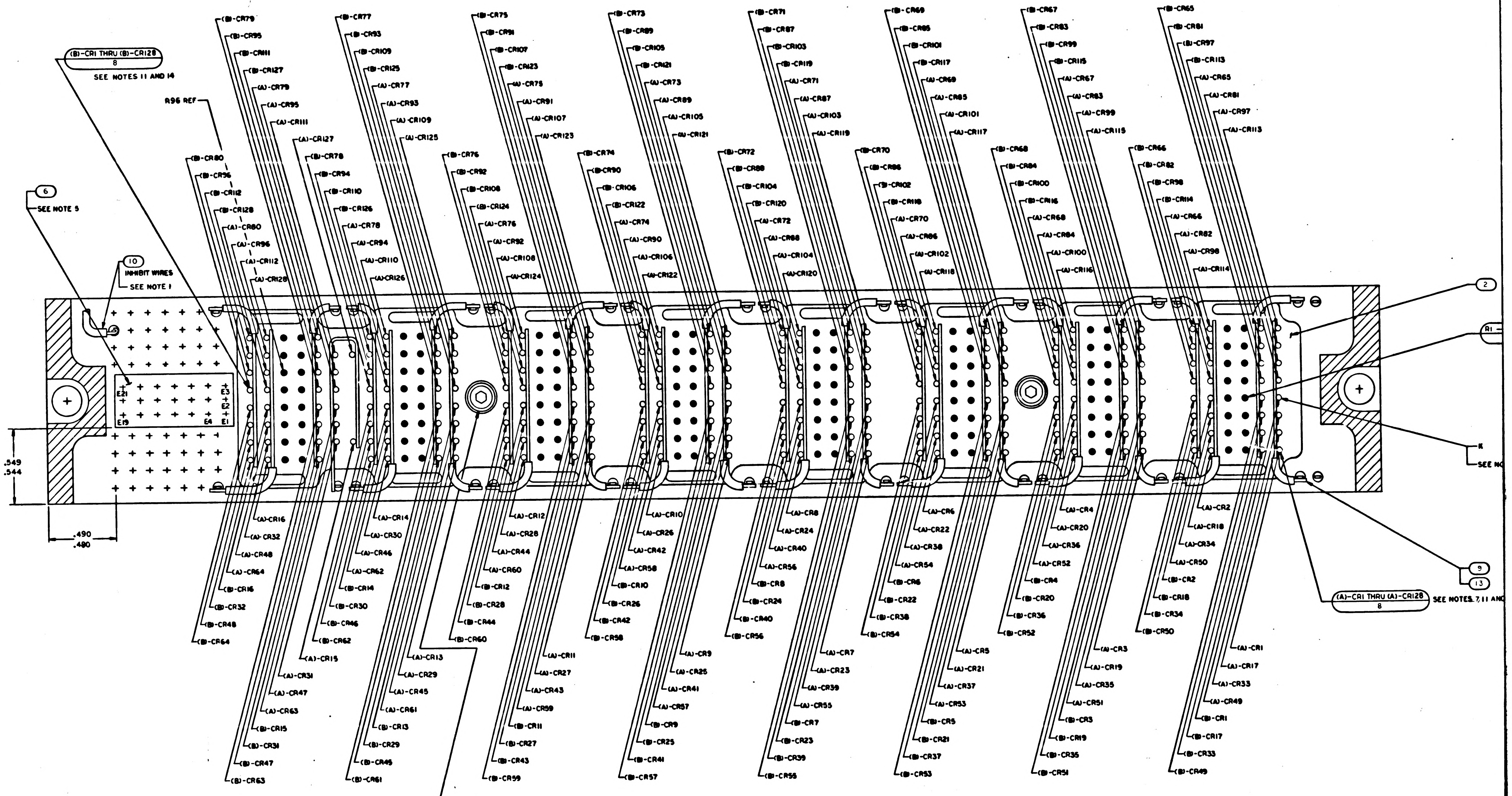

(B)-CR1 THRU (B)-CR128
8
SEE NOTES 11 AND 14
R96 REF
6
SEE NOTE 5
10
INHIBIT WIRES
SEE NOTE 1
E21
E3
E2
E19
E4
E1
.549
.544
.490
.480
2
R1
K
SEE NO
9
13
(A)-CR1 THRU (A)-CR128
8
SEE NOTES 7, 11 AND
(B)-CR79
(B)-CR95
(B)-CR111
(B)-CR127
(A)-CR79
(A)-CR95
(A)-CR111
(A)-CR127
(B)-CR77
(B)-CR93
(B)-CR109
(B)-CR125
(A)-CR77
(A)-CR93
(A)-CR109
(A)-CR125
(B)-CR75
(B)-CR91
(B)-CR107
(B)-CR123
(A)-CR75
(A)-CR91
(A)-CR107
(A)-CR123
(B)-CR73
(B)-CR89
(B)-CR105
(B)-CR121
(A)-CR73
(A)-CR89
(A)-CR105
(A)-CR121
(B)-CR71
(B)-CR87
(B)-CR103
(B)-CR119
(A)-CR71
(A)-CR87
(A)-CR103
(A)-CR119
(B)-CR69
(B)-CR85
(B)-CR101
(B)-CR117
(A)-CR69
(A)-CR85
(A)-CR101
(A)-CR117
(B)-CR67
(B)-CR83
(B)-CR99
(B)-CR115
(A)-CR67
(A)-CR83
(A)-CR99
(A)-CR115
(B)-CR65
(B)-CR81
(B)-CR97
(B)-CR113
(A)-CR65
(A)-CR81
(A)-CR97
(A)-CR113
(B)-CR80
(B)-CR96
(B)-CR112
(B)-CR128
(A)-CR80
(A)-CR96
(A)-CR112
(A)-CR128
(B)-CR78
(B)-CR94
(B)-CR110
(B)-CR126
(A)-CR78
(A)-CR94
(A)-CR110
(A)-CR126
(B)-CR76
(B)-CR92
(B)-CR108
(B)-CR124
(A)-CR76
(A)-CR92
(A)-CR108
(A)-CR124
(B)-CR74
(B)-CR90
(B)-CR106
(B)-CR122
(A)-CR74
(A)-CR90
(A)-CR106
(A)-CR122
(B)-CR72
(B)-CR88
(B)-CR104
(B)-CR120
(A)-CR72
(A)-CR88
(A)-CR104
(A)-CR120
(B)-CR70
(B)-CR86
(B)-CR102
(B)-CR118
(A)-CR70
(A)-CR86
(A)-CR102
(A)-CR118
(B)-CR68
(B)-CR84
(B)-CR100
(B)-CR116
(A)-CR68
(A)-CR84
(A)-CR100
(A)-CR116
(B)-CR66
(B)-CR82
(B)-CR98
(B)-CR114
(A)-CR66
(A)-CR82
(A)-CR98
(A)-CR114
(A)-CR16
(A)-CR32
(A)-CR48
(A)-CR64
(B)-CR16
(B)-CR32
(B)-CR48
(B)-CR64
(A)-CR14
(A)-CR30
(A)-CR46
(A)-CR62
(B)-CR14
(B)-CR30
(B)-CR46
(B)-CR62
(A)-CR12
(A)-CR28
(A)-CR44
(A)-CR60
(B)-CR12
(B)-CR28
(B)-CR44
(B)-CR60
(A)-CR10
(A)-CR26
(A)-CR42
(A)-CR58
(B)-CR10
(B)-CR26
(B)-CR42
(B)-CR58
(A)-CR8
(A)-CR24
(A)-CR40
(A)-CR56
(B)-CR8
(B)-CR24
(B)-CR40
(B)-CR56
(A)-CR6
(A)-CR22
(A)-CR38
(A)-CR54
(B)-CR6
(B)-CR22
(B)-CR38
(B)-CR54
(A)-CR4
(A)-CR20
(A)-CR36
(A)-CR52
(B)-CR4
(B)-CR20
(B)-CR36
(B)-CR52
(A)-CR2
(A)-CR18
(A)-CR34
(A)-CR50
(B)-CR2
(B)-CR18
(B)-CR34
(B)-CR50
(A)-CR15
(A)-CR31
(A)-CR47
(A)-CR63
(B)-CR15
(B)-CR31
(B)-CR47
(B)-CR63
(A)-CR13
(A)-CR29
(A)-CR45
(A)-CR61
(B)-CR13
(B)-CR29
(B)-CR45
(B)-CR61
(A)-CR11
(A)-CR27
(A)-CR43
(A)-CR59
(B)-CR11
(B)-CR27
(B)-CR43
(B)-CR59
(A)-CR9
(A)-CR25
(A)-CR41
(A)-CR57
(B)-CR9
(B)-CR25
(B)-CR41
(B)-CR57
(A)-CR7
(A)-CR23
(A)-CR39
(A)-CR55
(B)-CR7
(B)-CR23
(B)-CR39
(B)-CR55
(A)-CR5
(A)-CR21
(A)-CR37
(A)-CR53
(B)-CR5
(B)-CR21
(B)-CR37
(B)-CR53
(A)-CR3
(A)-CR19
(A)-CR35
(A)-CR51
(B)-CR3
(B)-CR19
(B)-CR35
(B)-CR51
(A)-CR1
(A)-CR17
(A)-CR33
(A)-CR49
(B)-CR1
(B)-CR17
(B)-CR33
(B)-CR49
11
14
SEE NOTE 12

SECTION C-C

ALL CATHODES NEARSIDE FOR FIND NO. 8
VIEW SHOWN WITH COMPONENT
OUTLINE REMOVED FOR CLARITY

1003821	A	2 OF

1003821 A F 1/2

SHEET 2

		REVISIONS	
SYM	DESCRIPTION	DATE	APPROVAL
A	REVISED PER TDRR 18039 DR R. [illegible] CHK [illegible]		

1003821 A

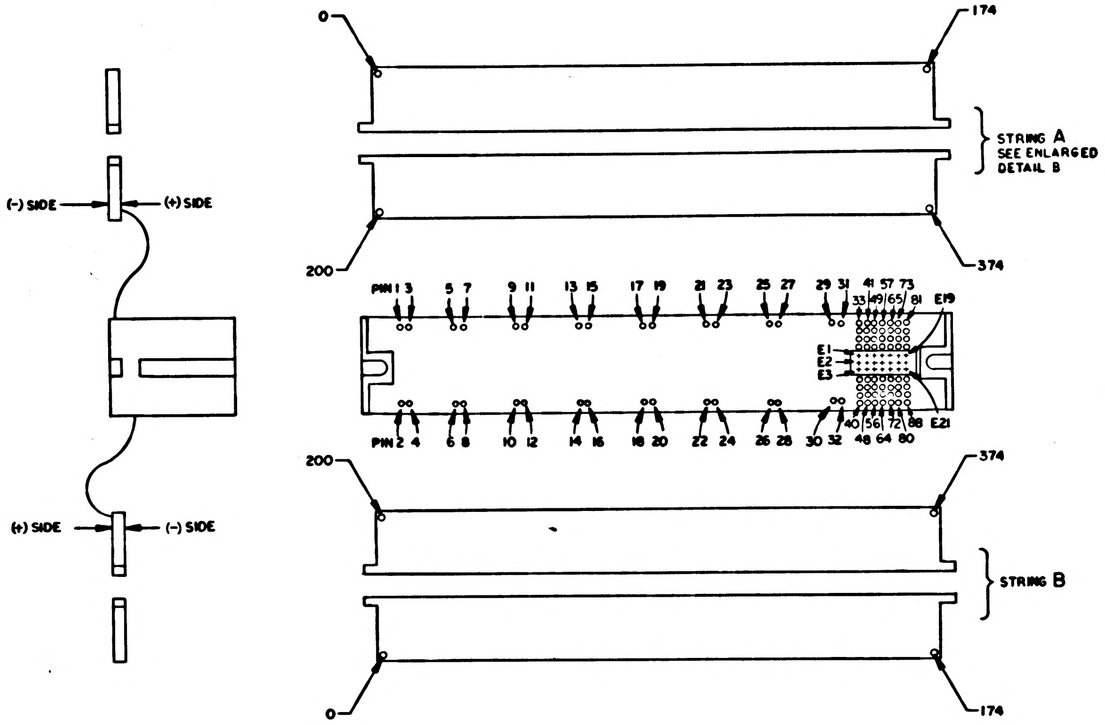
0
174
STRING A
SEE ENLARGED
DETAIL B
200
374
(-) SIDE
(+) SIDE
PIN 1 3 5 7 9 11 13 15 17 19 21 23 25 27 29 31 33 41 49 57 65 73 81
E19
E1
E2
E3
PIN 2 4 6 8 10 12 14 16 18 20 22 24 26 28 30 32 40 48 56 64 72 80 88
E21
200
374
(+) SIDE
(-) SIDE
STRING B
0
174

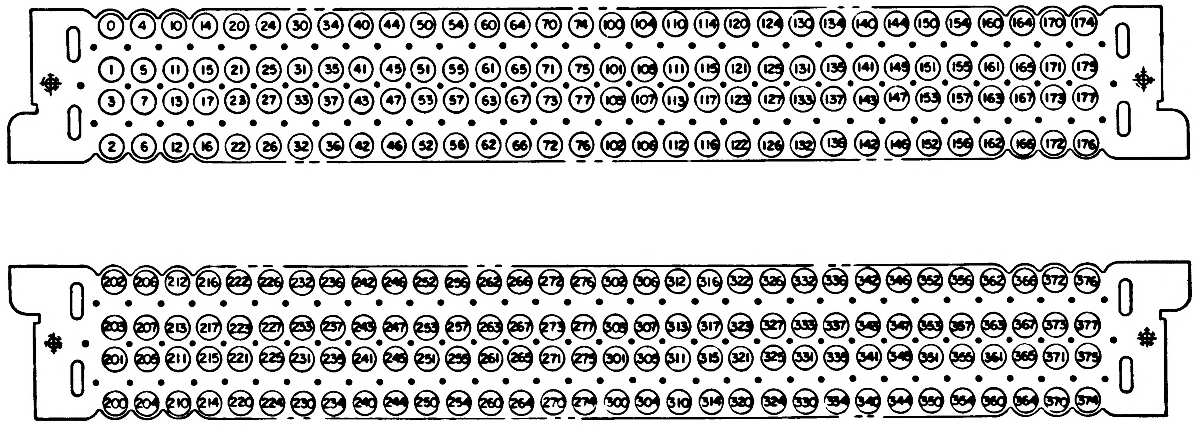
0 4 10 14 20 24 30 34 40 44 50 54 60 64 70 74 100 104 110 114 120 124 130 134 140 144 150 154 160 164 170 174
1 5 11 15 21 25 31 35 41 45 51 55 61 65 71 75 101 105 111 115 121 125 131 135 141 145 151 155 161 165 171 175
3 7 13 17 23 27 33 37 43 47 53 57 63 67 73 77 103 107 113 117 123 127 133 137 143 147 153 157 163 167 173 177
2 6 12 16 22 26 32 36 42 46 52 56 62 66 72 76 102 106 112 116 122 126 132 136 142 146 152 156 162 166 172 176
202 206 212 216 222 226 232 236 242 246 252 256 262 266 272 276 302 306 312 316 322 326 332 336 342 346 352 356 362 366 372 376
203 207 213 217 223 227 233 237 243 247 253 257 263 267 273 277 303 307 313 317 323 327 333 337 343 347 353 357 363 367 373 377
201 205 211 215 221 225 231 235 241 245 251 255 261 265 271 275 301 305 311 315 321 325 331 335 341 345 351 355 361 365 371 375
200 204 210 214 220 224 230 234 240 244 250 254 260 264 270 274 300 304 310 314 320 324 330 334 340 344 350 354 360 364 370 374

DETAIL B

1003821 A

QTY REQD	PART OR IDENTIFYING NO.	NOMENCLATURE OR DESCRIPTION	FIND NO.

LIST OF MATERIALS

NEXT ASSY	USED ON
APPLICATION	

UNLESS OTHERWISE SPECIFIED
DIMENSIONS ARE IN INCHES
TOLERANCES ON
FRACTIONS ± DECIMALS ± ANGLES ±
DO NOT SCALE THIS DRAWING
MATERIAL
HEAT TREATMENT
FINAL FINISH

MIT
INSTRUMENTATION LAB
CAMBRIDGE, MASS
DRAWN G. J. Bisson DATE 7 FEB 65
CHECKED
APPROVAL
APPROVAL [illegible] 3/5/65
NASA APPROVAL [illegible] 3/9/65
MIT APPROVAL [illegible] 3-9-65
MIT APPROVAL

MANNED SPACECRAFT CENTER
HOUSTON, TEXAS

ROPE MEMORY MODULE
SUBASSEMBLY

CODE IDENT NO. 80230
SIZE J
NASA DRAWING NO. 1003821
SCALE NONE
WT
SHEET 3 OF 3

1003821 A

SYM	DESCRIPTION
A	REVISED PER TDR DR R. [illegible] CHK

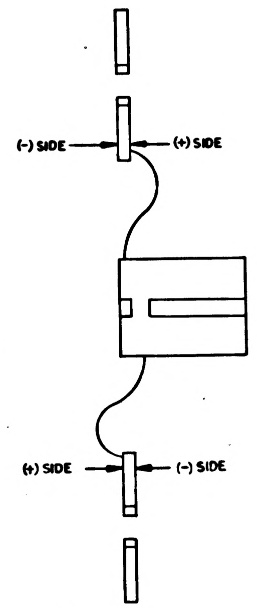
(-) SIDE
(+) SIDE
(+) SIDE
(-) SIDE

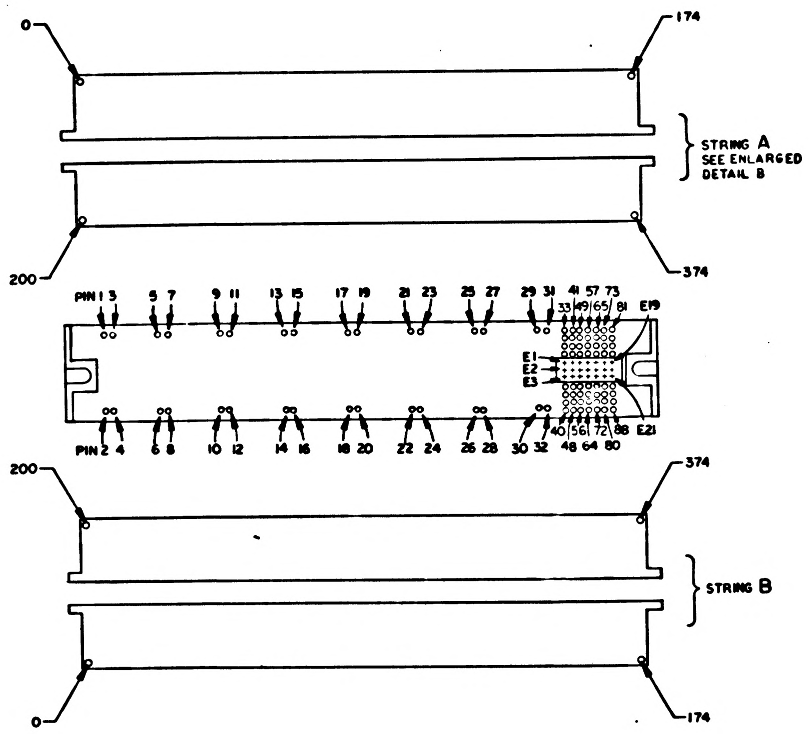
0
174
STRING A
SEE ENLARGED
DETAIL B
200
374
PIN 1 3
5 7
9 11
13 15
17 19
21 23
25 27
29 31
33
41 57 73
49 65 81
E19
E1
E2
E3
E21
PIN 2 4
6 8
10 12
14 16
18 20
22 24
26 28
30 32
40 56 72 88
48 64 80
200
374
STRING B
0
174

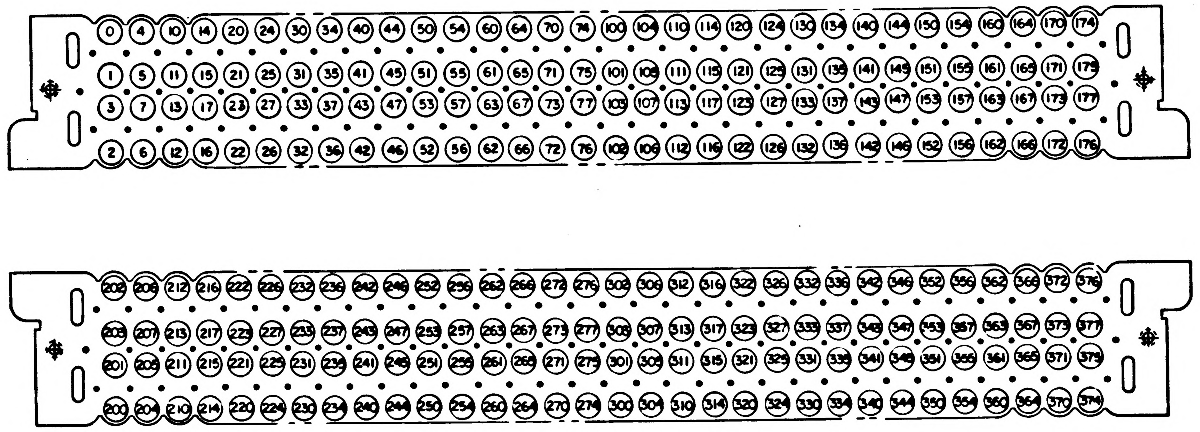

DETAIL B

QTY REQD	PART OR IDENTIFYING NO.	
		LIST OF MATERIALS

NEXT ASSY	USED ON
APPLICATION	

UNLESS OTHERWISE SPECIFIED
DIMENSIONS ARE IN INCHES
TOLERANCES ON
FRACTIONS DECIMALS ANGLES
± ± ±
DO NOT SCALE THIS DRAWING
MATERIAL
HEAT TREATMENT
FINAL FINISH

MIT
INSTRUMENTATION LAB
CAMBRIDGE, MASS.
DRAWN *G. J. Bim* DATE *7 FEB 65*
CHECKED
APPROVAL
APPROVAL *C. A. C. Hall 3/5/65*
NASA APPROVAL *[illegible]*
MIT APPROVAL *[illegible]*
MIT APPROVAL

MANNED

ROPE ME
SUBA

CODE IDENT NO. 80230
SIZE J
SCALE NONE
WT

SHEET 3

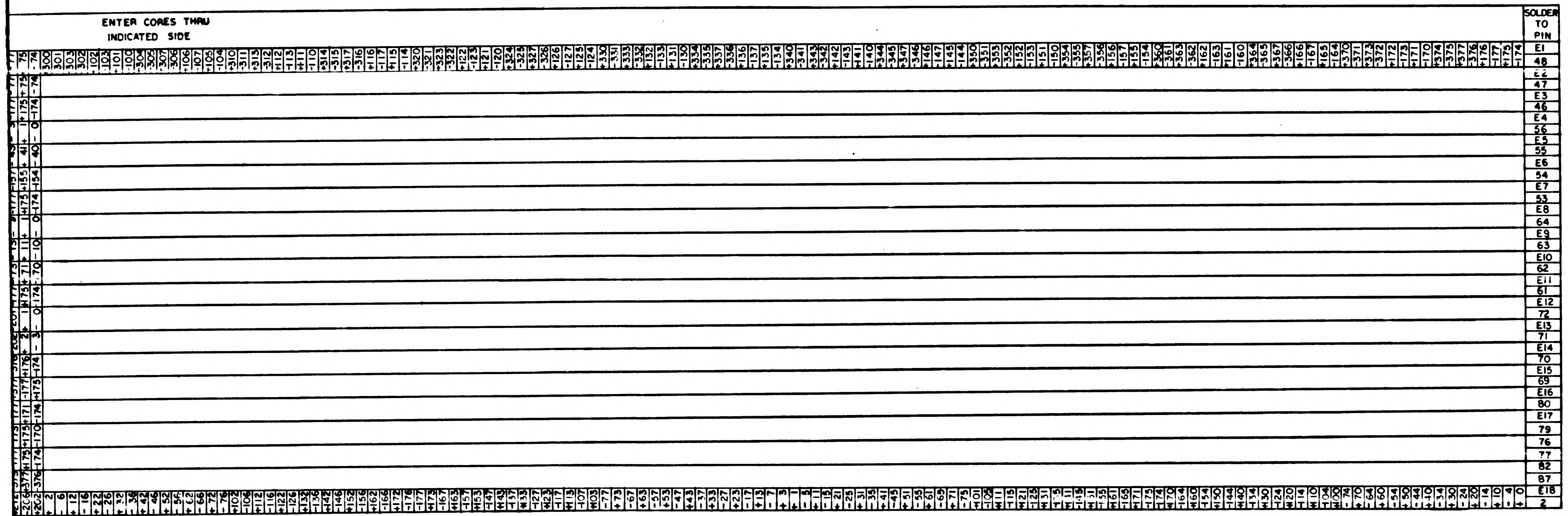
ENTER CORES THRU INDICATED SIDE
SOLDER TO PIN
E1
48
E2
47
E3
46
E4
56
E5
55
E6
54
E7
53
E8
64
E9
63
E10
62
E11
61
E12
72
E13
71
E14
70
E15
69
E16
80
E17
79
76
77
82
87
E18
2

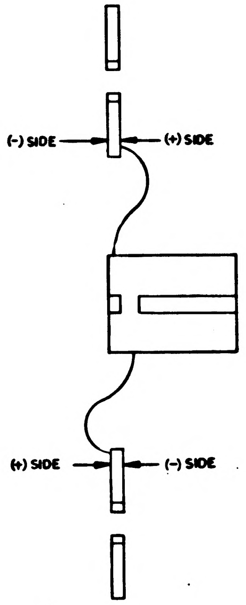
(-) SIDE
(+) SIDE
(+) SIDE
(-) SIDE

12 11 10 9

D

C

B

A

[illegible]

INHIBIT WIRING TABLE

WIRE NO.	STRING A	STRING B	SOLDER TO PIN																																
129	☒ 	 ☒	41 E1	+200	-201	+203	-202	+2	-3	+1	-0	+204	-205	+207	-206	+6	-7	+5	-4	+210	-211	+213	-212	+12	-13	+11	-10	+214	-215	+217	-216	+16	-17	+15	-14
130	☒ 	 ☒	42 E2	+200	-201	+203	-202	+2	-3	+1	-0	+204	-205	+207	-206	+6	-7	+5	-4	+210	-211	+213	-212	+12	-13	+11	-10	+214	-215	+217	-216	+16	-17	+15	-14
131	☒ 	 ☒	43 E3	+300	-301	+303	-302	+102	-103	+101	-100	+304	-305	+307	-306	+106	-107	+105	-104	+310	-311	+313	-312	+112	-113	+111	-110	+314	-315	+317	-316	+116	-117	+115	-114
132	☒ 	 ☒	49 E4	+334	-335	+337	-336	+136	-137	+135	-134	+330	-331	+333	-332	+132	-133	+131	-130	+324	-325	+327	-326	+126	-127	+125	-124	+320	-321	+323	-322	+122	-123	+121	-120
133	☒ 	 ☒	50 E5	+374	-375	+377	-376	+176	-177	+175	-174	+370	-371	+373	-372	+172	-173	+171	-170	+364	-365	+367	-366	+166	-167	+165	-164	+360	-361	+363	-362	+162	-163	+161	-160
134	☒ 	 ☒	51 E6	+200	-201	+203	-202	+2	-3	+1	-0	+204	-205	+207	-206	+6	-7	+5	-4	+210	-211	+213	-212	+12	-13	+11	-10	+214	-215	+217	-216	+16	-17	+15	-14
135	☒ 	 ☒	52 E7	+220	-221	+223	-222	+22	-23	+21	-20	+224	-225	+227	-226	+26	-27	+25	-24	+230	-231	+233	-232	+32	-33	+31	-30	+234	-235	+237	-236	+36	-37	+35	-34
136	☒ 	 ☒	57 E8	+364	-365	+367	-366	+166	-167	+165	-164	+360	-361	+363	-362	+162	-163	+161	-160	+344	-345	+347	-346	+146	-147	+145	-144	+340	-341	+343	-342	+142	-143	+141	-140
137	☒ 	 ☒	58 E9	+374	-375	+377	-376	+176	-177	+175	-174	+370	-371	+373	-372	+172	-173	+171	-170	+354	-355	+357	-356	+156	-157	+155	-154	+350	-351	+353	-352	+152	-153	+151	-150
138	☒ 	 ☒	59 E10	+200	-201	+203	-202	+2	-3	+1	-0	+210	-211	+213	-212	+12	-13	+11	-10	+220	-221	+223	-222	+22	-23	+21	-20	+230	-231	+233	-232	+32	-33	+31	-30
139	☒ 	 ☒	60 E11	+204	-205	+207	-206	+6	-7	+5	-4	+214	-215	+217	-216	+16	-17	+15	-14	+224	-225	+227	-226	+26	-27	+25	-24	+234	-235	+237	-236	+36	-37	+35	-34
140	☒ 	 ☒	65 E12	+374	-375	+175	-174	+370	-371	+171	-170	+364	-365	+165	-164	+360	-361	+161	-160	+354	-355	+155	-154	+350	-351	+151	-150	+344	-345	+145	-144	+340	-341	+141	-140
141	☒ 	 ☒	66 E13	+377	-376	+176	-177	+373	-372	+172	-173	+367	-366	+166	-167	+363	-362	+162	-163	+357	-356	+156	-157	+353	-352	+152	-153	+347	-346	+146	-147	+343	-342	+142	-143
142	☒ 	 ☒	67 E14	+200	-202	+2	-0	+204	-206	+6	-4	+210	-212	+12	-10	+214	-216	+16	-14	+220	-222	+22	-20	+224	-226	+26	-24	+230	-232	+32	-30	+234	-236	+36	-34
143	☒ 	 ☒	68 E15	-201	+203	-3	+1	-205	+207	-7	+5	-211	+213	-13	+11	-215	+217	-17	+15	-221	+223	-23	+21	-225	+227	-27	+25	-231	+233	-33	+31	-235	+237	-37	+35
144	☒ 	 ☒	73 E16	+200	-205	+203	-206	+2	-7	+1	-4	+214	-211	+217	-212	+16	-13	+15	-10	+224	-221	+227	-222	+26	-23	+25	-20	+230	-235	+233	-236	+32	-37	+31	-34
145	☒ 	 ☒	74 E17	+204	-201	+207	-202	+6	-3	+5	-0	+210	-215	+213	-216	+12	-17	+11	-14	+220	-225	+223	-226	+22	-27	+21	-24	+234	-231	+237	-232	+36	-33	+35	-30
146	☒ 	 ☒	75 78	+2	-3	+1	-0	+6	-7	+5	-4	+12	-13	+11	-10	+16	-17	+15	-14	+22	-23	+21	-20	+26	-27	+25	-24	+32	-33	+31	-30	+36	-37	+35	-34
147	☒ 	 ☒	81 88	+200	-201	+203	-202	+204	-205	+207	-206	+210	-211	+213	-212	+214	-215	+217	-216	+220	-221	+223	-222	+224	-225	+227	-226	+230	-231	+233	-232	+234	-235	+237	-236
148	☒ 	 ☒	1 E18	+200	-204	+210	-214	+220	-224	+230	-234	+240	-244	+250	-254	+260	-264	+270	-274	+300	-304	+310	-314	+320	-324	+330	-334	+340	-344	+350	-354	+360	-364	+370	-374

WIRE NO.																															
129	+220	-221	+223	-222	+22	-23	+21	-20	+224	-225	+227	-226	+26	-27	+25	-24	+230	-231	+233	-232	+32	-33	+31	-30	+234	-235	+237	-236	+36	-37	+35	-34
130	+220	-221	+223	-222	+22	-23	+21	-20	+224	-225	+227	-226	+26	-27	+25	-24	+230	-231	+233	-232	+32	-33	+31	-30	+234	-235	+237	-236	+36	-37	+35	-34
131	+320	-321	+323	-322	+122	-123	+121	-120	+324	-325	+327	-326	+126	-127	+125	-124	+330	-331	+333	-332	+132	-133	+131	-130	+334	-335	+337	-336	+136	-137	+135	-134
132	+314	-315	+317	-316	+116	-117	+115	-114	+310	-311	+313	-312	+112	-113	+111	-110	+304	-305	+307	-306	+106	-107	+105	-104	+300	-301	+303	-302	+102	-103	+101	-100
133	+354	-355	+357	-356	+156	-157	+155	-154	+350	-351	+353	-352	+152	-153	+151	-150	+344	-345	+347	-346	+146	-147	+145	-144	+340	-341	+343	-342	+142	-143	+141	-140
134	+240	-241	+243	-242	+42	-43	+41	-40	+244	-245	+247	-246	+46	-47	+45	-44	+250	-251	+253	-252	+52	-53	+51	-50	+254	-255	+257	-256	+56	-57	+55	-54
135	+260	-261	+263	-262	+62	-63	+61	-60	+264	-265	+267	-266	+66	-67	+65	-64	+270	-271	+273	-272	+72	-73	+71	-70	+274	-275	+277	-276	+76	-77	+75	-74
136	+324	-325	+327	-326	+126	-127	+125	-124	+320	-321	+323	-322	+122	-123	+121	-120	+304	-305	+307	-306	+106	-107	+105	-104	+300	-301	+303	-302	+102	-103	+101	-100
137	+334	-335	+337	-336	+136	-137	+135	-134	+330	-331	+333	-332	+132	-133	+131	-130	+314	-315	+317	-316	+116	-117	+115	-114	+310	-311	+313	-312	+112	-113	+111	-110
138	+240	-241	+243	-242	+42	-43	+41	-40	+250	-251	+253	-252	+52	-53	+51	-50	+260	-261	+263	-262	+62	-63	+61	-60	+270	-271	+273	-272	+72	-73	+71	-70
139	+244	-245	+247	-246	+46	-47	+45	-44	+254	-255	+257	-256	+56	-57	+55	-54	+264	-265	+267	-266	+66	-67	+65	-64	+274	-275	+277	-276	+76	-77	+75	-74
140	+334	-335	+135	-134	+330	-331	+131	-130	+324	-325	+125	-124	+320	-321	+121	-120	+314	-315	+115	-114	+310	-311	+111	-110	+304	-305	+105	-104	+300	-301	+101	-100
141	+337	-336	+136	-137	+333	-332	+132	-133	+327	-326	+126	-127	+323	-322	+122	-123	+317	-316	+116	-117	+313	-312	+112	-113	+307	-306	+106	-107	+303	-302	+102	-103
142	+240	-242	+42	-40	+244	-246	+46	-44	+250	-252	+52	-50	+254	-256	+56	-54	+260	-262	+62	-60	+264	-266	+66	-64	+270	-272	+72	-70	+274	-276	+76	-74
143	-241	+243	-43	+41	-245	+247	-47	+45	-251	+253	-53	+51	-255	+257	-57	+55	-261	+263	-63	+61	-265	+267	-67	+65	-271	+273	-73	+71	-275	+277	-77	+75
144	+244	-241	+247	-242	+46	-43	+45	-40	+250	-255	+253	-256	+52	-57	+51	-54	+260	-265	+263	-266	+62	-67	+61	-64	+274	-271	+277	-272	+76	-73	+75	-70
145	+240	-245	+243	-246	+42	-47	+41	-44	+254	-251	+257	-252	+56	-53	+55	-50	+264	-261	+267	-262	+66	-63	+65	-60	+270	-275	+273	-276	+72	-77	+71	-74
146	+42	-43	+41	-40	+46	-47	+45	-44	+52	-53	+51	-50	+56	-57	+55	-54	+62	-63	+61	-60	+66	-67	+65	-64	+72	-73	+71	-70	+76	-77	+75	-74
147	+240	-241	+243	-242	+244	-245	+247	-246	+250	-251	+253	-252	+254	-255	+257	-256	+260	-261	+263	-262	+264	-265	+267	-266	+270	-271	+273	-272	+274	-275	+277	-276
148	-375	+371	-365	+361	-355	+351	-345	+341	-335	+331	-325	+321	-315	+311	-305	+301	-275	+271	-265	+261	-255	+251	-245	+241	-235	+231	-225	+221	-215	+211	-205	+201

WIRE NO.																															
129	+240	-241	+243	-242	+42	-43	+41	-40	+244	-245	+247	-246	+46	-47	+45	-44	+250	-251	+253	-252	+52	-53	+51	-50	+254	-255	+257	-256	+56	-57	+55	-54
130	+240	-241	+243	-242	+42	-43	+41	-40	+244	-245	+247	-246	+46	-47	+45	-44	+250	-251	+253	-252	+52	-53	+51	-50	+254	-255	+257	-256	+56	-57	+55	-54
131	+340	-341	+343	-342	+142	-143	+141	-140	+344	-345	+347	-346	+146	-147	+145	-144	+350	-351	+353	-352	+152	-153	+151	-150	+354	-355	+357	-356	+156	-157	+155	-154
132	+234	-235	+237	-236	+36	-37	+35	-34	+230	-231	+233	-232	+32	-33	+31	-30	+224	-225	+227	-226	+26	-27	+25	-24	+220	-221	+223	-222	+22	-23	+21	-20
133	+274	-275	+277	-276	+76	-77	+75	-74	+270	-271	+273	-272	+72	-73	+71	-70	+264	-265	+267	-266	+66	-67	+65	-64	+260	-261	+263	-262	+62	-63	+61	-60
134	+300	-301	+303	-302	+102	-103	+101	-100	+304	-305	+307	-306	+106	-107	+105	-104	+310	-311	+313	-312	+112	-113	+111	-110	+314	-315	+317	-316	+116	-117	+115	-114
135	+320	-321	+323	-322	+122	-123	+121	-120	+324	-325	+327	-326	+126	-127	+125	-124	+330	-331	+333	-332	+132	-133	+131	-130	+334	-335	+337	-336	+136	-137	+135	-134
136	+264	-265	+267	-266	+66	-67	+65	-64	+260	-261	+263	-262	+62	-63	+61	-60	+244	-245	+247	-246	+46	-47	+45	-44	+240	-241	+243	-242	+42	-43	+41	-40
137	+274	-275	+277	-276	+76	-77	+75	-74	+270	-271	+273	-272	+72	-73	+71	-70	+254	-255	+257	-256	+56	-57	+55	-54	+250	-251	+253	-252	+52	-53	+51	-50
138	+300	-301	+303	-302	+102	-103	+101	-100	+310	-311	+313	-312	+112	-113	+111	-110	+320	-321	+323	-322	+122	-123	+121	-120	+330	-331	+333	-332	+132	-133	+131	-130
139	+304	-305	+307	-306	+106	-107	+105	-104	+314	-315	+317	-316	+116	-117	+115	-114	+324	-325	+327	-326	+126	-127	+125	-124	+334	-335	+337	-336	+136	-137	+135	-134
140	+274	-275	+75	-74	+270	-271	+71	-70	+264	-265	+65	-64	+260	-261	+61	-60	+254	-255	+55	-54	+250	-251	+51	-50	+244	-245	+45	-44	+240	-241	+41	-40
141	+277	-276	+76	-77	+273	-272	+72	-73	+267	-266	+66	-67	+263	-262	+62	-63	+257	-256	+56	-57	+253	-252	+52	-53	+247	-246	+46	-47	+243	-242	+42	-43
142	+300	-302	+102	-100	+304	-306	+106	-104	+310	-312	+112	-110	+314	-316	+116	-114	+320	-322	+122	-120	+324	-326	+126	-124	+330	-332	+132	-130	+334	-336	+136	-134
143	-301	+303	-103	+101	-305	+307	-107	+105	-311	+313	-113	+111	-315	+317	-117	+115	-321	+323	-123	+121	-325	+327	-127	+125	-331	+333	-133	+131	-335	+337	-137	+135
144	+304	-301	+307	-302	+106	-103	+105	-100	+310	-315	+313	-316	+112	-117	+111	-114	+320	-325	+323	-326	+122	-127	+121	-124	+334	-331	+337	-332	+136	-133	+135	-130
145	+300	-305	+303	-306	+102	-107	+101	-104	+314	-311	+317	-312	+116	-113	+115	-110	+324	-321	+327	-322	+126	-123	+125	-120	+330	-335	+333	-336	+132	-137	+131	-134
146	+102	-103	+101	-100	+106	-107	+105	-104	+112	-113	+111	-110	+116	-117	+115	-114	+122	-123	+121	-120	+126	-127	+125	-124	+132	-133	+131	-130	+136	-137	+135	-134
147	+300	-301	+303	-302	+304	-305	+307	-306	+310	-311	+313	-312	+314	-315	+317	-316	+320	-321	+323	-322	+324	-325	+327	-326	+330	-331	+333	-332	+334	-335	+337	-336
148	+203	-207	+213	-217	+223	-227	+233	-237	+243	-247	+253	-257	+263	-267	+273	-277	+303	-307	+313	-317	+323	-327	+333	-337	+343	-347	+353	-357	+363	-367	+373	-377

WIRE NO.																															
129	+260	-261	+263	-262	+62	-63	+61	-60	+264	-265	+267	-266	+66	-67	+65	-64	+270	-271	+273	-272	+72	-73	+71	-70	+274	-275	+277	-276	+76	-77	+75	-74
130	+260	-261	+263	-262	+62	-63	+61	-60	+264	-265	+267	-266	+66	-67	+65	-64	+270	-271	+273	-272	+72	-73	+71	-70	+274	-275	+277	-276	+76	-77	+75	-74
131	+360	-361	+363	-362	+162	-163	+161	-160	+364	-365	+367	-366	+166	-167	+165	-164	+370	-371	+373	-372	+172	-173	+171	-170	+374	-375	+377	-376	+176	-177	+175	-174
132	+214	-215	+217	-216	+16	-17	+15	-14	+210	-211	+213	-212	+12	-13	+11	-10	+204	-205	+207	-206	+6	-7	+5	-4	+200	-201	+203	-202	+2	-3	+1	-0
133	+254	-255	+257	-256	+56	-57	+55	-54	+250	-251	+253	-252	+52	-53	+51	-50	+244	-245	+247	-246	+46	-47	+45	-44	+240	-241	+243	-242	+42	-43	+41	-40
134	+340	-341	+343	-342	+142	-143	+141	-140	+344	-345	+347	-346	+146	-147	+145	-144	+350	-351	+353	-352	+152	-153	+151	-150	+354	-355	+357	-356	+156	-157	+155	-154
135	+360	-361	+363	-362	+162	-163	+161	-160	+364	-365	+367	-366	+166	-167	+165	-164	+370	-371	+373	-372	+172	-173	+171	-170	+374	-375	+377	-376	+176	-177	+175	-174
136	+224	-225	+227	-226	+26	-27	+25	-24	+220	-221	+223	-222	+22	-23	+21	-20	+204	-205	+207	-206	+6	-7	+5	-4	+200	-201	+203	-202	+2	-3	+1	-0
137	+234	-235	+237	-236	+36	-37	+35	-34	+230	-231	+233	-232	+32	-33	+31	-30	+214	-215	+217	-216	+16	-17	+15	-14	+210	-211	+213	-212	+12	-13	+11	-10
138	+340	-341	+343	-342	+142	-143	+141	-140	+350	-351	+353	-352	+152	-153	+151	-150	+360	-361	+363	-362	+162	-163	+161	-160	+370	-371	+373	-372	+172	-173	+171	-170
139	+344	-345	+347	-346	+146	-147	+145	-144	+354	-355	+357	-356	+156	-157	+155	-154	+364	-365	+367	-366	+166	-167	+165	-164	+374	-375	+377	-376	+176	-177	+175	-174
140	+234	-235	+35	-34	+230	-231	+31	-30	+224	-225	+25	-24	+220	-221	+21	-20	+214	-215	+15	-14	+210	-211	+11	-10	+204	-205	+5	-4	+200	-201	+1	-0
141	+237	-236	+36	-37	+233	-232	+32	-33	+227	-226	+26	-27	+223	-222	+22	-23	+217	-216	+16	-17	+213	-212	+12	-13	+207	-206	+6	-7	+203	-202	+2	-3
142	+340	-342	+142	-140	+344	-346	+146	-144	+350	-352	+152	-150	+354	-356	+156	-154	+360	-362	+162	-160	+364	-366	+166	-164	+370	-372	+172	-170	+374	-376	+176	-174
143	-341	+343	-143	+141	-345	+347	-147	+145	-351	+353	-153	+151	-355	+357	-157	+155	-361	+363	-163	+161	-365	+367	-167	+165	-371	+373	-173	+171	-375	+377	-177	+175
144	+340	-345	+343	-346	+142	-147	+141	-144	+354	-351	+357	-352	+156	-153	+155	-150	+364	-361	+367	-362	+166	-163	+165	-160	+370	-375	+373	-376	+172	-177	+171	-174
145	+344	-341	+347	-342	+146	-143	+145	-140	+350	-355	+353	-356	+152	-157	+151	-154	+360	-365	+363	-366	+162	-167	+161	-164	+374	-371	+377	-372	+176	-173	+175	-170
146	+142	-143	+141	-140	+146	-147	+145	-144	+152	-153	+151	-150	+156	-157	+155	-154	+162	-163	+161	-160	+166	-167	+165	-164	+172	-173	+171	-170	+176	-177	+175	-174
147	+340	-341	+343	-342	+344	-345	+347	-346	+350	-351	+353	-352	+354	-355	+357	-356	+360	-361	+363	-362	+364	-365	+367	-366	+370	-371	+373	-372	+374	-375	+377	-376
148	-376	+372	-366	+362	-356	+352	-346	+342	-336	+332	-326	+322	-316	+312	-306	+302	-276	+272	-266	+262	-256	+252	-246	+242	-236	+232	-226	+222	-216	+212	-206	+202

WIRE NO.	ENTER CORES THRU INDICATED SIDE																						
129	+300	-301	+303	-302	+102	-103	+101	-100	+304	-305	+307	-306	+106	-107	+105	-104	+310	-311	+313	-312	+112	-113	+11
130																							
131																							
132																							
133																							
134																							
135																							
136																							
137																							
138																							
139																							
140																							
141																							
142																							
143																							
144																							
145																							
146																							
147																							
148	+2	-6	+12	-16	+22	-26	+32	-36	+42	-46	+52	-56	+62	-66	+72	-76	+102	-106	+112	-116	+122	-126	+132

B	1003821

REVISIONS 17251

SYM	DESCRIPTION	DATE	APPROVAL
A	REVISED PER TDRR 18039 DR R Zuibord CHK		
B	REVISED PER TDRR 25933 DR S.P. Infiniko CHK		

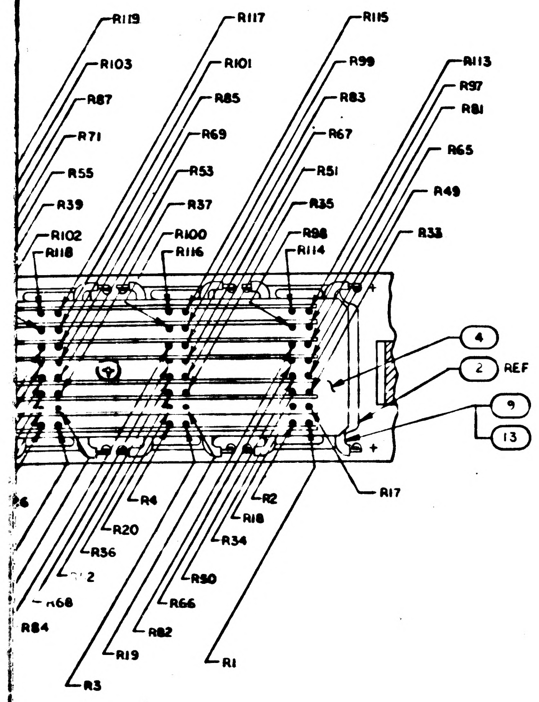

R119
R117
R115
R103
R101
R99
R113
R97
R81
R87
R85
R83
R71
R69
R67
R65
R55
R53
R51
R49
R39
R37
R35
R33
R102
R118
R100
R116
R98
R114
4
2 REF
9
13
R4
R2
R20
R18
R36
R34
R17
2
R50
R68
R66
R84
R82
R19
R1
R3

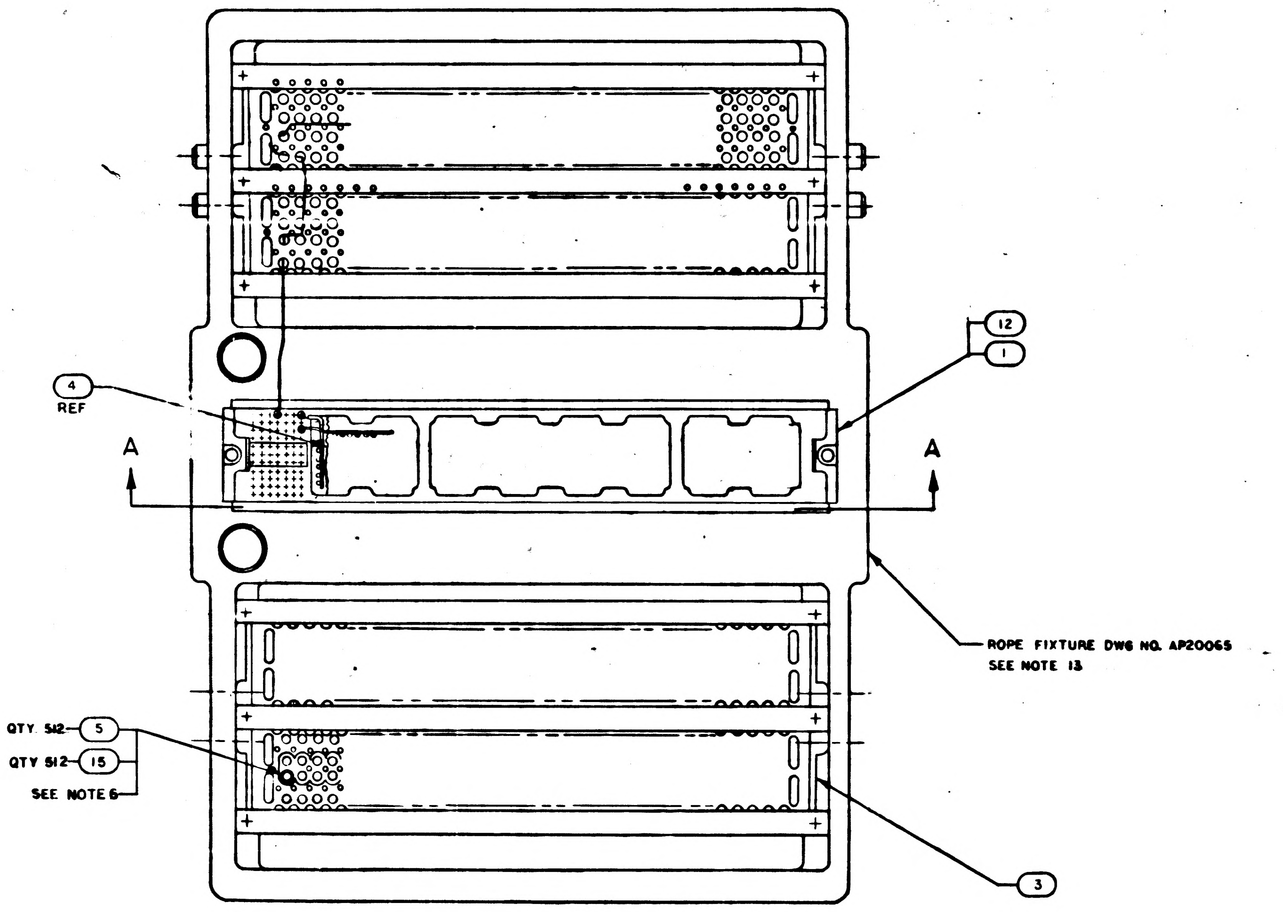

4
REF
A
A
12
1
ROPE FIXTURE DWG NO. AP20065
SEE NOTE 13
QTY 512 5
QTY 512 15
SEE NOTE 6
3

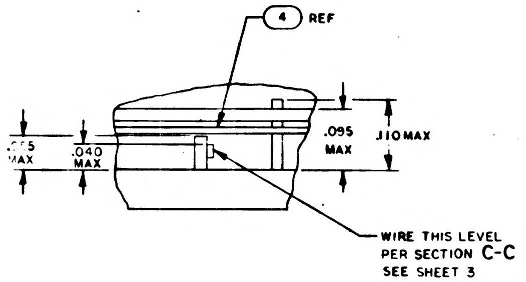

4 REF
.075 MAX
.040 MAX
.095 MAX
.110 MAX
WIRE THIS LEVEL
PER SECTION C-C
SEE SHEET 3

DETAIL A
SCALE: 10/1

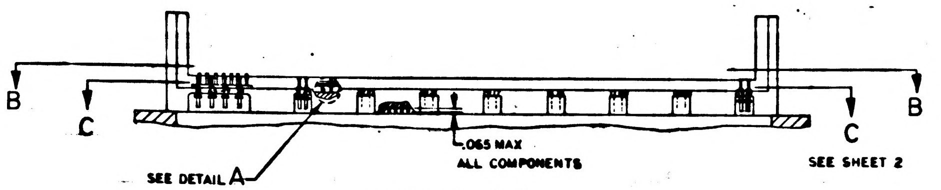

B
B
C
C
.065 MAX
ALL COMPONENTS
SEE SHEET 2
SEE DETAIL A

PARTIAL SECTION A-A

QTY 021	QTY 011	PART OR IDENTIFYING NO.	NOMENCLATURE OR DESCRIPTION	FIND NO
		1006144	SCHEMATIC	REF
512		1006320-001	CORE, MAGNETIC	15
2	2	1000093-2	SCREW, BUTTON HD	14
AR	AR	1006776-22	SLEEVING	13
	1	1003135-011	HEADER, ASSY	12
2	2	1004237	WASHER, FLAT	11
AR	AR	1006275-1	WIRE, ELECTRICAL	10
AR	AR	1006757-1	WIRE, 010 X 020	9
256	256	1006751	DIODE	8
128	128	1006750-39	RESISTOR, FIXED 2K	7
1	1	1003134	TERMINAL BOARD ASSEMBLY	6
	512	1006298-1	CORE, MAGNETIC	5
1	1	1004235-3	INSULATOR	4
4	4	1004233	HOLDER, CORE	3
1	1	1004232	HOLDER, COMPONENT	2
1		1003135	HEADER ASSEMBLY	1

LIST OF MATERIALS

NEXT ASSY	USED ON
1003133	
1003733	

APPLICATION

UNLESS OTHERWISE SPECIFIED
DIMENSIONS ARE IN INCHES
TOLERANCES ON
FRACTIONS DECIMALS ANGLES
± — ± — ± —
DO NOT SCALE THIS DRAWING
MATERIAL —
HEAT TREATMENT —
FINAL FINISH —

MIT
INSTRUMENTATION LAB
CAMBRIDGE, MASS.

DRAWN DATE 9/
CHECKED R. Edwards 12 Feb 65
APPROVAL
APPROVAL Ellen Schell 7/5/65
NASA APPROVAL
MIT APPROVAL

MANNED SPACECRAFT CENTER
HOUSTON, TEXAS

ROPE MEMORY MODULE SUBASSEMBLY

CODE IDENT NO. 80230
SIZE J
NASA DRAWING NO. 1003821
SCALE 1/1
WT
SHEET 1 OF 3

MASTER

1003821	B	SH OF 3

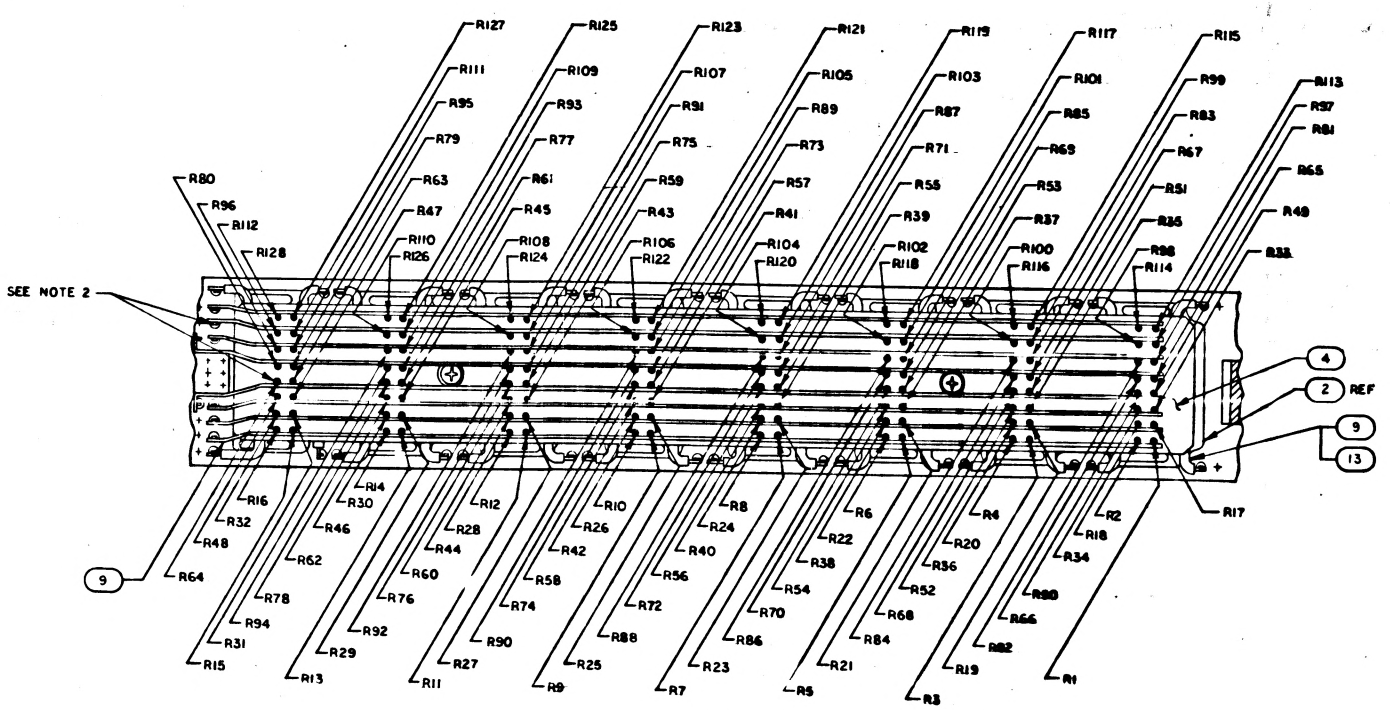
SEE NOTE 2
R127
R125
R123
R121
R119
R117
R115
R113
R111
R109
R107
R105
R103
R101
R99
R97
R95
R93
R91
R89
R87
R85
R83
R81
R79
R77
R75
R73
R71
R69
R67
R65
R63
R61
R59
R57
R55
R53
R51
R49
R47
R45
R43
R41
R39
R37
R35
R33
R80
R96
R112
R128
R110
R126
R108
R124
R106
R122
R104
R120
R102
R118
R100
R116
R98
R114
4
2 REF
9
13
R17
R16
R32
R48
R64
R14
R30
R46
R62
R78
R94
R31
R15
R12
R28
R44
R60
R76
R92
R29
R13
R10
R26
R42
R58
R74
R90
R27
R11
R8
R24
R40
R56
R72
R88
R25
R9
R6
R22
R38
R54
R70
R86
R23
R7
R4
R20
R36
R52
R68
R84
R21
R5
R2
R18
R34
R50
R66
R82
R19
R3
R1
9

PARTIAL SECTION B-B
FIND NO. 12 NOT SHOWN
SCALE: 2/1

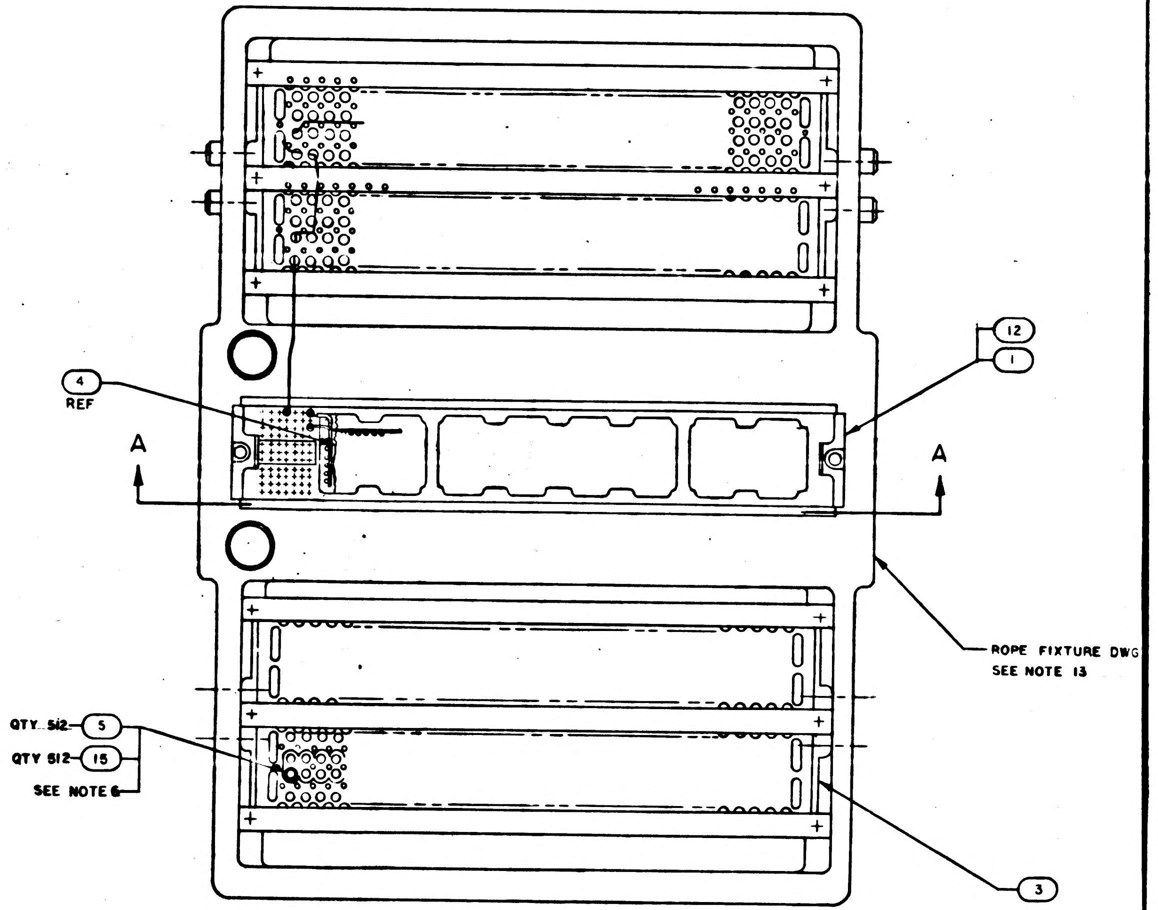
4
REF
A
A
12
1
ROPE FIXTURE DWG
SEE NOTE 13
QTY 512
5
QTY 512
15
SEE NOTE 6
3

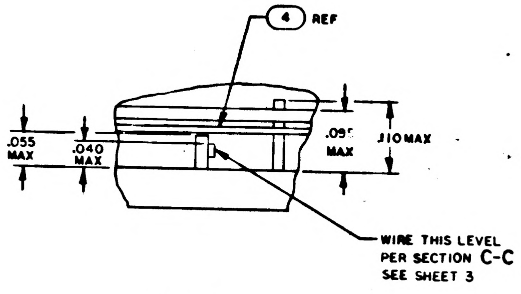
4 REF
.055 MAX
.040 MAX
.095 MAX
.110 MAX
WIRE THIS LEVEL
PER SECTION C-C
SEE SHEET 3

DETAIL A
SCALE: 10/1

NOTES

1. ALL CONNECTIONS USING FIND NO.10 TO BE MADE BY SOLDERING PER ND1002071. DO NOT TIN LEADS. SOLDER WRAPS TO BE 2 TO 4 TURNS
2. ALL CONNECTIONS USING FIND NO. 9 TO BE MADE BY WELDING PER ND1002005
3. INHIBIT WIRE PER TABLE SHOWN ON SHEET 3 AND PER ND1002029
4. INTERPRET DRAWING IN ACCORDANCE WITH STANDARDS PRESCRIBED BY MIL-D-70327
5. BOND FIND NO.6 TO FIND NO.1 PER ND1002004 TYPE I
6. BOND FIND NO.5 AND FIND NO.15 TO FIND NO.3 USING EPOXY ADHESIVE PER ND1002219
7. WHITE DOT DENOTES LEAD TO BE CUT FOR FIRST LEVEL WIRING
8. BLACK DOT DENOTES LEAD TO BE CUT FOR SECOND LEVEL WIRING
9. K DENOTES CATHODE SIDE OF DIODE
10. AR DENOTES AS REQUIRED
11. SELECT FIND NO. 8 NOTED (A) AND (B), EXAMPLE (A)-CR6 (B)-CR6, PER THE ELECTRICAL REQUIREMENTS: AT A FORWARD CURRENT OF 1.8 Ma ±2%, AND AT A FORWARD CURRENT OF 3.6 Ma ±2% THE VOLTAGE DROP ACROSS BOTH DIODES SHALL BE WITHIN 1 Mv OF EACH OTHER
12. ASSEMBLE FIND NO.14 TO FIND NO.1 USING MIL-S-22473 GRADE HV
13. THIS ASSEMBLY IS TO BE STORED WITH ROPE FIXTURE DWG NO. AP20065
14. STAKE FIND NO.7 TO FIND NO.2 PER ND1002009, METHOD A
15. UNLESS OTHERWISE SPECIFIED ALL WIRING SHALL BE IN ACCORDANCE WITH ND 1002069
16. STAKE & COVER FIND NO.8 TO FIND NO.2 PER ND1002009 METHOD A

REFERENCES

1. ROPE FIXTURE DWG NO. AP20065

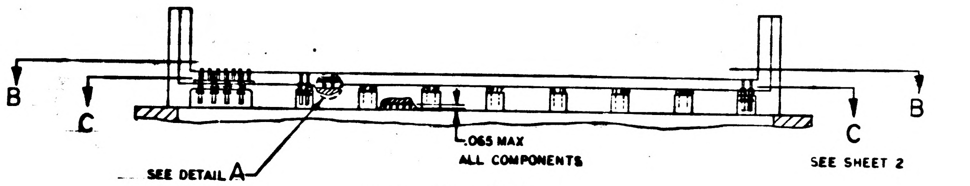
B
C
.065 MAX
ALL COMPONENTS
C
SEE SHEET 2
B
SEE DETAIL A

PARTIAL SECTION A-A

4 3 2 1

1003821	B

SYM	DESCRIPTION	DATE	APPROVAL
A	REVISED PER TDRR 8039 DR R. Lindberg CHK		
B	REVISED PER TDRR 25933 DR S.P. Infilas CHK	2/10/66	J. McC

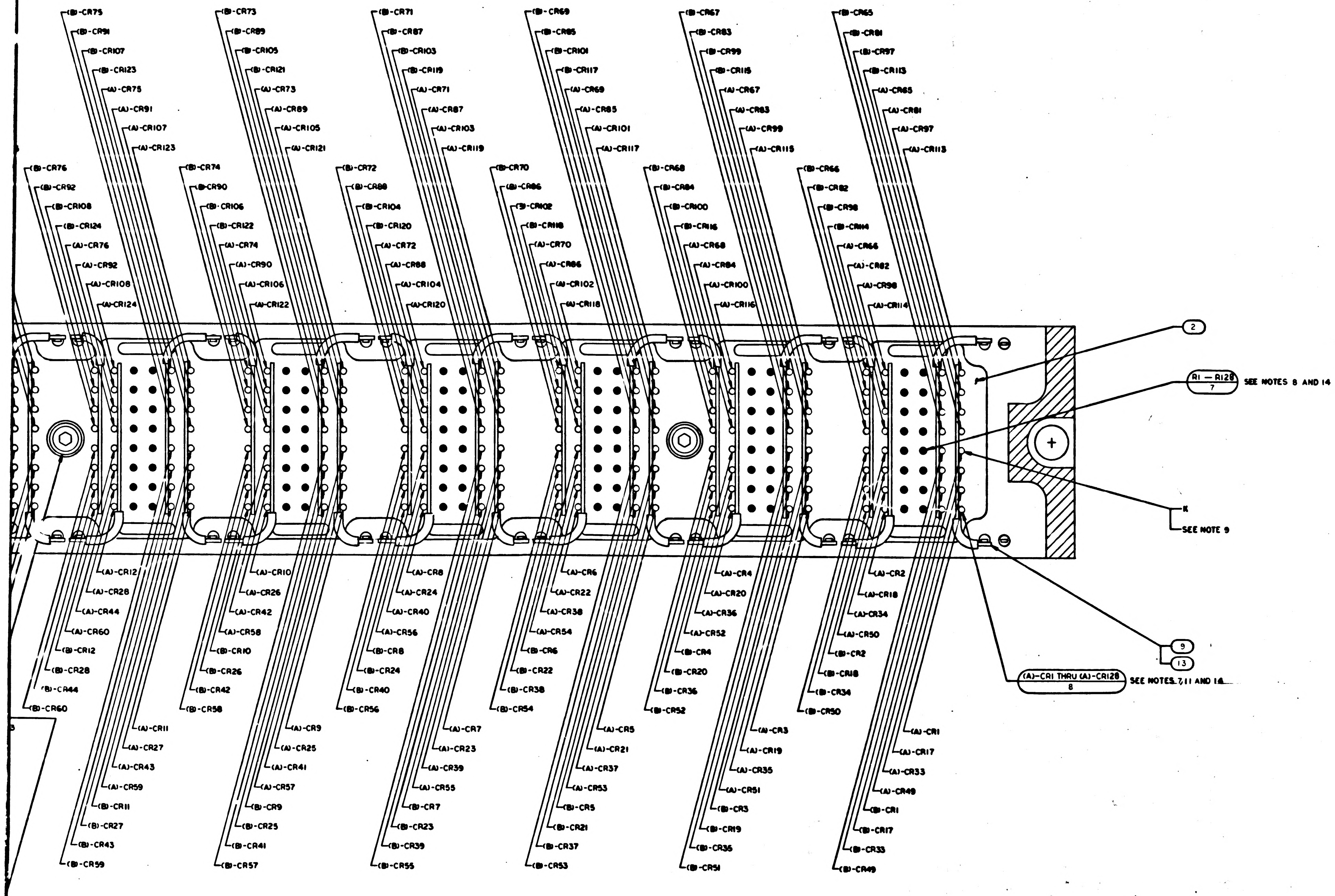

(B)-CR75
(B)-CR91
(B)-CR107
(B)-CR123
(A)-CR75
(A)-CR91
(A)-CR107
(A)-CR123
(B)-CR73
(B)-CR89
(B)-CR105
(B)-CR121
(A)-CR73
(A)-CR89
(A)-CR105
(A)-CR121
(B)-CR71
(B)-CR87
(B)-CR103
(B)-CR119
(A)-CR71
(A)-CR87
(A)-CR103
(A)-CR119
(B)-CR69
(B)-CR85
(B)-CR101
(B)-CR117
(A)-CR69
(A)-CR85
(A)-CR101
(A)-CR117
(B)-CR67
(B)-CR83
(B)-CR99
(B)-CR115
(A)-CR67
(A)-CR83
(A)-CR99
(A)-CR115
(B)-CR65
(B)-CR81
(B)-CR97
(B)-CR113
(A)-CR65
(A)-CR81
(A)-CR97
(A)-CR113
(B)-CR76
(B)-CR92
(B)-CR108
(B)-CR124
(A)-CR76
(A)-CR92
(A)-CR108
(A)-CR124
(B)-CR74
(B)-CR90
(B)-CR106
(B)-CR122
(A)-CR74
(A)-CR90
(A)-CR106
(A)-CR122
(B)-CR72
(B)-CR88
(B)-CR104
(B)-CR120
(A)-CR72
(A)-CR88
(A)-CR104
(A)-CR120
(B)-CR70
(B)-CR86
(B)-CR102
(B)-CR118
(A)-CR70
(A)-CR86
(A)-CR102
(A)-CR118
(B)-CR68
(B)-CR84
(B)-CR100
(B)-CR116
(A)-CR68
(A)-CR84
(A)-CR100
(A)-CR116
(B)-CR66
(B)-CR82
(B)-CR98
(B)-CR114
(A)-CR66
(A)-CR82
(A)-CR98
(A)-CR114
2
R1 — R128
7
SEE NOTES 8 AND 14
K
SEE NOTE 9
9
13
(A)-CR1 THRU (A)-CR128
8
SEE NOTES 7,11 AND 14
(A)-CR12
(A)-CR28
(A)-CR44
(A)-CR60
(B)-CR12
(B)-CR28
(B)-CR44
(B)-CR60
(A)-CR10
(A)-CR26
(A)-CR42
(A)-CR58
(B)-CR10
(B)-CR26
(B)-CR42
(B)-CR58
(A)-CR8
(A)-CR24
(A)-CR40
(A)-CR56
(B)-CR8
(B)-CR24
(B)-CR40
(B)-CR56
(A)-CR6
(A)-CR22
(A)-CR38
(A)-CR54
(B)-CR6
(B)-CR22
(B)-CR38
(B)-CR54
(A)-CR4
(A)-CR20
(A)-CR36
(A)-CR52
(B)-CR4
(B)-CR20
(B)-CR36
(B)-CR52
(A)-CR2
(A)-CR18
(A)-CR34
(A)-CR50
(B)-CR2
(B)-CR18
(B)-CR34
(B)-CR50
(A)-CR11
(A)-CR27
(A)-CR43
(A)-CR59
(B)-CR11
(B)-CR27
(B)-CR43
(B)-CR59
(A)-CR9
(A)-CR25
(A)-CR41
(A)-CR57
(B)-CR9
(B)-CR25
(B)-CR41
(B)-CR57
(A)-CR7
(A)-CR23
(A)-CR39
(A)-CR55
(B)-CR7
(B)-CR23
(B)-CR39
(B)-CR55
(A)-CR5
(A)-CR21
(A)-CR37
(A)-CR53
(B)-CR5
(B)-CR21
(B)-CR37
(B)-CR53
(A)-CR3
(A)-CR19
(A)-CR35
(A)-CR51
(B)-CR3
(B)-CR19
(B)-CR35
(B)-CR51
(A)-CR1
(A)-CR17
(A)-CR33
(A)-CR49
(B)-CR1
(B)-CR17
(B)-CR33
(B)-CR49

(11) (14) SEE NOTE 12

SECTION C-C

ALL CATHODES NEARSIDE FOR FIND NO. 8
VIEW SHOWN WITH COMPONENT
OUTLINE REMOVED FOR CLARITY

QTY REQD	PART OR IDENTIFYING NO.	NOMENCLATURE OR DESCRIPTION	FIND NO.
	LIST OF MATERIALS		

NEXT ASSY	USED ON
APPLICATION	

UNLESS OTHERWISE SPECIFIED
DIMENSIONS ARE IN INCHES
TOLERANCES ON
FRACTIONS ± DECIMALS ± ANGLES ±
DO NOT SCALE THIS DRAWING
MATERIAL —//—
HEAT TREATMENT —//—
FINAL FINISH —//—

MIT
INSTRUMENTATION LAB
CAMBRIDGE, MASS.
DRAWN Sadusha DATE 9 FEB 65
CHECKED R. Edwards 2 7 Mar 65
APPROVAL
APPROVAL Eldon C. Hall 3/5/65
NASA APPROVAL
MIT APPROVAL M.D. Morley 3-9-65

MANNED SPACECRAFT CENTER
HOUSTON, TEXAS

ROPE MEMORY MODULE
SUBASSEMBLY

CODE IDENT NO. 80230
SIZE J
NASA DRAWING NO. 1003821
SCALE 4/1
WT
SHEET 2 OF 3

1003821	E	SHEET

1-2/2

4 2 1

6 5 4 3

NOTICE – WHEN GOVERNMENT DRAWINGS, SPECIFICATIONS, OR OTHER DATA ARE USED FOR ANY PURPOSE OTHER THAN IN CONNECTION WITH A DEFINITELY RELATED GOVERNMENT PROCUREMENT OPERATION, THE UNITED STATES GOVERNMENT THEREBY INCURS NO RESPONSIBILITY NOR ANY OBLIGATION WHATSOEVER; AND THE FACT THAT THE GOVERNMENT MAY HAVE FORMULATED, FURNISHED, OR IN ANY WAY SUPPLIED THE SAID DRAWINGS, SPECIFICATIONS OR OTHER DATA IS NOT TO BE REGARDED BY IMPLICATION OR OTHERWISE AS IN ANY MANNER LICENSING THE HOLDER OR ANY OTHER PERSON OR CORPORATION, OR CONVEYING ANY RIGHTS OR PERMISSION TO MANUFACTURE, USE, OR SELL ANY PATENTED INVENTION THAT MAY IN ANY WAY BE RELATED THERETO.

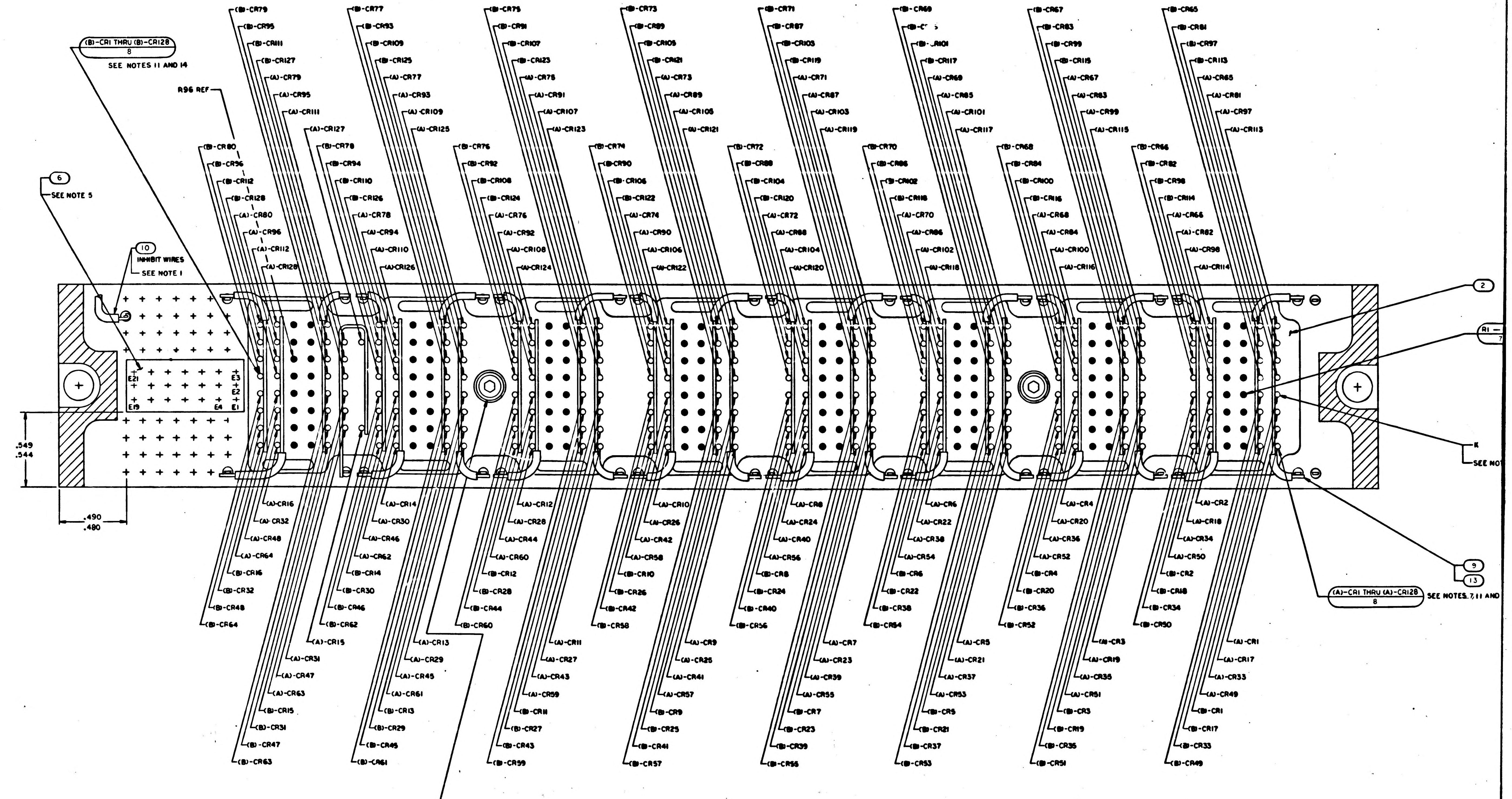
(B)-CR1 THRU (B)-CR128
8
SEE NOTES 11 AND 14
R96 REF
6
SEE NOTE 5
10
INHIBIT WIRES
SEE NOTE 1
(B)-CR79
(B)-CR95
(B)-CR111
(B)-CR127
(A)-CR79
(A)-CR95
(A)-CR111
(A)-CR127
(B)-CR77
(B)-CR93
(B)-CR109
(B)-CR125
(A)-CR77
(A)-CR93
(A)-CR109
(A)-CR125
(B)-CR75
(B)-CR91
(B)-CR107
(B)-CR123
(A)-CR75
(A)-CR91
(A)-CR107
(A)-CR123
(B)-CR73
(B)-CR89
(B)-CR105
(B)-CR121
(A)-CR73
(A)-CR89
(A)-CR105
(A)-CR121
(B)-CR71
(B)-CR87
(B)-CR103
(B)-CR119
(A)-CR71
(A)-CR87
(A)-CR103
(A)-CR119
(B)-CR69
(B)-C[illegible]5
(B)-CR101
(B)-CR117
(A)-CR69
(A)-CR85
(A)-CR101
(A)-CR117
(B)-CR67
(B)-CR83
(B)-CR99
(B)-CR115
(A)-CR67
(A)-CR83
(A)-CR99
(A)-CR115
(B)-CR65
(B)-CR81
(B)-CR97
(B)-CR113
(A)-CR65
(A)-CR81
(A)-CR97
(A)-CR113
(B)-CR80
(B)-CR96
(B)-CR112
(B)-CR128
(A)-CR80
(A)-CR96
(A)-CR112
(A)-CR128
(B)-CR78
(B)-CR94
(B)-CR110
(B)-CR126
(A)-CR78
(A)-CR94
(A)-CR110
(A)-CR126
(B)-CR76
(B)-CR92
(B)-CR108
(B)-CR124
(A)-CR76
(A)-CR92
(A)-CR108
(A)-CR124
(B)-CR74
(B)-CR90
(B)-CR106
(B)-CR122
(A)-CR74
(A)-CR90
(A)-CR106
(A)-CR122
(B)-CR72
(B)-CR88
(B)-CR104
(B)-CR120
(A)-CR72
(A)-CR88
(A)-CR104
(A)-CR120
(B)-CR70
(B)-CR86
(B)-CR102
(B)-CR118
(A)-CR70
(A)-CR86
(A)-CR102
(A)-CR118
(B)-CR68
(B)-CR84
(B)-CR100
(B)-CR116
(A)-CR68
(A)-CR84
(A)-CR100
(A)-CR116
(B)-CR66
(B)-CR82
(B)-CR98
(B)-CR114
(A)-CR66
(A)-CR82
(A)-CR98
(A)-CR114
2
R1
7
E21
E3
E2
E19
E4
E1
.549
.544
.490
.480
K
SEE NO
(A)-CR16
(A)-CR32
(A)-CR48
(A)-CR64
(B)-CR16
(B)-CR32
(B)-CR48
(B)-CR64
(A)-CR14
(A)-CR30
(A)-CR46
(A)-CR62
(B)-CR14
(B)-CR30
(B)-CR46
(B)-CR62
(A)-CR12
(A)-CR28
(A)-CR44
(A)-CR60
(B)-CR12
(B)-CR28
(B)-CR44
(B)-CR60
(A)-CR10
(A)-CR26
(A)-CR42
(A)-CR58
(B)-CR10
(B)-CR26
(B)-CR42
(B)-CR58
(A)-CR8
(A)-CR24
(A)-CR40
(A)-CR56
(B)-CR8
(B)-CR24
(B)-CR40
(B)-CR56
(A)-CR6
(A)-CR22
(A)-CR38
(A)-CR54
(B)-CR6
(B)-CR22
(B)-CR38
(B)-CR54
(A)-CR4
(A)-CR20
(A)-CR36
(A)-CR52
(B)-CR4
(B)-CR20
(B)-CR36
(B)-CR52
(A)-CR2
(A)-CR18
(A)-CR34
(A)-CR50
(B)-CR2
(B)-CR18
(B)-CR34
(B)-CR50
9
13
(A)-CR1 THRU (A)-CR128
8
SEE NOTES 7,11 AND
(A)-CR15
(A)-CR31
(A)-CR47
(A)-CR63
(B)-CR15
(B)-CR31
(B)-CR47
(B)-CR63
(A)-CR13
(A)-CR29
(A)-CR45
(A)-CR61
(B)-CR13
(B)-CR29
(B)-CR45
(B)-CR61
(A)-CR11
(A)-CR27
(A)-CR43
(A)-CR59
(B)-CR11
(B)-CR27
(B)-CR43
(B)-CR59
(A)-CR9
(A)-CR25
(A)-CR41
(A)-CR57
(B)-CR9
(B)-CR25
(B)-CR41
(B)-CR57
(A)-CR7
(A)-CR23
(A)-CR39
(A)-CR55
(B)-CR7
(B)-CR23
(B)-CR39
(B)-CR55
(A)-CR5
(A)-CR21
(A)-CR37
(A)-CR53
(B)-CR5
(B)-CR21
(B)-CR37
(B)-CR53
(A)-CR3
(A)-CR19
(A)-CR35
(A)-CR51
(B)-CR3
(B)-CR19
(B)-CR35
(B)-CR51
(A)-CR1
(A)-CR17
(A)-CR33
(A)-CR49
(B)-CR1
(B)-CR17
(B)-CR33
(B)-CR49
11
14
SEE NOTE 12

SECTION C-C

ALL CATHODES NEARSIDE FOR FIND NO. 8
VIEW SHOWN WITH COMPONENT
OUTLINE REMOVED FOR CLARITY

SHEET 2

3

1003821 B

	REVISIONS 1225			
SYM	DESCRIPTION		DATE	APPROVAL
A	REVISED PER TDRR 18039 DR R. Zeitund CHK [illegible] 3/3		[illegible]	[illegible]
B	REVISED PER TDRR 25933 DR [illegible] CHK [illegible]		7/15/66	[illegible]

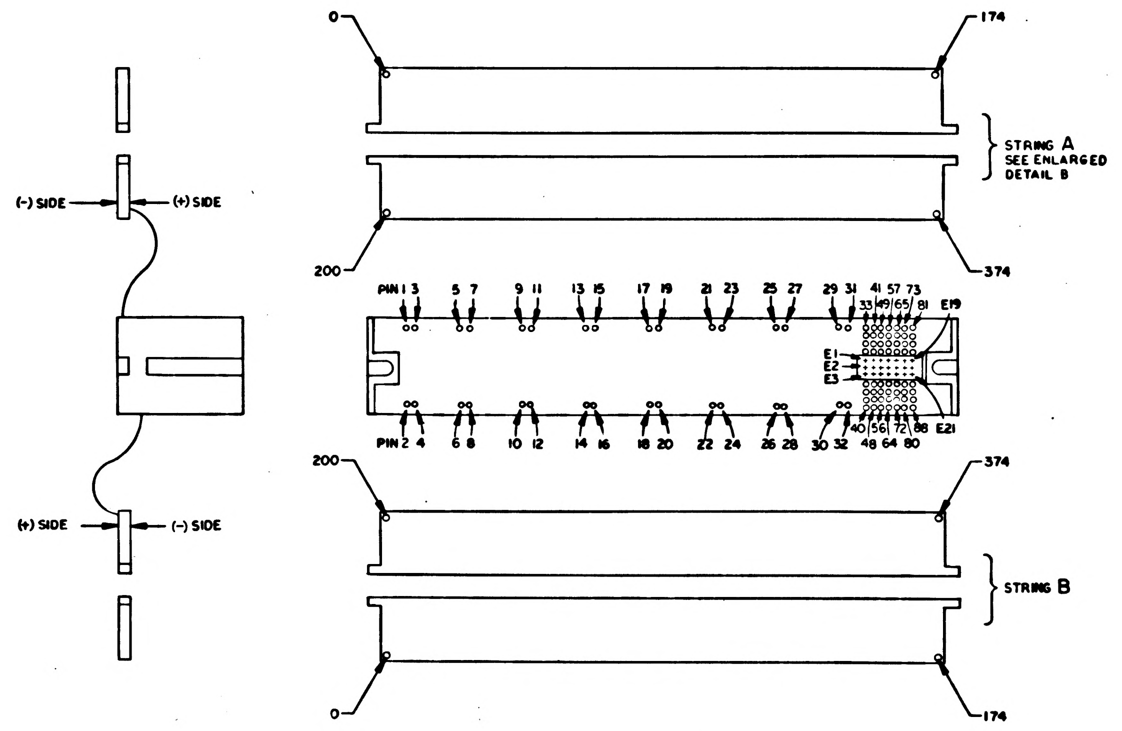

0
174
STRING A
SEE ENLARGED
DETAIL B
200
374
(–) SIDE
(+) SIDE
PIN 1 3 5 7 9 11 13 15 17 19 21 23 25 27 29 31 33 41 49 57 65 73 81 E19
E1
E2
E3
PIN 2 4 6 8 10 12 14 16 18 20 22 24 26 28 30 32 40 48 56 64 72 80 88 E21
200
374
(+) SIDE
(–) SIDE
STRING B
0
174

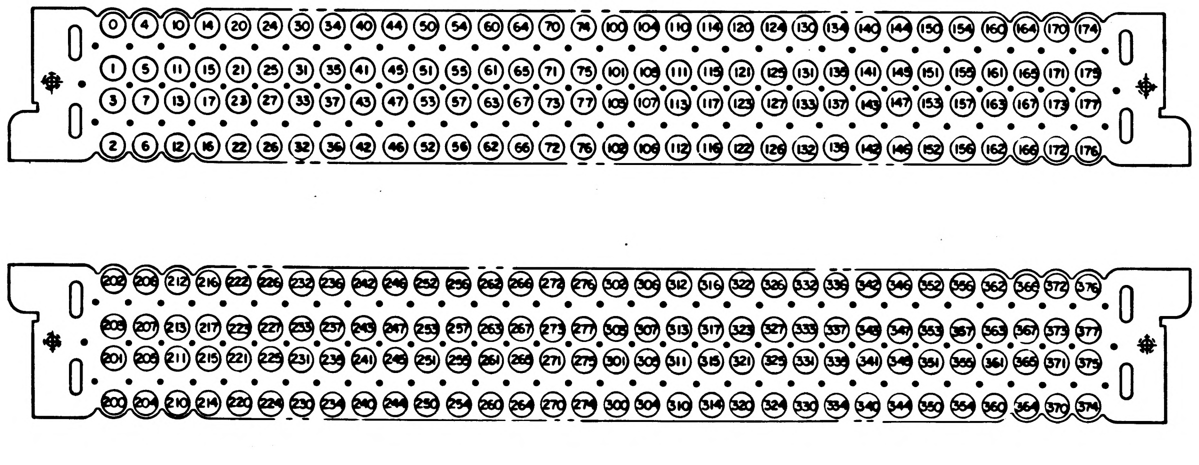

0 4 10 14 20 24 30 34 40 44 50 54 60 64 70 74 100 104 110 114 120 124 130 134 140 144 150 154 160 164 170 174
1 5 11 15 21 25 31 35 41 45 51 55 61 65 71 75 101 105 111 115 121 125 131 135 141 145 151 155 161 165 171 175
3 7 13 17 23 27 33 37 43 47 53 57 63 67 73 77 103 107 113 117 123 127 133 137 143 147 153 157 163 167 173 177
2 6 12 16 22 26 32 36 42 46 52 56 62 66 72 76 102 106 112 116 122 126 132 136 142 146 152 156 162 166 172 176
202 206 212 216 222 226 232 236 242 246 252 256 262 266 272 276 302 306 312 316 322 326 332 336 342 346 352 356 362 366 372 376
203 207 213 217 223 227 233 237 243 247 253 257 263 267 273 277 303 307 313 317 323 327 333 337 343 347 353 357 363 367 373 377
201 205 211 215 221 225 231 235 241 245 251 255 261 265 271 275 301 305 311 315 321 325 331 335 341 345 351 355 361 365 371 375
200 204 210 214 220 224 230 234 240 244 250 254 260 264 270 274 300 304 310 314 320 324 330 334 340 344 350 354 360 364 370 374

DETAIL B

QTY REQD	PART OR IDENTIFYING NO.	NOMENCLATURE OR DESCRIPTION	FIND NO.

LIST OF MATERIALS

NEXT ASSY | USED ON
APPLICATION

UNLESS OTHERWISE SPECIFIED
DIMENSIONS ARE IN INCHES
TOLERANCES ON
FRACTIONS ± DECIMALS ± ANGLES ±
DO NOT SCALE THIS DRAWING
MATERIAL
HEAT TREATMENT
FINAL FINISH

MIT
INSTRUMENTATION LAB
CAMBRIDGE, MASS.
REQ. NO. CONTRACT
DRAWN A. J. Pierce DATE 17FEB65
CHECKED
APPROVAL
APPROVAL C. C. Hall 3/8/65
NASA APPROVAL [illegible] 3/9/65
MIT APPROVAL [illegible] 3-9-65
MIT APPROVAL

MANNED SPACECRAFT CENTER
HOUSTON, TEXAS

ROPE MEMORY MODULE
SUBASSEMBLY

CODE IDENT NO. 80230
SIZE J
NASA DRAWING NO. 1003821
SCALE NONE
WT
SHEET 3 OF 3

1003821 B SHT 3 OF 3

F 3/3

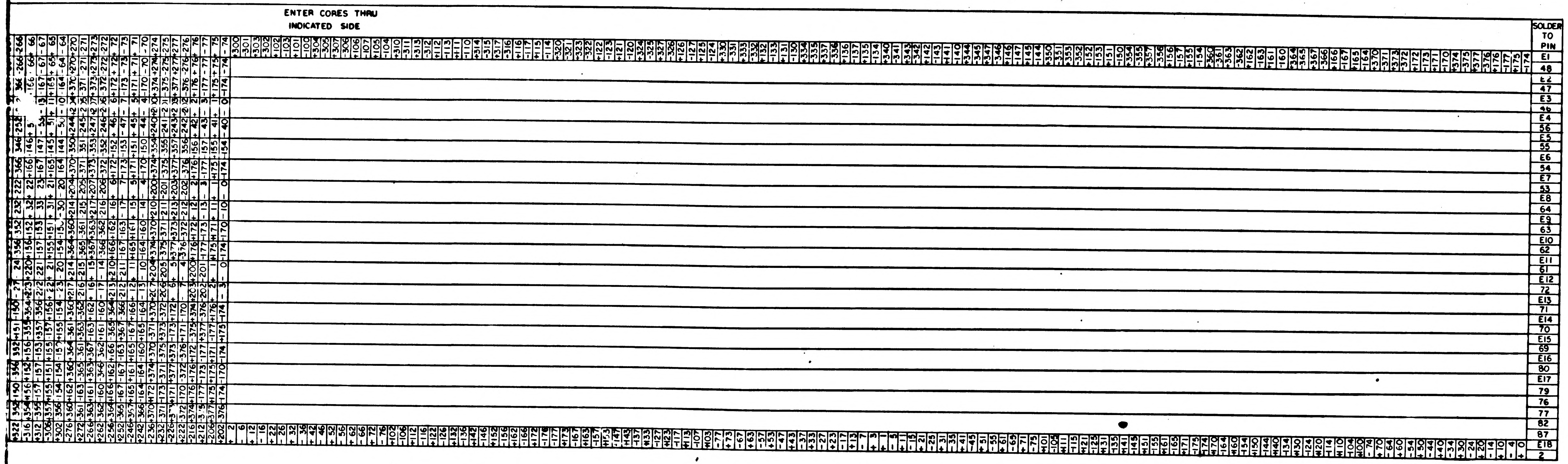
ENTER CORES THRU
INDICATED SIDE
SOLDER TO PIN
E1
48
E2
47
E3
46
E4
56
E5
55
E6
54
E7
53
E8
64
E9
63
E10
62
E11
61
E12
72
E13
71
E14
70
E15
69
E16
80
E17
79
76
77
82
87
E18
2

INHIBIT WIRING TABLE

WIRE NO.	148	147	146	145	144	143	142	141	140	139	138	137	136	135	134	133	132	131	130	129
STRING A	☒	☒	☒	☒	☒	☒	☒	☒	☒	☒	☒	☒	☒	☒	☒	☒	☒	☒	☒	☒
STRING B	☒	☒	☒	☒	☒	☒	☒	☒	☒	☒	☒	☒	☒	☒	☒	☒	☒	☒	☒	☒
SOLDER TO PIN	1 E18	81 88	75 78	74 E17	73 E16	68 E15	67 E14	66 E13	65 E12	60 E11	59 E10	58 E9	57 E8	52 E7	51 E6	50 E5	49 E4	43 E3	42 E2	41 E1
	+200	+200	+2	+204	+200	-201	+200	+377	+374	+204	+200	+374	+364	+220	+200	+374	+334	+300	+200	+200
	-204	-201	-3	-201	-205	+203	-202	-376	-375	-205	-201	-375	-365	-221	-201	-375	-335	-301	-201	-201
	+210	+203	+1	+207	+203	-3	+2	+176	+175	+207	+203	+377	+367	+223	+203	+377	+337	+303	+203	+203
	-214	-202	-0	-202	-206	+1	-0	-177	-174	-206	-202	-376	-366	-222	-202	-376	-336	-302	-202	-202
	+220	+204	+6	+6	+2	-205	+204	+373	+370	+6	+2	+176	+166	+22	+2	+176	+136	+102	+2	+2
	-224	-205	-7	-3	-7	+207	-206	-372	-371	-7	-3	-177	-167	-23	-3	-177	-137	-103	-3	-3
	+230	+207	+5	+5	+1	-7	+6	+172	+171	+5	+1	+175	+165	+21	+1	+175	+135	+101	+1	+1
	-234	-206	-4	-0	-4	+5	-4	-173	-170	-4	-0	-174	-164	-20	-0	-174	-134	-100	-0	-0
	+240	+210	+12	+210	+214	-211	+210	+367	+364	+214	+210	+370	+360	+224	+204	+370	+330	+304	+204	+204
	-244	-211	-13	-215	-211	+213	-212	-366	-365	-215	-211	-371	-361	-225	-205	-371	-331	-305	-205	-205
	+250	+213	+11	+213	+217	-13	+12	+166	+165	+217	+213	+373	+363	+227	+207	+373	+333	+307	+207	+207
	-254	-212	-10	-216	-212	+11	-10	-167	-164	-216	-212	-372	-362	-226	-206	-372	-332	-306	-206	-206
	+260	+214	+16	+12	+16	-215	+214	+363	+360	+16	+12	+172	+162	+26	+6	+172	+132	+106	+6	+6
	-264	-215	-17	-17	-13	+217	-216	-362	-361	-17	-13	-173	-163	-27	-7	-173	-133	-107	-7	-7
	+270	+217	+15	+11	+15	-17	+16	+162	+161	+15	+11	+171	+161	+25	+5	+171	+131	+105	+5	+5
	-274	-216	-14	-14	-10	+15	-14	-163	-160	-14	-10	-170	-160	-24	-4	-170	-130	-104	-4	-4
	+300	+220	+22	+220	+224	-221	+220	+357	+354	+224	+220	+354	+344	+230	+210	+364	+324	+310	+210	+210
	-304	-221	-23	-225	-221	+223	-222	-356	-355	-225	-221	-355	-345	-231	-211	-365	-325	-311	-211	-211
	+310	+223	+21	+223	+227	-23	+22	+156	+155	+227	+223	+357	+347	+233	+213	+367	+327	+313	+213	+213
	-314	-222	-20	-226	-222	+21	-20	-157	-154	-226	-222	-356	-346	-232	-212	-366	-326	-312	-212	-212
	+320	+224	+26	+22	+26	-225	+224	+353	+350	+26	+22	+156	+146	+32	+12	+166	+126	+112	+12	+12
	-324	-225	-27	-27	-23	+227	-226	-352	-351	-27	-23	-157	-147	-33	-13	-167	-127	-113	-13	-13
	+330	+227	+25	+21	+25	-27	+26	+152	+151	+25	+21	+155	+145	+31	+11	+165	+125	+111	+11	+11
	-334	-226	-24	-24	-20	+25	-24	-153	-150	-24	-20	-154	-144	-30	-10	-164	-124	-110	-10	-10
	+340	+230	+32	+234	+230	-231	+230	+347	+344	+234	+230	+350	+340	+234	+214	+360	+320	+314	+214	+214
	-344	-231	-33	-231	-235	+233	-232	-346	-345	-235	-231	-351	-341	-235	-215	-361	-321	-315	-215	-215
	+350	+233	+31	+237	+233	-33	+32	+146	+145	+237	+233	+353	+343	+237	+217	+363	+323	+317	+217	+217
	-354	-232	-30	-232	-236	+31	-30	-147	-44	[illegible]	[illegible]	-352	-342	-236	-216	-362	-322	-316	-216	-216
	+360	+234	+36	+36	+32	-235	+234	+343	+340	[illegible]	+32	+152	+142	+36	+16	+162	+122	+116	+16	+16
	-364	-235	-37	-33	-37	+237	-236	-342	-341	[illegible]	-33	-153	-143	-37	-17	-163	-123	-117	-17	-17
	+370	+237	+35	+35	+31	-37	+36	+142	+41	+35	+31	+151	+141	+35	+15	+161	+121	+115	+15	+15
	-374	-236	-34	-30	-34	+35	-34	-143	-40	-34	-30	-150	-140	-34	-14	-160	-120	-114	-14	-14
	-375	+240	+42	+240	+244	-241	+240	+337	+334	+244	+240	+334	+324	+260	+240	+354	+314	+320	+220	+220
	+371	-241	-43	-245	-241	+243	-242	-336	-335	-245	-241	-335	-325	-261	-241	-355	-315	-321	-221	-221
	-365	+243	+41	+243	+247	-43	+42	+136	+35	+247	+243	+337	+327	+263	+243	+357	+317	+323	+223	+223
	+361	-242	-40	-246	-242	+41	-40	-137	-34	-246	-242	-336	-326	-262	-242	-356	-316	-322	-222	-222
	-355	+244	+46	+42	+46	-245	+244	+333	+330	+46	+42	+36	+126	+62	+42	+156	+116	+122	+22	+22
	+351	-245	-47	-47	-43	+247	-246	-332	-331	-47	-43	-137	-127	-63	-43	-157	-117	-123	-23	-23
	-345	+247	+45	+41	+45	-47	+46	+132	+131	+45	+41	+135	+125	+61	+41	+155	+115	+121	+21	+21
	+341	-246	-44	-44	-40	+45	-44	-133	-130	-44	-40	-134	-124	-60	-40	-154	-114	-120	-20	-20
	-335	+250	+52	+254	+250	-251	+250	+327	+324	+254	+250	+330	+320	+264	+244	+350	+310	+324	+224	+224
	+331	-251	-53	-251	-255	+253	-252	-326	-325	-255	-251	-331	-321	-265	-245	-351	-311	-325	-225	-225
	-325	+253	+51	+257	+253	-53	+52	+126	+125	+257	+253	+333	+323	+267	+247	+353	+313	+327	+227	+227
	+321	-252	-50	-252	-256	+51	-50	-127	-124	-256	-252	-332	-322	-266	-246	-352	-312	-326	-226	-226
	-315	+254	+56	+56	+52	-255	+254	+323	+320	+56	+52	+132	+122	+66	+46	+152	+112	+26	+26	+26
	+311	-255	-57	-53	-57	+257	-256	-322	-321	-57	-53	-133	-123	-67	-47	-153	-113	-27	-27	-27
	-305	+257	+55	+55	+51	-57	+56	+122	+121	+55	+51	+131	+121	+65	+45	+151	+111	+25	+25	+25
	+301	-256	-54	-50	-54	+55	-54	-123	-120	-54	-50	-130	-120	-64	-44	-150	-110	-24	-24	-24
	-275	+260	+62	+264	+260	-261	+260	+317	+314	+264	+260	+314	+304	+270	+250	+344	+304	+30	+230	+230
	+271	-261	-63	-261	-265	+263	-262	-316	-315	-265	-261	-315	-305	-271	-251	-345	-305	-31	-231	-231
	-265	+263	+61	+267	+263	-63	+62	+116	+115	+267	+263	+317	+307	+273	+253	+347	+307	+33	+233	+233
	+261	-262	-60	-262	-266	+61	-60	-117	-114	-266	-262	-316	-306	-272	-252	-346	-306	-32	-232	-232
	-255	+264	+66	+66	+62	-265	+264	+313	+310	+66	+62	+116	+106	+72	+52	+146	+106	+32	+32	+32
	+251	-265	-67	-63	-67	+267	-266	-312	-311	-67	-63	-117	-107	-73	-53	-147	-107	-33	-33	-33
	-245	+267	+65	+65	+61	-67	+66	+112	+111	+65	+61	+115	+105	+71	+51	+145	+105	+31	+31	+31
	+241	-266	-64	-60	-64	+65	-64	-113	-110	-64	-60	-114	-104	-70	-50	-144	-104	-30	-30	-30
	-235	+270	+72	+270	+274	[illegible]	+270	+307	+304	+274	+270	+310	+300	+274	+254	+340	+300	+34	+234	+234
	+231	-271	-73	-275	-271	+272	-272	-306	-305	-275	-271	-311	-301	-275	-255	-341	-301	-35	-235	-235
	-225	+273	+71	+273	+277	-72	+72	+106	+105	+277	+273	+313	+303	+277	+257	+343	+303	+37	+237	+237
	+221	-272	-70	-276	-272	+71	-70	-107	-104	-276	-272	-312	-302	-276	-256	-342	-302	-36	-236	-236
	-215	+274	+76	+72	+76	-275	+274	+303	+300	+76	+72	+112	+102	+76	+56	+142	+102	+36	+36	+36
	+211	-275	-77	-77	-73	+277	-276	-302	-301	-77	-73	-113	-103	-77	-57	-143	-103	-37	-37	-37
	-205	+277	+75	+71	+75	-77	+76	+102	+101	+75	+71	+111	+101	+75	+55	+141	+101	+35	+35	+35
	+201	-276	-74	-74	-70	+75	-74	-103	-100	-74	-70	-110	-100	-74	-54	-140	-100	-34	-34	-34
	+203	+300	+102	+300	+304	-301	+300	+277	+274	+304	+300	+274	+264	+320	+300	+274	+234	+340	+240	+240
	-207	-301	-103	-305	-301	+303	-302	-276	-275	-305	-301	-275	-265	-321	-301	-275	-235	-341	-241	-241
	+213	+303	+101	+303	+307	-103	+102	+76	+75	+307	+303	+277	+267	+323	+303	+277	+237	+343	+243	+243
	-217	-302	-100	-306	-302	+101	-100	-77	-74	-306	-302	-276	-266	-322	-302	-276	-236	-342	-242	-242
	+223	+304	+106	+102	+106	-305	+304	+273	+270	+106	+102	+76	+66	+122	+102	+76	+36	+142	+42	+42
	-227	-305	-107	-107	-103	+307	-306	-272	-271	-107	-103	-77	-67	-123	-103	-77	-37	-143	-43	-43
	+233	+307	+105	+101	+105	-107	+106	+72	+71	+105	+101	+75	+65	+121	+101	+75	+35	+141	+41	+41
	-237	-306	-104	-104	-100	+105	-104	-73	-70	-104	-100	-74	-64	-120	-100	-74	-34	-140	-40	-40
	+243	+310	+112	+314	+310	-311	+310	+267	+264	+314	+310	+270	+260	+324	+304	+270	+230	+344	+244	+244
	-247	-311	-113	-311	-315	+313	-312	-266	-265	-315	-311	-271	-261	-325	-305	-271	-231	-345	-245	-245
	+253	+313	+111	+317	+313	-113	+112	+66	+65	+317	+313	+273	+263	+327	+307	+273	+233	+347	+247	+247
	-257	-312	-110	-312	-316	+111	-110	-67	-64	-316	-312	-272	-262	-326	-306	-272	-232	-346	-246	-246
	+263	+314	+116	+116	+112	-315	+314	+263	+260	+116	+112	+72	+62	+126	+106	+72	+32	+146	+46	+46
	-267	-315	-117	-113	-117	+317	-316	-262	-261	-117	-113	-73	-63	-127	-107	-73	-33	-147	-47	-47
	+273	+317	+115	+115	+111	-117	+116	+62	+61	+115	+111	+71	+61	+125	+105	+71	+31	+145	+45	+45
	-277	-316	-114	-110	-114	+115	-114	-63	-60	-114	-110	-70	-60	-124	-104	-70	-30	-144	-44	-44
	+303	+320	+122	+324	+320	-321	+320	+257	+254	+324	+320	+254	+244	+330	+310	+264	+224	+350	+250	+250
	-307	-321	-123	-321	-325	+323	-322	-256	-255	-325	-321	-255	-245	-331	-311	-265	-225	-351	-251	-251
	+313	+323	+121	+327	+323	-123	+122	+56	+55	+327	+323	+257	+247	+333	+313	+267	+227	+353	+253	+253
	-317	-322	-120	-322	-326	+121	-120	-57	-54	-326	-322	-256	-246	-332	-312	-266	-226	-352	-252	-252
	+323	+324	+126	+126	+122	-325	+324	+253	+250	+126	+122	+56	+46	+132	+112	+66	+26	+152	+52	+52
	-327	-325	-127	-123	-127	+327	-326	-252	-251	-127	-123	-57	-47	-133	-113	-67	-27	-153	-53	-53
	+333	+327	+125	+125	+121	-127	+126	+52	+51	+125	+121	+55	+45	+131	+111	+65	+25	+151	+51	+51
	-337	-326	-124	-120	-124	+125	-124	-53	-50	-124	-120	-54	-44	-130	-110	-64	-24	-150	-50	-50
	+343	+330	+132	+330	+334	-331	+330	+247	+244	+334	+330	+250	+240	+334	+314	+260	+220	+354	+254	+254
	-347	-331	-133	-335	-331	+333	-332	-246	-245	-335	-331	-251	-241	-335	-315	-261	-221	-355	-255	-255
	+353	+333	+131	+333	+337	-133	+132	+46	+45	+337	+333	+253	+243	+337	+317	+263	+223	+357	+257	+257
	-357	-332	-130	-336	-332	+131	-130	-47	-44	-336	-332	-252	-242	-336	-316	-262	-222	-356	-256	-256
	+363	+334	+136	+132	+136	-335	+334	+243	+240	+136	+132	+52	+42	+136	+116	+62	+22	+156	+56	+56
	-367	-335	-137	-137	-133	+337	-336	-242	-241	-137	-133	-53	-43	-137	-117	-63	-23	-157	-57	-57
	+373	+337	+135	+131	+135	-137	+136	+42	+41	+135	+131	+51	+41	+135	+115	+61	+21	+155	+55	+55
	-377	-336	-134	-134	-130	+135	-134	-43	-40	-134	-130	-50	-40	-134	-114	-60	-20	-154	-54	-54
	-376	+340	+142	+344	+340	-341	+340	+237	+234	+344	+340	+234	+224	+360	+340	+254	+214	+360	+260	+260
	+372	-341	-143	-341	-345	+343	-342	-236	-235	-345	-341	-235	-225	-361	-341	-255	-215	-361	-261	-261
	-366	+343	+141	+347	+343	-143	+142	+36	+35	+347	+343	+237	+227	+363	+343	+257	+217	+363	+263	+263
	+362	-342	-140	-342	-346	+141	-140	-37	-34	-346	-342	-236	-226	-362	-342	-256	-216	-362	-262	-262
	-356	+344	+146	+146	+142	-345	+344	+233	+230	+146	+142	+36	+26	+162	+142	+56	+16	+162	+62	+62
	+352	-345	-147	-143	-147	+347	-346	-232	-231	-147	-143	-37	-27	-163	-143	-57	-17	-163	-63	-63
	-346	+347	+145	+145	+141	-147	+146	+32	+31	+145	+141	+35	+25	+161	+141	+55	+15	+161	+61	+61
	+342	-346	-144	-140	-144	+145	-144	-33	-30	-144	-140	-34	-24	-160	-140	-54	-14	-160	-60	-60
	-336	+350	+152	+350	+354	-351	+350	+227	+224	+354	+350	+230	+220	+364	+344	+250	+210	+364	+264	+264
	+332	-351	-153	-355	-351	+353	-352	-226	-225	-355	-351	-231	-221	-365	-345	-251	-211	-365	-265	-265
	-326	+353	+151	+353	+357	-153	+152	+26	+25	+357	+353	+233	+223	+367	+347	+253	+213	+367	+267	+267
	+322	-352	-150	-356	-352	+151	-150	-27	-24	-356	-352	-232	-222	-366	-346	-252	-212	-366	-266	-266
	-316	+354	+156	+152	[illegible]	[illegible]	+354	+223	+220	+156	+152	+32	+22	+166	+146	+52	+12	+166	+66	+66
	+312	-355	-157	-157	-153	+357	-356	-222	-221	-157	-153	-33	-23	-167	-147	-53	-13	-167	-67	-67
	-306	+357	+155	+151	+155	-157	+156	+22	+21	+155	+151	+31	+21	+165	+145	+51	+11	+165	+65	+65
	+302	-356	-154	-154	-150	+155	-154	-23	-20	-154	-150	-30	-20	-164	-144	-50	-10	-164	-64	-64
	-276	+360	+162	+360	+364	-361	+360	+217	+214	+364	+360	+214	+204	+370	+350	+244	+204	+370	+270	+270
	+272	-361	-163	-365	-361	+363	-362	-216	-215	-365	-361	-215	-205	-371	-351	-245	-205	-371	-271	-271
	-266	+363	+161	+363	+367	-163	+162	+16	+15	+367	+363	+217	+207	+373	+353	+247	+207	+373	+273	+273
	+262	-362	-160	-366	-362	+161	-160	-17	-14	-366	-362	-216	-206	-372	-352	-246	-206	-372	-272	-272
	-256	+364	+166	+162	+166	-365	+364	+213	+210	+166	+162	+16	+6	+172	+152	+46	+6	+172	+72	+72
	+252	-365	-167	-167	-163	+367	-366	-212	-211	-167	-163	-17	-7	-173	-153	-47	-7	-173	-73	-73
	-246	+367	+165	+161	+165	-167	+166	+12	+11	+165	+161	+15	+5	+171	+151	+45	+5	+171	+71	+71
	+242	-366	-164	-164	-160	+155	-164	-13	-10	-164	-160	-14	-4	-170	-150	-44	-4	-170	-70	-70
	-236	+370	+172	+374	+370	-371	+370	+207	+204	+374	+370	+210	+200	+374	+354	+240	+200	+374	+274	+274
	+232	-371	-173	-371	-375	+373	-372	-206	-205	-375	-371	-211	-201	-375	-355	-241	-201	-375	-275	-275
	-226	+373	+171	+377	+373	-173	+172	+6	+5	+377	+373	+213	+203	+377	+357	+243	+203	+377	+277	+277
	+222	-372	-170	-372	-376	+171	-170	-7	-4	-376	-372	-212	-202	-376	-356	-242	-202	-376	-276	-276
	-216	+374	+176	+176	+172	-375	+374	+203	+200	+176	+172	+12	+2	+176	+156	+42	+2	+176	+76	+76
	+212	-375	-177	-173	-177	+377	-376	-202	-201	-177	-173	-13	-3	-177	-157	-43	-3	-177	-77	-77
	-206	+377	+175	+175	+171	-177	+176	+2	+1	+175	+171	+11	+1	+175	+155	+41	+1	+175	+75	+75
	+202	-376	-174	-170	-174	+175	-174	-3	-0	-174	-170	-10	-0	-174	-154	-40	-0	-174	-74	-74
	+2																			+300
	-6																			-301
	+12																			+303
	-16																			-302
	+22																			+102
	-26																			-103
	+32																			+101
	-36																			-100
	+42																			+304
	-46																			-305
	+52																			+307
	-56																			-306
	+62																			+106
	-66																			-107
	+72																			+105
	-76																			-104
	+102																			+310
	-106																			-311
	+112																			+313
	-116																			-312
	+122																			+112
	-126																			-113
	+132																			+111
	-136																			-110

ENTER CORES THRU INDICATED SIDE

SYM	DESCRIPTION	DATE	APPROVAL
REVISIONS 17251			

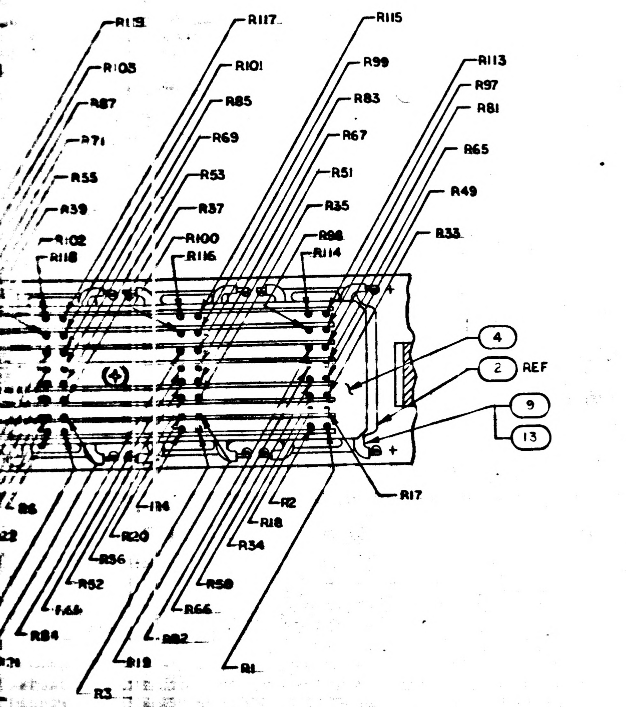
R119
R117
R115
R105
R101
R99
R113
R97
R87
R85
R83
R81
R71
R69
R67
R65
R55
R53
R51
R49
R39
R37
R35
R33
R102
R100
R98
R118
R116
R114
4
2 REF
9
13
R17
R2
R18
R34
R20
R36
R50
R52
R66
F64
R84
R82
R19
R1
R3

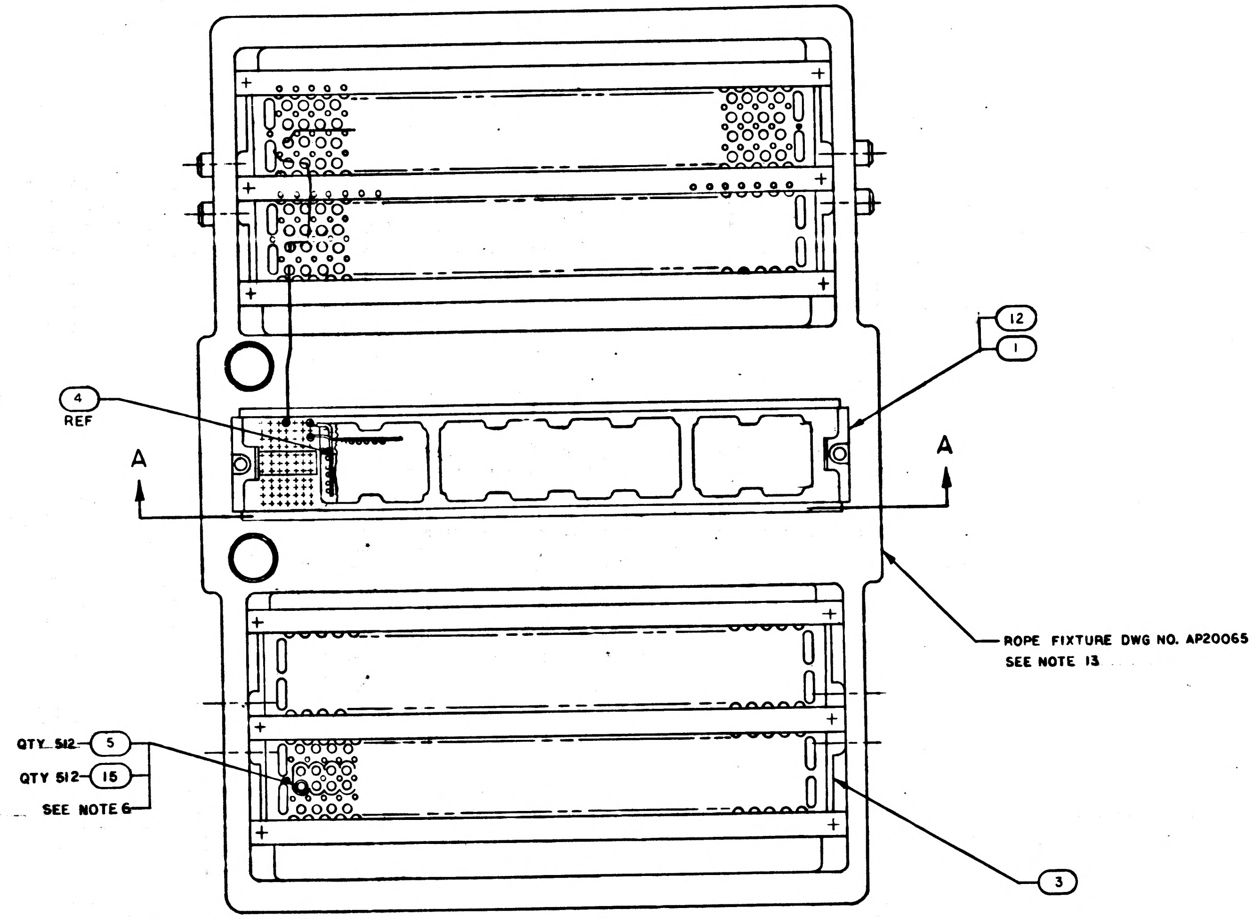
4
REF
12
1
A
A
ROPE FIXTURE DWG NO. AP20065
SEE NOTE 13
QTY 512 5
QTY 512 15
SEE NOTE 6
3

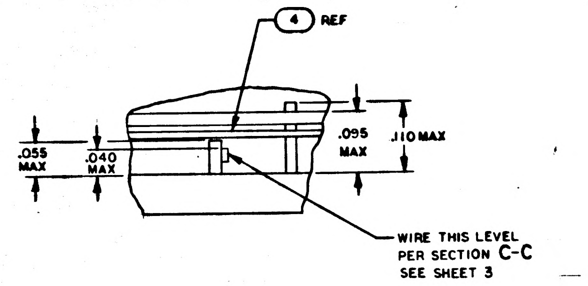
4 REF
.055 MAX
.040 MAX
.095 MAX
.110 MAX
WIRE THIS LEVEL
PER SECTION C-C
SEE SHEET 3

DETAIL A
SCALE: 10/1

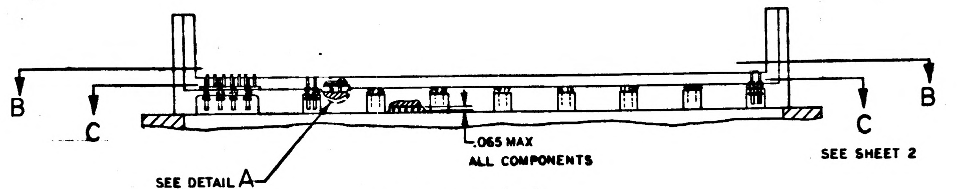
B
C
C
B
SEE DETAIL A
.065 MAX
ALL COMPONENTS
SEE SHEET 2

PARTIAL SECTION A-A

QTY 021	QTY 011	PART OR IDENTIFYING NO.	NOMENCLATURE OR DESCRIPTION	FIND NO.
☒	☒	1006144	SCHEMATIC	REF
512	☒	1006320	CORE, MAGNETIC	15
2	2	1000093-2	SCREW, BUTTON HD	14
AR	AR	1006776-22	SLEEVING	13
☒	1	1003135-011	HEADER, ASSY	12
2	2	1004237	WASHER, FLAT	11
AR	AR	1006275-1	WIRE, ELECTRICAL	10
AR	AR	1006757-1	WIRE, 010 X 020	9
256	256	1006751	DIODE	8
128	128	1006750-39	RESISTOR, FIXED 2K	7
1	1	1003134	TERMINAL BOARD ASSEMBLY	6
☒	512	1006298-1	CORE, MAGNETIC	5
1	1	1004235-3	INSULATOR	4
4	4	1004233	HOLDER, CORE	3
1	1	1004232	HOLDER, COMPONENT	2
1	☒	1003135	HEADER ASSEMBLY	1

LIST OF MATERIALS

NEXT ASSY	USED ON
1003133	
1003733	

APPLICATION

UNLESS OTHERWISE SPECIFIED
DIMENSIONS ARE IN INCHES
TOLERANCES ON
FRACTIONS ± — DECIMALS ± — ANGLES ± —
DO NOT SCALE THIS DRAWING
MATERIAL —
HEAT TREATMENT —
FINAL FINISH —

MIT
INSTRUMENTATION LAB
CAMBRIDGE, MASS
DRAWN *Sladysha* DATE 9-5-65
CHECKED *R. Edward 12 Feb 65*
APPROVAL
APPROVAL *Elder C. Hall 3/5/65*
NASA APPROVAL *3/5/65*
MIT APPROVAL *M. J. Whaley 3-9-65*

MANNED SPACECRAFT CENTER
HOUSTON, TEXAS

ROPE MEMORY MODULE
SUBASSEMBLY

CODE IDENT NO. —
SIZE J
NASA DRAWING NO. 1003821
SCALE 1/1
WT
SHEET 1 OF 3

MASTER

NOTICE — WHEN GOVERNMENT DRAWINGS, SPECIFICATIONS, OR OTHER DATA ARE USED FOR ANY PURPOSE OTHER THAN IN CONNECTION WITH A DEFINITELY RELATED GOVERNMENT PROCUREMENT OPERATION, THE UNITED STATES GOVERNMENT THEREBY INCURS NO RESPONSIBILITY NOR ANY OBLIGATION WHATSOEVER; AND THE FACT THAT THE GOVERNMENT MAY HAVE FORMULATED, FURNISHED, OR IN ANY WAY SUPPLIED THE SAID DRAWINGS, SPECIFICATIONS, OR OTHER DATA IS NOT TO BE REGARDED BY IMPLICATION OR OTHERWISE AS IN ANY MANNER LICENSING THE HOLDER OR ANY OTHER PERSON OR CORPORATION, OR CONVEYING ANY RIGHTS OR PERMISSION TO MANUFACTURE, USE, OR SELL ANY PATENTED INVENTION THAT MAY IN ANY WAY BE RELATED THERETO.

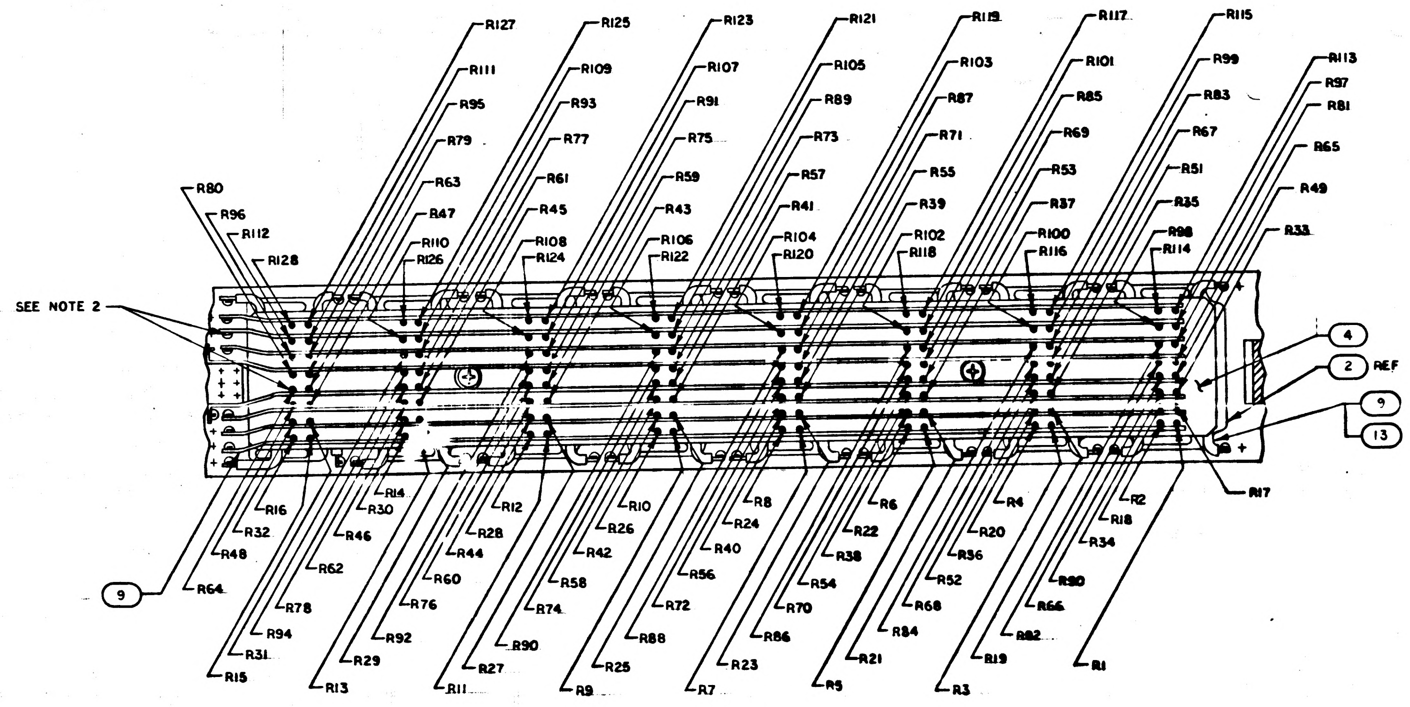
R127
R125
R123
R121
R119
R117
R115
R111
R109
R107
R105
R103
R101
R99
R113
R97
R81
R95
R93
R91
R89
R87
R85
R83
R79
R77
R75
R73
R71
R69
R67
R65
R63
R61
R59
R57
R55
R53
R51
R49
R47
R45
R43
R41
R39
R37
R35
R33
R80
R96
R112
R128
R110
R126
R108
R124
R106
R122
R104
R120
R102
R118
R100
R116
R98
R114
SEE NOTE 2
4
2 REF
9
13
R17
R16
R32
R48
R64
R14
R30
R46
R62
R78
R94
R31
R15
R29
R13
R60
R76
R92
R12
R28
R44
R74
R90
R27
R11
R10
R26
R42
R58
R88
R25
R9
R8
R24
R40
R56
R72
R23
R7
R6
R22
R38
R54
R70
R86
R21
R5
R4
R20
R36
R52
R68
R84
R3
R2
R18
R34
R50
R66
R82
R19
R1

PARTIAL SECTION B-B

FIND NO. 12 NOT SHOWN

SCALE: 2/1

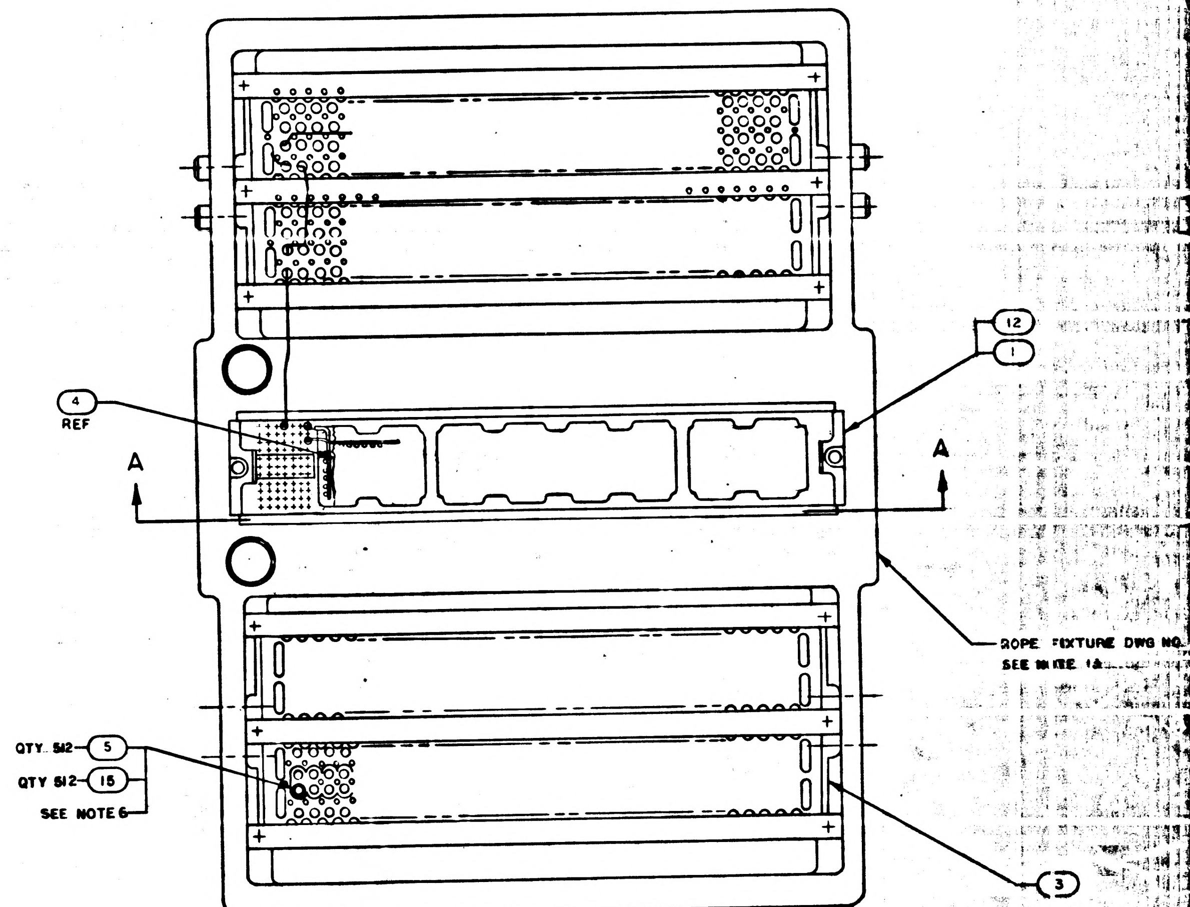
12
1
4
REF
A
A
ROPE FIXTURE DWG NO.
SEE NOTE 13
QTY 512
5
QTY 512
15
SEE NOTE 6
3

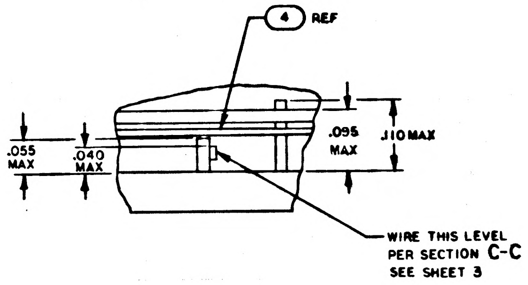
4 REF
.055 MAX
.040 MAX
.095 MAX
.110 MAX
WIRE THIS LEVEL PER SECTION C-C SEE SHEET 3

DETAIL A

SCALE: 10/1

NOTES

1. ALL CONNECTIONS USING FIND NO.10 TO BE MADE BY SOLDERING PER ND1002071. DO NOT TIN LEADS. SOLDER WRAPS TO BE 2 TO 4 TURNS
2. ALL CONNECTIONS USING FIND NO. 9 TO BE MADE BY WELDING PER ND1002005
3. INHIBIT WIRE PER TABLE SHOWN ON SHEET 3 AND PER ND1002029
4. INTERPRET DRAWING IN ACCORDANCE WITH STANDARDS PRESCRIBED BY MIL-D-70327
5. BOND FIND NO.6 TO FIND NO.1 PER ND1002004 TYPE I
6. BOND FIND NO.5 AND FIND NO.15 TO FIND NO.3 USING EPOXY ADHESIVE DWG NO.1011541
7. WHITE DOT DENOTES LEAD TO BE CUT FOR FIRST LEVEL WIRING
8. BLACK DOT DENOTES LEAD TO BE CUT FOR SECOND LEVEL WIRING
9. K DENOTES CATHODE SIDE OF DIODE
10. AR DENOTES AS REQUIRED
11. SELECT FIND NO. 8 NOTED (A) AND (B), EXAMPLE (A)-CR6 (B)-CR6, PER THE ELECTRICAL REQUIREMENTS: AT A FORWARD CURRENT OF 1.8Ma ±2%, AND AT A FORWARD CURRENT OF 3.6Ma ±2% THE VOLTAGE DROP ACROSS BOTH DIODES SHALL BE WITHIN 1 Mv OF EACH OTHER
12. ASSEMBLE FIND NO.14 TO FIND NO.1 USING MIL-S-22473 GRADE HV
13. THIS ASSEMBLY IS TO BE STORED WITH ROPE FIXTURE DWG NO. AP20065
14. STAKE FIND NO.7 AND FIND NO.8 TO FIND NO. 2 PER ND1002009, METHOD C OR D
15. UNLESS OTHERWISE SPECIFIED ALL WIRING SHALL BE IN ACCORDANCE WITH ND 1002069

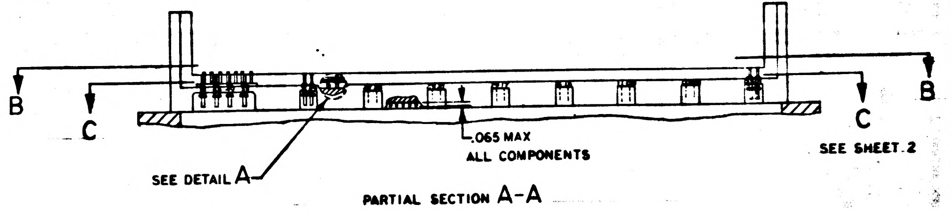
B
C
C
B
.065 MAX
ALL COMPONENTS
SEE DETAIL A
SEE SHEET 2

PARTIAL SECTION A-A

REFERENCES

1. ROPE FIXTURE DWG NO. AP20065

—	1003821

REVISIONS 17251			
SYM	DESCRIPTION	DATE	APPROVAL

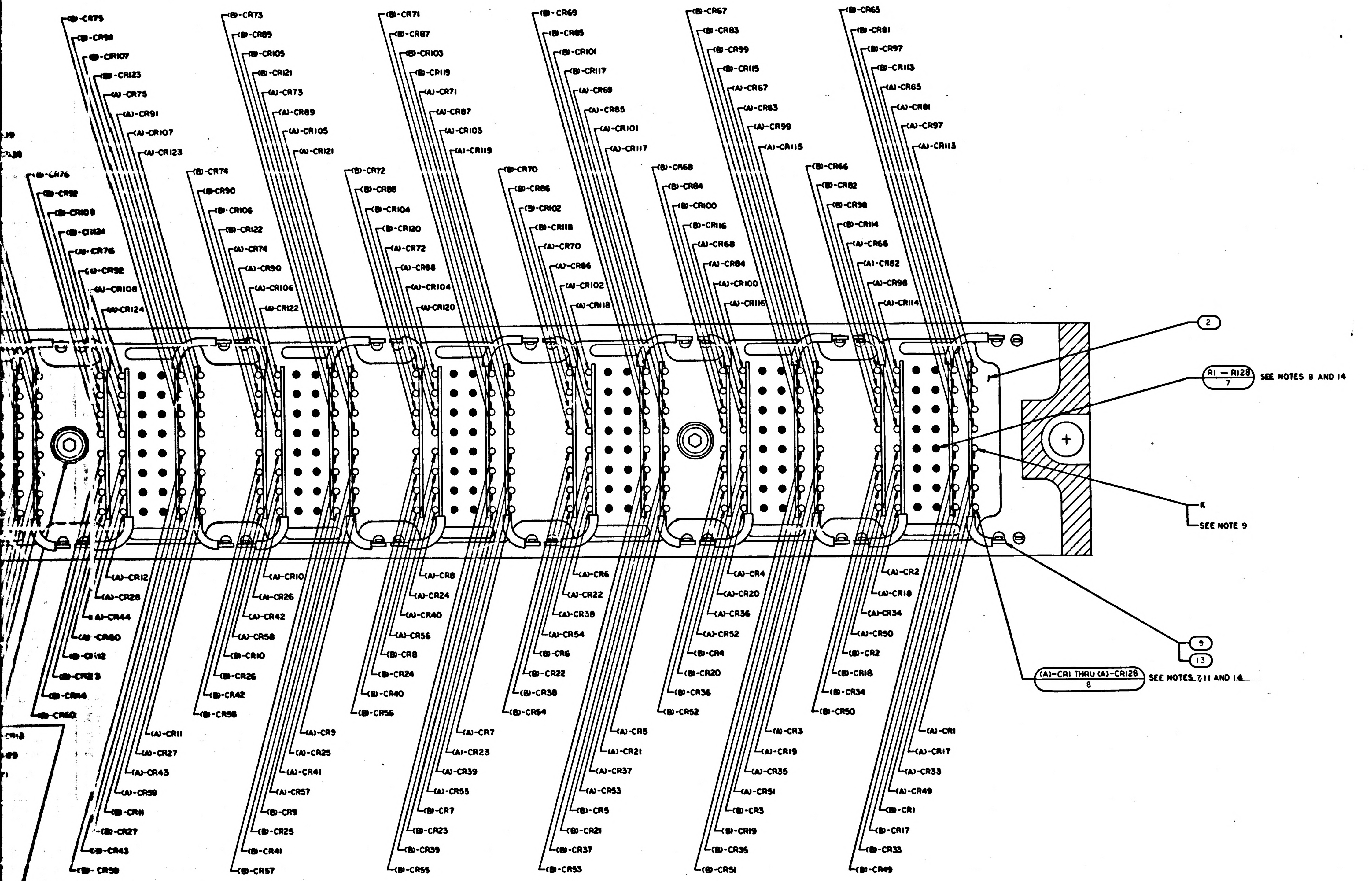

(B)-CR75
(B)-CR91
(B)-CR107
(B)-CR123
(A)-CR75
(A)-CR91
(A)-CR107
(A)-CR123
(B)-CR73
(B)-CR89
(B)-CR105
(B)-CR121
(A)-CR73
(A)-CR89
(A)-CR105
(A)-CR121
(B)-CR71
(B)-CR87
(B)-CR103
(B)-CR119
(A)-CR71
(A)-CR87
(A)-CR103
(A)-CR119
(B)-CR69
(B)-CR85
(B)-CR101
(B)-CR117
(A)-CR69
(A)-CR85
(A)-CR101
(A)-CR117
(B)-CR67
(B)-CR83
(B)-CR99
(B)-CR115
(A)-CR67
(A)-CR83
(A)-CR99
(A)-CR115
(B)-CR65
(B)-CR81
(B)-CR97
(B)-CR113
(A)-CR65
(A)-CR81
(A)-CR97
(A)-CR113
(B)-CR76
(B)-CR92
(B)-CR108
(B)-CR124
(A)-CR76
(A)-CR92
(A)-CR108
(A)-CR124
(B)-CR74
(B)-CR90
(B)-CR106
(B)-CR122
(A)-CR74
(A)-CR90
(A)-CR106
(A)-CR122
(B)-CR72
(B)-CR88
(B)-CR104
(B)-CR120
(A)-CR72
(A)-CR88
(A)-CR104
(A)-CR120
(B)-CR70
(B)-CR86
(B)-CR102
(B)-CR118
(A)-CR70
(A)-CR86
(A)-CR102
(A)-CR118
(B)-CR68
(B)-CR84
(B)-CR100
(B)-CR116
(A)-CR68
(A)-CR84
(A)-CR100
(A)-CR116
(B)-CR66
(B)-CR82
(B)-CR98
(B)-CR114
(A)-CR66
(A)-CR82
(A)-CR98
(A)-CR114
2
R1 — R128
7
SEE NOTES 8 AND 14
K
SEE NOTE 9
9
13
(A)-CR1 THRU (A)-CR128
8
SEE NOTES 7,11 AND 14
(A)-CR12
(A)-CR28
(A)-CR44
(A)-CR60
(B)-CR12
(B)-CR28
(B)-CR44
(B)-CR60
(A)-CR10
(A)-CR26
(A)-CR42
(A)-CR58
(B)-CR10
(B)-CR26
(B)-CR42
(B)-CR58
(A)-CR8
(A)-CR24
(A)-CR40
(A)-CR56
(B)-CR8
(B)-CR24
(B)-CR40
(B)-CR56
(A)-CR6
(A)-CR22
(A)-CR38
(A)-CR54
(B)-CR6
(B)-CR22
(B)-CR38
(B)-CR54
(A)-CR4
(A)-CR20
(A)-CR36
(A)-CR52
(B)-CR4
(B)-CR20
(B)-CR36
(B)-CR52
(A)-CR2
(A)-CR18
(A)-CR34
(A)-CR50
(B)-CR2
(B)-CR18
(B)-CR34
(B)-CR50
(A)-CR11
(A)-CR27
(A)-CR43
(A)-CR59
(B)-CR11
(B)-CR27
(B)-CR43
(B)-CR59
(A)-CR9
(A)-CR25
(A)-CR41
(A)-CR57
(B)-CR9
(B)-CR25
(B)-CR41
(B)-CR57
(A)-CR7
(A)-CR23
(A)-CR39
(A)-CR55
(B)-CR7
(B)-CR23
(B)-CR39
(B)-CR55
(A)-CR5
(A)-CR21
(A)-CR37
(A)-CR53
(B)-CR5
(B)-CR21
(B)-CR37
(B)-CR53
(A)-CR3
(A)-CR19
(A)-CR35
(A)-CR51
(B)-CR3
(B)-CR19
(B)-CR35
(B)-CR51
(A)-CR1
(A)-CR17
(A)-CR33
(A)-CR49
(B)-CR1
(B)-CR17
(B)-CR33
(B)-CR49

10
SEE NOTE 12
6

SECTION C-C

ALL CATHODES NEARSIDE FOR FIND NO. 8
VIEW SHOWN WITH COMPONENT
OUTLINE REMOVED FOR CLARITY

MASTER

QTY REQD	PART OR IDENTIFYING NO.	NOMENCLATURE OR DESCRIPTION	FIND NO.

LIST OF MATERIALS

NEXT ASSY	USED ON
APPLICATION	

UNLESS OTHERWISE SPECIFIED
DIMENSIONS ARE IN INCHES
TOLERANCES ON
FRACTIONS ± DECIMALS ± ANGLES ±
DO NOT SCALE THIS DRAWING
MATERIAL —— // ——
HEAT TREATMENT —— // ——
FINAL FINISH —— // ——

MIT
INSTRUMENTATION LAB
CAMBRIDGE MASS.
DWG. NO. CONTRACT
DRAWN G. Sapha DATE 9FEB65
CHECKED R. Edwards 2 Mar 65
APPROVAL
APPROVAL Eli C Hall 3/5/65
NASA APPROVAL [illegible] 3/5/65
MIT APPROVAL M J Marley 3-9-65

MANNED SPACECRAFT CENTER
HOUSTON, TEXAS

ROPE MEMORY MODULE
SUBASSEMBLY

CODE IDENT NO.	SIZE	NASA DRAWING NO.
——	J	1003821
SCALE 4/1	WT	SHEET 2 OF 3

1003821	SHEET 2

6 5 4 3

1003821

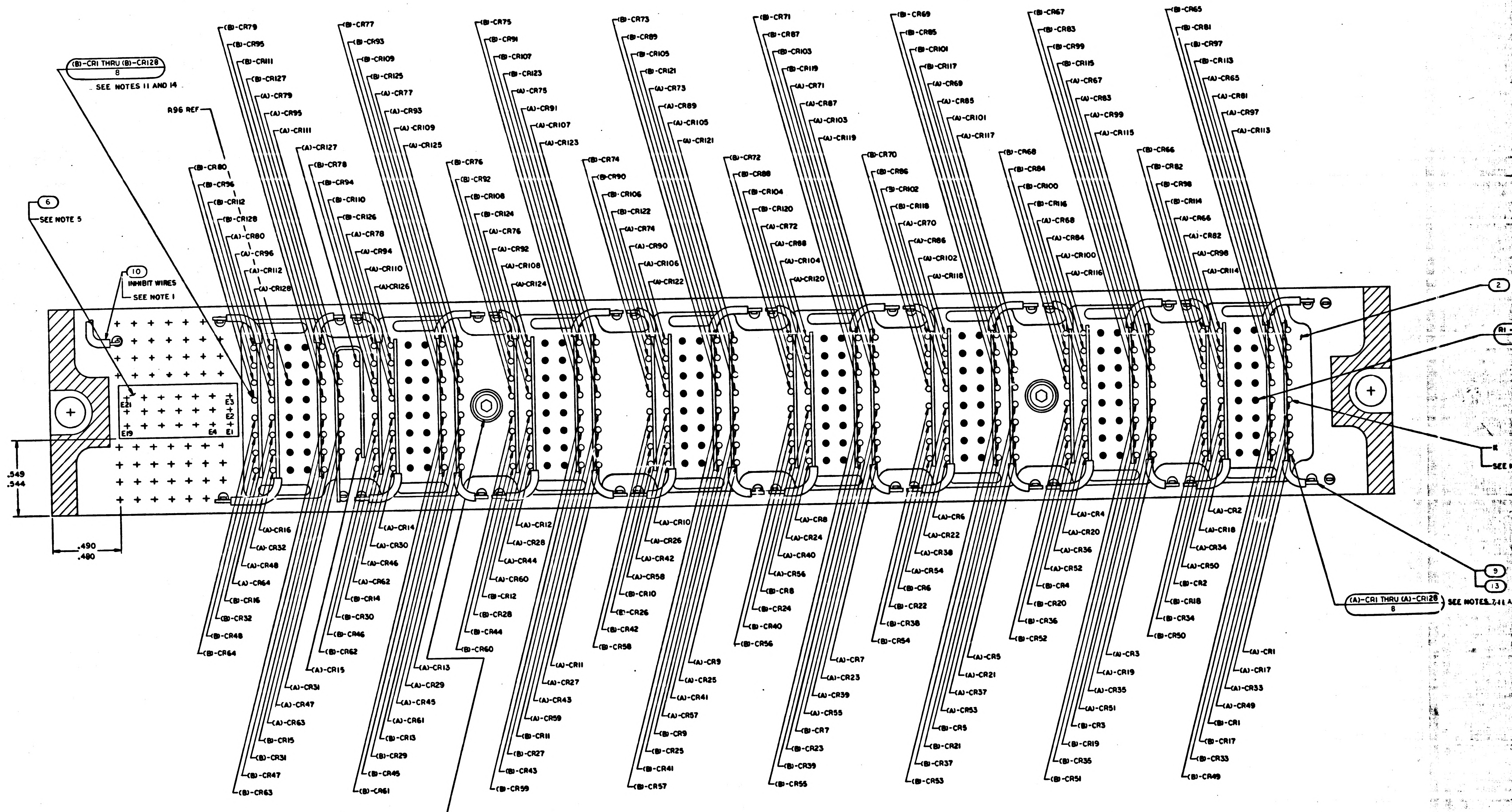
(B)-CR1 THRU (B)-CR128
8
SEE NOTES 11 AND 14
R96 REF
6
SEE NOTE 5
10
INHIBIT WIRES
SEE NOTE 1
E21
E19
E3
E2
E1
E4
.549
.544
.490
.480
(B)-CR79
(B)-CR95
(B)-CR111
(B)-CR127
(A)-CR79
(A)-CR95
(A)-CR111
(A)-CR127
(B)-CR77
(B)-CR93
(B)-CR109
(B)-CR125
(A)-CR77
(A)-CR93
(A)-CR109
(A)-CR125
(B)-CR75
(B)-CR91
(B)-CR107
(B)-CR123
(A)-CR75
(A)-CR91
(A)-CR107
(A)-CR123
(B)-CR73
(B)-CR89
(B)-CR105
(B)-CR121
(A)-CR73
(A)-CR89
(A)-CR105
(A)-CR121
(B)-CR71
(B)-CR87
(B)-CR103
(B)-CR119
(A)-CR71
(A)-CR87
(A)-CR103
(A)-CR119
(B)-CR69
(B)-CR85
(B)-CR101
(B)-CR117
(A)-CR69
(A)-CR85
(A)-CR101
(A)-CR117
(B)-CR67
(B)-CR83
(B)-CR99
(B)-CR115
(A)-CR67
(A)-CR83
(A)-CR99
(A)-CR115
(B)-CR65
(B)-CR81
(B)-CR97
(B)-CR113
(A)-CR65
(A)-CR81
(A)-CR97
(A)-CR113
(B)-CR80
(B)-CR96
(B)-CR112
(B)-CR128
(A)-CR80
(A)-CR96
(A)-CR112
(A)-CR128
(B)-CR78
(B)-CR94
(B)-CR110
(B)-CR126
(A)-CR78
(A)-CR94
(A)-CR110
(A)-CR126
(B)-CR76
(B)-CR92
(B)-CR108
(B)-CR124
(A)-CR76
(A)-CR92
(A)-CR108
(A)-CR124
(B)-CR74
(B)-CR90
(B)-CR106
(B)-CR122
(A)-CR74
(A)-CR90
(A)-CR106
(A)-CR122
(B)-CR72
(B)-CR88
(B)-CR104
(B)-CR120
(A)-CR72
(A)-CR88
(A)-CR104
(A)-CR120
(B)-CR70
(B)-CR86
(B)-CR102
(B)-CR118
(A)-CR70
(A)-CR86
(A)-CR102
(A)-CR118
(B)-CR68
(B)-CR84
(B)-CR100
(B)-CR116
(A)-CR68
(A)-CR84
(A)-CR100
(A)-CR116
(B)-CR66
(B)-CR82
(B)-CR98
(B)-CR114
(A)-CR66
(A)-CR82
(A)-CR98
(A)-CR114
2
R1
9
13
(A)-CR1 THRU (A)-CR128
8
SEE NOTES 7,11 A
SEE
(A)-CR16
(A)-CR32
(A)-CR48
(A)-CR64
(B)-CR16
(B)-CR32
(B)-CR48
(B)-CR64
(A)-CR14
(A)-CR30
(A)-CR46
(A)-CR62
(B)-CR14
(B)-CR30
(B)-CR46
(B)-CR62
(A)-CR12
(A)-CR28
(A)-CR44
(A)-CR60
(B)-CR12
(B)-CR28
(B)-CR44
(B)-CR60
(A)-CR10
(A)-CR26
(A)-CR42
(A)-CR58
(B)-CR10
(B)-CR26
(B)-CR42
(B)-CR58
(A)-CR8
(A)-CR24
(A)-CR40
(A)-CR56
(B)-CR8
(B)-CR24
(B)-CR40
(B)-CR56
(A)-CR6
(A)-CR22
(A)-CR38
(A)-CR54
(B)-CR6
(B)-CR22
(B)-CR38
(B)-CR54
(A)-CR4
(A)-CR20
(A)-CR36
(A)-CR52
(B)-CR4
(B)-CR20
(B)-CR36
(B)-CR52
(A)-CR2
(A)-CR18
(A)-CR34
(A)-CR50
(B)-CR2
(B)-CR18
(B)-CR34
(B)-CR50
(A)-CR15
(A)-CR31
(A)-CR47
(A)-CR63
(B)-CR15
(B)-CR31
(B)-CR47
(B)-CR63
(A)-CR13
(A)-CR29
(A)-CR45
(A)-CR61
(B)-CR13
(B)-CR29
(B)-CR45
(B)-CR61
(A)-CR11
(A)-CR27
(A)-CR43
(A)-CR59
(B)-CR11
(B)-CR27
(B)-CR43
(B)-CR59
(A)-CR9
(A)-CR25
(A)-CR41
(A)-CR57
(B)-CR9
(B)-CR25
(B)-CR41
(B)-CR57
(A)-CR7
(A)-CR23
(A)-CR39
(A)-CR55
(B)-CR7
(B)-CR23
(B)-CR39
(B)-CR55
(A)-CR5
(A)-CR21
(A)-CR37
(A)-CR53
(B)-CR5
(B)-CR21
(B)-CR37
(B)-CR53
(A)-CR3
(A)-CR19
(A)-CR35
(A)-CR51
(B)-CR3
(B)-CR19
(B)-CR35
(B)-CR51
(A)-CR1
(A)-CR17
(A)-CR33
(A)-CR49
(B)-CR1
(B)-CR17
(B)-CR33
(B)-CR49
11
14
SEE NOTE 12

C

B

A

SECTION C-C

ALL CATHODES NEARSIDE FOR FIND NO. 8
VIEW SHOWN WITH COMPONENT
OUTLINE REMOVED FOR CLARITY

1003821 SHEET 2 OF 3

6 5 4 3

1003821 —

REVISIONS 1225!

SYM	DESCRIPTION	DATE	APPROVAL

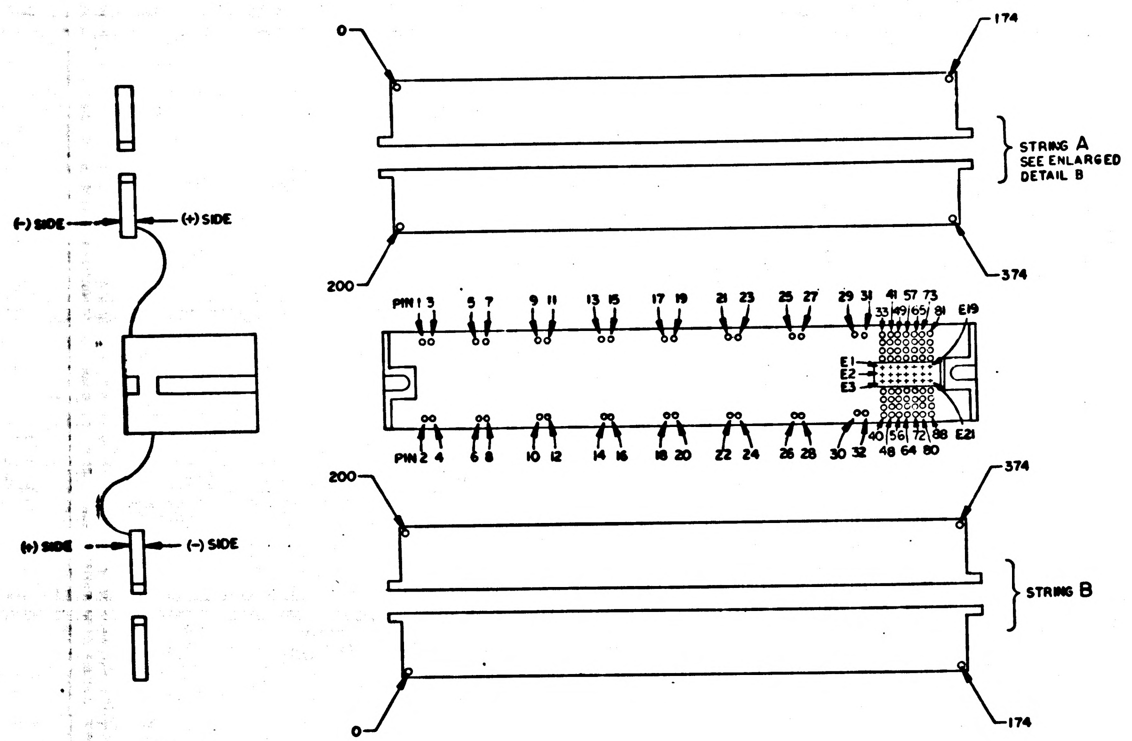

(-) SIDE
(+) SIDE
0
174
STRING A
SEE ENLARGED
DETAIL B
200
374
PIN 1 3 5 7 9 11 13 15 17 19 21 23 25 27 29 31 33 41 49 57 65 73 81 E19
E1
E2
E3
PIN 2 4 6 8 10 12 14 16 18 20 22 24 26 28 30 32 40 48 56 64 72 80 88 E21
200
374
(+) SIDE
(-) SIDE
STRING B
0
174

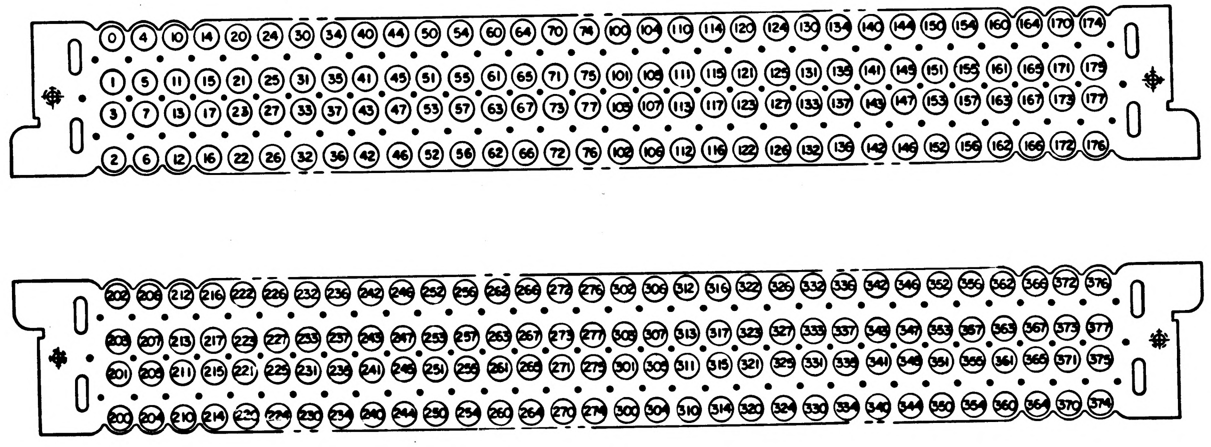

0 4 10 14 20 24 30 34 40 44 50 54 60 64 70 74 100 104 110 114 120 124 130 134 140 144 150 154 160 164 170 174
1 5 11 15 21 25 31 35 41 45 51 55 61 65 71 75 101 105 111 115 121 125 131 135 141 145 151 155 161 165 171 175
3 7 13 17 23 27 33 37 43 47 53 57 63 67 73 77 103 107 113 117 123 127 133 137 143 147 153 157 163 167 173 177
2 6 12 16 22 26 32 36 42 46 52 56 62 66 72 76 102 106 112 116 122 126 132 136 142 146 152 156 162 166 172 176
202 206 212 216 222 226 232 236 242 246 252 256 262 266 272 276 302 306 312 316 322 326 332 336 342 346 352 356 362 366 372 376
203 207 213 217 223 227 233 237 243 247 253 257 263 267 273 277 303 307 313 317 323 327 333 337 343 347 353 357 363 367 373 377
201 205 211 215 221 225 231 235 241 245 251 255 261 265 271 275 301 305 311 315 321 325 331 335 341 345 351 355 361 365 371 375
200 204 210 214 220 224 230 234 240 244 250 254 260 264 270 274 300 304 310 314 320 324 330 334 340 344 350 354 360 364 370 374

DETAIL B

MASTER

QTY REQD	PART OR IDENTIFYING NO.	NOMENCLATURE OR DESCRIPTION	FIND NO.

LIST OF MATERIALS

NEXT ASSY	USED ON
APPLICATION	

UNLESS OTHERWISE SPECIFIED
DIMENSIONS ARE IN INCHES
TOLERANCES ON
FRACTIONS ± DECIMALS ± ANGLES ±
DO NOT SCALE THIS DRAWING
MATERIAL
HEAT TREATMENT
FINAL FINISH

MIT
INSTRUMENTATION LAB
CAMBRIDGE, MASS.
DRAWN G. J. Rim DATE 17FEB65
CHECKED
APPROVAL
APPROVAL Eldon C. Hall 3/5/65
NASA APPROVAL 3/8/65
MIT APPROVAL 3-9-65
MIT APPROVAL

MANNED SPACECRAFT CENTER
HOUSTON, TEXAS

ROPE MEMORY MODULE
SUBASSEMBLY

CODE IDENT NO. —
SIZE J
NASA DRAWING NO. 1003821
SCALE NONE
WT
SHEET 3 OF 3

1003821

44

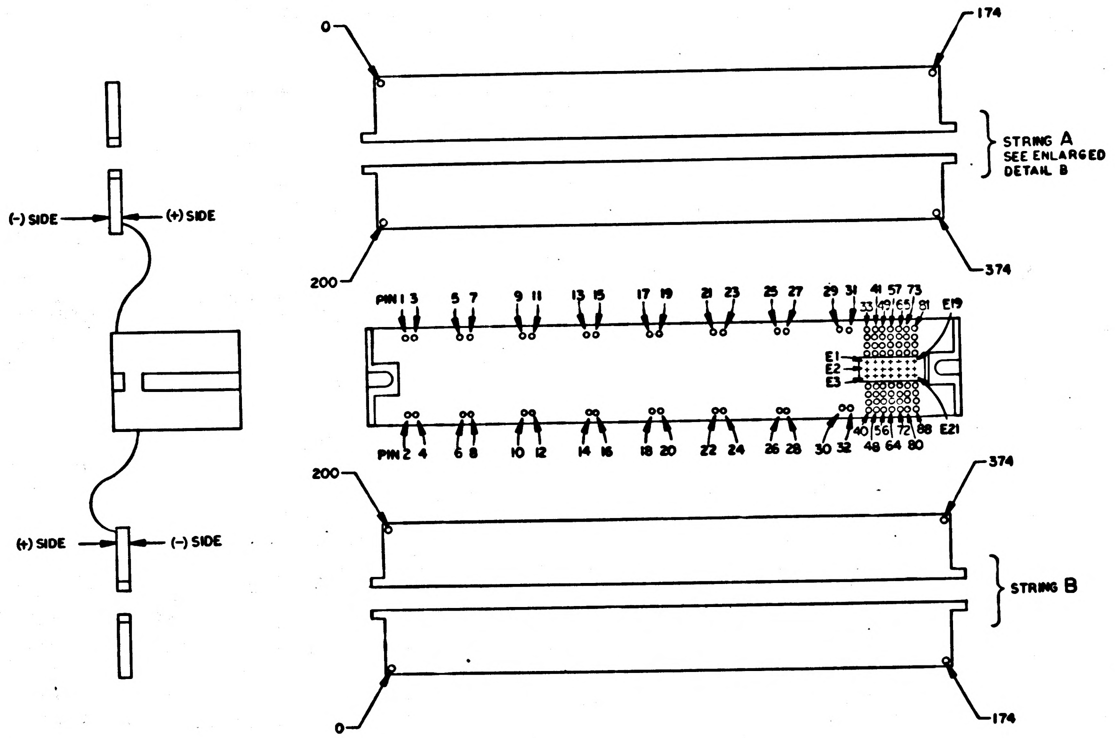
0
174
STRING A
SEE ENLARGED
DETAIL B
200
374
(-) SIDE
(+) SIDE
(+) SIDE
(-) SIDE
PIN 1 3
5 7
9 11
13 15
17 19
21 23
25 27
29 31
33
41 57 73
49 65
81
E19
E1
E2
E3
PIN 2 4
6 8
10 12
14 16
18 20
22 24
26 28
30 32
40 56 72 88
48 64 80
E21
200
374
STRING B
0
174

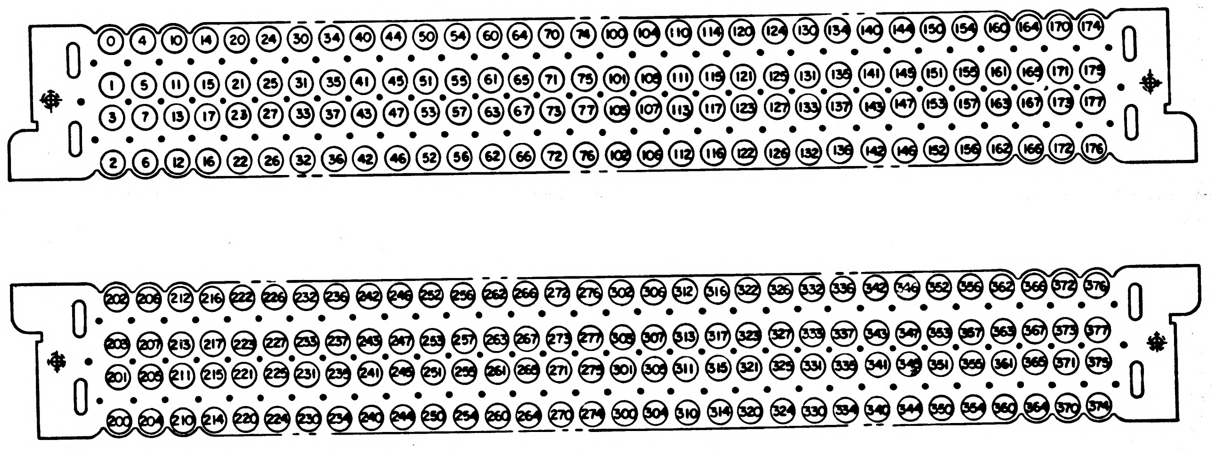
0
174
1
175
3
177
2
176
202
376
203
377
201
375
200
374

DETAIL B

MASTER

QTY REQD	PART OR IDENTIFYING NO.

LIST OF MAT

NEXT ASSY	USED ON
APPLICATION	

UNLESS OTHERWISE SPECIFIED
DIMENSIONS ARE IN INCHES
TOLERANCES ON
FRACTIONS DECIMALS ANGLES
± ± ±
DO NOT SCALE THIS DRAWING
MATERIAL
HEAT TREATMENT
FINAL FINISH

MIT
INSTRUMENTATION LAB
CAMBRIDGE, MASS.
DRAWN G. J. Ris DATE 17FEB65
CHECKED
APPROVAL
APPROVAL Eldon C Hall
NASA APPROVAL 3/9/65
MIT APPROVAL 3-9-65
MIT APPROVAL
CODE IDENT NO.
SCALE NONE

ROPE
S

ENTER CORES THRU
INDICATED SIDE

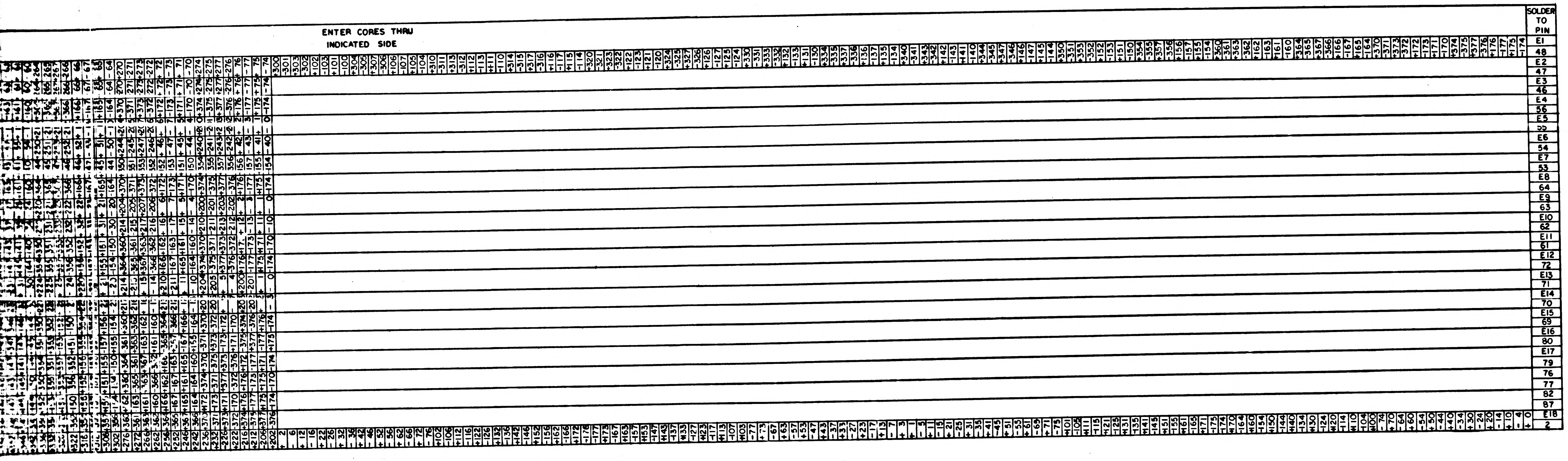
SOLDER TO PIN
E1
48
E2
47
E3
46
E4
56
E5
55
E6
54
E7
53
E8
64
E9
63
E10
62
E11
61
E12
72
E13
71
E14
70
E15
69
E16
80
E17
79
76
77
82
87
E18
2

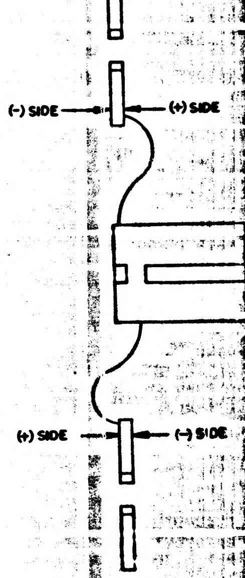
(-) SIDE
(+) SIDE
(+) SIDE
(-) SIDE

12 11 10 9

D

C

B

A

INHIBIT WIRING TABLE

ENTER CORES THRU INDICATED SIDE

WIRE NO.	STRING A	STRING B	SOLDER TO PIN
129	☒		41
		☒	E1
130	☒		42
		☒	E2
131	☒		43
		☒	E3
132	☒		49
		☒	E4
133	☒		50
		☒	E5
134	☒		51
		☒	E6
135	☒		52
		☒	E7
136	☒		57
		☒	E8
137	☒		58
		☒	E9
138	☒		59
		☒	E10
139	☒		60
		☒	E11
140	☒		65
		☒	E12
141	☒		66
		☒	E13
142	☒		67
		☒	E14
143	☒		68
		☒	E15
144	☒		73
		☒	E16
145	☒		74
		☒	E17
146	☒		75
		☒	78
147	☒		81
		☒	88
148	☒		1
		☒	E18

1003821 -

12 11 10 9

SYM	ZONE	DESCRIPTION	DR	CHK	DATE	APPROVED
A		REVISED PER TDRR 20820				

REVISIONS 20557

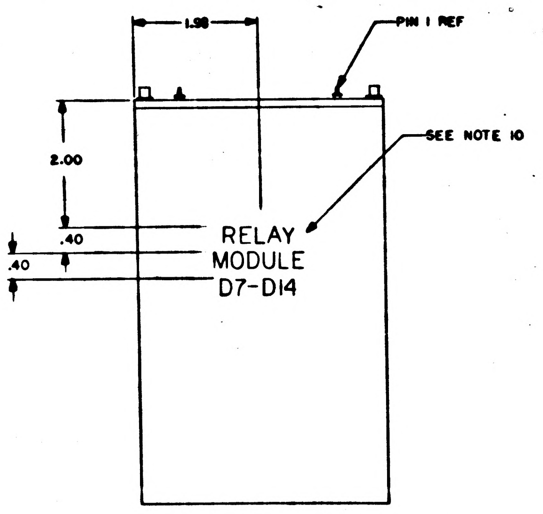
1.98
PIN 1 REF
SEE NOTE 10
2.00
.40
.40
RELAY
MODULE
D7-D14

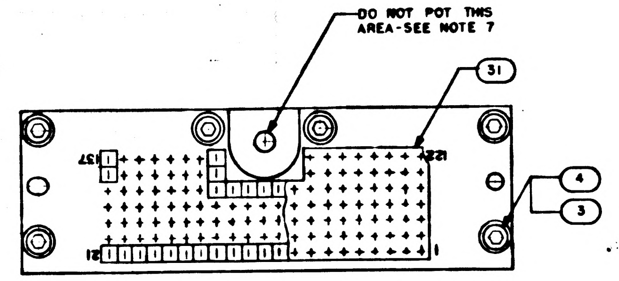
DO NOT POT THIS AREA-SEE NOTE 7
31
4
3
137
121
12
1

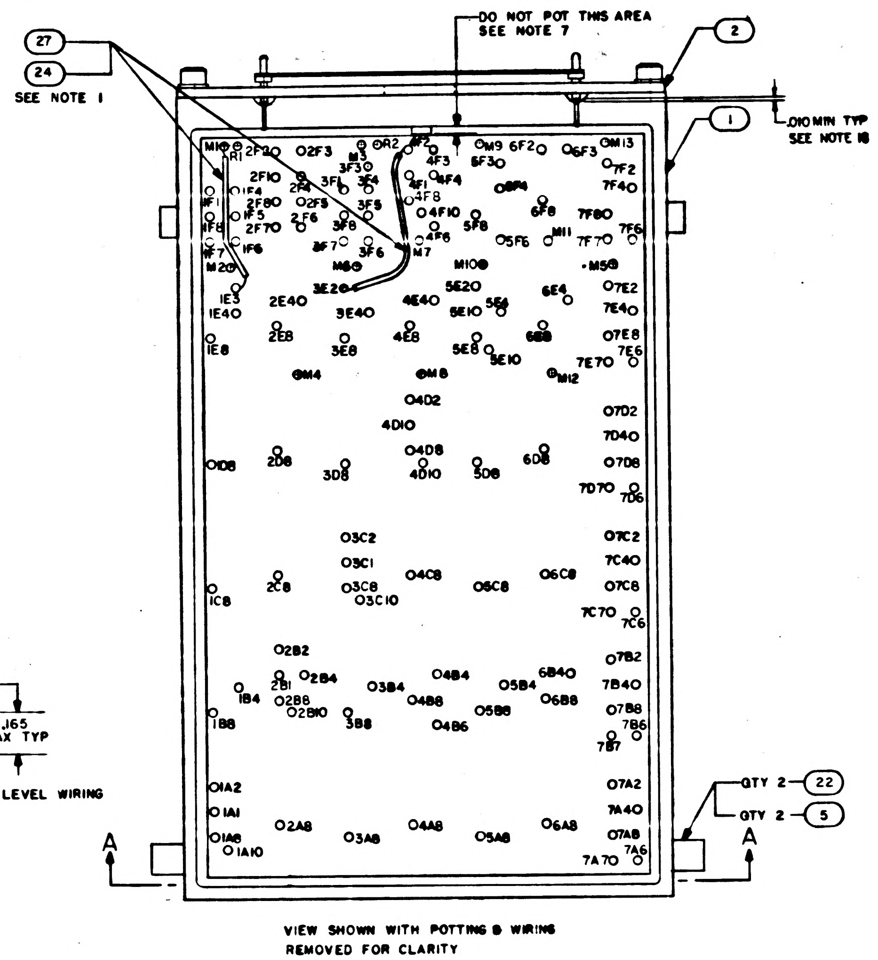
DO NOT POT THIS AREA SEE NOTE 7
27
24
SEE NOTE 1
2
1
.010 MIN TYP SEE NOTE 18
QTY 2 22
QTY 2 5
A
A

VIEW SHOWN WITH POTTING & WIRING REMOVED FOR CLARITY

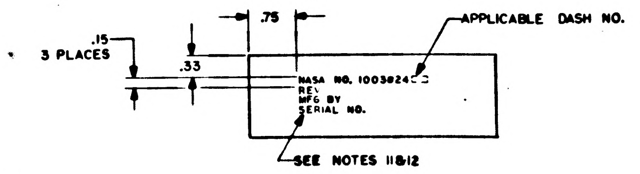
.15
3 PLACES
.33
.75
APPLICABLE DASH NO.
NASA NO. 1003824
REV
MFG BY
SERIAL NO.
SEE NOTES 11&12

MARKING VIEW
SCALE 1/1

NOTES:
1. WELD ALL FIRST & SECOND LEVEL CONNECTIONS AND AS NOTED ON THIRD LEVEL PER ND 1002005
2. FOR THIRD LEVEL CONNECTIONS USE FIND NO. 23 & WIRE WRAP ONE END TO FIND NO. 2 PER ND 1002031 AND WELD ALL OTHER ENDS PER ND 1002005
3. FILL CAVITY EXCEPT WHERE INDICATED WITH BLACK POLYURETHANE FOAM PER ND 1002002
4. SPRAY COAT ALL INSIDE SURFACES OF FIND NO. 1 WITH CLEAR EPOXY PER ND 1002035 EXCEPT .010 MAX THICKNESS
5. △ DENOTES LEADS TO BE CUT .030 MAX ABOVE SURFACE OF FIND NO. 9 & FIND NO. 10
6. ● DENOTES LEADS TO BE CUT AFTER WELDING
7. EXTEND HOLE INDICATED .100/.070 BEYOND INSIDE SURFACE OF FIND NO. 1
8. AR DENOTES AS REQUIRED
9. BOND FIND NO. 9, 10, 25 & 29 TO FIND NO. 26 PER ND 1002004, TYPE V
10. MARK $^{.24}_{.26}$ HIGH WHITE CHARACTERS PER ND 1002019 AND ND 1002122 TYPE II, CLASS I USING MARKING INK 1006271-1
11. MARK $^{.08}_{.10}$ HIGH WHITE CHARACTERS PER ND 1002019 AND ND 1002122 TYPE II, CLASS I USING MARKING INK 1006271-1
12. SERIALIZE PER ND 1002023
13. BOND STICKS TO FIND NO. 1 PER ND 1002004, TYPE I
14. FILL CAVITY PER ND 1002217
15. WORMANSHIP, FABRICATION AND INSPECTION REQUIREMENTS PER ND 1002069
16. STAKE FIND NO. 11 & 28 IN FIND NO. 25 & 29 PER ND 1002009, METHOD B
17. STAKE THIRD LEVEL WIRING TO FIND NO. 6 PER ND 1002004, TYPE V USE STAKING COMPOUND SPARINGLY
18. SEAL TERMINALS TO HEADER PER ND 1002004, TYPE VI
19. FIND NUMBER 10 MAY BE EITHER 1006772-1 OR 1006772-4 EXCEPT DO NOT USE BOTH IN THE SAME ASSY.

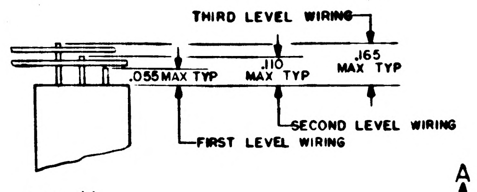
THIRD LEVEL WIRING
.055 MAX TYP
.110 MAX TYP
.165 MAX TYP
SECOND LEVEL WIRING
FIRST LEVEL WIRING

DETAIL H

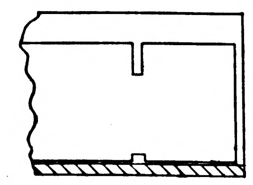

PARTIAL SECTION E-E

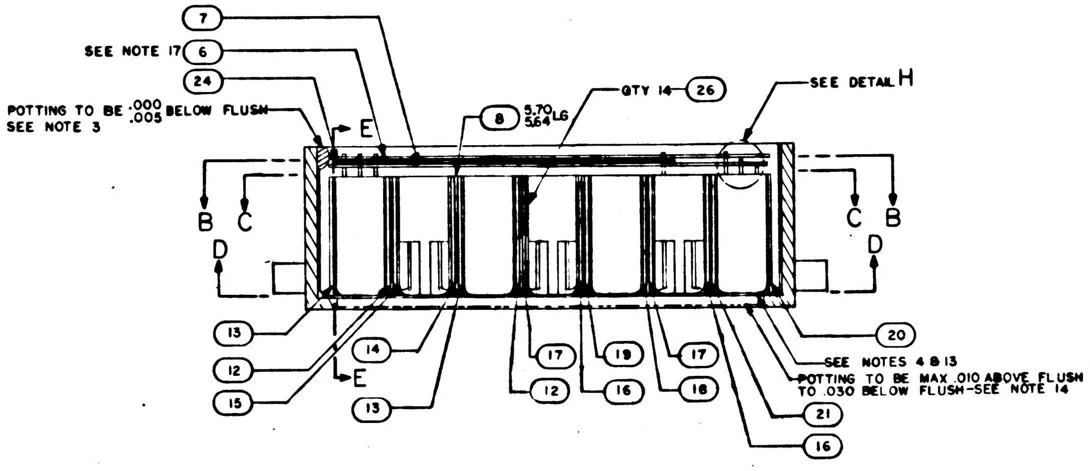
7
SEE NOTE 17 6
24
POTTING TO BE .000/.005 BELOW FLUSH SEE NOTE 3
E
8 5.70/5.64 LG
QTY 14 26
SEE DETAIL H
B
C
D
C
B
D
13
12
15
14
13
E
17
12
19
16
17
18
20
SEE NOTES 4 & 13
POTTING TO BE MAX .010 ABOVE FLUSH TO .030 BELOW FLUSH-SEE NOTE 14
21
16

SECTION A-A

WIRING LIST	
TO	FROM
1	7D4
2	7E2
3	7D7
4	6E8
5	M 3
6	5F4
7	7A8
8	5E10
9	M7
10	4A8
11	4D2
12	4D1
13	4F8
14	3C10
15	3C8
16	3F7
17	2F5
18	2B8
19	2D8
20	M2
21	1A8
22	7E4
23	7C6
24	7D8
25	7B2
26	M10
27	5F6
28	7A7
29	5E8
30	M8
31	4E4
32	4C8
33	4E8
34	4F1
35	3C2
36	2B4
37	3F1
38	M4
39	2B1
40	2F6
41	1E4
42	1B8
43	7F4
44	7F7
45	M12
46	6F2
47	6D8
48	7B7
49	6B8
50	5E1
51	5C8
52	4B4
53	4F6
54	4D8
55	3B8
56	3F3
57	3F8
58	2B10
59	2A8
60	2C8
61	2E8
62	1A10
63	1C8
64	7F6
65	7F2
66	7D2
67	6F8
68	7B8

WIRING LIST	
TO	FROM
69	7A2
70	6B4
71	5E2
72	5B8
73	5B4
74	4D10
75	4F10
76	3A8
77	M6
78	3F4
79	3E8
80	2B2
81	2F4
82	2F7
83	1A2
84	1F1
85	7E6
86	7F8
87	7E7
88	7C7
89	7B6
90	6C8
91	5F8
92	5D8
93	5A8
94	4B6
95	4B8
96	4F4
97	3B4
98	3E4
99	3C1
100	3D8
101	2E4
102	2F3
103	2F1
104	1A1
105	1F7
106	M5
107	7C4
108	M11
109	7C8
110	6E4
111	7A4
112	6A8
113	M3
114	R2
115	3F6
116	3F5
117	R1
118	1F6
119	1B4
120	1F4
121	1E8
122	M13
123	7D6
124	7E8
125	7C2
126	7B4
127	7A6
128	5E4
129	6F3
130	5F3
131	4F3
132	2F8
133	2F2
134	1F5
135	SPARE ●
136	1F8
137	1D8

● DENOTES NO CONNECTION

27

QTY REQD	PART OR IDENTIFYING NO.	MATERIAL OR NOTES	NOMENCLATURE OR DESCRIPTION	FIND NO.

LIST OF MATERIALS

NEXT ASSY	USED ON
1003707	
1003706	

APPLICATION

UNLESS OTHERWISE SPECIFIED
DIMENSIONS ARE IN INCHES
CAPACITOR VALUES ARE IN µf
RESISTOR VALUES ARE IN OHMS
TOLERANCES ON
FRACTIONS ± DECIMALS ±.02 ANGLES ±
DO NOT SCALE THIS DRAWING
MATERIAL

MIT
INSTRUMENTATION LAB
CAMBRIDGE, MASS

DRAWN Bacwalter 1 MAR 65
CHECKED R. Edmond
APPROVED
APPROVED
APPROVED MIT
APPROVED MSC
DATE

MANNED SPACECRAFT CENTER
HOUSTON, TEXAS

RELAY MODULE ASSEMBLY
AGC DSKY, NAV & MAIN

CODE IDENT NO. 80230
SIZE J
DRAWING NO. 1003824
SCALE 2/1
SHEET OF 2

MASTER

SYM	ZONE	DESCRIPTION	DR	CHK	DATE	APPROVED
A		REVISED PER TDRR 20820			8/4	

REVISIONS 20557

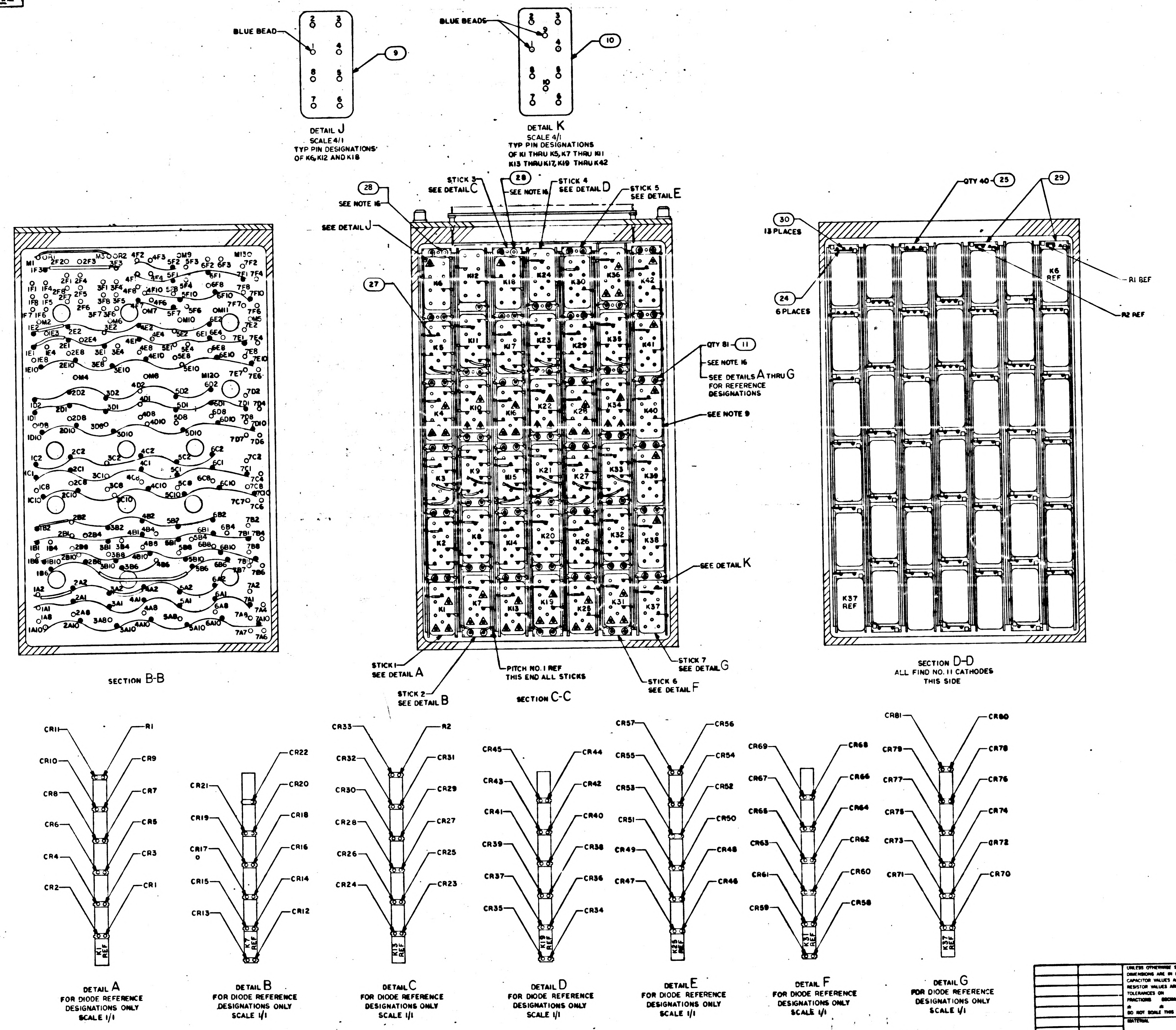
BLUE BEAD
2 3 1 4 8 5 7 6
9
DETAIL J
SCALE 4/1
TYP PIN DESIGNATIONS OF K6, K12 AND K18
BLUE BEADS
10
DETAIL K
SCALE 4/1
TYP PIN DESIGNATIONS OF K1 THRU K5, K7 THRU K11 K13 THRU K17, K19 THRU K42
28
SEE NOTE 16
SEE DETAIL J
STICK 3 SEE DETAIL C
STICK 4 SEE DETAIL D
STICK 5 SEE DETAIL E
27
QTY 81 11
SEE NOTE 16
SEE DETAILS A THRU G FOR REFERENCE DESIGNATIONS
SEE NOTE 9
SEE DETAIL K
STICK 1 SEE DETAIL A
STICK 2 SEE DETAIL B
PITCH NO. 1 REF THIS END ALL STICKS
STICK 6 SEE DETAIL F
STICK 7 SEE DETAIL G
SECTION C-C
SECTION B-B
QTY 40 25
29
30
13 PLACES
24
6 PLACES
R1 REF
R2 REF
K6 REF
K37 REF
SECTION D-D
ALL FIND NO. 11 CATHODES THIS SIDE
DETAIL A
FOR DIODE REFERENCE DESIGNATIONS ONLY
SCALE 1/1
DETAIL B
FOR DIODE REFERENCE DESIGNATIONS ONLY
SCALE 1/1
DETAIL C
FOR DIODE REFERENCE DESIGNATIONS ONLY
SCALE 1/1
DETAIL D
FOR DIODE REFERENCE DESIGNATIONS ONLY
SCALE 1/1
DETAIL E
FOR DIODE REFERENCE DESIGNATIONS ONLY
SCALE 1/1
DETAIL F
FOR DIODE REFERENCE DESIGNATIONS ONLY
SCALE 1/1
DETAIL G
FOR DIODE REFERENCE DESIGNATIONS ONLY
SCALE 1/1
K1 REF
K7 REF
K13 REF
K19 REF
K25 REF
K31 REF
K37 REF

QTY REQD	PART OR IDENTIFYING NO.	MATERIAL OR NOTES	NOMENCLATURE OR DESCRIPTION	FIND NO
☒	1005780		SCHEMATIC	REF
1	1004654		GASKET	31
AR	1006757-13		WIRE ELECTRICAL .020 DIA	30
2	1004124-2		BLOCK, DIODE	29
2	1006750-72		RESISTOR, FIXED	28
AR	1006776-22		INSULATION, SLEEVING	27
14	1004852		BACKING STRIP	26
40	1004124-1		BLOCK, DIODE	25
AR	1006757-7		WIRE, ELECTRICAL .005 X .020	24
AR	1006732-1		WIRE, ELECTRICAL	23
2	1004540		PIN, STOP	22
1	1003521-5		800 MATRIX ASSY	21
1	1003521-26		800 MATRIX ASSY	20
1	1003521-31		800 MATRIX ASSY	19
1	1003521-32		800 MATRIX ASSY	18
2	1003521-33		800 MATRIX ASSY	17
2	1003521-34		800 MATRIX ASSY	16
1	1003521-29		800 MATRIX ASSY	15
1	1003521-30		800 MATRIX ASSY	14
2	1003521-27		800 MATRIX ASSY	13
2	1003521-28		800 MATRIX ASSY	12
81	1006751		SEMICONDUCTOR DEVICE, DIODE	11
39	SEE NOTE 19		RELAY ARM., MAGNETIC LATCHING	10
3	1006815-2		RELAY ARMATURE	9
AR	1006806-10		INSULATION TAPE, ELECTRICAL	8
1	1004842-1		INSULATOR	7
1	1004842-2		INSULATOR	6
2	MS35200-13		SCREW, FLATHEAD	5
6	NAS620-4		WASHER, FLAT	4
6	MS35457-1		SCREW, SOCKET	3
1	1004145		PLATE, RELAY MODULE	2
1	1004113		HEADER ASSY, RELAY MODULE	1

011 LIST OF MATERIALS

UNLESS OTHERWISE SPECIFIED
DIMENSIONS ARE IN INCHES
CAPACITOR VALUES ARE IN μf
RESISTOR VALUES ARE IN OHMS
TOLERANCES ON
FRACTIONS DECIMALS ANGLES
± ± ±
DO NOT SCALE THIS DRAWING
MATERIAL

NEXT ASSY | USED ON
APPLICATION

MIT
INSTRUMENTATION LAB
CAMBRIDGE MASS

DRAWN A.J. Bison
CHECKED
APPROVED
APPROVED
APPROVED MIT
APPROVED MSC
DATE

MANNED SPACECRAFT CENTER
HOUSTON, TEXAS

RELAY MODULE ASSEMBLY
AGC DSKY, NAV AND MAIN

CODE IDENT NO. 80230 | SIZE J | DRAWING NO. 1003824
SCALE 2/1 | SHEET 2 OF 2

REVISIONS 20557						
SYM	ZONE	DESCRIPTION	DR	CHK	DATE	APPROVED
A		REVISED PER TDRR 20820				
B		REVISED PER TDRR 24455				

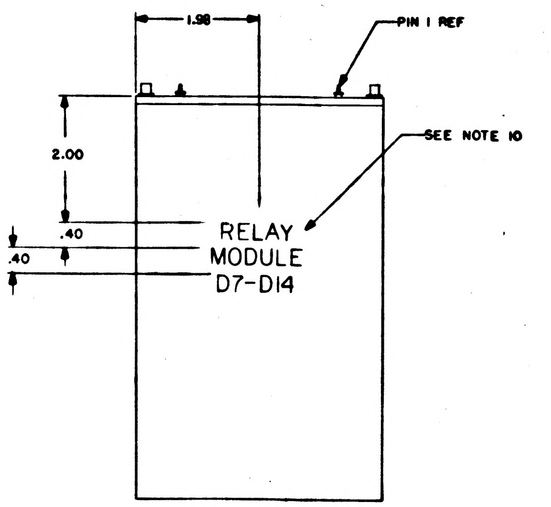

1.98
PIN 1 REF
SEE NOTE 10
2.00
.40
.40
RELAY
MODULE
D7-D14

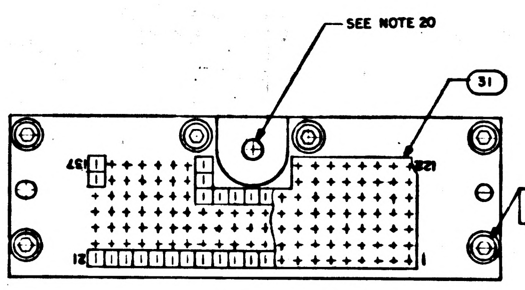

SEE NOTE 20
31
4
3
137
121
12
1

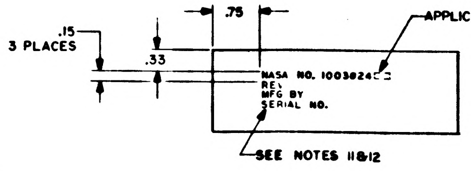

.75
.15
3 PLACES
.33
APPLICABLE DASH NO.
NASA NO. 1003824
REV
MFG BY
SERIAL NO.
SEE NOTES 11 & 12

MARKING VIEW
SCALE 1/1

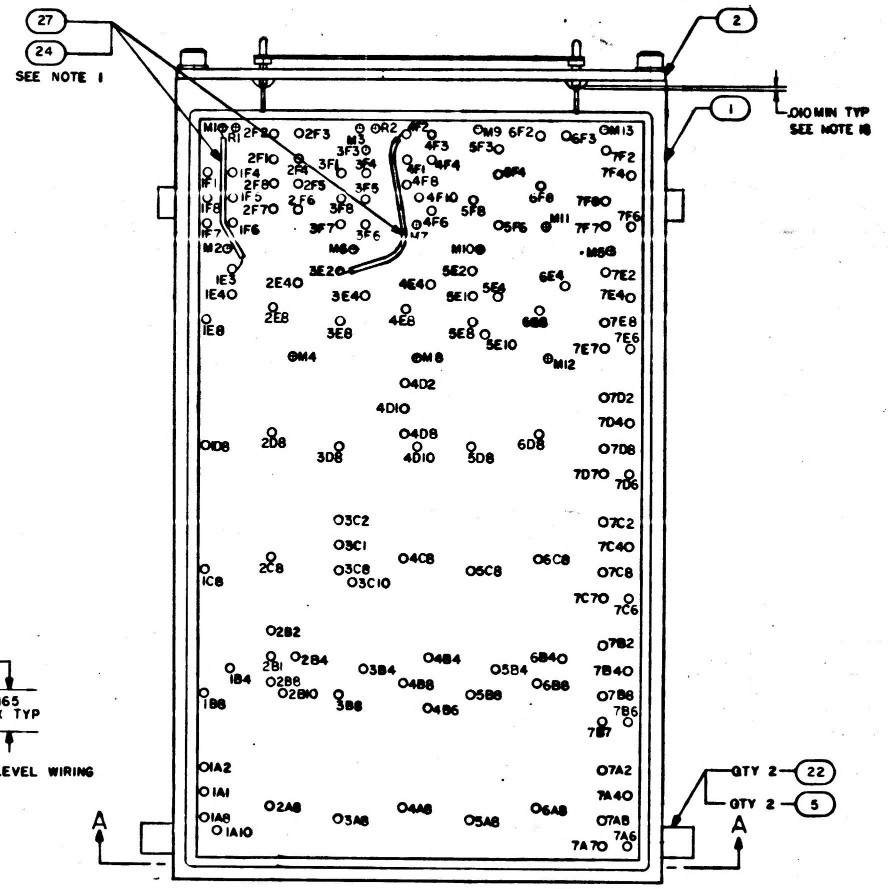

27
24
SEE NOTE 1
2
1
.010 MIN TYP
SEE NOTE 18
QTY 2
22
QTY 2
5
A
A

VIEW SHOWN WITH POTTING & WIRING REMOVED FOR CLARITY

NOTES:

1. WELD ALL FIRST & SECOND LEVEL CONNECTIONS AND AS NOTED ON THIRD LEVEL PER ND 1002005
2. FOR THIRD LEVEL CONNECTIONS USE FIND NO. 23 & WIRE WRAP ONE END TO FIND NO. 2 PER ND 1002031 AND WELD ALL OTHER ENDS PER ND 1002005
3. FILL CAVITY EXCEPT WHERE INDICATED WITH BLACK POLYURETHANE FOAM PER ND 1002002
4. SPRAY COAT ALL INSIDE SURFACES OF FIND NO.1 WITH CLEAR EPOXY PER ND 1002035 EXCEPT .010 MAX THICKNESS
5. △ DENOTES LEADS TO BE CUT .030 MAX ABOVE SURFACE OF FIND NO.9 & FIND NO.10
6. ● DENOTES LEADS TO BE CUT AFTER WELDING
7. ~~EXTEND HOLE INDICATED .100/.070 BEYOND INSIDE SURFACE OF FIND NO.1~~
8. AR DENOTES AS REQUIRED
9. BOND FIND NO. 9, 10, 25 & 29 TO FIND NO.26 PER ND 1002004, TYPE V
10. MARK $^{.21}_{.26}$ HIGH WHITE CHARACTERS PER ND 1002019 AND ND 1002122 TYPE II, CLASS I USING MARKING INK 1006271-1
11. MARK $^{.08}_{.10}$ HIGH WHITE CHARACTERS PER ND 1002019 AND ND 1002122 TYPE II, CLASS I USING MARKING INK 1006271-1
12. SERIALIZE PER ND 1002023
13. BOND STICKS TO FIND NO.1 PER ND 1002004, TYPE I
14. FILL CAVITY PER ND 1002217
15. WORMANSHIP, FABRICATION AND INSPECTION REQUIREMENTS PER ND 1002069
16. STAKE FIND NO. 11 & 28 IN FIND NO.25 & 29 PER ND 1002009, METHOD B
17. STAKE THIRD LEVEL WIRING TO FIND NO.6 PER ND 1002004, TYPE V USE STAKING COMPOUND SPARINGLY
18. SEAL TERMINALS TO HEADER PER ND 1002004, TYPE VI
19. FIND NUMBER 10 MAY BE EITHER 1006772-1 OR 1006772-4 EXCEPT DO NOT USE BOTH IN THE SAME ASSY.
20. HOLE INDICATED TO BE FREE OF POTTING TO INSIDE SURFACE OF FIND NO.1

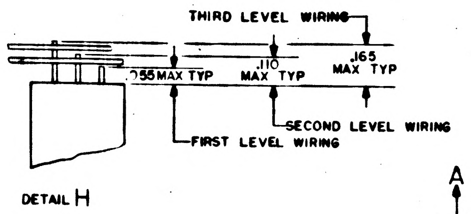

THIRD LEVEL WIRING
.110 MAX TYP
.165 MAX TYP
.055 MAX TYP
SECOND LEVEL WIRING
FIRST LEVEL WIRING

DETAIL H

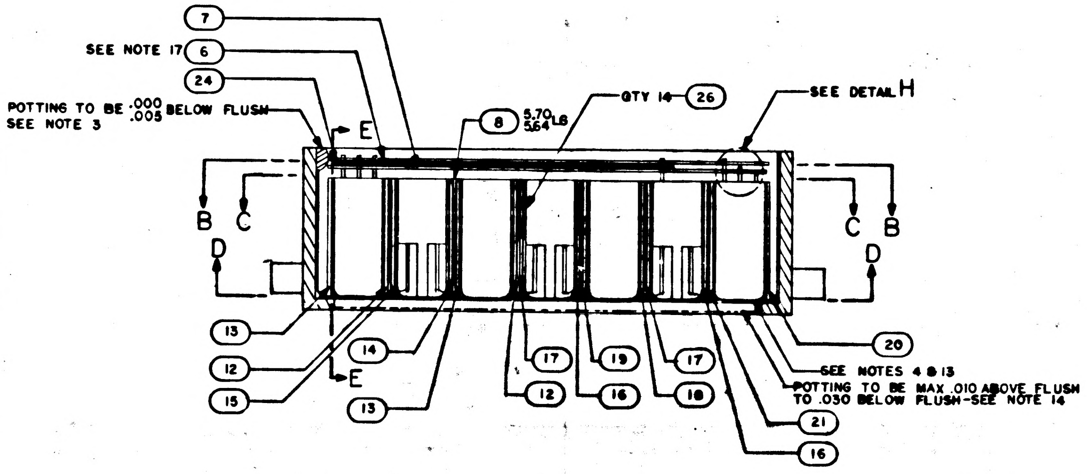

7
SEE NOTE 17
6
24
POTTING TO BE .000/.005 BELOW FLUSH
SEE NOTE 3
E
8
5.70/5.64 L6
QTY 14
26
SEE DETAIL H
B
C
D
C
B
D
13
12
15
14
E
13
12
17
16
19
18
17
20
SEE NOTES 4 & 13
POTTING TO BE MAX .010 ABOVE FLUSH TO .030 BELOW FLUSH-SEE NOTE 14
21
16

SECTION A-A

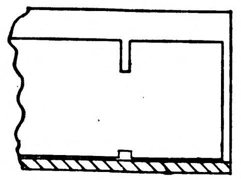

PARTIAL SECTION E-E

WIRING LIST	
TO	FROM
1	7D4
2	7E2
3	7D7
4	6E8
5	M9
6	5F4
7	7A8
8	5E10
9	M7
10	4A8
11	4D2
12	4D1
13	4F8
14	3C10
15	3C8
16	3F7
17	2F5
18	2B8
19	2D8
20	M2
21	1A8
22	7E4
23	7C6
24	7D8
25	7B2
26	M10
27	5F6
28	7A7
29	5E8
30	M8
31	4E4
32	4C8
33	4E8
34	4F1
35	3C2
36	2B4
37	3F1
38	M4
39	2B1
40	2F6
41	1E4
42	1B8
43	7F4
44	7F7
45	M12
46	6F2
47	6D8
48	7B7
49	6B8
50	5E1
51	5C8
52	4B4
53	4F6
54	4D8
55	3B8
56	3F3
57	3F8
58	2B10
59	2A8
60	2C8
61	2E8
62	1A10
63	1C8
64	7F6
65	7F2
66	7D2
67	6F8
68	7B8

WIRING LIST	
TO	FROM
69	7A2
70	6B4
71	5E2
72	5B8
73	5B4
74	4D10
75	4F10
76	3A8
77	M6
78	3F4
79	3E8
80	2B2
81	2F4
82	2F7
83	1A2
84	1F1
85	7E6
86	7F8
87	7E7
88	7C7
89	7B6
90	6C8
91	5F8
92	5D8
93	5A8
94	4B6
95	4B8
96	4F4
97	3B4
98	3E4
99	3C1
100	3D8
101	2E4
102	2F3
103	2F1
104	1A1
105	1F7
106	M5
107	7C4
108	M11
109	7C8
110	6E4
111	7A4
112	6A8
113	M3
114	R2
115	3F6
116	3F5
117	R1
118	1F6
119	1B4
120	1F4
121	1E8
122	M13
123	7D6
124	7E8
125	7C2
126	7B4
127	7A6
128	5E4
129	6F3
130	5F3
131	4F3
132	2F8
133	2F2
134	1F5
135	SPARE ●
136	1F8
137	1D8

● DENOTES NO CONNECTION

MASTER

QTY REQD	PART OR IDENTIFYING NO.	MATERIAL OR NOTES	NOMENCLATURE OR DESCRIPTION	FIND NO.
LIST OF MATERIALS				

NEXT ASSY	USED ON
1003707	
1003706	
APPLICATION	

UNLESS OTHERWISE SPECIFIED
DIMENSIONS ARE IN INCHES
CAPACITOR VALUES ARE IN µf
RESISTOR VALUES ARE IN OHMS
TOLERANCES ON
FRACTIONS ± DECIMALS ±.02 ANGLES ±
DO NOT SCALE THIS DRAWING
MATERIAL

MIT
INSTRUMENTATION LAB
CAMBRIDGE, MASS

DRAWN Bacnorka 1 MAR 63
CHECKED R. Edmond
APPROVED
APPROVED
APPROVED MIT W Coffin
APPROVED MSC
DATE

MANNED SPACECRAFT CENTER
HOUSTON, TEXAS

RELAY MODULE ASSEMBLY
AGC DSKY, NAV & MAIN

CODE IDENT NO. 80230 | SIZE J | DRAWING NO. 1003824
SCALE 2/1 | SHEET 1 OF 2

SYM	ZONE	DESCRIPTION	DR.	CHK	DATE	APPROVED
A		REVISED PER TDRR 20820				
B		REVISED PER TDRR 24495			12/14/65	

REVISIONS 20557

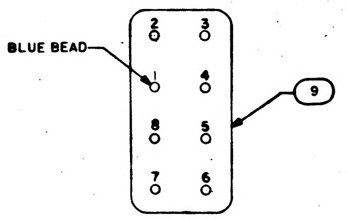

BLUE BEAD
2 3
1 4
8 5
7 6
9

DETAIL J
SCALE 4/1
TYP PIN DESIGNATIONS
OF K6, K12 AND K18

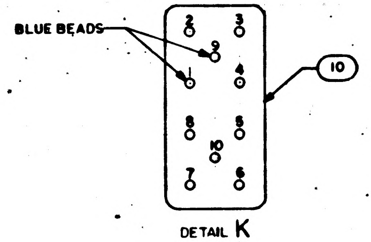

BLUE BEADS
2 3
9
1 4
8 5
10
7 6
10

DETAIL K
SCALE 4/1
TYP PIN DESIGNATIONS
OF K1 THRU K5, K7 THRU K11
K13 THRU K17, K19 THRU K42

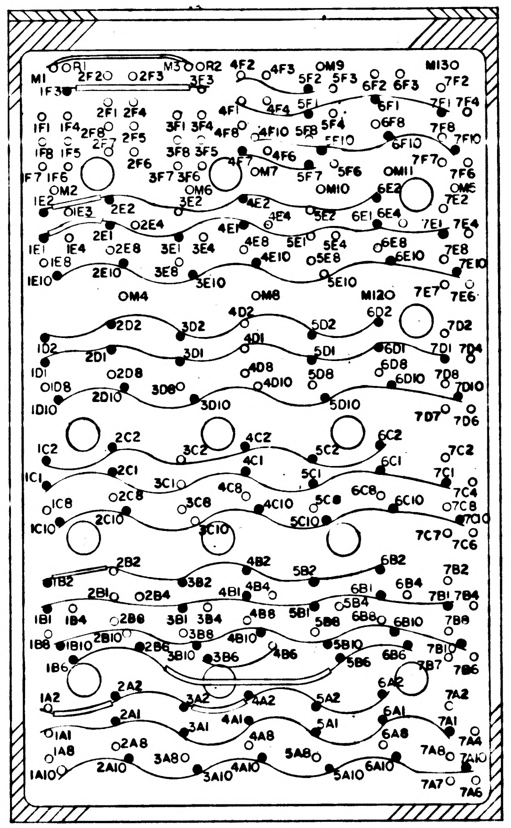

M1
0R1
2F2
0R2
M3
4F2
4F3
0M9
M13
7F2
1F3
2F3
3F3
5F2
5F3
6F2
6F3
1F1
1F4
2F1
2F4
3F1
3F4
4F1
4F4
5F1
6F1
7F1
7F4
1F8
1F5
2F8
2F5
3F8
3F5
4F8
4F10
5F8
5F4
5F10
6F8
6F10
7F8
7F10
1F7
1F6
OM2
3F7
3F6
0M6
4F7
4F6
0M7
5F7
5F6
0M10
0M11
6E2
7F7
7F6
OME
1E2
0E3
2E2
3E2
4E2
4E4
5E2
5E4
6E1
6E4
7E2
7E4
1E1
1E4
2E1
2E4
2E8
3E1
3E4
4E1
4E8
4E10
5E8
5E10
6E8
6E10
7E1
7E8
7E10
1E10
2E10
3E8
5E10
7E7
7E6
0M4
0M8
M12
1D2
2D2
3D2
4D2
5D2
6D2
7D2
2D1
3D1
4D1
5D1
6D1
7D1
7D4
1D1
2D8
4D8
5D8
6D8
7D8
1D8
2D10
3D8
4D10
5D10
6D10
7D10
1D10
3D10
7D7
7D6
1C2
2C2
3C2
4C2
5C2
6C2
7C2
1C1
2C1
3C1
4C1
5C1
6C1
7C1
7C4
1C8
2C8
3C8
4C8
5C8
6C8
6C10
7C8
7C7
1C10
2C10
3C10
4C10
5C10
7C10
7C6
2B2
3B2
4B2
5B2
6B2
7B2
1B2
2B1
2B4
3B4
4B1
4B4
5B1
5B4
6B1
6B4
7B1
7B4
1B1
1B4
2B8
3B1
3B8
4B8
5B8
6B8
6B10
7B8
1B8
1B10
2B10
3B10
4B10
5B10
6B6
7B10
1B6
3B6
4B6
5B6
7B7
7B6
1A2
2A2
3A2
4A2
5A2
6A2
7A2
1A1
2A1
3A1
4A1
5A1
6A1
7A1
7A4
1A8
2A8
3A8
4A8
5A8
6A8
7A8
7A10
1A10
2A10
3A10
4A10
5A10
6A10
7A7
7A6

SECTION B-B

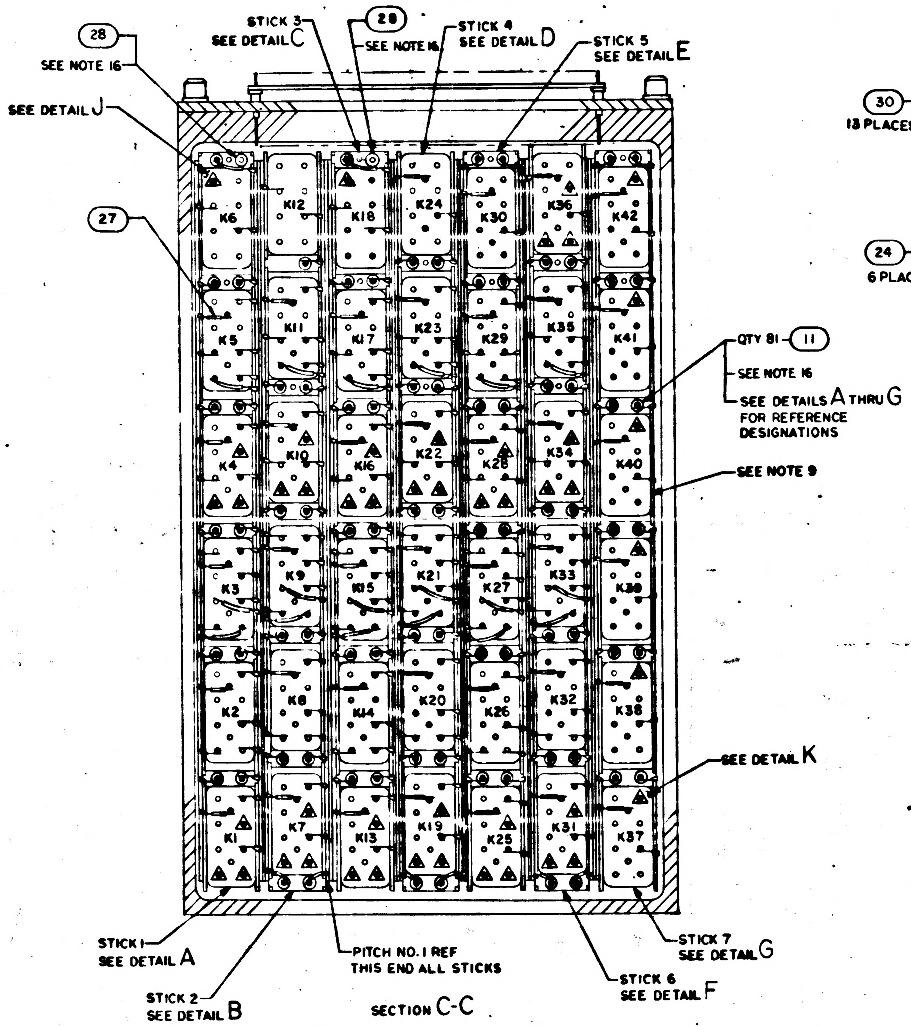

28
SEE NOTE 16
SEE DETAIL J
STICK 3
SEE DETAIL C
28
SEE NOTE 16
STICK 4
SEE DETAIL D
STICK 5
SEE DETAIL E
27
K6
K12
K18
K24
K30
K36
K42
K5
K11
K17
K23
K29
K35
K41
K4
K10
K16
K22
K28
K34
K40
K3
K9
K15
K21
K27
K33
K39
K2
K8
K14
K20
K26
K32
K38
K1
K7
K13
K19
K25
K31
K37
QTY 81
11
SEE NOTE 16
SEE DETAILS A THRU G
FOR REFERENCE
DESIGNATIONS
SEE NOTE 9
SEE DETAIL K
STICK 1
SEE DETAIL A
STICK 2
SEE DETAIL B
PITCH NO. 1 REF
THIS END ALL STICKS
STICK 6
SEE DETAIL F
STICK 7
SEE DETAIL G

SECTION C-C

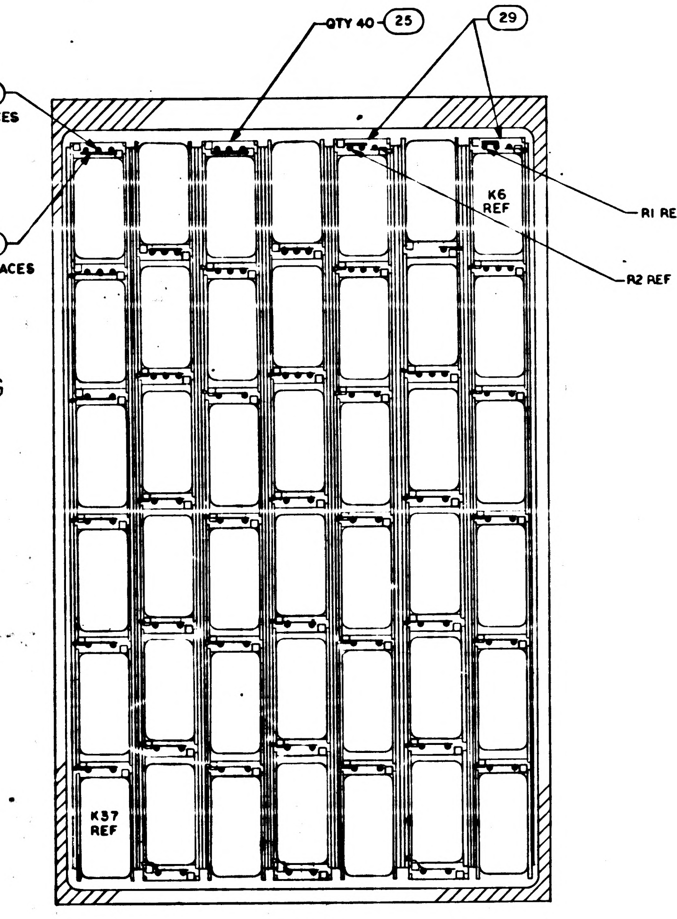

QTY 40
25
29
30
13 PLACES
24
6 PLACES
K6
REF
R1 REF
R2 REF
K37
REF

SECTION D-D
ALL FIND NO. 11 CATHODES
THIS SIDE

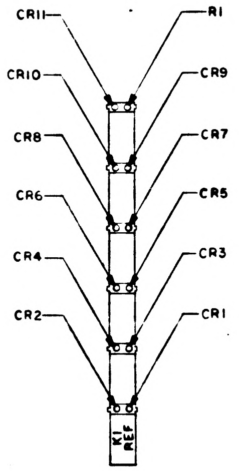

CR11
R1
CR10
CR9
CR8
CR7
CR6
CR5
CR4
CR3
CR2
CR1
K1
REF

DETAIL A
FOR DIODE REFERENCE
DESIGNATIONS ONLY
SCALE 1/1

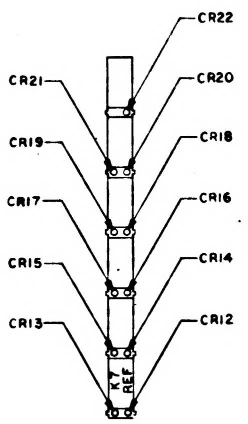

CR22
CR21
CR20
CR19
CR18
CR17
CR16
CR15
CR14
CR13
CR12
K7
REF

DETAIL B
FOR DIODE REFERENCE
DESIGNATIONS ONLY
SCALE 1/1

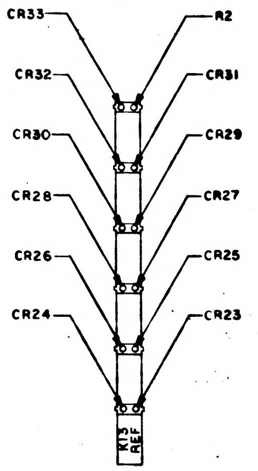

CR33
R2
CR32
CR31
CR30
CR29
CR28
CR27
CR26
CR25
CR24
CR23
K13
REF

DETAIL C
FOR DIODE REFERENCE
DESIGNATIONS ONLY
SCALE 1/1

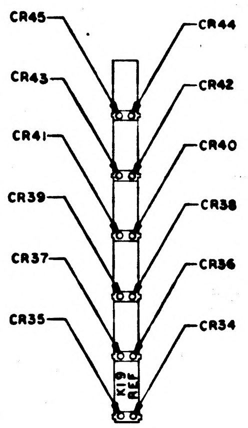

CR45
CR44
CR43
CR42
CR41
CR40
CR39
CR38
CR37
CR36
CR35
CR34
K19
REF

DETAIL D
FOR DIODE REFERENCE
DESIGNATIONS ONLY
SCALE 1/1

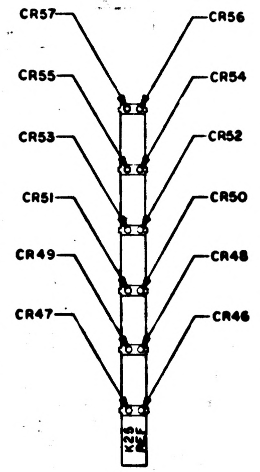

CR57
CR56
CR55
CR54
CR53
CR52
CR51
CR50
CR49
CR48
CR47
CR46
K25
REF

DETAIL E
FOR DIODE REFERENCE
DESIGNATIONS ONLY
SCALE 1/1

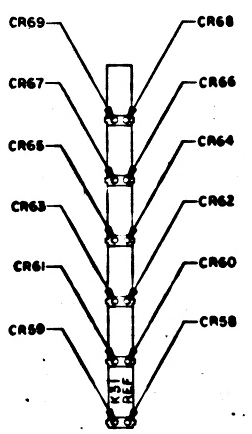

CR69
CR68
CR67
CR66
CR65
CR64
CR63
CR62
CR61
CR60
CR59
CR58
K31
REF

DETAIL F
FOR DIODE REFERENCE
DESIGNATIONS ONLY
SCALE 1/1

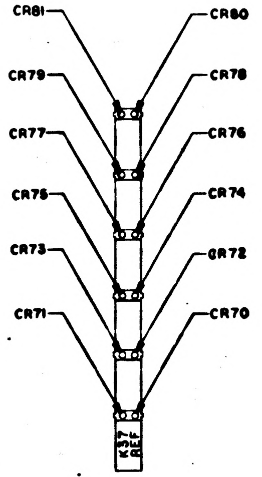

CR81
CR80
CR79
CR78
CR77
CR76
CR75
CR74
CR73
CR72
CR71
CR70
K37
REF

DETAIL G
FOR DIODE REFERENCE
DESIGNATIONS ONLY
SCALE 1/1

MASTER

QTY REQD	PART OR IDENTIFYING NO.	MATERIAL OR NOTES	NOMENCLATURE OR DESCRIPTION	FIND NO.
☒	1005780		SCHEMATIC	REF
1	1004654		GASKET	31
AR	1006757-13		WIRE ELECTRICAL .020 DIA	30
2	1004124-2		BLOCK, DIODE	29
2	1006750-72		RESISTOR, FIXED	28
AR	1006776-22		INSULATION, SLEEVING	27
14	1004852		BACKING STRIP	26
40	1004124-1		BLOCK, DIODE	25
AR	1006757-7		WIRE, ELECTRICAL .005 X .020	24
AR	1006732-1		WIRE, ELECTRICAL	23
2	1004540		PIN, STOP	22
1	1003521-5		800 MATRIX ASSY	21
1	1003521-26		800 MATRIX ASSY	20
1	1003521-31		800 MATRIX ASSY	19
1	1003521-32		800 MATRIX ASSY	18
2	1003521-33		800 MATRIX ASSY	17
2	1003521-34		800 MATRIX ASSY	16
1	1003521-29		800 MATRIX ASSY	15
1	1003521-30		800 MATRIX ASSY	14
2	1003521-27		800 MATRIX ASSY	13
2	1003521-28		800 MATRIX ASSY	12
81	1006751		SEMICONDUCTOR DEVICE, DIODE	11
39	SEE NOTE 19		RELAY ARM., MAGNETIC LATCHING	10
3	1006815-2		RELAY ARMATURE	9
AR	1006806-10		INSULATION TAPE, ELECTRICAL	8
1	1004842-1		INSULATOR	7
1	1004842-2		INSULATOR	6
2	MS35200-13		SCREW, FLATHEAD	5
6	NAS620-4		WASHER, FLAT	4
6	MS35457-1		SCREW, SOCKET	3
1	1004145		PLATE, RELAY MODULE	2
1	1004113		HEADER ASSY, RELAY MODULE	1

011 LIST OF MATERIALS

NEXT ASSY	USED ON
APPLICATION	

UNLESS OTHERWISE SPECIFIED
DIMENSIONS ARE IN INCHES
CAPACITOR VALUES ARE IN μf
RESISTOR VALUES ARE IN OHMS
TOLERANCES ON
FRACTIONS DECIMALS ANGLES
± ± ±
DO NOT SCALE THIS DRAWING
MATERIAL

MIT
INSTRUMENTATION LAB
CAMBRIDGE MASS

MANNED SPACECRAFT CENTER
HOUSTON, TEXAS

DRAWN A. J. Bixon
CHECKED
APPROVED
APPROVED
APPROVED MIT
APPROVED MSC
DATE

RELAY MODULE ASSEMBLY
AGC DSKY, NAV AND MAIN

CODE IDENT NO. 80230 | SIZE J | DRAWING NO. 1003824
SCALE 2/1 | SHEET 2 OF 2

SYM	ZONE	DESCRIPTION	BY	CHK	DATE	APPROVED
		REVISIONS 20557				
A		REVISED PER TDRR 20820				
B		REVISED PER TDRR 24495				
C		REVISED PER TDRR 28403				

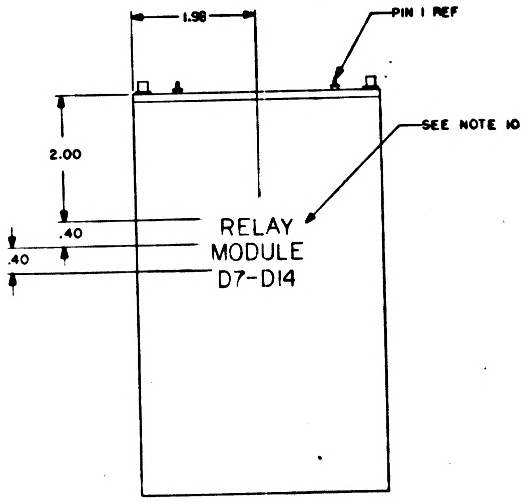

1.98
PIN 1 REF
SEE NOTE 10
2.00
.40
.40
RELAY
MODULE
D7-D14

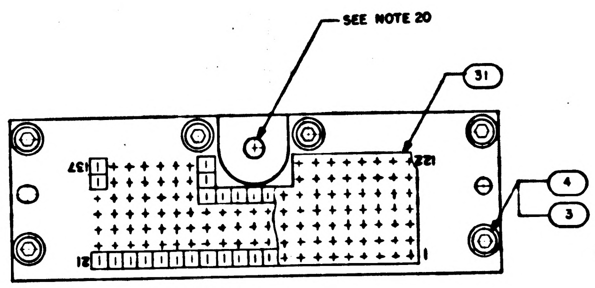

SEE NOTE 20
31
4
3
137
122
12
1

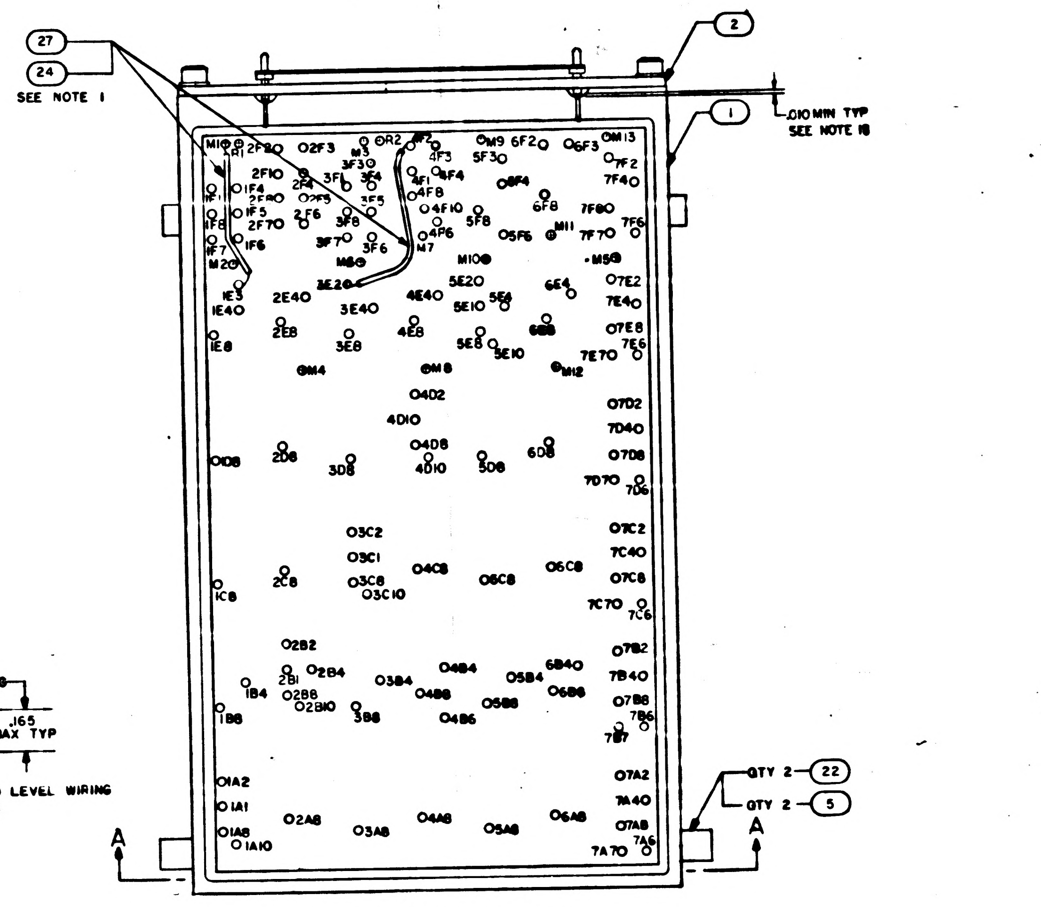

27
24
SEE NOTE 1
2
1
.010 MIN TYP
SEE NOTE 18
QTY 2 22
QTY 2 5
A
A
M10
M11
M12
M13

VIEW SHOWN WITH POTTING & WIRING REMOVED FOR CLARITY

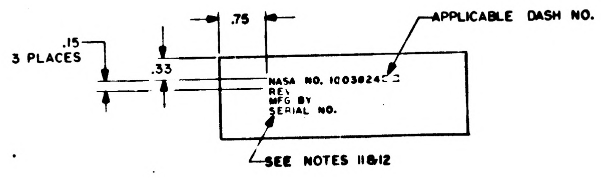

.75
APPLICABLE DASH NO.
.15
3 PLACES
.33
NASA NO. 1003824
REV
MFG BY
SERIAL NO.
SEE NOTES 11&12

MARKING VIEW
SCALE 1/1

NOTES:
1. WELD ALL FIRST & SECOND LEVEL CONNECTIONS AND AS NOTED ON THIRD LEVEL PER ND 1002005
2. FOR THIRD LEVEL CONNECTIONS USE FIND NO. 32 & WIRE WRAP ONE END TO FIND NO.2 PER ND 1002031 AND WELD ALL OTHER ENDS PER ND 1002005
3. FILL CAVITY EXCEPT WHERE INDICATED WITH BLACK POLYURETHANE FOAM PER ND 1002002
4. SPRAY COAT ALL INSIDE SURFACES OF FIND NO.1 WITH CLEAR EPOXY PER ND 1002035 EXCEPT .010 MAX THICKNESS
5. △ DENOTES LEADS TO BE CUT .030 MAX ABOVE SURFACE OF FIND NO.9 & FIND NO.10
6. ● DENOTES LEADS TO BE CUT AFTER WELDING
7. ~~EXTEND HOLE INDICATED .100/.070 BEYOND INSIDE SURFACE OF FIND NO.1~~
8. AR DENOTES AS REQUIRED
9. BOND FIND NO. 9, 10, 25 & 29 TO FIND NO.26 PER ND 1002004, TYPE V
10. MARK $^{.24}_{.26}$ HIGH WHITE CHARACTERS PER ND 1002019 AND ND 1002122 TYPE II, CLASS I USING MARKING INK 1006271-1
11. MARK $^{.08}_{.10}$ HIGH WHITE CHARACTERS PER ND 1002019 AND ND 1002122 TYPE II, CLASS I USING MARKING INK 1006271-1
12. SERIALIZE PER ND 1002023
13. BOND STICKS TO FIND NO 1 PER ND 1002004, TYPE I
14. FILL CAVITY PER ND 1002217
15. WORMANSHIP, FABRICATION AND INSPECTION REQUIREMENTS PER ND 1002069
16. STAKE FIND NO. 11 & 28 IN FIND NO.25 & 29 PER ND 1002009, METHOD B
17. STAKE THIRD LEVEL WIRING TO FIND NO.6 PER ND 1002004, TYPE V USE STAKING COMPOUND SPARINGLY
18. SEAL TERMINALS TO HEADER PER ND 1002004, TYPE VI
19. FIND NUMBER 10 MAY BE EITHER 1006772-1 OR 1006772-4 EXCEPT DO NOT USE BOTH IN THE SAME ASSY.
20. HOLE INDICATED TO BE FREE OF POTTING TO INSIDE SURFACE OF FIND NO.1

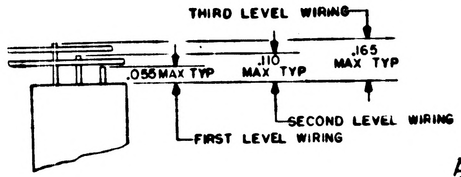

THIRD LEVEL WIRING
.055 MAX TYP
.110 MAX TYP
.165 MAX TYP
SECOND LEVEL WIRING
FIRST LEVEL WIRING

DETAIL H

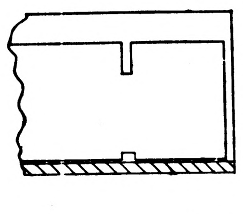

PARTIAL SECTION E-E

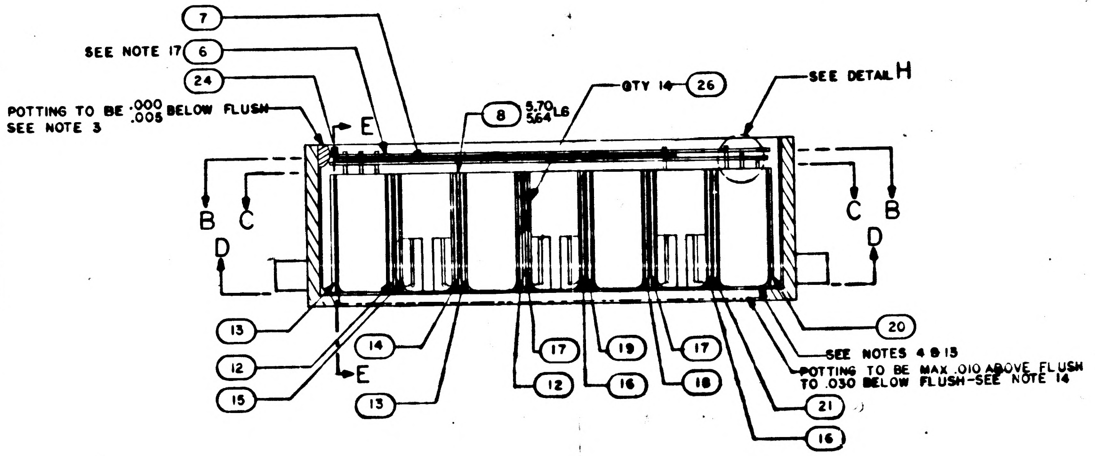

7
SEE NOTE 17
6
24
POTTING TO BE .000/.005 BELOW FLUSH
SEE NOTE 3
8
5.70/5.64 LG
QTY 14
26
SEE DETAIL H
E
E
B
C
D
C
B
D
13
12
15
14
13
12
17
16
19
17
18
20
SEE NOTES 4 & 15
POTTING TO BE MAX .010 ABOVE FLUSH TO .030 BELOW FLUSH-SEE NOTE 14
21
16

SECTION A-A

WIRING LIST	
TO	FROM
1	7D4
2	7E2
3	7D7
4	6E8
5	M9
6	5F4
7	7A8
8	5E10
9	M7
10	4A8
11	4D2
12	4D1
13	4F8
14	3C10
15	3C8
16	3F7
17	2F5
18	2B8
19	2D8
20	M2
21	1A8
22	7E4
23	7C6
24	[illegible]
25	7B2
26	M10
27	5F6
28	7A7
29	5E8
30	M8
31	4E4
32	4C8
33	4E8
34	4F1
35	3C2
36	2B4
37	3F1
38	M4
39	2B1
40	2F6
41	1E4
42	1B8
43	7F4
44	7F7
45	M12
46	6F2
47	6D8
48	7B7
49	6B8
50	5E1
51	5C8
52	4B4
53	4F6
54	4D8
55	3B8
56	3F3
57	3F8
58	2B10
59	2A8
60	2C8
61	2E8
62	1A10
63	1C8
64	7F6
65	7F2
66	7D2
67	6F8
68	7B8

WIRING LIST	
TO	FROM
69	7A2
70	6B4
71	5E2
72	5B8
73	5B4
74	4D10
75	4F10
76	3A8
77	M6
78	3F4
79	3E8
80	2B2
81	2F4
82	2F7
83	1A2
84	1F1
85	7E6
86	7F8
87	7E7
88	7C7
89	7B6
90	6C8
91	5F8
92	5D8
93	5A8
94	4B6
95	4B8
96	4F4
97	3B4
98	3E4
99	3C1
100	3D8
101	2E4
102	2F3
103	2F1
104	1A1
105	1F7
106	M5
107	7C4
108	M11
109	7C8
110	6E4
111	7A4
112	6A8
113	M3
114	R2
115	3F6
116	3F5
117	R1
118	1F6
119	1B4
120	1F4
121	1E8
122	M13
123	7D6
124	7E8
125	7C2
126	7B4
127	7A6
128	5E4
129	6F3
130	5F3
131	4F3
132	2F8
133	2F2
134	1F5
135	SPARE ●
136	1F8
137	1D8

● DENOTES NO CONNECTION

QTY REQD	PART OR IDENTIFYING NO.	MATERIAL OR NOTES	NOMENCLATURE OR DESCRIPTION	FIND NO

LIST OF MATERIALS

NEXT ASSY	USED ON
1003707	
1003706	

APPLICATION

UNLESS OTHERWISE SPECIFIED
DIMENSIONS ARE IN INCHES
CAPACITOR VALUES ARE IN μf
RESISTOR VALUES ARE IN OHMS
TOLERANCES ON
FRACTIONS ± DECIMALS ±.02 ANGLES ±
DO NOT SCALE THIS DRAWING
MATERIAL

MIT
INSTRUMENTATION LAB
CAMBRIDGE MASS

DRAWN Bacuolm 1 MAR 65
CHECKED R. Edmond
APPROVED
APPROVED
APPROVED MIT
APPROVED MSC
DATE

MANNED SPACECRAFT CENTER
HOUSTON, TEXAS

RELAY MODULE ASSEMBLY
AGC DSKY, NAV & MAIN

CODE IDENT NO. 80230
SIZE J
DRAWING NO. 1003824
SCALE 2/1
SHEET 1 OF 2

MASTER

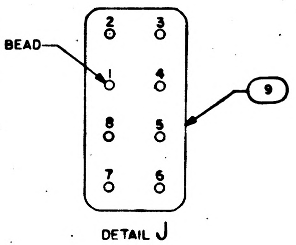
BLUE BEAD
2
3
1
4
8
5
7
6
9

DETAIL J
SCALE 4/1
TYP PIN DESIGNATIONS
OF K6, K12 AND K18

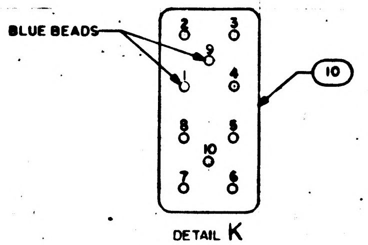
BLUE BEADS
2
3
9
1
4
8
5
10
7
6
10

DETAIL K
SCALE 4/1
TYP PIN DESIGNATIONS
OF K1 THRU K5, K7 THRU K11
K13 THRU K17, K19 THRU K42

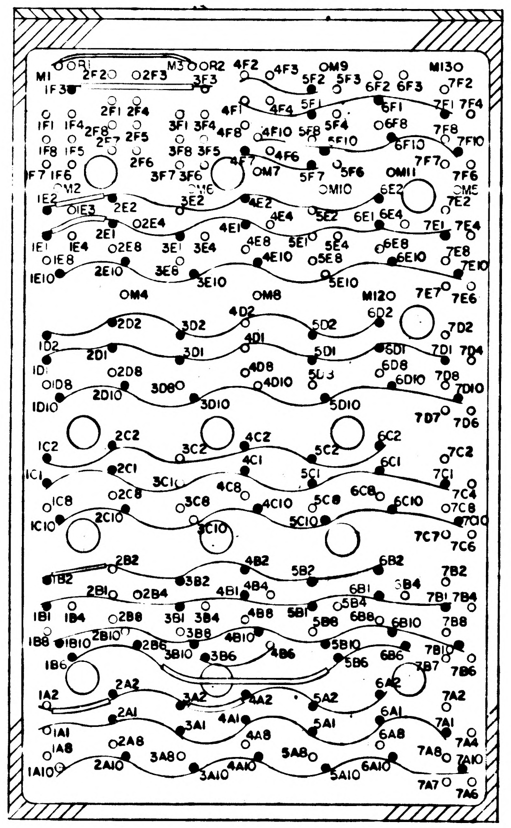
M1
2F2
M3
R2
4F2
4F3
OM9
5F2
5F3
6F2
6F3
M13O
7F2
1F3
2F1
2F4
3F3
4F1
4F4
5F1
6F1
7F4
1F1
1F4
2F8
2F5
3F1
3F4
4F8
4F10
5F8
6F8
7F8
7F10
1F8
1F5
3F8
3F5
4F6
5E10
6F10
7F7
1F7
1F6
2F6
3F7
3F6
OM7
5F7
5F6
OM11
7F6
OM12
3E2
4E2
OM10
6E2
1E2
2E2
5E2
6E1
6E4
7E1
7E4
2E1
4E1
4E4
2E4
1E1
1E4
2E8
3E4
4E8
5E8
6E8
7E8
1E8
2E10
3E6
4E10
6E10
1E10
3E10
5E10
7E7
7E6
OM4
OM8
M12O
1D2
2D2
3D2
4D2
5D2
6D2
7D2
2D1
3D1
4D1
5D1
7D1
7D4
1D
2D8
4D8
6D8
7D8
1D8
3D8
4D10
6D10
7D10
1D10
2D10
3D10
5D10
7D7
7D6
1C2
2C2
3C2
4C2
5C2
6C2
7C2
2C1
3C1
4C1
5C1
6C1
7C1
1C1
1C8
2C8
3C8
4C8
6C8
6C10
1C10
2C10
3C10
4C10
5C10
7C7
7C10
7C6
1B2
2B2
3B2
4B2
5B2
6B2
7B2
2B1
2B4
4B1
4B4
6B1
5B4
7B1
7B4
1B1
1B4
2B8
3B1
3B4
4B8
5B8
6B8
6B10
7B8
1B8
1B10
2B10
2B6
3B8
3B6
3B10
4B6
5B10
5B6
6B6
7B10
7B7
7B6
1B6
2A2
3A2
4A2
5A2
6A2
7A2
1A2
2A1
3A1
4A1
5A1
6A1
7A1
1A1
1A8
2A8
3A8
4A8
5A8
6A8
7A8
7A10
1A10
2A10
3A10
4A10
5A10
6A10
7A7
7A6

SECTION B-B

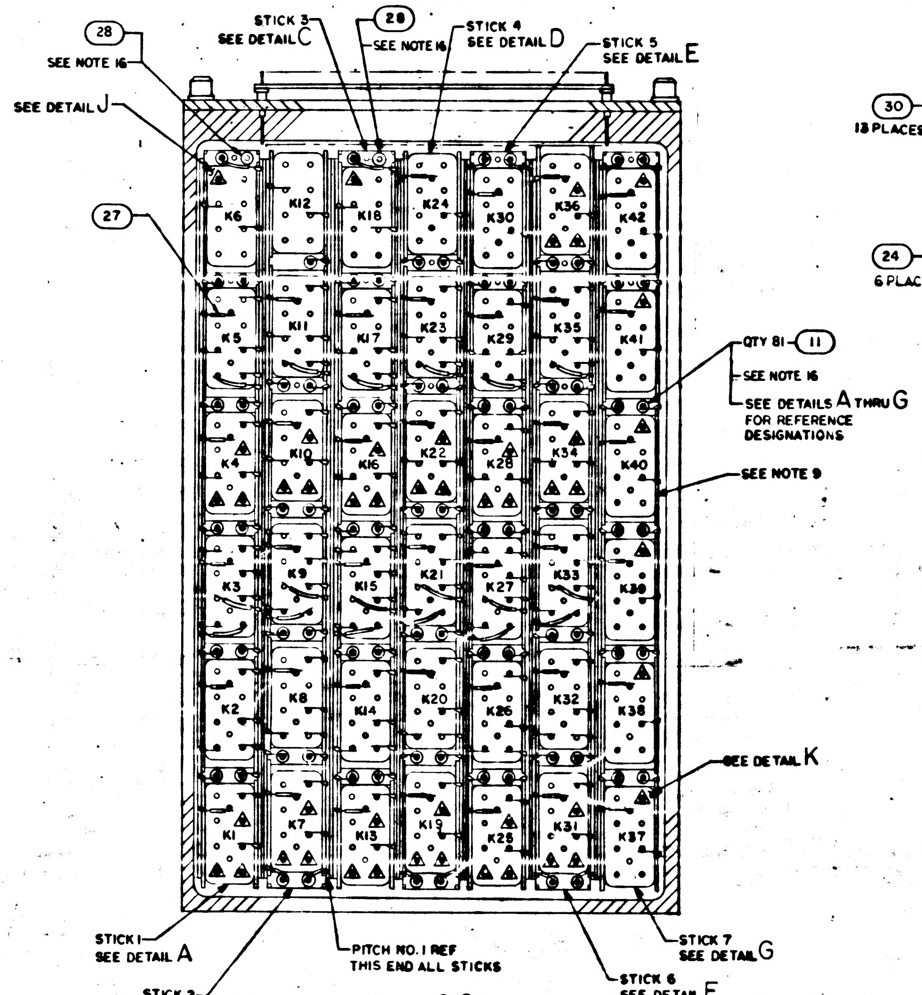
28
SEE NOTE 16
STICK 3
SEE DETAIL C
28
SEE NOTE 16
STICK 4
SEE DETAIL D
STICK 5
SEE DETAIL E
SEE DETAIL J
27
K6
K12
K18
K24
K30
K36
K42
K5
K11
K17
K23
K29
K35
K41
K4
K10
K16
K22
K28
K34
K40
K3
K9
K15
K21
K27
K33
K39
K2
K8
K14
K20
K26
K32
K38
K1
K7
K13
K19
K25
K31
K37
QTY 81 - 11
SEE NOTE 16
SEE DETAILS A THRU G
FOR REFERENCE
DESIGNATIONS
SEE NOTE 9
SEE DETAIL K
STICK 1
SEE DETAIL A
STICK 2
SEE DETAIL B
PITCH NO. 1 REF
THIS END ALL STICKS
STICK 6
SEE DETAIL F
STICK 7
SEE DETAIL G

SECTION C-C

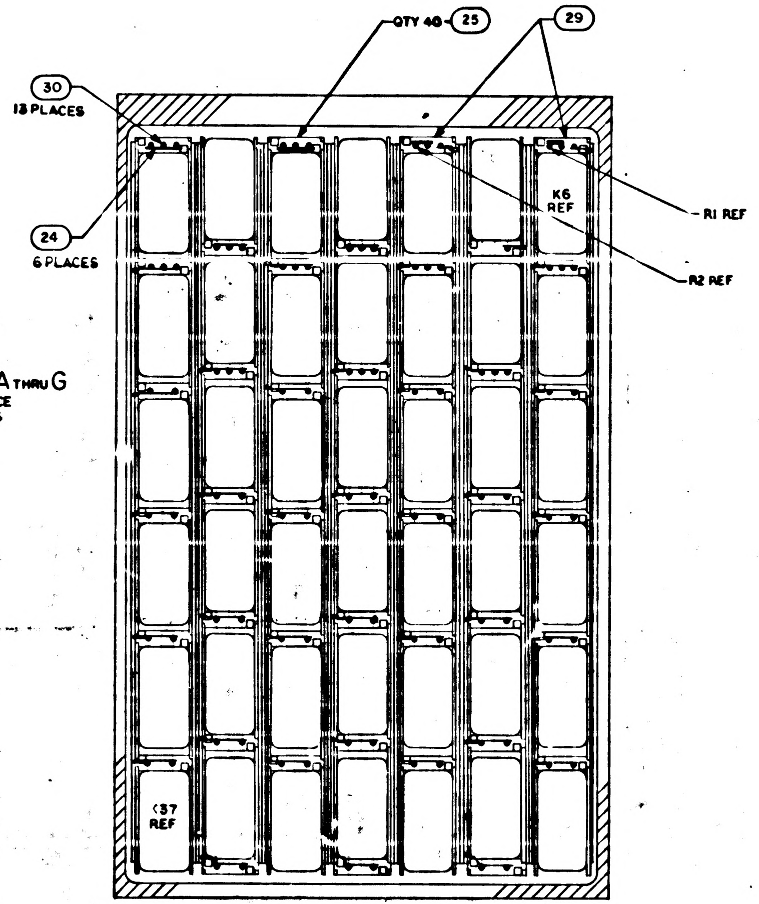
QTY 40 - 25
29
30
13 PLACES
K6
REF
R1 REF
R2 REF
24
6 PLACES
K37
REF

SECTION D-D
ALL FIND NO. 11 CATHODES
THIS SIDE

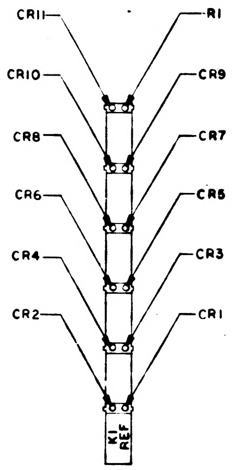
CR11
R1
CR10
CR9
CR8
CR7
CR6
CR5
CR4
CR3
CR2
CR1
K1
REF

DETAIL A
FOR DIODE REFERENCE
DESIGNATIONS ONLY
SCALE 1/1

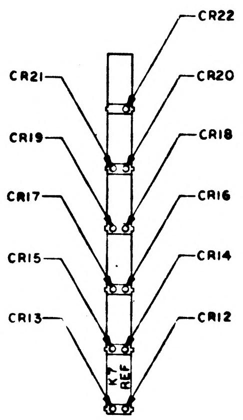
CR22
CR21
CR20
CR19
CR18
CR17
CR16
CR15
CR14
CR13
CR12
K7
REF

DETAIL B
FOR DIODE REFERENCE
DESIGNATIONS ONLY
SCALE 1/1

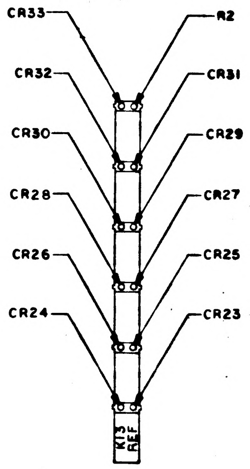
CR33
R2
CR32
CR31
CR30
CR29
CR28
CR27
CR26
CR25
CR24
CR23
K13
REF

DETAIL C
FOR DIODE REFERENCE
DESIGNATIONS ONLY
SCALE 1/1

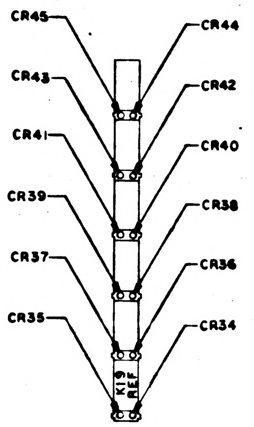
CR45
CR44
CR43
CR42
CR41
CR40
CR39
CR38
CR37
CR36
CR35
CR34
K19
REF

DETAIL D
FOR DIODE REFERENCE
DESIGNATIONS ONLY
SCALE 1/1

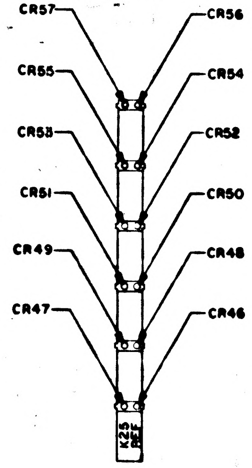
CR57
CR56
CR55
CR54
CR53
CR52
CR51
CR50
CR49
CR48
CR47
CR46
K25
REF

DETAIL E
FOR DIODE REFERENCE
DESIGNATIONS ONLY
SCALE 1/1

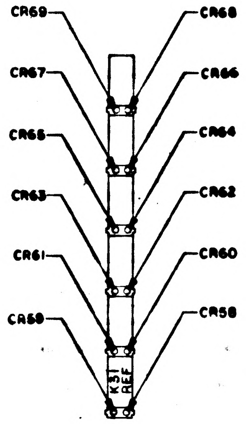
CR69
CR68
CR67
CR66
CR65
CR64
CR63
CR62
CR61
CR60
CR59
CR58
K31
REF

DETAIL F
FOR DIODE REFERENCE
DESIGNATIONS ONLY
SCALE 1/1

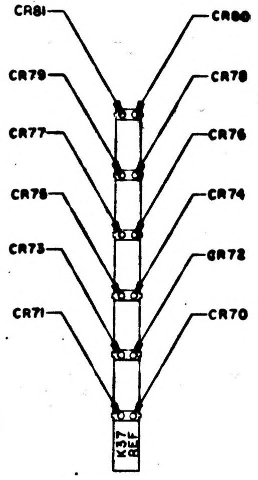
CR81
CR80
CR79
CR78
CR77
CR76
CR75
CR74
CR73
CR72
CR71
CR70
K37
REF

DETAIL G
FOR DIODE REFERENCE
DESIGNATIONS ONLY
SCALE 1/1

MASTER

REVISIONS 20557

SYM	ZONE	DESCRIPTION	DR	CHK	DATE	APPROVED
A		REVISED PER TDRR 20820				
B		REVISED PER TDRR 24495			12/8/65	
C		REVISED PER TDRR 28403			6 '66	

QTY REQD	PART OR IDENTIFYING NO.	MATERIAL OR NOTES	NOMENCLATURE OR DESCRIPTION	FIND NO
☒	1005780		SCHEMATIC	REF
AR	1006376-003		WIRE, ELECTRICAL	32
1	1004654		GASKET	31
AR	1006757-13		WIRE ELECTRICAL .020 DIA	30
2	1004124-2		BLOCK, DIODE	29
2	1006750-72		RESISTOR, FIXED	28
AR	1006776-22		INSULATION, SLEEVING	27
14	1004852		BACKING STRIP	26
40	1004124-1		BLOCK, DIODE	25
AR	1006757-7		WIRE, ELECTRICAL .005 X .020	24
~~AR~~	~~1006733-1~~		~~WIRE, ELECTRICAL~~	~~23~~
2	1004140		PIN, STOP	22
1	1003521-5		800 MATRIX ASSY	21
1	1003521-26		800 MATRIX ASSY	20
1	1003521-31		800 MATRIX ASSY	19
1	1003521-32		800 MATRIX ASSY	18
2	1003521-33		800 MATRIX ASSY	17
2	1003521-34		800 MATRIX ASSY	16
1	1003521-29		800 MATRIX ASSY	15
1	1003521-30		800 MATRIX ASSY	14
2	1003521-27		800 MATRIX ASSY	13
2	1003521-28		800 MATRIX ASSY	12
81	1006751		SEMICONDUCTOR DEVICE, DIODE	11
39	SEE NOTE 19		RELAY ARM., MAGNETIC LATCHING	10
3	1006815-2		RELAY ARMATURE	9
AR	1006806-10		INSULATION TAPE, ELECTRICAL	8
1	1004842-1		INSULATOR	7
1	1004842-2		INSULATOR	6
2	MS35200-13		SCREW, FLATHEAD	5
6	NAS620-4		WASHER, FLAT	4
6	MS35457-1		SCREW, SOCKET	3
1	1004145		PLATE, RELAY MODULE	2
1	1004113		HEADER ASSY, RELAY MODULE	1

011 LIST OF MATERIALS

NEXT ASSY	USED ON
APPLICATION	

UNLESS OTHERWISE SPECIFIED
DIMENSIONS ARE IN INCHES
CAPACITOR VALUES ARE IN μf
RESISTOR VALUES ARE IN OHMS
TOLERANCES ON
FRACTIONS DECIMALS ANGLES
± ± ±
DO NOT SCALE THIS DRAWING
MATERIAL

MIT
INSTRUMENTATION LAB
CAMBRIDGE, MASS

MANNED SPACECRAFT CENTER
HOUSTON, TEXAS

DRAWN A. J. Zinon
CHECKED
APPROVED
APPROVED
APPROVED MIT
APPROVED MSC

RELAY MODULE ASSEMBLY
AGC DSKY, NAV AND MAIN

CODE IDENT NO. 80230
SIZE J
DRAWING NO. 1003824
SCALE 2/1
SHEET 2 OF 2

REVISIONS 20557						
SYM	ZONE	DESCRIPTION	DR	CHK	DATE	APPROVED
A		REVISED PER TDRR 20820				
B		REVISED PER TDRR 24455				
C		REVISED PER TDRR 28403				
D		REVISED PER TDRR 30413		C.D.		P.

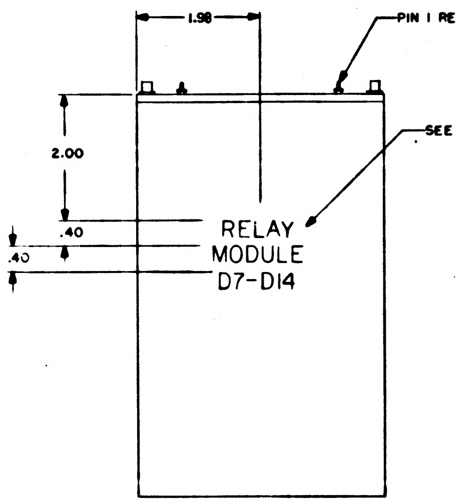
1.98
PIN 1 REF
SEE NOTE 10
2.00
.40
.40
RELAY
MODULE
D7-D14

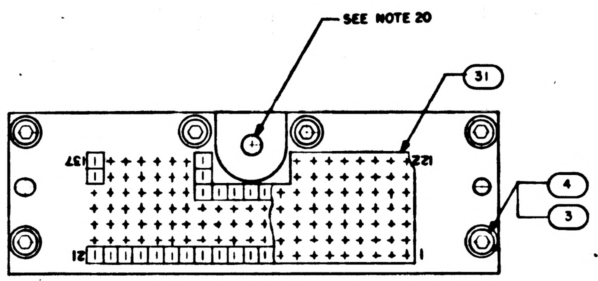
SEE NOTE 20
31
4
3
137
12
1

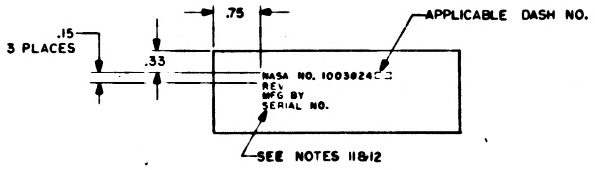
.15
3 PLACES
.33
.75
APPLICABLE DASH NO.
NASA NO. 1003824
REV
MFG BY
SERIAL NO.
SEE NOTES 11&12

MARKING VIEW
SCALE 1/1

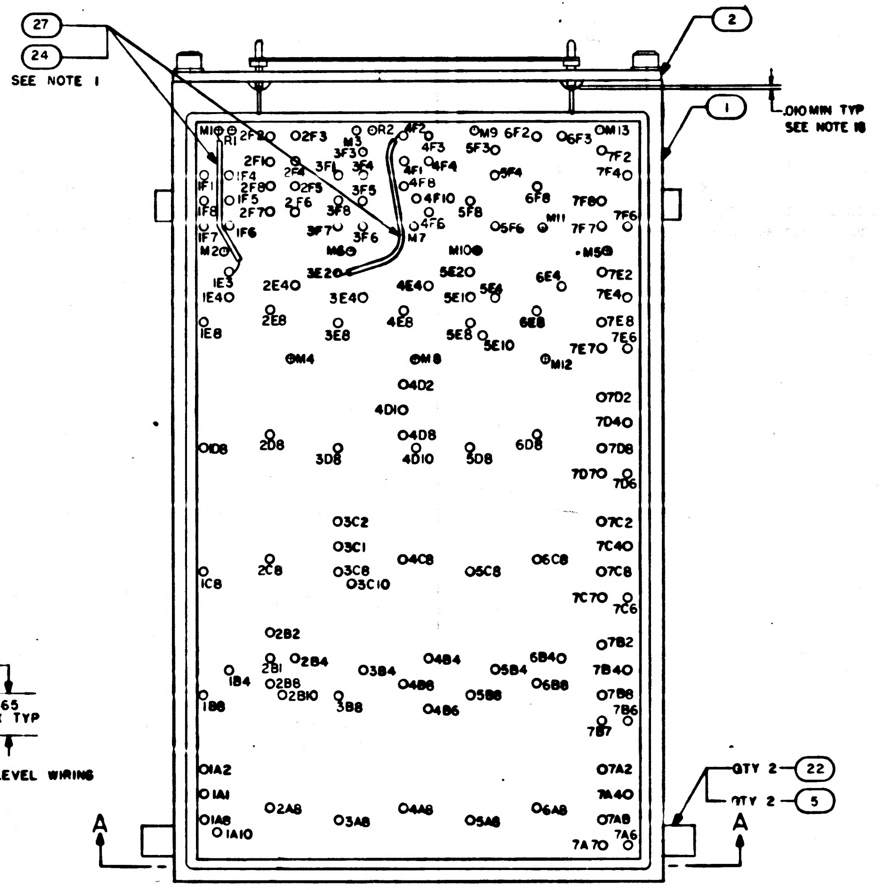
27
24
SEE NOTE 1
2
1
.010 MIN TYP
SEE NOTE 18
QTY 2 22
QTY 2 5
A
A

VIEW SHOWN WITH POTTING & WIRING REMOVED FOR CLARITY

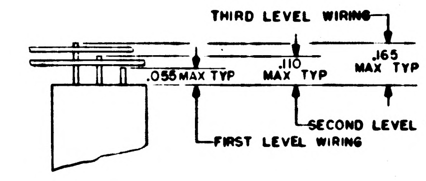
THIRD LEVEL WIRING
.110 MAX TYP
.165 MAX TYP
.055 MAX TYP
SECOND LEVEL WIRING
FIRST LEVEL WIRING

DETAIL H

NOTES:
1. WELD ALL FIRST & SECOND LEVEL CONNECTIONS AND AS NOTED ON THIRD LEVEL PER ND 1002005
2. FOR THIRD LEVEL CONNECTIONS USE FIND NO. 34 & WIRE WRAP ONE END TO FIND NO.2 PER ND 1002031 AND WELD ALL OTHER ENDS PER ND 1002005
3. FILL CAVITY EXCEPT WHERE INDICATED WITH BLACK POLYURETHANE FOAM PER ND 1002002
4. SPRAY COAT ALL INSIDE SURFACES OF FIND NO.1 WITH CLEAR EPOXY PER ND 1002035 EXCEPT .010 MAX THICKNESS
5. ⚠ DENOTES LEADS TO BE CUT .030 MAX ABOVE SURFACE OF FIND NO.9 & FIND NO.10
6. ● DENOTES LEADS TO BE CUT AFTER WELDING
~~7. EXTEND HOLE INDICATED .100/.070 BEYOND INSIDE SURFACE OF FIND NO.1~~
8. AR DENOTES AS REQUIRED
9. BOND FIND NO. 9, 10, 25 & 29 TO FIND NO.26 PER ND 1002004, TYPE V
10. MARK $^{.24}_{.26}$ HIGH WHITE CHARACTERS PER ND 1002019 AND ND 1002122 TYPE II, CLASS I USING MARKING INK 1006271-1
11. MARK $^{.08}_{.10}$ HIGH WHITE CHARACTERS PER ND 1002019 AND ND 1002122 TYPE II, CLASS I USING MARKING INK 1006271-1
12 SERIALIZE PER ND 1002023
13 BOND STICKS TO FIND NO.1 PER ND 1002004, TYPE I
14 FILL CAVITY PER ND 1002217
15 WORMANSHIP, FABRICATION AND INSPECTION REQUIREMENTS PER ND 1002069
16 STAKE FIND NO. 11 & 28 IN FIND NO. 25 & 29 PER ND 1002009, METHOD B
17 STAKE THIRD LEVEL WIRING TO FIND NO.6 PER ND 1002004, TYPE V USE STAKING COMPOUND SPARINGLY
18. SEAL TERMINALS TO HEADER PER ND 1002004, TYPE VI
~~19. FIND NUMBER 10 MAY BE EITHER 1006772-1 OR 1006772-4 EXCEPT DO NOT USE BOTH IN THE SAME ASSY.~~
20. HOLE INDICATED TO BE FREE OF POTTING TO INSIDE SURFACE OF FIND NO.1

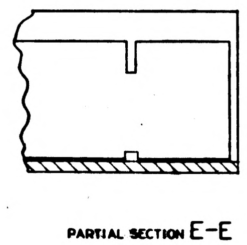

PARTIAL SECTION E-E

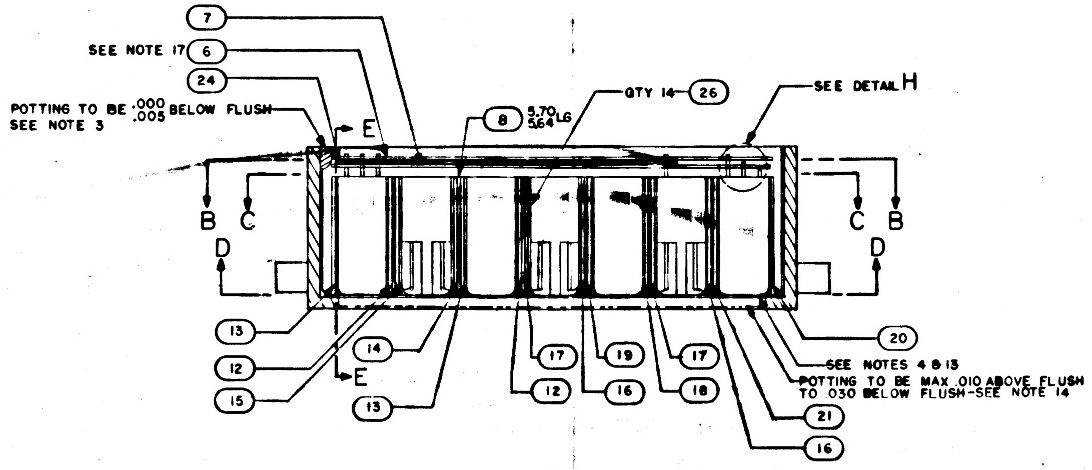
7
SEE NOTE 17
6
24
POTTING TO BE .000/.005 BELOW FLUSH
SEE NOTE 3
E
8
5.70/5.64 LG
QTY 14
26
SEE DETAIL H
B
C
D
C
B
D
13
12
15
14
E
13
17
12
19
16
17
18
20
SEE NOTES 4 & 13
POTTING TO BE MAX .010 ABOVE FLUSH TO .030 BELOW FLUSH-SEE NOTE 14
21
16

SECTION A-A

WIRING LIST	
TO	FROM
1	7D4
2	7E2
3	7D7
4	6F8
5	M9
6	5F4
7	7A8
8	5E10
9	M7
10	4A8
11	4D2
12	4D1
13	4F8
14	3C10
15	3C8
16	3F7
17	2F5
18	2B8
19	2D8
20	M2
21	1A8
22	7E4
23	7C6
24	7D8
25	7B2
26	M10
27	5F6
28	7A7
29	5E8
30	M8
31	4E4
32	4C8
33	4E8
34	4F1
35	3C2
36	2B4
37	3F1
38	M4
39	2B1
40	2F6
41	1E4
42	1B8
43	7F4
44	7F7
45	M12
46	6F2
47	6D8
48	7B7
49	6B8
50	5E1
51	5C8
52	4B4
53	4F6
54	4D8
55	3B8
56	3F3
57	3F8
58	2B10
59	2A8
60	2C8
61	2E8
62	1A10
63	1C8
64	7F6
65	7F2
66	7D2
67	6F8
68	7B8

WIRING LIST		
TO	FROM	
69	7A2	
70	6B4	
71	5E2	
72	5B8	
73	5B4	
74	4D10	
75	4F10	
76	3A8	
77	M6	
78	3F4	
79	3E8	
80	2B2	
81	2F4	
82	2F7	
83	1A2	
84	1F1	
85	7E6	
86	7F8	
87	7E7	
88	7C7	
89	7B6	
90	6C8	
91	5F8	
92	5D8	
93	5A8	
94	4B6	
95	4B8	
96	4F4	
97	3B4	
98	3E4	
99	3C1	
100	3D8	
101	2E4	
102	2F3	
103	2F1	
104	1A1	
105	1F7	
106	M5	
107	7C4	
108	M11	
109	7C8	
110	6E4	
111	7A4	
112	6A8	
113	M3	
114	R2	
115	3F6	
116	3F5	
117	R1	
118	1F6	
119	1B4	
120	1F4	
121	1E8	
122	M13	
123	7D6	
124	7E8	
125	7C2	
126	7B4	
127	7A6	
128	5E4	
129	6F3	
130	5F3	
131	4F3	
132	2F8	
133	2F2	
134	1F5	
135	SPARE	●
136	1F8	
137	1D8	

● DENOTES NO CONNECTION

MASTER

QTY REQD	PART OR IDENTIFYING NO.	MATERIAL OR NOTES	NOMENCLATURE OR DESCRIPTION	FIND NO

LIST OF MATERIALS

NEXT ASSY	USED ON
1003707	
1003706	

APPLICATION

UNLESS OTHERWISE SPECIFIED
DIMENSIONS ARE IN INCHES
CAPACITOR VALUES ARE IN µf
RESISTOR VALUES ARE IN OHMS
TOLERANCES ON
FRACTIONS DECIMALS ANGLES
± ±.02
DO NOT SCALE THIS DRAWING
MATERIAL

MIT
INSTRUMENTATION LAB
CAMBRIDGE MASS

MANNED SPACECRAFT CENTER
HOUSTON, TEXAS

DRAWN
CHECKED R. Edmund
APPROVED
APPROVED
APPROVED MIT
APPROVED MSC

RELAY MODULE ASSEMBLY
AGC DSKY, NAV & MAIN

CODE IDENT NO. 80230
SIZE J
DRAWING NO. 1003824
SCALE 2/1
SHEET 1 OF 2

NOTICE [illegible]

SYM	ZONE	DESCRIPTION	DR.	CHK	DATE	APPROVED
A		REVISED PER TDRR 20820				
B		REVISED PER TDRR 24495				
C		REVISED PER TDRR 28403			6/1/66	
D		REVISED PER TDRR 30413		E.U.	8/11/66	

REVISIONS 20557

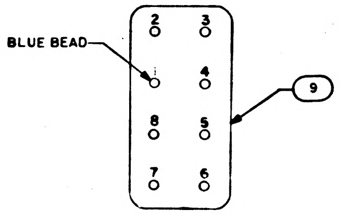
BLUE BEAD
2
3
1
4
8
5
7
6
9

DETAIL J
SCALE 4/1
TYP PIN DESIGNATIONS
OF K6, K12 AND K18

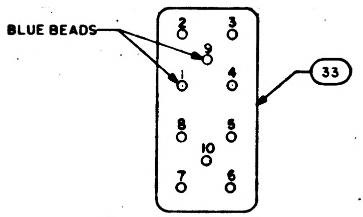
BLUE BEADS
2
3
9
1
4
8
5
10
7
6
33

DETAIL K
SCALE 4/1
TYP PIN DESIGNATIONS
OF K1 THRU K5, K7 THRU K11
K13 THRU K17, K19 THRU K42

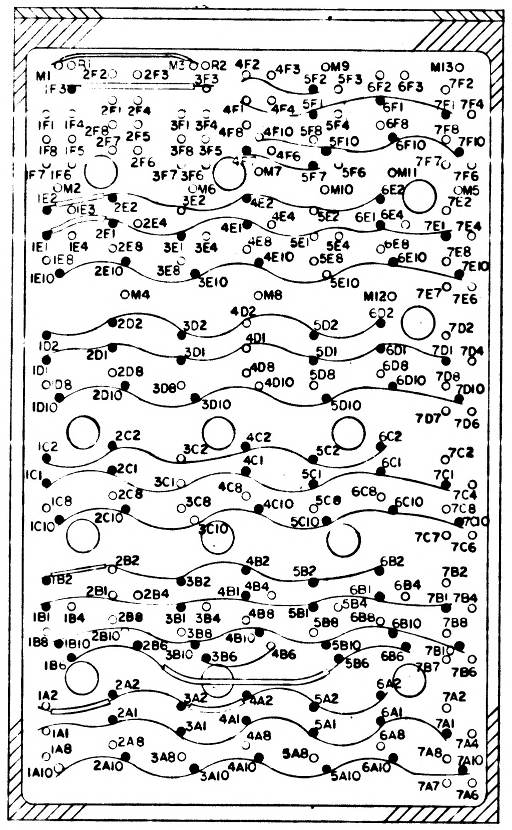
M1
OR1
OR2
M3
2F3
4F2
4F3
OM9
M13O
5F2
5F3
6F2
6F3
7F2
2F1
2F4
4F1
4F4
5F1
6F1
7F4
1F1
1F4
3F1
3F4
4F10
5F4
6F8
7F8
1F8
1F5
2F8
2F5
3F8
3F5
4F6
5F10
6F10
7F10
2F6
3F7
3F6
OM7
5F6
OM11
OM2
OM6
OM5
1E2
OE8
2E2
3E2
4E2
5E2
6E1
6E2
7E1
7E4
2E1
4E4
1E1
1E4
2E8
3E1
3E4
4E8
5E4
6E8
7E8
1E10
2E10
3E8
3E10
4E10
5E8
5E10
6E10
7E10
OM4
OM8
M12O
7E7
7E6
4D2
6D2
2D2
3D2
4D1
5D2
7D2
1D2
2D1
3D1
5D1
6D1
7D1
7D4
1D1
2D8
4D8
5D8
6D8
7D8
1D8
3D8
4D10
6D10
7D10
1D10
2D10
3D10
5D10
7D7
7D6
2C2
4C2
5C2
6C2
1C2
2C1
3C2
4C1
6C1
7C2
1C1
3C1
5C1
7C1
7C4
1C8
2C8
3C8
4C8
5C8
6C8
6C10
7C8
1C10
2C10
3C10
4C10
5C10
7C10
7C7
7C6
1B2
2B2
3B2
4B2
5B2
6B2
7B2
2B1
2B4
3B2
4B1
4B4
5B4
6B1
6B4
7B1
7B4
1B1
1B4
2B8
3B1
3B4
4B8
5B1
5B8
6B8
6B10
7B8
1B8
1B10
2B10
2B6
3B8
3B10
3B6
4B10
4B6
5B10
5B6
6B6
7B7
7B10
1B6
7B6
2A2
3A2
4A2
5A2
6A2
7A2
1A2
2A1
3A1
4A1
5A1
6A1
7A1
7A4
1A1
1A8
2A8
3A8
4A8
5A8
6A8
7A8
1A10
2A10
3A10
4A10
5A10
6A10
7A10
7A7
7A6

SECTION B-B

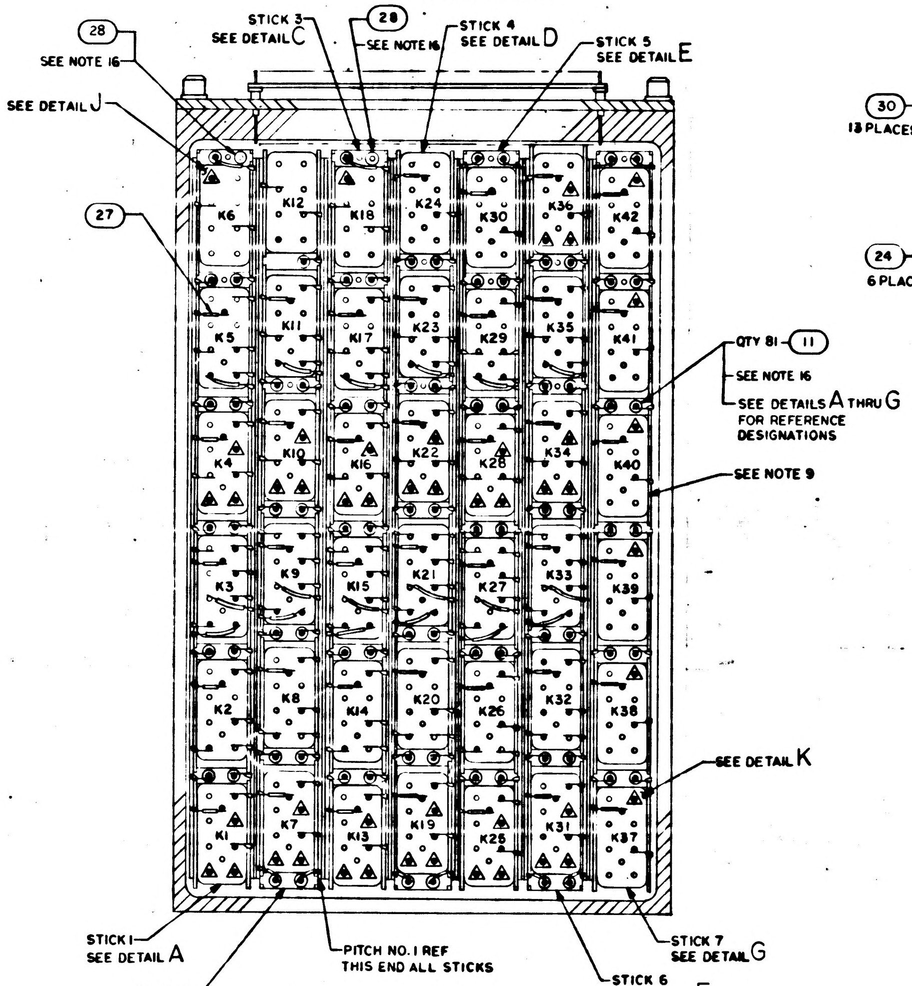
28
SEE NOTE 16
SEE DETAIL J
STICK 3
SEE DETAIL C
28
SEE NOTE 16
STICK 4
SEE DETAIL D
STICK 5
SEE DETAIL E
27
K6
K12
K18
K24
K30
K36
K42
K5
K11
K17
K23
K29
K35
K41
K4
K10
K16
K22
K28
K34
K40
K3
K9
K15
K21
K27
K33
K39
K2
K8
K14
K20
K26
K32
K38
K1
K7
K13
K19
K25
K31
K37
QTY 81
11
SEE NOTE 16
SEE DETAILS A THRU G
FOR REFERENCE
DESIGNATIONS
SEE NOTE 9
SEE DETAIL K
STICK 1
SEE DETAIL A
STICK 2
SEE DETAIL B
PITCH NO. 1 REF
THIS END ALL STICKS
STICK 6
SEE DETAIL F
STICK 7
SEE DETAIL G

SECTION C-C

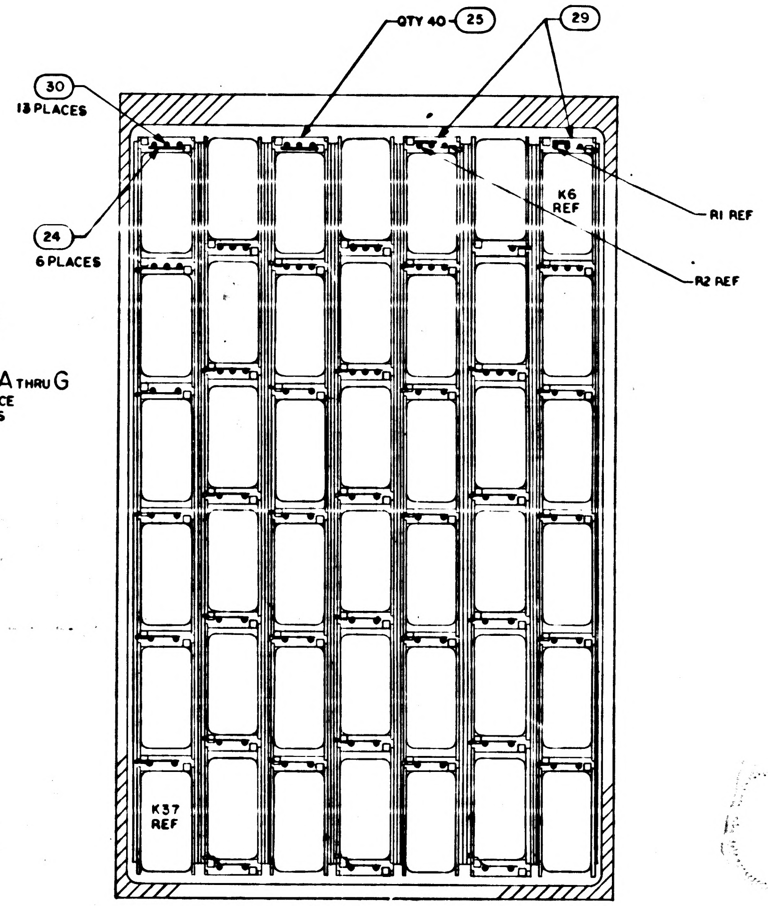
QTY 40
25
29
30
13 PLACES
24
6 PLACES
K6
REF
R1 REF
R2 REF
K37
REF

SECTION D-D
ALL FIND NO. 11 CATHODES
THIS SIDE

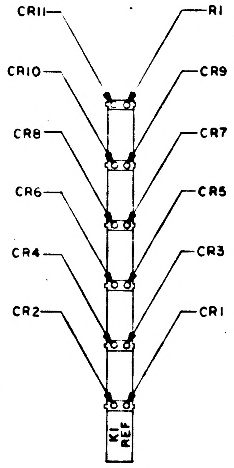
CR11
R1
CR10
CR9
CR8
CR7
CR6
CR5
CR4
CR3
CR2
CR1
K1
REF

DETAIL A
FOR DIODE REFERENCE
DESIGNATIONS ONLY
SCALE 1/1

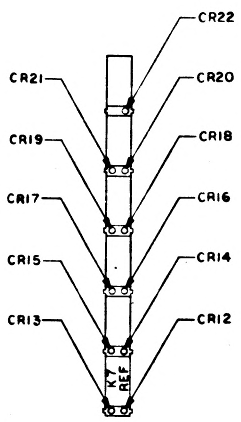
CR22
CR21
CR20
CR19
CR18
CR17
CR16
CR15
CR14
CR13
CR12
K7
REF

DETAIL B
FOR DIODE REFERENCE
DESIGNATIONS ONLY
SCALE 1/1

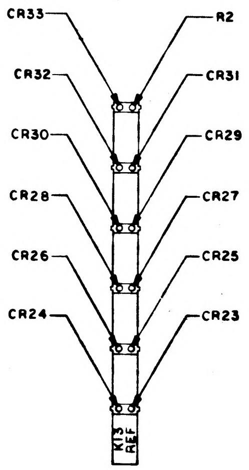
CR33
R2
CR32
CR31
CR30
CR29
CR28
CR27
CR26
CR25
CR24
CR23
K13
REF

DETAIL C
FOR DIODE REFERENCE
DESIGNATIONS ONLY
SCALE 1/1

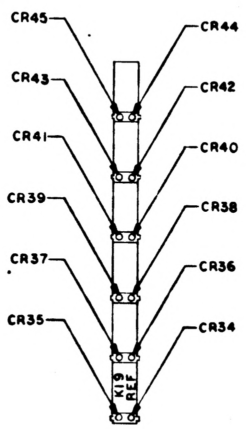
CR45
CR44
CR43
CR42
CR41
CR40
CR39
CR38
CR37
CR36
CR35
CR34
K19
REF

DETAIL D
FOR DIODE REFERENCE
DESIGNATIONS ONLY
SCALE 1/1

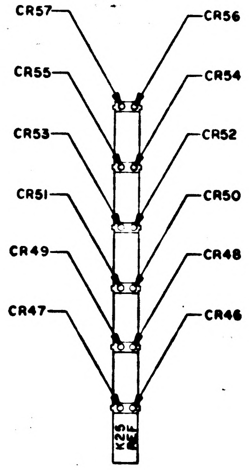
CR57
CR56
CR55
CR54
CR53
CR52
CR51
CR50
CR49
CR48
CR47
CR46
K25
REF

DETAIL E
FOR DIODE REFERENCE
DESIGNATIONS ONLY
SCALE 1/1

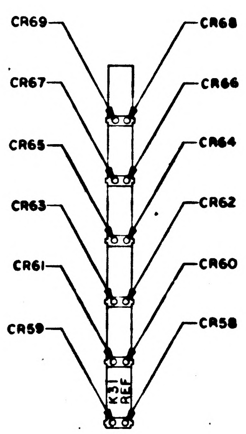
CR69
CR68
CR67
CR66
CR65
CR64
CR63
CR62
CR61
CR60
CR59
CR58
K31
REF

DETAIL F
FOR DIODE REFERENCE
DESIGNATIONS ONLY
SCALE 1/1

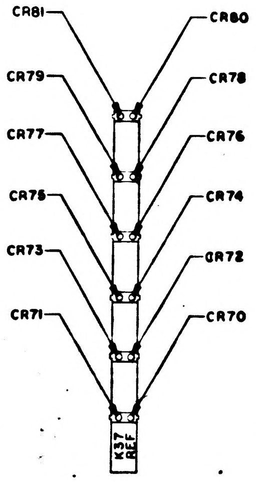
CR81
CR80
CR79
CR78
CR77
CR76
CR75
CR74
CR73
CR72
CR71
CR70
K37
REF

DETAIL G
FOR DIODE REFERENCE
DESIGNATIONS ONLY
SCALE 1/1

QTY REQD	PART OR IDENTIFYING NO	MATERIAL OR NOTES	NOMENCLATURE OR DESCRIPTION	FIND NO
☒	1005780		SCHEMATIC	REF
AR	1006732-2		WIRE ELECTRICAL	34
39	1006772-7		RELAY, ARM., MAGNETIC LATCHING	33
~~AR~~	~~1006378-003~~		~~WIRE, ELECTRICAL~~	~~32~~
1	1004654		GASKET	31
AR	1006757-13		WIRE ELECTRICAL .020 DIA	30
2	1004124-2		BLOCK, DIODE	29
2	1006750-72		RESISTOR, FIXED	28
AR	1006776-22		INSULATION, SLEEVING	27
14	1004852		BACKING STRIP	26
40	1004124-1		BLOCK, DIODE	25
AR	1006757-7		WIRE, ELECTRICAL .005 X .020	24
~~AR~~	~~1006732-1~~		~~WIRE, ELECTRICAL~~	~~23~~
2	1004540		PIN, STOP	22
1	1003521-5		800 MATRIX ASSY	21
1	1003521-26		800 MATRIX ASSY	20
1	1003521-31		800 MATRIX ASSY	19
1	1003521-32		800 MATRIX ASSY	18
2	1003521-33		800 MATRIX ASSY	17
2	1003521-34		800 MATRIX ASSY	16
1	1003521-29		800 MATRIX ASSY	15
1	1003521-30		800 MATRIX ASSY	14
2	1003521-27		800 MATRIX ASSY	13
2	1003521-28		800 MATRIX ASSY	12
81	1006751		SEMICONDUCTOR DEVICE, DIODE	11
~~39~~	~~SEE NOTE 19~~		~~RELAY, ARM., MAGNETIC LATCHING~~	~~10~~
3	1006815-2		RELAY ARMATURE	9
AR	1006806-10		INSULATION TAPE, ELECTRICAL	8
1	1004842-1		INSULATOR	7
1	1004842-2		INSULATOR	6
2	MS35200-13		SCREW, FLATHEAD	5
6	NAS620-4		WASHER, FLAT	4
6	MS35457-1		SCREW, SOCKET	3
1	1004145		PLATE, RELAY MODULE	2
1	1004113		HEADER ASSY, RELAY MODULE	1

011 LIST OF MATERIALS

NEXT ASSY	USED ON

APPLICATION

UNLESS OTHERWISE SPECIFIED
DIMENSIONS ARE IN INCHES
CAPACITOR VALUES ARE IN μf
RESISTOR VALUES ARE IN OHMS
TOLERANCES ON
FRACTIONS ± DECIMALS ± ANGLES ±
DO NOT SCALE THIS DRAWING

MATERIAL

MIT
INSTRUMENTATION LAB
CAMBRIDGE MASS

DRAWN A.J. Binon
CHECKED
APPROVED
APPROVED
APPROVED MIT
APPROVED MSC
DATE

MANNED SPACECRAFT CENTER
HOUSTON, TEXAS

RELAY MODULE ASSEMBLY
AGC DSKY, NAV AND MAIN

CODE IDENT NO 80230
SIZE J
DRAWING NO. 1003824
SCALE 2/1
SHEET 2 OF 2

MASTER

SYM	ZONE	DESCRIPTION	DR	CHK	DATE	APPROVED
A		REVISED PER TDRR 20820				
B		REVISED PER TDRR 24495				
C		REVISED PER TDRR 28403			6/1/66	
D		REVISED PER TDRR 30413			8/11/66	
E		REVISED PER TDRR 31541			10/24/66	

REVISIONS 20557

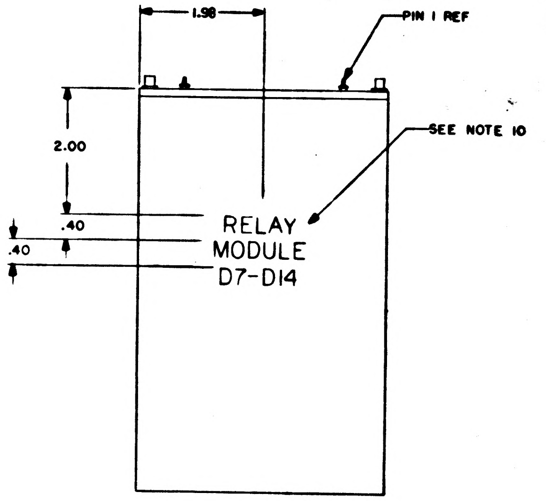

PIN 1 REF
1.98
2.00
.40
.40
SEE NOTE 10
RELAY
MODULE
D7-D14

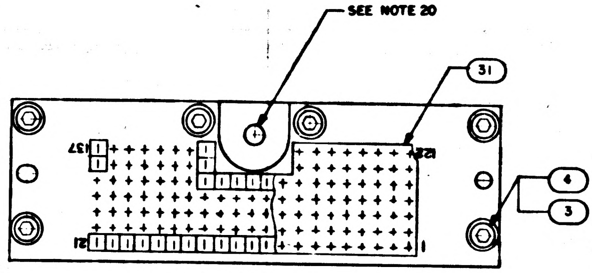

SEE NOTE 20
31
137
121
4
3
1

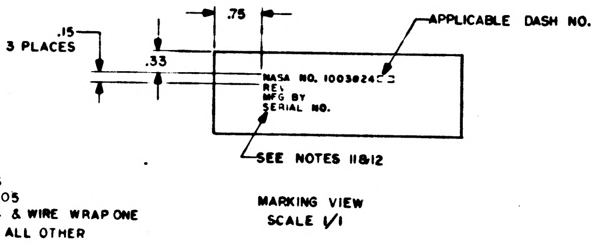

.15
3 PLACES
.75
.33
APPLICABLE DASH NO.
NASA NO. 1003824-
REV
MFG BY
SERIAL NO.
SEE NOTES 11&12

MARKING VIEW
SCALE 1/1

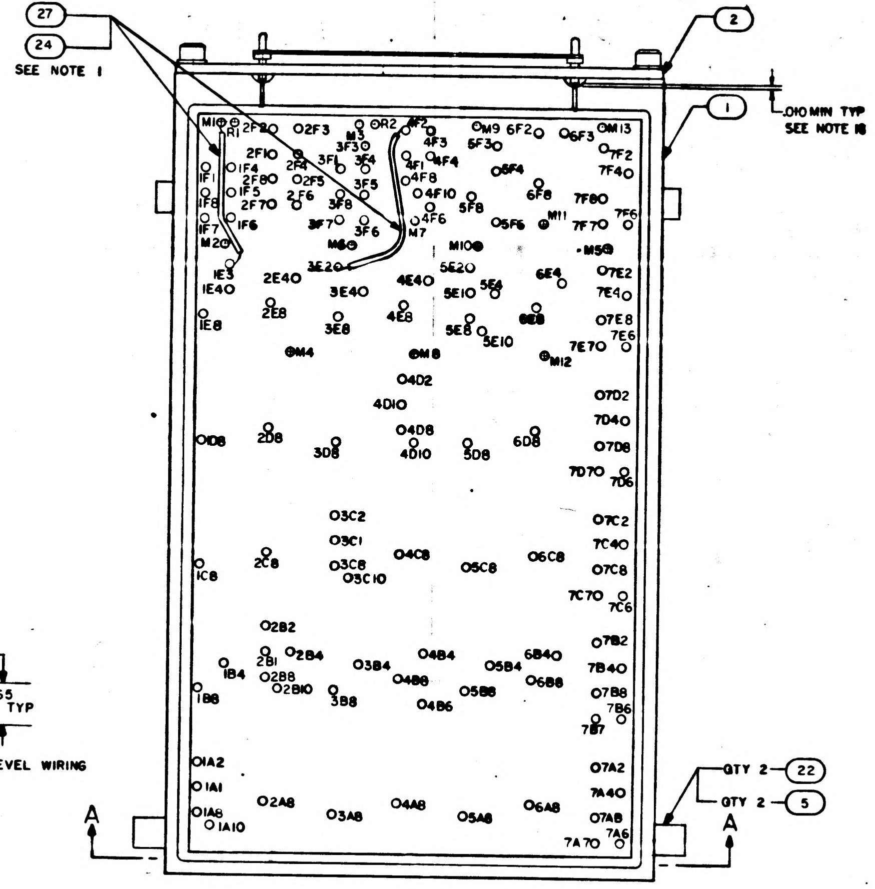

27
24
SEE NOTE 1
2
1
.010 MIN TYP
SEE NOTE 18
QTY 2 22
QTY 2 5
A
A

VIEW SHOWN WITH POTTING & WIRING REMOVED FOR CLARITY

NOTES:
1. WELD ALL FIRST & SECOND LEVEL CONNECTIONS AND AS NOTED ON THIRD LEVEL PER ND 1002005
2. FOR THIRD LEVEL CONNECTIONS USE FIND NO. 34 & WIRE WRAP ONE END TO FIND NO.2 PER ND 1002031 AND WELD ALL OTHER ENDS PER ND 1002005
3. FILL CAVITY EXCEPT WHERE INDICATED WITH BLACK POLYURETHANE FOAM PER ND 1002002
4. SPRAY COAT ALL INSIDE SURFACES OF FIND NO.1 WITH CLEAR EPOXY PER ND 1002035 EXCEPT .010 MAX THICKNESS
5. △ DENOTES LEADS TO BE CUT .030 MAX ABOVE SURFACE OF FIND NO.9 & FIND NO.10
6. ● DENOTES LEADS TO BE CUT AFTER WELDING
~~7. EXTEND HOLE INDICATED .100/.070 BEYOND INSIDE SURFACE OF FIND NO.1~~
8. AR DENOTES AS REQUIRED
9. BOND FIND NO. 9, 10, 25 & 29 TO FIND NO.26 PER ND 1002004, TYPE V
10. MARK $^{.24}_{.26}$ HIGH WHITE CHARACTERS PER ND 1002019 AND ND 1002122 TYPE II, CLASS I USING MARKING INK 1006271-1
11. MARK $^{.08}_{.10}$ HIGH WHITE CHARACTERS PER ND 1002019 AND ND 1002122 TYPE II, CLASS I USING MARKING INK 1006271-1
12. SERIALIZE PER ND 1002023
13. BOND STICKS TO FIND NO.1 PER ND 1002004, TYPE I
14. FILL CAVITY PER ND 1002217
15. WORMANSHIP, FABRICATION AND INSPECTION REQUIREMENTS PER ND 1002069
16. STAKE FIND NO.35 & 28 IN FIND NO.25 & 29 PER ND 1002009, METHOD B
17. STAKE THIRD LEVEL WIRING TO FIND NO.6 PER ND 1002004, TYPE V USE STAKING COMPOUND SPARINGLY
18. SEAL TERMINALS TO HEADER PER ND 1002004, TYPE VI
~~19. FIND NUMBER 10 MAY BE EITHER 1006772-1 OR 1006772-4 EXCEPT DO NOT USE BOTH IN THE SAME ASSY.~~
20. HOLE INDICATED TO BE FREE OF POTTING TO INSIDE SURFACE OF FIND NO.1
21. COLOR OF FIND NO. 34 TO BE OPTIONAL

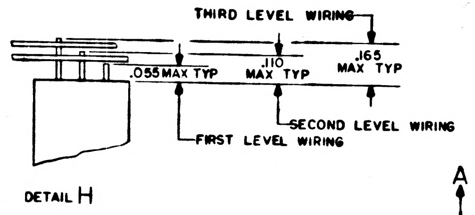

THIRD LEVEL WIRING
.055 MAX TYP
.110 MAX TYP
.165 MAX TYP
FIRST LEVEL WIRING
SECOND LEVEL WIRING

DETAIL H

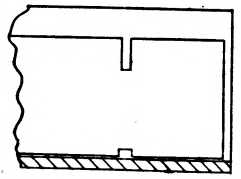

PARTIAL SECTION E-E

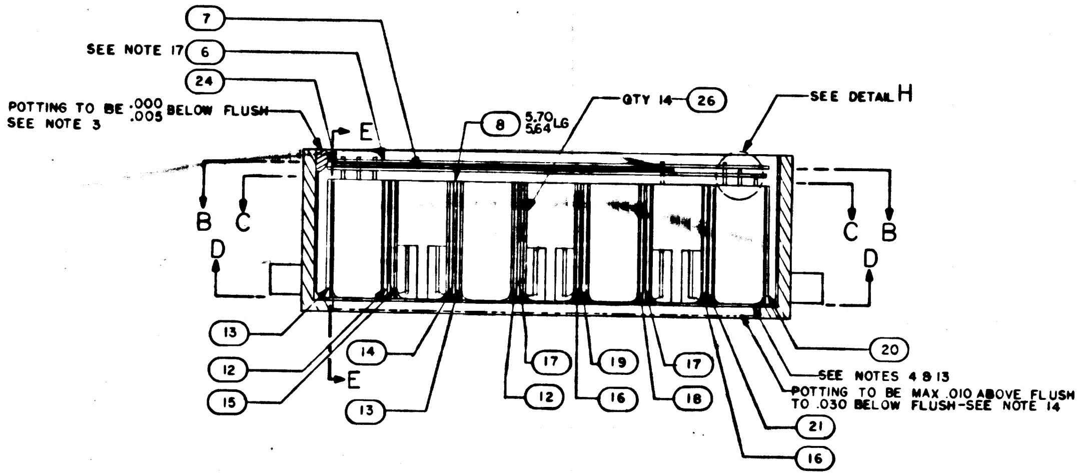

7
SEE NOTE 17 6
24
POTTING TO BE .000/.005 BELOW FLUSH
SEE NOTE 3
E
8
5.70/5.64 LG
QTY 14 26
SEE DETAIL H
B
C
D
C
B
D
13
12
15
14
13
17
12
19
16
17
18
20
SEE NOTES 4 & 13
POTTING TO BE MAX .010 ABOVE FLUSH TO .030 BELOW FLUSH-SEE NOTE 14
21
16
E

SECTION A-A

WIRING LIST	
TO	FROM
1	7D4
2	7E2
3	7D7
4	6E8
5	M9
6	5F4
7	7A8
8	5E10
9	M7
10	4A8
11	4D2
12	4D1
13	4F8
14	3C10
15	3C8
16	3F7
17	2F5
18	2B8
19	2D8
20	M2
21	1A8
22	7E4
23	7C6
24	7D8
25	7B2
26	M10
27	5F6
28	7A7
29	5E8
30	M8
31	4E4
32	4C8
33	4E8
34	4F1
35	3C2
36	2B4
37	3F1
38	M4
39	2B1
40	2F6
41	1E4
42	1B8
43	7F4
44	7F7
45	M12
46	6F2
47	6D8
48	7B7
49	6B8
50	5E1
51	5C8
52	4B4
53	4F6
54	4D8
55	3B8
56	3F3
57	3F8
58	2B10
59	2A8
60	2C8
61	2E8
62	1A10
63	1C8
64	7F6
65	7F2
66	7D2
67	6F8
68	7B8

WIRING LIST	
TO	FROM
69	7A2
70	6B4
71	5E2
72	5B8
73	5B4
74	4D10
75	4F10
76	3A8
77	M6
78	3F4
79	3E8
80	2B2
81	2F4
82	2F7
83	1A2
84	1F1
85	7E6
86	7F8
87	7E7
88	7C7
89	7B6
90	6C8
91	5F8
92	5D8
93	5A8
94	4B6
95	4B8
96	4F4
97	3B4
98	3E4
99	3C1
100	3D8
101	2E4
102	2F3
103	2F1
104	1A1
105	1F7
106	M5
107	7C4
108	M11
109	7C8
110	6E4
111	7A4
112	6A8
113	M3
114	R2
115	3F6
116	3F5
117	R1
118	1F6
119	1B4
120	1F4
121	1E8
122	M13
123	7D6
124	7E8
125	7C2
126	7B4
127	7A6
128	5E4
129	6F3
130	5F3
131	4F3
132	2F8
133	2F2
134	1F5
135	SPARE ●
136	1F8
137	1D8

● DENOTES NO CONNECTION

MASTER

QTY REQD	PART OR IDENTIFYING NO	MATERIAL OR NOTES	NOMENCLATURE OR DESCRIPTION	FIND NO

LIST OF MATERIALS

NEXT ASSY	USED ON
1003707	
1003706	

APPLICATION

UNLESS OTHERWISE SPECIFIED
DIMENSIONS ARE IN INCHES
CAPACITOR VALUES ARE IN μf
RESISTOR VALUES ARE IN OHMS
TOLERANCES ON
FRACTIONS ± DECIMALS ±.02 ANGLES ±
DO NOT SCALE THIS DRAWING
MATERIAL

MIT
INSTRUMENTATION LAB
CAMBRIDGE MASS

DRAWN Bucwalter 1 MAR 65
CHECKED
APPROVED
APPROVED
APPROVED MIT
APPROVED MSC

MANNED SPACECRAFT CENTER
HOUSTON, TEXAS

RELAY MODULE ASSEMBLY
AGC DSKY, NAV & MAIN

CODE IDENT NO 80230 | SIZE J | DRAWING NO. 1003824
SCALE 2/1 | SHEET 1 OF 2

SYM	ZONE	DESCRIPTION	DR.	CHK	DATE	APPROVED
A		REVISED PER TDRR 20820			8/3/65	
B		REVISED PER TDRR 24495			12/14/65	
C		REVISED PER TDRR 28403				
D		REVISED PER TDRR 30413				
E		REVISED PER TDRR 31541			10/26/66	

REVISIONS 20557

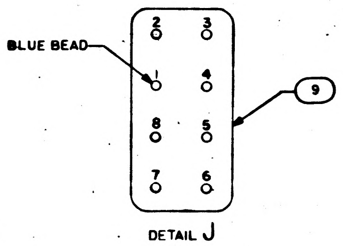
BLUE BEAD
2
3
1
4
8
5
7
6
9

DETAIL J
SCALE 4/1
TYP PIN DESIGNATIONS
OF K6, K12 AND K18

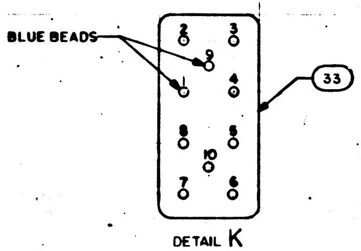
BLUE BEADS
2
3
9
1
4
8
5
10
7
6
33

DETAIL K
SCALE 4/1
TYP PIN DESIGNATIONS
OF K1 THRU K5, K7 THRU K11
K13 THRU K17, K19 THRU K42

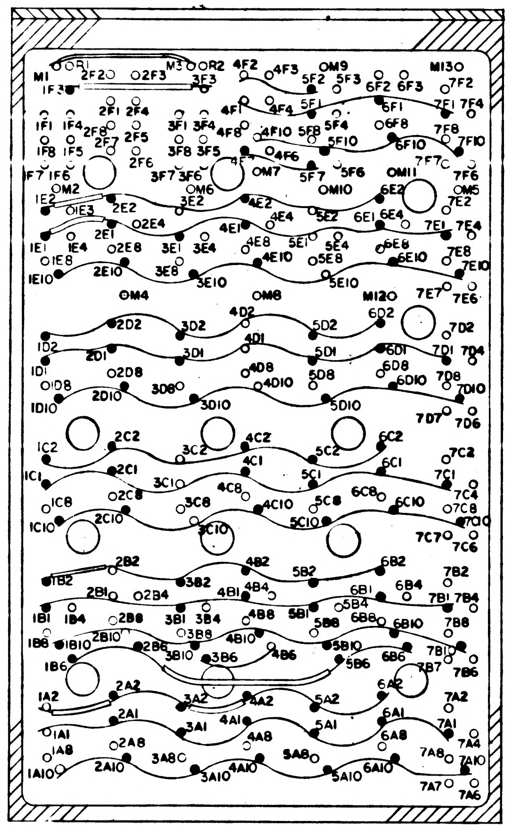
M1 OR1 2F2 2F3 M3 OR2 4F2 4F3 OM9 M13
1F3 3F3 5F2 5F3 6F2 6F3 7F2
2F1 2F4 4F1 4F4 5F1 6F1 7F1 7F4
1F1 1F4 2F8 3F1 3F4 4F8 4F10 5F8 5F4 6F8 7F8
1F8 1F5 2F7 2F5 3F8 3F5 5F10 6F10 7F10
2F6 4F7 4F6 7F7
1F7 1F6 3F7 3F6 OM7 5F7 5F6 OM11 7F6
OM2 OM6 OM10 6E2 OM5
1E2 1E3 2E2 3E2 4E2 7E2
2E4 4E4 5E2 6E1 6E4
2E1 4E1 7E1 7E4
1E1 1E4 2E8 3E1 3E4 4E8 5E1 5E4 6E8 7E8
1E8 4E10 5E8 6E10 7E10
1E10 2E10 3E8 3E10 5E10
OM4 OM8 M12 7E7 7E6
4D2 6D2
2D2 3D2 5D2 7D2
1D2 4D1
2D1 3D1 5D1 6D1 7D1 7D4
1D1 2D8 4D8 5D8 6D8 7D8
1D8 3D8 4D10 6D10 7D10
1D10 2D10 3D10 5D10 7D7 7D6
2C2 4C2 6C2
1C2 3C2 5C2 7C2
4C1 6C1
1C1 2C1 3C1 5C1 7C1
4C8 6C8 7C4
1C8 2C8 3C8 4C10 5C8 6C10 7C8
1C10 2C10 3C10 5C10 7C10
7C7 7C6
2B2 4B2 6B2
1B2 3B2 5B2 7B2
2B1 2B4 4B1 4B4 6B1 6B4 7B1 7B4
1B1 1B4 2B8 3B1 3B4 4B8 5B1 5B4 5B8 6B8 6B10 7B8
1B8 1B10 2B10 3B8 4B10 5B10
2B6 3B10 3B6 4B6 5B6 6B6 7B10
1B6 7B7 7B6
2A2 6A2
1A2 3A2 4A2 5A2 7A2
2A1 6A1
1A1 3A1 4A1 5A1 7A1
1A8 2A8 4A8 6A8 7A4
3A8 5A8 7A8 7A10
1A10 2A10 3A10 4A10 5A10 6A10
7A7 7A6

SECTION B-B

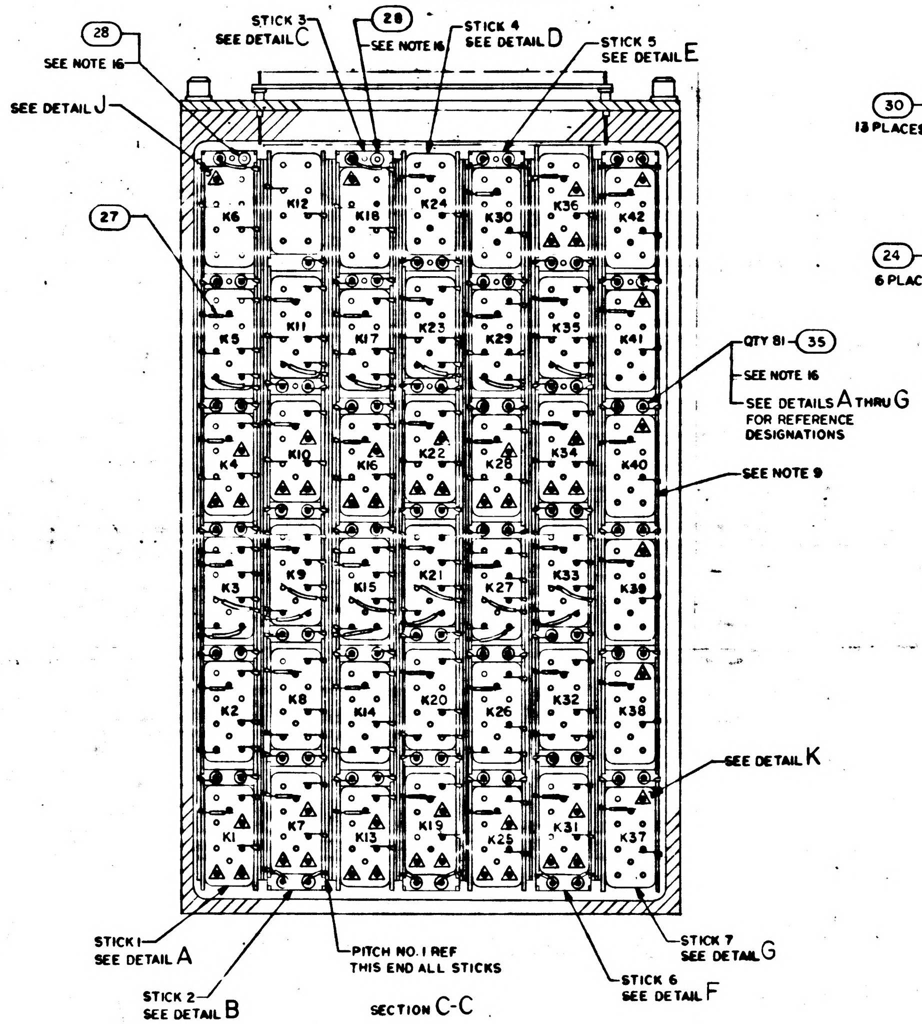
28
SEE NOTE 16
SEE DETAIL J
STICK 3
SEE DETAIL C
28
SEE NOTE 16
STICK 4
SEE DETAIL D
STICK 5
SEE DETAIL E
27
K6 K12 K18 K24 K30 K36 K42
K5 K11 K17 K23 K29 K35 K41
K4 K10 K16 K22 K28 K34 K40
K3 K9 K15 K21 K27 K33 K39
K2 K8 K14 K20 K26 K32 K38
K1 K7 K13 K19 K25 K31 K37
QTY 81 35
SEE NOTE 16
SEE DETAILS A THRU G
FOR REFERENCE
DESIGNATIONS
SEE NOTE 9
SEE DETAIL K
STICK 1
SEE DETAIL A
PITCH NO. 1 REF
THIS END ALL STICKS
STICK 7
SEE DETAIL G
STICK 6
SEE DETAIL F
STICK 2
SEE DETAIL B

SECTION C-C

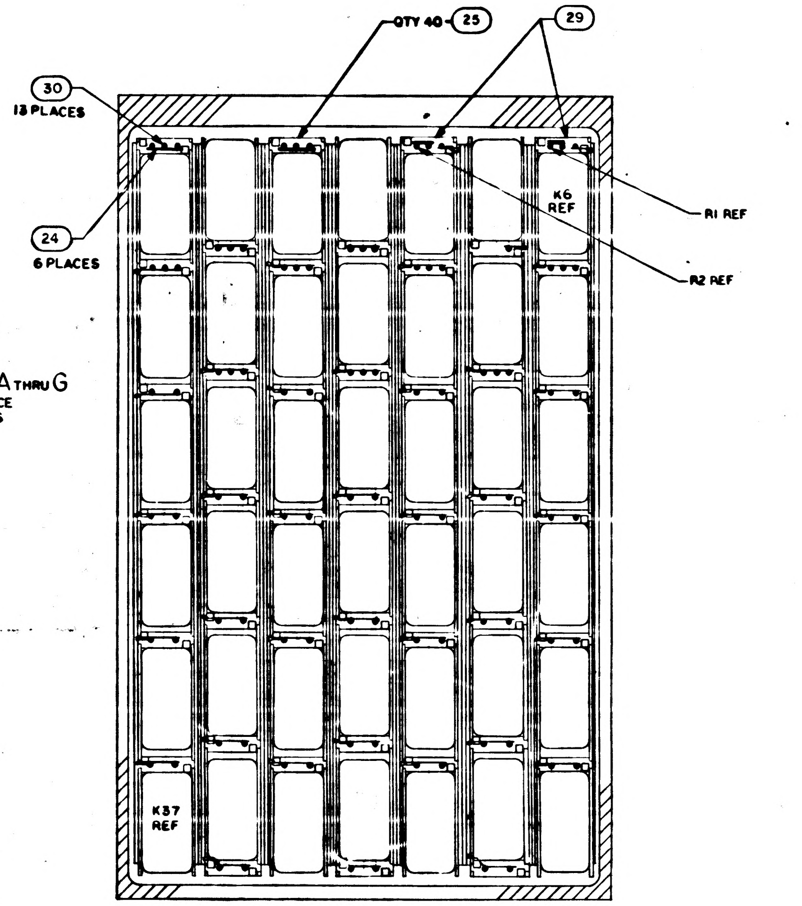
QTY 40 25
29
30
13 PLACES
K6
REF
R1 REF
R2 REF
24
6 PLACES
K37
REF

SECTION D-D
ALL FIND NO. 11 CATHODES
THIS SIDE

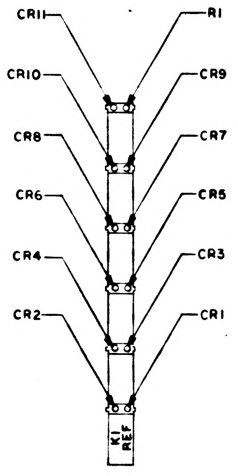
CR11
R1
CR10
CR9
CR8
CR7
CR6
CR5
CR4
CR3
CR2
CR1
K1
REF

DETAIL A
FOR DIODE REFERENCE
DESIGNATIONS ONLY
SCALE 1/1

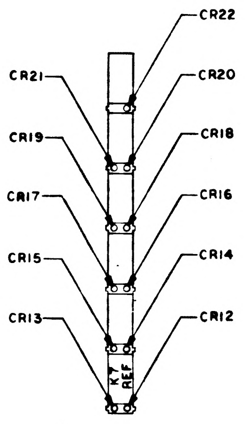
CR22
CR21
CR20
CR19
CR18
CR17
CR16
CR15
CR14
CR13
CR12
K7
REF

DETAIL B
FOR DIODE REFERENCE
DESIGNATIONS ONLY
SCALE 1/1

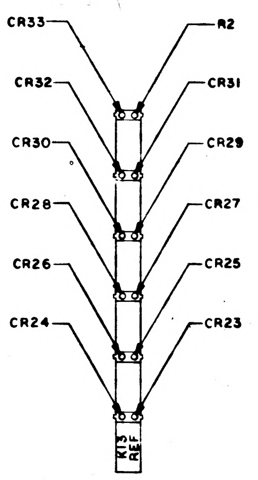
CR33
R2
CR32
CR31
CR30
CR29
CR28
CR27
CR26
CR25
CR24
CR23
K13
REF

DETAIL C
FOR DIODE REFERENCE
DESIGNATIONS ONLY
SCALE 1/1

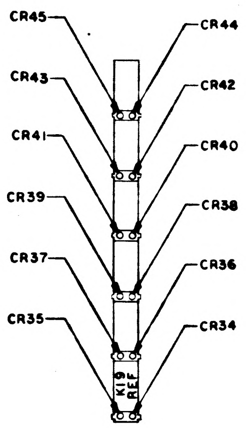
CR45
CR44
CR43
CR42
CR41
CR40
CR39
CR38
CR37
CR36
CR35
CR34
K19
REF

DETAIL D
FOR DIODE REFERENCE
DESIGNATIONS ONLY
SCALE 1/1

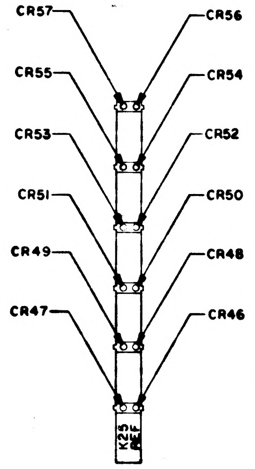
CR57
CR56
CR55
CR54
CR53
CR52
CR51
CR50
CR49
CR48
CR47
CR46
K25
REF

DETAIL E
FOR DIODE REFERENCE
DESIGNATIONS ONLY
SCALE 1/1

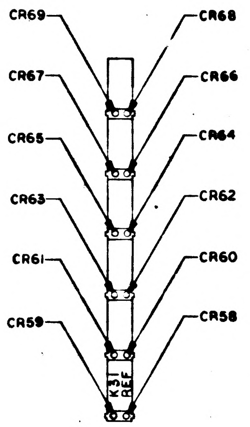
CR69
CR68
CR67
CR66
CR65
CR64
CR63
CR62
CR61
CR60
CR59
CR58
K31
REF

DETAIL F
FOR DIODE REFERENCE
DESIGNATIONS ONLY
SCALE 1/1

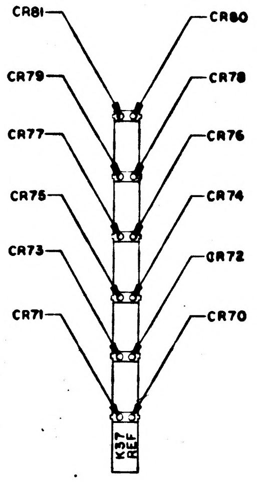
CR81
CR80
CR79
CR78
CR77
CR76
CR75
CR74
CR73
CR72
CR71
CR70
K37
REF

DETAIL G
FOR DIODE REFERENCE
DESIGNATIONS ONLY
SCALE 1/1

SEE NOTE 21

QTY REQD	PART OR IDENTIFYING NO.	MATERIAL OR NOTES	NOMENCLATURE OR DESCRIPTION	FIND NO
	1005780		SCHEMATIC	REF
81	1006399		SEMICONDUCTOR DEVICE, DIODE	35
AR	1006732		WIRE ELECTRICAL	34
39	1006772-7		RELAY, ARM., MAGNETIC LATCHING	33
~~AR~~	~~1006378-003~~		~~WIRE, ELECTRICAL~~	~~32~~
1	1004654		GASKET	31
AR	1006757-13		WIRE ELECTRICAL .020 DIA	30
2	1004124-2		BLOCK, DIODE	29
2	1006750-72		RESISTOR, FIXED	28
AR	1006776-22		INSULATION, SLEEVING	27
14	1004852		BACKING STRIP	26
40	1004124-1		BLOCK, DIODE	25
AR	1006757-7		WIRE, ELECTRICAL .005 X .020	24
~~AR~~	~~1006782-1~~		~~WIRE, ELECTRICAL~~	~~23~~
2	1004540		PIN, STOP	22
1	1003521-5		800 MATRIX ASSY	21
1	1003521-26		800 MATRIX ASSY	20
1	1003521-31		800 MATRIX ASSY	19
1	1003521-32		800 MATRIX ASSY	18
2	1003521-33		800 MATRIX ASSY	17
2	1003521-34		800 MATRIX ASSY	16
1	1003521-29		800 MATRIX ASSY	15
1	1003521-30		800 MATRIX ASSY	14
2	1003521-27		800 MATRIX ASSY	13
2	1003521-28		800 MATRIX ASSY	12
~~81~~	~~1006751~~		~~SEMICONDUCTOR DEVICE, DIODE~~	~~11~~
~~39~~	~~SEE NOTE 19~~		~~RELAY, ARM., MAGNETIC LATCHING~~	~~10~~
3	1006815-2		RELAY, ARMATURE	9
AR	1006806-10		INSULATION TAPE, ELECTRICAL	8
1	1004842-1		INSULATOR	7
1	1004842-2		INSULATOR	6
2	MS35200-13		SCREW, FLATHEAD	5
6	NAS620-4		WASHER, FLAT	4
6	MS35457-1		SCREW, SOCKET	3
1	1004145		PLATE, RELAY MODULE	2
1	1004113		HEADER ASSY, RELAY MODULE	1

011 LIST OF MATERIALS

NEXT ASSY	USED ON
APPLICATION	

UNLESS OTHERWISE SPECIFIED
DIMENSIONS ARE IN INCHES
CAPACITOR VALUES ARE IN µf
RESISTOR VALUES ARE IN OHMS
TOLERANCES ON
FRACTIONS DECIMALS ANGLES
± ± ±
DO NOT SCALE THIS DRAWING
MATERIAL

MIT
INSTRUMENTATION LAB
CAMBRIDGE MASS

DRAWN A. J. Zinn
CHECKED
APPROVED
APPROVED
APPROVED MIT
APPROVED MSC
DATE

MANNED SPACECRAFT CENTER
HOUSTON, TEXAS

RELAY MODULE ASSEMBLY
AGC DSKY, NAV AND MAIN

CODE IDENT NO. 80230
SIZE J
DRAWING NO. 1003824
SCALE 2/1
SHEET 2 OF 2

MASTER

REVISIONS 20557

SYM	ZONE	DESCRIPTION	DR	CHK	DATE	APPROVED

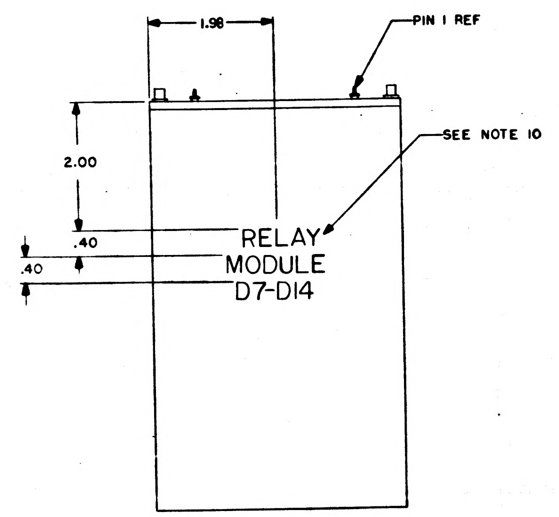

1.98
PIN I REF
SEE NOTE 10
2.00
.40
.40
RELAY
MODULE
D7-D14

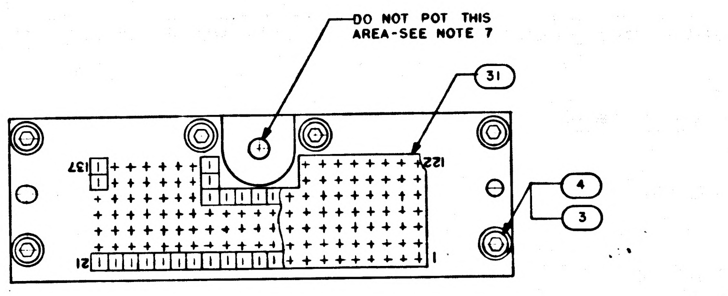

DO NOT POT THIS AREA-SEE NOTE 7
31
137
122
121
1
4
3

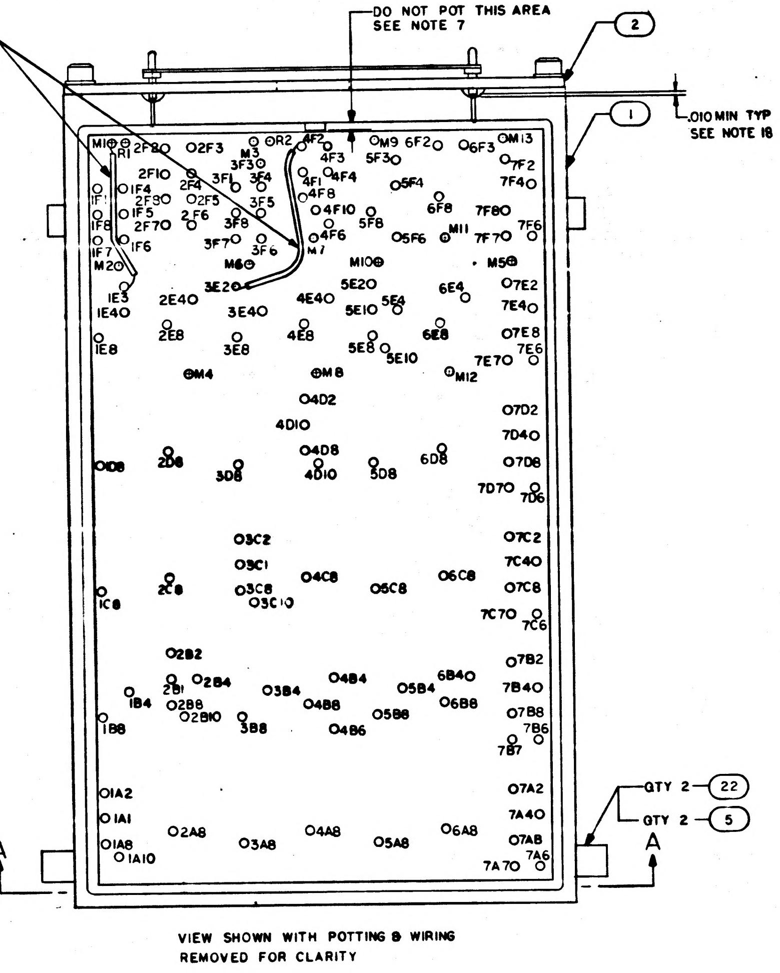

27
24
SEE NOTE 1
DO NOT POT THIS AREA SEE NOTE 7
2
1
.010 MIN TYP SEE NOTE 18
QTY 2 22
QTY 2 5
A
A
VIEW SHOWN WITH POTTING & WIRING REMOVED FOR CLARITY

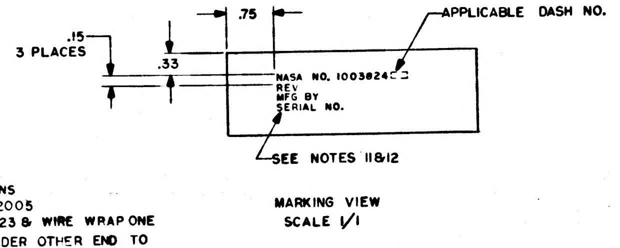

.75
.15
3 PLACES
.33
APPLICABLE DASH NO.
NASA NO. 1003824-
REV
MFG BY
SERIAL NO.
SEE NOTES 11&12

MARKING VIEW
SCALE 1/1

NOTES:

1. WELD ALL FIRST & SECOND LEVEL CONNECTIONS AND AS NOTED ON THIRD LEVEL PER ND 1002005
2. FOR THIRD LEVEL CONNECTIONS USE FIND NO. 23 & WIRE WRAP ONE END TO FIND NO. 2 PER ND 1002031 AND SOLDER OTHER END TO COMPONENT TERMINATIONS PER ND 1002071 USING SOLDER PER ND 1002075
3. FILL CAVITY EXCEPT WHERE INDICATED WITH BLACK POLYURETHANE FOAM PER ND 1002002
4. SPRAY COAT ALL INSIDE SURFACES OF FIND NO. 1 WITH CLEAR EPOXY PER ND 1002035 EXCEPT .010 MAX THICKNESS
5. △ DENOTES LEADS TO BE CUT .030 MAX ABOVE SURFACE OF FIND NO 9 & FIND NO. 10
6. ● DENOTES LEADS TO BE CUT AFTER WELDING
7. EXTEND HOLE INDICATED .100/.070 BEYOND INSIDE SURFACE OF FIND NO. 1
8. AR DENOTES AS REQUIRED
9. BOND FIND NO. 9, 10, 25 & 29 TO FIND NO. 26 PER ND 1002004, TYPE V
10. MARK $^{.24}_{.26}$ HIGH WHITE CHARACTERS PER ND 1002019 AND ND 1002122 TYPE II, CLASS I USING MARKING INK 1006271-1
11. MARK $^{.08}_{.10}$ HIGH WHITE CHARACTERS PER ND 1002019 AND ND 1002122 TYPE II, CLASS I USING MARKING INK 1006271-1
12. SERIALIZE PER ND 1002023
13. BOND STICKS TO FIND NO. 1 PER ND 1002004, TYPE I
14. FILL CAVITY PER ND 1002217
15. WORKMANSHIP, FABRICATION AND INSPECTION REQUIREMENTS PER ND 1002069
16. STAKE FIND NO. 11 & 28 IN FIND NO. 25 & 29 PER ND 1002009, METHOD B
17. STAKE THIRD LEVEL WIRING TO FIND NO. 6 PER ND 1002004, TYPE V USE STAKING COMPOUND SPARINGLY
18. APPLY BEAD OF ADHESIVE MATERIAL AS SHOWN PER ND1002004, TYPE VI
19. FIND NUMBER 10 MAY BE EITHER 1006772-1 OR 1006772-4 EXCEPT DO NOT USE BOTH IN THE SAME ASSY.

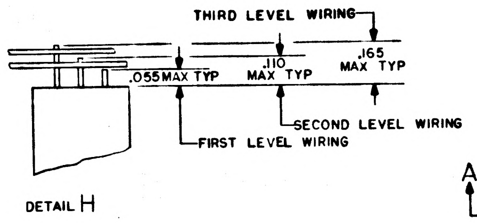

THIRD LEVEL WIRING
.055 MAX TYP
.110 MAX TYP
.165 MAX TYP
SECOND LEVEL WIRING
FIRST LEVEL WIRING

DETAIL H

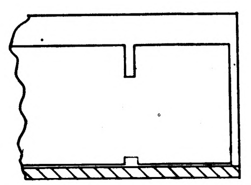

PARTIAL SECTION E-E

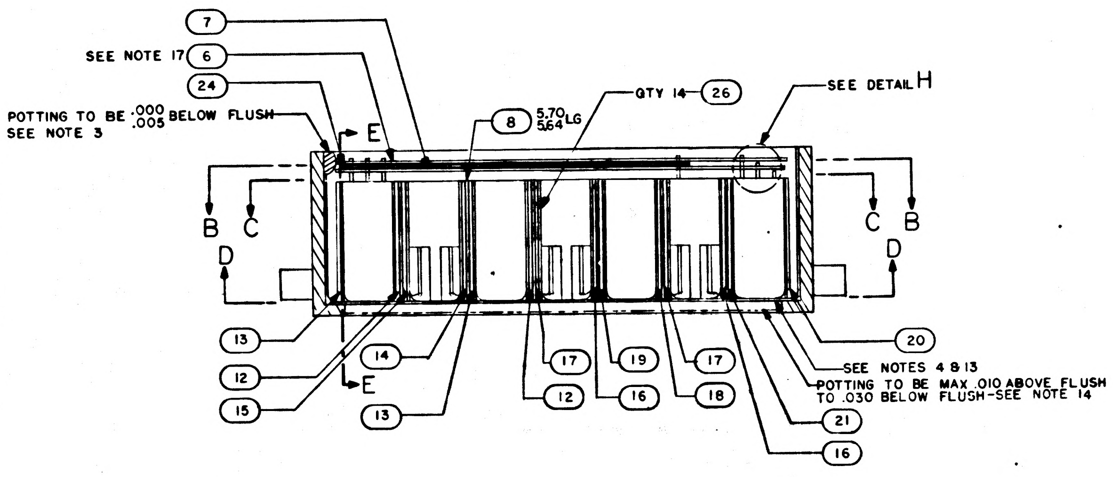

7
SEE NOTE 17
6
24
POTTING TO BE .000/.005 BELOW FLUSH SEE NOTE 3
E
8
5.70/5.64 LG
QTY 14 26
SEE DETAIL H
B
C
D
C
B
D
13
14
12
15
E
13
17
12
19
16
17
18
20
SEE NOTES 4 & 13
POTTING TO BE MAX .010 ABOVE FLUSH TO .030 BELOW FLUSH-SEE NOTE 14
21
16

SECTION A-A

WIRING LIST	
TO	FROM
1	7D4
2	7E2
3	7D7
4	6E8
5	M9
6	5F4
7	7A8
8	5E10
9	M7
10	4A8
11	4D2
12	4D1
13	4F8
14	3C10
15	3C8
16	3F7
17	2F5
18	2B8
19	2D8
20	M2
21	1A8
22	7E4
23	7C6
24	7D8
25	7B2
26	M10
27	5F6
28	7A7
29	5E8
30	M8
31	4E4
32	4C8
33	4E8
34	4F1
35	3C2
36	2B4
37	3F1
38	M4
39	2B1
40	2F6
41	1E4
42	1B8
43	7F4
44	7F7
45	M12
46	6F2
47	6D8
48	7B7
49	6B8
50	5E1
51	5C8
52	4B4
53	4F6
54	4D8
55	3B8
56	3F3
57	3F8
58	2B10
59	2A8
60	2C8
61	2E8
62	1A10
63	1C8
64	7F6
65	7F2
66	7D2
67	6F8
68	7B8

WIRING LIST	
TO	FROM
69	7A2
70	6B4
71	5E2
72	5B8
73	5B4
74	4D10
75	4F10
76	3A8
77	M6
78	3F4
79	3E8
80	2B2
81	2F4
82	2F7
83	1A2
84	1F1
85	7E6
86	7F8
87	7E7
88	7C7
89	7B6
90	6C8
91	5F8
92	5D8
93	5A8
94	4B6
95	4B8
96	4F4
97	3B4
98	3E4
99	3C1
100	3D8
101	2E4
102	2F3
103	2F1
104	1A1
105	1F7
106	M5
107	7C4
108	M11
109	7C8
110	6E4
111	7A4
112	6A8
113	M3
114	R2
115	3F6
116	3F5
117	R1
118	1F6
119	1B4
120	1F4
121	1E8
122	M13
123	7D6
124	7E8
125	7C2
126	7B4
127	7A6
128	5E4
129	6F3
130	5F3
131	4F3
132	2F8
133	2F2
134	1F5
135	SPARE *
136	1F8
137	1D8

* DENOTES NO CONNECTION

2H

QTY REQD	PART OR IDENTIFYING NO.	MATERIAL OR NOTES	NOMENCLATURE OR DESCRIPTION	FIND NO.

LIST OF MATERIALS

1003707	
1003706	
NEXT ASSY	USED ON
APPLICATION	

UNLESS OTHERWISE SPECIFIED
DIMENSIONS ARE IN INCHES
CAPACITOR VALUES ARE IN μf
RESISTOR VALUES ARE IN OHMS
TOLERANCES ON
FRACTIONS ± DECIMALS ±.02 ANGLES ±
DO NOT SCALE THIS DRAWING

MATERIAL

MIT
INSTRUMENTATION LAB
CAMBRIDGE, MASS

DRAWN Bucworlder 1 MAR 65
CHECKED R. Edmund
APPROVED
APPROVED Eldon C Hall
APPROVED MIT W Crofts
APPROVED MSC
DATE

MANNED SPACECRAFT CENTER
HOUSTON, TEXAS

RELAY MODULE ASSEMBLY
AGC DSKY, NAV & MAIN

CODE IDENT NO. 80230 | SIZE J | DRAWING NO. 1003824
SCALE 2/1 | SHEET 1 OF 2

MASTER

E-2

REVISIONS 26557

SYM	ZONE	DESCRIPTION	LTR	CHK	DATE	APPROVALS

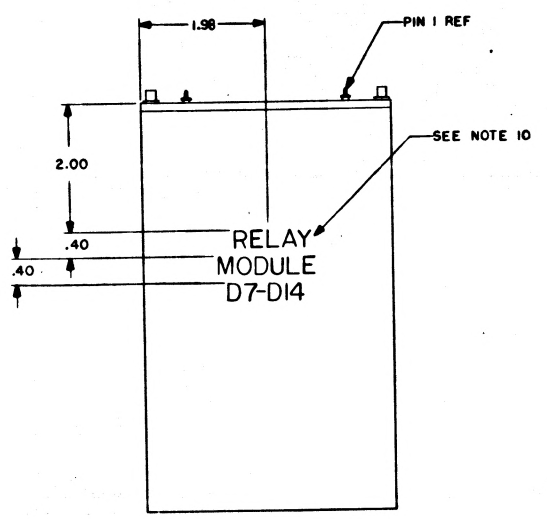
1.98
PIN 1 REF
SEE NOTE 10
2.00
.40
.40
RELAY
MODULE
D7-D14

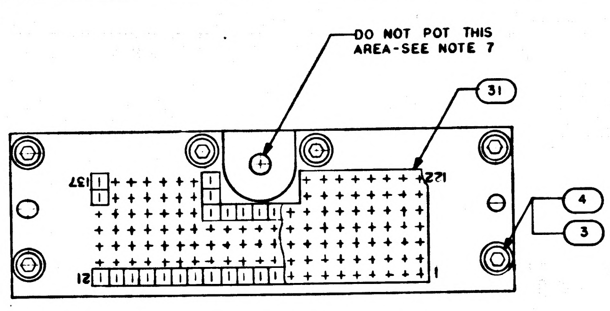
DO NOT POT THIS AREA-SEE NOTE 7
31
137
271
4
3
12
1

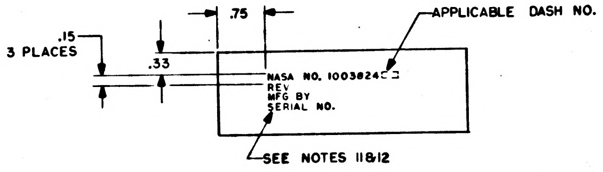
.75
APPLICABLE DASH NO.
.15
3 PLACES
.33
NASA NO. 1003824
REV
MFG BY
SERIAL NO.
SEE NOTES 11&12

MARKING VIEW
SCALE 1/1

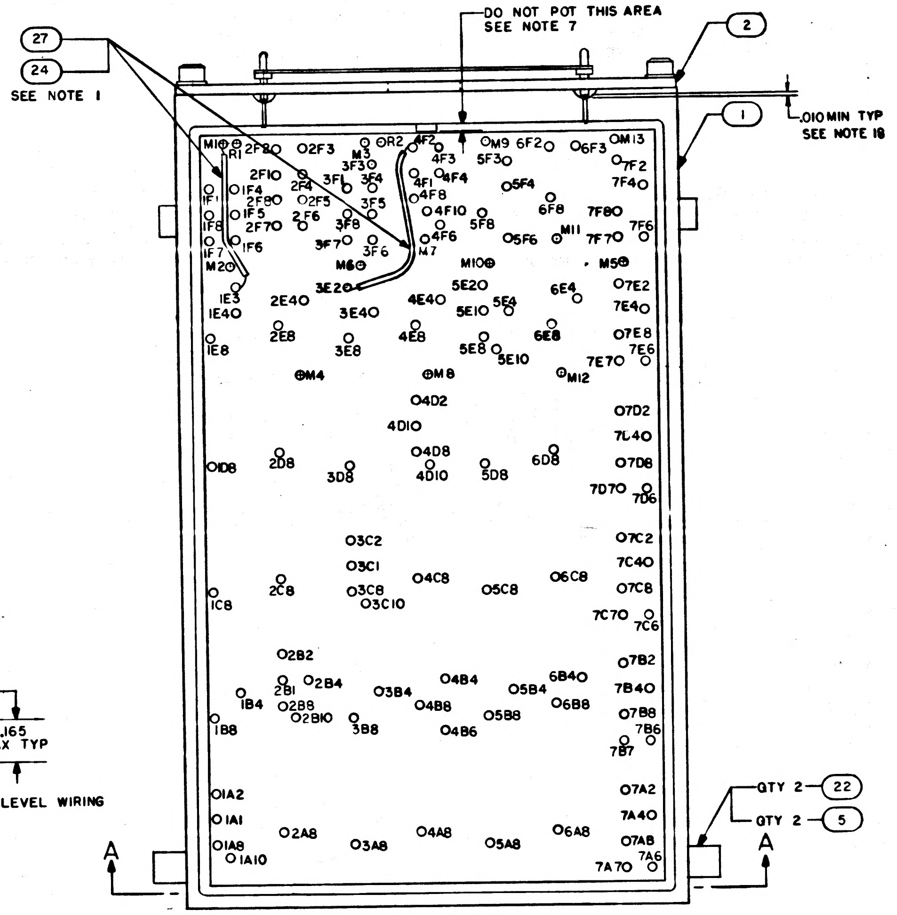
DO NOT POT THIS AREA
SEE NOTE 7
2
27
24
SEE NOTE 1
1
.010 MIN TYP
SEE NOTE 18
QTY 2
22
QTY 2
5
A
A

VIEW SHOWN WITH POTTING & WIRING REMOVED FOR CLARITY

NOTES:
1. WELD ALL FIRST & SECOND LEVEL CONNECTIONS AND AS NOTED ON THIRD LEVEL PER ND 1002005
2. FOR THIRD LEVEL CONNECTIONS USE FIND NO. 23 & WIRE WRAP ONE END TO FIND NO. 2 PER ND 1002031 AND SOLDER OTHER END TO COMPONENT TERMINATIONS PER ND 1002071 USING SOLDER PER ND 1002075
3. FILL CAVITY EXCEPT WHERE INDICATED WITH BLACK POLYURETHANE FOAM PER ND 1002002
4. SPRAY COAT ALL INSIDE SURFACES OF FIND NO. 1 WITH CLEAR EPOXY PER ND 1002035 EXCEPT .010 MAX THICKNESS
5. △ DENOTES LEADS TO BE CUT .030 MAX ABOVE SURFACE OF FIND NO. 9 & FIND NO. 10
6. ● DENOTES LEADS TO BE CUT AFTER WELDING
7. EXTEND HOLE INDICATED .100/.070 BEYOND INSIDE SURFACE OF FIND NO. 1
8. AR DENOTES AS REQUIRED
9. BOND FIND NO. 9, 10, 25 & 29 TO FIND NO. 26 PER ND 1002004, TYPE V
10. MARK $\frac{.24}{.26}$ HIGH WHITE CHARACTERS PER ND 1002019 AND ND 1002122 TYPE II, CLASS I USING MARKING INK 1006271-1
11. MARK $\frac{.08}{.10}$ HIGH WHITE CHARACTERS PER ND 1002019 AND ND 1002122 TYPE II, CLASS I USING MARKING INK 1006271-1
12. SERIALIZE PER ND 1002023
13. BOND STICKS TO FIND NO. 1 PER ND 1002004, TYPE I
14. FILL CAVITY PER ND 1002217
15. WORMANSHIP, FABRICATION AND INSPECTION REQUIREMENTS PER ND 1002069
16. STAKE FIND NO. 11 & 28 IN FIND NO. 25 & 29 PER ND 1002009, METHOD B
17. STAKE THIRD LEVEL WIRING TO FIND NO. 6 PER ND 1002004, TYPE V USE STAKING COMPOUND SPARINGLY
18. APPLY BEAD OF ADHESIVE MATERIAL AS SHOWN PER ND1002004, TYPE VI
19. FIND NUMBER 10 MAY BE EITHER 1006772-1 OR 1006772-4 EXCEPT DO NOT USE BOTH IN THE SAME ASSY.

2#

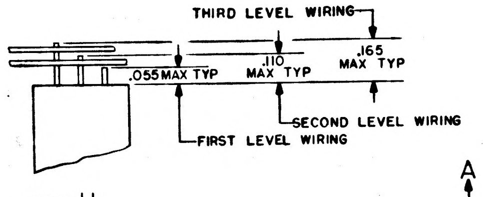
THIRD LEVEL WIRING
.055 MAX TYP
.110 MAX TYP
.165 MAX TYP
SECOND LEVEL WIRING
FIRST LEVEL WIRING

DETAIL H

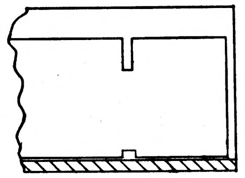

PARTIAL SECTION E-E

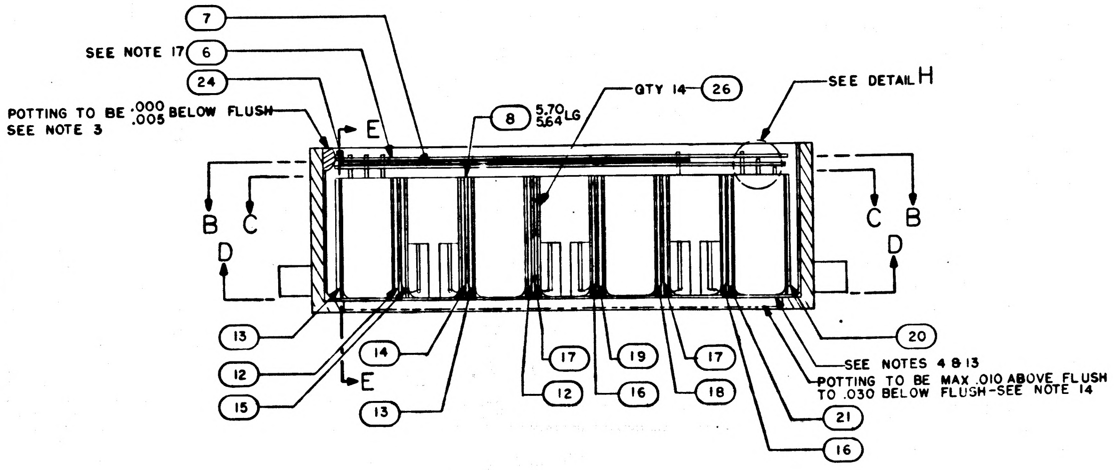
7
SEE NOTE 17
6
24
POTTING TO BE .000/.005 BELOW FLUSH
SEE NOTE 3
8
5.70/5.64 LG
QTY 14
26
SEE DETAIL H
E
E
B
C
D
C
B
D
13
12
15
14
13
17
12
19
16
17
18
20
SEE NOTES 4 & 13
POTTING TO BE MAX .010 ABOVE FLUSH TO .030 BELOW FLUSH-SEE NOTE 14
21
16

SECTION A-A

WIRING LIST	
TO	FROM
1	7D4
2	7E2
3	7D7
4	6E8
5	M9
6	5F4
7	7A8
8	5E10
9	M7
10	4A8
11	4D2
12	4D1
13	4F8
14	3C10
15	3C8
16	3F7
17	2F5
18	2B8
19	2D8
20	M2
21	1A8
22	7E4
23	7C6
24	7D8
25	7B2
26	M10
27	5F6
28	7A7
29	5E8
30	M8
31	4E4
32	4C8
33	4E8
34	4F1
35	3C2
36	2B4
37	3F1
38	M4
39	2B1
40	2F6
41	1E4
42	1B8
43	7F4
44	7F7
45	M12
46	6F2
47	6D8
48	7B7
49	6B8
50	5E1
51	5C8
52	4B4
53	4F6
54	4D8
55	3B8
56	3F3
57	3F8
58	2B10
59	2A8
60	2C8
61	2E8
62	1A10
63	1C8
64	7F6
65	7F2
66	7D2
67	6F8
68	7B8

WIRING LIST		
TO	FROM	
69	7A2	
70	6B4	
71	5E2	
72	5B8	
73	5B4	
74	4D10	
75	4F10	
76	3A8	
77	M6	
78	3F4	
79	3E8	
80	2B2	
81	2F4	
82	2F7	
83	1A2	
84	1F1	
85	7E6	
86	7F8	
87	7E7	
88	7C7	
89	7B6	
90	6C8	
91	5F8	
92	5D8	
93	5A8	
94	4B6	
95	4B8	
96	4F4	
97	3B4	
98	3E4	
99	3C1	
100	3D8	
101	2E4	
102	2F3	
103	2F1	
104	1A1	
105	1F7	
106	M5	
107	7C4	
108	M11	
109	7C8	
110	6E4	
111	7A4	
112	6A8	
113	M3	
114	R2	
115	3F6	
116	3F5	
117	R1	
118	1F6	
119	1B4	
120	1F4	
121	1E8	
122	M13	
123	7D6	
124	7E8	
125	7C2	
126	7B4	
127	7A6	
128	5E4	
129	6F3	
130	5F3	
131	4F3	
132	2F8	
133	2F2	
134	1F5	
135	SPARE	*
136	1F8	
137	1D8	

* DENOTES NO CONNECTION

MASTER

QTY REQD	PART OR IDENTIFYING NO.	MATERIAL OR NOTES	NOMENCLATURE OR DESCRIPTION

LIST OF MATERIALS

NEXT ASSY	USED ON
1003707	
1003706	

APPLICATION

UNLESS OTHERWISE SPECIFIED
DIMENSIONS ARE IN INCHES
CAPACITOR VALUES ARE IN μf
RESISTOR VALUES ARE IN OHMS
TOLERANCES ON
FRACTIONS ± DECIMALS ±.02 ANGLES ±
DO NOT SCALE THIS DRAWING
MATERIAL

MIT
INSTRUMENTATION LAB
CAMBRIDGE, MASS

DRAWN Bucwalter 1 MAR 65
CHECKED R. Edmund 5 Mar 65
APPROVED
APPROVED Eldon C. Hall
APPROVED MIT W
APPROVED MSC
DATE

MANNED SPACECRAFT CENTER
HOUSTON, TEXAS

RELAY MODULE ASSEMB
AGC DSKY, NAV & MAIN

CODE IDENT NO. 80230
SIZE J
DRAWING NO. 1003824
SCALE 2/1
SHEET

1003824 —

SYM	ZONE	DESCRIPTION	DR	CHK	DATE	APPROVED

REVISIONS 20557

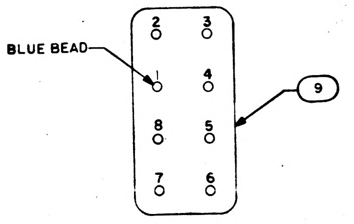
BLUE BEAD
2
3
1
4
8
5
7
6
9

DETAIL J
SCALE 4/1
TYP PIN DESIGNATIONS OF K6, K12 AND K18

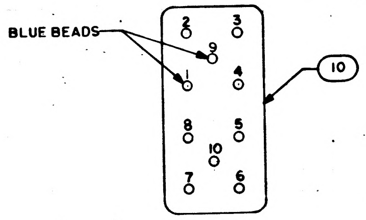
BLUE BEADS
2
3
9
1
4
8
5
10
7
6
10

DETAIL K
SCALE 4/1
TYP PIN DESIGNATIONS OF K1 THRU K5, K7 THRU K11 K13 THRU K17, K19 THRU K42

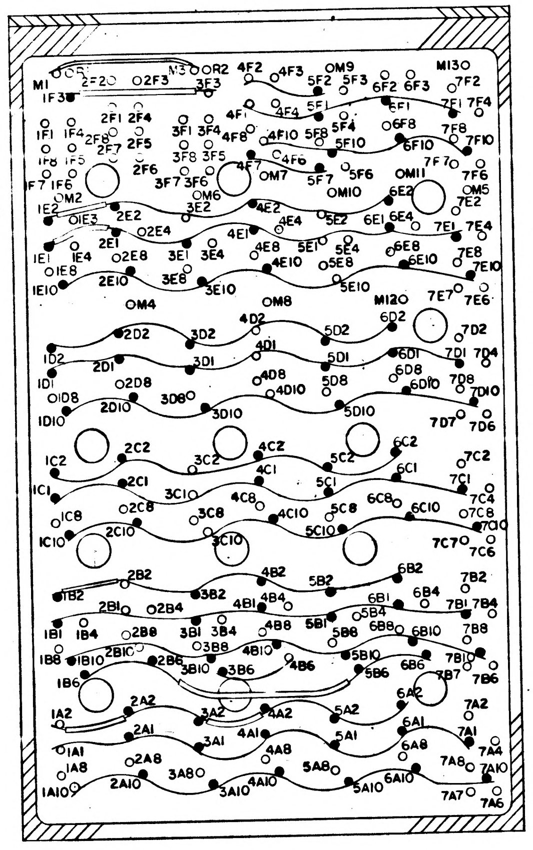
M1
1F3
1F1
1F4
2F1 2F4
2F5
2F7
2F6
3F1
3F4
3F8
3F5
3F7
3F6
4F8
4F1
4F10
4F7
5F1
5F4
5F8
5F10
5F7
5F6
6F8
6F10
6E1
7F10
7F1
7F4
7F8
7F6
7F7
M130
OM2
OM5
OM6
OM7
OM10
OM11
OM4
OM8
M120
2E2
2E1
2E4
2E8
2E10
3E2
3E1
3E4
3E6
3E10
4E2
4E1
4E4
4E8
4E10
5E2
5E1
5E4
5E8
5E10
6E2
6E4
6E8
6E10
7E2
7E4
7E1
7E8
7E10
7E6
7E7
1E2
1E3
1E1
1E4
1E8
1E10
2D2
2D1
2D8
2D10
3D2
3D1
3D8
3D10
4D2
4D1
4D8
4D10
5D2
5D1
5D8
5D10
6D2
6D1
6D8
6D10
7D2
7D1
7D4
7D8
7D10
7D6
7D7
1D2
1D1
1D8
1D10
1C2
1C1
1C8
1C10
2C2
2C1
2C8
2C10
3C2
3C1
3C8
3C10
4C2
4C1
4C8
4C10
5C2
5C1
5C8
5C10
6C2
6C1
6C8
6C10
7C2
7C1
7C4
7C8
7C10
7C7
7C6
2B2
2B1
2B4
2B8
2B10
3B2
3B1
3B4
3B8
3B6
4B2
4B1
4B4
4B8
4B10
4B6
5B2
5B1
5B6
5B8
5B10
6B2
6B4
6B1
6B8
6B10
6B6
7B2
7B1
7B4
7B8
7B10
7B7
7B6
1B2
1B1
1B4
1B8
1B10
1B6
1A2
1A1
1A8
1A10
2A2
2A1
2A8
2A10
3A2
3A1
3A8
3A10
4A2
4A1
4A8
4A10
5A2
5A1
5A8
5A10
6A2
6A1
6A8
6A10
7A2
7A1
7A4
7A8
7A10
7A7
7A6

SECTION B-B

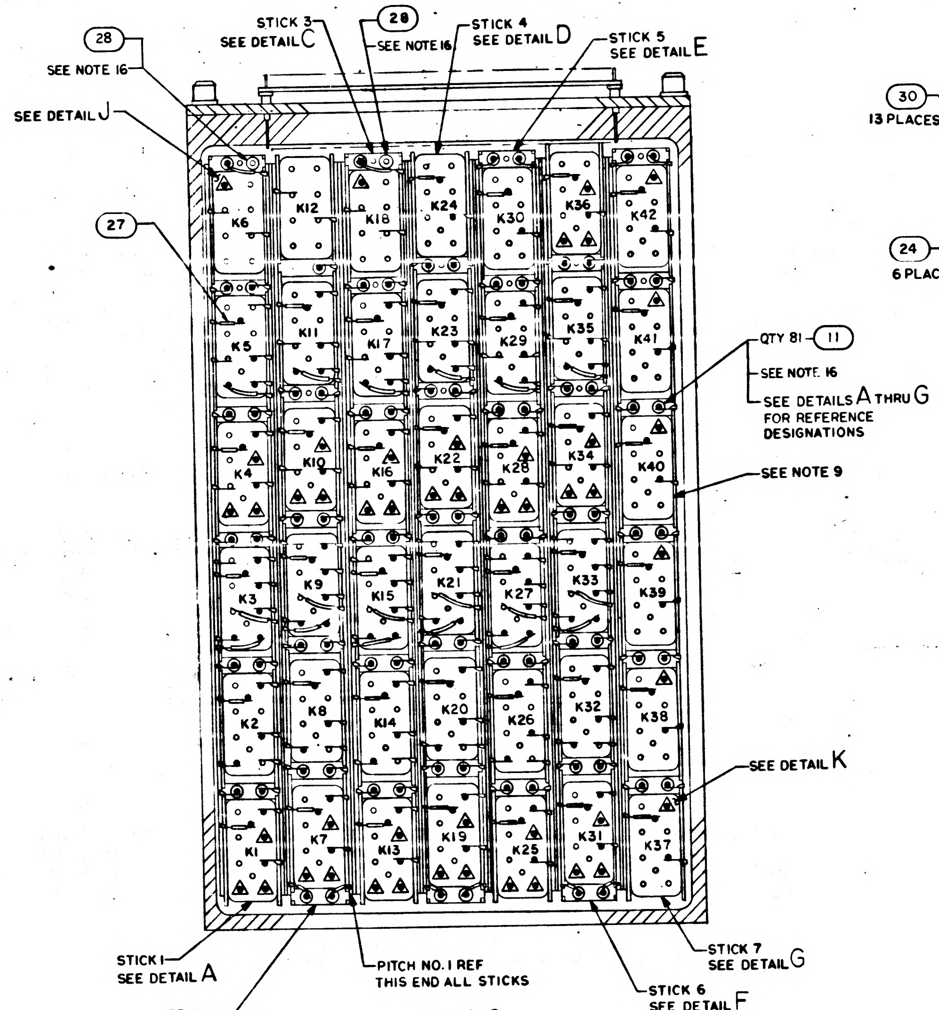
28
SEE NOTE 16
SEE DETAIL J
STICK 3 SEE DETAIL C
28
SEE NOTE 16
STICK 4 SEE DETAIL D
STICK 5 SEE DETAIL E
27
K6
K12
K18
K24
K30
K36
K42
K5
K11
K17
K23
K29
K35
K41
K4
K10
K16
K22
K28
K34
K40
K3
K9
K15
K21
K27
K33
K39
K2
K8
K14
K20
K26
K32
K38
K1
K7
K13
K19
K25
K31
K37
QTY 81 11
SEE NOTE 16
SEE DETAILS A THRU G FOR REFERENCE DESIGNATIONS
SEE NOTE 9
SEE DETAIL K
STICK 1 SEE DETAIL A
STICK 2 SEE DETAIL B
PITCH NO. 1 REF THIS END ALL STICKS
STICK 6 SEE DETAIL F
STICK 7 SEE DETAIL G

SECTION C-C

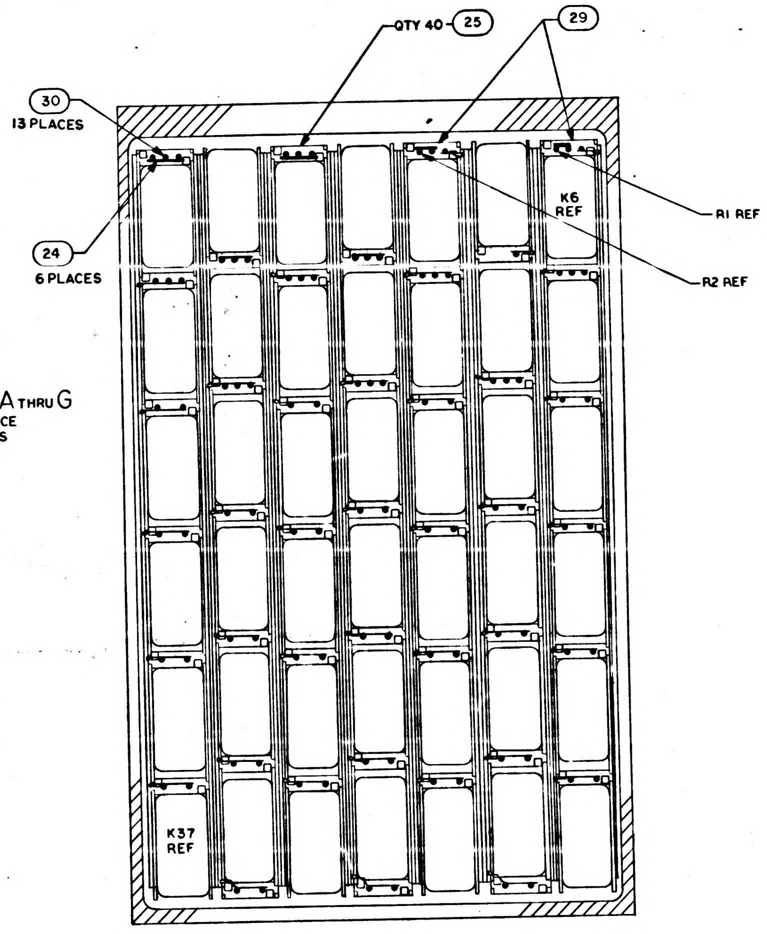
QTY 40 25
29
30
13 PLACES
24
6 PLACES
K6 REF
R1 REF
R2 REF
K37 REF

SECTION D-D
ALL FIND NO. 11 CATHODES THIS SIDE

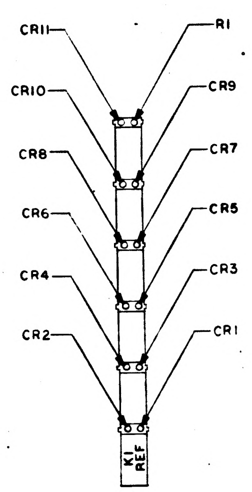
CR11
R1
CR10
CR9
CR8
CR7
CR6
CR5
CR4
CR3
CR2
CR1
K1 REF

DETAIL A
FOR DIODE REFERENCE DESIGNATIONS ONLY
SCALE 1/1

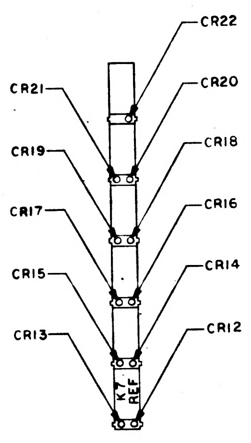
CR22
CR21
CR20
CR19
CR18
CR17
CR16
CR15
CR14
CR13
CR12
K7 REF

DETAIL B
FOR DIODE REFERENCE DESIGNATIONS ONLY
SCALE 1/1

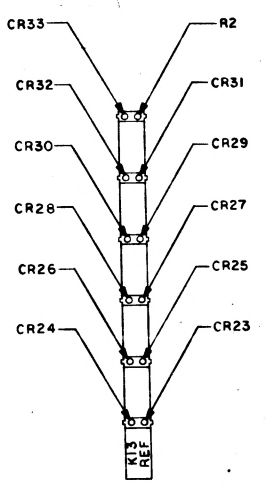
CR33
R2
CR32
CR31
CR30
CR29
CR28
CR27
CR26
CR25
CR24
CR23
K13 REF

DETAIL C
FOR DIODE REFERENCE DESIGNATIONS ONLY
SCALE 1/1

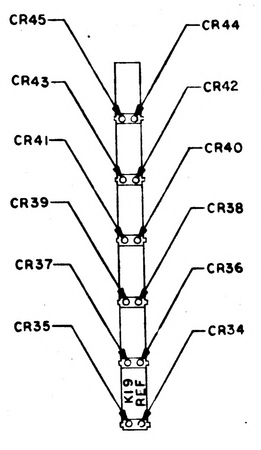
CR45
CR44
CR43
CR42
CR41
CR40
CR39
CR38
CR37
CR36
CR35
CR34
K19 REF

DETAIL D
FOR DIODE REFERENCE DESIGNATIONS ONLY
SCALE 1/1

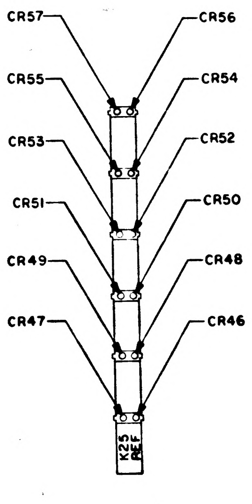
CR57
CR56
CR55
CR54
CR53
CR52
CR51
CR50
CR49
CR48
CR47
CR46
K25 REF

DETAIL E
FOR DIODE REFERENCE DESIGNATIONS ONLY
SCALE 1/1

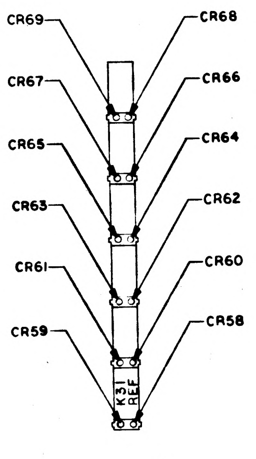
CR69
CR68
CR67
CR66
CR65
CR64
CR63
CR62
CR61
CR60
CR59
CR58
K31 REF

DETAIL F
FOR DIODE REFERENCE DESIGNATIONS ONLY
SCALE 1/1

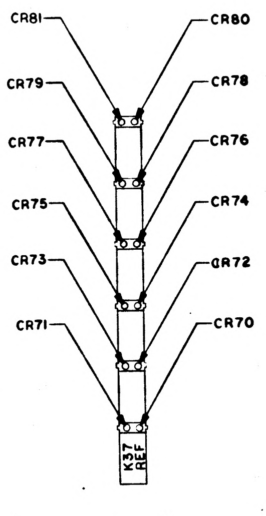
CR81
CR80
CR79
CR78
CR77
CR76
CR75
CR74
CR73
CR72
CR71
CR70
K37 REF

DETAIL G
FOR DIODE REFERENCE DESIGNATIONS ONLY
SCALE 1/1

MASTER

2H

QTY REQD	PART OR IDENTIFYING NO.	MATERIAL OR NOTES	NOMENCLATURE OR DESCRIPTION	FIND NO.
☒	1005780		SCHEMATIC	REF
1	1004654		GASKET	31
AR	1006757-13		WIRE ELECTRICAL .020 DIA	30
2	1004124-2		BLOCK, DIODE	29
2	1006750-72		RESISTOR, FIXED	28
AR	1006776-22		INSULATION, SLEEVING	27
14	1004852		BACKING STRIP	26
40	1004124-1		BLOCK, DIODE	25
AR	1006757-7		WIRE, ELECTRICAL .005 X .020	24
AR	1006732-1		WIRE, ELECTRICAL	23
2	1004540		PIN, STOP	22
1	1003521-5		800 MATRIX ASSY	21
1	1003521-26		800 MATRIX ASSY	20
1	1003521-31		800 MATRIX ASSY	19
1	1003521-32		800 MATRIX ASSY	18
2	1003521-33		800 MATRIX ASSY	17
2	1003521-34		800 MATRIX ASSY	16
1	1003521-29		800 MATRIX ASSY	15
1	1003521-30		800 MATRIX ASSY	14
2	1003521-27		800 MATRIX ASSY	13
2	1003521-28		800 MATRIX ASSY	12
81	1006751		SEMICONDUCTOR DEVICE, DIODE	11
39	SEE NOTE 19		RELAY, ARM., MAGNETIC LATCHING	10
3	1006815-2		RELAY, ARMATURE	9
AR	1006806-10		INSULATION TAPE, ELECTRICAL	8
1	1004842-1		INSULATOR	7
1	1004842-2		INSULATOR	6
2	MS35200-13		SCREW, FLATHEAD	5
6	NAS620-4		WASHER, FLAT	4
6	MS35457-1		SCREW, SOCKET	3
1	1004145		PLATE, RELAY MODULE	2
1	1004113		HEADER ASSY, RELAY MODULE	1

011 LIST OF MATERIALS

1 | 1003824

NEXT ASS	USED ON
APPLICATION	

UNLESS OTHERWISE SPECIFIED
DIMENSIONS ARE IN INCHES
CAPACITOR VALUES ARE IN µf
RESISTOR VALUES ARE IN OHMS
TOLERANCES ON
FRACTIONS ± DECIMALS ± ANGLES ±
DO NOT SCALE THIS DRAWING

MATERIAL

MIT
INSTRUMENTATION LAB
CAMBRIDGE, MASS

DRAWN A.J. Bison 1MAR65
CHECKED
APPROVED
APPROVED Eldon C. Hall
APPROVED MIT
APPROVED MSC
DATE

MANNED SPACECRAFT CENTER
HOUSTON, TEXAS

RELAY MODULE ASSEMBLY
AGC DSKY, NAV AND MAIN

CODE IDENT NO. 80230
SIZE J
DRAWING NO. 1003824
SCALE 2/1
SHEET 2 OF 2

F-2

NOTICE - WHEN GOVERNMENT DRAWINGS, SPECIFICATIONS, OR OTHER DATA ARE USED FOR ANY PURPOSE OTHER THAN IN CONNECTION WITH A DEFINITELY RELATED GOVERNMENT PROCUREMENT OPERATION, THE UNITED STATES GOVERNMENT THEREBY INCURS NO RESPONSIBILITY NOR ANY OBLIGATION WHATSOEVER; AND THE FACT THAT THE GOVERNMENT MAY HAVE FORMULATED, FURNISHED, OR IN ANY WAY SUPPLIED THE SAID DRAWINGS, SPECIFICATIONS, OR OTHER DATA IS NOT TO BE REGARDED BY IMPLICATION OR OTHERWISE AS IN ANY MANNER LICENSING THE HOLDER OR ANY OTHER PERSON OR CORPORATION, OR CONVEYING ANY RIGHTS OR PERMISSION TO MANUFACTURE, USE, OR SELL ANY PATENTED INVENTION THAT MAY IN ANY WAY BE RELATED THERETO.

REVISIONS 2 9557						
SYM	ZONE	DESCRIPTION	DR	CHK	DATE	APPROV

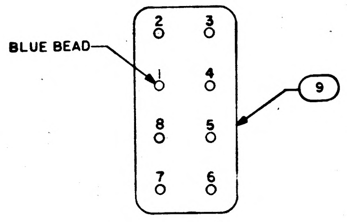
BLUE BEAD
1
2
3
4
5
6
7
8
9

DETAIL J
SCALE 4/1
TYP PIN DESIGNATIONS
OF K6, K12 AND K18

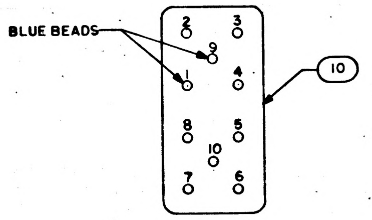
BLUE BEADS
1
2
3
4
5
6
7
8
9
10
10

DETAIL K
SCALE 4/1
TYP PIN DESIGNATIONS
OF K1 THRU K5, K7 THRU K11
K13 THRU K17, K19 THRU K42

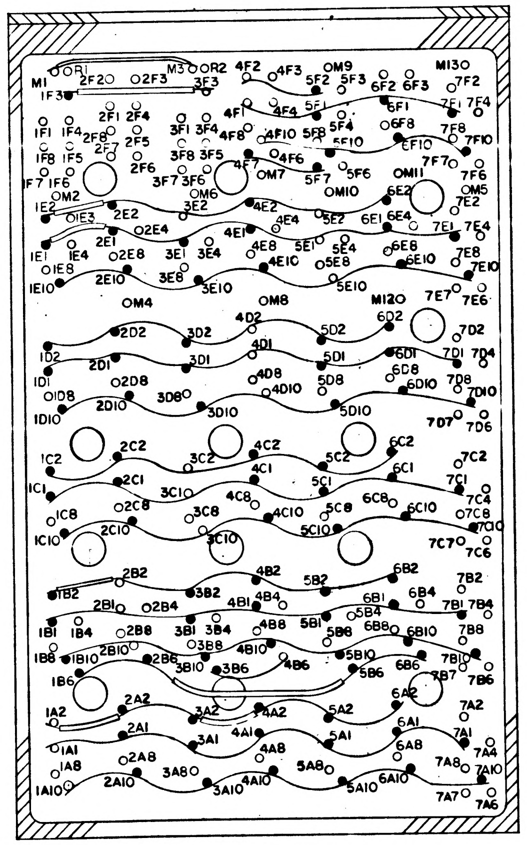
M1
R1
R2
M3
M13
M12
2F2
2F3
3F3
4F2
4F3
M9
1F3
M2
M4
M5
M6
M7
M8
M10
M11

SECTION B-B

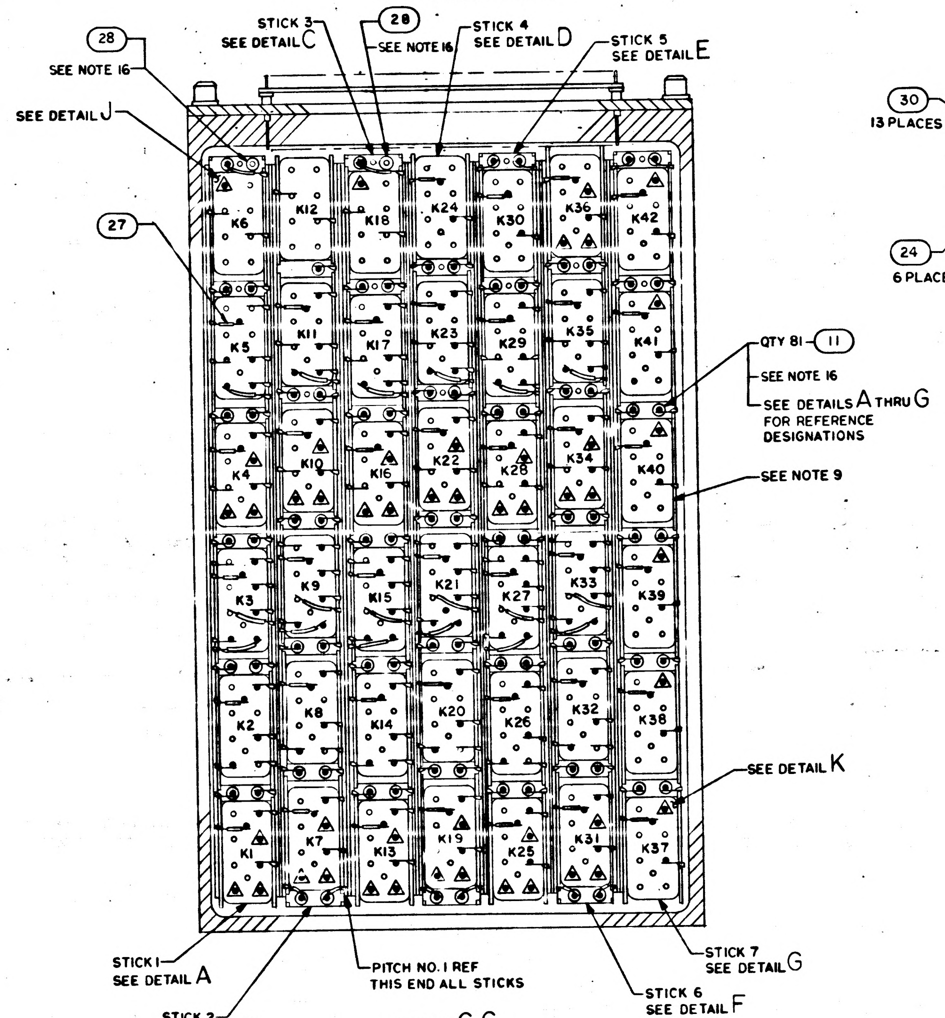
28
SEE NOTE 16
SEE DETAIL J
STICK 3
SEE DETAIL C
28
SEE NOTE 16
STICK 4
SEE DETAIL D
STICK 5
SEE DETAIL E
27
K6
K12
K18
K24
K30
K36
K42
K5
K11
K17
K23
K29
K35
K41
K4
K10
K16
K22
K28
K34
K40
K3
K9
K15
K21
K27
K33
K39
K2
K8
K14
K20
K26
K32
K38
K1
K7
K13
K19
K25
K31
K37
QTY 81
11
SEE NOTE 16
SEE DETAILS A THRU G
FOR REFERENCE
DESIGNATIONS
SEE NOTE 9
SEE DETAIL K
STICK 1
SEE DETAIL A
STICK 2
SEE DETAIL B
PITCH NO. 1 REF
THIS END ALL STICKS
STICK 6
SEE DETAIL F
STICK 7
SEE DETAIL G

SECTION C-C

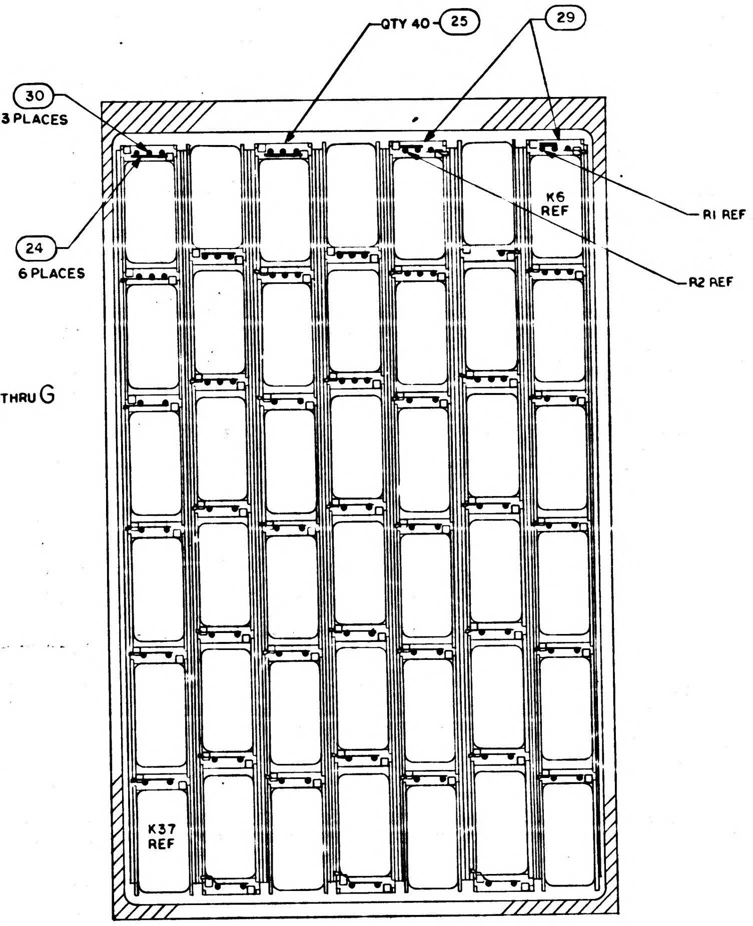
30
13 PLACES
QTY 40
25
29
24
6 PLACES
K6
REF
R1 REF
R2 REF
K37
REF

SECTION D-D
ALL FIND NO. 11 CATHODES
THIS SIDE

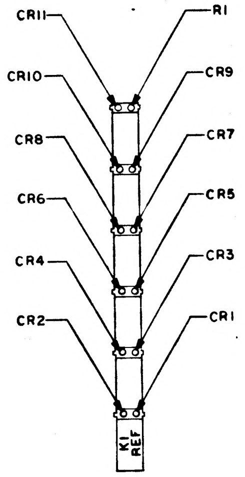
CR11
R1
CR10
CR9
CR8
CR7
CR6
CR5
CR4
CR3
CR2
CR1
K1
REF

DETAIL A
FOR DIODE REFERENCE
DESIGNATIONS ONLY
SCALE 1/1

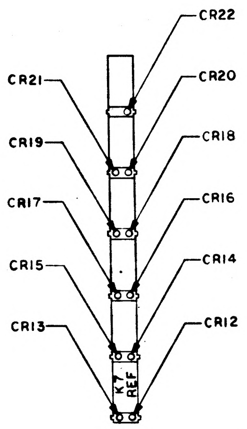
CR22
CR21
CR20
CR19
CR18
CR17
CR16
CR15
CR14
CR13
CR12
K7
REF

DETAIL B
FOR DIODE REFERENCE
DESIGNATIONS ONLY
SCALE 1/1

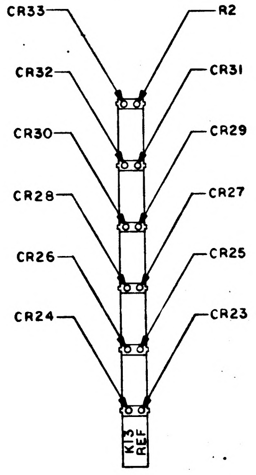
CR33
R2
CR32
CR31
CR30
CR29
CR28
CR27
CR26
CR25
CR24
CR23
K13
REF

DETAIL C
FOR DIODE REFERENCE
DESIGNATIONS ONLY
SCALE 1/1

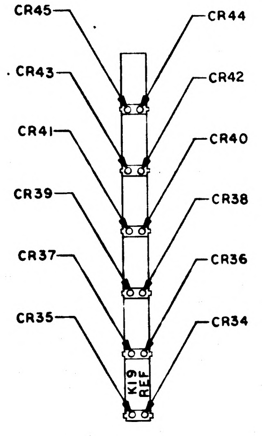
CR45
CR44
CR43
CR42
CR41
CR40
CR39
CR38
CR37
CR36
CR35
CR34
K19
REF

DETAIL D
FOR DIODE REFERENCE
DESIGNATIONS ONLY
SCALE 1/1

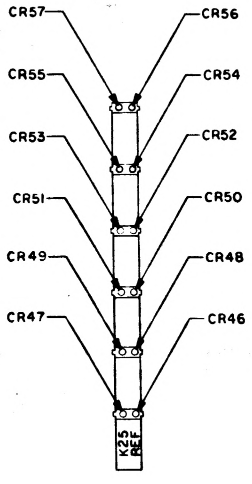
CR57
CR56
CR55
CR54
CR53
CR52
CR51
CR50
CR49
CR48
CR47
CR46
K25
REF

DETAIL E
FOR DIODE REFERENCE
DESIGNATIONS ONLY
SCALE 1/1

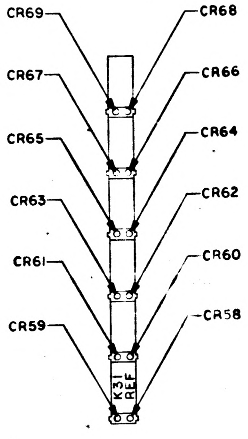
CR69
CR68
CR67
CR66
CR65
CR64
CR63
CR62
CR61
CR60
CR59
CR58
K31
REF

DETAIL F
FOR DIODE REFERENCE
DESIGNATIONS ONLY
SCALE 1/1

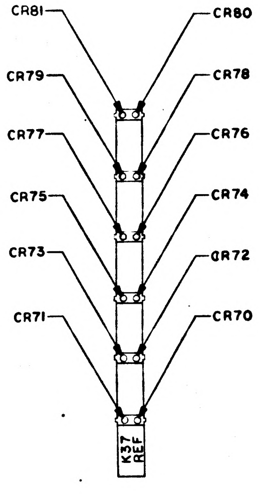
CR81
CR80
CR79
CR78
CR77
CR76
CR75
CR74
CR73
CR72
CR71
CR70
K37
REF

DETAIL G
FOR DIODE REFERENCE
DESIGNATIONS ONLY
SCALE 1/1

QTY REQD	PART OR IDENTIFYING NO.	MATERIAL OR NOTES	NOMENCLATURE OR DESCRIPTION
☒	1005780		SCHEMATIC
1	1004654		GASKET
AR	1006757-13		WIRE ELECTRICAL .020 DIA
2	1004124-2		BLOCK, DIODE
2	1006750-72		RESISTOR, FIXED
AR	1006776-22		INSULATION, SLEEVING
14	1004852		BACKING STRIP
40	1004124-1		BLOCK, DIODE
AR	1006757-7		WIRE, ELECTRICAL .005 X .020
AR	1006732-1		WIRE, ELECTRICAL
2	1004540		PIN, STOP
1	1003521-5		800 MATRIX ASSY
1	1003521-26		800 MATRIX ASSY
1	1003521-31		800 MATRIX ASSY
1	1003521-32		800 MATRIX ASSY
2	1003521-33		800 MATRIX ASSY
2	1003521-34		800 MATRIX ASSY
1	1003521-29		800 MATRIX ASSY
1	1003521-30		800 MATRIX ASSY
2	1003521-27		800 MATRIX ASSY
2	1003521-28		800 MATRIX ASSY
81	1006751		SEMICONDUCTOR DEVICE, DIODE
39	SEE NOTE 19		RELAY, ARMATURE MAGNETIC LATCHING
3	1006815-2		RELAY ARMATURE
AR	1006806-10		INSULATION, TAPE, ELECTRICAL
1	1004842-1		INSULATOR
1	1004842-2		INSULATOR
2	MS35200-13		SCREW, FLAT HEAD
6	NAS620-4		WASHER, FLAT
6	MS35457-1		SCREW, SOCKET
1	1004145		PLATE, RELAY MODULE
1	1004113		HEADER ASSY, RELAY MODULE

C11 LIST OF MATERIALS

NEXT ASSY	USED ON
APPLICATION	

UNLESS OTHERWISE SPECIFIED
DIMENSIONS ARE IN INCHES
CAPACITOR VALUES ARE IN µf
RESISTOR VALUES ARE IN OHMS
TOLERANCES ON
FRACTIONS ± DECIMALS ± ANGLES ±
DO NOT SCALE THIS DRAWING
MATERIAL

MIT
INSTRUMENTATION LAB
CAMBRIDGE MASS

MANNED SPACECRAFT CENTER
HOUSTON, TEXAS

DRAWN
CHECKED
APPROVED
APPROVED
APPROVED MIT
APPROVED MSC
DATE

RELAY MODULE ASSEM
AGC DSKY, NAV AND MAIN

CODE IDENT NO. 80230
SIZE J
DRAWING NO. 1003824
SCALE 2/1
SHEET 2

1003900

REVISIONS			
SYM	DESCRIPTION	DATE	APPROVAL

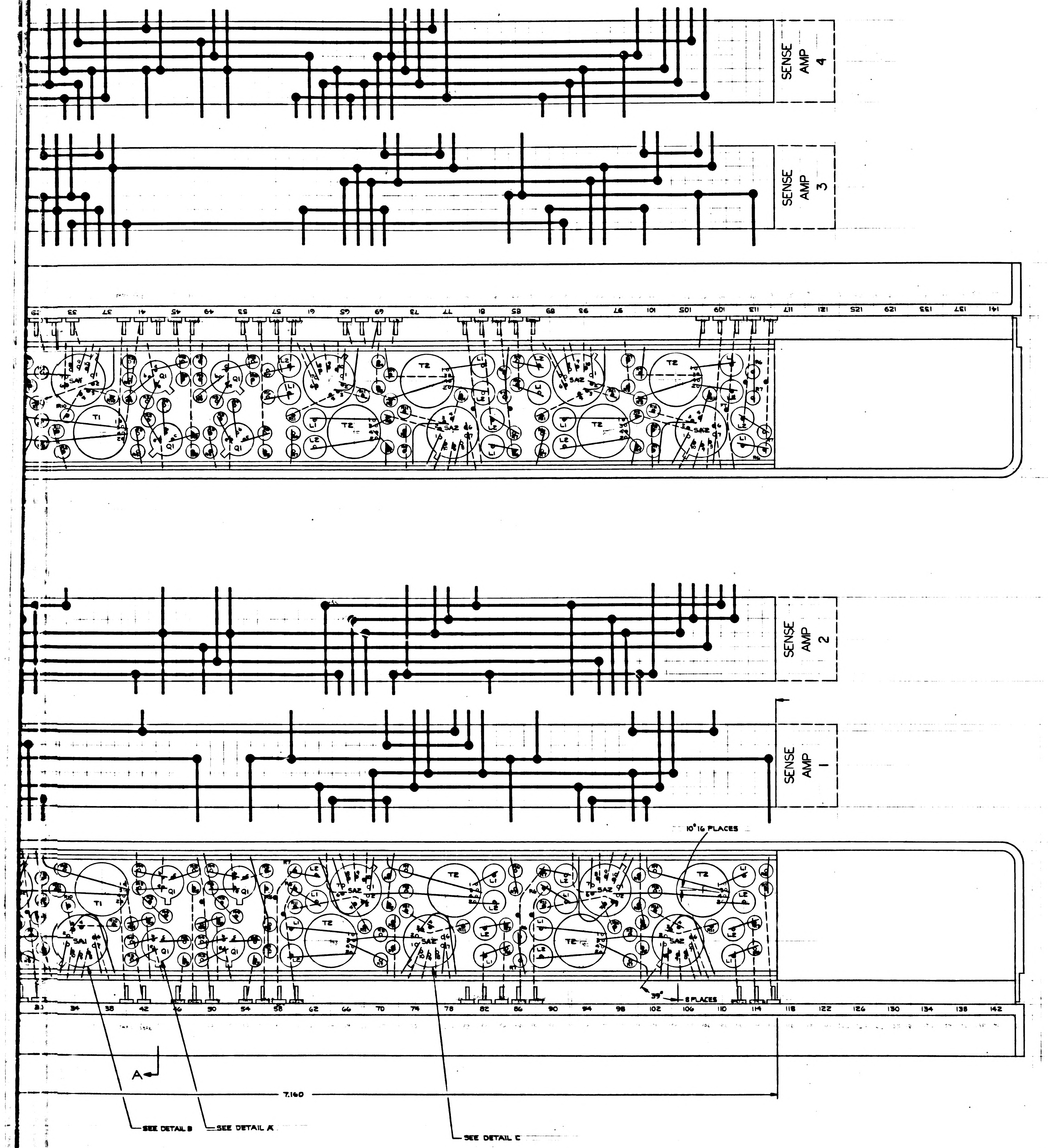

SENSE AMP 4
SENSE AMP 3
SENSE AMP 2
SENSE AMP 1
29 33 37 41 45 49 53 57 61 65 69 73 77 81 85 89 93 97 101 105 109 113 117 121 125 129 133 137 141
30 34 38 42 46 50 54 58 62 66 70 74 78 82 86 90 94 98 102 106 110 114 118 122 126 130 134 138 142
T1
T2
Q1
SA1
SA2
L1
L2
R7
10° 16 PLACES
35° 8 PLACES
A
7.160
SEE DETAIL B
SEE DETAIL A
SEE DETAIL C

FOR INFORMATION ONLY

CLASS B RELEASE TDR No. 00933 DATE 4-24-63

1003900

QTY REQD	PART OR IDENTIFYING NO.	NOMENCLATURE OR DESCRIPTION	FIND NO

LIST OF MATERIALS

NEXT ASSY	USED ON

APPLICATION

UNLESS OTHERWISE SPECIFIED
DIMENSIONS ARE IN INCHES
TOLERANCES ON
FRACTIONS ± DECIMALS ±.005 ANGLES ±0°30'
DO NOT SCALE THIS DRAWING
MATERIAL
HEAT TREATMENT
FINAL FINISH

MIT
INSTRUMENTATION LAB
CAMBRIDGE MASS
DRAWN Ed Powers DATE 17 Apr 63
CHECKED
APPROVAL
APPROVAL
NASA APPROVAL 4/24/63
MIT APPROVAL

MANNED SPACECRAFT CENTER
HOUSTON, TEXAS

DESIGN LAYOUT
SENSE AMPLIFIER STICK

CODE IDENT NO. SIZE J NASA DRAWING NO. 1003900
SCALE 4/1 WT SHEET 1 OF 1

INCHES
PHOTOGRAPHIC SCALE ONLY

HOLE IDENT	X DIM	Y DIM	HOLE SIZE	⌖ TOL
1	0.000	0.000	C	.005
2	-.082	.258	A	
3	.160	.374	E	
4	.240	.121	A	
5	.308	-.139	A	
6	.417	-.068	A	
7	.337	.035	A	
8	.386	.155	A	
9	.416	.282	A	
10	.416	.439	A	
11	.520	.359	A	
12	.588	.247	A	
13	.561	.508	A	
14	.676	-.006	E	
15	.831	.367	C	
16	.911	.111	A	
17	1.077	.257	A	
18	1.158	0.000	C	
19	1.316	.372	E	
20	1.400	.119	A	
21	1.466	-.139	A	
22	1.493	.030	A	
23	1.542	.152	A	
24	1.574	-.069	A	
25	1.574	.280	A	
26	1.574	.438	A	
27	1.677	.359	A	
28	1.717	.508	A	
29	1.747	.246	A	
30	1.834	-.006	E	
31	1.988	.367	C	
32	2.070	.113	A	
33	2.199	-.140	A	
34	2.199	-.011	A	
35	2.199	.117	A	
36	2.257	.381	A	
37	2.257	.508	A	
38	2.324	.150	A	
39	2.335	.279	A	
40	2.394	-.029	D	
41	2.453	.177	A	
42	2.465	.421	D	
43	2.591	-.140	A	
44	2.591	-.011	A	
45	2.660	.380	A	
46	2.660	.508	A	
47	2.718	-.140	A	
48	2.718	-.011	A	
49	2.718	.117	A	
50	2.790	.380	A	
51	2.790	.508	A	
52	2.843	.150	A	
53	2.867	.276	A	
54	2.914	-.029	D	
55	2.973	.177	A	
56	2.998	.421	D	
57	3.109	-.140	A	
58	3.109	-.011	A	
59	3.194	.378	A	
60	3.194	.508	A	
61	3.220	-.076	A	
62	3.220	.118	A	
63	3.378	-.107	B	
64	3.378	.087	B	
65	3.405	.247	A	
66	3.405	.378	A	
67	3.405	.508	A	
68	3.562	.282	B	
69	3.562	.477	B	
70	3.668	0.000	F	
71	3.851	.365	F	
72	3.918	.104	A	
73	4.033	-.140	A	
74	4.033	.046	A	
75	4.096	.263	A	
76	4.096	.478	A	
77	4.123	-.047	A	
78	4.123	.138	A	
79	4.221	.220	A	
80	4.221	.360	A	
81	4.221	.508	A	
82	4.387	0.000	F	
83	4.572	.367	F	
84	4.634	.104	A	
85	4.795	-.107	B	
86	4.795	.089	B	
87	4.862	.282	B	
88	4.862	.476	B	
89	4.949	-.054	A	
90	4.949	.118	A	
91	5.020	.380	A	
92	5.020	.508	A	
93	5.047	-.140	A	
94	5.047	.030	A	
95	5.206	.107	B	
96	5.206	.089	B	
97	5.224	.252	A	
98	5.224	.382	A	
99	5.224	.508	A	
100	5.387	.282	B	
101	5.387	.476	B	
102	5.495	0.000	F	
103	5.678	.367	F	
104	5.744	.106	A	
105	5.859	-.140	A	
106	5.859	.047	A	
107	5.922	.263	A	
108	5.922	.477	A	
109	5.948	-.047	A	
110	5.948	.138	A	
111	6.046	.220	A	
112	6.046	.361	A	
113	6.046	.508	A	
114	6.212	0.000	F	
115	6.398	.367	F	
116	6.459	.106	A	
117	6.621	-.107	B	
118	6.621	.087	B	
119	6.700	.282	B	
120	6.700	.477	B	
121	6.774	-.055	A	
122	6.774	.133	A	
123	6.859	.378	A	
124	6.859	.508	A	.005

HOLE IDENT	X DIM	Y DIM	HOLE SIZE	TOL
125	1.462	.195	G	.005
126	2.717	.280	G	
127	3.257	.312	G	
128	3.320	.192	G	
129	4.725	.202	G	
130	4.995	.202	G	
131	5.035	.190	G	
132	5.135	.190	G	
133	6.585	.217	G	
134	6.725	.017	G	
135	6.870	.017	G	.005

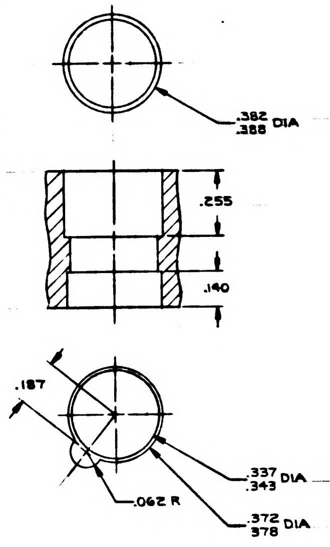
.382
.388 DIA
.255
.140
.187
.062 R
.337
.343 DIA
.372
.378 DIA

DETAIL C

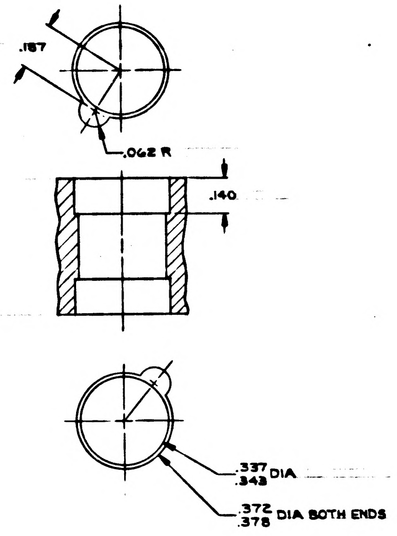
.187
.062 R
.140
.337
.343 DIA
.372
.378 DIA BOTH ENDS

DETAIL B

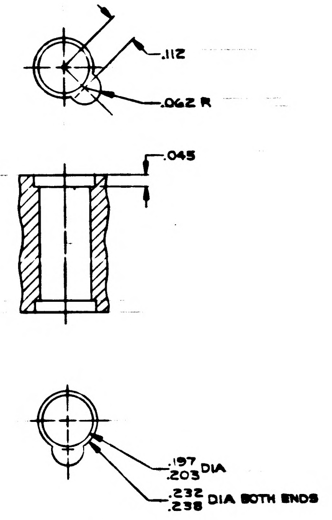
.112
.062 R
.045
.197
.203 DIA
.232
.238 DIA BOTH ENDS

DETAIL A

NOTES
1. MATERIAL FOR COMPONENT BLOCK: PLASTIC, CLEAR ACRYLIC PER MIL-P-8184 FINISH B.
2. SCHEMATIC REF: SENSE AMPLIFIER STICK-1006083.
3. R10 & R11 VALUE TO BE DETERMINED AT ELECTRICAL TEST.

HOLE SIZE	HOLE DESCRIPTION
A	.100 .104 DIA
B	.168 .172 DIA
C	.382 .388 DIA
D	SEE DETAIL A
E	SEE DETAIL B
F	SEE DETAIL C
G	.028 .032 DIA X .250 DEEP

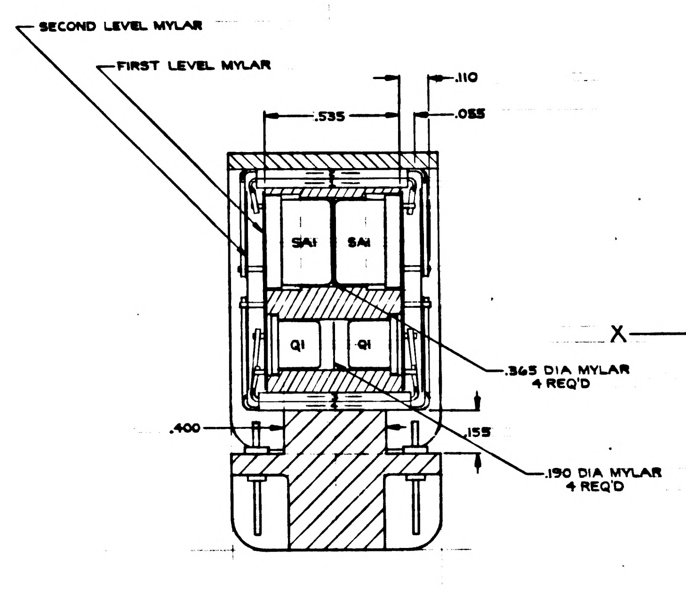
SECOND LEVEL MYLAR
FIRST LEVEL MYLAR
.110
.535
.055
SA1
SA1
Q1
Q1
.365 DIA MYLAR
4 REQ'D
.400
.155
.190 DIA MYLAR
4 REQ'D

SECTION A-A

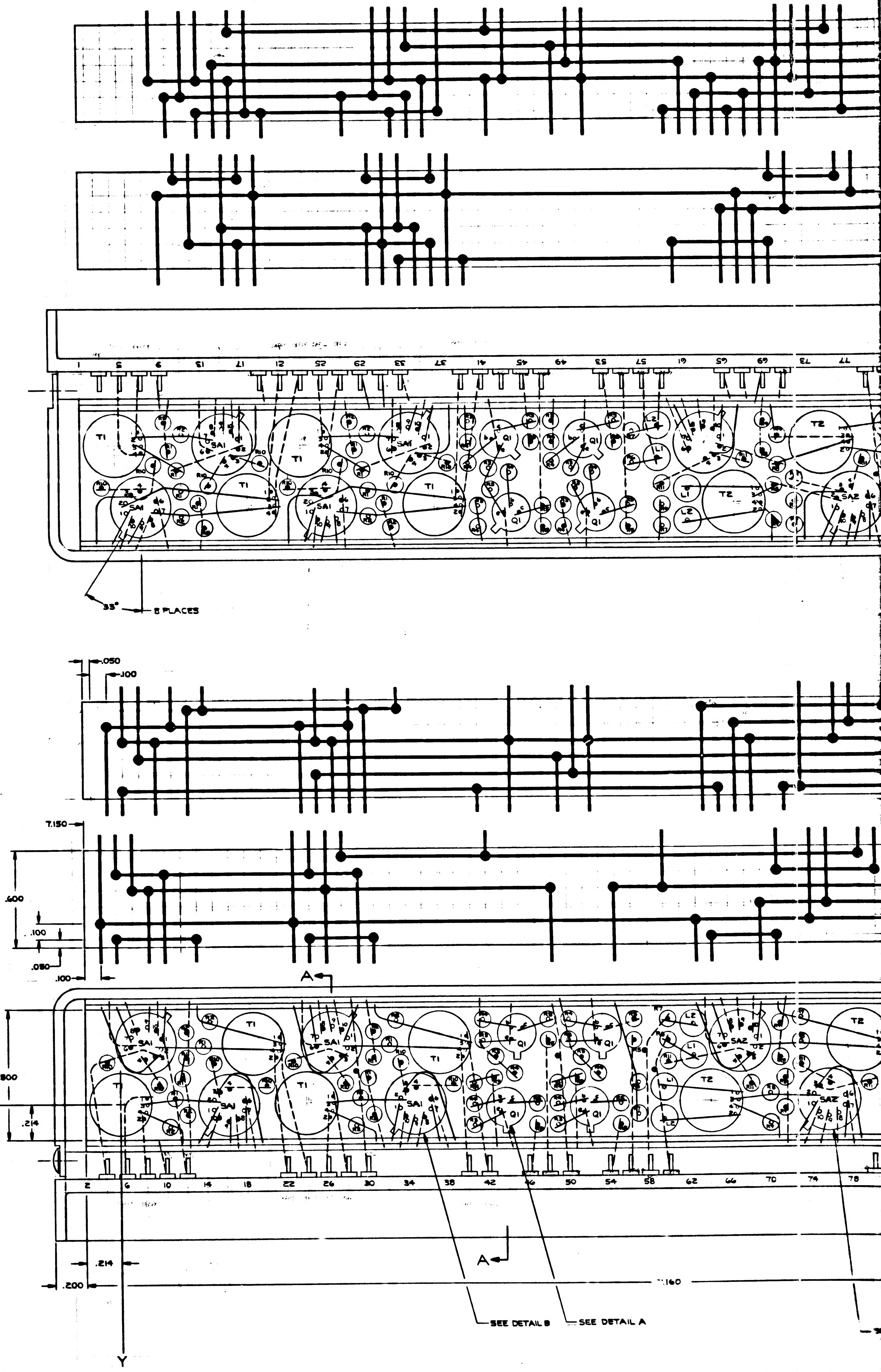
T1
T2
SA1
SA2
Q1
L1
L2
33°
8 PLACES
.050
.100
7.150
.600
.100
.050
.100
A
.800
X
.214
2
6
10
14
18
22
26
30
34
38
42
46
50
54
58
62
66
70
74
78
A
.214
.200
7.160
SEE DETAIL B
SEE DETAIL A
Y

INCHES
PHOTOGRAPHIC SCALE ONLY

NOTICE — WHEN GOVERNMENT DRAWINGS, SPECIFICATIONS, OR OTHER DATA ARE USED FOR ANY PURPOSE OTHER THAN IN CONNECTION WITH A DEFINITELY RELATED GOVERNMENT PROCUREMENT OPERATION, THE UNITED STATES GOVERNMENT THEREBY INCURS NO RESPONSIBILITY NOR ANY OBLIGATION WHATSOEVER; AND THE FACT THAT THE GOVERNMENT MAY HAVE FORMULATED, FURNISHED, OR IN ANY WAY SUPPLIED THE SAID DRAWINGS, SPECIFICATIONS OR OTHER DATA IS NOT TO BE REGARDED BY IMPLICATION OR OTHERWISE AS IN ANY MANNER LICENSING THE HOLDER OR ANY OTHER PERSON OR CORPORATION, OR CONVEYING ANY RIGHTS OR PERMISSION TO MANUFACTURE, USE, OR SELL ANY PATENTED INVENTION THAT MAY IN ANY WAY BE RELATED THERETO.

1003909 A Ⓐ

REVISIONS TDRR 02282

SYM	DESCRIPTION	DATE	APPROVAL
A	REPLACED BY REV B PER TDRR 04743	11-19-63	E.J.M. PPK

TYPE	WIDTH (PITCH)	LENGTH (PITCH)	USED ON	HEADER HOUSING REF.
A	3/4	9 3/4	LOGIC	1004201
B	3/4	6 3/4	ROPE SENSE AMP.	1003109
			ERASABLE SENSE AMP.	1003109
			XK INTERFACE	1004197
			YT INTERFACE	1004194
C	1	9 3/4	ERASABLE DRIVER	
			ROPE DRIVER	
			CORRECT SWITCHING	1004192
			ROPE STRAND SELECT	1004192
			DRIVER SERVICE	1004192
			ROPE GATE	
D	1	9 3/4	CONTROL	1004198
E	1 1/2	9 3/4	ROPES	
F	1 1/2	6 3/4	POWER SWITCH	1004191
G	1 1/2	6 3/4	OSCILLATOR	
H	1 3/4	9 3/4	ERASABLE MEMORY	1003101

INACTIVE

Ⓐ REPLACED BY REV B WITH CHANGE

MASTER

QTY REQD	PART OR IDENTIFYING NO.	NOMENCLATURE OR DESCRIPTION	FIND NO.

LIST OF MATERIALS

NEXT ASSY	USED ON
APPLICATION	

UNLESS OTHERWISE SPECIFIED
DIMENSIONS ARE IN INCHES
TOLERANCES ON
FRACTIONS ± — DECIMALS ± — ANGLES ± —
DO NOT SCALE THIS DRAWING
MATERIAL
HEAT TREATMENT
FINAL FINISH

MIT
INSTRUMENTATION LAB
CAMBRIDGE, MASS.
DWG. NO. CONTRACT
DRAWN DATE 7-29-63
CHECKED 7/30/63
APPROVAL 7/30/63
APPROVAL 7/30/63
NASA APPROVAL 7-31-63
MIT APPROVAL 7/31/63

MANNED SPACECRAFT CENTER
HOUSTON, TEXAS

COMPUTER MODULE
FORM FACTOR CONTROL

CODE IDENT NO.
SIZE C
NASA DRAWING NO. 1003909
SCALE —
WT
SHEET 1 OF 1

INCHES
0 1 2
PHOTOGRAPHIC SCALE ONLY

NOTICE — WHEN GOVERNMENT DRAWINGS, SPECIFICATIONS, OR OTHER DATA ARE USED FOR ANY PURPOSE OTHER THAN IN CONNECTION WITH A DEFINITELY RELATED GOVERNMENT PROCUREMENT OPERATION, THE UNITED STATES GOVERNMENT THEREBY INCURS NO RESPONSIBILITY NOR ANY OBLIGATION WHATSOEVER; AND THE FACT THAT THE GOVERNMENT MAY HAVE FORMULATED, FURNISHED, OR IN ANY WAY SUPPLIED THE SAID DRAWINGS, SPECIFICATIONS OR OTHER DATA IS NOT TO BE REGARDED BY IMPLICATION OR OTHERWISE AS IN ANY MANNER LICENSING THE HOLDER OR ANY OTHER PERSON OR CORPORATION, OR CONVEYING ANY RIGHTS OR PERMISSION TO MANUFACTURE, USE, OR SELL ANY PATENTED INVENTION THAT MAY IN ANY WAY BE RELATED THERETO.

1003909

REVISIONS TDRR 022F2			
SYM	DESCRIPTION	DATE	APPROVAL

TYPE	WIDTH (PITCH)	LENGTH (PITCH)	USED ON	HEADER HOUSING REF.
A	3/4	9 3/4	LOGIC	1004201
B	3/4	6 3/4	ROPE SENSE AMP.	1003109
			ERASABLE SENSE AMP.	1003109
			XK INTERFACE	1004197
			YT INTERFACE	1004194
C	1	9 3/4	ERASABLE DRIVER	
			ROPE DRIVER	
			CORRECT SWITCHING	1004192
			ROPE STRAND SELECT	1004192
			DRIVER SERVICE	1004192
			ROPE GATE	
D	1	9 3/4	CONTROL	1004198
E	1 1/2	9 3/4	ROPES	
F	1 1/2	6 3/4	POWER SWITCH	1004191
G	1 1/2	6 3/4	OSCILLATOR	
H	1 3/4	9 3/4	ERASABLE MEMORY	1003101

MASTER

QTY REQD	PART OR IDENTIFYING NO.	NOMENCLATURE OR DESCRIPTION	FIND NO.

LIST OF MATERIALS

NEXT ASSY	USED ON

APPLICATION

UNLESS OTHERWISE SPECIFIED
DIMENSIONS ARE IN INCHES
TOLERANCES ON
FRACTIONS ± — DECIMALS ± — ANGLES ± —
DO NOT SCALE THIS DRAWING
MATERIAL
HEAT TREATMENT
FINAL FINISH

MIT
INSTRUMENTATION LAB
CAMBRIDGE, MASS.
DWG. NO. CONTRACT

DRAWN T.J. Bakely DATE 7-29-63
CHECKED Hong 7/30/63
APPROVAL W.B. Turner 7/30/63
APPROVAL D. Duggan 7/30/63
NASA APPROVAL W J Rhine 7-31-63
MIT APPROVAL D Hazel 7/31/63

MANNED SPACECRAFT CENTER
HOUSTON, TEXAS

COMPUTER MODULE FORM FACTOR CONTROL

CODE IDENT NO.
SIZE C
NASA DRAWING NO. 1003909
SCALE —
WT
SHEET 1 OF 1

INCHES
0 1 2
PHOTOGRAPHIC SCALE ONLY

NOTICE — WHEN GOVERNMENT DRAWINGS, SPECIFICATIONS, OR OTHER DATA ARE USED FOR ANY PURPOSE OTHER THAN IN CONNECTION WITH A DEFINITELY RELATED GOVERNMENT PROCUREMENT OPERATION, THE UNITED STATES GOVERNMENT THEREBY INCURS NO RESPONSIBILITY NOR ANY OBLIGATION WHATSOEVER; AND THE FACT THAT THE GOVERNMENT MAY HAVE FORMULATED, FURNISHED, OR IN ANY WAY SUPPLIED THE SAID DRAWINGS, SPECIFICATIONS OR OTHER DATA IS NOT TO BE REGARDED BY IMPLICATION OR OTHERWISE AS IN ANY MANNER LICENSING THE HOLDER OR ANY OTHER PERSON OR CORPORATION, OR CONVEYING ANY RIGHTS OR PERMISSION TO MANUFACTURE, USE, OR SELL ANY PATENTED INVENTION THAT MAY IN ANY WAY BE RELATED THERETO.

REVISIONS			
SYM	DESCRIPTION	DATE	APPROVAL
	TAKEN FROM MIT-D-68793-C		

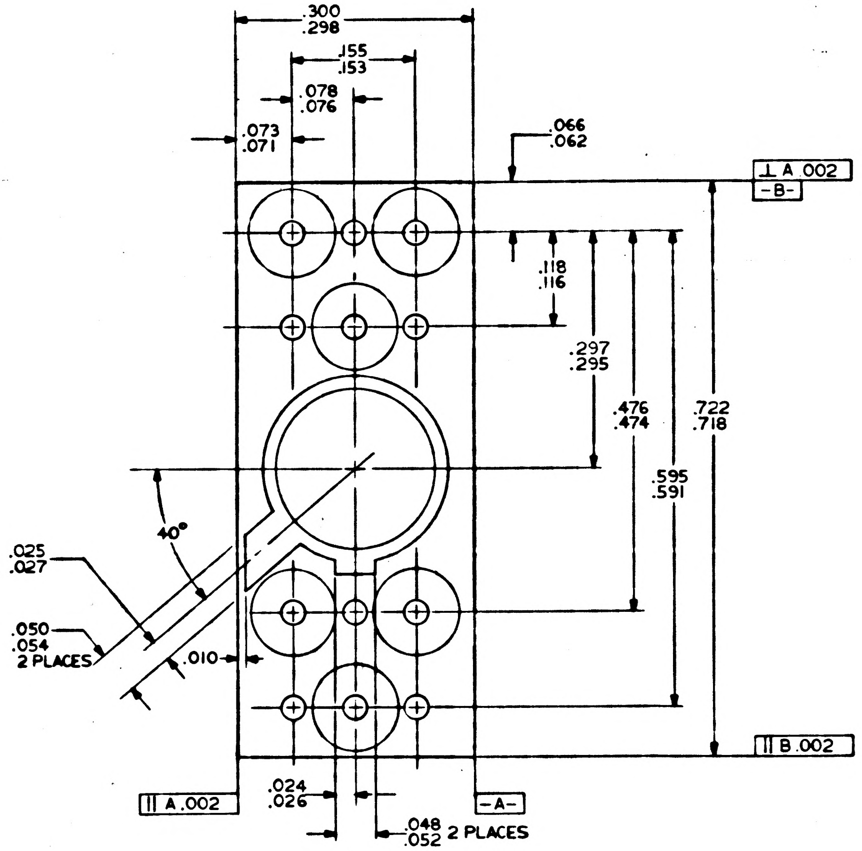
.300
.298
.155
.153
.078
.076
.073
.071
.066
.062
⊥ A .002
-B-
.118
.116
.297
.295
.476
.474
.722
.718
.595
.591
40°
.025
.027
.050
.054
2 PLACES
.010
‖ B .002
‖ A .002
.024
.026
-A-
.048
.052 2 PLACES

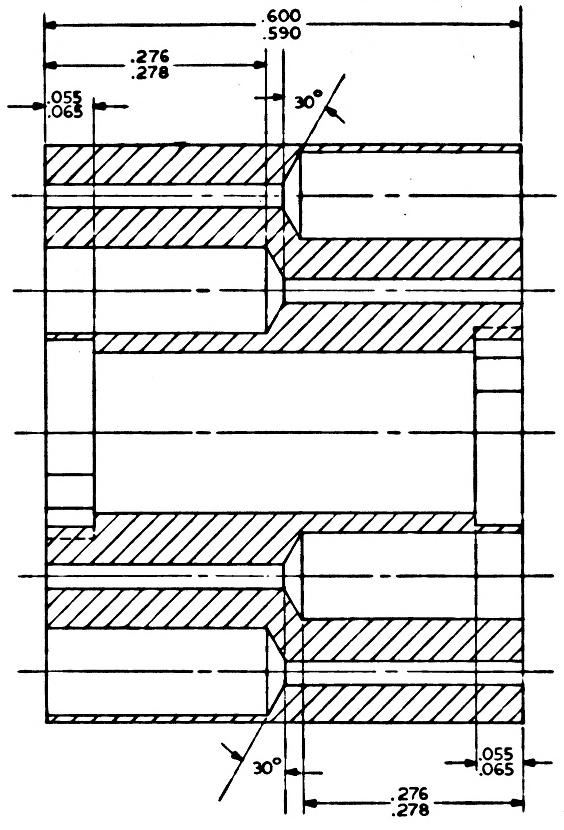
.600
.590
.276
.278
.055
.065
30°
30°
.055
.065
.276
.278

SECTION A-A

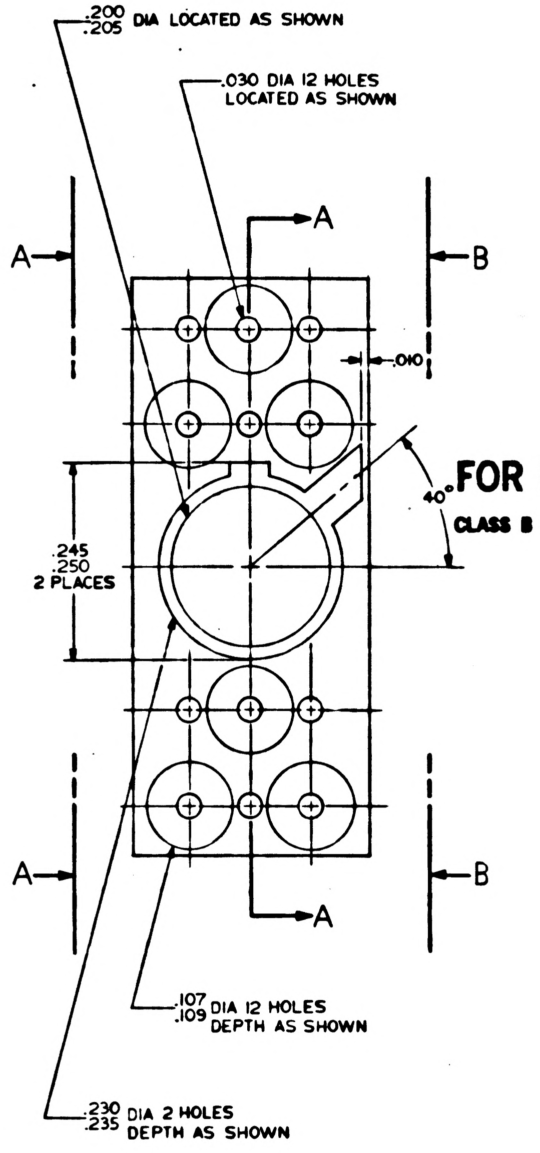
.200
.205 DIA LOCATED AS SHOWN
.030 DIA 12 HOLES
LOCATED AS SHOWN
A
A
B
.010
40°
.245
.250
2 PLACES
A
A
B
.107
.109 DIA 12 HOLES
DEPTH AS SHOWN
.230
.235 DIA 2 HOLES
DEPTH AS SHOWN

FOR INFORMATION ONLY

CLASS B RELEASE TDR No. 00004 DATE 8-9-62

NOTES:

1. INTERPRET DRAWING IN ACCORDANCE WITH STANDARDS PRESCRIBED BY MIL-D-70327
2. RECESS LETTER "A" AS SHOWN .001/.002
3. CENTER LINES OF HOLES TO BE PARALLEL TO EACH OTHER AND PARALLEL TO SURFACE -A- WITHIN .005 IN 10,000
4. MATERIAL NYLON MIL-P-20693 TYPE IV

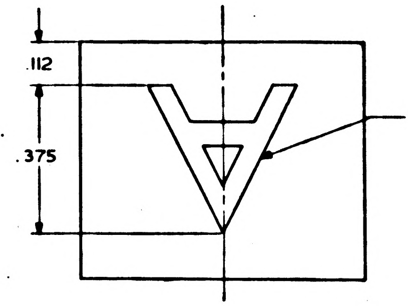
.112
.375
SEE NOTE 2

VIEW A-A
SCALE 5/1

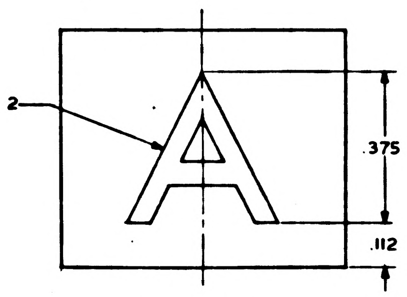

VIEW B-B
SCALE 5/1

COLOR	PART NO
CLEAR	-4
WHITE	-5
RED	-2
YELLOW	-1
BLUE	-3

QTY REQD	PART OR IDENTIFYING NO.	NOMENCLATURE OR DESCRIPTION	FIND NO.

LIST OF MATERIALS

NEXT ASSY	USED ON
1003001	
1003004	

APPLICATION

UNLESS OTHERWISE SPECIFIED DIMENSIONS ARE IN INCHES
TOLERANCES ON
FRACTIONS ± DECIMALS ±.005 ANGLES ±1/2°
DO NOT SCALE THIS DRAWING
MATERIAL SEE NOTE 4
HEAT TREATMENT
FINAL FINISH

MIT
INSTRUMENTATION LAB
CAMBRIDGE, MASS
DWG. NO. CONTRACT
DRAWN BONARRIGO DATE 8-1-62
CHECKED Le Mattie
APPROVAL W. Tousey 8/6/62
APPROVAL Duggan 8/6/62
NASA APPROVAL
MIT APPROVAL

MANNED SPACECRAFT CENTER
HOUSTON, TEXAS

MODULE
INJECTION MOULDING

CODE IDENT NO.
SIZE D
NASA DRAWING NO. 1004017
SCALE 10/1
WT
SHEET OF

1004017

NOTICE — WHEN GOVERNMENT DRAWINGS, SPECIFICATIONS, OR OTHER DATA ARE USED FOR ANY PURPOSE OTHER THAN IN CONNECTION WITH A DEFINITELY RELATED GOVERNMENT PROCUREMENT OPERATION, THE UNITED STATES GOVERNMENT THEREBY INCURS NO RESPONSIBILITY NOR ANY OBLIGATION WHATSOEVER; AND THE FACT THAT THE GOVERNMENT MAY HAVE FORMULATED, FURNISHED, OR IN ANY WAY SUPPLIED THE SAID DRAWINGS, SPECIFICATIONS OR OTHER DATA IS NOT TO BE REGARDED BY IMPLICATION OR OTHERWISE AS IN ANY MANNER LICENSING THE HOLDER OR ANY OTHER PERSON OR CORPORATION, OR CONVEYING ANY RIGHTS OR PERMISSION TO MANUFACTURE, USE, OR SELL ANY PATENTED INVENTION THAT MAY IN ANY WAY BE RELATED THERETO.

1004019

REVISIONS			
SYM	DESCRIPTION	DATE	APPROVAL

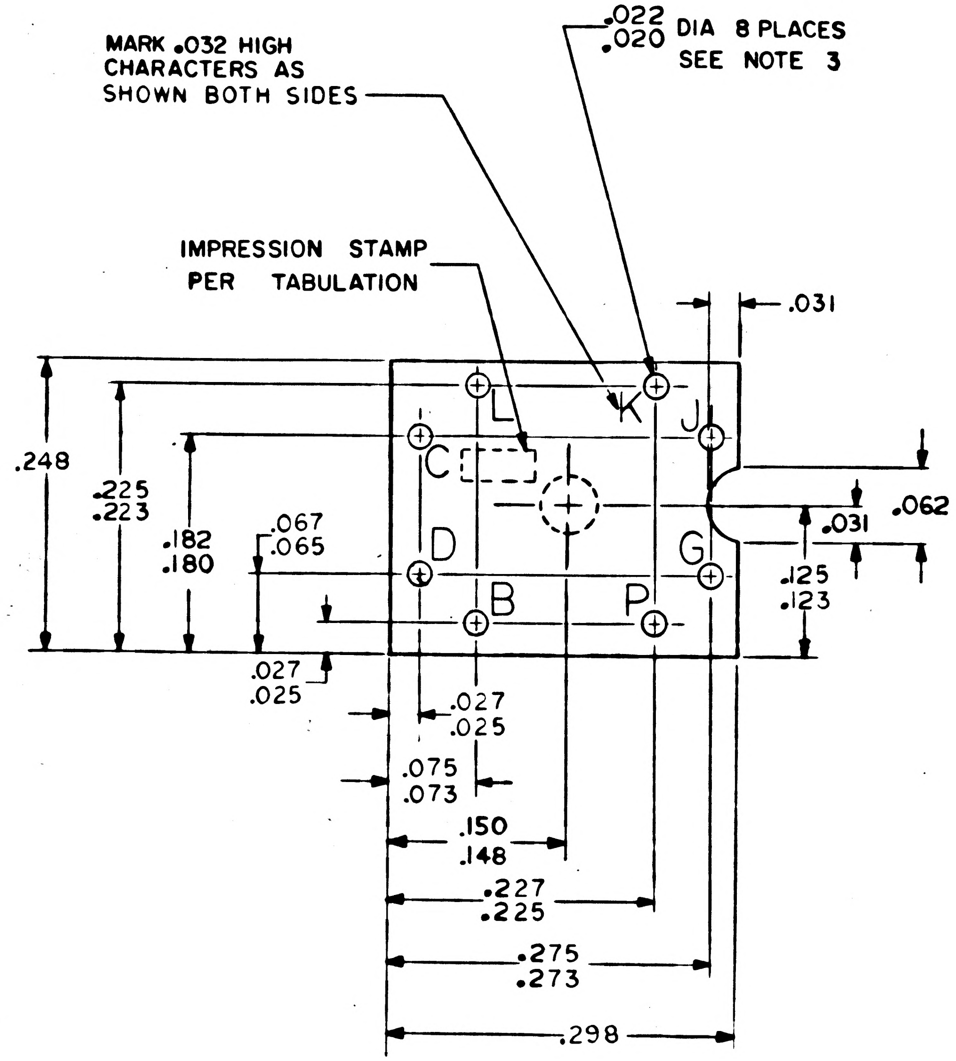
MARK .032 HIGH CHARACTERS AS SHOWN BOTH SIDES
.022 .020 DIA 8 PLACES SEE NOTE 3
IMPRESSION STAMP PER TABULATION
.031
L
K
J
C
D
G
B
P
.248
.225 .223
.182 .180
.067 .065
.062
.031
.125 .123
.027 .025
.027 .025
.075 .073
.150 .148
.227 .225
.275 .273
.298

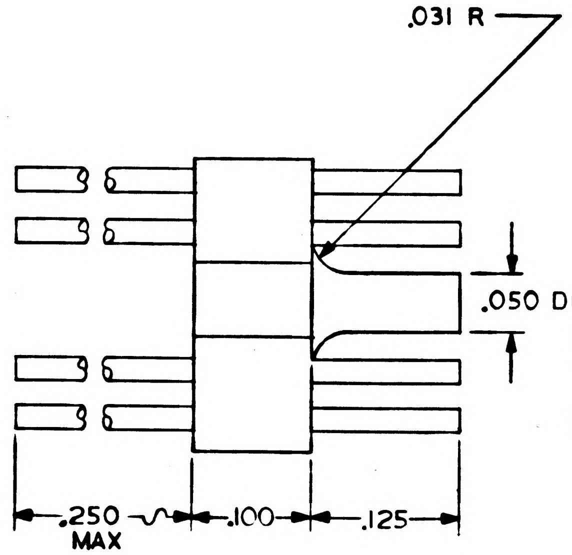
.031 R
.050 DIA
.250 MAX
.100
.125

FOR INFORMATION ONLY

CLASS B RELEASE TDR No. 00031 **DATE** 9-27-62

PART NO.	TYPE DESIGNATOR	HOUSING COLOR
1004019-1	KA	YELLOW
10C4019-2	KB	RED
1004019-3	KC	BLUE

NOTES:

1. INTERPRET DRAWING IN ACCORDANCE WITH STANDARDS PRESCRIBED BY MIL-D-70327
2. MATERIAL: GLASS FILLED DIALLYLPHTHALATE #52-01 PER MIL-M-14 F-TYPE SDG
3. PIN MATERIAL: GRADE 'A' NICKEL PER QQ-N-281 PLATE PER ND 1002001

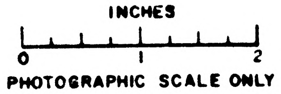
INCHES
0
1
2
PHOTOGRAPHIC SCALE ONLY

QTY REQD	PART OR IDENTIFYING NO.	NOMENCLATURE OR DESCRIPTION	FIND NO.

LIST OF MATERIALS

NEXT ASSY	USED ON
1003034	

APPLICATION

UNLESS OTHERWISE SPECIFIED
DIMENSIONS ARE IN INCHES
TOLERANCES ON
FRACTIONS ± — DECIMALS ±.005 ANGLES ± —
DO NOT SCALE THIS DRAWING

MATERIAL
SEE NOTE 2 & 3

HEAT TREATMENT —

FINAL FINISH —

MIT
INSTRUMENTATION LAB
CAMBRIDGE, MASS.
DWG. NO. CONTRACT

DRAWN DEMPSKI DATE 8-3-62
CHECKED Joe Marton
APPROVAL W B Turner 9/27/62
APPROVAL Eldon C Hall

NASA APPROVAL W J Rhine 9-27-62

MIT APPROVAL L Hazel 9/27/62

MANNED SPACECRAFT CENTER
HOUSTON, TEXAS

MOLDING
K CORE
(TAB)

CODE IDENT NO.
SIZE C
NASA DRAWING NO. 1004019
SCALE 10:1
WT
SHEET 1 OF 1

1004019

NOTICE — WHEN GOVERNMENT DRAWINGS, SPECIFICATIONS, OR OTHER DATA ARE USED FOR ANY PURPOSE OTHER THAN IN CONNECTION WITH A DEFINITELY RELATED GOVERNMENT PROCUREMENT OPERATION, THE UNITED STATES GOVERNMENT THEREBY INCURS NO RESPONSIBILITY NOR ANY OBLIGATION WHATSOEVER, AND THE FACT THAT THE GOVERNMENT MAY HAVE FORMULATED, FURNISHED, OR IN ANY WAY SUPPLIED THE SAID DRAWINGS, SPECIFICATIONS OR OTHER DATA IS NOT TO BE REGARDED BY IMPLICATION OR OTHERWISE AS IN ANY MANNER LICENSING THE HOLDER OR ANY OTHER PERSON OR CORPORATION, OR CONVEYING ANY RIGHTS OR PERMISSION TO MANUFACTURE, USE, OR SELL ANY PATENTED INVENTION THAT MAY IN ANY WAY BE RELATED THERETO.

REVISIONS			
SYM	DESCRIPTION	DATE	APPROVAL

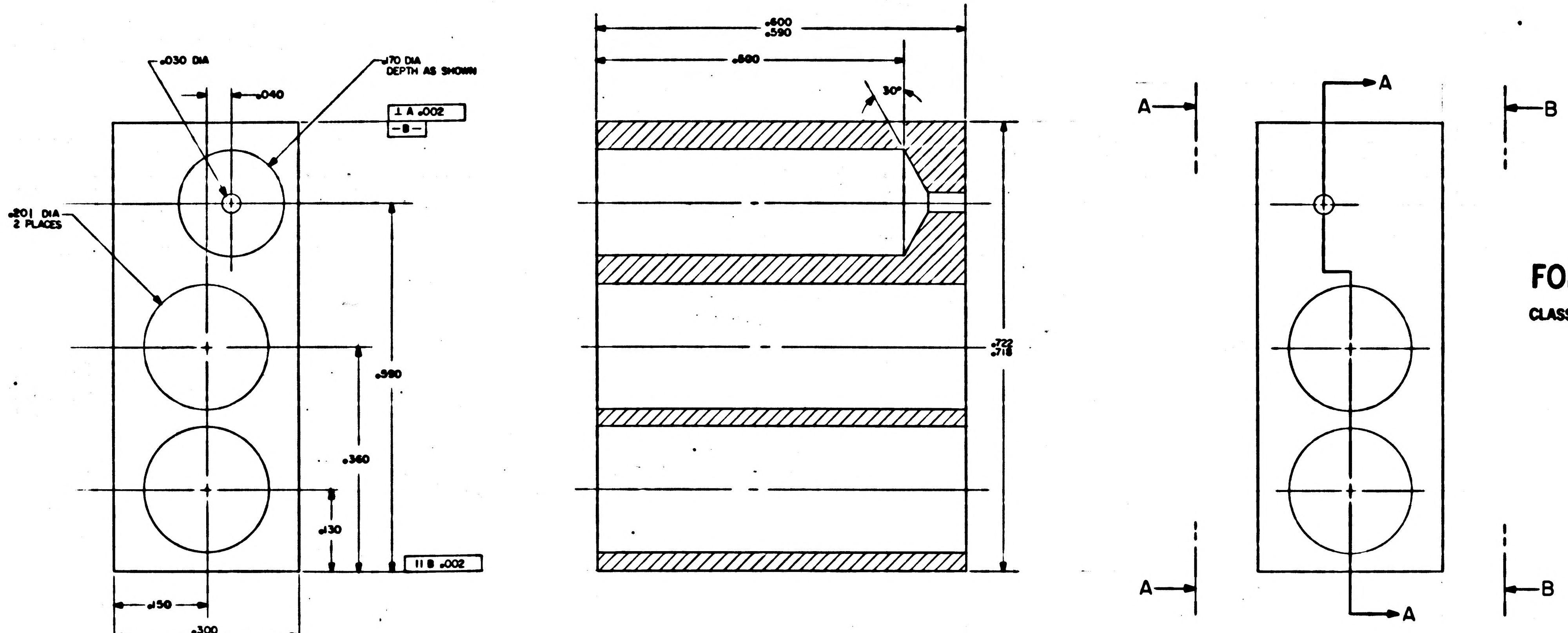

SECTION A-A

FOR INFORMATION ONLY

CLASS B RELEASE TDR No. 0000 4 DATE 8-962

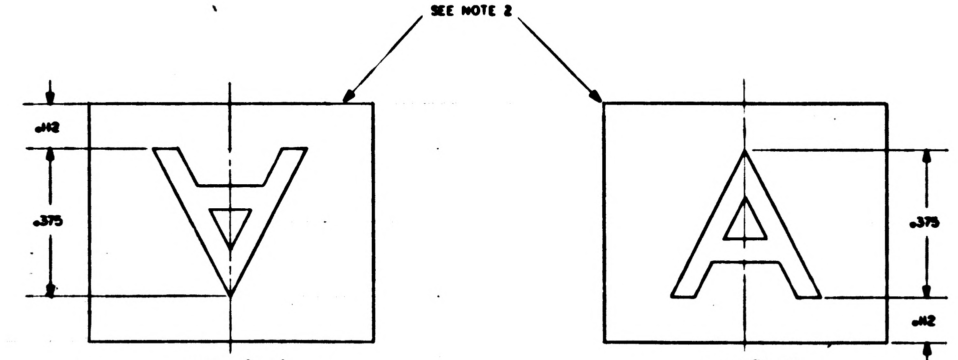

VIEW A-A
SCALE 5/1

VIEW B-B
SCALE 5/1

NOTES:

1. INTERPRET DRAWING IN ACCORDANCE WITH STANDARDS PRESCRIBED BY MIL-D-70327
2. RECESS LETTER "A" AS SHOWN $^{.001}_{.002}$
3. CENTER LINES OF HOLES TO BE PARALLEL TO EACH OTHER AND PARALLEL TO SURFACE -A- WITHIN .005 IN 10.000
4. MATERIAL NYLON MIL-P-20693 TYPE III

QTY REQD	PART OR IDENTIFYING NO.	NOMENCLATURE OR DESCRIPTION	FIND NO.
LIST OF MATERIALS			

1003005		UNLESS OTHERWISE SPECIFIED DIMENSIONS ARE IN INCHES TOLERANCES ON FRACTIONS ± DECIMALS ±.005 ANGLES ±1/2° DO NOT SCALE THIS DRAWING	MIT INSTRUMENTATION LAB CAMBRIDGE, MASS. DWG. NO. CONTRACT
NEXT ASSY	USED ON	MATERIAL SEE NOTE 4	DRAWN V S Hart DATE 8-6-62
APPLICATION		HEAT TREATMENT —	CHECKED Joe Morton
		FINAL FINISH —	APPROVAL N B Tunes
			APPROVAL Duggan
			NASA APPROVAL Jack Barnard
			MIT APPROVAL Bryant

MANNED SPACECRAFT CENTER
HOUSTON, TEXAS

MODULE INJECTION MOULDING
FILTER CIRCUIT

CODE IDENT NO.	SIZE	NASA DRAWING NO.
	D	1004021
SCALE 10/1	WT	SHEET 1 OF 1

1004021

NOTICE — WHEN GOVERNMENT DRAWINGS, SPECIFICATIONS, OR OTHER DATA ARE USED FOR ANY PURPOSE OTHER THAN IN CONNECTION WITH A DEFINITELY RELATED GOVERNMENT PROCUREMENT OPERATION, THE UNITED STATES GOVERNMENT THEREBY INCURS NO RESPONSIBILITY NOR ANY OBLIGATION WHATSOEVER; AND THE FACT THAT THE GOVERNMENT MAY HAVE FORMULATED, FURNISHED, OR IN ANY WAY SUPPLIED THE SAID DRAWINGS, SPECIFICATIONS OR OTHER DATA IS NOT TO BE REGARDED BY IMPLICATION OR OTHERWISE AS IN ANY MANNER LICENSING THE HOLDER OR ANY OTHER PERSON OR CORPORATION, OR CONVEYING ANY RIGHTS OR PERMISSION TO MANUFACTURE, USE, OR SELL ANY PATENTED INVENTION THAT MAY IN ANY WAY BE RELATED THERETO.

REVISIONS			
SYM	DESCRIPTION	DATE	APPROVAL

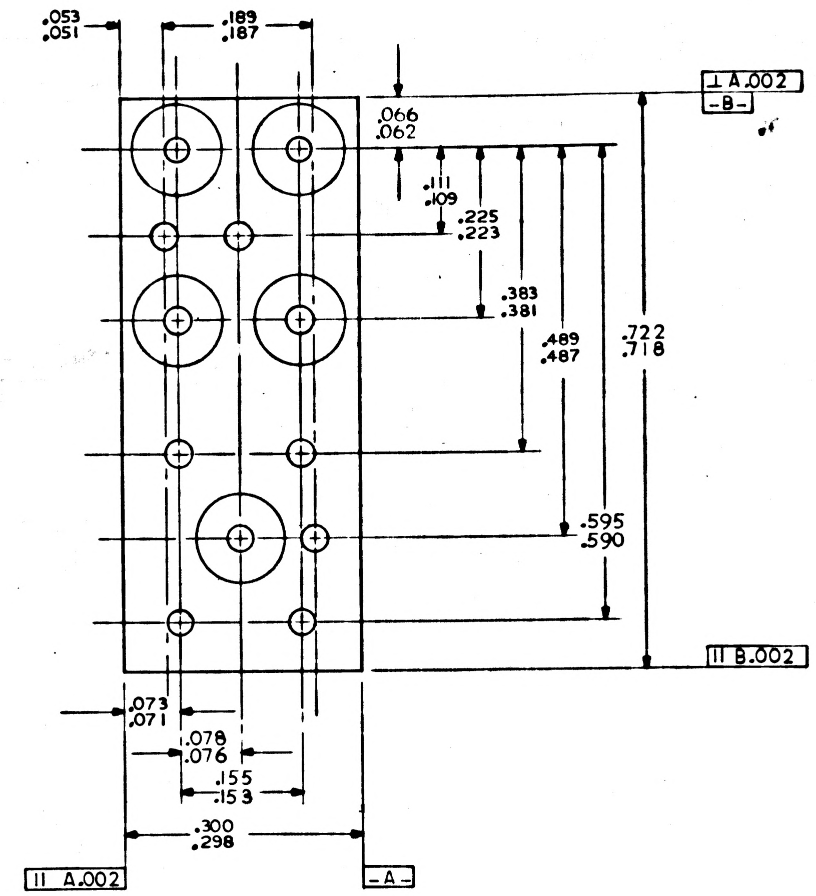
.053
.051
.189
.187
⊥ A .002
-B-
.066
.062
.111
.109
.225
.223
.383
.381
.489
.487
.722
.718
.595
.590
‖ B .002
.073
.071
.078
.076
.155
.153
.300
.298
‖ A .002
-A-

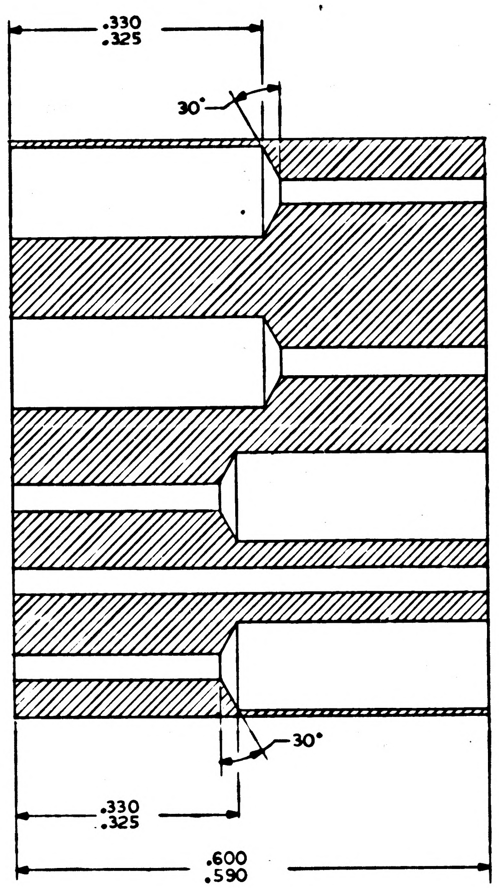
.330
.325
30°
30°
.330
.325
.600
.590

SECTION A-A

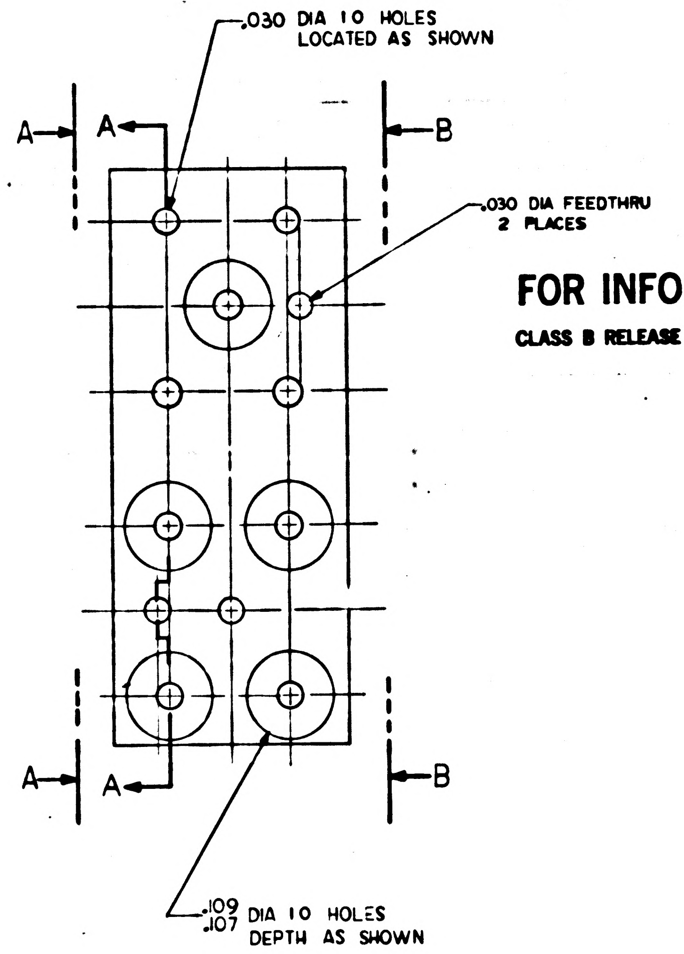
.030 DIA 10 HOLES
LOCATED AS SHOWN
A
A
B
.030 DIA FEEDTHRU
2 PLACES
A
A
B
.109
.107 DIA 10 HOLES
DEPTH AS SHOWN

FOR INFORMATION ONLY

CLASS B RELEASE TDR No. 00004 **DATE** 8-9-62

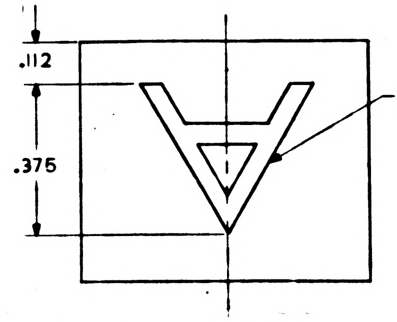
.112
.375
SEE NOTE 2

VIEW A-A
SCALE 5/1

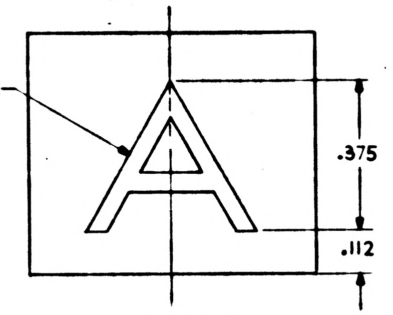

VIEW B-B
SCALE 5/1

DASH NO.	COLOR	CIRCUIT
-1	YELLOW	DA
-2	RED	DK
-3	BLUE	CA

NOTES:
1. INTERPRET DRAWING IN ACCORDANCE WITH STANDARDS PRESCRIBED BY MIL-D-70327
2. RECESS LETTER "A" AS SHOWN $^{.001}_{.002}$
3. CENTER LINES OF HOLES TO BE PARALLEL TO EACH OTHER AND PARALLEL TO SURFACE "A" WITHIN .005 IN 10.000
4. MATERIAL: NYLON MIL-P-20693 TYPE IV

QTY REQD	PART OR IDENTIFYING NO.	NOMENCLATURE OR DESCRIPTION	FIND NO.

LIST OF MATERIALS

NEXT ASSY	USED ON
1003029	
1003003	
1003002	

APPLICATION

UNLESS OTHERWISE SPECIFIED DIMENSIONS ARE IN INCHES
TOLERANCES ON
FRACTIONS ± — DECIMALS ±005 ANGLES ±1/2°
DO NOT SCALE THIS DRAWING
MATERIAL SEE NOTE 4
HEAT TREATMENT —
FINAL FINISH —

MIT
INSTRUMENTATION LAB
CAMBRIDGE, MASS
DWG. NO. CONTRACT
DRAWN DEMPSKI DATE 8-6-62
CHECKED Joe Meyer
APPROVAL W.S. Tanner 8/7/62
APPROVAL E. Duggan 8-7-62
NASA APPROVAL Jack Barnard
MIT APPROVAL Ray K Bryant

MANNED SPACECRAFT CENTER
HOUSTON, TEXAS

MODULE INJECTION
MOULDING
(TAB)

CODE IDENT NO. SIZE D NASA DRAWING NO. 1004022
SCALE 10/1 WT SHEET OF

1004022

NOTICE – WHEN GOVERNMENT DRAWINGS, SPECIFICATIONS, OR OTHER DATA ARE USED FOR ANY PURPOSE OTHER THAN IN CONNECTION WITH A DEFINITELY RELATED GOVERNMENT PROCUREMENT OPERATION, THE UNITED STATES GOVERNMENT THEREBY INCURS NO RESPONSIBILITY NOR ANY OBLIGATION WHATSOEVER; AND THE FACT THAT THE GOVERNMENT MAY HAVE FORMULATED, FURNISHED, OR IN ANY WAY SUPPLIED THE SAID DRAWINGS, SPECIFICATIONS, OR OTHER DATA IS NOT TO BE REGARDED BY IMPLICATION OR OTHERWISE AS IN ANY MANNER LICENSING THE HOLDER OR ANY OTHER PERSON OR CORPORATION, OR CONVEYING ANY RIGHTS OR PERMISSION TO MANUFACTURE, USE, OR SELL ANY PATENTED INVENTION THAT MAY IN ANY WAY BE RELATED THERETO.

REVISIONS			
SYM	DESCRIPTION	DATE	APPROVAL
A	REVISED PER TDR C0063	10-5-62	

FOR INFORMATION ONLY

CLASS B RELEASE TDR No. 00067 DATE 9-13-62

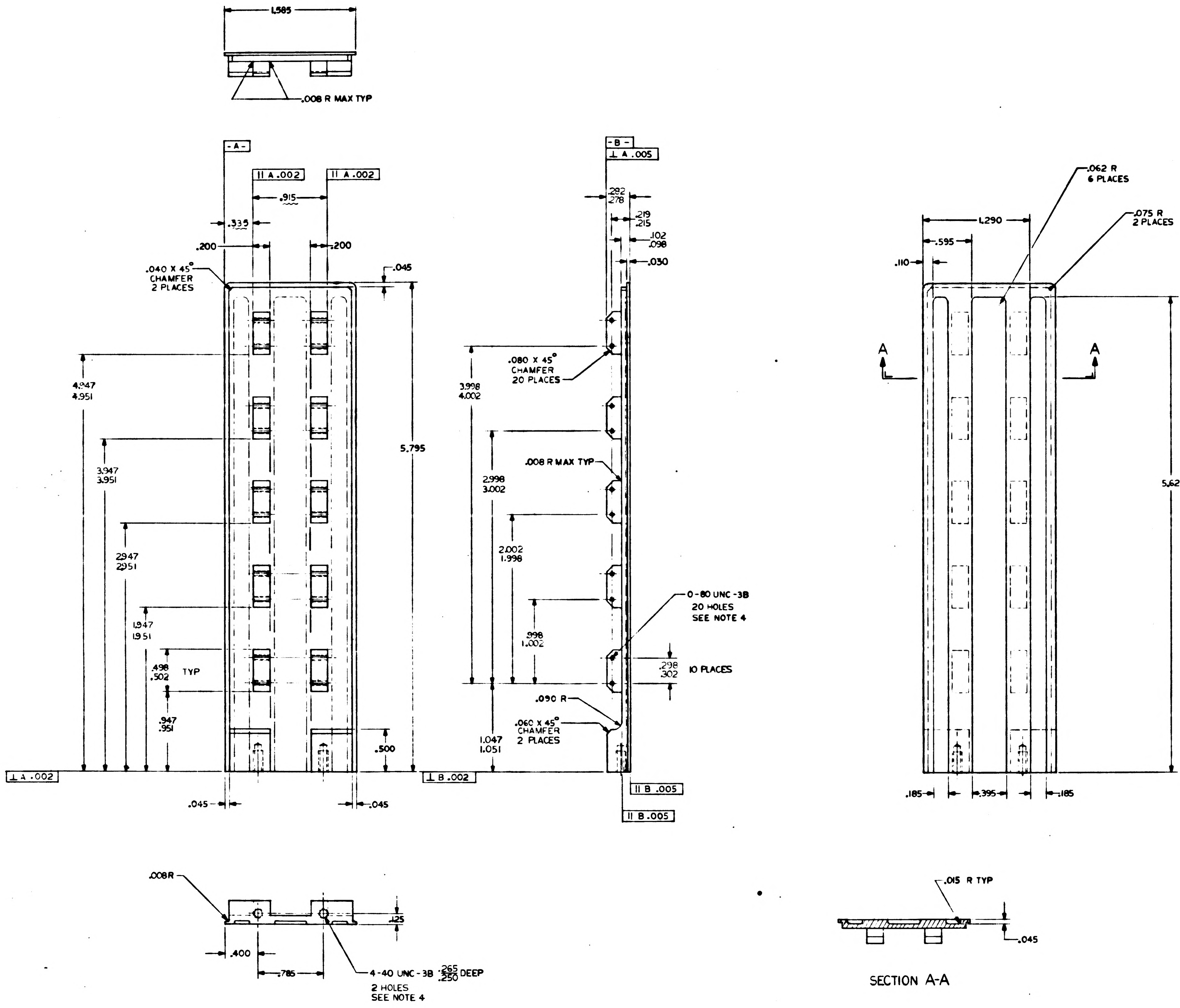
1.585
.008 R MAX TYP
-A-
∥ A .002
∥ A .002
.915
.335
.200
.200
.045
.040 X 45° CHAMFER 2 PLACES
4.947 4.951
3.947 3.951
2.947 2.951
1.947 1.951
.498 .502 TYP
.947 .951
5.795
.500
⊥ A .002
.045
.045
-B-
⊥ A .005
.282 .278
.219 .215
.102 .098
.030
.080 X 45° CHAMFER 20 PLACES
3.998 4.002
2.998 3.002
.008 R MAX TYP
2.002 1.998
.998 1.002
0-80 UNC-3B 20 HOLES SEE NOTE 4
.298 .302 10 PLACES
.090 R
.060 X 45° CHAMFER 2 PLACES
1.047 1.051
⊥ B .002
∥ B .005
∥ B .005
.062 R 6 PLACES
.075 R 2 PLACES
1.290
.595
.110
A
A
5.625
.185
.395
.185
.008R
.125
.400
.785
4-40 UNC-3B .265 .250 DEEP 2 HOLES SEE NOTE 4
.015 R TYP
.045
SECTION A-A

NOTES:
1. INTERPRET DRAWING IN ACCORDANCE WITH STANDARDS PRESCRIBED BY MIL-D-70327
2. REMOVE ALL BURRS AND SHARP EDGES
3. ANODIZE PER MIL-A-8625 TYPE II DYED BLACK
4. OPERATION TO BE DONE AFTER ANODIZING, ALODINE 1200 CLEAR FOR ELECTRICAL PURPOSE

QTY REQD	PART OR IDENTIFYING NO.	NOMENCLATURE OR DESCRIPTION	FIND NO

LIST OF MATERIALS

INCHES
PHOTOGRAPHIC SCALE ONLY

1003036
NEXT ASSY | USED ON
APPLICATION

UNLESS OTHERWISE SPECIFIED
DIMENSIONS ARE IN INCHES
TOLERANCES ON
FRACTIONS ± DECIMALS ±.005 ANGLES ±$\frac{1}{2}$°
DO NOT SCALE THIS DRAWING
MATERIAL 6061-T6 ALUMINUM QQ-A-327
HEAT TREATMENT —
FINAL FINISH SEE NOTE 3

MIT
INSTRUMENTATION LAB
CAMBRIDGE MASS
DWG NO CONTRACT
DRAWN W. HORGAN DATE 8-4-62
CHECKED
APPROVAL
APPROVAL Eldon C Hall
NASA APPROVAL 9-13-62
MIT APPROVAL 9/13/62

MANNED SPACECRAFT CENTER
HOUSTON, TEXAS

END PLATE
COMPUTER BLOCK

CODE IDENT NO. | SIZE E | NASA DRAWING NO. 1004032
SCALE 2:1 | WT | SHEET OF

1004032 A

NOTICE — WHEN GOVERNMENT DRAWINGS, SPECIFICATIONS, OR OTHER DATA ARE USED FOR ANY PURPOSE OTHER THAN IN CONNECTION WITH A DEFINITELY RELATED GOVERNMENT PROCUREMENT OPERATION, THE UNITED STATES GOVERNMENT THEREBY INCURS NO RESPONSIBILITY NOR ANY OBLIGATION WHATSOEVER; AND THE FACT THAT THE GOVERNMENT MAY HAVE FORMULATED, FURNISHED, OR IN ANY WAY SUPPLIED THE SAID DRAWINGS, SPECIFICATIONS OR OTHER DATA IS NOT TO BE REGARDED BY IMPLICATION OR OTHERWISE AS IN ANY MANNER LICENSING THE HOLDER OR ANY OTHER PERSON OR CORPORATION, OR CONVEYING ANY RIGHTS OR PERMISSION TO MANUFACTURE, USE, OR SELL ANY PATENTED INVENTION THAT MAY IN ANY WAY BE RELATED THERETO.

1004067

REVISIONS			
SYM	DESCRIPTION	DATE	APPROVAL

FOR INFORMATION ONLY

CLASS B RELEASE TDR No. 00063 **DATE** 10-11-62

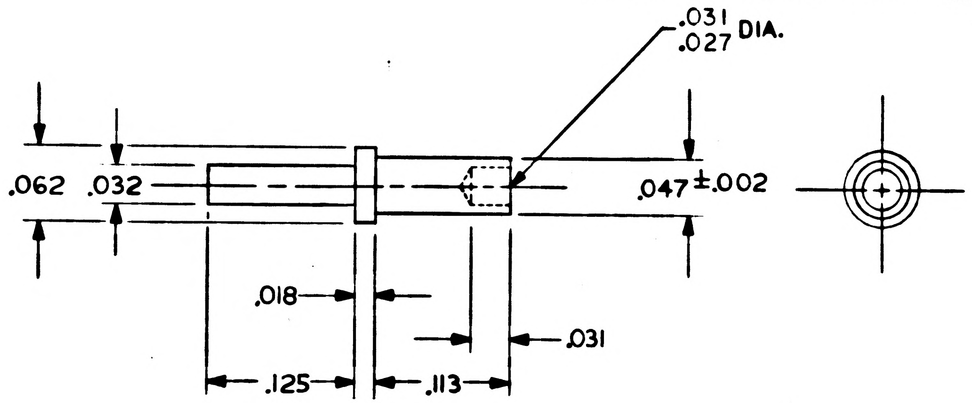

NOTES
1. INTERPRET DRAWING IN ACCORDANCE WITH STANDARDS PRESCRIBED BY MIL-D-70327
2. MAT'L: MONEL PER QQ-N-281A NICKEL COPPER ALLOY

INCHES
0 1 2
PHOTOGRAPHIC SCALE ONLY

QTY REQD	PART OR IDENTIFYING NO.	NOMENCLATURE OR DESCRIPTION	FIND NO.

LIST OF MATERIALS

1003042	
NEXT ASSY	USED ON
APPLICATION	

UNLESS OTHERWISE SPECIFIED DIMENSIONS ARE IN INCHES
TOLERANCES ON
FRACTIONS ± -//- DECIMALS ±.005 ANGLES ± -//-
DO NOT SCALE THIS DRAWING
MATERIAL SEE NOTE 2
HEAT TREATMENT -//-
FINAL FINISH -//-

MIT
INSTRUMENTATION LAB
CAMBRIDGE, MASS.
DWG. NO. 102355 CONTRACT

DRAWN L. SHULMAN DATE 8-10-62
CHECKED Joe Martori
APPROVAL W. P. Turner
APPROVAL E. J. Duggan 10-11-62
NASA APPROVAL W J Rhine 10-11-62
MIT APPROVAL J. Halzel 10/11/62

MANNED SPACECRAFT CENTER
HOUSTON, TEXAS

TERMINAL

SPECIFICATION CONTROL DRAWING

CODE IDENT NO.
SIZE C
NASA DRAWING NO. 1004067
SCALE 10/1 WT -//- SHEET 1 OF 1

NOTICE — WHEN GOVERNMENT DRAWINGS, SPECIFICATIONS, OR OTHER DATA ARE USED FOR ANY PURPOSE OTHER THAN IN CONNECTION WITH A DEFINITELY RELATED GOVERNMENT PROCUREMENT OPERATION, THE UNITED STATES GOVERNMENT THEREBY INCURS NO RESPONSIBILITY NOR ANY OBLIGATION WHATSOEVER; AND THE FACT THAT THE GOVERNMENT MAY HAVE FORMULATED, FURNISHED, OR IN ANY WAY SUPPLIED THE SAID DRAWINGS, SPECIFICATIONS OR OTHER DATA IS NOT TO BE REGARDED BY IMPLICATION OR OTHERWISE AS IN ANY MANNER LICENSING THE HOLDER OR ANY OTHER PERSON OR CORPORATION, OR CONVEYING ANY RIGHTS OR PERMISSION TO MANUFACTURE, USE, OR SELL ANY PATENTED INVENTION THAT MAY IN ANY WAY BE RELATED THERETO.

1004081

REVISIONS			
SYM	DESCRIPTION	DATE	APPROVAL

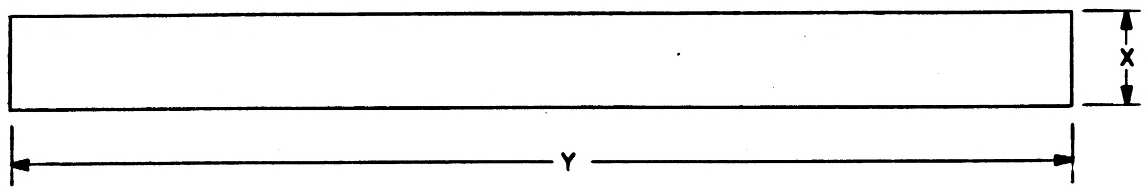

FOR INFORMATION ONLY

CLASS B RELEASE TDR No. 00514 **DATE** 6 Mar 63

DASH NO	X DIM	Y DIM
— 1	.781	8.937
— 2	1.656	9.00
— 3	.400	6.550
— 4	1.484	8.984
— 5	.796	9.00
— 6	1.40	9.00

NOTES:

1. INTERPRET DRAWING IN ACCORDANCE WITH STANDARDS PRESCRIBED BY MIL D 70327
2. MATL: .003/.005 PLASTIC SHEET PER L-P-00519 TYPE 2, CLASS 1

MASTER

QTY REQD	PART OR IDENTIFYING NO.	NOMENCLATURE OR DESCRIPTION	FIND NO.

LIST OF MATERIALS

NEXT ASSY	USED ON
1003058	

APPLICATION

UNLESS OTHERWISE SPECIFIED
DIMENSIONS ARE IN INCHES
TOLERANCES ON
FRACTIONS ± DECIMALS ±.010 ANGLES ±
DO NOT SCALE THIS DRAWING

MATERIAL
SEE NOTE 2

HEAT TREATMENT

FINAL FINISH

MIT
INSTRUMENTATION LAB
CAMBRIDGE, MASS.
DWG. NO. CONTRACT

DRAWN DATE Nov 27-62
CHECKED 3/5/63
APPROVAL 3/5/63
APPROVAL 3/4/63
NASA APPROVAL
MIT APPROVAL 6 Mar 63

MANNED SPACECRAFT CENTER
HOUSTON, TEXAS

INSULATOR, MYLAR
COMPUTER

CODE IDENT NO.
SIZE C
NASA DRAWING NO. 1004081
SCALE
WT
SHEET 1 OF 1

NOTICE — WHEN GOVERNMENT DRAWINGS, SPECIFICATIONS, OR OTHER DATA ARE USED FOR ANY PURPOSE OTHER THAN IN CONNECTION WITH A DEFINITELY RELATED GOVERNMENT PROCUREMENT OPERATION, THE UNITED STATES GOVERNMENT THEREBY INCURS NO RESPONSIBILITY NOR ANY OBLIGATION WHATSOEVER; AND THE FACT THAT THE GOVERNMENT MAY HAVE FORMULATED, FURNISHED, OR IN ANY WAY SUPPLIED THE SAID DRAWINGS, SPECIFICATIONS OR OTHER DATA IS NOT TO BE REGARDED BY IMPLICATION OR OTHERWISE AS IN ANY MANNER LICENSING THE HOLDER OR ANY OTHER PERSON OR CORPORATION, OR CONVEYING ANY RIGHTS OR PERMISSION TO MANUFACTURE, USE, OR SELL ANY PATENTED INVENTION THAT MAY IN ANY WAY BE RELATED THERETO.

1004086 A

REVISIONS			
SYM	DESCRIPTION	DATE	APPROVAL
A	REVISED PER TDRR 00678	3-27-63	WK

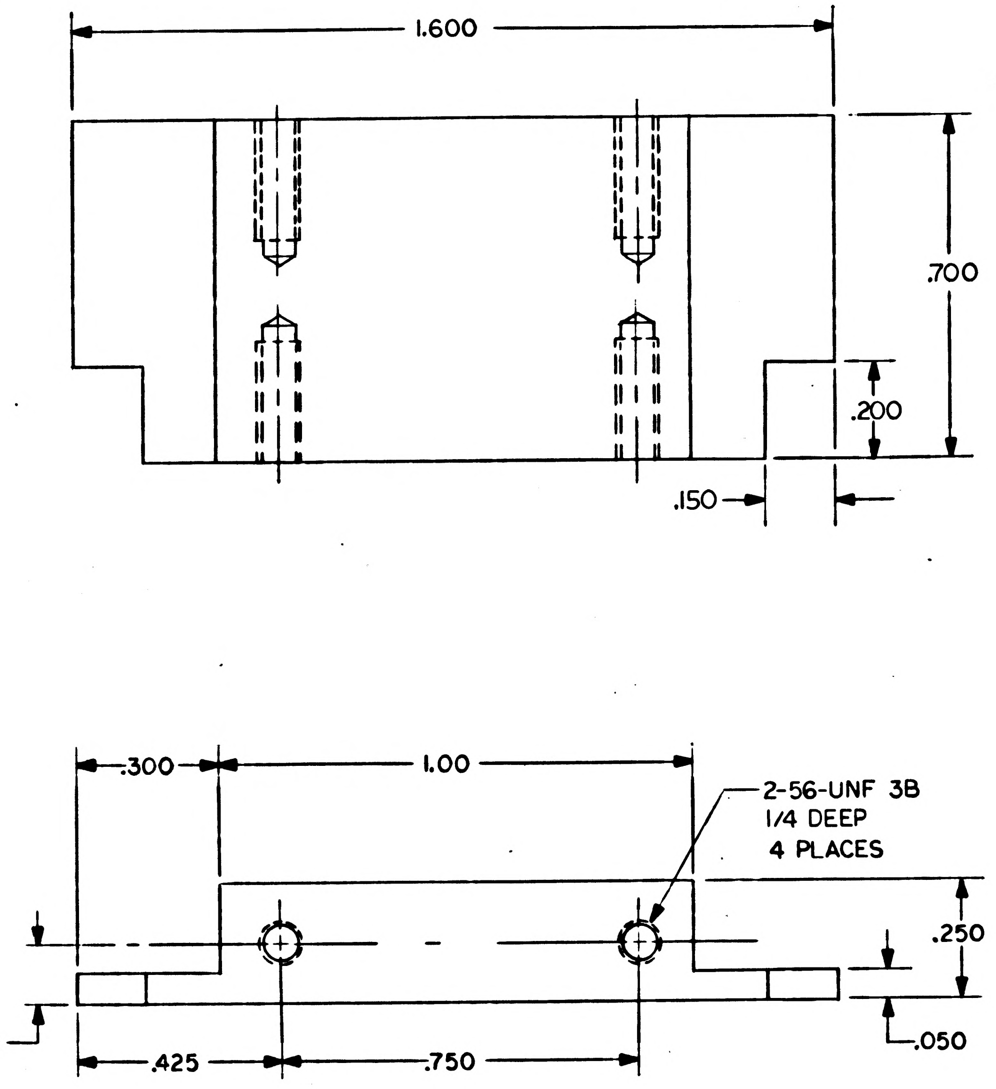

FOR INFORMATION ONLY

CLASS B RELEASE TDR No. 00309 **DATE** 30 Jan 63

NOTES:

1. INTERPRET DRAWING IN ACCORDANCE WITH STANDARDS PRESCRIBED BY MIL-D-70327
2. MATERIAL: MAGNESIUM A231B PER MIL-QQ-M-44
3. JETBLACK GALVANIC ANODIZE PER MIL-3171-A

MASTER

QTY REQD	PART OR IDENTIFYING NO.	NOMENCLATURE OR DESCRIPTION	FIND NO.

LIST OF MATERIALS

1003068	
NEXT ASSY	USED ON
APPLICATION	

UNLESS OTHERWISE SPECIFIED
DIMENSIONS ARE IN INCHES
TOLERANCES ON
FRACTIONS ± 1/64 DECIMALS ±.005 ANGLES ±
DO NOT SCALE THIS DRAWING
MATERIAL SEE NOTE 2
HEAT TREATMENT
FINAL FINISH SEE NOTE 3

MIT
INSTRUMENTATION LAB
CAMBRIDGE, MASS.
DWG. NO. CONTRACT

DRAWN J. Crowley DATE 12-7-62
CHECKED 1/28/63
APPROVAL W. Turner 28 JAN 63
APPROVAL 20 JAN 63
NASA APPROVAL W J Rhine 1-30-63
MIT APPROVAL 30 Jan 63

MANNED SPACECRAFT CENTER
HOUSTON, TEXAS

END PLATE ERASABLE MEMORY

CODE IDENT NO. SIZE C NASA DRAWING NO. 1004086
SCALE 4:1 WT SHEET OF

NOTICE — WHEN GOVERNMENT DRAWINGS, SPECIFICATIONS, OR OTHER DATA ARE USED FOR ANY PURPOSE OTHER THAN IN CONNECTION WITH A DEFINITELY RELATED GOVERNMENT PROCUREMENT OPERATION, THE UNITED STATES GOVERNMENT THEREBY INCURS NO RESPONSIBILITY NOR ANY OBLIGATION WHATSOEVER; AND THE FACT THAT THE GOVERNMENT MAY HAVE FORMULATED, FURNISHED, OR IN ANY WAY SUPPLIED THE SAID DRAWINGS, SPECIFICATIONS OR OTHER DATA IS NOT TO BE REGARDED BY IMPLICATION OR OTHERWISE AS IN ANY MANNER LICENSING THE HOLDER OR ANY OTHER PERSON OR CORPORATION, OR CONVEYING ANY RIGHTS OR PERMISSION TO MANUFACTURE, USE, OR SELL ANY PATENTED INVENTION THAT MAY IN ANY WAY BE RELATED THERETO.

1004086

REVISIONS			
SYM	DESCRIPTION	DATE	APPROVAL

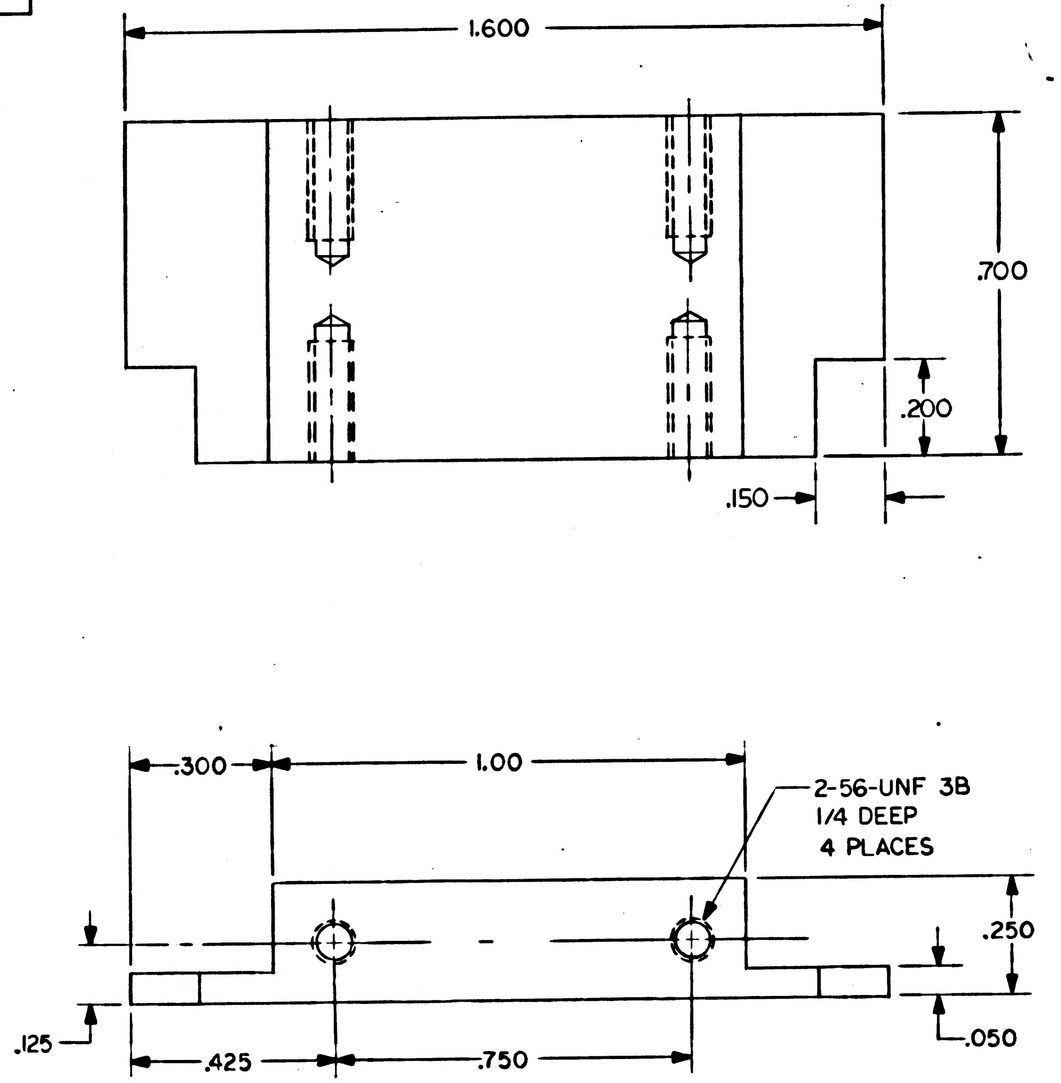

FOR INFORMATION ONLY

CLASS B RELEASE TDR No. 00309 **DATE**

30 Jan 63

NOTES:

1. INTERPRET DRAWING IN ACCORDANCE WITH STANDARDS PRESCRIBED BY MIL-D-70327
2. 6061-T6 ALUMINUM PER QQ-A-327
3. ANODIZED PER MIL-A-8625 TYPE II DYED BLACK

MASTER

QTY REQD	PART OR IDENTIFYING NO.	NOMENCLATURE OR DESCRIPTION	FIND NO.

LIST OF MATERIALS

NEXT ASSY	USED ON
APPLICATION	

UNLESS OTHERWISE SPECIFIED
DIMENSIONS ARE IN INCHES
TOLERANCES ON
FRACTIONS ± 1/64 DECIMALS ±.005 ANGLES ±
DO NOT SCALE THIS DRAWING

MATERIAL
SEE NOTE 2

HEAT TREATMENT

FINAL FINISH
SEE NOTE 3

MIT
INSTRUMENTATION LAB
CAMBRIDGE, MASS
DWG. NO. CONTRACT

DRAWN J. Crowley DATE 12-7-62
CHECKED 1/28/63
APPROVAL W.E. Turner 28 JAN 63
APPROVAL 28 JAN 63

NASA APPROVAL W.J. Rhine 1-30-63

MIT APPROVAL 30 Jan 63

MANNED SPACECRAFT CENTER
HOUSTON, TEXAS

END PLATE ERASABLE MEMORY

CODE IDENT NO. SIZE C NASA DRAWING NO. 1004086

SCALE 4:1 WT SHEET OF

NOTICE — WHEN GOVERNMENT DRAWINGS, SPECIFICATIONS, OR OTHER DATA ARE USED FOR ANY PURPOSE OTHER THAN IN CONNECTION WITH A DEFINITELY RELATED GOVERNMENT PROCUREMENT OPERATION, THE UNITED STATES GOVERNMENT THEREBY INCURS NO RESPONSIBILITY NOR ANY OBLIGATION WHATSOEVER; AND THE FACT THAT THE GOVERNMENT MAY HAVE FORMULATED, FURNISHED, OR IN ANY WAY SUPPLIED THE SAID DRAWINGS, SPECIFICATIONS, OR OTHER DATA IS NOT TO BE REGARDED BY IMPLICATION OR OTHERWISE AS IN ANY MANNER LICENSING THE HOLDER OR ANY OTHER PERSON OR CORPORATION, OR CONVEYING ANY RIGHTS OR PERMISSION TO MANUFACTURE, USE, OR SELL ANY PATENTED INVENTION THAT MAY IN ANY WAY BE RELATED THERETO.

SYM	DESCRIPTION	DATE	APPROVAL

REVISIONS

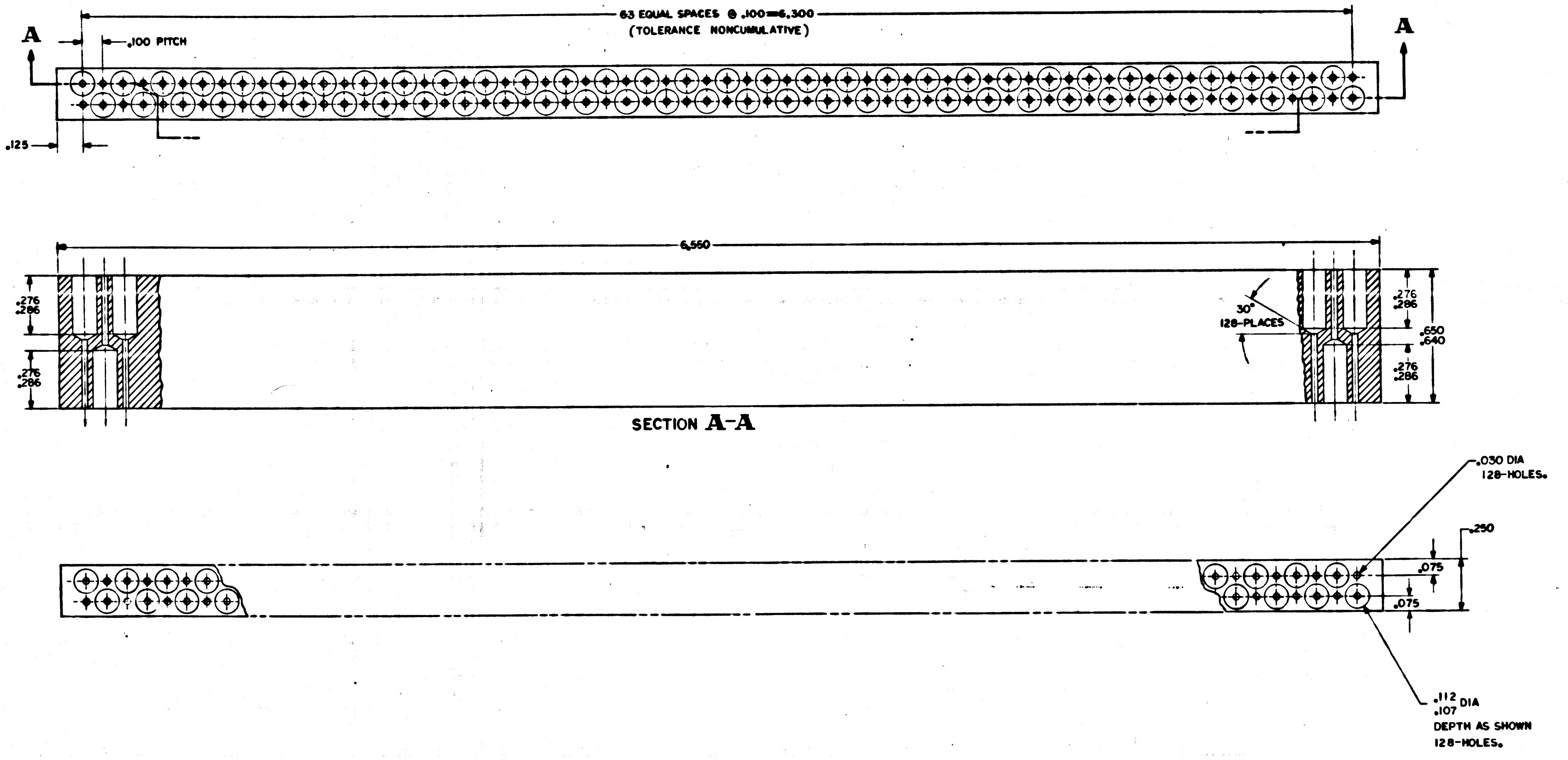

63 EQUAL SPACES @ .100=6.300
(TOLERANCE NONCUMULATIVE)
A
A
.100 PITCH
.125
6.560
.276
.286
.276
.286
30°
128-PLACES
.276
.286
.650
.640
.276
.286
SECTION A-A
.030 DIA
128-HOLES.
.250
.075
.075
.112
.107 DIA
DEPTH AS SHOWN
128-HOLES.

FOR INFORMATION ONLY

CLASS B RELEASE TDR No. 00309 DATE 30 Jan 1963

NOTES:

1. INTERPRET DRAWING IN ACCORDANCE WITH STANDARDS PRESCRIBED BY MIL-D-70327.
2. MATERIAL: PLASTIC, CLEAR ACRYLIC PER MIL-P-8184.

MASTER

QTY REQD	PART OR IDENTIFYING NO.	NOMENCLATURE OR DESCRIPTION	FIND NO

LIST OF MATERIALS

NEXT ASSY	USED ON
APPLICATION	

UNLESS OTHERWISE SPECIFIED
DIMENSIONS ARE IN INCHES
TOLERANCES ON
FRACTIONS ± — DECIMALS ±.005 ANGLES ±½°
DO NOT SCALE THIS DRAWING

MATERIAL SEE NOTE 2.

HEAT TREATMENT —

FINAL FINISH CLASS "B" FINISH

MIT INSTRUMENTATION LAB
CAMBRIDGE, MASS

DRAWN DATE 12-10-62
CHECKED 1/10/63
APPROVAL 28 Jan 63
APPROVAL
NASA APPROVAL 1-30-63
MIT APPROVAL 30 Jan 63

MANNED SPACECRAFT CENTER
HOUSTON, TEXAS

DIODE BLOCK
ERASABLE MEMORY

CODE IDENT NO.
SIZE E
NASA DRAWING NO. 1004088
SCALE 4/1
WT
SHEET 1 OF 1

1004088

NOTICE — WHEN GOVERNMENT DRAWINGS, SPECIFICATIONS, OR OTHER DATA ARE USED FOR ANY PURPOSE OTHER THAN IN CONNECTION WITH A DEFINITELY RELATED GOVERNMENT PROCUREMENT OPERATION, THE UNITED STATES GOVERNMENT THEREBY INCURS NO RESPONSIBILITY NOR ANY OBLIGATION WHATSOEVER; AND THE FACT THAT THE GOVERNMENT MAY HAVE FORMULATED, FURNISHED, OR IN ANY WAY SUPPLIED THE SAID DRAWINGS, SPECIFICATIONS OR OTHER DATA IS NOT TO BE REGARDED BY IMPLICATION OR OTHERWISE AS IN ANY MANNER LICENSING THE HOLDER OR ANY OTHER PERSON OR CORPORATION, OR CONVEYING ANY RIGHTS OR PERMISSION TO MANUFACTURE, USE, OR SELL ANY PATENTED INVENTION THAT MAY IN ANY WAY BE RELATED THERETO.

REVISIONS			
SYM	DESCRIPTION	DATE	APPROVAL

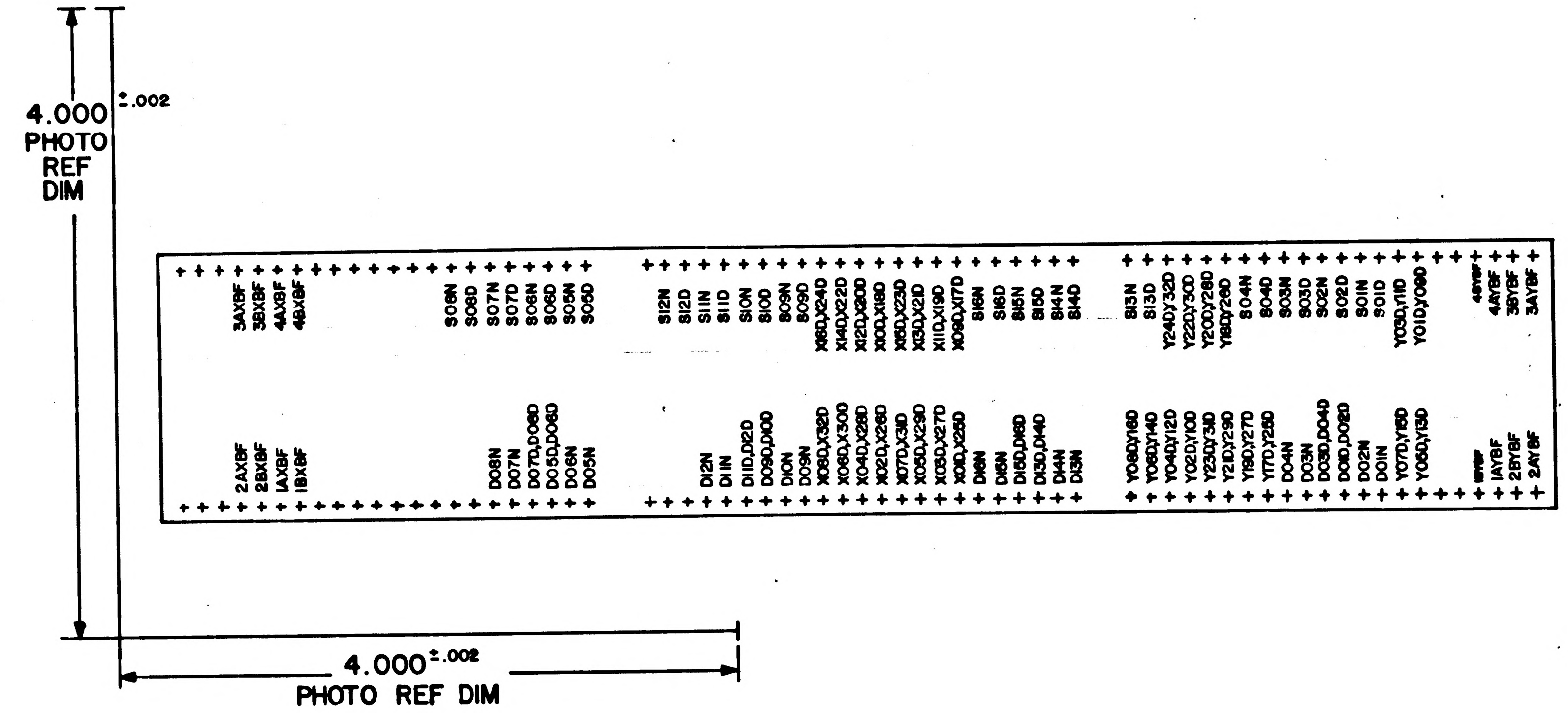
4.000 ±.002
PHOTO
REF
DIM
3AXBF
3BXBF
4AXBF
4BXBF
SO8N
SO8D
SO7N
SO7D
SO6N
SO6D
SO5N
SO5D
SI2N
SI2D
SIIN
SIID
SION
SIOD
SO9N
SO9D
XI6D,X24D
XI4D,X22D
XI2D,X20D
XI0D,XI8D
XI5D,X23D
XI3D,X2ID
XIID,XI9D
XO9D,XI7D
SI6N
SI6D
SI5N
SI5D
SI4N
SI4D
SI3N
SI3D
Y24D,Y32D
Y22D,Y30D
Y20D,Y28D
YI8D,Y26D
SO4N
SO4D
SO3N
SO3D
SO2N
SO2D
SOIN
SOID
YO3D,YIID
YOID,YO9D
4BYBF
4AYBF
3BYBF
3AYBF
2AXBF
2BXBF
IAXBF
IBXBF
DO8N
DO7N
DO7D,DO8D
DO5D,DO6D
DO6N
DO5N
DI2N
DIIN
DIID,DI2D
DO9D,DIOD
DION
DO9N
XO8D,X32D
XO6D,X30D
XO4D,X28D
XO2D,X26D
XO7D,X3ID
XO5D,X29D
XO3D,X27D
XOID,X25D
DI6N
DI5N
DI5D,DI6D
DI3D,DI4D
DI4N
DI3N
YO8D,YI6D
YO6D,YI4D
YO4D,YI2D
YO2D,YIOD
Y23D,Y3ID
Y2ID,Y29D
YI9D,Y27D
YI7D,Y25D
DO4N
DO3N
DO3D,DO4D
DOID,DO2D
DO2N
DOIN
YO7D,YI5D
YO5D,YI3D
IBYBF
IAYBF
2BYBF
2AYBF
4.000 ±.002
PHOTO REF DIM

FOR INFORMATION ONLY

CLASS B RELEASE TDR No. 00309 DATE
30 Jan 1963

NOTES:
1. INTERPRET DRAWING IN ACCORDANCE WITH STANDARDS PRESCRIBED BY MIL-D-70327
2. ORIGINAL OF THIS DRAWING OR REPRODUCTION MADE BY PROCESS OR METHOD SHALL INSURE DIMENSIONAL STABILITY. DIMENSIONAL VARIATION SHALL NOT EXCEED .001 INCH PER INCH
3. MAKE MASTER PATTERN POSITIVE FILMS TO DIMENSIONS SHOWN
4. MATERIAL: .007 (COULD VARY) THICK PLASTIC SHEETS, SENSITIZED, DIMENSIONALLY STABLE PER L-P-00518 (NAVY-AER) TYPE II, CLASS "C"

MASTER

QTY REQD	PART OR IDENTIFYING NO.	NOMENCLATURE OR DESCRIPTION	FIND NO.

LIST OF MATERIALS

NEXT ASSY	USED ON
APPLICATION	

UNLESS OTHERWISE SPECIFIED
DIMENSIONS ARE IN INCHES
TOLERANCES ON
FRACTIONS ± — DECIMALS ± — ANGLES ± —
DO NOT SCALE THIS DRAWING
MATERIAL —
HEAT TREATMENT —
FINAL FINISH —

MIT
INSTRUMENTATION LAB
CAMBRIDGE MASS.
DWG. NO. CONTRACT
DRAWN A. Dangelis DATE 12/1/62
CHECKED 12/31/62
APPROVAL W. B. Turner 28 JAN 63
APPROVAL 21 Jan 63
NASA APPROVAL 1-30-63
MIT APPROVAL 30 Jan 63

MANNED SPACECRAFT CENTER
HOUSTON, TEXAS

SILK SCREEN MASTER
ERASABLE MEMORY STICK

CODE IDENT NO. SIZE D NASA DRAWING NO. 1004089
SCALE 2/1 WT — SHEET OF

1004089

NOTICE — WHEN GOVERNMENT DRAWINGS, SPECIFICATIONS, OR OTHER DATA ARE USED FOR ANY PURPOSE OTHER THAN IN CONNECTION WITH A DEFINITELY RELATED GOVERNMENT PROCUREMENT OPERATION, THE UNITED STATES GOVERNMENT THEREBY INCURS NO RESPONSIBILITY NOR ANY OBLIGATION WHATSOEVER; AND THE FACT THAT THE GOVERNMENT MAY HAVE FORMULATED, FURNISHED, OR IN ANY WAY SUPPLIED THE SAID DRAWINGS, SPECIFICATIONS OR OTHER DATA IS NOT TO BE REGARDED BY IMPLICATION OR OTHERWISE AS IN ANY MANNER LICENSING THE HOLDER OR ANY OTHER PERSON OR CORPORATION, OR CONVEYING ANY RIGHTS OR PERMISSION TO MANUFACTURE, USE, OR SELL ANY PATENTED INVENTION THAT MAY IN ANY WAY BE RELATED THERETO.

REVISIONS			
SYM	DESCRIPTION	DATE	APPROVAL
A	REVISED PER TDRR 00679	3-27-63	

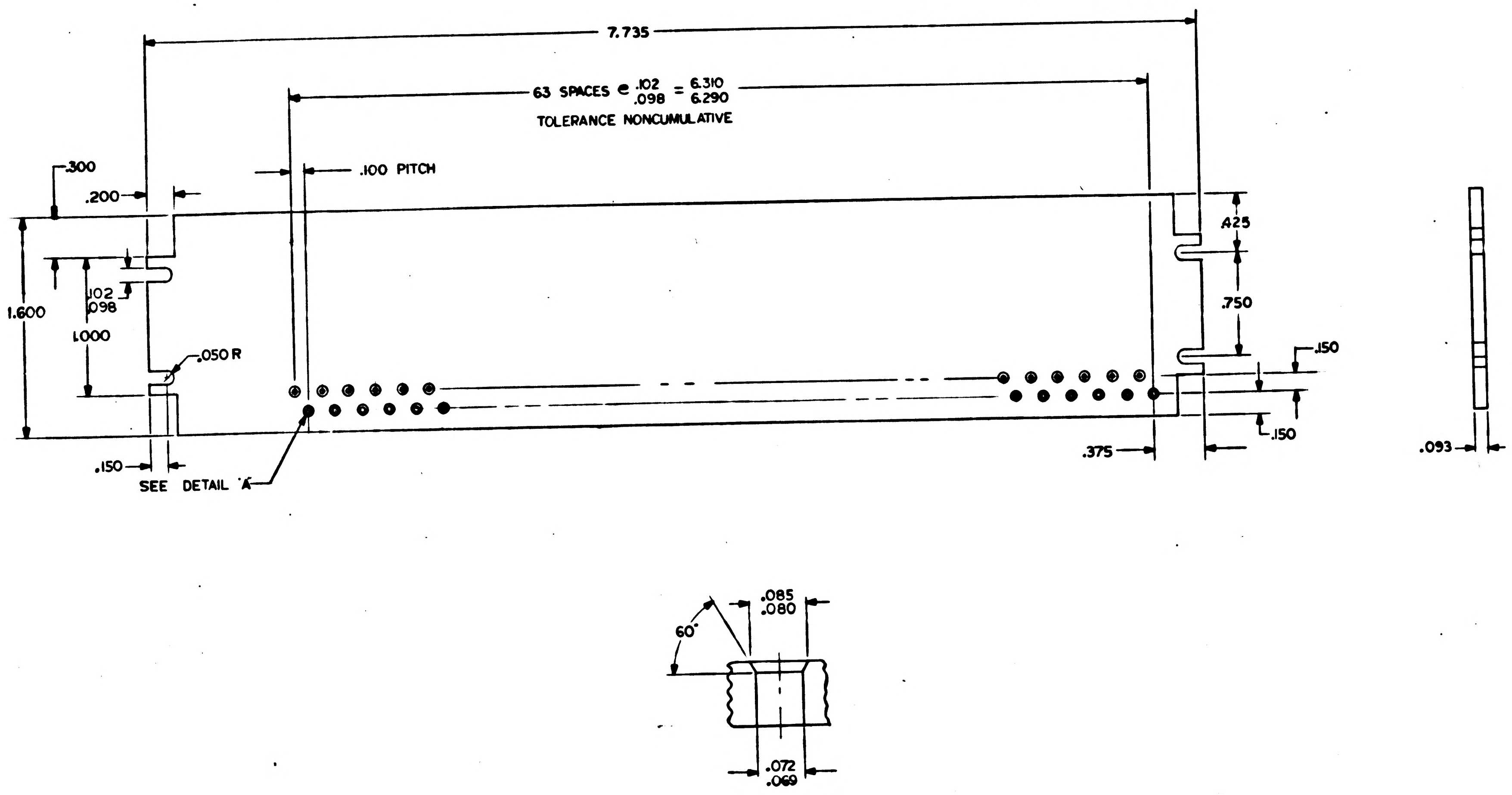

DETAIL A
SCALE 10/1

FOR INFORMATION ONLY

CLASS B RELEASE TDR No. 00309 DATE 30 Jan 1963

NOTES:
1. INTERPRET DRAWING IN ACCORDANCE WITH STANDARDS PRESCRIBED BY MIL-D-70327
2. MAT'L MAGNESIUM A231B PER MIL-QQ-M-44
3. JETBLACK GALVANIC ANODIZE PER MIL-3171-A

MASTER

QTY REQD	PART OR IDENTIFYING NO.	NOMENCLATURE OR DESCRIPTION	FIND NO.

LIST OF MATERIALS

1003068

NEXT ASSY | USED ON

APPLICATION

UNLESS OTHERWISE SPECIFIED
DIMENSIONS ARE IN INCHES
TOLERANCES ON
FRACTIONS ±1/64 DECIMALS ±.005 ANGLES ±
DO NOT SCALE THIS DRAWING

MATERIAL SEE NOTE 2
HEAT TREATMENT
FINAL FINISH SEE NOTE 3

MIT
INSTRUMENTATION LAB
CAMBRIDGE, MASS.
DWG. NO. CONTRACT

DRAWN J. Crowley DATE 12-12-62
CHECKED 12/31/62
APPROVAL 28 JAN 63
APPROVAL 28 Jan 63
NASA APPROVAL 1-30-63
MIT APPROVAL 30 Jan 63

MANNED SPACECRAFT CENTER
HOUSTON, TEXAS

FEED THRU TERMINAL
PLATE

CODE IDENT NO. | SIZE D | NASA DRAWING NO. 1004090

SCALE 2:1 | WT | SHEET OF

1004090 A

NOTICE — WHEN GOVERNMENT DRAWINGS, SPECIFICATIONS, OR OTHER DATA ARE USED FOR ANY PURPOSE OTHER THAN IN CONNECTION WITH A DEFINITELY RELATED GOVERNMENT PROCUREMENT OPERATION, THE UNITED STATES GOVERNMENT THEREBY INCURS NO RESPONSIBILITY NOR ANY OBLIGATION WHATSOEVER, AND THE FACT THAT THE GOVERNMENT MAY HAVE FORMULATED, FURNISHED, OR IN ANY WAY SUPPLIED THE SAID DRAWINGS, SPECIFICATIONS OR OTHER DATA IS NOT TO BE REGARDED BY IMPLICATION OR OTHERWISE AS IN ANY MANNER LICENSING THE HOLDER OR ANY OTHER PERSON OR CORPORATION, OR CONVEYING ANY RIGHTS OR PERMISSION TO MANUFACTURE, USE, OR SELL ANY PATENTED INVENTION THAT MAY IN ANY WAY BE RELATED THERETO.

REVISIONS

SYM	DESCRIPTION	DATE	APPROVAL
A	REVISED PER TDRR 00679	3-27-63	WK
B	REVISED PER TDRR 01119	5-1-63	WK

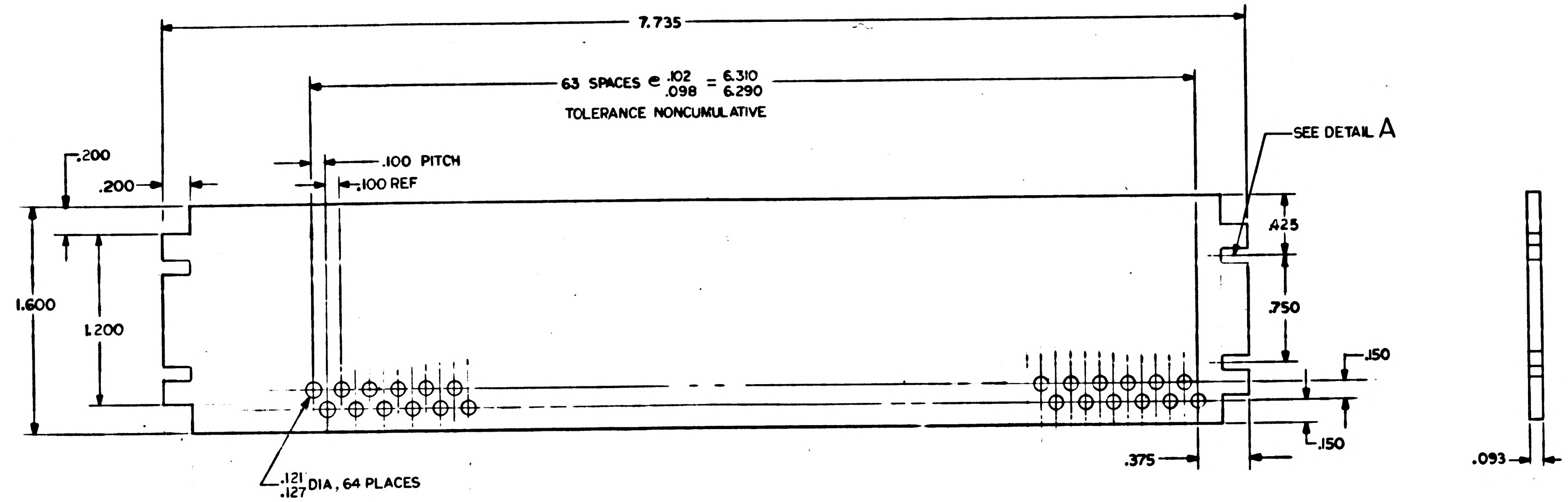

FOR INFORMATION ONLY

CLASS B RELEASE TDR No. 00309 DATE 30 Jan 1963

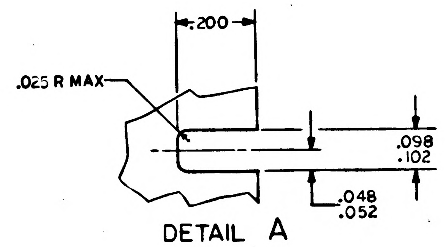

DETAIL A
SCALE 5/1

NOTES:

1. INTERPRET DRAWING IN ACCORDANCE WITH STANDARDS PRESCRIBED BY MIL-D-70327
2. PLASTIC SHEET, LAMINATED PER MIL-P-18177 TYPE GEE

MASTER

QTY REQD	PART OR IDENTIFYING NO.	NOMENCLATURE OR DESCRIPTION	FIND NO.

LIST OF MATERIALS

1003068	
NEXT ASSY	USED ON
APPLICATION	

UN' ...HERWISE SPECIFIED
DIM ARE IN INCHES
TOL ON
FRACTIONS ±1/64 DECIMALS ±.005 ANGLES ±
DO NOT SCALE THIS DRAWING
MATERIAL SEE NOTE 2
HEAT TREATMENT —‖—
FINAL FINISH —‖—

MIT
INSTRUMENTATION LAB
CAMBRIDGE, MASS.
DWG. NO. CONTRACT
DRAWN J. Cmulay DATE 12-12-62
CHECKED 12/31/62
APPROVAL W. F. Twome 28 JAN 63
APPROVAL 28 Jan 63
NASA APPROVAL W. J. Rhine 1-30-63
MIT APPROVAL W. Koffer 30 Jan 63

MANNED SPACECRAFT CENTER
HOUSTON, TEXAS

FEED THRU TERMINAL
PLATE

CODE IDENT NO.
SIZE D
NASA DRAWING NO. 1004090
SCALE 2:1
WT
SHEET 1 OF 1

1004090 B

INCHES
0 1 2
PHOTOGRAPHIC SCALE ONLY

NOTICE — WHEN GOVERNMENT DRAWINGS, SPECIFICATIONS, OR OTHER DATA ARE USED FOR ANY PURPOSE OTHER THAN IN CONNECTION WITH A DEFINITELY RELATED GOVERNMENT PROCUREMENT OPERATION, THE UNITED STATES GOVERNMENT THEREBY INCURS NO RESPONSIBILITY NOR ANY OBLIGATION WHATSOEVER; AND THE FACT THAT THE GOVERNMENT MAY HAVE FORMULATED, FURNISHED, OR IN ANY WAY SUPPLIED THE SAID DRAWINGS, SPECIFICATIONS OR OTHER DATA IS NOT TO BE REGARDED BY IMPLICATION OR OTHERWISE AS IN ANY MANNER LICENSING THE HOLDER OR ANY OTHER PERSON OR CORPORATION, OR CONVEYING ANY RIGHTS OR PERMISSION TO MANUFACTURE, USE, OR SELL ANY PATENTED INVENTION THAT MAY IN ANY WAY BE RELATED THERETO.

REVISIONS – TDRR 00309

SYM	DESCRIPTION	DATE	APPROVAL
A	REVISED PER TDRR 00679	3-28-63	WK.
B	REVISED PER TDRR 01119	5-1-63	WK
C	REVISED AND UPGRADED FROM CLASS B TO CLASS A PER TDRR 01821	28 JUN63 7/2/63	

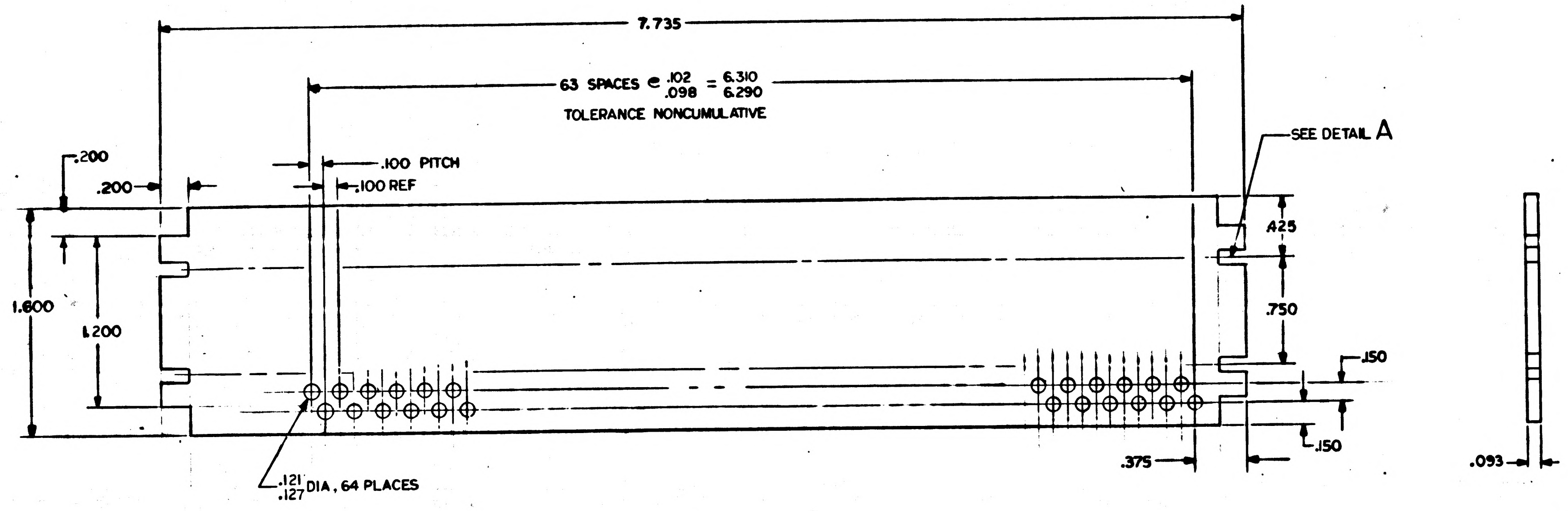

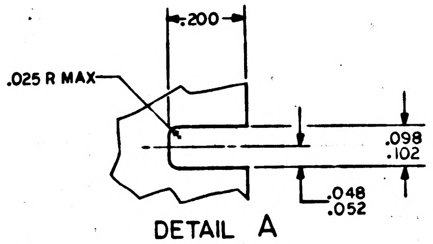

DETAIL A
SCALE 5/1

NOTES:
1. INTERPRET DRAWING IN ACCORDANCE WITH STANDARDS PRESCRIBED BY MIL-D-70327
2. PLASTIC SHEET, LAMINATED PER MIL-P-18177 TYPE GEE

MASTER

QTY REQD	PART OR IDENTIFYING NO.	NOMENCLATURE OR DESCRIPTION	FIND NO.

LIST OF MATERIALS

NEXT ASSY	USED ON
1003071	

APPLICATION

UNLESS OTHERWISE SPECIFIED DIMENSIONS ARE IN INCHES
TOLERANCES ON
FRACTIONS ± DECIMALS ±.005 ANGLES ±
DO NOT SCALE THIS DRAWING
MATERIAL SEE NOTE 2
HEAT TREATMENT —‖—
FINAL FINISH —‖—

MIT INSTRUMENTATION LAB
CAMBRIDGE, MASS.
DWG. NO. CONTRACT
DRAWN J. Crowley DATE 12-12-62
CHECKED 12/21/62
APPROVAL W.B. Turner 28 JAN 63
APPROVAL 28 Jan 63
NASA APPROVAL W.J. Rhine 1-30-63
MIT APPROVAL W. Kaffer 30 Jan 63

MANNED SPACECRAFT CENTER
HOUSTON, TEXAS

FEED THRU TERMINAL PLATE

CODE IDENT NO.
SIZE D
NASA DRAWING NO. 1004090
SCALE 2:1
WT
SHEET 1 OF 1

1004090 C

INCHES
0 1 2
PHOTOGRAPHIC SCALE ONLY

NOTICE — WHEN GOVERNMENT DRAWINGS, SPECIFICATIONS, OR OTHER DATA ARE USED FOR ANY PURPOSE OTHER THAN IN CONNECTION WITH A DEFINITELY RELATED GOVERNMENT PROCUREMENT OPERATION, THE UNITED STATES GOVERNMENT THEREBY INCURS NO RESPONSIBILITY NOR ANY OBLIGATION WHATSOEVER; AND THE FACT THAT THE GOVERNMENT MAY HAVE FORMULATED, FURNISHED, OR IN ANY WAY SUPPLIED THE SAID DRAWINGS, SPECIFICATIONS OR OTHER DATA IS NOT TO BE REGARDED BY IMPLICATION OR OTHERWISE AS IN ANY MANNER LICENSING THE HOLDER OR ANY OTHER PERSON OR CORPORATION, OR CONVEYING ANY RIGHTS OR PERMISSION TO MANUFACTURE, USE, OR SELL ANY PATENTED INVENTION THAT MAY IN ANY WAY BE RELATED THERETO.

REVISIONS + DRR 00309

SYM	DESCRIPTION	DATE	APPROVAL
A	REVISED PER TDRR 00679	3-28-63	WK
B	REVISED PER TDRR 01119	5-1-63	WK
C	REVISED AND UPGRADED FROM CLASS B TO CLASS A. PER TDRR 01821	28 JUN 63 7/2/63	
D	REVISED PER TDRR 02846	8-28-63	

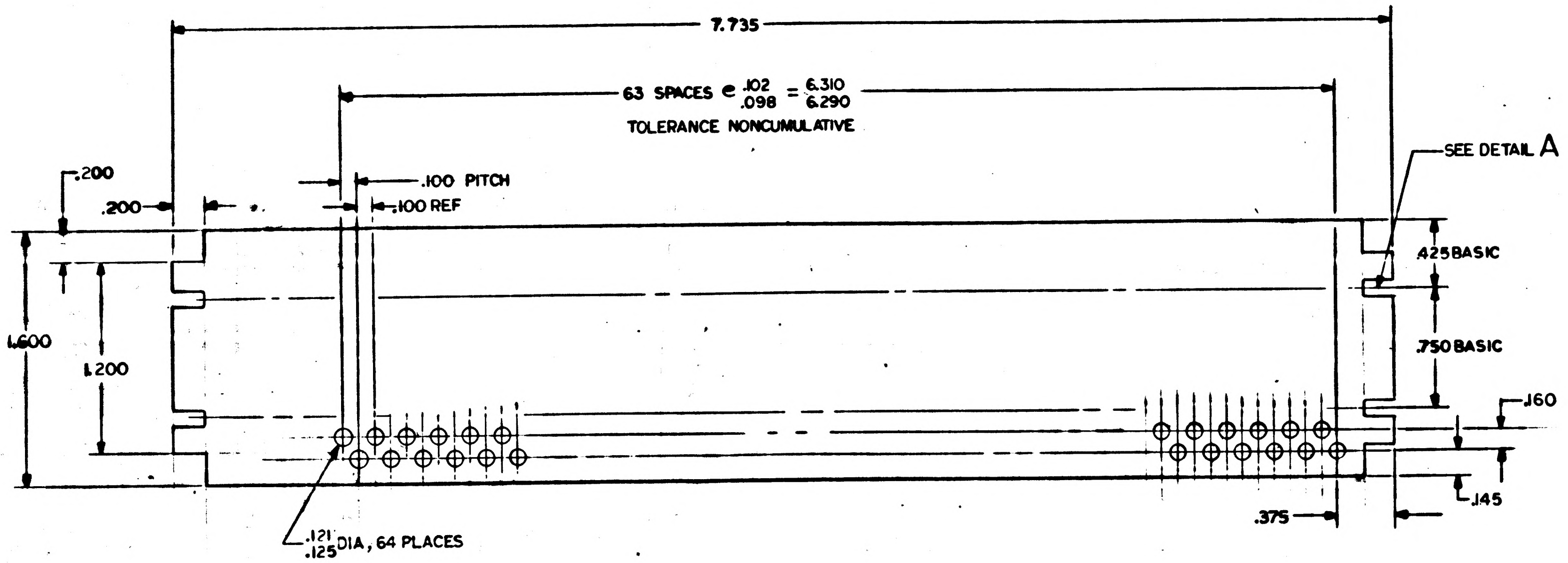
7.735
63 SPACES @ .102/.098 = 6.310/6.290
TOLERANCE NONCUMULATIVE
SEE DETAIL A
.200
.200
.100 PITCH
.100 REF
.425 BASIC
.750 BASIC
1.600
1.200
.160
.145
.375
.121/.125 DIA, 64 PLACES

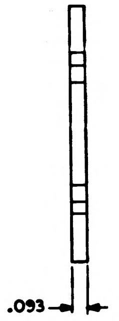

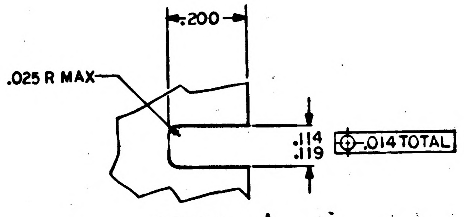
.200
.025 R MAX
.114/.119
.014 TOTAL

DETAIL A
SCALE 5/1

NOTES:

1. INTERPRET DRAWING IN ACCORDANCE WITH STANDARDS PRESCRIBED BY MIL-D-70327
2. PLASTIC SHEET, LAMINATED PER MIL-P-18177 TYPE GEE

MASTER

QTY REQD	PART OR IDENTIFYING NO.	NOMENCLATURE OR DESCRIPTION	FIND NO.

LIST OF MATERIALS

NEXT ASSY	USED ON
1003071	

APPLICATION

UNLESS OTHERWISE SPECIFIED DIMENSIONS ARE IN INCHES
TOLERANCES ON
FRACTIONS ± DECIMALS ±.005 ANGLES ±
DO NOT SCALE THIS DRAWING
MATERIAL SEE NOTE 2
HEAT TREATMENT —
FINAL FINISH —

MIT INSTRUMENTATION LAB
CAMBRIDGE, MASS.
DWG. NO. CONTRACT
DRAWN J. Cowley DATE 12-12-62
CHECKED 12/31/62
APPROVAL 28 JAN 63
APPROVAL 28 Jan 63
NASA APPROVAL W. J. Rhine 1-30-63
MIT APPROVAL W Koffor 30 Jan 63

MANNED SPACECRAFT CENTER
HOUSTON, TEXAS

FEED THRU TERMINAL PLATE

CODE IDENT NO. —
SIZE D
NASA DRAWING NO. 1004090
SCALE 2:1
WT
SHEET 1 OF 1

1004090 D

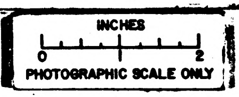
INCHES
0
1
2
PHOTOGRAPHIC SCALE ONLY

NOTICE — WHEN GOVERNMENT DRAWINGS, SPECIFICATIONS, OR OTHER DATA ARE USED FOR ANY PURPOSE OTHER THAN IN CONNECTION WITH A DEFINITELY RELATED GOVERNMENT PROCUREMENT OPERATION, THE UNITED STATES GOVERNMENT THEREBY INCURS NO RESPONSIBILITY NOR ANY OBLIGATION WHATSOEVER; AND THE FACT THAT THE GOVERNMENT MAY HAVE FORMULATED, FURNISHED, OR IN ANY WAY SUPPLIED THE SAID DRAWINGS, SPECIFICATIONS OR OTHER DATA IS NOT TO BE REGARDED BY IMPLICATION OR OTHERWISE AS IN ANY MANNER LICENSING THE HOLDER OR ANY OTHER PERSON OR CORPORATION, OR CONVEYING ANY RIGHTS OR PERMISSION TO MANUFACTURE, USE, OR SELL ANY PATENTED INVENTION THAT MAY IN ANY WAY BE RELATED THERETO.

REVISIONS + DRR 00309

SYM	DESCRIPTION	DATE	APPROVAL
A	REVISED PER TDRR 00679	3-22-63	WK
B	REVISED PER TDRR 01119	5-1-63	WK
C	REVISED AND UPGRADED FROM CLASS B TO CLASS A PER TDRR 01821	28 JUN 63 7/3/63	
D	REVISED PER TDRR 02846	8-28-63	
E	REVISED PER TDRR 11310 DR S.A. Clermont CHK	8/13/69	

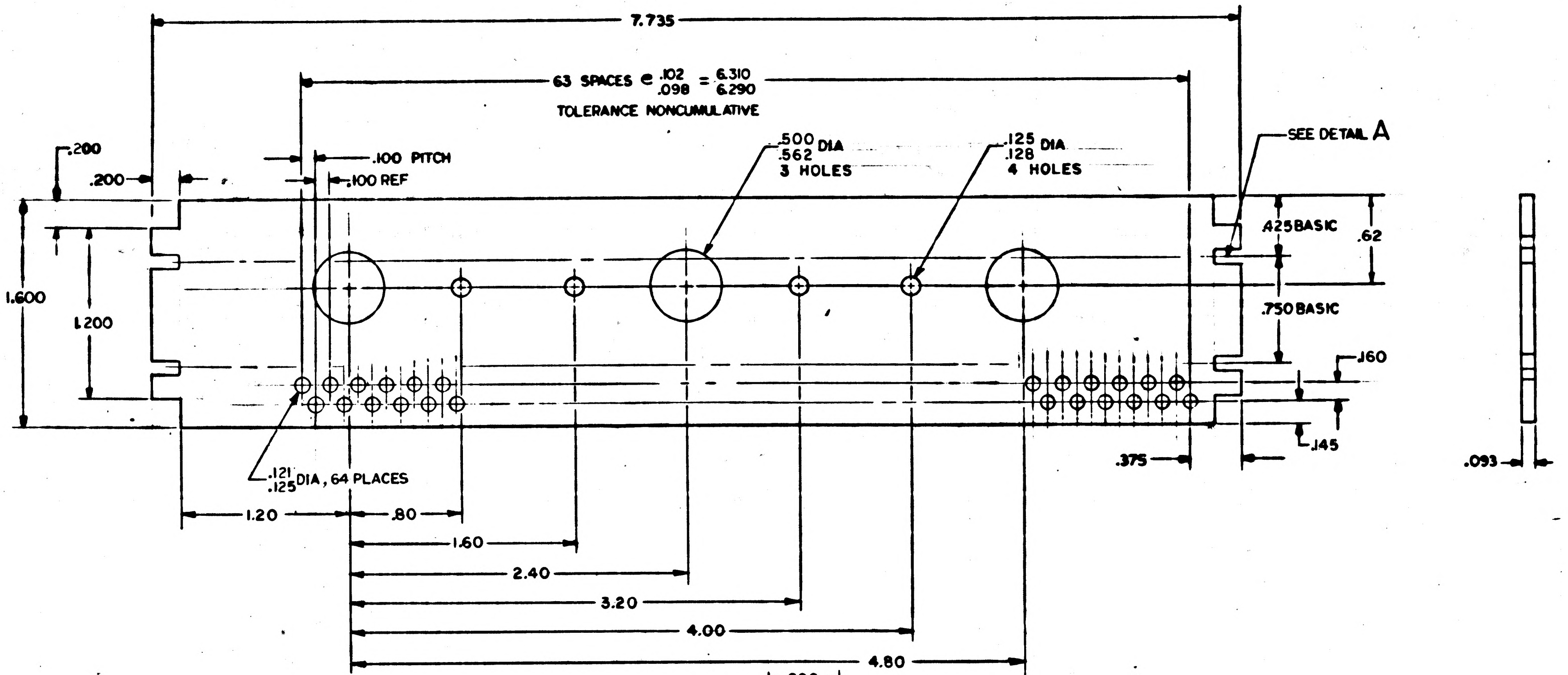

7.735
63 SPACES @ .102/.098 = 6.310/6.290
TOLERANCE NONCUMULATIVE
.200
.200
.100 PITCH
.100 REF
.500/.562 DIA
3 HOLES
.125/.128 DIA
4 HOLES
SEE DETAIL A
.425 BASIC
.62
.750 BASIC
1.600
1.200
.160
.145
.375
.093
.121/.125 DIA, 64 PLACES
1.20
.80
1.60
2.40
3.20
4.00
4.80

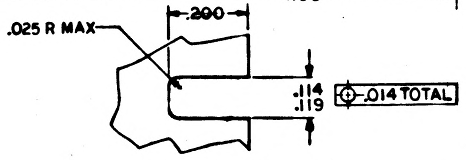

.025 R MAX
.200
.114/.119
⊕ .014 TOTAL

DETAIL A
SCALE 5/1

NOTES:
1. INTERPRET DRAWING IN ACCORDANCE WITH STANDARDS PRESCRIBED BY MIL-D-70327
2. PLASTIC SHEET, LAMINATED PER MIL-P-18177 TYPE GEE

QTY REQD	PART OR IDENTIFYING NO.	NOMENCLATURE OR DESCRIPTION	FIND NO.

LIST OF MATERIALS

1003071	
NEXT ASSY	USED ON
APPLICATION	

UNLESS OTHERWISE SPECIFIED
DIMENSIONS ARE IN INCHES
TOLERANCES ON
FRACTIONS ± DECIMALS ±.005 ±.03 ANGLES ±
DO NOT SCALE THIS DRAWING
MATERIAL
SEE NOTE 2
HEAT TREATMENT
—
FINAL FINISH
—

MIT
INSTRUMENTATION LAB
CAMBRIDGE, MASS.
DWG. NO. CONTRACT
DRAWN DATE 12-12-62
CHECKED 12/21/62
APPROVAL 28 JAN 63
APPROVAL
NASA APPROVAL W. J. Rhine 1-30-63
MIT APPROVAL W. Koffer

MANNED SPACECRAFT CENTER
HOUSTON, TEXAS

FEED THRU TERMINAL PLATE

CODE IDENT NO. —
SIZE D
NASA DRAWING NO. 1004090
SCALE 2:1
WT
SHEET 1 OF 1

NOTICE — WHEN GOVERNMENT DRAWINGS, SPECIFICATIONS, OR OTHER DATA ARE USED FOR ANY PURPOSE OTHER THAN IN CONNECTION WITH A DEFINITELY RELATED GOVERNMENT PROCUREMENT OPERATION, THE UNITED STATES GOVERNMENT THEREBY INCURS NO RESPONSIBILITY NOR ANY OBLIGATION WHATSOEVER AND THE FACT THAT THE GOVERNMENT MAY HAVE FORMULATED, FURNISHED, OR IN ANY WAY SUPPLIED THE SAID DRAWINGS, SPECIFICATIONS OR OTHER DATA IS NOT TO BE REGARDED BY IMPLICATION OR OTHERWISE AS IN ANY MANNER LICENSING THE HOLDER OR ANY OTHER PERSON OR CORPORATION, OR CONVEYING ANY RIGHTS OR PERMISSION TO MANUFACTURE, USE, OR SELL ANY PATENTED INVENTION THAT MAY IN ANY WAY BE RELATED THERETO.

REVISIONS

SYM	DESCRIPTION	DATE	APPROVAL

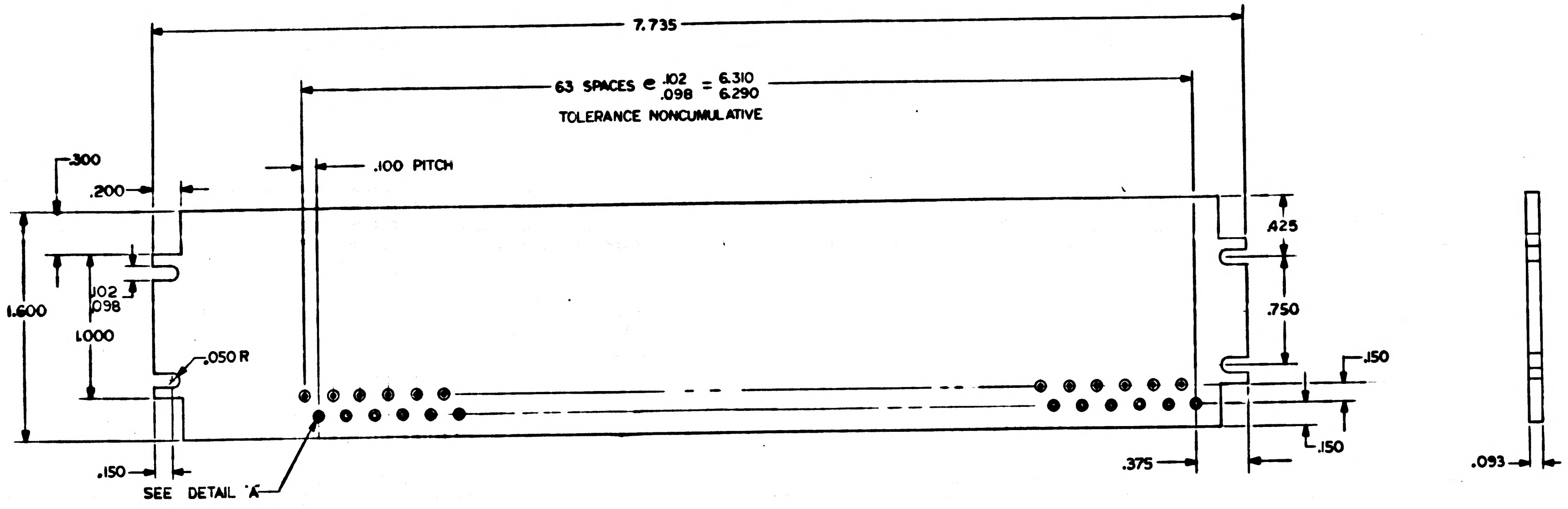

FOR INFORMATION ONLY

CLASS B RELEASE TDR No. 00309 DATE 30 Jan 1963

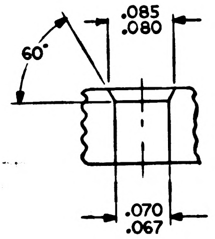

DETAIL A
SCALE 10/1

NOTES:

1. INTERPRET DRAWING IN ACCORDANCE WITH STANDARDS PRESCRIBED BY MIL-D-70327
2. 6061 T6 ALUMINUM PER QQ-A-327
3. ANODIZED PER MIL-A-8625 TYPE II DYED BLACK

MASTER

QTY REQD	PART OR IDENTIFYING NO.	NOMENCLATURE OR DESCRIPTION	FIND NO.

LIST OF MATERIALS

NEXT ASSY	USED ON
APPLICATION	

UNLESS OTHERWISE SPECIFIED DIMENSIONS ARE IN INCHES
TOLERANCES ON
FRACTIONS ±1/64 DECIMALS ±.005 ANGLES ±
DO NOT SCALE THIS DRAWING
MATERIAL SEE NOTE 2
HEAT TREATMENT
FINAL FINISH SEE NOTE 3

MIT
INSTRUMENTATION LAB
CAMBRIDGE, MASS
DWG. NO. CONTRACT

DRAWN J. Connolly DATE 12-12-62
CHECKED 12/31/62
APPROVAL W. Turner 28 JAN 63
APPROVAL 28 Jan 63
NASA APPROVAL W. J. Rhine 1-30-63
MIT APPROVAL 30 Jan 63

MANNED SPACECRAFT CENTER
HOUSTON, TEXAS

FEED THRU TERMINAL PLATE

CODE IDENT NO.
SIZE D
NASA DRAWING NO. 1004090
SCALE 2:1
WT
SHEET OF

1004090

NOTICE — WHEN GOVERNMENT DRAWINGS, SPECIFICATIONS, OR OTHER DATA ARE USED FOR ANY PURPOSE OTHER THAN IN CONNECTION WITH A DEFINITELY RELATED GOVERNMENT PROCUREMENT OPERATION, THE UNITED STATES GOVERNMENT THEREBY INCURS NO RESPONSIBILITY NOR ANY OBLIGATION WHATSOEVER; AND THE FACT THAT THE GOVERNMENT MAY HAVE FORMULATED, FURNISHED, OR IN ANY WAY SUPPLIED THE SAID DRAWINGS, SPECIFICATIONS OR OTHER DATA IS NOT TO BE REGARDED BY IMPLICATION OR OTHERWISE AS IN ANY MANNER LICENSING THE HOLDER OR ANY OTHER PERSON OR CORPORATION, OR CONVEYING ANY RIGHTS OR PERMISSION TO MANUFACTURE, USE, OR SELL ANY PATENTED INVENTION THAT MAY IN ANY WAY BE RELATED THERETO.

REVISIONS			
SYM	DESCRIPTION	DATE	APPROVAL

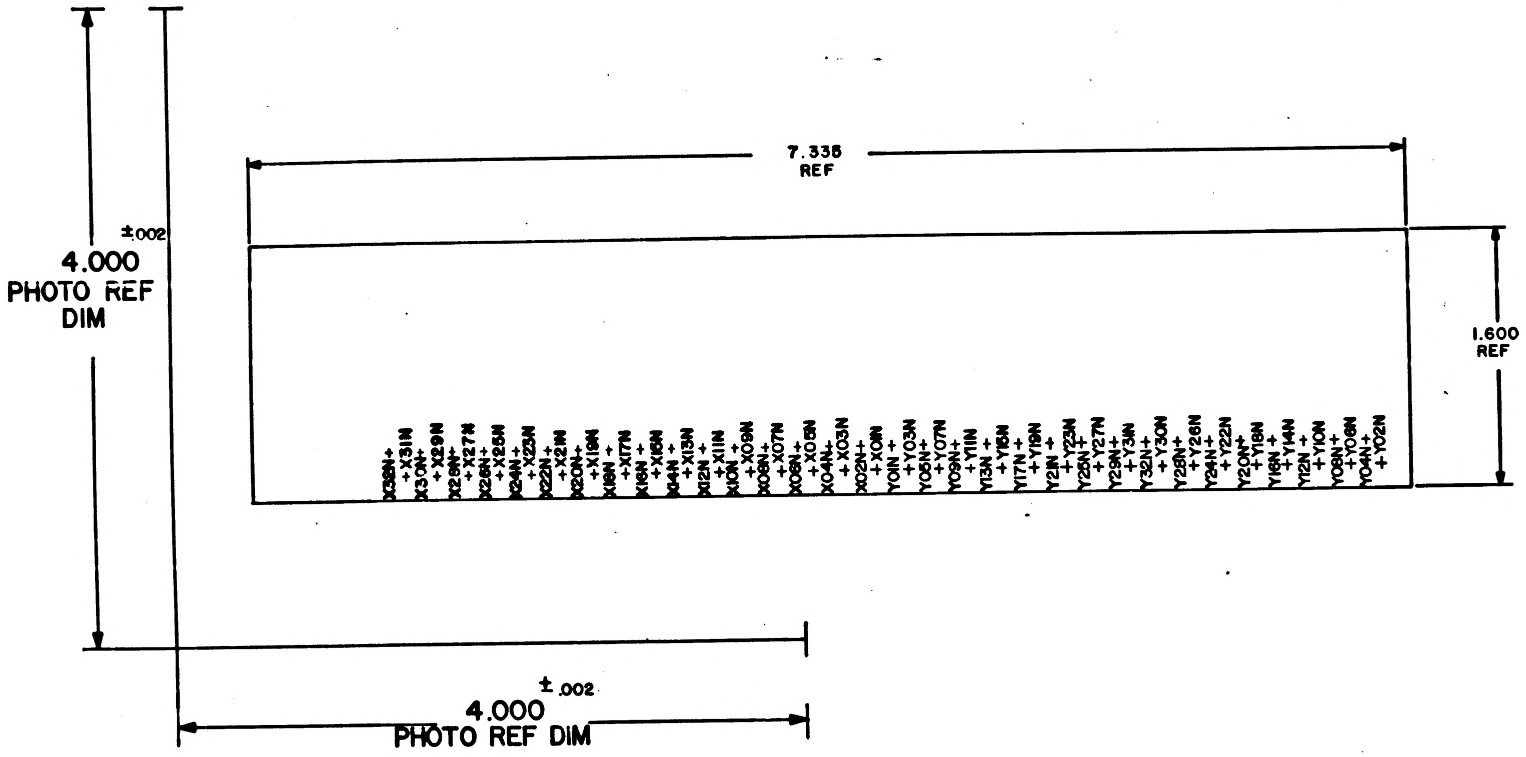
7.335
REF
1.600
REF
4.000 ±.002
PHOTO REF
DIM
4.000 ±.002
PHOTO REF DIM
X32N+
+X31N
X30N+
+X29N
X28N+
+X27N
X26N+
+X25N
X24N+
+X23N
X22N+
+X21N
X20N+
+X19N
X18N+
+X17N
X16N+
+X15N
X14N+
+X13N
X12N+
+X11N
X10N+
+X09N
X08N+
+X07N
X06N+
+X05N
X04N+
+X03N
X02N+
+X01N
Y01N+
+Y03N
Y05N+
+Y07N
Y09N+
+Y11N
Y13N+
+Y15N
Y17N+
+Y19N
Y21N+
+Y23N
Y25N+
+Y27N
Y29N+
+Y31N
Y32N+
+Y30N
Y28N+
+Y26N
Y24N+
+Y22N
Y20N+
+Y18N
Y16N+
+Y14N
Y12N+
+Y10N
Y08N+
+Y06N
Y04N+
+Y02N

FOR INFORMATION ONLY

CLASS B RELEASE TDR No. 00309 DATE
30 Jan 1963

NOTES:
1. INTERPRET DRAWING IN ACCORDANCE WITH STANDARDS PRESCRIBED BY MIL-D-70327
2. ORIGINAL OF THIS DRAWING OR REPRODUCTION MADE BY PROCESS OR METHOD SHALL INSURE DIMENSIONAL STABILITY. DIMENSIONAL VARIATION SHALL NOT EXCEED .001 INCH PER INCH
3. MAKE MASTER PATTERN POSITIVE FILMS TO DIMENSIONS SHOWN
4. MATERIAL: .007 (COULD VARY) THICK PLASTIC SHEETS, SENSITIZED, DIMENSIONALLY STABLE PER L-P-00518 (NAVY-AER) TYPE II, CLASS "C"

MASTER

QTY REQD	PART OR IDENTIFYING NO.	NOMENCLATURE OR DESCRIPTION	FIND NO.

LIST OF MATERIALS

NEXT ASSY	USED ON

APPLICATION

UNLESS OTHERWISE SPECIFIED
DIMENSIONS ARE IN INCHES
TOLERANCES ON
FRACTIONS ± —#— DECIMALS ±.005 ANGLES ±—#—
DO NOT SCALE THIS DRAWING
MATERIAL SEE NOTE 4
HEAT TREATMENT —#—
FINAL FINISH —#—

MIT
INSTRUMENTATION LAB
CAMBRIDGE, MASS
DWG. NO. CONTRACT
DRAWN DATE 1/21/63
CHECKED 1/28/63
APPROVAL W. E. Turner 28 Jan 63
APPROVAL 28 Jan 63
NASA APPROVAL 1-30-63
MIT APPROVAL 30 Jan 63

MANNED SPACECRAFT CENTER
HOUSTON, TEXAS

SILK SCREEN MASTER
ERASABLE MEMORY STICK

CODE IDENT NO.
SIZE D
NASA DRAWING NO. 1004093
SCALE 2/1
WT
SHEET 1 OF 1

1004093

NOTICE — WHEN GOVERNMENT DRAWINGS, SPECIFICATIONS, OR OTHER DATA ARE USED FOR ANY PURPOSE OTHER THAN IN CONNECTION WITH A DEFINITELY RELATED GOVERNMENT PROCUREMENT OPERATION, THE UNITED STATES GOVERNMENT THEREBY INCURS NO RESPONSIBILITY NOR ANY OBLIGATION WHATSOEVER; AND THE FACT THAT THE GOVERNMENT MAY HAVE FORMULATED, FURNISHED, OR IN ANY WAY SUPPLIED THE SAID DRAWINGS, SPECIFICATIONS OR OTHER DATA IS NOT TO BE REGARDED BY IMPLICATION OR OTHERWISE AS IN ANY MANNER LICENSING THE HOLDER OR ANY OTHER PERSON OR CORPORATION, OR CONVEYING ANY RIGHTS OR PERMISSION TO MANUFACTURE, USE, OR SELL ANY PATENTED INVENTION THAT MAY IN ANY WAY BE RELATED THERETO

REVISIONS			
SYM	DESCRIPTION	DATE	APPROVAL
A	REVISED AND UPGRADED TO CLASS A PER TDRR 00908	16APR63	WBT WK

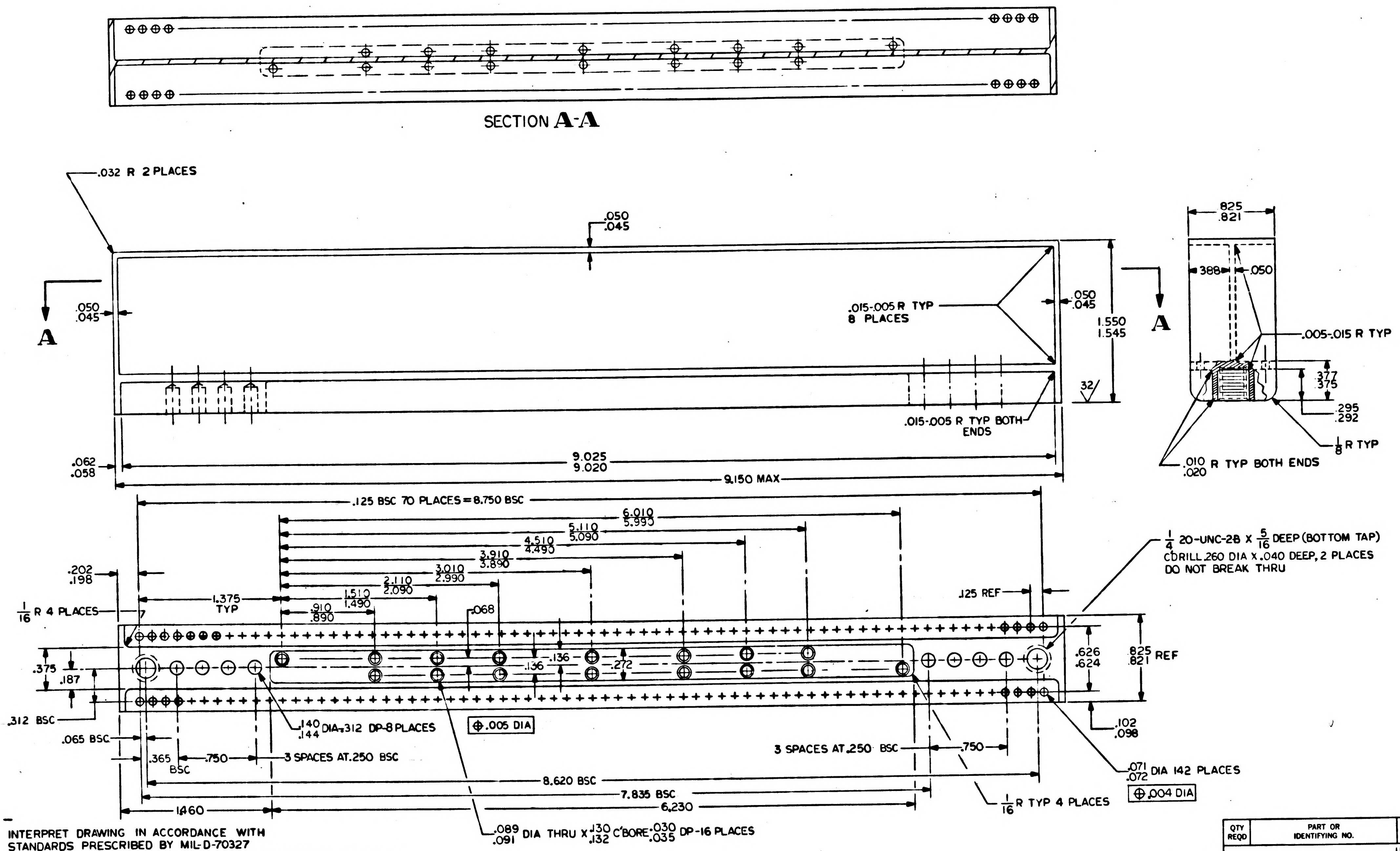
SECTION A-A
.032 R 2 PLACES
.050 .045
A
.015-.005 R TYP 8 PLACES
.050 .045
1.550 1.545
32
.015-.005 R TYP BOTH ENDS
.062 .058
9.025 9.020
9.150 MAX
.825 .821
.388
.050
.005-.015 R TYP
.377 .375
.295 .292
1/8 R TYP
.010 .020 R TYP BOTH ENDS
.125 BSC 70 PLACES = 8.750 BSC
6.010 5.990
5.110 5.090
4.510 4.490
3.910 3.890
3.010 2.990
2.110 2.090
1.510 1.490
.910 .890
1.375 TYP
.068
.202 .198
1/16 R 4 PLACES
.375
.187
.136
.136
.272
.125 REF
1/4 20-UNC-2B X 5/16 DEEP (BOTTOM TAP)
C'DRILL .260 DIA X .040 DEEP, 2 PLACES
DO NOT BREAK THRU
.626 .624
.825 .821 REF
.102 .098
.312 BSC
.065 BSC
.140 .144 DIA X .312 DP-8 PLACES
⊕ .005 DIA
.365 BSC
.750
3 SPACES AT .250 BSC
3 SPACES AT .250 BSC
.750
.071 .072 DIA 142 PLACES
⊕ .004 DIA
8.620 BSC
7.835 BSC
6.230
1.460
1/16 R TYP 4 PLACES
.089 .091 DIA THRU X .130 .132 C'BORE .030 .035 DP-16 PLACES

NOTES: —

1. INTERPRET DRAWING IN ACCORDANCE WITH STANDARDS PRESCRIBED BY MIL-D-70327
2. MATERIAL - MAG. ALLOY EZ33A-T5 PER QQ-M-55A, COMR EZ33A, TEMPER T5
3. FINISH — GALVANIC ANODIZE PER MIL-M-3171A TYPE IV
4. ALL SURFACES 125 ✓ UNLESS OTHERWISE SPECIFIED

MASTER

QTY REQD	PART OR IDENTIFYING NO.	NOMENCLATURE OR DESCRIPTION	FIND NO.

LIST OF MATERIALS

NEXT ASSY	USED ON
1003075	

APPLICATION

UNLESS OTHERWISE SPECIFIED DIMENSIONS ARE IN INCHES
TOLERANCES ON
FRACTIONS ± 1/64 DECIMALS ± .005 ANGLES ± —
DO NOT SCALE THIS DRAWING

MATERIAL SEE NOTE 2

HEAT TREATMENT —

FINAL FINISH SEE NOTE 3

MIT INSTRUMENTATION LAB
CAMBRIDGE, MASS
DWG. NO. CONTRACT

DRAWN Bannigo DATE 1-19-63
CHECKED 3/5/63
APPROVAL 3/5/63
APPROVAL 3/6/63
NASA APPROVAL Jack Barnard
MIT APPROVAL 6 Mar 63

MANNED SPACECRAFT CENTER
HOUSTON, TEXAS

HEADER HOUSING
MICRO LOGIC STICK

CODE IDENT NO.	SIZE	NASA DRAWING NO.
	D	1004094

SCALE 2/1 WT — SHEET 1 OF 1

INCHES
0 1 2
PHOTOGRAPHIC SCALE ONLY

NOTICE — WHEN GOVERNMENT DRAWINGS, SPECIFICATIONS, OR OTHER DATA ARE USED FOR ANY PURPOSE OTHER THAN IN CONNECTION WITH A DEFINITELY RELATED GOVERNMENT PROCUREMENT OPERATION, THE UNITED STATES GOVERNMENT THEREBY INCURS NO RESPONSIBILITY NOR ANY OBLIGATION WHATSOEVER; AND THE FACT THAT THE GOVERNMENT MAY HAVE FORMULATED, FURNISHED, OR IN ANY WAY SUPPLIED THE SAID DRAWINGS, SPECIFICATIONS OR OTHER DATA IS NOT TO BE REGARDED BY IMPLICATION OR OTHERWISE AS IN ANY MANNER LICENSING THE HOLDER OR ANY OTHER PERSON OR CORPORATION, OR CONVEYING ANY RIGHTS OR PERMISSION TO MANUFACTURE, USE, OR SELL ANY PATENTED INVENTION THAT MAY IN ANY WAY BE RELATED THERETO.

REVISIONS			
SYM	DESCRIPTION	DATE	APPROVAL

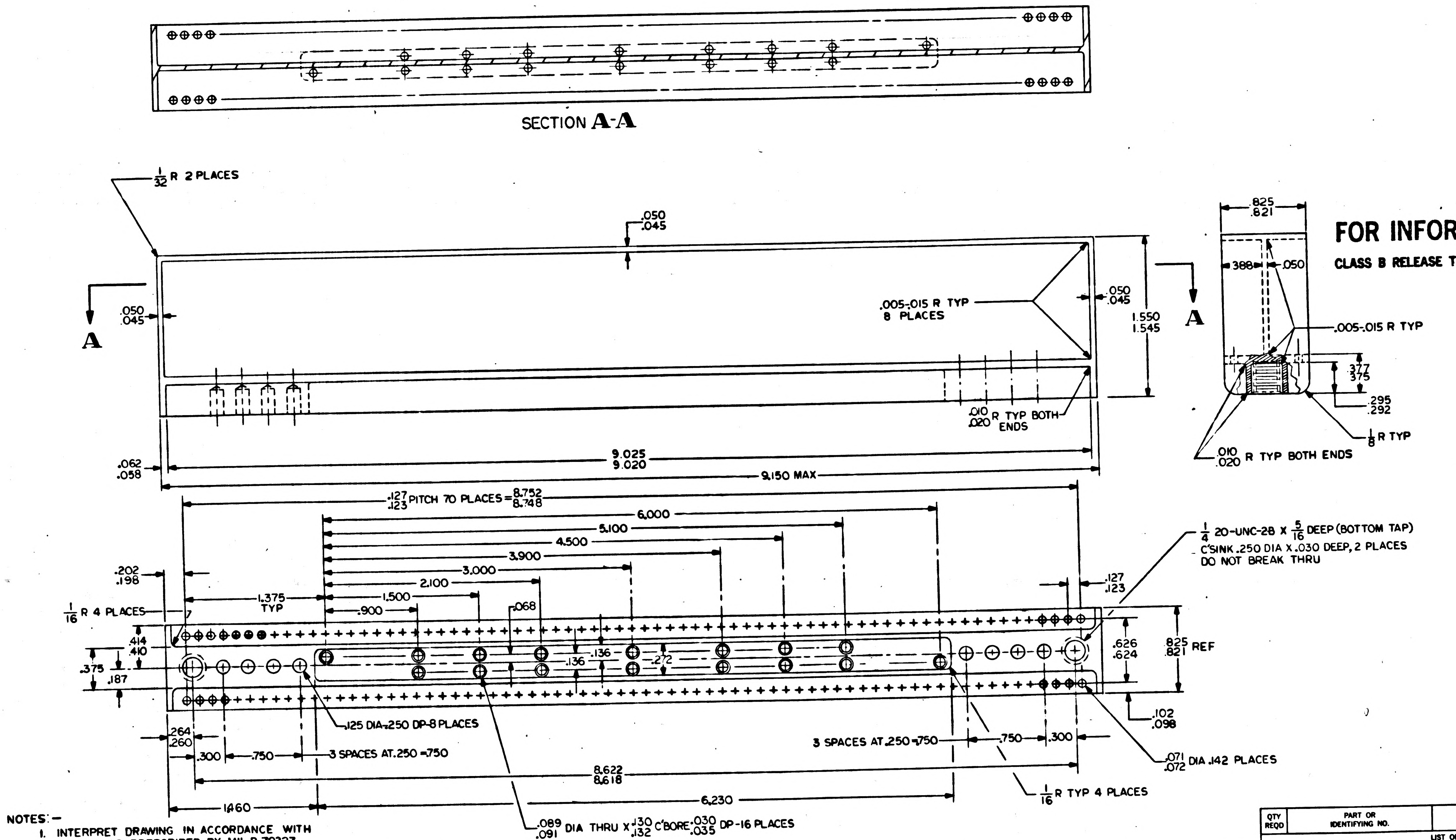
SECTION A-A
$\frac{1}{32}$ R 2 PLACES
.050
.045
A
A
.005-.015 R TYP 8 PLACES
1.550
1.545
.010
.020 R TYP BOTH ENDS
.062
.058
9.025
9.020
9.150 MAX
.825
.821
.388
.050
.005-.015 R TYP
.377
.375
.295
.292
$\frac{1}{8}$ R TYP
.010
.020 R TYP BOTH ENDS
.127
.123 PITCH 70 PLACES = 8.752
8.748
6.000
5.100
4.500
3.900
3.000
2.100
1.500
.900
1.375 TYP
.068
.202
.198
$\frac{1}{16}$ R 4 PLACES
.414
.410
.375
.187
.136
.136
.272
.127
.123
$\frac{1}{4}$ 20-UNC-2B X $\frac{5}{16}$ DEEP (BOTTOM TAP)
C'SINK .250 DIA X .030 DEEP, 2 PLACES
DO NOT BREAK THRU
.626
.624
.825
.821 REF
.102
.098
.125 DIA x .250 DP-8 PLACES
.264
.260
.300
.750
3 SPACES AT .250 = .750
3 SPACES AT .250 = .750
.750
.300
.071
.072 DIA .142 PLACES
8.622
8.618
$\frac{1}{16}$ R TYP 4 PLACES
1.460
6.230
.089
.091 DIA THRU X .130
.132 C'BORE .030
.035 DP-16 PLACES

FOR INFORMATION ONLY

CLASS B RELEASE TDR No. 00514 DATE 6 Mar 63

NOTES: —

1. INTERPRET DRAWING IN ACCORDANCE WITH STANDARDS PRESCRIBED BY MIL-D-70327
2. MATERIAL – MAG. ALLOY AZ91C-T6 PER QQ-M-56A, COMR AZ91C, TEMPER T6
3. FINISH — GALVANIC ANODIZE PER MIL-M-3171A TYPE (JET BLACK)
4. ALL SURFACES 125/ OR BETTER

MASTER

QTY REQD	PART OR IDENTIFYING NO.	NOMENCLATURE OR DESCRIPTION	FIND NO.

LIST OF MATERIALS

NEXT ASSY	USED ON
1003075	

APPLICATION

UNLESS OTHERWISE SPECIFIED DIMENSIONS ARE IN INCHES
TOLERANCES ON
FRACTIONS ±1/64 DECIMALS ±.005 ANGLES ± —
DO NOT SCALE THIS DRAWING
MATERIAL SEE NOTE 2
HEAT TREATMENT —
FINAL FINISH SEE NOTE 3

MIT
INSTRUMENTATION LAB
CAMBRIDGE, MASS
DWG. NO.
CONTRACT
DRAWN Baranyi DATE 1-14-63
CHECKED 3/5/63
APPROVAL W.B. 3/5/63
APPROVAL 3/6/63
NASA APPROVAL Jack
MIT APPROVAL 6 Mar 63

MANNED SPACECRAFT CENTER
HOUSTON, TEXAS

HEADER HOUSING
MICRO LOGIC STICK

CODE IDENT NO.
SIZE D
NASA DRAWING NO. 1004094
SCALE 2/1
WT —
SHEET 1 OF 1

1004094

NOTICE — WHEN GOVERNMENT DRAWINGS, SPECIFICATIONS, OR OTHER DATA ARE USED FOR ANY PURPOSE OTHER THAN IN CONNECTION WITH A DEFINITELY RELATED GOVERNMENT PROCUREMENT OPERATION, THE UNITED STATES GOVERNMENT THEREBY INCURS NO RESPONSIBILITY NOR ANY OBLIGATION WHATSOEVER, AND THE FACT THAT THE GOVERNMENT MAY HAVE FORMULATED, FURNISHED, OR IN ANY WAY SUPPLIED THE SAID DRAWINGS, SPECIFICATIONS OR OTHER DATA IS NOT TO BE REGARDED BY IMPLICATION OR OTHERWISE AS IN ANY MANNER LICENSING THE HOLDER OR ANY OTHER PERSON OR CORPORATION, OR CONVEYING ANY RIGHTS OR PERMISSION TO MANUFACTURE, USE OR SELL ANY PATENTED INVENTION THAT MAY IN ANY WAY BE RELATED THERETO.

(M)

REVISIONS			
SYM	DESCRIPTION	DATE	APPROVAL
A	UPGRADED TO CLASS A PER TDRR 00907	16 APR 63	WBT WR

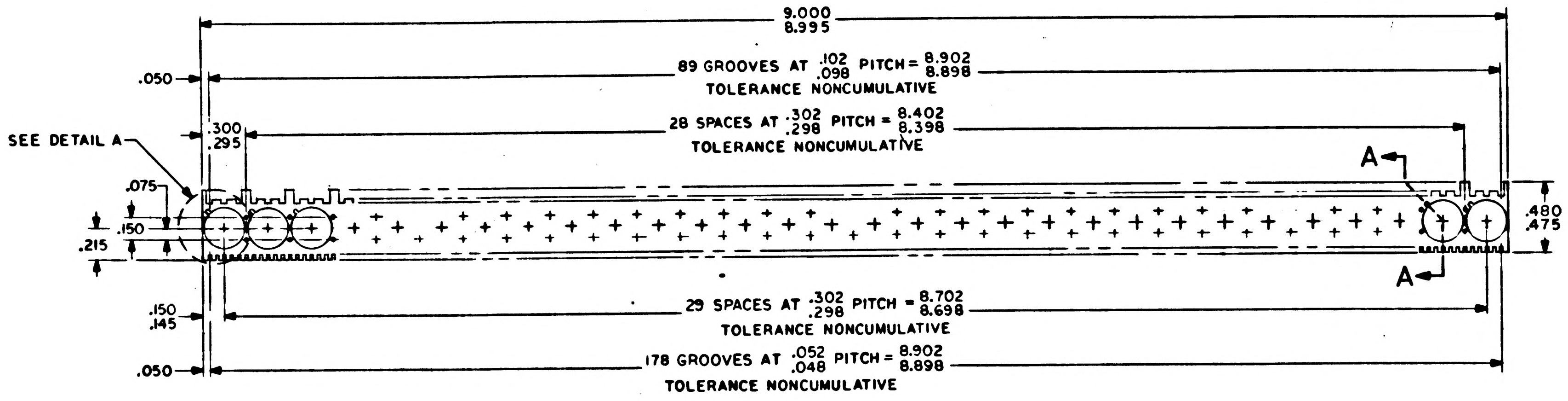
9.000
8.995
89 GROOVES AT .102 .098 PITCH = 8.902 8.898
TOLERANCE NONCUMULATIVE
.050
SEE DETAIL A
.300
.295
28 SPACES AT .302 .298 PITCH = 8.402 8.398
TOLERANCE NONCUMULATIVE
A
A
.075
.150
.215
.480
.475
.150
.145
29 SPACES AT .302 .298 PITCH = 8.702 8.698
TOLERANCE NONCUMULATIVE
.050
178 GROOVES AT .052 .048 PITCH = 8.902 8.898
TOLERANCE NONCUMULATIVE

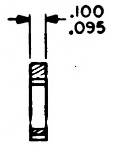

SECTION A-A

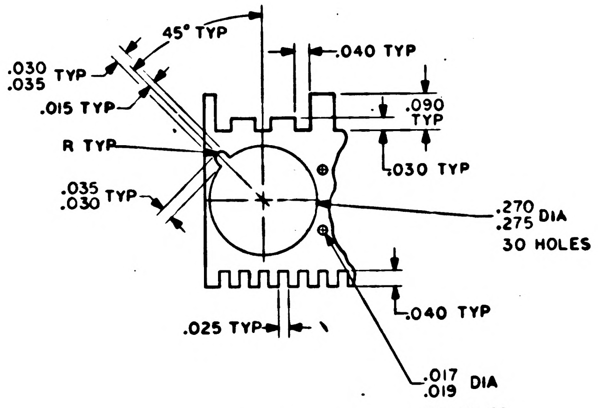
45° TYP
.040 TYP
.030
.035 TYP
.015 TYP
.090
TYP
R TYP
.030 TYP
.035
.030 TYP
.270
.275 DIA
30 HOLES
.040 TYP
.025 TYP
.017
.019 DIA
55 HOLES

DETAIL A
SCALE 5/1

NOTES
1. INTERPRET DRAWING IN ACCORDANCE WITH STANDARDS PRESCRIBED BY MIL-D-70327
2. MAT'L: PLASTIC, CLEAR, ACRYLIC PER MIL-P-8184 FINISH B

QTY REQD	PART OR IDENTIFYING NO.	NOMENCLATURE OR DESCRIPTION	FIND NO.

LIST OF MATERIALS

NEXT ASSY	USED ON
1003080	
1003079	

APPLICATION

UNLESS OTHERWISE SPECIFIED
DIMENSIONS ARE IN INCHES
TOLERANCES ON
FRACTIONS ± —//— DECIMALS ± .005 ANGLES ± 0° 30'
DO NOT SCALE THIS DRAWING
MATERIAL SEE NOTE 2
HEAT TREATMENT —//—
FINAL FINISH —//—

MIT
INSTRUMENTATION LAB
CAMBRIDGE, MASS
DWG. NO.
CONTRACT
DRAWN J. Fatigo DATE 18 Feb 63
CHECKED [illegible] 3/5/63
APPROVAL WB Tanner 3/5/63
APPROVAL D Diggs 3/6/63
NASA APPROVAL Jack Bernard
MIT APPROVAL W Kupfer 6 Mar 63

MANNED SPACECRAFT CENTER
HOUSTON, TEXAS

HOUSING MICRO LOGIC
TO 47

CODE IDENT NO.
SIZE D
NASA DRAWING NO. 1004095
SCALE 2/1
WT
SHEET 1 OF 1

1004095 A

MASTER

INCHES
0 1 2
PHOTOGRAPHIC SCALE ONLY

NOTICE — WHEN GOVERNMENT DRAWINGS, SPECIFICATIONS, OR OTHER DATA ARE USED FOR ANY PURPOSE OTHER THAN IN CONNECTION WITH A DEFINITELY RELATED GOVERNMENT PROCUREMENT OPERATION, THE UNITED STATES GOVERNMENT THEREBY INCURS NO RESPONSIBILITY NOR ANY OBLIGATION WHATSOEVER; AND THE FACT THAT THE GOVERNMENT MAY HAVE FORMULATED, FURNISHED, OR IN ANY WAY SUPPLIED THE SAID DRAWINGS, SPECIFICATIONS OR OTHER DATA IS NOT TO BE REGARDED BY IMPLICATION OR OTHERWISE AS IN ANY MANNER LICENSING THE HOLDER OR ANY OTHER PERSON OR CORPORATION, OR CONVEYING ANY RIGHTS OR PERMISSION TO MANUFACTURE, USE, OR SELL ANY PATENTED INVENTION THAT MAY IN ANY WAY BE RELATED THERETO.

REVISIONS			
SYM	DESCRIPTION	DATE	APPROVAL
A	UPGRADED TO CLASS A PER TDRR 00907	16 APR 63	WBT WR
B	REVISED PER TDRR 04638	10-12-63	WR

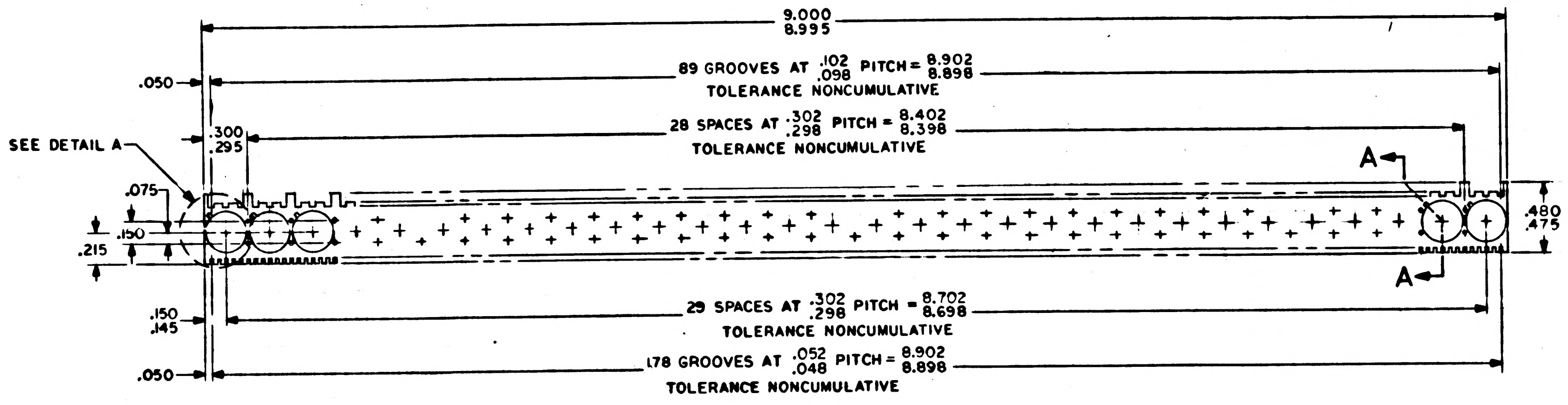
9.000
8.995
89 GROOVES AT .102/.098 PITCH = 8.902/8.898
TOLERANCE NONCUMULATIVE
.050
.300
.295
28 SPACES AT .302/.298 PITCH = 8.402/8.398
TOLERANCE NONCUMULATIVE
SEE DETAIL A
A
A
.075
.150
.215
.480
.475
.150
.145
29 SPACES AT .302/.298 PITCH = 8.702/8.698
TOLERANCE NONCUMULATIVE
.050
178 GROOVES AT .052/.048 PITCH = 8.902/8.898
TOLERANCE NONCUMULATIVE

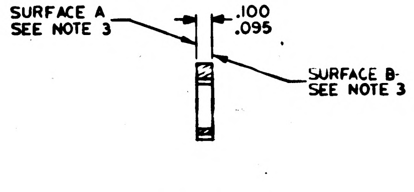
SURFACE A
SEE NOTE 3
.100
.095
SURFACE B
SEE NOTE 3

SECTION A-A

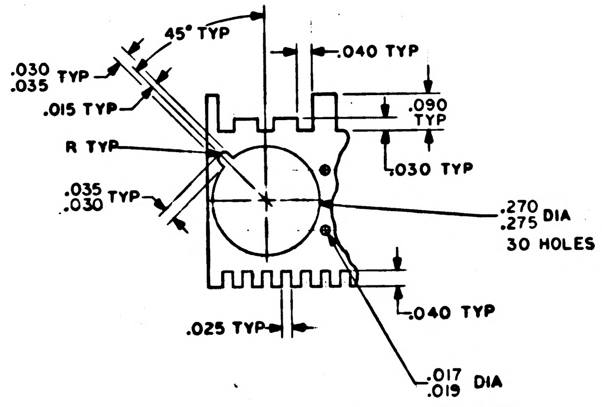
45° TYP
.040 TYP
.030
.035 TYP
.015 TYP
.090
TYP
R TYP
.030 TYP
.035
.030 TYP
.270
.275 DIA
30 HOLES
.040 TYP
.025 TYP
.017
.019 DIA
55 HOLES

DETAIL A
SCALE 5/1

NOTES
1. INTERPRET DRAWING IN ACCORDANCE WITH STANDARDS PRESCRIBED BY MIL-D-70327
2. MAT'L: PLASTIC, CLEAR, ACRYLIC PER MIL-P-8184 FINISH B
3. SURFACES A AND B TO BE DULL FINISH

MASTER

QTY REQD	PART OR IDENTIFYING NO.	NOMENCLATURE OR DESCRIPTION	FIND NO.
LIST OF MATERIALS			

NEXT ASSY	USED ON
1003080	
1003079	
APPLICATION	

UNLESS OTHERWISE SPECIFIED
DIMENSIONS ARE IN INCHES
TOLERANCES ON
FRACTIONS ± —//— DECIMALS ± .005 ANGLES 0° ± 30′
DO NOT SCALE THIS DRAWING
MATERIAL SEE NOTE 2
HEAT TREATMENT —//—
FINAL FINISH —//—

MIT
INSTRUMENTATION LAB
CAMBRIDGE, MASS.
DWG. NO.
CONTRACT
DRAWN DATE 18 Feb 63
CHECKED 3/5/63
APPROVAL WBTurner 3/5/63
APPROVAL 3/1/63
NASA APPROVAL
MIT APPROVAL

MANNED SPACECRAFT CENTER
HOUSTON, TEXAS

HOUSING MICRO LOGIC TO 47

CODE IDENT NO. —
SIZE D
NASA DRAWING NO. 1004095
SCALE 2/1
WT
SHEET 1 OF 1

INCHES
0 1 2
PHOTOGRAPHIC SCALE ONLY

NOTICE — WHEN GOVERNMENT DRAWINGS, SPECIFICATIONS, OR OTHER DATA ARE USED FOR ANY PURPOSE OTHER THAN IN CONNECTION WITH A DEFINITELY RELATED GOVERNMENT PROCUREMENT OPERATION, THE UNITED STATES GOVERNMENT THEREBY INCURS NO RESPONSIBILITY NOR ANY OBLIGATION WHATSOEVER; AND THE FACT THAT THE GOVERNMENT MAY HAVE FORMULATED, FURNISHED, OR IN ANY WAY SUPPLIED THE SAID DRAWINGS, SPECIFICATIONS OR OTHER DATA IS NOT TO BE REGARDED BY IMPLICATION OR OTHERWISE AS IN ANY MANNER LICENSING THE HOLDER OR ANY OTHER PERSON OR CORPORATION, OR CONVEYING ANY RIGHTS OR PERMISSION TO MANUFACTURE, USE, OR SELL ANY PATENTED INVENTION THAT MAY IN ANY WAY BE RELATED THERETO.

REVISIONS

SYM	DESCRIPTION	DATE	APPROVAL
A	UPGRADED TO CLASS A PER TDRR 00907	16 APR 63	WR
B	REVISED PER TDRR 04638	10-12-63	WR
C	REVISED PER TDRR 04309	10-30-63	WR

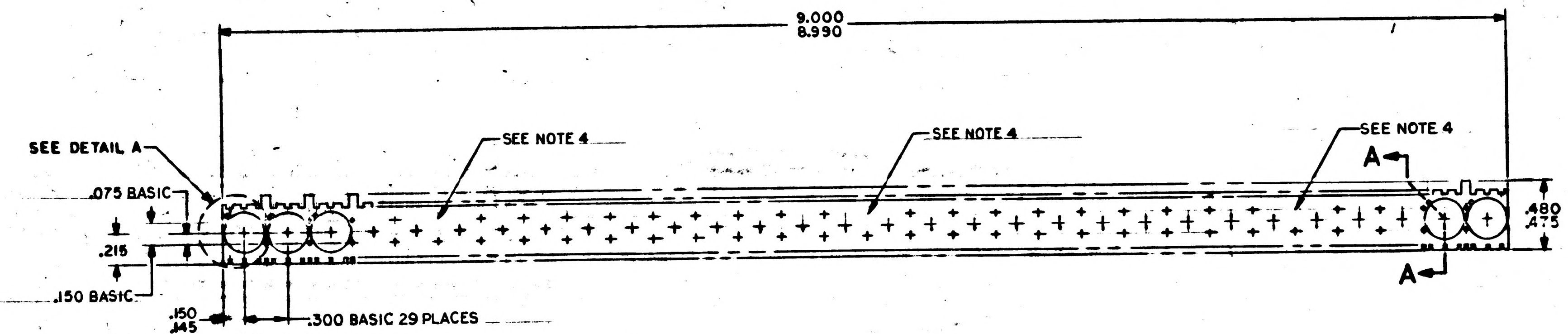
9.000
8.990
SEE DETAIL A
SEE NOTE 4
SEE NOTE 4
SEE NOTE 4
.075 BASIC
.215
.150 BASIC
.150
.145
.300 BASIC 29 PLACES
A
A
.480
.475

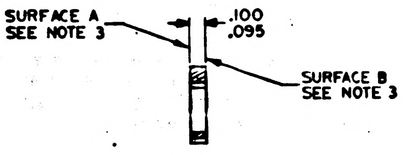
SURFACE A
SEE NOTE 3
.100
.095
SURFACE B
SEE NOTE 3

SECTION A-A

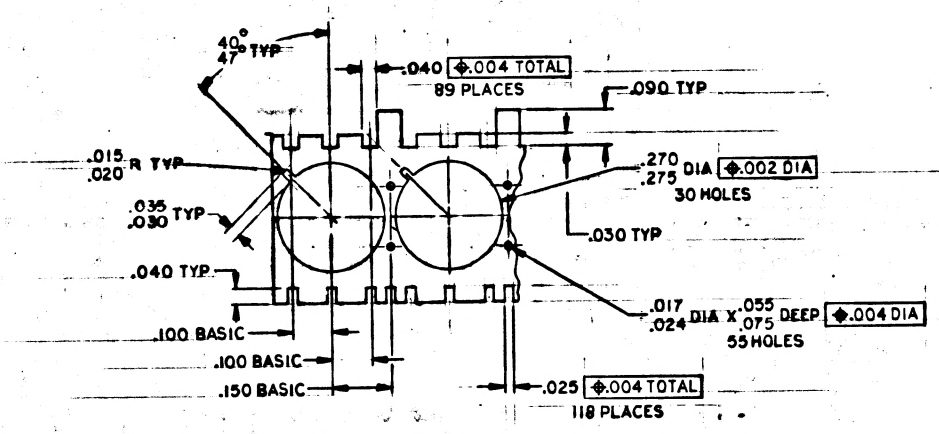
40°
47° TYP
.040 ⌖.004 TOTAL
89 PLACES
.090 TYP
.015
.020 R TYP
.270
.275 DIA ⌖.002 DIA
30 HOLES
.035
.030 TYP
.030 TYP
.040 TYP
.017
.024 DIA X .055
.075 DEEP ⌖.004 DIA
55 HOLES
.100 BASIC
.100 BASIC
.150 BASIC
.025 ⌖.004 TOTAL
118 PLACES

DETAIL A
SCALE 5/1

NOTES
1. INTERPRET DRAWING IN ACCORDANCE WITH STANDARDS PRESCRIBED BY MIL-D-70327
2. MAT'L: PLASTIC, CLEAR, ACRYLIC PER MIL-P-8184 FINISH B-ALT MIL-P-5425 FINISH B
3. SURFACES A AND B TO BE DULL FINISH
4. NO $^{.017}_{.024}$ HOLES AT THESE LOCATIONS

MASTER

QTY REQD	PART OR IDENTIFYING NO.	NOMENCLATURE OR DESCRIPTION	FIND NO.
LIST OF MATERIALS			

NEXT ASSY	USED ON
1003080	
1003079	
APPLICATION	

UNLESS OTHERWISE SPECIFIED
DIMENSIONS ARE IN INCHES
TOLERANCES ON
FRACTIONS ± — DECIMALS ± .005 ANGLES ±
DO NOT SCALE THIS DRAWING

MATERIAL: SEE NOTE 2
HEAT TREATMENT: —
FINAL FINISH: —

MIT INSTRUMENTATION LAB
CAMBRIDGE, MASS.
DWG. NO.
CONTRACT

DRAWN DATE 10-26-62
CHECKED 2/5/63
APPROVAL 3/5/63
APPROVAL 3/1/63
NASA APPROVAL
MIT APPROVAL 63

MANNED SPACECRAFT CENTER
HOUSTON, TEXAS

HOUSING MICRO LOGIC TO 47

CODE IDENT NO. —
SIZE D
NASA DRAWING NO. 1004095
SCALE 2/1
WT
SHEET 1 OF 1

NOTICE — WHEN GOVERNMENT DRAWINGS, SPECIFICATIONS, OR OTHER DATA ARE USED FOR ANY PURPOSE OTHER THAN IN CONNECTION WITH A DEFINITELY RELATED GOVERNMENT PROCUREMENT OPERATION, THE UNITED STATES GOVERNMENT THEREBY INCURS NO RESPONSIBILITY NOR ANY OBLIGATION WHATSOEVER; AND THE FACT THAT THE GOVERNMENT MAY HAVE FORMULATED, FURNISHED, OR IN ANY WAY SUPPLIED THE SAID DRAWINGS, SPECIFICATIONS OR OTHER DATA IS NOT TO BE REGARDED BY IMPLICATION OR OTHERWISE AS IN ANY MANNER LICENSING THE HOLDER OR ANY OTHER PERSON OR CORPORATION, OR CONVEYING ANY RIGHTS OR PERMISSION TO MANUFACTURE, USE, OR SELL ANY PATENTED INVENTION THAT MAY IN ANY WAY BE RELATED THERETO.

REVISIONS

SYM	DESCRIPTION	DATE	APPROVAL
A	UPGRADED TO CLASS A PER TDRR 00907	16 APR 63	WR
B	REVISED PER TDRR 04638	10-17-63	WR
C	REVISED PER TDRR 04309	10-30-63	WR
D	REVISED PER TDRR 04606	11-13-63	WR

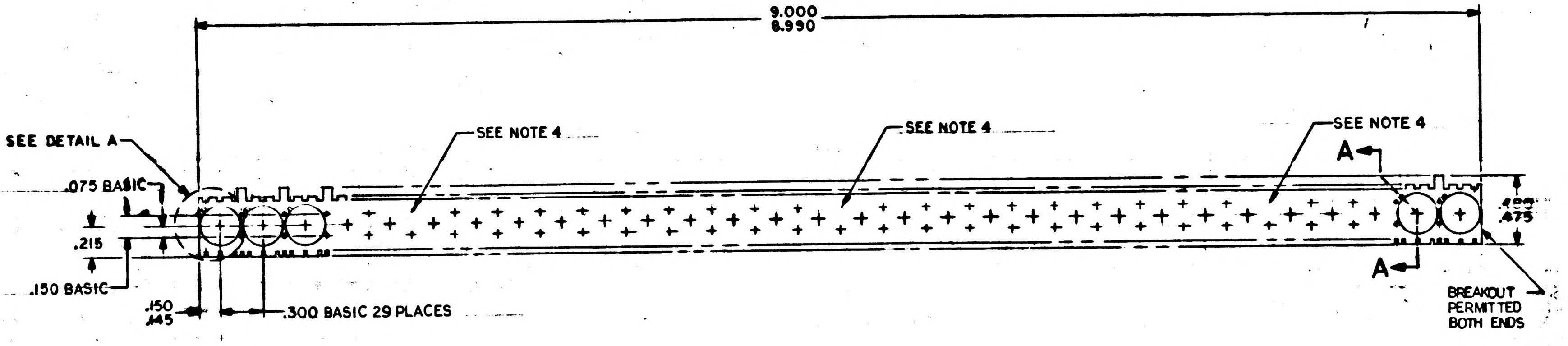
9.000
8.990
SEE DETAIL A
SEE NOTE 4
SEE NOTE 4
SEE NOTE 4
.075 BASIC
.215
.150 BASIC
.150
.145
.300 BASIC 29 PLACES
A
A
.480
.475
BREAKOUT PERMITTED BOTH ENDS

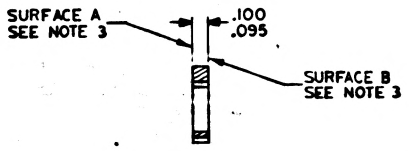
SURFACE A SEE NOTE 3
.100
.095
SURFACE B SEE NOTE 3

SECTION A-A

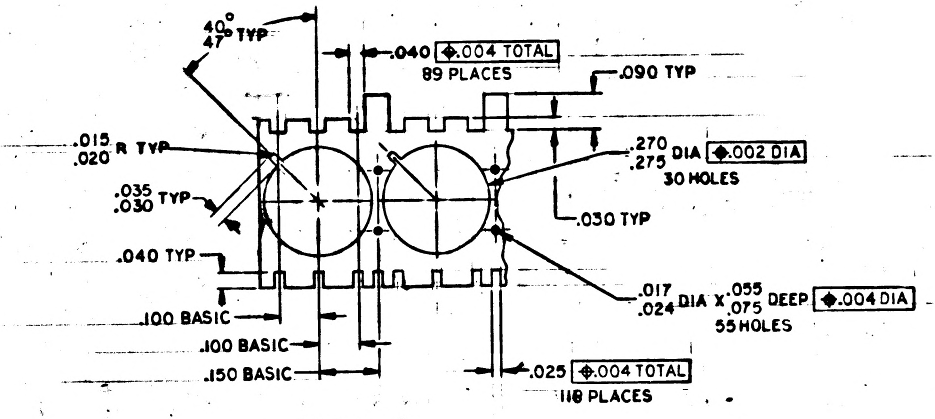
40°
47° TYP
.040 ⌖.004 TOTAL
89 PLACES
.090 TYP
.015
.020 R TYP
.270
.275 DIA ⌖.002 DIA
30 HOLES
.035
.030 TYP
.030 TYP
.040 TYP
.017
.024 DIA X .055
.075 DEEP ⌖.004 DIA
55 HOLES
.100 BASIC
.100 BASIC
.150 BASIC
.025 ⌖.004 TOTAL
118 PLACES

DETAIL A
SCALE 5/1

NOTES
1. INTERPRET DRAWING IN ACCORDANCE WITH STANDARDS PRESCRIBED BY MIL-D-70327
2. MAT'L: PLASTIC, CLEAR, ACRYLIC PER MIL-P-8184 FINISH B-ALT MIL-P-5425 FINISH B
3. SURFACES A AND B TO BE DULL FINISH
4. NO $^{.017}_{.024}$ HOLES AT THESE LOCATIONS
5. NO BREAKOUTS PERMITTED EXCEPT WHERE INDICATED

MASTER

QTY REQD	PART OR IDENTIFYING NO.	NOMENCLATURE OR DESCRIPTION	FIND NO.

LIST OF MATERIALS

NEXT ASSY	USED ON
1003082	
1003081	

APPLICATION

UNLESS OTHERWISE SPECIFIED DIMENSIONS ARE IN INCHES
TOLERANCES ON
FRACTIONS ± —
DECIMALS ± .005
ANGLES ±
DO NOT SCALE THIS DRAWING
MATERIAL SEE NOTE 2
HEAT TREATMENT —
FINAL FINISH —

MIT INSTRUMENTATION LAB
CAMBRIDGE, MASS.
DWG. NO. CONTRACT
DRAWN DATE 1-24-63
CHECKED 2/ /63
APPROVAL W.B. Turner 3/5/63
APPROVAL 3/ /63
NASA APPROVAL
MIT APPROVAL W. ... Feb 63

MANNED SPACECRAFT CENTER
HOUSTON, TEXAS

HOUSING MICRO LOGIC
TO 47

CODE IDENT NO. —
SIZE D
NASA DRAWING NO. 1004095
SCALE 2/1
WT
SHEET 1 OF 1

INCHES
0 1 2
PHOTOGRAPHIC SCALE ONLY

NOTICE — WHEN GOVERNMENT DRAWINGS, SPECIFICATIONS, OR OTHER DATA ARE USED FOR ANY PURPOSE OTHER THAN IN CONNECTION WITH A DEFINITELY RELATED GOVERNMENT PROCUREMENT OPERATION, THE UNITED STATES GOVERNMENT THEREBY INCURS NO RESPONSIBILITY NOR ANY OBLIGATION WHATSOEVER; AND THE FACT THAT THE GOVERNMENT MAY HAVE FORMULATED, FURNISHED, OR IN ANY WAY SUPPLIED THE SAID DRAWINGS, SPECIFICATIONS OR OTHER DATA IS NOT TO BE REGARDED BY IMPLICATION OR OTHERWISE AS IN ANY MANNER LICENSING THE HOLDER OR ANY OTHER PERSON OR CORPORATION, OR CONVEYING ANY RIGHTS OR PERMISSION TO MANUFACTURE, USE, OR SELL ANY PATENTED INVENTION THAT MAY IN ANY WAY BE RELATED THERETO.

REVISIONS

SYM	DESCRIPTION	DATE	APPROVAL
A	UPGRADED TO CLASS A PER TDRR 00907	16 APR 63	WBT WR
B	REVISED PER TDRR 04838	10-17-63	WR
C	REVISED PER TDRR 04307	10-30-63	WR
D	REVISED PER TDRR 04606	11-13-63	WR
E	REVISED PER TDRR 07833 DR CHK	4/14/64	

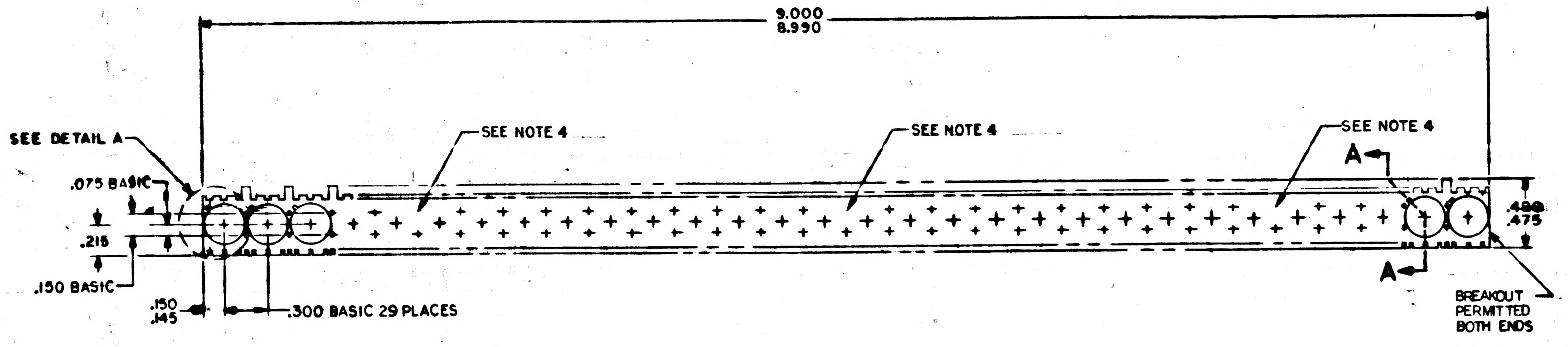

9.000
8.990
SEE DETAIL A
SEE NOTE 4
SEE NOTE 4
SEE NOTE 4
.075 BASIC
.215
.150 BASIC
.150
.145
.300 BASIC 29 PLACES
A
A
.480
.475
BREAKOUT PERMITTED BOTH ENDS

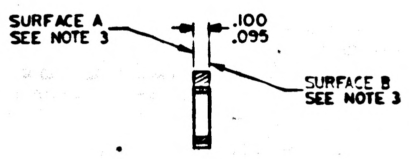

SURFACE A
SEE NOTE 3
.100
.095
SURFACE B
SEE NOTE 3

SECTION A-A

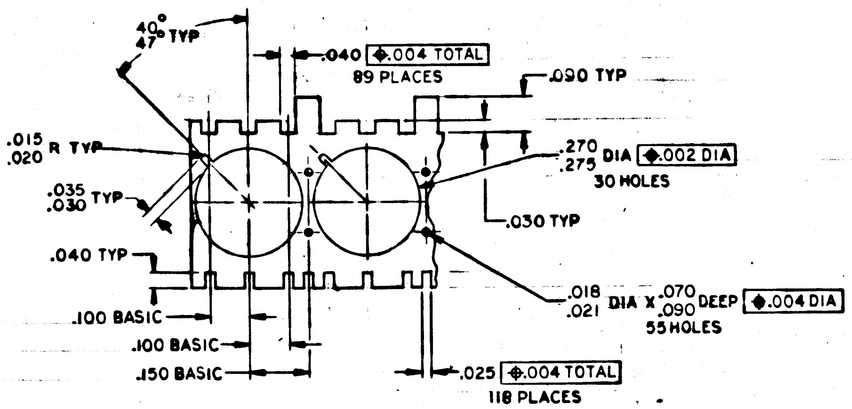

40°
47° TYP
.040 ⌖.004 TOTAL
89 PLACES
.090 TYP
.015
.020 R TYP
.035
.030 TYP
.270
.275 DIA ⌖.002 DIA
30 HOLES
.030 TYP
.040 TYP
.018
.021 DIA X .070
.090 DEEP ⌖.004 DIA
55 HOLES
.100 BASIC
.100 BASIC
.150 BASIC
.025 ⌖.004 TOTAL
118 PLACES

DETAIL A
SCALE 5/1

NOTES
1. INTERPRET DRAWING IN ACCORDANCE WITH STANDARDS PRESCRIBED BY MIL-D-70327
2. MAT'L: PLASTIC, CLEAR, ACRYLIC PER MIL-P-8184 FINISH B-ALT MIL-P-5425 FINISH B
3. SURFACES A AND B TO BE DULL FINISH
4. NO $\frac{.017}{.024}$ HOLES AT THESE LOCATIONS
5. NO BREAKOUTS PERMITTED EXCEPT WHERE INDICATED

MASTER

QTY REQD	PART OR IDENTIFYING NO.	NOMENCLATURE OR DESCRIPTION	FIND NO.

LIST OF MATERIALS

NEXT ASSY	USED ON
1003082	
1003081	

APPLICATION

UNLESS OTHERWISE SPECIFIED DIMENSIONS ARE IN INCHES
TOLERANCES ON
FRACTIONS ± — DECIMALS ± .005 ANGLES ±
DO NOT SCALE THIS DRAWING

MATERIAL
SEE NOTE 2

HEAT TREATMENT —

FINAL FINISH —

MIT
INSTRUMENTATION LAB
CAMBRIDGE, MASS.
DWG. NO. CONTRACT

DRAWN DATE
CHECKED
APPROVAL 3/5/63
APPROVAL

NASA APPROVAL

MIT APPROVAL 63

MANNED SPACECRAFT CENTER
HOUSTON, TEXAS

HOUSING MICRO LOGIC TO 47

CODE IDENT NO. —
SIZE D
NASA DRAWING NO. 1004095
SCALE 2/1
WT
SHEET 1 OF 1

NOTICE — WHEN GOVERNMENT DRAWINGS, SPECIFICATIONS, OR OTHER DATA ARE USED FOR ANY PURPOSE OTHER THAN IN CONNECTION WITH A DEFINITELY RELATED GOVERNMENT PROCUREMENT OPERATION, THE UNITED STATES GOVERNMENT THEREBY INCURS NO RESPONSIBILITY NOR ANY OBLIGATION WHATSOEVER; AND THE FACT THAT THE GOVERNMENT MAY HAVE FORMULATED, FURNISHED, OR IN ANY WAY SUPPLIED THE SAID DRAWINGS, SPECIFICATIONS OR OTHER DATA IS NOT TO BE REGARDED BY IMPLICATION OR OTHERWISE AS IN ANY MANNER LICENSING THE HOLDER OR ANY OTHER PERSON OR CORPORATION, OR CONVEYING ANY RIGHTS OR PERMISSION TO MANUFACTURE, USE, OR SELL ANY PATENTED INVENTION THAT MAY IN ANY WAY BE RELATED THERETO.

REVISIONS			
SYM	DESCRIPTION	DATE	APPROVAL

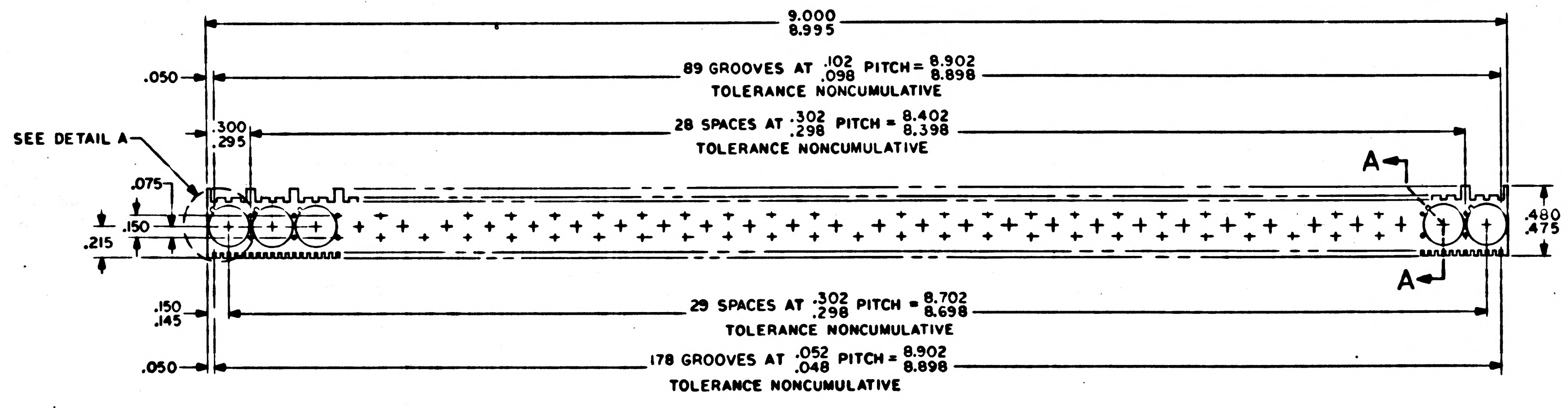
9.000
8.995
.050
89 GROOVES AT .102 .098 PITCH = 8.902 8.898
TOLERANCE NONCUMULATIVE
SEE DETAIL A
.300
.295
28 SPACES AT .302 .298 PITCH = 8.402 8.398
TOLERANCE NONCUMULATIVE
A
.075
.150
.215
.480
.475
A
.150
.145
29 SPACES AT .302 .298 PITCH = 8.702 8.698
TOLERANCE NONCUMULATIVE
.050
178 GROOVES AT .052 .048 PITCH = 8.902 8.898
TOLERANCE NONCUMULATIVE

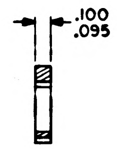

SECTION A-A

FOR INFORMATION ONLY

CLASS B RELEASE TDR No. 00514 DATE 6 Mar 63

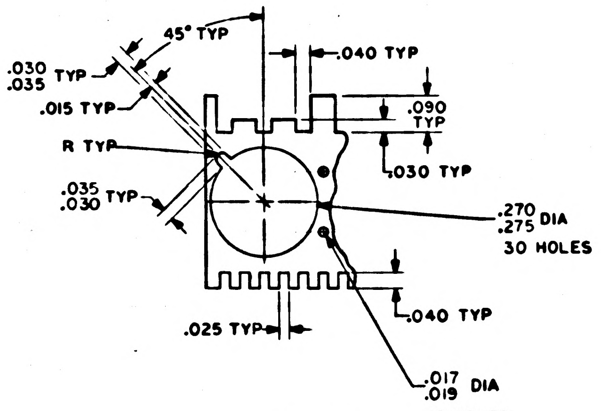
45° TYP
.040 TYP
.030
.035 TYP
.015 TYP
.090
TYP
R TYP
.030 TYP
.035
.030 TYP
.270
.275 DIA
30 HOLES
.040 TYP
.025 TYP
.017
.019 DIA
55 HOLES

DETAIL A
SCALE 5/1

NOTES
1. INTERPRET DRAWING IN ACCORDANCE WITH STANDARDS PRESCRIBED BY MIL-D-70327
2. MAT'L: PLASTIC, CLEAR, ACRYLIC PER MIL-P-8184 FINISH B

MASTER

D 1004095

QTY REQD	PART OR IDENTIFYING NO.	NOMENCLATURE OR DESCRIPTION	FIND NO.

LIST OF MATERIALS

NEXT ASSY	USED ON
1003080	
1003079	

APPLICATION

UNLESS OTHERWISE SPECIFIED
DIMENSIONS ARE IN INCHES
TOLERANCES ON
FRACTIONS ± — DECIMALS ± .005 ANGLES 0° ± 30′
DO NOT SCALE THIS DRAWING

MATERIAL
SEE NOTE 2

HEAT TREATMENT
—

FINAL FINISH
—

MIT
INSTRUMENTATION LAB
CAMBRIDGE, MASS
DWG. NO.
CONTRACT

DRAWN J. Fabuzzi DATE 1 Feb 63
CHECKED 3/5/63
APPROVAL W. B. Turner 3/5/63
APPROVAL 3/6/63
NASA APPROVAL Jack Barnard
MIT APPROVAL 6 Mar 63

MANNED SPACECRAFT CENTER
HOUSTON, TEXAS

HOUSING MICRO LOGIC
TO 47

CODE IDENT NO.
SIZE D
NASA DRAWING NO. 1004095
SCALE 2/1
WT
SHEET 1 OF 1

NOTICE — WHEN GOVERNMENT DRAWINGS, SPECIFICATIONS, OR OTHER DATA ARE USED FOR ANY PURPOSE OTHER THAN IN CONNECTION WITH A DEFINITELY RELATED GOVERNMENT PROCUREMENT OPERATION, THE UNITED STATES GOVERNMENT THEREBY INCURS NO RESPONSIBILITY NOR ANY OBLIGATION WHATSOEVER; AND THE FACT THAT THE GOVERNMENT MAY HAVE FORMULATED, FURNISHED, OR IN ANY WAY SUPPLIED THE SAID DRAWINGS, SPECIFICATIONS OR OTHER DATA IS NOT TO BE REGARDED BY IMPLICATION OR OTHERWISE AS IN ANY MANNER LICENSING THE HOLDER OR ANY OTHER PERSON OR CORPORATION, OR CONVEYING ANY RIGHTS OR PERMISSION TO MANUFACTURE, USE, OR SELL ANY PATENTED INVENTION THAT MAY IN ANY WAY BE RELATED THERETO.

1004098 A

(M)

REVISIONS CLASS B TDRR 00514

SYM	DESCRIPTION	DATE	APPROVAL
A	REVISED AND UP GRADED TO CLASS A PER TDRR 00910	16 APR 63	

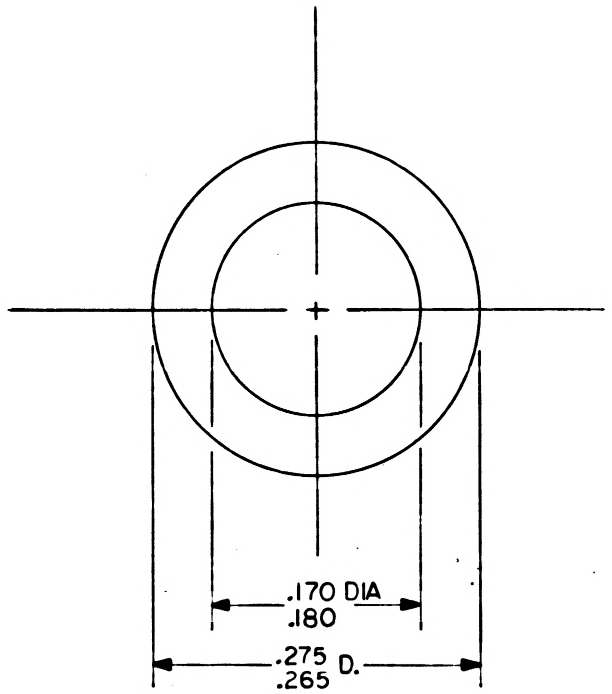

NOTES:
1. INTERPRET IN ACCORDANCE WITH STANDARDS PRESCRIBED BY MIL D 70237
2. MATERIAL: .003/.005 PLASTIC SHEET PER L-P-00519 TYPE 2, CLASS 1

MASTER

QTY REQD	PART OR IDENTIFYING NO.	NOMENCLATURE OR DESCRIPTION	FIND NO.

LIST OF MATERIALS

NEXT ASSY	USED ON
1003079	—
1003080	—

APPLICATION

UNLESS OTHERWISE SPECIFIED
DIMENSIONS ARE IN INCHES
TOLERANCES ON
FRACTIONS ± —//— DECIMALS ± —//— ANGLES ± —//—
DO NOT SCALE THIS DRAWING

MATERIAL
SEE NOTE 2

HEAT TREATMENT
—//—

FINAL FINISH
—//—

M I T
INSTRUMENTATION LAB
CAMBRIDGE, MASS.
DWG. NO. CONTRACT

DRAWN DATE 2/20/63
CHECKED 3/6/63
APPROVAL W.B. Turner 3/5/63
APPROVAL 2/1/63
NASA APPROVAL
MIT APPROVAL 6 Mar 63

MANNED SPACECRAFT CENTER
HOUSTON, TEXAS

WASHER, MYLAR
(MICRO LOGIC STICK)

CODE IDENT NO. SIZE C NASA DRAWING NO. 1004098

SCALE 10 X WT SHEET 1 OF 1

INCHES
0 1 2
PHOTOGRAPHIC SCALE ONLY

1004098 A

NOTICE — WHEN GOVERNMENT DRAWINGS, SPECIFICATIONS, OR OTHER DATA ARE USED FOR ANY PURPOSE OTHER THAN IN CONNECTION WITH A DEFINITELY RELATED GOVERNMENT PROCUREMENT OPERATION, THE UNITED STATES GOVERNMENT THEREBY INCURS NO RESPONSIBILITY NOR ANY OBLIGATION WHATSOEVER; AND THE FACT THAT THE GOVERNMENT MAY HAVE FORMULATED, FURNISHED, OR IN ANY WAY SUPPLIED THE SAID DRAWINGS, SPECIFICATIONS OR OTHER DATA IS NOT TO BE REGARDED BY IMPLICATION OR OTHERWISE AS IN ANY MANNER LICENSING THE HOLDER OR ANY OTHER PERSON OR CORPORATION, OR CONVEYING ANY RIGHTS OR PERMISSION TO MANUFACTURE, USE, OR SELL ANY PATENTED INVENTION THAT MAY IN ANY WAY BE RELATED THERETO.

1004098

REVISIONS			
SYM	DESCRIPTION	DATE	APPROVAL

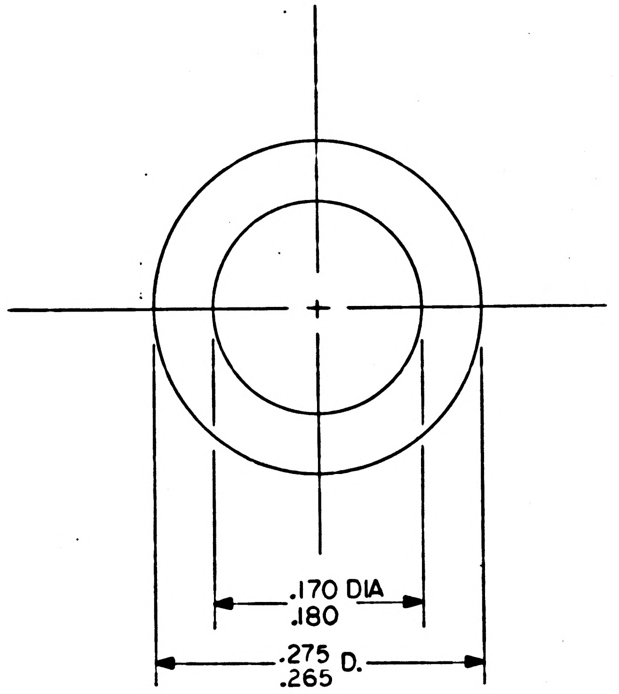

FOR INFORMATION ONLY

CLASS B RELEASE TDR No. 00514 **DATE** 6 Mar 63

NOTES:
1. INTERPRET IN ACCORDANCE WITH STANDARDS PRESCRIBED BY MIL D 70237
2. MATERIAL: .003/.005 PLASTIC SHEET PER L-P-00519 TYPE 2, CLASS 1

QTY REQD	PART OR IDENTIFYING NO.	NOMENCLATURE OR DESCRIPTION	FIND NO.

LIST OF MATERIALS

NEXT ASSY	USED ON
1003079	—
1003080	—

APPLICATION

UNLESS OTHERWISE SPECIFIED
DIMENSIONS ARE IN INCHES
TOLERANCES ON
FRACTIONS ± -//- DECIMALS ± -//- ANGLES ± -//-
DO NOT SCALE THIS DRAWING
MATERIAL
SEE NOTE 2
HEAT TREATMENT
-//-
FINAL FINISH
-//-

MIT
INSTRUMENTATION LAB
CAMBRIDGE, MASS.
DWG. NO. CONTRACT
DRAWN [illegible] DATE 2/20/63
CHECKED [illegible] 3/6/63
APPROVAL W.B. Turner 3/5/63
APPROVAL [illegible] 2/1/63
NASA APPROVAL Jack Barnes
MIT APPROVAL [illegible] 6 Mar 63

MANNED SPACECRAFT CENTER
HOUSTON, TEXAS

WASHER, MYLAR
(MICRO LOGIC STICK)

CODE IDENT NO.
SIZE C
NASA DRAWING NO. 1004098
SCALE 10 X
WT
SHEET 1 OF 1

MASTER

NOTICE — WHEN GOVERNMENT DRAWINGS, SPECIFICATIONS, OR OTHER DATA ARE USED FOR ANY PURPOSE OTHER THAN IN CONNECTION WITH A DEFINITELY RELATED GOVERNMENT PROCUREMENT OPERATION, THE UNITED STATES GOVERNMENT THEREBY INCURS NO RESPONSIBILITY NOR ANY OBLIGATION WHATSOEVER; AND THE FACT THAT THE GOVERNMENT MAY HAVE FORMULATED, FURNISHED, OR IN ANY WAY SUPPLIED THE SAID DRAWINGS, SPECIFICATIONS OR OTHER DATA IS NOT TO BE REGARDED BY IMPLICATION OR OTHERWISE AS IN ANY MANNER LICENSING THE HOLDER OR ANY OTHER PERSON OR CORPORATION, OR CONVEYING ANY RIGHTS OR PERMISSION TO MANUFACTURE, USE, OR SELL ANY PATENTED INVENTION THAT MAY IN ANY WAY BE RELATED THERETO.

1004099

SYM	DESCRIPTION	DATE	APPROVAL

REVISIONS

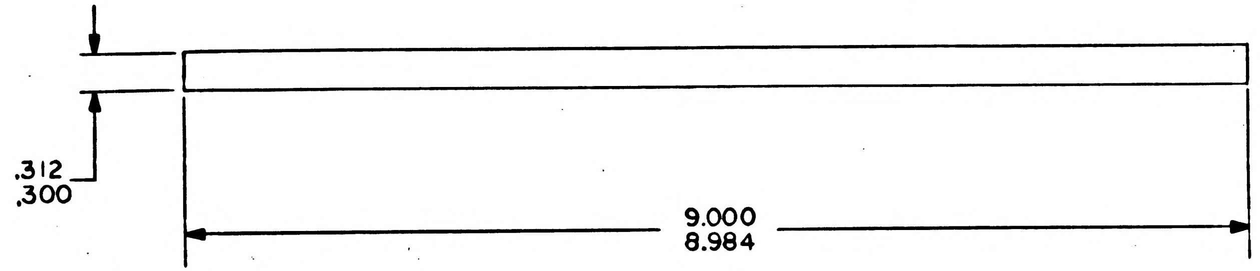

FOR INFORMATION ONLY

CLASS B RELEASE TDR No. 00514 **DATE** 6 Mar 63

1004099

NOTES:

1. INTERPRET THIS DRAWING IN ACCORDANCE WITH STANDARDS PRESCRIBED BY MIL-D-70327
2. MATERIAL: .015 THICK GLASS EPOXY BOARD / MIL-P-18177 TYPE GEB

MASTER

QTY REQD	PART OR IDENTIFYING NO.	NOMENCLATURE OR DESCRIPTION	FIND NO.

LIST OF MATERIALS

NEXT ASSY	USED ON
1003080	
1003079	—

APPLICATION

UNLESS OTHERWISE SPECIFIED DIMENSIONS ARE IN INCHES
TOLERANCES ON
FRACTIONS ± DECIMALS ± ANGLES ±
DO NOT SCALE THIS DRAWING
MATERIAL SEE NOTE 2
HEAT TREATMENT —//—
FINAL FINISH —//—

MIT INSTRUMENTATION LAB
CAMBRIDGE, MASS.
DWG. NO. CONTRACT
DRAWN L. Cataldo DATE 3/21/63
CHECKED 3/5/63
APPROVAL W.B. Turner 3/5/63
APPROVAL 3/1/63
NASA APPROVAL Jack Barnes
MIT APPROVAL 6 Mar 63

MANNED SPACECRAFT CENTER
HOUSTON, TEXAS

STRIP, BACKING
MICRO LOGIC STICK

CODE IDENT NO.
SIZE C
NASA DRAWING NO. 1004099
SCALE 1-1 WT SHEET 1 OF 1

NOTICE — WHEN GOVERNMENT DRAWINGS, SPECIFICATIONS, OR OTHER DATA ARE USED FOR ANY PURPOSE OTHER THAN IN CONNECTION WITH A DEFINITELY RELATED GOVERNMENT PROCUREMENT OPERATION, THE UNITED STATES GOVERNMENT THEREBY INCURS NO RESPONSIBILITY NOR ANY OBLIGATION WHATSOEVER; AND THE FACT THAT THE GOVERNMENT MAY HAVE FORMULATED, FURNISHED OR IN ANY WAY SUPPLIED THE SAID DRAWINGS, SPECIFICATIONS OR OTHER DATA IS NOT TO BE REGARDED BY IMPLICATION OR OTHERWISE AS IN ANY MANNER LICENSING THE HOLDER OR ANY OTHER PERSON OR CORPORATION, OR CONVEYING ANY RIGHTS OR PERMISSION TO MANUFACTURE, USE, OR SELL ANY PATENTED INVENTION THAT MAY IN ANY WAY BE RELATED THERETO.

Ⓜ

REVISIONS			
SYM	DESCRIPTION	DATE	APPROVAL
A	REVISED PER TDRR00672	3/25/63	W.K.

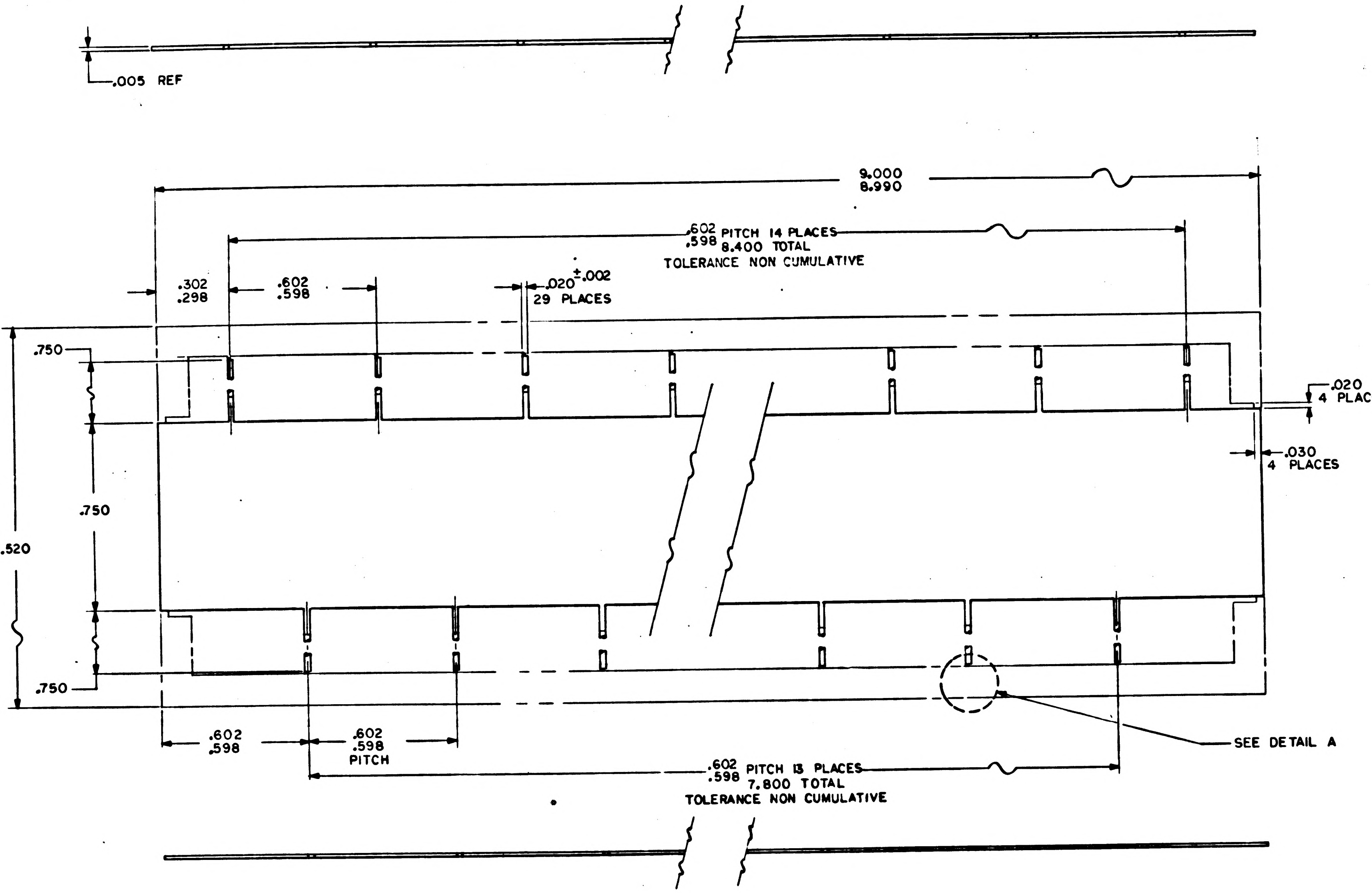
.005 REF
9.000
8.990
.602
.598 PITCH 14 PLACES
8.400 TOTAL
TOLERANCE NON CUMULATIVE
.302
.298
.602
.598
.020 ±.002
29 PLACES
.750
.750
2.520
.750
.020
4 PLACES
.030
4 PLACES
.602
.598
.602
.598
PITCH
.602
.598 PITCH 13 PLACES
7.800 TOTAL
TOLERANCE NON CUMULATIVE
SEE DETAIL A

FOR INFORMATION ONLY

CLASS B RELEASE TDR No. 00514 DATE 6 Mar 63

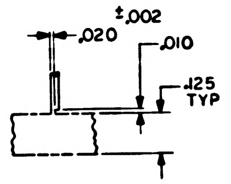
±.002
.020
.010
.125
TYP

DETAIL A
SEE NOTE 3

NOTES:
1. INTERPRET DRAWING IN ACCORDANCE WITH STANDARDS PRESCRIBED BY MIL-D-70327
2. MATERIAL: .005 NICKEL PER MIL-N-46025, ANNEALED
3. PHANTOM LINES DEFINE BORDER TO BE REMOVED AT ASSEMBLY

MASTER

QTY REQD	PART OR IDENTIFYING NO.	NOMENCLATURE OR DESCRIPTION	FIND NO.

LIST OF MATERIALS

NEXT ASSY	USED ON
1003082	
1003081	

APPLICATION

UNLESS OTHERWISE SPECIFIED DIMENSIONS ARE IN INCHES
TOLERANCES ON
FRACTIONS ± — DECIMALS ±.005 ANGLES ± —
DO NOT SCALE THIS DRAWING
MATERIAL SEE NOTE 2
HEAT TREATMENT —
FINAL FINISH —

MIT
INSTRUMENTATION LAB
CAMBRIDGE, MASS.
DWG. NO. CONTRACT
DRAWN A. Dzenis DATE 2/21/63
CHECKED 3/5/63
APPROVAL W.B. Turner 3/5/63
APPROVAL 3/6/63
NASA APPROVAL
MIT APPROVAL 6 Mar 63

MANNED SPACECRAFT CENTER
HOUSTON, TEXAS

GROUND PLANE
MICROLOGIC STICK

CODE IDENT NO.
SIZE D
NASA DRAWING NO. 1004100
SCALE 4/1 WT SHEET 1 OF 1

1004100 A

NOTICE — WHEN GOVERNMENT DRAWINGS, SPECIFICATIONS, OR OTHER DATA ARE USED FOR ANY PURPOSE OTHER THAN IN CONNECTION WITH A DEFINITELY RELATED GOVERNMENT PROCUREMENT OPERATION THE UNITED STATES GOVERNMENT THEREBY INCURS NO RESPONSIBILITY NOR ANY OBLIGATION WHATSOEVER, AND THE FACT THAT THE GOVERNMENT MAY HAVE FORMULATED, FURNISHED OR IN ANY WAY SUPPLIED THE SAID DRAWINGS, SPECIFICATIONS OR OTHER DATA IS NOT TO BE REGARDED BY IMPLICATION OR OTHERWISE AS IN ANY MANNER LICENSING THE HOLDER OR ANY OTHER PERSON OR CORPORATION, OR CONVEYING ANY RIGHTS OR PERMISSION TO MANUFACTURE, USE OR SELL ANY PATENTED INVENTION THAT MAY IN ANY WAY BE RELATED THERETO.

REVISIONS

SYM	DESCRIPTION	DATE	APPROVAL
A	REVISED PER TDRR00672	3/25/63	W.K.
B	UPGRADED TO CLASS A PER TDRR 00905	16APR63	WK

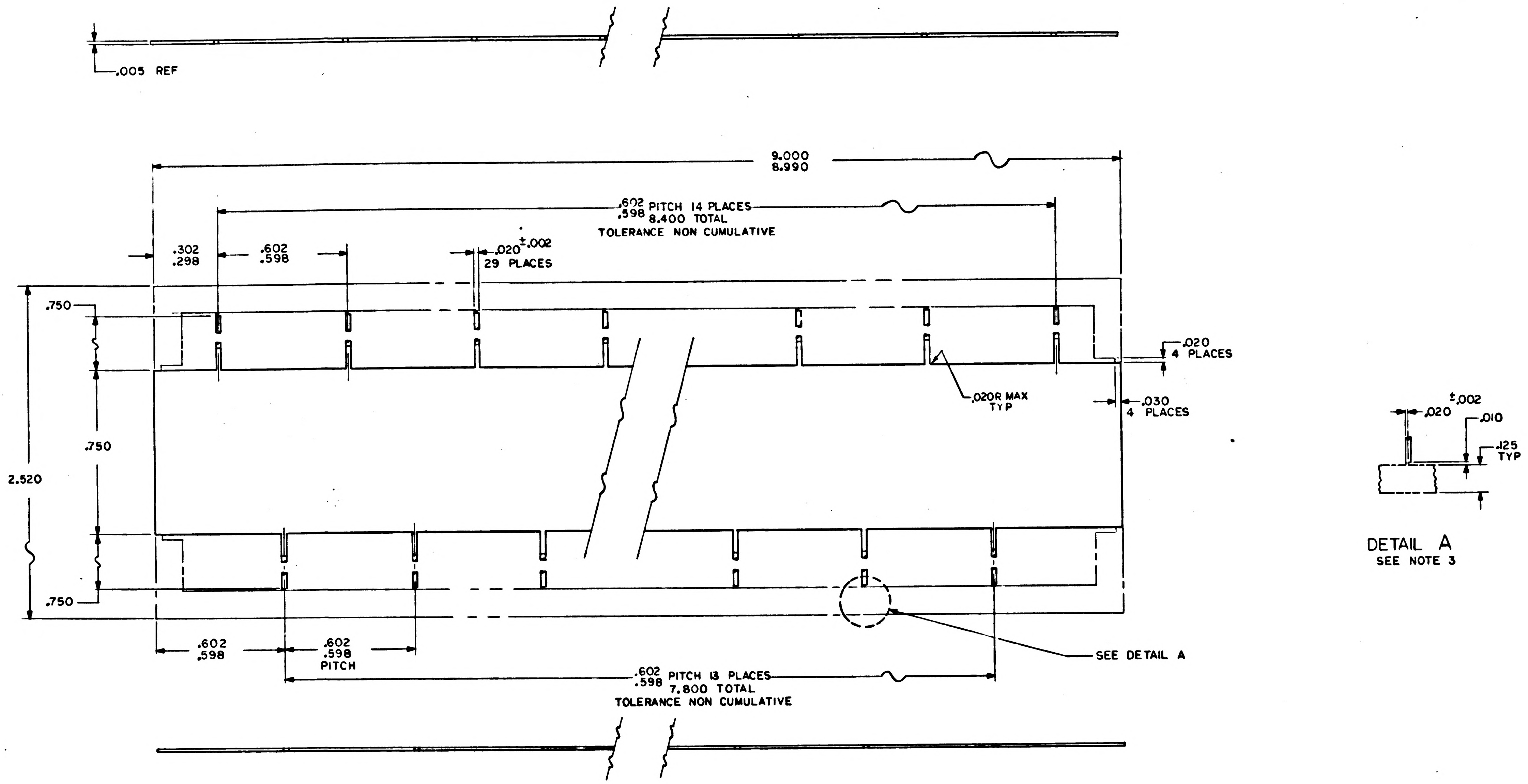

.005 REF
9.000
8.990
.602
.598 PITCH 14 PLACES
8.400 TOTAL
TOLERANCE NON CUMULATIVE
.302
.298
.602
.598
.020 ±.002
29 PLACES
.750
.750
2.520
.750
.020
4 PLACES
.030
4 PLACES
.020R MAX
TYP
SEE DETAIL A
.602
.598
.602
.598
PITCH
.602
.598 PITCH 13 PLACES
7.800 TOTAL
TOLERANCE NON CUMULATIVE
±.002
.020
.010
.125
TYP
DETAIL A
SEE NOTE 3

NOTES:

1. INTERPRET DRAWING IN ACCORDANCE WITH STANDARDS PRESCRIBED BY MIL-D-70327
2. MATERIAL: .005 NICKEL PER MIL-N-46025, ANNEALED
3. PHANTOM LINES DEFINE BORDER TO BE REMOVED AT ASSEMBLY

QTY REQD	PART OR IDENTIFYING NO.	NOMENCLATURE OR DESCRIPTION	FIND NO.

LIST OF MATERIALS

NEXT ASSY	USED ON
1003082	
1003081	

APPLICATION

UNLESS OTHERWISE SPECIFIED
DIMENSIONS ARE IN INCHES
TOLERANCES ON
FRACTIONS ± — DECIMALS ±.005 ANGLES ± —
DO NOT SCALE THIS DRAWING
MATERIAL SEE NOTE 2
HEAT TREATMENT —
FINAL FINISH —

MIT
INSTRUMENTATION LAB
CAMBRIDGE, MASS
DWG. NO. CONTRACT
DRAWN DATE 2/21/63
CHECKED 3/5/63
APPROVAL W.B. 3/5/63
APPROVAL 3/6/63
NASA APPROVAL
MIT APPROVAL 6 Mar 63

MANNED SPACECRAFT CENTER
HOUSTON, TEXAS

GROUND PLANE
MICROLOGIC STICK

CODE IDENT NO.
SIZE D
NASA DRAWING NO. 1004100
SCALE 4/1
WT
SHEET 1 OF 1

1004100 B

INCHES
0 1 2
PHOTOGRAPHIC SCALE ONLY

NOTICE — WHEN GOVERNMENT DRAWINGS, SPECIFICATIONS, OR OTHER DATA ARE USED FOR ANY PURPOSE OTHER THAN IN CONNECTION WITH A DEFINITELY RELATED GOVERNMENT PROCUREMENT OPERATION, THE UNITED STATES GOVERNMENT THEREBY INCURS NO RESPONSIBILITY NOR ANY OBLIGATION WHATSOEVER; AND THE FACT THAT THE GOVERNMENT MAY HAVE FORMULATED, FURNISHED, OR IN ANY WAY SUPPLIED THE SAID DRAWINGS, SPECIFICATIONS OR OTHER DATA IS NOT TO BE REGARDED BY IMPLICATION OR OTHERWISE AS IN ANY MANNER LICENSING THE HOLDER OR ANY OTHER PERSON OR CORPORATION, OR CONVEYING ANY RIGHTS OR PERMISSION TO MANUFACTURE, USE OR SELL ANY PATENTED INVENTION THAT MAY IN ANY WAY BE RELATED THERETO.

REVISIONS

SYM	DESCRIPTION	DATE	APPROVAL
A	REVISED PER TDRR 00672	3/25/63	[illegible]
B	UPGRADED TO CLASS A PER TDRR 00905	16 APR 63	WDT WK
C	REVISED PER TDRR 1631	6/19/63	RPK [illegible]

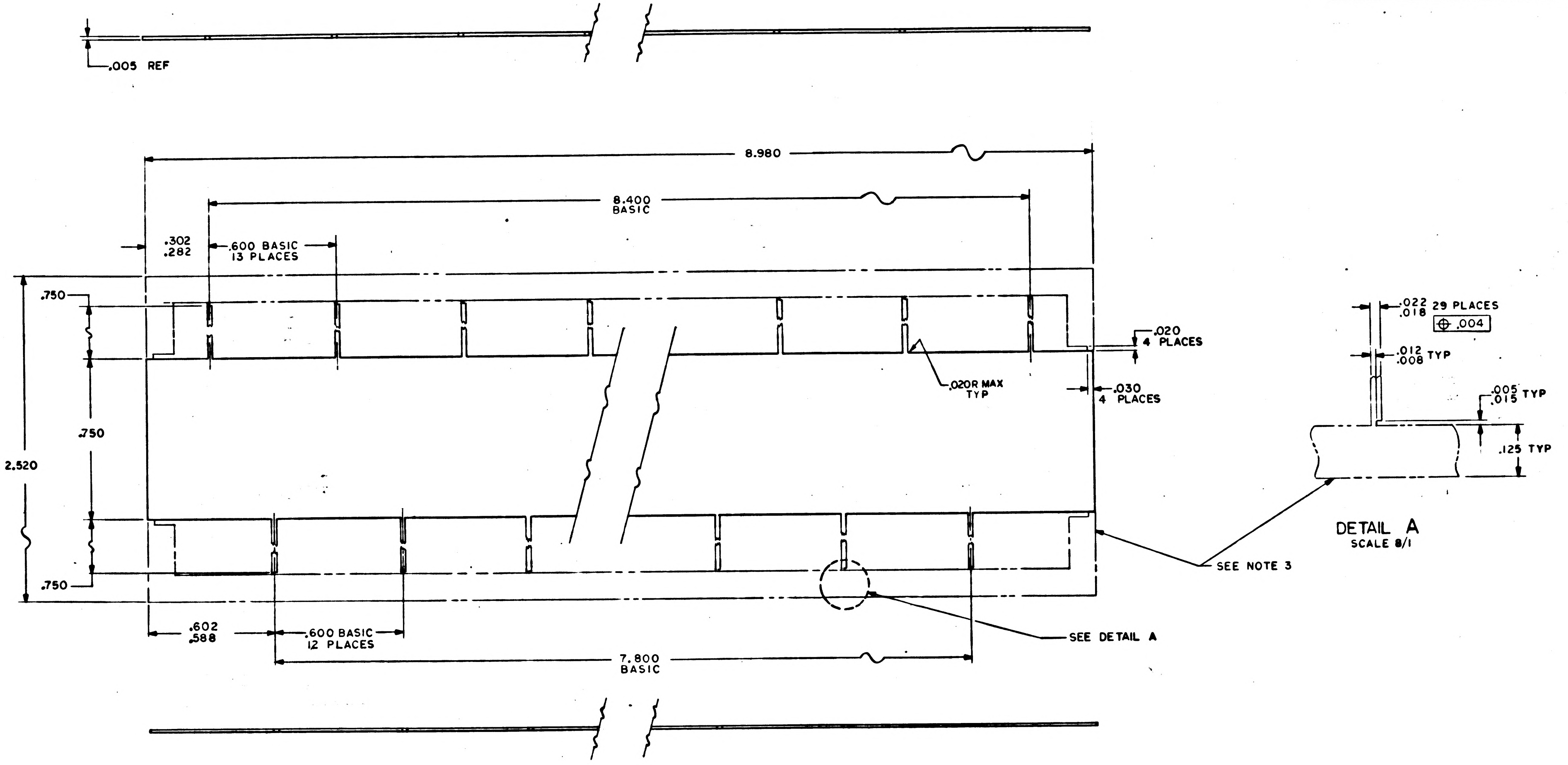

.005 REF
8.980
8.400 BASIC
.302
.282
.600 BASIC 13 PLACES
.750
.750
2.520
.750
.020 4 PLACES
.020R MAX TYP
.030 4 PLACES
.602
.588
.600 BASIC 12 PLACES
7.800 BASIC
SEE NOTE 3
SEE DETAIL A
.022
.018 29 PLACES
⊕ .004
.012
.008 TYP
.005
.015 TYP
.125 TYP
DETAIL A
SCALE 8/1

NOTES:
1. INTERPRET DRAWING IN ACCORDANCE WITH STANDARDS PRESCRIBED BY MIL-D-70327
2. MATERIAL: .005 NICKEL PER MIL-N-46025, ANNEALED
3. PHANTOM LINES DEFINE BORDER TO BE REMOVED AT ASSEMBLY

QTY REQD	PART OR IDENTIFYING NO.	NOMENCLATURE OR DESCRIPTION	FIND NO.

LIST OF MATERIALS

NEXT ASSY	USED ON
1003082	
1003081	

APPLICATION

UNLESS OTHERWISE SPECIFIED DIMENSIONS ARE IN INCHES
TOLERANCES ON
FRACTIONS ± — DECIMALS ±.010 ANGLES ± —
DO NOT SCALE THIS DRAWING
MATERIAL SEE NOTE 2
HEAT TREATMENT —
FINAL FINISH —

MIT INSTRUMENTATION LAB
CAMBRIDGE, MASS.
DWG. NO. CONTRACT
DRAWN [illegible] DATE 2/21/63
CHECKED [illegible] 3/1/63
APPROVAL W B Tanner 3/5/63
APPROVAL [illegible] 3/6/63
NASA APPROVAL [illegible]
MIT APPROVAL W Kupfer 6 Mar 63

MANNED SPACECRAFT CENTER
HOUSTON, TEXAS

GROUND PLANE
LOGIC MODULE

CODE IDENT NO.
SIZE D
NASA DRAWING NO. 1004100
SCALE 4/1
WT
SHEET 1 OF 1

1004100 C

INCHES 0 1 2
PHOTOGRAPHIC SCALE ONLY

NOTICE — WHEN GOVERNMENT DRAWINGS, SPECIFICATIONS, OR OTHER DATA ARE USED FOR ANY PURPOSE OTHER THAN IN CONNECTION WITH A DEFINITELY RELATED GOVERNMENT PROCUREMENT OPERATION, THE UNITED STATES GOVERNMENT THEREBY INCURS NO RESPONSIBILITY NOR ANY OBLIGATION WHATSOEVER; AND THE FACT THAT THE GOVERNMENT MAY HAVE FORMULATED, FURNISHED, OR IN ANY WAY SUPPLIED THE SAID DRAWINGS, SPECIFICATIONS OR OTHER DATA IS NOT TO BE REGARDED BY IMPLICATION OR OTHERWISE AS IN ANY MANNER LICENSING THE HOLDER OR ANY OTHER PERSON OR CORPORATION, OR CONVEYING ANY RIGHTS OR PERMISSION TO MANUFACTURE, USE, OR SELL ANY PATENTED INVENTION THAT MAY IN ANY WAY BE RELATED THERETO.

REVISIONS

SYM	DESCRIPTION	DATE	APPROVAL
A	REVISED PER TDRR 00672	3/25/63	WC
B	UPGRADED TO CLASS A PER TDRR 00905	APR 63	WDT WC
C	REVISED PER TDRR 1631	6/ /63	RPR
D	REVISED PER TDRR 06229	7/1/64	WC

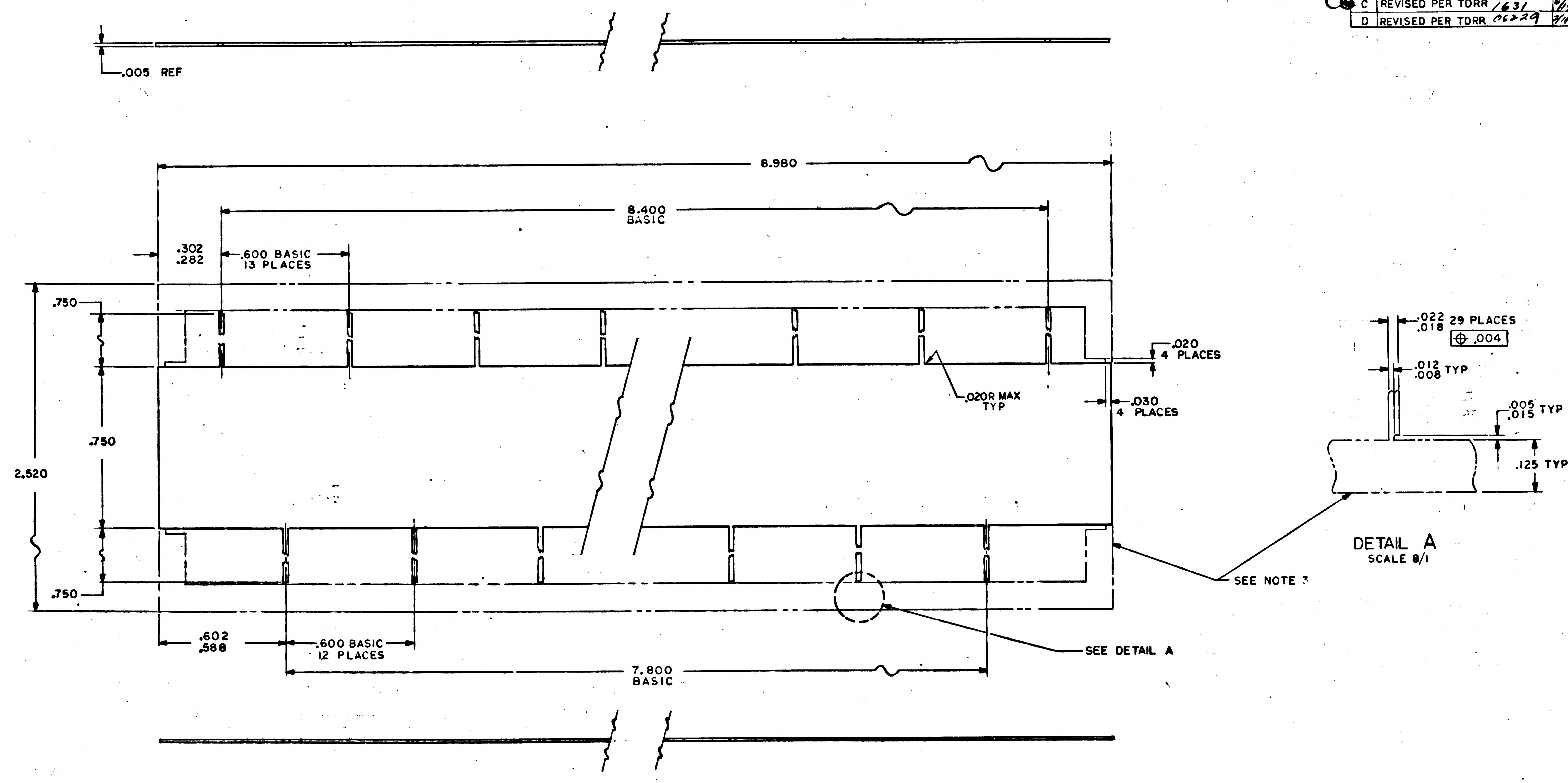

.005 REF
8.980
8.400 BASIC
.302
.282
.600 BASIC 13 PLACES
.750
.750
2.520
.750
.020 4 PLACES
.020R MAX TYP
.030 4 PLACES
.602
.588
.600 BASIC 12 PLACES
7.800 BASIC
SEE DETAIL A
SEE NOTE 3
.022
.018 29 PLACES
⊕ .004
.012
.008 TYP
.005
.015 TYP
.125 TYP
DETAIL A
SCALE 8/1

NOTES:
1. INTERPRET DRAWING IN ACCORDANCE WITH STANDARDS PRESCRIBED BY MIL-D-70327
2. MATERIAL: .005 NICKEL PER MIL-N-46025, ANNEALED; ALT MAT'L HUNTINGTON ALLOY # 204 NICKEL
3. PHANTOM LINES DEFINE BORDER TO BE REMOVED AT ASSEMBLY

MASTER

QTY REQD	PART OR IDENTIFYING NO.	NOMENCLATURE OR DESCRIPTION	FIND NO.

LIST OF MATERIALS

NEXT ASSY	USED ON
1003082	
1003081	

APPLICATION

UNLESS OTHERWI FIED
DIMENSIONS ARE ES
TOLERANCES ON
FRACTIONS ± — DECIMALS ±.010 ANGLES ± —
DO NOT SCALE THIS DRAWING
MATERIAL SEE NOTE 2
HEAT TREATMENT —
FINAL FINISH —

MIT INSTRUMENTATION LAB
CAMBRIDGE, MASS.
DWG. NO. CONTRACT
DRAWN DATE 2/21/63
CHECKED 3/1/63
APPROVAL 3/5/63
APPROVAL 3/6/63
NASA APPROVAL
MIT APPROVAL

MANNED SPACECRAFT CENTER
HOUSTON, TEXAS

GROUND PLANE
LOGIC MODULE

CODE IDENT NO. —
SIZE D
NASA DRAWING NO. 1004100
SCALE 4/1
WT
SHEET 1 OF 1

INCHES
0 1 2
PHOTOGRAPHIC SCALE ONLY

NOTICE — WHEN GOVERNMENT DRAWINGS, SPECIFICATIONS, OR OTHER DATA ARE USED FOR ANY PURPOSE OTHER THAN IN CONNECTION WITH A DEFINITELY RELATED GOVERNMENT PROCUREMENT OPERATION, THE UNITED STATES GOVERNMENT THEREBY INCURS NO RESPONSIBILITY NOR ANY OBLIGATION WHATSOEVER; AND THE FACT THAT THE GOVERNMENT MAY HAVE FORMULATED, FURNISHED, OR IN ANY WAY SUPPLIED THE SAID DRAWINGS, SPECIFICATIONS OR OTHER DATA IS NOT TO BE REGARDED BY IMPLICATION OR OTHERWISE AS IN ANY MANNER LICENSING THE HOLDER OR ANY OTHER PERSON OR CORPORATION, OR CONVEYING ANY RIGHTS OR PERMISSION TO MANUFACTURE, USE, OR SELL ANY PATENTED INVENTION THAT MAY IN ANY WAY BE RELATED THERETO.

REVISIONS			
SYM	DESCRIPTION	DATE	APPROVAL

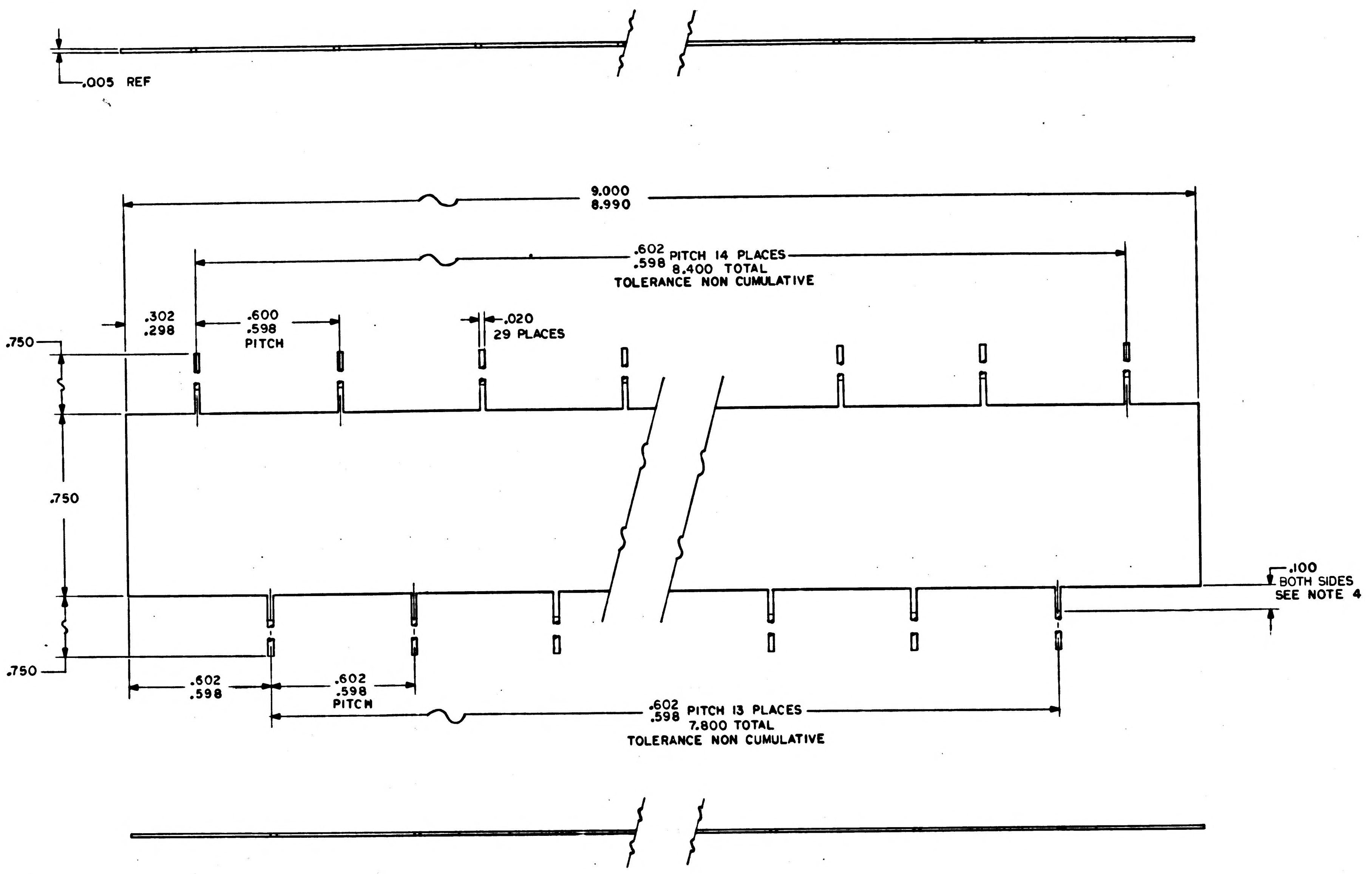

.005 REF
9.000
8.990
.602
.598 PITCH 14 PLACES
8.400 TOTAL
TOLERANCE NON CUMULATIVE
.302
.298
.600
.598
PITCH
.020
29 PLACES
.750
.750
.750
.100
BOTH SIDES
SEE NOTE 4
.602
.598
.602
.598
PITCH
.602
.598 PITCH 13 PLACES
7.800 TOTAL
TOLERANCE NON CUMULATIVE

FOR INFORMATION ONLY

CLASS B RELEASE TDR No. 00514 **DATE** 6 Mar 63

NOTES:

1. INTERPRET DRAWING IN ACCORDANCE WITH STANDARDS PRESCRIBED BY MIL-D-70327
2. MATERIAL: .005 NICKEL PER QQ-N-281 TYPE A
3. FINISH ALL SURFACES WITH .0007/.001 SILVER PLATING PER QQ-S-365
4. ALL TABS TO BE FREE OF PLATING TO WITHIN .100 OF PIECE

MASTER

QTY REQD	PART OR IDENTIFYING NO.	NOMENCLATURE OR DESCRIPTION	FIND NO.

LIST OF MATERIALS

NEXT ASSY	USED ON
1003082	
1003081	

APPLICATION

UNLESS OTHERWISE SPECIFIED
DIMENSIONS ARE IN INCHES
TOLERANCES ON
FRACTIONS ± — DECIMALS ±.005 ANGLES ± —
DO NOT SCALE THIS DRAWING
MATERIAL SEE NOTE 2
HEAT TREATMENT —
FINAL FINISH SEE NOTE 3

MIT
INSTRUMENTATION LAB
CAMBRIDGE, MASS
DWG. NO.
CONTRACT
DRAWN DATE 2/21/63
CHECKED 3/5/63
APPROVAL 3/5/63
APPROVAL 3/6/63
NASA APPROVAL
MIT APPROVAL 6 Mar 63

MANNED SPACECRAFT CENTER
HOUSTON, TEXAS

GROUND PLANE
MICROLOGIC STICK

CODE IDENT NO.
SIZE D
NASA DRAWING NO. 1004100
SCALE 4/1
WT
SHEET 1 OF 1

1004100

NOTICE — WHEN GOVERNMENT DRAWINGS, SPECIFICATIONS, OR OTHER DATA ARE USED FOR ANY PURPOSE OTHER THAN IN CONNECTION WITH A DEFINITELY RELATED GOVERNMENT PROCUREMENT OPERATION, THE UNITED STATES GOVERNMENT THEREBY INCURS NO RESPONSIBILITY NOR ANY OBLIGATION WHATSOEVER, AND THE FACT THAT THE GOVERNMENT MAY HAVE FORMULATED, FURNISHED, OR IN ANY WAY SUPPLIED THE SAID DRAWINGS, SPECIFICATIONS, OR OTHER DATA IS NOT TO BE REGARDED BY IMPLICATION OR OTHERWISE AS IN ANY MANNER LICENSING THE HOLDER OR ANY OTHER PERSON OR CORPORATION, OR CONVEYING ANY RIGHTS OR PERMISSION TO MANUFACTURE, USE, OR SELL ANY PATENTED INVENTION THAT MAY IN ANY WAY BE RELATED THERETO

REVISIONS			
SYM	DESCRIPTION	DATE	APPROVAL
A	REVISED PER TDRR 00677	3-25-63	

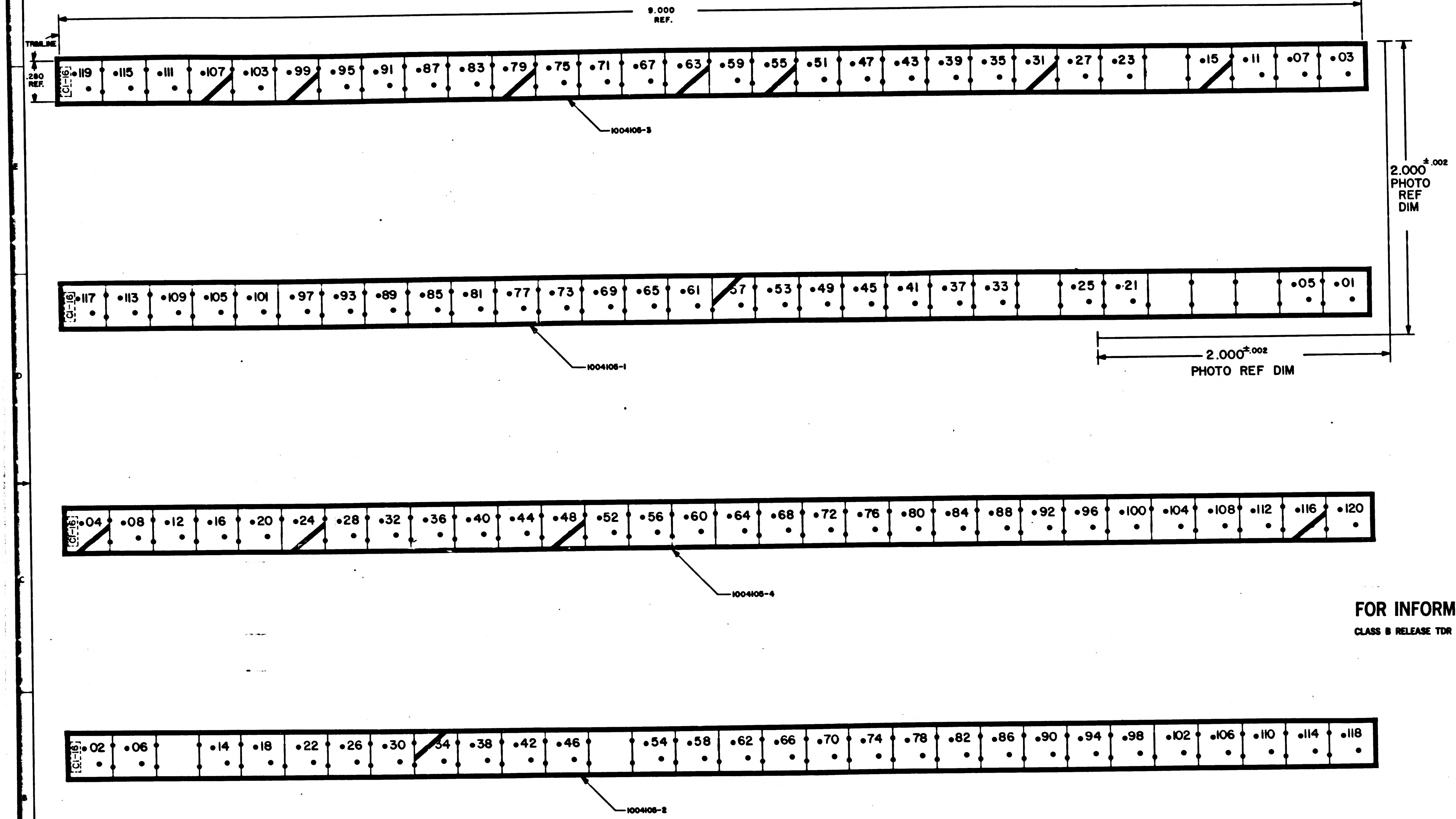
9.000
REF.
TRIMLINE
.280
REF.
CI-16
•119 •115 •111 •107 •103 •99 •95 •91 •87 •83 •79 •75 •71 •67 •63 •59 •55 •51 •47 •43 •39 •35 •31 •27 •23 •15 •11 •07 •03
1004105-3
2.000 ±.002
PHOTO
REF
DIM
CI-16
•117 •113 •109 •105 •101 •97 •93 •89 •85 •81 •77 •73 •69 •65 •61 57 •53 •49 •45 •41 •37 •33 •25 •21 •05 •01
1004105-1
2.000 ±.002
PHOTO REF DIM
CI-16
•04 •08 •12 •16 •20 •24 •28 •32 •36 •40 •44 •48 •52 •56 •60 •64 •68 •72 •76 •80 •84 •88 •92 •96 •100 •104 •108 •112 •116 •120
1004105-4
CI-16
•02 •06 •14 •18 •22 •26 •30 34 •38 •42 •46 •54 •58 •62 •66 •70 •74 •78 •82 •86 •90 •94 •98 •102 •106 •110 •114 •118
1004105-2

FOR INFORMATION ONLY

CLASS B RELEASE TDR No. 00514 DATE 6 Mar 63

NOTES:

1. INTERPRET DRAWING IN ACCORDANCE WITH STANDARDS PRESCRIBED BY MIL-D-70327
2. ORIGINAL OF THIS DRAWING OR REPRODUCTION MADE BY PROCESS OR METHOD SHALL INSURE DIMENSIONAL STABILITY. DIMENSIONAL VARIATIONS SHALL NOT EXCEED .001 INCH PER INCH
3. MAKE MASTER PATTERN POSITIVE FILMS TO DIMENSIONS SHOWN
4. CUT TO WITHIN .010 OF TRIMLINE
5. MATERIAL: .006/.008 THICK PLASTIC SHEETS, SENSITIZED, DIMENSIONALLY STABLE PER L-P-00518 (NAVY AER) TYPE II, CLASS "C"
6. ● PUNCH HOLES TO .040 DIAMETER

QTY REQD	PART OR IDENTIFYING NO	NOMENCLATURE OR DESCRIPTION	FIND NO

LIST OF MATERIALS

NEXT ASSY	USED ON
APPLICATION	

UNLESS OTHERWISE SPECIFIED
DIMENSIONS ARE IN INCHES
TOLERANCES ON
FRACTIONS — DECIMALS .006 — ANGLES —
DO NOT SCALE THIS DRAWING
MATERIAL
SEE NOTE 5
HEAT TREATMENT —
FINAL FINISH —

MIT
INSTRUMENTATION LAB
CAMBRIDGE MASS
DWG NO CONTRACT
DRAWN [illegible] DATE 2/26/63
CHECKED [illegible]
APPROVAL [illegible] 3/5/63
APPROVAL [illegible]
NASA APPROVAL [illegible]
MIT APPROVAL [illegible] 6 Mar 63

MANNED SPACECRAFT CENTER
HOUSTON, TEXAS

MYLAR MASTER
INSULATOR, STICK
ARITHMETIC STICK NO. CI-16

CODE IDENT NO
SIZE E
NASA DRAWING NO 1004105
SCALE 4/1
WT
SHEET 1 OF 1

1004105

NOTICE — WHEN GOVERNMENT DRAWINGS, SPECIFICATIONS, OR OTHER DATA ARE USED FOR ANY PURPOSE OTHER THAN IN CONNECTION WITH A DEFINITELY RELATED GOVERNMENT PROCUREMENT OPERATION, THE UNITED STATES GOVERNMENT THEREBY INCURS NO RESPONSIBILITY NOR ANY OBLIGATION WHATSOEVER; AND THE FACT THAT THE GOVERNMENT MAY HAVE FORMULATED, FURNISHED, OR IN ANY WAY SUPPLIED THE SAID DRAWINGS, SPECIFICATIONS OR OTHER DATA IS NOT TO BE REGARDED BY IMPLICATION OR OTHERWISE AS IN ANY MANNER LICENSING THE HOLDER OR ANY OTHER PERSON OR CORPORATION, OR CONVEYING ANY RIGHTS OR PERMISSION TO MANUFACTURE, USE, OR SELL ANY PATENTED INVENTION THAT MAY IN ANY WAY BE RELATED THERETO.

1004107 A

REVISIONS 00931

SYM	DESCRIPTION	DATE	APPROVAL
A	UP GRADED TO CLASS A WITH CHANGES PER TDRR 02849	8-28-63	RPK JW

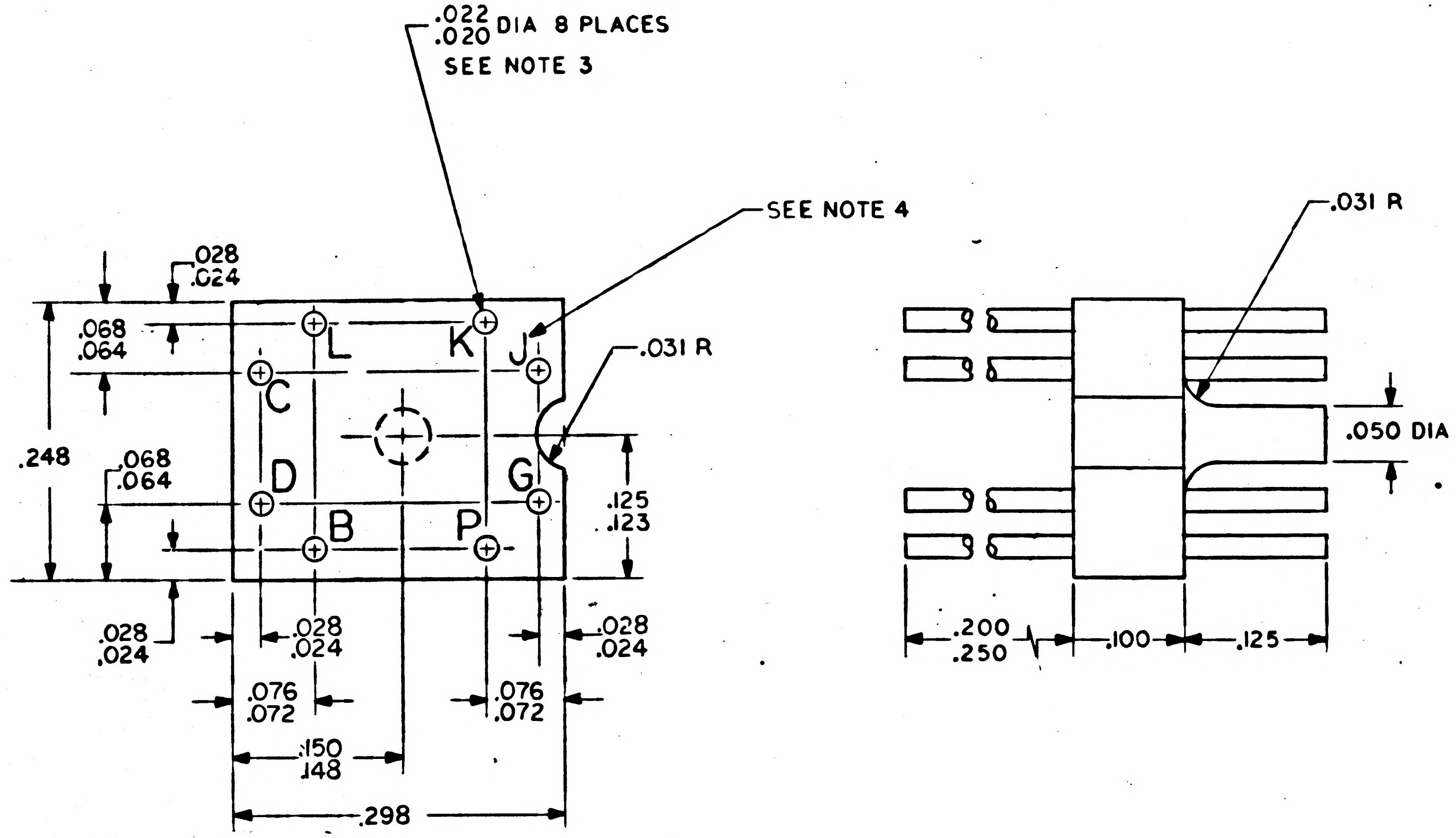

NOTES:

1. INTERPRET DRAWING IN ACCORDANCE WITH STANDARDS PRESCRIBED BY MIL-D-70327
2. MATERIAL: GLASS FILLED DIALLYLPHTHALATE NO. 52-01 YELLOW, PER MIL-M-14F, TYPE SDG
3. GRADE A NICKEL PER MIL-N-46025, GOLD PLATED PER MIL-G-45204 TYPE I, CLASS I WITH COPPER STIKE NOTE TO EXCEED .00001 INCHES THICK
4. MARK .060/.100 HIGH BLACK PER ND1002019

MASTER

QTY REQD	PART OR IDENTIFYING NO.	NOMENCLATURE OR DESCRIPTION	FIND NO.

LIST OF MATERIALS

NEXT ASSY	USED ON
1003084	

APPLICATION

UNLESS OTHERWISE SPECIFIED DIMENSIONS ARE IN INCHES
TOLERANCES ON
FRACTIONS ± —//—
DECIMALS ± .005
ANGLES ± —//—
DO NOT SCALE THIS DRAWING

MATERIAL SEE NOTES 2 AND 3
HEAT TREATMENT —//—
FINAL FINISH —//—

MIT INSTRUMENTATION LAB
CAMBRIDGE, MASS.
DWG. NO. CONTRACT

DRAWN J. Falzone DATE 7 MAR 63
CHECKED
APPROVAL 1/30/63
APPROVAL J Duggan
NASA APPROVAL 1/24/63
MIT APPROVAL W I Seeger 24 Jan 63

MANNED SPACECRAFT CENTER
HOUSTON, TEXAS

MOLDING
K CORE

CODE IDENT NO.
SIZE C
NASA DRAWING NO. 1004107
SCALE 10/1
WT
SHEET 1 OF 1

1004107 A

INCHES
0 1 2
PHOTOGRAPHIC SCALE ONLY

1004107

NOTICE — WHEN GOVERNMENT DRAWINGS, SPECIFICATIONS, OR OTHER DATA ARE USED FOR ANY PURPOSE OTHER THAN IN CONNECTION WITH A DEFINITELY RELATED GOVERNMENT PROCUREMENT OPERATION, THE UNITED STATES GOVERNMENT THEREBY INCURS NO RESPONSIBILITY NOR ANY OBLIGATION WHATSOEVER; AND THE FACT THAT THE GOVERNMENT MAY HAVE FORMULATED, FURNISHED, OR IN ANY WAY SUPPLIED THE SAID DRAWINGS, SPECIFICATIONS OR OTHER DATA IS NOT TO BE REGARDED BY IMPLICATION OR OTHERWISE AS IN ANY MANNER LICENSING THE HOLDER OR ANY OTHER PERSON OR CORPORATION, OR CONVEYING ANY RIGHTS OR PERMISSION TO MANUFACTURE, USE, OR SELL ANY PATENTED INVENTION THAT MAY IN ANY WAY BE RELATED THERETO.

SYM	DESCRIPTION	DATE	APPROVAL
REVISIONS			

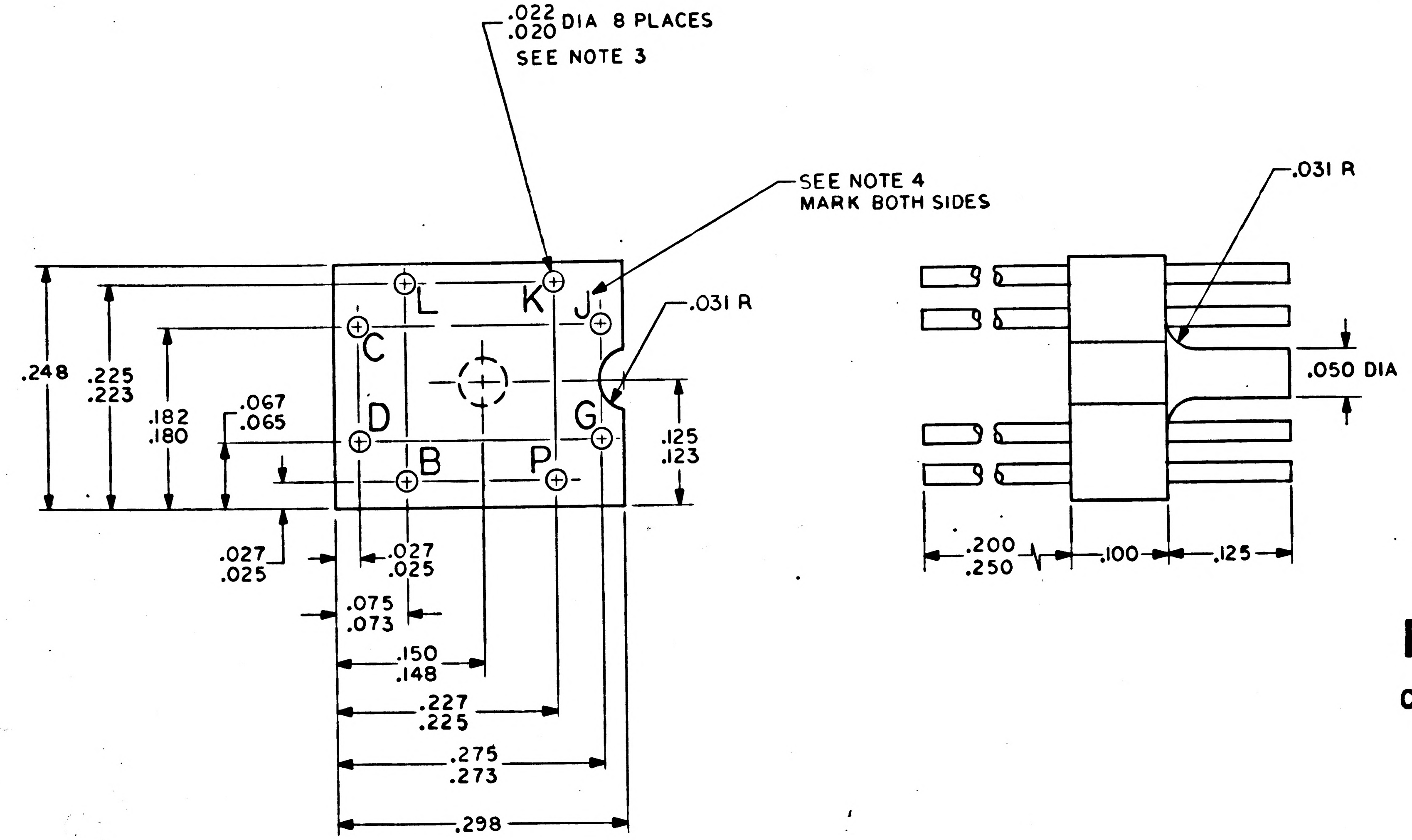

FOR INFORMATION ONLY

CLASS B RELEASE TDR No. 00931 **DATE** 4-24-63

NOTES:
1. INTERPRET DRAWING IN ACCORDANCE WITH STANDARDS PRESCRIBED BY MIL-D-70327
2. MATERIAL: GLASS FILLED DIALLYLPHTHALATE NO. 52-01 YELLOW, PER MIL-M-14F, TYPE SDG
3. PIN MATERIAL: GRADE "A" NICKEL PER QQ-N-281 PLATE PER ND1002001
4. MARK .060/.100 HIGH BLACK PER ND1002019

MASTER

QTY REQD	PART OR IDENTIFYING NO.	NOMENCLATURE OR DESCRIPTION	FIND NO.

LIST OF MATERIALS

1003084	
NEXT ASSY	USED ON
APPLICATION	

UNLESS OTHERWISE SPECIFIED DIMENSIONS ARE IN INCHES
TOLERANCES ON
FRACTIONS ± —//— DECIMALS ± .005 ANGLES ± —//—
DO NOT SCALE THIS DRAWING
MATERIAL SEE NOTES 2 AND 3
HEAT TREATMENT —//—
FINAL FINISH —//—

MIT
INSTRUMENTATION LAB
CAMBRIDGE, MASS.
DWG. NO. CONTRACT

DRAWN J. Falzone DATE 7 MAR 63
CHECKED
APPROVAL 4/30/63
APPROVAL
NASA APPROVAL 4/24/63
MIT APPROVAL W I Jeffer 24 Apr 63

MANNED SPACECRAFT CENTER
HOUSTON, TEXAS

MOLDING
K CORE

CODE IDENT NO.
SIZE C
NASA DRAWING NO. 1004107
SCALE 10/1
WT
SHEET 1 OF 1

INCHES
0 1 2
PHOTOGRAPHIC SCALE ONLY

NOTICE — WHEN GOVERNMENT DRAWINGS, SPECIFICATIONS, OR OTHER DATA ARE USED FOR ANY PURPOSE OTHER THAN IN CONNECTION WITH A DEFINITELY RELATED GOVERNMENT PROCUREMENT OPERATION, THE UNITED STATES GOVERNMENT THEREBY INCURS NO RESPONSIBILITY NOR ANY OBLIGATION WHATSOEVER; AND THE FACT THAT THE GOVERNMENT MAY HAVE FORMULATED, FURNISHED OR IN ANY WAY SUPPLIED THE SAID DRAWINGS, SPECIFICATIONS OR OTHER DATA IS NOT TO BE REGARDED BY IMPLICATION OR OTHERWISE AS IN ANY MANNER LICENSING THE HOLDER OR ANY OTHER PERSON OR CORPORATION, OR CONVEYING ANY RIGHTS OR PERMISSION TO MANUFACTURE, USE, OR SELL ANY PATENTED INVENTION THAT MAY IN ANY WAY BE RELATED THERETO.

1004108 A

REVISIONS 00931

SYM	DESCRIPTION	DATE	APPROVAL
A	UP GRADED TO CLASS A WITH CHANGES PER TDRR 02848	2-28-63	RFK

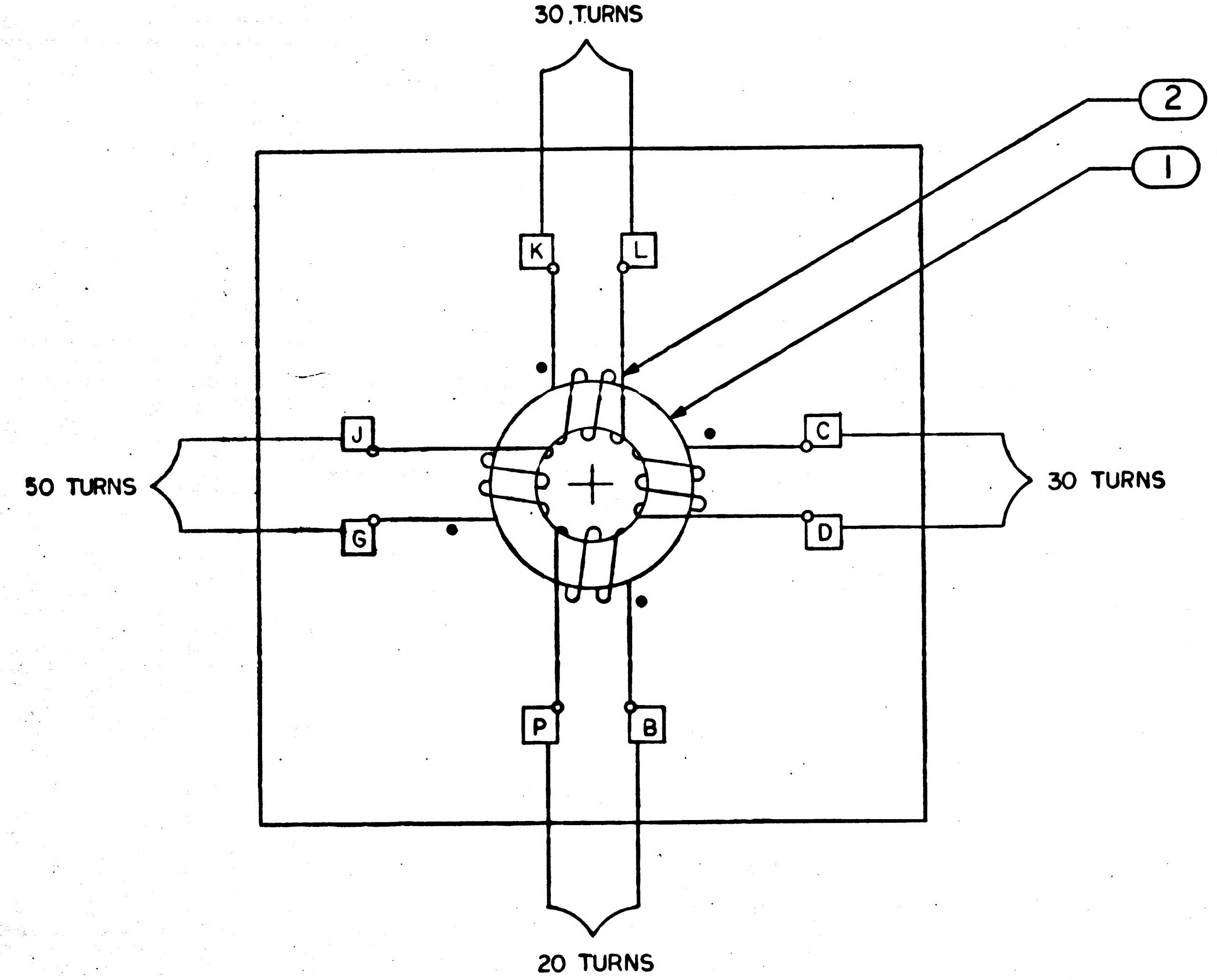

NOTES:

1. INTERPRET DRAWING IN ACCORDANCE WITH STANDARDS PRESCRIBED BY MIL-D-70327

MASTER

QTY REQD	PART OR IDENTIFYING NO.	NOMENCLATURE OR DESCRIPTION	FIND NO.
A.R.	1006711-20	WIRE	2
1	1006773-2	CORE, 11 MAXWELL	1

LIST OF MATERIALS

NEXT ASSY	USED ON
1003084	

APPLICATION

UNLESS OTHERWISE SPECIFIED
DIMENSIONS ARE IN INCHES
TOLERANCES ON
FRACTIONS ± DECIMALS ± ANGLES ±
DO NOT SCALE THIS DRAWING
MATERIAL
HEAT TREATMENT
FINAL FINISH

MIT
INSTRUMENTATION LAB
CAMBRIDGE, MASS.
DWG. NO. CONTRACT
DRAWN DATE 2/13/63
CHECKED 7/4/63
APPROVAL
APPROVAL
NASA APPROVAL
MIT APPROVAL 24 Apr 63

MANNED SPACECRAFT CENTER
HOUSTON, TEXAS

ASSEMBLY, WOUND
K CORE

CODE IDENT NO.
SIZE C
NASA DRAWING NO. 1004108
SCALE 10:1
WT
SHEET OF

INCHES
0 1 2
PHOTOGRAPHIC SCALE ONLY

NOTICE — WHEN GOVERNMENT DRAWINGS, SPECIFICATIONS, OR OTHER DATA ARE USED FOR ANY PURPOSE OTHER THAN IN CONNECTION WITH A DEFINITELY RELATED GOVERNMENT PROCUREMENT OPERATION, THE UNITED STATES GOVERNMENT THEREBY INCURS NO RESPONSIBILITY NOR ANY OBLIGATION WHATSOEVER; AND THE FACT THAT THE GOVERNMENT MAY HAVE FORMULATED, FURNISHED, OR IN ANY WAY SUPPLIED THE SAID DRAWINGS, SPECIFICATIONS OR OTHER DATA IS NOT TO BE REGARDED BY IMPLICATION OR OTHERWISE AS IN ANY MANNER LICENSING THE HOLDER OR ANY OTHER PERSON OR CORPORATION, OR CONVEYING ANY RIGHTS OR PERMISSION TO MANUFACTURE, USE, OR SELL ANY PATENTED INVENTION THAT MAY IN ANY WAY BE RELATED THERETO.

1004108 B

REVISIONS 00931

SYM	DESCRIPTION	DATE	APPROVAL
A	UP GRADED TO CLASS A WITH CHANGES PER TDRR 02848	8-28-63	RPK
B	REVISED PER TDRR 20259 DR M. Ripley CHK R.M.E. DM	7/2/65	

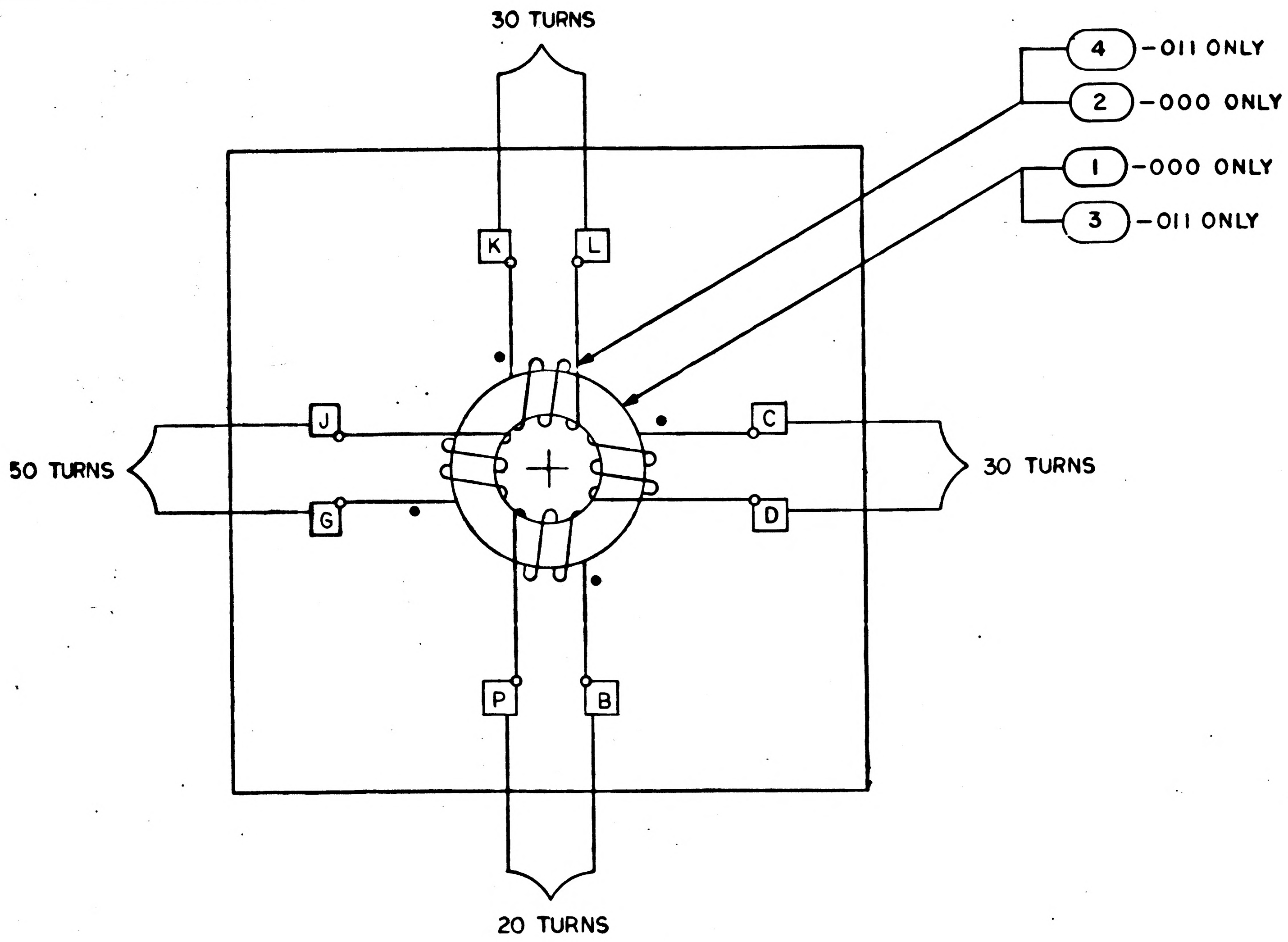

NOTES:

1. INTERPRET DRAWING IN ACCORDANCE WITH STANDARDS PRESCRIBED BY MIL-D-70327
2. THE ORIGINAL CONFIGURATION IS IDENTIFIED BY THE DRAWING NUMBER AND A-000 SUFFIX
3. AR DENOTES AS REQUIRED

QTY REQD -011	QTY REQD -000	PART OR IDENTIFYING NO.	NOMENCLATURE OR DESCRIPTION	FIND NO.
AR	☒	1006275-2	WIRE	4
1	☒	1006320-2	CORE, MAGNETIC	3
☒	AR	1006711-20	WIRE	2
☒	1	1006773-2	CORE, 11 MAXWELL	1

LIST OF MATERIALS

NEXT ASSY	USED ON
1003084	

APPLICATION

UNLESS OTHERWISE SPECIFIED DIMENSIONS ARE IN INCHES
TOLERANCES ON
FRACTIONS ± DECIMALS ± ANGLES ±
DO NOT SCALE THIS DRAWING
MATERIAL
HEAT TREATMENT
FINAL FINISH

MIT
INSTRUMENTATION LAB
CAMBRIDGE, MASS.
DWG. NO. CONTRACT
DRAWN J. Cowley DATE 2/13/63
CHECKED 7/4/63
APPROVAL
APPROVAL
NASA APPROVAL 4/24/63
MIT APPROVAL W Kupfer 24 Apr 63

MANNED SPACECRAFT CENTER
HOUSTON, TEXAS

ASSEMBLY, WOUND
K CORE

CODE IDENT NO. 80230
SIZE C
NASA DRAWING NO. 1004108
SCALE 10:1
WT
SHEET 1 OF 1

NOTICE — WHEN GOVERNMENT DRAWINGS, SPECIFICATIONS, OR OTHER DATA ARE USED FOR ANY PURPOSE OTHER THAN IN CONNECTION WITH A DEFINITELY RELATED GOVERNMENT PROCUREMENT OPERATION, THE UNITED STATES GOVERNMENT THEREBY INCURS NO RESPONSIBILITY NOR ANY OBLIGATION WHATSOEVER; AND THE FACT THAT THE GOVERNMENT MAY HAVE FORMULATED, FURNISHED, OR IN ANY WAY SUPPLIED THE SAID DRAWINGS, SPECIFICATIONS OR OTHER DATA IS NOT TO BE REGARDED BY IMPLICATION OR OTHERWISE AS IN ANY MANNER LICENSING THE HOLDER OR ANY OTHER PERSON OR CORPORATION, OR CONVEYING ANY RIGHTS OR PERMISSION TO MANUFACTURE, USE, OR SELL ANY PATENTED INVENTION THAT MAY IN ANY WAY BE RELATED THERETO.

1004108 C

REVISIONS 00931

SYM	DESCRIPTION	DATE	APPROVAL
A	UP GRADED TO CLASS A WITH CHANGES PER TDRR 02848	8-28-63	RPR
B	REVISED PER TDRR 20259 DR A. Ripley CHK R.H.E. BM	7/2/65	
C	REVISED PER TDRR 21817 DR R. Lunford CHK CAP BM	9/9/65	

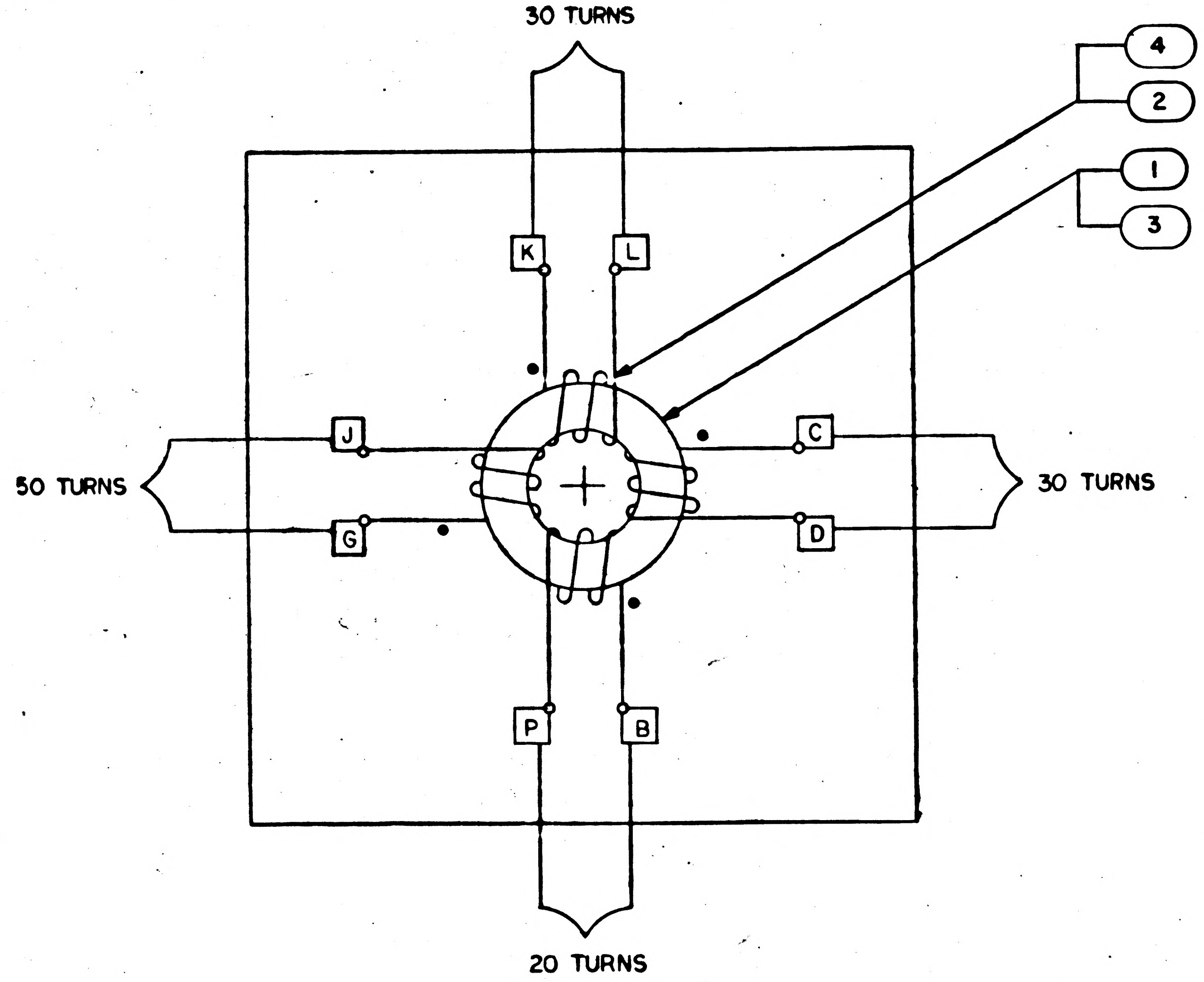

NOTES:
1. INTERPRET DRAWING IN ACCORDANCE WITH STANDARDS PRESCRIBED BY MIL-D-70327
2. THE ORIGINAL CONFIGURATION IS IDENTIFIED BY THE DRAWING NUMBER AND A-000 SUFFIX
3. AR DENOTES AS REQUIRED

MASTE

QTY REQD	QTY REQD	QTY REQD	PART OR IDENTIFYING NO.	NOMENCLATURE OR DESCRIPTION	FIND NO.
AR	AR	☒	1006275-2	WIRE	4
☒	1	☒	1006320-2	CORE, MAGNETIC	3
☒	☒	AR	1006711-20	WIRE	2
1	☒	1	1006773-2	CORE, 11 MAXWELL	1
-021	-011	-000	LIST OF MATERIALS		

1003084	
NEXT ASSY	USED ON
APPLICATION	

UNLESS OTHERWISE SPECIFIED
DIMENSIONS ARE IN INCHES
TOLERANCES ON
FRACTIONS ± DECIMALS ± ANGLES ±
DO NOT SCALE THIS DRAWING
MATERIAL
HEAT TREATMENT
FINAL FINISH

MIT
INSTRUMENTATION LAB
CAMBRIDGE, MASS.
DWG. NO.
CONTRACT
DRAWN
DATE
CHECKED
APPROVAL
APPROVAL
NASA APPROVAL
MIT APPROVAL

MANNED SPACECRAFT CENTER
HOUSTON, TEXAS

ASSEMBLY, WOUND
K CORE

CODE IDENT NO. 80230
SIZE C
NASA DRAWING NO. 1004108
SCALE 10:1
WT
SHEET 1 OF 1

NOTICE — WHEN GOVERNMENT DRAWINGS, SPECIFICATIONS, OR OTHER DATA ARE USED FOR ANY PURPOSE OTHER THAN IN CONNECTION WITH A DEFINITELY RELATED GOVERNMENT PROCUREMENT OPERATION, THE UNITED STATES GOVERNMENT THEREBY INCURS NO RESPONSIBILITY NOR ANY OBLIGATION WHATSOEVER; AND THE FACT THAT THE GOVERNMENT MAY HAVE FORMULATED, FURNISHED, OR IN ANY WAY SUPPLIED THE SAID DRAWINGS, SPECIFICATIONS OR OTHER DATA IS NOT TO BE REGARDED BY IMPLICATION OR OTHERWISE AS IN ANY MANNER LICENSING THE HOLDER OR ANY OTHER PERSON OR CORPORATION, OR CONVEYING ANY RIGHTS OR PERMISSION TO MANUFACTURE, USE, OR SELL ANY PATENTED INVENTION THAT MAY IN ANY WAY BE RELATED THERETO.

1004108

REVISIONS			
SYM	DESCRIPTION	DATE	APPROVAL

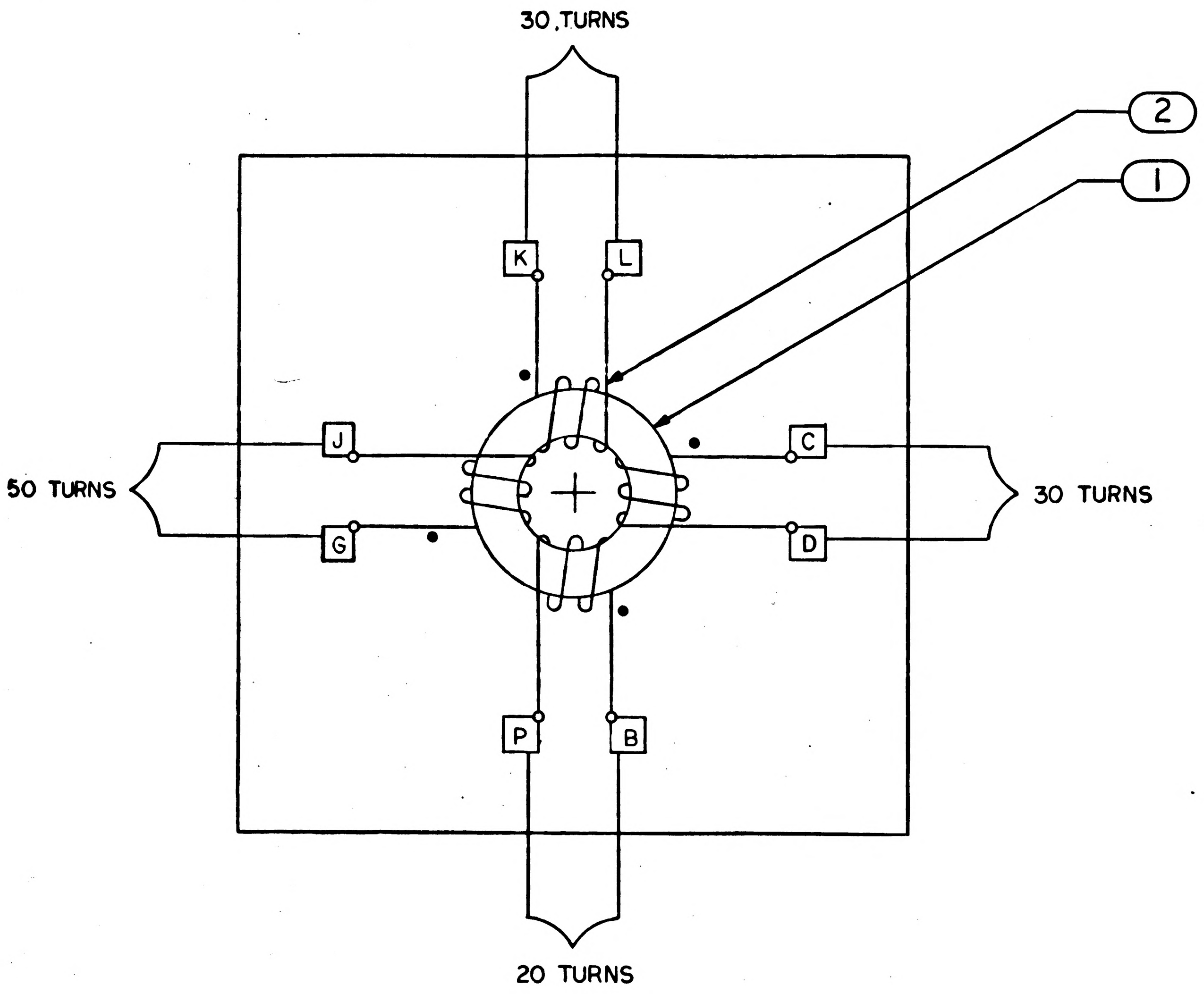

FOR INFORMATION ONLY

CLASS B RELEASE TDR No. 00931 **DATE** 4-24-63

NOTES:

1. INTERPRET DRAWING IN ACCORDANCE WITH STANDARDS PRESCRIBED BY MIL- D-70327
2. NO 38 MAGNET COPPER WIRE, PER ND1002116

MASTER

A.R.	———	WIRE (SEE NOTE 2)	2
1	1006754	CORE, 11 MAXWELL	1
QTY REQD	PART OR IDENTIFYING NO.	NOMENCLATURE OR DESCRIPTION	FIND NO.

LIST OF MATERIALS

1003084	
NEXT ASSY	USED ON
APPLICATION	

UNLESS OTHERWISE SPECIFIED DIMENSIONS ARE IN INCHES
TOLERANCES ON
FRACTIONS ± DECIMALS ± ANGLES ±
DO NOT SCALE THIS DRAWING
MATERIAL
HEAT TREATMENT
FINAL FINISH

MIT
INSTRUMENTATION LAB
CAMBRIDGE, MASS.
DWG. NO. CONTRACT

DRAWN DATE 3/13/63
CHECKED 4/4/63
APPROVAL
APPROVAL
NASA APPROVAL 4/24/63
MIT APPROVAL 24 Apr 63

MANNED SPACECRAFT CENTER
HOUSTON, TEXAS

ASSEMBLY, WOUND K CORE

CODE IDENT NO.
SIZE C
NASA DRAWING NO. 1004108
SCALE 10:1
WT
SHEET OF

INCHES
0 1 2
PHOTOGRAPHIC SCALE ONLY

NOTICE — WHEN GOVERNMENT DRAWINGS, SPECIFICATIONS, OR OTHER DATA ARE USED FOR ANY PURPOSE OTHER THAN IN CONNECTION WITH A DEFINITELY RELATED GOVERNMENT PROCUREMENT OPERATION, THE UNITED STATES GOVERNMENT THEREBY INCURS NO RESPONSIBILITY NOR ANY OBLIGATION WHATSOEVER; AND THE FACT THAT THE GOVERNMENT MAY HAVE FORMULATED, FURNISHED, OR IN ANY WAY SUPPLIED THE SAID DRAWINGS, SPECIFICATIONS, OR OTHER DATA IS NOT TO BE REGARDED BY IMPLICATION OR OTHERWISE AS IN ANY MANNER LICENSING THE HOLDER OR ANY OTHER PERSON OR CORPORATION, OR CONVEYING ANY RIGHTS OR PERMISSION TO MANUFACTURE, USE, OR SELL ANY PATENTED INVENTION THAT MAY IN ANY WAY BE RELATED THERETO.

M

REVISIONS

SYM	DESCRIPTION	DATE	APPROVAL
A	REVISED PER TDRR 01457	6-4-63	

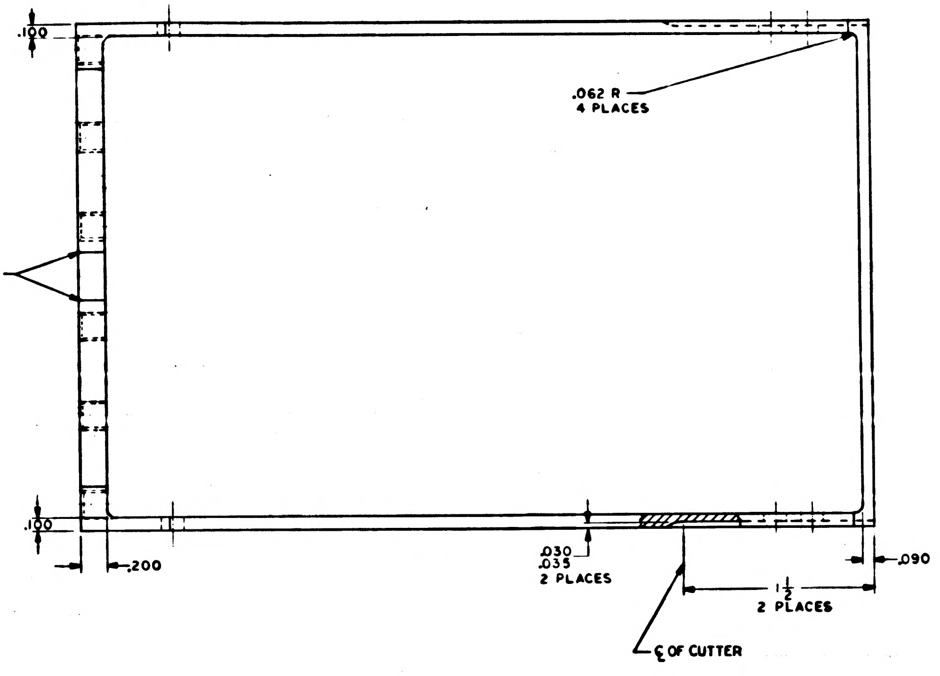
.100
.062 R
4 PLACES
.015 R
.100
.200
.030
.035
2 PLACES
.090
1 1/2
2 PLACES
℄ OF CUTTER

FOR INFORMATION ONLY

CLASS B RELEASE TDR No. 01298 DATE 5-23-63

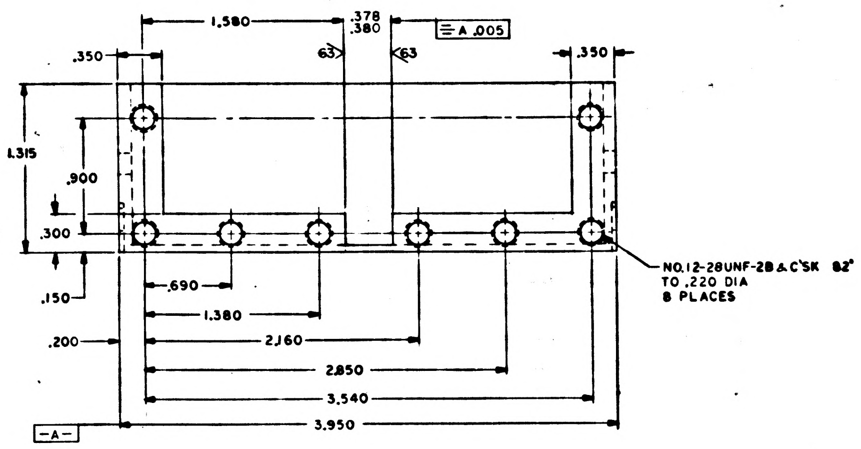
1.580
.378
.380
≡ A .005
.350
63
63
.350
1.315
.900
.300
.150
.200
.690
1.380
2.160
2.850
3.540
3.950
-A-
NO.12-28UNF-2B & C'SK 82°
TO .220 DIA
8 PLACES

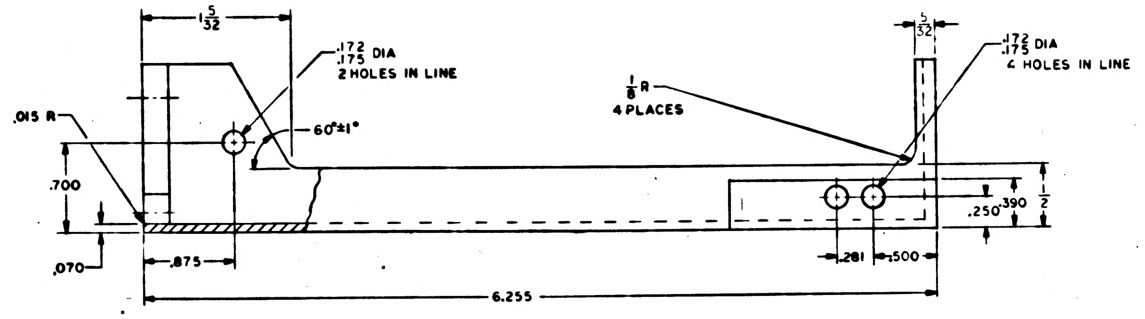
1 5/32
.172
.175 DIA
2 HOLES IN LINE
.015 R
60°±1°
.700
.070
.875
5/32
.172
.175 DIA
4 HOLES IN LINE
1/8 R
4 PLACES
.250
.390
1/2
.281
.500
6.255

NOTES:
1. INTERPRET DRAWING IN ACCORDANCE WITH STANDARDS PRESCRIBED BY MIL-D-70327
2. MATERIAL: 356-T6 ALUMINUIM PER QQ-A-601b
3. ANODIZE PER MIL-A-8625 TYPE II DYED BLACK
4. MACHINED SURFACES TO HAVE 125√ FINISH UNLESS OTHERWISE SPECIFIED: CAST FINISH
5. REMOVE BURRS AND SHARP EDGES

QTY REQD	PART OR IDENTIFYING NO.	NOMENCLATURE OR DESCRIPTION	FIND NO.

LIST OF MATERIALS

NEXT ASSY | USED ON
APPLICATION

UNLESS OTHERWISE SPECIFIED
DIMENSIONS ARE IN INCHES
TOLERANCES ON
FRACTIONS ± 1/64 DECIMALS ±.005 ANGLES ± 1/2°
DO NOT SCALE THIS DRAWING
MATERIAL
SEE NOTE 2
HEAT TREATMENT
FINAL FINISH
SEE NOTE 3

MIT
INSTRUMENTATION LAB
CAMBRIDGE MASS
DWG NO CONTRACT
DRAWN DATE 5-21-63
CHECKED 5-14-63
APPROVAL W B Turner 22 MAY 63
APPROVAL
NASA APPROVAL 5/22/63
MIT APPROVAL 5/22/63

MANNED SPACECRAFT CENTER
HOUSTON TEXAS

TRAY, RELAY
AGC KEYBOARD

CODE IDENT NO. | SIZE E | NASA DRAWING NO. 1004113
SCALE 2/1 | WT | SHEET 1 OF 1

MASTER

1004113

INCHES
0 1 2
PHOTOGRAPHIC SCALE ONLY

NOTICE — WHEN GOVERNMENT DRAWINGS, SPECIFICATIONS, OR OTHER DATA ARE USED FOR ANY PURPOSE OTHER THAN IN CONNECTION WITH A DEFINITELY RELATED GOVERNMENT PROCUREMENT OPERATION, THE UNITED STATES GOVERNMENT THEREBY INCURS NO RESPONSIBILITY NOR ANY OBLIGATION WHATSOEVER; AND THE FACT THAT THE GOVERNMENT MAY HAVE FORMULATED, FURNISHED, OR IN ANY WAY SUPPLIED THE SAID DRAWINGS, SPECIFICATIONS, OR OTHER DATA IS NOT TO BE REGARDED BY IMPLICATION OR OTHERWISE AS IN ANY MANNER LICENSING THE HOLDER OR ANY OTHER PERSON OR CORPORATION, OR CONVEYING ANY RIGHTS OR PERMISSION TO MANUFACTURE, USE, OR SELL ANY PATENTED INVENTION THAT MAY IN ANY WAY BE RELATED THERETO.

REVISIONS

SYM	DESCRIPTION	DATE	APPROVAL
A	REVISED PER TDRR 01457	6-4-63	
B	REPLACED AND UPGRADED TO CLASS A PER TDRR 02901	9-4-63	JW

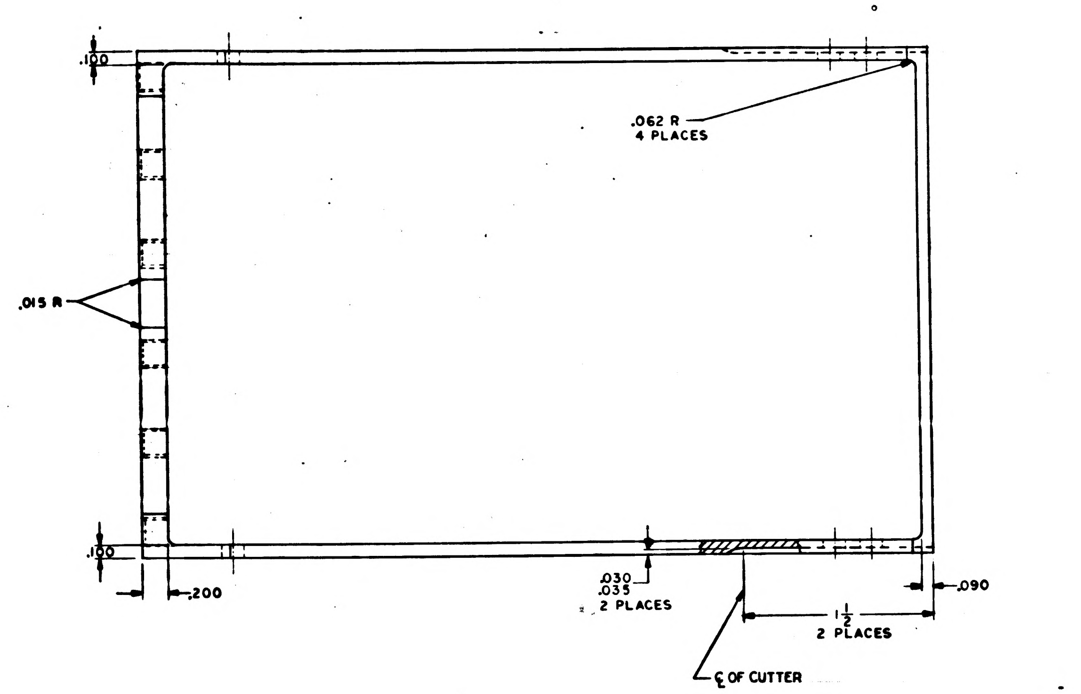

.100
.062 R
4 PLACES
.015 R
.100
.200
.030
.035
2 PLACES
1 1/2
2 PLACES
.090
℄ OF CUTTER

FOR . ATION ONLY

CLASS B RELEASE TDR No. 01298 DATE 5-22-63

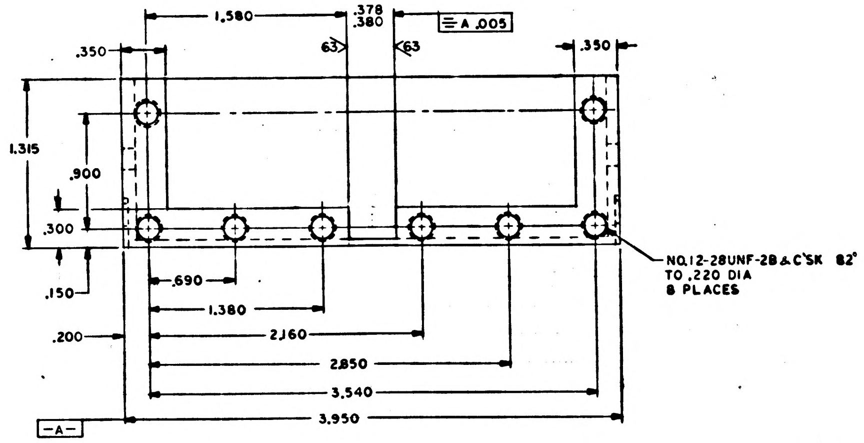

1.580
.378
.380
A .005
.350
63
63
.350
1.315
.900
.300
.150
.690
1.380
2.160
2.850
3.540
3.950
.200
-A-
NO.12-28UNF-2B & C'SK 82° TO .220 DIA
8 PLACES

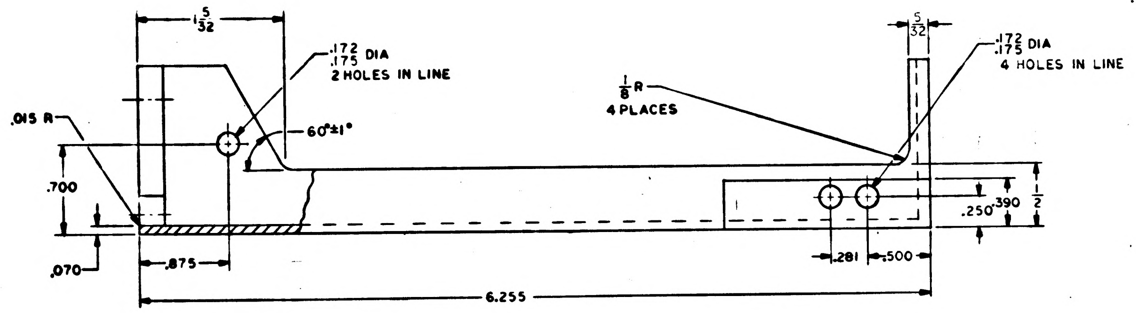

1 5/32
.172
.175 DIA
2 HOLES IN LINE
.015 R
60°±1°
.700
.070
.875
6.255
5/32
.172
.175 DIA
4 HOLES IN LINE
1/8 R
4 PLACES
.250
.390
1/2
.281
.500

NOTES:
1. INTERPRET DRAWING IN ACCORDANCE WITH STANDARDS PRESCRIBED BY MIL-D-70327
2. MATERIAL: 356-T6 ALUMINUIM PER QQ-A-601b
3. ANODIZE PER MIL-A-8625 TYPE II DYED BLACK
4. MACHINED SURFACES TO HAVE 125/ FINISH UNLESS OTHERWISE SPECIFIED: CAST FINISH
5. REMOVE BURRS AND SHARP EDGES

REV B REPLACED BY REV C

OBSOLETE

QTY REQD	PART OR IDENTIFYING NO.	NOMENCLATURE OR DESCRIPTION	FIND NO.

LIST OF MATERIALS

NEXT ASSY	USED ON

APPLICATION

UNLESS OTHERWISE SPECIFIED
DIMENSIONS ARE IN INCHES
TOLERANCES ON
FRACTIONS ±1/64 DECIMALS ±.005 ANGLES ±1/2°
DO NOT SCALE THIS DRAWING
MATERIAL
SEE NOTE 2
HEAT TREATMENT
FINAL FINISH
SEE NOTE 3

MIT
INSTRUMENTATION LAB
CAMBRIDGE, MASS
DWG NO CONTRACT
DRAWN DATE
CHECKED 5-14-63
APPROVAL 22 MAY 63
APPROVAL
NASA APPROVAL 5/22/63
MIT APPROVAL 5/22/63

MANNED SPACECRAFT CENTER
HOUSTON, TEXAS

TRAY, RELAY
AGC KEYBOARD

CODE IDENT NO.
SIZE E
NASA DRAWING NO. 1004113
SCALE 2/1
WT
SHEET 1 OF 1

MASTER

1004113 B

INCHES
0 1 2
PHOTOGRAPHIC SCALE ONLY

NOTICE – WHEN GOVERNMENT DRAWINGS, SPECIFICATIONS, OR OTHER DATA ARE USED FOR ANY PURPOSE OTHER THAN IN CONNECTION WITH A DEFINITELY RELATED GOVERNMENT PROCUREMENT OPERATION, THE UNITED STATES GOVERNMENT THEREBY INCURS NO RESPONSIBILITY NOR ANY OBLIGATION WHATSOEVER; AND THE FACT THAT THE GOVERNMENT MAY HAVE FORMULATED, FURNISHED, OR IN ANY WAY SUPPLIED THE SAID DRAWINGS, SPECIFICATIONS OR OTHER DATA IS NOT TO BE REGARDED BY IMPLICATION OR OTHERWISE AS IN ANY MANNER LICENSING THE HOLDER OR ANY OTHER PERSON OR CORPORATION, OR CONVEYING ANY RIGHTS OR PERMISSION TO MANUFACTURE, USE, OR SELL ANY PATENTED INVENTION THAT MAY IN ANY WAY BE RELATED THERETO.

ANY USE OF THIS DOCUMENT FOR OTHER THAN GOVERNMENTAL PURPOSES IS SUBJECT TO PRIOR WRITTEN CONSENT OF RAYTHEON CO.

REVISIONS

SYM	DESCRIPTION	DATE	APPROVED
C	REDRAWN REPLACES REV B WITH CHANGE AND UPDATED TO CLASS A PER TDRR 02901	7-5-63	

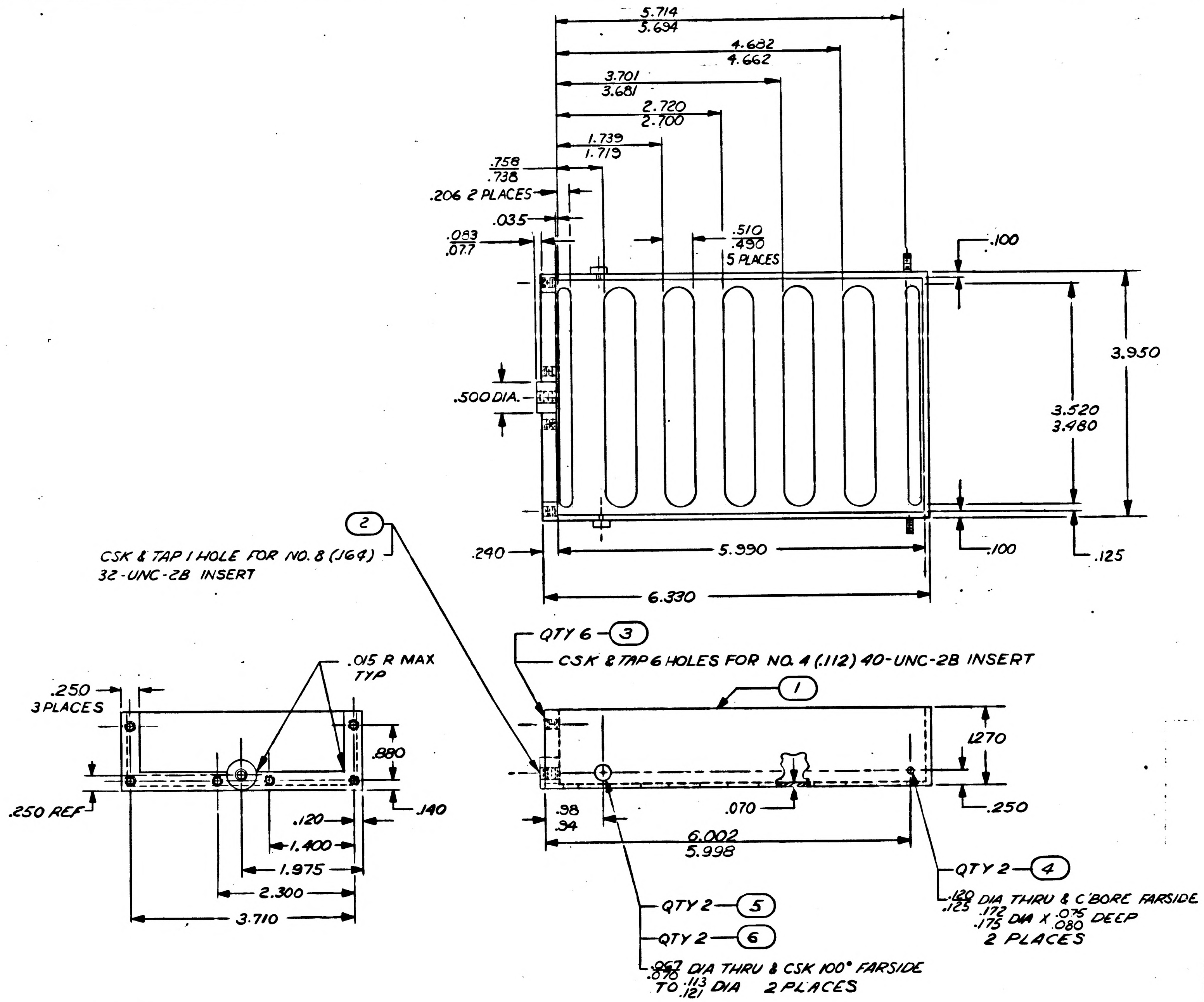
5.714
5.694
4.682
4.662
3.701
3.681
2.720
2.700
1.739
1.719
.758
.738
.206 2 PLACES
.035
.083
.077
.510
.490
5 PLACES
.100
3.950
3.520
3.480
.500 DIA.
.240
5.990
.100
.125
6.330
2
CSK & TAP 1 HOLE FOR NO. 8 (.164) 32-UNC-2B INSERT
QTY 6 – 3
CSK & TAP 6 HOLES FOR NO. 4 (.112) 40-UNC-2B INSERT
1
.015 R MAX TYP
.250 3 PLACES
.880
.250 REF
.140
.120
1.400
1.975
2.300
3.710
1.270
.250
.98
.94
.070
6.002
5.998
QTY 2 – 4
.120 .125 DIA THRU & C'BORE FARSIDE .172 .175 DIA X .075 .080 DEEP 2 PLACES
QTY 2 – 5
QTY 2 – 6
.067 .070 DIA THRU & CSK 100° FARSIDE TO .113 .121 DIA 2 PLACES

Ⓒ REPLACES REV B WITH CHANGE

NOTES

1. MATL CAST 356-T6 AL TEMP T6 CLASS 3M, COND T6 PER QQ-A-601
2. CAST SURFACE QUALITY 200/✓
3. MACHINE ALL SURFACES 125/✓
4. ANODIZE PER MIL-A-8625 TYPE I DYED BLACK

LIST OF MATERIALS

QTY REQD	PART OR IDENTIFYING NO.	NOMENCLATURE OR DESCRIPTION	FIND NO
2	MS20427F2-5	RIVET	6
2	1004118	PIN, GUIDE	5
2	1006951-26	STUD, CAPTIVE	4
6	MS21209-C0415	INSERT, SCREW THREAD, LOCKING	3
1	MS21209-C0815	INSERT, SCREW THREAD, LOCKING	2
1	1004113-1	HOUSING, RELAY MODULE	1

NEXT ASSY	USED ON
1003098	

APPLICATION

UNLESS OTHERWISE SPECIFIED DIMENSIONS ARE IN INCHES
TOLERANCES ON
FRACTIONS ±   DECIMALS ±.005   ANGLES ± 2°
DO NOT SCALE THIS DRAWING
MATERIAL SEE NOTE 1
HEAT TREATMENT NONE
FINAL FINISH SEE NOTE 4

MIT INSTRUMENTATION LAB
CAMBRIDGE, MASS
SERIAL NO.   CONTRACT
DRAWN O. McKinney DATE 17 JUL 63
CHECKED 26 Aug 63
APPROVAL Aug 28/63
APPROVAL 30 Aug
APPROVAL 4 Sept 63
NASA APPROVAL 9/5/63
MIT APPROVAL
MIT APPROVAL 9/5/63

MANNED SPACECRAFT CENTER
HOUSTON, TEXAS

HOUSING ASSEMBLY RELAY MODULE
AGC DISPLAY & KEYBOARD

CODE IDENT NO. —   SIZE D   NASA DRAWING NO. 1004113
SCALE 1/1   WT   SHEET 1 OF 1

INTERPRET DRAWING IN ACCORDANCE WITH STANDARDS PRESCRIBED BY MIL-D-70327

INCHES 0 1 2
PHOTOGRAPHIC SCALE ONLY

1004113

NOTICE — WHEN GOVERNMENT DRAWINGS, SPECIFICATIONS, OR OTHER DATA ARE USED FOR ANY PURPOSE OTHER THAN IN CONNECTION WITH A DEFINITELY RELATED GOVERNMENT PROCUREMENT OPERATION, THE UNITED STATES GOVERNMENT THEREBY INCURS NO RESPONSIBILITY NOR ANY OBLIGATION WHATSOEVER; AND THE FACT THAT THE GOVERNMENT MAY HAVE FORMULATED, FURNISHED, OR IN ANY WAY SUPPLIED THE SAID DRAWINGS, SPECIFICATIONS OR OTHER DATA IS NOT TO BE REGARDED BY IMPLICATION OR OTHERWISE AS IN ANY MANNER LICENSING THE HOLDER OR ANY OTHER PERSON OR CORPORATION, OR CONVEYING ANY RIGHTS OR PERMISSION TO MANUFACTURE, USE, OR SELL ANY PATENTED INVENTION THAT MAY IN ANY WAY BE RELATED THERETO.

ANY USE OF THIS DOCUMENT FOR OTHER THAN GOVERNMENTAL PURPOSES IS SUBJECT TO PRIOR WRITTEN CONSENT OF RAYTHEON CO.

REVISIONS

SYM	DESCRIPTION	DATE	APPROVED
C	REDRAWN REPLACES REV B WITH CHANGE AND UPDATED TO CLASS A PER TDRR 02901	9-5-63	JW
D	REVISED PER TDRR 04311	10-30-63	LK EPK WH

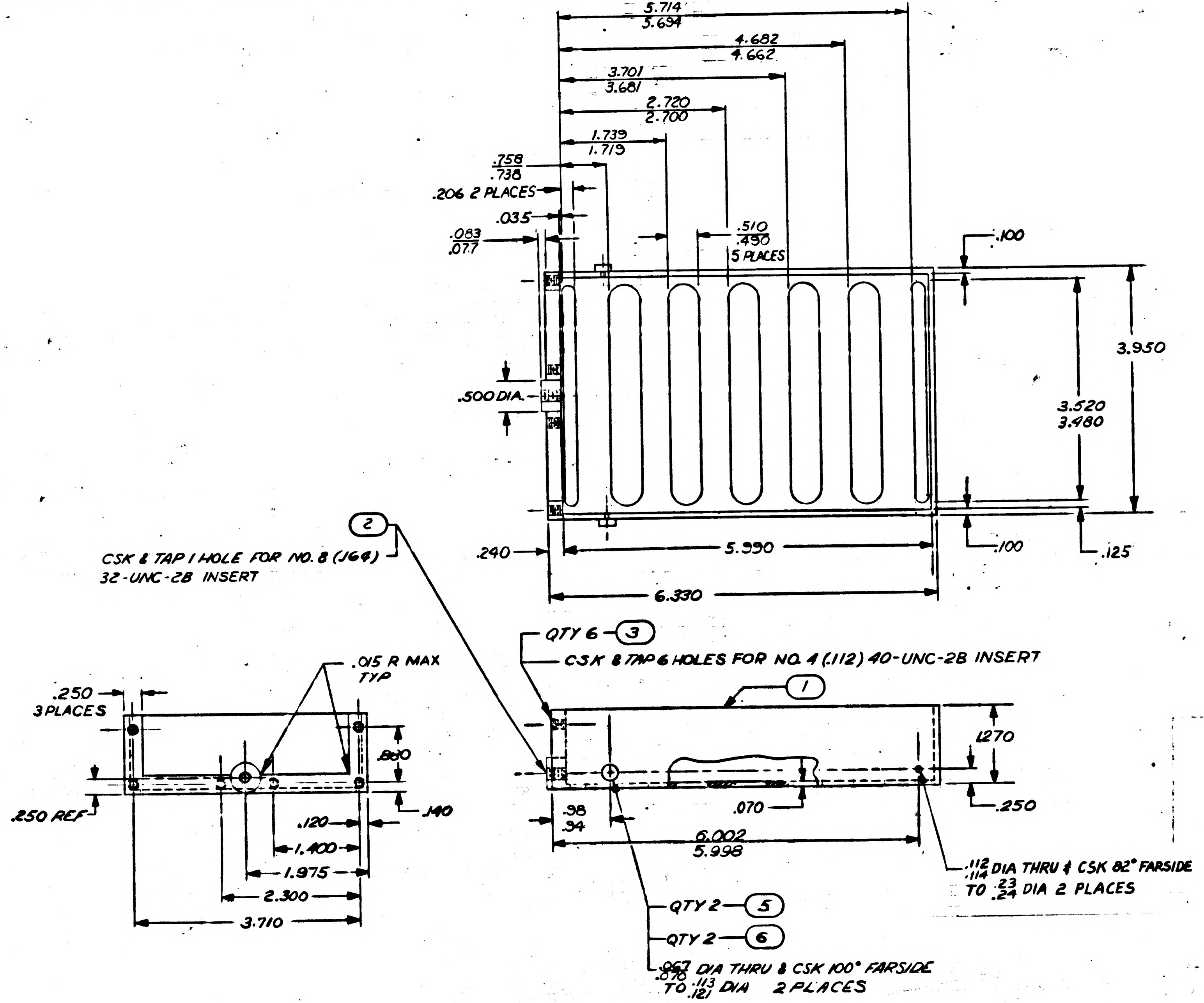
5.714
5.694
4.682
4.662
3.701
3.681
2.720
2.700
1.739
1.719
.758
.738
.206 2 PLACES
.035
.083
.077
.510
.490
5 PLACES
.100
3.950
3.520
3.480
.500 DIA.
.240
5.990
.100
.125
6.330
②
CSK & TAP 1 HOLE FOR NO. 8 (.164) 32-UNC-2B INSERT
QTY 6 ③
CSK & TAP 6 HOLES FOR NO. 4 (.112) 40-UNC-2B INSERT
①
.015 R MAX TYP
.250
3 PLACES
.800
.250 REF
.120
.140
1.400
1.975
2.300
3.710
.270
.250
.38
.34
.070
6.002
5.998
.112
.114 DIA THRU & CSK 82° FARSIDE TO .23
.24 DIA 2 PLACES
QTY 2 ⑤
QTY 2 ⑥
.067
.070 DIA THRU & CSK 100° FARSIDE TO .113
.121 DIA 2 PLACES

Ⓒ REPLACES REV B WITH CHANGE

NOTES

1. MATL CAST 356-T6 AL TEMP T6 CLASS 3M, COND T6 PER QQ-A-601
2. CAST SURFACE QUALITY 200/
3. MACHINE ALL SURFACES 125/
4. ANODIZE PER MIL-A-8625 TYPE I DYED BLACK

QTY REQD	PART OR IDENTIFYING NO.	NOMENCLATURE OR DESCRIPTION	FIND NO
2	MS20427F2-5	RIVET	6
2	1004118	PIN, GUIDE	5
			4
6	MS21209-C0415	INSERT, SCREW THREAD, LOCKING	3
1	MS21209-C0815	INSERT, SCREW THREAD, LOCKING	2
1	1004113-1	HOUSING, RELAY MODULE	1

LIST OF MATERIALS

1003098	
NEXT ASSY	USED ON
APPLICATION	

UNLESS OTHERWISE SPECIFIED DIMENSIONS ARE IN INCHES
TOLERANCES ON
FRACTIONS ± DECIMALS ±.005 ANGLES ± 2°
DO NOT SCALE THIS DRAWING
MATERIAL SEE NOTE 1
HEAT TREATMENT NONE
FINAL FINISH SEE NOTE 4

MIT
INSTRUMENTATION LAB
CAMBRIDGE, MASS.
DRAWN O. McKenney DATE 17 JUL 63
CHECKED R. F. [illegible] 26 Aug 63
APPROVAL J. Jensen Aug 29/63
APPROVAL [illegible] 30 Aug
APPROVAL [illegible] 4 Sept 63
NASA APPROVAL M. Lucas 9/5/63
MIT APPROVAL
MIT APPROVAL [illegible] 9/5/63

MANNED SPACECRAFT CENTER
HOUSTON, TEXAS

HEADER ASSEMBLY RELAY MODULE
A.G.C. DSKY NAV & MAIN

CODE IDENT NO. ——
SIZE D
NASA DRAWING NO. 1004113
SCALE 1/1
WT
SHEET 1 OF 1

INTERPRET DRAWING IN ACCORDANCE WITH STANDARDS PRESCRIBED BY MIL-D-70327

NOTICE — WHEN GOVERNMENT DRAWINGS, SPECIFICATIONS, OR OTHER DATA ARE USED FOR ANY PURPOSE OTHER THAN IN CONNECTION WITH A DEFINITELY RELATED GOVERNMENT PROCUREMENT OPERATION, THE UNITED STATES GOVERNMENT THEREBY INCURS NO RESPONSIBILITY NOR ANY OBLIGATION WHATSOEVER; AND THE FACT THAT THE GOVERNMENT MAY HAVE FORMULATED, FURNISHED, OR IN ANY WAY SUPPLIED THE SAID DRAWINGS, SPECIFICATIONS OR OTHER DATA IS NOT TO BE REGARDED BY IMPLICATION OR OTHERWISE AS IN ANY MANNER LICENSING THE HOLDER OR ANY OTHER PERSON OR CORPORATION, OR CONVEYING ANY RIGHTS OR PERMISSION TO MANUFACTURE, USE, OR SELL ANY PATENTED INVENTION THAT MAY IN ANY WAY BE RELATED THERETO.

ANY USE OF THIS DOCUMENT FOR OTHER THAN GOVERNMENTAL PURPOSES IS SUBJECT TO PRIOR WRITTEN CONSENT OF RAYTHEON CO.

REVISIONS

SYM	DESCRIPTION	DATE	APPROVED
C	REDRAWN REPLACES REV B WITH CHANGE AND UPDATED TO CLASS A PER TDRR 02901	7-5-63	
D	REVISED PER TDRR 04311	10-30-63	
E	REVISED PER TDRR 04513	11-8-63	

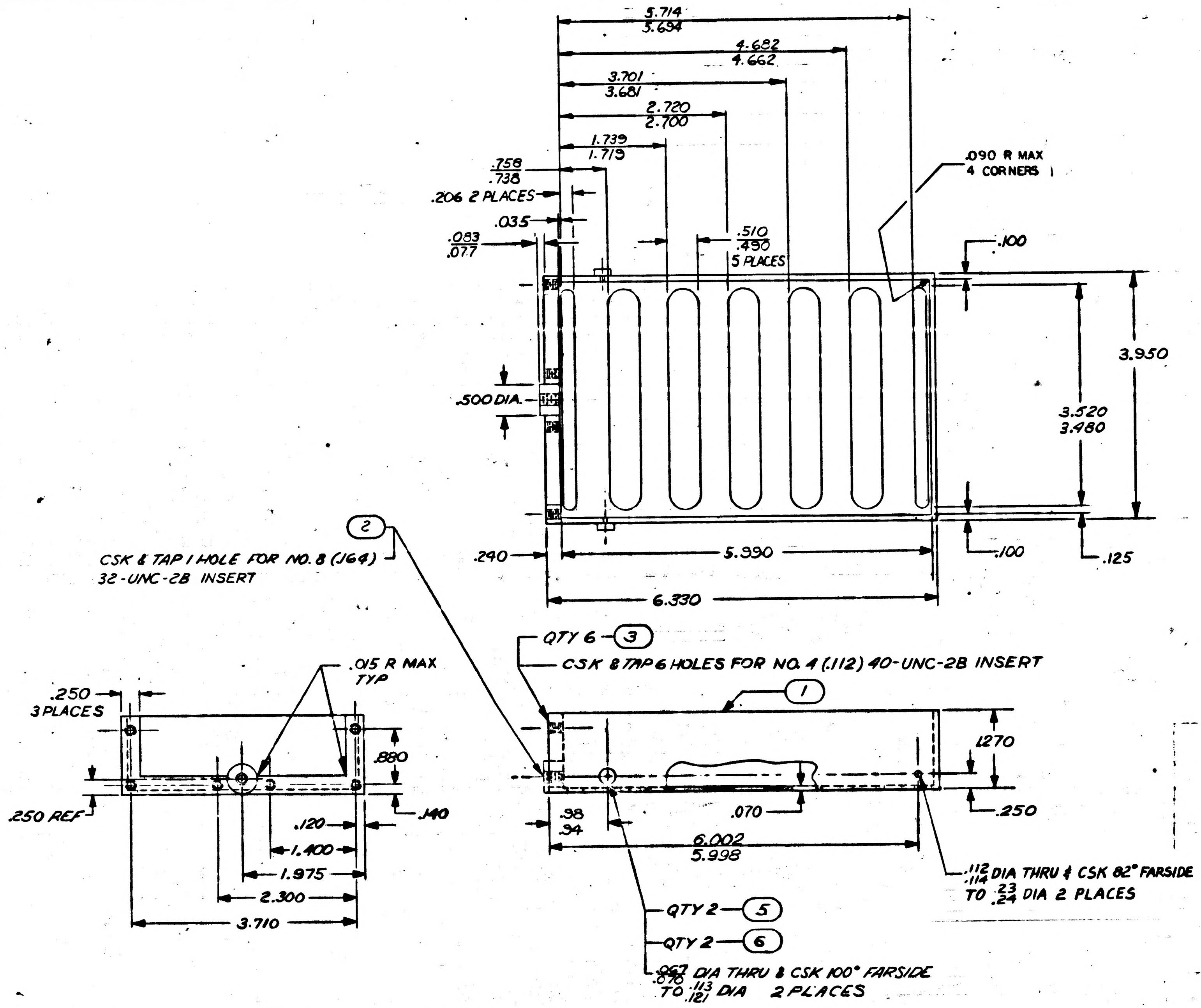

5.714
5.694
4.682
4.662
3.701
3.681
2.720
2.700
1.739
1.719
.758
.738
.206 2 PLACES
.035
.083
.077
.510
.490
5 PLACES
.090 R MAX
4 CORNERS
.100
3.950
3.520
3.480
.500 DIA.
.240
5.990
.100
.125
6.330
2
CSK & TAP 1 HOLE FOR NO. 8 (.164) 32-UNC-2B INSERT
QTY 6
3
CSK & TAP 6 HOLES FOR NO. 4 (.112) 40-UNC-2B INSERT
1
.015 R MAX TYP
.250 3 PLACES
.880
.250 REF
.120
.140
1.400
1.975
2.300
3.710
.1270
.070
.250
.98
.94
6.002
5.998
.112 .114 DIA THRU & CSK 82° FARSIDE TO .23 .24 DIA 2 PLACES
QTY 2
5
QTY 2
6
.067 .070 DIA THRU & CSK 100° FARSIDE TO .113 .121 DIA 2 PLACES

ⓒ REPLACES REV B WITH CHANGE

NOTES

1. MATL MAKE FROM DWG NO 1004562
2. MACHINE ALL SURFACES ✓
4. ANODIZE PER MIL-A-8625 TYPE I DYED BLACK
3. REMOVE ALL BURRS & SHARP EDGES.

SEE NOTE 1 →

QTY REQD	PART OR IDENTIFYING NO.	NOMENCLATURE OR DESCRIPTION	FIND NO.
2	MS20427F2-5	RIVET	6
2	1004118	PIN, GUIDE	5
			4
6	MS21209-C0415	INSERT, SCREW THREAD, LOCKING	3
1	MS21209-C0815	INSERT, SCREW THREAD, LOCKING	2
1	1004113-1	HOUSING, RELAY MODULE	1

LIST OF MATERIALS

NEXT ASSY	USED ON
1003098	

APPLICATION

UNLESS OTHERWISE SPECIFIED DIMENSIONS ARE IN INCHES
TOLERANCES ON
FRACTIONS ± DECIMALS ±.005 ANGLES ± 2°
DO NOT SCALE THIS DRAWING
MATERIAL SEE NOTE 1
HEAT TREATMENT NONE
FINAL FINISH SEE NOTE 4

MIT INSTRUMENTATION LAB
CAMBRIDGE, MASS.
DWG. NO.
CONTRACT
DRAWN D. McKenney DATE 17 JUL 63
CHECKED R. L. Bush 26 Aug 63
APPROVAL
APPROVAL
APPROVAL
NASA APPROVAL
MIT APPROVAL
MIT APPROVAL 9/5/63

MANNED SPACECRAFT CENTER
HOUSTON, TEXAS

HEADER ASSEMBLY RELAY MODULE
AGC DSKY NAV & MAIN

CODE IDENT NO. —
SIZE D
NASA DRAWING NO. 1004113
SCALE 1/1
WT
SHEET 1 OF 1

INTERPRET DRAWING IN ACCORDANCE WITH STANDARDS PRESCRIBED BY MIL-D-70327

INCHES
0 1 2
PHOTOGRAPHIC SCALE ONLY

NOTICE WHEN GOVERNMENT DRAWINGS SPECIFICATIONS OR OTHER DATA ARE USED FOR ANY PURPOSE OTHER THAN IN CONNECTION WITH A DEFINITELY RELATED GOVERNMENT PROCUREMENT OPERATION, THE UNITED STATES GOVERNMENT THEREBY INCURS NO RESPONSIBILITY NOR ANY OBLIGATION WHATSOEVER; AND THE FACT THAT THE GOVERNMENT MAY HAVE FORMULATED FURNISHED, OR IN ANY WAY SUPPLIED THE SAID DRAWINGS SPECIFICATIONS OR OTHER DATA IS NOT TO BE REGARDED BY IMPLICATION OR OTHERWISE AS IN ANY MANNER LICENSING THE HOLDER OR ANY OTHER PERSON OR CORPORATION, OR CONVEYING ANY RIGHTS OR PERMISSION TO MANUFACTURE, USE, OR SELL ANY PATENTED INVENTION THAT MAY IN ANY WAY BE RELATED THERETO.

ANY USE OF THIS DOCUMENT FOR OTHER THAN GOVERNMENTAL PURPOSES IS SUBJECT TO PRIOR WRITTEN CONSENT OF RAYTHEON CO.

REVISIONS			
SYM	DESCRIPTION	DATE	APPROVED
C	REDRAWN REPLACES REV B WITH CHANGE AND UPDATED TO CLASS A PER TDRR 02901	7-5-63	JW
D	REVISED PER TDRR 04311	10-30-63	LK RPK WH
E	REVISED PER TDRR 04513	1-8-64	WK
F	REVISED PER TDRR 07347 DR. CHK	6 Nov 64	

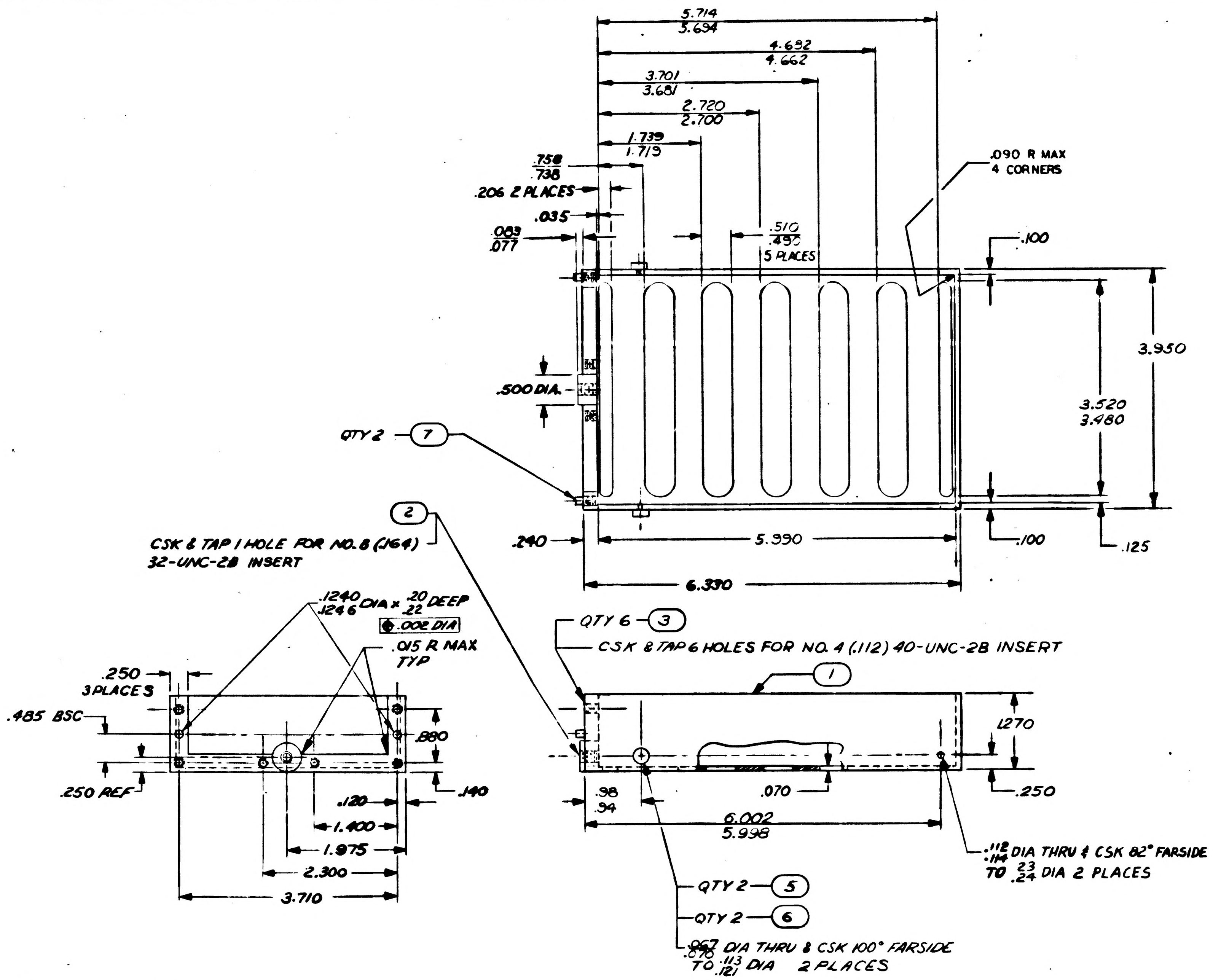
5.714
5.694
4.692
4.662
3.701
3.681
2.720
2.700
1.739
1.719
.758
.738
.206 2 PLACES
.035
.083
.077
.510
.490
5 PLACES
.090 R MAX
4 CORNERS
.100
3.950
.500 DIA.
3.520
3.480
QTY 2 — 7
2
CSK & TAP 1 HOLE FOR NO. 8 (.164) 32-UNC-2B INSERT
.240
5.990
.100
.125
6.330
.1240
.1246 DIA × .20
.22 DEEP
.002 DIA
.015 R MAX
TYP
.250
3 PLACES
.485 BSC
.880
.250 REF
.120
.140
1.400
1.975
2.300
3.710
QTY 6 — 3
CSK & TAP 6 HOLES FOR NO. 4 (.112) 40-UNC-2B INSERT
1
1.270
.98
.94
.070
.250
6.002
5.998
.112
.114 DIA THRU & CSK 82° FARSIDE
TO .23
.24 DIA 2 PLACES
QTY 2 — 5
QTY 2 — 6
.067
.070 DIA THRU & CSK 100° FARSIDE
TO .113
.121 DIA 2 PLACES

Ⓒ REPLACES REV B WITH CHANGE

NOTES

1. MATL MAKE FROM DWG NO 1004562
2. MACHINE ALL SURFACES 125✓
4. ANODIZE PER MIL-A-8625 TYPE I DYED BLACK
3. REMOVE ALL BURRS & SHARP EDGES

SEE NOTE 1

QTY REQD	PART OR IDENTIFYING NO.	NOMENCLATURE OR DESCRIPTION	FIND NO
2	AN122691	PIN DOWELL	7
2	MS20427F2-5	RIVET	6
2	1004118	PIN GUIDE	5
			4
6	MS21209-C0415	INSERT, SCREW THREAD, LOCKING	3
1	MS21209-C0815	INSERT, SCREW THREAD, LOCKING	2
1	1004113-1	HOUSING, RELAY MODULE	1

LIST OF MATERIALS

NEXT ASSY	USED ON
1003098	

APPLICATION

UNLESS OTHERWISE SPECIFIED DIMENSIONS ARE IN INCHES
TOLERANCES ON
FRACTIONS ± DECIMALS ±.005 ANGLES ± 2°
DO NOT SCALE THIS DRAWING
MATERIAL SEE NOTE 1
HEAT TREATMENT NONE
FINAL FINISH SEE NOTE 4

MIT
INSTRUMENTATION LAB
CAMBRIDGE, MASS
DWG. NO. CONTRACT

DRAWN DATE
CHECKED
APPROVAL
APPROVAL
APPROVAL
NASA APPROVAL
MIT APPROVAL
MIT APPROVAL

MANNED SPACECRAFT CENTER
HOUSTON, TEXAS

HEADER ASSEMBLY RELAY MODULE
AGC DSKY NAV & MAIN

CODE IDENT NO. —— SIZE D NASA DRAWING NO. 1004113
SCALE 1/1 WT SHEET 1 OF 1

INTERPRET DRAWING IN ACCORDANCE WITH STANDARDS PRESCRIBED BY MIL-D-70327

NOTICE — WHEN GOVERNMENT DRAWINGS, SPECIFICATIONS, OR OTHER DATA ARE USED FOR ANY PURPOSE OTHER THAN IN CONNECTION WITH A DEFINITELY RELATED GOVERNMENT PROCUREMENT OPERATION, THE UNITED STATES GOVERNMENT THEREBY INCURS NO RESPONSIBILITY NOR ANY OBLIGATION WHATSOEVER; AND THE FACT THAT THE GOVERNMENT MAY HAVE FORMULATED, FURNISHED, OR IN ANY WAY SUPPLIED THE SAID DRAWINGS, SPECIFICATIONS OR OTHER DATA IS NOT TO BE REGARDED BY IMPLICATION OR OTHERWISE AS IN ANY MANNER LICENSING THE HOLDER OR ANY OTHER PERSON OR CORPORATION, OR CONVEYING ANY RIGHTS OR PERMISSION TO MANUFACTURE, USE, OR SELL ANY PATENTED INVENTION THAT MAY IN ANY WAY BE RELATED THERETO.

ANY USE OF THIS DOCUMENT FOR OTHER THAN GOVERNMENTAL PURPOSES IS SUBJECT TO PRIOR WRITTEN CONSENT OF RAYTHEON CO.

REVISIONS

SYM	DESCRIPTION	DATE	APPROVED
C	REDRAWN REPLACES REV B WITH CHANGE AND UPDATED TO CLASS A PER TDRR 02901	7-5-63	JW
D	REVISED PER TDRR 04311	10-30-63	LR RPK WH
E	REVISED PER TDRR 04513	11-8-63	WK
F	REVISED PER TDRR 07347 DR CHK	16 Nov 64	
G	REVISED PER TDRR 12305 DR CHK ATM	9/27/66	

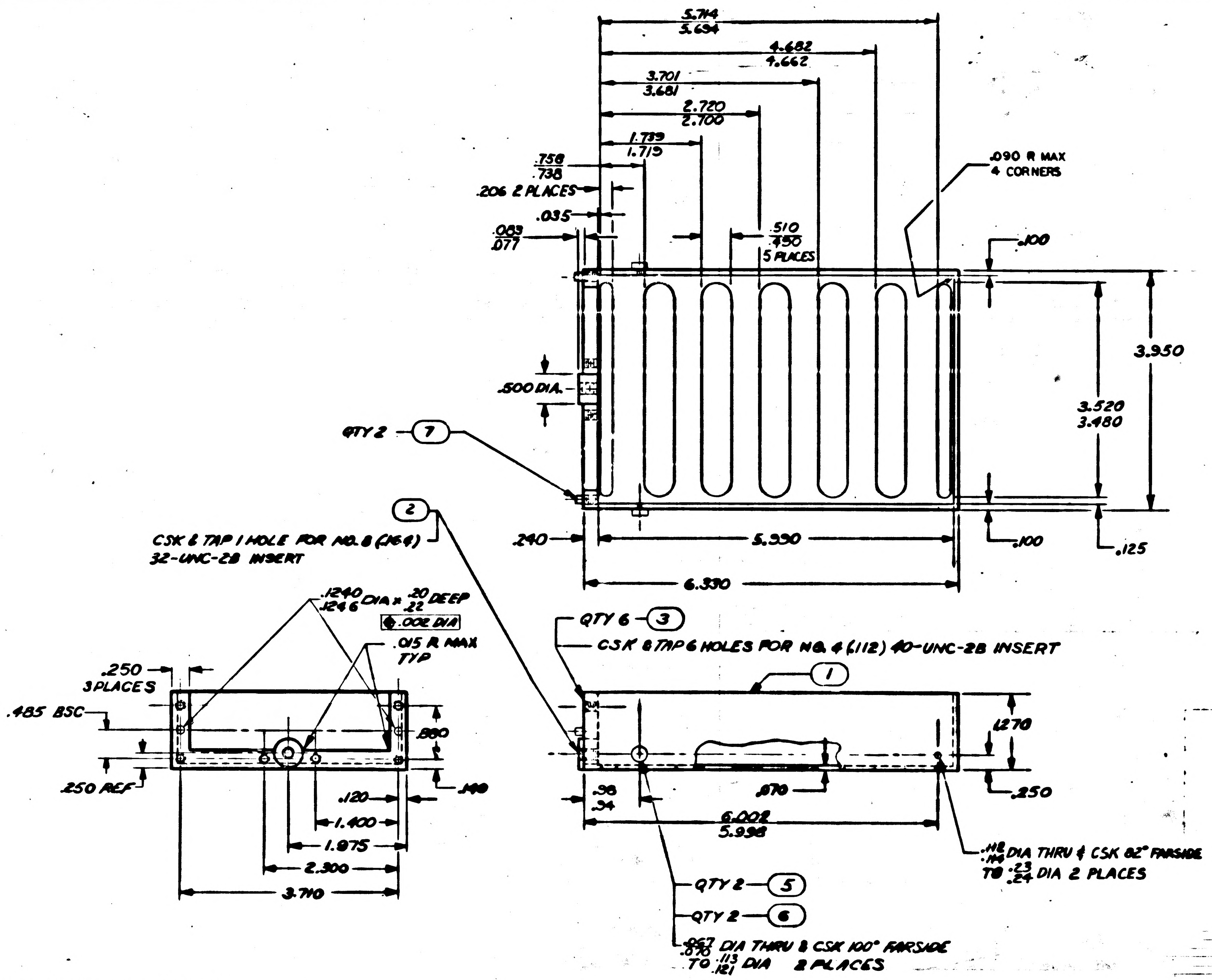
5.714
5.694
4.682
4.662
3.701
3.681
2.720
2.700
1.739
1.719
.758
.738
.206 2 PLACES
.035
.083
.077
.510
.490
5 PLACES
.090 R MAX
4 CORNERS
.100
3.950
3.520
3.480
.500 DIA.
QTY 2 — 7
2
CSK & TAP 1 HOLE FOR NO. 8 (.164) 32-UNC-2B INSERT
.240
5.330
.100
.125
6.330
.1240
.1246 DIA x .20 .22 DEEP
.002 DIA
.015 R MAX TYP
.250 3 PLACES
.485 BSC
.880
.250 REF
.140
.120
1.400
1.875
2.300
3.710
QTY 6 — 3
CSK & TAP 6 HOLES FOR NO. 4 (.112) 40-UNC-2B INSERT
1
1.270
.98
.34
.070
.250
6.002
5.998
.118 .114 DIA THRU & CSK 82° FARSIDE TO .23 .24 DIA 2 PLACES
QTY 2 — 5
QTY 2 — 6
.067 .070 DIA THRU & CSK 100° FARSIDE TO .113 .121 DIA 2 PLACES

NOTES

1. MATL MAKE FROM DWG NO 1004562
2. MACHINE ALL SURFACES 125✓
4. ANODIZE PER MIL-A-8625 TYPE I DYED BLACK
3. REMOVE ALL BURRS & SHARP EDGES

Ⓒ REPLACES REV B WITH CHANGE

SEE NOTE 1

QTY REQD	PART OR IDENTIFYING NO	NOMENCLATURE OR DESCRIPTION	FIND NO.
2	AN122691	PIN DOWELL	7
2	MS20426A2-4	RIVET	6
2	1004118	PIN GUIDE	5
			4
6	MS21209-C0415	INSERT, SCREW THREAD, LOCKING	3
1	MS21209-C0815	INSERT, SCREW THREAD, LOCKING	2
1	1004113-1	HOUSING, RELAY MODULE	1

LIST OF MATERIALS

1003098	
NEXT ASSY	USED ON
APPLICATION	

UNLESS OTHERWISE SPECIFIED
DIMENSIONS ARE IN INCHES
TOLERANCES ON
FRACTIONS ± DECIMALS ±.005 ANGLES ±2°
DO NOT SCALE THIS DRAWING
MATERIAL SEE NOTE 1
HEAT TREATMENT NONE
FINAL FINISH SEE NOTE 4

MIT
INSTRUMENTATION LAB
CAMBRIDGE, MASS.
DRAWN DATE 12/14/62
CHECKED
APPROVAL
APPROVAL
APPROVAL
NASA APPROVAL
MIT APPROVAL
MIT APPROVAL

MANNED SPACECRAFT CENTER
HOUSTON, TEXAS

HEADER ASSEMBLY RELAY MODULE

AGC DSKY NAV & MAIN

CODE IDENT NO. —
SIZE D
NASA DRAWING NO. 1004113
SCALE 1/1
WT
SHEET 1 OF 1

INTERPRET DRAWING IN ACCORDANCE WITH STANDARDS PRESCRIBED BY MIL-D-70327

NOTICE — WHEN GOVERNMENT DRAWINGS, SPECIFICATIONS, OR OTHER DATA ARE USED FOR ANY PURPOSE OTHER THAN IN CONNECTION WITH A DEFINITELY RELATED GOVERNMENT PROCUREMENT OPERATION, THE UNITED STATES GOVERNMENT THEREBY INCURS NO RESPONSIBILITY NOR ANY OBLIGATION WHATSOEVER; AND THE FACT THAT THE GOVERNMENT MAY HAVE FORMULATED, FURNISHED, OR IN ANY WAY SUPPLIED THE SAID DRAWINGS, SPECIFICATIONS, OR OTHER DATA IS NOT TO BE REGARDED BY IMPLICATION OR OTHERWISE AS IN ANY MANNER LICENSING THE HOLDER OR ANY OTHER PERSON OR CORPORATION, OR CONVEYING ANY RIGHTS OR PERMISSION TO MANUFACTURE, USE, OR SELL ANY PATENTED INVENTION THAT MAY IN ANY WAY BE RELATED THERETO

SYM	DESCRIPTION	DATE	APPROVAL

REVISIONS

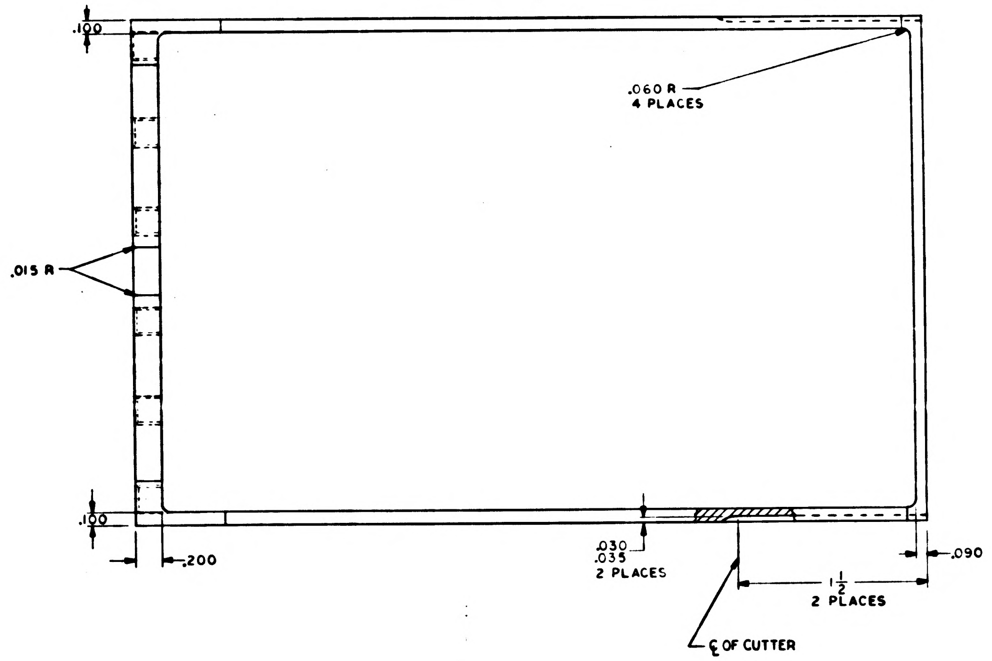
.100
.060 R
4 PLACES
.015 R
.100
.200
.030
.035
2 PLACES
.090
1 1/2
2 PLACES
℄ OF CUTTER

FOR INFORMATION ONLY

CLASS B RELEASE TDR No. 01298 DATE 5-22-63

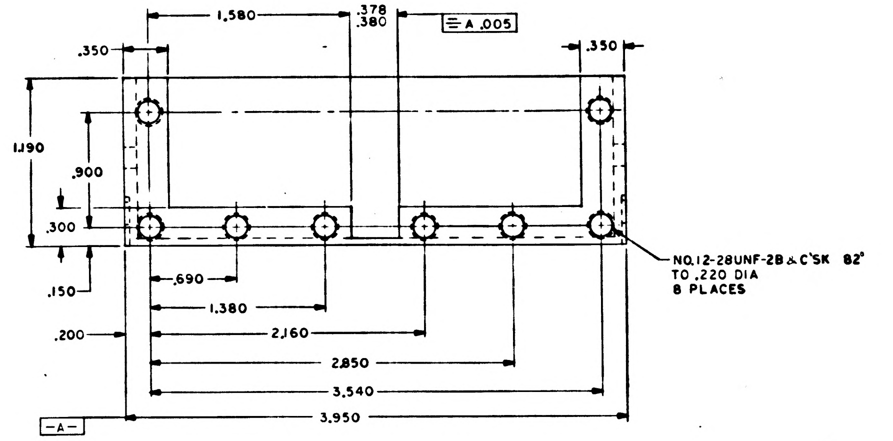
1.580
.378
.380
A .005
.350
.350
1.190
.900
.300
.150
.200
.690
1.380
2.160
2.850
3.540
3.950
-A-
NO.12-28UNF-2B & C'SK 82°
TO .220 DIA
8 PLACES

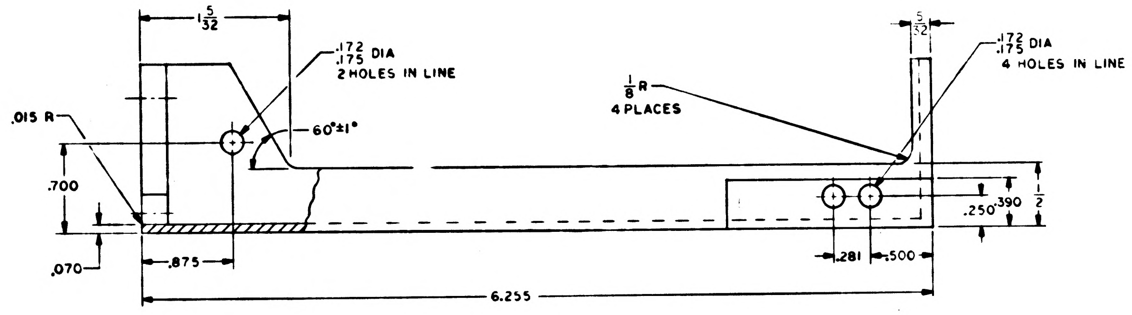
1 5/32
.172
.175 DIA
2 HOLES IN LINE
.015 R
60°±1°
1/8 R
4 PLACES
.172
.175 DIA
4 HOLES IN LINE
.700
.070
.875
.250
.390
.281
.500
6.255

NOTES:
1. INTERPRET DRAWING IN ACCORDANCE WITH STANDARDS PRESCRIBED BY MIL-D-70327
2. MATERIAL: 356-T6 ALUMINUIM PER QQ-A-601b
3. ANODIZE PER MIL-A-8625 TYPE II DYED BLACK
4. MACHINED SURFACES TO HAVE 125√ FINISH
5. REMOVE BURRS AND SHARP EDGES

QTY REQD	PART OR IDENTIFYING NO.	NOMENCLATURE OR DESCRIPTION	FIND NO

LIST OF MATERIALS

NEXT ASSY	USED ON
APPLICATION	

UNLESS OTHERWISE SPECIFIED
DIMENSIONS ARE IN INCHES
TOLERANCES ON
FRACTIONS ± 1/64 DECIMALS ±.005 ANGLES ± 1/2°
DO NOT SCALE THIS DRAWING

MATERIAL
SEE NOTE 2

HEAT TREATMENT

FINAL FINISH
SEE NOTE 3

MIT
INSTRUMENTATION LAB
CAMBRIDGE, MASS
DWG NO CONTRACT

DRAWN DATE
CHECKED 5-14-63
APPROVAL W.B. Turner 22 MAY 63
APPROVAL

NASA APPROVAL 5/22/63
MIT APPROVAL 5/23/63

MANNED SPACECRAFT CENTER
HOUSTON, TEXAS

TRAY, RELAY
AGC KEYBOARD

CODE IDENT NO.
SIZE E
NASA DRAWING NO 1004113
SCALE 2:1
WT
SHEET OF 1

1004113

INCHES
PHOTOGRAPHIC SCALE ONLY

NOTICE — WHEN GOVERNMENT DRAWINGS, SPECIFICATIONS, OR OTHER DATA ARE USED FOR ANY PURPOSE OTHER THAN IN CONNECTION WITH A DEFINITELY RELATED GOVERNMENT PROCUREMENT OPERATION, THE UNITED STATES GOVERNMENT THEREBY INCURS NO RESPONSIBILITY NOR ANY OBLIGATION WHATSOEVER, AND THE FACT THAT THE GOVERNMENT MAY HAVE FORMULATED, FURNISHED, OR IN ANY WAY SUPPLIED THE SAID DRAWINGS, SPECIFICATIONS OR OTHER DATA IS NOT TO BE REGARDED BY IMPLICATION OR OTHERWISE AS IN ANY MANNER LICENSING THE HOLDER OR ANY OTHER PERSON OR CORPORATION, OR CONVEYING ANY RIGHTS OR PERMISSION TO MANUFACTURE, USE, OR SELL ANY PATENTED INVENTION THAT MAY IN ANY WAY BE RELATED THERETO.

1004114 B

REVISIONS			
SYM	DESCRIPTION	DATE	APPROVAL
B	REDRAWN REPLACES REV A WITH CHANGE PER TDRR 03454	9/26/63 9-26-63	

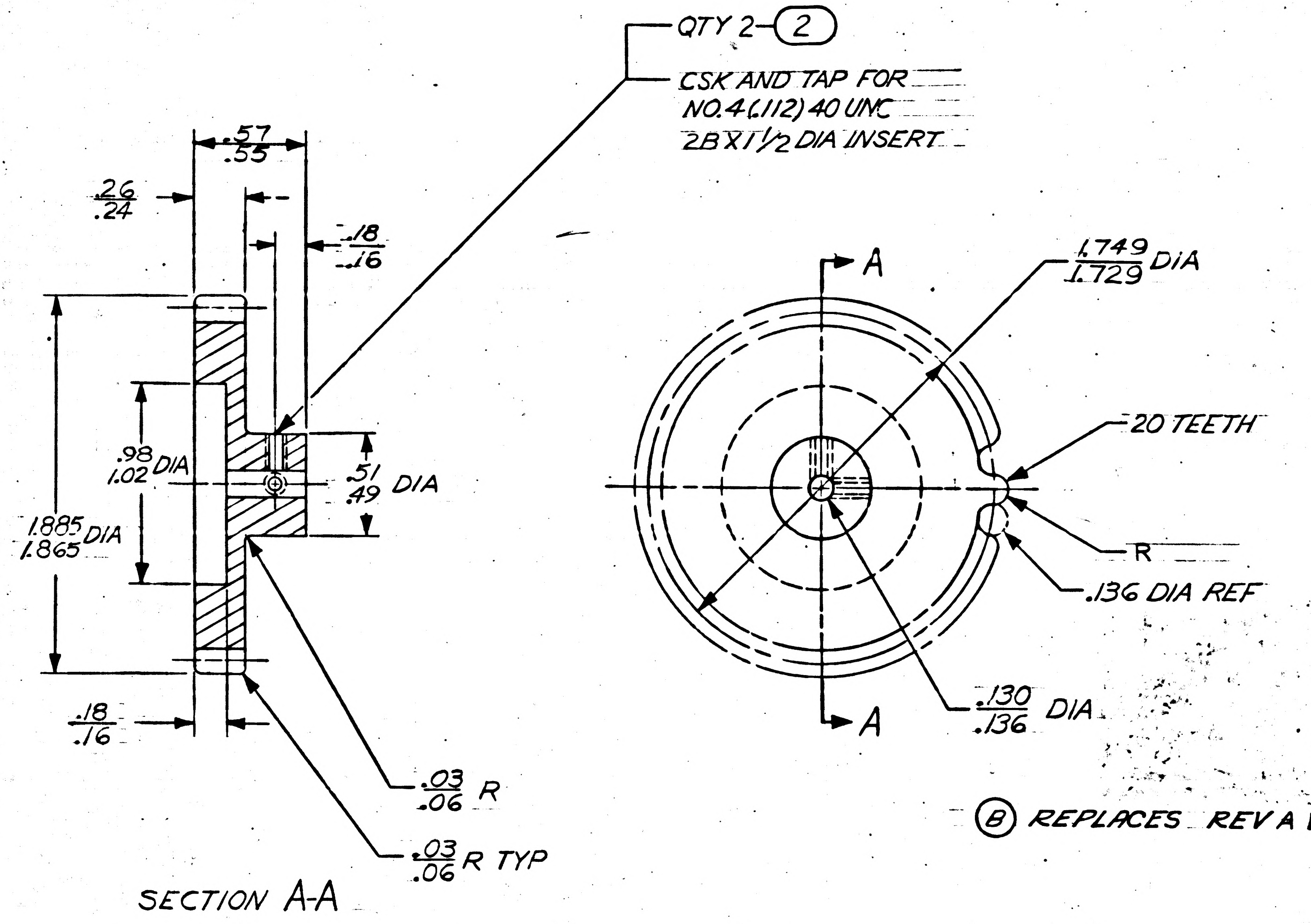

Ⓑ REPLACES REV A WITH CHANGE

NOTES:
1. MATL: 6061-T6 AL. PER QQ-A-325, TEMPER T6
2. REMOVE ALL BURRS AND SHARP EDGES
3. MASK TAPPED HOLES AND THRU HOLE AND PAINT 1 COAT LIGHT GRAY PER FED-STD-595 COLOR CHIP NO. 36231
4. INTERPRET DRAWING IN ACCORDANCE WITH STANDARDS PRESCRIBED BY MIL-D-70327
5. INSTALL FIND NO. 2 PER MS33646-BREAK OFF DRIVING TANG
6. COAT THREADS AND FIND NO. 2 WITH MIL-P-8585, WET ZINC CHROMATE

QTY REQD	PART OR IDENTIFYING NO.	NOMENCLATURE OR DESCRIPTION	FIND NO.
2	MS21209-C0415	INSERT, SCREW THREAD LOCKING	2
1	1004114-1	THUMB WHEEL	1

LIST OF MATERIALS

NEXT ASSY	USED ON
1003524	

APPLICATION

UNLESS OTHERWISE SPECIFIED DIMENSIONS ARE IN INCHES TOLERANCES ON
FRACTIONS ± DECIMALS ± ANGLES ±
DO NOT SCALE THIS DRAWING
MATERIAL: SEE NOTE 1
HEAT TREATMENT: NONE
FINAL FINISH: SEE NOTE 3&4

MIT INSTRUMENTATION LAB
CAMBRIDGE, MASS.
DWG. NO.
CONTRACT

DRAWN DATE 6 Sep 63
CHECKED 6 Sep 63
APPROVAL Sept 19/63
APPROVAL 5 SEP 63
NASA APPROVAL 9/26/63
MIT APPROVAL
MIT APPROVAL 9/26/63

MANNED SPACECRAFT CENTER
HOUSTON, TEXAS

THUMB WHEEL
AGC DISPLAY AND KEYBOARD

CODE IDENT NO.
SIZE C
NASA DRAWING NO. 1004114
SCALE 2/1
WT
SHEET 1 OF 1

INCHES
0 2
PHOTOGRAPHIC SCALE ONLY

NOTICE — WHEN GOVERNMENT DRAWINGS, SPECIFICATIONS, OR OTHER DATA ARE USED FOR ANY PURPOSE OTHER THAN IN CONNECTION WITH A DEFINITELY RELATED GOVERNMENT PROCUREMENT OPERATION, THE UNITED STATES GOVERNMENT THEREBY INCURS NO RESPONSIBILITY NOR ANY OBLIGATION WHATSOEVER; AND THE FACT THAT THE GOVERNMENT MAY HAVE FORMULATED, FURNISHED, OR IN ANY WAY SUPPLIED THE SAID DRAWINGS, SPECIFICATIONS OR OTHER DATA IS NOT TO BE REGARDED BY IMPLICATION OR OTHERWISE AS IN ANY MANNER LICENSING THE HOLDER OR ANY OTHER PERSON OR CORPORATION, OR CONVEYING ANY RIGHTS OR PERMISSION TO MANUFACTURE, USE, OR SELL ANY PATENTED INVENTION THAT MAY IN ANY WAY BE RELATED THERETO.

1004114 C

REVISIONS

SYM	DESCRIPTION	DATE	APPROVAL
B	REDRAWN REPLACES REV A WITH CHANGE PER TDRR 03454	7/24/63 9-26-63	
C	REVISED PER TDRR 04024	10-10-63	

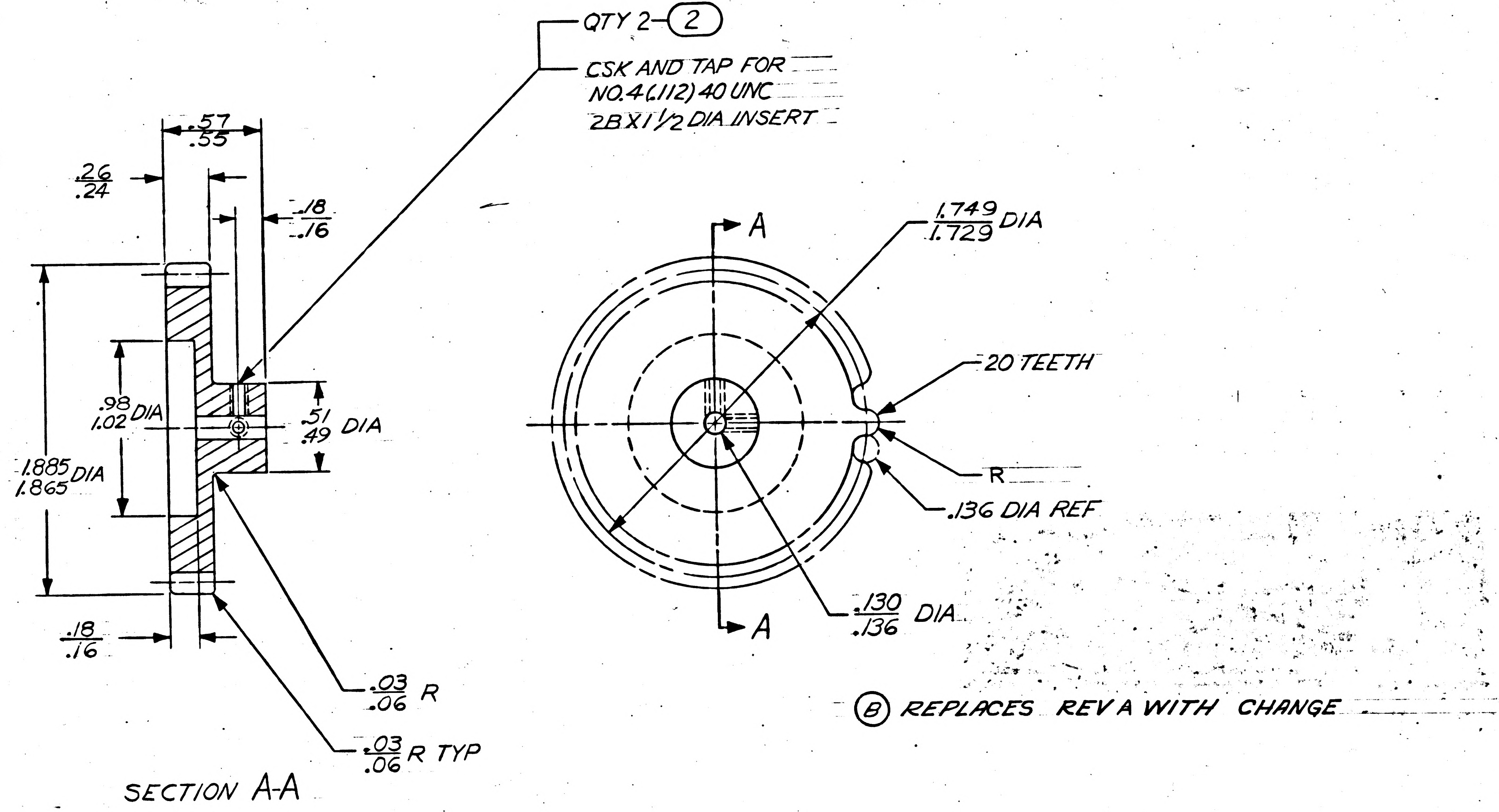

NOTES:

1. MATL: 6061-T6 AL. PER QQ-A-325, TEMPER T6
2. REMOVE ALL BURRS AND SHARP EDGES
3. MASK TAPPED HOLES AND THRU HOLE AND ANODIZE PER MIL-A-8625 TYPE I (CHROMIC ACID) DYED MEDIUM GREY PER FED STD-TT-C-595, COLOR CHIP NO. 26440
4. INTERPRET DRAWING IN ACCORDANCE WITH STANDARDS PRESCRIBED BY MIL-D-70327
5. INSTALL FIND NO. 2 PER MS33646-BREAK OFF DRIVING TANG
6. COAT THREADS AND FIND NO. 2 WITH MIL-P-8585, WET ZINC CHROMATE

MASTER

QTY REQD	PART OR IDENTIFYING NO.	NOMENCLATURE OR DESCRIPTION	FIND NO.
2	MS 21209-C0415	INSERT, SCREW THREAD LOCKING	2
1	1004114-1	THUMB WHEEL	1

LIST OF MATERIALS

NEXT ASSY	USED ON
1003524	

APPLICATION

UNLESS OTHERWISE SPECIFIED DIMENSIONS ARE IN INCHES
TOLERANCES ON
FRACTIONS ± DECIMALS ± ANGLES ±
DO NOT SCALE THIS DRAWING
MATERIAL SEE NOTE 1
HEAT TREATMENT NONE
FINAL FINISH SEE NOTE 3

M I T
INSTRUMENTATION LAB
CAMBRIDGE, MASS.
DWG. NO.
CONTRACT

DRAWN DATE 6 Sept 63
CHECKED 6 Sep 63
APPROVAL Sept 19/63
APPROVAL 5 SEP 63
NASA APPROVAL 9/26/63
MIT APPROVAL
MIT APPROVAL 9/26/63

MANNED SPACECRAFT CENTER
HOUSTON, TEXAS

THUMB WHEEL
AGC DISPLAY AND KEYBOARD

CODE IDENT NO.
SIZE C
NASA DRAWING NO. 1004114
SCALE 2/1
WT
SHEET 1 OF 1

INCHES
0 1 2
PHOTOGRAPHIC SCALE ONLY

NOTICE — WHEN GOVERNMENT DRAWINGS, SPECIFICATIONS, OR OTHER DATA ARE USED FOR ANY PURPOSE OTHER THAN IN CONNECTION WITH A DEFINITELY RELATED GOVERNMENT PROCUREMENT OPERATION, THE UNITED STATES GOVERNMENT THEREBY INCURS NO RESPONSIBILITY NOR ANY OBLIGATION WHATSOEVER; AND THE FACT THAT THE GOVERNMENT MAY HAVE FORMULATED, FURNISHED, OR IN ANY WAY SUPPLIED THE SAID DRAWINGS, SPECIFICATIONS OR OTHER DATA IS NOT TO BE REGARDED BY IMPLICATION OR OTHERWISE AS IN ANY MANNER LICENSING THE HOLDER OR ANY OTHER PERSON OR CORPORATION, OR CONVEYING ANY RIGHTS OR PERMISSION TO MANUFACTURE, USE, OR SELL ANY PATENTED INVENTION THAT MAY IN ANY WAY BE RELATED THERETO.

1004114

SYM	DESCRIPTION	DATE	APPROVAL

REVISIONS

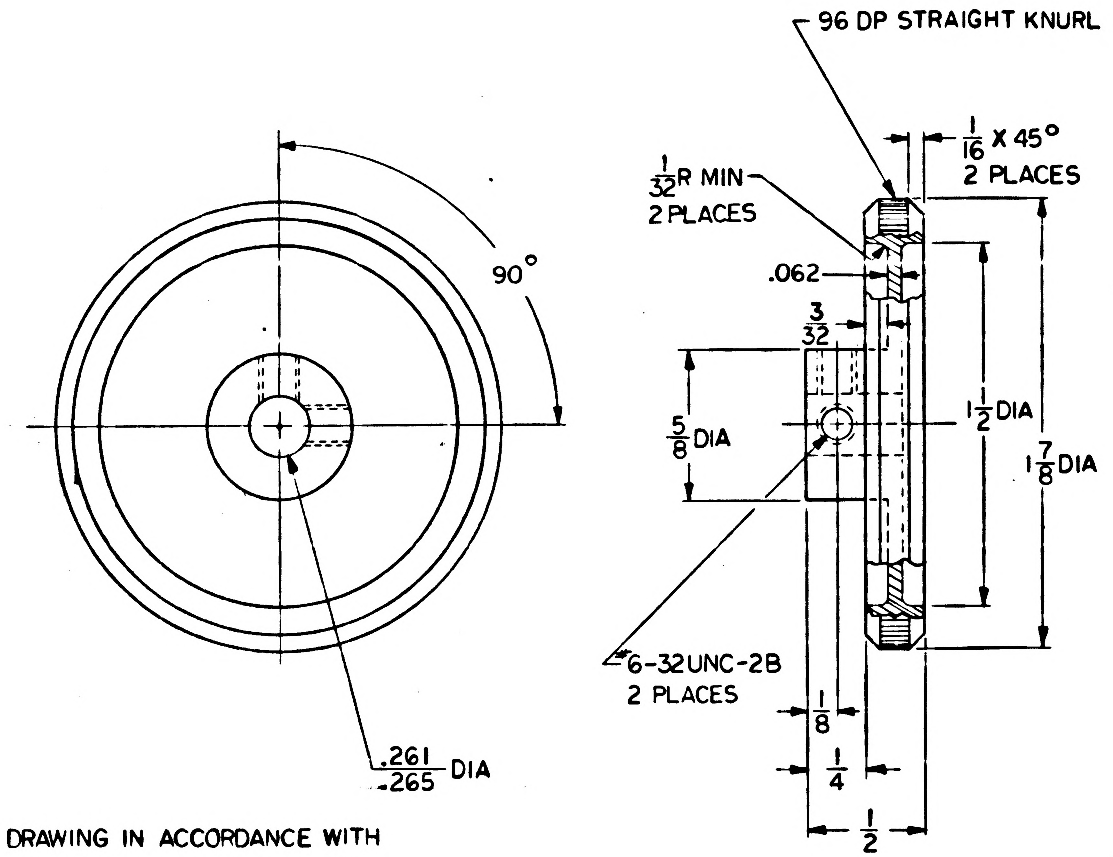

FOR INFORMATION ONLY

CLASS B RELEASE TDR No. 01298 DATE 5-22-63

NOTES

1. INTERPRET DRAWING IN ACCORDANCE WITH STANDARDS PRESCRIBED BY MIL-D-70327
2. MAT'L: 303 SST PER QQ-S-763B-1
3. REMOVE BURRS & BREAK SHARP EDGES
4. PASSIVATE PER MIL-F-14072
5. 125/ALL OVER, UNLESS OTHERWISE SPECIFIED
6. MASK ALL HOLES
7. PAINT LIGHT GRAY PER FED STD NO. 595-26440

MASTER

QTY REQD	PART OR IDENTIFYING NO.	NOMENCLATURE OR DESCRIPTION	FIND NO.

LIST OF MATERIALS

NEXT ASSY	USED ON

APPLICATION

UNLESS OTHERWISE SPECIFIED
DIMENSIONS ARE IN INCHES
TOLERANCES ON
FRACTIONS ± 1/64 DECIMALS ±.005 ANGLES ± 1/2°
DO NOT SCALE THIS DRAWING

MATERIAL
SEE NOTE 2

HEAT TREATMENT
—//—

FINAL FINISH
SEE NOTE 4

MIT
INSTRUMENTATION LAB
CAMBRIDGE, MASS.
DWG. NO. CONTRACT

DRAWN DATE 11 APR 63
CHECKED 5-13-63
APPROVAL W B Turner 22 MAY 63
APPROVAL

NASA APPROVAL 5/22/63

MIT APPROVAL 5/22/63

MANNED SPACECRAFT CENTER
HOUSTON, TEXAS

THUMB WHEEL
(AGC KEYBOARD)

CODE IDENT NO.
SIZE C
NASA DRAWING NO. 1004114
SCALE 2/1 WT SHEET 1 OF 1

INCHES
0 1 2
PHOTOGRAPHIC SCALE ONLY

NOTICE — WHEN GOVERNMENT DRAWINGS, SPECIFICATIONS, OR OTHER DATA ARE USED FOR ANY PURPOSE OTHER THAN IN CONNECTION WITH A DEFINITELY RELATED GOVERNMENT PROCUREMENT OPERATION, THE UNITED STATES GOVERNMENT THEREBY INCURS NO RESPONSIBILITY NOR ANY OBLIGATION WHATSOEVER; AND THE FACT THAT THE GOVERNMENT MAY HAVE FORMULATED, FURNISHED, OR IN ANY WAY SUPPLIED THE SAID DRAWINGS, SPECIFICATIONS OR OTHER DATA IS NOT TO BE REGARDED BY IMPLICATION OR OTHERWISE AS IN ANY MANNER LICENSING THE HOLDER OR ANY OTHER PERSON OR CORPORATION, OR CONVEYING ANY RIGHTS OR PERMISSION TO MANUFACTURE, USE, OR SELL ANY PATENTED INVENTION THAT MAY IN ANY WAY BE RELATED THERETO.

1004116 M

REVISIONS

SYM	DESCRIPTION	DATE	APPROVAL
A	~~INACTIVATED~~, REPLACED BY REV B WITH CHANGE PER TDRR 03453	17 Oct 63	WK

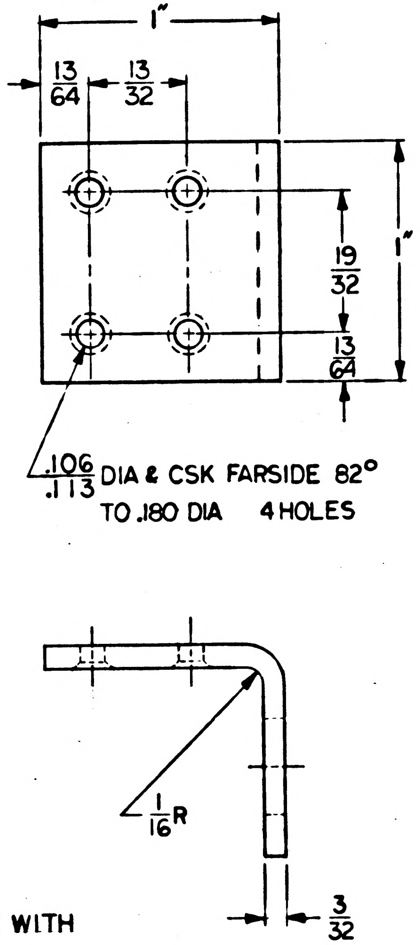

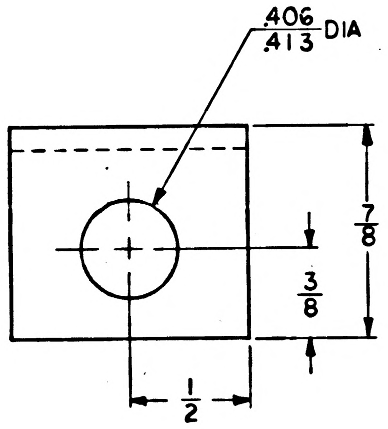

NOTES

1. INTERPRET DRAWING IN ACCORDANCE WITH STANDARDS PRESCRIBED BY MIL-D-70327
2. MAT'L: 6061-T6 AL PER QQ-A-327, TEMP T6
3. REMOVE BURRS & BREAK SHARP EDGES
4. ANODIZE PER MIL-A-8625, TYPE II, DYED BLACK

FOR INFORMATION ONLY

CLASS B RELEASE TDR No. 01298 **DATE** 5-22-63

Ⓐ REPLACED WITH CHANGE BY REV B

on re-issue of TDRR 03453 (17 Oct 63)

QTY REQD	PART OR IDENTIFYING NO.	NOMENCLATURE OR DESCRIPTION	FIND NO.

LIST OF MATERIALS

NEXT ASSY	USED ON

APPLICATION

UNLESS OTHERWISE SPECIFIED
DIMENSIONS ARE IN INCHES
TOLERANCES ON
FRACTIONS ± 1/64 DECIMALS ± — ANGLES ± —
DO NOT SCALE THIS DRAWING

MATERIAL SEE NOTE 2

HEAT TREATMENT —

FINAL FINISH SEE NOTE 4

MIT
INSTRUMENTATION LAB
CAMBRIDGE, MASS.
DWG. NO. CONTRACT

DRAWN Tom Hillson DATE 12 APR 63
CHECKED 5-13-63
APPROVAL W B Turner 22 MAY 63
APPROVAL

NASA APPROVAL 5/22/63

MIT APPROVAL 5/22/63

MANNED SPACECRAFT CENTER
HOUSTON, TEXAS

BRACKET
(AGC KEYBOARD)

CODE IDENT NO.
SIZE C
NASA DRAWING NO. 1004116
SCALE 2/1
WT
SHEET 1 OF 1

MASTER

INCHES
0 1 2
PHOTOGRAPHIC SCALE ONLY

NOTICE — WHEN GOVERNMENT DRAWINGS, SPECIFICATIONS, OR OTHER DATA ARE USED FOR ANY PURPOSE OTHER THAN IN CONNECTION WITH A DEFINITELY RELATED GOVERNMENT PROCUREMENT OPERATION, THE UNITED STATES GOVERNMENT THEREBY INCURS NO RESPONSIBILITY NOR ANY OBLIGATION WHATSOEVER; AND THE FACT THAT THE GOVERNMENT MAY HAVE FORMULATED, FURNISHED, OR IN ANY WAY SUPPLIED THE SAID DRAWINGS, SPECIFICATIONS OR OTHER DATA IS NOT TO BE REGARDED BY IMPLICATION OR OTHERWISE AS IN ANY MANNER LICENSING THE HOLDER OR ANY OTHER PERSON OR CORPORATION, OR CONVEYING ANY RIGHTS OR PERMISSION TO MANUFACTURE, USE, OR SELL ANY PATENTED INVENTION THAT MAY IN ANY WAY BE RELATED THERETO.

Ⓜ INITIAL CLASS B ON TORR 01298 REVISIONS 03453 (ERROR)

SYM	DESCRIPTION	DATE	APPROVAL
B	REPLACES REV.A WITH CHANGE PER TORR 03453	17 Oct 63	WK
C	CHANGED PER TORR 04040	7 Oct 63	WK.

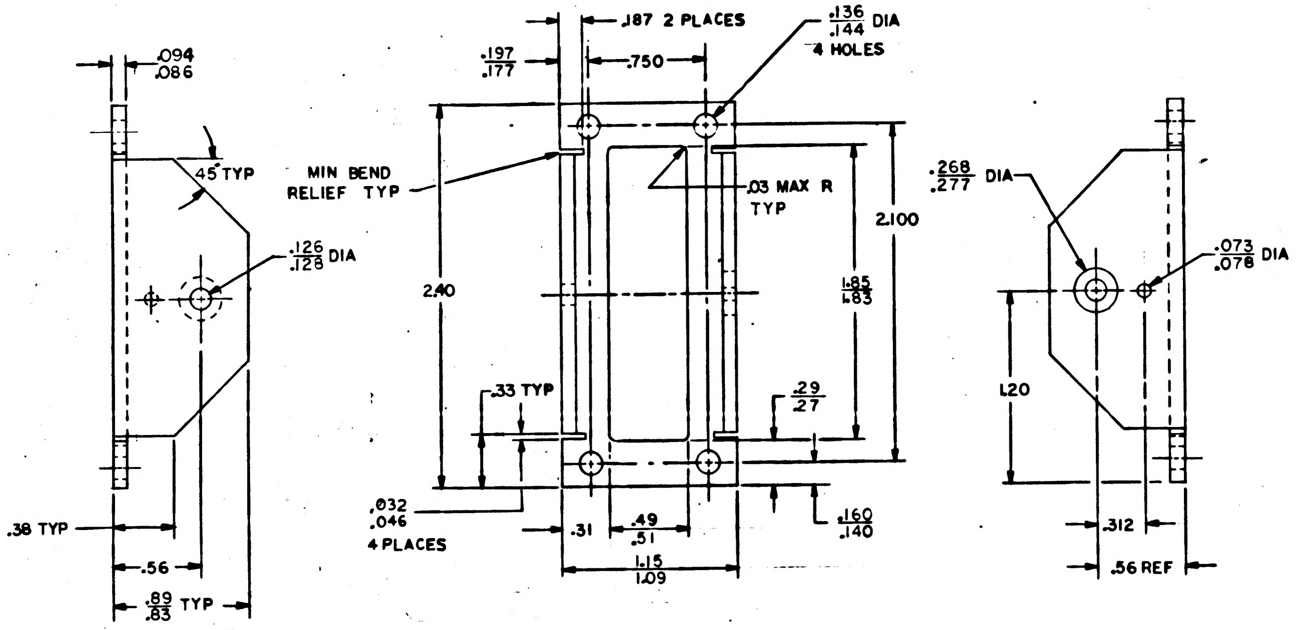

.094
.086
45° TYP
.126
.128 DIA
.38 TYP
.56
.89
.83 TYP
.187 2 PLACES
.136
.144 DIA
4 HOLES
.197
.177
.750
MIN BEND RELIEF TYP
.03 MAX R TYP
2.100
2.40
1.85
1.83
.33 TYP
.29
.27
.032
.046
4 PLACES
.31
.49
.51
1.15
1.09
.160
.140
.268
.277 DIA
.073
.076 DIA
1.20
.312
.56 REF

Ⓑ REPLACES REV A (TORR 01298) WITH CHANGES (17 Oct 63)

NOTES

1. MATL 5052-H32 ALUMINUM PER QQ-A-318 TEMPER H32
2. REMOVE BURRS AND SHARP EDGES
3. SURFACE QUALITY 125✓
4. ANODIZE PER MIL-A-8625 TYPE II DYED BLACK
5. INTERPRET DRAWING IN ACCORDANCE WITH STANDARDS PRESCRIBED BY MIL-D-70327
6. ALL BEND RADII TO BE .06

MASTER

QTY REQD	PART OR IDENTIFYING NO.	NOMENCLATURE OR DESCRIPTION	FIND NO.

LIST OF MATERIALS

NEXT ASSY	USED ON
1003524	

APPLICATION

UNLESS OTHERWISE SPECIFIED DIMENSIONS ARE IN INCHES
TOLERANCES ON
FRACTIONS ± DECIMALS ±.02 .005 ANGLES ± 5°
DO NOT SCALE THIS DRAWING
MATERIAL SEE NOTE 1
HEAT TREATMENT NONE
FINAL FINISH SEE NOTE 4

MIT INSTRUMENTATION LAB
CAMBRIDGE, MASS.
DWG. NO.
CONTRACT
DRAWN DATE 17 SEP 63
CHECKED 17 Sep 63
APPROVAL Sept 19/63
APPROVAL Eldon C Hall 20 Sept 63
NASA APPROVAL
MIT APPROVAL
MIT APPROVAL 9/21/63

MANNED SPACECRAFT CENTER
HOUSTON, TEXAS

BRACKET, POTENTIOMETER
AGC DISPLAY AND KEYBOARD

CODE IDENT NO. —
SIZE D
NASA DRAWING NO. 1004116
SCALE 2/1
WT
SHEET 1 OF 1

1004116

INCHES 0 1 2
PHOTOGRAPHIC SCALE ONLY

NOTICE — WHEN GOVERNMENT DRAWINGS, SPECIFICATIONS, OR OTHER DATA ARE USED FOR ANY PURPOSE OTHER THAN IN CONNECTION WITH A DEFINITELY RELATED GOVERNMENT PROCUREMENT OPERATION, THE UNITED STATES GOVERNMENT THEREBY INCURS NO RESPONSIBILITY NOR ANY OBLIGATION WHATSOEVER; AND THE FACT THAT THE GOVERNMENT MAY HAVE FORMULATED, FURNISHED, OR IN ANY WAY SUPPLIED THE SAID DRAWINGS, SPECIFICATIONS OR OTHER DATA IS NOT TO BE REGARDED BY IMPLICATION OR OTHERWISE AS IN ANY MANNER LICENSING THE HOLDER OR ANY OTHER PERSON OR CORPORATION, OR CONVEYING ANY RIGHTS OR PERMISSION TO MANUFACTURE, USE, OR SELL ANY PATENTED INVENTION THAT MAY IN ANY WAY BE RELATED THERETO.

Ⓜ INITIAL CLASS'B ON TORR 01298 REVISIONS 03453 (ERROR)

SYM	DESCRIPTION	DATE	APPROVAL
B	REPLACES REV.A WITH CHANGE PER TORR 03453	17 Oct 63	WK
Ⓜ C	CHANGED PER TORR 04040	7 Oct 63	WK.
D	CHANGED PER TORR 05039 CAP.	10 Dec 63	RAK 12/17/63

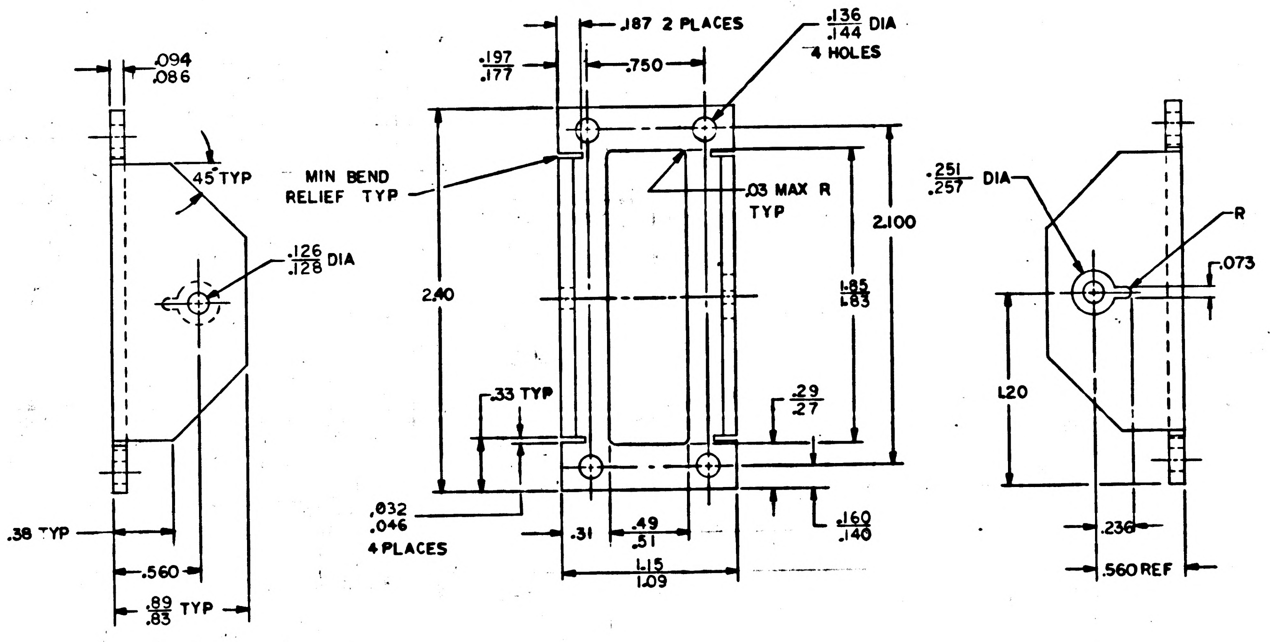

.094
.086
45° TYP
.126
.128 DIA
.38 TYP
.560
.89
.83 TYP
.187 2 PLACES
.136
.144 DIA
4 HOLES
.197
.177
.750
MIN BEND
RELIEF TYP
.03 MAX R
TYP
2.40
2.100
1.85
1.83
.33 TYP
.29
.27
.032
.046
4 PLACES
.31
.49
.51
1.15
1.09
.160
.140
.251
.257 DIA
R
.073
1.20
.236
.560 REF

Ⓑ REPLACES REV A (TORR 01298) WITH CHANGES (17 Oct 63)

NOTES
1. MATL 5052-H32 ALUMINUM PER QQ-A-318 TEMPER H32
2. REMOVE BURRS AND SHARP EDGES
3. SURFACE QUALITY 125
4. ANODIZE PER MIL-A-8625 TYPE II DYED BLACK
5. INTERPRET DRAWING IN ACCORDANCE WITH STANDARDS PRESCRIBED BY MIL-D-70327
6. ALL BEND RADII TO BE .06

MASTER

QTY REQD	PART OR IDENTIFYING NO.	NOMENCLATURE OR DESCRIPTION	FIND NO.

LIST OF MATERIALS

NEXT ASSY	USED ON
1003524	

APPLICATION

UNLESS OTHERWISE SPECIFIED DIMENSIONS ARE IN INCHES
TOLERANCES ON
FRACTIONS ± DECIMALS ±.02 .005 ANGLES ± 5°
DO NOT SCALE THIS DRAWING

MATERIAL SEE NOTE 1
HEAT TREATMENT NONE
FINAL FINISH SEE NOTE 4

MIT
INSTRUMENTATION LAB
CAMBRIDGE, MASS.
DWG. NO. CONTRACT

DRAWN DATE 17 SEP 63
CHECKED 17 Sep 63
APPROVAL Sept 19/63
APPROVAL 20 Sep 63
NASA APPROVAL
MIT APPROVAL
MIT APPROVAL 9/21/63

MANNED SPACECRAFT CENTER
HOUSTON, TEXAS

BRACKET, POTENTIOMETER
AGC DSKY, NAV & MAIN

CODE IDENT NO. —
SIZE D
NASA DRAWING NO. 1004116
SCALE 2/1
WT
SHEET 1 OF 1

1004116 D

INCHES
0 1 2
PHOTOGRAPHIC SCALE ONLY

NOTICE — WHEN GOVERNMENT DRAWINGS, SPECIFICATIONS, OR OTHER DATA ARE USED FOR ANY PURPOSE OTHER THAN IN CONNECTION WITH A DEFINITELY RELATED GOVERNMENT PROCUREMENT OPERATION, THE UNITED STATES GOVERNMENT THEREBY INCURS NO RESPONSIBILITY NOR ANY OBLIGATION WHATSOEVER; AND THE FACT THAT THE GOVERNMENT MAY HAVE FORMULATED, FURNISHED, OR IN ANY WAY SUPPLIED THE SAID DRAWINGS, SPECIFICATIONS OR OTHER DATA IS NOT TO BE REGARDED BY IMPLICATION OR OTHERWISE AS IN ANY MANNER LICENSING THE HOLDER OR ANY OTHER PERSON OR CORPORATION, OR CONVEYING ANY RIGHTS OR PERMISSION TO MANUFACTURE, USE, OR SELL ANY PATENTED INVENTION THAT MAY IN ANY WAY BE RELATED THERETO.

1004116

REVISIONS			
SYM	DESCRIPTION	DATE	APPROVAL

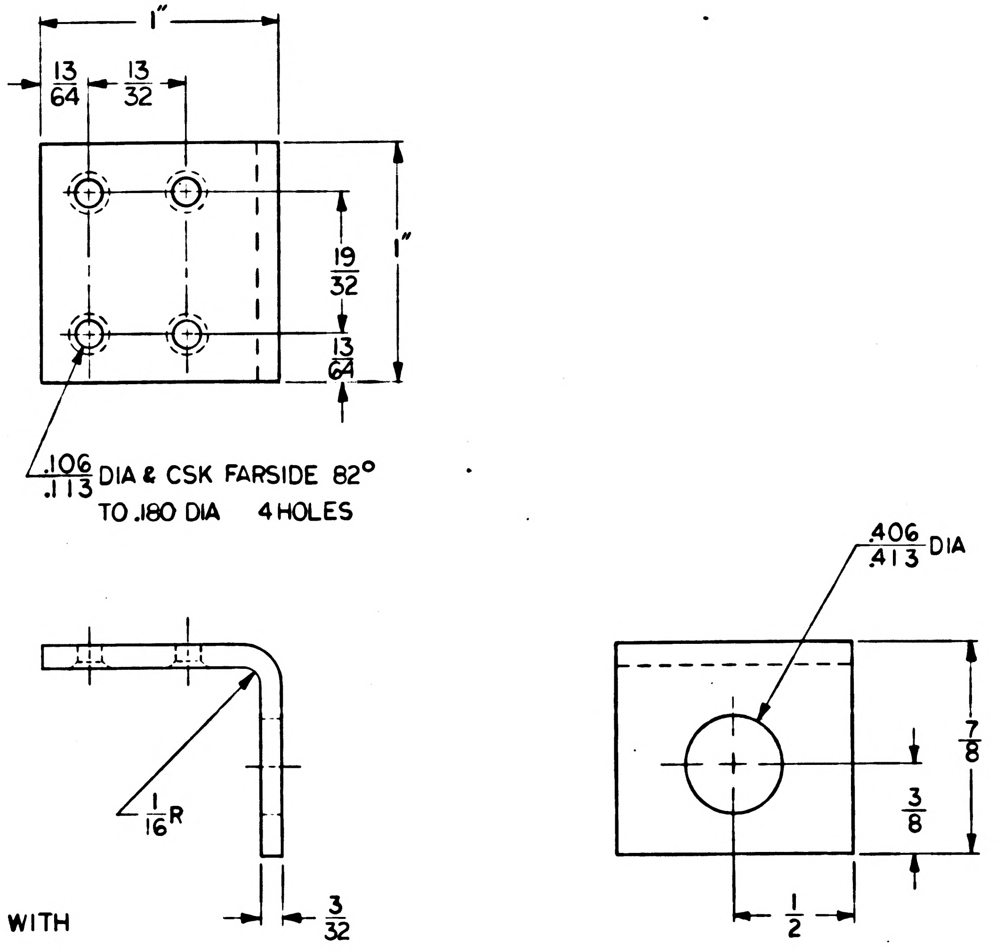

FOR INFORMATION ONLY

CLASS B RELEASE TDR No. 01278 DATE 5-22-63

NOTES

1. INTERPRET DRAWING IN ACCORDANCE WITH STANDARDS PRESCRIBED BY MIL-D-70327
2. MAT'L: 6061-T6 AL PER QQ-A-327, TEMP T6
3. REMOVE BURRS & BREAK SHARP EDGES
4. ANODIZE PER MIL-A-8625, TYPE II, DYED BLACK

QTY REQD	PART OR IDENTIFYING NO.	NOMENCLATURE OR DESCRIPTION	FIND NO.

LIST OF MATERIALS

NEXT ASSY	USED ON
APPLICATION	

UNLESS OTHERWISE SPECIFIED DIMENSIONS ARE IN INCHES
TOLERANCES ON
FRACTIONS ± 1/64 DECIMALS ± -/- ANGLES ± -/-
DO NOT SCALE THIS DRAWING
MATERIAL SEE NOTE 2
HEAT TREATMENT -/-
FINAL FINISH SEE NOTE 4

MIT
INSTRUMENTATION LAB
CAMBRIDGE, MASS.
DWG. NO. CONTRACT
DRAWN Tom Hillson DATE 12 APR 63
CHECKED 5-13-63
APPROVAL W B Turner 22 MAY 63
APPROVAL
NASA APPROVAL 5/22/63
MIT APPROVAL D Hoag 5/22/63

MANNED SPACECRAFT CENTER
HOUSTON, TEXAS

BRACKET
(AGC KEYBOARD)

CODE IDENT NO. SIZE C NASA DRAWING NO. 1004116
SCALE 2/1 WT SHEET 1 OF 1

INCHES
0 1 2
PHOTOGRAPHIC SCALE ONLY

MASTER

NOTICE — WHEN GOVERNMENT DRAWINGS, SPECIFICATIONS, OR OTHER DATA ARE USED FOR ANY PURPOSE OTHER THAN IN CONNECTION WITH A DEFINITELY RELATED GOVERNMENT PROCUREMENT OPERATION, THE UNITED STATES GOVERNMENT THEREBY INCURS NO RESPONSIBILITY NOR ANY OBLIGATION WHATSOEVER; AND THE FACT THAT THE GOVERNMENT MAY HAVE FORMULATED, FURNISHED, OR IN ANY WAY SUPPLIED THE SAID DRAWINGS, SPECIFICATIONS OR OTHER DATA IS NOT TO BE REGARDED BY IMPLICATION OR OTHERWISE AS IN ANY MANNER LICENSING THE HOLDER OR ANY OTHER PERSON OR CORPORATION, OR CONVEYING ANY RIGHTS OR PERMISSION TO MANUFACTURE, USE, OR SELL ANY PATENTED INVENTION THAT MAY IN ANY WAY BE RELATED THERETO.

REVISIONS 03453			
SYM	DESCRIPTION	DATE	APPROVAL

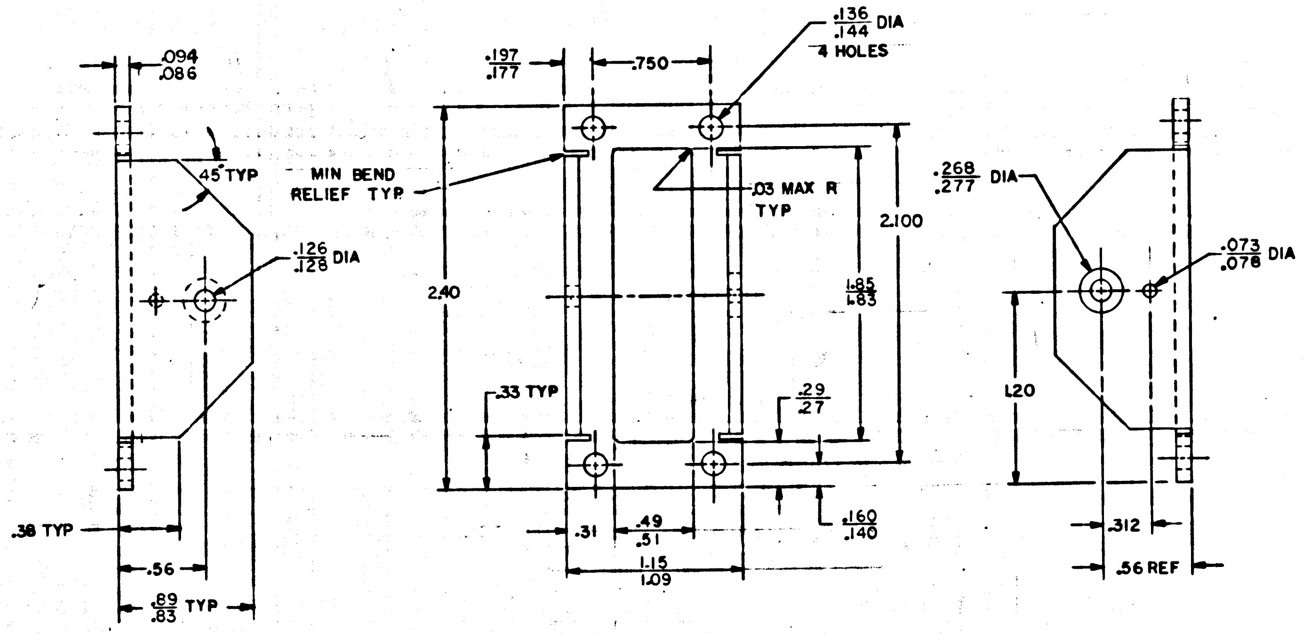

NOTES
1. MATL 5052-H32 ALUMINUM PER QQ-A-318 TEMPER H32
2. REMOVE BURRS AND SHARP EDGES
3. SURFACE QUALITY 125✓
4. ANODIZE PER MIL-A-8625 TYPE II DYED BLACK
5. INTERPRET DRAWING IN ACCORDANCE WITH STANDARDS PRESCRIBED BY MIL-D-70327
6. ALL BEND RADII TO BE .06/.12

MASTER

QTY REQD	PART OR IDENTIFYING NO.	NOMENCLATURE OR DESCRIPTION	FIND NO.
LIST OF MATERIALS			

1003524		UNLESS OTHERWISE SPECIFIED DIMENSIONS ARE IN INCHES TOLERANCES ON FRACTIONS ± DECIMALS ±.02 .005 ANGLES ± 5° DO NOT SCALE THIS DRAWING	MIT INSTRUMENTATION LAB CAMBRIDGE, MASS. DWG. NO. CONTRACT	MANNED SPACECRAFT CENTER HOUSTON, TEXAS
NEXT ASSY	USED ON	MATERIAL SEE NOTE I	DRAWN DATE 17 SEP 63 CHECKED 17 Sep 63 APPROVAL K. Samson Sept 19/63 APPROVAL Eldon C Hall 20 Sep 63	BRACKET POTENTIOMETER AGC DISPLAY AND KEYBOARD
APPLICATION		HEAT TREATMENT NONE	NASA APPROVAL 9/24/63 MIT APPROVAL MIT APPROVAL 9/21/63	CODE IDENT NO. — SIZE D NASA DRAWING NO. 1004116
		FINAL FINISH SEE NOTE 4		SCALE 2/1 WT SHEET 1 OF 1

INCHES
0 1 2
PHOTOGRAPHIC SCALE ONLY

1004117

REVISIONS			
SYM	DESCRIPTION	DATE	APPROVAL

NOTICE — WHEN GOVERNMENT DRAWINGS, SPECIFICATIONS, OR OTHER DATA ARE USED FOR ANY PURPOSE OTHER THAN IN CONNECTION WITH A DEFINITELY RELATED GOVERNMENT PROCUREMENT OPERATION, THE UNITED STATES GOVERNMENT THEREBY INCURS NO RESPONSIBILITY NOR ANY OBLIGATION WHATSOEVER; AND THE FACT THAT THE GOVERNMENT MAY HAVE FORMULATED, FURNISHED, OR IN ANY WAY SUPPLIED THE SAID DRAWINGS, SPECIFICATIONS OR OTHER DATA IS NOT TO BE REGARDED BY IMPLICATION OR OTHERWISE AS IN ANY MANNER LICENSING THE HOLDER OR ANY OTHER PERSON OR CORPORATION, OR CONVEYING ANY RIGHTS OR PERMISSION TO MANUFACTURE, USE, OR SELL ANY PATENTED INVENTION THAT MAY IN ANY WAY BE RELATED THERETO.

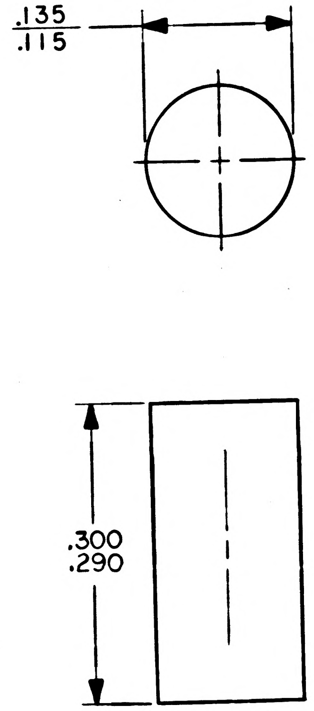

FOR INFORMATION ONLY

CLASS B RELEASE TDR No. 00896 **DATE** 4.17.63

NOTES:

1. INTERPRET DRAWING IN ACCORDANCE WITH STANDARDS PRESCRIBED BY MIL-D-70327
2. MATERIAL: MAGNESIUM, ZK60A-T5 PER QQ-M-31
3. FINISH: GALVANIC ANODIZE PER MIL-M-3171A TYPE IV,
4. BREAK SHARP CORNERS .005/.015

MASTER

QTY REQD	PART OR IDENTIFYING NO.	NOMENCLATURE OR DESCRIPTION	FIND NO.

LIST OF MATERIALS

1003061	
NEXT ASSY	USED ON
APPLICATION	

UNLESS OTHERWISE SPECIFIED
DIMENSIONS ARE IN INCHES
TOLERANCES ON
FRACTIONS ± DECIMALS ± ANGLES ± 2°
DO NOT SCALE THIS DRAWING
MATERIAL SEE NOTE 2
HEAT TREATMENT
FINAL FINISH SEE NOTE 3

MIT
INSTRUMENTATION LAB
CAMBRIDGE, MASS.
DWG. NO. CONTRACT
DRAWN DATE 4-15-63
CHECKED 15 Apr 63
APPROVAL W.B. 16 APR 63
APPROVAL
NASA APPROVAL
MIT APPROVAL 17 Apr 63

MANNED SPACECRAFT CENTER
HOUSTON, TEXAS

PLUG, KEYING

CODE IDENT NO.
SIZE C
NASA DRAWING NO. 1004117
SCALE 10/1
WT
SHEET 1 OF 1

INCHES
0 1 2
PHOTOGRAPHIC SCALE ONLY

1004117

NOTICE — WHEN GOVERNMENT DRAWINGS, SPECIFICATIONS, OR OTHER DATA ARE USED FOR ANY PURPOSE OTHER THAN IN CONNECTION WITH A DEFINITELY RELATED GOVERNMENT PROCUREMENT OPERATION, THE UNITED STATES GOVERNMENT THEREBY INCURS NO RESPONSIBILITY NOR ANY OBLIGATION WHATSOEVER; AND THE FACT THAT THE GOVERNMENT MAY HAVE FORMULATED, FURNISHED, OR IN ANY WAY SUPPLIED THE SAID DRAWINGS, SPECIFICATIONS OR OTHER DATA IS NOT TO BE REGARDED BY IMPLICATION OR OTHERWISE AS IN ANY MANNER LICENSING THE HOLDER OR ANY OTHER PERSON OR CORPORATION, OR CONVEYING ANY RIGHTS OR PERMISSION TO MANUFACTURE, USE, OR SELL ANY PATENTED INVENTION THAT MAY IN ANY WAY BE RELATED THERETO.

1004118 A

REVISIONS

SYM	DESCRIPTION	DATE	APPROVAL
A	REPLACED AND UPGRADED TO CLASS A PER TDRR 02901	9-4-63	

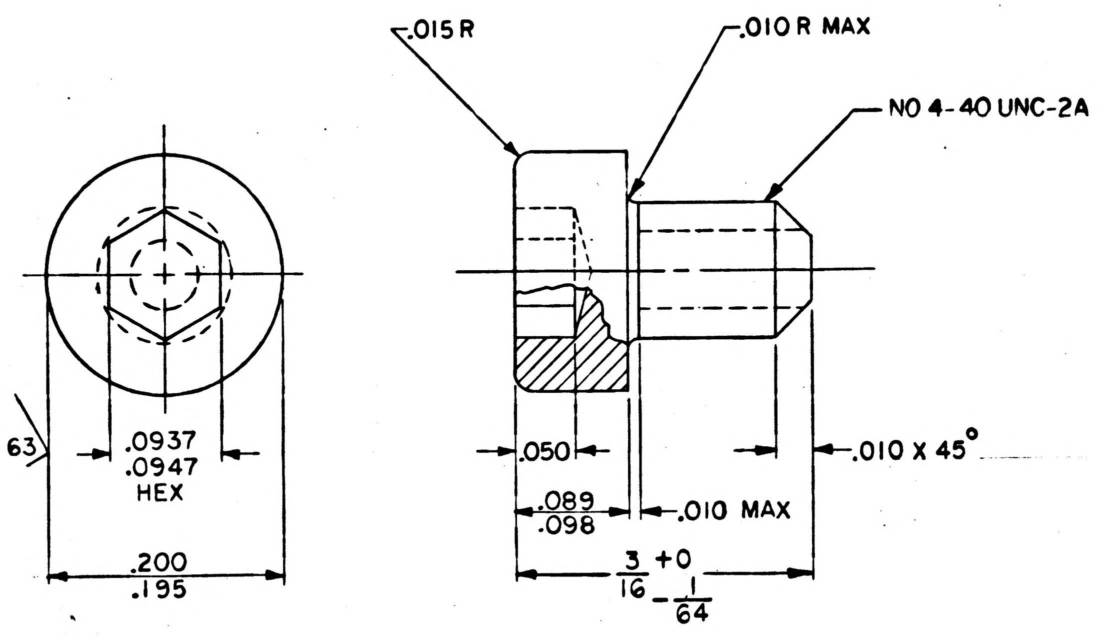

FOR INFORMATION ONLY

CLASS B RELEASE TDR No. 01298 **DATE** 5-22-63

NOTES

1. INTERPRET DRAWING IN ACCORDANCE WITH STANDARDS PRESCRIBED BY MIL-D-70327
2. MAT'L: 303 CRES PER QQ-S-763B-1
3. REMOVE ALL BURRS & SHARP EDGES
4. PASSIVATE PER MIL-F-14072
5. 125✓ ALL OVER, UNLESS OTHERWISE SPECIFIED

REV A REPLACED BY REV B
OBSOLETE

MASTER

QTY REQD	PART OR IDENTIFYING NO.	NOMENCLATURE OR DESCRIPTION	FIND NO.

LIST OF MATERIALS

NEXT ASSY	USED ON
APPLICATION	

UNLESS OTHERWISE SPECIFIED DIMENSIONS ARE IN INCHES
TOLERANCES ON
FRACTIONS ± 1/64   DECIMALS ± .005   ANGLES ± 1/2°
DO NOT SCALE THIS DRAWING
MATERIAL SEE NOTE 2
HEAT TREATMENT —"—
FINAL FINISH SEE NOTE 4

MIT
INSTRUMENTATION LAB
CAMBRIDGE, MASS.
DWG. NO. CONTRACT
DRAWN Tom Gibson DATE 15 APR 63
CHECKED 5-14-63
APPROVAL W B Turner 22 MAY 63
APPROVAL
NASA APPROVAL 5/22/63
MIT APPROVAL 5/22/63

MANNED SPACECRAFT CENTER
HOUSTON, TEXAS

GUIDE STUD
(AGC KEYBOARD)

CODE IDENT NO.
SIZE C
NASA DRAWING NO. 1004118
SCALE 10/1
WT
SHEET 1 OF 1

INCHES
0 1 2
PHOTOGRAPHIC SCALE ONLY

NOTICE — WHEN GOVERNMENT DRAWINGS, SPECIFICATIONS, OR OTHER DATA ARE USED FOR ANY PURPOSE OTHER THAN IN CONNECTION WITH A DEFINITELY RELATED GOVERNMENT PROCUREMENT OPERATION, THE UNITED STATES GOVERNMENT THEREBY INCURS NO RESPONSIBILITY NOR ANY OBLIGATION WHATSOEVER; AND THE FACT THAT THE GOVERNMENT MAY HAVE FORMULATED, FURNISHED, OR IN ANY WAY SUPPLIED THE SAID DRAWINGS, SPECIFICATIONS OR OTHER DATA IS NOT TO BE REGARDED BY IMPLICATION OR OTHERWISE AS IN ANY MANNER LICENSING THE HOLDER OR ANY OTHER PERSON OR CORPORATION, OR CONVEYING ANY RIGHTS OR PERMISSION TO MANUFACTURE, USE, OR SELL ANY PATENTED INVENTION THAT MAY IN ANY WAY BE RELATED THERETO.

1004118

REVISIONS			
SYM	DESCRIPTION	DATE	APPROVAL

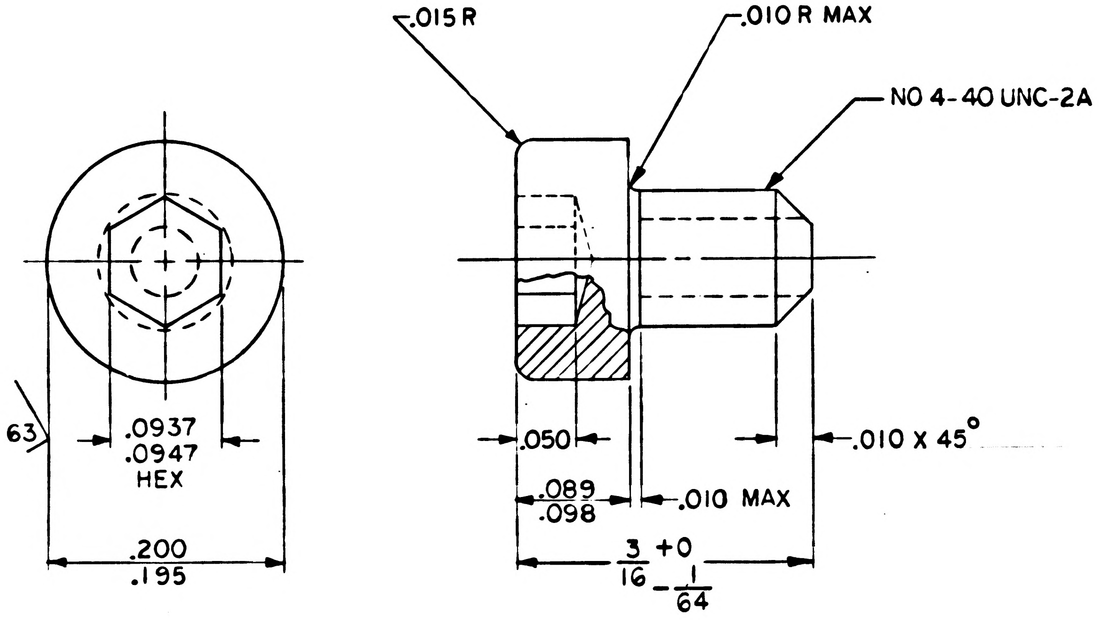

FOR INFORMATION ONLY

CLASS B RELEASE TDR No. 01298 DATE 5-22-63

NOTES

1. INTERPRET DRAWING IN ACCORDANCE WITH STANDARDS PRESCRIBED BY MIL-D-70327
2. MAT'L: 303 CRES PER QQ-S-763B-1
3. REMOVE ALL BURRS & SHARP EDGES
4. PASSIVATE PER MIL-F-14072
5. 125✓ALL OVER, UNLESS OTHERWISE SPECIFIED

MASTER

QTY REQD	PART OR IDENTIFYING NO.	NOMENCLATURE OR DESCRIPTION	FIND NO.

LIST OF MATERIALS

NEXT ASSY	USED ON
APPLICATION	

UNLESS OTHERWISE SPECIFIED
DIMENSIONS ARE IN INCHES
TOLERANCES ON
FRACTIONS ± 1/64 DECIMALS ±.005 ANGLES ± 1/2°
DO NOT SCALE THIS DRAWING
MATERIAL SEE NOTE 2
HEAT TREATMENT —//—
FINAL FINISH SEE NOTE 4

MIT
INSTRUMENTATION LAB
CAMBRIDGE, MASS.
DWG. NO. CONTRACT
DRAWN Tom Gilson DATE 15 APR 63
CHECKED 5-14-63
APPROVAL W B Turner 22 MAY 63
APPROVAL
NASA APPROVAL 5/22/63
MIT APPROVAL D Hoag 5/22/63

MANNED SPACECRAFT CENTER
HOUSTON, TEXAS

GUIDE STUD
(AGC KEYBOARD)

CODE IDENT NO.
SIZE C
NASA DRAWING NO. 1004118
SCALE 10/1
WT
SHEET 1 OF 1

INCHES
0 1 2
PHOTOGRAPHIC SCALE ONLY

1004120

SYM	DESCRIPTION	DATE	APPROVAL

NOTICE — WHEN GOVERNMENT DRAWINGS, SPECIFICATIONS, OR OTHER DATA ARE USED FOR ANY PURPOSE OTHER THAN IN CONNECTION WITH A DEFINITELY RELATED GOVERNMENT PROCUREMENT OPERATION, THE UNITED STATES GOVERNMENT THEREBY INCURS NO RESPONSIBILITY NOR ANY OBLIGATION WHATSOEVER; AND THE FACT THAT THE GOVERNMENT MAY HAVE FORMULATED, FURNISHED, OR IN ANY WAY SUPPLIED THE SAID DRAWINGS, SPECIFICATIONS OR OTHER DATA IS NOT TO BE REGARDED BY IMPLICATION OR OTHERWISE AS IN ANY MANNER LICENSING THE HOLDER OR ANY OTHER PERSON OR CORPORATION, OR CONVEYING ANY RIGHTS OR PERMISSION TO MANUFACTURE, USE, OR SELL ANY PATENTED INVENTION THAT MAY IN ANY WAY BE RELATED THERETO.

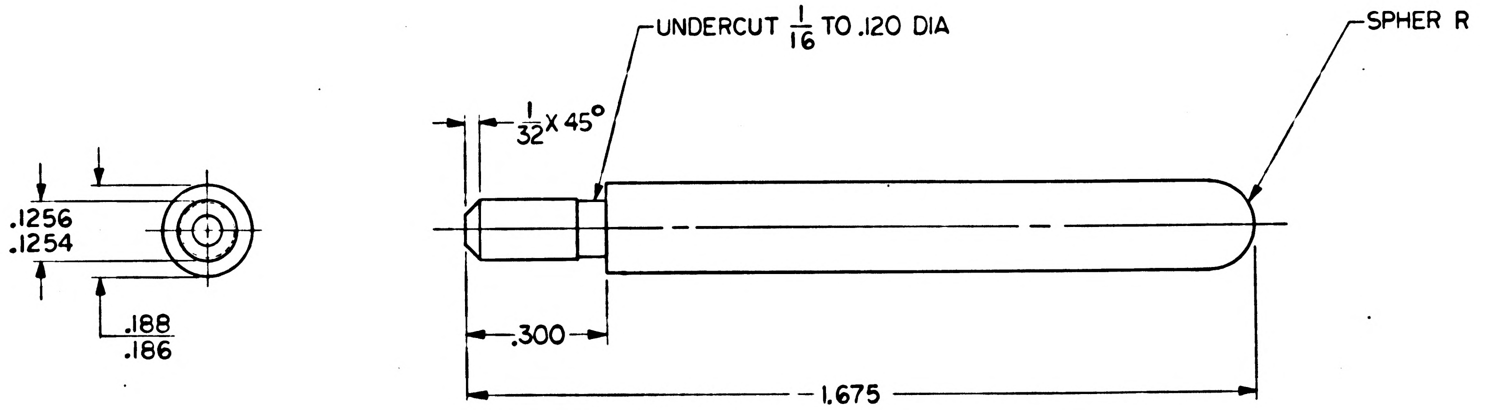

FOR INFORMATION ONLY

CLASS B RELEASE TDR No. 01298 DATE 5-22-63

NOTES
1. INTERPRET DRAWING IN ACCORDANCE WITH STANDARDS PRESCRIBED BY MIL-D-70327
2. MAT'L: 303 SST PER QQ-S-763B-1
3. REMOVE BURRS & BREAK ALL SHARP EDGES
4. PASSIVATE PER MIL-F-14072
5. 63/ ALL OVER, UNLESS OTHERWISE SPECIFIED

QTY REQD	PART OR IDENTIFYING NO.	NOMENCLATURE OR DESCRIPTION	FIND NO.

LIST OF MATERIALS

MASTER

NEXT ASSY | USED ON
APPLICATION

UNLESS OTHERWISE SPECIFIED DIMENSIONS ARE IN INCHES
TOLERANCES ON
FRACTIONS ± 1/64 DECIMALS ±.005 ANGLES ± 1/2
DO NOT SCALE THIS DRAWING
MATERIAL SEE NOTE 2
HEAT TREATMENT —
FINAL FINISH SEE NOTE 4

MIT
INSTRUMENTATION LAB
CAMBRIDGE, MASS.
DWG. NO. CONTRACT
DRAWN Tom Killeen DATE 17 APR 63
CHECKED 5-13-63
APPROVAL W.B. Turner 22 MAY 63
APPROVAL
NASA APPROVAL 5/22/63
MIT APPROVAL 5/22/63

MANNED SPACECRAFT CENTER
HOUSTON, TEXAS

GUIDE PIN
(AGC KEYBOARD)

CODE IDENT NO. | SIZE C | NASA DRAWING NO. 1004120
SCALE 4/1 | WT | SHEET 1 OF 1

1004120

INCHES
0 1 2
PHOTOGRAPHIC SCALE ONLY

NOTICE — WHEN GOVERNMENT DRAWINGS, SPECIFICATIONS, OR OTHER DATA ARE USED FOR ANY PURPOSE OTHER THAN IN CONNECTION WITH A DEFINITELY RELATED GOVERNMENT PROCUREMENT OPERATION, THE UNITED STATES GOVERNMENT THEREBY INCURS NO RESPONSIBILITY NOR ANY OBLIGATION WHATSOEVER; AND THE FACT THAT THE GOVERNMENT MAY HAVE FORMULATED, FURNISHED, OR IN ANY WAY SUPPLIED THE SAID DRAWINGS, SPECIFICATIONS OR OTHER DATA IS NOT TO BE REGARDED BY IMPLICATION OR OTHERWISE AS IN ANY MANNER LICENSING THE HOLDER OR ANY OTHER PERSON OR CORPORATION, OR CONVEYING ANY RIGHTS OR PERMISSION TO MANUFACTURE, USE, OR SELL ANY PATENTED INVENTION THAT MAY IN ANY WAY BE RELATED THERETO.

1004124 A

A DIM.	PART NO.
.081/.086 DIA	1004124-1
.099/.104 DIA	1004124-2

REVISIONS			
SYM	DESCRIPTION	DATE	APPROVAL
—	CLASS A RELEASE PER TDRR 02918	9/6/63	
A	REVISED PER TDRR 04485	11-5-63	

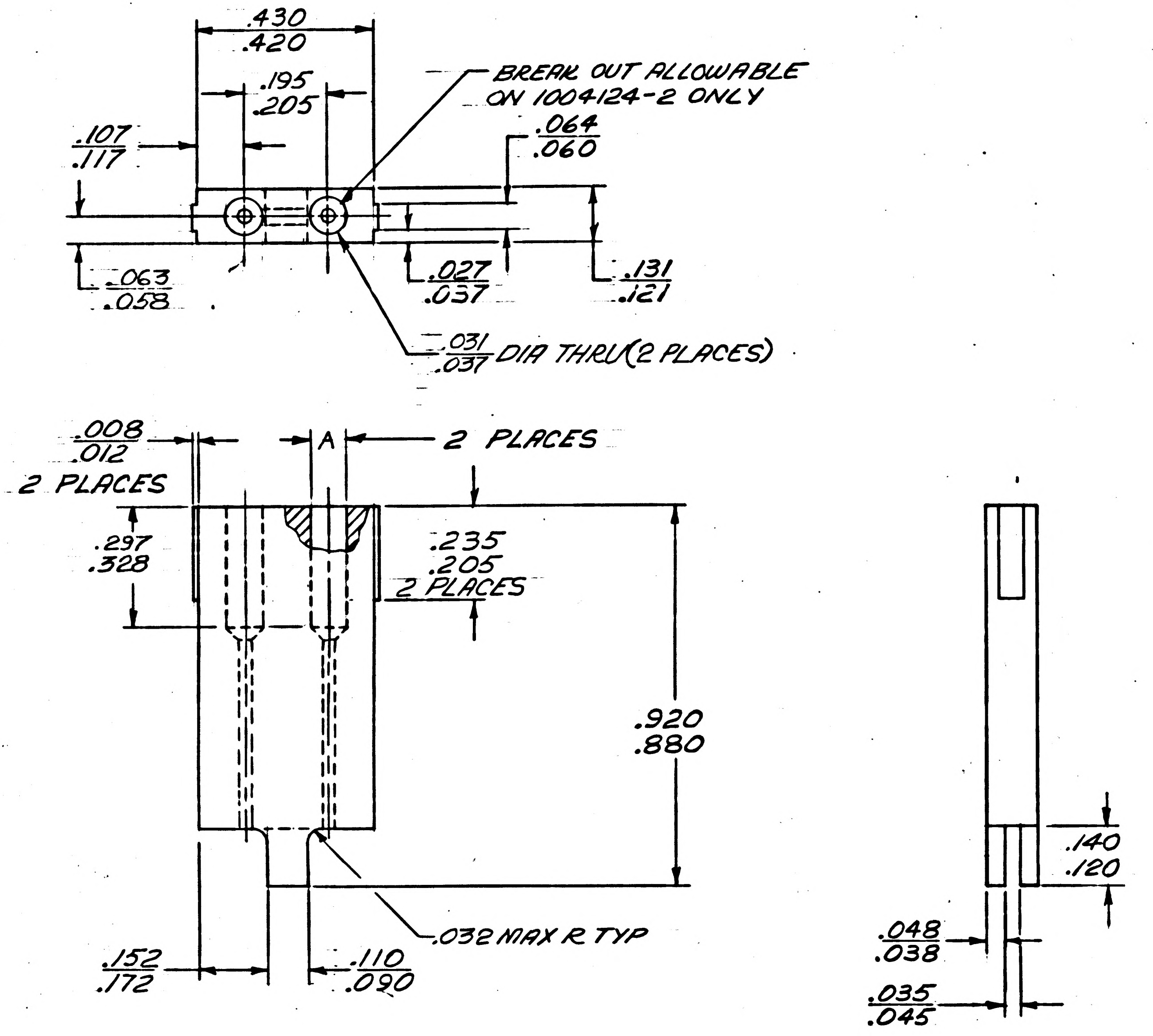
.430
.420
.195
.205
BREAK OUT ALLOWABLE ON 1004124-2 ONLY
.064
.060
.107
.117
.063
.058
.027
.037
.131
.121
.031/.037 DIA THRU (2 PLACES)
.008
.012
2 PLACES
A
2 PLACES
.297
.328
.235
.205
2 PLACES
.920
.880
.032 MAX R TYP
.152
.172
.110
.090
.140
.120
.048
.038
.035
.045

NOTES

1. MATL: PLASTIC SHEET ACRYLIC PER MIL-P-8184, FINISH B, ALT MIL-P-5425B FINISH B
2. REMOVE SHARP EDGES
3. INTERPRET DRAWING IN ACCORDANCE WITH STANDARDS PRESCRIBED BY MIL-D-70327

MASTER

QTY REQD	PART OR IDENTIFYING NO.	NOMENCLATURE OR DESCRIPTION	FIND NO.

LIST OF MATERIALS

NEXT ASSY	USED ON
1003098	

APPLICATION

UNLESS OTHERWISE SPECIFIED DIMENSIONS ARE IN INCHES
TOLERANCES ON
FRACTIONS ± DECIMALS ± ANGLES ±
DO NOT SCALE THIS DRAWING
MATERIAL SEE NOTE 1
HEAT TREATMENT NONE
FINAL FINISH NONE

MIT
INSTRUMENTATION LAB
CAMBRIDGE, MASS.
DWG. NO. CONTRACT
DRAWN D.A. Clermont DATE 21 JULY 63
CHECKED R.F. Buchanan 26 Aug 63
APPROVAL [illegible] 28 Aug 63
APPROVAL [illegible] 5 Sept 63
NASA APPROVAL [illegible] 9/5/63
MIT APPROVAL
MIT APPROVAL [illegible] 9/5/63

MANNED SPACECRAFT CENTER
HOUSTON, TEXAS

BLOCK, DIODE
RELAY MODULE
AGC DSKY, NAV & MAIN

CODE IDENT NO. —
SIZE C
NASA DRAWING NO. 1004124
SCALE 4/1
WT
SHEET 1 OF 1

INCHES
0 1 2
PHOTOGRAPHIC SCALE ONLY

NOTICE — WHEN GOVERNMENT DRAWINGS, SPECIFICATIONS, OR OTHER DATA ARE USED FOR ANY PURPOSE OTHER THAN IN CONNECTION WITH A DEFINITELY RELATED GOVERNMENT PROCUREMENT OPERATION, THE UNITED STATES GOVERNMENT THEREBY INCURS NO RESPONSIBILITY NOR ANY OBLIGATION WHATSOEVER; AND THE FACT THAT THE GOVERNMENT MAY HAVE FORMULATED, FURNISHED, OR IN ANY WAY SUPPLIED THE SAID DRAWINGS, SPECIFICATIONS OR OTHER DATA IS NOT TO BE REGARDED BY IMPLICATION OR OTHERWISE AS IN ANY MANNER LICENSING THE HOLDER OR ANY OTHER PERSON OR CORPORATION, OR CONVEYING ANY RIGHTS OR PERMISSION TO MANUFACTURE, USE, OR SELL ANY PATENTED INVENTION THAT MAY IN ANY WAY BE RELATED THERETO.

A DIM.	PART NO.
.081/.086 DIA	1004124-1
.099/.104 DIA	1004124-2

1004124 B

REVISIONS				
	SYM	DESCRIPTION	DATE	APPROVAL
Ⓜ	—	CLASS A RELEASE PER TDRR 02918	9/6/63	
Ⓜ	A	REVISED PER TDRR 04485	11-5-63	EOK
	B	REVISED PER TDRR 04738	11-19-63	EOK

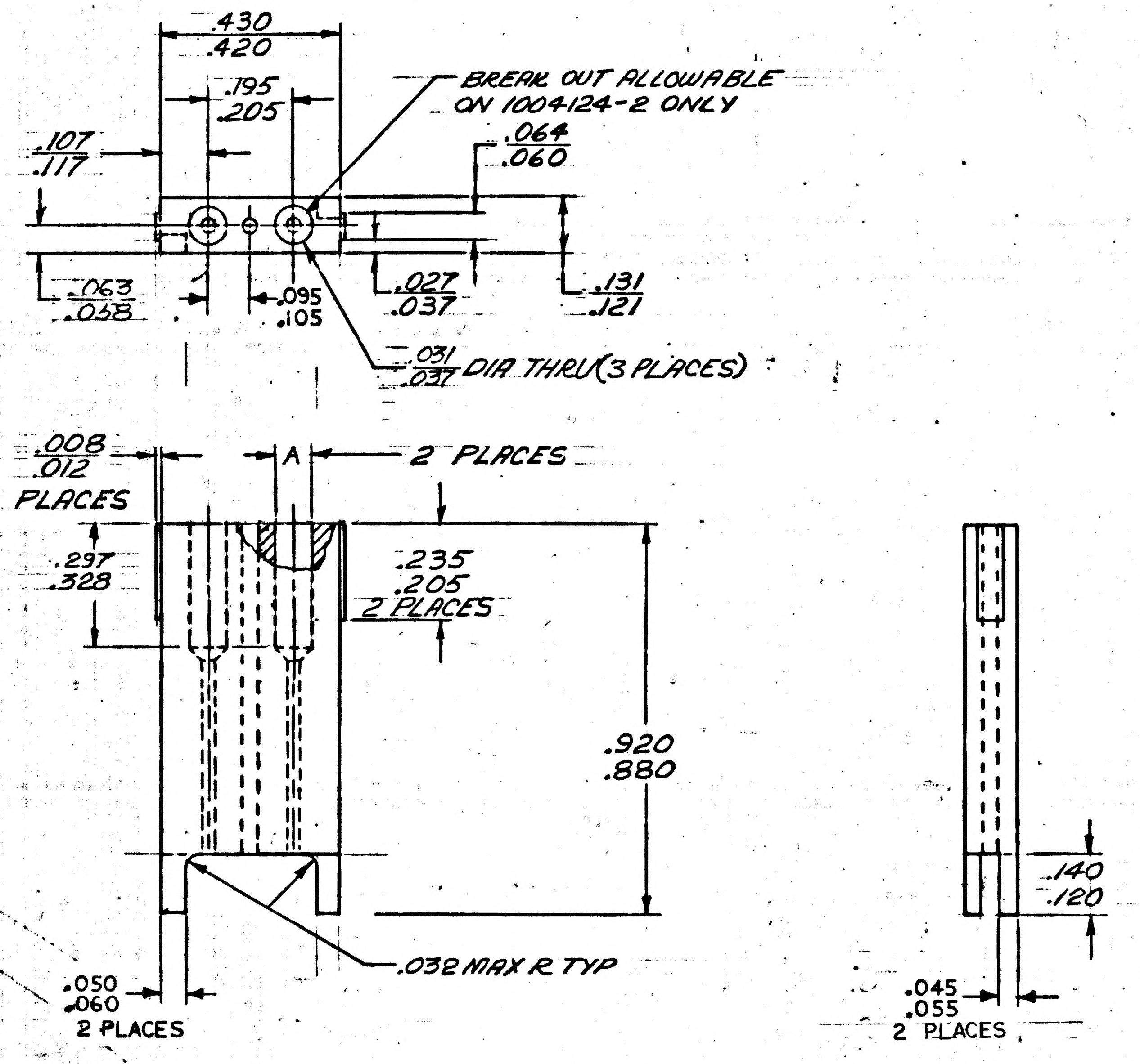
.430
.420
.195
.205
BREAK OUT ALLOWABLE ON 1004124-2 ONLY
.064
.060
.107
.117
.063
.058
.095
.105
.027
.037
.131
.121
.031
.037 DIA THRU (3 PLACES)
.008
.012
2 PLACES
A
2 PLACES
.297
.328
.235
.205
2 PLACES
.920
.880
.140
.120
.032 MAX R TYP
.050
.060
2 PLACES
.045
.055
2 PLACES

NOTES

1. MATL: PLASTIC SHEET ACRYLIC PER MIL-P-8184, FINISH B, ALT MIL-P-5425B FINISH B
2. REMOVE SHARP EDGES
3. INTERPRET DRAWING IN ACCORDANCE WITH STANDARDS PRESCRIBED BY MIL-D-70327

MASTER

QTY REQD	PART OR IDENTIFYING NO.	NOMENCLATURE OR DESCRIPTION	FIND NO.

LIST OF MATERIALS

1003098	
NEXT ASSY	USED ON
APPLICATION	

UNLESS OTHERWISE SPECIFIED DIMENSIONS ARE IN INCHES
TOLERANCES ON
FRACTIONS ± DECIMALS ± ANGLES ±
DO NOT SCALE THIS DRAWING
MATERIAL SEE NOTE 1
HEAT TREATMENT NONE
FINAL FINISH NONE

MIT INSTRUMENTATION LAB
CAMBRIDGE, MASS.
DWG. NO. CONTRACT
DRAWN D.C. Clement DATE 21 JULY 63
CHECKED R.F. Bunker 26 Aug 63
APPROVAL
APPROVAL Eldon C Hall 6 Sept 63
NASA APPROVAL 9/5/63
MIT APPROVAL
MIT APPROVAL 9/5/63

MANNED SPACECRAFT CENTER
HOUSTON, TEXAS

BLOCK, DIODE
RELAY MODULE
AGC DSKY, NAV & MAIN

CODE IDENT NO. —
SIZE C
NASA DRAWING NO. 1004124
SCALE 4/1
WT
SHEET 1 OF 1

INCHES
0 1 2
PHOTOGRAPHIC SCALE ONLY

NOTICE — WHEN GOVERNMENT DRAWINGS, SPECIFICATIONS, OR OTHER DATA ARE USED FOR ANY PURPOSE OTHER THAN IN CONNECTION WITH A DEFINITELY RELATED GOVERNMENT PROCUREMENT OPERATION, THE UNITED STATES GOVERNMENT THEREBY INCURS NO RESPONSIBILITY NOR ANY OBLIGATION WHATSOEVER; AND THE FACT THAT THE GOVERNMENT MAY HAVE FORMULATED, FURNISHED, OR IN ANY WAY SUPPLIED THE SAID DRAWINGS, SPECIFICATIONS OR OTHER DATA IS NOT TO BE REGARDED BY IMPLICATION OR OTHERWISE AS IN ANY MANNER LICENSING THE HOLDER OR ANY OTHER PERSON OR CORPORATION, OR CONVEYING ANY RIGHTS OR PERMISSION TO MANUFACTURE, USE, OR SELL ANY PATENTED INVENTION THAT MAY IN ANY WAY BE RELATED THERETO.

1004124

REVISIONS

SYM	DESCRIPTION	DATE	APPROVAL
—	CLASS A RELEASE PER TDRR 02918	9/5/63	

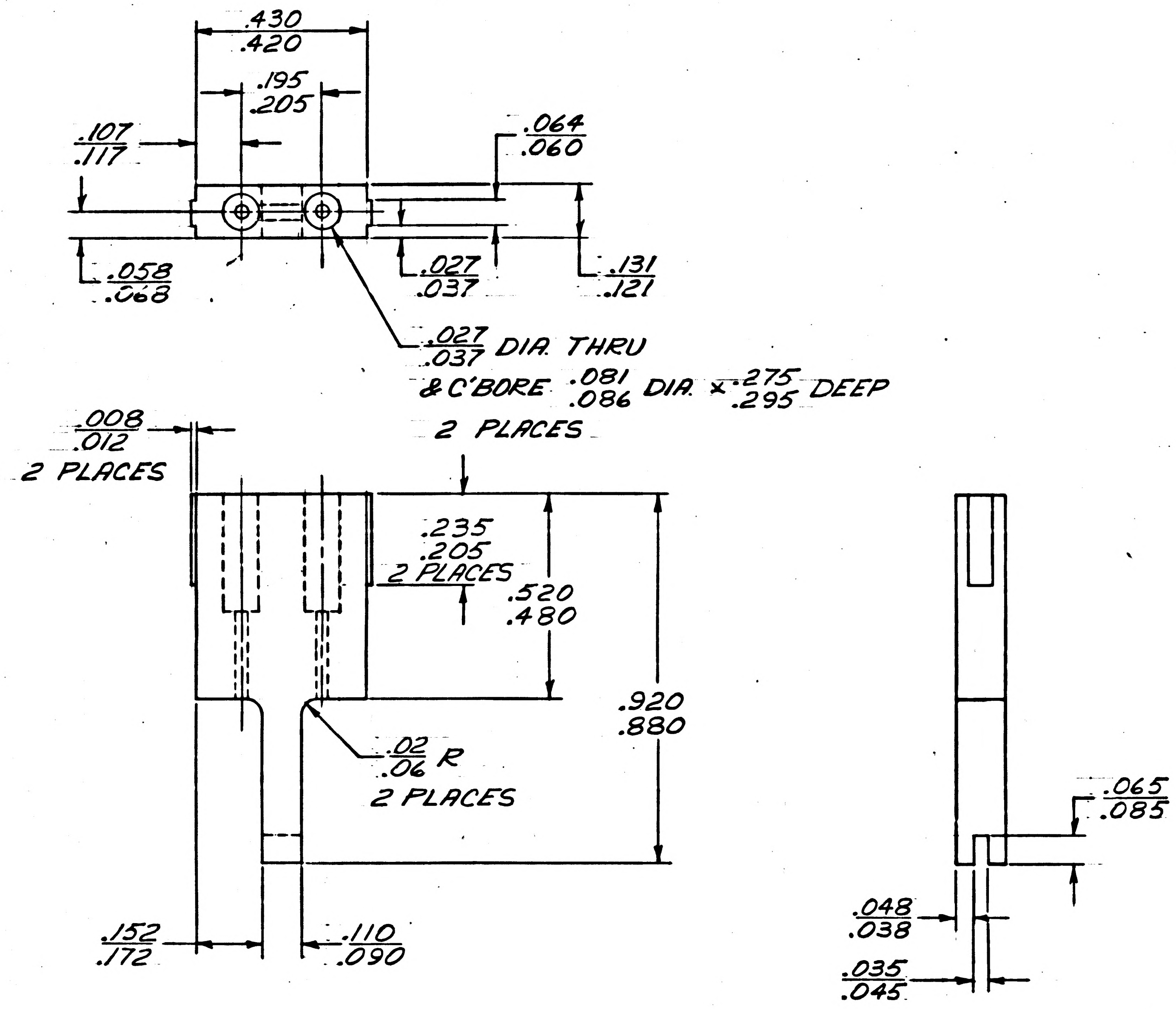
.430
.420
.195
.205
.107
.117
.064
.060
.058
.068
.027
.037
.131
.121
.027 DIA. THRU
.037
& C'BORE .081 DIA. × .275 DEEP
.086 .295
2 PLACES
.008
.012
2 PLACES
.235
.205
2 PLACES
.520
.480
.920
.880
.02 R
.06
2 PLACES
.065
.085
.048
.038
.035
.045
.152
.172
.110
.090

NOTES

1. MATL: PLASTIC SHEET ACRYLIC PER MIL-P-8184, FINISH B
2. REMOVE SHARP EDGES
3. INTERPRET DRAWING IN ACCORDANCE WITH STANDARDS PRESCRIBED BY MIL-D-70327

MASTER

QTY REQD	PART OR IDENTIFYING NO.	NOMENCLATURE OR DESCRIPTION	FIND NO.

LIST OF MATERIALS

NEXT ASSY	USED ON
1003098	

APPLICATION

UNLESS OTHERWISE SPECIFIED
DIMENSIONS ARE IN INCHES
TOLERANCES ON
FRACTIONS ± DECIMALS ± ANGLES ±
DO NOT SCALE THIS DRAWING

MATERIAL SEE NOTE 1
HEAT TREATMENT NONE
FINAL FINISH NONE

MIT
INSTRUMENTATION LAB
CAMBRIDGE, MASS.
DWG. NO. CONTRACT

DRAWN DATE 21 AUG 63
CHECKED 26 Aug 63
APPROVAL
APPROVAL 5 Sept 63
NASA APPROVAL 9/5/63
MIT APPROVAL
MIT APPROVAL 9/5/63

MANNED SPACECRAFT CENTER
HOUSTON, TEXAS

BLOCK, DIODE
AGC KEYBOARD

CODE IDENT NO. —
SIZE C
NASA DRAWING NO. 1004124
SCALE 4/1
WT
SHEET 1 OF 1

INCHES
0 1 2
PHOTOGRAPHIC SCALE ONLY

NOTICE - WHEN GOVERNMENT DRAWINGS, SPECIFICATIONS, OR OTHER DATA ARE USED FOR ANY PURPOSE OTHER THAN IN CONNECTION WITH A DEFINITELY RELATED GOVERNMENT PROCUREMENT OPERATION, THE UNITED STATES GOVERNMENT THEREBY INCURS NO RESPONSIBILITY NOR ANY OBLIGATION WHATSOEVER, AND THE FACT THAT THE GOVERNMENT MAY HAVE FORMULATED, FURNISHED, OR IN ANY WAY SUPPLIED THE SAID DRAWINGS, SPECIFICATIONS OR OTHER DATA IS NOT TO BE REGARDED BY IMPLICATION OR OTHERWISE AS IN ANY MANNER LICENSING THE HOLDER OR ANY OTHER PERSON OR CORPORATION, OR CONVEYING ANY RIGHTS OR PERMISSION TO MANUFACTURE, USE, OR SELL ANY PATENTED INVENTION THAT MAY IN ANY WAY BE RELATED THERETO.

REVISIONS 03453

SYM	DESCRIPTION	DATE	APPROVAL
A	REPLACED WITH CHANGE PER TDRR 04171	11-?-63	

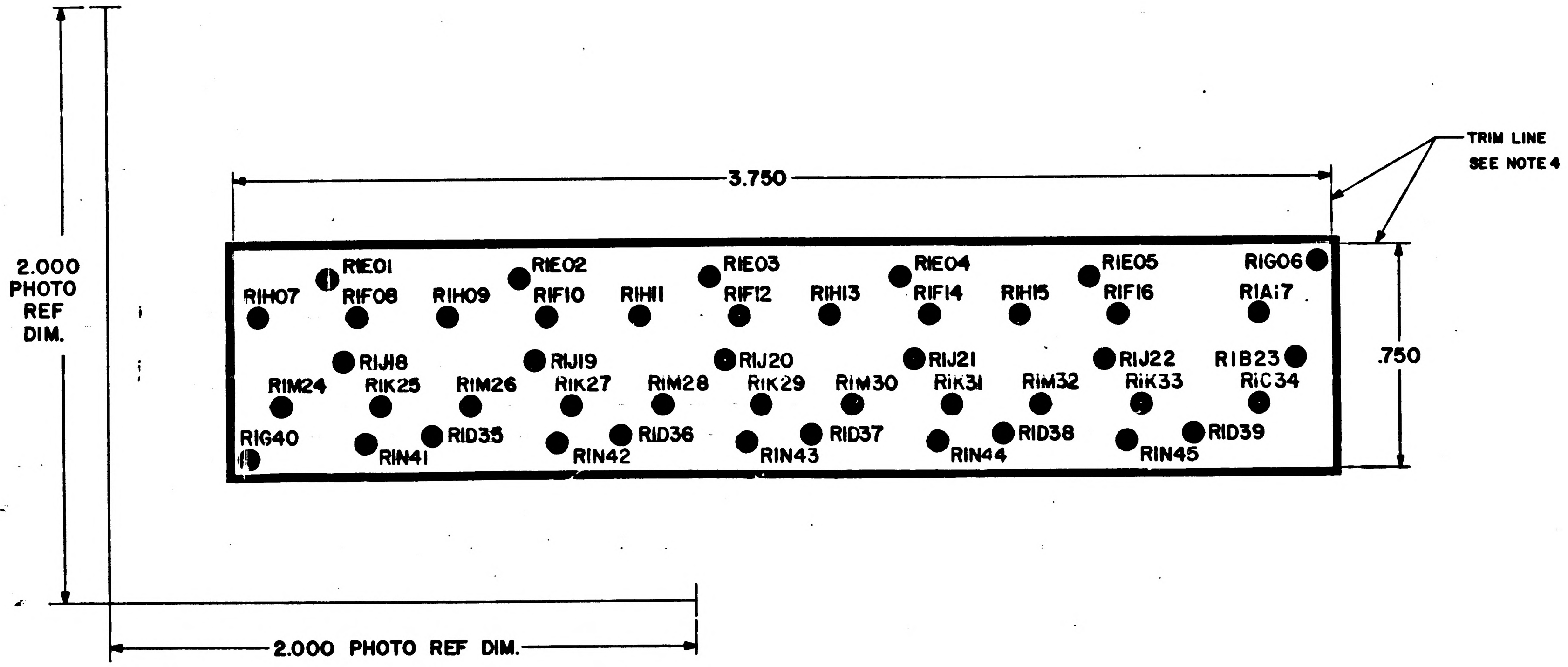
3.750
TRIM LINE
SEE NOTE 4
2.000
PHOTO
REF
DIM.
.750
2.000 PHOTO REF DIM.
R1E01
R1E02
R1E03
R1E04
R1E05
R1G06
R1H07
R1F08
R1H09
R1F10
R1H11
R1F12
R1H13
R1F14
R1H15
R1F16
R1A17
R1J18
R1J19
R1J20
R1J21
R1J22
R1B23
R1M24
R1K25
R1M26
R1K27
R1M28
R1K29
R1M30
R1K31
R1M32
R1K33
R1C34
R1G40
R1N41
R1D35
R1N42
R1D36
R1N43
R1D37
R1N44
R1D38
R1N45
R1D39

Ⓐ REPLACED WITH CHANGE BY REV B

INACTIVE

NOTES:
1. MATERIAL .006/008 THICK PLASTIC SHEET SENSITIZED DIMENSIONALLY STABLE PER L-F-340, TYPE IB, CLASS 2, STYLE I A
2. INTERPRET DRAWING IN ACCORDANCE WITH STANDARDS PRESCRIBED BY MIL-D-70327
3. ORIGINAL OF THIS DRAWING OR REPRODUCTION MADE BY A PROCESS OR METHOD SHALL INSURE DIMENSIONAL STABILITY. DIMENSIONAL STABILITY SHALL NOT EXCEED .001 INCH PER FOOT.
4. CUT TO WITHIN .010 OF TRIM LINE
5. MAKE PHOTOGRAPHIC MASTER NEGATIVE AND POSITIVE TO DIMENSIONS SHOWN
6. ● .078/.082 DIA PUNCH ALL HOLES

MASTER

QTY REQD	PART OR IDENTIFYING NO.	NOMENCLATURE OR DESCRIPTION	FIND NO.

LIST OF MATERIALS

NEXT ASSY	USED ON
1003824	

APPLICATION

UNLESS OTHERWISE SPECIFIED DIMENSIONS ARE IN INCHES
TOLERANCES ON
FRACTIONS ± DECIMALS ±.020" ANGLES ±
DO NOT SCALE THIS DRAWING
MATERIAL SEE NOTE 1
HEAT TREATMENT
FINAL FINISH

MIT
INSTRUMENTATION LAB
CAMBRIDGE, MASS
DWG. NO. CONTRACT
DRAWN R. Ramsay DATE 9 Aug 63
CHECKED
APPROVAL
APPROVAL E. Hall 21 Aug 63
NASA APPROVAL
MIT APPROVAL

MANNED SPACECRAFT CENTER
HOUSTON, TEXAS

PHOTOGRAPHIC MASTER DISPLAY REGISTER NO.1 AGC KEYBOARD

CODE IDENT NO. —
SIZE E
NASA DRAWING NO. 1004126
SCALE 5/1
WT
SHEET 1 OF 1

1004126 A

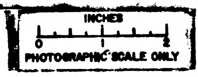
INCHES
0
1
PHOTOGRAPHIC SCALE ONLY

NOTICE — WHEN GOVERNMENT DRAWINGS, SPECIFICATIONS, OR OTHER DATA ARE USED FOR ANY PURPOSE OTHER THAN IN CONNECTION WITH A DEFINITE RELATED GOVERNMENT PROCUREMENT OPERATION, THE UNITED STATES GOVERNMENT THEREBY INCURS NO RESPONSIBILITY NOR ANY OBLIGATION WHATSOEVER; AND THE FACT THAT THE GOVERNMENT MAY HAVE FORMULATED, FURNISHED, OR IN ANY WAY SUPPLIED THE SAID DRAWINGS, SPECIFICATIONS, OR OTHER DATA IS NOT TO BE REGARDED BY IMPLICATION OR OTHERWISE AS IN ANY MANNER LICENSING THE HOLDER OR ANY OTHER PERSON OR CORPORATION, OR CONVEYING ANY RIGHTS OR PERMISSION TO MANUFACTURE, USE, OR SELL ANY PATENTED INVENTION THAT MAY IN ANY WAY BE RELATED THERETO.

REVISIONS 0 34 53			
SYM	DESCRIPTION	DATE	APPROVAL

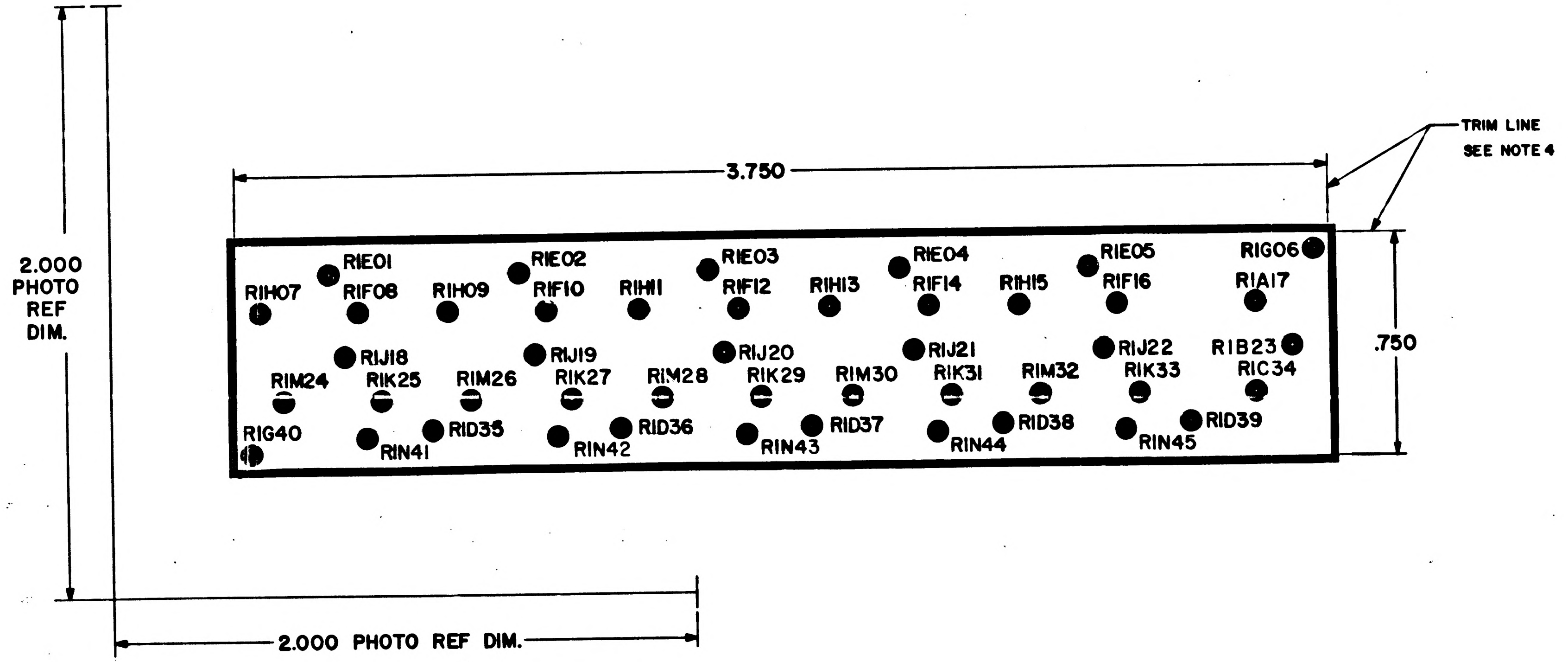

TRIM LINE
SEE NOTE 4
3.750
2.000
PHOTO
REF
DIM.
.750
2.000 PHOTO REF DIM.
R1E01
R1E02
R1E03
R1E04
R1E05
R1G06
R1H07
R1F08
R1H09
R1F10
R1H11
R1F12
R1H13
R1F14
R1H15
R1F16
R1A17
R1J18
R1J19
R1J20
R1J21
R1J22
R1B23
R1M24
R1K25
R1M26
R1K27
R1M28
R1K29
R1M30
R1K31
R1M32
R1K33
R1C34
R1D35
R1D36
R1D37
R1D38
R1D39
R1G40
R1N41
R1N42
R1N43
R1N44
R1N45

NOTES:
1. MATERIAL: .006/.008 THICK PLASTIC SHEET SENSITIZED DIMENSIONALLY STABLE PER L-F-340, TYPE IB, CLASS 2, STYLE IA
2. INTERPRET DRAWING IN ACCORDANCE WITH STANDARDS PRESCRIBED BY MIL-D-70327
3. ORIGINAL OF THIS DRAWING OR REPRODUCTION MADE BY A PROCESS OR METHOD SHALL INSURE DIMENSIONAL STABILITY. DIMENSIONAL STABILITY SHALL NOT EXCEED .001 INCH PER FOOT.
4. CUT TO WITHIN .010 OF TRIM LINE
5. MAKE PHOTOGRAPHIC MASTER NEGATIVE AND POSITIVE TO DIMENSIONS SHOWN
6. ● .078/.082 DIA PUNCH ALL HOLES

MASTER

QTY REQD	PART OR IDENTIFYING NO.	NOMENCLATURE OR DESCRIPTION	FIND NO.

LIST OF MATERIALS

1003524	
NEXT ASSY	USED ON
APPLICATION	

UNLESS OTHERWISE SPECIFIED
DIMENSIONS ARE IN INCHES
TOLERANCES ON
FRACTIONS ± DECIMALS ±.020 ANGLES ±
DO NOT SCALE THIS DRAWING
MATERIAL
SEE NOTE 1
HEAT TREATMENT
FINAL FINISH

MIT
INSTRUMENTATION LAB
CAMBRIDGE MASS
DWG NO
CONTRACT
DRAWN R. Ramsay DATE [illegible]
CHECKED [illegible] 27 Aug
APPROVAL [illegible]
APPROVAL E C Hall 26 Sept 63
NASA APPROVAL [illegible]
MIT APPROVAL [illegible] 9/26/63

MANNED SPACECRAFT CENTER
HOUSTON, TEXAS

PHOTOGRAPHIC MASTER
DISPLAY REGISTER NO.1
AGC KEYBOARD

CODE IDENT NO. —
SIZE E
NASA DRAWING NO. 1004126
SCALE 5/1
WT
SHEET 1 OF 1

1004126

INCHES
0 1 2
PHOTOGRAPHIC SCALE ONLY

NOTICE — WHEN GOVERNMENT DRAWINGS, SPECIFICATIONS, OR OTHER DATA ARE USED FOR ANY PURPOSE OTHER THAN IN CONNECTION WITH A DEFINITELY RELATED GOVERNMENT PROCUREMENT OPERATION, THE UNITED STATES GOVERNMENT THEREBY INCURS NO RESPONSIBILITY NOR ANY OBLIGATION WHATSOEVER; AND THE FACT THAT THE GOVERNMENT MAY HAVE FORMULATED, FURNISHED, OR IN ANY WAY SUPPLIED THE SAID DRAWINGS, SPECIFICATIONS OR OTHER DATA IS NOT TO BE REGARDED BY IMPLICATION OR OTHERWISE AS IN ANY MANNER LICENSING THE HOLDER OR ANY OTHER PERSON OR CORPORATION, OR CONVEYING ANY RIGHTS OR PERMISSION TO MANUFACTURE, USE, OR SELL ANY PATENTED INVENTION THAT MAY IN ANY WAY BE RELATED THERETO.

ANY USE OF THIS DOCUMENT FOR OTHER THAN GOVERNMENTAL PURPOSES IS SUBJECT TO PRIOR WRITTEN CONSENT OF RAYTHEON CO.

REVISIONS 03107

SYM	DESCRIPTION	DATE	APPROVED
B	ISSUED AS ~~REPLACES~~ REV ~~A~~ B WITH CHANGE PER TDRR 03107 (Rev A was never released)	9-18-63	WK

PART NO.	ENGRAVING
1004127 - 1	CLEAR
1004127 - 2	VERB
1004127 - 3	NOUN
1004127 - 4	ENTER
1004127 - 5	+
1004127 - 6	7
1004127 - 7	8
1004127 - 8	9
1004127 - 9	−
1004127 - 10	4
1004127 - 11	5
1004127 - 12	6
1004127 - 13	0
1004127 - 14	1
1004127 - 15	2
1004127 - 16	3

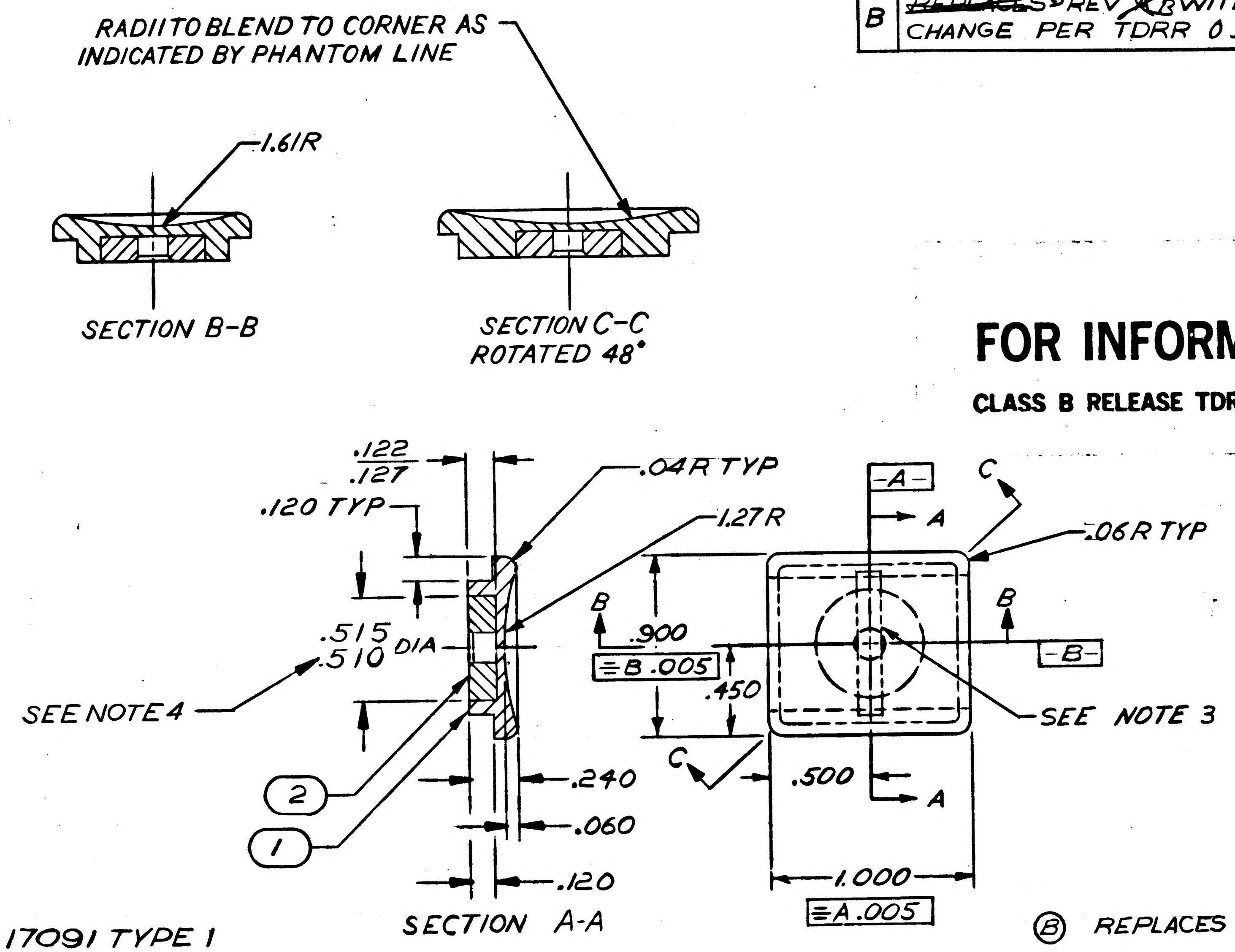

FOR INFORMATION ONLY

CLASS B RELEASE TDR No. 03107 **DATE**

Ⓑ REPLACES REV A WITH CHANGE

NOTES:

1. MATL: NYLON PER MIL-P-17091 TYPE 1 COLOR WHITE PER FED-STD-595 CHIP NO. 37875
2. REMOVE SHARP EDGES
3. ENGRAVE CHARACTERS .12 HIGH X .010/.016 DEEP PER ND1002019, EXCEPT STYLE FUTURA DEMIBOLD PER ND 1002122. FILL FLUSH TO TOP SURFACE WITH MATERIAL PER ND1002130, COLOR BLACK PER FED-STD-595 CHIP NO. 37038 CENTRALLY LOCATED
4. INDICATED DIMENSION NOT TO APPLY WHEN ASSEMBLY IS TO BE MOLDED

QTY REQD	PART OR IDENTIFYING NO.	NOMENCLATURE OR DESCRIPTION	FIND NO.
1	1004159	INSERT, BUTTON	2
1	SEE TABLE	BUTTON, KEYBOARD	1

LIST OF MATERIALS

NEXT ASSY	USED ON
1003097	

APPLICATION

UNLESS OTHERWISE SPECIFIED DIMENSIONS ARE IN INCHES
TOLERANCES ON
FRACTIONS ± DECIMALS ±.02 ±.005 ANGLES ±
DO NOT SCALE THIS DRAWING

MATERIAL SEE NOTE 1
HEAT TREATMENT
FINAL FINISH

MIT INSTRUMENTATION LAB
CAMBRIDGE, MASS.
DWG. NO. CONTRACT

DRAWN D.Q. O'Brien DATE 7-26-63
CHECKED Aug 13.63
APPROVAL D.B. Turner 12 SEP63
APPROVAL
APPROVAL
NASA APPROVAL 9/11/63
MIT APPROVAL
MIT APPROVAL 12 Sep 63

MANNED SPACECRAFT CENTER
HOUSTON, TEXAS

BUTTON, KEYBOARD
AGC KEYBOARD

CODE IDENT NO. ——
SIZE C
NASA DRAWING NO. 1004127
SCALE 2/1
WT
SHEET 1 OF 1

INTERPRET DRAWING IN ACCORDANCE WITH STANDARDS PRESCRIBED BY MIL-D-70327

INCHES 0 1 2 PHOTOGRAPHIC SCALE ONLY

1004127

NOTICE — WHEN GOVERNMENT DRAWINGS, SPECIFICATIONS, OR OTHER DATA ARE USED FOR ANY PURPOSE OTHER THAN IN CONNECTION WITH A DEFINITELY RELATED GOVERNMENT PROCUREMENT OPERATION, THE UNITED STATES GOVERNMENT THEREBY INCURS NO RESPONSIBILITY NOR ANY OBLIGATION WHATSOEVER; AND THE FACT THAT THE GOVERNMENT MAY HAVE FORMULATED, FURNISHED, OR IN ANY WAY SUPPLIED THE SAID DRAWINGS, SPECIFICATIONS OR OTHER DATA IS NOT TO BE REGARDED BY IMPLICATION OR OTHERWISE AS IN ANY MANNER LICENSING THE HOLDER OR ANY OTHER PERSON OR CORPORATION, OR CONVEYING ANY RIGHTS OR PERMISSION TO MANUFACTURE, USE, OR SELL ANY PATENTED INVENTION THAT MAY IN ANY WAY BE RELATED THERETO.

ANY USE OF THIS DOCUMENT FOR OTHER THAN GOVERNMENTAL PURPOSES IS SUBJECT TO PRIOR WRITTEN CONSENT OF RAYTHEON CO.

REVISIONS 03107

SYM	DESCRIPTION	DATE	APPROVED
Ⓜ B	ISSUED AS ~~REPLACES~~ REV ~~A~~ B WITH (Rev A was never released) CHANGE PER TDRR 03107	7-18-63	WK
C	REVISED AND UPGRADED TO CLASS A PER TDRR 04169	10-24-63	RPK

PART NO.	ENGRAVING	VIEW	DIM A
1004127 - 1	CLEAR	1	.12
1004127 - 2	VERB	1	.12
1004127 - 3	NOUN	1	.12
1004127 - 4	ENTER	1	.12
1004127 - 5	+	1	.38
1004127 - 6	7	1	.38
1004127 - 7	8	1	.38
1004127 - 8	9	1	.38
1004127 - 9	—	1	.38
1004127 - 10	4	1	.38
1004127 - 11	5	1	.38
1004127 - 12	6	1	.38
1004127 - 13	0	1	.38
1004127 - 14	1	1	.38
1004127 - 15	2	1	.38
1004127 - 16	3	1	.38
1004127 - 17	TEST ALARM	2	.12
1004127 - 18	ERROR RESET	2	.12
1004127 - 19	KEY RLSE	2	.12

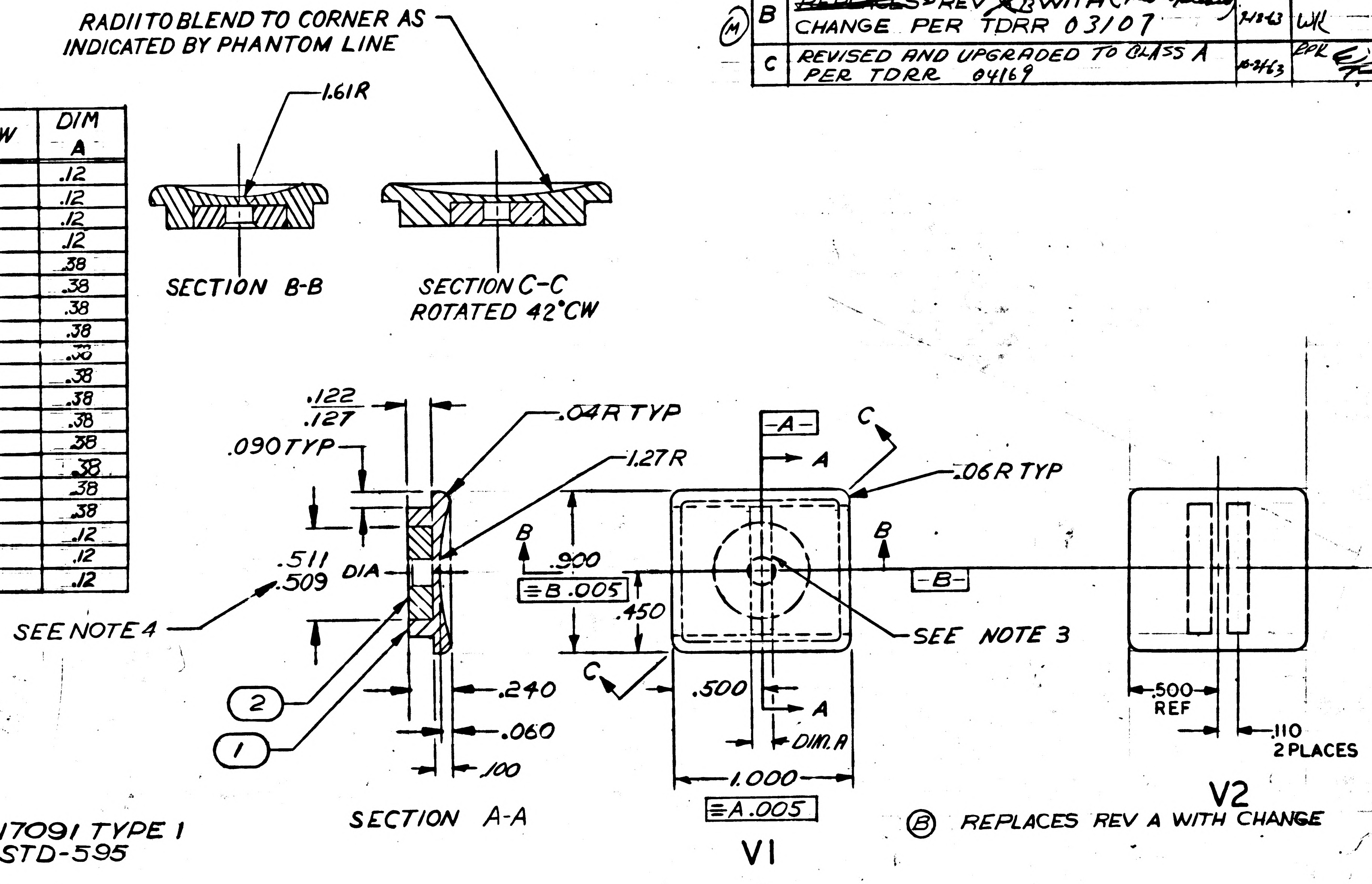

NOTES:

1. MATL: NYLON PER MIL-P-17091 TYPE 1 COLOR WHITE PER FED-STD-595 CHIP NO. 37875
2. REMOVE SHARP EDGES
3. ENGRAVE CHARACTERS .010/.016 DEEP PER ND1002019, EXCEPT STYLE FUTURA DEMIBOLD PER ND 1002122. FILL FLUSH TO TOP SURFACE WITH MATERIAL PER ND1002130, COLOR BLACK PER FED-STD-595 CHIP NO. 37038 CENTRALLY LOCATED
4. INDICATED DIMENSION NOT TO APPLY WHEN ASSEMBLY IS TO BE MOLDED

QTY REQD	PART OR IDENTIFYING NO.	NOMENCLATURE OR DESCRIPTION	FIND NO.
1	1004159	INSERT, BUTTON	2
1	SEE TABLE	BUTTON, KEYBOARD	1

LIST OF MATERIALS

NEXT ASSY	USED ON
1003539	
1003097	

APPLICATION

UNLESS OTHERWISE SPECIFIED DIMENSIONS ARE IN INCHES
TOLERANCES ON
FRACTIONS ± DECIMALS ±.02 ±.005 ANGLES ±
DO NOT SCALE THIS DRAWING
MATERIAL SEE NOTE 1
HEAT TREATMENT
FINAL FINISH

MIT INSTRUMENTATION LAB
CAMBRIDGE, MASS.
DWG. NO. CONTRACT
DRAWN DQ C[illegible] DATE 7-26-63
CHECKED [illegible] Smith Aug 13.63
APPROVAL W B Turner 12 SEP63
APPROVAL [illegible]
APPROVAL
NASA APPROVAL [illegible] 9/1-[illegible]
MIT APPROVAL
MIT APPROVAL [illegible] 12 Sep 63

MANNED SPACECRAFT CENTER
HOUSTON, TEXAS

BUTTON, KEYBOARD
AGC DSKY, NAV & MAIN

CODE IDENT NO. —— SIZE C NASA DRAWING NO. 1004127
SCALE 2/1 WT SHEET 1 OF 1

INTERPRET DRAWING IN ACCORDANCE WITH STANDARDS PRESCRIBED BY MIL-D-70327

MASTER

INCHES
0 1 2
PHOTOGRAPHIC SCALE ONLY

NOTICE — WHEN GOVERNMENT DRAWINGS, SPECIFICATIONS, OR OTHER DATA ARE USED FOR ANY PURPOSE OTHER THAN IN CONNECTION WITH A DEFINITELY RELATED GOVERNMENT PROCUREMENT OPERATION, THE UNITED STATES GOVERNMENT THEREBY INCURS NO RESPONSIBILITY NOR ANY OBLIGATION WHATSOEVER; AND THE FACT THAT THE GOVERNMENT MAY HAVE FORMULATED, FURNISHED, OR IN ANY WAY SUPPLIED THE SAID DRAWINGS, SPECIFICATIONS OR OTHER DATA IS NOT TO BE REGARDED BY IMPLICATION OR OTHERWISE AS IN ANY MANNER LICENSING THE HOLDER OR ANY OTHER PERSON OR CORPORATION, OR CONVEYING ANY RIGHTS OR PERMISSION TO MANUFACTURE, USE, OR SELL ANY PATENTED INVENTION THAT MAY IN ANY WAY BE RELATED THERETO.

1004127

REVISIONS			
SYM	DESCRIPTION	DATE	APPROVAL

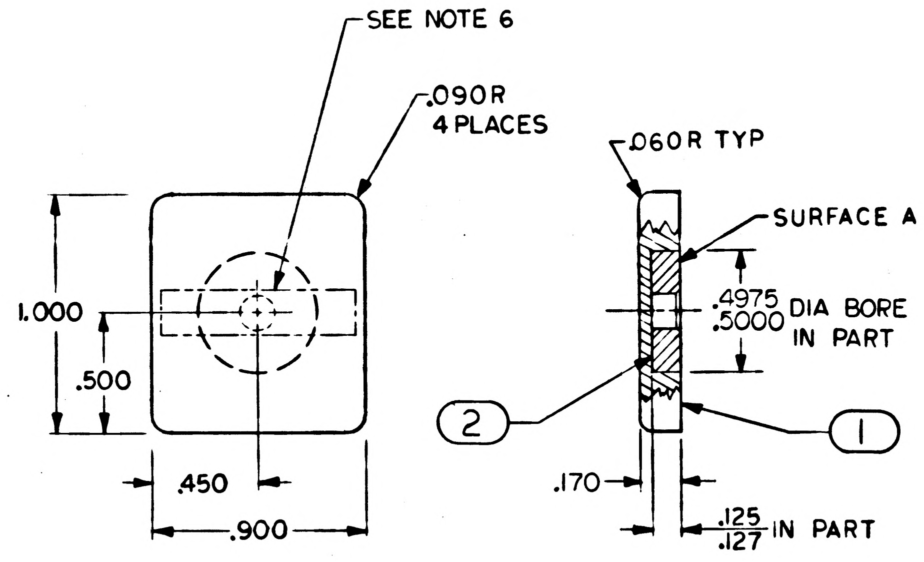

DASH NO.	MARKING
1	CLEAR
2	VERB
3	NOUN
4	ENTER
5	+
6	7
7	8
8	9
9	–
10	4
11	5
12	6
13	0
14	1
15	2
16	3

FOR INFORMATION ONLY

CLASS B RELEASE TDR No. 01298 **DATE** 5-22-63

NOTES

1. INTERPRET DRAWING IN ACCORDANCE WITH MIL-D-70327
2. MATERIAL: NYLON PER MIL-P-17091
3. REMOVE SHARP EDGES
4. MASK SURFACE A
5. PAINT LIGHT GRAY PER FEDERAL STANDARD NO. 595-26440
6. SILK SCREEN 5/32 HIGH CHARACTERS BLACK PER ND 1002019

QTY REQD	PART OR IDENTIFYING NO.	NOMENCLATURE OR DESCRIPTION	FIND NO.
1	1004159	INSERT, BUTTON	2
	———	BUTTON, KEYBOARD	1

LIST OF MATERIALS

MASTER

NEXT ASSY	USED ON
APPLICATION	

UNLESS OTHERWISE SPECIFIED
DIMENSIONS ARE IN INCHES
TOLERANCES ON
FRACTIONS ±1/64 DECIMALS ±.005 ANGLES ±
DO NOT SCALE THIS DRAWING
MATERIAL SEE NOTE 2
HEAT TREATMENT //
FINAL FINISH //

MIT
INSTRUMENTATION LAB
CAMBRIDGE, MASS.
DWG. NO. CONTRACT

DRAWN Tom Hilligoss DATE
CHECKED 5-14-63
APPROVAL W B Turner 22 MAY 63
APPROVAL
NASA APPROVAL 5/22/63
MIT APPROVAL 5/22/63

MANNED SPACECRAFT CENTER
HOUSTON, TEXAS

BUTTON, KEYBOARD

AGC KEYBOARD

CODE IDENT NO.
SIZE C
NASA DRAWING NO. 1004127
SCALE 2:1
WT
SHEET 1 OF 1

INCHES
0 1 2
PHOTOGRAPHIC SCALE ONLY

NOTICE — WHEN GOVERNMENT DRAWINGS, SPECIFICATIONS, OR OTHER DATA ARE USED FOR ANY PURPOSE OTHER THAN IN CONNECTION WITH A DEFINITELY RELATED GOVERNMENT PROCUREMENT OPERATION, THE UNITED STATES GOVERNMENT THEREBY INCURS NO RESPONSIBILITY NOR ANY OBLIGATION WHATSOEVER; AND THE FACT THAT THE GOVERNMENT MAY HAVE FORMULATED, FURNISHED, OR IN ANY WAY SUPPLIED THE SAID DRAWINGS, SPECIFICATIONS, OR OTHER DATA IS NOT TO BE REGARDED BY IMPLICATION OR OTHERWISE AS IN ANY MANNER LICENSING THE HOLDER OR ANY OTHER PERSON OR CORPORATION, OR CONVEYING ANY RIGHTS OR PERMISSION TO MANUFACTURE, USE, OR SELL ANY PATENTED INVENTION THAT MAY IN ANY WAY BE RELATED THERETO.

REVISIONS 03453			
SYM	DESCRIPTION	DATE	APPROVAL
A	REPLACED WITH CHANGE PER TDRR 04771	11-4-65	

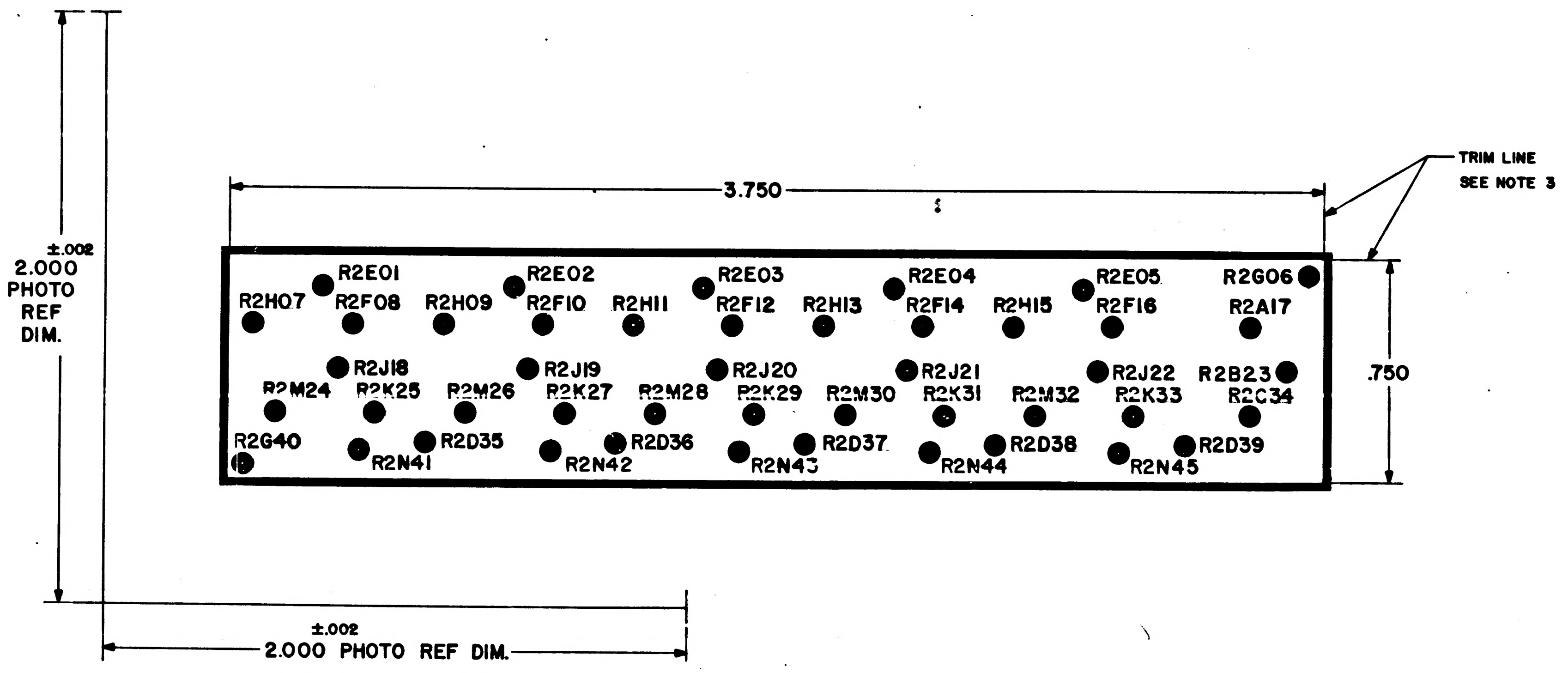

3.750
TRIM LINE
SEE NOTE 3
±.002
2.000
PHOTO
REF
DIM.
.750
R2E01
R2E02
R2E03
R2E04
R2E05
R2G06
R2H07
R2F08
R2H09
R2F10
R2H11
R2F12
R2H13
R2F14
R2H15
R2F16
R2A17
R2J18
R2J19
R2J20
R2J21
R2J22
R2B23
R2M24
R2K25
R2M26
R2K27
R2M28
R2K29
R2M30
R2K31
R2M32
R2K33
R2C34
R2G40
R2D35
R2D36
R2D37
R2D38
R2D39
R2N41
R2N42
R2N43
R2N44
R2N45
±.002
2.000 PHOTO REF DIM.

Ⓐ REPLACED WITH CHANGE BY REV B

INACTIVE

NOTES:

1. MATERIAL: .006/.008 THICK PLASTIC SHEET, SENSITIZED, DIMENSIONALLY STABLE PER L-F-340, TYPE IB, CLASS 2, STYLE IA
2. INTERPRET DRAWING IN ACCORDANCE WITH STANDARDS PRESCRIBED BY MIL-D-70327
3. ORIGINAL OF THIS DRAWING OR REPRODUCTION MADE BY A PROCESS OR METHOD SHALL INSURE DIMENSIONAL STABILITY. DIMENSIONAL VARIATIONS SHALL NOT EXCEED .001 INCH PER FOOT.
4. CUT TO WITHIN .010 OF TRIM LINE
5. MAKE PHOTOGRAPHIC MASTER NEGATIVE AND POSITIVE FILMS TO DIMENSIONS SHOWN
6. ● .078/.082 DIA PUNCH ALL HOLES

MASTER

QTY REQD	PART OR IDENTIFYING NO.	NOMENCLATURE OR DESCRIPTION	FIND NO.

LIST OF MATERIALS

NEXT ASSY	USED ON
1006524	

APPLICATION

UNLESS OTHERWISE SPECIFIED
DIMENSIONS ARE IN INCHES
TOLERANCES ON
FRACTIONS ± — DECIMALS ± .020 ANGLES ± —
DO NOT SCALE THIS DRAWING
MATERIAL SEE NOTE 5
HEAT TREATMENT —
FINAL FINISH —

M I T
INSTRUMENTATION LAB
CAMBRIDGE, MASS
DWG NO CONTRACT
DRAWN DATE 8 JUN 63
CHECKED 27 JUN 63
APPROVAL
APPROVAL 20 Sept 63
NASA APPROVAL
MIT APPROVAL 9/24/63

MANNED SPACECRAFT CENTER
HOUSTON, TEXAS

PHOTOGRAPHIC MASTER
DISPLAY REGISTER NO.2
AGC KEYBOARD

CODE IDENT NO. | SIZE E | NASA DRAWING NO 1004128
SCALE 5/1 | WT | SHEET 1 OF 1

1004128 A

INCHES
0 1 2
PHOTOGRAPHIC SCALE ONLY

NOTICE — WHEN GOVERNMENT DRAWINGS, SPECIFICATIONS, OR OTHER DATA ARE USED FOR ANY PURPOSE OTHER THAN IN CONNECTION WITH A DEFINITELY RELATED GOVERNMENT PROCUREMENT OPERATION, THE UNITED STATES GOVERNMENT THEREBY INCURS NO RESPONSIBILITY NOR ANY OBLIGATION WHATSOEVER; AND THE FACT THAT THE GOVERNMENT MAY HAVE FORMULATED, FURNISHED, OR IN ANY WAY SUPPLIED THE SAID DRAWINGS, SPECIFICATIONS, OR OTHER DATA IS NOT TO BE REGARDED BY IMPLICATION OR OTHERWISE AS IN ANY MANNER LICENSING THE HOLDER OR ANY OTHER PERSON OR CORPORATION, OR CONVEYING ANY RIGHTS OR PERMISSION TO MANUFACTURE, USE, OR SELL ANY PATENTED INVENTION THAT MAY IN ANY WAY BE RELATED THERETO.

REVISIONS 03453

SYM	DESCRIPTION	DATE	APPROVAL

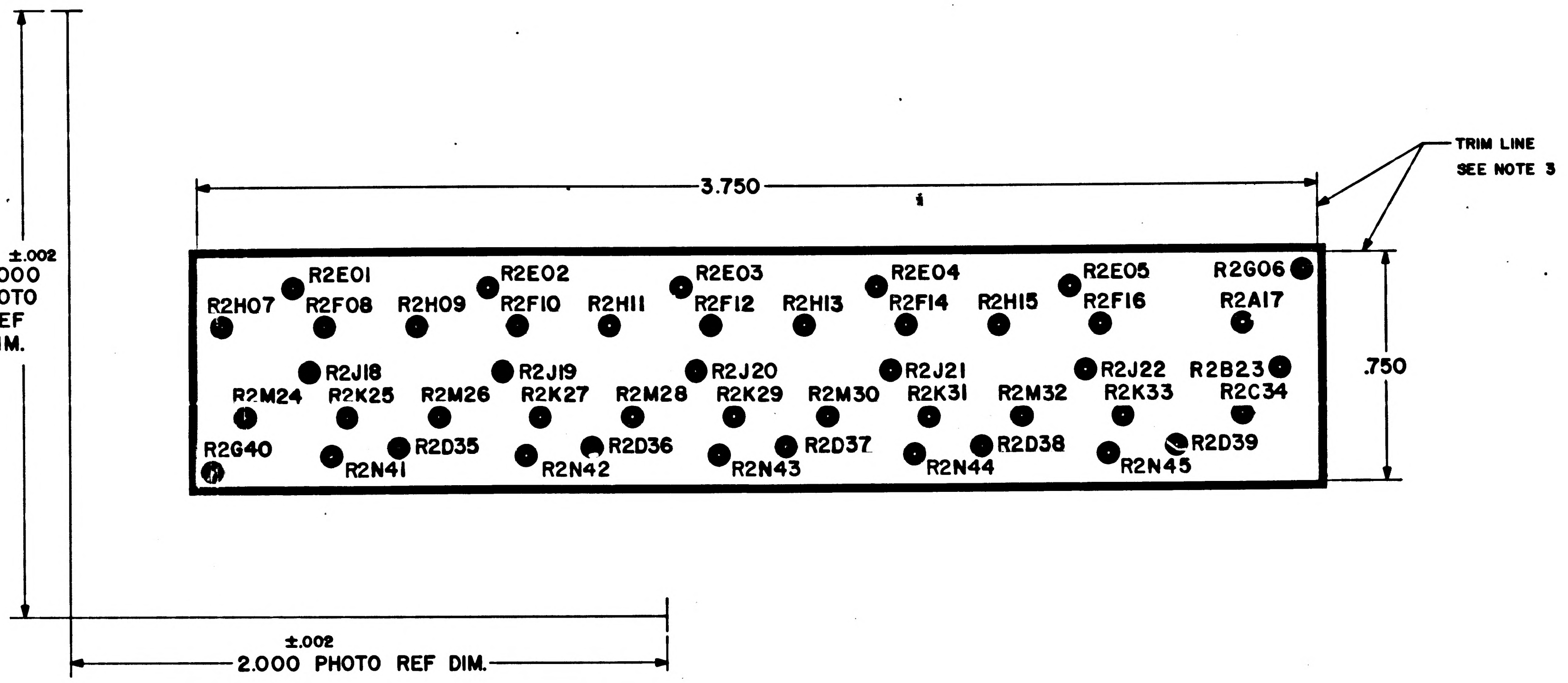
3.750
TRIM LINE
SEE NOTE 3
±.002
2.000
PHOTO
REF
DIM.
.750
R2E01
R2E02
R2E03
R2E04
R2E05
R2G06
R2H07
R2F08
R2H09
R2F10
R2H11
R2F12
R2H13
R2F14
R2H15
R2F16
R2A17
R2J18
R2J19
R2J20
R2J21
R2J22
R2B23
R2M24
R2K25
R2M26
R2K27
R2M28
R2K29
R2M30
R2K31
R2M32
R2K33
R2C34
R2G40
R2N41
R2D35
R2N42
R2D36
R2N43
R2D37
R2N44
R2D38
R2N45
R2D39
±.002
2.000 PHOTO REF DIM.

NOTES:

1. MATERIAL: .006/.008 THICK PLASTIC SHEET, SENSITIZED, DIMENSIONALLY STABLE PER L-F-340, TYPE IB, CLASS 2, STYLE IA
2. INTERPRET DRAWING IN ACCORDANCE WITH STANDARDS PRESCRIBED BY MIL-D-70327
3. ORIGINAL OF THIS DRAWING OR REPRODUCTION MADE BY A PROCESS OR METHOD SHALL INSURE DIMENSIONAL STABILITY. DIMENSIONAL VARIATIONS SHALL NOT EXCEED .001 INCH PER FOOT.
4. CUT TO WITHIN .010 OF TRIM LINE
5. MAKE PHOTOGRAPHIC MASTER NEGATIVE AND POSITIVE FILMS TO DIMENSIONS SHOWN
6. ● .078/.082 DIA PUNCH ALL HOLES

QTY REQD	PART OR IDENTIFYING NO.	NOMENCLATURE OR DESCRIPTION	FIND NO.

LIST OF MATERIALS

1003524	
NEXT ASSY	USED ON
APPLICATION	

UNLESS OTHERWISE SPECIFIED DIMENSIONS ARE IN INCHES
TOLERANCES ON
FRACTIONS ± — DECIMALS ± .020 ANGLES ± —
DO NOT SCALE THIS DRAWING
MATERIAL SEE NOTE 5
HEAT TREATMENT —
FINAL FINISH —

MIT INSTRUMENTATION LAB
CAMBRIDGE, MASS
DWG NO
CONTRACT
DRAWN
DATE
CHECKED
APPROVAL
APPROVAL
NASA APPROVAL
MIT APPROVAL

MANNED SPACECRAFT CENTER
HOUSTON, TEXAS

PHOTOGRAPHIC MASTER
DISPLAY REGISTER NO.2
AGC KEYBOARD

CODE IDENT NO.
SIZE E
NASA DRAWING NO. 1004128
SCALE 5/1
WT
SHEET 1 OF 1

1004128

MASTER

INCHES
PHOTOGRAPHIC SCALE ONLY

SYM	DESCRIPTION	DATE	APPROVAL
A	REPLACED WITH CHANGE PER TDRR 06771	11-14-63	

REVISIONS 03453

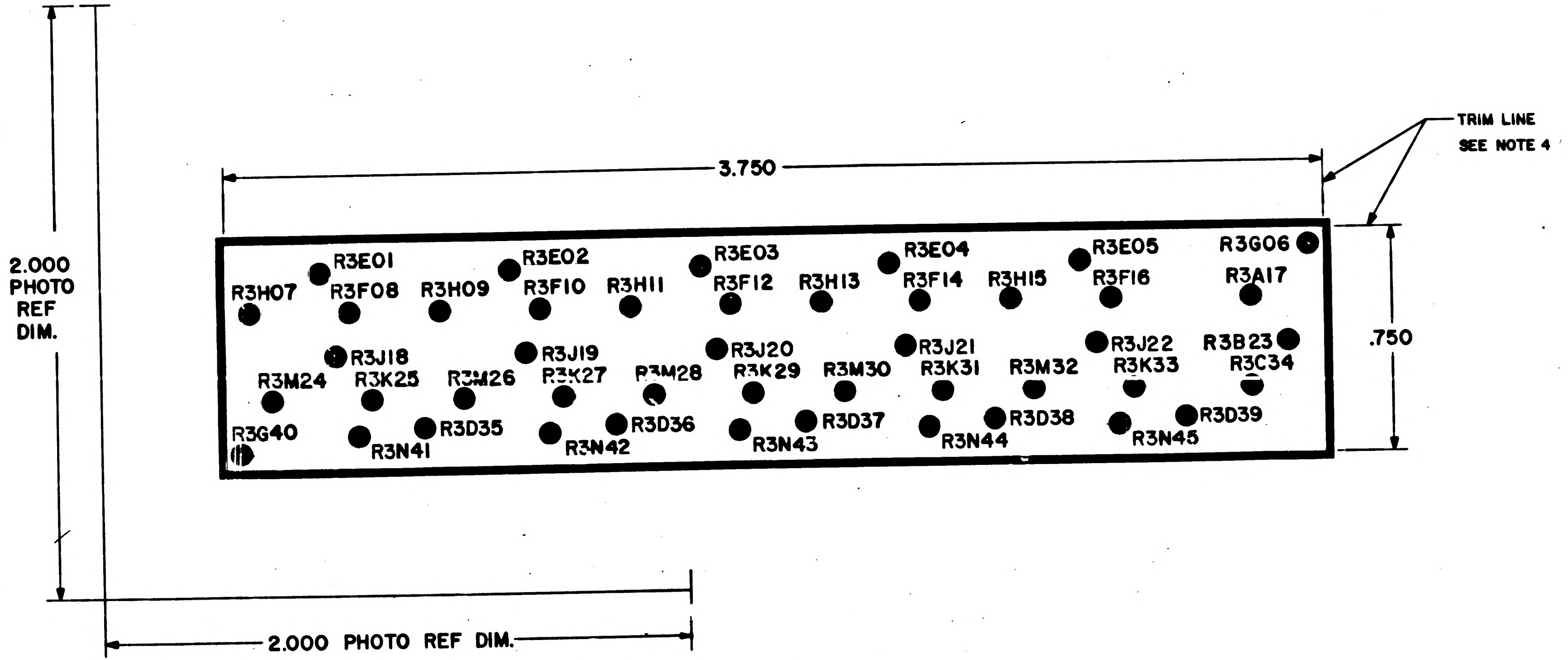
TRIM LINE
SEE NOTE 4
3.750
2.000 PHOTO REF DIM.
.750
2.000 PHOTO REF DIM.
R3E01
R3E02
R3E03
R3E04
R3E05
R3G06
R3H07
R3F08
R3H09
R3F10
R3H11
R3F12
R3H13
R3F14
R3H15
R3F16
R3A17
R3J18
R3J19
R3J20
R3J21
R3J22
R3B23
R3M24
R3K25
R3M26
R3K27
R3M28
R3K29
R3M30
R3K31
R3M32
R3K33
R3C34
R3D35
R3D36
R3D37
R3D38
R3D39
R3G40
R3N41
R3N42
R3N43
R3N44
R3N45

Ⓐ REPLACED WITH CHANGE BY REV B

INACTIVE

NOTES
1. MATERIAL: .006/.008 THICK PLASTIC SHEET, SENSITIZED, DIMENSIONALLY STABLE PER L-F-340, TYPE IB, CLASS 2, STYLE IA
2. INTERPRET DRAWING IN ACCORDANCE WITH STANDARDS PRESCRIBED BY MIL-D-70327
3. ORIGINAL OF THIS DRAWING OR REPRODUCTION MADE BY A PROCESS OR METHOD SHALL INSURE DIMENSIONAL STABILITY. DIMENSIONAL VARIATIONS SHALL NOT EXCEED .001 INCH PER FOOT.
4. CUT TO WITHIN .010 OF TRIM LINE
5. MAKE PHOTOGRAPHIC MASTER NEGATIVE AND POSITIVE FILMS TO DIMENSIONS SHOWN
6. ● .078/.082 DIA PUNCH ALL HOLES

MASTER

QTY REQD	PART OR IDENTIFYING NO.	NOMENCLATURE OR DESCRIPTION	FIND NO

LIST OF MATERIALS

1003524	
NEXT ASSY	USED ON
APPLICATION	

UNLESS OTHERWISE SPECIFIED DIMENSIONS ARE IN INCHES
TOLERANCES ON
FRACTIONS ± DECIMALS ±.020 ANGLES ±
DO NOT SCALE THIS DRAWING
MATERIAL SEE NOTE 1
HEAT TREATMENT
FINAL FINISH

MIT INSTRUMENTATION LAB
CAMBRIDGE MASS
DWG NO. CONTRACT
DRAWN A. Hutchinson DATE 21 Aug 63
CHECKED 22 Aug 63
APPROVAL 26 Sept 63
APPROVAL 20 Sept 63
NASA APPROVAL
MIT APPROVAL 9/21/64

MANNED SPACECRAFT CENTER
HOUSTON, TEXAS

PHOTOGRAPHIC MASTER
DISPLAY REGISTER NO.3
AGC KEYBOARD

CODE IDENT NO. —
SIZE E
NASA DRAWING NO. 1004129
SCALE 8/1
WT
SHEET 1 OF 1

INCHES
0 1 2
PHOTOGRAPHIC SCALE ONLY

NOTICE — WHEN GOVERNMENT DRAWINGS, SPECIFICATIONS, OR OTHER DATA ARE USED FOR ANY PURPOSE OTHER THAN IN CONNECTION WITH A DEFINITELY RELATED GOVERNMENT PROCUREMENT OPERATION, THE UNITED STATES GOVERNMENT THEREBY INCURS NO RESPONSIBILITY NOR ANY OBLIGATION WHATSOEVER AND THE FACT THAT THE GOVERNMENT MAY HAVE FORMULATED, FURNISHED, OR IN ANY WAY SUPPLIED THE SAID DRAWINGS, SPECIFICATIONS OR OTHER DATA IS NOT TO BE REGARDED BY IMPLICATION OR OTHERWISE AS IN ANY MANNER LICENSING THE HOLDER OR ANY OTHER PERSON OR CORPORATION, OR CONVEYING ANY RIGHTS OR PERMISSION TO MANUFACTURE, USE, OR SELL ANY PATENTED INVENTION THAT MAY IN ANY WAY BE RELATED THERETO.

REVISIONS 03453

SYM	DESCRIPTION	DATE	APPROVAL

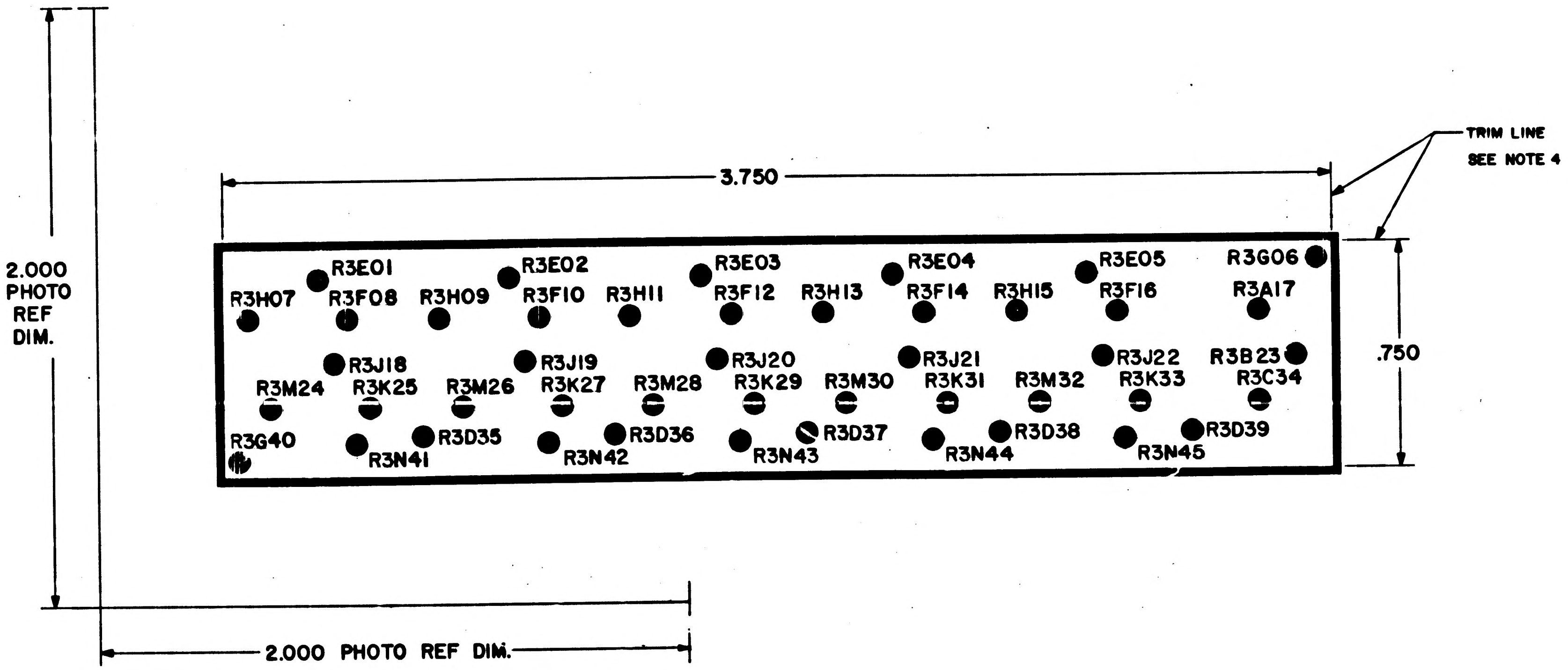
TRIM LINE
SEE NOTE 4
3.750
.750
2.000
PHOTO
REF
DIM.
2.000 PHOTO REF DIM.
R3E01
R3E02
R3E03
R3E04
R3E05
R3G06
R3H07
R3F08
R3H09
R3F10
R3H11
R3F12
R3H13
R3F14
R3H15
R3F16
R3A17
R3J18
R3J19
R3J20
R3J21
R3J22
R3B23
R3M24
R3K25
R3M26
R3K27
R3M28
R3K29
R3M30
R3K31
R3M32
R3K33
R3C34
R3D35
R3D36
R3D37
R3D38
R3D39
R3G40
R3N41
R3N42
R3N43
R3N44
R3N45

NOTES
1. MATERIAL: .006/.008 THICK PLASTIC SHEET, SENSITIZED, DIMENSIONALLY STABLE PER L-F-340, TYPE IB, CLASS 2, STYLE IA
2. INTERPRET DRAWING IN ACCORDANCE WITH STANDARDS PRESCRIBED BY MIL-D-70327
3. ORIGINAL OF THIS DRAWING OR REPRODUCTION MADE BY A PROCESS OR METHOD SHALL INSURE DIMENSIONAL STABILITY. DIMENSIONAL VARIATIONS SHALL NOT EXCEED .001 INCH PER FOOT.
4. CUT TO WITHIN .010 OF TRIM LINE
5. MAKE PHOTOGRAPHIC MASTER NEGATIVE AND POSITIVE FILMS TO DIMENSIONS SHOWN
6. ● .078/.082 DIA PUNCH ALL HOLES

QTY REQD	PART OR IDENTIFYING NO.	NOMENCLATURE OR DESCRIPTION	FIND NO.

LIST OF MATERIALS

1003524	
NEXT ASSY	USED ON
APPLICATION	

UNLESS OTHERWISE SPECIFIED DIMENSIONS ARE IN INCHES
TOLERANCES ON
FRACTIONS ± DECIMALS ± .020 ANGLES ±
DO NOT SCALE THIS DRAWING
MATERIAL SEE NOTE I
HEAT TREATMENT
FINAL FINISH

MIT
INSTRUMENTATION LAB
CAMBRIDGE, MASS
DWG. NO. CONTRACT
DRAWN A. Hutchinson DATE 20 Aug 63
CHECKED 27 Aug 63
APPROVAL 4 Sept 63
APPROVAL 20 Sept 63
NASA APPROVAL
MIT APPROVAL

MANNED SPACECRAFT CENTER
HOUSTON, TEXAS

PHOTOGRAPHIC MASTER DISPLAY REGISTER NO.3
AGC KEYBOARD

CODE IDENT NO. —
SIZE E
NASA DRAWING NO. 1004129
SCALE 5/1
WT
SHEET 1 OF 1

MASTER

1004129

INCHES
0 1
PHOTOGRAPHIC SCALE ONLY

NOTICE — WHEN GOVERNMENT DRAWINGS, SPECIFICATIONS, OR OTHER DATA ARE USED FOR ANY PURPOSE OTHER THAN IN CONNECTION WITH A DEFINITELY RELATED GOVERNMENT PROCUREMENT OPERATION, THE UNITED STATES GOVERNMENT THEREBY INCURS NO RESPONSIBILITY NOR ANY OBLIGATION WHATSOEVER, AND THE FACT THAT THE GOVERNMENT MAY HAVE FORMULATED, FURNISHED OR IN ANY WAY SUPPLIED THE SAID DRAWINGS, SPECIFICATIONS OR OTHER DATA IS NOT TO BE REGARDED BY IMPLICATION OR OTHERWISE AS IN ANY MANNER LICENSING THE HOLDER OR ANY OTHER PERSON OR CORPORATION, OR CONVEYING ANY RIGHTS OR PERMISSION TO MANUFACTURE, USE, OR SELL ANY PATENTED INVENTION THAT MAY IN ANY WAY BE RELATED THERETO.

REVISIONS			
SYM	DESCRIPTION	DATE	APPROVAL

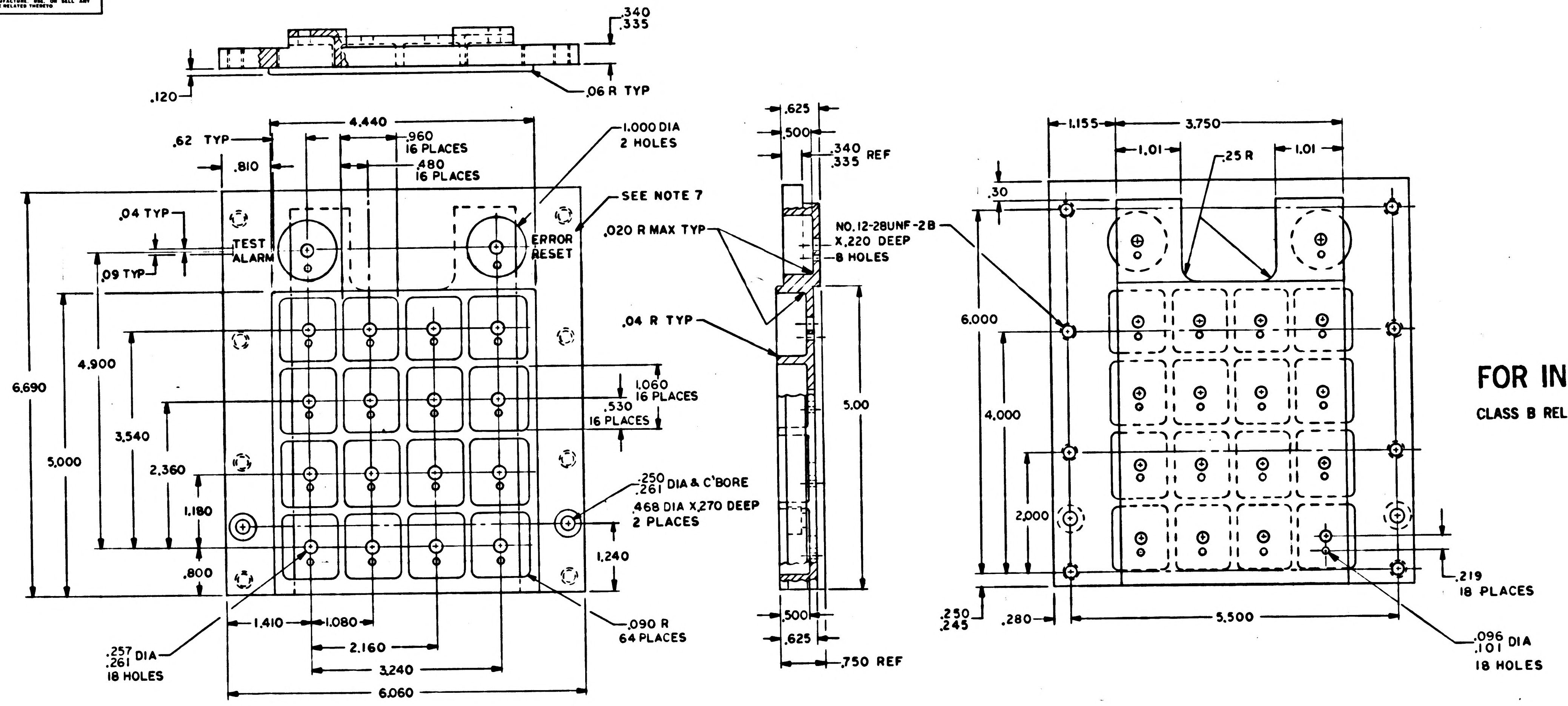
.340
.335
.120
.06 R TYP
4.440
.62 TYP
.960
16 PLACES
.480
16 PLACES
.810
1.000 DIA
2 HOLES
SEE NOTE 7
.04 TYP
TEST
ALARM
ERROR
RESET
.09 TYP
.020 R MAX TYP
.04 R TYP
6.690
5.000
4.900
3.540
2.360
1.180
.800
1.060
16 PLACES
.530
16 PLACES
.250
.261 DIA & C'BORE
.468 DIA X.270 DEEP
2 PLACES
1.240
.090 R
64 PLACES
1.410
1.080
2.160
3.240
6.060
.257
.261 DIA
18 HOLES
.625
.500
.340
.335 REF
NO.12-28UNF-2B
X.220 DEEP
8 HOLES
5.00
.500
.625
.750 REF
1.155
3.750
1.01
.25 R
1.01
.30
6.000
4.000
2.000
.219
18 PLACES
.250
.245
.280
5.500
.096
.101 DIA
18 HOLES

FRONT VIEW

FOR INFORMATION ONLY

CLASS B RELEASE TDR No. 01298 DATE 5-22-63

NOTES:

1. INTERPRET DRAWING IN ACCORDANCE WITH STANDARDS PRESCRIBED BY MIL-D-70327
2. MATERIAL: .750 THK ALUMINUM PER QQ-A-327, TEMP-T6
3. 125√ ALL OVER
4. REMOVE BURRS AND SHARP EDGES
5. ANODIZE PER MIL-A-8625 TYPE II DYED BLACK
6. MASK ALL THRU HOLES
7. SILKSCREEN .125 HIGH CHARACTERS PER ND1002019
8. PAINT FRONT AND TWO SIDES MEDIUM GRAY PER FED STD 595-26231

QTY REQD	PART OR IDENTIFYING NO.	NOMENCLATURE OR DESCRIPTION	FIND NO.

LIST OF MATERIALS

NEXT ASSY	USED ON
APPLICATION	

UNLESS OTHERWISE SPECIFIED
DIMENSIONS ARE IN INCHES
TOLERANCES ON
FRACTIONS ± DECIMALS ±.005 ±.02 ANGLES ±
DO NOT SCALE THIS DRAWING

MATERIAL
SEE NOTE 2

HEAT TREATMENT

FINAL FINISH
SEE NOTES 5 & 8

MIT
INSTRUMENTATION LAB
CAMBRIDGE, MASS
DWG. NO. CONTRACT

DRAWN DATE
CHECKED 5-14-63
APPROVAL 22 MAY 63
APPROVAL
NASA APPROVAL 5/22/63
MIT APPROVAL 5/22/63

MANNED SPACECRAFT CENTER
HOUSTON, TEXAS

HOUSING, KEYBOARD,
NAVIGATION
AGC KEYBOARD

CODE IDENT NO. SIZE D NASA DRAWING NO. 1004139

SCALE 1/1 WT SHEET 1 OF 1

INCHES
0 1 2
PHOTOGRAPHIC SCALE ONLY

1004141

SYM	DESCRIPTION	DATE	APPROVAL
A	REVISED PER TDRR 01457	6-4-63	

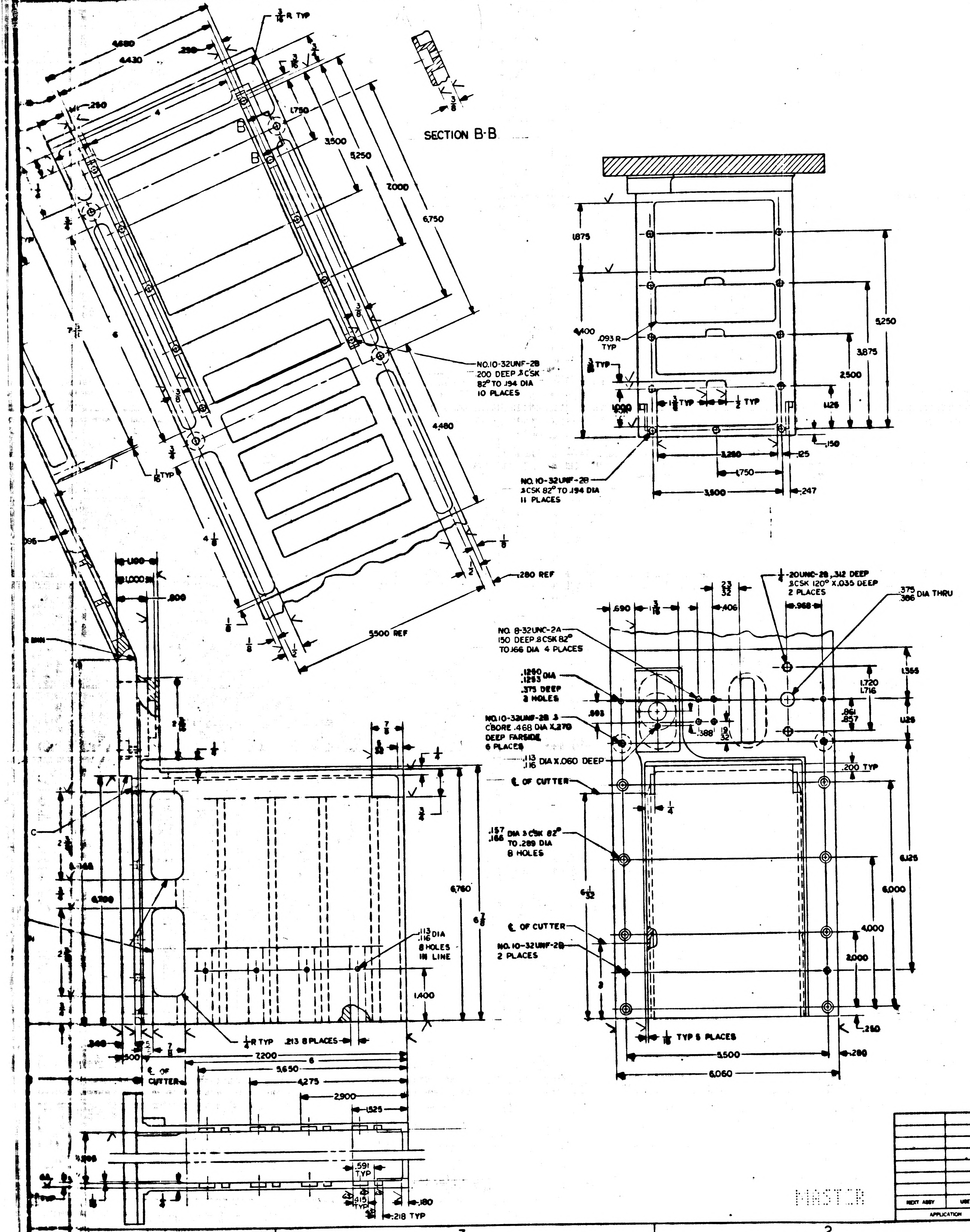
SECTION B-B
B
NO.10-32UNF-2B .200 DEEP & CSK 82° TO .194 DIA 10 PLACES
NO.10-32UNF-2B & CSK 82° TO .194 DIA 11 PLACES
.093 R TYP
.280 REF
5.500 REF
1/4-20UNC-2B .312 DEEP & CSK 120° X.035 DEEP 2 PLACES
.375/.386 DIA THRU
NO. 8-32UNC-2A .150 DEEP & CSK 82° TO .166 DIA 4 PLACES
.1260/.1253 DIA .375 DEEP 2 HOLES
NO.10-32UNF-2B & CBORE .468 DIA X.270 DEEP FARSIDE 6 PLACES
.113/.116 DIA X.060 DEEP
℄ OF CUTTER
.157/.166 DIA & CSK 82° TO .289 DIA 8 HOLES
NO.10-32UNF-2B 2 PLACES
.113/.116 DIA 8 HOLES IN LINE
1/4 R TYP
.213 8 PLACES
1/16 TYP 5 PLACES
.200 TYP
.218 TYP
.591 TYP
℄ OF CUTTER
C
5.500
6.060
7.200
5.650
4.275
2.900
1.525

FOR INFORMATION ONLY

CLASS B RELEASE TDR No. 01298 DATE 5-22-63

MASTER

QTY REQD	PART OR IDENTIFYING NO.	NOMENCLATURE OR DESCRIPTION	FIND NO.

LIST OF MATERIALS

NEXT ASSY	USED ON
APPLICATION	

UNLESS OTHERWISE SPECIFIED DIMENSIONS ARE IN INCHES TOLERANCES ON

FRACTIONS	DECIMALS	ANGLES
±1/64	±.005	±1/2°

DO NOT SCALE THIS DRAWING

MATERIAL SEE NOTE 2

HEAT TREATMENT

FINAL FINISH

MIT INSTRUMENTATION LAB CAMBRIDGE, MASS.

DRAWN DATE 5-2-63
CHECKED 5-13-63
APPROVAL
APPROVAL
NASA APPROVAL 5/13/63
MIT APPROVAL

MANNED SPACECRAFT CENTER
HOUSTON, TEXAS

HOUSING, DISPLAY,
NAVIGATION PANEL
AGC KEYBOARD

CODE IDENT NO | SIZE J | NASA DRAWING NO. 1004141

SCALE 1/1 | WT | SHEET 1 OF 1

[illegible]

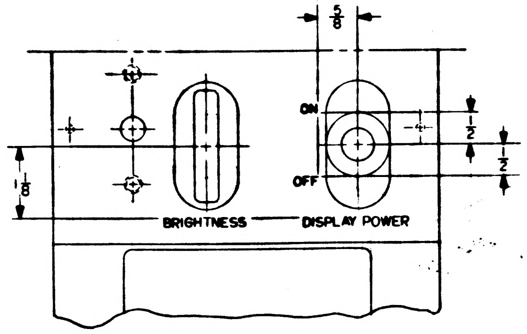

5/8
ON
OFF
1/2
1/2
1/8
BRIGHTNESS
DISPLAY POWER

MARKING VIEW

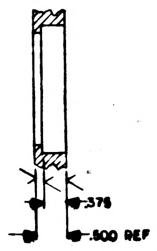

SECTION A-A

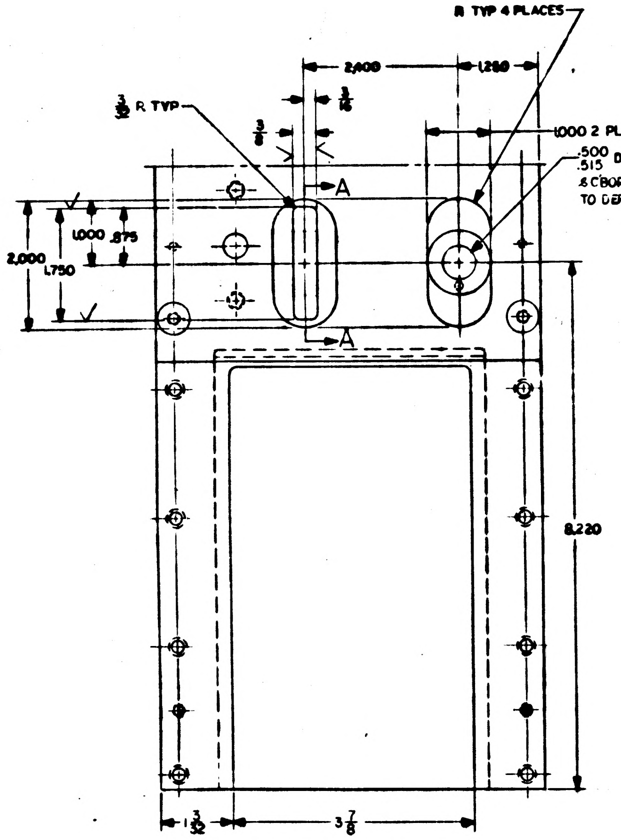

3/32 R TYP
R TYP 4 PLACES
2.400
1.250
3/8
3/16
1.000 2 PLACES
.500 DIA
.515
& C'BORE 1.000 DIA TO DEPTH SHOWN
A
A
2.000
1.750
1.000
.875
8.220
1 3/32
3 7/8

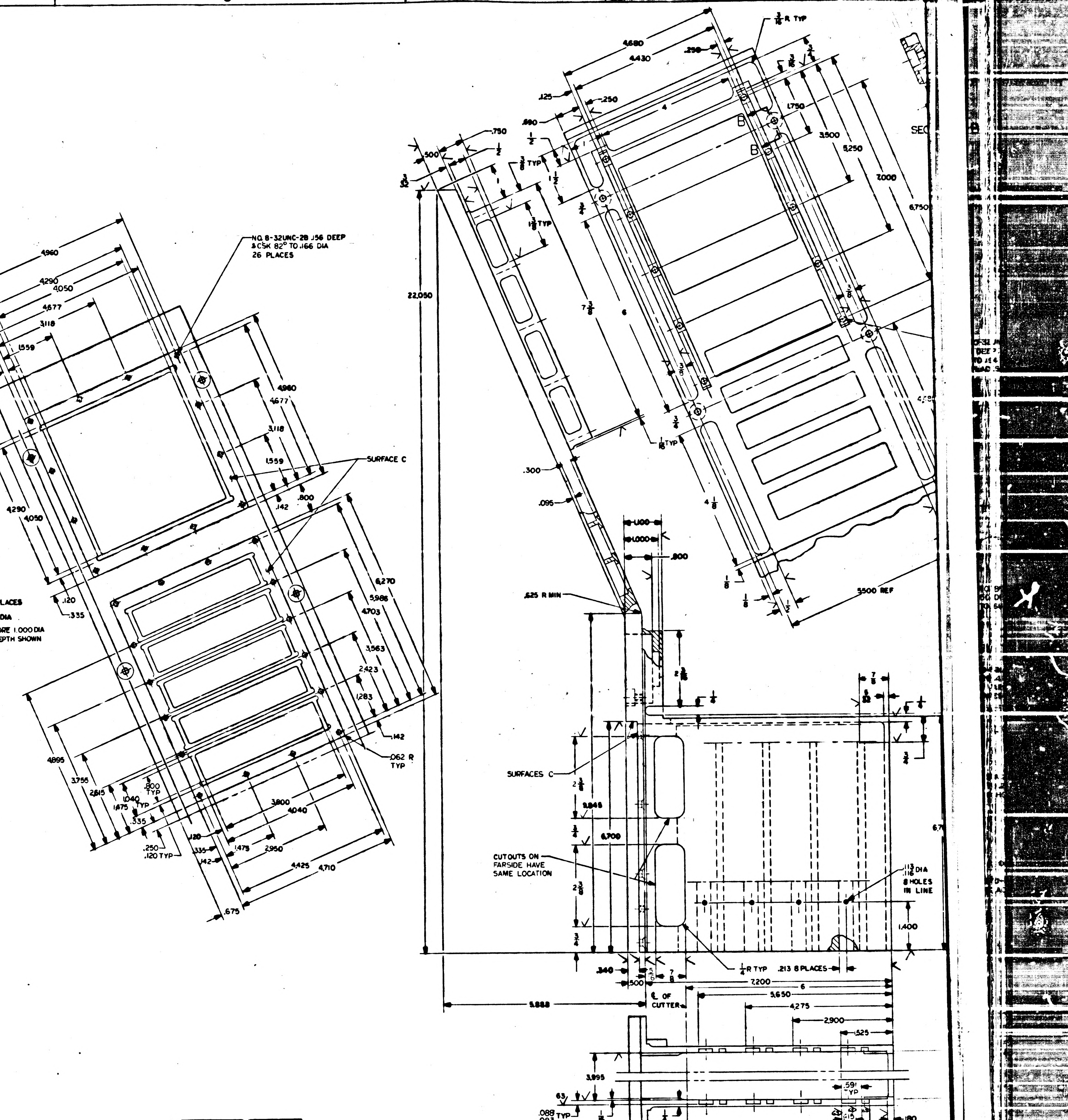

NO. 8-32UNC-2B .156 DEEP & CSK 82° TO .166 DIA 26 PLACES
4.960
4.290
4.050
4.677
3.118
1.559
.550
.335
.120
.142
SURFACE C
.800
.062 R TYP
6.270
5.986
4.703
3.563
2.423
1.283
4.895
3.755
2.615
1.475
.800 TYP
1.040 TYP
.335
.250
.120 TYP
3.800
4.040
2.950
4.425
4.710
.675
1/16 R TYP
4.680
4.430
.250
.125
.690
.750
.500
1.750
3.500
5.250
7.000
6.750
B
B
SEC
22.050
7 3/8
6
4 1/8
1/8 TYP
.300
.095
1.100
1.000
.800
.625 R MIN
5.500 REF
2 3/16
SURFACES C
CUTOUTS ON FARSIDE HAVE SAME LOCATION
2 3/8
3.945
6.700
1/4 R TYP
.213 8 PLACES
.113 .116 DIA 8 HOLES IN LINE
1.400
.340
.500
5.888
℄ OF CUTTER
7.200
5.650
4.275
2.900
.525
3.995
.591 TYP
.088 .083 TYP
.615 TYP
.180
.218 TYP

NOTES
1. INTERPRET DRAWING IN ACCORDANCE WITH STANDARDS PRESCRIBED BY MIL-D-70327
2. MATERIAL: 356-T6 ALUMINUM PER QQ-A-601b-1
3. SURFACES MARKED √ TO HAVE 125√ UNLESS OTHERWISE SPECIFIED: CAST FINISH
4. REMOVE ALL BURRS AND SHARP EDGES
5. ANODIZE PER MIL-A-8625 TYPE II, DYED BLACK
6. MASK SURFACES C
7. PAINT FRONT AND SIDES MEDIUM GRAY PER FED STD -595-26231
8. SILK SCREEN 1/8 HIGH CHACACTERS BLACK PER ND1002019

1004141

1004141

SYM	DESCRIPTION	DATE	APPROVAL
A	REVISED PER TDRR 01457	6-4-63	[illegible]
B	REPLACED WITH CHANGE BY REV C PER TDRR #3624	[illegible]	WK

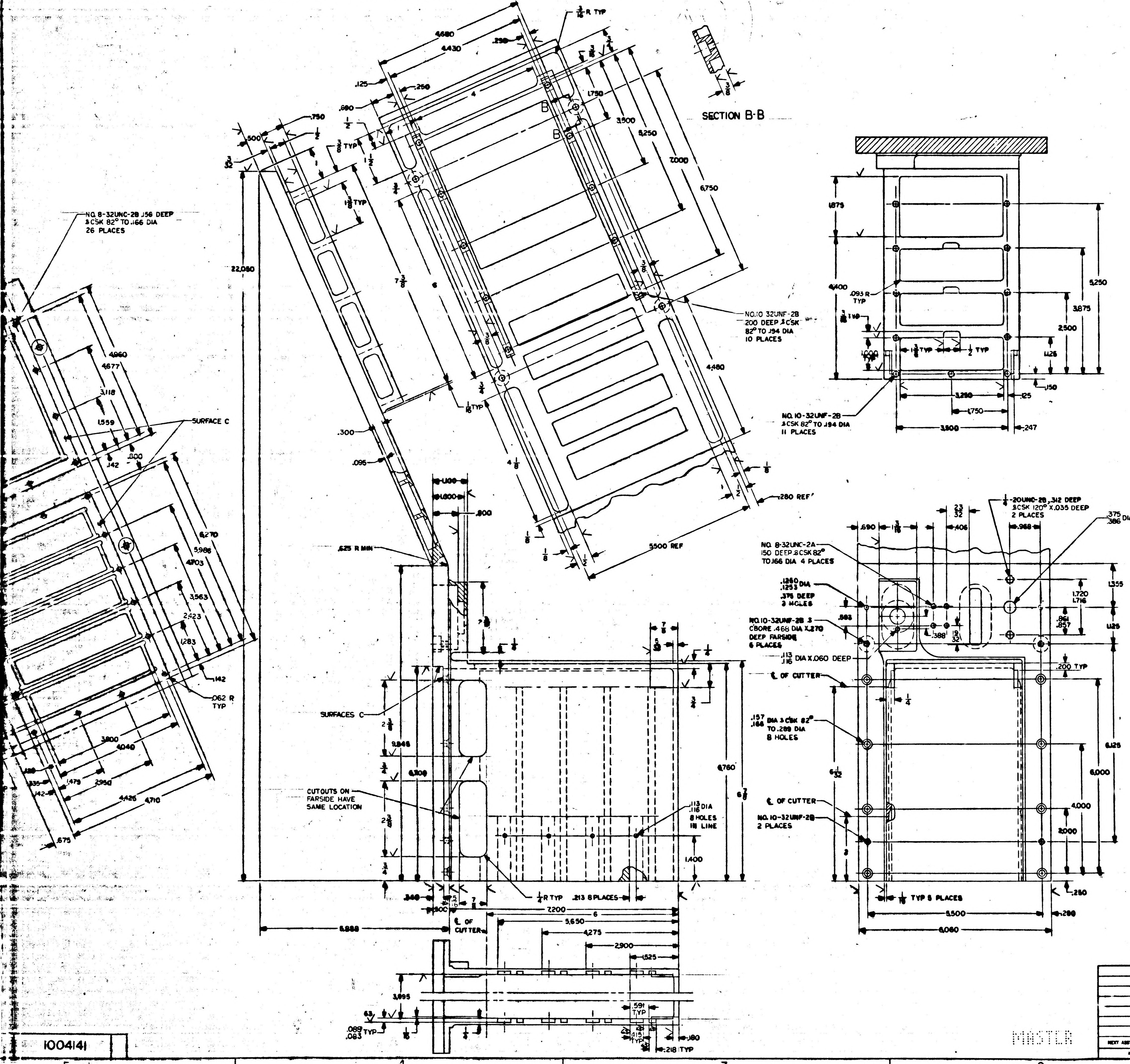

SECTION B-B
NO. 8-32UNC-2B .156 DEEP ⌵CSK 82° TO .166 DIA 26 PLACES
SURFACE C
SURFACES C
.062 R TYP
NO.10 32UNF-2B .200 DEEP ⌵CSK 82° TO .194 DIA 10 PLACES
NO. 10-32UNF-2B ⌵CSK 82° TO .194 DIA 11 PLACES
.093 R TYP
.625 R MIN
CUTOUTS ON FARSIDE HAVE SAME LOCATION
.113 .116 DIA 8 HOLES IN LINE
¼ R TYP
.213 8 PLACES
℄ OF CUTTER
5.500 REF
.280 REF
¼-20UNC-2B .312 DEEP ⌵CSK 120° X .035 DEEP 2 PLACES
.375 .386 DIA THRU
NO. 8-32UNC-2A .150 DEEP ⌵CSK 82° TO .166 DIA 4 PLACES
.1260 .1253 DIA .375 DEEP 3 HOLES
NO.10-32UNF-2B ⌵ CBORE .468 DIA X .270 DEEP FARSIDE 6 PLACES
.113 .116 DIA X .060 DEEP
.157 .166 DIA ⌵CSK 82° TO .289 DIA 8 HOLES
NO. 10-32UNF-2B 2 PLACES
.200 TYP
1/16 TYP 8 PLACES
MASTER

FOR INFORMATION ONLY

CLASS B RELEASE TDR No. 01298 DATE 6-27-63

ⒸREPLACED BY REV C WITH CHANGE

QTY REQD	PART OR IDENTIFYING NO.	NOMENCLATURE OR DESCRIPTION	FIND NO.

LIST OF MATERIALS

NEXT ASSY	USED ON

APPLICATION

UNLESS OTHERWISE SPECIFIED DIMENSIONS ARE IN INCHES
TOLERANCES ON
FRACTIONS ±1/64 DECIMALS ±.005 ANGLES ±1/2°
DO NOT SCALE THIS DRAWING
MATERIAL SEE NOTE 2
HEAT TREATMENT
FINAL FINISH

MIT INSTRUMENTATION LAB
CAMBRIDGE, MASS
DRAWN [illegible] DATE 5-2-63
CHECKED [illegible] 5-13-63
APPROVAL [illegible] 22 MAY 63
APPROVAL
NASA APPROVAL [illegible] 5/3/63
MIT APPROVAL [illegible]

MANNED SPACECRAFT CENTER
HOUSTON, TEXAS

HOUSING, DISPLAY, NAVIGATION PANEL AGC KEYBOARD

CODE IDENT NO. SIZE J NASA DRAWING NO. 1004141
SCALE 1/1 WT SHEET 1 OF 1

1004141

NOTICE — WHEN GOVERNMENT DRAWINGS, SPECIFICATIONS, OR OTHER DATA ARE USED FOR ANY PURPOSE OTHER THAN IN CONNECTION WITH A DEFINITELY RELATED GOVERNMENT PROCUREMENT OPERATION, THE UNITED STATES GOVERNMENT THEREBY INCURS NO RESPONSIBILITY NOR ANY OBLIGATION WHATSOEVER, AND THE FACT THAT THE GOVERNMENT MAY HAVE FORMULATED, FURNISHED, OR [illegible] IS NOT TO BE REGARDED BY IMPLICATION OR OTHERWISE AS IN ANY MANNER LICENSING THE HOLDER OR ANY OTHER PERSON OR CORPORATION, OR CONVEYING ANY RIGHTS OR PERMISSION TO MANUFACTURE, USE, OR SELL ANY PATENTED INVENTION THAT MAY IN ANY WAY BE RELATED THERETO.

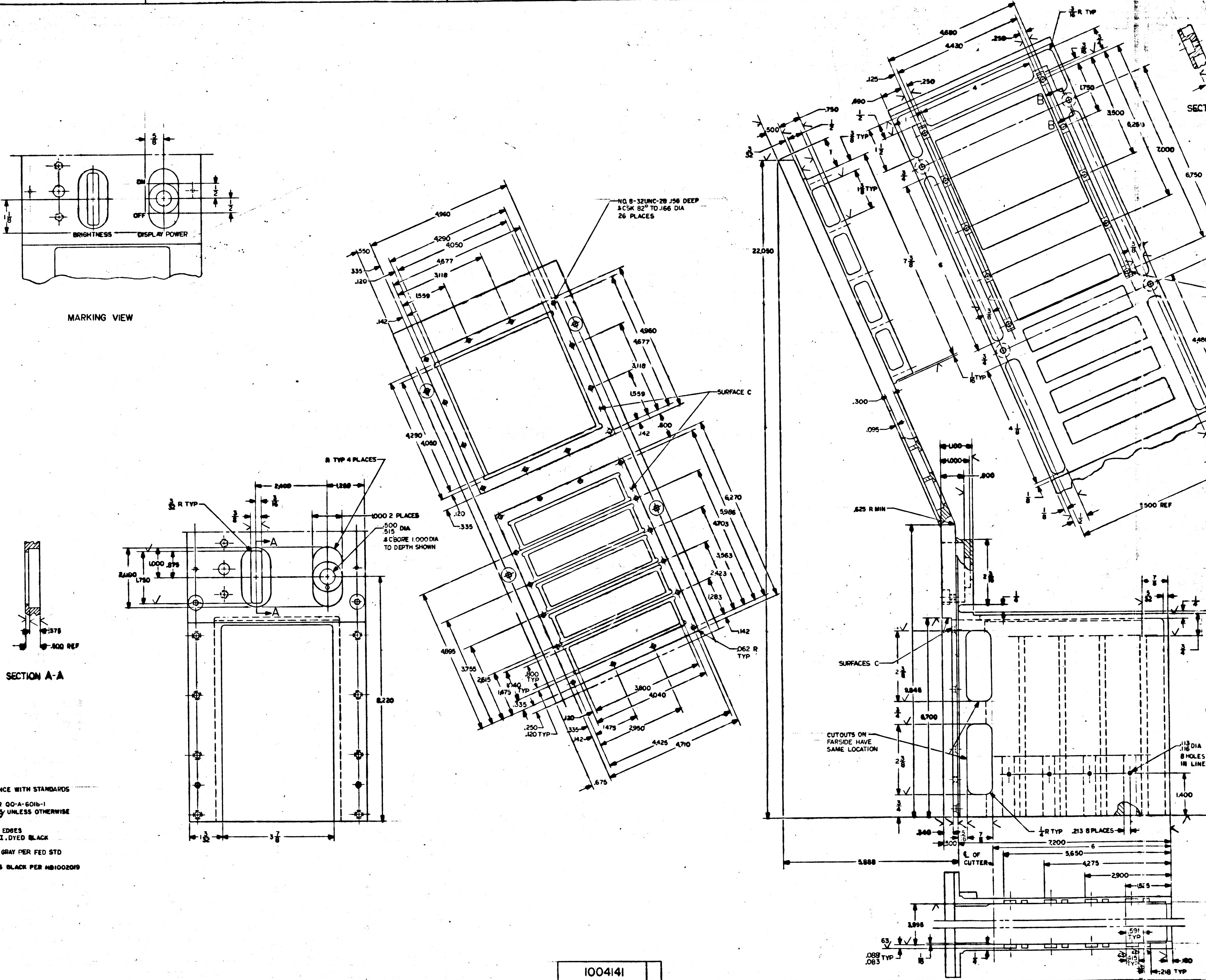
5/8
ON
OFF
1/2
1/2
1 1/8
BRIGHTNESS
DISPLAY POWER

MARKING VIEW

.375
.500 REF

SECTION A-A

B TYP 4 PLACES
3/32 R TYP
2.400
1.280
3/16
1.000 2 PLACES
.500
.515 DIA
& CBORE 1.000 DIA
TO DEPTH SHOWN
A
A
1.000
.875
2.400
1.750
8.220
1 3/32
3 7/8
NO. 8-32UNC-2B .156 DEEP
& CSK 82° TO .166 DIA
26 PLACES
4.960
4.290
4.050
4.677
3.118
1.559
.550
.335
.120
.142
SURFACE C
.800
.142
4.290
4.060
6.270
5.986
4.703
3.563
2.423
1.283
.142
.062 R
TYP
4.895
3.755
2.615
1.475
1.040 TYP
.800 TYP
.335
.250
.120 TYP
.120
.335
.142
1.479
2.950
3.800
4.040
4.425
4.710
.675
3/16 R TYP
4.680
4.430
.250
.125
.250
.690
1.750
3.500
6.250
7.000
6.750
B
B
.750
.500
1/2
3/32
1/2
3/8 TYP
1 1/2
1 3/8 TYP
3/4
22.050
7 3/8
6
3/8
3/8
3/4
1/8 TYP
4 1/8
.300
.095
1.100
1.000
.800
1/8
1/8
.625 R MIN
5.500 REF
2 3/16
7/8
5/32
1/4
3/4
SURFACES C
2 3/8
9.848
3/4
6.700
CUTOUTS ON FARSIDE HAVE SAME LOCATION
2 3/8
3/4
.113
.116 DIA
8 HOLES
IN LINE
1.400
1/4 R TYP
.213 8 PLACES
.340
5/16
7/8
.500
7.200
6
5.650
4.275
2.900
1.525
5.888
℄ OF CUTTER
3.996
63
.088
.083 TYP
1/16
1/4
.591 TYP
.415 TYP
.180
.218 TYP
SECT

NOTES
1. INTERPRET DRAWING IN ACCORDANCE WITH STANDARDS PRESCRIBED BY MIL-D-70327
2. MATERIAL: 356-T6 ALUMINUM PER QQ-A-601b-1
3. SURFACES MARKED √ TO HAVE 125√ UNLESS OTHERWISE SPECIFIED: CAST FINISH
4. REMOVE ALL BURRS AND SHARP EDGES
5. ANODIZE PER MIL-A-8625 TYPE II, DYED BLACK
6. MASK SURFACES C
7. PAINT FRONT AND SIDES MEDIUM GRAY PER FED STD -595-26231
8. SILK SCREEN 1/8 HIGH CHACACTERS BLACK PER NB1002019

1004141

SYM	DESCRIPTION	DATE	APPROVAL
C	REDRAW REPLACES REV B WITH CHANGES AND UPGRADED TO CLASS A PER TDRR 03624	10-3-63	wk

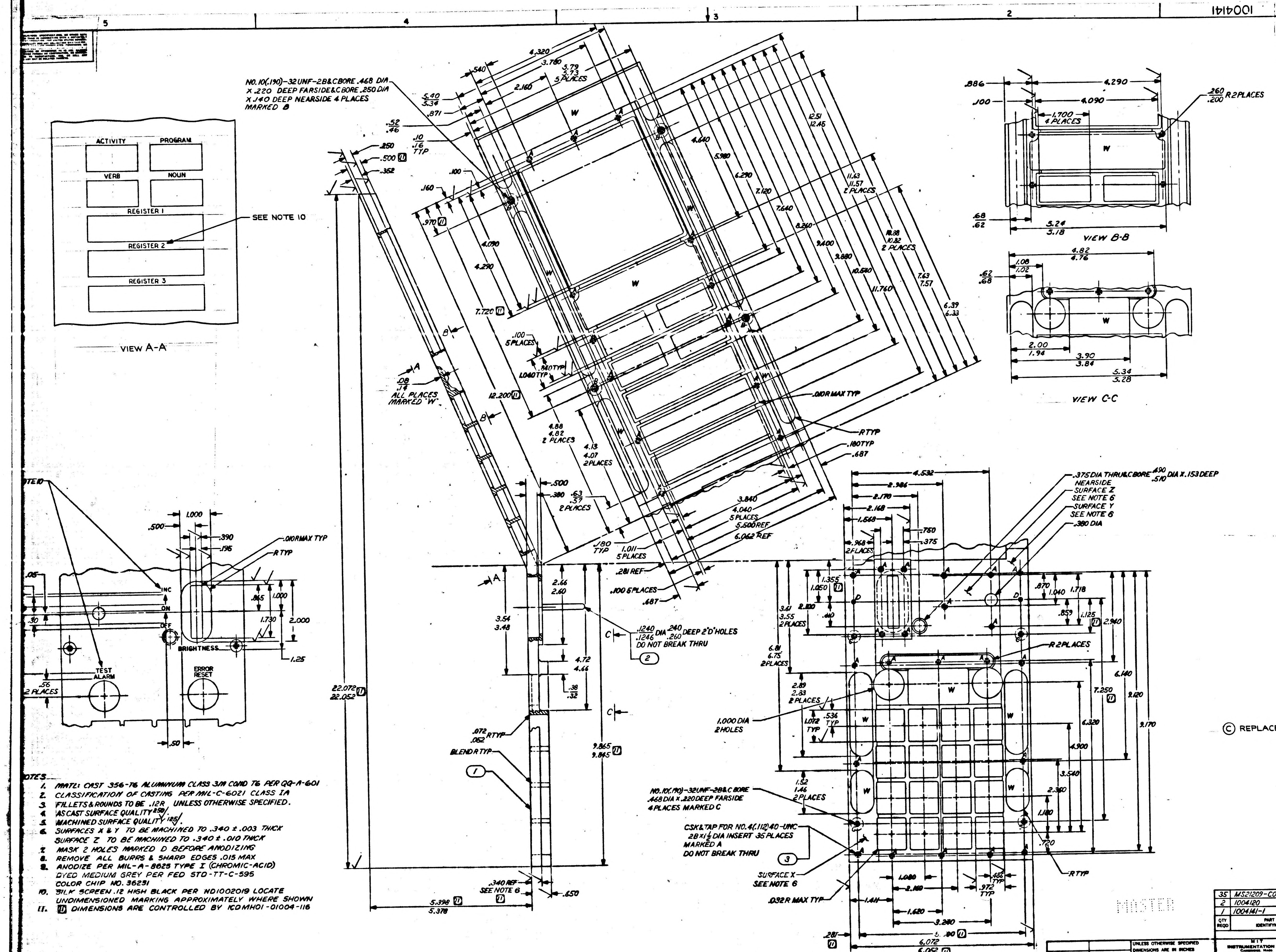
VIEW A-A
ACTIVITY
PROGRAM
VERB
NOUN
REGISTER 1
REGISTER 2
REGISTER 3
SEE NOTE 10
VIEW B-B
VIEW C-C
.260/.200 R 2 PLACES
NO. 10(.190)-32 UNF-2B & C BORE .468 DIA X .220 DEEP FARSIDE & C BORE .250 DIA X .140 DEEP NEARSIDE 4 PLACES MARKED B
.08/.14 ALL PLACES MARKED "W"
.010 R MAX TYP
R TYP
.180 TYP
.687
.375 DIA THRU & C BORE .490/.510 DIA X .153 DEEP NEARSIDE
SURFACE Z SEE NOTE 6
SURFACE Y SEE NOTE 6
.380 DIA
.1240/.1246 DIA .240/.260 DEEP 2 'D' HOLES DO NOT BREAK THRU
R 2 PLACES
1.000 DIA 2 HOLES
NO. 10(.190)-32 UNF-2B & C BORE .468 DIA X .220 DEEP FARSIDE 4 PLACES MARKED C
CSK & TAP FOR NO. 4(.112) 40-UNC-2B X 1½ DIA INSERT 35 PLACES MARKED A DO NOT BREAK THRU
SURFACE X SEE NOTE 6
.032 R MAX TYP
BLEND R TYP
.072/.062 R TYP
INC
ON
OFF
BRIGHTNESS
TEST ALARM
ERROR RESET
NOTE 10
22.072/22.052
12.200
9.865/9.845
5.398/5.378
6.072/6.052
MASTER

Ⓒ REPLACES REV B WITH CHANGES

NOTES

1. MATL: CAST 356-T6 ALUMINUM CLASS 3M COND T6 PER QQ-A-601
2. CLASSIFICATION OF CASTING PER MIL-C-6021 CLASS IA
3. FILLETS & ROUNDS TO BE .12R UNLESS OTHERWISE SPECIFIED.
4. AS CAST SURFACE QUALITY 250√.
5. MACHINED SURFACE QUALITY 125√.
6. SURFACES X & Y TO BE MACHINED TO .340 ± .003 THICK
   SURFACE Z TO BE MACHINED TO .340 ± .010 THICK
7. MASK 2 HOLES MARKED D BEFORE ANODIZING
8. REMOVE ALL BURRS & SHARP EDGES .015 MAX
9. ANODIZE PER MIL-A-8625 TYPE I (CHROMIC-ACID)
   DYED MEDIUM GREY PER FED STD-TT-C-595
   COLOR CHIP NO. 36231
10. SILK SCREEN .12 HIGH BLACK PER ND1002019 LOCATE
    UNDIMENSIONED MARKING APPROXIMATELY WHERE SHOWN
11. ⑪ DIMENSIONS ARE CONTROLLED BY ICD MH01-01004-116

QTY REQD	PART OR IDENTIFYING NO.	NOMENCLATURE OR DESCRIPTION	FIND NO.
35	MS21209-C0415	INSERT, SCREW THD LOCKING	3
2	1004120	PIN, GUIDE	2
1	1004141-1	PANEL, FRONT	1

LIST OF MATERIALS

NEXT ASSY	USED ON
1003524	

APPLICATION

UNLESS OTHERWISE SPECIFIED DIMENSIONS ARE IN INCHES
TOLERANCES ON
FRACTIONS ± DECIMALS ±.005 .03 ANGLES ±2°
DO NOT SCALE THIS DRAWING
MATERIAL SEE NOTE 1
HEAT TREATMENT NONE
FINAL FINISH SEE NOTE 9

MIT INSTRUMENTATION LAB
CAMBRIDGE, MASS.
DRAWN P. Rossman DATE 9-9-63
CHECKED
APPROVAL
APPROVAL
NASA APPROVAL 10-3-63
MIT APPROVAL 10-3-63

MANNED SPACECRAFT CENTER
HOUSTON, TEXAS

PANEL, FRONT
NAV ~~AGC~~ DISPLAY AND KEYBOARD

CODE IDENT NO. —
SIZE J
NASA DRAWING NO. 1004141
SCALE 1/1
WT
SHEET 1 OF 1

INTERPRET DRAWING IN ACCORDANCE WITH STANDARDS PRESCRIBED BY MIL-D-70327

(11)

F-2

1004141

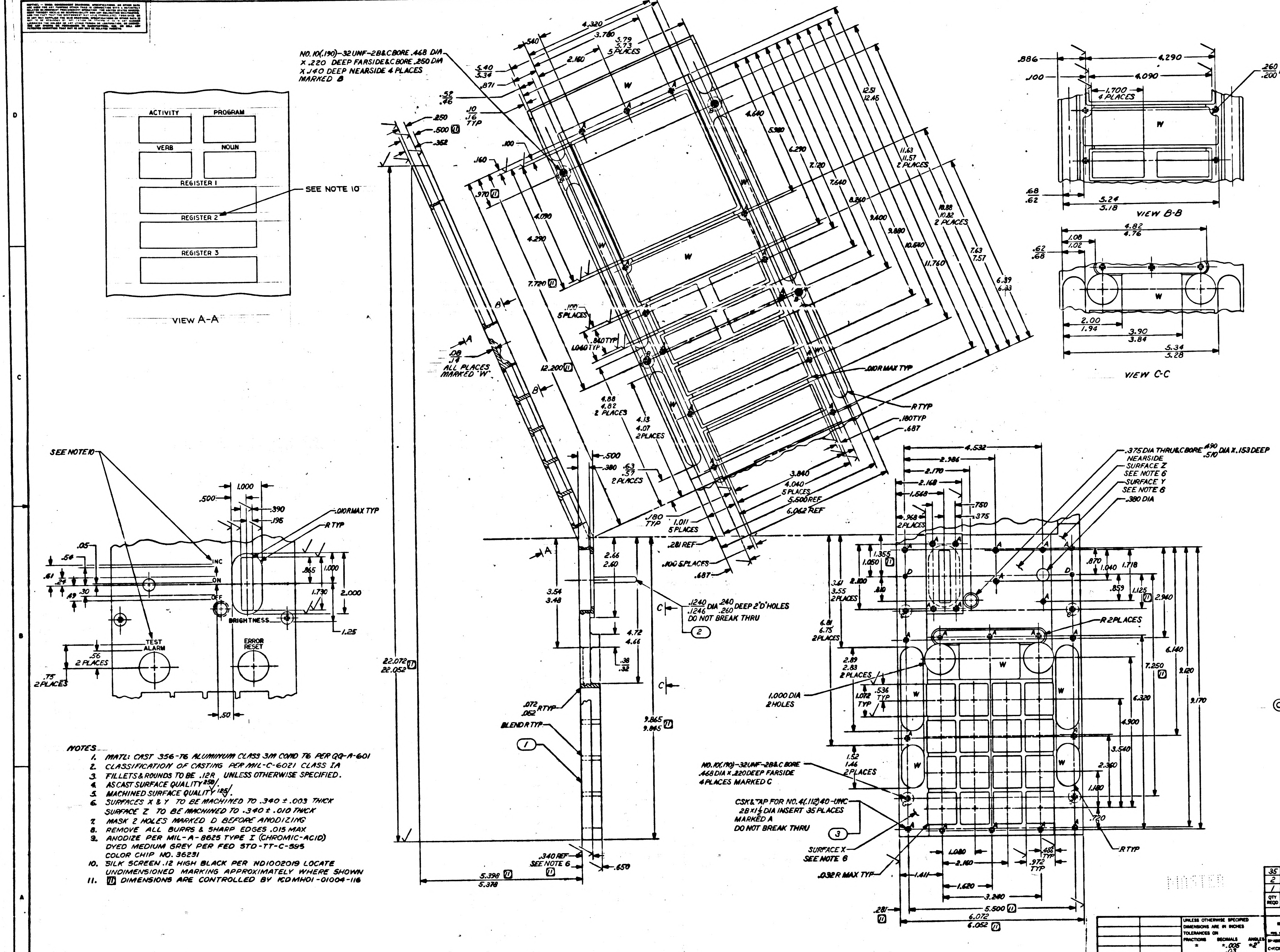

ACTIVITY
PROGRAM
VERB
NOUN
REGISTER 1
REGISTER 2
REGISTER 3
SEE NOTE 10
VIEW A-A
NO.10(.190)-32UNF-2B&C BORE .468 DIA X .220 DEEP FARSIDE & C BORE .250 DIA X .140 DEEP NEARSIDE 4 PLACES MARKED B
.08 .14 ALL PLACES MARKED "W"
.010R MAX TYP
R TYP
.180 TYP
.687
.1240 .1246 DIA .240 .260 DEEP 2"D" HOLES DO NOT BREAK THRU
BLEND R TYP
.340 REF SEE NOTE 6
VIEW B-B
VIEW C-C
.260 .200 R 2 PLACES
INC
ON
OFF
BRIGHTNESS
TEST ALARM
ERROR RESET
SEE NOTE 10
.375 DIA THRU & C BORE .490 .510 DIA X .153 DEEP NEARSIDE
SURFACE Z SEE NOTE 6
SURFACE Y SEE NOTE 6
.380 DIA
R 2 PLACES
1.000 DIA 2 HOLES
NO.10(.190)-32UNF-2B&C BORE .468 DIA X .220 DEEP FARSIDE 4 PLACES MARKED C
CSK & TAP FOR NO.4(.112)40-UNC-2B X 1½ DIA INSERT 35 PLACES MARKED A DO NOT BREAK THRU
SURFACE X SEE NOTE 6
.032R MAX TYP
R TYP
5.500 REF
6.062 REF
22.072 22.052
5.398 5.378
6.072 6.052

Ⓒ REPLACES REV B WITH CHAN

NOTES

1. MATL: CAST 356-T6 ALUMINUM CLASS 3M COND T6 PER QQ-A-601
2. CLASSIFICATION OF CASTING PER MIL-C-6021 CLASS IA
3. FILLETS & ROUNDS TO BE .12R UNLESS OTHERWISE SPECIFIED.
4. AS CAST SURFACE QUALITY $\sqrt{250}$.
5. MACHINED SURFACE QUALITY $\sqrt{125}$.
6. SURFACES X & Y TO BE MACHINED TO .340 ± .003 THICK SURFACE Z TO BE MACHINED TO .340 ± .010 THICK
7. MASK 2 HOLES MARKED D BEFORE ANODIZING
8. REMOVE ALL BURRS & SHARP EDGES .015 MAX
9. ANODIZE PER MIL-A-8625 TYPE I (CHROMIC-ACID) DYED MEDIUM GREY PER FED STD-TT-C-595 COLOR CHIP NO. 36231
10. SILK SCREEN .12 HIGH BLACK PER ND1002019 LOCATE UNDIMENSIONED MARKING APPROXIMATELY WHERE SHOWN
11. $\boxed{11}$ DIMENSIONS ARE CONTROLLED BY KDMH01-01004-116

SYM	DESCRIPTION
C	REDRAW REPLAC B WITH CHANGES UPGRADED TO PER TDRR

MASTER

QTY REQD	PART OR IDENTIFYING NO.	NOME
35	MS21209-C0415	INSERT, SCRE
2	1004120	PIN, GUIDE
1	1004141-1	PANEL, FRON

LIST OF MATERIALS

NEXT ASSY	USED ON
1003524	

APPLICATION

UNLESS OTHERWISE SPECIFIED DIMENSIONS ARE IN INCHES
TOLERANCES ON FRACTIONS ± DECIMALS ±.005 .03 ANGLES ±2°
DO NOT SCALE THIS DRAWING

MATERIAL SEE NOTE 1
HEAT TREATMENT NONE
FINAL FINISH SEE NOTE 9

MIT INSTRUMENTATION LAB
CAMBRIDGE, MASS.

DRAWN P. Morgan DATE 9-9-63
CHECKED
APPROVAL
APPROVAL
NASA APPROVAL W G 10-3-63
MIT APPROVAL

MANNED SP
HOU

PANEL
~~AGC~~ DISPLAY

SIZE J
SCALE 1/1
WT

INTERPRET DRAWING IN ACCORDANCE WITH STANDARDS PRESCRIBED BY MIL-D-70327

SYM	DESCRIPTION	DATE	APPROVAL
C	REDRAW REPLACES REV B WITH CHANGES AND UPGRADED TO CLASS A PER TDRR 03624	10-3-63	WK
D	REVISED PER TDRR 04176	10-2-63	WK

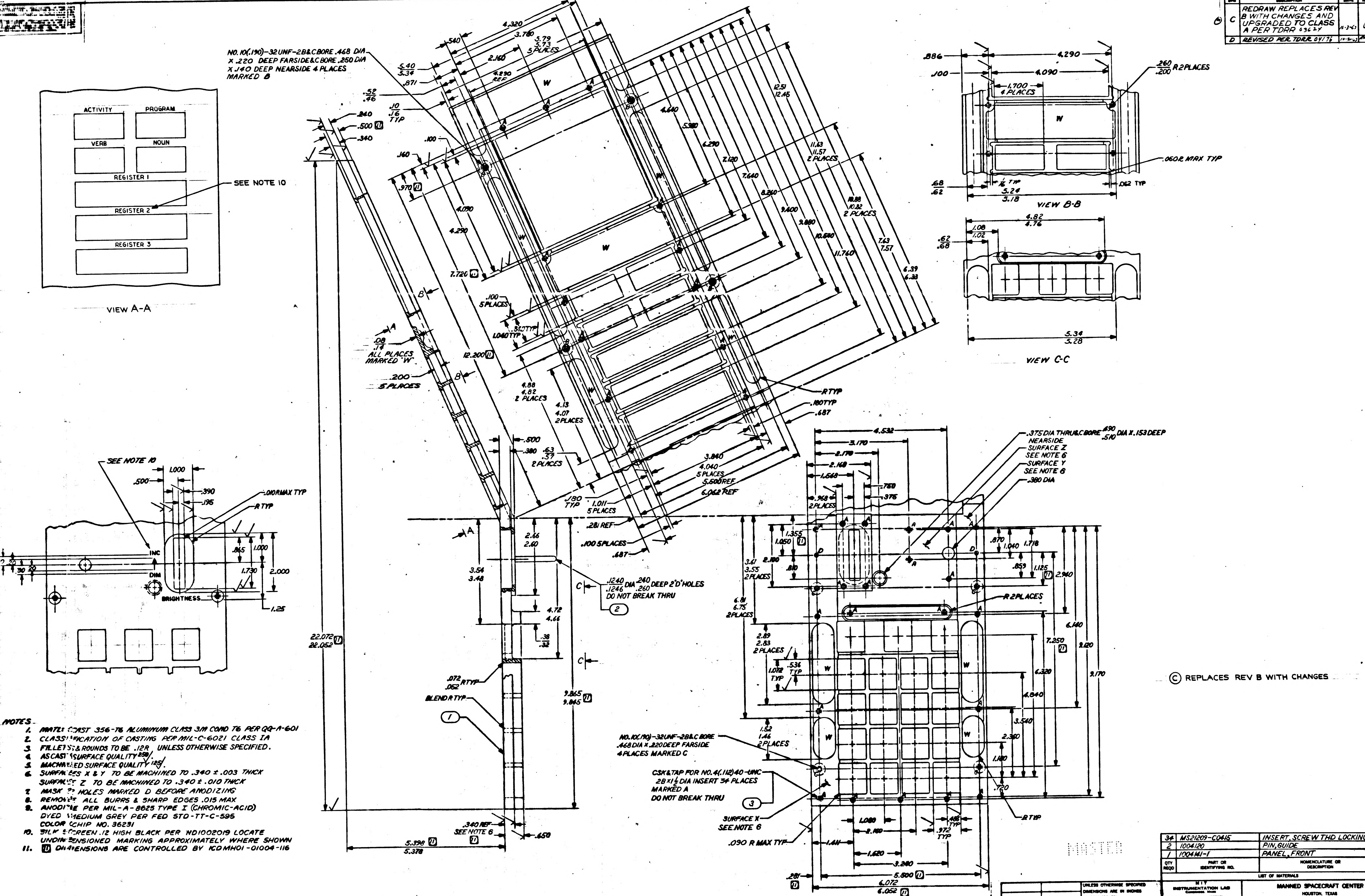

VIEW A-A
ACTIVITY
PROGRAM
VERB
NOUN
REGISTER 1
REGISTER 2
REGISTER 3
SEE NOTE 10
INC
DIM
BRIGHTNESS
VIEW B-B
VIEW C-C
NO.10(.190)-32UNF-2B&CBORE .468 DIA X .220 DEEP FARSIDE&CBORE .250 DIA X .140 DEEP NEARSIDE 4 PLACES MARKED B
.08 .14 ALL PLACES MARKED "W"
.1240 .1246 DIA .240 .260 DEEP 2"D" HOLES DO NOT BREAK THRU
.375 DIA THRU&CBORE .490 .510 DIA X .153 DEEP NEARSIDE SURFACE Z SEE NOTE 6 SURFACE Y SEE NOTE 6
NO.10(.190)-32UNF-2B&CBORE .468 DIA X .220 DEEP FARSIDE 4 PLACES MARKED C
CSK&TAP FOR NO.4(.112)40-UNC-2B X 1½ DIA INSERT 34 PLACES MARKED A DO NOT BREAK THRU
SURFACE X SEE NOTE 6
.090 R MAX TYP
.060 R MAX TYP
.010 R MAX TYP
BLEND R TYP
R 2 PLACES
22.072 22.052
12.200
7.720
5.398 5.378
6.072 6.052
5.800
9.865 9.845
.340 REF SEE NOTE 6
© REPLACES REV B WITH CHANGES

NOTES -
1. MATL: CAST 356-T6 ALUMINUM CLASS 3M COND T6 PER QQ-A-601
2. CLASSIFICATION OF CASTING PER MIL-C-6021 CLASS IA
3. FILLETS & ROUNDS TO BE .12R UNLESS OTHERWISE SPECIFIED.
4. AS CAST SURFACE QUALITY $\sqrt{250}$.
5. MACHINED SURFACE QUALITY $\sqrt{125}$.
6. SURFACES X & Y TO BE MACHINED TO .340 ± .003 THICK
   SURFACE Z TO BE MACHINED TO .340 ± .010 THICK
7. MASK 2 HOLES MARKED D BEFORE ANODIZING
8. REMOVE ALL BURRS & SHARP EDGES .015 MAX
9. ANODIZE PER MIL-A-8625 TYPE I (CHROMIC-ACID) DYED MEDIUM GREY PER FED STD-TT-C-595 COLOR CHIP NO. 36231
10. SILK SCREEN .12 HIGH BLACK PER ND1002019 LOCATE UNDIMENSIONED MARKING APPROXIMATELY WHERE SHOWN
11. Ⓘ DIMENSIONS ARE CONTROLLED BY ICD MH01-01004-116

MASTER

QTY REQD	PART OR IDENTIFYING NO.	NOMENCLATURE OR DESCRIPTION	FIND NO.
34	MS21209-C0415	INSERT, SCREW THD LOCKING	3
2	1004120	PIN, GUIDE	2
1	1004141-1	PANEL, FRONT	1

LIST OF MATERIALS

NEXT ASSY	USED ON
1003524	

APPLICATION

UNLESS OTHERWISE SPECIFIED DIMENSIONS ARE IN INCHES
TOLERANCES ON
FRACTIONS ± DECIMALS ±.005 .03 ANGLES ±2°
DO NOT SCALE THIS DRAWING
MATERIAL SEE NOTE 1
HEAT TREATMENT NONE
FINAL FINISH SEE NOTE 9

MIT INSTRUMENTATION LAB
CAMBRIDGE, MASS
DRAWN DATE 9-2-63
CHECKED
APPROVAL
APPROVAL
NASA APPROVAL 10-3-63
MIT APPROVAL
MIT APPROVAL

MANNED SPACECRAFT CENTER
HOUSTON, TEXAS

PANEL, FRONT

CODE IDENT NO. —
SIZE J
NASA DRAWING NO. 1004141
SCALE 1/1
WT
SHEET 1 OF 1

INTERPRET DRAWING IN ACCORDANCE WITH STANDARDS PRESCRIBED BY MIL-D-70327

E2 1004141

SYM	DESCRIPTION	DATE	APPROVAL
C	REDRAW REPLACES REV B WITH CHANGES AND UPGRADED TO CLASS A PER TDRR 03624	10-3-63	
D	REVISED PER TDRR 04 76		
E	REVISED PER TDRR 05111	10 DEC 63	

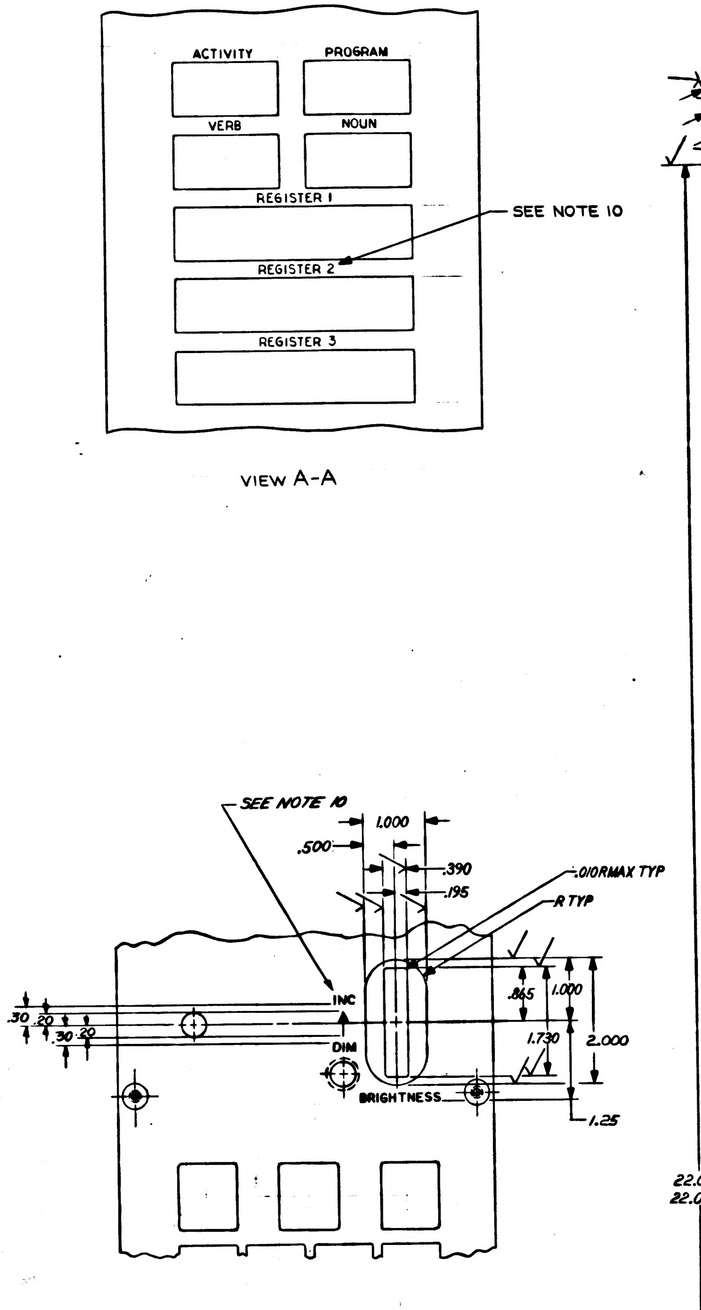
ACTIVITY
PROGRAM
VERB
NOUN
REGISTER 1
REGISTER 2
REGISTER 3
SEE NOTE 10
VIEW A-A
SEE NOTE 10
1.000
.500
.390
.195
.010R MAX TYP
R TYP
INC
DIM
BRIGHTNESS
.865
1.000
1.730
2.000
1.25
.30
.20
.30
.20

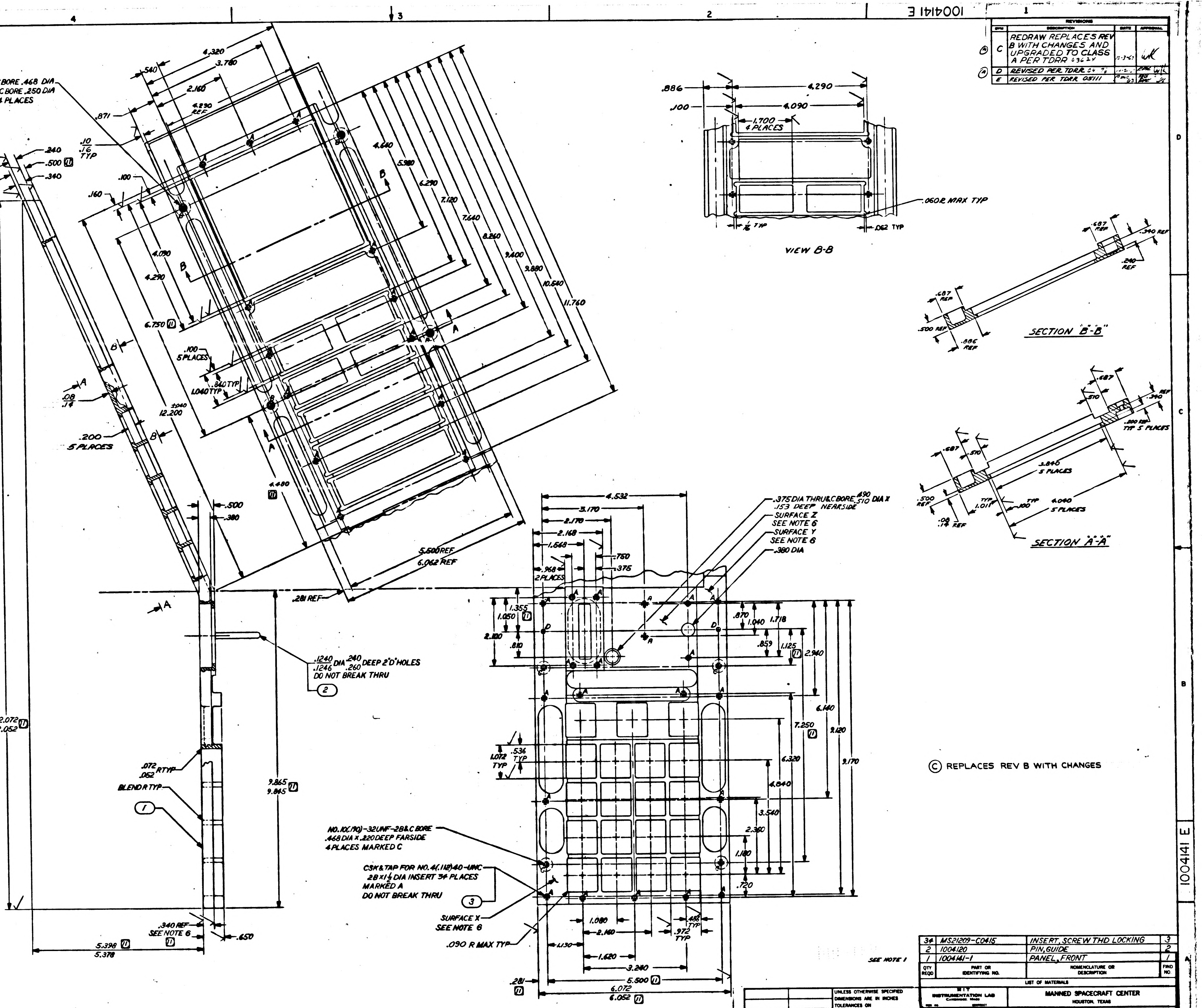
NO.10(.190)-32UNF-2B&CBORE .468 DIA X .220 DEEP FARSIDE & CBORE .250 DIA X .140 DEEP NEARSIDE 4 PLACES MARKED B
4.320
3.780
.540
2.160
.871
.10
.16
TYP
.240
.500
.340
.160
.100
4.090
4.290
6.750
.100 5 PLACES
.840 TYP
1.040 TYP
.08
.14
.200 5 PLACES
12.200 ±.040
22.072
22.052
4.480
5.500 REF
6.062 REF
.281 REF
4.640
5.980
6.290
7.120
7.640
8.260
9.400
9.880
10.640
11.760
.500
.380
.1240 DIA .240 DEEP 2 'D' HOLES
.1246 .260
DO NOT BREAK THRU
②
.072 R TYP
.052
BLEND R TYP
①
9.865
9.845
5.398
5.378
.340 REF SEE NOTE 6
.650
VIEW B-B
.886
.100
4.290
4.090
1.700 4 PLACES
.060R MAX TYP
1/16 TYP
.062 TYP
SECTION "B-B"
SECTION "A-A"
.687 REF
.340 REF
.240 REF
.500 REF
.886 REF
.510
.200 REF TYP 5 PLACES
1.846 5 PLACES
1.011 TYP
.100 TYP
4.040 5 PLACES
.08
.14 REF
4.532
3.170
2.170
2.168
1.648
.968 2 PLACES
.750
.375
.375 DIA THRU & CBORE .490 .510 DIA X .153 DEEP NEARSIDE
SURFACE Z SEE NOTE 6
SURFACE Y SEE NOTE 6
.380 DIA
1.355
1.050
2.100
.810
.870
1.040
1.718
.859
1.125
2.940
6.140
7.250
8.120
9.170
6.320
4.840
3.540
2.360
1.180
.720
1.072 TYP
.536 TYP
NO.10(.190)-32UNF-2B CBORE .468 DIA X .220 DEEP FARSIDE 4 PLACES MARKED C
CSK & TAP FOR NO.4(.112)40-UNC-2B X 1 1/2 DIA INSERT 34 PLACES MARKED A DO NOT BREAK THRU
③
SURFACE X SEE NOTE 6
.090 R MAX TYP
1.080
2.160
.486 TYP
.972 TYP
1.130
1.620
3.240
5.500
6.072
6.052
.281
SEE NOTE 1
Ⓒ REPLACES REV B WITH CHANGES

NOTES:

1. MAKE FROM 1004593
~~1. MATL: CAST 356-T6 ALUMINUM CLASS 3A COND T6 PER QQ-A-601~~
~~2. CLASSIFICATION OF CASTING PER MIL-C-6021 CLASS IA~~
~~3. FILLETS & ROUNDS TO BE .12R UNLESS OTHERWISE SPECIFIED.~~
~~4. AS CAST SURFACE QUALITY 250~~
5. MACHINED SURFACE QUALITY 125.
6. SURFACES X & Y TO BE MACHINED TO .340 ± .003 THICK
SURFACE Z TO BE MACHINED TO .340 ± .010 THICK
7. MASK 2 HOLES MARKED D BEFORE ANODIZING
8. REMOVE ALL BURRS & SHARP EDGES .015 MAX
9. ANODIZE PER MIL-A-8625 TYPE I (CHROMIC-ACID)
DYED MEDIUM GREY PER FED STD-TT-C-595
COLOR CHIP NO. 36231
10. SILK SCREEN .12 HIGH BLACK PER ND1002019 LOCATE
UNDIMENSIONED MARKING APPROXIMATELY WHERE SHOWN
11. ⑪ DIMENSIONS ARE CONTROLLED BY ICD MH01-01004-116

QTY REQD	PART OR IDENTIFYING NO.	NOMENCLATURE OR DESCRIPTION	FIND NO.
34	MS21209-C0415	INSERT, SCREW THD LOCKING	3
2	1004120	PIN, GUIDE	2
1	1004141-1	PANEL, FRONT	1

LIST OF MATERIALS

NEXT ASSY	USED ON
1003524	

APPLICATION

UNLESS OTHERWISE SPECIFIED
DIMENSIONS ARE IN INCHES
TOLERANCES ON
FRACTIONS ± DECIMALS ±.005 .02 ANGLES ±2°
DO NOT SCALE THIS DRAWING
MATERIAL SEE NOTE 1
HEAT TREATMENT NONE
FINAL FINISH SEE NOTE 9

MIT
INSTRUMENTATION LAB
CAMBRIDGE, MASS
DRAWN DATE 9-9-63
CHECKED
APPROVAL
APPROVAL
NASA APPROVAL 10-3-63
MIT APPROVAL 3 Oct 63

MANNED SPACECRAFT CENTER
HOUSTON, TEXAS

PANEL, FRONT
AGC DSKY, NAV.

CODE IDENT NO. —
SIZE J
NASA DRAWING NO. 1004141
SCALE 1/1
WT
SHEET 1 OF 1

INTERPRET DRAWING IN ACCORDANCE WITH STANDARDS PRESCRIBED BY MIL-D-70327

INCHES
PHOTOGRAPHIC SCALE ONLY

1004141

REV	DESCRIPTION	DATE	APPROVAL

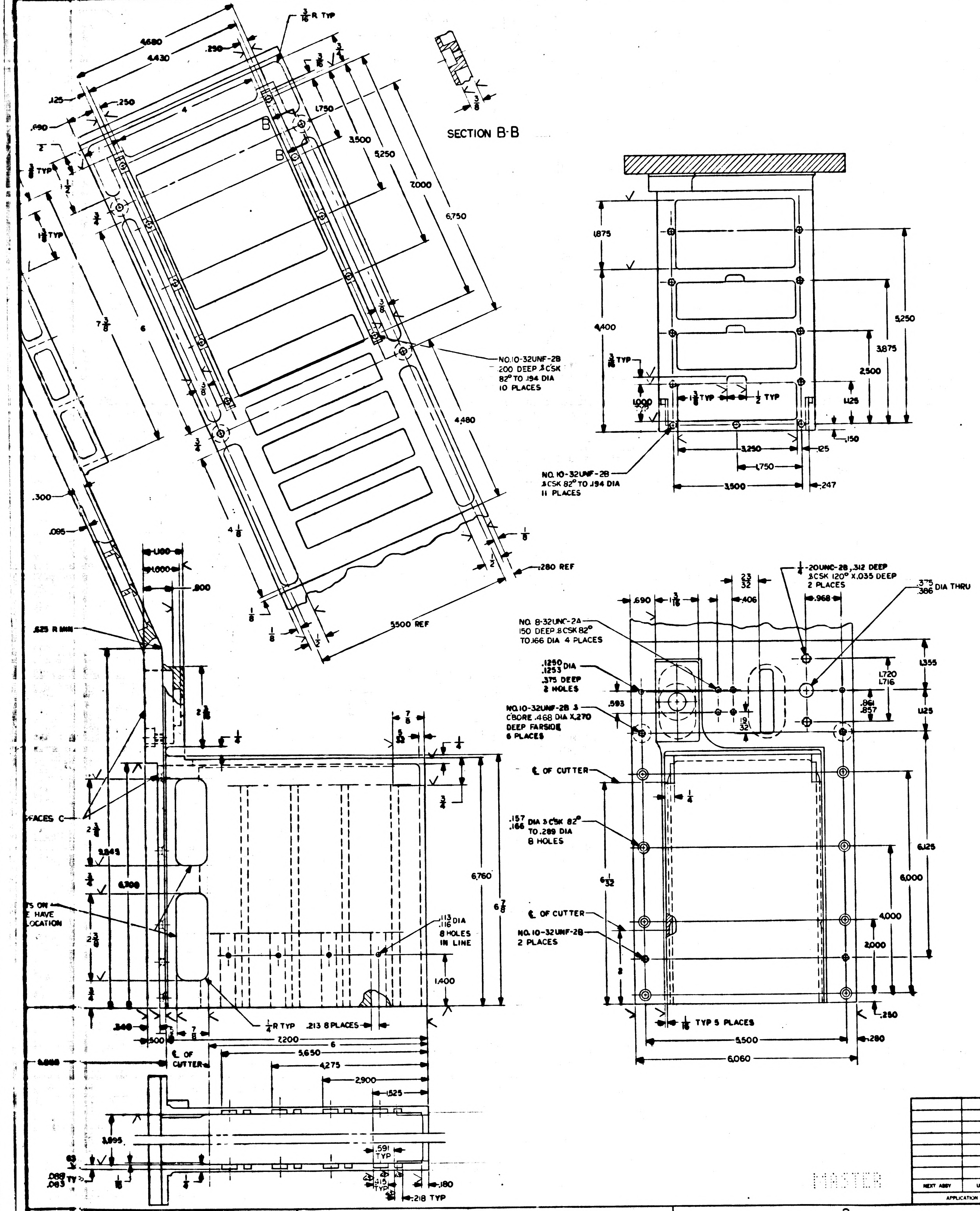
SECTION B-B
B
B
4.680
4.430
.250
$\frac{3}{16}$ R TYP
.125
.250
.690
1.750
3.500
5.250
7.000
6.750
$7\frac{3}{8}$
6
$4\frac{1}{8}$
4.480
5500 REF
.280 REF
.300
.095
.625 R MIN
NO.10-32UNF-2B
.200 DEEP & CSK
82° TO .194 DIA
10 PLACES
NO.10-32UNF-2B
& CSK 82° TO .194 DIA
11 PLACES
1.875
4.400
5.250
3.875
2.500
1.125
1.000
.150
3.250
1.750
3.500
.247
.125
$\frac{3}{16}$ TYP
$1\frac{1}{4}$ TYP
$\frac{1}{2}$ TYP
$\frac{1}{4}$-20UNC-2B, .312 DEEP
& CSK 120° X .035 DEEP
2 PLACES
.375
.386 DIA THRU
.690
.406
.968
NO. 8-32UNC-2A
.150 DEEP & CSK 82°
TO .166 DIA 4 PLACES
.1250
.1253 DIA
.375 DEEP
2 HOLES
.593
NO.10-32UNF-2B &
CBORE .468 DIA X .270
DEEP FARSIDE
6 PLACES
1.355
1.720
1.716
.861
.857
1.125
℄ OF CUTTER
.157
.166 DIA & CSK 82°
TO .289 DIA
8 HOLES
℄ OF CUTTER
NO.10-32UNF-2B
2 PLACES
$6\frac{1}{32}$
6.125
6.000
4.000
2.000
.250
$\frac{1}{16}$ TYP 5 PLACES
5.500
6.060
.280
1.100
1.000
.800
$2\frac{3}{16}$
FACES C
6.760
$6\frac{7}{8}$
.113
.116 DIA
8 HOLES
IN LINE
1.400
$\frac{1}{4}$ R TYP
.213 8 PLACES
.500
7.200
6
5.650
4.275
2.900
1.525
℄ OF CUTTER
3.995
.591 TYP
.218 TYP
.180
.088
.063

FOR INFORMATION ONLY

CLASS B RELEASE TDR No. 01298 DATE 5-23-63

QTY REQ'D	PART OR IDENTIFYING NO.	NOMENCLATURE OR DESCRIPTION	FIND NO.

LIST OF MATERIALS

NEXT ASSY	USED ON
APPLICATION	

UNLESS OTHERWISE SPECIFIED DIMENSIONS ARE IN INCHES
TOLERANCES ON
FRACTIONS ±1/64 DECIMALS ±.005 ANGLES ±1/2°
DO NOT SCALE THIS DRAWING
MATERIAL SEE NOTE 2
HEAT TREATMENT
FINAL FINISH

MIT INSTRUMENTATION LAB
CAMBRIDGE MASS
DRAWN P. Pomey DATE 5-2-63
CHECKED 5-13-63
APPROVAL W.B. 23 MAY 63
APPROVAL
NASA APPROVAL 5/13/63
MIT APPROVAL

MANNED SPACECRAFT CENTER
HOUSTON, TEXAS

HOUSING, DISPLAY,
NAVIGATION PANEL
AGC KEYBOARD

CODE IDENT NO. SIZE J NASA DRAWING NO. 1004141
SCALE 1/1 WT SHEET 1 OF 1

NOTICE — WHEN GOVERNMENT DRAWINGS SPECIFICATIONS OR OTHER DATA ARE USED FOR ANY PURPOSE OTHER THAN IN CONNECTION WITH A DEFINITELY RELATED GOVERNMENT PROCUREMENT OPERATION THE UNITED STATES GOVERNMENT THEREBY INCURS NO RESPONSIBILITY NOR ANY OBLIGATION WHATSOEVER AND THE FACT THAT THE GOVERNMENT MAY HAVE FORMULATED FURNISHED OR IN ANY WAY SUPPLIED THE SAID DRAWINGS SPECIFICATIONS OR OTHER DATA IS NOT TO BE REGARDED BY IMPLICATION OR OTHERWISE AS IN ANY MANNER LICENSING THE HOLDER OR ANY OTHER PERSON OR CORPORATION OR CONVEYING ANY RIGHTS OR PERMISSION TO MANUFACTURE USE OR SELL ANY PATENTED INVENTION THAT MAY IN ANY WAY BE RELATED THERETO

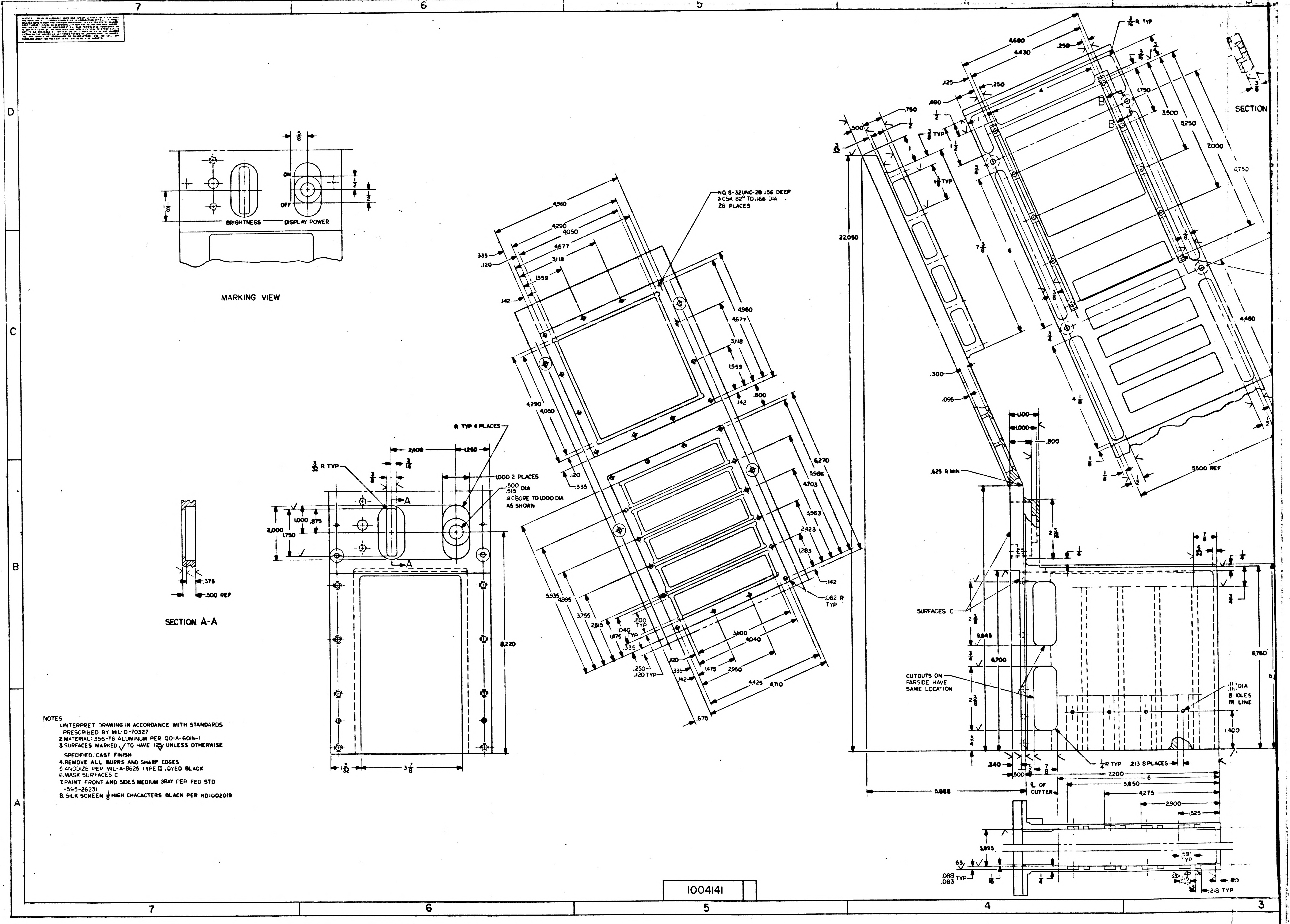
7
6
5
4
3
D
C
B
A
BRIGHTNESS
DISPLAY POWER
ON
OFF
5/8
1/2
1/2
1 1/8
MARKING VIEW
SECTION A-A
.375
.500 REF
R TYP 4 PLACES
3/32 R TYP
2.400
1.250
1.000 2 PLACES
.500 .515 DIA
& CBORE TO 1.000 DIA AS SHOWN
A
A
2.000
1.750
1.000
.875
8.220
1 3/32
3 7/8
NO. 8-32UNC-2B .156 DEEP & CSK 82° TO .166 DIA 26 PLACES
4.960
4.290
4.050
4.677
3.118
1.559
.335
.120
.142
.800
6.270
5.986
4.703
3.563
2.423
1.283
.062 R TYP
5.935
4.895
3.755
2.615
1.475
1.040 TYP
.800 TYP
.250
.120 TYP
3.800
4.040
2.950
4.425
4.710
.675
3/16 R TYP
4.680
4.430
.250
.125
.590
.750
.500
1.750
3.500
5.250
7.000
6.750
4.480
SECTION
B
B
3/8 TYP
1 1/2
1 3/8 TYP
22.050
7 3/8
6
4 1/8
.300
.095
1.100
1.000
.800
.625 R MIN
5500 REF
SURFACES C
2 3/8
9.848
6.700
6.760
CUTOUTS ON FARSIDE HAVE SAME LOCATION
.113 DIA 8 HOLES IN LINE
1.400
1/4 R TYP
.213 8 PLACES
.340
.500
7/8
℄ OF CUTTER
5.888
7.200
6
5.650
4.275
2.900
.525
3.995
63
.088 .083 TYP
1/16
1/4
.591 TYP
.218 TYP

NOTES
1. INTERPRET DRAWING IN ACCORDANCE WITH STANDARDS PRESCRIBED BY MIL-D-70327
2. MATERIAL: 356-T6 ALUMINUM PER QQ-A-601b-1
3. SURFACES MARKED √ TO HAVE 125√ UNLESS OTHERWISE SPECIFIED: CAST FINISH
4. REMOVE ALL BURRS AND SHARP EDGES
5. ANODIZE PER MIL-A-8625 TYPE II, DYED BLACK
6. MASK SURFACES C
7. PAINT FRONT AND SIDES MEDIUM GRAY PER FED STD -595-26231
8. SILK SCREEN 1/8 HIGH CHACACTERS BLACK PER ND1002019

1004141

NOTICE — WHEN GOVERNMENT DRAWINGS, SPECIFICATIONS, OR OTHER DATA ARE USED FOR ANY PURPOSE OTHER THAN IN CONNECTION WITH A DEFINITELY RELATED GOVERNMENT PROCUREMENT OPERATION, THE UNITED STATES GOVERNMENT THEREBY INCURS NO RESPONSIBILITY NOR ANY OBLIGATION WHATSOEVER; AND THE FACT THAT THE GOVERNMENT MAY HAVE FORMULATED, FURNISHED, OR IN ANY WAY SUPPLIED THE SAID DRAWINGS, SPECIFICATIONS OR OTHER DATA IS NOT TO BE REGARDED BY IMPLICATION OR OTHERWISE AS IN ANY MANNER LICENSING THE HOLDER OR ANY OTHER PERSON OR CORPORATION, OR CONVEYING ANY RIGHTS OR PERMISSION TO MANUFACTURE, USE, OR SELL ANY PATENTED INVENTION THAT MAY IN ANY WAY BE RELATED THERETO.

1004142

REVISIONS			
SYM	DESCRIPTION	DATE	APPROVAL

FOR INFORMATION ONLY

CLASS B RELEASE TDR No. 01298 **DATE** 5-22-63

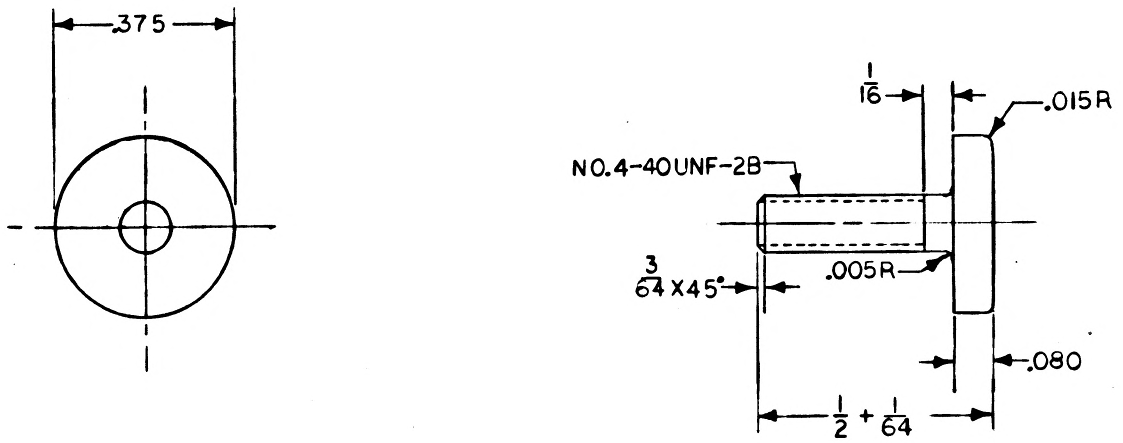

NOTES:

1. INTERPRET DRAWING IN ACCORDANCE WITH STANDARDS PRESCRIBED BY MIL-D-70327.
2. MATERIAL: 303CRES PER QQ-S-763B-1.
3. REMOVE BURRS & SHARP EDGES.
4. PASSIVATE PER MIL-F-14072.
5. 63✓ ALL OVER

QTY REQD	PART OR IDENTIFYING NO.	NOMENCLATURE OR DESCRIPTION	FIND NO.

LIST OF MATERIALS

NEXT ASSY	USED ON
APPLICATION	

UNLESS OTHERWISE SPECIFIED
DIMENSIONS ARE IN INCHES
TOLERANCES ON
FRACTIONS ± DECIMALS ±.005 ANGLES ±
DO NOT SCALE THIS DRAWING

MATERIAL SEE NOTE 2

HEAT TREATMENT

FINAL FINISH

MIT
INSTRUMENTATION LAB
CAMBRIDGE, MASS.
DWG. NO. CONTRACT

DRAWN J.F. Walsh DATE 5/3/63
CHECKED 5-14-63
APPROVAL W.B. Turner 22 MAY 63
APPROVAL

NASA APPROVAL 5/22/63

MIT APPROVAL 5/22/63

MANNED SPACECRAFT CENTER
HOUSTON, TEXAS

STOP, WEDGE
(AGC KEYBOARD)

CODE IDENT NO. SIZE C NASA DRAWING NO. 1004142

SCALE WT SHEET OF

MASTER

INCHES
0 1 2
PHOTOGRAPHIC SCALE ONLY

NOTICE — WHEN GOVERNMENT DRAWINGS, SPECIFICATIONS, OR OTHER DATA ARE USED FOR ANY PURPOSE OTHER THAN IN CONNECTION WITH A DEFINITELY RELATED GOVERNMENT PROCUREMENT OPERATION, THE UNITED STATES GOVERNMENT THEREBY INCURS NO RESPONSIBILITY NOR ANY OBLIGATION WHATSOEVER; AND THE FACT THAT THE GOVERNMENT MAY HAVE FORMULATED, FURNISHED, OR IN ANY WAY SUPPLIED THE SAID DRAWINGS, SPECIFICATIONS OR OTHER DATA IS NOT TO BE REGARDED BY IMPLICATION OR OTHERWISE AS IN ANY MANNER LICENSING THE HOLDER OR ANY OTHER PERSON OR CORPORATION, OR CONVEYING ANY RIGHTS OR PERMISSION TO MANUFACTURE, USE, OR SELL ANY PATENTED INVENTION THAT MAY IN ANY WAY BE RELATED THERETO.

REVISIONS			
SYM	DESCRIPTION	DATE	APPROVAL

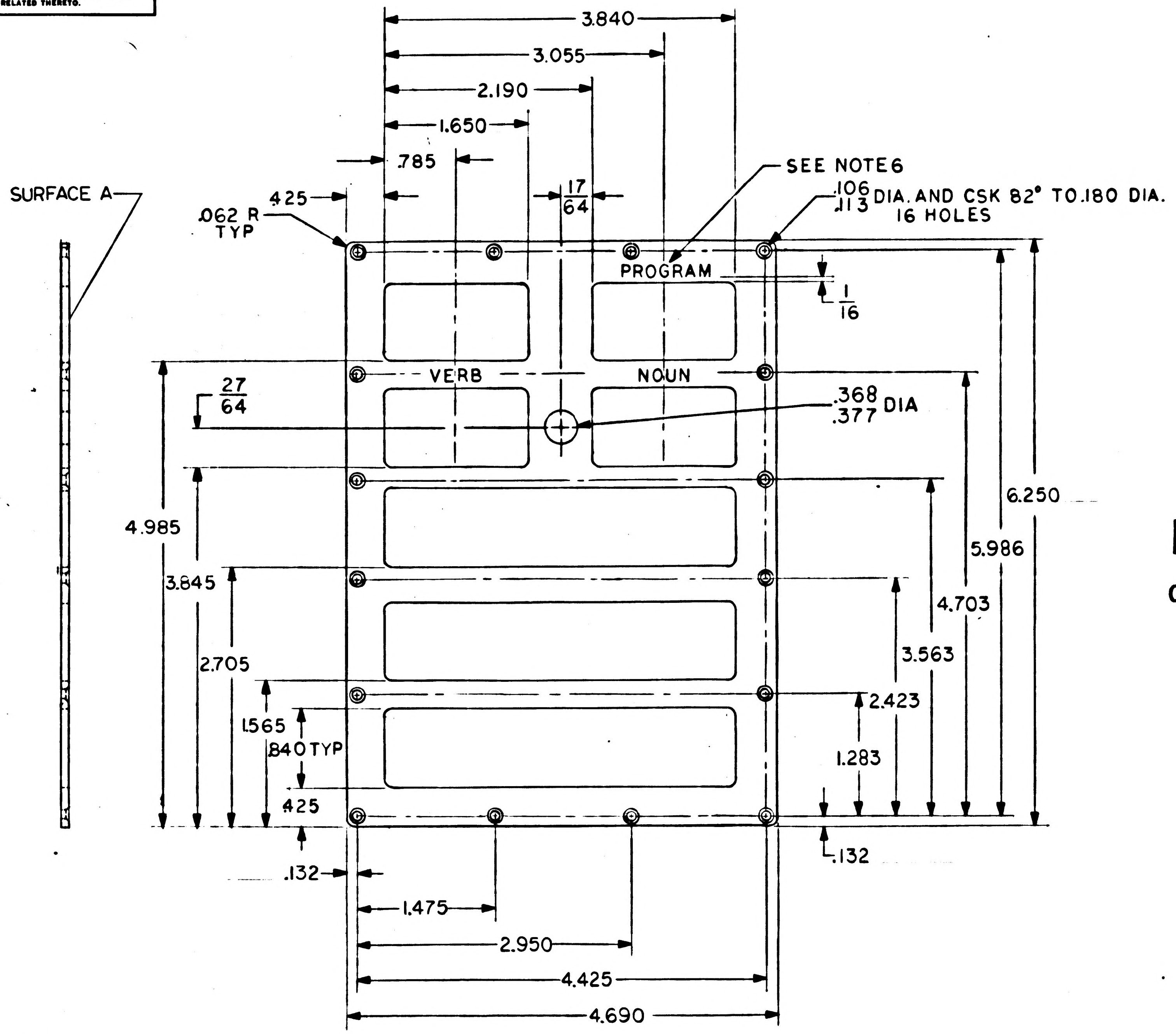
3.840
3.055
2.190
1.650
.785
.425
17/64
SEE NOTE 6
.106/.113 DIA. AND CSK 82° TO .180 DIA. 16 HOLES
SURFACE A
.062 R TYP
PROGRAM
VERB
NOUN
1/16
27/64
.368/.377 DIA
6.250
5.986
4.703
3.563
2.423
1.283
.132
4.985
3.845
2.705
1.565
.840 TYP
.425
.132
1.475
2.950
4.425
4.690

FOR INFORMATION ONLY

CLASS B RELEASE TDR No. 01298 DATE 5-22-63

NOTES:

1. INTERPRET DRAWING IN ACCORDANCE WITH MIL-D-70327
2. MATERIAL: .090 THICK 6061-T6 AL PER QQ-A-327
3. REMOVE ALL BURRS AND SHARP EDGES
4. ANODIZE PER MIL-A-8625, TYPE II, DYED BLACK
5. PAINT SURFACE A MEDIUM GRAY PER FED. STD595-26231
6. SILK SCREEN 1/8 HIGH CHARACTERS BLACK PER ND 1002019

MASTER

QTY REQD	PART OR IDENTIFYING NO.	NOMENCLATURE OR DESCRIPTION	FIND NO.

LIST OF MATERIALS

NEXT ASSY	USED ON
APPLICATION	

UNLESS OTHERWISE SPECIFIED
DIMENSIONS ARE IN INCHES
TOLERANCES ON
FRACTIONS ±1/64 DECIMALS ±.005 ANGLES ±1/2°
DO NOT SCALE THIS DRAWING
MATERIAL SEE NOTE 2
HEAT TREATMENT //
FINAL FINISH //

MIT
INSTRUMENTATION LAB
CAMBRIDGE, MASS.
DWG. NO. CONTRACT

DRAWN E O'Connell DATE 5-3-63
CHECKED 5-14-63
APPROVAL W B Turner 22 MAY 63
APPROVAL
NASA APPROVAL 5/22/63
MIT APPROVAL D Nafel 5/22/63

MANNED SPACECRAFT CENTER
HOUSTON, TEXAS

COVER, READ-OUT
AGC KEYBOARD

CODE IDENT NO.
SIZE C
NASA DRAWING NO. 1004143
SCALE 1 : 1
WT
SHEET 1 OF 1

INCHES
0 1 2
PHOTOGRAPHIC SCALE ONLY

NOTICE — WHEN GOVERNMENT DRAWINGS, SPECIFICATIONS, OR OTHER DATA ARE USED FOR ANY PURPOSE OTHER THAN IN CONNECTION WITH A DEFINITELY RELATED GOVERNMENT PROCUREMENT OPERATION, THE UNITED STATES GOVERNMENT THEREBY INCURS NO RESPONSIBILITY NOR ANY OBLIGATION WHATSOEVER, AND THE FACT THAT THE GOVERNMENT MAY HAVE FORMULATED, FURNISHED, OR IN ANY WAY SUPPLIED THE SAID DRAWINGS, SPECIFICATIONS OR OTHER DATA IS NOT TO BE REGARDED BY IMPLICATION OR OTHERWISE AS IN ANY MANNER LICENSING THE HOLDER OR ANY OTHER PERSON OR CORPORATION, OR CONVEYING ANY RIGHTS OR PERMISSION TO MANUFACTURE, USE, OR SELL ANY PATENTED INVENTION THAT MAY IN ANY WAY BE RELATED THERETO.

REVISIONS

SYM	DESCRIPTION	DATE	APPROVAL
A	REVISED PER TDRR 01457 6/5/63	6-4-63	

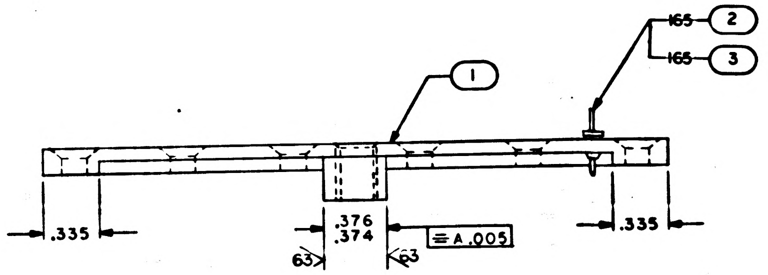
1
165
2
165
3
.335
.335
.376
.374
63
63
A .005

FOR INFORMATION ONLY

CLASS B RELEASE TDR No. 01298 DATE 5-22-63

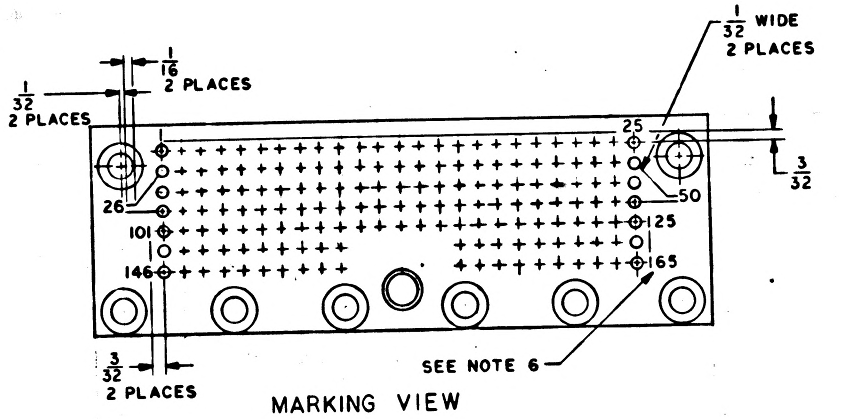
1/16
2 PLACES
1/32
2 PLACES
1/32 WIDE
2 PLACES
25
26
50
101
125
146
165
3/32
3/32
2 PLACES
SEE NOTE 6
MARKING VIEW

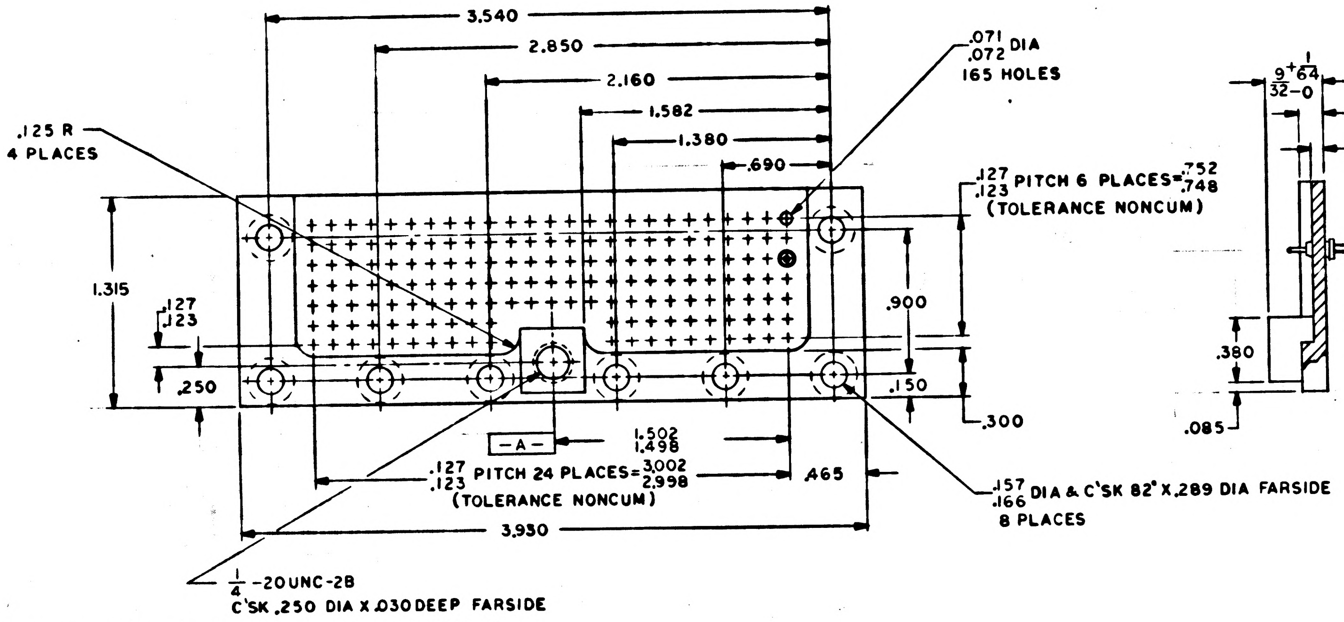
3,540
2,850
2,160
1,582
1,380
.690
.125 R
4 PLACES
.071
.072 DIA
165 HOLES
.127
.123 PITCH 6 PLACES= .752
.748
(TOLERANCE NONCUM)
1.315
.127
.123
.250
.900
.150
.300
—A—
1.502
1.498
.127
.123 PITCH 24 PLACES= 3.002
2.998
(TOLERANCE NONCUM)
.465
3.930
.157
.166 DIA & C'SK 82° X .289 DIA FARSIDE
8 PLACES
1/4 -20UNC-2B
C'SK .250 DIA X .030 DEEP FARSIDE
9/32 +1/64 -0
.160
.080
.380
.085

NOTES:
1. INTERPRET DRAWING IN ACCORDANCE WITH STANDARDS PRESCRIBED BY MIL-D-70327.
2. MATERIAL: 6061-T6 ALUMINUIM PER QQ-A-327
3. 125√ ALL OVER UNLESS OTHERWISE SPECIFIED
4. REMOVE BURRS & SHARP EDGES
5. ANODIZE PER MIL-A-8625 TYPE II DYED BLACK
6. MARK .083 HIGH WHITE CHARACTERS PER ND1002019

MASTER

QTY REQD	PART OR IDENTIFYING NO.	NOMENCLATURE OR DESCRIPTION	FIND NO.
165	1006782-3	CONTACT, MALCO	3
165	1006755	INSULATOR, MALCO	2
1	———	PLATE, RELAY TRAY	1

LIST OF MATERIALS

NEXT ASSY	USED ON

APPLICATION

UNLESS OTHERWISE SPECIFIED
DIMENSIONS ARE IN INCHES
TOLERANCES ON
FRACTIONS ± 1/64 DECIMALS ±.005 ANGLES ± 1/2°
DO NOT SCALE THIS DRAWING

MATERIAL
SEE NOTE 2

HEAT TREATMENT

FINAL FINISH
SEE NOTE 5

MIT
INSTRUMENTATION LAB
CAMBRIDGE, MASS
DWG. NO. CONTRACT

DRAWN [illegible] DATE 2-20-63
CHECKED [illegible] 5-14-63
APPROVAL W.B. [illegible] 22 MAY 63
APPROVAL

NASA APPROVAL [illegible] 5/22/63
MIT APPROVAL J. Hal[illegible] 5/22/63

MANNED SPACECRAFT CENTER
HOUSTON, TEXAS

PLATE, RELAY TRAY
AGC KEYBOARD

CODE IDENT NO. SIZE D NASA DRAWING NO. 1004145
SCALE 2/1 WT SHEET 1 OF 1

1004145

INCHES
0 1 2
PHOTOGRAPHIC SCALE ONLY

NOTICE — WHEN GOVERNMENT DRAWINGS, SPECIFICATIONS, OR OTHER DATA ARE USED FOR ANY PURPOSE OTHER THAN IN CONNECTION WITH A DEFINITELY RELATED GOVERNMENT PROCUREMENT OPERATION, THE UNITED STATES GOVERNMENT THEREBY INCURS NO RESPONSIBILITY NOR ANY OBLIGATION WHATSOEVER; AND THE FACT THAT THE GOVERNMENT MAY HAVE FORMULATED, FURNISHED OR IN ANY WAY SUPPLIED THE SAID DRAWINGS, SPECIFICATIONS OR OTHER DATA IS NOT TO BE REGARDED BY IMPLICATION OR OTHERWISE AS IN ANY MANNER LICENSING THE HOLDER OR ANY OTHER PERSON OR CORPORATION, OR CONVEYING ANY RIGHTS OR PERMISSION TO MANUFACTURE, USE, OR SELL ANY PATENTED INVENTION THAT MAY IN ANY WAY BE RELATED THERETO.

REVISIONS

SYM	DESCRIPTION	DATE	APPROVAL
A	REVISED PER TDRR 01457 6/4/63	6-4-63	
B	REPLACED AND UPGRADED TO CLASS A PER TDRR 02901	9-2-65	

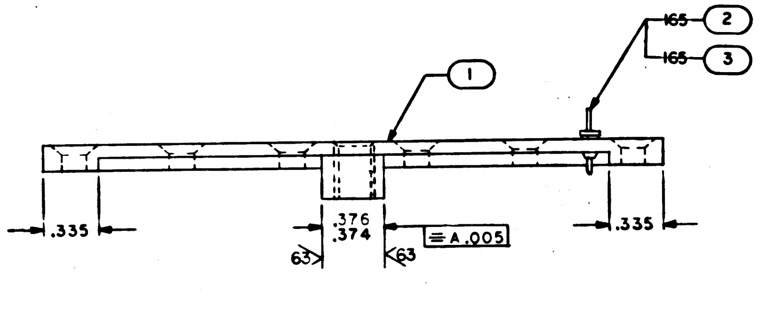

165 ②
165 ③
①
.335
.376
.374
63
63
= A .005
.335

FOR INFORMATION ONLY

CLASS B RELEASE TDR No. 01298 DATE 5-22-63

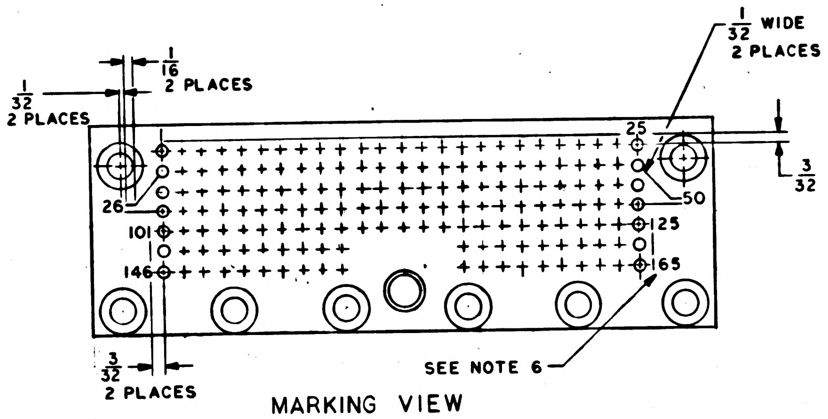

1/32 WIDE
2 PLACES
1/16
2 PLACES
1/32
2 PLACES
25
3/32
26
50
101
125
146
165
3/32
2 PLACES
SEE NOTE 6

MARKING VIEW

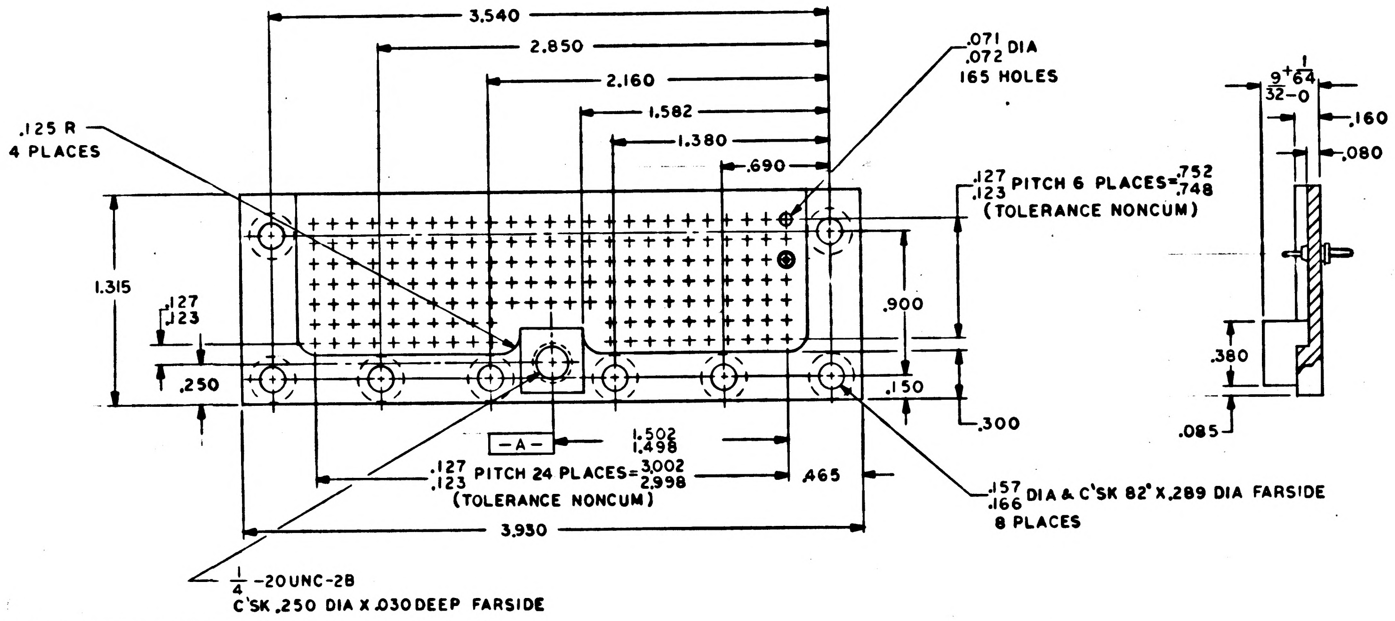

3.540
2.850
2.160
1.582
1.380
.690
.071
.072 DIA
165 HOLES
.125 R
4 PLACES
.127
.123 PITCH 6 PLACES = .752
.748
(TOLERANCE NONCUM)
1.315
.127
.123
.250
.900
.150
.300
-A-
1.502
1.498
.127
.123 PITCH 24 PLACES = 3.002
2.998
(TOLERANCE NONCUM)
.465
3.930
.157
.166 DIA & C'SK 82° X .289 DIA FARSIDE
8 PLACES
9/32 +1/64 -0
.160
.080
.380
.085
1/4-20UNC-2B
C'SK .250 DIA X .030 DEEP FARSIDE

REV B REPLACED BY REV C
OBOSLETE

NOTES:
1. INTERPRET DRAWING IN ACCORDANCE WITH STANDARDS PRESCRIBED BY MIL-D-70327.
2. MATERIAL: 6061-T6 ALUMINUIM PER QQ-A-327
3. 125/ ALL OVER UNLESS OTHERWISE SPECIFIED
4. REMOVE BURRS & SHARP EDGES
5. ANODIZE PER MIL-A-8625 TYPE II DYED BLACK
6. MARK .083 HIGH WHITE CHARACTERS PER ND1002019

MASTER

QTY REQD	PART OR IDENTIFYING NO.	NOMENCLATURE OR DESCRIPTION	FIND NO.
165	1006782-3	CONTACT, MALCO	3
165	1006755	INSULATOR, MALCO	2
1	———	PLATE, RELAY TRAY	1

LIST OF MATERIALS

NEXT ASSY	USED ON
APPLICATION	

UNLESS OTHERWISE SPECIFIED DIMENSIONS ARE IN INCHES
TOLERANCES ON
FRACTIONS ±1/64 DECIMALS ±.005 ANGLES ±1/2°
DO NOT SCALE THIS DRAWING
MATERIAL SEE NOTE 2
HEAT TREATMENT
FINAL FINISH SEE NOTE 5

MIT INSTRUMENTATION LAB
CAMBRIDGE, MASS.
DWG. NO. CONTRACT
DRAWN DATE 2-20-63
CHECKED 5-14-63
APPROVAL 22 MAY 63
APPROVAL
NASA APPROVAL 5/22/63
MIT APPROVAL 5/22/63

MANNED SPACECRAFT CENTER
HOUSTON, TEXAS

PLATE, RELAY TRAY
AGC KEYBOARD

CODE IDENT NO. SIZE D NASA DRAWING NO. 1004145
SCALE 2/1 WT SHEET 1 OF 1

INCHES 0 1 2
PHOTOGRAPHIC SCALE ONLY

1004145 B

NOTICE — WHEN GOVERNMENT DRAWINGS, SPECIFICATIONS, OR OTHER DATA ARE USED FOR ANY PURPOSE OTHER THAN IN CONNECTION WITH A DEFINITELY RELATED GOVERNMENT PROCUREMENT OPERATION, THE UNITED STATES GOVERNMENT THEREBY INCURS NO RESPONSIBILITY NOR ANY OBLIGATION WHATSOEVER; AND THE FACT THAT THE GOVERNMENT MAY HAVE FORMULATED, FURNISHED, OR IN ANY WAY SUPPLIED THE SAID DRAWINGS, SPECIFICATIONS OR OTHER DATA IS NOT TO BE REGARDED BY IMPLICATION OR OTHERWISE AS IN ANY MANNER LICENSING THE HOLDER OR ANY OTHER PERSON OR CORPORATION, OR CONVEYING ANY RIGHTS OR PERMISSION TO MANUFACTURE, USE, OR SELL ANY PATENTED INVENTION THAT MAY IN ANY WAY BE RELATED THERETO.

1004145

REVISIONS

SYM	DESCRIPTION	DATE	APPROVAL
C	REDRAWN REPLACES REV B WITH CHANGE AND UPGRADED TO CLASS A PER TDRR 02721	9-4-63	

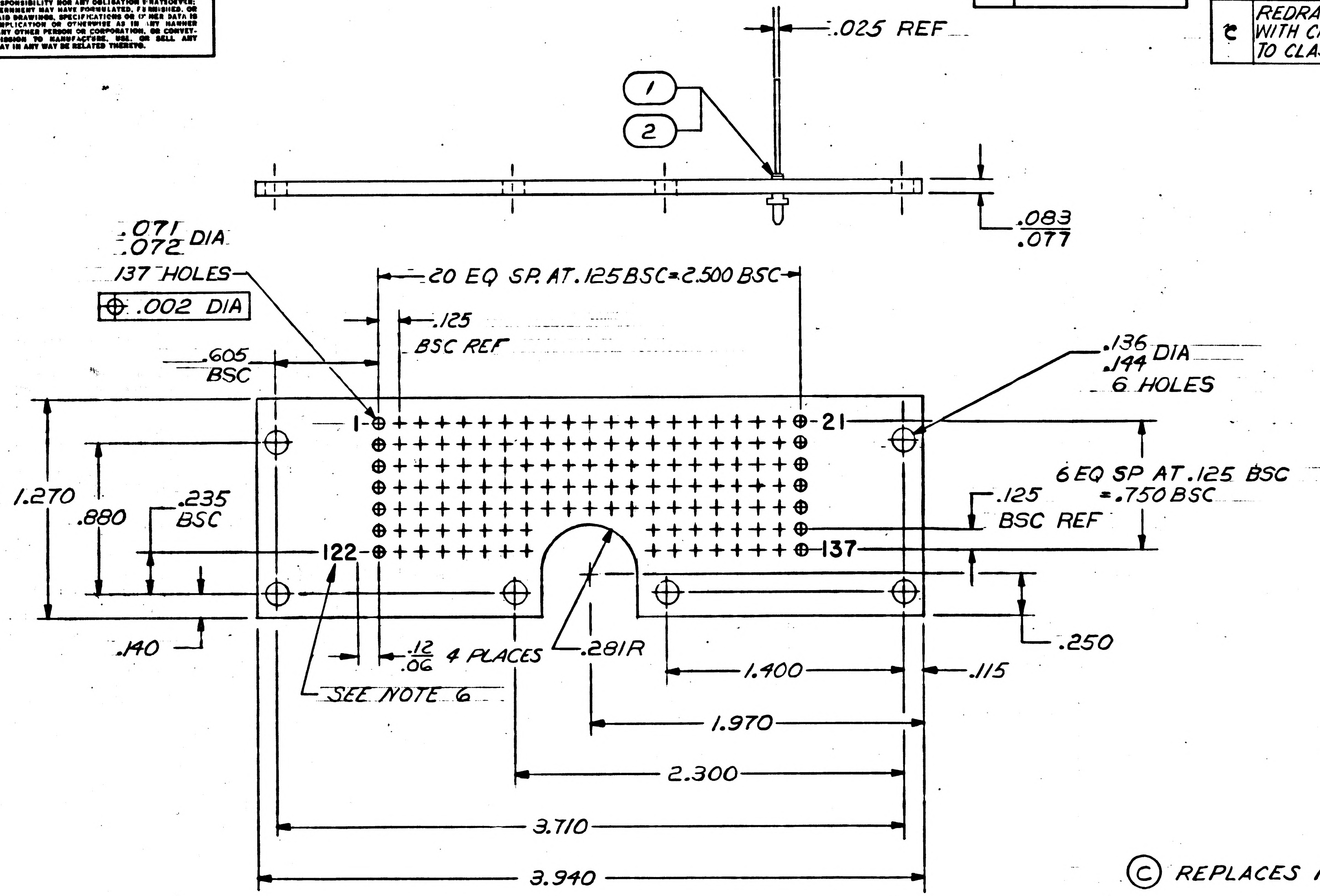
.025 REF
1
2
.083
.077
.071
.072 DIA
137 HOLES
⊕ .002 DIA
20 EQ SP. AT .125 BSC = 2.500 BSC
.125
BSC REF
.605
BSC
.136
.144 DIA
6 HOLES
1
21
122
137
6 EQ SP AT .125 BSC
= .750 BSC
.125
BSC REF
1.270
.880
.235
BSC
.140
.12
.06 4 PLACES
.281R
SEE NOTE 6
.250
.115
1.400
1.970
2.300
3.710
3.940

Ⓒ REPLACES REV B WITH CHANGE

NOTES
1. MATL: 6061-T6 ALUMINUM PER QQ-A-327 TEMP T6
2. REMOVE BURRS AND SHARP EDGES
3. ANODIZE PER MIL-A-8625 TYPE II DYED BLACK
4. 125/ ALL OVER
5. INTERPRET DRAWING IN ACCORDANCE WITH STANDARDS PRESCRIBED BY MIL-D-70327
~~6. STENCIL .07/.09 HIGH WHITE PER ND1002019~~

QTY REQD	PART OR IDENTIFYING NO.	NOMENCLATURE OR DESCRIPTION	FIND NO.
137	1006782-3	CONTACT, WRAPOST-MALE	3
137	1006775-1	INSULATOR, WRAPOST-MALE	2
1	1004145-1	PLATE, RELAY TRAY	1

LIST OF MATERIALS

NEXT ASSY	USED ON
1003098	

APPLICATION

UNLESS OTHERWISE SPECIFIED DIMENSIONS ARE IN INCHES
TOLERANCES ON
FRACTIONS ± DECIMALS ±.005 ANGLES ±
DO NOT SCALE THIS DRAWING
MATERIAL SEE NOTE 1
HEAT TREATMENT NONE
FINAL FINISH SEE NOTE 3

MIT
INSTRUMENTATION LAB
CAMBRIDGE, MASS.
DWG. NO. CONTRACT

DRAWN P.S. Tracy DATE 31 July 63
CHECKED R.F. B 6 Aug 63
APPROVAL K Jensen Aug 28/63
APPROVAL Eldon C Hall 30 Aug
NASA APPROVAL 9/5/63
MIT APPROVAL
MIT APPROVAL 9/5/63

MANNED SPACECRAFT CENTER
HOUSTON, TEXAS

PLATE, RELAY MODULE
AGC KEYBOARD

CODE IDENT NO. —— SIZE C NASA DRAWING NO. 1004145
SCALE 2/1 WT SHEET 1 OF 1

MASTER

INCHES
0 1 2
PHOTOGRAPHIC SCALE ONLY

NOTICE — WHEN GOVERNMENT DRAWINGS, SPECIFICATIONS, OR OTHER DATA ARE USED FOR ANY PURPOSE OTHER THAN IN CONNECTION WITH A DEFINITELY RELATED GOVERNMENT PROCUREMENT OPERATION, THE UNITED STATES GOVERNMENT THEREBY INCURS NO RESPONSIBILITY NOR ANY OBLIGATION WHATSOEVER; AND THE FACT THAT THE GOVERNMENT MAY HAVE FORMULATED, FURNISHED, OR IN ANY WAY SUPPLIED THE SAID DRAWINGS, SPECIFICATIONS, OR OTHER DATA IS NOT TO BE REGARDED BY IMPLICATION OR OTHERWISE AS IN ANY MANNER LICENSING THE HOLDER OR ANY OTHER PERSON OR CORPORATION, OR CONVEYING ANY RIGHTS OR PERMISSION TO MANUFACTURE, USE, OR SELL ANY PATENTED INVENTION THAT MAY IN ANY WAY BE RELATED THERETO.

D 1004145

REVISIONS

SYM	DESCRIPTION	DATE	APPROVAL
C	REDRAWN REPLACES REV B WITH CHANGE AND UPGRADED TO CLASS A PER TDRR 02901	9-4-63	Dw
D	REVISED PER TDRR 05379	30-12-63	

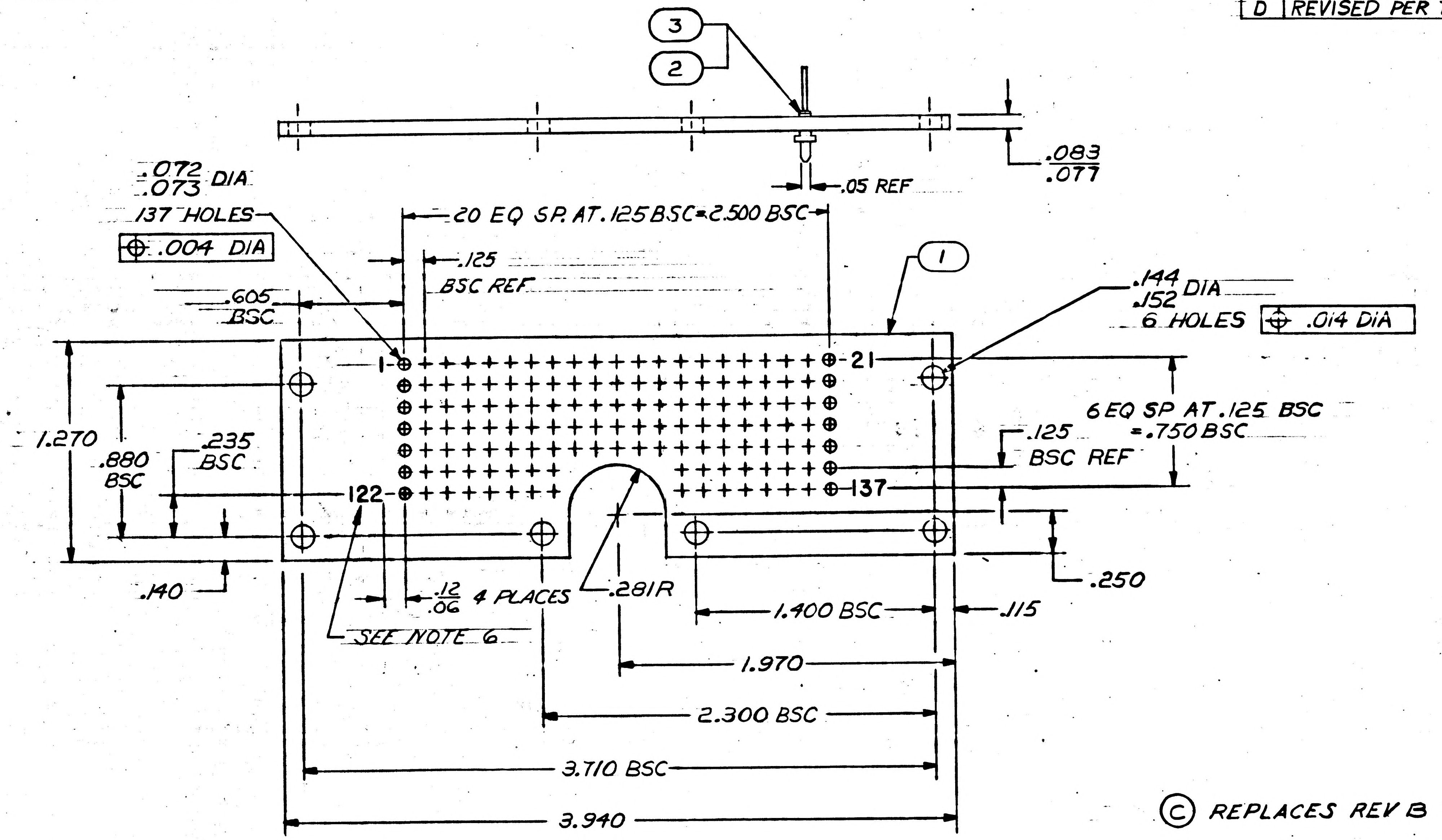
3
2
.083
.077
.05 REF
.072
.073 DIA
137 HOLES
⊕ .004 DIA
20 EQ SP. AT. .125 BSC = 2.500 BSC
.125
BSC REF
.605
BSC
1
.144
.152 DIA
6 HOLES ⊕ .014 DIA
1
21
6 EQ SP AT .125 BSC
= .750 BSC
.125
BSC REF
1.270
.880
BSC
.235
BSC
122
137
.250
.140
.12
.06 4 PLACES
.281R
SEE NOTE 6
1.400 BSC
.115
1.970
2.300 BSC
3.710 BSC
3.940

Ⓒ REPLACES REV B WITH CHANGE

NOTES
1. MATL: 6061-T6 ALUMINUM PER QQ-A-327 TEMP T6
2. REMOVE BURRS AND SHARP EDGES
3. ANODIZE PER MIL-A-8625 TYPE II DYED BLACK
4. 125/ ALL OVER
5. INTERPRET DRAWING IN ACCORDANCE WITH STANDARDS PRESCRIBED BY MIL-D-70327
~~6. STENCIL .07/.09 HIGH WHITE PER ND7002019~~
~~AND ND1002122 TYPE II CLASS I~~

QTY REQD	PART OR IDENTIFYING NO.	NOMENCLATURE OR DESCRIPTION	FIND NO.
137	1006782-3	CONTACT, WRAPOST-MALE	3
137	1006775-1	INSULATOR, WRAPOST-MALE	2
1	1004145-1	PLATE, RELAY TRAY	1

LIST OF MATERIALS

NEXT ASSY	USED ON
1003098	

APPLICATION

MASTER

UNLESS OTHERWISE SPECIFIED DIMENSIONS ARE IN INCHES
TOLERANCES ON
FRACTIONS ± DECIMALS ±.005 ANGLES ±
DO NOT SCALE THIS DRAWING
MATERIAL SEE NOTE 1
HEAT TREATMENT NONE
FINAL FINISH SEE NOTE 3

MIT
INSTRUMENTATION LAB
CAMBRIDGE, MASS.
DWG. NO. CONTRACT
DRAWN P.S. Tracy DATE 31 July 63
CHECKED R.F. Bunker 6 Aug 63
APPROVAL K Jensen Aug 28/63
APPROVAL Eldon C Hall 30 aug
NASA APPROVAL 9/5/63
MIT APPROVAL
MIT APPROVAL 9/5/63

MANNED SPACECRAFT CENTER
HOUSTON, TEXAS

PLATE, RELAY MODULE
AGC KEYBOARD

CODE IDENT NO. —
SIZE C
NASA DRAWING NO. 1004145
SCALE 2/1
WT
SHEET 1 OF 1

INCHES
0 1 2
PHOTOGRAPHIC SCALE ONLY

NOTICE — WHEN GOVERNMENT DRAWINGS, SPECIFICATIONS, OR OTHER DATA ARE USED FOR ANY PURPOSE OTHER THAN IN CONNECTION WITH A DEFINITELY RELATED GOVERNMENT PROCUREMENT OPERATION, THE UNITED STATES GOVERNMENT THEREBY INCURS NO RESPONSIBILITY NOR ANY OBLIGATION WHATSOEVER; AND THE FACT THAT THE GOVERNMENT MAY HAVE FORMULATED, FURNISHED, OR IN ANY WAY SUPPLIED THE SAID DRAWINGS, SPECIFICATIONS OR OTHER DATA IS NOT TO BE REGARDED BY IMPLICATION OR OTHERWISE AS IN ANY MANNER LICENSING THE HOLDER OR ANY OTHER PERSON OR CORPORATION, OR CONVEYING ANY RIGHTS OR PERMISSION TO MANUFACTURE, USE, OR SELL ANY PATENTED INVENTION THAT MAY IN ANY WAY BE RELATED THERETO.

1004145 E

REVISIONS			
SYM	DESCRIPTION	DATE	APPROVAL
C	REDRAWN REPLACES REV B WITH CHANGE AND UPGRADED TO CLASS A PER TDRR 02901	9-4-63	
D	REVISED PER TDRR 05379	30-12-63	
E	REVISED PER TDRR 06014	29 Jan 64	2/4/64

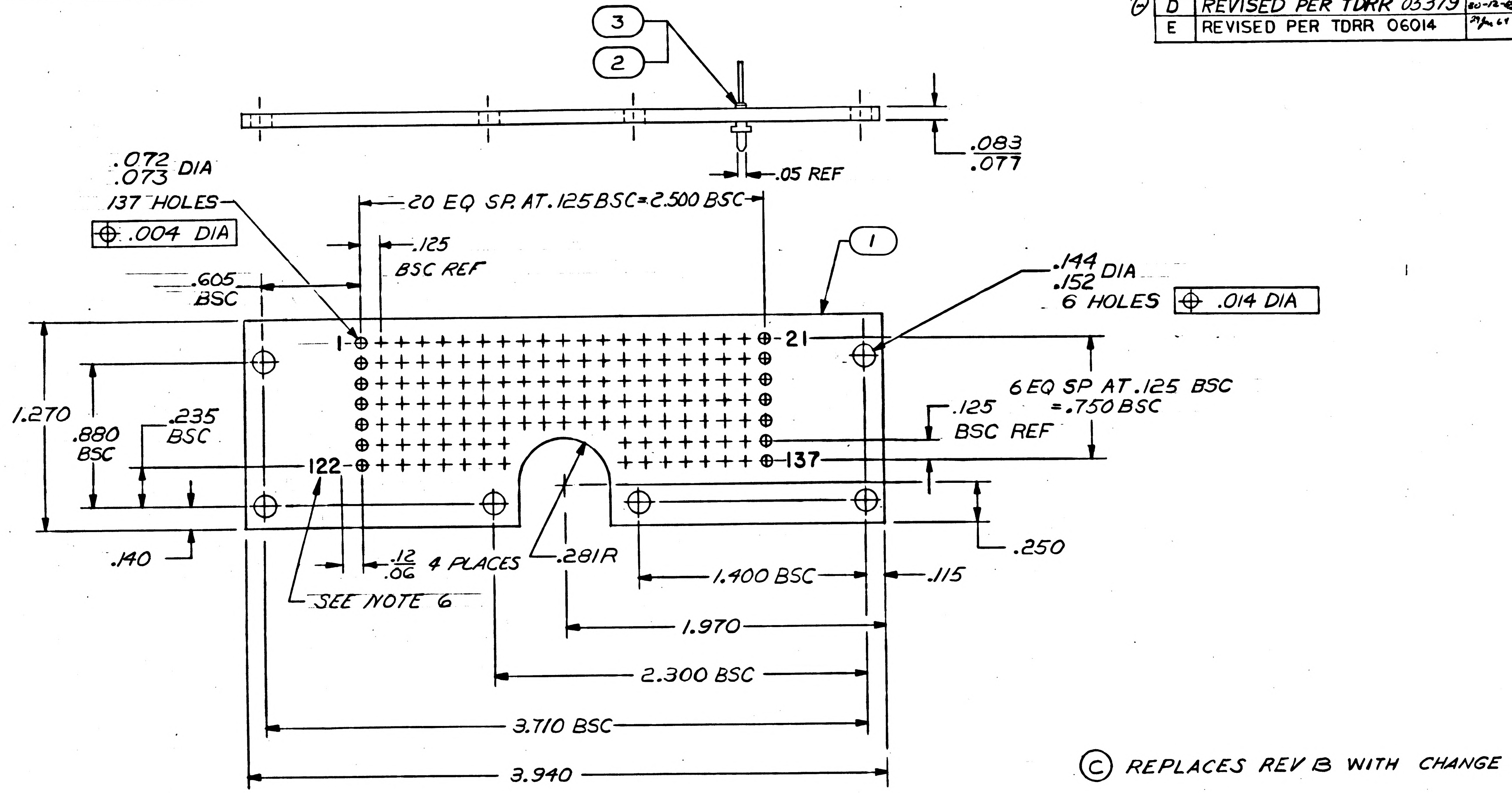
3
2
1
.072
.073 DIA
137 HOLES
⊕ .004 DIA
20 EQ SP. AT .125 BSC = 2.500 BSC
.05 REF
.083
.077
.125
BSC REF
.605
BSC
.144
.152 DIA
6 HOLES ⊕ .014 DIA
1
21
122
137
6 EQ SP AT .125 BSC
= .750 BSC
.125
BSC REF
1.270
.880
BSC
.235
BSC
.140
.12
.06 4 PLACES
.281R
SEE NOTE 6
1.400 BSC
.115
.250
1.970
2.300 BSC
3.710 BSC
3.940

Ⓒ REPLACES REV B WITH CHANGE

NOTES
1. MATL: 6061-T6 ALUMINUM PER QQ-A-327 TEMP T6
2. REMOVE BURRS AND SHARP EDGES
3. ANODIZE PER MIL-A-8625 TYPE II DYED BLACK
4. 125/ ALL OVER
5. INTERPRET DRAWING IN ACCORDANCE WITH STANDARDS PRESCRIBED BY MIL-D-70327
6. STENCIL .07/.09 HIGH WHITE PER ND1002019 AND ND1002122 TYPE II CLASS I

QTY REQD	PART OR IDENTIFYING NO.	NOMENCLATURE OR DESCRIPTION	FIND NO.
137	1006782-3	CONTACT, WRAPOST-MALE	3
137	1006775	INSULATOR, WRAPOST-MALE	2
1	1004145-1	PLATE, RELAY TRAY	1

LIST OF MATERIALS

1003098	
NEXT ASSY	USED ON
APPLICATION	

UNLESS OTHERWISE SPECIFIED DIMENSIONS ARE IN INCHES
TOLERANCES ON
FRACTIONS ± DECIMALS ±.005 ANGLES ±
DO NOT SCALE THIS DRAWING
MATERIAL SEE NOTE 1
HEAT TREATMENT NONE
FINAL FINISH SEE NOTE 3

MIT
INSTRUMENTATION LAB
CAMBRIDGE, MASS.
DWG. NO. CONTRACT
DRAWN P.S. Tracy DATE 31 July 63
CHECKED R.F. B[illegible] 6 Aug 63
APPROVAL K. Jensen Aug 28/63
APPROVAL Eldon C Hall 30 Aug
NASA APPROVAL [illegible] 9/5/63
MIT APPROVAL
MIT APPROVAL [illegible] 9/5/63

MANNED SPACECRAFT CENTER
HOUSTON, TEXAS

PLATE, RELAY MODULE
AGC KEYBOARD

CODE IDENT NO. —
SIZE C
NASA DRAWING NO. 1004145
SCALE 2/1
WT
SHEET 1 OF 1

MASTER

NOTICE — WHEN GOVERNMENT DRAWINGS, SPECIFICATIONS, OR OTHER DATA ARE USED FOR ANY PURPOSE OTHER THAN IN CONNECTION WITH A DEFINITELY RELATED GOVERNMENT PROCUREMENT OPERATION, THE UNITED STATES GOVERNMENT THEREBY INCURS NO RESPONSIBILITY NOR ANY OBLIGATION WHATSOEVER; AND THE FACT THAT THE GOVERNMENT MAY HAVE FORMULATED, FURNISHED, OR IN ANY WAY SUPPLIED THE SAID DRAWINGS, SPECIFICATIONS OR OTHER DATA IS NOT TO BE REGARDED BY IMPLICATION OR OTHERWISE AS IN ANY MANNER LICENSING THE HOLDER OR ANY OTHER PERSON OR CORPORATION, OR CONVEYING ANY RIGHTS OR PERMISSION TO MANUFACTURE, USE, OR SELL ANY PATENTED INVENTION THAT MAY IN ANY WAY BE RELATED THERETO.

1004145 F

REVISIONS

SYM	DESCRIPTION	DATE	APPROVAL
C	REDRAWN REPLACES REV B WITH CHANGE AND UPGRADED TO CLASS A PER TDRR 02901	9-[illegible]-63	[illegible]
D	REVISED PER TDRR 05379	30-12-63	[illegible]
E	REVISED PER TDRR 06014	27 Jan 64	[illegible]
F	REVISED PER TDRR 07347 DR [illegible] CHK [illegible]	[illegible]/64	[illegible]

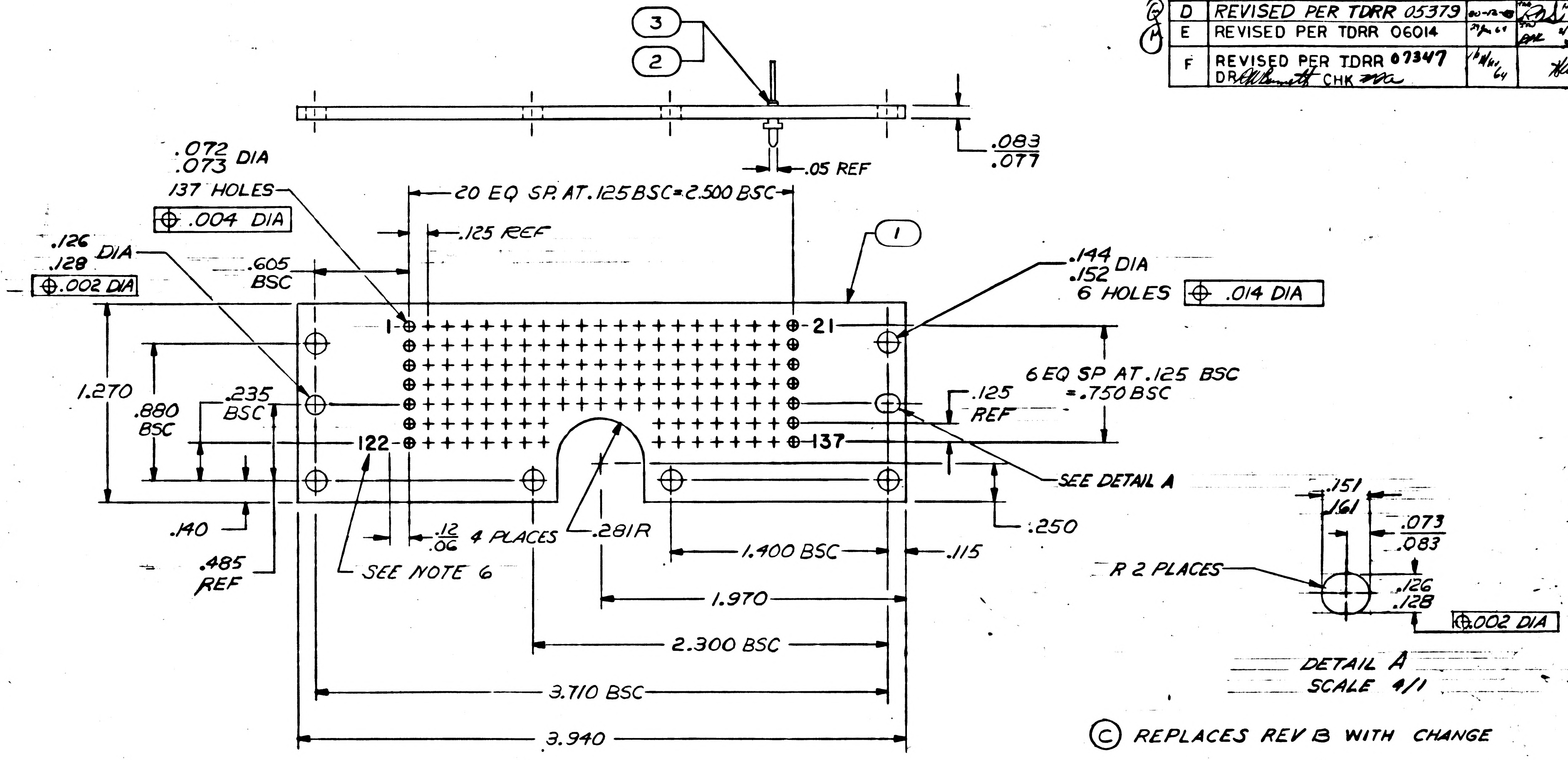

3
2
.05 REF
.083
.077
.072
.073 DIA
137 HOLES
⊕ .004 DIA
20 EQ SP. AT .125 BSC = 2.500 BSC
.125 REF
1
.126
.128 DIA
⊕ .002 DIA
.605 BSC
.144
.152 DIA
6 HOLES ⊕ .014 DIA
1
21
122
137
1.270
.880 BSC
.235 BSC
6 EQ SP AT .125 BSC = .750 BSC
.125 REF
SEE DETAIL A
.140
.485 REF
.12
.06 4 PLACES
.281R
SEE NOTE 6
1.400 BSC
.115
.250
1.970
2.300 BSC
3.710 BSC
3.940
.151
.161
.073
.083
R 2 PLACES
.126
.128
⊕ .002 DIA
DETAIL A
SCALE 4/1

Ⓒ REPLACES REV B WITH CHANGE

NOTES
1. MATL: 6061-T6 ALUMINUM PER QQ-A-327 TEMP T6
2. REMOVE BURRS AND SHARP EDGES
3. ANODIZE PER MIL-A-8625 TYPE II DYED BLACK
4. 125/ ALL OVER
5. INTERPRET DRAWING IN ACCORDANCE WITH STANDARDS PRESCRIBED BY MIL-D-70327
6. STENCIL .07/.09 HIGH WHITE PER ND1002019 AND ND1002122 TYPE II CLASS I

QTY REQD	PART OR IDENTIFYING NO.	NOMENCLATURE OR DESCRIPTION	FIND NO.
137	1006782-3	CONTACT, WRAPOST-MALE	3
137	1006775	INSULATOR, WRAPOST-MALE	2
1	1004145-1	PLATE, RELAY TRAY	1

LIST OF MATERIALS

NEXT ASSY	USED ON
1003098	

APPLICATION

UNLESS OTHERWISE SPECIFIED DIMENSIONS ARE IN INCHES
TOLERANCES ON
FRACTIONS ± DECIMALS ±.005 ANGLES ±
DO NOT SCALE THIS DRAWING
MATERIAL: SEE NOTE 1
HEAT TREATMENT: NONE
FINAL FINISH: SEE NOTE 3

MIT
INSTRUMENTATION LAB
CAMBRIDGE, MASS.
DWG. NO. CONTRACT

DRAWN P.S. Tracy DATE 31 July 63
CHECKED R.F. B[illegible] 6 Aug 63
APPROVAL K Jensen Aug 28 '63
APPROVAL Eldon C Hall 30 Aug
NASA APPROVAL [illegible] 9/5/63
MIT APPROVAL
MIT APPROVAL [illegible] 9/5/63

MANNED SPACECRAFT CENTER
HOUSTON, TEXAS

PLATE, RELAY MODULE
AGC KEYBOARD

CODE IDENT NO. ——
SIZE C
NASA DRAWING NO. 1004145
SCALE 2/1
WT
SHEET 1 OF 1

NOTICE — WHEN GOVERNMENT DRAWINGS, SPECIFICATIONS, OR OTHER DATA ARE USED FOR ANY PURPOSE OTHER THAN IN CONNECTION WITH A DEFINITELY RELATED GOVERNMENT PROCUREMENT OPERATION, THE UNITED STATES GOVERNMENT THEREBY INCURS NO RESPONSIBILITY NOR ANY OBLIGATION WHATSOEVER; AND THE FACT THAT THE GOVERNMENT MAY HAVE FORMULATED, FURNISHED, OR IN ANY WAY SUPPLIED THE SAID DRAWINGS, SPECIFICATIONS OR OTHER DATA IS NOT TO BE REGARDED BY IMPLICATION OR OTHERWISE AS IN ANY MANNER LICENSING THE HOLDER OR ANY OTHER PERSON OR CORPORATION, OR CONVEYING ANY RIGHTS OR PERMISSION TO MANUFACTURE, USE, OR SELL ANY PATENTED INVENTION THAT MAY IN ANY WAY BE RELATED THERETO.

1004145 G

REVISIONS			
SYM	DESCRIPTION	DATE	APPROVAL
C	REDRAWN REPLACES REV B WITH CHANGE AND UPGRADED TO CLASS A PER TDRR 02901	9-[illegible]-63	
D	REVISED PER TDRR 05379	20-12-63	
E	REVISED PER TDRR 06014	29 Jan 64	
F	REVISED PER TDRR 07347 DR CHK	16 Mar 64	
G	REVISED PER TDRR 13065 DR CHK	10/9/64	

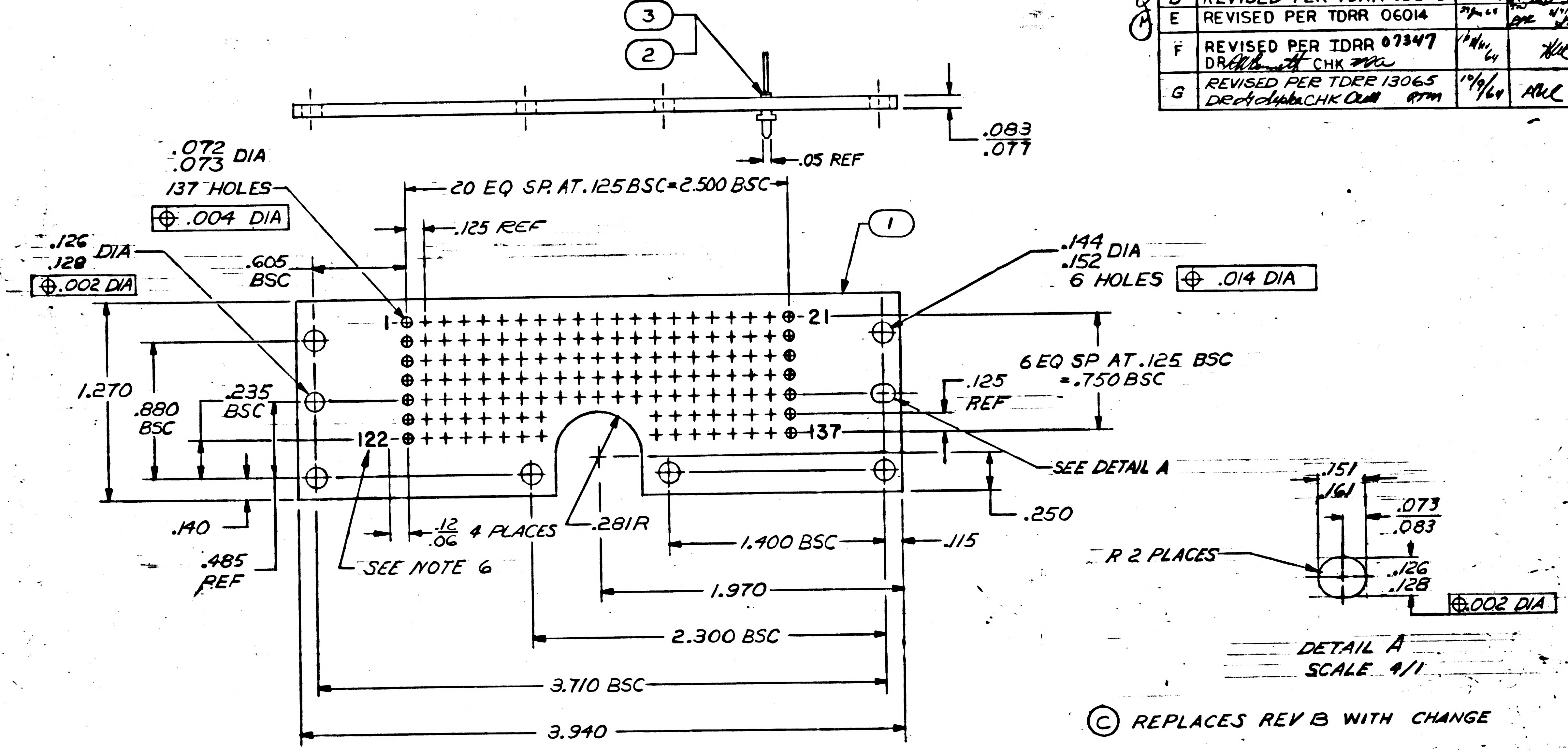

3
2
1
.083
.077
.05 REF
.072
.073 DIA
137 HOLES
⊕ .004 DIA
20 EQ SP. AT .125 BSC = 2.500 BSC
.125 REF
.126
.128 DIA
⊕ .002 DIA
.605
BSC
.144
.152 DIA
6 HOLES ⊕ .014 DIA
1
21
122
137
6 EQ SP AT .125 BSC = .750 BSC
.125
REF
1.270
.880
BSC
.235
BSC
SEE DETAIL A
.250
.140
.485
REF
.12
.06 4 PLACES
.281R
SEE NOTE 6
1.400 BSC
.115
1.970
2.300 BSC
3.710 BSC
3.940
.151
.161
.073
.083
R 2 PLACES
.126
.128
⊕ .002 DIA
DETAIL A
SCALE 4/1

Ⓒ REPLACES REV B WITH CHANGE

NOTES
1. MATL: 6061-T6 ALUMINUM PER QQ-A-327 TEMP T6
2. REMOVE BURRS AND SHARP EDGES
3. ANODIZE PER MIL-~~A~~-8625 TYPE I DYED BLACK
4. 125/ ALL OVER
5. INTERPRET DRAWING IN ACCORDANCE WITH STANDARDS PRESCRIBED BY MIL-D-70327
6. STENCIL .07/.09 HIGH WHITE PER ND1002019 AND ND1002122 TYPE II CLASS I
7. IDENTIFY PER ND1002019

137	1006782-3	CONTACT, WRAPOST-MALE	3
137	1006775	INSULATOR, WRAPOST-MALE	2
1	1004145-1	PLATE, RELAY TRAY	1
QTY REQD	PART OR IDENTIFYING NO.	NOMENCLATURE OR DESCRIPTION	FIND NO.

LIST OF MATERIALS

NEXT ASSY	USED ON
1003098	

APPLICATION

UNLESS OTHERWISE SPECIFIED DIMENSIONS ARE IN INCHES
TOLERANCES ON
FRACTIONS ± DECIMALS ±.005 ANGLES ±
DO NOT SCALE THIS DRAWING
MATERIAL SEE NOTE 1
HEAT TREATMENT NONE
FINAL FINISH SEE NOTE 3

MIT
INSTRUMENTATION LAB
CAMBRIDGE, MASS.
DWG. NO.
CONTRACT
DRAWN P.S. Tagey DATE 31 July 63
CHECKED R.F. [illegible] 6 Aug 63
APPROVAL K. Jensen Aug 28 '63
APPROVAL Eldon C Hall 30 Aug
NASA APPROVAL [illegible] 9/5/63
MIT APPROVAL
MIT APPROVAL [illegible] 9/5/63

MANNED SPACECRAFT CENTER
HOUSTON, TEXAS

PLATE, RELAY MODULE
AGC KEYBOARD

CODE IDENT NO. —
SIZE C
NASA DRAWING NO. 1004145
SCALE 2/1
WT
SHEET 1 OF 1

NOTICE — WHEN GOVERNMENT DRAWINGS, SPECIFICATIONS, OR OTHER DATA ARE USED FOR ANY PURPOSE OTHER THAN IN CONNECTION WITH A DEFINITELY RELATED GOVERNMENT PROCUREMENT OPERATION, THE UNITED STATES GOVERNMENT THEREBY INCURS NO RESPONSIBILITY NOR ANY OBLIGATION WHATSOEVER, AND THE FACT THAT THE GOVERNMENT MAY HAVE FORMULATED, FURNISHED, OR IN ANY WAY SUPPLIED THE SAID DRAWINGS, SPECIFICATIONS OR OTHER DATA IS NOT TO BE REGARDED BY IMPLICATION OR OTHERWISE AS IN ANY MANNER LICENSING THE HOLDER OR ANY OTHER PERSON OR CORPORATION, OR CONVEYING ANY RIGHTS OR PERMISSION TO MANUFACTURE, USE OR SELL ANY PATENTED INVENTION THAT MAY IN ANY WAY BE RELATED THERETO.

REVISIONS			
SYM	DESCRIPTION	DATE	APPROVAL

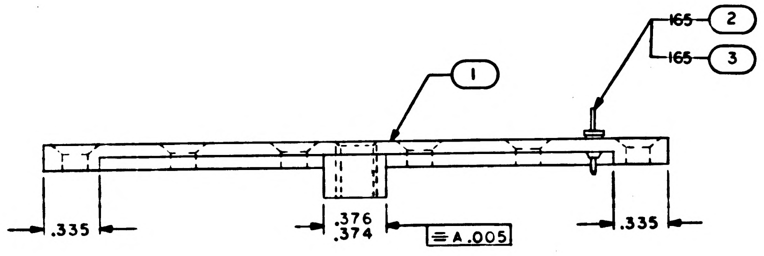

1
165 2
165 3
.335
.376
.374
= A .005
.335

FOR INFORMATION ONLY

CLASS B RELEASE TDR No. 01298 DATE 5-22-63

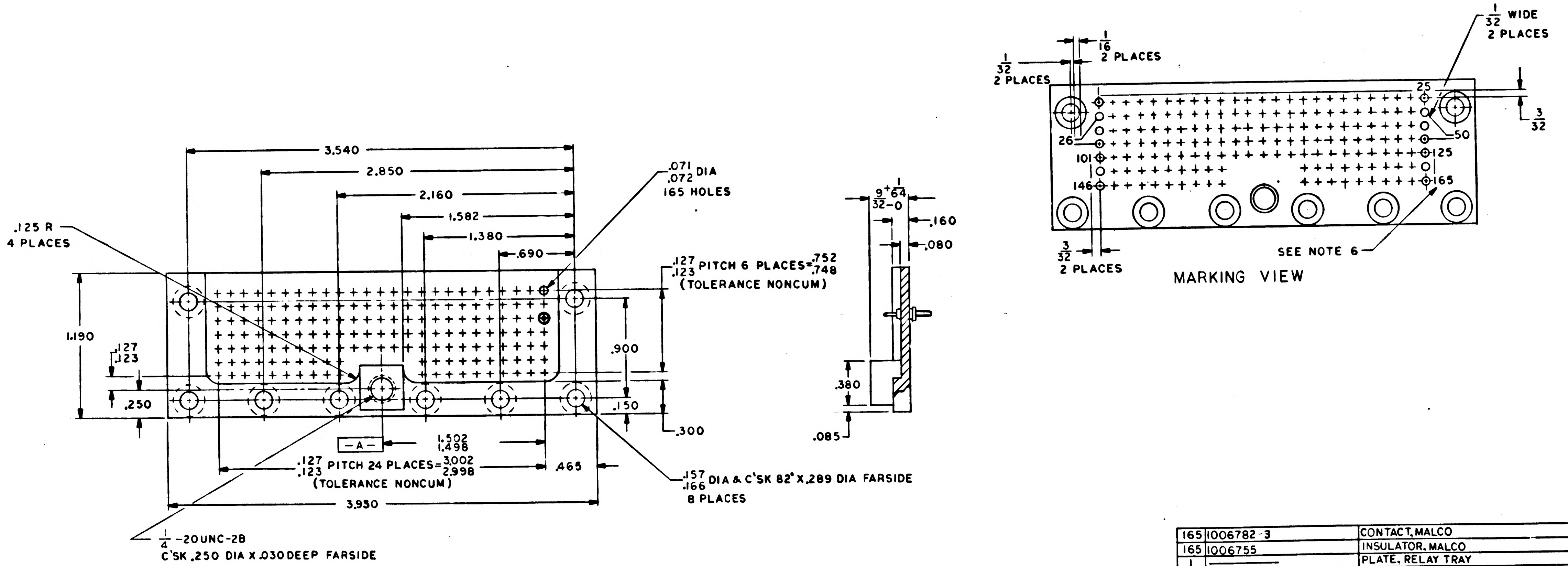

3.540
2.850
2.160
1.582
1.380
.690
.125 R
4 PLACES
.071
.072 DIA
165 HOLES
.127
.123 PITCH 6 PLACES = .752
.748
(TOLERANCE NONCUM)
1.190
.127
.123
.250
.900
.150
.300
-A-
1.502
1.498
.127
.123 PITCH 24 PLACES = 3.002
2.998
(TOLERANCE NONCUM)
.465
3.930
.157
.166 DIA & C'SK 82° X .289 DIA FARSIDE
8 PLACES
1/4 -20UNC-2B
C'SK .250 DIA X .030 DEEP FARSIDE
9/64 +1/64
32-0
.160
.080
.380
.085
1/16
2 PLACES
1/32
2 PLACES
1/32 WIDE
2 PLACES
3/32
25
26
50
101
125
146
165
3/32
2 PLACES
SEE NOTE 6
MARKING VIEW

NOTES:

1. INTERPRET DRAWING IN ACCORDANCE WITH STANDARDS PRESCRIBED BY MIL-D-70327
2. MATERIAL: 6061-T6 ALUMINUIM PER QQ-A-327
3. 125√ ALL OVER
4. REMOVE BURRS & SHARP EDGES
5. ANODIZE PER MIL-A-8625 TYPE II DYED BLACK
6. MARK .083 HIGH WHITE CHARACTERS PER ND1002019

QTY REQD	PART OR IDENTIFYING NO.	NOMENCLATURE OR DESCRIPTION	FIND NO.
165	1006782-3	CONTACT, MALCO	3
165	1006755	INSULATOR, MALCO	2
1	—	PLATE, RELAY TRAY	1

LIST OF MATERIALS

NEXT ASSY	USED ON

APPLICATION

UNLESS OTHERWISE SPECIFIED DIMENSIONS ARE IN INCHES
TOLERANCES ON
FRACTIONS ±1/64 DECIMALS ±.005 ANGLES ±1/2°
DO NOT SCALE THIS DRAWING

MATERIAL SEE NOTE 2
HEAT TREATMENT
FINAL FINISH SEE NOTE 5

MIT
INSTRUMENTATION LAB
CAMBRIDGE, MASS
DWG. NO. CONTRACT

DRAWN [illegible] DATE 7 MAY 63
CHECKED [illegible] 5-14-63
APPROVAL W L Turner 22 MAY 63
APPROVAL
NASA APPROVAL [illegible] 5/22/63
MIT APPROVAL [illegible] 5/22/63

MANNED SPACECRAFT CENTER
HOUSTON, TEXAS

PLATE, RELAY TRAY
AGC KEYBOARD

CODE IDENT NO.
SIZE D
NASA DRAWING NO. 1004145
SCALE 2/1
WT
SHEET 1 OF 1

1004145

INCHES
0 1 2
PHOTOGRAPHIC SCALE ONLY

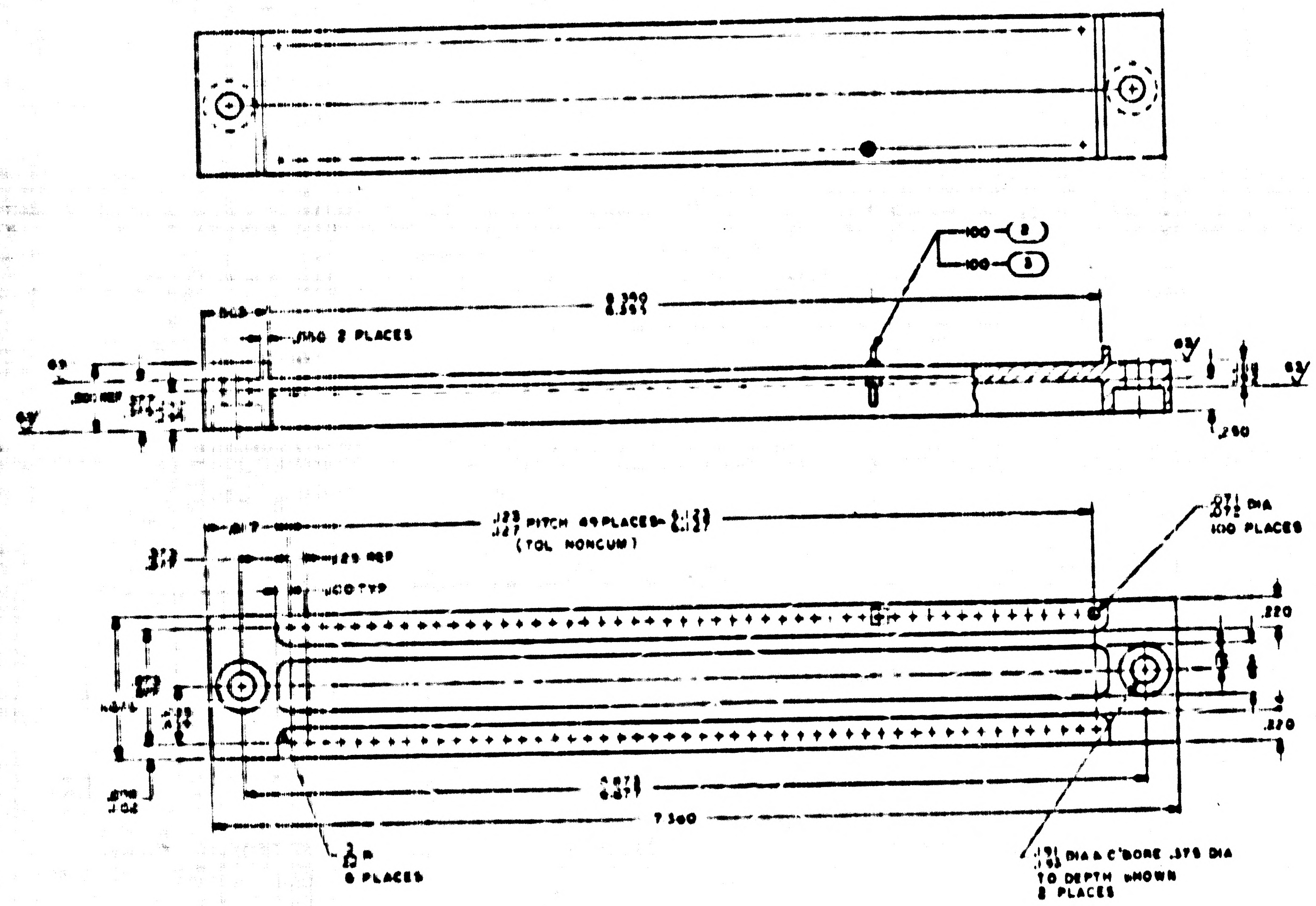

100-(2)
100-(3)
8.390
.110 2 PLACES
.125 PITCH 49 PLACES
(TOL NONCUM)
.125 REF
.100 TYP
.071 DIA
100 PLACES
.220
.250
7.360
6 PLACES
DIA & C'BORE .375 DIA
TO DEPTH SHOWN
2 PLACES

FOR INFORMATION ONLY

CLASS II RELEASE TDR No. [illegible] DATE [illegible]

OBSOLETE

REV A REPLACED WITH CHANGE BY REV B

NOTES

1. INTERPRET DRAWING IN ACCORDANCE WITH STANDARDS PRESCRIBED BY MIL-D-70327
2. MATERIAL: [illegible] 6061-T6 ALUMINUM PER QQ-A-327
3. UNLESS OTHERWISE SPECIFIED 125/ ALL OVER
4. REMOVE BURRS AND SHARP EDGES
5. ANODIZE PER MIL-A-8625 TYPE II DYED BLACK

MATERIAL: SEE NOTE 2

FINAL FINISH: SEE NOTE 3

MANNED SPACECRAFT CENTER
HOUSTON, TEXAS

HEADER
DECODING MODULE
AGC KEYBOARD

D 100-146

NOTICE — WHEN GOVERNMENT DRAWINGS, SPECIFICATIONS, OR OTHER DATA ARE USED FOR ANY PURPOSE OTHER THAN IN CONNECTION WITH A DEFINITELY RELATED GOVERNMENT PROCUREMENT OPERATION, THE UNITED STATES GOVERNMENT THEREBY INCURS NO RESPONSIBILITY NOR ANY OBLIGATION WHATSOEVER; AND THE FACT THAT THE GOVERNMENT MAY HAVE FORMULATED, FURNISHED, OR IN ANY WAY SUPPLIED THE SAID DRAWINGS, SPECIFICATIONS OR OTHER DATA IS NOT TO BE REGARDED BY IMPLICATION OR OTHERWISE AS IN ANY MANNER LICENSING THE HOLDER OR ANY OTHER PERSON OR CORPORATION, OR CONVEYING ANY RIGHTS OR PERMISSION TO MANUFACTURE, USE, OR SELL ANY PATENTED INVENTION THAT MAY IN ANY WAY BE RELATED THERETO.

REVISIONS			
SYM	DESCRIPTION	DATE	APPROVAL
B	REDRAWN PER TDRR 03462 AND UPGRADED TO CLASS A		
C	REVISED, REDRAWN & REISSUED PER TDRR 04495	11-5-63	

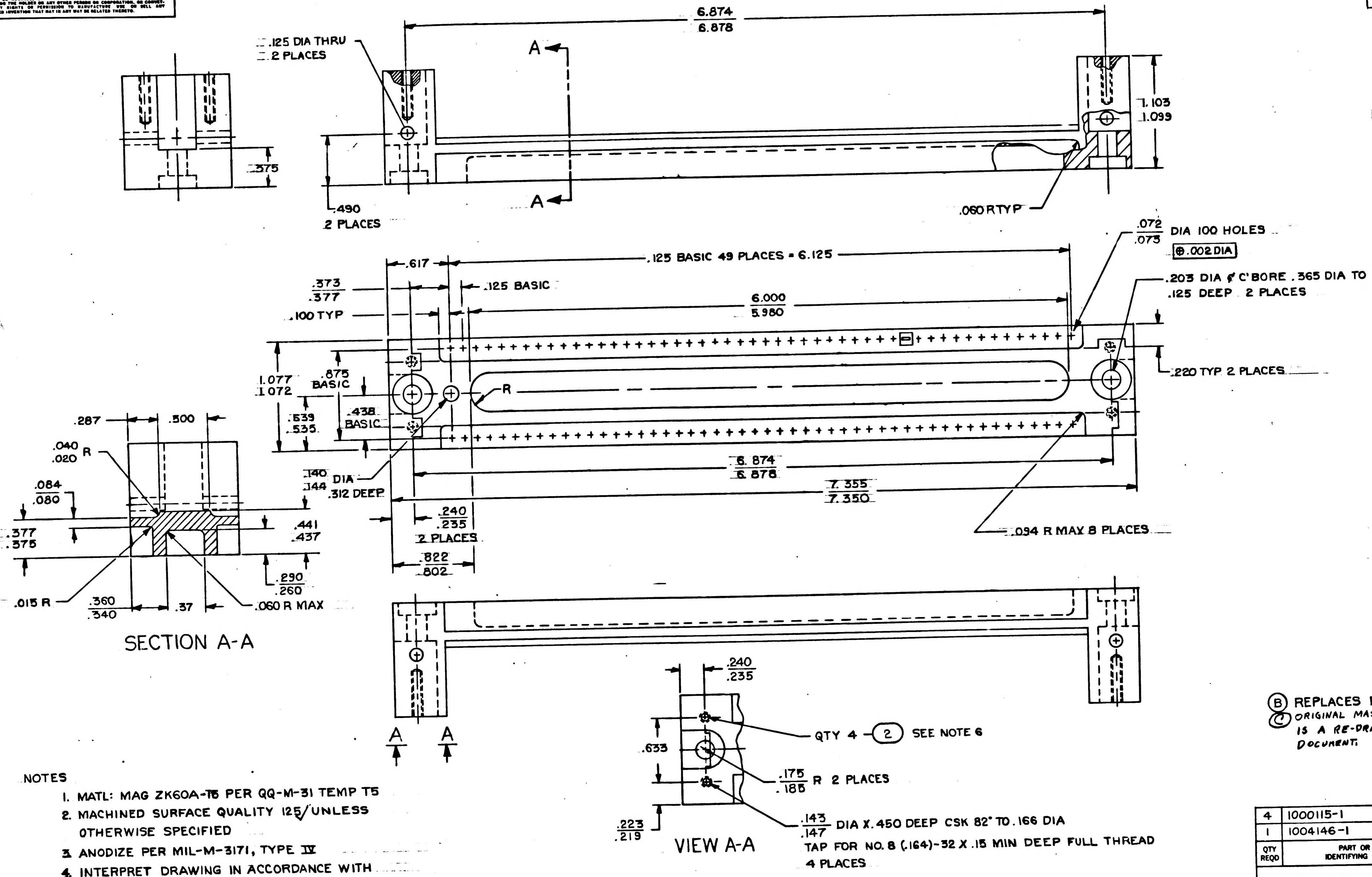

6.874
6.878
.125 DIA THRU
2 PLACES
A
A
.375
.490
2 PLACES
1.103
1.099
.060 R TYP
.617
.125 BASIC 49 PLACES = 6.125
.072
.073
DIA 100 HOLES
⊕ .002 DIA
.373
.377
.125 BASIC
6.000
5.980
.100 TYP
.203 DIA & C'BORE .365 DIA TO
.125 DEEP 2 PLACES
1.077
1.072
.875
BASIC
R
.220 TYP 2 PLACES
.539
.535
.438
BASIC
.287
.500
.040
.020
R
.140
.144
DIA
.312 DEEP
6.874
6.878
7.355
7.350
.084
.080
.377
.375
.441
.437
.240
.235
2 PLACES
.034 R MAX 8 PLACES
.822
.802
.290
.260
.015 R
.360
.340
.37
.060 R MAX
SECTION A-A
.240
.235
.633
QTY 4
2
SEE NOTE 6
.175
.185
R 2 PLACES
.223
.219
VIEW A-A
.143
.147
DIA X .450 DEEP CSK 82° TO .166 DIA
TAP FOR NO. 8 (.164)-32 X .15 MIN DEEP FULL THREAD
4 PLACES
A
A

Ⓑ REPLACES REV A WITH CHANGE.
Ⓒ ORIGINAL MASTER WAS LOST. THIS IS A RE-DRAW TO REPLACE THE LOST DOCUMENT.

NOTES
1. MATL: MAG ZK60A-T5 PER QQ-M-31 TEMP T5
2. MACHINED SURFACE QUALITY 125/ UNLESS OTHERWISE SPECIFIED
3. ANODIZE PER MIL-M-3171, TYPE IV
4. INTERPRET DRAWING IN ACCORDANCE WITH STANDARDS PRESCRIBED BY MIL-D-70327
5. BREAK SHARP EDGES
6. INSTALL FIND NO. 2 PER ND 1002121

QTY REQD	PART OR IDENTIFYING NO.	NOMENCLATURE OR DESCRIPTION	FIND NO.
4	1000115-1	INSERT, THREADED SELF LOCKING	2
1	1004146-1	HEADER AGC KEYBOARD	1

LIST OF MATERIALS

MASTER

NEXT ASSY	USED ON
1003536	

APPLICATION

UNLESS OTHERWISE SPECIFIED
DIMENSIONS ARE IN INCHES
TOLERANCES ON
FRACTIONS ± DECIMALS ±.005 ANGLES ±
DO NOT SCALE THIS DRAWING

MATERIAL: SEE NOTE 1
HEAT TREATMENT: NONE
FINAL FINISH: SEE NOTE 4

MIT
INSTRUMENTATION LAB
CAMBRIDGE, MASS.
DWG. NO.
CONTRACT

DRAWN DATE 4 Nov 63
CHECKED 4 Nov 63
APPROVAL 5 NOV 63
APPROVAL
NASA APPROVAL
MIT APPROVAL 5 Nov 63

MANNED SPACECRAFT CENTER
HOUSTON, TEXAS

HEADER
DECODING MODULE
AGC KEYBOARD

CODE IDENT NO. —
SIZE D
NASA DRAWING NO. 1004146
SCALE 2/1
WT
SHEET 1 OF 1

INCHES
0 1 2
PHOTOGRAPHIC SCALE ONLY

NOTICE — WHEN GOVERNMENT DRAWINGS, SPECIFICATIONS, OR OTHER DATA ARE USED FOR ANY PURPOSE OTHER THAN IN CONNECTION WITH A DEFINITELY RELATED GOVERNMENT PROCUREMENT OPERATION, THE UNITED STATES GOVERNMENT THEREBY INCURS NO RESPONSIBILITY NOR ANY OBLIGATION WHATSOEVER; AND THE FACT THAT THE GOVERNMENT MAY HAVE FORMULATED, FURNISHED, OR IN ANY WAY SUPPLIED THE SAID DRAWINGS, SPECIFICATIONS OR OTHER DATA IS NOT TO BE REGARDED BY IMPLICATION OR OTHERWISE AS IN ANY MANNER LICENSING THE HOLDER OR ANY OTHER PERSON OR CORPORATION, OR CONVEYING ANY RIGHTS OR PERMISSION TO MANUFACTURE, USE, OR SELL ANY PATENTED INVENTION THAT MAY IN ANY WAY BE RELATED THERETO.

REVISIONS

SYM	DESCRIPTION	DATE	APPROVAL
B	REDRAWN PER TDRR 03462 AND UPGRADED TO CLASS A	—	BM
C	REVISED, REDRAWN & REISSUED PER TDRR 04495	11-5-63	
D	REVISED PER TDRR 05181	17 DEC 63	23 DEC WR

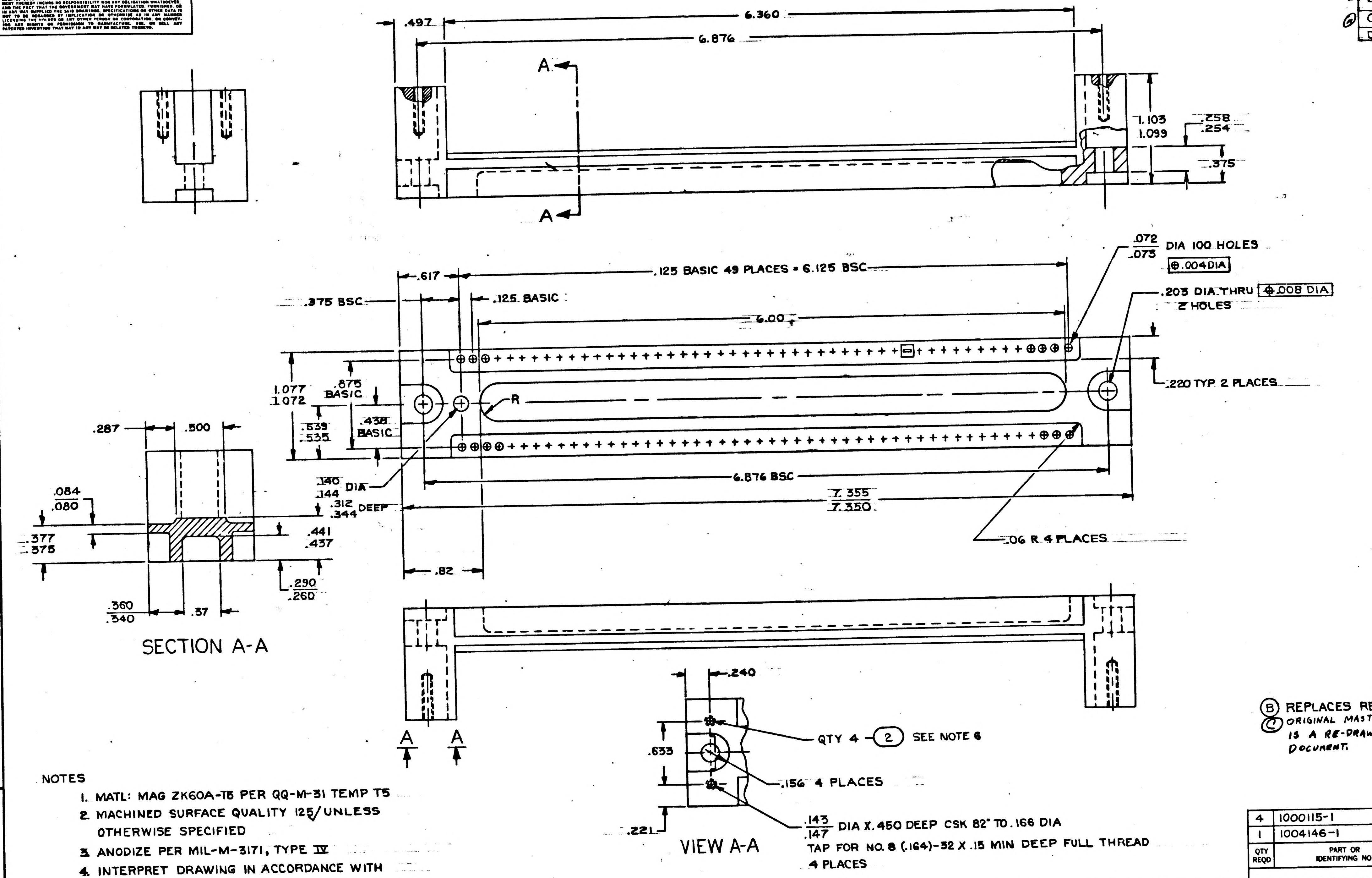

.497
6.360
6.876
A
A
1.103
1.099
.258
.254
.375
.072
.075
DIA 100 HOLES
⊕ .004 DIA
.617
.125 BASIC 49 PLACES = 6.125 BSC
.375 BSC
.125 BASIC
6.00
.203 DIA THRU ⊕ .008 DIA
2 HOLES
.220 TYP 2 PLACES
1.077
1.072
.875
BASIC
R
.539
.535
.438
BASIC
.140
.144
DIA
.312
.344
DEEP
6.876 BSC
7.355
7.350
.06 R 4 PLACES
.82
.287
.500
.084
.080
.377
.375
.441
.437
.290
.260
.360
.340
.37
SECTION A-A
A
A
.240
.633
QTY 4 ② SEE NOTE 6
.156 4 PLACES
.221
.143
.147
DIA X .450 DEEP CSK 82° TO .166 DIA
TAP FOR NO. 8 (.164)-32 X .15 MIN DEEP FULL THREAD
4 PLACES
VIEW A-A

Ⓑ REPLACES REV A WITH CHANGE.
Ⓒ ORIGINAL MASTER WAS LOST. THIS IS A RE-DRAW TO REPLACE THE LOST DOCUMENT.

NOTES
1. MATL: MAG ZK60A-T5 PER QQ-M-31 TEMP T5
2. MACHINED SURFACE QUALITY 125/UNLESS OTHERWISE SPECIFIED
3. ANODIZE PER MIL-M-3171, TYPE IV
4. INTERPRET DRAWING IN ACCORDANCE WITH STANDARDS PRESCRIBED BY MIL-D-70327
5. BREAK SHARP EDGES
6. INSTALL FIND NO. 2 PER ND1002121
~~7. UNLESS OTHERWISE SPECIFIED ALL FILLETS AND RADII TO BE .005/.015~~

MASTER

QTY REQD	PART OR IDENTIFYING NO.	NOMENCLATURE OR DESCRIPTION	FIND NO.
4	1000115-1	INSERT, THREADED SELF LOCKING	2
1	1004146-1	HEADER AGC KEYBOARD	1

LIST OF MATERIALS

NEXT ASSY	USED ON
1003536	

APPLICATION

UNLESS OTHERWISE SPECIFIED DIMENSIONS ARE IN INCHES
TOLERANCES ON FRACTIONS ± DECIMALS XXX ±.005 XX .02 ANGLES ±
DO NOT SCALE THIS DRAWING
MATERIAL SEE NOTE 1
HEAT TREATMENT NONE
FINAL FINISH SEE NOTE 4

MIT INSTRUMENTATION LAB
CAMBRIDGE, MASS.
DWG. NO. CONTRACT
DRAWN [illegible] DATE 4 Nov 63
CHECKED [illegible] 4 Nov 63
APPROVAL [illegible] 5 NOV 63
APPROVAL [illegible]
NASA APPROVAL [illegible]
MIT APPROVAL [illegible] 5 Nov 63

MANNED SPACECRAFT CENTER
HOUSTON, TEXAS

HEADER
DECODING MODULE
AGC DSKY NAV & MAIN

CODE IDENT NO. —
SIZE D
NASA DRAWING NO. 1004146
SCALE 2/1
WT
SHEET 1 OF 1

1004146 D

INCHES 0 1 2
PHOTOGRAPHIC SCALE ONLY

NOTICE — WHEN GOVERNMENT DRAWINGS, SPECIFICATIONS, OR OTHER DATA ARE USED FOR ANY PURPOSE OTHER THAN IN CONNECTION WITH A DEFINITELY RELATED GOVERNMENT PROCUREMENT OPERATION, THE UNITED STATES GOVERNMENT THEREBY INCURS NO RESPONSIBILITY NOR ANY OBLIGATION WHATSOEVER, AND THE FACT THAT THE GOVERNMENT MAY HAVE FORMULATED, FURNISHED, OR IN ANY WAY SUPPLIED THE SAID DRAWINGS, SPECIFICATIONS, OR OTHER DATA IS NOT TO BE REGARDED BY IMPLICATION OR OTHERWISE AS IN ANY MANNER LICENSING THE HOLDER OR ANY OTHER PERSON OR CORPORATION, OR CONVEYING ANY RIGHTS OR PERMISSION TO MANUFACTURE, USE, OR SELL ANY PATENTED INVENTION THAT MAY IN ANY WAY BE RELATED THERETO.

REVISIONS

SYM	DESCRIPTION	DATE	APPROVAL
B	REDRAWN PER TDRR 03462 AND UPGRADED TO CLASS A		
Ⓐ C	REVISED, REDRAWN & REISSUED PER TDRR 04495	11-5-63	
Ⓜ D	REVISED PER TDRR 05181	17 Dec 63	WR
E	REVISED PER TDRR 07500 DR CHK	4/7/64	HC

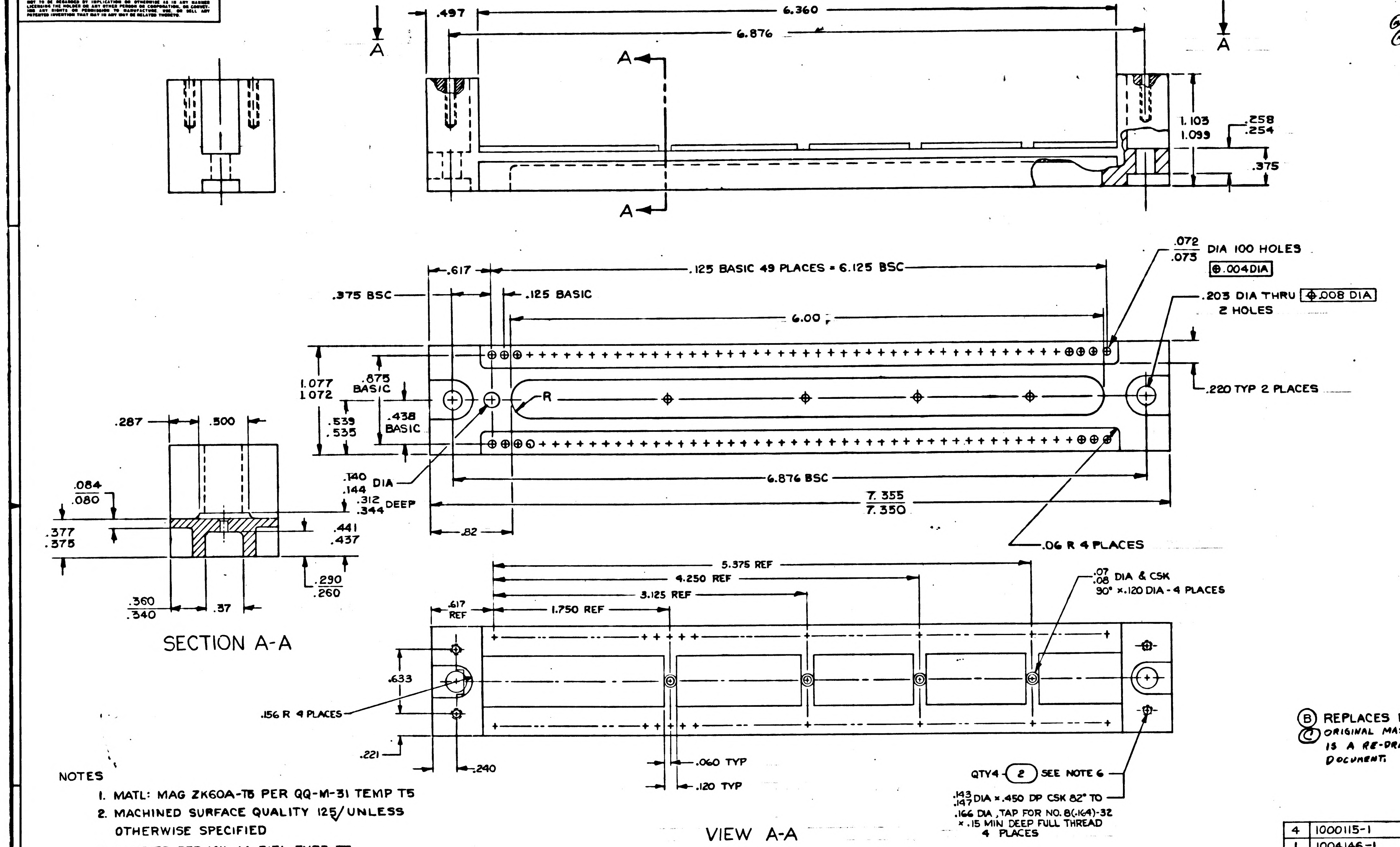

A
A
.497
6.360
6.876
A
A
1.103
1.099
.258
.254
.375
.072
.075
DIA 100 HOLES
⊕ .004 DIA
.617
.125 BASIC 49 PLACES = 6.125 BSC
.375 BSC
.125 BASIC
6.00
.203 DIA THRU ⊕ .008 DIA
2 HOLES
1.077
1.072
.875 BASIC
R
.220 TYP 2 PLACES
.539
.535
.438 BASIC
.287
.500
.140
.144 DIA
.312
.344 DEEP
6.876 BSC
7.355
7.350
.084
.080
.377
.375
.441
.437
.82
.06 R 4 PLACES
.290
.260
.360
.340
.37
SECTION A-A
5.375 REF
4.250 REF
3.125 REF
1.750 REF
.617 REF
.07
.08 DIA & CSK
90° × .120 DIA - 4 PLACES
.633
.156 R 4 PLACES
.221
.240
.060 TYP
.120 TYP
QTY4 (2) SEE NOTE 6
.143
.147 DIA × .450 DP CSK 82° TO
.166 DIA, TAP FOR NO. 8(.164)-32
× .15 MIN DEEP FULL THREAD
4 PLACES
VIEW A-A

Ⓑ REPLACES REV A WITH CHANGE.

Ⓒ ORIGINAL MASTER WAS LOST. THIS IS A RE-DRAW TO REPLACE THE LOST DOCUMENT.

NOTES

1. MATL: MAG ZK60A-T5 PER QQ-M-31 TEMP T5
2. MACHINED SURFACE QUALITY 125/ UNLESS OTHERWISE SPECIFIED
3. ANODIZE PER MIL-M-3171, TYPE IV
4. INTERPRET DRAWING IN ACCORDANCE WITH STANDARDS PRESCRIBED BY MIL- D-70327
5. BREAK SHARP EDGES
6. INSTALL FIND NO. 2 PER ND1002121
7. UNLESS OTHERWISE SPECIFIED ALL FILLETS AND RADII ~~TO BE~~ .005/015

QTY REQD	PART OR IDENTIFYING NO.	NOMENCLATURE OR DESCRIPTION	FIND NO.
4	1000115-1	INSERT, THREADED SELF LOCKING	2
1	1004146-1	HEADER AGC KEYBOARD	1

LIST OF MATERIALS

NEXT ASSY	USED ON
1003536	

APPLICATION

UNLESS OTHERWISE SPECIFIED DIMENSIONS ARE IN INCHES
TOLERANCES ON
FRACTIONS ± DECIMALS XXX ±.005 XX .02 ANGLES ±
DO NOT SCALE THIS DRAWING
MATERIAL SEE NOTE 1
HEAT TREATMENT NONE
FINAL FINISH SEE NOTE 4

MIT
INSTRUMENTATION LAB
CAMBRIDGE, MASS
DWG. NO. CONTRACT
DRAWN DATE 4 Nov 63
CHECKED 4 Nov 63
APPROVAL 5 Nov 63
APPROVAL
NASA APPROVAL
MIT APPROVAL 5 Nov 63

MANNED SPACECRAFT CENTER
HOUSTON, TEXAS

HEADER
DECODING MODULE
AGC DSKY NAV & MAIN

CODE IDENT NO. —
SIZE D
NASA DRAWING NO. 1004146
SCALE 2/1
WT
SHEET 1 OF 1

NOTICE — WHEN GOVERNMENT DRAWINGS, SPECIFICATIONS, OR OTHER DATA ARE USED FOR ANY PURPOSE OTHER THAN IN CONNECTION WITH A DEFINITELY RELATED GOVERNMENT PROCUREMENT OPERATION, THE UNITED STATES GOVERNMENT THEREBY INCURS NO RESPONSIBILITY NOR ANY OBLIGATION WHATSOEVER; AND THE FACT THAT THE GOVERNMENT MAY HAVE FORMULATED, FURNISHED, OR IN ANY WAY SUPPLIED THE SAID DRAWINGS, SPECIFICATIONS OR OTHER DATA IS NOT TO BE REGARDED BY IMPLICATION OR OTHERWISE AS IN ANY MANNER LICENSING THE HOLDER OR ANY OTHER PERSON OR CORPORATION, OR CONVEYING ANY RIGHTS OR PERMISSION TO MANUFACTURE, USE, OR SELL ANY PATENTED INVENTION THAT MAY IN ANY WAY BE RELATED THERETO.

REVISIONS

SYM	DESCRIPTION	DATE	APPROVAL
B	REDRAWN PER TDRR 03462 AND UPGRADED TO CLASS A	—	
C	REVISED, REDRAWN & REISSUED PER TDRR 04495	11-5-63	
D	REVISED PER TDRR 05181	17 Dec 63	WR
E	REVISED PER TDRR 07500 DR CHK	4/7/64	
F	REVISED PER TDRR 09796 DR CHK G.E.B.	5/28/64	

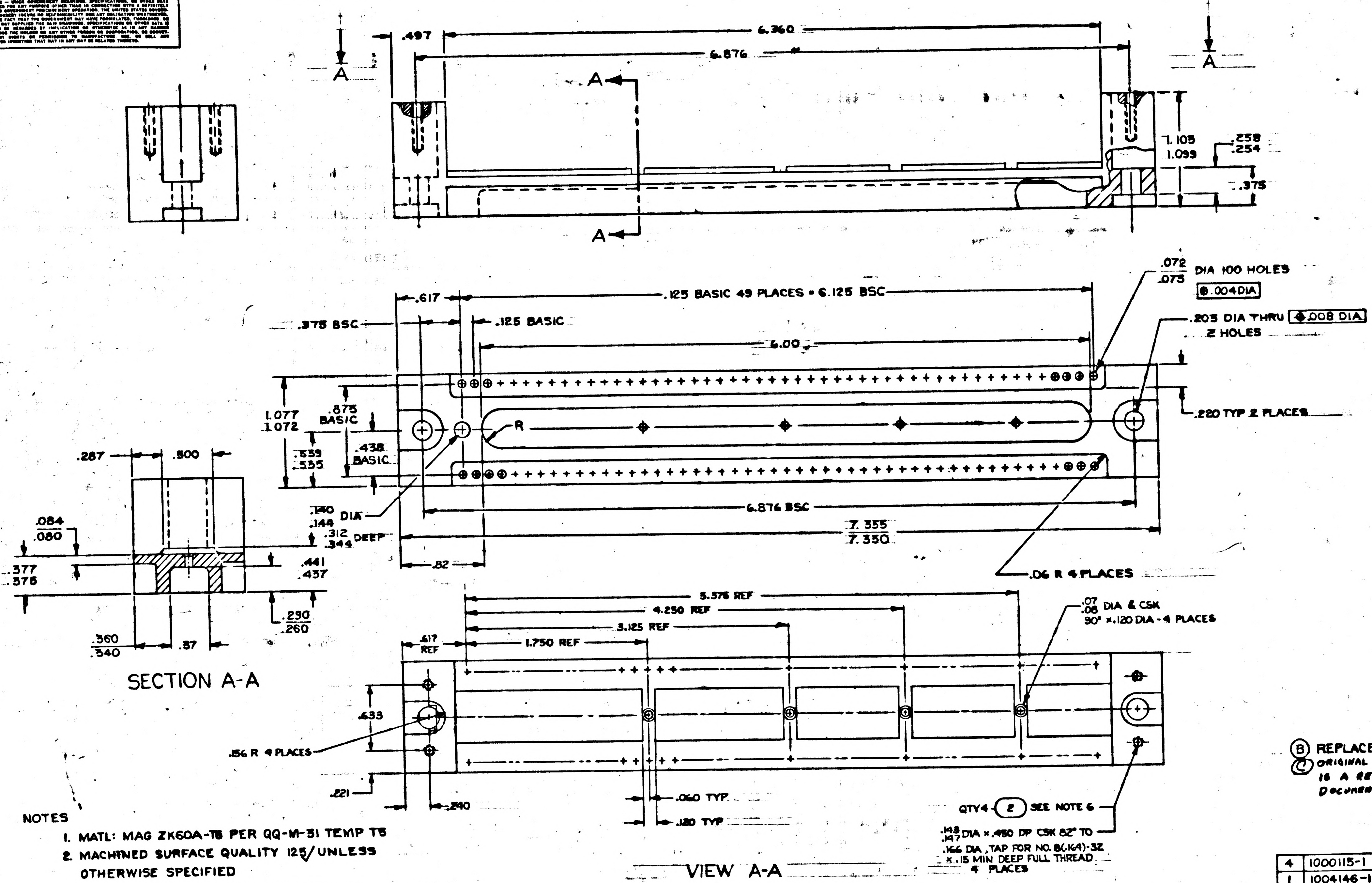

A
A
.497
6.360
6.876
1.103
1.093
.258
.254
.375
.072
.073
DIA 100 HOLES
⊕ .004 DIA
.617
.125 BASIC 49 PLACES = 6.125 BSC
.375 BSC
.125 BASIC
.203 DIA THRU ⊕ .008 DIA
2 HOLES
6.00
1.077
1.072
.875 BASIC
.539
.535
.438 BASIC
R
.220 TYP 2 PLACES
.287
.500
.140
.144
DIA
.312
.344
DEEP
6.876 BSC
7.355
7.350
.084
.080
.441
.437
.377
.375
.82
.06 R 4 PLACES
.290
.260
.360
.340
.87
SECTION A-A
5.375 REF
4.250 REF
3.125 REF
1.750 REF
.617 REF
.07
.08
DIA & CSK
90° × .120 DIA - 4 PLACES
.633
.156 R 4 PLACES
.221
.240
.060 TYP
.120 TYP
VIEW A-A
QTY 4 ② SEE NOTE 6
.143
.147
DIA × .450 DP CSK 82° TO
.166 DIA, TAP FOR NO. 8(.164)-32
× .15 MIN DEEP FULL THREAD
4 PLACES

Ⓑ REPLACES REV A WITH CHANGE.
Ⓒ ORIGINAL MASTER WAS LOST. THIS IS A RE-DRAW TO REPLACE THE LOST DOCUMENT.

NOTES

1. MATL: MAG ZK60A-T5 PER QQ-M-31 TEMP T5
2. MACHINED SURFACE QUALITY 125/ UNLESS OTHERWISE SPECIFIED
3. ~~ANODIZE PER MIL-M-3171, TYPE III~~
4. INTERPRET DRAWING IN ACCORDANCE WITH STANDARDS PRESCRIBED BY MIL-D-70327
5. BREAK SHARP EDGES
6. INSTALL FIND NO. 2 PER ND 1002121
7. UNLESS OTHERWISE SPECIFIED ALL FILLETS AND RADII [illegible] .005/.015
8. FINISH: ANODIZE PER MIL-M-45202A, TYPE I, CLASS C, PREPICKLE PER PAR. 3.32 OF MIL-M-3171A (PLUG THREADED INSERT HOLES)

MASTER

QTY REQD	PART OR IDENTIFYING NO.	NOMENCLATURE OR DESCRIPTION	FIND NO.
4	1000115-1	INSERT, THREADED SELF LOCKING	2
1	1004146-1	HEADER AGC KEYBOARD	1

LIST OF MATERIALS

NEXT ASSY	USED ON
1003536	

APPLICATION

UNLESS OTHERWISE SPECIFIED
DIMENSIONS ARE IN INCHES
TOLERANCES ON
FRACTIONS ± DECIMALS XXX ±.005 XX .02 ANGLES ±
DO NOT SCALE THIS DRAWING

MATERIAL SEE NOTE 1
HEAT TREATMENT NONE
FINAL FINISH SEE NOTE 8

MIT INSTRUMENTATION LAB
CAMBRIDGE, MASS.
DWG. NO. CONTRACT
DRAWN DATE
CHECKED
APPROVAL 5 Nov 63
APPROVAL
NASA APPROVAL
MIT APPROVAL 5 Nov 63

MANNED SPACECRAFT CENTER
HOUSTON, TEXAS

HEADER
DECODING MODULE
AGC DSKY NAV & MAIN

CODE IDENT NO. —
SIZE D
NASA DRAWING NO. 1004146
SCALE 2/1
WT
SHEET 1 OF 1

REVISIONS			
SYM	DESCRIPTION	DATE	APPROVAL
B	REDRAWN PER TDRR 03462 AND UPGRADED TO CLASS A	—	
C	REVISED, REDRAWN & RE-ISSUED PER TDRR 04495	11-5-63	
D	REVISED PER TDRR 05181	7 Dec 63	WR
E	REVISED PER TDRR 07500 DR CHK	4/7/64	HWC
F	REVISED PER TDRR 09796 DR CHK G.Z.B	5/28/64	HWC
G	REVISED PER TDRR 10383 DR CHK A.R.D.	6/22/64	HWC

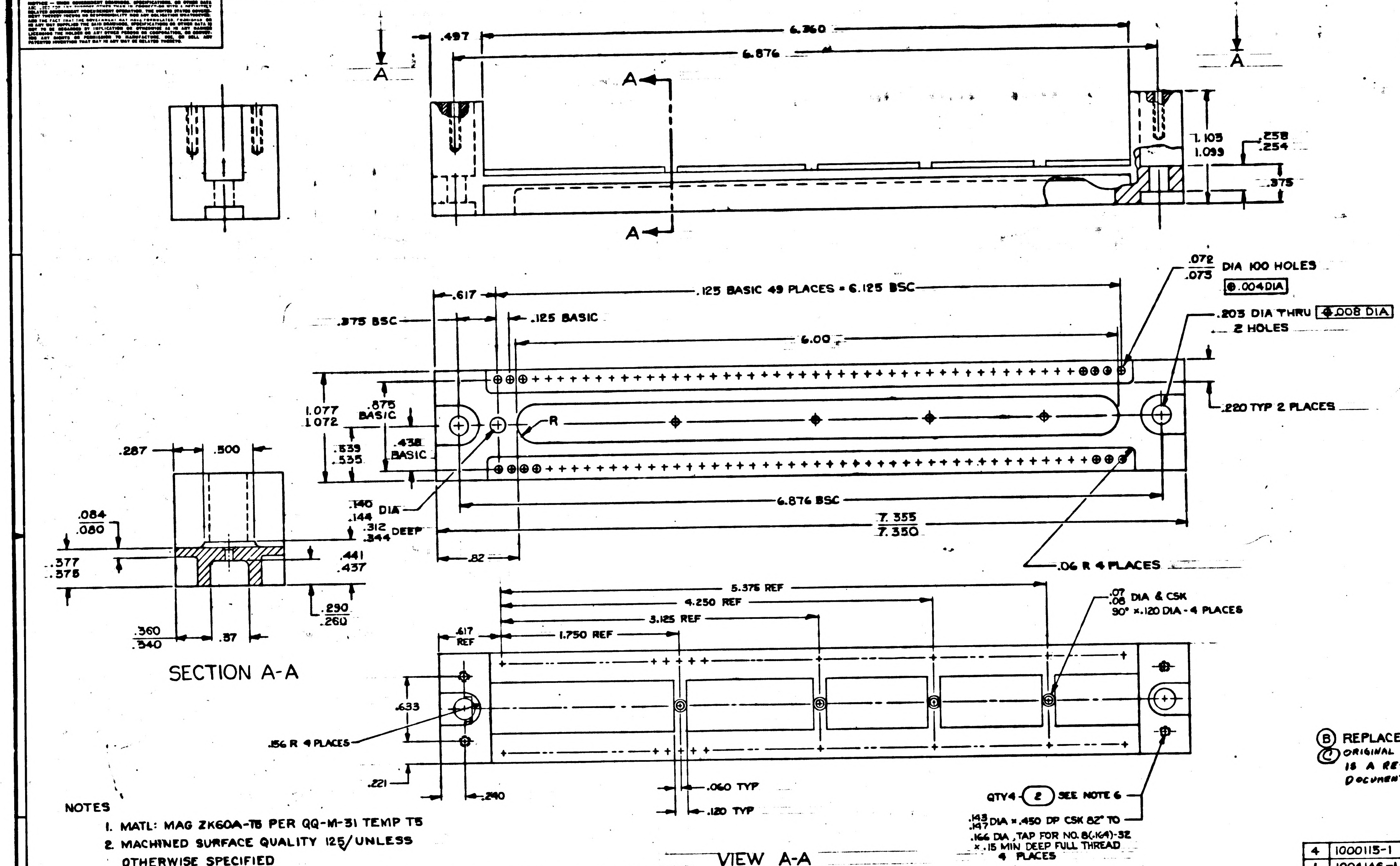

A
A
.497
6.360
6.876
1.105
1.099
.258
.254
.375
.072
.073
DIA 100 HOLES
⊕ .004 DIA
.617
.125 BASIC 49 PLACES = 6.125 BSC
.375 BSC
.125 BASIC
.203 DIA THRU ⊕ .008 DIA
2 HOLES
6.00
.220 TYP 2 PLACES
1.077
1.072
.875 BASIC
.539
.535
.438 BASIC
R
.140
.144 DIA
.312
.344 DEEP
6.876 BSC
7.355
7.350
.82
.06 R 4 PLACES
.287
.500
.084
.080
.377
.375
.441
.437
.290
.260
.360
.340
.37
SECTION A-A
5.376 REF
4.250 REF
3.125 REF
1.750 REF
.417 REF
.07
.08 DIA & CSK
90° × .120 DIA - 4 PLACES
.633
.156 R 4 PLACES
.221
.240
.060 TYP
.120 TYP
VIEW A-A
QTY4 ② SEE NOTE 6
.143
.147 DIA × .450 DP CSK 82° TO
.166 DIA, TAP FOR NO. 8(.164)-32
× .15 MIN DEEP FULL THREAD
4 PLACES

Ⓑ REPLACES REV A WITH CHANGE.

Ⓒ ORIGINAL MASTER WAS LOST. THIS IS A RE-DRAW TO REPLACE THE LOST DOCUMENT.

NOTES

1. MATL: MAG ZK60A-T5 PER QQ-M-31 TEMP T5
2. MACHINED SURFACE QUALITY 125/ UNLESS OTHERWISE SPECIFIED
3. ANODIZE PER MIL-M-3171, TYPE IV AND PROCESS ENTIRE SURFACE PER ND1002040
4. INTERPRET DRAWING IN ACCORDANCE WITH STANDARDS PRESCRIBED BY MIL-D-70327
5. BREAK SHARP EDGES
6. INSTALL FIND NO. 2 PER ND1002121
7. UNLESS OTHERWISE SPECIFIED ALL FILLETS AND RADII ~~[illegible]~~ .005/.015
8. ~~FINISH ANODIZE PER MIL-M-45202A, TYPE I, CLASS C, PREPICKLE PER PAR. 3.3.2 OF MIL-M-3171A (PLUG THREADED INSERT HOLES)~~
9. IDENTIFY PER ND1002019

QTY REQD	PART OR IDENTIFYING NO.	NOMENCLATURE OR DESCRIPTION	FIND NO.
4	1000115-1	INSERT, THREADED SELF LOCKING	2
1	1004146-1	HEADER AGC KEYBOARD	1

LIST OF MATERIALS

NEXT ASSY	USED ON
1003536	

APPLICATION

UNLESS OTHERWISE SPECIFIED DIMENSIONS ARE IN INCHES
TOLERANCES ON
FRACTIONS ± DECIMALS XXX ±.005 XX .02 ANGLES ±
DO NOT SCALE THIS DRAWING

MATERIAL SEE NOTE 1
HEAT TREATMENT NONE
FINAL FINISH SEE NOTE 3

MIT INSTRUMENTATION LAB
CAMBRIDGE, MASS.
DWG. NO. CONTRACT
DRAWN DATE
CHECKED
APPROVAL 5 NOV 63
APPROVAL
NASA APPROVAL
MIT APPROVAL 5 Nov 63

MANNED SPACECRAFT CENTER
HOUSTON, TEXAS

HEADER
DECODING MODULE
AGC DSKY NAV & MAIN

CODE IDENT NO. —
SIZE D
NASA DRAWING NO. 1004146
SCALE 2/1
WT
SHEET 1 OF 1

NOTICE — WHEN GOVERNMENT DRAWINGS, SPECIFICATIONS, OR OTHER DATA ARE USED FOR ANY PURPOSE OTHER THAN IN CONNECTION WITH A DEFINITELY RELATED GOVERNMENT PROCUREMENT OPERATION, THE UNITED STATES GOVERNMENT THEREBY INCURS NO RESPONSIBILITY NOR ANY OBLIGATION WHATSOEVER; AND THE FACT THAT THE GOVERNMENT MAY HAVE FORMULATED, FURNISHED, OR IN ANY WAY SUPPLIED THE SAID DRAWINGS, SPECIFICATIONS, OR OTHER DATA IS NOT TO BE REGARDED BY IMPLICATION OR OTHERWISE AS IN ANY MANNER LICENSING THE HOLDER OR ANY OTHER PERSON OR CORPORATION, OR CONVEYING ANY RIGHTS OR PERMISSION TO MANUFACTURE, USE, OR SELL ANY PATENTED INVENTION THAT MAY IN ANY WAY BE RELATED THERETO.

REVISIONS			
SYM	DESCRIPTION	DATE	APPROVAL
B	REDRAWN PER TDRR 03462 AND UPGRADED TO CLASS A	---	
C	REVISED, REDRAWN & REISSUED PER TDRR 04495	11-5-63	
D	REVISED PER TDRR 05181		
E	REVISED PER TDRR 07500 DR CHK	4/7/64	HaC
F	REVISED PER TDRR 09796 DR CHK A.Z.B	5/28/64	HaC
G	REVISED PER TDRR 10383 DR Boudreau CHK A.R.B.	6/22/64	HaC
H	REVISED PER TDRR 10247 DR J.S. Leonard CHK	8/31/64	HaC

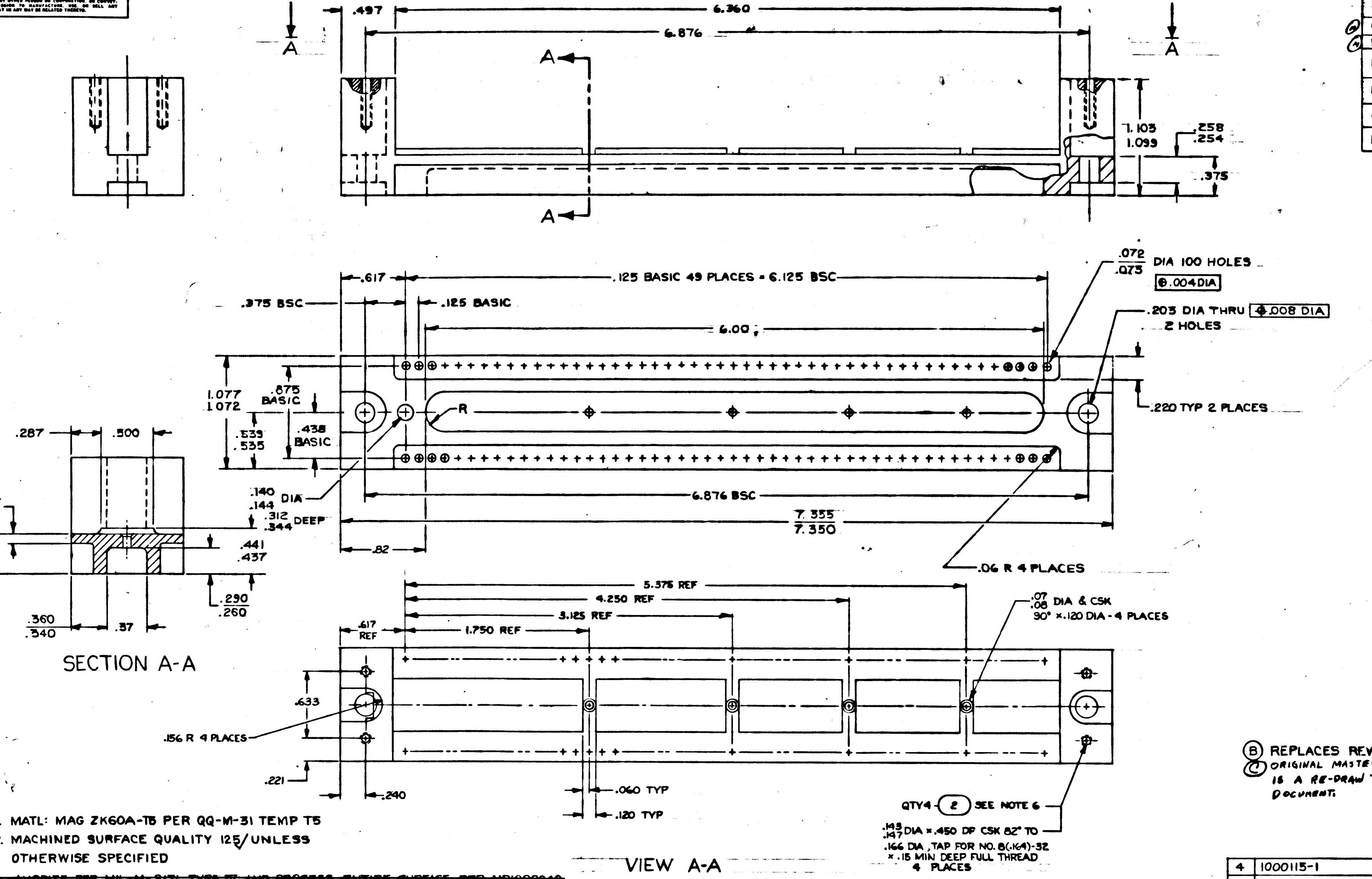

A
A
.497
6.360
6.876
1.103
1.093
.258
.254
.375
.617
.125 BASIC 49 PLACES = 6.125 BSC
.375 BSC
.125 BASIC
6.00
.072
.075
DIA 100 HOLES
⊕ .004 DIA
.205 DIA THRU ⊕ .008 DIA
2 HOLES
1.077
1.072
.875 BASIC
.539
.535
.438 BASIC
R
.220 TYP 2 PLACES
.140
.144
DIA
.312
.344
DEEP
6.876 BSC
7.355
7.350
.82
.06 R 4 PLACES
.287
.500
.084
.080
.377
.375
.441
.437
.290
.260
.360
.340
.37
SECTION A-A
5.375 REF
4.250 REF
3.125 REF
1.750 REF
.617 REF
.07
.08
DIA & CSK
90° × .120 DIA - 4 PLACES
.633
.156 R 4 PLACES
.221
.240
.060 TYP
.120 TYP
QTY4 ② SEE NOTE 6
.143
.147
DIA × .450 DP CSK 82° TO
.166 DIA, TAP FOR NO. 8(.164)-32
× .15 MIN DEEP FULL THREAD
4 PLACES
VIEW A-A

Ⓑ REPLACES REV A WITH CHANGE.

Ⓒ ORIGINAL MASTER WAS LOST. THIS IS A RE-DRAW TO REPLACE THE LOST DOCUMENT.

NOTES

1. MATL: MAG ZK60A-T5 PER QQ-M-31 TEMP T5
2. MACHINED SURFACE QUALITY 125/ UNLESS OTHERWISE SPECIFIED
3. ~~ANODIZE PER MIL-M-3171, TYPE III AND PROCESS ENTIRE SURFACE PER ND1002040~~
4. INTERPRET DRAWING IN ACCORDANCE WITH STANDARDS PRESCRIBED BY MIL-D-70327
5. BREAK SHARP EDGES
6. INSTALL FIND NO. 2 PER ND1002121
7. UNLESS OTHERWISE SPECIFIED ALL FILLETS AND RADII TO BE .005/.015
8. FINISH: ANODIZE PER MIL-M-45202, TYPE I, CLASS C
9. IDENTIFY PER ND1002019

QTY REQD	PART OR IDENTIFYING NO.	NOMENCLATURE OR DESCRIPTION	FIND NO.
4	1000115-1	INSERT, THREADED SELF LOCKING	2
1	1004146-1	HEADER AGC KEYBOARD	1

LIST OF MATERIALS

NEXT ASSY	USED ON
1003536	

APPLICATION

UNLESS OTHERWISE SPECIFIED
DIMENSIONS ARE IN INCHES
TOLERANCES ON
FRACTIONS ± DECIMALS XXX ±.005 XX .02 ANGLES ±
DO NOT SCALE THIS DRAWING

MATERIAL SEE NOTE 1

HEAT TREATMENT NONE

FINAL FINISH SEE NOTE 3

MIT INSTRUMENTATION LAB

DRAWN DATE
CHECKED 4/4/63
APPROVAL 5 NOV 63
APPROVAL

NASA APPROVAL

MIT APPROVAL 5 Nov 63

MANNED SPACECRAFT CENTER
HOUSTON, TEXAS

HEADER
DECODING MODULE
AGC DSKY NAV & MAIN

CODE IDENT NO. —
SIZE D
NASA DRAWING NO. 1004146

SCALE 2/1 WT SHEET 1 OF 1

NOTICE — WHEN GOVERNMENT DRAWINGS, SPECIFICATIONS, OR OTHER DATA ARE USED FOR ANY PURPOSE OTHER THAN IN CONNECTION WITH A DEFINITELY RELATED GOVERNMENT PROCUREMENT OPERATION, THE UNITED STATES GOVERNMENT THEREBY INCURS NO RESPONSIBILITY NOR ANY OBLIGATION WHATSOEVER, AND THE FACT THAT THE GOVERNMENT MAY HAVE FORMULATED, FURNISHED, OR IN ANY WAY SUPPLIED THE SAID DRAWINGS, SPECIFICATIONS OR OTHER DATA IS NOT TO BE REGARDED BY IMPLICATION OR OTHERWISE AS IN ANY MANNER LICENSING THE HOLDER OR ANY OTHER PERSON OR CORPORATION, OR CONVEYING ANY RIGHTS OR PERMISSION TO MANUFACTURE, USE, OR SELL ANY PATENTED INVENTION THAT MAY IN ANY WAY BE RELATED THERETO.

SYM	REVISIONS DESCRIPTION	DATE	APPROVAL

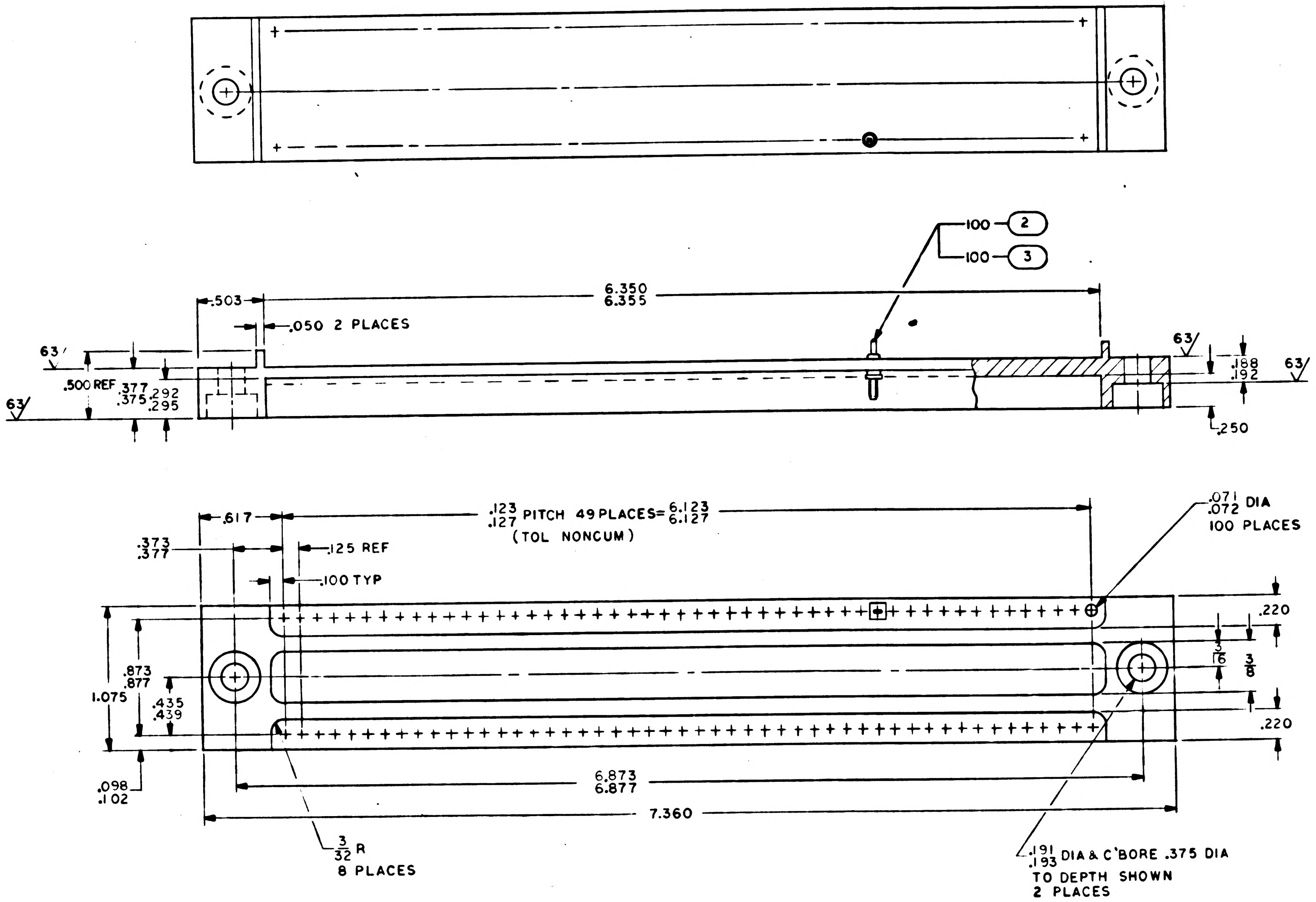

100 — ②
100 — ③
.503
6.350
6.355
.050 2 PLACES
63
.500 REF
.377
.375
.292
.295
63
.188
.192
63
.250
.617
.123
.127
PITCH 49 PLACES= 6.123
6.127
(TOL NONCUM)
.071
.072 DIA
100 PLACES
.373
.377
.125 REF
.100 TYP
.220
3/16
3/8
.220
.873
.877
.435
.439
1.075
.098
.102
6.873
6.877
7.360
3/32 R
8 PLACES
.191
.193 DIA & C'BORE .375 DIA
TO DEPTH SHOWN
2 PLACES

FOR INFORMATION ONLY

CLASS B RELEASE TDR No. 0298 DATE 5-22-63

NOTES
1. INTERPRET DRAWING IN ACCORDANCE WITH STANDARDS PRESCRIBED BY MIL-D-70327
2. MATERIAL: .500 THK 6061-T6 ALUMINUM PER QQ-A-327
3. UNLESS OTHERWISE SPECIFIED: 125∨ ALL OVER
4. REMOVE BURRS AND SHARP EDGES
5. ANODIZE PER MIL-A-8625 TYPE II DYED BLACK

QTY REQD	PART OR IDENTIFYING NO.	NOMENCLATURE OR DESCRIPTION	FIND NO.
100	1006782-1	CONTACT, MALCO	3
100	1006755	INSULATOR, MALCO	2
1	HEADER, AGC KEYBOARD	———	1

LIST OF MATERIALS

NEXT ASSY	USED ON
APPLICATION	

UNLESS OTHERWISE SPECIFIED
DIMENSIONS ARE IN INCHES
TOLERANCES ON
FRACTIONS ± 1/64 DECIMALS ±.005 ANGLES ±
DO NOT SCALE THIS DRAWING

MATERIAL SEE NOTE 2
HEAT TREATMENT
FINAL FINISH SEE NOTE 5

MIT
INSTRUMENTATION LAB
CAMBRIDGE, MASS
DWG. NO. CONTRACT

DRAWN [illegible] DATE 5-MAY-63
CHECKED [illegible] 5-14-63
APPROVAL W. Turner 22MAY63
APPROVAL
NASA APPROVAL [illegible] 5/22/63
MIT APPROVAL [illegible] 5/22/63

MANNED SPACECRAFT CENTER
HOUSTON, TEXAS

HEADER
DECODING MODULE
AGC KEYBOARD

CODE IDENT NO. SIZE D NASA DRAWING NO. 1004146
SCALE 2/1 WT SHEET 1 OF 1

1004146

INCHES 0 1 2
PHOTOGRAPHIC SCALE ONLY

NOTICE — WHEN GOVERNMENT DRAWINGS SPECIFICATIONS OR OTHER DATA ARE USED FOR ANY PURPOSE OTHER THAN IN CONNECTION WITH A DEFINITELY RELATED GOVERNMENT PROCUREMENT OPERATION THE UNITED STATES GOVERNMENT THEREBY INCURS NO RESPONSIBILITY NOR ANY OBLIGATION WHATSOEVER AND THE FACT THAT THE GOVERNMENT MAY HAVE FORMULATED FURNISHED OR IN ANY WAY SUPPLIED THE SAID DRAWINGS, SPECIFICATIONS OR OTHER DATA IS NOT TO BE REGARDED BY IMPLICATION OR OTHERWISE AS IN ANY MANNER LICENSING THE HOLDER OR ANY OTHER PERSON OR CORPORATION, OR CONVEYING ANY RIGHTS OR PERMISSION TO MANUFACTURE, USE, OR SELL ANY PATENTED INVENTION THAT MAY IN ANY WAY BE RELATED THERETO.

REVISIONS 03453

SYM	DESCRIPTION	DATE	APPROVAL
A	REDRAWN WITH CHANGE PER TDRR 04771	1-13-63	

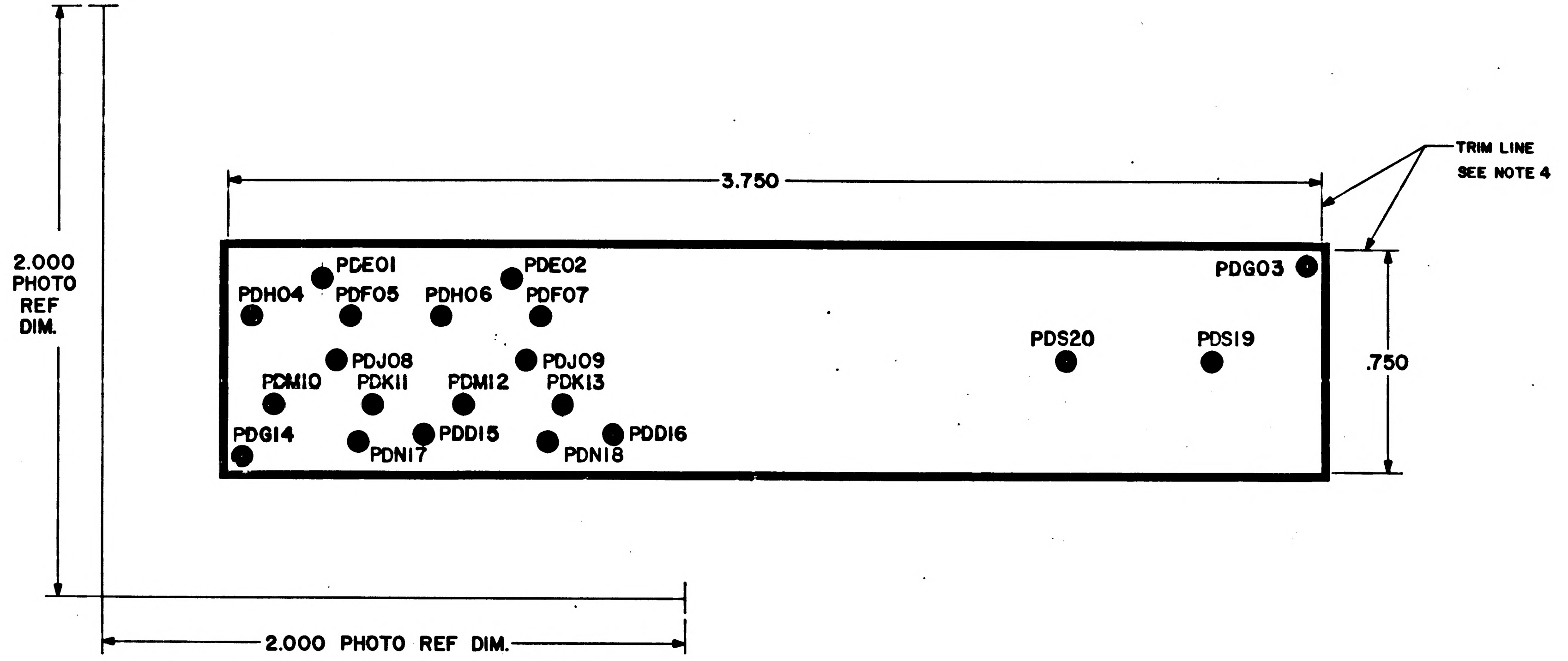

Ⓐ REPLACED WITH CHANGE BY REV B

INACTIVE

NOTES:
1. MATERIAL: .006/.008 THICK PLASTIC SHEET, SENSITIZED, DIMENSIONALLY STABLE PER L-F-340, TYPE IB, CLASS 2, STYLE IA
2. INTERPRET DRAWING IN ACCORDANCE WITH STANDARDS PRESCRIBED BY MIL-D-70327
3. ORIGINAL OF THIS DRAWING OR REPRODUCTION MADE BY A PROCESS OR METHOD SHALL INSURE DIMENSIONAL STABILITY. DIMENSIONAL VARIATIONS SHALL NOT EXCEED .001 INCH PER FOOT.
4. CUT TO WITHIN .010 OF TRIM LINE
5. MAKE PHOTOGRAPHIC MASTER NEGATIVE AND POSITIVE FILMS TO DIMENSIONS SHOWN
6. ● .078/.082 DIA PUNCH ALL HOLES

MASTER

QTY REQD	PART OR IDENTIFYING NO.	NOMENCLATURE OR DESCRIPTION	FIND NO.

LIST OF MATERIALS

NEXT ASSY	USED ON
1003524	

APPLICATION

UNLESS OTHERWISE SPECIFIED DIMENSIONS ARE IN INCHES
TOLERANCES ON
FRACTIONS ± DECIMALS ±.020 ANGLES ±
DO NOT SCALE THIS DRAWING
MATERIAL SEE NOTE 1
HEAT TREATMENT
FINAL FINISH

MIT INSTRUMENTATION LAB
CAMBRIDGE MASS
DWG NO CONTRACT
DRAWN R. Pozzy DATE 6 JUN 63
CHECKED L.D. Fryman 16 Aug 63
APPROVAL T.J. Lawton 1 Aug 63
APPROVAL E.C. Hall 21 Sept 63
NASA APPROVAL 9/4/63
MIT APPROVAL 9/26/63

MANNED SPACECRAFT CENTER
HOUSTON, TEXAS

PHOTOGRAPHIC MASTER
PROGRAM DISPLAY
AGC KEYBOARD

CODE IDENT NO —— SIZE E NASA DRAWING NO 1004147
SCALE 5/1 WT SHEET 1 OF 1

1004147

INCHES
PHOTOGRAPHIC SCALE ONLY

NOTICE — WHEN GOVERNMENT DRAWINGS, SPECIFICATIONS, OR OTHER DATA ARE USED FOR ANY PURPOSE OTHER THAN IN CONNECTION WITH A DEFINITELY RELATED GOVERNMENT PROCUREMENT OPERATION, THE UNITED STATES GOVERNMENT THEREBY INCURS NO RESPONSIBILITY NOR ANY OBLIGATION WHATSOEVER; AND THE FACT THAT THE GOVERNMENT MAY HAVE FORMULATED, FURNISHED, OR IN ANY WAY SUPPLIED THE SAID DRAWINGS, SPECIFICATIONS OR OTHER DATA IS NOT TO BE REGARDED BY IMPLICATION OR OTHERWISE AS IN ANY MANNER LICENSING THE HOLDER OR ANY OTHER PERSON OR CORPORATION, OR CONVEYING ANY RIGHTS OR PERMISSION TO MANUFACTURE, USE, OR SELL ANY PATENTED INVENTION THAT MAY IN ANY WAY BE RELATED THERETO

REVISIONS 03453			
SYM	DESCRIPTION	DATE	APPROVAL

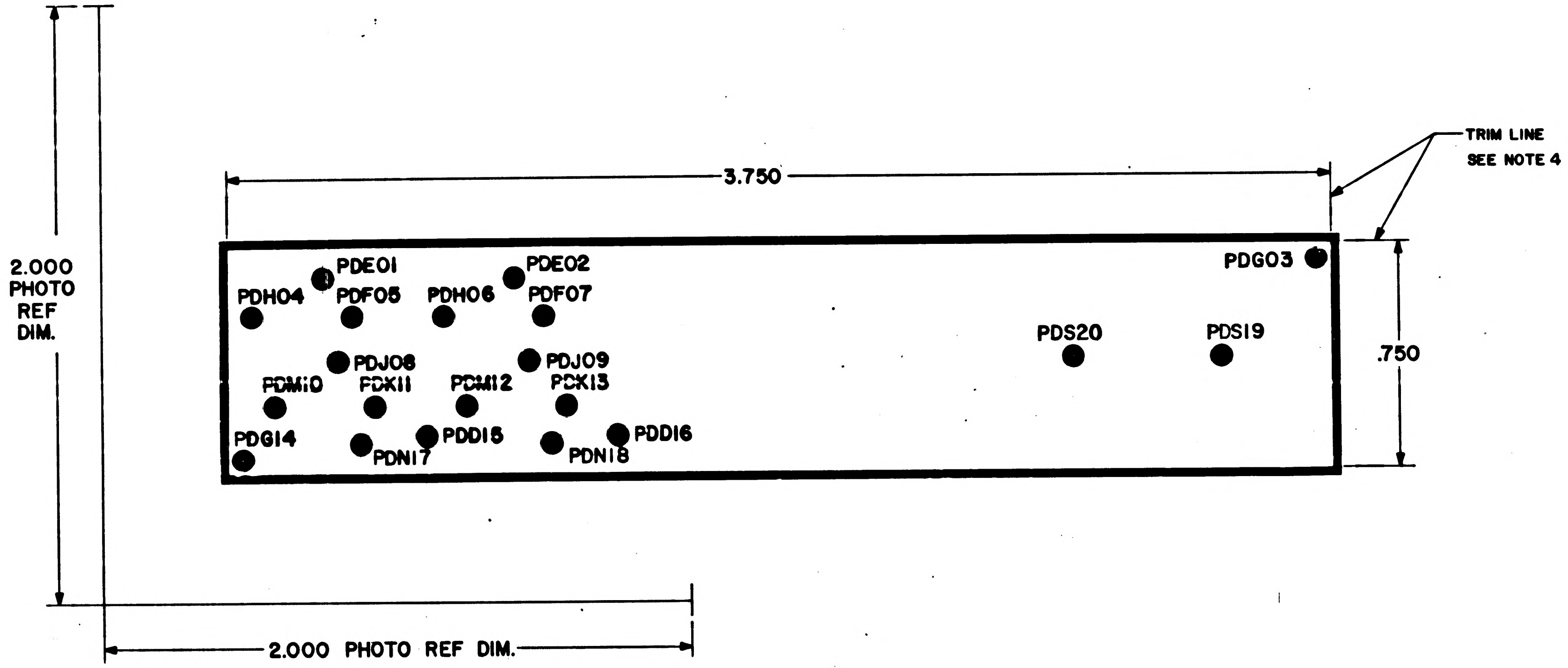

NOTES:

1. MATERIAL: .006/.008 THICK PLASTIC SHEET, SENSITIZED, DIMENSIONALLY STABLE PER L-F-340, TYPE IB, CLASS 2, STYLE IA
2. INTERPRET DRAWING IN ACCORDANCE WITH STANDARDS PRESCRIBED BY MIL-D-70327
3. ORIGINAL OF THIS DRAWING OR REPRODUCTION MADE BY A PROCESS OR METHOD SHALL INSURE DIMENSIONAL STABILITY. DIMENSIONAL VARIATIONS SHALL NOT EXCEED .001 INCH PER FOOT.
4. CUT TO WITHIN .010 OF TRIM LINE
5. MAKE PHOTOGRAPHIC MASTER NEGATIVE AND POSITIVE FILMS TO DIMENSIONS SHOWN
6. ● .078/.082 DIA PUNCH ALL HOLES

MASTER

QTY REQD	PART OR IDENTIFYING NO.	NOMENCLATURE OR DESCRIPTION	FIND NO
LIST OF MATERIALS			

NEXT ASSY	USED ON
1003524	
APPLICATION	

UNLESS OTHERWISE SPECIFIED
DIMENSIONS ARE IN INCHES
TOLERANCES ON
FRACTIONS ± DECIMALS ±.020 ANGLES ±
DO NOT SCALE THIS DRAWING
MATERIAL SEE NOTE 1
HEAT TREATMENT
FINAL FINISH

MIT
INSTRUMENTATION LAB
CAMBRIDGE MASS
DWG NO CONTRACT
DRAWN R. [illegible] DATE 6 JUN 63
CHECKED [illegible]
APPROVAL [illegible]
APPROVAL E C Hall 20 Sept 63
NASA APPROVAL [illegible] 9/24/63
MIT APPROVAL [illegible] Hazel 9/26/63

MANNED SPACECRAFT CENTER
HOUSTON, TEXAS

PHOTOGRAPHIC MASTER PROGRAM DISPLAY
AGC KEYBOARD

CODE IDENT NO. ——
SIZE E
NASA DRAWING NO. 1004147
SCALE 5/1
WT
SHEET 1 OF 1

1004147

INCHES
PHOTOGRAPHIC SCALE ONLY

REVISIONS 03453			
SYM	DESCRIPTION	DATE	APPROVAL
A	REPLACED WITH CHANGE PER TDRR 04771	11-4-63	

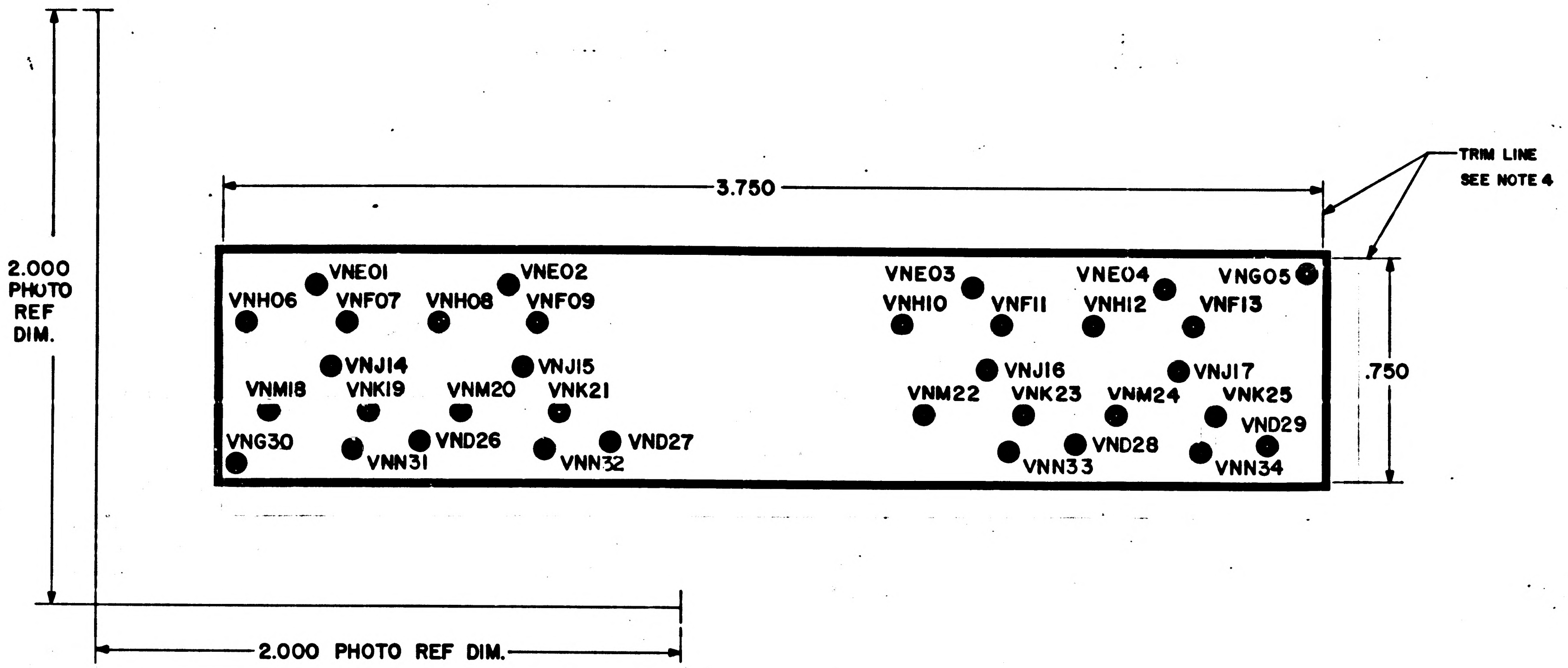

3.750
TRIM LINE
SEE NOTE 4
2.000 PHOTO REF DIM.
.750
2.000 PHOTO REF DIM.
VNE01
VNE02
VNE03
VNE04
VNG05
VNH06
VNF07
VNH08
VNF09
VNH10
VNF11
VNH12
VNF13
VNJ14
VNJ15
VNJ16
VNJ17
VNM18
VNK19
VNM20
VNK21
VNM22
VNK23
VNM24
VNK25
VND26
VND27
VND28
VND29
VNG30
VNN31
VNN32
VNN33
VNN34

NOTES:

1. MATERIAL : .006/.008 THICK PLASTIC SHEET, SENSITIZED, DIMENSIONALLY STABLE PER L-F-340, TYPE I B, CLASS 2, STYLE IA.
2. INTERPRET DRAWING IN ACCORDANCE WITH STANDARDS PRESCRIBED BY MIL-D-70327
3. ORIGINAL OF THIS DRAWING OR REPRODUCTION MADE BY A PROCESS OR METHOD SHALL INSURE DIMENSIONAL STABILITY. DIMENSIONAL VARIATIONS NOT TO EXCEED .001 INCH PER FOOT
4. CUT TO WITHIN .010 OF TRIM LINE
5. MAKE PHOTOGRAPHIC MASTER, NEGATIVE AND POSITIVE FILMS, TO DIMENSIONS SHOWN
6. ● .078/.082 DIA. PUNCH ALL HOLES

Ⓐ REPLACED WITH CHANGE BY REV B

INACTIVE

MASTER

QTY REQD	PART OR IDENTIFYING NO.	NOMENCLATURE OR DESCRIPTION	FIND NO.

LIST OF MATERIALS

NEXT ASSY	USED ON
1003824	

APPLICATION

UNLESS OTHERWISE SPECIFIED DIMENSIONS ARE IN INCHES
TOLERANCES ON
FRACTIONS ± DECIMALS ±.030 ANGLES ±
DO NOT SCALE THIS DRAWING
MATERIAL SEE NOTE 1
HEAT TREATMENT
FINAL FINISH

MIT
INSTRUMENTATION LAB
CAMBRIDGE MASS
DWG NO CONTRACT
DRAWN DATE
CHECKED 27 Aug 63
APPROVAL 14 Sept 63
APPROVAL E O Hall 20 Sept 63
NASA APPROVAL
MIT APPROVAL

MANNED SPACECRAFT CENTER
HOUSTON, TEXAS

PHOTOGRAPHIC MASTER
VERB-NOUN DISPLAY
AGC KEYBOARD

CODE IDENT NO. ——
SIZE E
NASA DRAWING NO. 1004148
SCALE 8/1
WT
SHEET 1 OF 1

1004148

INCHES
PHOTOGRAPHIC SCALE ONLY

NOTICE — WHEN GOVERNMENT DRAWINGS, SPECIFICATIONS, OR OTHER DATA ARE USED FOR ANY PURPOSE OTHER THAN IN CONNECTION WITH A DEFINITELY RELATED GOVERNMENT PROCUREMENT OPERATION, THE UNITED STATES GOVERNMENT THEREBY INCURS NO RESPONSIBILITY NOR ANY OBLIGATION WHATSOEVER, AND THE FACT THAT THE GOVERNMENT MAY HAVE FORMULATED, FURNISHED, OR IN ANY WAY SUPPLIED THE SAID DRAWINGS, SPECIFICATIONS, OR OTHER DATA IS NOT TO BE REGARDED BY IMPLICATION OR OTHERWISE AS IN ANY MANNER LICENSING THE HOLDER OR ANY OTHER PERSON OR CORPORATION, OR CONVEYING ANY RIGHTS OR PERMISSION TO MANUFACTURE, USE, OR SELL ANY PATENTED INVENTION THAT MAY IN ANY WAY BE RELATED THERETO.

REVISIONS 03453			
SYM	DESCRIPTION	DATE	APPROVAL

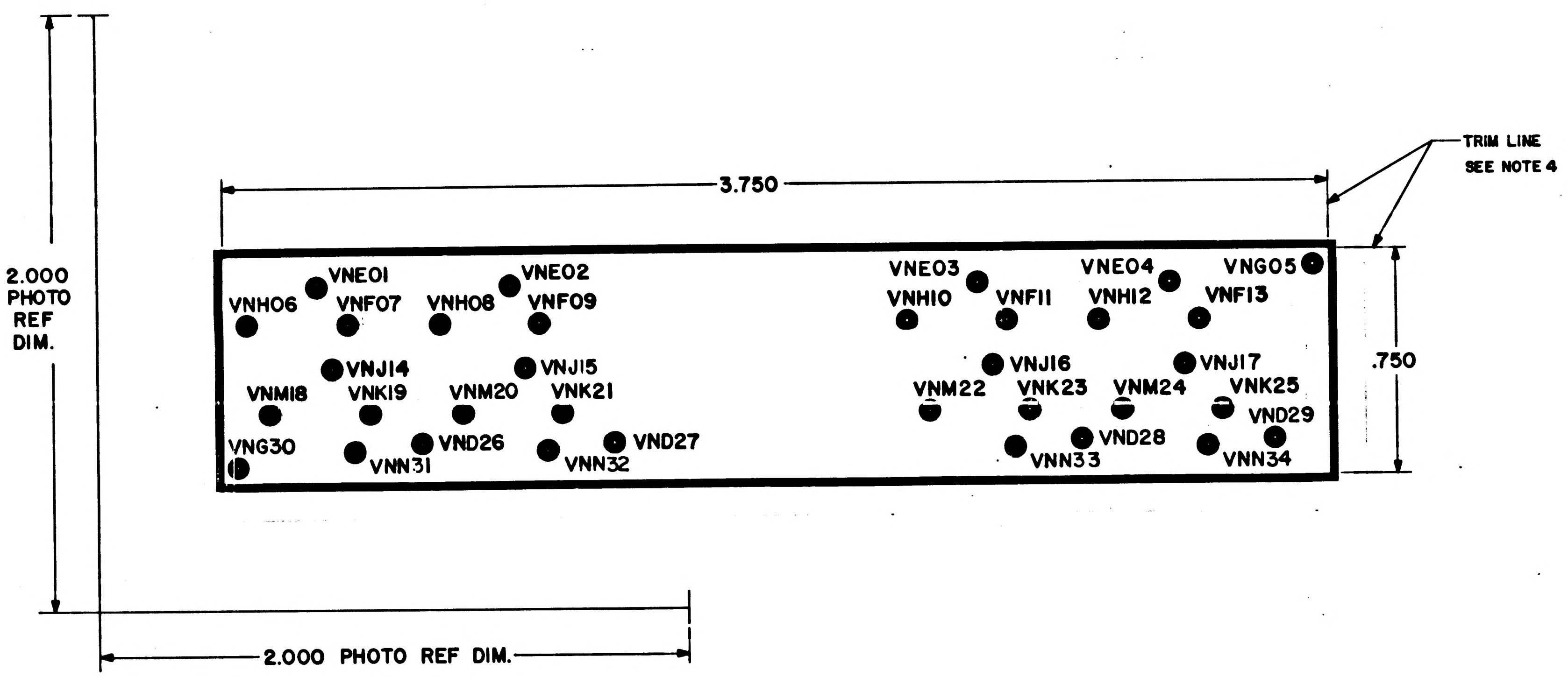
3.750
TRIM LINE
SEE NOTE 4
2.000
PHOTO
REF
DIM.
.750
VNE01
VNE02
VNE03
VNE04
VNG05
VNH06
VNF07
VNH08
VNF09
VNH10
VNF11
VNH12
VNF13
VNJ14
VNJ15
VNJ16
VNJ17
VNM18
VNK19
VNM20
VNK21
VNM22
VNK23
VNM24
VNK25
VND26
VND27
VND28
VND29
VNG30
VNN31
VNN32
VNN33
VNN34
2.000 PHOTO REF DIM.

NOTES:

1. MATERIAL: .006/.008 THICK PLASTIC SHEET, SENSITIZED, DIMENSIONALLY STABLE PER L-F-340, TYPE I B, CLASS 2, STYLE I A.
2. INTERPRET DRAWING IN ACCORDANCE WITH STANDARDS PRESCRIBED BY MIL-D-70327
3. ORIGINAL OF THIS DRAWING OR REPRODUCTION MADE BY A PROCESS OR METHOD SHALL INSURE DIMENSIONAL STABILITY. DIMENSIONAL VARIATIONS NOT TO EXCEED .001 INCH PER FOOT
4. CUT TO WITHIN .010 OF TRIM LINE
5. MAKE PHOTOGRAPHIC MASTER, NEGATIVE AND POSITIVE FILMS, TO DIMENSIONS SHOWN
6. ● .078/.082 DIA. PUNCH ALL HOLES

MASTER

QTY REQD	PART OR IDENTIFYING NO.	NOMENCLATURE OR DESCRIPTION	FIND NO

LIST OF MATERIALS

1003524	
NEXT ASSY	USED ON
APPLICATION	

UNLESS OTHERWISE SPECIFIED DIMENSIONS ARE IN INCHES
TOLERANCES ON
FRACTIONS ± DECIMALS ± .020 ANGLES ±
DO NOT SCALE THIS DRAWING
MATERIAL
SEE NOTE 1
HEAT TREATMENT
FINAL FINISH

MIT
INSTRUMENTATION LAB
CAMBRIDGE MASS
DWG NO
CONTRACT
DRAWN DATE
CHECKED 27 Aug 63
APPROVAL 14 Sep 63
APPROVAL E C Hall
NASA APPROVAL
MIT APPROVAL 9/26/63

MANNED SPACECRAFT CENTER
HOUSTON, TEXAS

PHOTOGRAPHIC MASTER
VERB-NOUN DISPLAY
AGC KEYBOARD

CODE IDENT NO. —
SIZE E
NASA DRAWING NO. 1004148
SCALE 5/1
WT
SHEET 1 OF 1

1004148

INCHES
0 1 2
PHOTOGRAPHIC SCALE ONLY

NOTICE — WHEN GOVERNMENT DRAWINGS, SPECIFICATIONS, OR OTHER DATA ARE USED FOR ANY PURPOSE OTHER THAN IN CONNECTION WITH A DEFINITELY RELATED GOVERNMENT PROCUREMENT OPERATION, THE UNITED STATES GOVERNMENT THEREBY INCURS NO RESPONSIBILITY NOR ANY OBLIGATION WHATSOEVER; AND THE FACT THAT THE GOVERNMENT MAY HAVE FORMULATED, FURNISHED, OR IN ANY WAY SUPPLIED THE SAID DRAWINGS, SPECIFICATIONS, OR OTHER DATA IS NOT TO BE REGARDED BY IMPLICATION OR OTHERWISE AS IN ANY MANNER LICENSING THE HOLDER OR ANY OTHER PERSON OR CORPORATION, OR CONVEYING ANY RIGHTS OR PERMISSION TO MANUFACTURE, USE, OR SELL ANY PATENTED INVENTION THAT MAY IN ANY WAY BE RELATED THERETO.

REVISIONS 03553

SYM	DESCRIPTION	DATE	APPROVAL
A	REPLACED WITH CHANGE PER TDRR 04771		

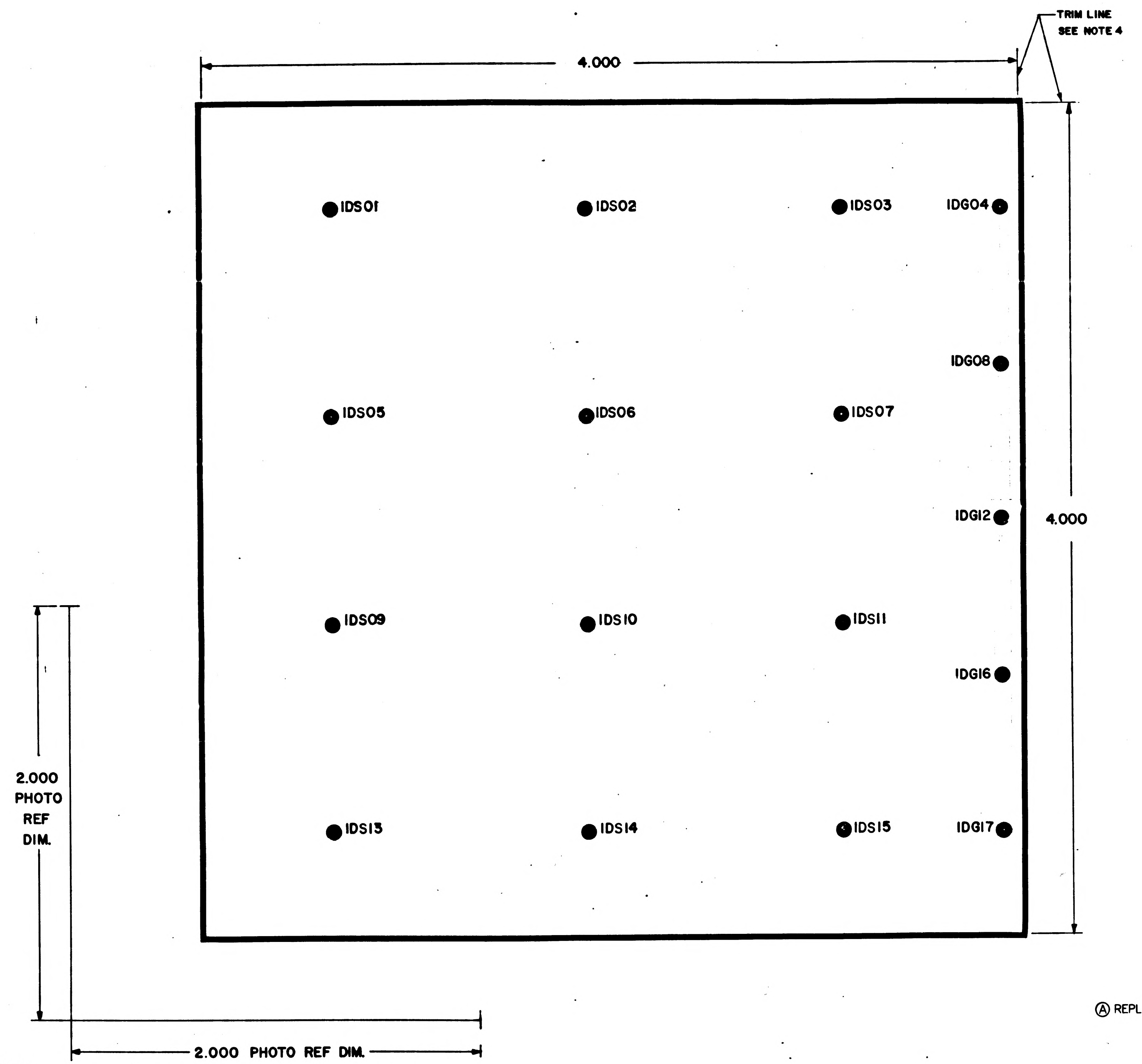

Ⓐ REPLACED WITH CHANGE BY REV B

INACTIVE

NOTES:

1. MATERIAL: .006/.008 THICK PLASTIC SHEET, SENSITIZED, DIMENSIONALLY STABLE PER L-F-340, TYPE I B, CLASS 2, STYLE IA
2. INTERPRET DRAWING IN ACCORDANCE WITH STANDARDS PRESCRIBED BY MIL-D-70327
3. ORIGINAL OF THIS DRAWING OR REPRODUCTION MADE BY A PROCESS OR METHOD SHALL INSURE DIMENSIONAL STABILITY. DIMENSIONAL VARIATIONS SHALL NOT EXCEED .001 INCH PER FOOT.
4. CUT TO WITHIN .010 OF TRIM LINE
5. MAKE PHOTOGRAPHIC MASTER NEGATIVE AND POSITIVE FILMS TO DIMENSIONS SHOWN
6. ● .078/.082 DIA PUNCH ALL HOLES

MASTER

QTY REQD	PART OR IDENTIFYING NO.	NOMENCLATURE OR DESCRIPTION	FIND NO.

LIST OF MATERIALS

NEXT ASSY	USED ON
1003524	

APPLICATION

UNLESS OTHERWISE SPECIFIED DIMENSIONS ARE IN INCHES
TOLERANCES ON
FRACTIONS ± DECIMALS ±.020 ANGLES ±
DO NOT SCALE THIS DRAWING
MATERIAL SEE NOTE 1
HEAT TREATMENT
FINAL FINISH

MIT INSTRUMENTATION LAB
CAMBRIDGE, MASS
DWG NO CONTRACT
DRAWN DATE
CHECKED 27 Aug 63
APPROVAL
APPROVAL 20 Sept 63
NASA APPROVAL
MIT APPROVAL

MANNED SPACECRAFT CENTER
HOUSTON, TEXAS

PHOTOGRAPHIC MASTER
INDICATOR DISPLAY
AGC KEYBOARD

CODE IDENT NO.
SIZE E
NASA DRAWING NO. 1004149
SCALE 5/1
WT
SHEET 1 OF 1

1004149 A

INCHES
0 1 2
PHOTOGRAPHIC SCALE ONLY

NOTICE — WHEN GOVERNMENT DRAWINGS, SPECIFICATIONS, OR OTHER DATA ARE USED FOR ANY PURPOSE OTHER THAN IN CONNECTION WITH A DEFINITELY RELATED GOVERNMENT PROCUREMENT OPERATION, THE UNITED STATES GOVERNMENT THEREBY INCURS NO RESPONSIBILITY NOR ANY OBLIGATION WHATSOEVER AND THE FACT THAT THE GOVERNMENT MAY HAVE FORMULATED, FURNISHED, OR IN ANY WAY SUPPLIED THE SAID DRAWINGS, SPECIFICATIONS OR OTHER DATA IS NOT TO BE REGARDED BY IMPLICATION OR OTHERWISE AS IN ANY MANNER LICENSING THE HOLDER OR ANY OTHER PERSON OR CORPORATION, OR CONVEYING ANY RIGHTS OR PERMISSION TO MANUFACTURE, USE, OR SELL ANY PATENTED INVENTION THAT MAY IN ANY WAY BE RELATED THERETO.

REVISIONS 03753			
SYM	DESCRIPTION	DATE	APPROVAL

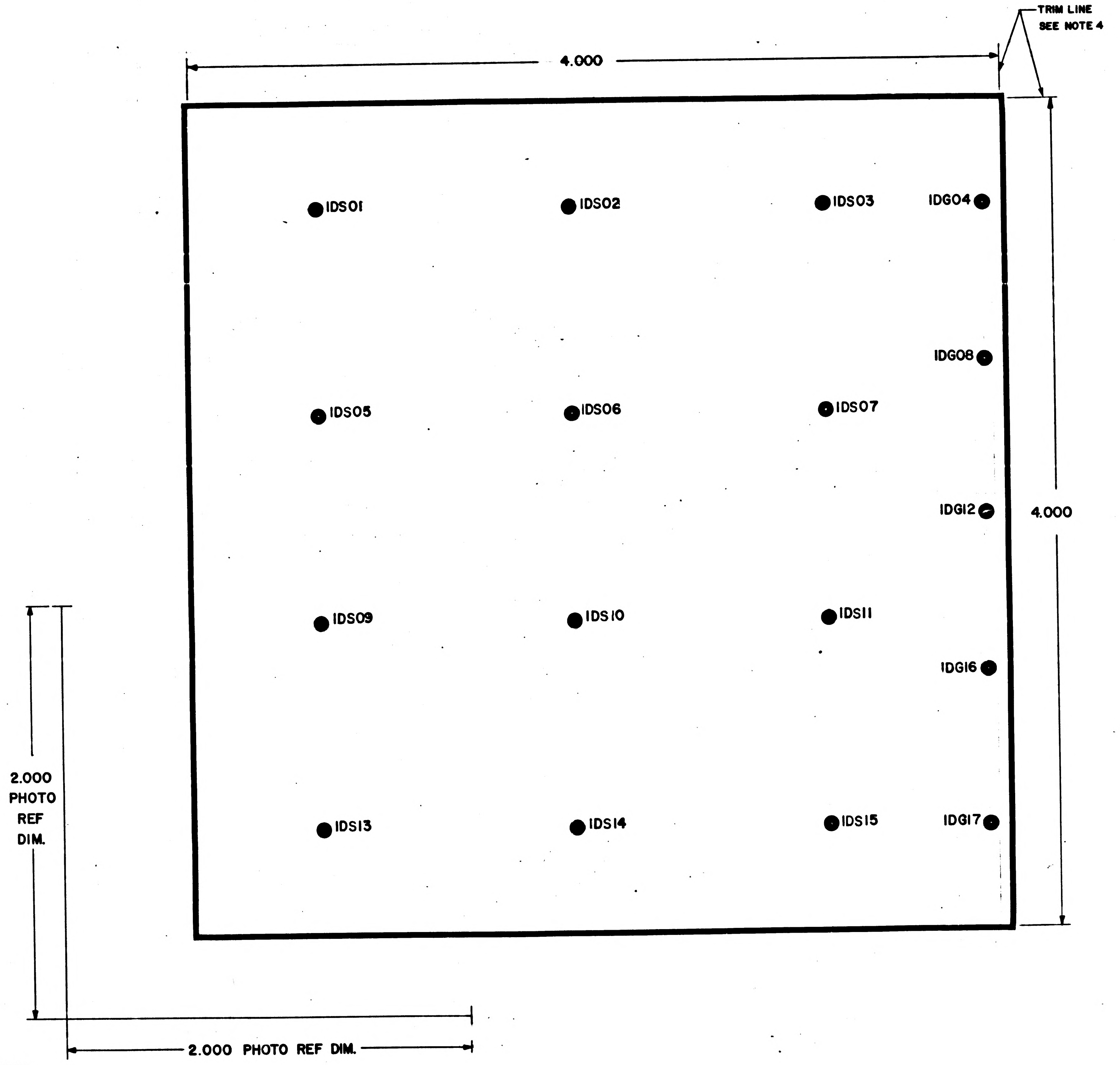

NOTES:

1. MATERIAL: .006/.008 THICK PLASTIC SHEET, SENSITIZED, DIMENSIONALLY STABLE PER L-F-340, TYPE I B, CLASS 2, STYLE I A
2. INTERPRET DRAWING IN ACCORDANCE WITH STANDARDS PRESCRIBED BY MIL-D-70327
3. ORIGINAL OF THIS DRAWING OR REPRODUCTION MADE BY A PROCESS OR METHOD SHALL INSURE DIMENSIONAL STABILITY. DIMENSIONAL VARIATIONS SHALL NOT EXCEED .001 INCH PER FOOT.
4. CUT TO WITHIN .010 OF TRIM LINE
5. MAKE PHOTOGRAPHIC MASTER NEGATIVE AND POSITIVE FILMS TO DIMENSIONS SHOWN
6. ● .078/.082 DIA PUNCH ALL HOLES

MASTER

QTY REQD	PART OR IDENTIFYING NO.	NOMENCLATURE OR DESCRIPTION	FIND NO.
LIST OF MATERIALS			

1003524	
NEXT ASSY	USED ON
APPLICATION	

UNLESS OTHERWISE SPECIFIED DIMENSIONS ARE IN INCHES
TOLERANCES ON
FRACTIONS ± DECIMALS ±.020 ANGLES ±
DO NOT SCALE THIS DRAWING
MATERIAL SEE NOTE 1
HEAT TREATMENT
FINAL FINISH

MIT
INSTRUMENTATION LAB
CAMBRIDGE, MASS
DWG NO
CONTRACT
DRAWN
DATE
CHECKED
APPROVAL
APPROVAL R C Hall 20 Sept 63
NASA APPROVAL
MIT APPROVAL

MANNED SPACECRAFT CENTER
HOUSTON, TEXAS

PHOTOGRAPHIC MASTER
INDICATOR DISPLAY
AGC KEYBOARD

CODE IDENT NO.
SIZE E
NASA DRAWING NO. 1004149
SCALE 5/1
WT
SHEET 1 OF 1

1004149

INCHES
0 1
PHOTOGRAPHIC SCALE ONLY

NOTICE — WHEN GOVERNMENT DRAWINGS, SPECIFICATIONS, OR OTHER DATA ARE USED FOR ANY PURPOSE OTHER THAN IN CONNECTION WITH A DEFINITELY RELATED GOVERNMENT PROCUREMENT OPERATION, THE UNITED STATES GOVERNMENT THEREBY INCURS NO RESPONSIBILITY NOR ANY OBLIGATION WHATSOEVER; AND THE FACT THAT THE GOVERNMENT MAY HAVE FORMULATED, FURNISHED, OR IN ANY WAY SUPPLIED THE SAID DRAWINGS, SPECIFICATIONS OR OTHER DATA IS [illegible] LICENSING THE HOLDER OR ANY OTHER PERSON OR CORPORATION, OR CONVEYING ANY RIGHTS OR PERMISSION TO MANUFACTURE USE OR SELL ANY PATENTED INVENTION THAT MAY IN ANY WAY BE RELATED THERETO.

REVISIONS TDRR 02282			
SYM	DESCRIPTION	DATE	APPROVAL

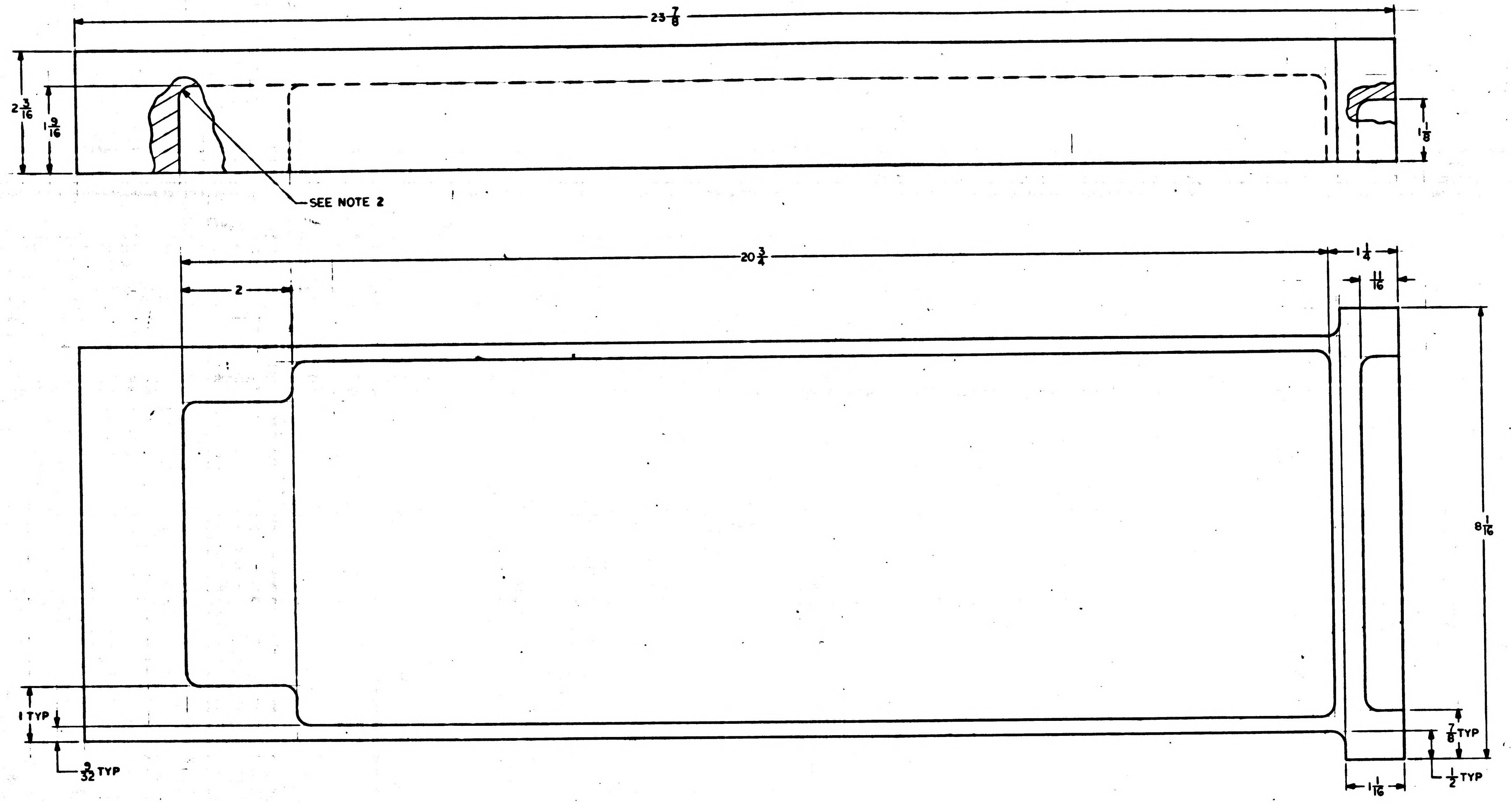

NOTES
1. INTERPRET DRAWING IN ACCORDANCE WITH STANDARDS PRESCRIBED BY MIL-D-70327
2. ALL FILLETS AND RADII 1/4 R
3. MATL: ASTM NO. ZK60A-T5 MAG ALLOY / QQ-M-31A

MASTER

QTY REQD	PART OR IDENTIFYING NO.	NOMENCLATURE OR DESCRIPTION	FIND NO.

LIST OF MATERIALS

NEXT ASSY	USED ON
APPLICATION	

UNLESS OTHERWISE SPECIFIED
DIMENSIONS ARE IN INCHES
TOLERANCES ON
FRACTIONS ± 1/64 DECIMALS ± — ANGLES ± —
DO NOT SCALE THIS DRAWING
MATERIAL SEE NOTE 3
HEAT TREATMENT —
FINAL FINISH —

MIT INSTRUMENTATION LAB
CAMBRIDGE, MASS.
DWG. NO. CONTRACT
DRAWN J. [illegible] DATE
CHECKED [illegible]
APPROVAL W.B. [illegible] 7/30/63
APPROVAL [illegible] 7/31/63
NASA APPROVAL W. J. [illegible] 7-31-63
MIT APPROVAL [illegible] 7/31/63

MANNED SPACECRAFT CENTER
HOUSTON, TEXAS

ROUGH MACHINING
COMPUTER TRAY

CODE IDENT NO.
SIZE D
NASA DRAWING NO. 1004150
SCALE 1/1
WT
SHEET 1 OF 1

INCHES
0 1 2
PHOTOGRAPHIC SCALE ONLY

NOTICE — WHEN GOVERNMENT DRAWINGS, SPECIFICATIONS, OR OTHER DATA ARE USED FOR ANY PURPOSE OTHER THAN IN CONNECTION WITH A DEFINITELY RELATED GOVERNMENT PROCUREMENT OPERATION, THE UNITED STATES GOVERNMENT THEREBY INCURS NO RESPONSIBILITY NOR ANY OBLIGATION WHATSOEVER; AND THE FACT THAT THE GOVERNMENT MAY HAVE FORMULATED, FURNISHED, OR IN ANY WAY SUPPLIED THE SAID DRAWINGS, SPECIFICATIONS, OR OTHER DATA IS NOT TO BE REGARDED BY IMPLICATION OR OTHERWISE AS IN ANY MANNER LICENSING THE HOLDER OR ANY OTHER PERSON OR CORPORATION, OR CONVEYING ANY RIGHTS OR PERMISSION TO MANUFACTURE, USE, OR SELL ANY PATENTED INVENTION THAT MAY IN ANY WAY BE RELATED THERETO.

		REVISIONS 04735		
	SYM	DESCRIPTION	DATE	APPROVAL
Ⓜ	A	REVISED PER TDRR 05113	18 DEC 63	

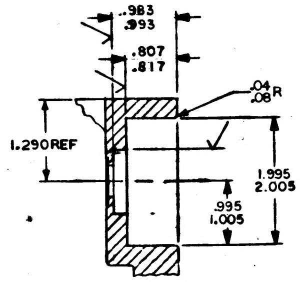

.983 .993
.807 .817
.04 .08 R
1.290 REF
1.995 2.005
.995 1.005

PARTIAL SECTION AA

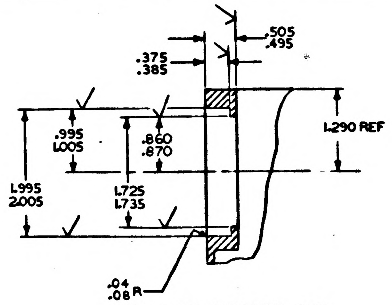

.505 .495
.375 .385
1.290 REF
.995 1.005
.860 .870
1.995 2.005
1.725 1.735
.04 .08 R

PARTIAL SECTION D-D

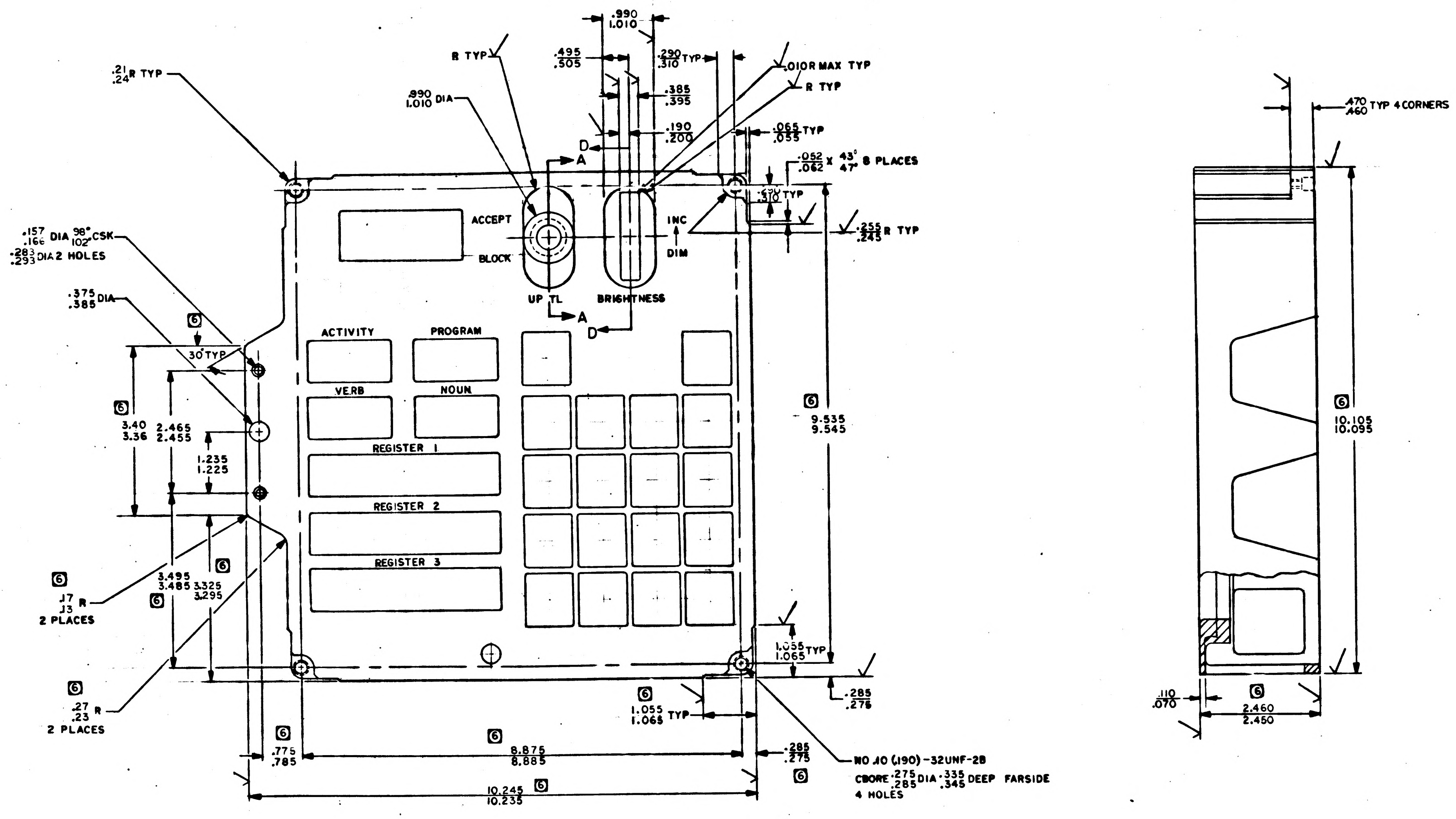

.21 .24 R TYP
R TYP
.890 1.010 DIA
.495 .505
.990 1.010
.290 .310 TYP
.385 .395
.190 .200
.010 R MAX TYP
R TYP
.065 .055 TYP
.052 .062 x 43° 47° 8 PLACES
.290 .310 TYP
.255 .245 R TYP
D
A
ACCEPT
BLOCK
UP TL
INC
DIM
BRIGHTNESS
.157 .166 DIA 98° 102° CSK
.283 .253 DIA 2 HOLES
.375 .385 DIA
30° TYP
ACTIVITY
PROGRAM
VERB
NOUN
REGISTER 1
REGISTER 2
REGISTER 3
6
3.40 3.36
2.465 2.455
1.235 1.225
9.535 9.545
.17 .13 R 2 PLACES
3.495 3.485
3.325 3.295
1.055 1.065 TYP
.285 .275
.27 .23 R 2 PLACES
1.055 1.065 TYP
.775 .785
8.875 8.885
.285 .275
10.245 10.235
NO 10 (190)-32UNF-2B
CBORE .275 .285 DIA .335 .345 DEEP FARSIDE
4 HOLES
.470 .460 TYP 4 CORNERS
10.105 10.095
.110 .070
2.460 2.450

NOTES

1. MAKE FROM DWG 1004586
2. SURFACE MARKED √ TO BE 125√
3. REMOVE ALL BURRS AND SHARP EDGES
4. ANODIZE PER MIL-A-8625, TYPE I CHROMIC-ACID DYED MEDIUM GREY PER FED. STD-TT-C-595 COLOR CHIP GREY
5. SILK SCREEN .12 HIGH BLACK PER ND1002019 LOCATE MARKING APPROXIMATELY WHERE SHOWN
6. ⑥ DIMENSIONS ARE CONTROLLED BY ICDMH01-01005-116
7. INTERPRET DRAWING IN ACCORDANCE WITH STANDARDS PRESCRIBED BY MIL-D-70327

MASTER

QTY REQD	PART OR IDENTIFYING NO.	NOMENCLATURE OR DESCRIPTION	FIND NO

LIST OF MATERIALS

NEXT ASSY	USED ON
1003540	

APPLICATION

UNLESS OTHERWISE SPECIFIED DIMENSIONS ARE IN INCHES
TOLERANCES ON
FRACTIONS ± DECIMALS ± ANGLES ±
DO NOT SCALE THIS DRAWING
MATERIAL SEE NOTE 1
HEAT TREATMENT NONE
FINAL FINISH SEE NOTE 4

MIT INSTRUMENTATION LAB CAMBRIDGE, MASS
DWG NO CONTRACT
DRAWN H. Carlson DATE 5 OCT 63
CHECKED A. R. Bogni 5 NOV 63
APPROVAL E. S. Briggs 5 NOV 63
APPROVAL Eldon C Hall 15 Nov 63
NASA APPROVAL
MIT APPROVAL
MIT APPROVAL D Hoag 11/19/63

MANNED SPACECRAFT CENTER
HOUSTON, TEXAS

HOUSING, FRONT PANEL
AGC DSKY MAIN

CODE IDENT NO. —— SIZE E NASA DRAWING NO. 1004151
SCALE 1/1 WT SHEET 1 OF 2

1004151 A

NOTICE - WHEN GOVERNMENT DRAWINGS SPECIFICATIONS OR OTHER DATA ARE USED FOR ANY PURPOSE OTHER THAN IN CONNECTION WITH A DEFINITELY RELATED GOVERNMENT PROCUREMENT OPERATION THE UNITED STATES GOVERNMENT THEREBY INCURS NO RESPONSIBILITY NOR ANY OBLIGATION WHATSOEVER AND THE FACT THAT THE GOVERNMENT MAY HAVE FORMULATED FURNISHED OR IN ANY WAY SUPPLIED THE SAID DRAWINGS SPECIFICATIONS OR OTHER DATA IS NOT TO BE REGARDED BY IMPLICATION OR OTHERWISE AS IN ANY MANNER LICENSING THE HOLDER OR ANY OTHER PERSON OR CORPORATION OR CONVEYING ANY RIGHTS OR PERMISSION TO MANUFACTURE USE OR SELL ANY PATENTED INVENTION THAT MAY IN ANY WAY BE RELATED THERETO

1004151

REVISIONS 84755			
SYM	DESCRIPTION	DATE	APPROVAL
A	REVISED PER TDRR 05113		

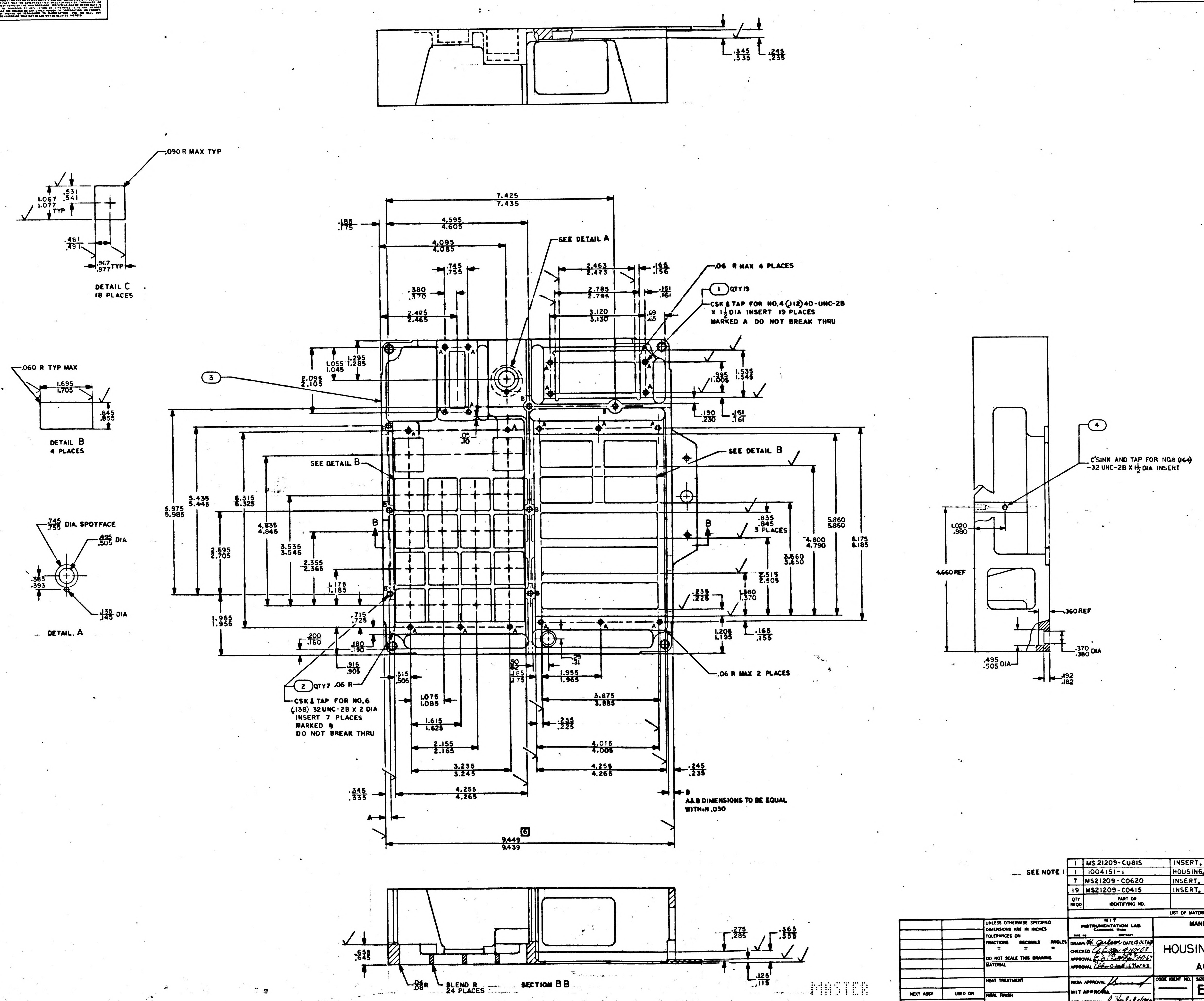

.345
.335
.245
.235
.090 R MAX TYP
1.067
1.077
TYP
.531
.541
.481
.491
.967
.977 TYP
DETAIL C
18 PLACES
7.425
7.435
.185
.175
4.595
4.605
4.095
4.085
.745
.755
.380
.370
2.475
2.465
SEE DETAIL A
2.463
2.473
2.785
2.795
3.120
3.130
.166
.156
.151
.161
.69
.65
.06 R MAX 4 PLACES
1 QTY19
CSK & TAP FOR NO.4 (.112) 40-UNC-2B X 1½ DIA INSERT 19 PLACES MARKED A DO NOT BREAK THRU
3
2.095
2.105
1.055
1.045
1.295
1.285
1.535
1.545
.995
1.005
.190
.230
.151
.161
.060 R TYP MAX
1.695
1.705
.845
.855
DETAIL B
4 PLACES
SEE DETAIL B
.05
.10
SEE DETAIL B
5.975
5.985
5.435
5.445
6.315
6.325
4.835
4.845
3.535
3.545
2.695
2.705
2.355
2.365
1.175
1.185
B
B
.835
.845
3 PLACES
3.660
3.650
4.800
4.790
5.860
5.850
6.175
6.185
2.515
2.505
1.380
1.370
.235
.225
.165
.155
1.205
1.195
.745
.755 DIA. SPOTFACE
.495
.505 DIA
.383
.393
.135
.145 DIA
DETAIL A
1.965
1.955
.715
.725
.200
.160
.180
.190
.915
.905
2 QTY7
.06 R
CSK & TAP FOR NO.6 (.138) 32 UNC-2B X 2 DIA INSERT 7 PLACES MARKED B DO NOT BREAK THRU
.515
.505
1.075
1.085
1.615
1.625
2.155
2.165
3.235
3.245
4.255
4.265
.160
.165
.175
.29
.31
1.955
1.965
3.875
3.885
.235
.225
4.015
4.005
4.255
4.265
.06 R MAX 2 PLACES
.245
.235
.345
.335
A
B
A&B DIMENSIONS TO BE EQUAL WITHIN .030
6
9.449
9.439
4
C'SINK AND TAP FOR NO.8 (.164) -32 UNC-2B X 1½ DIA INSERT
1.020
.980
4.660 REF
.360 REF
.370
.380 DIA
.495
.505 DIA
.192
.182
.655
.645
.275
.285
.365
.355
.125
.115
.04
.08 R
BLEND R
24 PLACES
SECTION BB
MASTER

SEE NOTE 1

QTY REQD	PART OR IDENTIFYING NO.	NOMENCLATURE OR DESCRIPTION	FIND NO.
1	MS 21209-CU815	INSERT, HELICAL	4
1	1004151-1	HOUSING, FRONT PANEL	3
7	MS21209-C0620	INSERT, HELICAL	2
19	MS21209-C0415	INSERT, HELICAL	1

LIST OF MATERIALS

NEXT ASSY	USED ON
APPLICATION	

UNLESS OTHERWISE SPECIFIED DIMENSIONS ARE IN INCHES
TOLERANCES ON
FRACTIONS ± DECIMALS ± ANGLES ±
DO NOT SCALE THIS DRAWING
MATERIAL
HEAT TREATMENT
FINAL FINISH

MIT INSTRUMENTATION LAB
CAMBRIDGE, MASS
DWG. NO. CONTRACT
DRAWN H. Carlson DATE 15 OCT 63
CHECKED A. Eggen 4 NOV 63
APPROVAL E. C. 5 Nov 63
APPROVAL Ellen C Hall 15 Nov 63
NASA APPROVAL
MIT APPROVAL
MIT APPROVAL

MANNED SPACECRAFT CENTER
HOUSTON, TEXAS

HOUSING, FRONT PANEL
AGC DSKY MAIN

CODE IDENT NO. ——
SIZE E
NASA DRAWING NO. 1004151
SCALE 1/1
WT
SHEET 2 OF 2

1004151 A

INCHES
PHOTOGRAPHIC SCALE ONLY

NOTICE — WHEN GOVERNMENT DRAWINGS, SPECIFICATIONS, OR OTHER DATA ARE USED FOR ANY PURPOSE OTHER THAN IN CONNECTION WITH A DEFINITELY RELATED GOVERNMENT PROCUREMENT OPERATION, THE UNITED STATES GOVERNMENT THEREBY INCURS NO RESPONSIBILITY NOR ANY OBLIGATION WHATSOEVER; AND THE FACT THAT THE GOVERNMENT MAY HAVE FORMULATED, FURNISHED, OR IN ANY WAY SUPPLIED THE SAID DRAWINGS, SPECIFICATIONS, OR OTHER DATA IS NOT TO BE REGARDED BY IMPLICATION OR OTHERWISE AS IN ANY MANNER LICENSING THE HOLDER OR ANY OTHER PERSON OR CORPORATION, OR CONVEYING ANY RIGHTS OR PERMISSION TO MANUFACTURE, USE, OR SELL ANY PATENTED INVENTION THAT MAY IN ANY WAY BE RELATED THERETO

REVISIONS 04935			
SYM	DESCRIPTION	DATE	APPROVAL
A	REVISED PER TDRR 05113	10 DEC 63	
B	REVISED PER TDRR 05790	1/21/64	

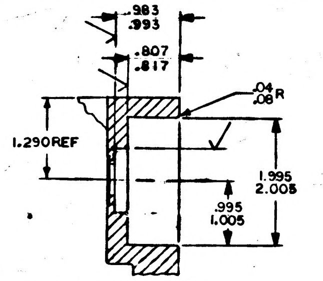
.983
.993
.807
.817
.04
.08 R
1.290 REF
1.995
2.005
.995
1.005

PARTIAL SECTION AA

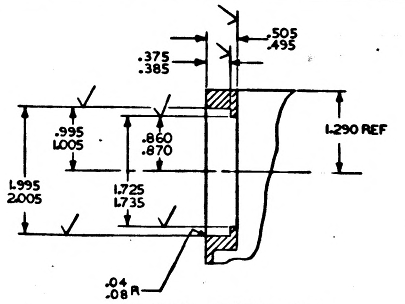
.505
.495
.375
.385
.995
1.005
.860
.870
1.290 REF
1.995
2.005
1.725
1.735
.04
.08 R

PARTIAL SECTION D-D

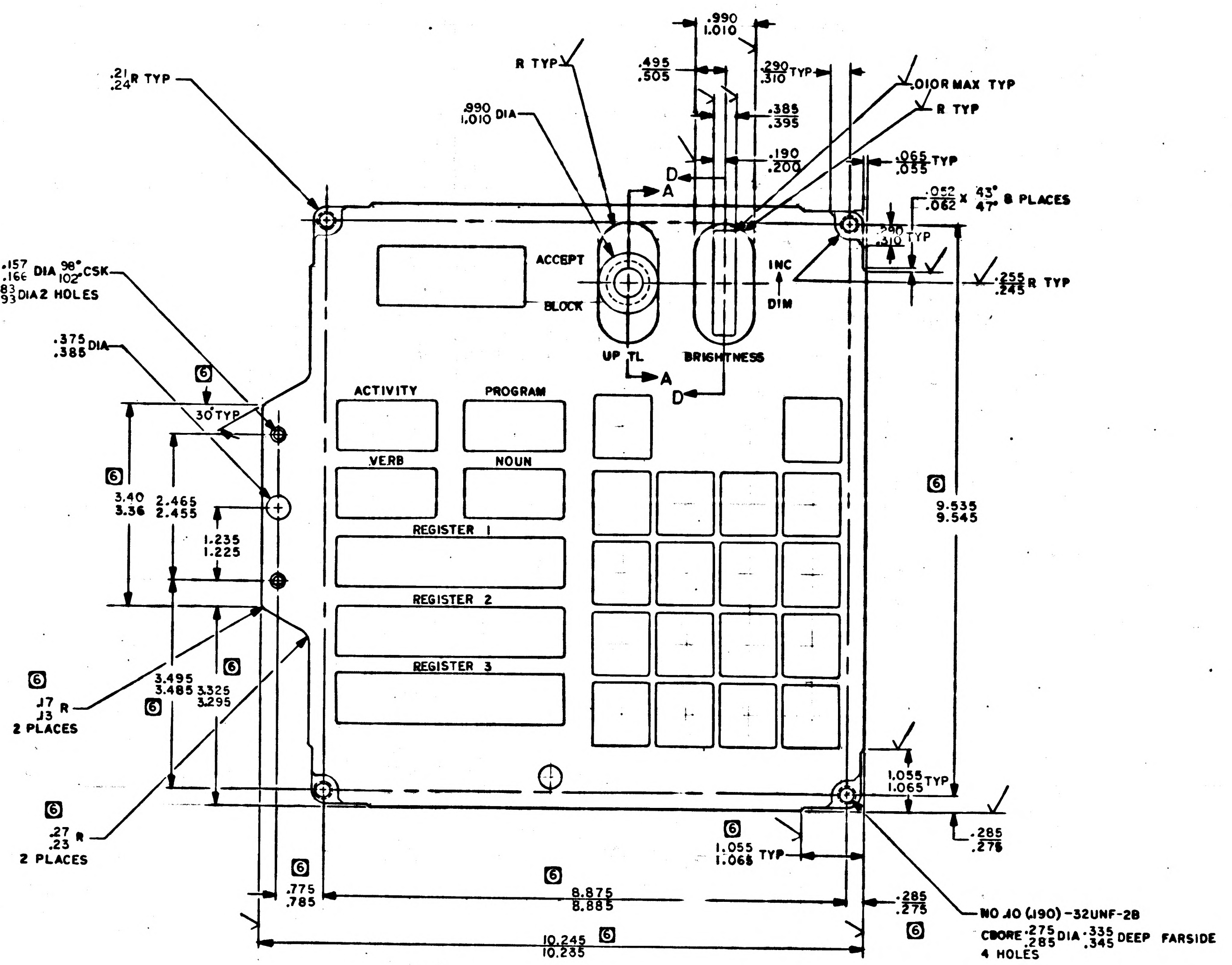
.990
1.010
.21
.24 R TYP
R TYP
.495
.505
.290
.310 TYP
.010 R MAX TYP
R TYP
.990
1.010 DIA
.385
.395
.190
.200
.065
.055 TYP
D
A
.052
.062 x 43°
47° 8 PLACES
.290
.310 TYP
.255
.245 R TYP
.157
.166 DIA 98°
102° CSK
.283
.293 DIA 2 HOLES
ACCEPT
BLOCK
INC
DIM
UP TL
BRIGHTNESS
.375
.385 DIA
6
30° TYP
ACTIVITY
PROGRAM
VERB
NOUN
REGISTER 1
REGISTER 2
REGISTER 3
3.40
3.36
2.465
2.455
1.235
1.225
9.535
9.545
3.495
3.485
3.325
3.295
.17
.13 R
2 PLACES
1.055
1.065 TYP
.27
.23 R
2 PLACES
1.055
1.065 TYP
.285
.275
.775
.785
8.875
8.885
10.245
10.235
NO 10 (.190)-32UNF-2B
CBORE .275
.285 DIA .335
.345 DEEP FARSIDE
4 HOLES

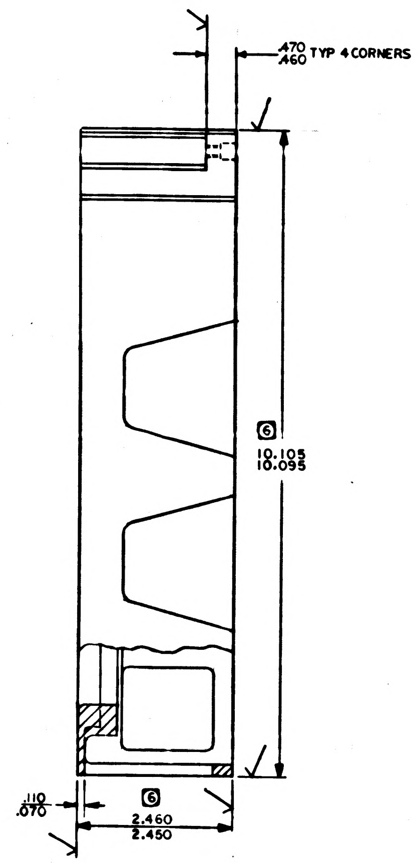
.470
.460 TYP 4 CORNERS
6
10.105
10.095
.110
.070
2.460
2.450

NOTES

1. MAKE FROM DWG 1004586
2. SURFACE MARKED ✓ TO BE $\overset{125}{\checkmark}$
3. REMOVE ALL BURRS AND SHARP EDGES
4. ANODIZE PER MIL-A-8625, TYPE I CHROMIC-ACID DYED MEDIUM GREY PER FED. STD-TT-C-595 COLOR CHIP GREY
5. SILK SCREEN .12 HIGH WHITE PER ND1002019 LOCATE MARKING APPROXIMATELY WHERE SHOWN
6. $\boxed{6}$ DIMENSIONS ARE CONTROLLED BY ICDMH01-01005-116
7. INTERPRET DRAWING IN ACCORDANCE WITH STANDARDS PRESCRIBED BY MIL-D-70327

MASTER

QTY REQD	PART OR IDENTIFYING NO.	NOMENCLATURE OR DESCRIPTION	FIND NO.

LIST OF MATERIALS

1003540	
NEXT ASSY	USED ON
APPLICATION	

UNLESS OTHERWISE SPECIFIED DIMENSIONS ARE IN INCHES
TOLERANCES ON
FRACTIONS ± DECIMALS ± ANGLES ±
DO NOT SCALE THIS DRAWING
MATERIAL: SEE NOTE 1
HEAT TREATMENT: NONE
FINAL FINISH: SEE NOTE 4

MIT INSTRUMENTATION LAB
CAMBRIDGE, MASS
DRAWN H. Carlson DATE 5 OCT 63
CHECKED A. L. Bogni 5 NOV 63
APPROVAL E. J. Buggs 5 Nov 63
APPROVAL Eldon C. Hall 15 Nov 63
NASA APPROVAL
MIT APPROVAL
MIT APPROVAL 11/19/63

MANNED SPACECRAFT CENTER
HOUSTON, TEXAS

HOUSING, FRONT PANEL
AGC DSKY MAIN

CODE IDENT NO. —
SIZE E
NASA DRAWING NO. 1004151
SCALE 1/1
WT
SHEET 1 OF 2

NOTICE — WHEN GOVERNMENT DRAWINGS, SPECIFICATIONS, OR OTHER DATA ARE USED FOR ANY PURPOSE OTHER THAN IN CONNECTION WITH A DEFINITELY RELATED GOVERNMENT PROCUREMENT OPERATION, THE UNITED STATES GOVERNMENT THEREBY INCURS NO RESPONSIBILITY NOR ANY OBLIGATION WHATSOEVER; AND THE FACT THAT THE GOVERNMENT MAY HAVE FORMULATED, FURNISHED, OR IN ANY WAY SUPPLIED THE SAID DRAWINGS, SPECIFICATIONS, OR OTHER DATA IS NOT TO BE REGARDED BY IMPLICATION OR OTHERWISE AS IN ANY MANNER LICENSING THE HOLDER OR ANY OTHER PERSON OR CORPORATION, OR CONVEYING ANY RIGHTS OR PERMISSION TO MANUFACTURE, USE, OR SELL ANY PATENTED INVENTION THAT MAY IN ANY WAY BE RELATED THERETO.

REVISIONS 04735

SYM	DESCRIPTION	DATE	APPROVAL
A	REVISED PER TDRR 05113	14/11/63	
B	REVISED PER TDRR 05790	1/21/64	L.T.B.

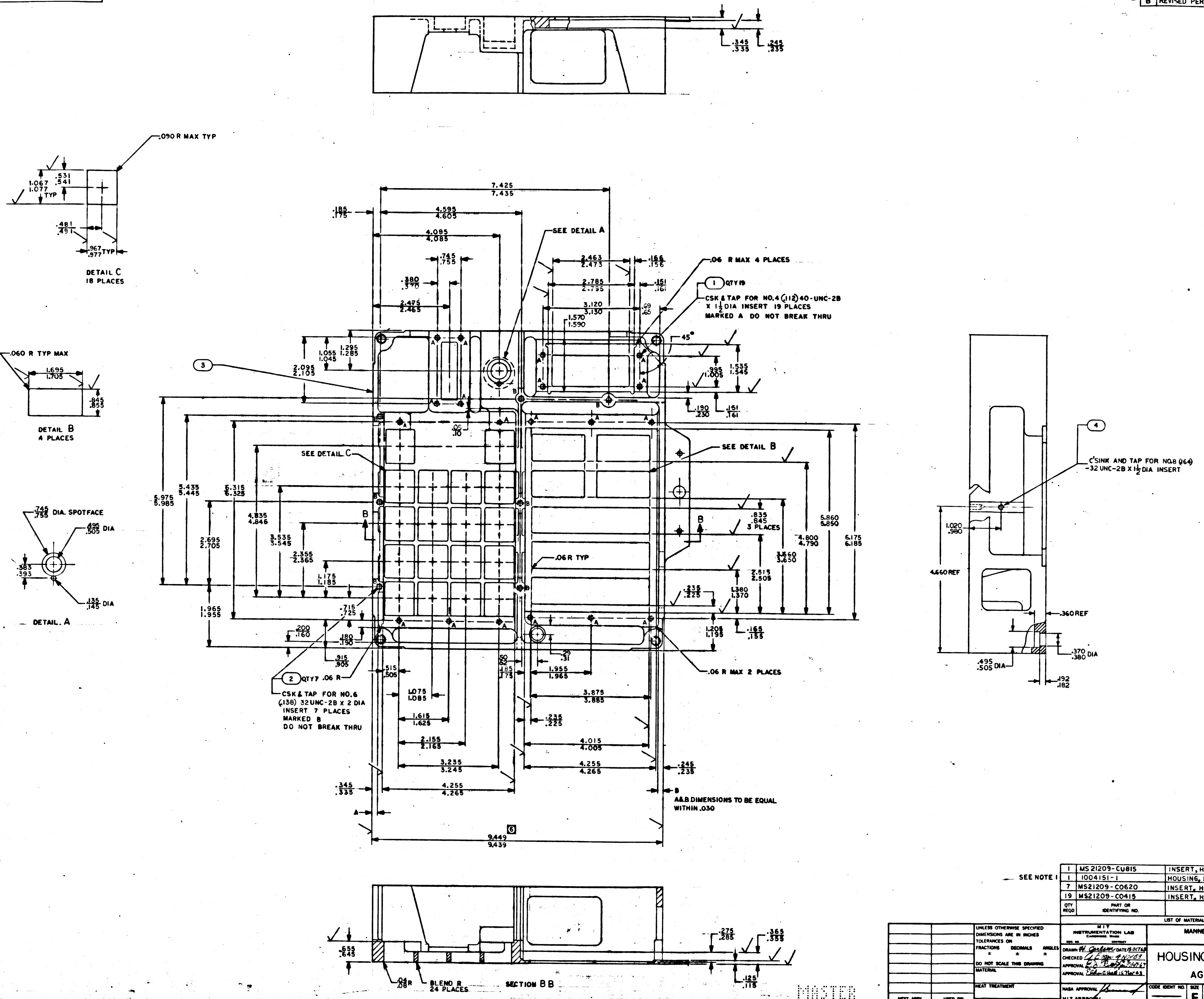

.345
.335
.245
.235
.090 R MAX TYP
.531
.541
1.067
1.077
TYP
.481
.491
.967
.977 TYP
DETAIL C
18 PLACES
7.425
7.435
.185
.175
4.595
4.605
4.085
4.085
.745
.755
.380
.370
2.475
2.465
SEE DETAIL A
2.463
2.473
.166
.156
2.785
2.795
.151
.161
3.120
3.130
.69
.65
1.570
1.590
.06 R MAX 4 PLACES
1 QTY 19
CSK & TAP FOR NO.4 (.112) 40-UNC-2B X 1½ DIA INSERT 19 PLACES MARKED A DO NOT BREAK THRU
45°
1.295
1.285
1.055
1.045
2.095
2.105
3
.995
1.005
1.535
1.545
.190
.230
.151
.161
.060 R TYP MAX
1.695
1.705
.845
.855
DETAIL B
4 PLACES
.05
.10
SEE DETAIL C
SEE DETAIL B
5.975
5.985
5.435
5.445
5.315
5.325
4.835
4.845
3.535
3.545
2.695
2.705
2.355
2.365
1.175
1.185
1.965
1.955
.715
.725
B
.835
.845
3 PLACES
.06 R TYP
4.800
4.790
3.660
3.650
2.515
2.505
1.380
1.370
.235
.225
5.860
5.850
6.175
6.185
.745
.755 DIA. SPOTFACE
.495
.505 DIA
.383
.393
.135
.145 DIA
DETAIL A
.200
.160
.180
.190
.915
.905
2 QTY 7 .06 R
CSK & TAP FOR NO.6 (.138) 32UNC-2B X 2 DIA INSERT 7 PLACES MARKED B DO NOT BREAK THRU
.515
.505
1.075
1.085
1.615
1.625
2.155
2.165
3.235
3.245
4.255
4.265
.50
.52
.185
.175
.29
.31
1.955
1.965
3.875
3.885
.235
.225
4.015
4.005
4.255
4.265
1.205
1.195
.165
.155
.06 R MAX 2 PLACES
.345
.335
.245
.235
A
B
A&B DIMENSIONS TO BE EQUAL WITHIN .030
6
9.449
9.439
4
C'SINK AND TAP FOR NO.8 (.164) -32 UNC-2B X 1½ DIA INSERT
1.020
.980
4.660 REF
.360 REF
.370
.380 DIA
.495
.505 DIA
.192
.182
.655
.645
.04
.08 R
BLEND R 24 PLACES
SECTION B B
.275
.285
.365
.355
.125
.115

MASTER

SEE NOTE 1

QTY REQD	PART OR IDENTIFYING NO.	NOMENCLATURE OR DESCRIPTION	FIND NO
1	MS 21209-CU815	INSERT, HELICAL	4
1	1004151-1	HOUSING, FRONT PANEL	3
7	MS21209-C0620	INSERT, HELICAL	2
19	MS21209-C0415	INSERT, HELICAL	1

LIST OF MATERIALS

NEXT ASSY	USED ON
APPLICATION	

UNLESS OTHERWISE SPECIFIED
DIMENSIONS ARE IN INCHES
TOLERANCES ON
FRACTIONS ± DECIMALS ± ANGLES ±
DO NOT SCALE THIS DRAWING
MATERIAL
HEAT TREATMENT
FINAL FINISH

MIT
INSTRUMENTATION LAB
CAMBRIDGE, MASS
DWG. NO. CONTRACT

DRAWN H. Carlson DATE 15 OCT 63
CHECKED G. E. 4 NOV 63
APPROVAL E. C. 14 11 63
APPROVAL Eldon C Hall 15 Nov 63
NASA APPROVAL
MIT APPROVAL
MIT APPROVAL 11/14/63

MANNED SPACECRAFT CENTER
HOUSTON, TEXAS

HOUSING, FRONT PANEL
AGC DSKY MAIN

CODE IDENT NO. —
SIZE E
NASA DRAWING NO. 1004151
SCALE 1/1
WT
SHEET 2 OF 2

1004151C

SYM	DESCRIPTION	DATE	APPROVAL
A	REVISED PER TDRR 05113		
B	REVISED PER TDRR 05790	4/21/64	
C	REVISED PER TDRR 07267 DR CHK	3/23/	

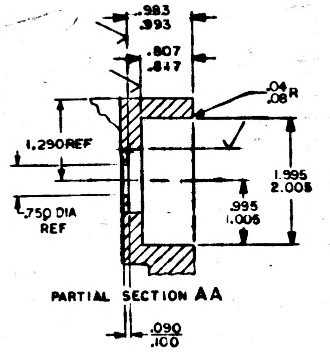

.983
.993
.807
.817
.04
.08 R
1.290 REF
.750 DIA REF
1.995
2.005
.995
1.005
.090
.100

PARTIAL SECTION AA

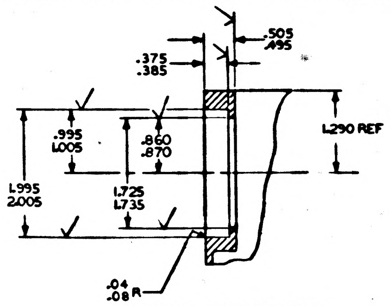

.375
.385
.505
.495
L290 REF
.995
1.005
.860
.870
1.995
2.005
1.725
1.735
.04
.08 R

PARTIAL SECTION D-D

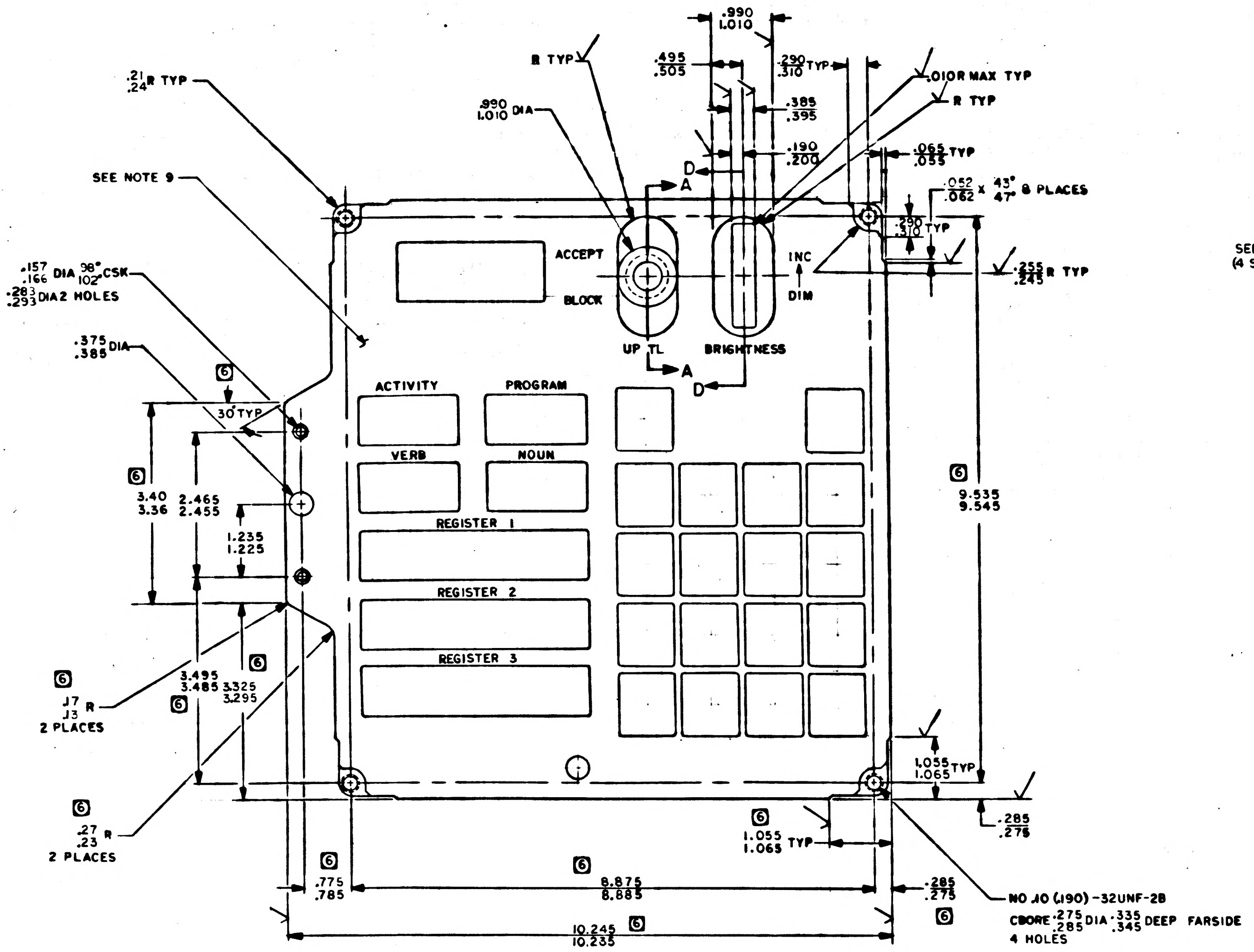

.21
.24 R TYP
SEE NOTE 9
.157
.166 DIA 98°
102° CSK
.283
.293 DIA 2 HOLES
.375
.385 DIA
30° TYP
3.40
3.36
2.465
2.455
1.235
1.225
3.495
3.485
3.325
3.295
.17
.13 R
2 PLACES
.27
.23 R
2 PLACES
.775
.785
8.875
8.885
10.245
10.235
R TYP
.990
1.010 DIA
.495
.505
.990
1.010
.290
.310 TYP
.385
.395
.190
.200
.010 R MAX TYP
R TYP
.065
.055 TYP
.052
.062 x 43°
47° 8 PLACES
.290
.310 TYP
.255
.245 R TYP
D
A
ACCEPT
BLOCK
UP TL
INC
DIM
BRIGHTNESS
ACTIVITY
PROGRAM
VERB
NOUN
REGISTER 1
REGISTER 2
REGISTER 3
9.535
9.545
1.055
1.065 TYP
.285
.275
1.055
1.065 TYP
.285
.275
NO .10 (.190) -32UNF-2B
CBORE .275
.285 DIA .335
.345 DEEP FARSIDE
4 HOLES
6

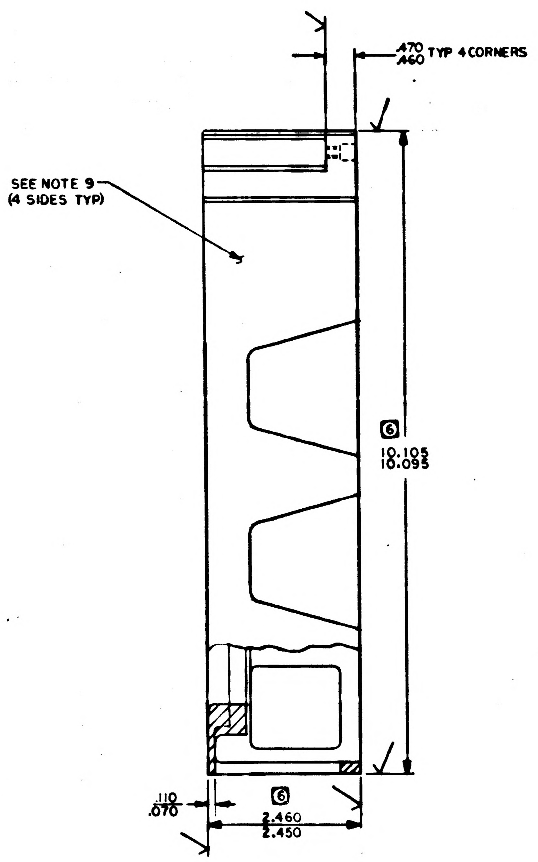

.470
.460 TYP 4 CORNERS
SEE NOTE 9
(4 SIDES TYP)
10.105
10.095
.110
.070
2.460
2.450
6

NOTES
1. MAKE FROM DWG 1004586
2. SURFACE MARKED √ TO BE 125√
3. REMOVE ALL BURRS AND SHARP EDGES
4. ANODIZE PER MIL-A-8625, TYPE I CHROMIC-ACID DYED BLACK

5. SILK SCREEN .12 HIGH WHITE PER ND1002019 LOCATE MARKING APPROXIMATELY WHERE SHOWN
6. 6 DIMENSIONS ARE CONTROLLED BY ICDMH01-01005-116
7. INTERPRET DRAWING IN ACCORDANCE WITH STANDARDS PRESCRIBED BY MIL-D-70327
8. 8 NOTES CONTROLLED BY ICD-MH01-01046-416
8 9. PAINT INDICATED SURFACES WITH 1010729-1 MEDIUM GREY EPOXY RESIN ENAMEL PER ND

MASTER

QTY REQD	PART OR IDENTIFYING NO.	NOMENCLATURE OR DESCRIPTION	FIND NO.

LIST OF MATERIALS

NEXT ASSY	USED ON
1003540	

APPLICATION

UNLESS OTHERWISE SPECIFIED DIMENSIONS ARE IN INCHES
TOLERANCES ON
FRACTIONS ± DECIMALS ± ANGLES ±
DO NOT SCALE THIS DRAWING
MATERIAL
SEE NOTE 1
HEAT TREATMENT
NONE
FINAL FINISH
SEE NOTE 4

MIT
INSTRUMENTATION LAB
CAMBRIDGE, MASS
DWG. NO. CONTRACT
DRAWN H. Carlson DATE 5 OCT 63
CHECKED 5 NOV 63
APPROVAL
APPROVAL
NASA APPROVAL
MIT APPROVAL
MIT APPROVAL

MANNED SPACECRAFT CENTER
HOUSTON, TEXAS

HOUSING, FRONT PANEL
AGC DSKY MAIN

CODE IDENT NO. ——
SIZE E
NASA DRAWING NO. 1004151
SCALE 1/1
WT
SHEET 1 OF 2

NOTICE — WHEN GOVERNMENT DRAWINGS, SPECIFICATIONS, OR OTHER DATA ARE USED FOR ANY PURPOSE OTHER THAN IN CONNECTION WITH A DEFINITELY RELATED GOVERNMENT PROCUREMENT OPERATION, THE UNITED STATES GOVERNMENT THEREBY INCURS NO RESPONSIBILITY NOR ANY OBLIGATION WHATSOEVER; AND THE FACT THAT THE GOVERNMENT MAY HAVE FORMULATED, FURNISHED, OR IN ANY WAY SUPPLIED THE SAID DRAWINGS, SPECIFICATIONS, OR OTHER DATA IS NOT TO BE REGARDED BY IMPLICATION OR OTHERWISE AS IN ANY MANNER LICENSING THE HOLDER OR ANY OTHER PERSON OR CORPORATION, OR CONVEYING ANY RIGHTS OR PERMISSION TO MANUFACTURE, USE, OR SELL ANY PATENTED INVENTION THAT MAY IN ANY WAY BE RELATED THERETO.

REVISIONS 00735

SYM	DESCRIPTION	DATE	APPROVAL
A	REVISED PER TDRR 05113	1/10/64	
B	REVISED PER TDRR 05790	1/21/64	J.T.B. WK
C	REVISED PER TDRR 07267 DR CHK	3/13/64	NLC

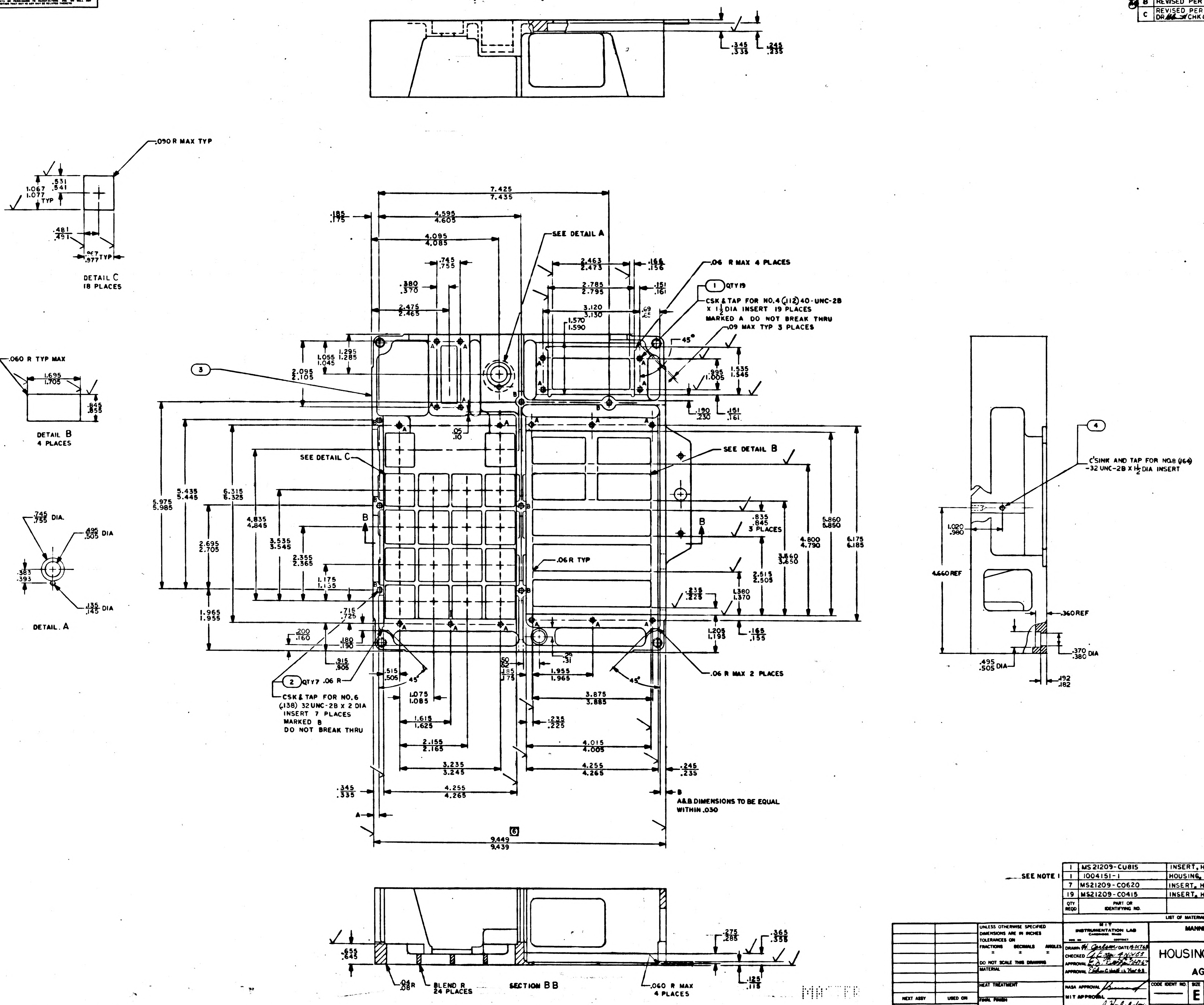

.345
.335
.245
.235
.090 R MAX TYP
1.067
1.077
TYP
.531
.541
.481
.491
.967
.977 TYP
DETAIL C
18 PLACES
.060 R TYP MAX
1.695
1.705
.845
.855
DETAIL B
4 PLACES
.745
.755 DIA.
.495
.505 DIA
.383
.393
.135
.145 DIA
DETAIL A
7.425
7.435
.185
.175
4.595
4.605
4.095
4.085
SEE DETAIL A
.745
.755
.380
.370
2.475
2.465
2.463
2.473
.166
.156
2.785
2.795
.151
.161
3.120
3.130
1.570
1.590
.06 R MAX 4 PLACES
① QTY 19
CSK & TAP FOR NO.4 (.112) 40-UNC-2B X 1 1/2 DIA INSERT 19 PLACES MARKED A DO NOT BREAK THRU
.09 MAX TYP 3 PLACES
45°
1.295
1.285
1.055
1.045
2.095
2.105
③
1.535
1.545
.995
1.005
.190
.230
.151
.161
.05
.10
SEE DETAIL C
SEE DETAIL B
5.975
5.985
5.435
5.445
6.315
6.325
4.835
4.845
3.535
3.545
2.695
2.705
2.355
2.365
1.175
1.135
1.965
1.955
.835
.845
3 PLACES
4.800
4.790
5.860
5.850
6.175
6.185
3.660
3.650
2.515
2.505
1.380
1.370
.235
.225
.06 R TYP
B
B
.715
.725
.200
.160
.180
.190
.915
.905
1.205
1.195
.165
.155
② QTY 7
.06 R
CSK & TAP FOR NO.6 (.138) 32 UNC-2B X 2 DIA INSERT 7 PLACES MARKED B DO NOT BREAK THRU
.515
.505
45°
1.075
1.085
.50
.185
.175
.29
.31
1.955
1.965
45°
.06 R MAX 2 PLACES
3.875
3.885
1.615
1.625
.235
.225
2.155
2.165
4.015
4.005
3.235
3.245
4.255
4.265
.245
.235
.345
.335
4.255
4.265
A
B
A & B DIMENSIONS TO BE EQUAL WITHIN .030
6
9.449
9.439
④
C'SINK AND TAP FOR NO.8 (.164) -32 UNC-2B X 1 1/2 DIA INSERT
1.020
.980
4.660 REF
.360 REF
.370
.380 DIA
.495
.505 DIA
.192
.182
.655
.645
.04
.08 R
BLEND R 24 PLACES
SECTION B B
.060 R MAX 4 PLACES
.275
.285
.365
.355
.125
.115

SEE NOTE 1

QTY REQD	PART OR IDENTIFYING NO.	NOMENCLATURE OR DESCRIPTION	FIND NO
1	MS21209-CU815	INSERT, HELICAL	4
1	1004151-1	HOUSING, FRONT PANEL	3
7	MS21209-C0620	INSERT, HELICAL	2
19	MS21209-C0415	INSERT, HELICAL	1

LIST OF MATERIALS

NEXT ASSY	USED ON
APPLICATION	

UNLESS OTHERWISE SPECIFIED DIMENSIONS ARE IN INCHES
TOLERANCES ON
FRACTIONS ± DECIMALS ± ANGLES ±
DO NOT SCALE THIS DRAWING
MATERIAL
HEAT TREATMENT
FINAL FINISH

MIT INSTRUMENTATION LAB
CAMBRIDGE, MASS
DWG NO CONTRACT
DRAWN H. Carlson DATE 15 OCT 63
CHECKED A. Egan 4 NOV 63
APPROVAL
APPROVAL
NASA APPROVAL
MIT APPROVAL
MIT APPROVAL

MANNED SPACECRAFT CENTER
HOUSTON, TEXAS

HOUSING, FRONT PANEL
AGC DSKY MAIN

CODE IDENT NO. —
SIZE E
NASA DRAWING NO. 1004151
SCALE 1/1
WT
SHEET 2 OF 2

1004151 D

NOTICE — WHEN GOVERNMENT DRAWINGS, SPECIFICATIONS, OR OTHER DATA ARE USED FOR ANY PURPOSE OTHER THAN IN CONNECTION WITH A DEFINITELY RELATED GOVERNMENT PROCUREMENT OPERATION, THE UNITED STATES GOVERNMENT THEREBY INCURS NO RESPONSIBILITY NOR ANY OBLIGATION WHATSOEVER, AND THE FACT THAT THE GOVERNMENT MAY HAVE FORMULATED, FURNISHED, OR IN ANY WAY SUPPLIED THE SAID DRAWINGS, SPECIFICATIONS, OR OTHER DATA IS NOT TO BE REGARDED BY IMPLICATION OR OTHERWISE AS IN ANY MANNER LICENSING THE HOLDER OR ANY OTHER PERSON OR CORPORATION, OR CONVEYING ANY RIGHTS OR PERMISSION TO MANUFACTURE, USE, OR SELL ANY PATENTED INVENTION THAT MAY IN ANY WAY BE RELATED THERETO.

REVISIONS 04735

SYM	DESCRIPTION	DATE	APPROVAL
A	REVISED PER TDRR 05113	20 DEC 63	
B	REVISED PER TDRR 05790	4/21/64	
C	REVISED PER TDRR 07267 DR CHK	3/23/	
D	REVISED PER TDRR 07644 DR CHK	4/30/64	

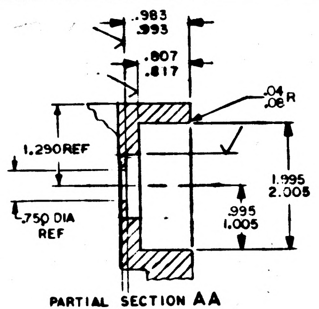
.983
.993
.807
.817
.04
.08 R
1.290 REF
.750 DIA REF
1.995
2.005
.995
1.005
.090
.100

PARTIAL SECTION AA

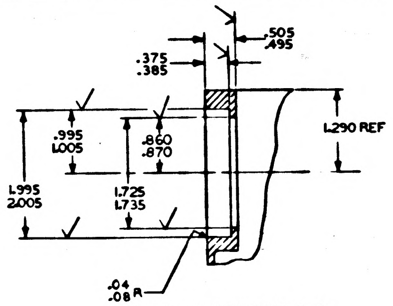
.505
.495
.375
.385
.995
1.005
.860
.870
1.290 REF
1.995
2.005
1.725
1.735
.04
.08 R

PARTIAL SECTION D-D

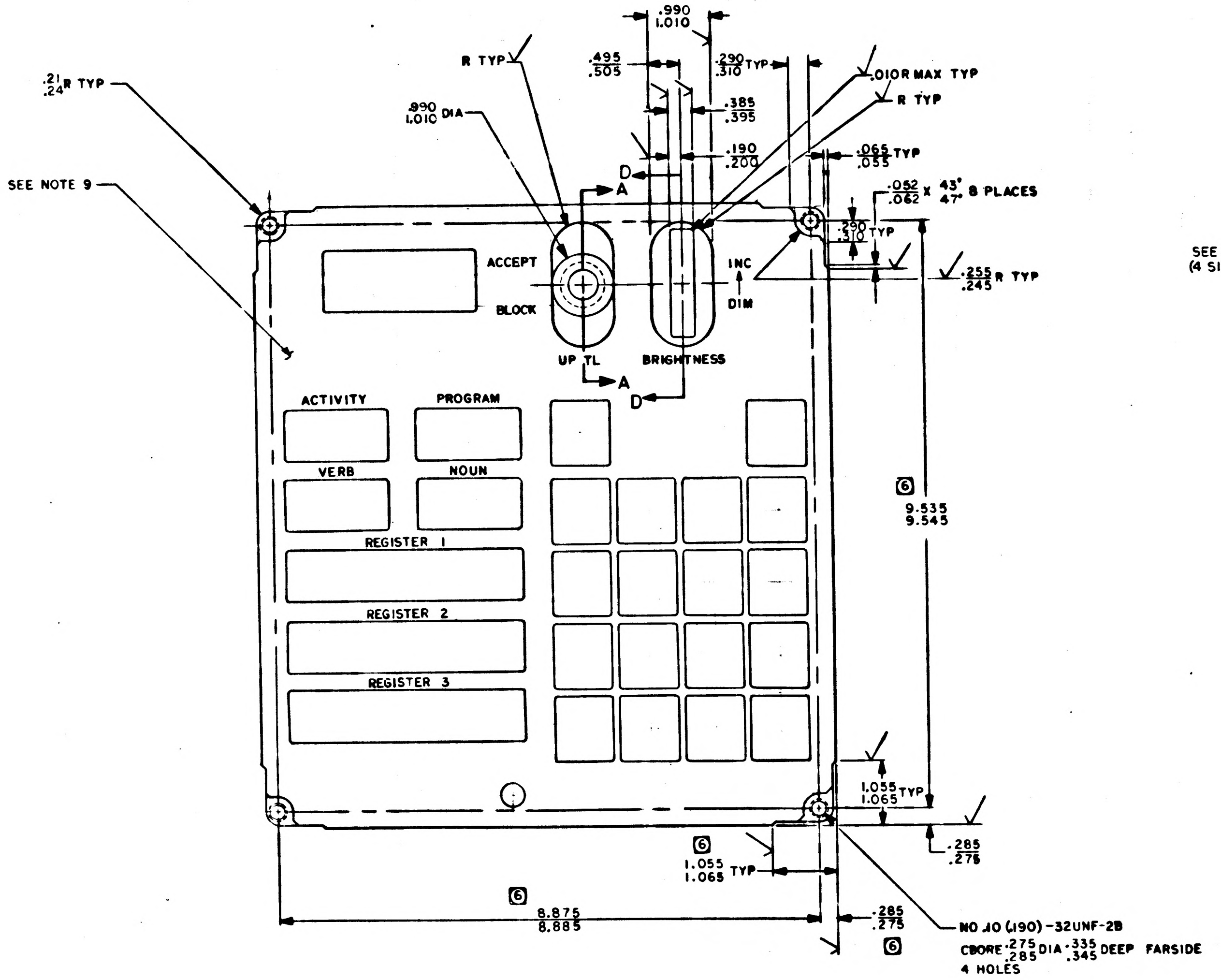
.21
.24 R TYP
SEE NOTE 9
R TYP
.990
1.010 DIA
.495
.505
.990
1.010
.290
.310 TYP
.385
.395
.190
.200
.010 R MAX TYP
R TYP
.065
.055 TYP
.052
.062 X 43°
47° 8 PLACES
.290
.310 TYP
.255
.245 R TYP
D
A
ACCEPT
BLOCK
UP TL
INC
DIM
BRIGHTNESS
ACTIVITY
PROGRAM
VERB
NOUN
REGISTER 1
REGISTER 2
REGISTER 3
6
9.535
9.545
1.055
1.065 TYP
.285
.275
6
1.055
1.065 TYP
6
8.875
8.885
.285
.275
6
NO .10 (.190)-32UNF-2B
CBORE .275
.285 DIA .335
.345 DEEP FARSIDE
4 HOLES

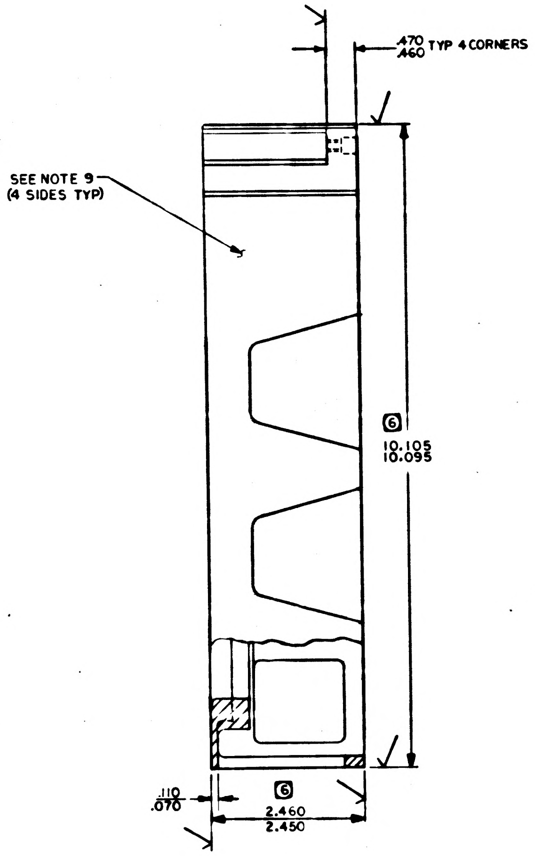
.470
.460 TYP 4 CORNERS
SEE NOTE 9
(4 SIDES TYP)
6
10.105
10.095
.110
.070
6
2.460
2.450

NOTES

1. MAKE FROM DWG 1004586
2. SURFACE MARKED √ TO BE 125√
3. REMOVE ALL BURRS AND SHARP EDGES
4. ANODIZE PER MIL-A-8625, TYPE I CHROMIC-ACID DYED BLACK
5. SILK SCREEN .12 HIGH WHITE PER ND1002019 LOCATE MARKING APPROXIMATELY WHERE SHOWN
6. ⑥ DIMENSIONS ARE CONTROLLED BY ICDMH01-01005-116
7. INTERPRET DRAWING IN ACCORDANCE WITH STANDARDS PRESCRIBED BY MIL-D-70327
8. ⑧ NOTES CONTROLLED BY ICD-MH01-01046-416
9. PAINT INDICATED SURFACES WITH 1010729-1 MEDIUM GREY EPOXY RESIN ENAMEL PER ND1002110

MASTER

QTY REQD	PART OR IDENTIFYING NO.	NOMENCLATURE OR DESCRIPTION	FIND NO.

LIST OF MATERIALS

1003459	1003400
NEXT ASSY	USED ON
APPLICATION	

UNLESS OTHERWISE SPECIFIED DIMENSIONS ARE IN INCHES
TOLERANCES ON
FRACTIONS ± DECIMALS ± ANGLES ±
DO NOT SCALE THIS DRAWING
MATERIAL: SEE NOTE 1
HEAT TREATMENT: NONE
FINAL FINISH: SEE NOTE 4

MIT
INSTRUMENTATION LAB
CAMBRIDGE, MASS.
DWG NO / CONTRACT
DRAWN H. Carlson DATE 15 OCT 63
CHECKED 5 NOV 63
APPROVAL
APPROVAL
NASA APPROVAL
MIT APPROVAL
MIT APPROVAL

MANNED SPACECRAFT CENTER
HOUSTON, TEXAS

HOUSING, FRONT PANEL
AGC DSKY MAIN

CODE IDENT NO.	SIZE	NASA DRAWING NO.
—	E	1004151

SCALE 1/1 WT SHEET 1 OF 2

1004151

NOTICE — WHEN GOVERNMENT DRAWINGS, SPECIFICATIONS, OR OTHER DATA ARE USED FOR ANY PURPOSE OTHER THAN IN CONNECTION WITH A DEFINITELY RELATED GOVERNMENT PROCUREMENT OPERATION, THE UNITED STATES GOVERNMENT THEREBY INCURS NO RESPONSIBILITY NOR ANY OBLIGATION WHATSOEVER; AND THE FACT THAT THE GOVERNMENT MAY HAVE FORMULATED, FURNISHED, OR IN ANY WAY SUPPLIED THE SAID DRAWINGS, SPECIFICATIONS, OR OTHER DATA IS NOT TO BE REGARDED BY IMPLICATION OR OTHERWISE AS IN ANY MANNER LICENSING THE HOLDER OR ANY OTHER PERSON OR CORPORATION, OR CONVEYING ANY RIGHTS OR PERMISSION TO MANUFACTURE, USE, OR SELL ANY PATENTED INVENTION THAT MAY IN ANY WAY BE RELATED THERETO

1004151 D

REVISIONS

SYM	DESCRIPTION	DATE	APPROVAL
A	REVISED PER TDRR 05113	11/10/63	
B	REVISED PER TDRR 05790	1/21/64	L.J.B.
C	REVISED PER TDRR 07267 DR CHK	3/23/64	NLC
D	REVISED PER TDRR 07644 DR CHK	4/30/64	NLC

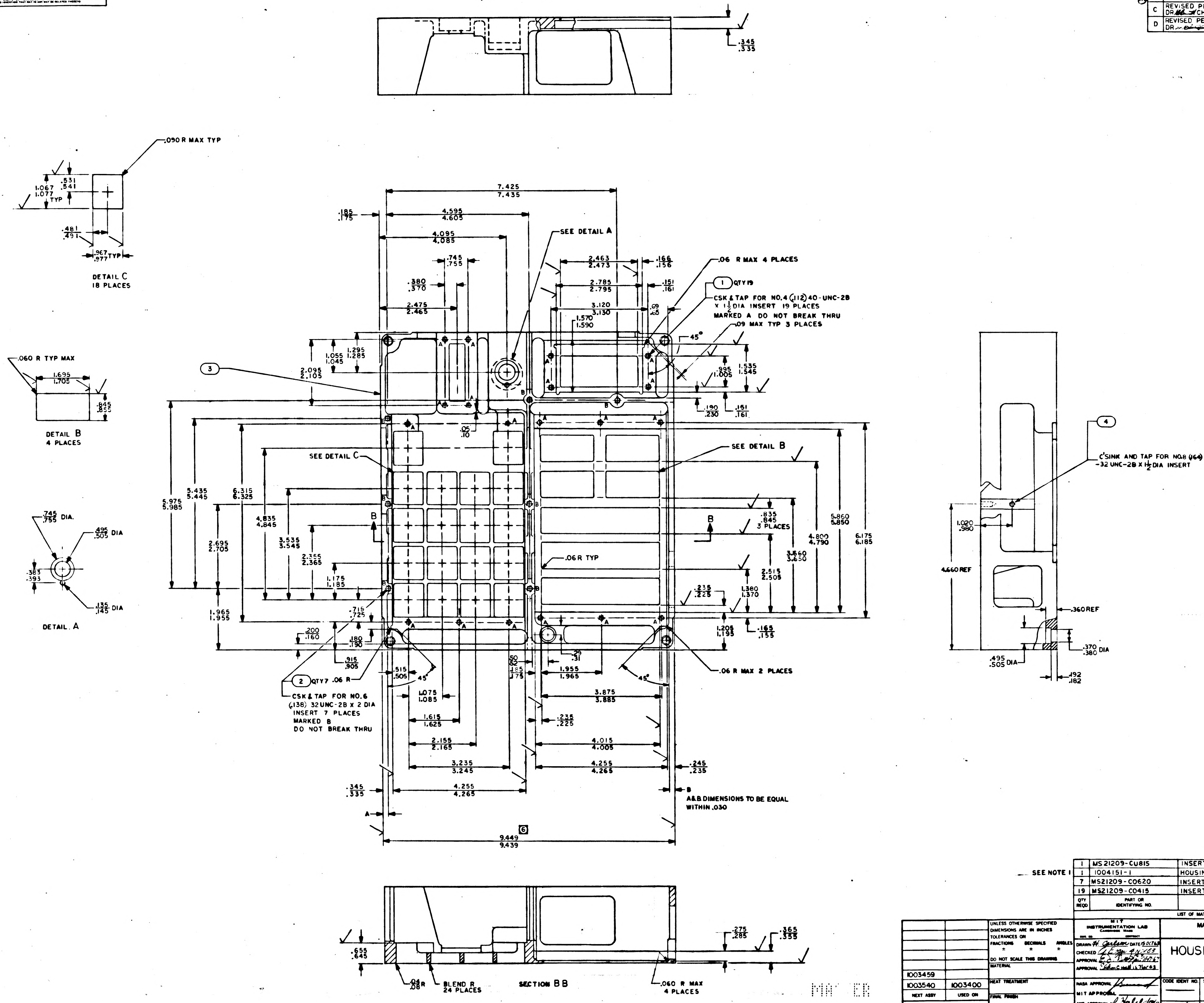

.345
.335
.090 R MAX TYP
1.067
1.077
.531
.541
TYP
.481
.491
.967
.977 TYP
DETAIL C
18 PLACES
.060 R TYP MAX
1.695
1.705
.845
.855
DETAIL B
4 PLACES
.745
.755 DIA.
.495
.505 DIA
.383
.393
.135
.145 DIA
DETAIL A
7.425
7.435
.185
.175
4.595
4.605
4.095
4.085
SEE DETAIL A
.745
.755
.380
.370
2.475
2.465
2.463
2.473
.166
.156
2.785
2.795
.151
.161
3.120
3.130
1.570
1.590
.09
.05
.06 R MAX 4 PLACES
1 QTY 19
CSK & TAP FOR NO.4 (.112) 40-UNC-2B X 1 1/2 DIA INSERT 19 PLACES MARKED A DO NOT BREAK THRU
.09 MAX TYP 3 PLACES
45°
1.535
1.545
.995
1.005
.190
.230
.151
.161
3
2.095
2.105
1.055
1.045
1.295
1.285
.05
.10
SEE DETAIL C
SEE DETAIL B
5.975
5.985
5.435
5.445
6.315
6.325
4.835
4.845
2.695
2.705
3.535
3.545
2.355
2.365
1.175
1.185
1.965
1.955
B
.835
.845
3 PLACES
.06 R TYP
5.860
5.850
4.800
4.790
3.660
3.650
2.515
2.505
6.175
6.185
.235
.225
1.380
1.370
1.205
1.195
.165
.155
.715
.725
.200
.160
.180
.190
.915
.905
.515
.505
45°
.50
.60
.185
.175
.29
.31
1.955
1.965
.06 R MAX 2 PLACES
45°
2 QTY 7
.06 R
CSK & TAP FOR NO.6 (.138) 32 UNC-2B X 2 DIA INSERT 7 PLACES MARKED B DO NOT BREAK THRU
1.075
1.085
3.875
3.885
1.615
1.625
.235
.225
2.155
2.165
4.015
4.005
3.235
3.245
4.255
4.265
.245
.235
.345
.335
4.255
4.265
B
A&B DIMENSIONS TO BE EQUAL WITHIN .030
A
6
9.449
9.439
4
C'SINK AND TAP FOR NO.8 (.164) -32 UNC-2B X 1 1/2 DIA INSERT
1.020
.980
4.660 REF
.360 REF
.370
.380 DIA
.495
.505 DIA
.192
.182
.655
.645
.275
.285
.365
.355
.04
.08 R
BLEND R 24 PLACES
SECTION BB
.060 R MAX 4 PLACES

SEE NOTE 1

QTY REQD	PART OR IDENTIFYING NO.	NOMENCLATURE OR DESCRIPTION	FIND NO
1	MS21209-CU815	INSERT, HELICAL	4
1	1004151-1	HOUSING, FRONT PANEL	3
7	MS21209-C0620	INSERT, HELICAL	2
19	MS21209-C0415	INSERT, HELICAL	1

LIST OF MATERIALS

NEXT ASSY	USED ON
1003459	
1003540	1003400

APPLICATION

UNLESS OTHERWISE SPECIFIED DIMENSIONS ARE IN INCHES
TOLERANCES ON
FRACTIONS ± DECIMALS ± ANGLES ±
DO NOT SCALE THIS DRAWING
MATERIAL
HEAT TREATMENT
FINAL FINISH

MIT
INSTRUMENTATION LAB
CAMBRIDGE MASS
DWG. NO. CONTRACT
DRAWN H. Carlson DATE 15 OCT 63
CHECKED 4 NOV 63
APPROVAL
APPROVAL 15 Nov 63
NASA APPROVAL
MIT APPROVAL
MIT APPROVAL

MANNED SPACECRAFT CENTER
HOUSTON, TEXAS

HOUSING, FRONT PANEL
AGC DSKY MAIN

CODE IDENT NO. —
SIZE E
NASA DRAWING NO. 1004151
SCALE 1/1 WT SHEET 2 OF 2

1004151

1004151E

SYM	DESCRIPTION	DATE	APPROVAL
A	REVISED PER TDRR 05113		
B	REVISED PER TDRR 05790	1/21/64	
C	REVISED PER TDRR 07267 DR CHK	3/23/	
D	REVISED PER TDRR 07644 DR CHK		
E	REVISED PER TDRR 10892 DR R Bouchard CHK R.P.B.	7/2/64	

REVISIONS 04735

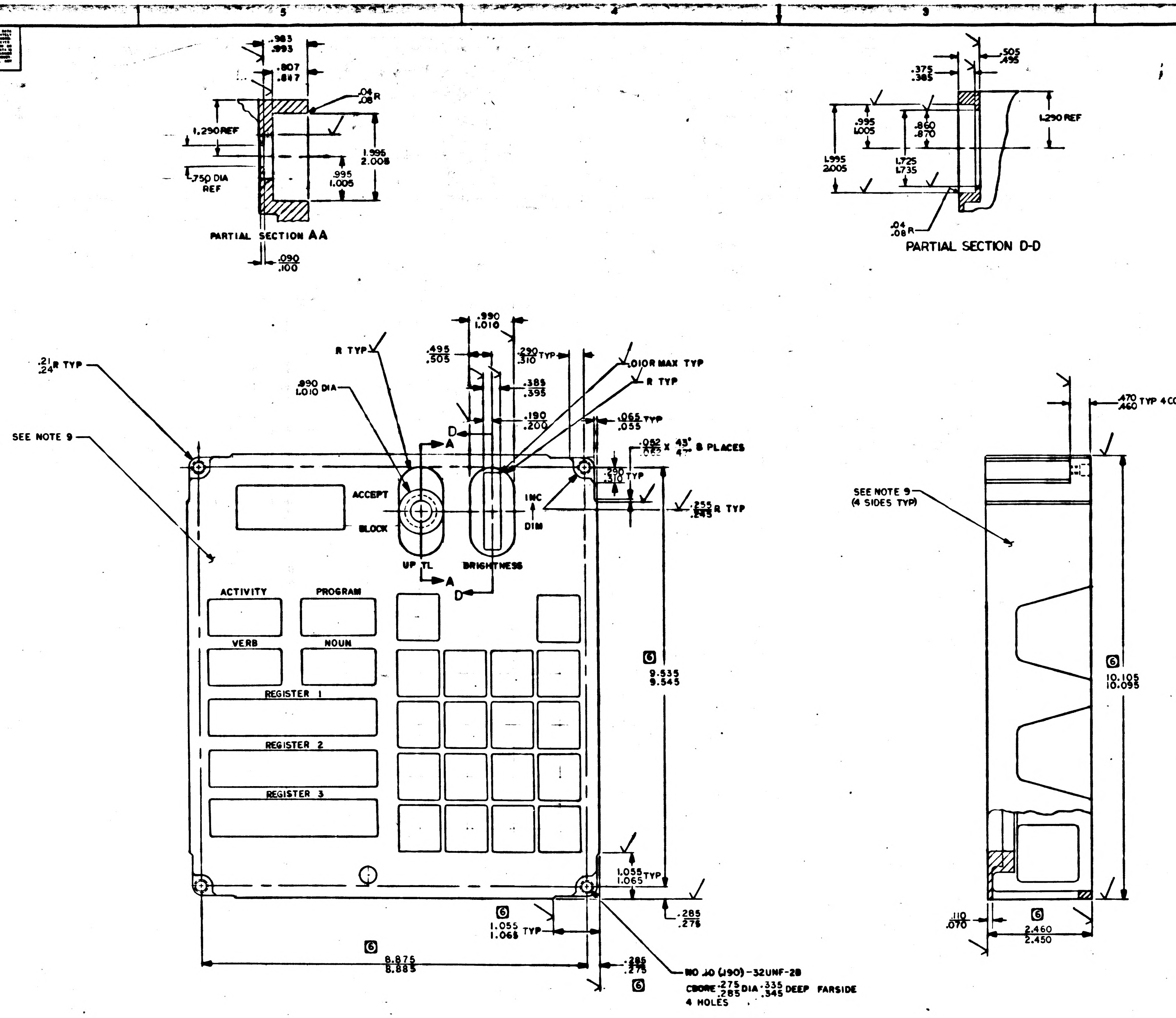

.983 .993
.807 .847
.04 .08 R
1.290 REF
1.996 2.008
.995 1.005
.750 DIA REF
PARTIAL SECTION AA
.090 .100
.505 .495
.375 .385
.995 1.005
.860 .870
1.290 REF
1.995 2.005
1.725 1.735
.04 .08 R
PARTIAL SECTION D-D
.21 .24 R TYP
SEE NOTE 9
R TYP
.890 1.010 DIA
.495 .505
.990 1.010
.290 .310 TYP
.385 .395
.190 .200
.010 R MAX TYP
R TYP
.065 .055 TYP
.092 .085 X 43° 47° 8 PLACES
.290 .310 TYP
.255 .245 R TYP
D
A
ACCEPT
BLOCK
UP TL
BRIGHTNESS
INC
DIM
ACTIVITY
PROGRAM
VERB
NOUN
REGISTER 1
REGISTER 2
REGISTER 3
6
9.535 9.545
1.055 1.065 TYP
.285 .275
1.055 1.065 TYP
8.875 8.885
.285 .275
NO 10 (.190)-32UNF-2B
CBORE .275 .285 DIA .335 .345 DEEP FARSIDE
4 HOLES
.470 .460 TYP 4 CORNERS
SEE NOTE 9 (4 SIDES TYP)
10.105 10.095
.110 .070
2.460 2.450

NOTES
1. MAKE FROM DWG 1004586
2. SURFACE MARKED √ TO BE 125√
3. REMOVE ALL BURRS AND SHARP EDGES
4. ANODIZE PER MIL-A-8625, TYPE I CHROMIC-ACID DYED BLACK
5. SILK SCREEN .12 HIGH WHITE PER ND1002019 LOCATE MARKING APPROXIMATELY WHERE SHOWN
6. $\boxed{6}$ DIMENSIONS ARE CONTROLLED BY ICDMH01-01005-116
7. INTERPRET DRAWING IN ACCORDANCE WITH STANDARDS PRESCRIBED BY MIL-D-70327
8. $\boxed{8}$ NOTES CONTROLLED BY ICD-MH01-01046-416
9. PAINT INDICATED SURFACES WITH 1010729-1 MEDIUM GREY EPOXY RESIN ENAMEL PER ND1002110
10. IDENTIFY PER ND1002019

MASTER

QTY REQD	PART OR IDENTIFYING NO.	NOMENCLATURE OR DESCRIPTION	FIND NO.

LIST OF MATERIALS

1003459	
NEXT ASSY	USED ON
APPLICATION	

UNLESS OTHERWISE SPECIFIED DIMENSIONS ARE IN INCHES
TOLERANCES ON
FRACTIONS ± DECIMALS ± ANGLES ±
DO NOT SCALE THIS DRAWING
MATERIAL SEE NOTE 1
HEAT TREATMENT NONE
FINAL FINISH SEE NOTE 4

MIT INSTRUMENTATION LAB
CAMBRIDGE, MASS
DRAWN H. Carlson DATE 5 OCT 63
CHECKED A.R. Bogni 5 NOV 63
APPROVAL E. J. Biggs
APPROVAL
NASA APPROVAL
MIT APPROVAL
MIT APPROVAL

MANNED SPACECRAFT CENTER
HOUSTON, TEXAS

HOUSING, FRONT PANEL
AGC DSKY MAIN

CODE IDENT NO. —— SIZE E NASA DRAWING NO. 1004151
SCALE 1/1 WT SHEET 1 OF 2

NOTICE — WHEN GOVERNMENT DRAWINGS, SPECIFICATIONS, OR OTHER DATA ARE USED FOR ANY PURPOSE OTHER THAN IN CONNECTION WITH A DEFINITELY RELATED GOVERNMENT PROCUREMENT OPERATION, THE UNITED STATES GOVERNMENT THEREBY INCURS NO RESPONSIBILITY NOR ANY OBLIGATION WHATSOEVER; AND THE FACT THAT THE GOVERNMENT MAY HAVE FORMULATED, FURNISHED, OR IN ANY WAY SUPPLIED THE SAID DRAWINGS, SPECIFICATIONS, OR OTHER DATA IS NOT TO BE REGARDED BY IMPLICATION OR OTHERWISE AS IN ANY MANNER LICENSING THE HOLDER OR ANY OTHER PERSON OR CORPORATION, OR CONVEYING ANY RIGHTS OR PERMISSION TO MANUFACTURE, USE, OR SELL ANY PATENTED INVENTION THAT MAY IN ANY WAY BE RELATED THERETO.

REVISIONS 04795

SYM	DESCRIPTION	DATE	APPROVAL
A	REVISED PER TDRR 05113	11/10/63	
B	REVISED PER TDRR 05790	1/21/64	L.T.B.
C	REVISED PER TDRR 07267 DR CHK	3/23/64	
D	REVISED PER TDRR 07644 DR CHK	4/3/64	
E	REVISED PER TDRR 10892 DR P. Buchanan CHK A.R.B.	7/2/64	

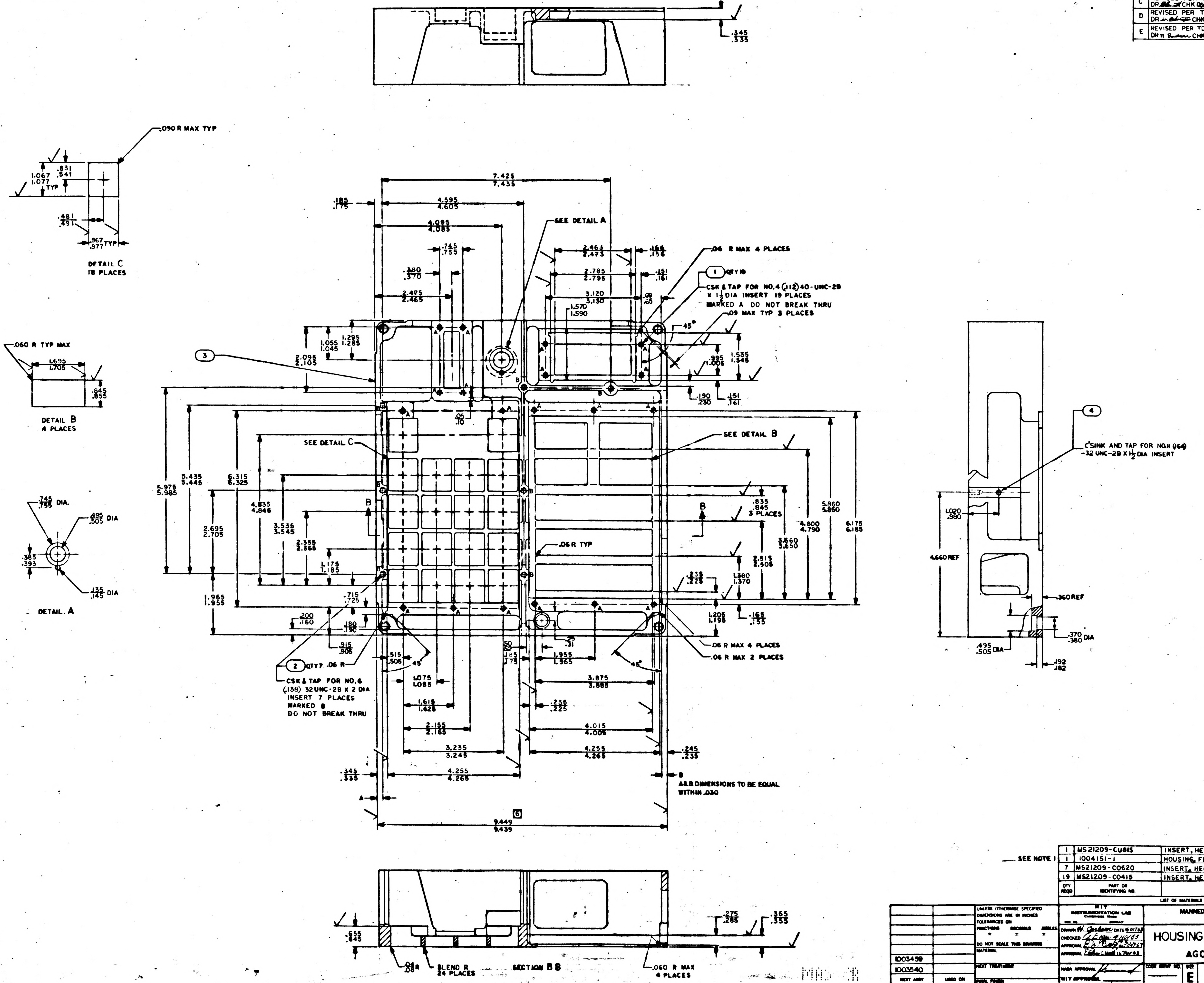

1004151 E
.345
.335
.090 R MAX TYP
.531
.541
1.067
1.077
TYP
.481
.491
.967
.977 TYP
DETAIL C
18 PLACES
.060 R TYP MAX
1.695
1.705
.845
.855
DETAIL B
4 PLACES
.745
.755 DIA.
.495
.505 DIA
.383
.393
.135
.145 DIA
DETAIL A
7.425
7.435
.185
.175
4.595
4.605
4.095
4.085
.745
.755
.380
.370
2.475
2.465
SEE DETAIL A
2.464
2.473
.166
.156
2.785
2.795
.151
.161
3.120
3.130
1.570
1.590
.06 R MAX 4 PLACES
① QTY 19
CSK & TAP FOR NO.4 (.112) 40-UNC-2B X 1½ DIA INSERT 19 PLACES MARKED A DO NOT BREAK THRU
.09 MAX TYP 3 PLACES
45°
1.535
1.545
.995
1.005
.190
.230
.151
.161
③
1.055
1.045
1.295
1.285
2.095
2.105
5.975
5.985
5.435
5.445
6.315
6.325
4.835
4.845
3.535
3.545
2.695
2.705
2.355
2.365
1.175
1.185
1.965
1.955
SEE DETAIL C
SEE DETAIL B
.835
.845
3 PLACES
.06 R TYP
4.800
4.790
3.660
3.650
5.860
5.850
6.175
6.185
2.515
2.505
1.360
1.370
.235
.225
1.205
1.195
.165
.155
B
.715
.725
.200
.160
.180
.190
.915
.905
② QTY 7
.06 R
CSK & TAP FOR NO.6 (.138) 32UNC-2B X 2 DIA INSERT 7 PLACES MARKED B DO NOT BREAK THRU
.515
.505
45°
1.075
1.085
1.618
1.628
2.155
2.165
3.235
3.245
4.255
4.265
.345
.335
A
.185
.175
.25
.31
1.955
1.965
3.875
3.885
.235
.225
4.015
4.005
4.255
4.265
.245
.235
B
A&B DIMENSIONS TO BE EQUAL WITHIN .030
.06 R MAX 4 PLACES
.06 R MAX 2 PLACES
9.449
9.439
④
C'SINK AND TAP FOR NO.8 (.164) -32 UNC-2B X 1½ DIA INSERT
1.020
.980
4.660 REF
.360 REF
.370
.380 DIA
.495
.505 DIA
.192
.182
.275
.285
.365
.355
.655
.645
.06
.08 R
BLEND R 24 PLACES
SECTION B B
.060 R MAX 4 PLACES

SEE NOTE 1

QTY REQD	PART OR IDENTIFYING NO.	NOMENCLATURE OR DESCRIPTION	FIND NO.
1	MS21209-CU815	INSERT, HELICAL	4
1	1004151-1	HOUSING, FRONT PANEL	3
7	MS21209-C0620	INSERT, HELICAL	2
19	MS21209-C0415	INSERT, HELICAL	1

LIST OF MATERIALS

NEXT ASSY	USED ON
1003459	
1003540	

APPLICATION

UNLESS OTHERWISE SPECIFIED DIMENSIONS ARE IN INCHES
TOLERANCES ON
FRACTIONS ± DECIMALS ± ANGLES ±
DO NOT SCALE THIS DRAWING
MATERIAL
HEAT TREATMENT
FINAL FINISH

MIT INSTRUMENTATION LAB
CAMBRIDGE, MASS
DRAWN H. Carlson DATE 15 OCT 63
CHECKED A. Egan 4 NOV 63
APPROVAL 11 Nov 63
APPROVAL 15 Nov 63
NASA APPROVAL
MIT APPROVAL
MIT APPROVAL

MANNED SPACECRAFT CENTER
HOUSTON, TEXAS

HOUSING, FRONT PANEL
AGC DSKY MAIN

CODE IDENT NO. —
SIZE E
NASA DRAWING NO. 1004151
SCALE 1/1
WT
SHEET 2 OF 2

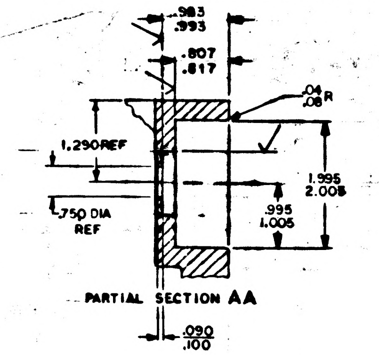
.983
.993
.807
.817
.04
.08 R
1.290 REF
.750 DIA REF
.995
1.005
1.995
2.005
.090
.100

PARTIAL SECTION AA

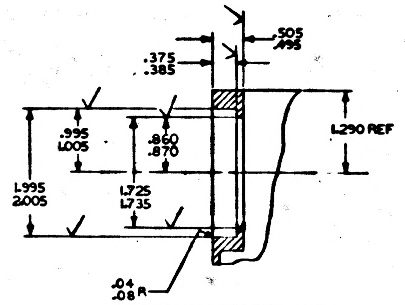
.505
.495
.375
.385
1.290 REF
.995
1.005
.860
.870
1.995
2.005
1.725
1.735
.04
.08 R

PARTIAL SECTION D-D

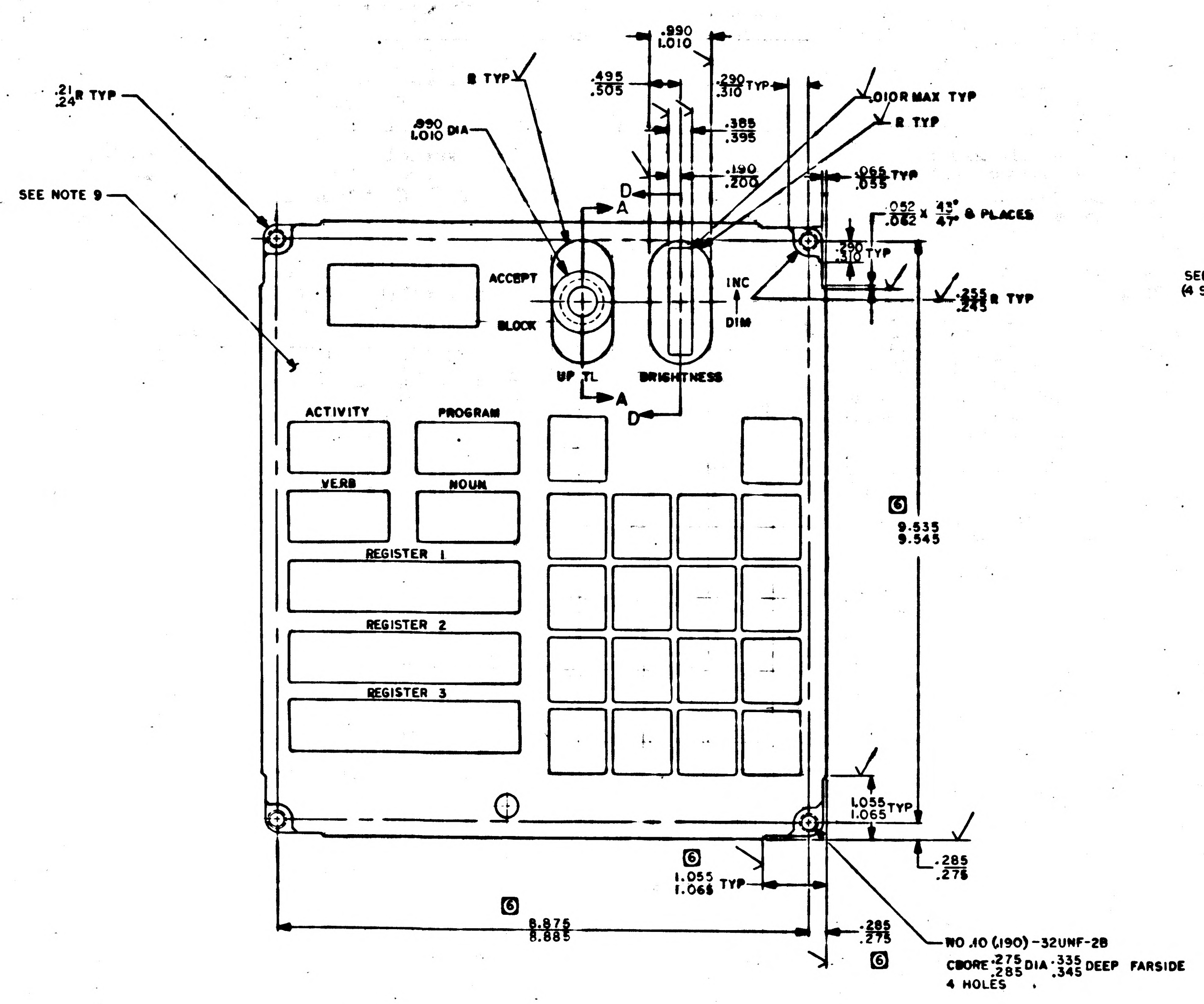
.21
.24 R TYP
SEE NOTE 9
R TYP
.990
1.010 DIA
.990
1.010
.495
.505
.290
.310 TYP
.385
.395
.190
.200
.010 R MAX TYP
R TYP
.065
.055 TYP
.052
.062 X 43°
47° 8 PLACES
.290
.310 TYP
.255
.245 R TYP
D
A
ACCEPT
BLOCK
UP TL
BRIGHTNESS
INC
DIM
ACTIVITY
PROGRAM
VERB
NOUN
REGISTER 1
REGISTER 2
REGISTER 3
6
9.535
9.545
1.055
1.065 TYP
.285
.275
6
1.055
1.065 TYP
6
8.875
8.885
.285
.275
6
NO .10 (.190)-32UNF-2B
CBORE .275
.285 DIA .335
.345 DEEP FARSIDE
4 HOLES

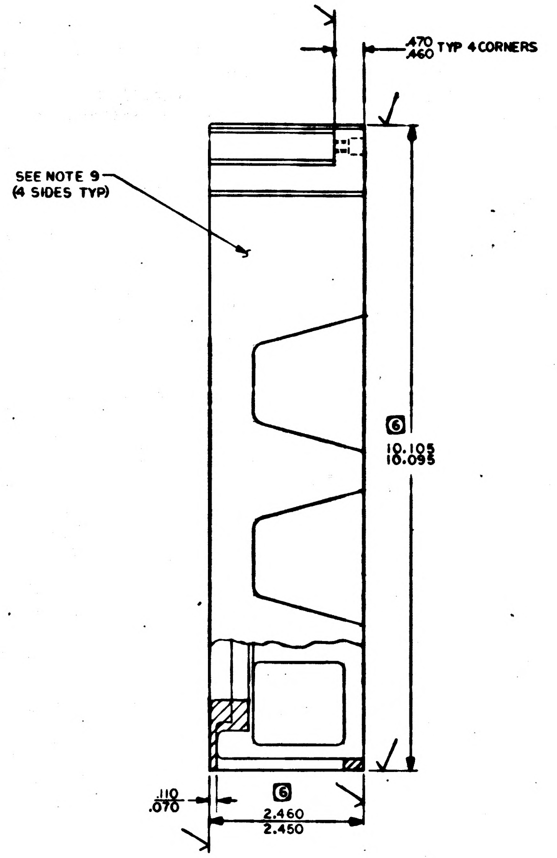
.470
.460 TYP 4 CORNERS
SEE NOTE 9
(4 SIDES TYP)
6
10.105
10.095
.110
.070
6
2.460
2.450

NOTES

1. MAKE FROM DWG 1004586
2. SURFACE MARKED ✓ TO BE 125✓
3. REMOVE ALL BURRS AND SHARP EDGES
4. ANODIZE PER MIL-A-8625, TYPE I CHROMIC-ACID DYED BLACK

5. SILK SCREEN .12 HIGH WHITE PER ND1002019 LOCATE MARKING APPROXIMATELY WHERE SHOWN
6. ⑥ DIMENSIONS ARE CONTROLLED BY ICDMH01-01005-116
7. INTERPRET DRAWING IN ACCORDANCE WITH STANDARDS PRESCRIBED BY MIL-D-70327
8. Ⓡ NOTES CONTROLLED BY ICD-MH01-01046-416
9. PAINT INDICATED SURFACES WITH 1010729-1 MEDIUM GREY EPOXY RESIN ENAMEL PER ND1002110
10. IDENTIFY PER ND1002019

REVISIONS 04735

SYM	DESCRIPTION	DATE	APPROVAL
A	REVISED PER TDRR 05113	[illegible]	[illegible]
B	REVISED PER TDRR 05790	4/21/64	[illegible]
C	REVISED PER TDRR 07267 DR [illegible] CHK [illegible]	3/22/	[illegible]
D	REVISED PER TDRR 07644 DR [illegible] CHK [illegible]	[illegible]	[illegible]
E	REVISED PER TDRR 10892 DR R Boudreau CHK A.R.B. RTM	7/2/64	HWC
F	REVISED PER TDRR 12038 DR [illegible] CHK A.R.B. RTM	8/17/64	HWC

QTY REQD	PART OR IDENTIFYING NO.	NOMENCLATURE OR DESCRIPTION	FIND NO.

LIST OF MATERIALS

1003459	
NEXT ASSY	USED ON

APPLICATION

UNLESS OTHERWISE SPECIFIED
DIMENSIONS ARE IN INCHES
TOLERANCES ON
FRACTIONS ± DECIMALS ± ANGLES ±
DO NOT SCALE THIS DRAWING

MATERIAL
SEE NOTE 1

HEAT TREATMENT
NONE

FINAL FINISH
SEE NOTE 4

MIT
INSTRUMENTATION LAB
CAMBRIDGE, MASS.

DRAWN W. Carlson DATE 5 OCT 63
CHECKED A.L. Bogni 5 NOV 63
APPROVAL E. J. [illegible] 5/11/8-63
APPROVAL [illegible]
NASA APPROVAL
MIT APPROVAL
MIT APPROVAL [illegible]

MANNED SPACECRAFT CENTER
HOUSTON, TEXAS

HOUSING, FRONT PANEL
AGC DSKY MAIN

CODE IDENT NO. —— SIZE E NASA DRAWING NO. 1004151

SCALE 1/1 WT SHEET 1 OF 2

MASTER

NOTICE — WHEN GOVERNMENT DRAWINGS, SPECIFICATIONS, OR OTHER DATA ARE USED FOR ANY PURPOSE OTHER THAN IN CONNECTION WITH A DEFINITELY RELATED GOVERNMENT PROCUREMENT OPERATION, THE UNITED STATES GOVERNMENT THEREBY INCURS NO RESPONSIBILITY NOR ANY OBLIGATION WHATSOEVER; AND THE FACT THAT THE GOVERNMENT MAY HAVE FORMULATED, FURNISHED, OR IN ANY WAY SUPPLIED THE SAID DRAWINGS, SPECIFICATIONS, OR OTHER DATA IS NOT TO BE REGARDED BY IMPLICATION OR OTHERWISE AS IN ANY MANNER LICENSING THE HOLDER OR ANY OTHER PERSON OR CORPORATION, OR CONVEYING ANY RIGHTS OR PERMISSION TO MANUFACTURE, USE, OR SELL ANY PATENTED INVENTION THAT MAY IN ANY WAY BE RELATED THERETO.

1004151 F

REVISIONS 84735

SYM	DESCRIPTION	DATE	APPROVAL
A	REVISED PER TDRR 05113	10/10/63	
B	REVISED PER TDRR 05790	1/21/64	A.R.B.
C	REVISED PER TDRR 07267 DR CHK	3/23/64	HWC
D	REVISED PER TDRR 07644 DR D. CHK	3/31/64	HWC
E	REVISED PER TDRR 10892 DR P. Buchanan CHK A.R.B. RTM	7/2/64	HWC
F	REVISED PER TDRR 12038 DR G.A.Bailey CHK A.R.B. RTM	9/17/64	HWC

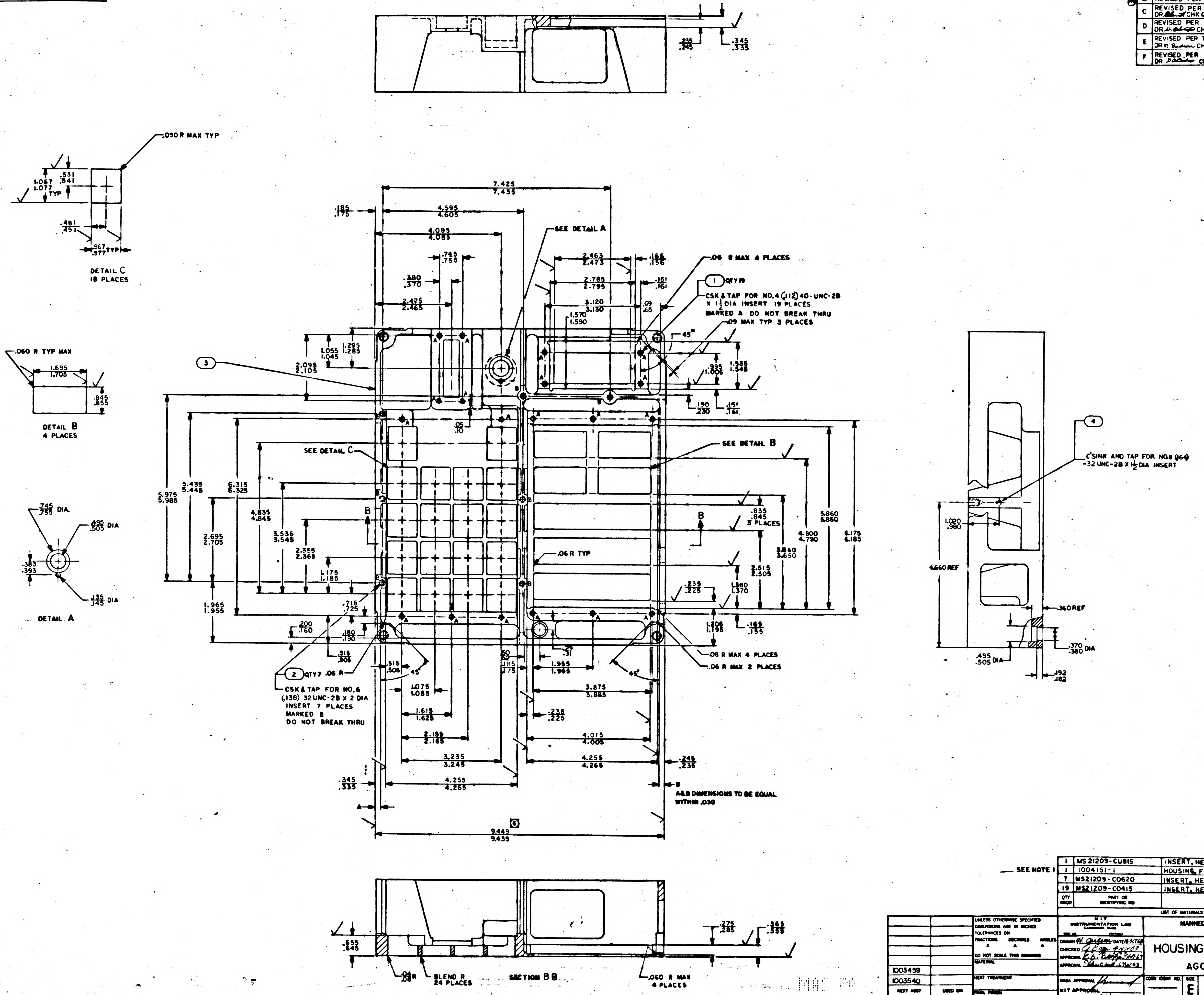

.090 R MAX TYP
DETAIL C
18 PLACES
.060 R TYP MAX
1.695
1.705
.845
.855
DETAIL B
4 PLACES
.745
.755 DIA.
.495
.505 DIA
.383
.393
.135
.145 DIA
DETAIL A
7.425
7.435
SEE DETAIL A
.06 R MAX 4 PLACES
1 QTY 19
CSK & TAP FOR NO.4 (.112) 40-UNC-2B X 1 1/2 DIA INSERT 19 PLACES MARKED A DO NOT BREAK THRU
.09 MAX TYP 3 PLACES
45°
3
SEE DETAIL C
SEE DETAIL B
.835
.845
3 PLACES
.06 R TYP
B
2 QTY 7
CSK & TAP FOR NO.6 (.138) 32UNC-2B X 2 DIA INSERT 7 PLACES MARKED B DO NOT BREAK THRU
.06 R
.06 R MAX 4 PLACES
.06 R MAX 2 PLACES
A & B DIMENSIONS TO BE EQUAL WITHIN .030
9.449
9.439
G
4
C'SINK AND TAP FOR NO.8 (.164) -32 UNC-2B X 1 1/2 DIA INSERT
4.660 REF
.360 REF
.370
.380 DIA
.495
.505 DIA
.192
.182
.04
.08 R
BLEND R
24 PLACES
SECTION B B
.060 R MAX
4 PLACES

QTY REQD	PART OR IDENTIFYING NO.	NOMENCLATURE OR DESCRIPTION	FIND NO.
1	MS 21209-CU815	INSERT, HELICAL	4
1	1004151-1	HOUSING, FRONT PANEL	3
7	MS21209-C0620	INSERT, HELICAL	2
19	MS21209-C0415	INSERT, HELICAL	1

SEE NOTE 1

LIST OF MATERIALS

NEXT ASSY	USED ON
1003459	
1003540	

APPLICATION

UNLESS OTHERWISE SPECIFIED
DIMENSIONS ARE IN INCHES
TOLERANCES ON
FRACTIONS ± DECIMALS ± ANGLES ±
DO NOT SCALE THIS DRAWING
MATERIAL
HEAT TREATMENT
FINAL FINISH

M I T
INSTRUMENTATION LAB
CAMBRIDGE, MASS
DRAWN H. Carlson DATE 15 OCT 63
CHECKED A. Egan 4 NOV 63
APPROVAL E. D. 11-17-63
APPROVAL Eldon C Hall 15 Nov 63
NASA APPROVAL
MIT APPROVAL
MIT APPROVAL

MANNED SPACECRAFT CENTER
HOUSTON, TEXAS

HOUSING, FRONT PANEL
AGC DSKY MAIN

CODE IDENT NO. ——
SIZE E
NASA DRAWING NO. 1004151
SCALE 1/1
WT
SHEET 2 OF 2

1004151

REVISIONS

SYM	DESCRIPTION	DATE	APPROVAL

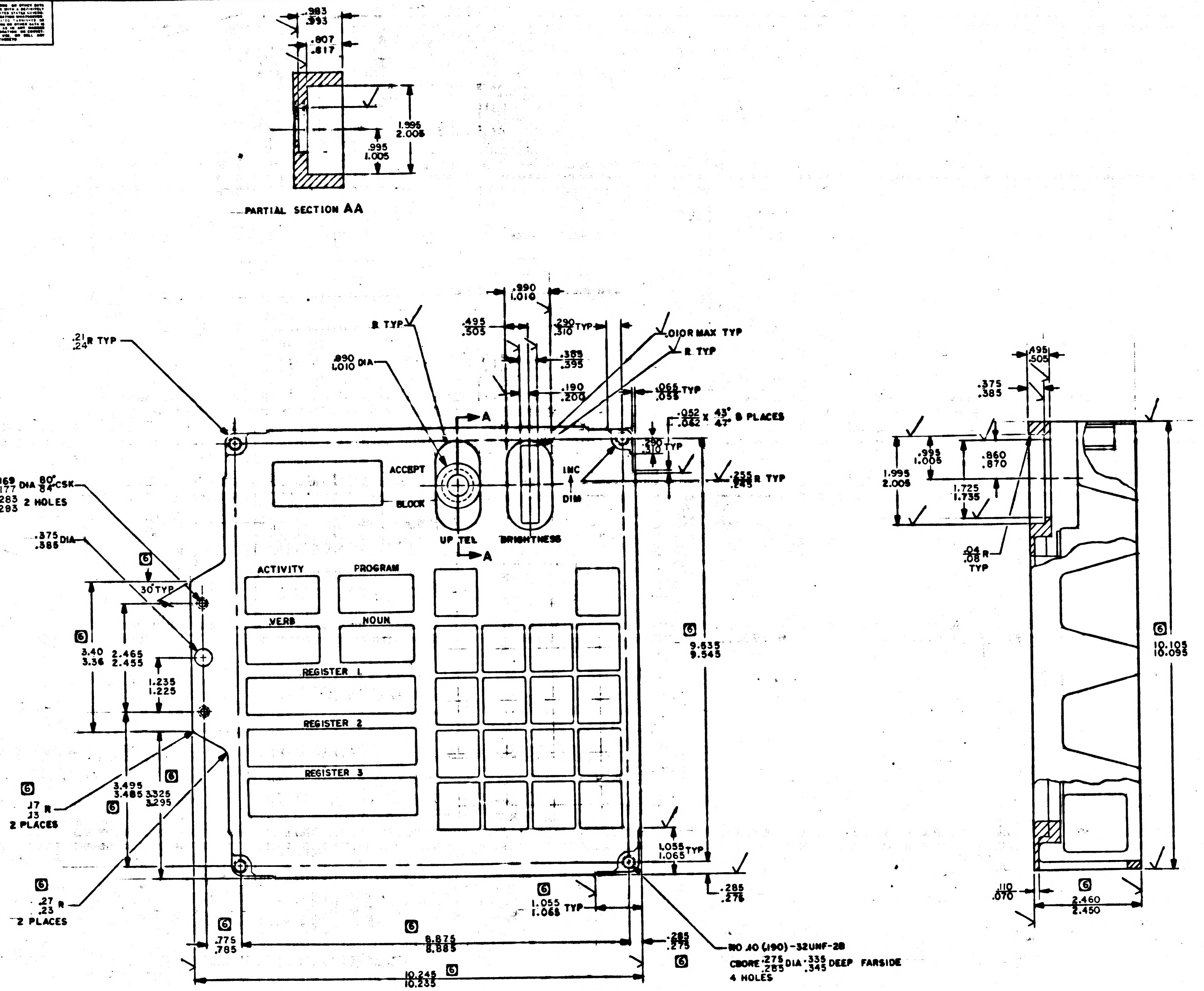
.983
.993
.807
.817
1.995
2.005
.995
1.005
PARTIAL SECTION AA
.21
.24 R TYP
R TYP
.890
1.010 DIA
.495
.505
.990
1.010
.290
.310 TYP
.385
.395
.190
.200
.010 R MAX TYP
R TYP
.065
.055 TYP
.052
.062 x 43°
47° 8 PLACES
.290
.310 TYP
.255
.245 R TYP
A
ACCEPT
BLOCK
INC
DIM
UP TEL
BRIGHTNESS
.169
.177 DIA 80°
84° CSK
.283
.293 2 HOLES
.375
.385 DIA
30° TYP
ACTIVITY
PROGRAM
VERB
NOUN
REGISTER 1
REGISTER 2
REGISTER 3
3.40
3.36
2.465
2.455
1.235
1.225
9.635
9.545
3.495
3.485
3.325
3.295
.17
.13 R
2 PLACES
.27
.23 R
2 PLACES
1.055
1.065 TYP
.285
.275
.775
.785
8.875
8.885
10.245
10.235
NO .10 (.190)-32UNF-2B
CBORE .275
.285 DIA .335
.345 DEEP FARSIDE
4 HOLES
.495
.505
.375
.385
.995
1.005
.860
.870
1.725
1.735
.04
.08 R
TYP
10.105
10.095
.110
.070
2.460
2.450
6

NOTES

1. MAKE FROM DWG 1004586
2. SURFACE MARKED √ TO BE 125√
3. REMOVE ALL BURRS AND SHARP EDGES
4. ANODIZE PER MIL-A-8625, TYPE I CHROMIC-ACID DYED MEDIUM GREY PER FED. STD-TT-C-595 COLOR CHIP GREY
5. SILK SCREEN .12 HIGH BLACK PER ND1002019 LOCATE MARKING APPROXIMATELY WHERE SHOWN
6. 6 DIMENSIONS ARE CONTROLLED BY ICDMH01-01006-116
7. INTERPRET DRAWING IN ACCORDANCE WITH STANDARDS PRESCRIBED BY MIL-D-70327

MASTER

QTY REQD	PART OR IDENTIFYING NO.	NOMENCLATURE OR DESCRIPTION	FIND NO

LIST OF MATERIALS

NEXT ASSY	USED ON
1003540	

APPLICATION

UNLESS OTHERWISE SPECIFIED DIMENSIONS ARE IN INCHES
TOLERANCES ON
FRACTIONS ± DECIMALS ± ANGLES ±
DO NOT SCALE THIS DRAWING
MATERIAL
SEE NOTE 1
HEAT TREATMENT
NONE
FINAL FINISH
SEE NOTE 4

MIT
INSTRUMENTATION LAB
CAMBRIDGE, MASS
DWG. NO. CONTRACT
DRAWN H. Carlson DATE 5 OCT 65
CHECKED A.R. Bogni 5 NOV 65
APPROVAL E. J. Dugan 5 NOV 65
APPROVAL Eldon C Hall 6 Nov 65
NASA APPROVAL
MIT APPROVAL
MIT APPROVAL 11/19/65

MANNED SPACECRAFT CENTER
HOUSTON, TEXAS

HOUSING, FRONT PANEL
AGC DSKY MAIN

CODE IDENT NO. —— SIZE E NASA DRAWING NO. 1004151
SCALE 1/1 WT SHEET 1 OF 2

INCHES
0 1 2
PHOTOGRAPHIC SCALE ONLY

1004151

1004151

REVISIONS 04795			
SYM	DESCRIPTION	DATE	APPROVAL

NOTICE — WHEN GOVERNMENT DRAWINGS, SPECIFICATIONS, OR OTHER DATA ARE USED FOR ANY PURPOSE OTHER THAN IN CONNECTION WITH A DEFINITELY RELATED GOVERNMENT PROCUREMENT OPERATION, THE UNITED STATES GOVERNMENT THEREBY INCURS NO RESPONSIBILITY NOR ANY OBLIGATION WHATSOEVER; AND THE FACT THAT THE GOVERNMENT MAY HAVE FORMULATED, FURNISHED, OR IN ANY WAY SUPPLIED THE SAID DRAWINGS, SPECIFICATIONS, OR OTHER DATA IS NOT TO BE REGARDED BY IMPLICATION OR OTHERWISE AS IN ANY MANNER LICENSING THE HOLDER OR ANY OTHER PERSON OR CORPORATION, OR CONVEYING ANY RIGHTS OR PERMISSION TO MANUFACTURE, USE, OR SELL ANY PATENTED INVENTION THAT MAY IN ANY WAY BE RELATED THERETO.

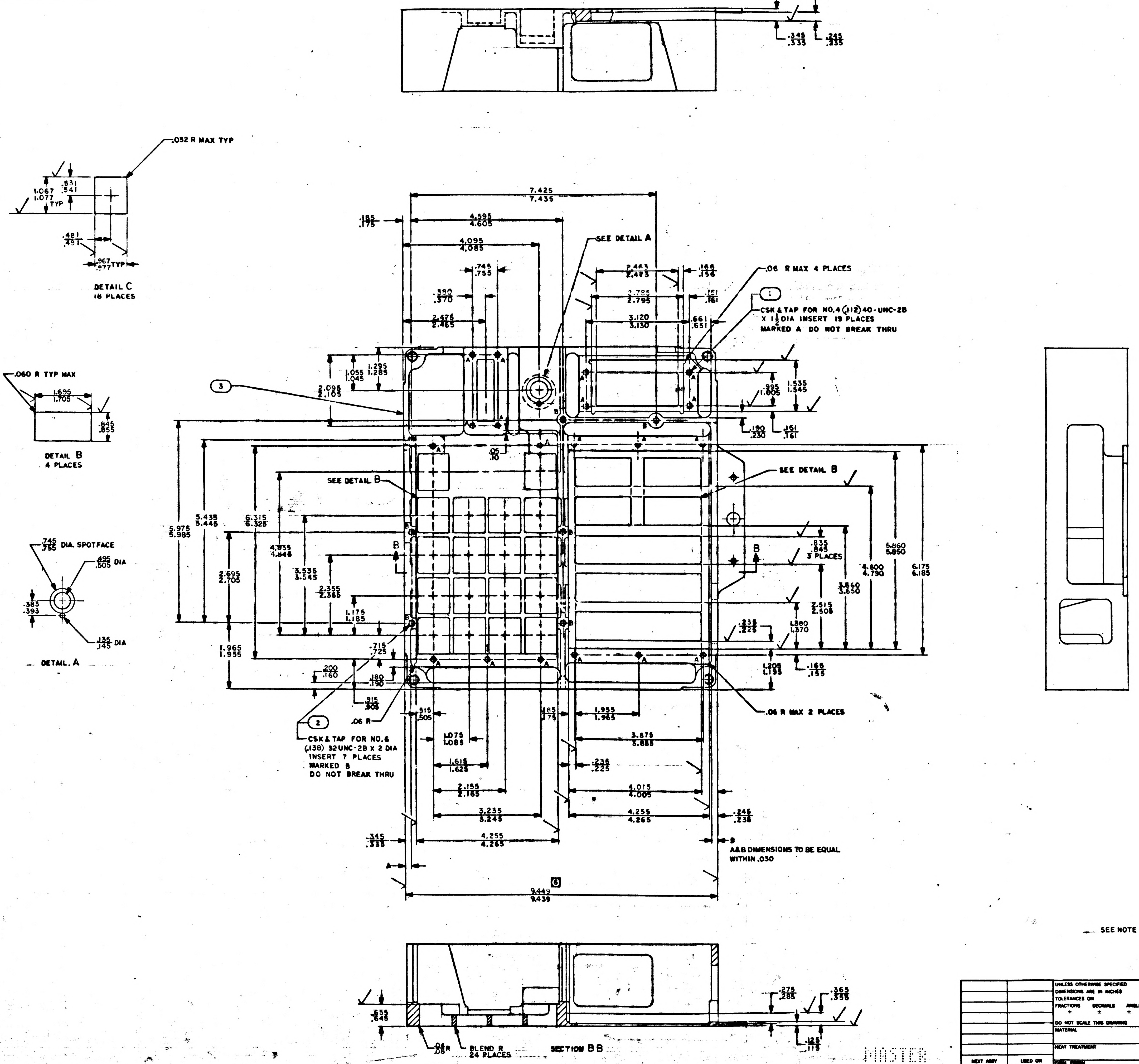
.345
.335
.245
.235
.032 R MAX TYP
1.067
1.077
TYP
.531
.541
.481
.491
.967
.977 TYP
DETAIL C
18 PLACES
.060 R TYP MAX
1.695
1.705
.845
.855
DETAIL B
4 PLACES
.745
.755 DIA. SPOTFACE
.495
.505 DIA
.383
.393
.135
.145 DIA
DETAIL A
7.425
7.435
.185
.175
4.595
4.605
4.095
4.085
SEE DETAIL A
.745
.755
.380
.370
2.475
2.465
2.463
2.473
.166
.156
2.785
2.795
.151
.161
3.120
3.130
.661
.651
.06 R MAX 4 PLACES
1
CSK & TAP FOR NO.4 (.112) 40-UNC-2B X 1½ DIA INSERT 19 PLACES MARKED A DO NOT BREAK THRU
3
1.295
1.285
1.055
1.045
2.095
2.105
.995
1.005
1.535
1.545
.190
.230
.161
.161
.05
.10
SEE DETAIL B
SEE DETAIL B
5.975
5.985
5.435
5.445
6.315
6.325
4.835
4.845
3.535
3.545
2.695
2.705
2.355
2.365
1.175
1.185
1.965
1.955
B
B
A
.835
.845
3 PLACES
5.860
5.850
4.800
4.790
3.660
3.650
2.515
2.505
6.175
6.185
.235
.225
1.380
1.370
.715
.725
.200
.160
.180
.190
.915
.905
.06 R
1.205
1.195
.165
.155
.06 R MAX 2 PLACES
2
CSK & TAP FOR NO.6 (.138) 32UNC-2B X 2 DIA INSERT 7 PLACES MARKED B DO NOT BREAK THRU
.515
.505
1.075
1.085
.185
.175
1.955
1.965
3.875
3.885
1.615
1.625
.235
.225
2.155
2.165
4.015
4.005
3.235
3.245
4.255
4.265
.245
.235
.345
.335
4.255
4.265
B
A&B DIMENSIONS TO BE EQUAL WITHIN .030
A
6
9.449
9.439
.555
.545
.275
.285
.365
.355
.125
.115
.04
.08 R
BLEND R
24 PLACES
SECTION B B
MASTER

SEE NOTE 1

QTY REQD	PART OR IDENTIFYING NO.	NOMENCLATURE OR DESCRIPTION	FIND NO.
1	1004151-1	HOUSING, FRONT PANEL	3
7	MS21209-C0620	INSERT, HELICAL	2
19	MS21209-C0415	INSERT, HELICAL	1

LIST OF MATERIALS

NEXT ASSY	USED ON
APPLICATION	

UNLESS OTHERWISE SPECIFIED
DIMENSIONS ARE IN INCHES
TOLERANCES ON
FRACTIONS ± DECIMALS ± ANGLES ±
DO NOT SCALE THIS DRAWING
MATERIAL
HEAT TREATMENT
FINAL FINISH

MIT
INSTRUMENTATION LAB
CAMBRIDGE, MASS.
DWG. NO. CONTRACT
DRAWN H. Carlson DATE 15 OCT 63
CHECKED A. Eggers 4 NOV 63
APPROVAL 7 NOV 63
APPROVAL Elden C Hall 15 Nov 63
NASA APPROVAL
MIT APPROVAL
MIT APPROVAL

MANNED SPACECRAFT CENTER
HOUSTON, TEXAS

HOUSING, FRONT PANEL
AGC DSKY MAIN

CODE IDENT NO. —
SIZE E
NASA DRAWING NO. 1004151
SCALE 1/1
WT
SHEET 2 OF 2

NOTICE — WHEN GOVERNMENT DRAWINGS, SPECIFICATIONS, OR OTHER DATA ARE USED FOR ANY PURPOSE OTHER THAN IN CONNECTION WITH A DEFINITELY RELATED GOVERNMENT PROCUREMENT OPERATION, THE UNITED STATES GOVERNMENT THEREBY INCURS NO RESPONSIBILITY NOR ANY OBLIGATION WHATSOEVER; AND THE FACT THAT THE GOVERNMENT MAY HAVE FORMULATED, FURNISHED, OR IN ANY WAY SUPPLIED THE SAID DRAWINGS, SPECIFICATIONS OR OTHER DATA IS NOT TO BE REGARDED BY IMPLICATION OR OTHERWISE AS IN ANY MANNER LICENSING THE HOLDER OR ANY OTHER PERSON OR CORPORATION, OR CONVEYING ANY RIGHTS OR PERMISSION TO MANUFACTURE, USE, OR SELL ANY PATENTED INVENTION THAT MAY IN ANY WAY BE RELATED THERETO.

M

REVISIONS			
SYM	DESCRIPTION	DATE	APPROVAL
A	REPLACED WITH CHANGE AND UPGRADED TO CLASS A PER TDRR 03674	10-3-63	WK

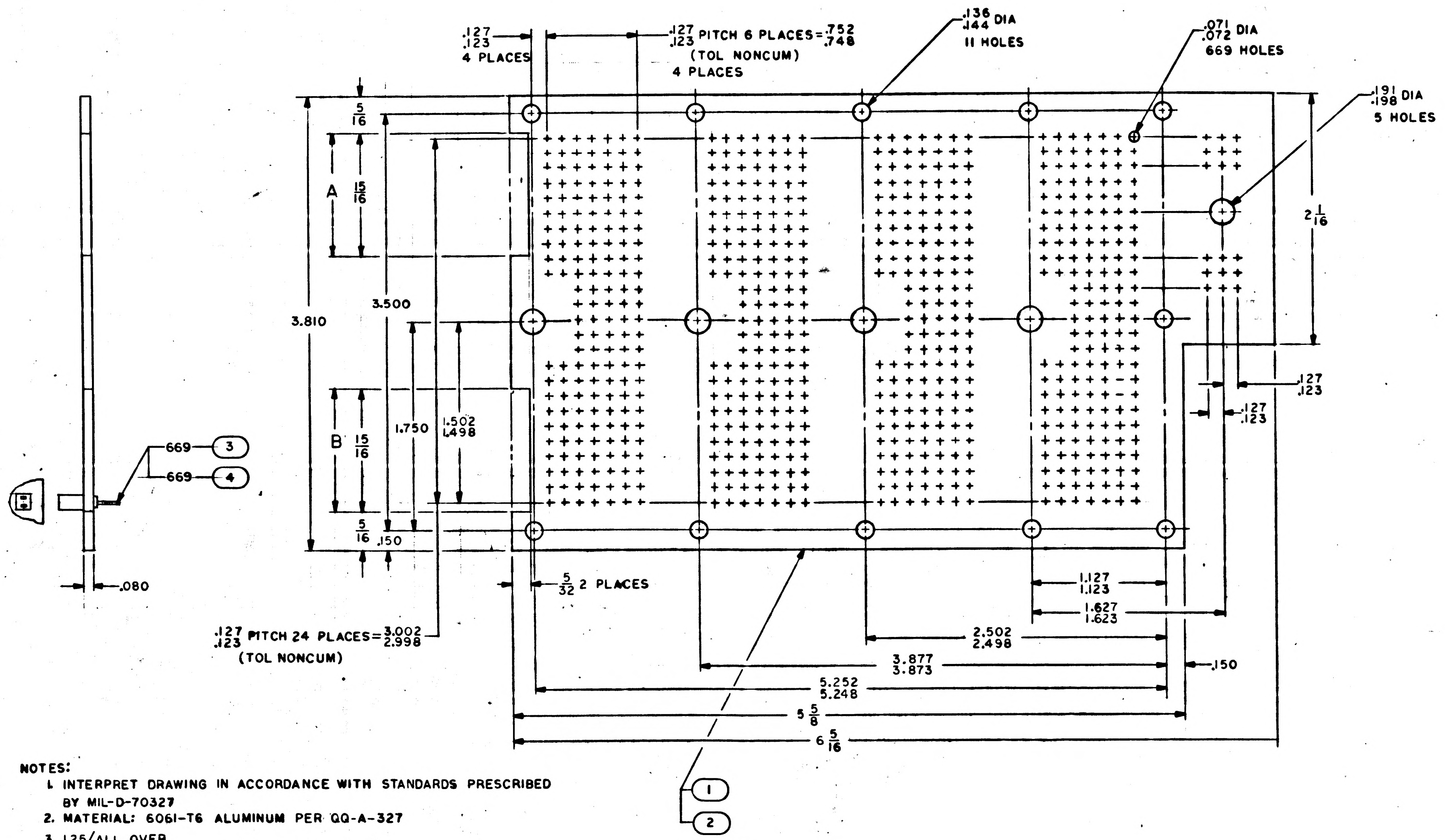

.127 .123 4 PLACES
.127 .123 PITCH 6 PLACES = .752 .748 (TOL NONCUM) 4 PLACES
.136 .144 DIA 11 HOLES
.071 .072 DIA 669 HOLES
.191 .198 DIA 5 HOLES
5/16
A 15/16
B 15/16
3.810
3.500
1.750
1.502 1.498
5/16
.150
2 1/16
.127 .123
.127 .123
669 ③
669 ④
.080
5/32 2 PLACES
.127 .123 PITCH 24 PLACES = 3.002 2.998 (TOL NONCUM)
1.127 1.123
1.627 1.623
2.502 2.498
3.877 3.873
.150
5.252 5.248
5 5/8
6 5/16
①
②

FOR INFORMATION ONLY

CLASS B RELEASE TDR No. 01298 DATE 5-22-63

Ⓐ REPLACED BY REV B WITH CHANGE

NOTES:
1. INTERPRET DRAWING IN ACCORDANCE WITH STANDARDS PRESCRIBED BY MIL-D-70327
2. MATERIAL: 6061-T6 ALUMINUM PER QQ-A-327
3. 125/ALL OVER
4. REMOVE BURRS & SHARP EDGES
5. ANODIZE PER MIL-A-8625 TYPE II DYED BLACK
6. PART NO. 1004152-1 AS SHOWN
7. PART NO. 1004152-2 WITHOUT CUTOUTS A & B

1004152

MASTER

QTY REQD	PART OR IDENTIFYING NO.	NOMENCLATURE OR DESCRIPTION	FIND NO.
669	1006781	CONTACT, MALCO	4
669	1006774	INSULATOR, MALCO	3
	1004152-2	SEE NOTE 7	2
	1004152-1	SEE NOTE 6	1

LIST OF MATERIALS

NEXT ASSY	USED ON
APPLICATION	

UNLESS OTHERWISE SPECIFIED DIMENSIONS ARE IN INCHES
TOLERANCES ON
FRACTIONS ± 1/64 DECIMALS ±.005 ANGLES ±
DO NOT SCALE THIS DRAWING
MATERIAL SEE NOTE 2
HEAT TREATMENT
FINAL FINISH SEE NOTE 5

MIT INSTRUMENTATION LAB
CAMBRIDGE, MASS.
DWG. NO.
CONTRACT
DRAWN DATE
CHECKED 5-15-63
APPROVAL 22 MAY 63
APPROVAL
NASA APPROVAL 5/22/63
MIT APPROVAL 5/22/63

MANNED SPACECRAFT CENTER
HOUSTON, TEXAS

PLATE, RELAY MODULE
AGC KEYBOARD

CODE IDENT NO.
SIZE D
NASA DRAWING NO. 1004152
SCALE 2/1
WT
SHEET 1 OF 1

ANY USE OF THIS DOCUMENT FOR OTHER THAN GOVERNMENTAL PURPOSES IS SUBJECT TO PRIOR WRITTEN CONSENT OF RAYTHEON CO.

REVISIONS			
SYM	DESCRIPTION	DATE	APPROVED
B	REDRAW REPLACES REV A WITH CHANGES AND UPGRADED TO CLASS A PER TDRR 03.34	10-3-63	WL

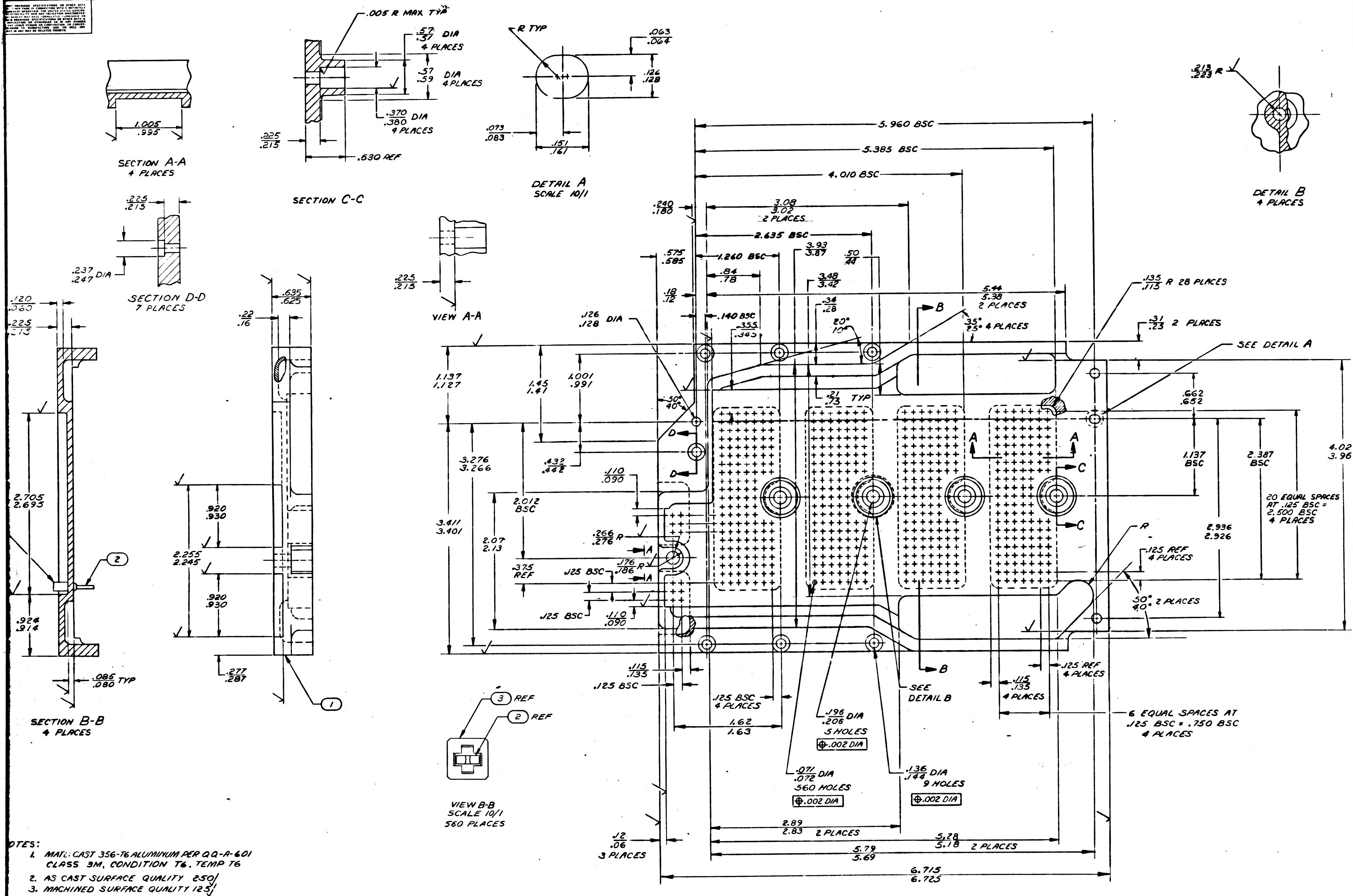

SECTION A-A
4 PLACES
1.005
.995
SECTION C-C
.005 R MAX TYP
.57 .37 DIA 4 PLACES
.57 .59 DIA 4 PLACES
.370 .380 DIA 4 PLACES
.225 .215
.630 REF
R TYP
.063 .064
.126 .128
.073 .083
.151 .161
DETAIL A
SCALE 10/1
.213 .223 R
DETAIL B
4 PLACES
SECTION D-D
7 PLACES
.225 .215
.237 .247 DIA
VIEW A-A
SECTION B-B
4 PLACES
.120 .080
.225 .215
2.705 2.695
.924 .914
.085 .080 TYP
.635 .625
.22 .16
.920 .930
2.255 2.245
.277 .287
VIEW B-B
SCALE 10/1
560 PLACES
3 REF
2 REF
2
1
5.960 BSC
5.385 BSC
4.010 BSC
3.08 3.02 2 PLACES
2.635 BSC
1.260 BSC
3.93 3.87
.50 .44
.84 .78
3.48 3.42
.34 .28
.240 .180
.575 .585
.18 .12
.140 BSC
.355 .345
20° 10°
5.44 5.38 2 PLACES
35° 25° 4 PLACES
.135 .115 R 28 PLACES
.31 .23 2 PLACES
SEE DETAIL A
.126 .128 DIA
1.137 1.127
1.45 1.41
1.001 .991
.50 .40
.21 .13 TYP
.662 .652
3.276 3.266
.432 .442
.110 .090
2.012 BSC
3.411 3.401
2.07 2.13
.266 .276 R
.375 REF
.125 BSC
.176 .186 R
.125 BSC
.110 .090
1.137 BSC
2.387 BSC
4.02 3.96
20 EQUAL SPACES AT .125 BSC = 2.500 BSC 4 PLACES
2.936 2.926
R
.125 REF 4 PLACES
50° 40° 2 PLACES
.115 .135
.125 BSC
.125 BSC 4 PLACES
1.62 1.63
.196 .206 DIA
5 HOLES
⊕ .002 DIA
SEE DETAIL B
.115 .135 4 PLACES
.125 REF 4 PLACES
6 EQUAL SPACES AT .125 BSC = .750 BSC 4 PLACES
.071 .072 DIA
560 HOLES
⊕ .002 DIA
.136 .144 DIA
9 HOLES
⊕ .002 DIA
2.89 2.83 2 PLACES
5.28 5.18 2 PLACES
5.79 5.69
6.715 6.725
.12 .06 3 PLACES
A
B
C
D

OTES:

1. MATL: CAST 356-T6 ALUMINUM PER QQ-A-601 CLASS 3M, CONDITION T6. TEMP T6
2. AS CAST SURFACE QUALITY 250√
3. MACHINED SURFACE QUALITY 125√
4. ANODIZE PER MIL-A-8625, TYPE I DYED BLACK
5. REMOVE BURRS AND SHARP EDGES
6. UNLESS OTHERWISE SPECIFIED ALL FILLETS AND ROUNDS TO BE .18/.06 R
7. INSTALL FIND NO. 2 & 3 PER ND1002136

Ⓑ REPLACES REVISION A

QTY REQD	PART OR IDENTIFYING NO.	NOMENCLATURE OR DESCRIPTION	FIND NO
560	1006774	INSULATOR, WRAPOST, FEMALE	3
560	1006781-4	CONTACT, MALCO	2
1	1004152-1	PLATE	1

LIST OF MATERIALS

1003535	
NEXT ASSY	USED ON
APPLICATION	

UNLESS OTHERWISE SPECIFIED DIMENSIONS ARE IN INCHES
TOLERANCES ON
FRACTIONS ± DECIMALS ± ANGLES ±
DO NOT SCALE THIS DRAWING
MATERIAL SEE NOTE 1
HEAT TREATMENT NONE
FINAL FINISH SEE NOTE 4

MIT INSTRUMENTATION LAB
CAMBRIDGE, MASS
DWG. NO. CONTRACT
DRAWN D.A. Clemons DATE 5/15/63
CHECKED R.L. Bush May 63
APPROVAL
APPROVAL E.J. Duggan
APPROVAL
NASA APPROVAL W.J. Rhine 10-3-63
MIT APPROVAL
MIT APPROVAL W. Tuffer 3 Oct 63

MANNED SPACECRAFT CENTER
HOUSTON, TEXAS

PLATE, RELAY MODULE ASSY
AGC KEYBOARD

CODE IDENT NO ——
SIZE J
NASA DRAWING NO. 1004152
SCALE 2/1
WT
SHEET 1 OF 1

INTERPRET DRAWING IN ACCORDANCE WITH STANDARDS PRESCRIBED BY MIL-D-70327

NOTICE – WHEN GOVERNMENT DRAWINGS, SPECIFICATIONS, OR OTHER DATA ARE USED FOR ANY PURPOSE OTHER THAN IN CONNECTION WITH A DEFINITELY RELATED GOVERNMENT PROCUREMENT OPERATION, THE UNITED STATES GOVERNMENT THEREBY INCURS NO RESPONSIBILITY NOR ANY OBLIGATION WHATSOEVER, AND THE FACT THAT THE GOVERNMENT MAY HAVE FORMULATED, FURNISHED, OR IN ANY WAY SUPPLIED THE SAID DRAWINGS, SPECIFICATIONS OR OTHER DATA IS NOT TO BE REGARDED BY IMPLICATION OR OTHERWISE AS IN ANY MANNER LICENSING THE HOLDER OR ANY OTHER PERSON OR CORPORATION, OR CONVEYING ANY RIGHTS OR PERMISSION TO MANUFACTURE, USE, OR SELL ANY PATENTED INVENTION THAT MAY IN ANY WAY BE RELATED THERETO.

ANY USE OF THIS DOCUMENT FOR OTHER THAN GOVERNMENTAL PURPOSES IS

REVISIONS	
SYM	DESCRIPTION
B	REDRAW REPLACES REV A CHANGES AND UPGRADE CLASS A PER TDRR

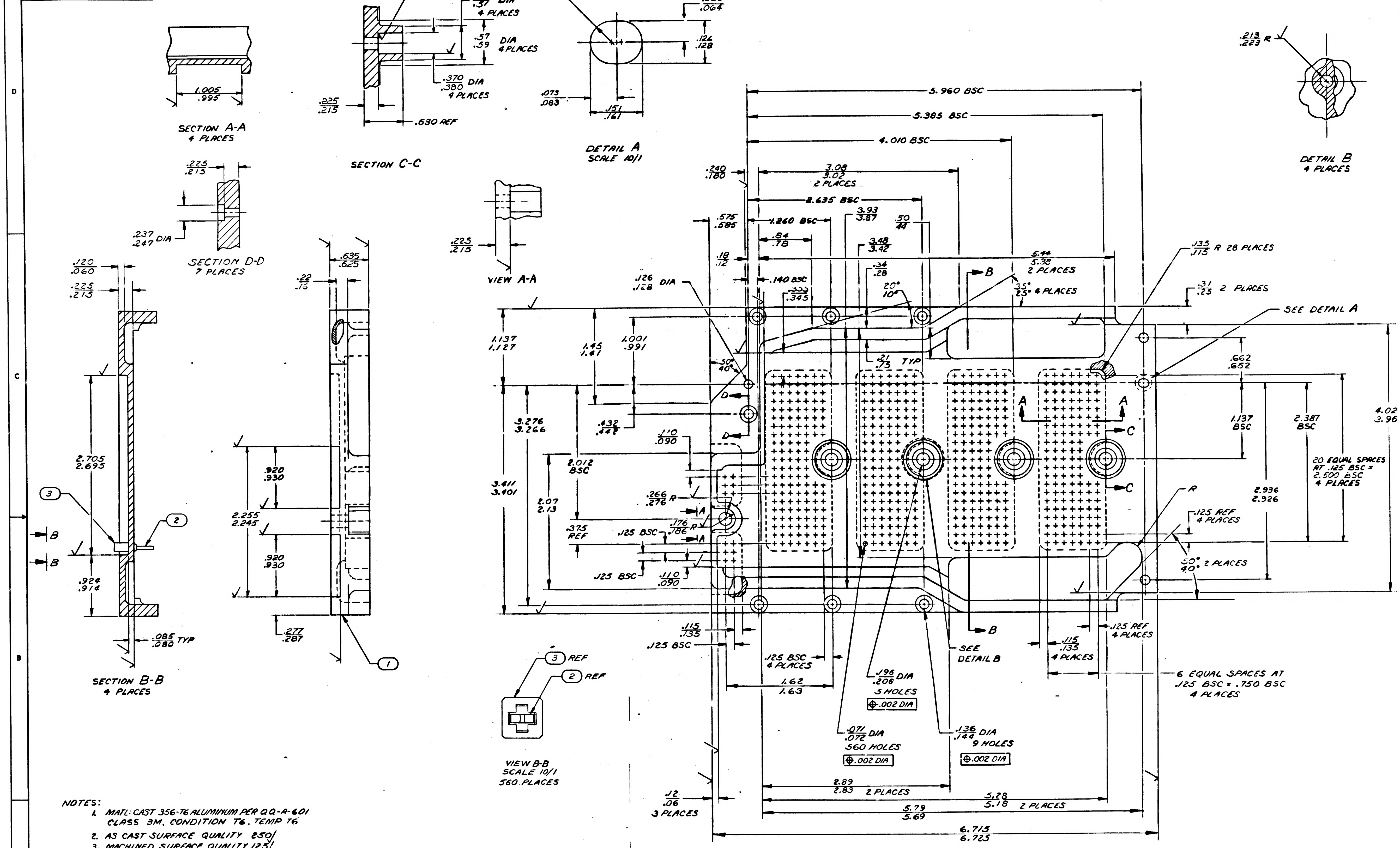
SECTION A-A
4 PLACES
1.005
.995
.005 R MAX TYP
.57 .57 DIA 4 PLACES
.57 .59 DIA 4 PLACES
.370 .380 DIA 4 PLACES
.225 .215
.630 REF
SECTION C-C
R TYP
.063 .064
.126 .128
.073 .083
.151 .161
DETAIL A
SCALE 10/1
.213 .223 R
DETAIL B
4 PLACES
.225 .215
.237 .247 DIA
SECTION D-D
7 PLACES
.225 .215
VIEW A-A
.120 .060
.225 .215
.635 .625
.22 .16
2.705 2.695
.924 .914
.085 .080 TYP
SECTION B-B
4 PLACES
.920 .930
2.255 2.245
.920 .930
.277 .287
VIEW B-B
SCALE 10/1
560 PLACES
3 REF
2 REF
5.960 BSC
5.385 BSC
4.010 BSC
3.08 3.02 2 PLACES
2.635 BSC
1.260 BSC
3.93 3.87
.50 .44
.84 .78
3.48 3.42
.34 .28
.140 BSC
.333 .345
20° 10°
5.44 5.38 2 PLACES
35° 25° 4 PLACES
.135 .115 R 28 PLACES
.31 .23 2 PLACES
SEE DETAIL A
.240 .180
.575 .585
.18 .12
.126 .128 DIA
1.137 1.127
1.45 1.41
1.001 .991
.50° .40°
.21 .15 TYP
.662 .652
3.276 3.266
.432 .442
.110 .090
2.012 BSC
2.07 2.13
3.411 3.401
.266 .276 R
.375 REF
.125 BSC
.176 .186
.125 BSC
.110 .090
1.137 BSC
2.387 BSC
4.02 3.96
20 EQUAL SPACES AT .125 BSC = 2.500 BSC 4 PLACES
2.936 2.926
R
.125 REF 4 PLACES
50° 40° 2 PLACES
.115 .135
.125 BSC
.125 BSC 4 PLACES
1.62 1.63
.196 .206 DIA 5 HOLES
⌖ .002 DIA
SEE DETAIL B
.071 .072 DIA 560 HOLES
⌖ .002 DIA
.136 .144 DIA 9 HOLES
⌖ .002 DIA
.115 .135 4 PLACES
.125 REF 4 PLACES
6 EQUAL SPACES AT .125 BSC = .750 BSC 4 PLACES
.12 .06 3 PLACES
2.89 2.83 2 PLACES
5.28 5.18 2 PLACES
5.79 5.69
6.715 6.725
A
B
C
D
1
2
3

NOTES:

1. MATL: CAST 356-T6 ALUMINUM PER QQ-A-601 CLASS 3M, CONDITION T6. TEMP T6
2. AS CAST SURFACE QUALITY 250√
3. MACHINED SURFACE QUALITY 125√
4. ANODIZE PER MIL-A-8625, TYPE I DYED BLACK
5. REMOVE BURRS AND SHARP EDGES
6. UNLESS OTHERWISE SPECIFIED ALL FILLETS AND ROUNDS TO BE .18/.06 R
7. INSTALL FIND NO. 2 & 3 PER ND1002136

Ⓑ REPLACES REVISION A

QTY REQD	PART OR IDENTIFYING NO		NOM
560	1006774		INSULATOR,
560	1006781-4		CONTACT,
1	1004152-1		PLATE

LIST OF MATERIALS

1003535	
NEXT ASSY	USED ON
APPLICATION	

UNLESS OTHERWISE SPECIFIED
DIMENSIONS ARE IN INCHES
TOLERANCES ON
FRACTIONS ± DECIMALS ± ANGLES ±
DO NOT SCALE THIS DRAWING
MATERIAL SEE NOTE 1
HEAT TREATMENT NONE
FINAL FINISH SEE NOTE 4

MIT
INSTRUMENTATION LAB
CAMBRIDGE, MASS
DWG. NO. CONTRACT
DRAWN DATE 8/15/63
CHECKED
APPROVAL
APPROVAL
APPROVAL
NASA APPROVAL 10-3-63
MIT APPROVAL
MIT APPROVAL

MANNED S
PLATE, REL
AGC

CODE IDENT NO
SIZE J
SCALE 2/1
WT

INTERPRET DRAWING IN ACCORDANCE WITH STANDARDS PRESCRIBED BY MIL-D-70327

ANY USE OF THIS DOCUMENT FOR OTHER THAN GOVERNMENTAL PURPOSES IS SUBJECT TO PRIOR WRITTEN CONSENT OF RAYTHEON CO.

REVISIONS			
SYM	DESCRIPTION	DATE	APPROVED
B	REDRAW REPLACES REV A WITH CHANGES AND UPGRADED TO CLASS A PER TDRR 03624	10-8-63	WL
C	REVISED PER TDRR 04614		WR

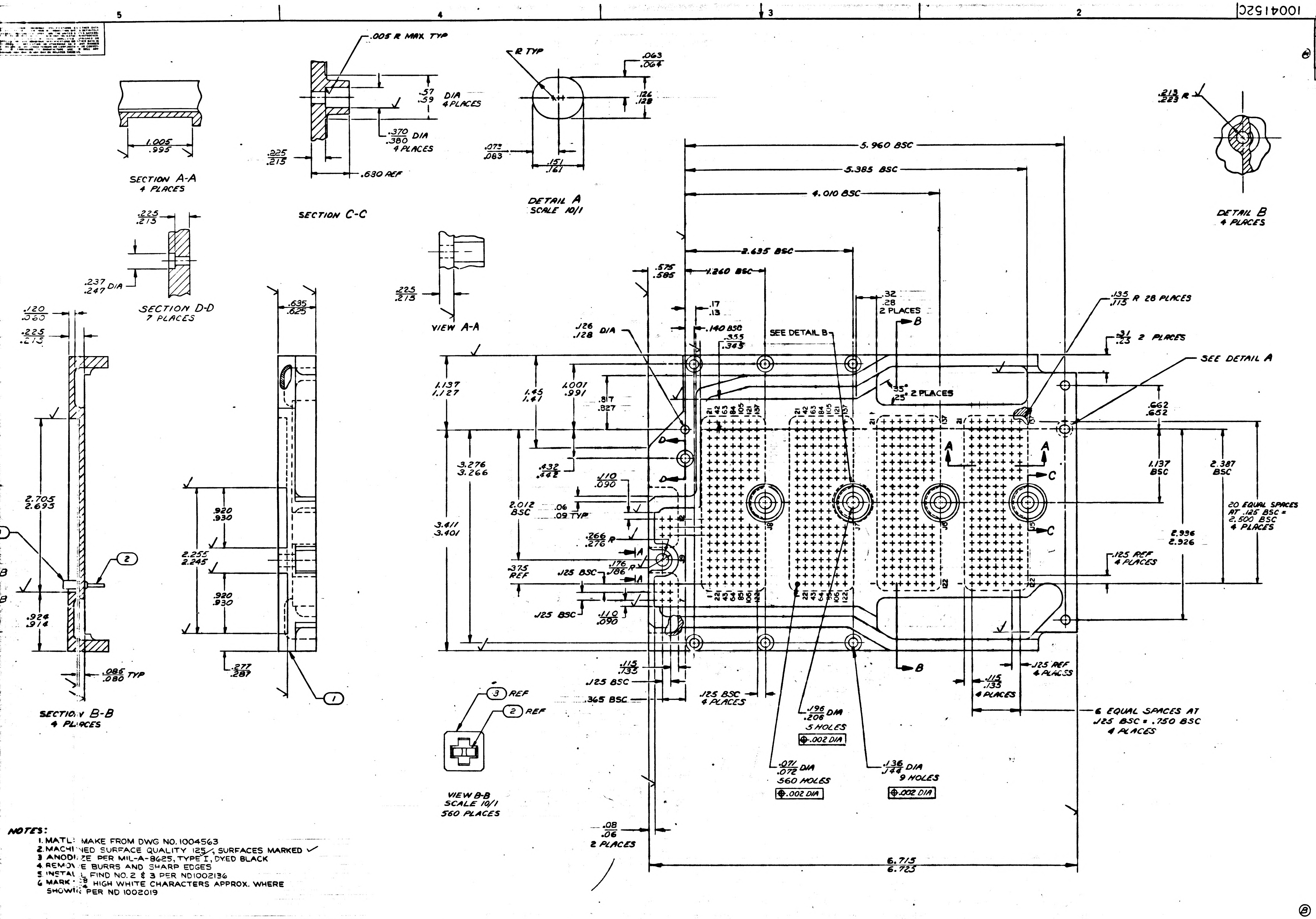
SECTION A-A
4 PLACES
1.005
.995
SECTION C-C
.005 R MAX TYP
.57
.59 DIA
4 PLACES
.370
.380 DIA
4 PLACES
.225
.215
.630 REF
DETAIL A
SCALE 10/1
R TYP
.063
.064
.126
.128
.072
.083
.151
.161
DETAIL B
4 PLACES
.213
.223 R
SECTION D-D
7 PLACES
.237
.247 DIA
VIEW A-A
SECTION B-B
4 PLACES
VIEW B-B
SCALE 10/1
560 PLACES
3 REF
2 REF
5.960 BSC
5.385 BSC
4.010 BSC
2.635 BSC
1.260 BSC
.575
.585
.17
.13
.140 BSC
.355
.343
SEE DETAIL B
.32
.28
2 PLACES
.135
.115 R 28 PLACES
.31
.23 2 PLACES
SEE DETAIL A
35°
25° 2 PLACES
.126
.128 DIA
1.137
1.127
1.45
1.41
1.001
.991
.817
.827
.662
.652
3.276
3.266
.432
.442
.110
.090
2.012
BSC
.06
.09 TYP
.266
.276 R
3.411
3.401
.375
REF
.125 BSC
.176
.186 R
.125 BSC
1.137
BSC
2.387
BSC
20 EQUAL SPACES
AT .125 BSC =
2.500 BSC
4 PLACES
2.936
2.926
.125 REF
4 PLACES
.115
.135
.125 BSC
.365 BSC
.125 BSC
4 PLACES
.196
.206 DIA
5 HOLES
.002 DIA
.071
.072 DIA
560 HOLES
.002 DIA
.136
.144 DIA
9 HOLES
.002 DIA
.125 REF
4 PLACES
.115
.135
4 PLACES
6 EQUAL SPACES AT
.125 BSC = .750 BSC
4 PLACES
.08
.06
2 PLACES
6.715
6.725
2.705
2.693
.120
.060
.225
.215
.924
.914
.086
.080 TYP
.635
.625
.920
.930
2.255
2.245
.920
.930
.277
.287
1
2

NOTES:

1. MATL: MAKE FROM DWG NO. 1004563
2. MACHINED SURFACE QUALITY 125✓, SURFACES MARKED ✓
3. ANODIZE PER MIL-A-8625, TYPE I, DYED BLACK
4. REMOVE BURRS AND SHARP EDGES
5. INSTALL FIND NO. 2 & 3 PER ND1002136
6. MARK 3/64 HIGH WHITE CHARACTERS APPROX. WHERE SHOWING PER ND 1002019

Ⓑ REPLACES REVISION A

SEE NOTE 1

560	1006774	INSULATOR, WRAPOST, FEMALE	3
560	1006781-4	CONTACT, MALCO	2
1	1004152-1	PLATE, CONNECTOR	1
QTY REQD	PART OR IDENTIFYING NO.	NOMENCLATURE OR DESCRIPTION	FIND NO

LIST OF MATERIALS

1003535	
NEXT ASSY	USED ON
APPLICATION	

UNLESS OTHERWISE SPECIFIED DIMENSIONS ARE IN INCHES
TOLERANCES ON
FRACTIONS ± DECIMALS ± ANGLES ±
DO NOT SCALE THIS DRAWING
MATERIAL SEE NOTE 1
HEAT TREATMENT NONE
FINAL FINISH SEE NOTE 4

MIT INSTRUMENTATION LAB
CAMBRIDGE, MASS
DRAWN DG Clermont DATE 8/16/62
CHECKED R. Buck
APPROVAL
APPROVAL
APPROVAL
NASA APPROVAL W J Rhine 10-7-63
MIT APPROVAL
MIT APPROVAL

MANNED SPACECRAFT CENTER
HOUSTON, TEXAS

PLATE, CONNECTOR RELAY
HOUSING ASSY
AGC DSKY, NAV

CODE IDENT NO. —
SIZE J
NASA DRAWING NO. 1004152
SCALE 2/1
WT
SHEET 1 OF 1

INTERPRET DRAWING IN ACCORDANCE WITH STANDARDS PRESCRIBED BY MIL-D-70327

INCHES
PHOTOGRAPHIC SCALE ONLY

E32

ANY USE OF THIS DOCUMENT FOR OTHER THAN GOVERNMENTAL PURPOSES IS SUBJECT TO PRIOR WRITTEN CONSENT

REVISIONS			
SYM	DESCRIPTION	DATE	
Ⓐ B	REDRAW REPLACES REV A WITH CHANGES AND UPGRADED TO CLASS A PER TDRR		
C	REVISED PER TDRR		

NOTICE – WHEN GOVERNMENT DRAWINGS, SPECIFICATIONS, OR OTHER DATA ARE USED FOR ANY PURPOSE OTHER THAN IN CONNECTION WITH A DEFINITELY RELATED GOVERNMENT PROCUREMENT OPERATION, THE UNITED STATES GOVERNMENT THEREBY INCURS NO RESPONSIBILITY NOR ANY OBLIGATION WHATSOEVER AND THE FACT THAT THE GOVERNMENT MAY HAVE FORMULATED, FURNISHED, OR IN ANY WAY SUPPLIED THE SAID DRAWINGS, SPECIFICATIONS OR OTHER DATA IS NOT TO BE REGARDED BY IMPLICATION OR OTHERWISE AS IN ANY MANNER LICENSING THE HOLDER OR ANY OTHER PERSON OR CORPORATION, OR CONVEYING ANY RIGHTS OR PERMISSION TO MANUFACTURE, USE, OR SELL ANY PATENTED INVENTION THAT MAY IN ANY WAY BE RELATED THERETO.

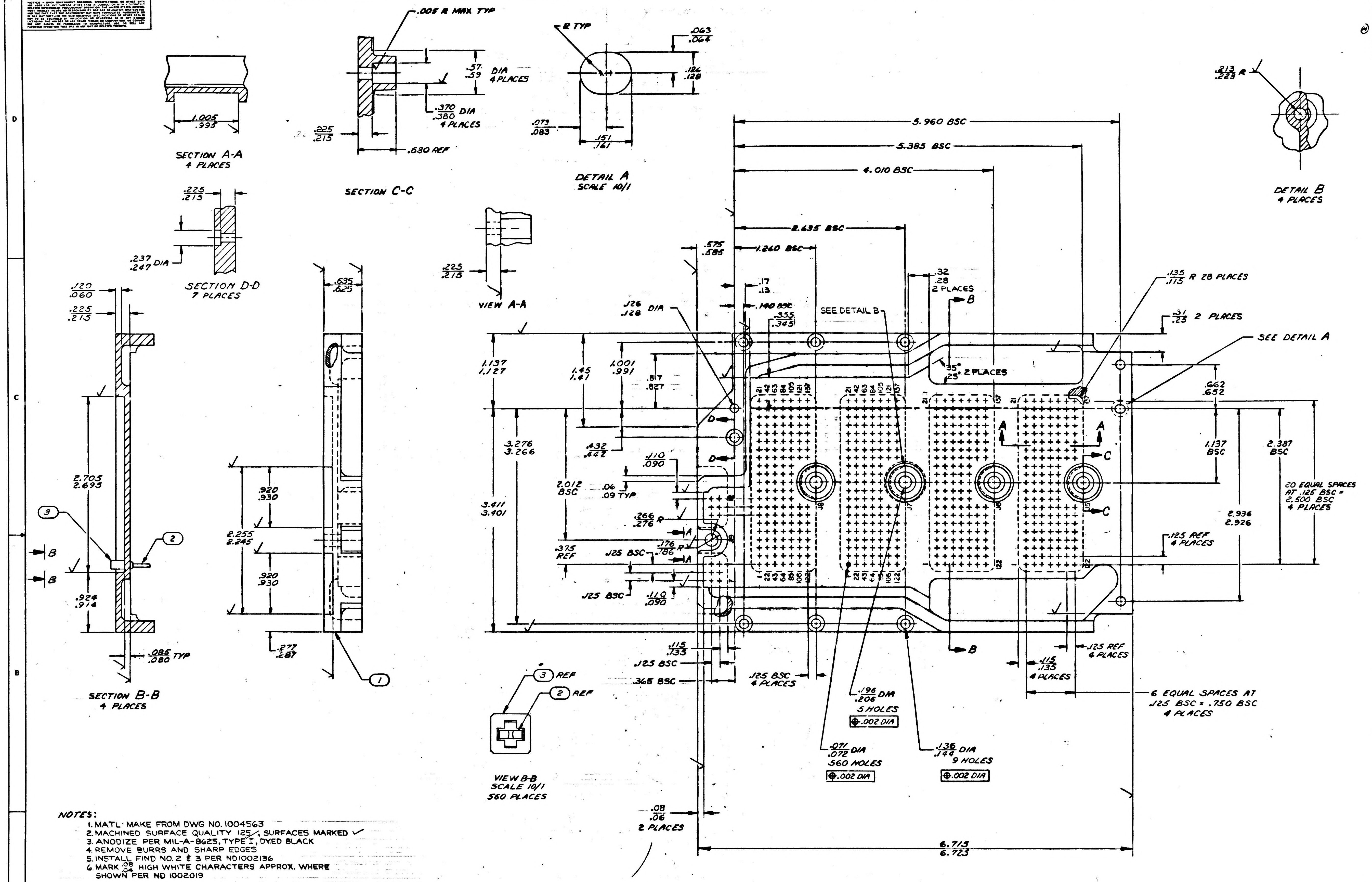
SECTION A-A
4 PLACES
1.005
.995
SECTION C-C
.005 R MAX TYP
.57
.59 DIA
4 PLACES
.370 DIA
.380
4 PLACES
.225
.215
.630 REF
DETAIL A
SCALE 10/1
R TYP
.063
.064
.126
.128
.073
.083
.151
.161
DETAIL B
4 PLACES
.213
.223 R
SECTION D-D
7 PLACES
.225
.215
.237
.247 DIA
VIEW A-A
.225
.215
SECTION B-B
4 PLACES
.120
.060
.225
.215
2.705
2.695
.924
.914
.085
.080 TYP
.635
.625
.920
.930
2.255
2.245
.277
.287
VIEW B-B
SCALE 10/1
560 PLACES
3 REF
2 REF
5.960 BSC
5.385 BSC
4.010 BSC
2.635 BSC
1.260 BSC
.575
.585
.17
.13
.140 BSC
.355
.345
SEE DETAIL B
.32
.28
2 PLACES
35°
25° 2 PLACES
.135
.115 R 28 PLACES
.31
.23 2 PLACES
SEE DETAIL A
.126
.128 DIA
1.137
1.127
1.45
1.41
1.001
.991
.817
.827
3.276
3.266
.432
.442
.110
.090
2.012 BSC
.06
.09 TYP
3.411
3.401
.266
.276 R
.375 REF
.125 BSC
.176
.186 R
.125 BSC
.110
.090
.662
.652
1.137 BSC
2.387 BSC
20 EQUAL SPACES
AT .125 BSC =
2.500 BSC
4 PLACES
2.936
2.926
.125 REF
4 PLACES
.115
.135
.125 BSC
.365 BSC
.125 BSC
4 PLACES
.196
.206 DIA
5 HOLES
⊕.002 DIA
.071
.072 DIA
560 HOLES
⊕.002 DIA
.136
.144 DIA
9 HOLES
⊕.002 DIA
.125 REF
4 PLACES
.115
.135
4 PLACES
6 EQUAL SPACES AT
.125 BSC = .750 BSC
4 PLACES
.08
.06
2 PLACES
6.715
6.725

NOTES:

1. MATL: MAKE FROM DWG NO. 1004563
2. MACHINED SURFACE QUALITY 125/, SURFACES MARKED ✓
3. ANODIZE PER MIL-A-8625, TYPE I, DYED BLACK
4. REMOVE BURRS AND SHARP EDGES
5. INSTALL FIND NO. 2 & 3 PER ND1002136
6. MARK .08/.04 HIGH WHITE CHARACTERS APPROX. WHERE SHOWN PER ND 1002019

Ⓑ REPLACES REVISION A

SEE NOTE 1

QTY REQD	PART OR IDENTIFYING NO.	NOMENCLATURE OR DESCRIPTION
560	1006774	INSULATOR, WRAPPOST, FEMALE
560	1006781-4	CONTACT, MALCO
1	1004152-1	PLATE, CONNECTOR

LIST OF MATERIALS

1003535	
NEXT ASSY	USED ON
APPLICATION	

UNLESS OTHERWISE SPECIFIED DIMENSIONS ARE IN INCHES
TOLERANCES ON
FRACTIONS ± DECIMALS ± ANGLES ±
DO NOT SCALE THIS DRAWING
MATERIAL SEE NOTE 1
HEAT TREATMENT NONE
FINAL FINISH SEE NOTE 4

MIT
INSTRUMENTATION LAB
CAMBRIDGE, MASS
DRAWN DATE 5/15/63
CHECKED
APPROVAL
APPROVAL
APPROVAL
NASA APPROVAL 10-7-63
MIT APPROVAL
MIT APPROVAL

MANNED SPACECRAFT CENTER
HOUSTON, TEXAS

PLATE, CONNECTOR RELAY
HOUSING ASSY
AGC DSKY, NAV

CODE IDENT NO. ——
SIZE J
NASA DRAWING NO. 1004152
SCALE 2/1
WT
SHEET 1

INTERPRET DRAWING IN ACCORDANCE WITH STANDARDS PRESCRIBED BY MIL-D-70327

INCHES
0 1 2
PHOTOGRAPHIC SCALE ONLY

ANY USE OF THIS DOCUMENT FOR OTHER THAN GOVERNMENTAL PURPOSES IS SUBJECT TO PRIOR WRITTEN CONSENT OF [illegible]

REVISIONS			
SYM	DESCRIPTION	DATE	APPROVED
Ⓐ B	REDRAW REPLACES REV A WITH CHANGES AND UPGRADED TO CLASS A PER TDRR 03624	[illegible]	[illegible]
Ⓐ C	REVISED PER TDRR [illegible]	[illegible]	[illegible]
D	REVISED PER TDRR [illegible]	[illegible]	RDK

NOTICE — WHEN GOVERNMENT DRAWINGS, SPECIFICATIONS, OR OTHER DATA ARE USED FOR ANY PURPOSE OTHER THAN IN CONNECTION WITH A DEFINITELY RELATED GOVERNMENT PROCUREMENT OPERATION, THE UNITED STATES GOVERNMENT THEREBY INCURS NO RESPONSIBILITY NOR ANY OBLIGATION WHATSOEVER; AND THE FACT THAT THE GOVERNMENT MAY HAVE FORMULATED, FURNISHED, OR IN ANY WAY SUPPLIED THE SAID DRAWINGS, SPECIFICATIONS, OR OTHER DATA IS NOT TO BE REGARDED BY IMPLICATION OR OTHERWISE AS IN ANY MANNER LICENSING THE HOLDER OR ANY OTHER PERSON OR CORPORATION, OR CONVEYING ANY RIGHTS OR PERMISSION TO MANUFACTURE, USE, OR SELL ANY PATENTED INVENTION THAT MAY IN ANY WAY BE RELATED THERETO.

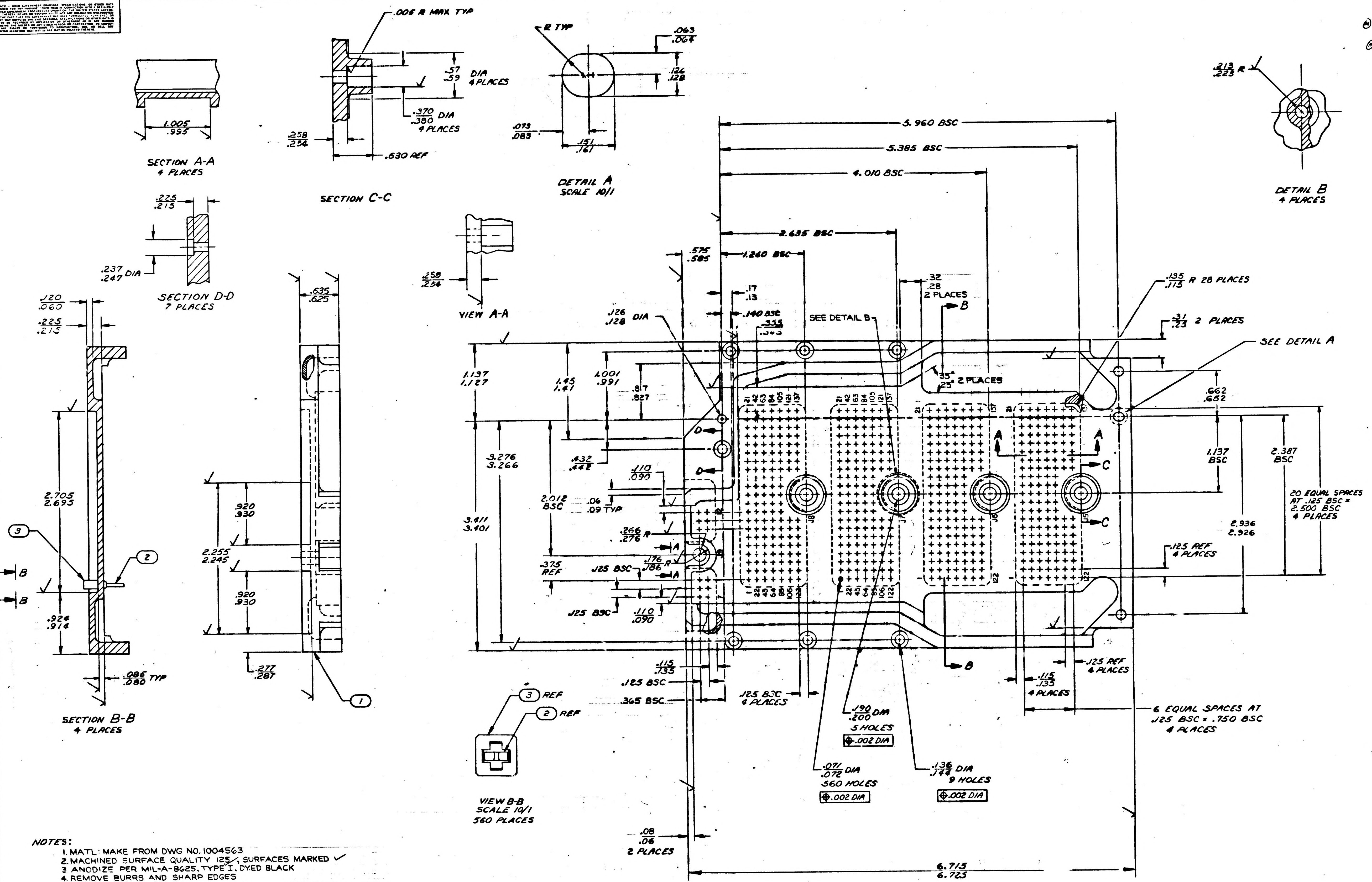
SECTION A-A
4 PLACES
1.005
.995
SECTION C-C
.005 R MAX TYP
.57
.59 DIA
4 PLACES
.370
.380 DIA
4 PLACES
.258
.254
.630 REF
R TYP
.063
.064
.124
.128
.073
.083
.151
.161
DETAIL A
SCALE 10/1
.213
.223 R
DETAIL B
4 PLACES
SECTION D-D
7 PLACES
.225
.215
.237
.247 DIA
VIEW A-A
.258
.254
.120
.060
.225
.215
2.705
2.693
.924
.914
.085
.080 TYP
SECTION B-B
4 PLACES
.635
.625
.920
.930
2.255
2.245
.920
.930
.277
.287
5.960 BSC
5.385 BSC
4.010 BSC
2.635 BSC
1.260 BSC
.575
.585
.17
.13
.140 BSC
.355
.345
.32
.28
2 PLACES
SEE DETAIL B
35°
25° 2 PLACES
.135
.115 R 28 PLACES
.31
.23 2 PLACES
SEE DETAIL A
.126
.128 DIA
1.137
1.127
1.45
1.41
1.001
.991
.817
.827
.432
.442
3.276
3.266
3.411
3.401
2.012
BSC
.110
.090
.06
.09 TYP
.266
.276 R
.375
REF
.125 BSC
.176
.186
.125 BSC
.110
.090
.662
.652
1.137
BSC
2.387
BSC
20 EQUAL SPACES
AT .125 BSC =
2.500 BSC
4 PLACES
2.936
2.926
.125 REF
4 PLACES
.115
.135
.125 BSC
.365 BSC
.125 BSC
4 PLACES
.190
.200 DIM
5 HOLES
⊕ .002 DIA
.071
.072 DIA
560 HOLES
⊕ .002 DIA
.136
.144 DIA
9 HOLES
⊕ .002 DIA
.125 REF
4 PLACES
.115
.135
4 PLACES
6 EQUAL SPACES AT
.125 BSC = .750 BSC
4 PLACES
.08
.06
2 PLACES
6.715
6.725
A
B
C
D
1
2
3
3 REF
2 REF
VIEW B-B
SCALE 10/1
560 PLACES
21
42
63
84
105
121
137
122
18
17
16
15

NOTES:

1. MATL: MAKE FROM DWG NO. 1004563
2. MACHINED SURFACE QUALITY 125✓, SURFACES MARKED ✓
3. ANODIZE PER MIL-A-8625, TYPE I, DYED BLACK
4. REMOVE BURRS AND SHARP EDGES
5. INSTALL FIND NO. 2 & 3 PER ND1002136
6. MARK $^{.08}_{.04}$ HIGH WHITE CHARACTERS APPROX. WHERE SHOWN PER ND 1002019

Ⓑ REPLACES REVISION A

SEE NOTE 1

QTY REQD	PART OR IDENTIFYING NO.	NOMENCLATURE OR DESCRIPTION	FIND NO
560	1006774	INSULATOR, WRAPOST, FEMALE	3
560	1006781-4	CONTACT, MALCO	2
1	1004152-1	PLATE, CONNECTOR	1

LIST OF MATERIALS

1003535	
NEXT ASSY	USED ON
APPLICATION	

UNLESS OTHERWISE SPECIFIED
DIMENSIONS ARE IN INCHES
TOLERANCES ON
FRACTIONS ± DECIMALS ± ANGLES ±
DO NOT SCALE THIS DRAWING
MATERIAL SEE NOTE 1
HEAT TREATMENT NONE
FINAL FINISH SEE NOTE 4

MIT
INSTRUMENTATION LAB
CAMBRIDGE, MASS
DWG. NO. CONTRACT
DRAWN D.A. [illegible] DATE 8/15/[illegible]
CHECKED [illegible] [illegible]
APPROVAL
APPROVAL [illegible]
APPROVAL
NASA APPROVAL W J [illegible] 10-3-63
MIT APPROVAL
MIT APPROVAL [illegible] 30 Oct

MANNED SPACECRAFT CENTER
HOUSTON, TEXAS

PLATE, CONNECTOR RELAY
HOUSING ASSY
AGC DSKY, NAV

CODE IDENT NO. ——— SIZE J NASA DRAWING NO 1004152
SCALE 2/1 WT SHEET 1 OF 1

INTERPRET DRAWING IN ACCORDANCE WITH STANDARDS PRESCRIBED BY MIL-D-70327

INCHES
PHOTOGRAPHIC SCALE ONLY

NOTICE: WHEN GOVERNMENT DRAWINGS, SPECIFICATIONS, OR OTHER DATA ARE USED FOR ANY PURPOSE OTHER THAN IN CONNECTION WITH A DEFINITELY RELATED GOVERNMENT PROCUREMENT OPERATION, THE UNITED STATES GOVERNMENT THEREBY INCURS NO RESPONSIBILITY NOR ANY OBLIGATION WHATSOEVER; AND THE FACT THAT THE GOVERNMENT MAY HAVE FORMULATED, FURNISHED, OR IN ANY WAY SUPPLIED THE SAID DRAWINGS, SPECIFICATIONS, OR OTHER DATA IS NOT TO BE REGARDED BY IMPLICATION OR OTHERWISE AS IN ANY MANNER LICENSING THE HOLDER OR ANY OTHER PERSON OR CORPORATION, OR CONVEYING ANY RIGHTS OR PERMISSION TO MANUFACTURE, USE, OR SELL ANY PATENTED INVENTION THAT MAY IN ANY WAY BE RELATED THERETO.

1004152E

ANY USE OF THIS DOCUMENT FOR OTHER THAN GOVERNMENTAL PURPOSES IS SUBJECT TO PRIOR WRITTEN CONSENT OF RAYTHEON CO.

REVISIONS			
SYM	DESCRIPTION	DATE	APPROVED
Ⓜ B	REDRAW REPLACES REV A WITH CHANGES AND UPGRADED TO CLASS A PER TDRR 03624	[illegible]	[illegible]
Ⓐ C	REVISED PER TDRR [illegible]	[illegible]	[illegible]
Ⓜ D	REVISED PER TDRR [illegible]	[illegible]	[illegible]
E	REVISED PER TDRR 05766	[illegible]	[illegible]

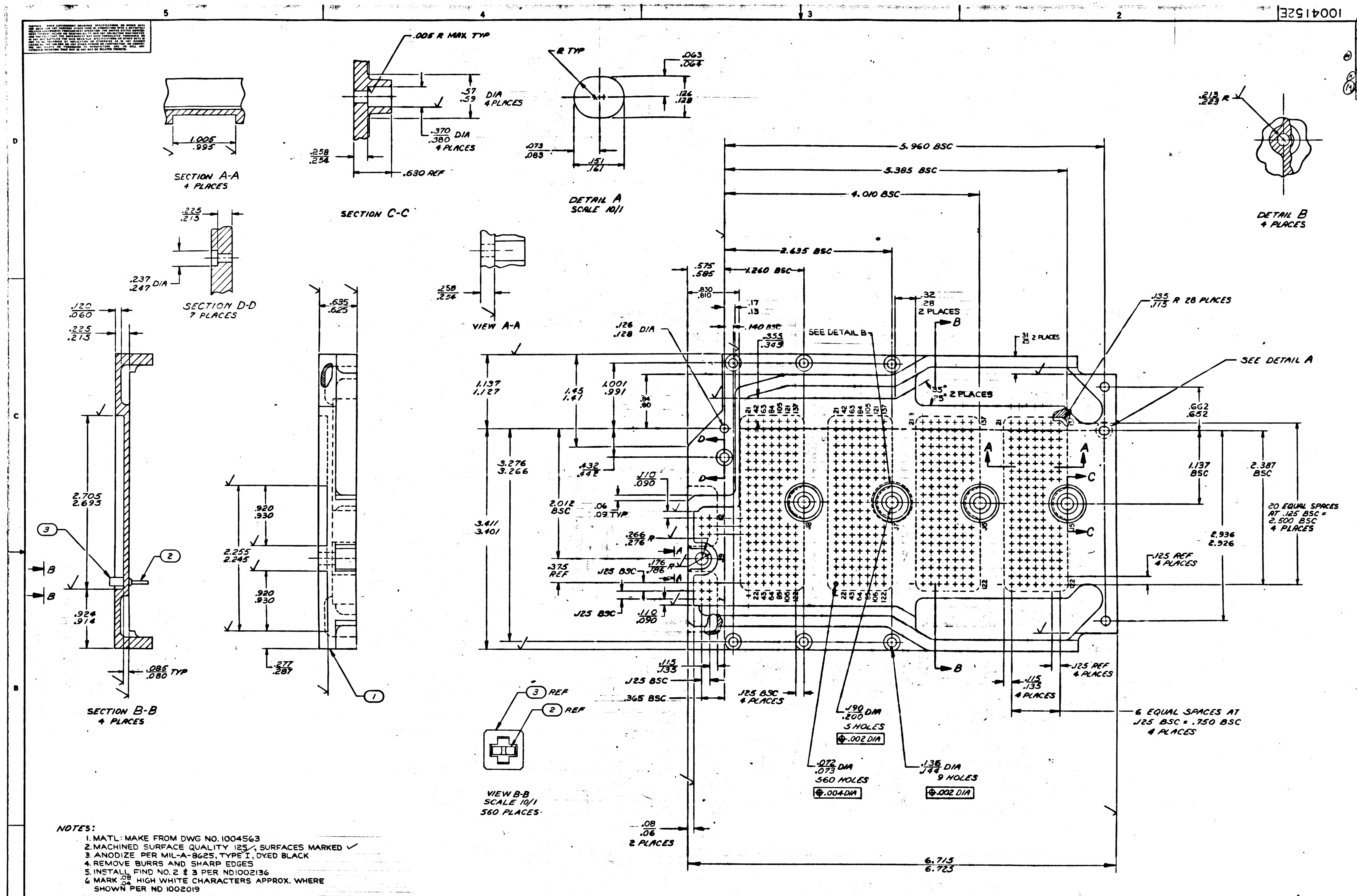
5
4
3
2
1
D
C
B
A
SECTION A-A
4 PLACES
1.005
.995
.005 R MAX TYP
.57
.59 DIA
4 PLACES
.370
.380 DIA
4 PLACES
.258
.254
.630 REF
SECTION C-C
R TYP
.063
.064
.126
.128
.073
.083
.151
.161
DETAIL A
SCALE 10/1
.213
.223 R
DETAIL B
4 PLACES
.225
.215
.237
.247 DIA
SECTION D-D
7 PLACES
.258
.254
VIEW A-A
.120
.060
.225
.213
2.705
2.693
.924
.914
.085
.080 TYP
SECTION B-B
4 PLACES
.635
.625
.920
.930
2.255
2.245
.920
.930
.277
.287
5.960 BSC
5.385 BSC
4.010 BSC
2.635 BSC
1.260 BSC
.575
.585
.830
.810
.17
.13
.140 BSC
.355
.345
.126
.128 DIA
SEE DETAIL B
.32
.28
2 PLACES
.31
.25 2 PLACES
35°
25° 2 PLACES
.135
.115 R 28 PLACES
SEE DETAIL A
1.137
1.127
1.45
1.41
1.001
.991
.84
.80
3.276
3.266
.432
.442
2.012
BSC
.110
.090
.06
.09 TYP
3.411
3.401
.266
.276 R
.176
.186 R
.375
REF
.125 BSC
.125 BSC
.110
.090
.662
.652
1.137
BSC
2.387
BSC
20 EQUAL SPACES
AT .125 BSC =
2.500 BSC
4 PLACES
2.936
2.926
.125 REF
4 PLACES
.115
.135
.125 BSC
.365 BSC
.125 BSC
4 PLACES
.190
.200 DIA
5 HOLES
⌖ .002 DIA
.072
.075 DIA
560 HOLES
⌖ .004 DIA
.136
.144 DIA
9 HOLES
⌖ .002 DIA
.115
.133
4 PLACES
.125 REF
4 PLACES
6 EQUAL SPACES AT
.125 BSC = .750 BSC
4 PLACES
.08
.06
2 PLACES
6.715
6.725
③ REF
② REF
VIEW B-B
SCALE 10/1
560 PLACES
①
②
③
A
B
C
D

NOTES:

1. MATL: MAKE FROM DWG NO. 1004563
2. MACHINED SURFACE QUALITY 125✓, SURFACES MARKED ✓
3. ANODIZE PER MIL-A-8625, TYPE I, DYED BLACK
4. REMOVE BURRS AND SHARP EDGES
5. INSTALL FIND NO. 2 & 3 PER ND1002136
6. MARK $^{.08}_{.04}$ HIGH WHITE CHARACTERS APPROX. WHERE SHOWN PER ND 1002019

Ⓑ REPLACES REVISION A

SEE NOTE 1

QTY REQD	PART OR IDENTIFYING NO.	NOMENCLATURE OR DESCRIPTION	FIND NO
560	1006774	INSULATOR, WRAPOST, FEMALE	3
560	1006781-4	CONTACT, MALCO	2
1	1004152-1	PLATE, CONNECTOR	1

LIST OF MATERIALS

NEXT ASSY	USED ON
1003535	

APPLICATION

UNLESS OTHERWISE SPECIFIED DIMENSIONS ARE IN INCHES
TOLERANCES ON
FRACTIONS ± DECIMALS ± ANGLES ±
DO NOT SCALE THIS DRAWING
MATERIAL: SEE NOTE 1
HEAT TREATMENT: NONE
FINAL FINISH: SEE NOTE 4

MIT INSTRUMENTATION LAB
CAMBRIDGE, MASS
CONTRACT
DRAWN [illegible] DATE [illegible]
CHECKED [illegible]
APPROVAL
APPROVAL [illegible]
APPROVAL
NASA APPROVAL [illegible] 10-7-63
MIT APPROVAL
MIT APPROVAL [illegible]

MANNED SPACECRAFT CENTER
HOUSTON, TEXAS

PLATE, CONNECTOR RELAY
HOUSING ASSY
AGC DSKY, NAV

CODE IDENT NO. —
SIZE J
NASA DRAWING NO. 1004152
SCALE 2/1
WT
SHEET 1 OF 1

INTERPRET DRAWING IN ACCORDANCE WITH STANDARDS PRESCRIBED BY MIL-D-70327

1004152D

1004152F

NOTICE: WHEN GOVERNMENT DRAWINGS, SPECIFICATIONS, OR OTHER DATA ARE USED FOR ANY PURPOSE OTHER THAN IN CONNECTION WITH A DEFINITELY RELATED GOVERNMENT PROCUREMENT OPERATION, THE UNITED STATES GOVERNMENT THEREBY INCURS NO RESPONSIBILITY NOR ANY OBLIGATION WHATSOEVER; AND THE FACT THAT THE GOVERNMENT MAY HAVE FORMULATED, FURNISHED, OR IN ANY WAY SUPPLIED THE SAID DRAWINGS, SPECIFICATIONS, OR OTHER DATA IS NOT TO BE REGARDED BY IMPLICATION OR OTHERWISE AS IN ANY MANNER LICENSING THE HOLDER OR ANY OTHER PERSON OR CORPORATION, OR CONVEYING ANY RIGHTS OR PERMISSION TO MANUFACTURE, USE, OR SELL ANY PATENTED INVENTION THAT MAY IN ANY WAY BE RELATED THERETO.

ANY USE OF THIS DOCUMENT FOR OTHER THAN GOVERNMENTAL PURPOSES IS SUBJECT TO PRIOR WRITTEN CONSENT OF RAYTHEON CO.

REVISIONS				
	SYM	DESCRIPTION	DATE	APPROVED
(B)	B	REDRAW REPLACES REV A WITH CHANGES AND UPGRADED TO CLASS A PER TDRR 03624		
(A)	C	REVISED PER TDRR 04614		
(M)	D	REVISED PER TDRR 04772		
(M)	E	REVISED PER TDRR 05766		
	F	REVISED PER TDRR 07341 DR B.J. Papin CHK		

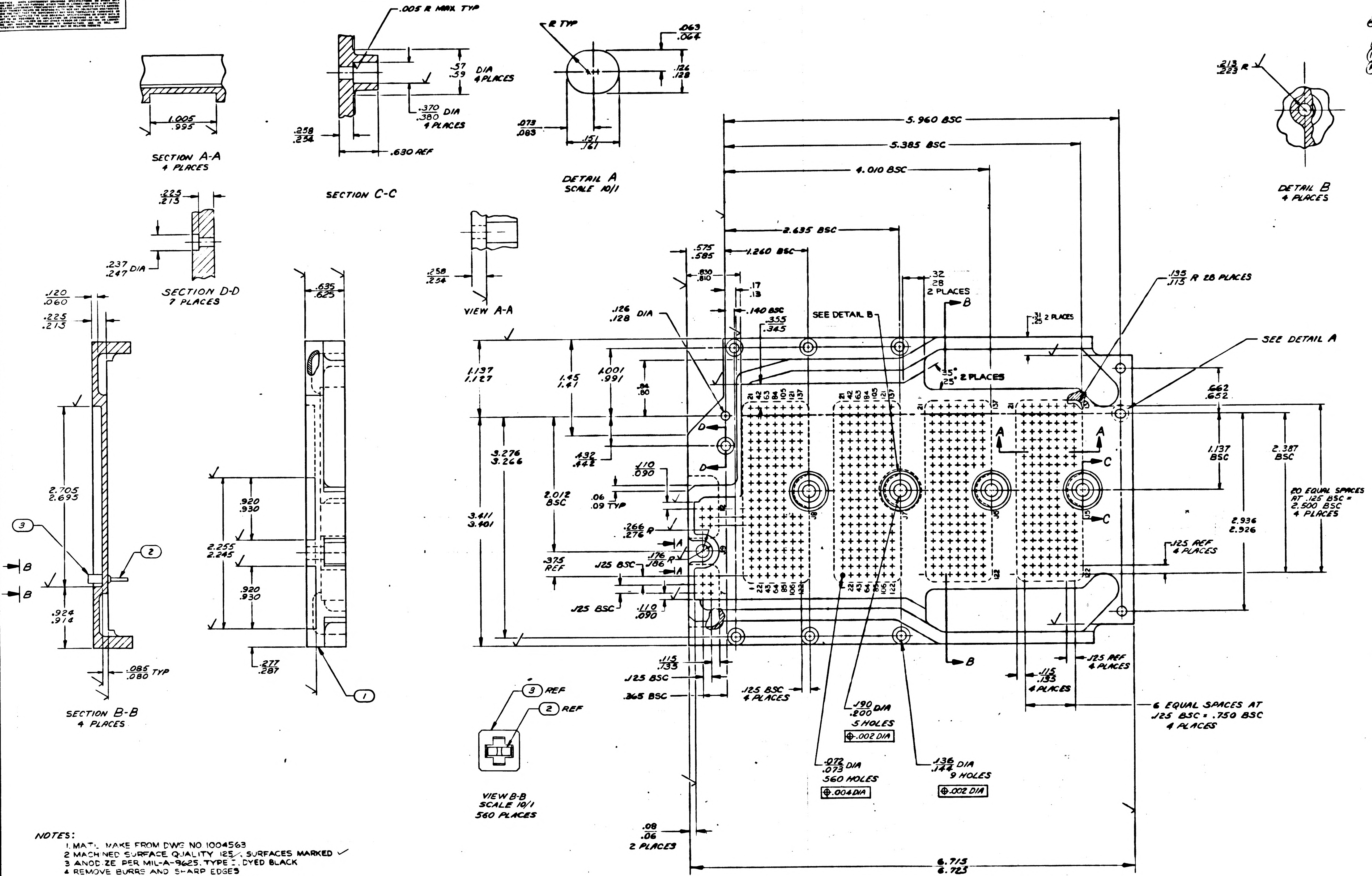
SECTION A-A
4 PLACES
1.005
.995
SECTION C-C
.005 R MAX TYP
.57
.59 DIA
4 PLACES
.370
.380 DIA
4 PLACES
.258
.254
.630 REF
R TYP
.063
.064
.126
.128
.073
.083
.151
.161
DETAIL A
SCALE 10/1
DETAIL B
4 PLACES
.213
.223 R
.225
.213
.237
.247 DIA
SECTION D-D
7 PLACES
VIEW A-A
.258
.254
.120
.060
.225
.213
2.705
2.695
.924
.914
.085
.080 TYP
SECTION B-B
4 PLACES
.635
.625
.920
.930
2.255
2.245
.920
.930
.277
.287
5.960 BSC
5.385 BSC
4.010 BSC
2.635 BSC
1.260 BSC
.575
.585
.830
.810
.17
.13
.140 BSC
.355
.345
SEE DETAIL B
.32
.28
2 PLACES
.31
.25 2 PLACES
.35°
.25° 2 PLACES
.135
.115 R 28 PLACES
SEE DETAIL A
.126
.128 DIA
1.137
1.127
1.45
1.41
1.001
.991
.84
.80
3.276
3.266
.432
.442
.110
.090
2.012
BSC
.06
.09 TYP
3.411
3.401
.266
.276 R
.375
REF
.125 BSC
.176
.186 R
.125 BSC
.110
.090
.662
.652
1.137
BSC
2.387
BSC
20 EQUAL SPACES
AT .125 BSC =
2.500 BSC
4 PLACES
2.936
2.926
.125 REF
4 PLACES
.125 REF
4 PLACES
.115
.133
4 PLACES
6 EQUAL SPACES AT
.125 BSC = .750 BSC
4 PLACES
.115
.133
.125 BSC
.365 BSC
.125 BSC
4 PLACES
.190
.200 DIA
5 HOLES
⊕ .002 DIA
.072
.073 DIA
560 HOLES
⊕ .004 DIA
.136
.144 DIA
9 HOLES
⊕ .002 DIA
.08
.06
2 PLACES
6.715
6.725
VIEW B-B
SCALE 10/1
560 PLACES
3 REF
2 REF
1
2
3

NOTES:
1. MAT'L MAKE FROM DWG NO 1004563
2 MACHINED SURFACE QUALITY 125√, SURFACES MARKED ✓
3 ANODIZE PER MIL-A-8625, TYPE I, DYED BLACK
4 REMOVE BURRS AND SHARP EDGES
5 INSTALL FIND NO. 2 & 3 PER ND1002136
6 MARK $\frac{.08}{.04}$ HIGH WHITE CHARACTERS APPROX. WHERE SHOWN PER ND 1002019

(B) REPLACES REVISION A

SEE NOTE 1

QTY REQD	PART OR IDENTIFYING NO	NOMENCLATURE OR DESCRIPTION	FIND NO
560	1006774	INSULATOR, WRAPOST, FEMALE	3
560	1006781-4	CONTACT, MALCO	2
1	1004152-1	PLATE, CONNECTOR	1

LIST OF MATERIALS

NEXT ASSY	USED ON
1003535	

APPLICATION

UNLESS OTHERWISE SPECIFIED DIMENSIONS ARE IN INCHES
TOLERANCES ON
FRACTIONS ± DECIMALS ± ANGLES ±
DO NOT SCALE THIS DRAWING
MATERIAL SEE NOTE 1
HEAT TREATMENT NONE
FINAL FINISH SEE NOTE 4

MIT
INSTRUMENTATION LAB
CAMBRIDGE, MASS
CONTRACT
DRAWN D. L. [illegible] DATE 5/15/63
CHECKED [illegible] May 63
APPROVAL
APPROVAL
APPROVAL
NASA APPROVAL W. J. [illegible] 10-9-63
MIT APPROVAL
MIT APPROVAL [illegible] 30 Oct

MANNED SPACECRAFT CENTER
HOUSTON, TEXAS

PLATE, CONNECTOR RELAY HOUSING ASSY AGC DSKY, NAV

CODE IDENT NO ——
SIZE J
NASA DRAWING NO. 1004152
SCALE 2/1
WT
SHEET 1 OF 1

INTERPRET DRAWING IN ACCORDANCE WITH STANDARDS PRESCRIBED BY MIL-D-70327

NOTICE — WHEN GOVERNMENT DRAWINGS SPECIFICATIONS, OR OTHER DATA ARE USED FOR ANY PURPOSE OTHER THAN IN CONNECTION WITH A DEFINITELY RELATED GOVERNMENT PROCUREMENT OPERATION THE UNITED STATES GOVERNMENT THEREBY INCURS NO RESPONSIBILITY NOR ANY OBLIGATION WHATSOEVER, AND THE FACT THAT THE GOVERNMENT MAY HAVE FORMULATED, FURNISHED OR IN ANY WAY SUPPLIED THE SAID DRAWINGS, SPECIFICATIONS OR OTHER DATA IS NOT TO BE REGARDED BY IMPLICATION OR OTHERWISE AS IN ANY MANNER LICENSING THE HOLDER OR ANY OTHER PERSON OR CORPORATION, OR CONVEYING ANY RIGHTS OR PERMISSION TO MANUFACTURE, USE, OR SELL ANY PATENTED INVENTION THAT MAY IN ANY WAY BE RELATED THERETC

REVISIONS

SYM	DESCRIPTION	DATE	APPROVAL

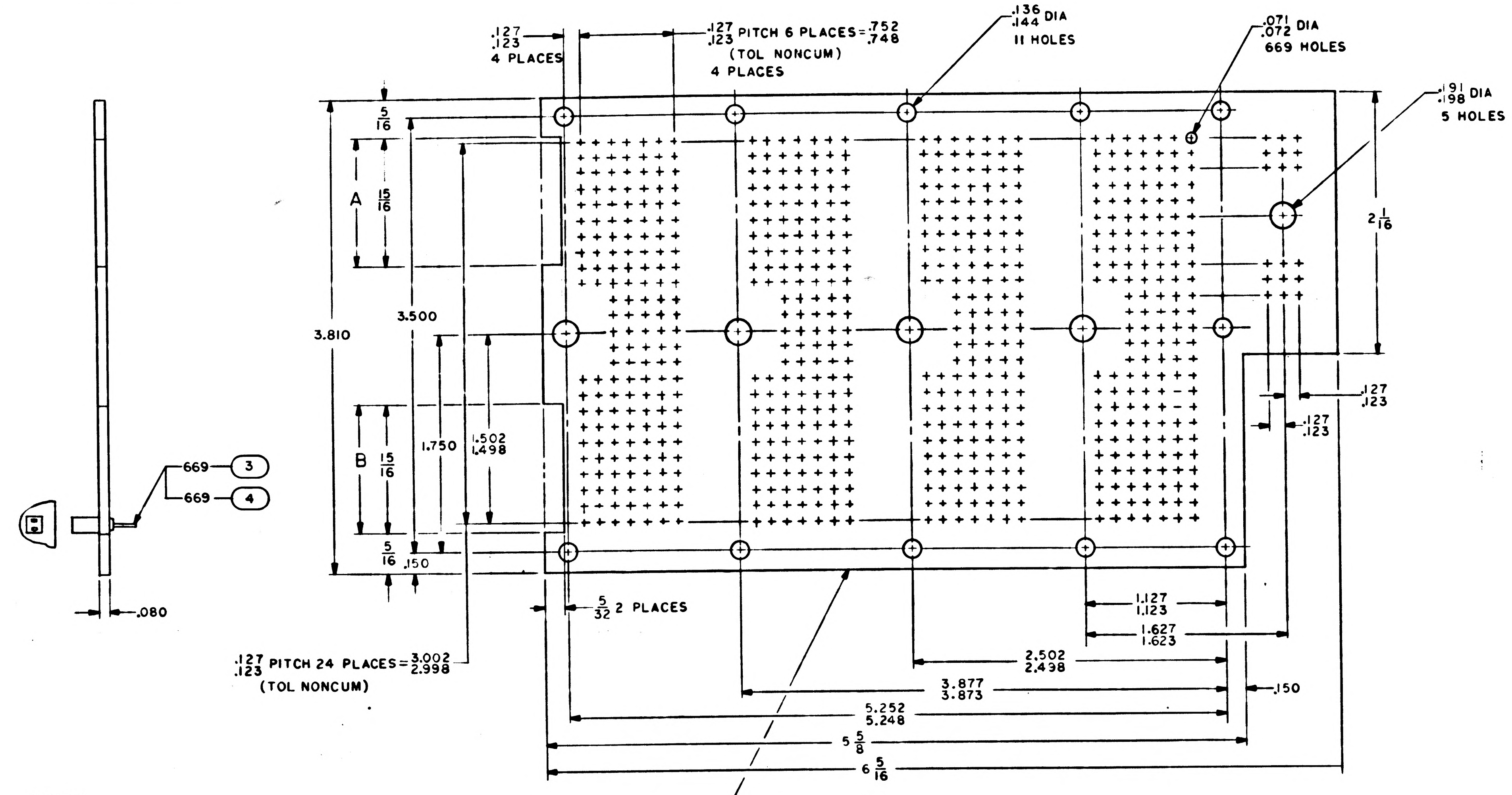

.127 .123 4 PLACES
.127 .123 PITCH 6 PLACES = .752 .748
(TOL NONCUM)
4 PLACES
.136 .144 DIA
11 HOLES
.071 .072 DIA
669 HOLES
.191 .198 DIA
5 HOLES
5/16
A
15/16
3.810
3.500
B
15/16
1.750
1.502 1.498
5/16
.150
2 1/16
.127 .123
.127 .123
669 — 3
669 — 4
.080
5/32 2 PLACES
1.127 1.123
1.627 1.623
2.502 2.498
3.877 3.873
.150
5.252 5.248
5 5/8
6 5/16
.127 .123 PITCH 24 PLACES = 3.002 2.998
(TOL NONCUM)
1
2

FOR INFORMATION ONLY

CLASS B RELEASE TDR No. 01298 DATE 5-28-63

NOTES:

1. INTERPRET DRAWING IN ACCORDANCE WITH STANDARDS PRESCRIBED BY MIL-D-70327
2. MATERIAL: 6061-T6 ALUMINUM PER QQ-A-327
3. 125√ALL OVER
4. REMOVE BURRS & SHARP EDGES
5. ANODIZE PER MIL-A-8625 TYPE II DYED BLACK
6. PART NO. 1004152-1 AS SHOWN
7. PART NO. 1004152-2 WITHOUT CUTOUTS A & B

669	1006781	CONTACT, MALCO	4
669	1006774	INSULATOR, MALCO	3
	1004152-2	SEE NOTE 7	2
	1004152-1	SEE NOTE 6	1
QTY REQD	PART OR IDENTIFYING NO.	NOMENCLATURE OR DESCRIPTION	FIND NO.

LIST OF MATERIALS

NEXT ASSY	USED ON
APPLICATION	

UNLESS OTHERWISE SPECIFIED
DIMENSIONS ARE IN INCHES
TOLERANCES ON
FRACTIONS ± 1/64 DECIMALS ±.005 ANGLES ±
DO NOT SCALE THIS DRAWING

MATERIAL
SEE NOTE 2

HEAT TREATMENT

FINAL FINISH
SEE NOTE 5

MIT
INSTRUMENTATION LAB
CAMBRIDGE, MASS
DWG NO. CONTRACT

DRAWN DATE 11 MAY 63
CHECKED 5-15-63
APPROVAL N.B. Turner 22 MAY 63
APPROVAL
NASA APPROVAL 5/22/63
MIT APPROVAL 5/22/63

MANNED SPACECRAFT CENTER
HOUSTON, TEXAS

PLATE, RELAY MODULE
AGC KEYBOARD

CODE IDENT NO. SIZE D NASA DRAWING NO. 1004152

SCALE 2/1 WT SHEET 1 OF 1

1004152

INCHES
0 1 2
PHOTOGRAPHIC SCALE ONLY

NOTICE — WHEN GOVERNMENT DRAWINGS, SPECIFICATIONS, OR OTHER DATA ARE USED FOR ANY PURPOSE OTHER THAN IN CONNECTION WITH A DEFINITELY RELATED GOVERNMENT PROCUREMENT OPERATION, THE UNITED STATES GOVERNMENT THEREBY INCURS NO RESPONSIBILITY NOR ANY OBLIGATION WHATSOEVER; AND THE FACT THAT THE GOVERNMENT MAY HAVE FORMULATED, FURNISHED, OR IN ANY WAY SUPPLIED THE SAID DRAWINGS, SPECIFICATIONS OR OTHER DATA IS NOT TO BE REGARDED BY IMPLICATION OR OTHERWISE AS IN ANY MANNER LICENSING THE HOLDER OR ANY OTHER PERSON OR CORPORATION, OR CONVEYING ANY RIGHTS OR PERMISSION TO MANUFACTURE, USE, OR SELL ANY PATENTED INVENTION THAT MAY IN ANY WAY BE RELATED THERETO.

(N)

REVISIONS			
SYM	DESCRIPTION	DATE	APPROVAL
A	REPLACED WITH CHANGE BY REV B PER TDRR 03634	10-3-65	WK

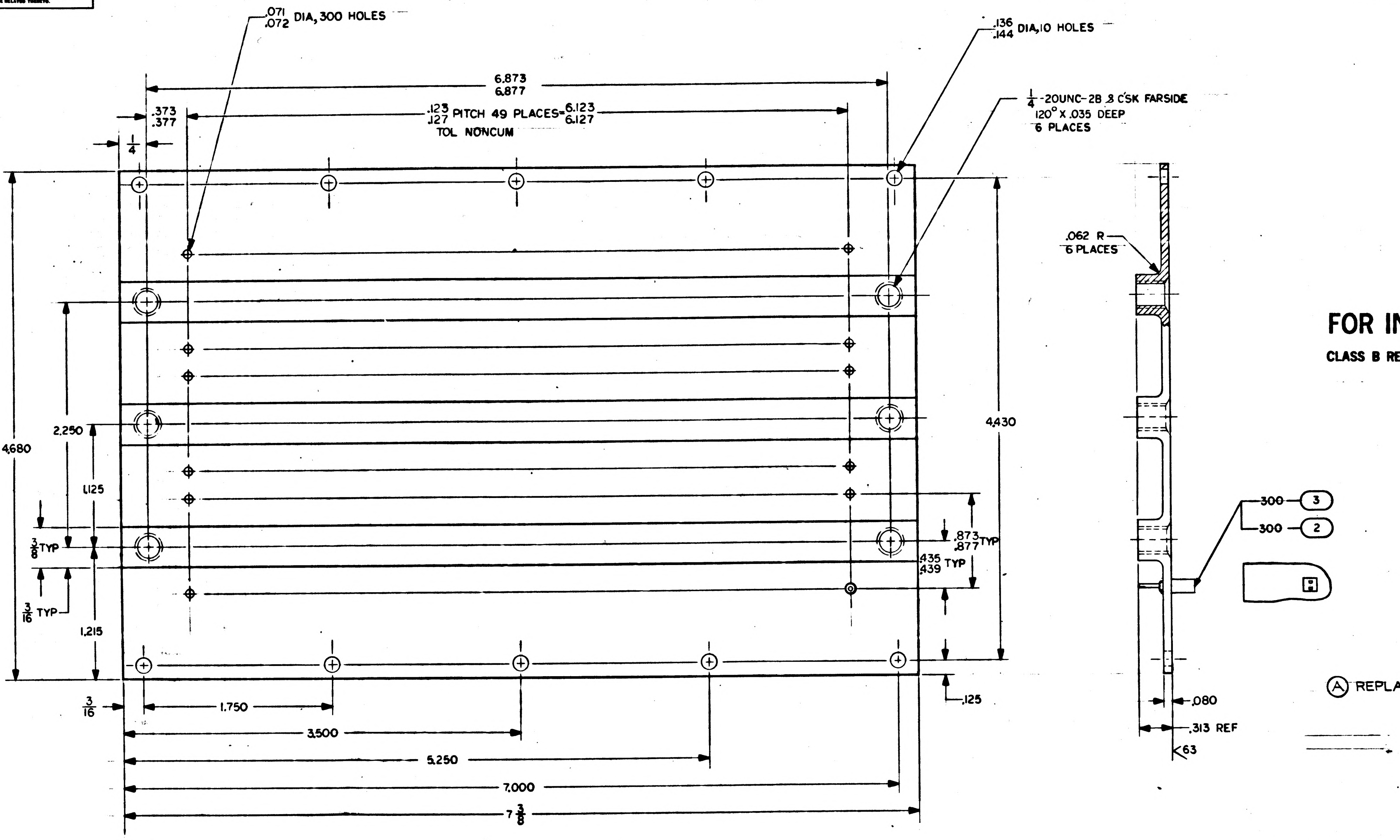
.071 / .072 DIA, 300 HOLES
.136 / .144 DIA, 10 HOLES
1/4-20UNC-2B, 3 C'SK FARSIDE 120° X .035 DEEP 6 PLACES
6.873 / 6.877
.373 / .377
.123 / .127 PITCH 49 PLACES = 6.123 / 6.127
TOL NONCUM
1/4
4.680
2.250
1.125
3/8 TYP
3/16 TYP
1.215
4.430
.873 / .877 TYP
.435 / .439 TYP
.125
3/16
1.750
3.500
5.250
7.000
7 3/8
.062 R 6 PLACES
300 ③
300 ②
.080
.313 REF
63

FOR INFORMATION ONLY

CLASS B RELEASE TDR No. 0298 **DATE** 5-28-63

Ⓐ REPLACED WITH CHANGE BY REV B

NOTES
1. INTERPRET DRAWING IN ACCORDANCE WITH STANDARDS PRESCRIBED BY MIL-D-70327
2. MAT'L .313 THK 6061-T6 AL PER QQ-A-327 TEMPER T6
3. 125√ UNLESS OTHERWISE SPECIFIED
4. REMOVE BURRS AND SHARP EDGES
5. ANODIZE PER MIL A 8625 TYPE II, DYED BLACK

MASTER

QTY REQD	PART OR IDENTIFYING NO.	NOMENCLATURE OR DESCRIPTION	FIND NO.
300	1006781-2	CONTACT, MALCO	3
300	1006774	INSULATOR, MALCO	2
1	PLATE, DECODING MODULE	——	1

LIST OF MATERIALS

NEXT ASSY	USED ON
APPLICATION	

UNLESS OTHERWISE SPECIFIED DIMENSIONS ARE IN INCHES
TOLERANCES ON
FRACTIONS ±1/64 DECIMALS ±.005 ANGLES ±1/2°
DO NOT SCALE THIS DRAWING
MATERIAL SEE NOTE 2
HEAT TREATMENT
FINAL FINISH

MIT INSTRUMENTATION LAB
CAMBRIDGE, MASS.
DWG. NO.
CONTRACT
DRAWN R. Raney DATE 5-14-63
CHECKED [illegible] 5-14-63
APPROVAL N. B. Turner 22 MAY 63
APPROVAL [illegible]
NASA APPROVAL [illegible] 5/23/63
MIT APPROVAL D. Walsh 5/22/63

MANNED SPACECRAFT CENTER
HOUSTON, TEXAS

PLATE, DECODING MODULE
AGC KEYBOARD

CODE IDENT NO.
SIZE D
NASA DRAWING NO. 1004154
SCALE 2/1
WT
SHEET 1 OF 1

1004154

1004154

REVISIONS			
SYM	DESCRIPTION	DATE	APPROVAL
B	REDRAWN REPLACES REV A WITH CHANGES & UPGRADE TO CL A PER TDRR 03624	10-3-63	VK

NOTICE — WHEN GOVERNMENT DRAWINGS, SPECIFICATIONS, OR OTHER DATA ARE USED FOR ANY PURPOSE OTHER THAN IN CONNECTION WITH A DEFINITELY RELATED GOVERNMENT PROCUREMENT OPERATION, THE UNITED STATES GOVERNMENT THEREBY INCURS NO RESPONSIBILITY NOR ANY OBLIGATION WHATSOEVER; AND THE FACT THAT THE GOVERNMENT MAY HAVE FORMULATED, FURNISHED, OR IN ANY WAY SUPPLIED THE SAID DRAWINGS, SPECIFICATIONS OR OTHER DATA IS NOT TO BE REGARDED BY IMPLICATION OR OTHERWISE AS IN ANY MANNER LICENSING THE HOLDER OR ANY OTHER PERSON OR CORPORATION, OR CONVEYING ANY RIGHTS OR PERMISSION TO MANUFACTURE, USE, OR SELL ANY PATENTED INVENTION THAT MAY IN ANY WAY BE RELATED THERETO.

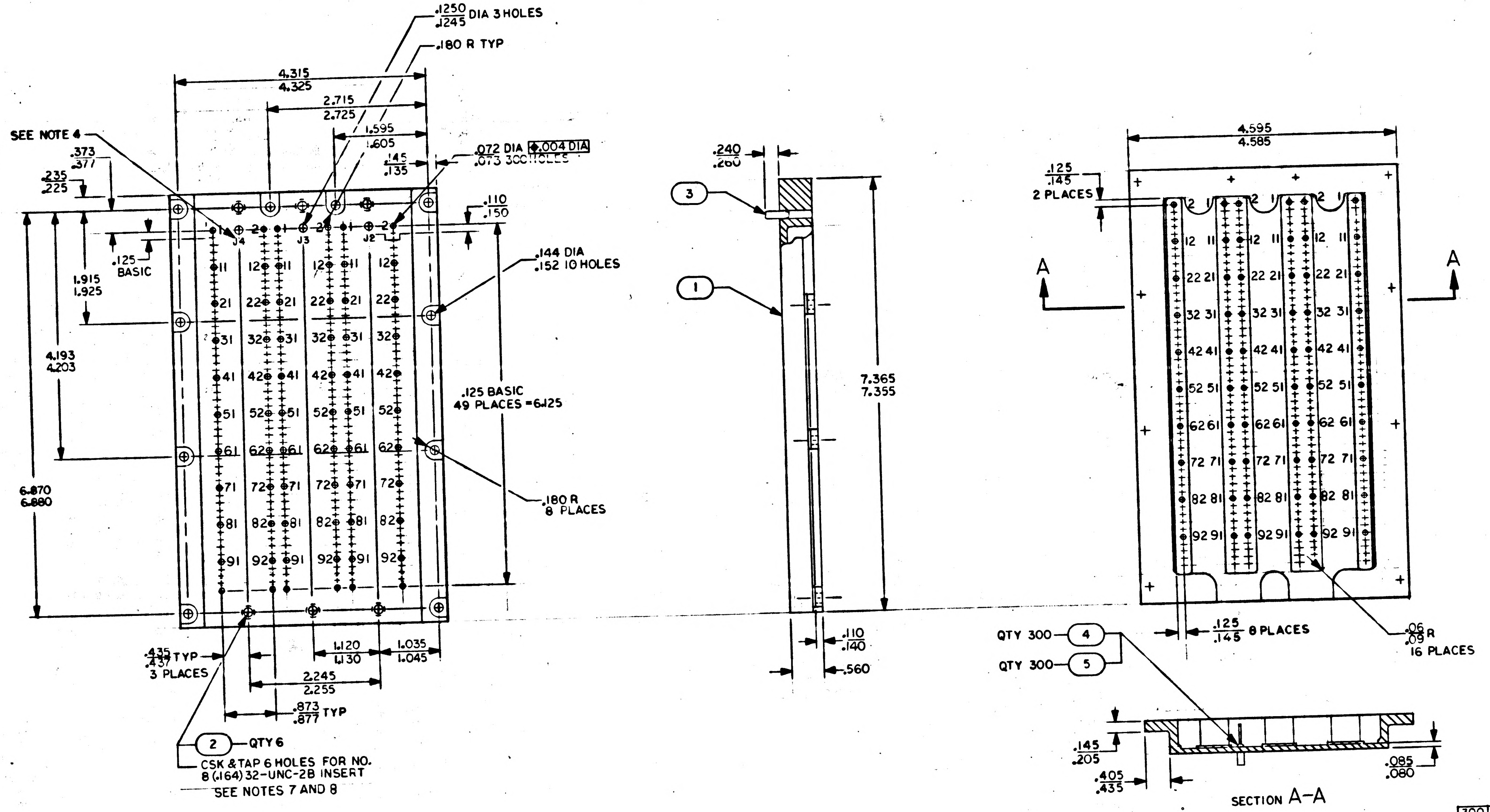
.1250
.1245 DIA 3 HOLES
.180 R TYP
4.315
4.325
2.715
2.725
1.595
1.605
SEE NOTE 4
.373
.377
.235
.225
.072 DIA
.073 300 HOLES
⌖.004 DIA
.145
.135
.110
.150
J4
J3
J2
.125 BASIC
1.915
1.925
4.193
4.203
6.870
6.880
.144 DIA
.152 10 HOLES
.125 BASIC
49 PLACES =6.125
.180 R
8 PLACES
.435
.437 TYP
3 PLACES
1.120
1.130
1.035
1.045
2.245
2.255
.873
.877 TYP
2 QTY 6
CSK & TAP 6 HOLES FOR NO. 8 (.164) 32-UNC-2B INSERT
SEE NOTES 7 AND 8
.240
.260
3
1
7.365
7.355
.110
.140
.560
4.595
4.585
.125
.145
2 PLACES
A
A
11 12 21 22 31 32 41 42 51 52 61 62 71 72 81 82 91 92
.125
.145 8 PLACES
.06
.09 R
16 PLACES
QTY 300 4
QTY 300 5
.145
.205
.405
.435
.085
.080
SECTION A-A

NOTES

1. MAKE FROM DWG NO. 1004566
2. MACHINED SURFACE QUALITY 125√
3. ANODIZE PER MIL-A-8625, TYPE I, DYED BLACK
4. MARK .06 HIGH WHITE PER ND1002019 BOTH SIDES
5. INTERPRET DRAWING IN ACCORDANCE WITH STANDARDS PRESCRIBED BY MIL-D-70327
6. INSTALL FIND NO. 4 AND FIND NO. 5 PER ND 1002136
7. INSTALL FIND NO. 2 PER MS 33646 BREAK OFF DRIVING TANG
8. COAT FIND NO. 2 WITH MIL-P-8585 WET ZINC CHROMATE PRIMER

Ⓑ REPLACES REV A WITH CHANGES

SEE NOTE 1

QTY REQD	PART OR IDENTIFYING NO.	NOMENCLATURE OR DESCRIPTION	FIND NO.
300	1006781-2	CONTACT, WRAPOST, FEMALE	5
300	1006774	INSULATOR, WRAPOST, FEMALE	4
3	1004248	PIN, KEYING	3
6	MS21209-C0815	INSERT, HELICAL	2
1	1004154-1	PLATE, WIREWRAP	1

LIST OF MATERIALS

MASTER

1003531	
NEXT ASSY	USED ON
APPLICATION	

UNLESS OTHERWISE SPECIFIED
DIMENSIONS ARE IN INCHES
TOLERANCES ON
FRACTIONS ± DECIMALS ±.005 ANGLES ±
DO NOT SCALE THIS DRAWING

MATERIAL
SEE NOTE 1

HEAT TREATMENT
NONE

FINAL FINISH
SEE NOTE 3

MIT
INSTRUMENTATION LAB
CAMBRIDGE, MASS.
DWG. NO. CONTRACT

DRAWN P.S. Tracy DATE 27Sep63
CHECKED O.R. Bogni 28SEP63
APPROVAL 1/63
APPROVAL Eldon C. Hall 30Sept63

NASA APPROVAL W.J. Rhine 10-3-63
MIT APPROVAL
MIT APPROVAL W. Kupfer 3Oct63

MANNED SPACECRAFT CENTER
HOUSTON, TEXAS

PLATE, DECODING MODULE
AGC KEYBOARD

CODE IDENT NO. ——
SIZE D
NASA DRAWING NO. 1004154
SCALE 1/1
WT
SHEET 1 OF 1

NOTICE — WHEN GOVERNMENT DRAWINGS, SPECIFICATIONS, OR OTHER DATA ARE USED FOR ANY PURPOSE OTHER THAN IN CONNECTION WITH A DEFINITELY RELATED GOVERNMENT PROCUREMENT OPERATION, THE UNITED STATES GOVERNMENT THEREBY INCURS NO RESPONSIBILITY NOR ANY OBLIGATION WHATSOEVER; AND THE FACT THAT THE GOVERNMENT MAY HAVE FORMULATED, FURNISHED, OR IN ANY WAY SUPPLIED THE SAID DRAWINGS, SPECIFICATIONS OR OTHER DATA IS NOT TO BE REGARDED BY IMPLICATION OR OTHERWISE AS IN ANY MANNER LICENSING THE HOLDER OR ANY OTHER PERSON OR CORPORATION, OR CONVEYING ANY RIGHTS OR PERMISSION TO MANUFACTURE, USE, OR SELL ANY PATENTED INVENTION THAT MAY IN ANY WAY BE RELATED THERETO.

C1004154

REVISIONS			
SYM	DESCRIPTION	DATE	APPROVAL
B	REDRAWN REPLACES REV A WITH CHANGES & UPGRADE TO CL A PER TDRR 03624	10-3-63	VK
C	REVISED PER TDRR 04176	10-21-63	VK

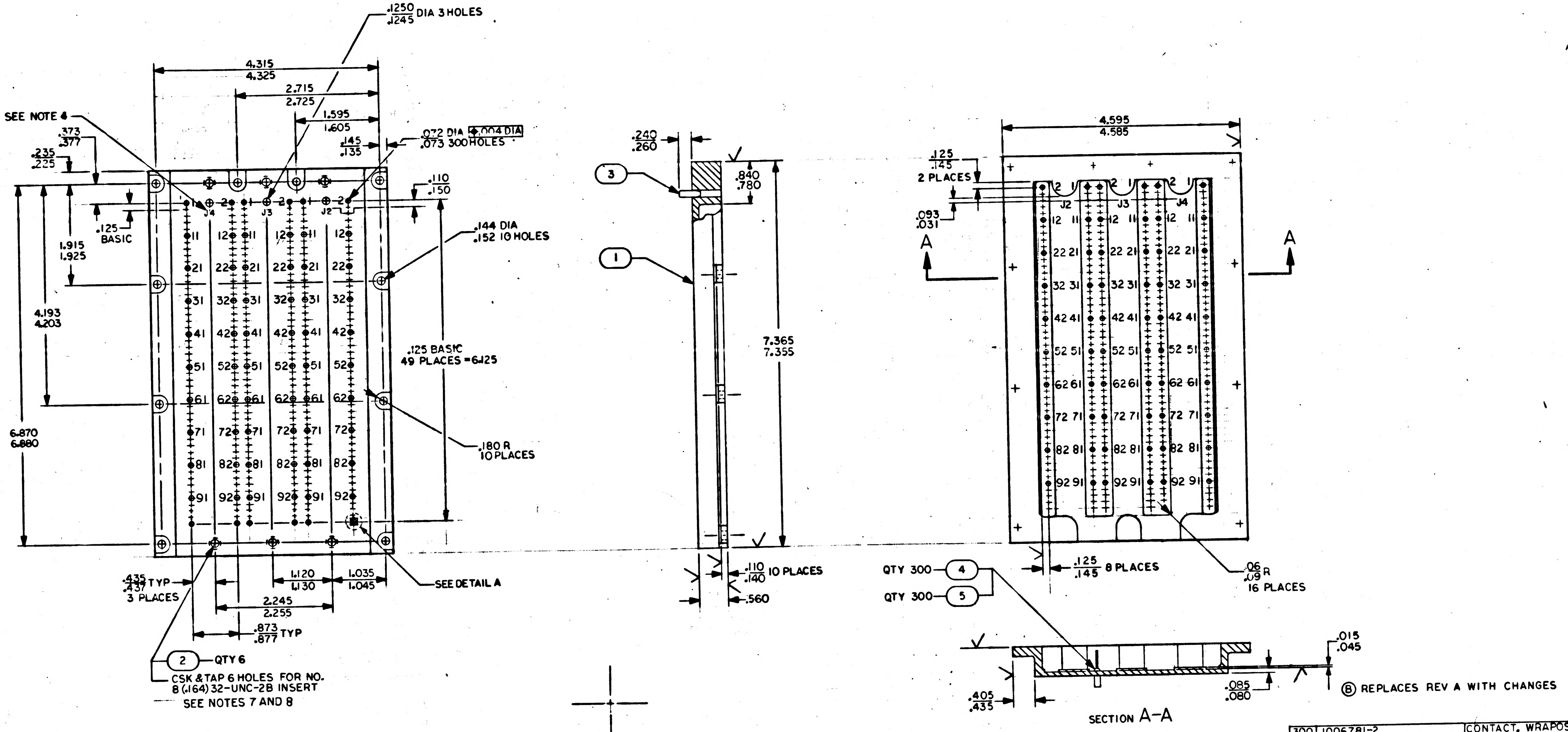

.1250
.1245 DIA 3 HOLES
4.315
4.325
2.715
2.725
1.595
1.605
SEE NOTE 4
.373
.377
.235
.225
.145
.135
.072 DIA ⊕ .004 DIA
.073 300 HOLES
.110
.150
.125 BASIC
1.915
1.925
.144 DIA
.152 10 HOLES
4.193
4.203
.125 BASIC
49 PLACES = 6.125
6.870
6.880
.180 R
10 PLACES
J4
J3
J2
SEE DETAIL A
.435
.437 TYP
3 PLACES
1.120
1.130
1.035
1.045
2.245
2.255
.873
.877 TYP
2
QTY 6
CSK & TAP 6 HOLES FOR NO. 8 (.164) 32-UNC-2B INSERT
SEE NOTES 7 AND 8
.240
.260
3
.840
.780
1
7.365
7.355
.110
.140 10 PLACES
.560
4.595
4.585
.125
.145
2 PLACES
.093
.031
A
A
J2
J3
J4
.125
.145 8 PLACES
.06
.09 R
16 PLACES
QTY 300
4
QTY 300
5
.015
.045
.405
.435
.085
.080
SECTION A-A

Ⓑ REPLACES REV A WITH CHANGES

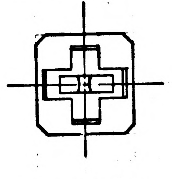
DETAIL A
SCALE 10/1

NOTES:-
1. MAKE FROM DWG NO. 1004566
2. SURFACE MARKED √ TO BE 125√
3. ANODIZE PER MIL-A-8625, TYPE I, DYED BLACK
4. MARK .06 HIGH WHITE PER ND1002019 BOTH SIDES
5. INTERPRET DRAWING IN ACCORDANCE WITH STANDARDS PRESCRIBED BY MIL-D-70327
6. INSTALL FIND NO. 4 AND FIND NO. 5 PER ND 1002136
7. INSTALL FIND NO. 2 PER MS 33646 BREAK OFF DRIVING TANG
8. COAT FIND NO. 2 WITH MIL-P-8585 WET ZINC CHROMATE PRIMER

MASTER

SEE NOTE 1

QTY REQD	PART OR IDENTIFYING NO.	NOMENCLATURE OR DESCRIPTION	FIND NO.
300	1006781-2	CONTACT, WRAPOST, FEMALE	5
300	1006774	INSULATOR, WRAPOST, FEMALE	4
3	1004248	PIN, KEYING	3
6	MS21209-C0815	INSERT, HELICAL	2
1	1004154-1	PLATE, WIREWRAP	1

LIST OF MATERIALS

NEXT ASSY	USED ON
1003531	

APPLICATION

UNLESS OTHERWISE SPECIFIED DIMENSIONS ARE IN INCHES
TOLERANCES ON
FRACTIONS ± DECIMALS ±.005 ANGLES ±
DO NOT SCALE THIS DRAWING
MATERIAL SEE NOTE 1
HEAT TREATMENT NONE
FINAL FINISH SEE NOTE 3

MIT INSTRUMENTATION LAB
CAMBRIDGE, MASS.
DWG. NO. CONTRACT
DRAWN P.S. Tracy DATE 27 Sep 63
CHECKED O.R. Bogni 28 SEP 63
APPROVAL E.J. Sleegan 10/2/63
APPROVAL Eldon C. Hall 3 Oct 63
NASA APPROVAL W.J. Rhine 10-3-63
MIT APPROVAL
MIT APPROVAL W. Kupfer 3 Oct 63

MANNED SPACECRAFT CENTER
HOUSTON, TEXAS

PLATE CONNECTOR DECODING
MODULE
AGC DSKY, NAV

CODE IDENT NO. ——— SIZE D NASA DRAWING NO. 1004154
SCALE 1/1 WT SHEET 1 OF 1

INCHES
0 1 2
PHOTOGRAPHIC SCALE ONLY

NOTICE — WHEN GOVERNMENT DRAWINGS, SPECIFICATIONS, OR OTHER DATA ARE USED FOR ANY PURPOSE OTHER THAN IN CONNECTION WITH A DEFINITELY RELATED GOVERNMENT PROCUREMENT OPERATION, THE UNITED STATES GOVERNMENT THEREBY INCURS NO RESPONSIBILITY NOR ANY OBLIGATION WHATSOEVER, AND THE FACT THAT THE GOVERNMENT MAY HAVE FORMULATED, FURNISHED, OR IN ANY WAY SUPPLIED THE SAID DRAWINGS, SPECIFICATIONS OR OTHER DATA IS NOT TO BE REGARDED BY IMPLICATION OR OTHERWISE AS IN ANY MANNER LICENSING THE HOLDER OR ANY OTHER PERSON OR CORPORATION, OR CONVEYING ANY RIGHTS OR PERMISSION TO MANUFACTURE, USE, OR SELL ANY PATENTED INVENTION THAT MAY IN ANY WAY BE RELATED THERETO

REVISIONS

SYM	DESCRIPTION	DATE	APPROVAL

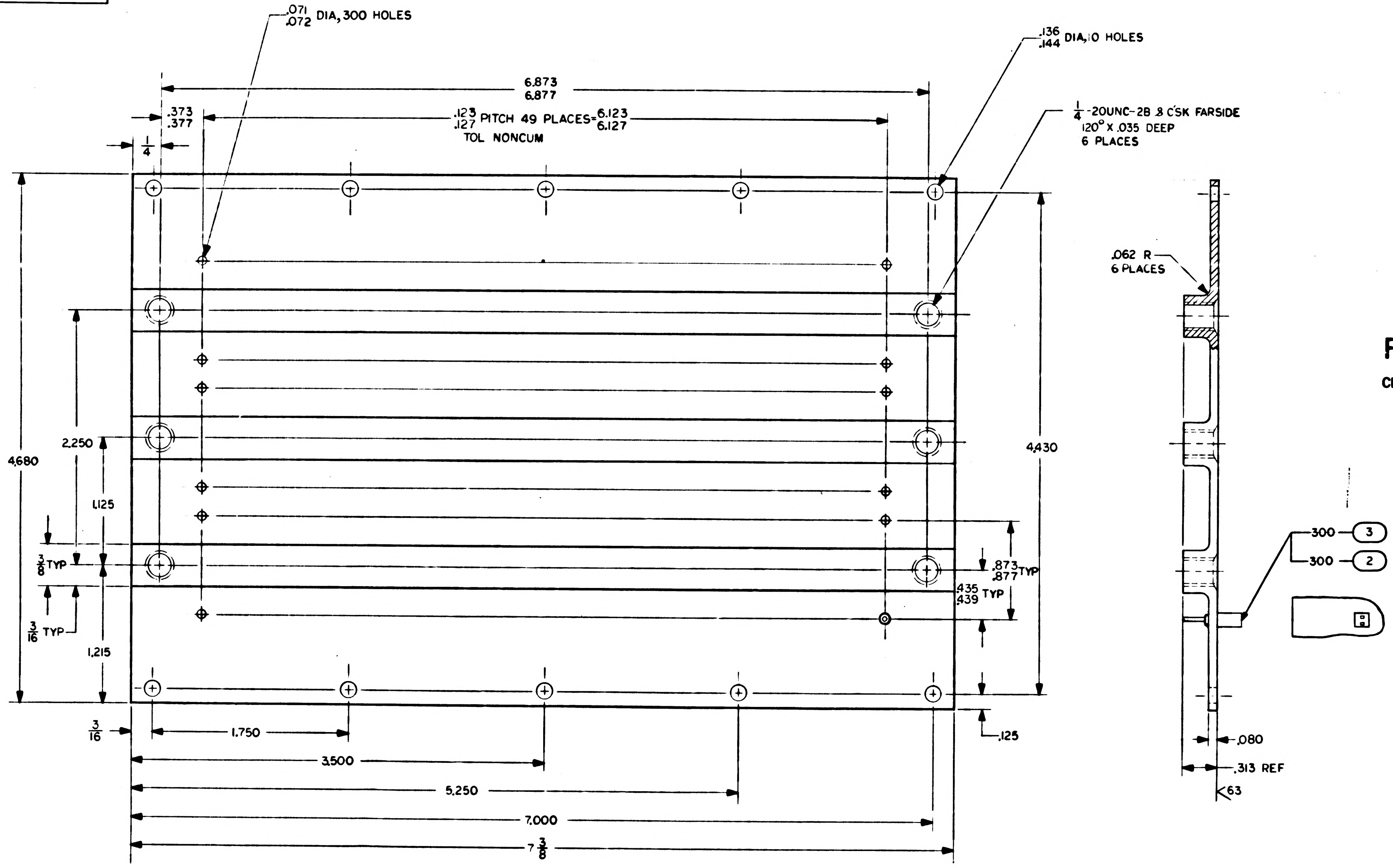
.071
.072 DIA, 300 HOLES
.136
.144 DIA, 10 HOLES
1/4 -20UNC-2B .3 C'SK FARSIDE
120° X .035 DEEP
6 PLACES
6.873
6.877
.373
.377
.123
.127 PITCH 49 PLACES = 6.123
6.127
TOL NONCUM
1/4
4.680
2.250
1.125
3/8 TYP
3/16 TYP
1.215
4.430
.873
.877 TYP
.435
.439 TYP
3/16
.125
1.750
3.500
5.250
7.000
7 3/8
.062 R
6 PLACES
300 ③
300 ②
.080
.313 REF
63

FOR INFORMATION ONLY

CLASS B RELEASE TDR No. 0298 DATE 5-22-63

NOTES
1. INTERPRET DRAWING IN ACCORDANCE WITH STANDARDS PRESCRIBED BY MIL-D-70327
2. MAT'L .313 THK 6061-T6 AL PER QQ-A-327 TEMPER T6
3. 125√ UNLESS OTHERWISE SPECIFIED
4. REMOVE BURRS AND SHARP EDGES
5. ANODIZE PER MIL A 8625 TYPE II, DYED BLACK

MASTER

QTY REQD	PART OR IDENTIFYING NO.	NOMENCLATURE OR DESCRIPTION	FIND NO.
300	1006781-2	CONTACT, MALCO	3
300	1006774	INSULATOR, MALCO	2
1	PLATE, DECODING MODULE	———	1

LIST OF MATERIALS

NEXT ASSY	USED ON

APPLICATION

UNLESS OTHERWISE SPECIFIED DIMENSIONS ARE IN INCHES TOLERANCES ON

FRACTIONS	DECIMALS	ANGLES
±1/64	±.005	±1/2°

DO NOT SCALE THIS DRAWING

MATERIAL SEE NOTE 2

HEAT TREATMENT

FINAL FINISH

MIT INSTRUMENTATION LAB
CAMBRIDGE, MASS
DWG. NO. CONTRACT

DRAWN R. Romey DATE 5-11-63
CHECKED [illegible] 5-14-63
APPROVAL N B Turner 22 MAY 63
APPROVAL

NASA APPROVAL [illegible] 5/22/63

MIT APPROVAL D Nalgel 5/22/63

MANNED SPACECRAFT CENTER
HOUSTON, TEXAS

PLATE, DECODING MODULE
AGC KEYBOARD

CODE IDENT NO.
SIZE D
NASA DRAWING NO. 1004154
SCALE 2/1
WT
SHEET 1 OF 1

1004154

1004154

INCHES
0 1 2
PHOTOGRAPHIC SCALE ONLY

NOTICE — WHEN GOVERNMENT DRAWINGS, SPECIFICATIONS, OR OTHER DATA ARE USED FOR ANY PURPOSE OTHER THAN IN CONNECTION WITH A DEFINITELY RELATED GOVERNMENT PROCUREMENT OPERATION, THE UNITED STATES GOVERNMENT THEREBY INCURS NO RESPONSIBILITY NOR ANY OBLIGATION WHATSOEVER; AND THE FACT THAT THE GOVERNMENT MAY HAVE FORMULATED, FURNISHED, OR IN ANY WAY SUPPLIED THE SAID DRAWINGS, SPECIFICATIONS, OR OTHER DATA IS NOT TO BE REGARDED BY IMPLICATION OR OTHERWISE AS IN ANY MANNER LICENSING THE HOLDER OR ANY OTHER PERSON OR CORPORATION, OR CONVEYING ANY RIGHTS OR PERMISSION TO MANUFACTURE, USE, OR SELL ANY PATENTED INVENTION THAT MAY IN ANY WAY BE RELATED THERETO.

REVISIONS			
SYM	DESCRIPTION	DATE	APPROVAL
A	REPLACED WITH CHANGE BY REV B PER TDRR 03624	6-3-63	WR

HOLE IDENT	BASIC X DIM	BASIC Y DIM	HOLE DIA	⌖ DIA	QTY
A1	0.000	0.000	0.109 0.112	.006	92
A2	0.134				
A3	0.400				
A4	0.600				
A5	0.800				
A6	0.934				
A7	1.068				
A8	1.200				
A9	1.334				
A10	1.468				
A11	1.600				
A12	1.734				
A13	1.868				
A14	2.000				
A15	2.134				
A16	2.268				
A17	2.400				
A18	2.600				
A19	2.800				
A20	2.937				
A21	3.137				
A22	3.337				
A23	3.474				
A24	3.674				
A25	3.874				
A26	4.011				
A27	4.211				
A28	4.411				
A29	4.548				
A30	4.748				
A31	4.948				
A32	5.085				
A33	5.285				
A34	5.485				
A35	5.685				
A36	5.885	0.000			
A37	0.000	0.137			
A38	0.400				
A39	0.800				
A40	1.200				
A41	1.600				
A42	2.000				
A43	2.400				
A44	2.800				
A45	2.937				
A46	3.337				
A47	3.474				
A48	3.874				
A49	4.011				
A50	4.411				
A51	4.548				
A52	4.948				
A53	5.085				
A54	5.485				
A55	5.885	0.137			
A56	0.000	0.274			
A57	0.400				
A58	0.800				
A59	1.200				
A60	1.600				
A61	2.000				
A62	2.400				
A63	2.800				
A64	2.937				
A65	3.337				
A66	3.474				
A67	3.874				
A68	4.011				
A69	4.411				
A70	4.548				
A71	4.948				
A72	5.085				
A73	5.485				
A74	5.885	0.274			
A75	0.000	0.411			
A76	0.400				
A77	0.800				
A78	1.200				
A79	1.600				
A80	2.000				
A81	2.400				
A82	2.800				
A83	3.337				
A84	3.474				
A85	3.874				
A86	4.011				
A87	4.411				
A88	4.548				
A89	4.948				
A90	5.085				
A91	5.485				
A92	5.885	0.411			
B1	0.200	0.274	SEE DETAIL A	.006	14
B2	0.600				
B3	1.000				
B4	1.400				
B5	1.800				
B6	2.200				
B7	2.600				
B8	3.137				
B9	3.674				
B10	4.211				
B11	4.748				
B12	5.285				
B13	5.685				
B14	6.085	0.274			

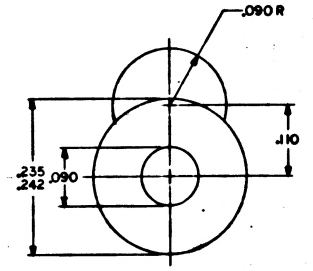

DETAIL A
SCALE 10/1

FOR INFORMATION ONLY
CLASS B RELEASE TDR No. 01298 DATE 5-22-63

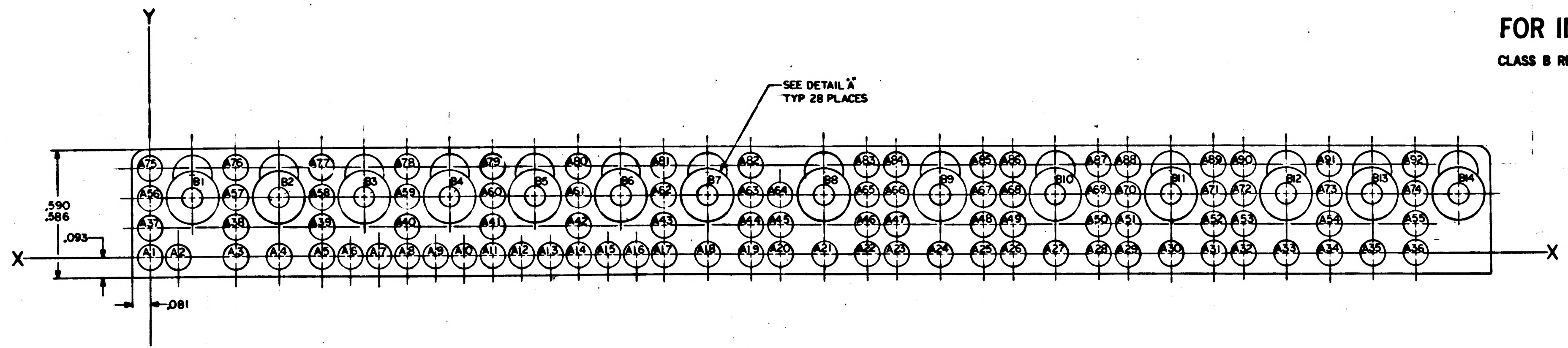

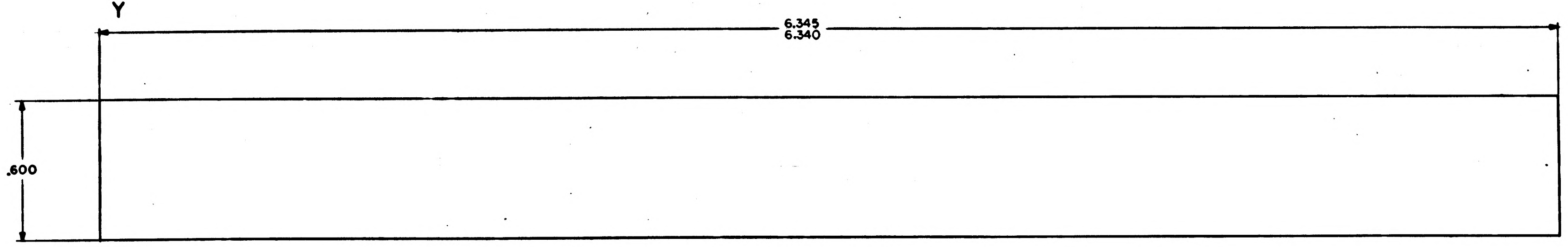

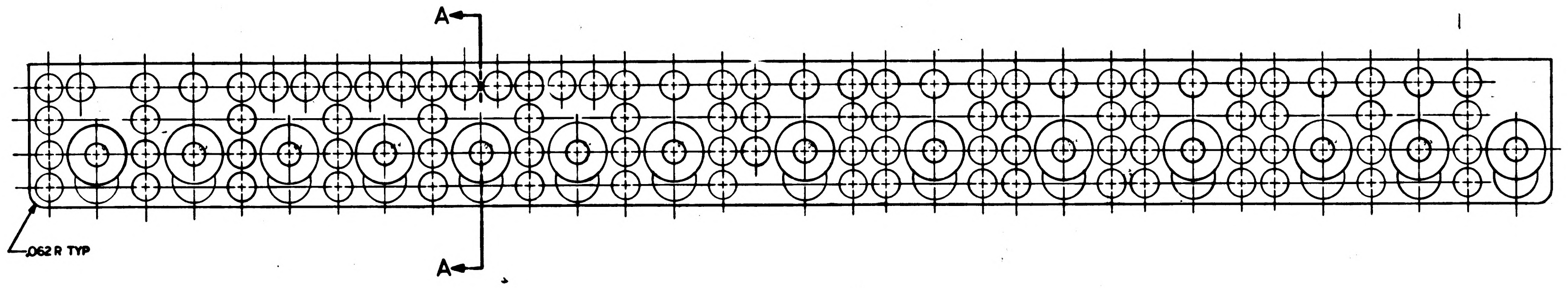

Ⓐ REPLACED WITH CHANGE BY REV B

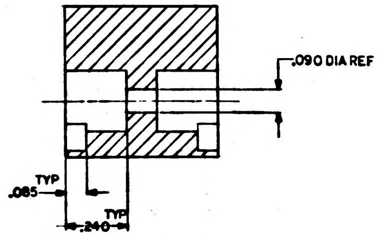

SECTION A-A
SCALE 4/1

NOTES:

1. INTERPRET DRAWING IN ACCORDANCE WITH STANDARDS PRESCRIBED BY MIL-D-70327
2. MATL: PLASTIC, CLEAR ACRYLIC PER MIL-P-8184 FINISH B
3. TRUE POSITION AS SHOWN IN CHART
4. REMOVE ALL SHARP EDGES

MASTER

QTY REQD	PART OR IDENTIFYING NO.	NOMENCLATURE OR DESCRIPTION	FIND NO.
LIST OF MATERIALS			

NEXT ASSY	USED ON
APPLICATION	

UNLESS OTHERWISE SPECIFIED DIMENSIONS ARE IN INCHES
TOLERANCES ON FRACTIONS ± // DECIMALS ± ANGLES ± //
DO NOT SCALE THIS DRAWING
MATERIAL SEE NOTE 2
HEAT TREATMENT //
FINAL FINISH SEE NOTE 2

MIT INSTRUMENTATION LAB
CAMBRIDGE, MASS
DWG NO CONTRACT
DRAWN W. F. ... DATE 5/13/63
CHECKED ... 5-13-63
APPROVAL W.B. ... 22 MAY 63
APPROVAL
NASA APPROVAL ... 5/22/63
MIT APPROVAL ... 5/22/63

MANNED SPACECRAFT CENTER
HOUSTON, TEXAS

BLOCK, COMPONENT
AGC KEYBOARD

CODE IDENT NO. SIZE E NASA DRAWING NO. 1004155
SCALE 4/1 WT SHEET 1 OF 1

1004155 A

ENT DRAWINGS, SPECIFICATIONS, OR OTHER DATA
SE OTHER THAN IN CONNECTION WITH A DEFINITELY
CUREMENT OPERATION THE UNITED STATES GOVERN-
ONSIBILITY NOR ANY OBLIGATION WHATSOEVER
OVERNMENT MAY HAVE FORMULATED, FURNISHED, OR
SAID DRAWINGS SPECIFICATIONS OR OTHER DATA IS
IMPLICATION OR OTHERWISE AS IN ANY MANNER
ANY OTHER PERSON OR CORPORATION, OR CONVEY-
MISSION TO MANUFACTURE USE, OR SELL ANY
MAY IN ANY WAY BE RELATED THERETO.

1004155

ANY USE OF THIS DOCUMENT FOR OTHER THAN GOVERNMENTAL PURPOSES IS SUBJECT TO PRIOR WRITTEN CONSENT OF RAYTHEON CO.

REVISIONS

SYM	DESCRIPTION	DATE	APPROVED
B	REDRAW REPLACES REV A WITH CHANGES AND UPGRADED TO CLASS A PER TDR 63624	10-3-63	

HOLE IDENT	BASIC X DIM	BASIC Y DIM	HOLE DIA	⊕ DIA
A1	3.016	-0.026	SEE SECTION A-A	.006
A2	3.137			
A3	3.258			
A4	3.553			
A5	3.674			
A6	3.795			
A7	4.090			
A8	4.211			
A9	4.332			
A10	4.627			
A11	4.748			
A12	4.869			
A13	5.164			
A14	5.285			
A15	5.406	-0.026		
A16	0.000	0.000		
A17	0.134			
A18	0.400			
A19	0.534			
A20	0.800			
A21	0.934			
A22	1.068			
A23	1.200			
A24	1.334			
A25	1.468			
A26	1.600			
A27	1.734			
A28	1.868			
A29	2.000			
A30	2.134			
A31	2.268			
A32	2.400			
A33	2.600			
A34	2.800			
A35	5.685			
A36	5.885	0.000		
A37	2.929	0.061		
A38	3.345			
A39	3.466			
A40	3.882			
A41	4.003			
A42	4.419			
A43	4.540			
A44	4.956			
A45	5.077			
A46	5.493	0.061		
A47	0.000	0.137		
A48	0.400			
A49	0.800			
A50	1.200			
A51	1.600			
A52	2.000			
A53	2.400			
A54	2.800			
A55	5.885	0.137		
A56	0.000	0.274		
A57	0.400			
A58	0.800			
A59	1.200			
A60	1.600			
A61	2.000			
A62	2.400			
A63	2.800			
A64	5.885	0.274		
A65	2.929	0.342		
A66	3.345			
A67	3.466			
A68	3.882			
A69	4.003			
A70	4.419			
A71	4.540			
A72	4.956			
A73	5.077			
A74	5.493	0.342		
A75	0.000	0.411		
A76	0.400			
A77	0.800			
A78	1.200		SEE SECTION A-A	
A79	1.600			
A80	2.000	0.411		.006

HOLE IDENT	BASIC X DIM	BASIC Y DIM	HOLE DIA	⊕ DIA
A81	2.400	0.411	SEE SECTION A-A	.006
A82	2.800	0.411		
A83	5.820	0.425		
A84	3.254			
A85	3.557			
A86	3.791			
A87	4.094			
A88	4.328			
A89	4.631			
A90	4.865			
A91	5.168		SEE SECTION AA	
A92	5.402	0.425		.006
A93	6.130	0.000		
A94	5.950	0.425		
B1	3.137	0.216	SEE DETAIL A	.006
B2	3.674			
B3	4.211			
B4	4.748			
B5	5.285	0.216		.006

HOLE IDENT	BASIC X DIM	BASIC Y DIM	HOLE DIA	⊕ DIA
C1	0.675	0.000	.025 .031	.006
C2	0.275	0.100		
C3	0.675	0.100		
C4	6.010	0.100		
C5	3.406	0.151		
C6	3.943	0.151		
C7	4.480	0.151		
C8	5.017	0.151		
C9	5.522	0.216		
C10	3.406	0.251		
C11	3.943	0.251		
C12	4.480	0.251		
C13	5.017	0.251		
C14	5.610	0.100		
C15	3.016	0.429		
C16	1.900	0.455		
C17	2.100	0.455	.025 .031	
C18	2.300	0.455		.006
D1	2.700	0.061	SEE SECTION B-B	.006

HOLE IDENT	BASIC X DIM	BASIC Y DIM	HOLE DIA	⊕ DIA
E1	0.200	0.274	SEE DETAIL B	.006
E2	0.600			
E3	1.000			
E4	1.400			
E5	1.800			
E6	2.200			
E7	2.600		SEE DETAIL B	
E8	5.685			
E9	6.085	0.274		.006

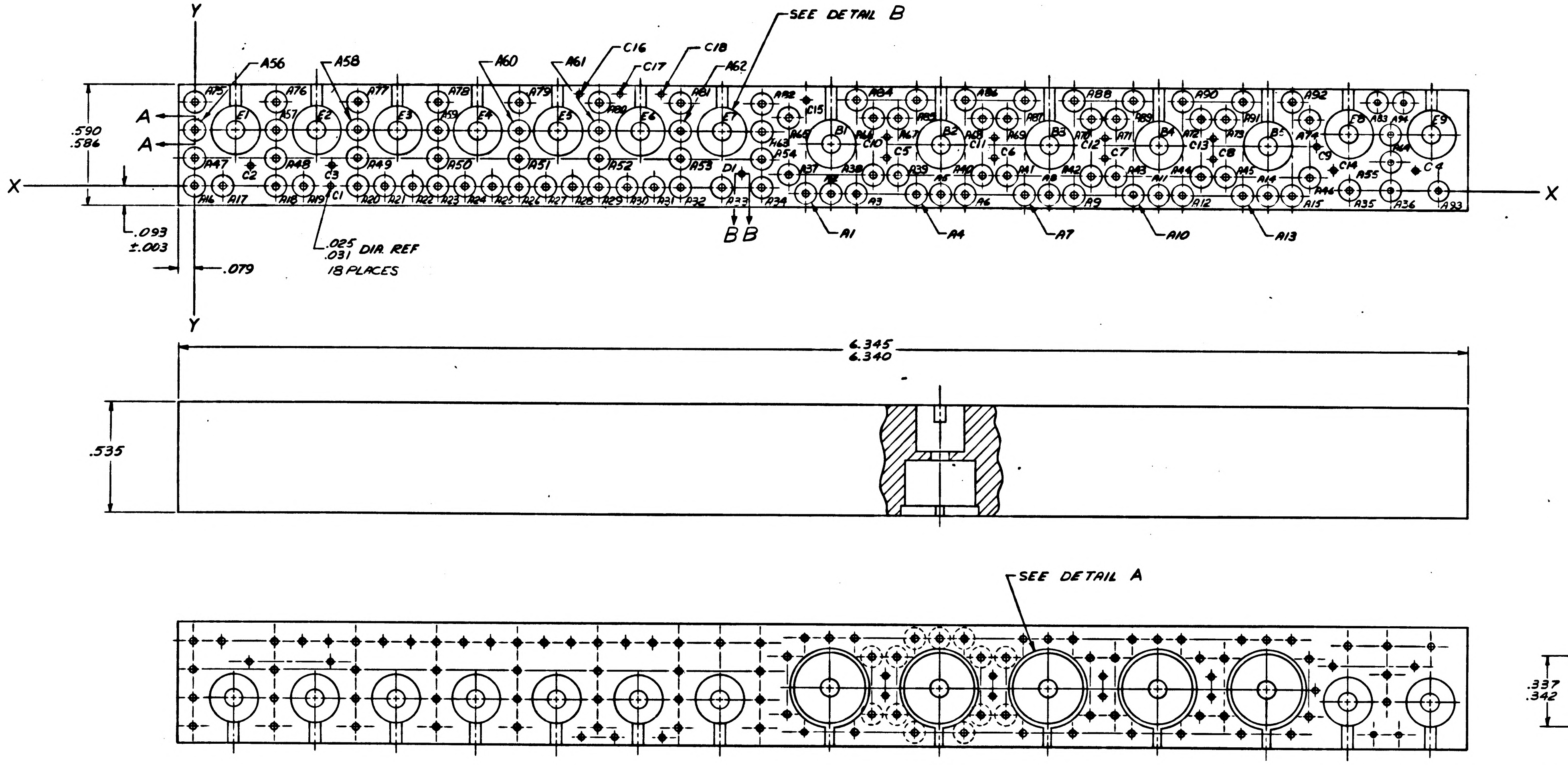

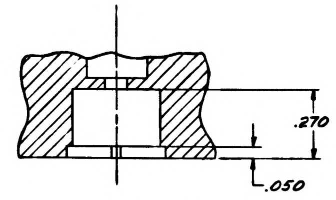

SECTION D-D

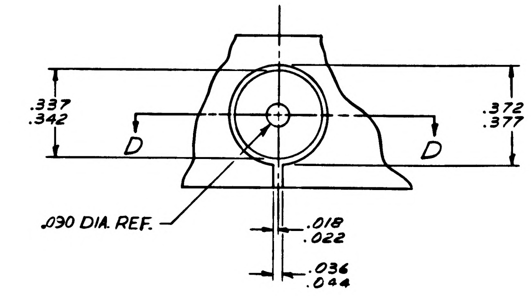

DETAIL A
5 PLACES

Ⓑ REPLACES REV A WITH CHANGE

NOTES:

1. MATERIAL: PLASTIC, CLEAR ACRYLIC PER MIL-P-8184, FINISH B
2. REMOVE BURRS & SHARP EDGES

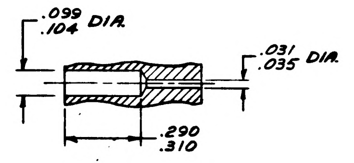

SECTION A-A
94 PLACES

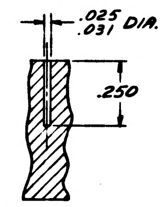

SECTION B-B

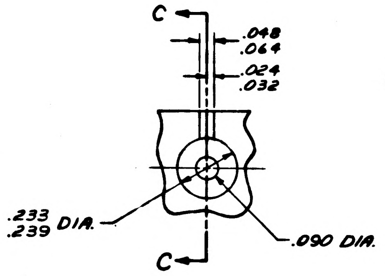

DETAIL B
23 PLACES

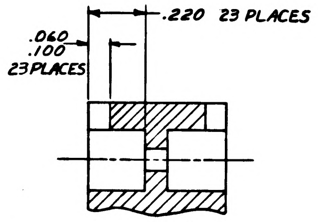

SECTION C-C
9 PLACES

QTY REQD	PART OR IDENTIFYING NO.	NOMENCLATURE OR DESCRIPTION	FIND NO

LIST OF MATERIALS

1003530	
NEXT ASSY	USED ON
APPLICATION	

UNLESS OTHERWISE SPECIFIED DIMENSIONS ARE IN INCHES
TOLERANCES ON
FRACTIONS ± DECIMALS ±.005 ANGLES ±
DO NOT SCALE THIS DRAWING
MATERIAL SEE NOTE 1
HEAT TREATMENT NONE
FINAL FINISH NONE

MIT INSTRUMENTATION LAB
CAMBRIDGE, MASS
DWG. NO. CONTRACT
DRAWN D.A. Clermont DATE 8AUG63
CHECKED A.R. Boggi 26AUG63
APPROVAL 10-4-63
APPROVAL
APPROVAL
NASA APPROVAL W.J. Rhine 10-7-63
M.I.T. APPROVAL
MIT APPROVAL 10-3-63

MANNED SPACECRAFT CENTER
HOUSTON, TEXAS

BLOCK, COMPONENT
DECODING MODULE
AGC KEYBOARD

CODE IDENT NO —
SIZE J
NASA DRAWING NO 1004155
SCALE 4/1
WT
SHEET 1 OF 1

INTERPRET DRAWING IN ACCORDANCE WITH STANDARDS PRESCRIBED BY MIL-D-70327

...Y DRAWINGS, SPECIFICATIONS, OR OTHER DATA
...TICE THAN IN CONNECTION WITH A DEFINITELY
...MENT OPERATION, THE UNITED STATES GOVERN-
...PONSIBILITY NOR ANY OBLIGATION WHATSOEVER,
...NMENT MAY HAVE FORMULATED, FURNISHED, OR
...ID DRAWINGS, SPECIFICATIONS, OR OTHER DATA IS
...ICATION OR OTHERWISE AS IN ANY MANNER
...NY OTHER PERSON OR CORPORATION, OR CONVEY-
...ISSION TO MANUFACTURE, USE, OR SELL ANY
...HAT MAY IN ANY WAY BE RELATED THERETO.

ANY USE OF THIS DOCUMENT FOR OTHER THAN GOVERNMENTAL PURPOSES IS SUBJECT TO PRIOR WRITTEN CONSENT OF RAYTHEON CO.

REVISIONS			
SYM	DESCRIPTION	DATE	APPROVED
Ⓑ B	REDRAW REPLACES REV A WITH CHANGES AND UPGRADED TO CLASS A PER TDR 63624	10-3-63	LK
C	REVISED PER TDRR 04324	10-30-63	LK

OLE ENT	BASIC X DIM	BASIC Y DIM	HOLE DIA	⊕-DIA
A1	3.016	-0.026	SEE SECTION A-A	.006
A2	3.137			
A3	3.258			
A4	3.553			
A5	3.674			
A6	3.795			
A7	4.090			
A8	4.211			
A9	4.332			
A10	4.627			
A11	4.748			
A12	4.869			
A13	5.164			
A14	5.285			
A15	5.406	-0.026		
A16	0.000	0.000		
A17	0.134			
A18	0.400			
A19	0.534			
A20	0.800			
A21	0.934			
A22	1.068			
A23	1.200			
A24	1.334			
A25	1.468			
A26	1.600	0.000		
A27	1.734	-0.015		
A28	1.868	0.000		
A29	2.000			
A30	2.134			
A31	2.268			
A32	2.400			
A33	2.600			
A34	2.800			
A35	5.685			
A36	5.885	0.000		
A37	2.929	0.061		
A38	3.345			
A39	3.466			
A40	3.882			
A41	4.003			
A42	4.419			
A43	4.540			
A44	4.956			
A45	5.077			
A46	5.493	0.061		
A47	0.000	0.137		
A48	0.400			
A49	0.800			
A50	1.200			
A51	1.600			
A52	2.000			
A53	2.400			
A54	2.800			
A55	5.885	0.137		
A56	0.000	0.274		
A57	0.400			
A58	0.800			
A59	1.200			
A60	1.600			
A61	2.000			
A62	2.400			
A63	2.800			
A64	5.885	0.274		
A65	2.929	0.342		
A66	3.345			
A67	3.466			
A68	3.882			
A69	4.003			
A70	4.419			
A71	4.540			
A72	4.956			
A73	5.077			
A74	5.493	0.342		
A75	0.000	0.411		
A76	0.400			
A77	0.800			
A78	1.200		SEE SECTION A-A	
A79	1.600			
A80	2.000	0.411		.006

HOLE IDENT	BASIC X DIM	BASIC Y DIM	HOLE DIA	⊕-DIA
A81	2.400	0.411	SEE SECTION A-A	.006
A82	2.800	0.411		
A83	5.820	0.425		
A84	3.254			
A85	3.557			
A86	3.791			
A87	4.094			
A88	4.328			
A89	4.631			
A90	4.865		SEE SECTION A-A	
A91	5.168			
A92	5.402	0.425		.006
A93	6.130	0.000		
A94	5.950	0.425		
A95	1.716	0.105		
A96	2.516	0.105		
B1	3.137	0.216	SEE DETAIL A	.006
B2	3.674			
B3	4.211			
B4	4.748			
B5	5.285	0.216		.006

HOLE IDENT	BASIC X DIM	BASIC Y DIM	HOLE DIA	⊕-DIA
C1	0.675	0.000	.025 .031	.006
C2	0.275	0.100		
C3	0.675	0.100		
C4	6.010	0.100		
C5	3.406	0.151		
C6	3.943	0.151		
C7	4.480	0.151		
C8	5.017	0.151		
C9	5.522	0.216		
C10	3.406	0.251		
C11	3.943	0.251		
C12	4.480	0.251		
C13	5.017	0.251		
C14	5.610	0.100		
C15	3.016	0.429		
C16	1.900	0.455		
C17	2.100	0.455	.025 .031	
C18	2.300	0.455		.006
D1	2.700	0.061	SEE SECTION B-B	.006

HOLE IDENT	BASIC X DIM	BASIC Y DIM	HOLE DIA	⊕-DIA
E1	0.200	0.274	SEE DETAIL B	.006
E2	0.600			
E3	1.000			
E4	1.400			
E5	1.800			
E6	2.200			
E7	2.600		SEE DETAIL B	
E8	5.685			
E9	6.085	0.274		.006

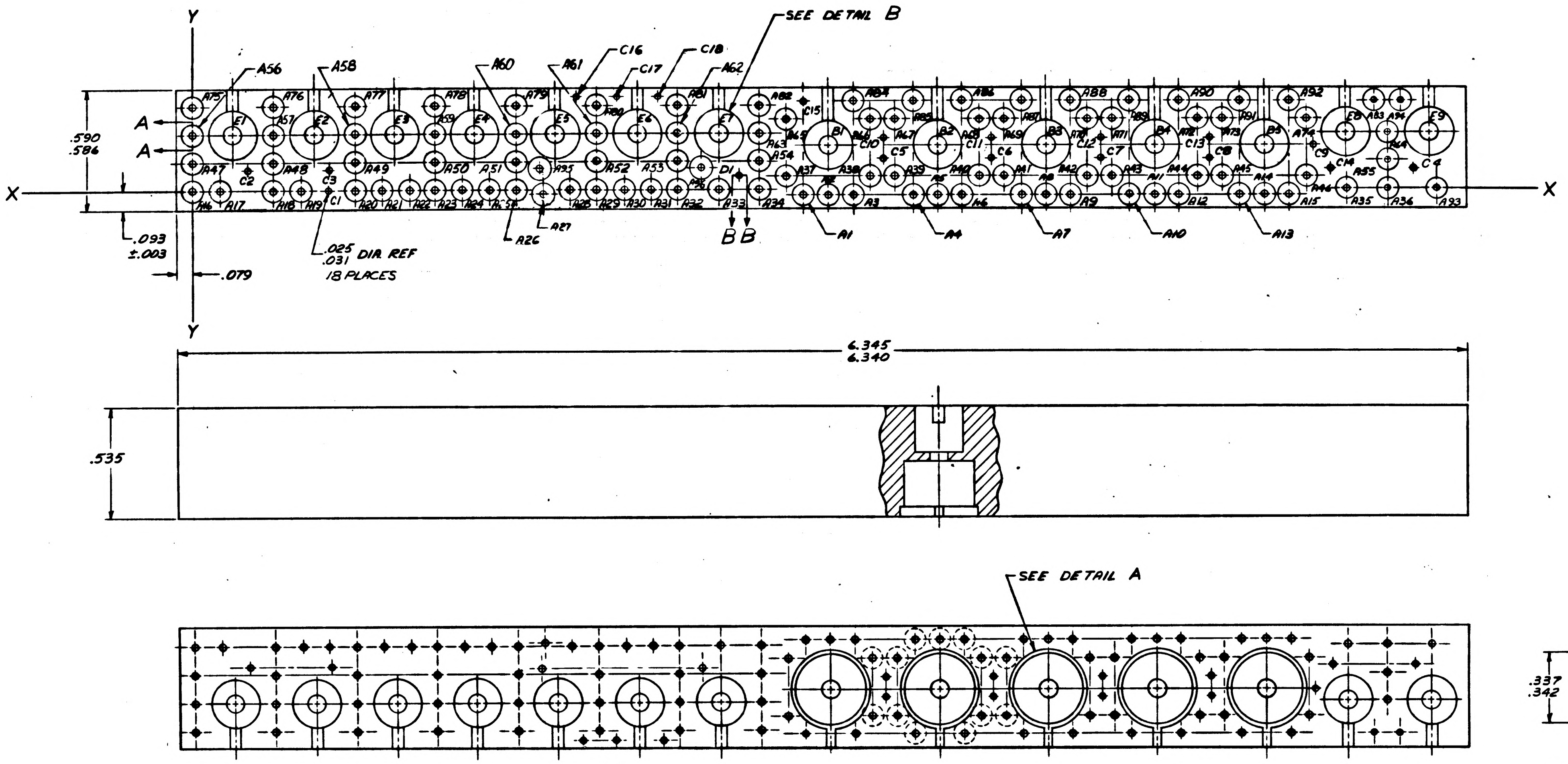
SEE DETAIL B
A56
A58
A60
A61
C16
C17
C18
A62
Y
A
A
.590
.586
X
X
A75
A76
A77
A78
A79
A80
A81
A82
E1
E2
E3
E4
E5
E6
E7
E8
E9
B1
B2
B3
B4
B5
A47
A48
A49
A50
A51
A52
A53
A54
C1
C2
C3
C4
C5
C6
C7
C8
C9
C10
C11
C12
C13
C14
C15
D1
A16
A17
A18
A19
A20
A21
A22
A23
A24
A25
A28
A29
A30
A31
A32
A33
A34
A35
A36
A93
.093
±.003
.079
.025
.031 DIA REF
18 PLACES
A26
A27
B B
A1
A4
A7
A10
A13
Y
6.345
6.340
.535
SEE DETAIL A

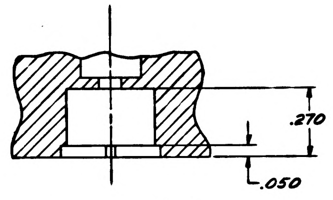

SECTION D-D

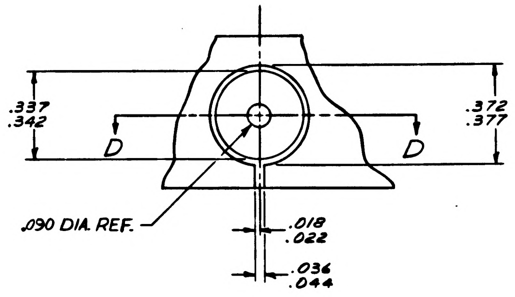
.337
.342
.372
.377
D
D
.090 DIA. REF.
.018
.022
.036
.044

DETAIL A
5 PLACES

Ⓑ REPLACES REV A WITH CHANGE

NOTES:
1. MATERIAL: PLASTIC, CLEAR ACRYLIC PER MIL-P-8184, FINISH B
2. REMOVE BURRS & SHARP EDGES

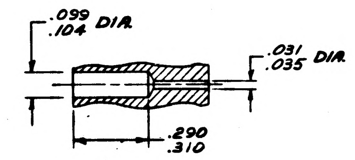
.099
.104 DIA
.031
.035 DIA
.290
.310

SECTION A-A
96 PLACES

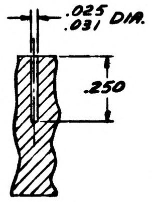
.025
.031 DIA
.250

SECTION B-B

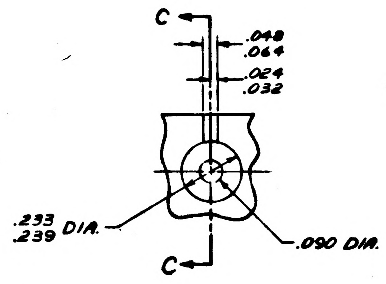
C
C
.048
.064
.024
.032
.233
.239 DIA
.090 DIA

DETAIL B
23 PLACES

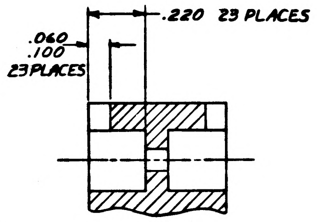
.220 23 PLACES
.060
.100
23 PLACES

SECTION C-C
9 PLACES

QTY REQD	PART OR IDENTIFYING NO.	NOMENCLATURE OR DESCRIPTION	FIND NO

LIST OF MATERIALS

1003530		UNLESS OTHERWISE SPECIFIED DIMENSIONS ARE IN INCHES TOLERANCES ON FRACTIONS ± DECIMALS ±.005 ANGLES ± DO NOT SCALE THIS DRAWING	MIT INSTRUMENTATION LAB CAMBRIDGE, MASS	MANNED SPACECRAFT CENTER HOUSTON, TEXAS
NEXT ASSY	USED ON	MATERIAL SEE NOTE 1	DRAWN D.O. Clement DATE 8AUG63 CHECKED APPROVAL APPROVAL APPROVAL	BLOCK, COMPONENT DECODING MODULE AGC DSKY, NAV & MAIN
APPLICATION		HEAT TREATMENT NONE FINAL FINISH NONE	NASA APPROVAL W J Rhine 10-3-63 M.I.T. APPROVAL MIT APPROVAL 3 Oct 63	CODE IDENT NO. —— SIZE J NASA DRAWING NO 1004155 SCALE 4/1 WT SHEET 1 OF 1

INTERPRET DRAWING IN ACCORDANCE WITH STANDARDS PRESCRIBED BY MIL-D-70327

(141)

INCHES
PHOTOGRAPHIC SCALE ONLY

NOTICE – WHEN GOVERNMENT DRAWINGS, SPECIFICATIONS, OR OTHER DATA ARE USED FOR ANY PURPOSE OTHER THAN IN CONNECTION WITH A DEFINITELY RELATED GOVERNMENT PROCUREMENT OPERATION, THE UNITED STATES GOVERNMENT THEREBY INCURS NO RESPONSIBILITY NOR ANY OBLIGATION WHATSOEVER; AND THE FACT THAT THE GOVERNMENT MAY HAVE FORMULATED, FURNISHED, OR IN ANY WAY SUPPLIED THE SAID DRAWINGS, SPECIFICATIONS, OR OTHER DATA IS NOT TO BE REGARDED BY IMPLICATION OR OTHERWISE AS IN ANY MANNER LICENSING THE HOLDER OR ANY OTHER PERSON OR CORPORATION, OR CONVEYING ANY RIGHTS OR PERMISSION TO MANUFACTURE, USE, OR SELL ANY PATENTED INVENTION THAT MAY IN ANY WAY BE RELATED THERETO.

HOLE IDENT	BASIC X DIM	BASIC Y DIM	HOLE DIA	⊕ DIA
A1	3.016	-0.026	SEE SECTION A-A	.006
A2	3.137			
A3	3.258			
A4	3.553			
A5	3.674			
A6	3.795			
A7	4.090			
A8	4.211			
A9	4.332			
A10	4.627			
A11	4.748			
A12	4.869			
A13	5.164			
A14	5.285			
A15	5.406	-0.026		
A16	0.000	0.000		
A17	0.134			
A18	0.400			
A19	0.534			
A20	0.800			
A21	0.934			
A22	1.068			
A23	1.200			
A24	1.334			
A25	1.468			
A26	1.600	0.000		
A27	1.734	-0.015		
A28	1.868	0.000		
A29	2.000			
A30	2.134			
A31	2.268			
A32	2.400			
A33	2.600			
A34	2.800			
A35	5.685			
A36	5.885	0.000		
A37	2.929	0.061		
A38	3.345			
A39	3.466			
A40	3.882			
A41	4.003			
A42	4.419			
A43	4.540			
A44	4.956			
A45	5.077			
A46	5.493	0.061		
A47	0.000	0.137		
A48	0.400			
A49	0.800			
A50	1.200			
A51	1.600			
A52	2.000			
A53	2.400			
A54	2.800			
A55	5.885	0.137		
A56	0.000	0.274		
A57	0.400			
A58	0.800			
A59	1.200			
A60	1.600			
A61	2.000			
A62	2.400			
A63	2.800			
A64	5.885	0.274		
A65	2.929	0.342		
A66	3.345			
A67	3.466			
A68	3.882			
A69	4.003			
A70	4.419			
A71	4.540			
A72	4.956			
A73	5.077			
A74	5.493	0.342		
A75	0.000	0.411		
A76	0.400			
A77	0.800			
A78	1.200		SEE SECTION A-A	
A79	1.600			
A80	2.000	0.411		.006

HOLE IDENT	BASIC X DIM	BASIC Y DIM	HOLE DIA	⊕ DIA
A81	2.400	0.411	SEE SECTION A-A	.006
A82	2.800	0.411		
A83	5.820	0.425		
A84	3.254			
A85	3.557			
A86	3.791			
A87	4.094			
A88	4.328			
A89	4.631			
A90	4.865			
A91	5.168			
A92	5.402	0.425	SEE SECTION A-A	.006
A93	6.130	0.000		
A94	5.950	0.425		
A95	1.716	0.105		
A96	2.516	0.105		
B1	3.137	0.216	SEE DETAIL A	.006
B2	3.674			
B3	4.211			
B4	4.748			
B5	5.285	0.216		.006

HOLE IDENT	BASIC X DIM	BASIC Y DIM	HOLE DIA	⊕ DIA
C1	0.675	0.000	.025 .031	.006
C2	0.275	0.100		
C3	0.675	0.100		
C4	6.010	0.100		
C5	3.406	0.151		
C6	3.943	0.151		
C7	4.480	0.151		
C8	5.017	0.151		
C9	5.522	0.216		
C10	3.406	0.251		
C11	3.943	0.251		
C12	4.480	0.251		
C13	5.017	0.251		
C14	5.610	0.100		
C15	3.016	0.429		
C16	1.900	0.455		
C17	2.100	0.455	.025 .031	
C18	2.300	0.455		.006
D1	2.700	0.061	SEE SECTION B-B	.006

HOLE IDENT	BASIC X DIM	BASIC Y DIM	HOLE DIA	⊕ DIA
E1	0.200	0.274	SEE DETAIL B	.006
E2	0.600			
E3	1.000			
E4	1.400			
E5	1.800			
E6	2.200			
E7	2.600		SEE DETAIL B	
E8	5.685			
E9	6.085	0.274		.006

SYM	DESCRIPTION
B	REDRAW REPLACES REV A CHANGES AND UPGRADED TO C PER TDR 3620
C	REVISED PER DRR 04520

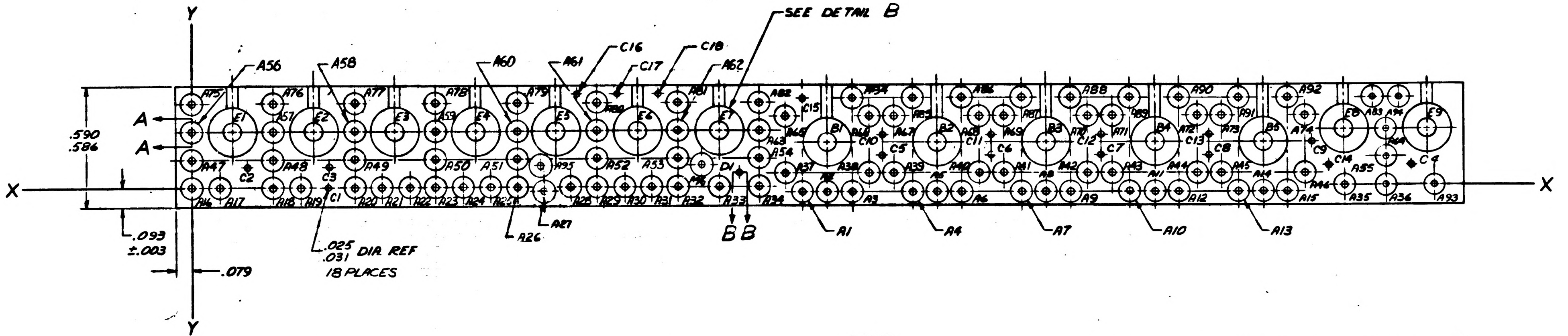

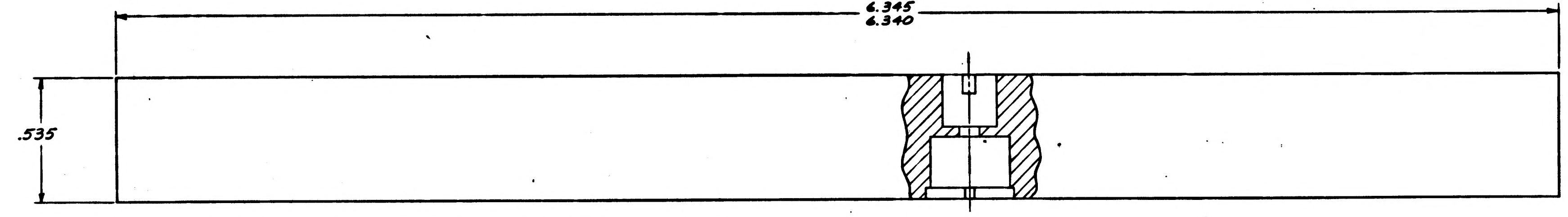

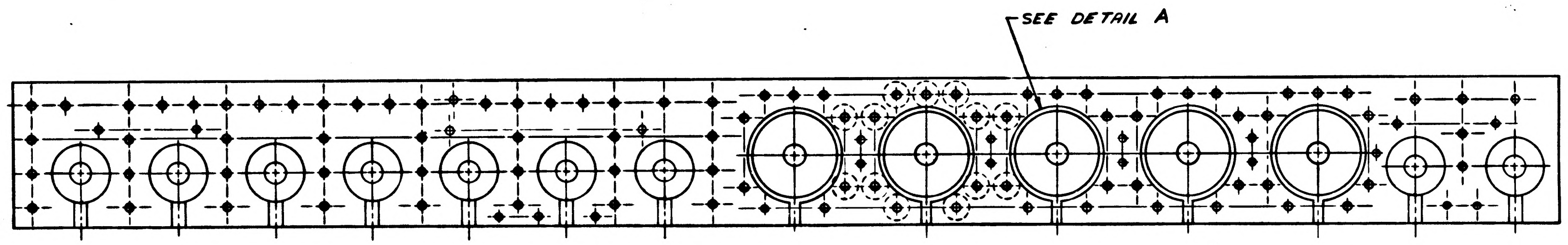

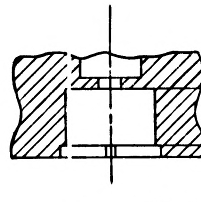
SECTION D-D

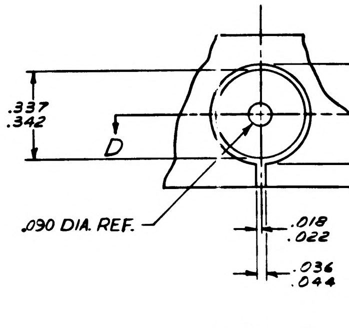

DETAIL A
5 PLACES

Ⓑ REPLACES REV A WITH CHA

NOTES:

1. MATERIAL: PLASTIC, CLEAR ACRYLIC PER MIL-P-8184, FINISH B
2. REMOVE BURRS & SHARP EDGES

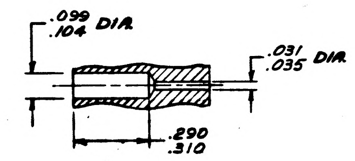

SECTION A-A
96 PLACES

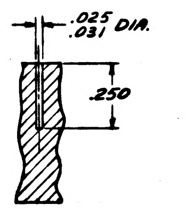

SECTION B-B

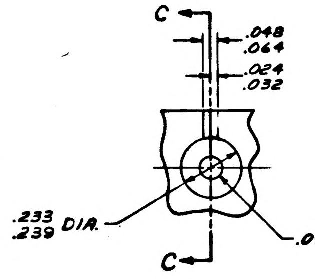

DETAIL B
23 PLACES

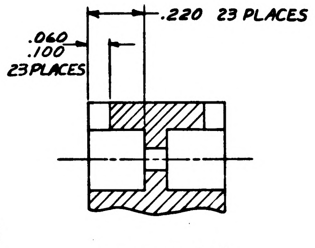

SECTION C-C
9 PLACES

QTY REQD	PART OR IDENTIFYING NO

LIST OF MATERIALS

NEXT ASSY	USED ON
1003530	

APPLICATION

UNLESS OTHERWISE SPECIFIED
DIMENSIONS ARE IN INCHES
TOLERANCES ON
FRACTIONS ± DECIMALS ±.005 ANGLES ±
DO NOT SCALE THIS DRAWING
MATERIAL SEE NOTE 1
HEAT TREATMENT NONE
FINAL FINISH NONE

MIT
INSTRUMENTATION LAB
CAMBRIDGE, MASS
DRAWN D.A. Clermont DATE 8 AUG 63
CHECKED A.R. Bogni 26 AUG 63
APPROVAL
APPROVAL
APPROVAL
NASA APPROVAL W.J. 10-7-63
M.I.T. APPROVAL
MIT APPROVAL

MANNED S
BLOCK,
DECOD
AGC D
CODE IDENT NO
SIZE J
SCALE 4/1

INTERPRET DRAWING IN ACCORDANCE WITH STANDARDS PRESCRIBED BY MIL-D-70327

ANY USE OF THIS DOCUMENT FOR OTHER THAN GOVERNMENTAL PURPOSES IS SUBJECT TO PRIOR WRITTEN CONSENT OF RAYTHEON CO.

...NT DRAWINGS SPECIFICATIONS OR OTHER DATA ...SE OTHER THAN IN CONNECTION WITH A DEFINITELY ...CUREMENT OPERATION THE UNITED STATES GOVERN... RESPONSIBILITY NOR ANY OBLIGATION WHATSOEVER ...OVERNMENT MAY HAVE FORMULATED FURNISHED OR SAID DRAWINGS SPECIFICATIONS OR OTHER DATA IS ...IMPLICATION OR OTHERWISE AS IN ANY MANNER ...ANY OTHER PERSON OR CORPORATION OR CONVEY... ...MISSION TO MANUFACTURE, USE, OR SELL ANY ...MAY IN ANY WAY BE RELATED THERETO.

HOLE IDENT	BASIC X DIM	BASIC Y DIM	HOLE DIA	⊕ DIA
A1	3.016	-0.026	SEE SECTION A-A	.006
A2	3.137	↑		↑
A3	3.258			
A4	3.553		↑	
A5	3.674			
A6	3.795			
A7	4.090			
A8	4.211			
A9	4.332			
A10	4.627			
A11	4.748			
A12	4.869			
A13	5.164			
A14	5.285	↓		
A15	5.406	-0.026		
A16	0.000	0.000		
A17	0.134	↑		
A18	0.400			
A19	0.534			
A20	0.800			
A21	0.934			
A22	1.068			
A23	1.200			
A24	1.334			
A25	1.468	↓		
A26	1.600	0.000		
A27	1.734	-0.015		
A28	1.868	0.000		
A29	2.000			
A30	2.134			
A31	2.268			
A32	2.400			
A33	2.600			
A34	2.800			
A35	5.685	↓		
A36	5.885	0.000		
A37	2.929	0.061		
A38	3.345	↑		
A39	3.466			
A40	3.882			
A41	4.003			
A42	4.419			
A43	4.540			
A44	4.956			
A45	5.077	↓		
A46	5.493	0.061		
A47	0.000	0.137		
A48	0.400	↑		
A49	0.800			
A50	1.200			
A51	1.600			
A52	2.000			
A53	2.400			
A54	2.800	↓		
A55	5.885	0.137		
A56	0.000	0.274		
A57	0.400	↑		
A58	0.800			
A59	1.200			
A60	1.600			
A61	2.000			
A62	2.400			
A63	2.800	↓		
A64	5.885	0.274		
A65	2.929	0.342		
A66	3.345	↑		
A67	3.466			
A68	3.882			
A69	4.003			
A70	4.419			
A71	4.540			
A72	4.956			
A73	5.077	↓		
A74	5.493	0.342		
A75	0.000	0.411		
A76	0.400	↑		
A77	0.800		↓	
A78	1.200		SEE SECTION A-A	
A79	1.600	↓		↓
A80	2.000	0.411		.006

HOLE IDENT	BASIC X DIM	BASIC Y DIM	HOLE DIA	⊕ DIA
A81	2.400	0.411	SEE SECTION A-A	.006
A82	2.800	0.411		↑
A83	5.820	0.425		
A84	3.254	↑	↑	
A85	3.557			
A86	3.791			
A87	4.094			
A88	4.328			
A89	4.631		↓	
A90	4.865		SEE SECTION A-A	
A91	5.168	↓		↓
A92	5.402	0425		.006
A93	6.130	0.000		
A94	5.950	0.425		
A95	1.716	0.105		
A96	2.516	0.105		
B1	3.137	0.216	SEE DETAIL A	.006
B2	3.674	↑		↑
B3	4.211			
B4	4.748	↓		↓
B5	5.285	0.216		.006

HOLE IDENT	BASIC X DIM	BASIC Y DIM	HOLE DIA	⊕ DIA
C1	0.675	0.000	.025 .031	.006
C2	0.275	0.100		↑
C3	0.675	0.100	↑	
C4	6.010	0.100		
C5	3.406	0.151		
C6	3.943	0.151		
C7	4.480	0.151		
C8	5.017	0.151		
C9	5.522	0.216		
C10	3.406	0.251		
C11	3.943	0.251		
C12	4.480	0.251		
C13	5.017	0.251		
C14	5.610	0.100		
C15	3.016	0.429		
C16	1.900	0.455	↓	
C17	2.100	0.455	.025 .031	↓
C18	2.300	0.455		.006
D1	2.700	0.061	SEE SECTION B-B	.006

HOLE IDENT	BASIC X DIM	BASIC Y DIM	HOLE DIA	⊕ DIA
E1	0.200	0.274	SEE DETAIL B	.006
E2	0.600	↑		↑
E3	1.000			
E4	1.400		↑	
E5	1.800			
E6	2.200		↓	
E7	2.600		SEE DETAIL B	
E8	5.685	↓		↓
E9	6.085	0.274		.006

REVISIONS

SYM	DESCRIPTION	DATE	APPROVED
Ⓑ B	REDRAW REPLACES REV A WITH CHANGES AND UPGRADED TO CLASS A PER TDR 63624	10-3-63	
Ⓒ C	REVISED PER TDRR 04324		
D	REVISED PER TDRR 04354		

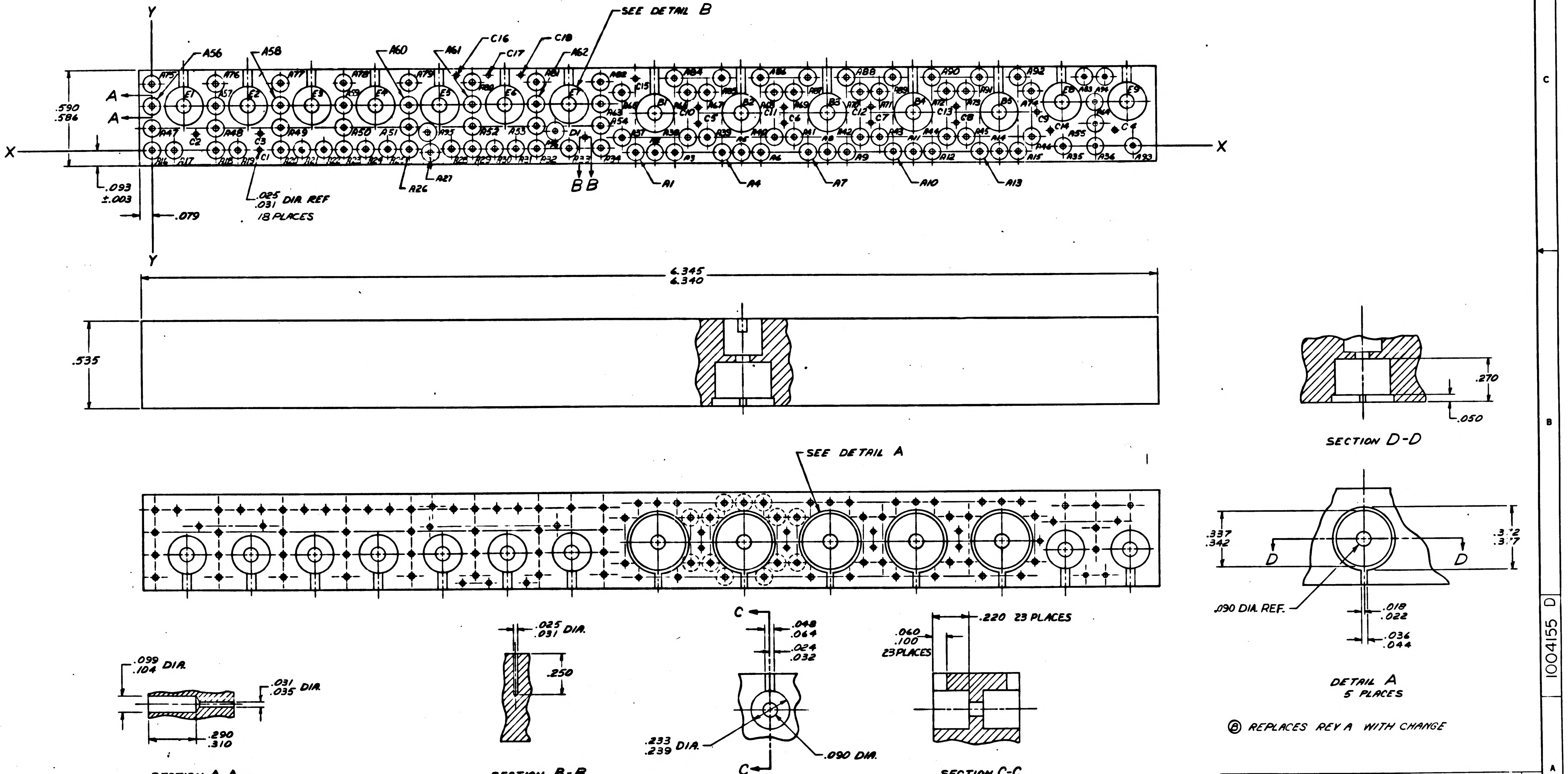

Y
X
A
A
SEE DETAIL B
A56
A58
A60
A61
C16
C17
C18
A62
A75 A76 A77 A78 A79 A80 A81 A82 A84 A86 A88 A90 A92
E1 E2 E3 E4 E5 E6 E7 E8 E9
A57 A59 A63 A64 A65 A66 A67 A68 A69 A70 A71 A72 A73 A74 A83 A85 A87 A89 A91 A94
B1 B2 B3 B4 B5
C1 C2 C3 C4 C5 C6 C7 C8 C9 C10 C11 C12 C13 C14 C15
A47 A48 A49 A50 A51 A52 A53 A54 A55 A95 A96 A37 A38 A39 A40 A41 A42 A43 A44 A45 A46
A16 A17 A18 A19 A20 A21 A22 A23 A24 A25 A26 A27 A28 A29 A30 A31 A32 A33 A34 A35 A36 A93
D1
A1 A4 A7 A10 A13
A3 A6 A9 A12 A15
.590
.586
.093
±.003
.079
.025
.031 DIA REF
18 PLACES
B B
6.345
6.340
.535
.270
.050
SEE DETAIL A
.337
.342
.372
.377
D
D
.090 DIA. REF.
.018
.022
.036
.044
.099
.104 DIA.
.031
.035 DIA.
.290
.310
.025
.031 DIA.
.250
C
C
.048
.064
.024
.032
.233
.239 DIA.
.090 DIA.
.060
.100
23 PLACES
.220 23 PLACES

SECTION A-A
96 PLACES

SECTION B-B

DETAIL B
23 PLACES

SECTION C-C
9 PLACES

SECTION D-D

DETAIL A
5 PLACES

Ⓑ REPLACES REV A WITH CHANGE

NOTES:
1. MATERIAL: PLASTIC, CLEAR ACRYLIC PER MIL-P-8184, FINISH B, ALT MIL-P-5425 FINISH B
2. REMOVE BURRS & SHARP EDGES

QTY REQD	PART OR IDENTIFYING NO.	NOMENCLATURE OR DESCRIPTION	FIND NO

LIST OF MATERIALS

NEXT ASSY	USED ON
1003530	

APPLICATION

UNLESS OTHERWISE SPECIFIED DIMENSIONS ARE IN INCHES
TOLERANCES ON
FRACTIONS ± DECIMALS ±.005 ANGLES ±
DO NOT SCALE THIS DRAWING
MATERIAL SEE NOTE 1
HEAT TREATMENT NONE
FINAL FINISH NONE

MIT INSTRUMENTATION LAB
CAMBRIDGE, MASS.
DRAWN D.O. Clement DATE 8AUG63
CHECKED 26AUG63
APPROVAL
APPROVAL
APPROVAL
NASA APPROVAL W J Rhine 10-7-63
MLT. APPROVAL
MIT APPROVAL

MANNED SPACECRAFT CENTER
HOUSTON, TEXAS

BLOCK, COMPONENT
DECODING MODULE
AGC DSKY, NAV & MAIN

CODE IDENT NO —
SIZE J
NASA DRAWING NO 1004155
SCALE 4/1
WT
SHEET 1 OF 1

INTERPRET DRAWING IN ACCORDANCE WITH STANDARDS PRESCRIBED BY MIL-D-70327

INCHES
PHOTOGRAPHIC SCALE ONLY

E-2

NOTICE — WHEN GOVERNMENT DRAWINGS, SPECIFICATIONS, OR OTHER DATA ARE USED FOR ANY PURPOSE OTHER THAN IN CONNECTION WITH A DEFINITELY RELATED GOVERNMENT PROCUREMENT OPERATION, THE UNITED STATES GOVERNMENT THEREBY INCURS NO RESPONSIBILITY NOR ANY OBLIGATION WHATSOEVER; AND THE FACT THAT THE GOVERNMENT MAY HAVE FORMULATED, FURNISHED, OR IN ANY WAY SUPPLIED THE SAID DRAWINGS, SPECIFICATIONS, OR OTHER DATA IS NOT TO BE REGARDED BY IMPLICATION OR OTHERWISE AS IN ANY MANNER LICENSING THE HOLDER OR ANY OTHER PERSON OR CORPORATION, OR CONVEYING ANY RIGHTS OR PERMISSION TO MANUFACTURE, USE, OR SELL ANY PATENTED INVENTION THAT MAY IN ANY WAY BE RELATED THERETO.

REVISIONS			
SYM	DESCRIPTION	DATE	APPROVAL

HOLE IDENT	BASIC X DIM	BASIC Y DIM	HOLE DIA	⌖ DIA	QTY
A1	0.000	0.000	0.109 0.112	.006	92
A2	0.134				
A3	0.400				
A4	0.600				
A5	0.800				
A6	0.934				
A7	1.068				
A8	1.200				
A9	1.334				
A10	1.468				
A11	1.600				
A12	1.734				
A13	1.868				
A14	2.000				
A15	2.134				
A16	2.268				
A17	2.400				
A18	2.600				
A19	2.800				
A20	2.937				
A21	3.137				
A22	3.337				
A23	3.474				
A24	3.674				
A25	3.874				
A26	4.011				
A27	4.211				
A28	4.411				
A29	4.548				
A30	4.748				
A31	4.948				
A32	5.085				
A33	5.285				
A34	5.485				
A35	5.685				
A36	5.885	0.000			
A37	0.000	0.137			
A38	0.400				
A39	0.800				
A40	1.200				
A41	1.600				
A42	2.000				
A43	2.400				
A44	2.800				
A45	2.937				
A46	3.337				
A47	3.474				
A48	3.874				
A49	4.011				
A50	4.411				
A51	4.548				
A52	4.948				
A53	5.085				
A54	5.485				
A55	5.885	0.137			
A56	0.000	0.274			
A57	0.400				
A58	0.800				
A59	1.200				
A60	1.600				
A61	2.000				
A62	2.400				
A63	2.800				
A64	2.937				
A65	3.337				
A66	3.474				
A67	3.874				
A68	4.011				
A69	4.411				
A70	4.548				
A71	4.948				
A72	5.085				
A73	5.485				
A74	5.885	0.274			
A75	0.000	0.411			
A76	0.400				
A77	0.800				
A78	1.200				
A79	1.600				
A80	2.000				
A81	2.400				
A82	2.800				
A83	3.337				
A84	3.474				
A85	3.874				
A86	4.011				
A87	4.411				
A88	4.548				
A89	4.948				
A90	5.085				
A91	5.485				
A92	5.885	0.411			
B1	0.200	0.274	SEE DETAIL A	.006	14
B2	0.600				
B3	1.000				
B4	1.400				
B5	1.800				
B6	2.200				
B7	2.600				
B8	3.137				
B9	3.674				
B10	4.211				
B11	4.748				
B12	5.285				
B13	5.685				
B14	6.085	0.274			

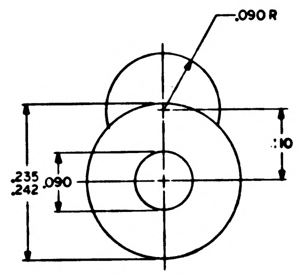

DETAIL A
SCALE 10/1

FOR INFORMATION ONLY

CLASS B RELEASE TDR No. 01298 DATE 5-21-63

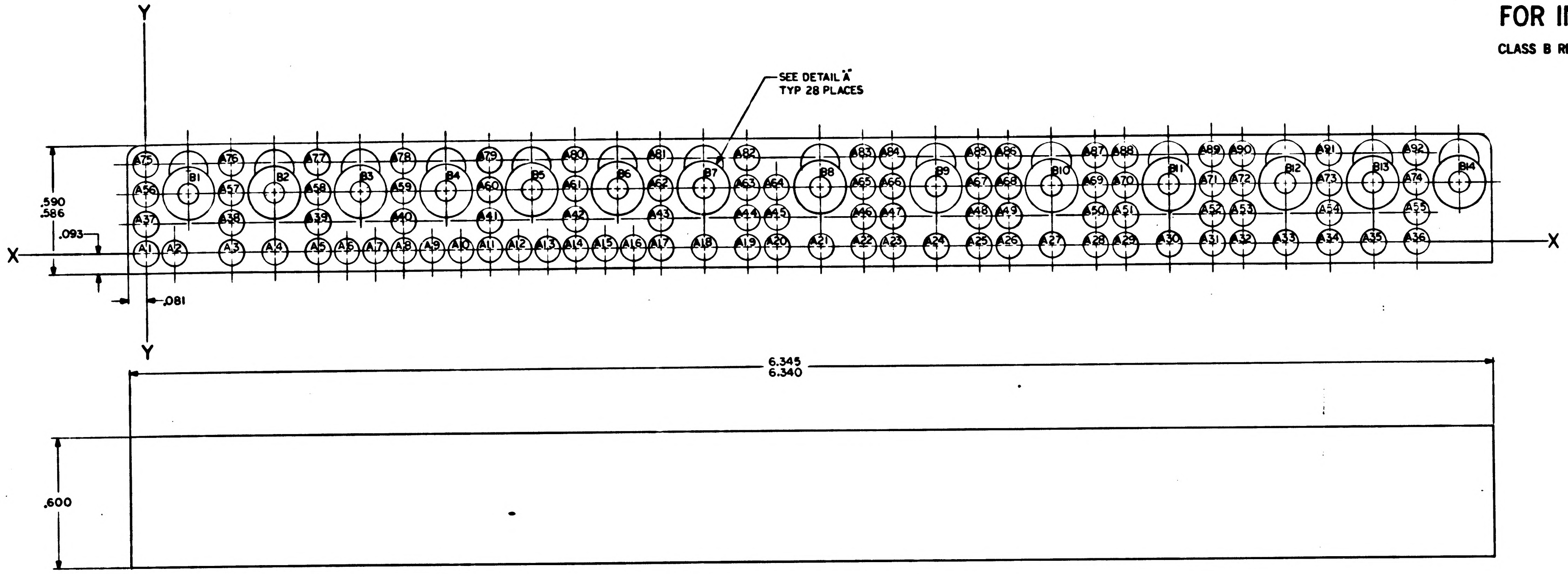

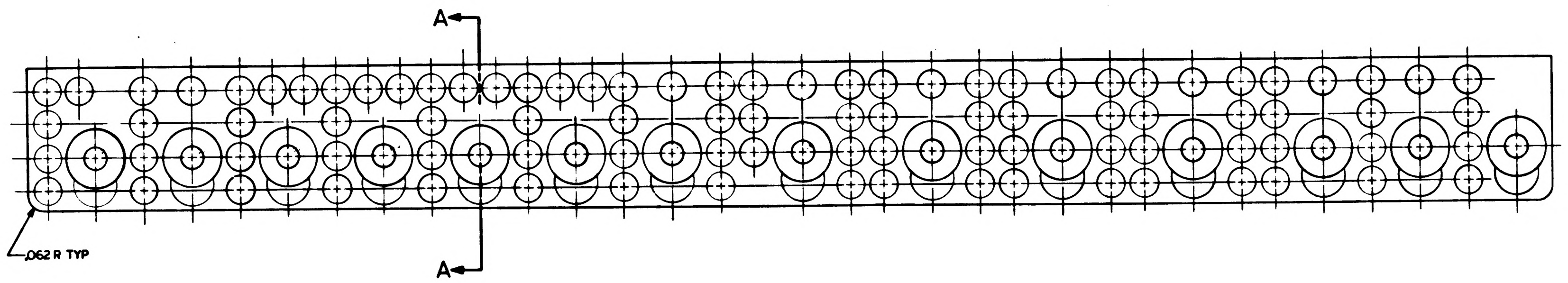

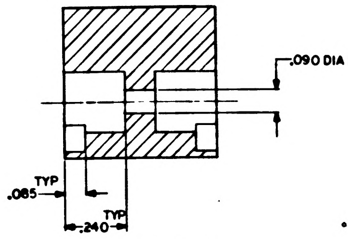

SECTION A-A
SCALE 4/1

NOTES:
1. INTERPRET DRAWING IN ACCORDANCE WITH STANDARDS PRESCRIBED BY MIL-D-70327
2. MATL: PLASTIC. CLEAR ACRYLIC PER MIL-P-8184 FINISH B
3. TRUE POSITION AS SHOWN IN CHART
4. REMOVE ALL SHARP EDGES

QTY REQD	PART OR IDENTIFYING NO.	NOMENCLATURE OR DESCRIPTION	FIND NO

LIST OF MATERIALS

NEXT ASSY | USED ON
APPLICATION

UNLESS OTHERWISE SPECIFIED DIMENSIONS ARE IN INCHES
TOLERANCES ON
FRACTIONS ± // DECIMALS ± ANGLES ± //
DO NOT SCALE THIS DRAWING
MATERIAL SEE NOTE 2
HEAT TREATMENT //
FINAL FINISH SEE NOTE 2

MIT INSTRUMENTATION LAB
CAMBRIDGE MASS
DWG NO CONTRACT
DRAWN DATE 5/13/63
CHECKED 5-13-63
APPROVAL W B 22 MAY 63
APPROVAL
NASA APPROVAL 5/22/63
MIT APPROVAL 5/21/63

MANNED SPACECRAFT CENTER
HOUSTON, TEXAS

BLOCK, COMPONENT
AGC KEYBOARD

CODE IDENT NO | SIZE E | NASA DRAWING NO 1004155
SCALE 4/1 | WT | SHEET 1 OF 1

1004155

INCHES
PHOTOGRAPHIC SCALE ONLY

NOTICE — WHEN GOVERNMENT DRAWINGS, SPECIFICATIONS, OR OTHER DATA ARE USED FOR ANY PURPOSE OTHER THAN IN CONNECTION WITH A DEFINITELY RELATED GOVERNMENT PROCUREMENT OPERATION, THE UNITED STATES GOVERNMENT THEREBY INCURS NO RESPONSIBILITY NOR ANY OBLIGATION WHATSOEVER; AND THE FACT THAT THE GOVERNMENT MAY HAVE FORMULATED, FURNISHED, OR IN ANY WAY SUPPLIED THE SAID DRAWINGS, SPECIFICATIONS, OR OTHER DATA IS NOT TO BE REGARDED BY IMPLICATION OR OTHERWISE AS IN ANY MANNER LICENSING THE HOLDER OR ANY OTHER PERSON OR CORPORATION, OR CONVEYING ANY RIGHTS OR PERMISSION TO MANUFACTURE, USE, OR SELL ANY PATENTED INVENTION THAT MAY IN ANY WAY BE RELATED THERETO.

REVISIONS			
SYM	DESCRIPTION	DATE	APPROVAL
A	REVISED PER TDRR 01457	6-4-63	

HOLE IDENT	X BASIC DIM.	Y BASIC DIM.	⊕ DIM	HOLE DIA	DEPTH
A1	1.076	3.270	.006	.202 .206	.696
A2	1.076	2.938			
A3	0.000	2.938			
A4	2.160	2.938			
A5	2.160	1.922			
A6	2.160	0.820			
A7	2.160	-0.332			
A8	1.076	0.000			
A9	1.076	-0.332			
A10	0.000	0.000			
A11	1.076	1.152			
A12	1.076	0.820			
A13	0.000	0.820			
A14	1.076	2.254			
A15	1.076	1.922			
A16	0.000	2.254			
B1	2.020	2.776	.006	.108 .112	.560
B2	2.020	2.548			
C1	-0.184	2.532			.500
C2	-0.184	3.974	.006	.035 .038	THRU
C3	-0.104	3.904			
C4	0.000	3.840			
C5	0.104	3.780			
C6	0.184	3.712			
C7	0.258	3.648			
C8	0.892	3.974			
C9	0.972	3.904			
C10	1.076	3.840			
C11	1.184	3.780			
C12	1.262	3.712			
C13	1.338	3.648			
C14	1.976	3.974			
C15	2.056	3.904			
C16	2.160	3.840			
C17	2.264	3.780			
C18	2.344	3.712			
C19	2.420	3.648			
C20	2.020	2.662			
C21	0.892	2.662			
D1	0.892	3.380	.006	.108 .112	.560
D2	0.892	3.214			
D3	-0.184	3.214			
D4	1.976	3.214			
D5	1.976	2.200			
D6	1.976	1.094			
D7	1.976	0.060			
D8	0.892	2.940			
D9	0.972	3.094			
D10	-0.104	3.094			
D11	2.056	3.104			
D12	2.056	2.084			
D13	2.056	0.978			
D14	0.972	2.084			
D15	-0.104	2.416			
D16	1.184	2.776			
D17	0.104	2.776			
D18	2.264	2.776			
D19	1.184	0.992			
D20	1.184	0.664			
D21	0.104	0.664			
D22	1.184	2.100			
D23	1.262	2.662			
D24	2.344	2.662			
D25	2.344	1.656			
D26	2.344	0.552			
D27	1.262	-0.608			
D28	0.184	-0.270			
D29	0.184	0.552			
D30	1.262	1.984			
D31	1.262	2.526			
D32	1.338	3.094			
D33	1.338	2.776			
D34	2.420	0.430			
D35	1.338	-0.390			
D36	0.258	-0.382			
D37	1.338	0.430			
D38	1.338	1.868			
D39	0.258	1.868			
D40	1.976	3.546			
D41	-0.184	3.546			
D42	2.056	3.436			
D43	-0.104	3.436			
D44	2.420	3.436			
D45	0.892	2.796			

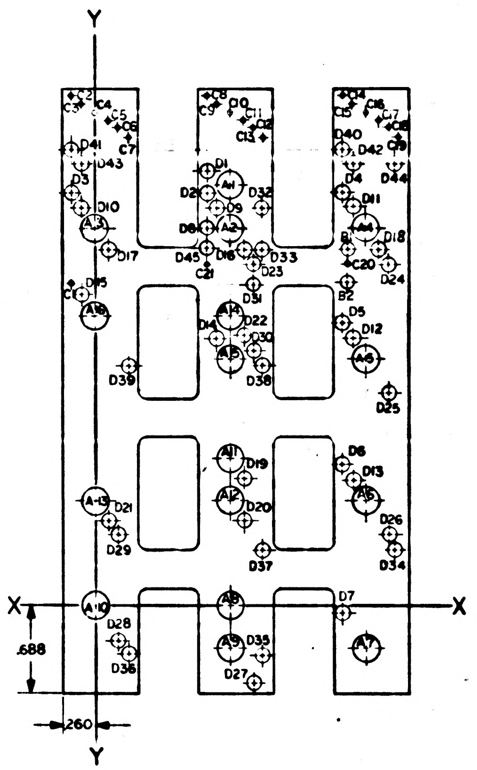
Y
X
.688
.260
A1
A2
A3
A4
A5
A6
A7
A8
A9
A10
A11
A12
A13
A14
A15
A16
B1
B2
C1
C2
C3
C4
C5
C6
C7
C8
C9
C10
C11
C12
C13
C14
C15
C16
C17
C18
C19
C20
C21
D1
D2
D3
D4
D5
D6
D7
D8
D9
D10
D11
D12
D13
D14
D15
D16
D17
D18
D19
D20
D21
D22
D23
D24
D25
D26
D27
D28
D29
D30
D31
D32
D33
D34
D35
D36
D37
D38
D39
D40
D41
D42
D43
D44
D45

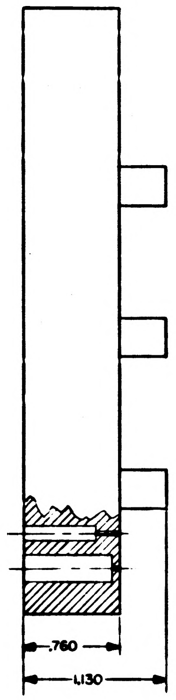

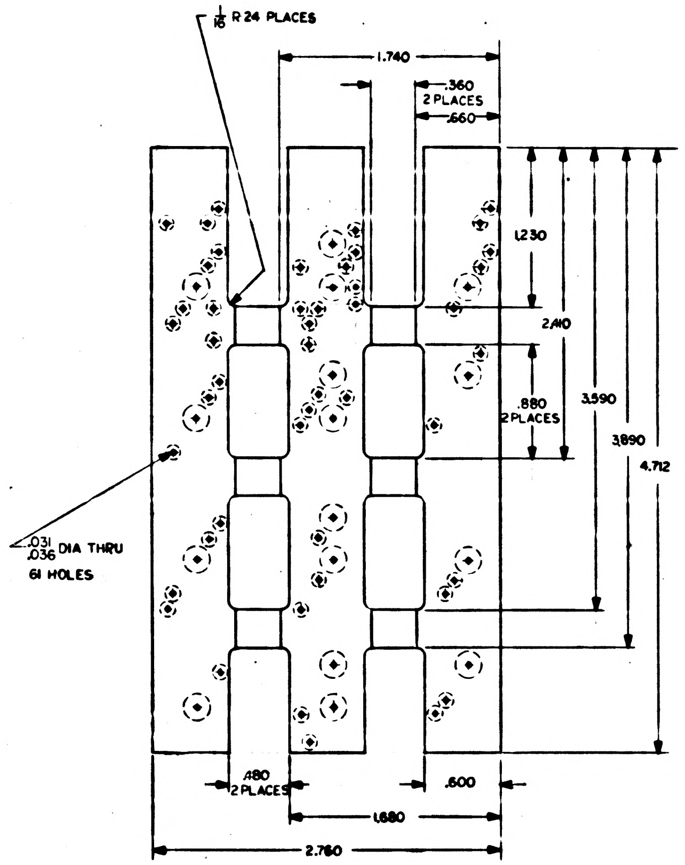
1/8 R 24 PLACES
1.740
.360
2 PLACES
.660
1.230
2.110
.880
2 PLACES
3.590
3.890
4.712
.031
.036 DIA THRU
61 HOLES
.480
2 PLACES
.600
1.680
2.760

FOR INFORMATION ONLY

CLASS B RELEASE TDR No. 01298 DATE 5-22-63

NOTES:

1. INTERPRET DRAWING IN ACCORDANCE WITH STANDARDS PRESCRIBED BY MIL-D-70327
2. MAT'L: PLASTIC, CLEAR ACRYLIC PER MIL-P-8184 FINISH B
3. TRUE POSITION AS SHOWN IN CHART
4. REMOVE ALL SHARP EDGES

MASTER

QTY REQD	PART OR IDENTIFYING NO.	NOMENCLATURE OR DESCRIPTION	FIND NO

LIST OF MATERIALS

NEXT ASSY	USED ON
APPLICATION	

UNLESS OTHERWISE SPECIFIED
DIMENSIONS ARE IN INCHES
TOLERANCES ON
FRACTIONS ± — DECIMALS ±.005 ANGLES ± —
DO NOT SCALE THIS DRAWING
MATERIAL SEE NOTE 2
HEAT TREATMENT
FINAL FINISH

MIT
INSTRUMENTATION LAB
CAMBRIDGE, MASS
DWG NO. CONTRACT
DRAWN DATE
CHECKED 5-13-63
APPROVAL W B Turner 22 MAY 63
APPROVAL
NASA APPROVAL 5/22/63
MIT APPROVAL 5/22/63

MANNED SPACECRAFT CENTER
HOUSTON, TEXAS

BLOCK, COMPONENT
KEYBOARD MODULE
AGC KEYBOARD

CODE IDENT NO. SIZE E NASA DRAWING NO. 1004156
SCALE 2/1 WT SHEET 1 OF 1

1004156

INCHES
PHOTOGRAPHIC SCALE ONLY

NOTICE — WHEN GOVERNMENT DRAWINGS, SPECIFICATIONS, OR OTHER DATA ARE USED FOR ANY PURPOSE OTHER THAN IN CONNECTION WITH A DEFINITELY RELATED GOVERNMENT PROCUREMENT OPERATION, THE UNITED STATES GOVERNMENT THEREBY INCURS NO RESPONSIBILITY NOR ANY OBLIGATION WHATSOEVER; AND THE FACT THAT THE GOVERNMENT MAY HAVE FORMULATED, FURNISHED, OR IN ANY WAY SUPPLIED THE SAID DRAWINGS, SPECIFICATIONS, OR OTHER DATA IS NOT TO BE REGARDED BY IMPLICATION OR OTHERWISE AS IN ANY MANNER LICENSING THE HOLDER OR ANY OTHER PERSON OR CORPORATION, OR CONVEYING ANY RIGHTS OR PERMISSION TO MANUFACTURE, USE, OR SELL ANY PATENTED INVENTION THAT MAY IN ANY WAY BE RELATED THERETO.

REVISIONS			
SYM	DESCRIPTION	DATE	APPROVAL
A	REVISED PER TDRR 01457	6-4-63	
B	REVISED AND UPGRADED TO CLASS A PER TDRR 02557		WBT

HOLE IDENT	X BASIC DIM.	Y BASIC DIM.	⌖ DIM	HOLE DIA	C'BORE DEPTH
A1	1.076	3.270	.006	.035 .038 THRU & C'BORE .202 .206	.650
A2	1.076	2.938			
A3	0.000	2.938			
A4	2.160	2.938			
A5	2.160	1.922			
A6	2.160	0.820			
A7	2.160	-0.332			
A8	1.076	0.000			
A9	1.076	-0.332			
A10	0.000	0.000			
A11	1.076	1.152			
A12	1.076	0.820			
A13	0.000	0.820			
A14	1.076	2.254			
A15	1.076	1.922			
A16	0.000	2.254			
B1	2.020	2.776	.006	.035 .038 THRU & C'BORE .108 .112	.350
B2	2.020	2.548			
C2	-0.184	3.974	.006	.035 .038	THRU
C3	-0.104	3.904			
C4	0.000	3.840			
C5	0.104	3.780			
C6	0.184	3.712			
C7	0.258	3.648			
C8	0.892	3.974			
C9	0.972	3.904			
C10	1.076	3.840			
C11	1.184	3.780			
C12	1.262	3.712			
C13	1.338	3.648			
C14	1.976	3.974			
C15	2.056	3.904			
C16	2.160	3.840			
C17	2.264	3.780			
C18	2.344	3.712			
C19	2.420	3.648			
C20	2.020	2.662			
C21	0.892	2.600			
D1	0.892	3.380	.006	.035 .038 THRU & C'BORE .108 .112	.350
D2	0.892	3.214			
D3	-0.184	3.214			
D4	1.976	3.214			
D5	1.976	2.200			
D6	1.976	1.094			
D7	1.976	0.060			
D8	0.892	2.940			
D9	0.972	3.094			
D10	-0.104	3.094			
D11	2.056	3.104			
D12	2.056	2.084			
D13	2.056	0.978			
D14	0.972	2.084			
D15	-0.104	2.416			
D16	1.184	2.776			
D17	0.104	2.776			
D18	2.264	2.776			
D19	1.184	0.992			
D20	1.184	0.664			
D21	0.104	0.664			
D22	1.184	2.100			
D23	1.262	2.662			
D24	2.344	2.662			
D25	2.344	1.656			
D26	2.344	0.552			
D27	1.262	-0.608			
D28	0.184	-0.270			
D29	0.184	0.552			
D30	1.262	1.984			
D31	1.262	2.526			
D32	1.338	3.094			
D33	1.338	2.776			
D34	2.420	0.430			
D35	1.338	-0.390			
D36	0.258	-0.382			
D37	1.338	0.430			
D38	1.338	1.868			
D39	0.258	1.868			
D40	1.976	3.546			
D41	-0.184	3.546			
D42	2.056	3.436			
D43	-0.104	3.436			
D44	2.420	3.436			
D45	0.892	2.796			

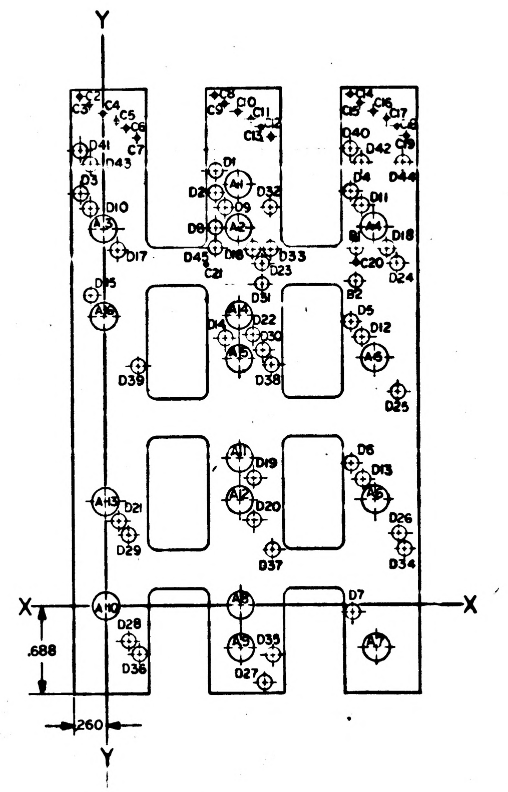
Y
X
X
Y
.688
.260
A1 A2 A3 A4 A5 A6 A7 A8 A9 A10 A11 A12 A13 A14 A15 A16
B1 B2
C2 C3 C4 C5 C6 C7 C8 C9 C10 C11 C12 C13 C14 C15 C16 C17 C18 C19 C20 C21
D1 D2 D3 D4 D5 D6 D7 D8 D9 D10 D11 D12 D13 D14 D15 D16 D17 D18 D19 D20 D21 D22 D23 D24 D25 D26 D27 D28 D29 D30 D31 D32 D33 D34 D35 D36 D37 D38 D39 D40 D41 D42 D43 D44 D45

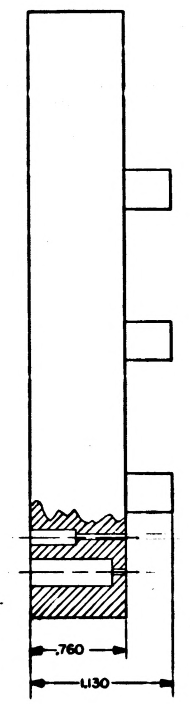

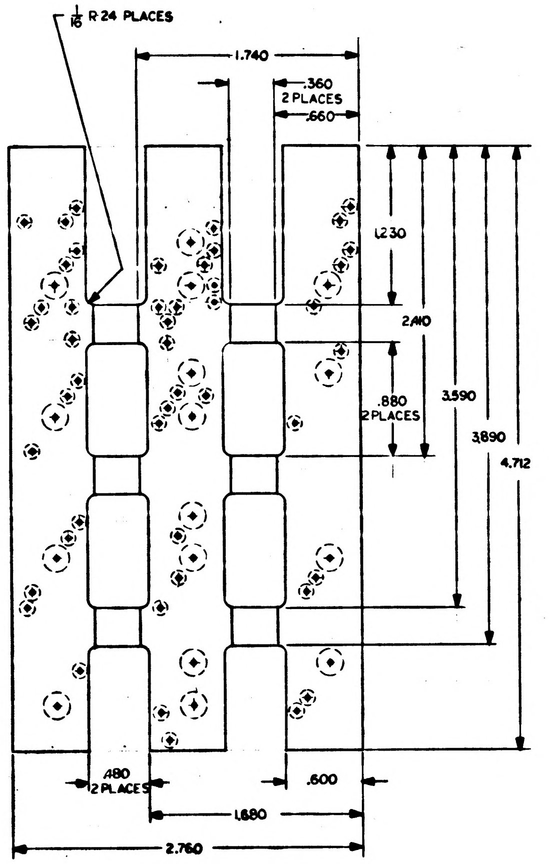
1/16 R 24 PLACES
1.740
.360
2 PLACES
.660
1.230
2.410
.880
2 PLACES
3.590
3.890
4.712
.480
2 PLACES
.600
1.680
2.760

NOTES:
1. INTERPRET DRAWING IN ACCORDANCE WITH STANDARDS PRESCRIBED BY MIL-D-70327
2. MAT'L: PLASTIC, CLEAR ACRYLIC PER MIL-P-8184 FINISH B
3. TRUE POSITION AS SHOWN IN CHART
4. REMOVE ALL SHARP EDGES

MASTER

QTY REQD	PART OR IDENTIFYING NO.	NOMENCLATURE OR DESCRIPTION	FIND NO.

LIST OF MATERIALS

NEXT ASSY	USED ON
1003097	

APPLICATION

UNLESS OTHERWISE SPECIFIED
DIMENSIONS ARE IN INCHES
TOLERANCES ON
FRACTIONS ± — DECIMALS ±.005 ANGLES ± —
DO NOT SCALE THIS DRAWING
MATERIAL SEE NOTE 2
HEAT TREATMENT
FINAL FINISH

MIT
INSTRUMENTATION LAB
CAMBRIDGE MASS
DWG NO. CONTRACT
DRAWN Tom Killoran DATE 10 MAY 63
CHECKED 5-13-63
APPROVAL W B Turner 22 MAY 63
APPROVAL
NASA APPROVAL 5/22/63
MIT APPROVAL 5/23/63

MANNED SPACECRAFT CENTER
HOUSTON, TEXAS

BLOCK, COMPONENT
KEYBOARD MODULE
AGC KEYBOARD

CODE IDENT NO.
SIZE E
NASA DRAWING NO. 1004156
SCALE 2/1 WT SHEET 1 OF 1

1004156 B

INCHES
0 1 2
PHOTOGRAPHIC SCALE ONLY

NOTICE — WHEN GOVERNMENT DRAWINGS, SPECIFICATIONS, OR OTHER DATA ARE USED FOR ANY PURPOSE OTHER THAN IN CONNECTION WITH A DEFINITELY RELATED GOVERNMENT PROCUREMENT OPERATION, THE UNITED STATES GOVERNMENT THEREBY INCURS NO RESPONSIBILITY NOR ANY OBLIGATION WHATSOEVER; AND THE FACT THAT THE GOVERNMENT MAY HAVE FORMULATED, FURNISHED, OR IN ANY WAY SUPPLIED THE SAID DRAWINGS, SPECIFICATIONS, OR OTHER DATA IS NOT TO BE REGARDED BY IMPLICATION OR OTHERWISE AS IN ANY MANNER LICENSING THE HOLDER OR ANY OTHER PERSON OR CORPORATION, OR CONVEYING ANY RIGHTS OR PERMISSION TO MANUFACTURE, USE, OR SELL ANY PATENTED INVENTION THAT MAY IN ANY WAY BE RELATED THERETO.

REVISIONS			
SYM	DESCRIPTION	DATE	APPROVAL
A	REVISED PER TDRR 01457	6-4-63	
B	REVISED AND UPGRADED TO CLASS A PER TDRR 02557		
C	REVISED PER TDRR 03471	9-26-63	

HOLE IDENT	X BASIC DIM.	Y BASIC DIM.	⊕ DIM	HOLE DIA	C'BORE DEPTH
A1	1.076	3.270	.006	.035 .038 THRU & C'BORE .202 .206	.650
A2	1.076	2.938			
A3	0.000	2.938			
A4	2.160	2.938			
A5	2.160	1.922			
A6	2.160	0.820			
A7	2.160	-0.332			
A8	1.076	0.000			
A9	1.076	-0.332			
A10	0.000	0.000			
A11	1.076	1.152			
A12	1.076	0.820			
A13	0.000	0.820			
A14	1.076	2.254			
A15	1.076	1.922			
A16	0.000	2.254			
A17	2.160	2.370			
B1	2.020	2.776	.006	.035 .038 THRU & C'BORE .108 .112	.350
B2	2.020	2.548			
B3	-0.184	2.662			
C2	-0.184	3.974	.006	.035 .038	THRU
C3	-0.104	3.904			
C4	0.000	3.840			
C5	0.104	3.780			
C6	0.184	3.712			
C7	0.258	3.648			
C8	0.892	3.974			
C9	0.972	3.904			
C10	1.076	3.840			
C11	1.184	3.780			
C12	1.262	3.712			
C13	1.338	3.648			
C14	1.976	3.974			
C15	2.056	3.904			
C16	2.160	3.840			
C17	2.264	3.780			
C18	2.344	3.712			
C19	2.420	3.648			
C20	2.020	2.662			
C21	0.892	2.600			
C22	-0.184	2.776			
D1	0.892	3.380	.006	.035 .038 THRU & C'BORE .108 .112	.350
D2	0.892	3.214			
D3	-0.184	3.214			
D4	1.976	3.214			
D5	1.976	2.200			
D6	1.976	1.094			
D7	1.976	0.060			
D8	0.892	2.940			
D9	0.972	3.094			
D10	-0.104	3.094			
D11	2.056	3.104			
D12	2.056	2.084			
D13	2.056	0.978			
D14	0.972	2.084			
D15	-0.104	2.416			
D16	1.184	2.776			
D17	0.104	2.776			
D18	2.264	2.776			
D19	1.184	0.992			
D20	1.184	0.664			
D21	0.104	0.664			
D22	1.184	2.100			
D23	1.262	2.662			
D24	2.344	2.662			
D25	2.344	1.656			
D26	2.344	0.552			
D27	1.262	-0.608			
D28	0.184	-0.270			
D29	0.184	0.552			
D30	1.262	1.984			
D31	1.262	2.526			
D32	1.338	3.094			
D33	1.338	2.776			
D34	2.420	0.430			
D35	1.338	-0.390			
D36	0.258	-0.382			
D37	1.338	0.430			
D38	1.338	1.868			
D39	0.258	1.868			
D40	1.976	3.546			
D41	-0.184	3.546			
D42	2.056	3.436			
D43	-0.104	3.436			
D44	2.420	3.436			
D45	0.892	2.796			

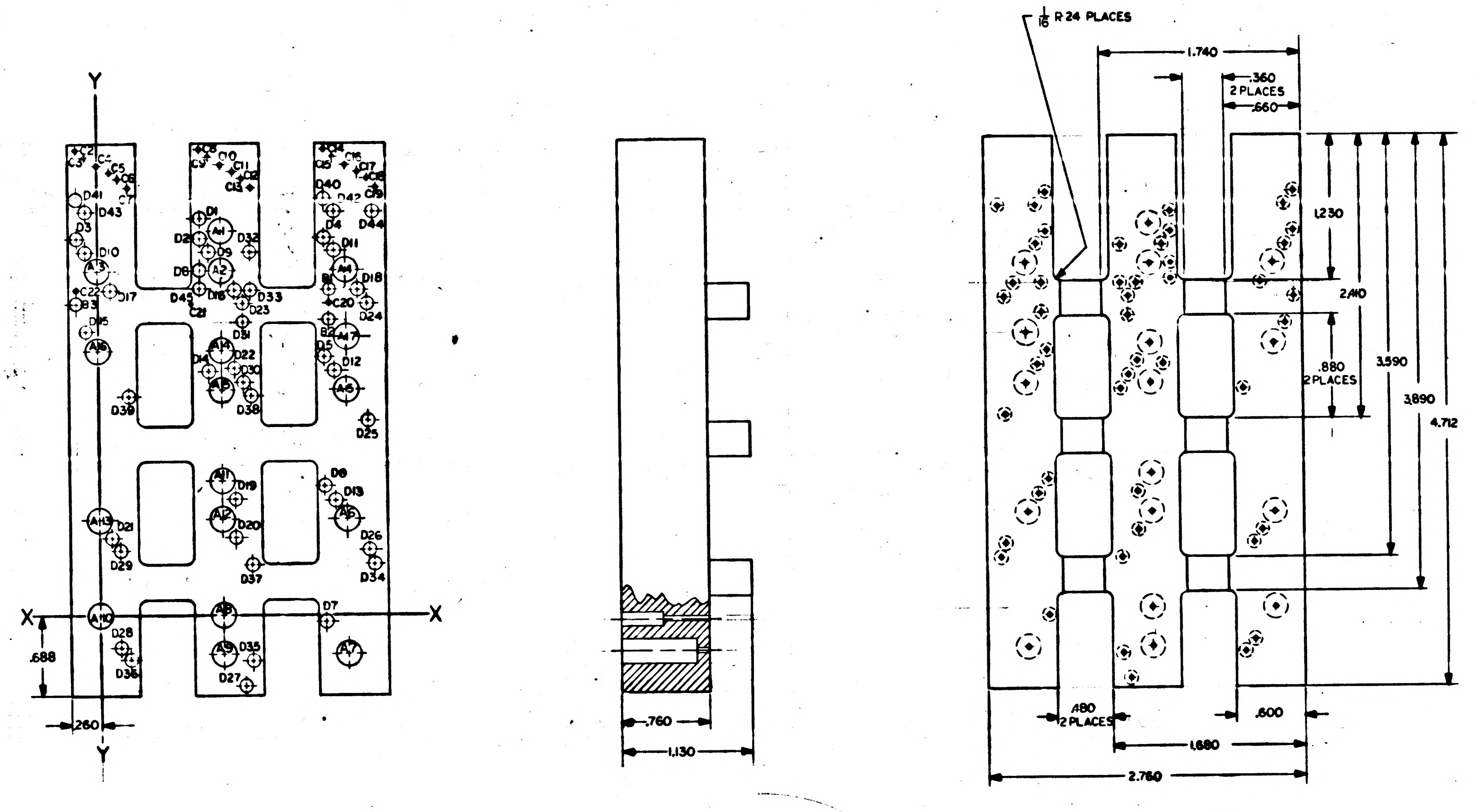
Y
X
.688
.260
A1
A2
A3
A4
A5
A6
A7
A8
A9
A10
A11
A12
A13
A14
A15
A16
A17
B1
B2
B3
D1
D2
D3
D4
D5
D6
D7
D8
D9
D10
D11
D12
D13
D14
D15
D16
D17
D18
D19
D20
D21
D22
D23
D24
D25
D26
D27
D28
D29
D30
D31
D32
D33
D34
D35
D36
D37
D38
D39
D40
D41
D42
D43
D44
D45
C2
C3
C4
C5
C6
C7
C8
C9
C10
C11
C12
C13
C14
C15
C16
C17
C18
C19
C20
C21
C22
.760
1.130
1/16 R 24 PLACES
1.740
.360 2 PLACES
.660
1.230
2.410
.880 2 PLACES
3.590
3.890
4.712
.480 2 PLACES
.600
1.680
2.760

NOTES:
1. INTERPRET DRAWING IN ACCORDANCE WITH STANDARDS PRESCRIBED BY MIL-D-70327
2. MAT'L: PLASTIC, CLEAR ACRYLIC PER MIL-P-8184 FINISH B
3. TRUE POSITION AS SHOWN IN CHART
4. REMOVE ALL SHARP EDGES

MASTER

QTY REQD	PART OR IDENTIFYING NO.	NOMENCLATURE OR DESCRIPTION	FIND NO.

LIST OF MATERIALS

NEXT ASSY	USED ON
1003097	

APPLICATION

UNLESS OTHERWISE SPECIFIED
DIMENSIONS ARE IN INCHES
TOLERANCES ON
FRACTIONS ± — DECIMALS ±.005 ANGLES ± —
DO NOT SCALE THIS DRAWING
MATERIAL SEE NOTE 2
HEAT TREATMENT
FINAL FINISH

MIT
INSTRUMENTATION LAB
CAMBRIDGE MASS
DWG NO. CONTRACT
DRAWN Tony Wilson DATE 10 MAR 63
CHECKED A. Moore 5-13-63
APPROVAL W B Turner 23 MAY 63
APPROVAL
NASA APPROVAL 5/22/63
MIT APPROVAL

MANNED SPACECRAFT CENTER
HOUSTON, TEXAS

BLOCK, COMPONENT
KEYBOARD MODULE
AGC KEYBOARD

CODE IDENT NO.
SIZE E
NASA DRAWING NO. 1004156
SCALE 2/1
WT
SHEET 1 OF 1

INCHES
PHOTOGRAPHIC SCALE ONLY

NOTICE — WHEN GOVERNMENT DRAWINGS, SPECIFICATIONS, OR OTHER DATA ARE USED FOR ANY PURPOSE OTHER THAN IN CONNECTION WITH A DEFINITELY RELATED GOVERNMENT PROCUREMENT OPERATION, THE UNITED STATES GOVERNMENT THEREBY INCURS NO RESPONSIBILITY NOR ANY OBLIGATION WHATSOEVER, AND THE FACT THAT THE GOVERNMENT MAY HAVE FORMULATED, FURNISHED, OR IN ANY WAY SUPPLIED THE SAID DRAWINGS, SPECIFICATIONS, OR OTHER DATA IS NOT TO BE REGARDED BY IMPLICATION OR OTHERWISE AS IN ANY MANNER LICENSING THE HOLDER OR ANY OTHER PERSON OR CORPORATION, OR CONVEYING ANY RIGHTS OR PERMISSION TO MANUFACTURE, USE, OR SELL ANY PATENTED INVENTION THAT MAY IN ANY WAY BE RELATED THERETO.

SYM	DESCRIPTION	DATE	APPROVAL
A	REVISED PER TDRR [illegible]	6463	[illegible]
B	REVISED AND UPGRADED TO CLASS A PER TDRR 01557	[illegible]	[illegible]
C	REVISED PER TDRR 03471	[illegible]	[illegible]
D	REVISED PER TDRR 04327	28 OCT 63	[illegible]

HOLE IDENT	X BASIC DIM.	Y BASIC DIM.	⊕ DIM	HOLE DIA	C'BORE DEPTH
A1	1.076	3.270	.006	.035 .038 THRU & C'BORE .202 .206	.650
A2	1.076	2.938			
A3	0.000	2.938			
A4	2.160	2.938			
A5	2.160	1.922			
A6	2.160	0.820			
A7	2.160	-0.332			
A8	1.076	0.000			
A9	1.076	-0.332			
A10	0.000	0.000			
A11	1.076	1.152			
A12	1.076	0.820			
A13	0.000	0.820			
A14	1.076	2.254			
A15	1.076	1.922			
A16	0.000	2.254			
A17	2.160	2.370			
A18	0.000	3.270			
A19	2.160	3.270			
B1	2.020	2.776	.006	.035 .038 THRU & C'BORE .108 .112	.350
B2	2.020	2.548			
B3	-0.184	2.662			
C2	-0.184	3.974	.006	.035 .038	THRU
C3	-0.104	3.904			
C4	0.000	3.840			
C5	0.104	3.780			
C6	0.184	3.712			
C7	0.258	3.648			
C8	0.892	3.974			
C9	0.972	3.904			
C10	1.076	3.840			
C11	1.184	3.780			
C12	1.262	3.712			
C13	1.338	3.648			
C14	1.976	3.974			
C15	2.056	3.904			
C16	2.160	3.840			
C17	2.264	3.780			
C18	2.344	3.712			
C19	2.420	3.648			
C20	2.020	2.662			
C21	0.892	2.600			
C22	-0.184	2.776			
D1	0.892	3.380	.006	.035 .038 THRU & C'BORE .108 .112	.350
D2	0.892	3.214			
D3	-0.184	3.214			
D4	1.976	3.214			
D5	1.976	2.200			
D6	1.976	1.094			
D7	1.976	0.060			
D8	0.892	2.940			
D9	0.972	3.094			
D10	-0.104	3.094			
D11	2.056	3.104			
D12	2.056	2.084			
D13	2.056	0.978			
D14	0.972	2.084			
D15	-0.104	2.416			
D16	1.184	2.776			
D17	0.104	2.776			
D18	2.264	2.776			
D19	1.184	0.992			
D20	1.184	0.664			
D21	0.104	0.664			
D22	1.18[illegible]	2.100			
D23	1.2[illegible]	2.662			
D24	2.344	2.662			
D25	2.344	1.656			
D26	2.344	0.552			
D27	1.262	-0.608			
D28	0.184	-0.270			
D29	0.184	0.552			
D30	1.262	1.9[illegible]			
D31	1.262	2.526			
D32	1.338	3.094			
D33	1.338	2.776			
D34	2.420	0.430			
D35	1.338	-0.390			
D36	0.258	-0.382			
D37	1.338	0.430			
D38	1.338	1.868			
D39	0.258	1.868			
D40	1.976	3.546			
D41	-0.184	3.546			
D42	2.056	3.436			
D43	-0.104	3.436			
D44	2.420	3.436			
D45	0.892	2.796			

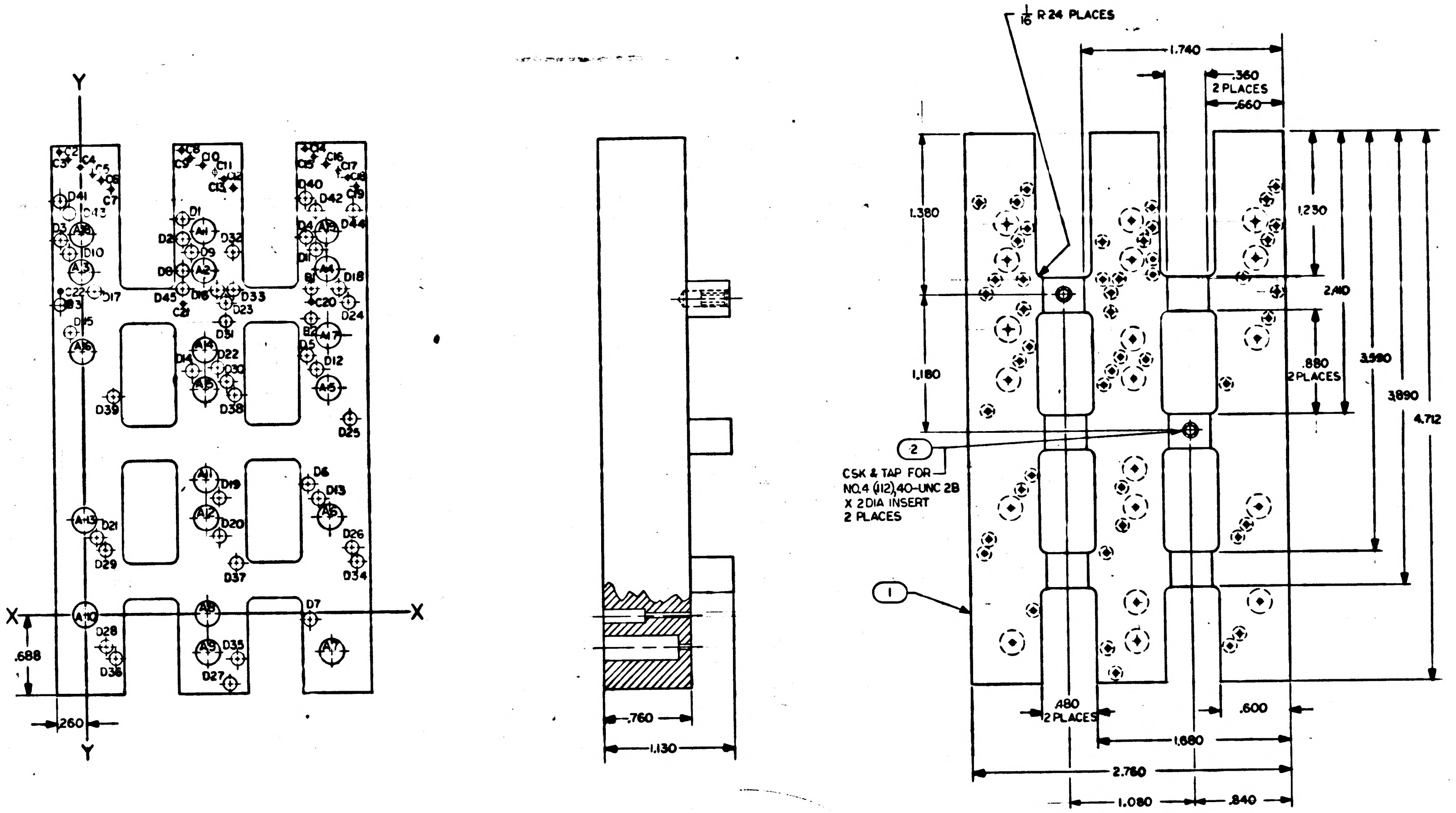

NOTES:

1. INTERPRET DRAWING IN ACCORDANCE WITH STANDARDS PRESCRIBED BY MIL-D-70327
2. MAT'L: PLASTIC, CLEAR ACRYLIC PER MIL-P-8184 FINISH B
3. TRUE POSITION AS SHOWN IN CHART
4. REMOVE ALL SHARP EDGES

MASTER

QTY REQD	PART OR IDENTIFYING NO.	NOMENCLATURE OR DESCRIPTION	FIND NO.
2	MS21209-C0420	INSERT, SCREW THREAD LOCKING	2
1	1004156-1	BLOCK	1

LIST OF MATERIALS

NEXT ASSY	USED ON
1003097	

APPLICATION

UNLESS OTHERWISE SPECIFIED
DIMENSIONS ARE IN INCHES
TOLERANCES ON
FRACTIONS ± — DECIMALS ±.005 ANGLES ± —
DO NOT SCALE THIS DRAWING
MATERIAL
SEE NOTE 2
HEAT TREATMENT
FINAL FINISH

MIT
INSTRUMENTATION LAB
CAMBRIDGE, MASS
DWG. NO.
CONTRACT
DRAWN Tom [illegible] DATE 10 MAR 63
CHECKED [illegible] 5-13-63
APPROVAL W.B. Turner 22 MAR 63
APPROVAL [illegible]
NASA APPROVAL [illegible] 5/22/63
MIT APPROVAL [illegible] 5/22/63

MANNED SPACECRAFT CENTER
HOUSTON, TEXAS

BLOCK, COMPONENT KEYBOARD MODULE
AGC DSKY, NAV & MAIN

CODE IDENT NO. —
SIZE E
NASA DRAWING NO. 1004156
SCALE 2/1
WT
SHEET 1 OF 1

1004156 D

NOTICE — WHEN GOVERNMENT DRAWINGS, SPECIFICATIONS, OR OTHER DATA ARE USED FOR ANY PURPOSE OTHER THAN IN CONNECTION WITH A DEFINITELY RELATED GOVERNMENT PROCUREMENT OPERATION, THE UNITED STATES GOVERNMENT THEREBY INCURS NO RESPONSIBILITY NOR ANY OBLIGATION WHATSOEVER; AND THE FACT THAT THE GOVERNMENT MAY HAVE FORMULATED, FURNISHED, OR IN ANY WAY SUPPLIED THE SAID DRAWINGS, SPECIFICATIONS, OR OTHER DATA IS NOT TO BE REGARDED BY IMPLICATION OR OTHERWISE AS IN ANY MANNER LICENSING THE HOLDER OR ANY OTHER PERSON OR CORPORATION, OR CONVEYING ANY RIGHTS OR PERMISSION TO MANUFACTURE, USE, OR SELL ANY PATENTED INVENTION THAT MAY IN ANY WAY BE RELATED THERETO

REVISIONS			
SYM	DESCRIPTION	DATE	APPROVAL
A	REVISED PER TDRR 01487	6-4-63	
B	REVISED AND UPGRADED TO CLASS A PER TDRR 02557		
C	REVISED PER TDRR 03871	9-25-63	
D	REVISED PER TDRR 04327	28 OCT 63	
E	REVISED PER TDRR 04515	11-6-63	

HOLE IDENT	X BASIC DIM.	Y BASIC DIM.	⊕ DIM	HOLE DIA	C'BORE DEPTH
A1	1.076	3.270	.006	.035 .038 THRU & C'BORE .202 .206	.650
A2	1.076	2.938			
A3	0.000	2.938			
A4	2.160	2.938			
A5	2.160	1.922			
A6	2.160	0.820			
A7	2.160	-0.332			
A8	1.076	0.000			
A9	1.076	-0.332			
A10	0.000	0.000			
A11	1.076	1.152			
A12	1.076	0.820			
A13	0.000	0.820			
A14	1.076	2.254			
A15	1.076	1.922			
A16	0.000	2.254			
A17	2.160	2.370			
A18	0.000	3.270			
A19	2.160	3.270			
B1	2.020	2.776	.006	.035 .038 THRU & C'BORE .108 .112	.350
B2	2.020	2.548			
B3	-0.184	2.662			
C2	-0.184	3.974	.006	.035 .038	THRU
C3	-0.104	3.904			
C4	0.000	3.840			
C5	0.104	3.780			
C6	0.184	3.712			
C7	0.258	3.648			
C8	0.892	3.974			
C9	0.972	3.904			
C10	1.076	3.840			
C11	1.184	3.780			
C12	1.262	3.712			
C13	1.338	3.648			
C14	1.976	3.974			
C15	2.056	3.904			
C16	2.160	3.840			
C17	2.264	3.780			
C18	2.344	3.712			
C19	2.420	3.648			
C20	2.020	2.662			
C21	0.892	2.600			
C22	-0.184	2.776			
D1	0.892	3.380	.006	.035 .038 THRU & C'BORE .108 .112	.350
D2	0.892	3.214			
D3	-0.184	3.214			
D4	1.976	3.214			
D5	1.976	2.200			
D6	1.976	1.094			
D7	1.976	0.060			
D8	0.892	2.940			
D9	0.972	3.094			
D10	-0.104	3.094			
D11	2.056	3.104			
D12	2.056	2.084			
D13	2.056	0.978			
D14	0.972	2.084			
D15	-0.104	2.416			
D16	1.184	2.776			
D17	0.104	2.776			
D18	2.264	2.776			
D19	1.184	0.992			
D20	1.184	0.664			
D21	0.104	0.664			
D22	1.184	2.100			
D23	1.262	2.862			
D24	2.344	2.662			
D25	2.344	1.656			
D26	2.344	0.552			
D27	1.262	-0.608			
D28	0.184	-0.270			
D29	0.184	0.552			
D30	1.262	1.984			
D31	1.262	2.526			
D32	1.338	3.094			
D33	1.338	2.776			
D34	2.420	0.430			
D35	1.338	-0.390			
D36	0.258	-0.382			
D37	1.338	0.430			
D38	1.338	1.868			
D39	0.258	1.868			
D40	1.976	3.546			
D41	-0.184	3.546			
D42	2.056	3.436			
D43	-0.104	3.436			
D44	2.420	3.436			
D45	0.892	2.796			

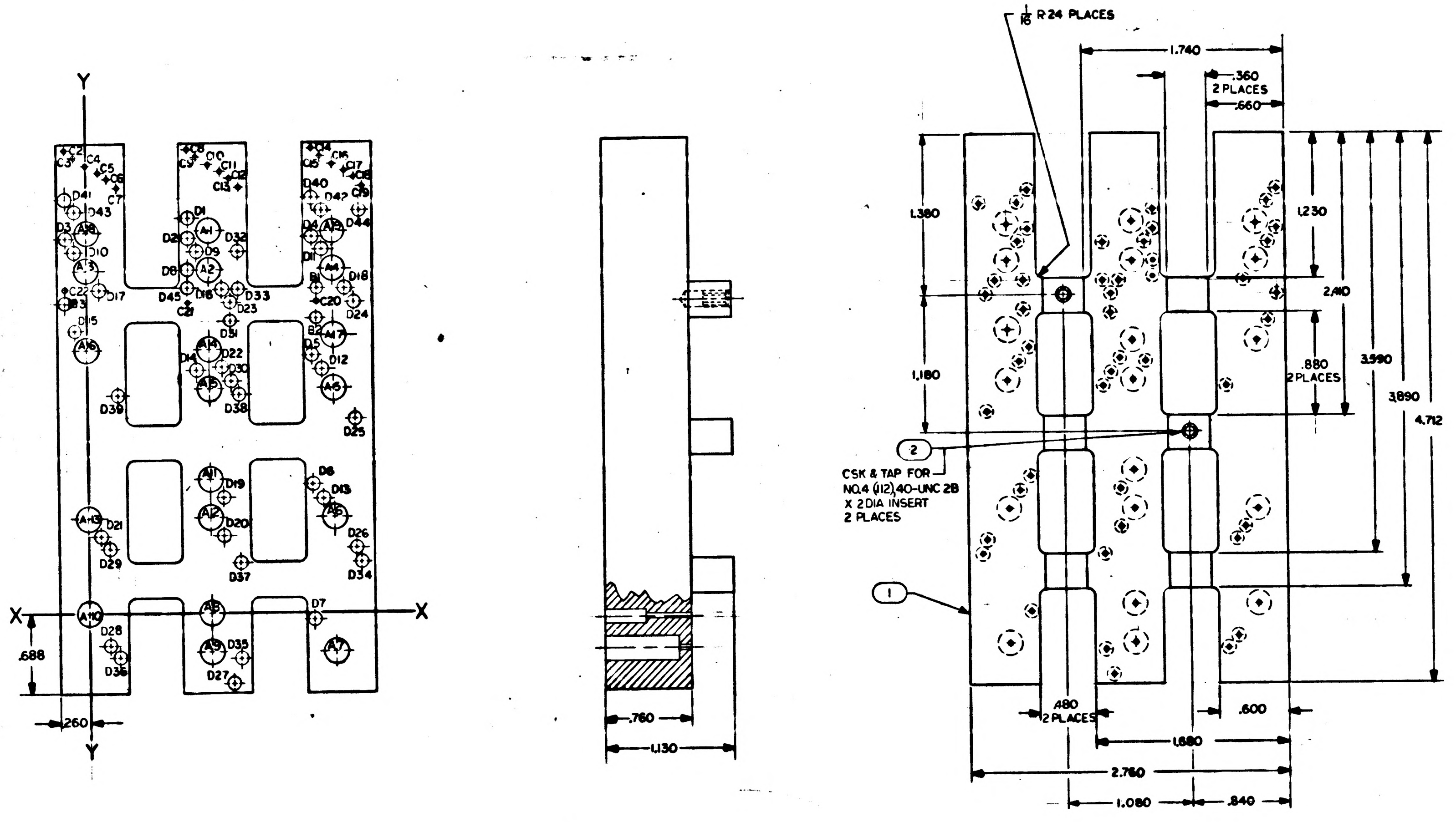

Y
X
X
Y
.688
.260
A1
A2
A3
A4
A5
A6
A7
A8
A9
A10
A11
A12
A13
A14
A15
A16
A17
A18
A19
D1
D2
D3
D4
D5
D6
D7
D8
D10
D12
D13
D14
D15
D17
D18
D19
D20
D21
D22
D23
D24
D25
D26
D27
D28
D29
D30
D31
D32
D33
D34
D35
D36
D37
D38
D39
D40
D41
D42
D43
D44
D45
C2
C3
C4
C5
C6
C7
C8
C9
C11
C12
C13
C14
C15
C16
C17
C20
C21
C22
.760
1.130
1/16 R 24 PLACES
1.740
.360
2 PLACES
.660
1.380
1.180
1.230
2.410
.880
2 PLACES
3.590
3.890
4.712
2
CSK & TAP FOR
NO.4 (.112),40-UNC 2B
X 2 DIA INSERT
2 PLACES
1
.480
2 PLACES
.600
1.680
2.760
1.080
.840

NOTES:
1. INTERPRET DRAWING IN ACCORDANCE WITH STANDARDS PRESCRIBED BY MIL-D-70327
2. MAT'L: PLASTIC, CLEAR ACRYLIC PER MIL-P-8184 FINISH B, ALT MIL-P-5425B FINISH B
3. TRUE POSITION AS SHOWN IN CHART
4. REMOVE ALL SHARP EDGES

QTY REQD	PART OR IDENTIFYING NO.	NOMENCLATURE OR DESCRIPTION	FIND NO.
2	MS21209-C0420	INSERT, SCREW THREAD LOCKING	2
1	1004156-1	BLOCK	1

LIST OF MATERIALS

NEXT ASSY	USED ON
1003097	

APPLICATION

UNLESS OTHERWISE SPECIFIED
DIMENSIONS ARE IN INCHES
TOLERANCES ON
FRACTIONS ± — DECIMALS ±.005 ANGLES ± —
DO NOT SCALE THIS DRAWING

MATERIAL
SEE NOTE 2

HEAT TREATMENT

FINAL FINISH

MIT
INSTRUMENTATION LAB
CAMBRIDGE, MASS
DWG NO. CONTRACT

DRAWN DATE
CHECKED 5-13-63
APPROVAL W B Turner 23 MAY 63
APPROVAL
NASA APPROVAL 5/22/63
MIT APPROVAL

MANNED SPACECRAFT CENTER
HOUSTON, TEXAS

BLOCK, COMPONENT KEYBOARD MODULE
AGC DSKY, NAV & MAIN

CODE IDENT NO. —
SIZE E
NASA DRAWING NO. 1004156
SCALE 2/1
WT
SHEET 1 OF 1

MASTER

INCHES
PHOTOGRAPHIC SCALE ONLY

1004156 E

NOTICE — WHEN GOVERNMENT DRAWINGS, SPECIFICATIONS, OR OTHER DATA ARE USED FOR ANY PURPOSE OTHER THAN IN CONNECTION WITH A DEFINITELY RELATED GOVERNMENT PROCUREMENT OPERATION, THE UNITED STATES GOVERNMENT THEREBY INCURS NO RESPONSIBILITY NOR ANY OBLIGATION WHATSOEVER; AND THE FACT THAT THE GOVERNMENT MAY HAVE FORMULATED, FURNISHED, OR IN ANY WAY SUPPLIED THE SAID DRAWINGS, SPECIFICATIONS, OR OTHER DATA IS NOT TO BE REGARDED BY IMPLICATION OR OTHERWISE AS IN ANY MANNER LICENSING THE HOLDER OR ANY OTHER PERSON OR CORPORATION, OR CONVEYING ANY RIGHTS OR PERMISSION TO MANUFACTURE, USE, OR SELL ANY PATENTED INVENTION THAT MAY IN ANY WAY BE RELATED THERETO.

REVISIONS			
SYM	DESCRIPTION	DATE	APPROVAL
A	REVISED PER TDRR 01157	6-4-63	
B	REVISED AND UPGRADED TO CLASS A PER TDRR 02557		
C	REVISED PER TDRR 03471	9-26-63	
D	REVISED PER TDRR 04327	28 OCT 63	
E	REVISED PER TDRR 04515	11-6-63	
F	REVISED PER TDRR 04769		

HOLE IDENT	X BASIC DIM.	Y BASIC DIM.	⌖ DIM	HOLE DIA	C'BORE DEPTH
A1	1.0[illegible]	3.270	.006	.035 .038 THRU & C'BORE .202 .206	.650
A2	1.0[illegible]6	2.938			
A3	0.0[illegible]0	2.938			
A4	2.[illegible]0	2.938			
A5	2.[illegible]0	1.922			
A6	2.[illegible]0	0.820			
A7	2.[illegible]6[illegible]	-0.332			
A8	1.[illegible]7[illegible]	0.000			
A9	1.[illegible]0	-0.332			
A10	0.0[illegible]	0.000			
A11	1.[illegible]	1.152			
A12	1.[illegible]	0.820			
A13	0.[illegible]	0.820			
A14	[illegible]	2.254			
A15	1.[illegible]	1.922			
A16	[illegible]	2.254			
A17	2[illegible]60	2.370			
A18	0[illegible]00	3.270			
A19	2[illegible]6[illegible]	3.270			
B1	[illegible]20	2.776	.006	.035 .038 THRU & C'BORE .108 .112	.350
B2	2[illegible]020	2.548			
B3	-0[illegible]184	2.662			
C2	-0.184	3.974	.006	.035 .038	THRU
C3	-0.104	3.904			
C4	0.000	3.840			
C5	0.104	3.780			
C6	0.184	3.712			
C7	0.258	3.648			
C8	0.892	3.974			
C9	0.972	3.904			
C10	1.076	3.840			
C11	1.184	3.780			
C12	1.262	3.712			
C13	1.338	3.648			
C14	1.976	3.974			
C15	2.056	3.904			
C16	2.160	3.840			
C17	2.264	3.780			
C18	2.344	3.712			
C19	2.420	3.648			
C20	2.020	2.662			
C21	0.892	2.600			
C22	-0.184	2.776			
D1	0.892	3.380	.006	.035 .038 THRU & C'BORE .108 .112	.350
D2	0.892	3.214			
D3	-0.184	3.214			
D4	1.976	3.214			
D5	1.976	2.200			
D6	1.976	1.094			
D7	1.976	0.060			
D8	0.892	2.940			
D9	0.972	3.094			
D10	-0.104	3.094			
D11	2.056	3.104			
D12	2.056	2.084			
D13	2.056	0.978			
D14	0.972	2.084			
D15	-0.104	2.416			
D16	1.184	2.776			
D17	0.104	2.776			
D18	2.264	2.776			
D19	1.184	0.992			
D20	1.184	0.664			
D21	0.104	0.664			
D22	1.184	2.100			
D23	1.262	2.862			
D24	2.344	2.662			
D25	2.344	1.686			
D26	2.344	0.552			
D27	1.262	-0.608			
D28	0.184	-0.270			
D29	0.184	0.552			
D30	1.262	1.984			
D31	1.262	2.526			
D32	1.338	3.094			
D33	1.338	2.776			
D34	2.420	0.430			
D35	1.338	-0.390			
D36	0.258	-0.382			
D37	1.338	0.430			
D38	1.338	1.888			
D39	0.258	1.888			
D40	1.976	3.546			
D41	-0.184	3.546			
D42	2.056	3.436			
D43	-0.104	3.436			
D44	2.420	3.436			
D45	0.892	2.796			
A20	1.076	2.598	.006	.035 .038 THRU & C'BORE .202 .206	.650

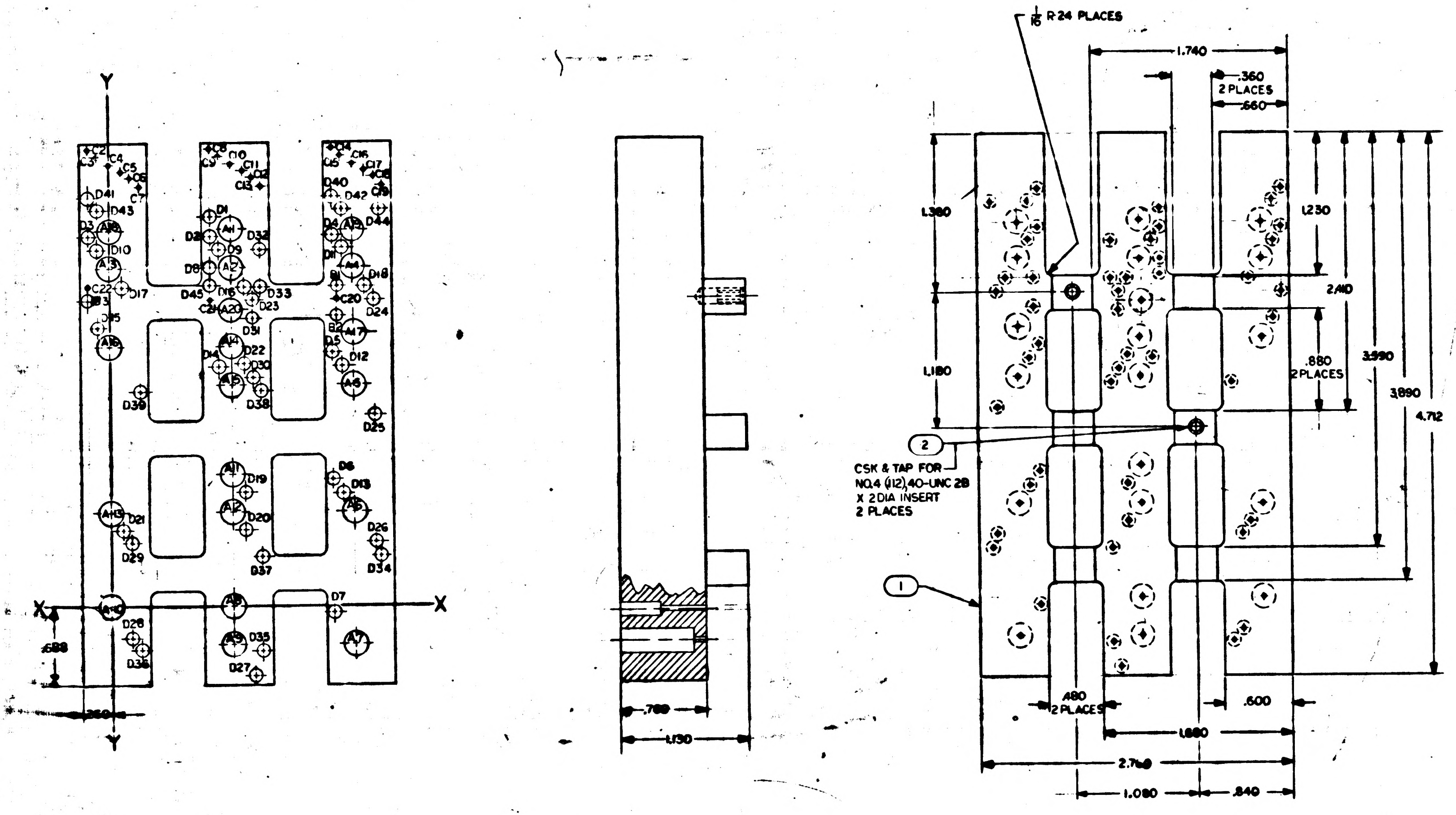

NOTES:
1. INTERPRET DRAWING IN ACCORDANCE WITH STANDARDS PRESCRIBED BY MIL-D-70327
2. MAT'L: PLASTIC, CLEAR ACRYLIC PER MIL-P-8184 FINISH B, ALT MIL-P-5425B FINISH B
3. TRUE POSITION AS SHOWN IN CHART
4. REMOVE ALL SHARP EDGES

QTY REQD	PART OR IDENTIFYING NO.	NOMENCLATURE OR DESCRIPTION	FIND NO.
2	MS21209-C0420	INSERT, SCREW THREAD LOCKING	2
1	1004156-1	BLOCK	1

LIST OF MATERIALS

NEXT ASSY	USED ON
1003097	

APPLICATION

UNLESS OTHERWISE SPECIFIED
DIMENSIONS ARE IN INCHES
TOLERANCES ON
FRACTIONS ± — DECIMALS ±.005 ANGLES ± —
DO NOT SCALE THIS DRAWING
MATERIAL
SEE NOTE 2
HEAT TREATMENT
FINAL FINISH

MIT
INSTRUMENTATION LAB
CAMBRIDGE, MASS.
DWG. NO. CONTRACT
DRAWN Tom Kelleher DATE 10 MAY 63
CHECKED 5-13-63
APPROVAL 22 MAY 63
APPROVAL
NASA APPROVAL 5/23/63
MIT APPROVAL 5/22/63

MANNED SPACECRAFT CENTER
HOUSTON, TEXAS

BLOCK, COMPONENT
KEYBOARD MODULE
AGC DSKY, NAV & MAIN

CODE IDENT NO. — SIZE E NASA DRAWING NO. 1004156
SCALE 2/1 WT SHEET 1 OF 1

MASTER

INCHES
PHOTOGRAPHIC SCALE ONLY

NOTICE — WHEN GOVERNMENT DRAWINGS, SPECIFICATIONS, OR OTHER DATA ARE USED FOR ANY PURPOSE OTHER THAN IN CONNECTION WITH A DEFINITELY RELATED GOVERNMENT PROCUREMENT OPERATION, THE UNITED STATES GOVERNMENT THEREBY INCURS NO RESPONSIBILITY NOR ANY OBLIGATION WHATSOEVER; AND THE FACT THAT THE GOVERNMENT MAY HAVE FORMULATED, FURNISHED, OR IN ANY WAY SUPPLIED THE SAID DRAWINGS, SPECIFICATIONS, OR OTHER DATA IS NOT TO BE REGARDED BY IMPLICATION OR OTHERWISE AS IN ANY MANNER LICENSING THE HOLDER OR ANY OTHER PERSON OR CORPORATION, OR CONVEYING ANY RIGHTS OR PERMISSION TO MANUFACTURE, USE, OR SELL ANY PATENTED INVENTION THAT MAY IN ANY WAY BE RELATED THERETO.

HOLE IDENT	X BASIC DIM.	Y BASIC DIM.	⊕ DIM	HOLE DIA	C'BORE DEPTH
A1	1.076	3.270	.006	.035 .038 THRU & C'BORE .202 .206	.650
A2	1.076	2.938			
A3	0.000	2.938			
A4	2.160	2.938			
A5	2.160	1.922			
A6	2.160	0.820			
A7	2.160	-0.332			
A8	1.076	0.000			
A9	1.076	-0.332			
A10	0.000	0.000			
A11	1.076	1.152			
A12	1.076	0.820			
A13	0.000	0.820			
A14	1.076	2.254			
A15	.076	1.922			
A16	.000	2.254			
A17	2.160	2.370			
A18	0.000	3.270			
A19	2.160	3.270			
B1	2.020	2.776	.006	.035 .038 THRU & C'BORE .108 .112	.350
B2	2.020	2.548			
B3	-0.184	2.662			
C2	-0.184	3.974	.006	.035 .038	THRU
C3	-0.104	3.904			
C4	0.000	3.840			
C5	0.104	3.780			
C6	0.184	3.712			
C7	0.258	3.648			
C8	0.892	3.974			
C9	0.972	3.904			
C10	1.076	3.840			
C11	1.184	3.780			
C12	1.262	3.712			
C13	1.338	3.648			
C14	1.976	3.974			
C15	2.056	3.904			
C16	2.160	3.840			
C17	2.264	3.780			
C18	2.344	3.712			
C19	2.420	3.648			
C20	2.020	2.662			
C21	0.892	2.600			
C22	-0.184	2.776			
D1	0.892	3.380	.006	.035 .038 THRU & C'BORE .108 .112	.350
D2	0.892	3.214			
D3	-0.184	3.214			
D4	1.976	3.214			
D5	1.976	2.200			
D6	1.976	1.094			
D7	1.976	-.060			
D8	0.892	2.940			
D9	0.972	3.094			
D10	-0.104	3.094			
D11	2.056	3.104			
D12	2.056	2.084			
D13	2.056	0.978			
D14	0.972	2.084			
D15	-0.104	2.416			
D16	1.184	2.776			
D17	0.104	2.776			
D18	2.264	2.776			
D19	1.184	0.992			
D20	1.184	0.664			
D21	0.104	0.664			
D22	1.184	2.100			
D23	1.262	2.862			
D24	2.344	2.682			
D25	2.344	1.696			
D26	2.344	0.552			
D27	1.262	-0.608			
D28	0.184	-0.270			
D29	0.184	0.552			
D30	1.262	1.984			
D31	1.262	2.526			
D32	1.338	3.094			
D33	1.338	2.776			
D34	2.420	0.430			
D35	1.338	-0.390			
D36	0.258	-0.382			
D37	1.338	0.430			
D38	1.338	1.868			
D39	0.258	1.868			
D40	1.976	3.546			
D41	-0.184	3.546			
D42	2.056	3.436			
D43	-0.104	3.436			
D44	2.420	3.436			
D45	0.892	2.796			
A20	1.076	2.598	.006	.035 .038 THRU & C BORE .202 .206	.650

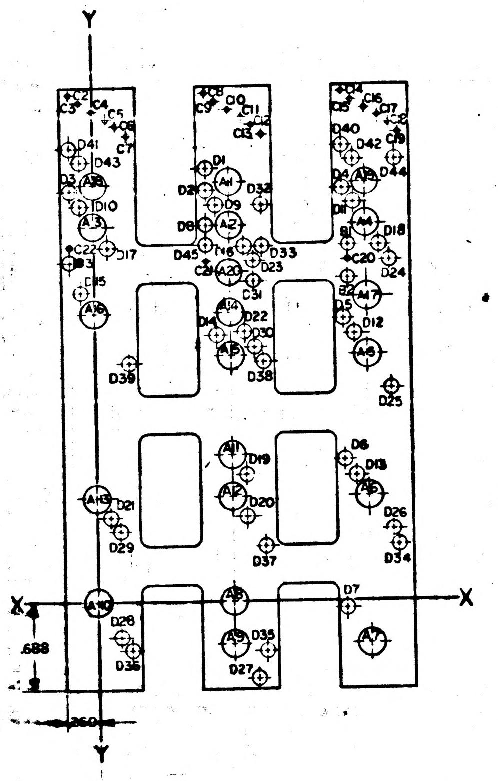

Y
X
X
Y
.688
.260
C2 C3 C4 C5 C6 C7 C8 C9 C10 C11 C12 C13 C14 C15 C16 C17 C18 C19 C20 C21 C22
D1 D2 D3 D5 D6 D7 D8 D9 D10 D11 D12 D13 D14 D15 D16 D17 D18 D19 D20 D21 D22 D23 D24 D25 D26 D27 D28 D29 D31 D32 D33 D34 D35 D36 D37 D38 D39 D40 D41 D42 D43 D44 D45
A1 A2 A3 A4 A7 A8 A9 A10 A11 A13 A14 A15 A17 A20

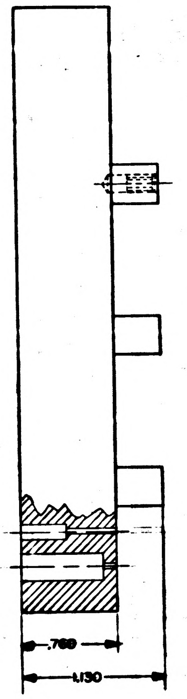

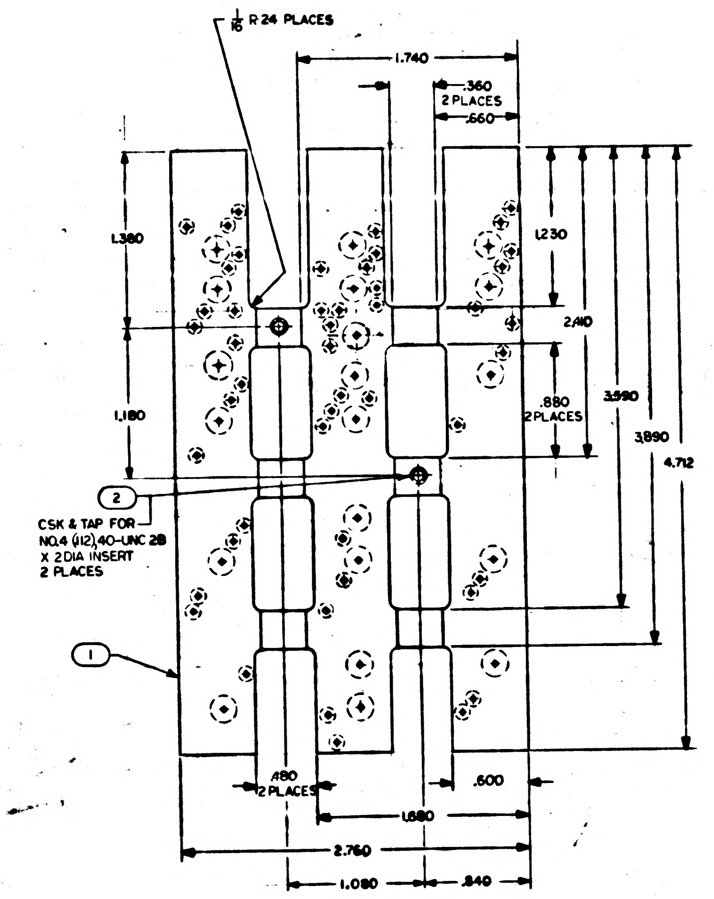

1/16 R 24 PLACES
1.740
.360
2 PLACES
.660
1.380
1.180
1.230
2.410
.880
2 PLACES
3.590
3.890
4.712
2
CSK & TAP FOR NO.4 (.112) 40-UNC 2B X 2 DIA INSERT 2 PLACES
1
.480
2 PLACES
.600
1.680
2.760
1.080
.840

REVISIONS			
SYM	DESCRIPTION	DATE	APPROVAL
A	REVISED PER TDRR 01457	6-4-63	
B	REVISED AND UPGRADED TO CLASS A PER TDRR 02557		WBT
C	REVISED PER TDRR 03471	7-26-63	
D	REVISED PER TDRR 04327	23 OCT 63	
E	REVISED PER TDRR 04515	11-6-63	
F	REVISED PER TDRR 04769		
G	REVISED PER TDRR 05638	1-7-64	J.T.B.
H	INACTIVATE PER TDRR 05563	1-7-64	J.T.B.

INACTIVE, SUPERSEDED BY 1004596

NOTES:
1. INTERPRET DRAWING IN ACCORDANCE WITH STANDARDS PRESCRIBED BY MIL-D-70327
2. MAT'L: PLASTIC, CLEAR ACRYLIC PER MIL-P-8184 FINISH B, ALT MIL-P-5425B FINISH B
3. TRUE POSITION AS SHOWN IN CHART
4. REMOVE ALL SHARP EDGES

QTY REQD	PART OR IDENTIFYING NO.	NOMENCLATURE OR DESCRIPTION	FIND NO
2	MS21209-C0420	INSERT, SCREW THREAD LOCKING	2
1	1004156-1	BLOCK	1

LIST OF MATERIALS

NEXT ASSY	USED ON
1003097	

APPLICATION

UNLESS OTHERWISE SPECIFIED
DIMENSIONS ARE IN INCHES
TOLERANCES ON
FRACTIONS ± — DECIMALS ±.005 ANGLES ± —
DO NOT SCALE THIS DRAWING
MATERIAL SEE NOTE 2
HEAT TREATMENT
FINAL FINISH

MIT
INSTRUMENTATION LAB
CAMBRIDGE, MASS.
DWG NO.
CONTRACT
DRAWN DATE
CHECKED 5-13-63
APPROVAL W.B. Turner 22 MAY 63
APPROVAL
NASA APPROVAL 5/22/63
MIT APPROVAL

MANNED SPACECRAFT CENTER
HOUSTON, TEXAS

BLOCK, COMPONENT
KEYBOARD MODULE
AGC DSKY, NAV & MAIN

CODE IDENT NO. —
SIZE E
NASA DRAWING NO. 1004156
SCALE 2/1
WT
SHEET 1 OF 1

MASTER

NOTICE — WHEN GOVERNMENT DRAWINGS, SPECIFICATIONS, OR OTHER DATA ARE USED FOR ANY PURPOSE OTHER THAN IN CONNECTION WITH A DEFINITELY RELATED GOVERNMENT PROCUREMENT OPERATION, THE UNITED STATES GOVERNMENT THEREBY INCURS NO RESPONSIBILITY NOR ANY OBLIGATION WHATSOEVER; AND THE FACT THAT THE GOVERNMENT MAY HAVE FORMULATED, FURNISHED, OR IN ANY WAY SUPPLIED THE SAID DRAWINGS, SPECIFICATIONS, OR OTHER DATA IS NOT TO BE REGARDED BY IMPLICATION OR OTHERWISE AS IN ANY MANNER LICENSING THE HOLDER OR ANY OTHER PERSON OR CORPORATION, OR CONVEYING ANY RIGHTS OR PERMISSION TO MANUFACTURE, USE, OR SELL ANY PATENTED INVENTION THAT MAY IN ANY WAY BE RELATED THERETO.

REVISIONS			
SYM	DESCRIPTION	DATE	APPROVAL

HOLE IDENT	X BASIC DIM.	Y BASIC DIM.	⊕ DIM	HOLE DIA	DEPTH
A	1.076	3.270	.006	.202 .206	.696
A2	1.076	2.938			
A3	0. 00	2.938			
A4	2.160	2.938			
A5	2.160	1.922			
A6	2.160	0.820			
A7	2.160	-0.332			
A8	1.076	0.000			
A9	1.076	-0.332			
A10	0.000	0.000			
A	1.076	1.152			
A12	1.076	0.820			
A13	0.000	0.820			
A14	1.076	2.254			
A15	1.076	1.922			
A16	0.000	2.254			
B1	2.020	2.776	.006	.108 .112	.560
C1	-0.184	2.532			.500
C2	-0.184	3.974	.006	.021 .025	THRU
C3	-0.104	3.904			
C4	0.000	3.840			
C5	0.104	3.780			
C6	0.184	3.712			
C7	0.258	3.648			
C8	0.892	3.974			
C9	0.972	3.904			
C10	1.076	3.840			
C11	1.184	3.780			
C12	1.262	3.712			
C13	1.338	3.648			
C14	1.976	3.974			
C15	2.056	3.904			
C16	2.160	3.840			
C17	2.264	3.780			
C18	2.344	3.712			
C19	2.420	3.648			
C20	2.020	2.662			
D1	0.892	3.380	.006	.108 .112	.560
D2	0.892	3.214			
D3	-0.184	3.214			
D4	1.976	3.214			
D5	1.976	2.200			
D6	1.976	1.094			
D7	1.976	0.060			
D8	0.892	3.546			
D9	0.972	3.094			
D10	-0.104	3.094			
D11	2.056	3.104			
D12	2.056	2.084			
D13	2.056	0.978			
D14	0.972	2.084			
D15	-0.104	2.416			
D16	1.184	2.776			
D17	0.104	2.776			
D18	2.264	2.776			
D19	1.184	0.992			
D20	1.184	0.664			
D21	0.104	0.664			
D22	1.184	2.100			
D23	1.262	2.662			
D24	2.344	2.662			
D25	2.344	1.656			
D26	2.344	0.552			
D27	1.262	-0.608			
D28	0.184	-0.270			
D29	0.184	0.552			
D30	1.262	1.984			
D31	1.262	3.546			
D32	1.338	3.094			
D33	1.338	2.776			
D34	2.420	0.430			
D35	1.338	-0.390			
D36	0.258	-0.382			
D37	1.338	0.430			
D38	1.338	1.868			
D39	0.258	1.868			
D40	1.976	3.546			
D41	-0.184	3.546			
D42	2.056	3.436			
D43	-0.104	3.436			
D44	2.420	3.436			

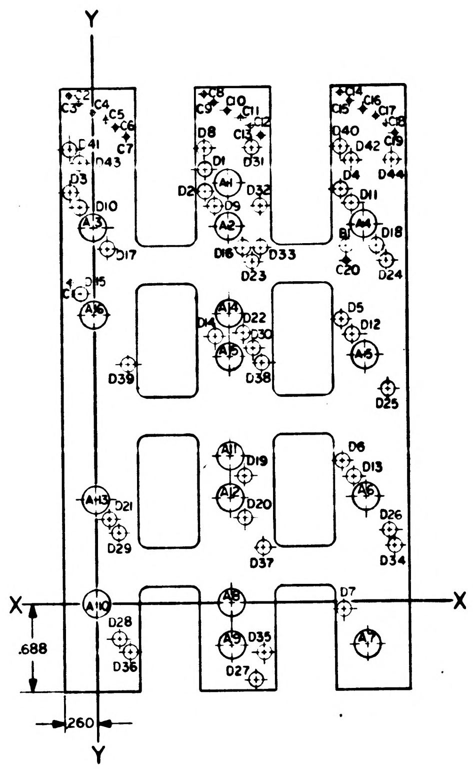

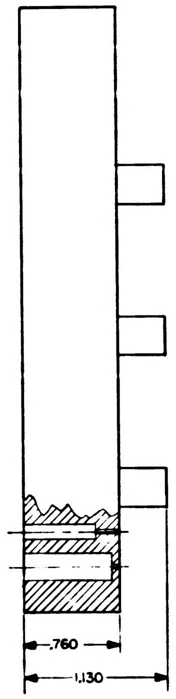

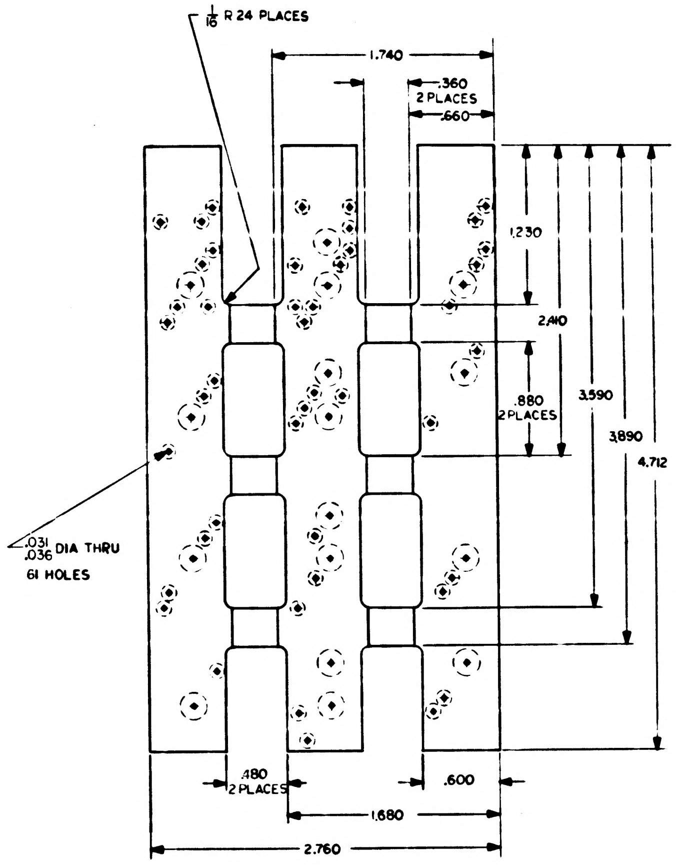

FOR INFORMATION ONLY

CLASS B RELEASE TDR No. 01298 DATE 5-22-63

NOTES:

1. INTERPRET DRAWING IN ACCORDANCE WITH STANDARDS PRESCRIBED BY MIL-D-70327
2. MAT'L: PLASTIC, CLEAR ACRYLIC PER MIL-P-8184 FINISH B
3. TRUE POSITION AS SHOWN IN CHART
4. REMOVE ALL SHARP EDGES

QTY REQD	PART OR IDENTIFYING NO.	NOMENCLATURE OR DESCRIPTION	FIND NO
LIST OF MATERIALS			

NEXT ASSY	USED ON
APPLICATION	

UNLESS OTHERWISE SPECIFIED
DIMENSIONS ARE IN INCHES
TOLERANCES ON
FRACTIONS ± — DECIMALS ±.005 ANGLES ± —
DO NOT SCALE THIS DRAWING
MATERIAL SEE NOTE 2
HEAT TREATMENT
FINAL FINISH

MIT
INSTRUMENTATION LAB
CAMBRIDGE MASS
DWG NO CONTRACT
DRAWN Tom Allison DATE 1 MAY 63
CHECKED 5-13-63
APPROVAL WB Turner 22 MAY 63
APPROVAL
NASA APPROVAL 5/22/63
MIT APPROVAL 5/22/63

MANNED SPACECRAFT CENTER
HOUSTON, TEXAS

BLOCK, COMPONENT
KEYBOARD MODULE
AGC KEYBOARD

CODE IDENT NO | SIZE E | NASA DRAWING NO 1004156
SCALE 2/1 | WT | SHEET 1 OF 1

1004156

INCHES
PHOTOGRAPHIC SCALE ONLY

NOTICE — WHEN GOVERNMENT DRAWINGS, SPECIFICATIONS, OR OTHER DATA ARE USED FOR ANY PURPOSE OTHER THAN IN CONNECTION WITH A DEFINITELY RELATED GOVERNMENT PROCUREMENT OPERATION, THE UNITED STATES GOVERNMENT THEREBY INCURS NO RESPONSIBILITY NOR ANY OBLIGATION WHATSOEVER; AND THE FACT THAT THE GOVERNMENT MAY HAVE FORMULATED, FURNISHED, OR IN ANY WAY SUPPLIED THE SAID DRAWINGS, SPECIFICATIONS OR OTHER DATA IS NOT TO BE REGARDED BY IMPLICATION OR OTHERWISE AS IN ANY MANNER LICENSING THE HOLDER OR ANY OTHER PERSON OR CORPORATION, OR CONVEYING ANY RIGHTS OR PERMISSION TO MANUFACTURE, USE, OR SELL ANY PATENTED INVENTION THAT MAY IN ANY WAY BE RELATED THERETO.

1004157

REVISIONS			
SYM	DESCRIPTION	DATE	APPROVAL

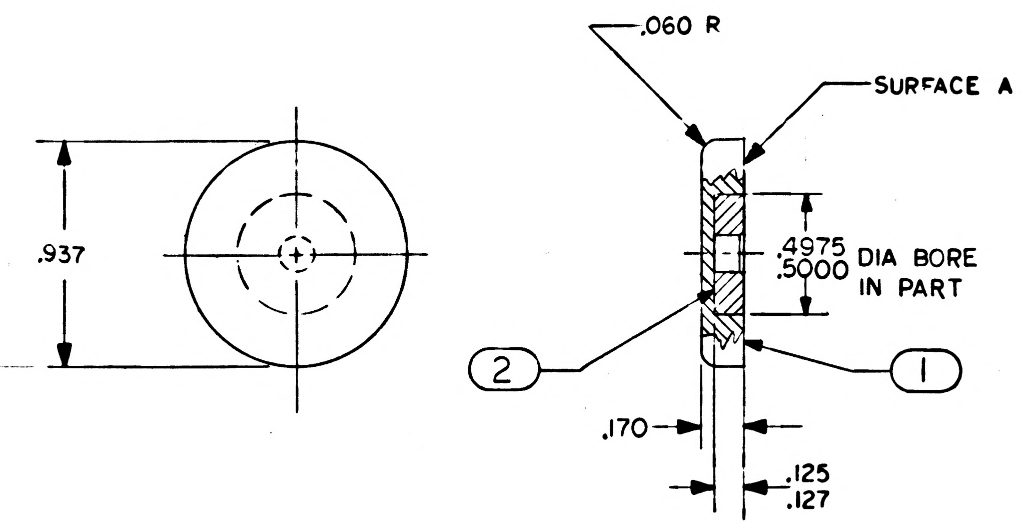

FOR INFORMATION ONLY

CLASS B RELEASE TDR No. 01298 **DATE** 5-22-63

NOTES:

1. INTERPRET DRAWING IN ACCORDANCE WITH MIL-D-70327
2. MAT'L: NYLON PER MIL-P-17091
3. REMOVE SHARP EDGES
4. MASK SURFACE A
5. PAINT LIGHT GRAY PER FED-STD-595-26440

QTY REQD	PART OR IDENTIFYING NO.	NOMENCLATURE OR DESCRIPTION	FIND NO.
1	1004159	INSERT, BUTTON	2
1	———	BUTTON, ROUND	1

LIST OF MATERIALS

NEXT ASSY	USED ON
APPLICATION	

UNLESS OTHERWISE SPECIFIED DIMENSIONS ARE IN INCHES
TOLERANCES ON
FRACTIONS ±1/64 DECIMALS ±.005 ANGLES ±
DO NOT SCALE THIS DRAWING
MATERIAL SEE NOTE 2
HEAT TREATMENT
FINAL FINISH

MIT INSTRUMENTATION LAB
CAMBRIDGE, MASS.
DWG. NO. CONTRACT

DRAWN R. Roney DATE 5-15-63
CHECKED 5-15-63
APPROVAL W B Gurnsen 22 MAY 63
APPROVAL
NASA APPROVAL W. S. 5/22/63
MIT APPROVAL 5/22/63

MANNED SPACECRAFT CENTER
HOUSTON, TEXAS

BUTTON, ROUND
AGC KEYBOARD

CODE IDENT NO.
SIZE C
NASA DRAWING NO. 1004157
SCALE 2/1
WT
SHEET 1 OF 1

MASTER

INCHES
0 1 2
PHOTOGRAPHIC SCALE ONLY

1004157

NOTICE — WHEN GOVERNMENT DRAWINGS, SPECIFICATIONS, OR OTHER DATA ARE USED FOR ANY PURPOSE OTHER THAN IN CONNECTION WITH A DEFINITELY RELATED GOVERNMENT PROCUREMENT OPERATION, THE UNITED STATES GOVERNMENT THEREBY INCURS NO RESPONSIBILITY NOR ANY OBLIGATION WHATSOEVER; AND THE FACT THAT THE GOVERNMENT MAY HAVE FORMULATED, FURNISHED, OR IN ANY WAY SUPPLIED THE SAID DRAWINGS, SPECIFICATIONS OR OTHER DATA IS NOT TO BE REGARDED BY IMPLICATION OR OTHERWISE AS IN ANY MANNER LICENSING THE HOLDER OR ANY OTHER PERSON OR CORPORATION, OR CONVEYING ANY RIGHTS OR PERMISSION TO MANUFACTURE, USE, OR SELL ANY PATENTED INVENTION THAT MAY IN ANY WAY BE RELATED THERETO.

1004159	A

M

REVISIONS			
SYM	DESCRIPTION	DATE	APPROVAL
A	CHANGED PER TDRR 03121	9-12-63	EPK WK

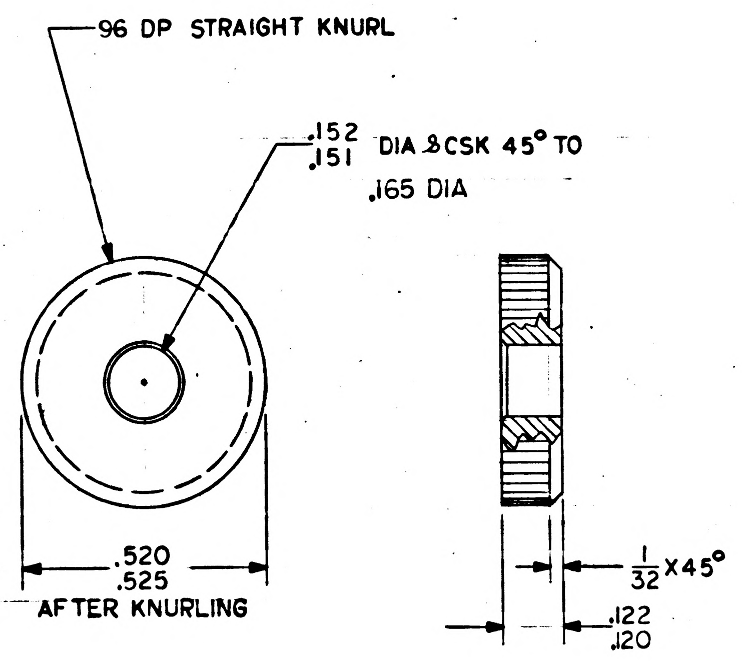

FOR INFORMATION ONLY

CLASS B RELEASE TDR No. 01248 **DATE** 5-22-63

NOTES
1. INTERPRET DRAWING IN ACCORDANCE WITH STANDARDS PRESCRIBED BY MIL-D-70327
2. MAT'L 5052-H32 AL PER QQ-A-318 TEMPER H32
3. REMOVE BURRS AND SHARP EDGES
4. ANODIZE PER MIL-A-8625 TYPE II, DYED BLACK

MASTER

QTY REQD	PART OR IDENTIFYING NO.	NOMENCLATURE OR DESCRIPTION	FIND NO.

LIST OF MATERIALS

1004127	
1004157	
NEXT ASSY	USED ON
APPLICATION	

UNLESS OTHERWISE SPECIFIED
DIMENSIONS ARE IN INCHES
TOLERANCES ON
FRACTIONS ±1/64 DECIMALS ±005 ANGLES ±1/2°
DO NOT SCALE THIS DRAWING
MATERIAL SEE NOTE 2
HEAT TREATMENT
FINAL FINISH

MIT
INSTRUMENTATION LAB
CAMBRIDGE, MASS.
DWG. NO. CONTRACT
DRAWN R. Roney DATE 5-15-63
CHECKED 5-16-63
APPROVAL W B Turner 22 MAY 63
APPROVAL
NASA APPROVAL W S Swingle 5/22/63
MIT APPROVAL 5/22/63

MANNED SPACECRAFT CENTER
HOUSTON, TEXAS

INSERT, BUTTON
AGC KEYBOARD

CODE IDENT NO. —
SIZE C
NASA DRAWING NO. 1004159
SCALE 4/1
WT
SHEET 1 OF 1

INCHES
0 1 2
PHOTOGRAPHIC SCALE ONLY

NOTICE — WHEN GOVERNMENT DRAWINGS, SPECIFICATIONS, OR OTHER DATA ARE USED FOR ANY PURPOSE OTHER THAN IN CONNECTION WITH A DEFINITELY RELATED GOVERNMENT PROCUREMENT OPERATION, THE UNITED STATES GOVERNMENT THEREBY INCURS NO RESPONSIBILITY NOR ANY OBLIGATION WHATSOEVER; AND THE FACT THAT THE GOVERNMENT MAY HAVE FORMULATED, FURNISHED, OR IN ANY WAY SUPPLIED THE SAID DRAWINGS, SPECIFICATIONS OR OTHER DATA IS NOT TO BE REGARDED BY IMPLICATION OR OTHERWISE AS IN ANY MANNER LICENSING THE HOLDER OR ANY OTHER PERSON OR CORPORATION, OR CONVEYING ANY RIGHTS OR PERMISSION TO MANUFACTURE, USE, OR SELL ANY PATENTED INVENTION THAT MAY IN ANY WAY BE RELATED THERETO.

B 1004159

REVISIONS			
SYM	DESCRIPTION	DATE	APPROVAL
A	CHANGED PER TDRR 03121	9-12-63	EPK WK
B	CHANGED PER TDRR 04176	10-24-63	EPK WH

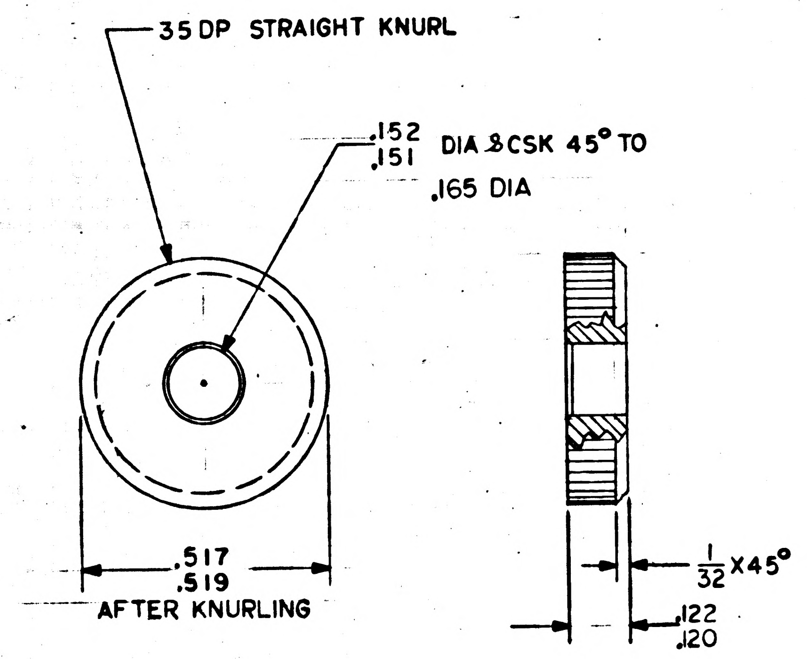

NOTES

1. INTERPRET DRAWING IN ACCORDANCE WITH STANDARDS PRESCRIBED BY MIL-D-70327
2. MAT'L 5052-H32 AL PER QQ-A-318 TEMPER H32
3. REMOVE BURRS AND SHARP EDGES
4. ANODIZE PER MIL-A-8625 TYPE II, DYED BLACK

MASTER

QTY REQD	PART OR IDENTIFYING NO.	NOMENCLATURE OR DESCRIPTION	FIND NO.

LIST OF MATERIALS

NEXT ASSY	USED ON
1004127	
1004157	

APPLICATION

UNLESS OTHERWISE SPECIFIED DIMENSIONS ARE IN INCHES
TOLERANCES ON
FRACTIONS ±1/64 DECIMALS ±.005 ANGLES ±1/2°
DO NOT SCALE THIS DRAWING
MATERIAL SEE NOTE 2
HEAT TREATMENT
FINAL FINISH

MIT
INSTRUMENTATION LAB
CAMBRIDGE, MASS.
DWG. NO. CONTRACT
DRAWN R. Roney DATE 5-15-63
CHECKED 5-16-63
APPROVAL W B Turner 22 MAY 63
APPROVAL
NASA APPROVAL W S Swin Jr 5/22/63
MIT APPROVAL E Valzel 5/22/63

MANNED SPACECRAFT CENTER
HOUSTON, TEXAS

INSERT, BUTTON
DSKY NAV & MAIN

CODE IDENT NO. —
SIZE C
NASA DRAWING NO. 1004159
SCALE 4/1
WT
SHEET 1 OF 1

INCHES
0 1 2
PHOTOGRAPHIC SCALE ONLY

NOTICE — WHEN GOVERNMENT DRAWINGS, SPECIFICATIONS, OR OTHER DATA ARE USED FOR ANY PURPOSE OTHER THAN IN CONNECTION WITH A DEFINITELY RELATED GOVERNMENT PROCUREMENT OPERATION, THE UNITED STATES GOVERNMENT THEREBY INCURS NO RESPONSIBILITY NOR ANY OBLIGATION WHATSOEVER; AND THE FACT THAT THE GOVERNMENT MAY HAVE FORMULATED, FURNISHED, OR IN ANY WAY SUPPLIED THE SAID DRAWINGS, SPECIFICATIONS OR OTHER DATA IS NOT TO BE REGARDED BY IMPLICATION OR OTHERWISE AS IN ANY MANNER LICENSING THE HOLDER OR ANY OTHER PERSON OR CORPORATION, OR CONVEYING ANY RIGHTS OR PERMISSION TO MANUFACTURE, USE, OR SELL ANY PATENTED INVENTION THAT MAY IN ANY WAY BE RELATED THERETO.

1004159

REVISIONS			
SYM	DESCRIPTION	DATE	APPROVAL

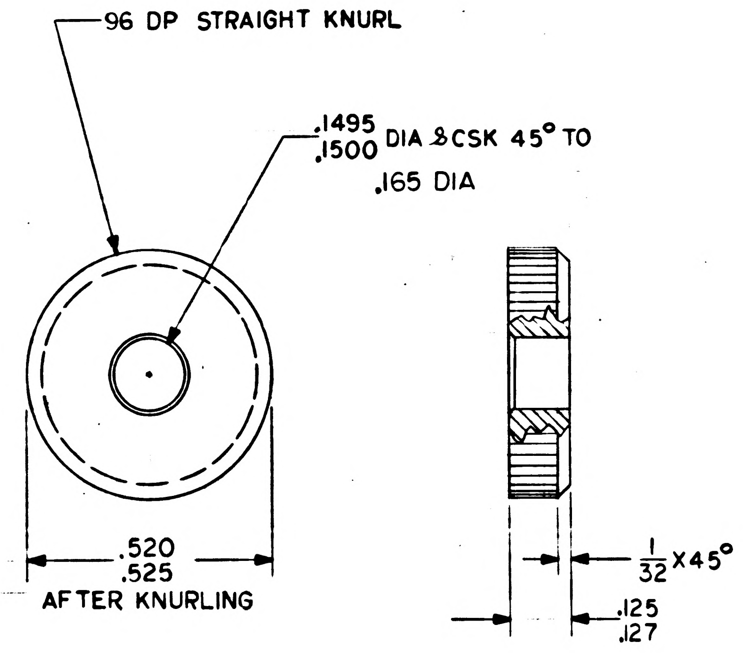

FOR INFORMATION ONLY

CLASS B RELEASE TDR No. 01298 **DATE** 5-22-63

NOTES
1. INTERPRET DRAWING IN ACCORDANCE WITH STANDARDS PRESCRIBED BY MIL-D-70327
2. MATL 5052-H32 AL PER QQ-A-318 TEMPER H32
3. REMOVE BURRS AND SHARP EDGES
4. ANODIZE PER MIL-A-8625 TYPE II, DYED BLACK

QTY REQD	PART OR IDENTIFYING NO.	NOMENCLATURE OR DESCRIPTION	FIND NO.

LIST OF MATERIALS

MASTER

NEXT ASSY	USED ON
APPLICATION	

UNLESS OTHERWISE SPECIFIED
DIMENSIONS ARE IN INCHES
TOLERANCES ON
FRACTIONS ±1/64 DECIMALS ±005 ANGLES ±1/2°
DO NOT SCALE THIS DRAWING
MATERIAL
SEE NOTE 2
HEAT TREATMENT
FINAL FINISH

MIT
INSTRUMENTATION LAB
CAMBRIDGE, MASS.
DWG. NO. CONTRACT
DRAWN DATE 5-15-63
CHECKED 5-16-63
APPROVAL W B Turner 22 MAY 63
APPROVAL
NASA APPROVAL 5/22/63
MIT APPROVAL 5/22/63

MANNED SPACECRAFT CENTER
HOUSTON, TEXAS

INSERT, BUTTON
AGC KEYBOARD

CODE IDENT NO.
SIZE C
NASA DRAWING NO. 1004159
SCALE 4/1
WT
SHEET 1 OF 1

INCHES
0 1 2
PHOTOGRAPHIC SCALE ONLY

1004163 A

SYM	DESCRIPTION	DATE	APPROVAL
—	CLASS A RELEASE PER TDRR 02918	4-6-63	
A	REVISED PER TDRR 04763	11-19-63	

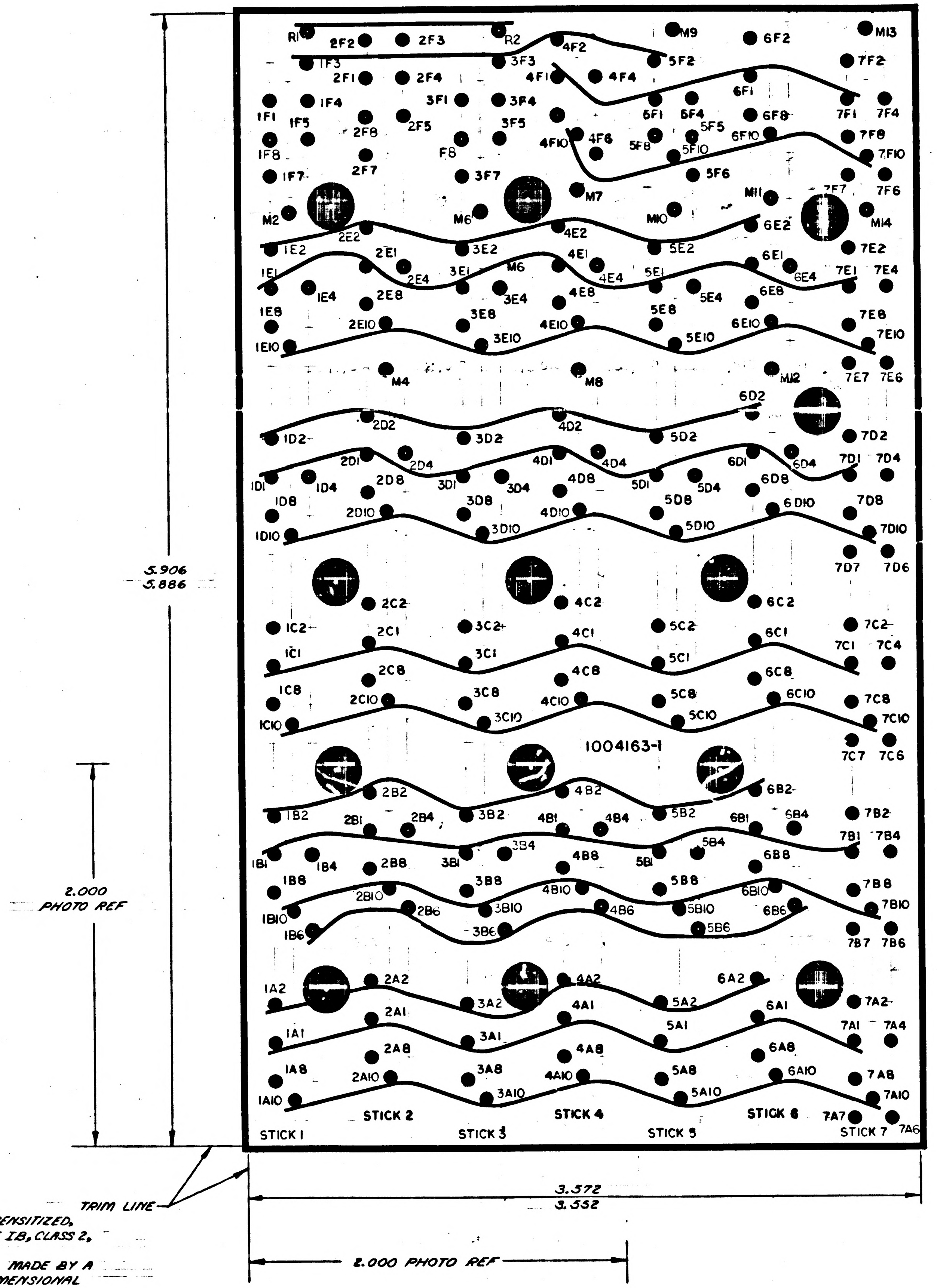

NOTES

1. MATL: .006/.008 THICK PLASTIC SHEET, SENSITIZED, DIMENSIONALLY STABLE PER L-F-340 TYPE IB, CLASS 2, STYLE IA
2. THIS DRAWING OR REPRODUCTION MADE BY A PROCESS OR METHOD SHALL INSURE DIMENSIONAL STABILITY. DIMENSIONAL STABILITY SHALL NOT EXCEED .001 INCH PER FOOT
3. MAKE PHOTOGRAPHIC MASTER NEGATIVE AND POSITIVE FILMS TO DIMENSIONS SHOWN
4. CUT TO WITHIN .010 OF TRIM LINE
5. ● DENOTES .080/.084 DIA HOLE ALL OTHERS .240/.260 DIA
6. INTERPRET DRAWING IN ACCORDANCE WITH STANDARDS PRESCRIBED BY MIL-D-70327

MASTER

QTY REQD	PART OR IDENTIFYING NO.	NOMENCLATURE OR DESCRIPTION	FIND NO.

LIST OF MATERIALS

NEXT ASSY	USED ON
1003098	

APPLICATION

UNLESS OTHERWISE SPECIFIED DIMENSIONS ARE IN INCHES
TOLERANCES ON
FRACTIONS ± DECIMALS ± ANGLES ±
DO NOT SCALE THIS DRAWING
MATERIAL
HEAT TREATMENT
FINAL FINISH

MIT
INSTRUMENTATION LAB
CAMBRIDGE, MASS
DWG. NO. CONTRACT
DRAWN J.A. Jeffline DATE 22 NOV 63
CHECKED
APPROVAL
APPROVAL
NASA APPROVAL
MIT APPROVAL
MIT APPROVAL

MANNED SPACECRAFT CENTER
HOUSTON, TEXAS

INSULATOR PHOTOMASTER
RELAY MODULE
AGC DSKY, NAV & MAIN

CODE IDENT NO. —
SIZE E
NASA DRAWING NO. 1004163 -
SCALE 4/1
WT —
SHEET 1 OF 2

INCHES
0 1 2
PHOTOGRAPHIC SCALE ONLY

NOTICE — WHEN GOVERNMENT DRAWINGS, SPECIFICATIONS, OR OTHER DATA ARE USED FOR ANY PURPOSE OTHER THAN IN CONNECTION WITH A DEFINITELY RELATED GOVERNMENT PROCUREMENT OPERATION, THE UNITED STATES GOVERNMENT THEREBY INCURS NO RESPONSIBILITY NOR ANY OBLIGATION WHATSOEVER; AND THE FACT THAT THE GOVERNMENT MAY HAVE FORMULATED, FURNISHED, OR IN ANY WAY SUPPLIED THE SAID DRAWINGS, SPECIFICATIONS, OR OTHER DATA IS NOT TO BE REGARDED BY IMPLICATION OR OTHERWISE AS IN ANY MANNER LICENSING THE HOLDER OR ANY OTHER PERSON OR CORPORATION, OR CONVEYING ANY RIGHTS OR PERMISSION TO MANUFACTURE, USE, OR SELL ANY PATENTED INVENTION THAT MAY IN ANY WAY BE RELATED THERETO.

REVISIONS

SYM	DESCRIPTION	DATE	APPROVAL
—	CLASS A RELEASE PER TDRR 02918	9/5/63	DW
A	REVISED PER TDRR 04763	11/12/63	

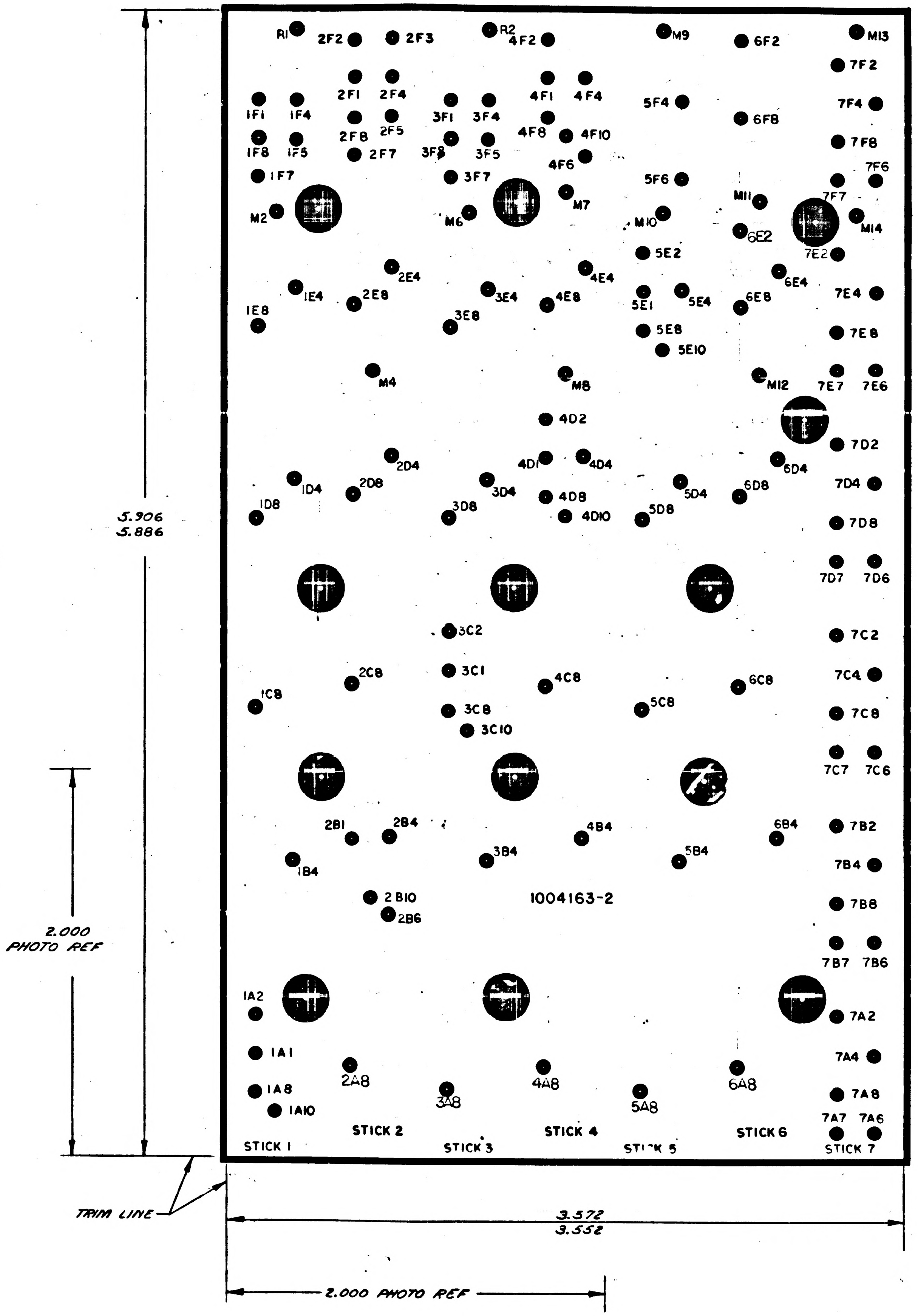
R1
2F2
2F3
R2
4F2
M9
6F2
M13
7F2
2F1
2F4
4F1
4F4
5F4
7F4
1F1
1F4
3F1
3F4
6F8
2F8
2F5
4F8
4F10
7F8
1F8
1F5
2F7
3F8
3F5
4F6
7F6
1F7
3F7
5F6
M2
M6
M7
M11
7F7
M10
6E2
M14
7E2
5E2
2E4
4E4
6E4
1E4
2E8
3E4
4E8
5E1
5E4
6E8
7E4
1E8
3E8
5E8
7E8
5E10
M4
M8
M12
7E7
7E6
4D2
7D2
2D4
4D1
4D4
6D4
1D4
2D8
3D4
4D8
5D4
6D8
7D4
1D8
3D8
4D10
5D8
7D8
7D7
7D6
3C2
7C2
2C8
3C1
4C8
6C8
7C4
1C8
3C8
5C8
7C8
3C10
7C7
7C6
2B1
2B4
4B4
6B4
7B2
3B4
5B4
7B4
1B4
2B10
1004163-2
2B6
7B8
7B7
7B6
1A2
7A2
1A1
7A4
2A8
4A8
6A8
1A8
7A8
3A8
1A10
5A8
7A7
7A6
STICK 1
STICK 2
STICK 3
STICK 4
STICK 5
STICK 6
STICK 7
5.906
5.886
2.000
PHOTO REF
TRIM LINE
3.572
3.552
2.000 PHOTO REF

MASTER

QTY REQD	PART OR IDENTIFYING NO.	NOMENCLATURE OR DESCRIPTION	FIND NO.

LIST OF MATERIALS

NEXT ASSY	USED ON
APPLICATION	

UNLESS OTHERWISE SPECIFIED DIMENSIONS ARE IN INCHES
TOLERANCES ON
FRACTIONS ± DECIMALS ± ANGLES ±
DO NOT SCALE THIS DRAWING
MATERIAL
HEAT TREATMENT
FINAL FINISH

MIT INSTRUMENTATION LAB
CAMBRIDGE, MASS
DWG NO
CONTRACT
DRAWN J.A. Laffini DATE 22 AUG 63
CHECKED 26 Aug 63
APPROVAL 21 Aug 63
APPROVAL C Hall 5 Sep 63
NASA APPROVAL
MIT APPROVAL
MIT APPROVAL 9/5/63

MANNED SPACECRAFT CENTER
HOUSTON, TEXAS

INSULATOR PHOTOMASTER RELAY MODULE
AGC DSKY, NAV & MAIN

CODE IDENT NO. —
SIZE E
NASA DRAWING NO. 1004163
SCALE 4/1
WT
SHEET 2 OF 2

INCHES
0 1 2
PHOTOGRAPHIC SCALE ONLY

NOTICE — WHEN GOVERNMENT DRAWINGS, SPECIFICATIONS, OR OTHER DATA ARE USED FOR ANY PURPOSE OTHER THAN IN CONNECTION WITH A DEFINITELY RELATED GOVERNMENT PROCUREMENT OPERATION, THE UNITED STATES GOVERNMENT THEREBY INCURS NO RESPONSIBILITY NOR ANY OBLIGATION WHATSOEVER; AND THE FACT THAT THE GOVERNMENT MAY HAVE FORMULATED, FURNISHED, OR IN ANY WAY SUPPLIED THE SAID DRAWINGS, SPECIFICATIONS, OR OTHER DATA IS NOT TO BE REGARDED BY IMPLICATION OR OTHERWISE AS IN ANY MANNER LICENSING THE HOLDER OR ANY OTHER PERSON OR CORPORATION, OR CONVEYING ANY RIGHTS OR PERMISSION TO MANUFACTURE, USE, OR SELL ANY PATENTED INVENTION THAT MAY IN ANY WAY BE RELATED THERETO

REVISIONS			
SYM	DESCRIPTION	DATE	APPROVAL
—	CLASS A RELEASE PER TDRR 02918	9 Oct 63	
A	REVISED PER TDRR 04763	11-13-63	
B	REDRAWN WITHOUT CHANGE PER TDRR 04931	3 Dec 63	wK

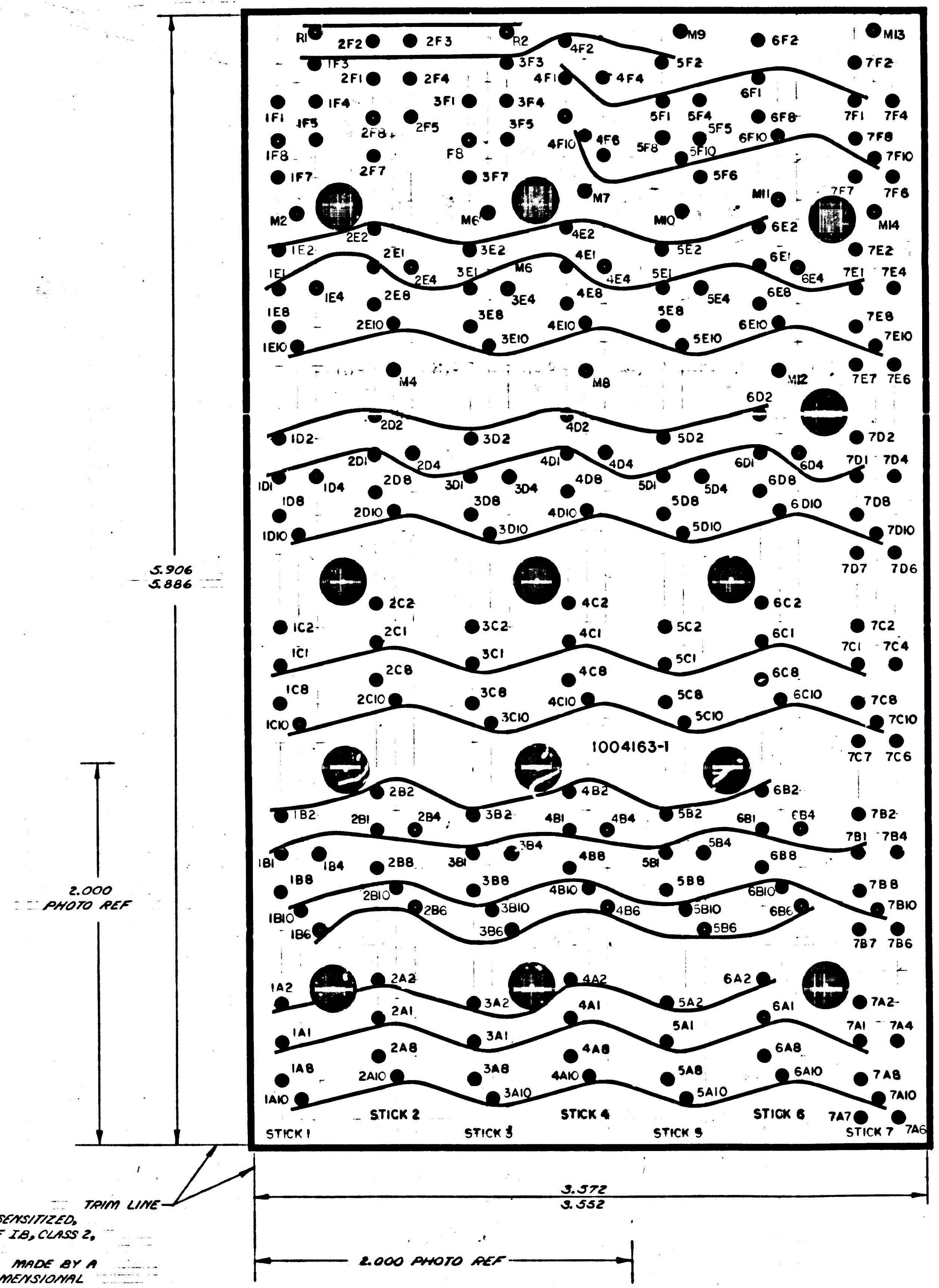
RI
2F2
2F3
R2
4F2
M9
6F2
MI3
IF3
3F3
5F2
7F2
2FI
2F4
4FI
4F4
IFI
IF4
3FI
3F4
6FI
5FI
5F4
6F8
7FI
7F4
IF5
2F8
2F5
3F5
4FI0
4F6
5F8
5F5
6FI0
7F8
IF8
F8
5FI0
7FI0
IF7
2F7
3F7
5F6
M7
MII
7F7
7F6
M2
M6
MI0
6E2
MI4
IE2
2E2
3E2
4E2
5E2
7E2
IEI
2EI
2E4
3EI
M6
4EI
4E4
5EI
6EI
6E4
7EI
7E4
IE4
2E8
3E4
4E8
5E4
6E8
IE8
3E8
5E8
7E8
2EI0
4EI0
6EI0
7EI0
IEI0
3EI0
5EI0
M4
M8
MI2
7E7
7E6
6D2
2D2
4D2
ID2
3D2
5D2
7D2
2DI
2D4
4DI
4D4
6DI
6D4
7DI
7D4
IDI
ID4
2D8
3DI
3D4
4D8
5DI
5D4
6D8
ID8
2DI0
3D8
4DI0
5D8
6DI0
7D8
IDI0
3DI0
5DI0
7DI0
7D7
7D6
2C2
4C2
6C2
IC2
2CI
3C2
4CI
5C2
6CI
7C2
ICI
3CI
5CI
7CI
7C4
2C8
4C8
6C8
IC8
2CI0
3C8
4CI0
5C8
6CI0
7C8
ICI0
3CI0
5CI0
7CI0
1004163-1
7C7
7C6
2B2
4B2
6B2
IB2
2BI
2B4
3B2
4BI
4B4
5B2
6BI
6B4
7B2
7BI
7B4
3B4
5B4
IBI
IB4
2B8
3BI
4B8
5BI
6B8
IB8
3B8
5B8
7B8
2BI0
4BI0
6BI0
IBI0
2B6
3BI0
4B6
5BI0
6B6
7BI0
IB6
3B6
5B6
7B7
7B6
IA2
2A2
4A2
6A2
2AI
3A2
4AI
5A2
6AI
7A2
IAI
3AI
5AI
7AI
7A4
2A8
4A8
6A8
IA8
2AI0
3A8
4AI0
5A8
6AI0
7A8
IAI0
3AI0
5AI0
7AI0
STICK 2
STICK 4
STICK 6
7A7
STICK I
STICK 3
STICK 5
STICK 7
7A6
5.906
5.886
2.000
PHOTO REF
TRIM LINE
3.572
3.552
2.000 PHOTO REF

NOTES
1. MATL: .006/.008 THICK PLASTIC SHEET, SENSITIZED, DIMENSIONALLY STABLE PER L-F-340 TYPE IB, CLASS 2, STYLE IA
2. THIS DRAWING OR REPRODUCTION MADE BY A PROCESS OR METHOD SHALL INSURE DIMENSIONAL STABILITY. DIMENSIONAL STABILITY SHALL NOT EXCEED .001 INCH PER FOOT
3. MAKE PHOTOGRAPHIC MASTER NEGATIVE AND POSITIVE FILMS TO DIMENSIONS SHOWN
4. CUT TO WITHIN .010 OF TRIM LINE
5. ● DENOTES .080/.084 DIA. HOLE ALL OTHERS .240/.260 DIA
6. INTERPRET DRAWING IN ACCORDANCE WITH STANDARDS PRESCRIBED BY MIL-D-70327

INACTIVE

Ⓑ REPLACED BY REV C WITHOUT CHANGE

MASTER

QTY REQD	PART OR IDENTIFYING NO.	NOMENCLATURE OR DESCRIPTION	FIND NO.
LIST OF MATERIALS			

1003098	
NEXT ASSY	USED ON
APPLICATION	

UNLESS OTHERWISE SPECIFIED
DIMENSIONS ARE IN INCHES
TOLERANCES ON
FRACTIONS ± DECIMALS ± ANGLES ±
DO NOT SCALE THIS DRAWING
MATERIAL
HEAT TREATMENT
FINAL FINISH

MIT
INSTRUMENTATION LAB
CAMBRIDGE, MASS
DWG. NO. CONTRACT
DRAWN J.A. Zaffini DATE 22 Aug 63
CHECKED
APPROVAL
APPROVAL 5 Sept 63
NASA APPROVAL
MIT APPROVAL
MIT APPROVAL

MANNED SPACECRAFT CENTER
HOUSTON, TEXAS

INSULATOR PHOTOMASTER
RELAY MODULE
AGC DSKY, NAV & MAIN

CODE IDENT NO. —
SIZE E
NASA DRAWING NO. 1004163
SCALE 4/1
WT —
SHEET 1 OF 2

INCHES
PHOTOGRAPHIC SCALE ONLY

SYM	DESCRIPTION	DATE	APPROVAL
—	CLASS A RELEASE PER TDRR 02918	9/5/63	
A	REVISED PER TDRR 04763	4/1/63	
B	REDRAWN WITHOUT CHANGE PER TDRR 04931	3 Dec 63	

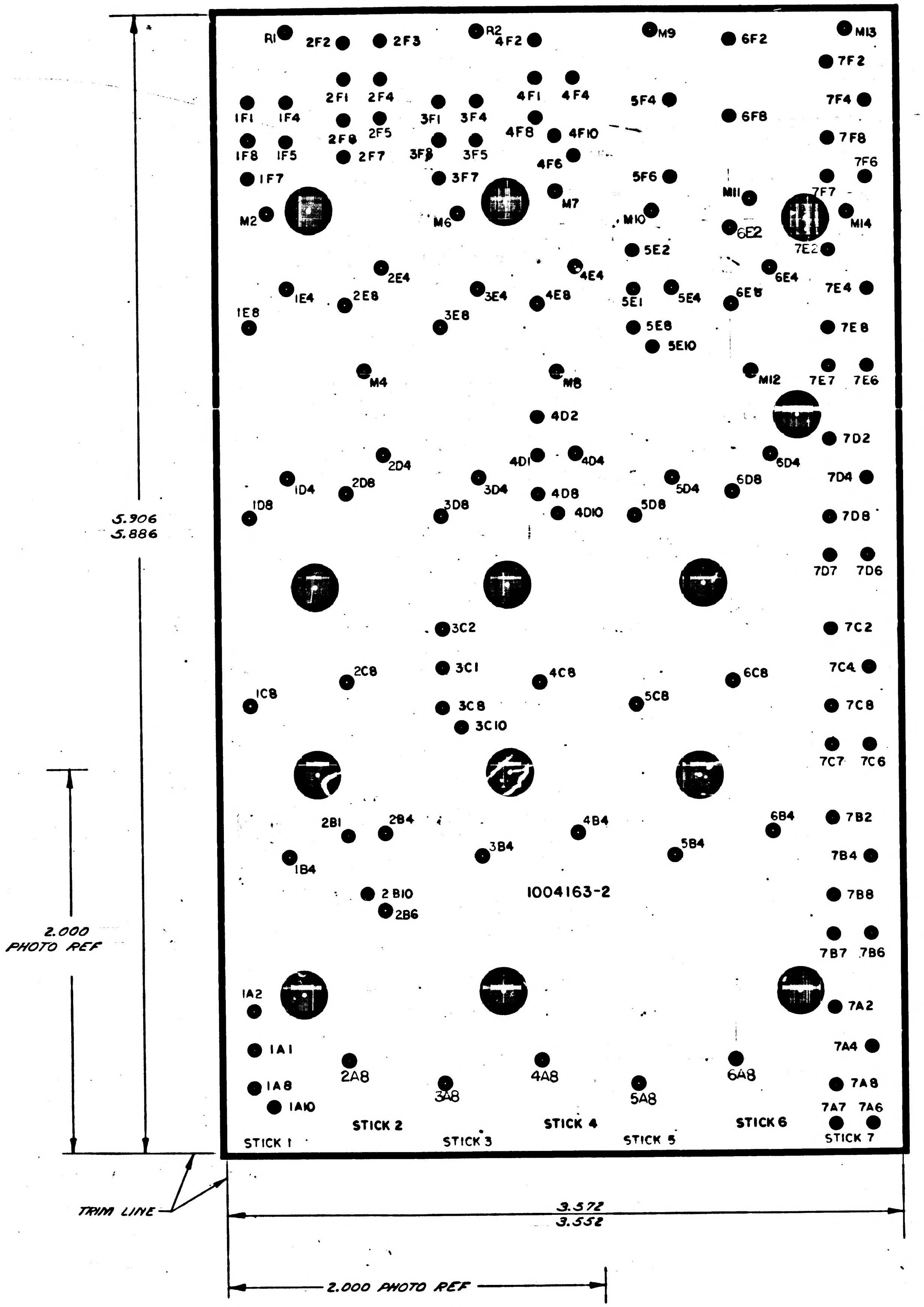

R1
2F2
2F3
R2
4F2
M9
6F2
M13
7F2
2F1
2F4
4F1
4F4
1F1
1F4
3F1
3F4
5F4
7F4
2F8
2F5
4F8
4F10
6F8
1F8
1F5
2F7
3F8
3F5
7F8
4F6
7F6
1F7
3F7
5F6
M11
7F7
M7
M2
M6
M10
6E2
M14
5E2
7E2
2E4
4E4
6E4
1E4
2E8
3E4
4E8
5E1
5E4
6E8
7E4
1E8
3E8
5E8
7E8
5E10
M4
M8
M12
7E7
7E6
4D2
7D2
2D4
4D1
4D4
6D4
1D4
2D8
3D4
4D8
5D4
6D8
7D4
1D8
3D8
4D10
5D8
7D8
7D7
7D6
3C2
7C2
3C1
2C8
4C8
6C8
7C4
1C8
3C8
5C8
7C8
3C10
7C7
7C6
2B1
2B4
4B4
6B4
7B2
3B4
5B4
7B4
1B4
2B10
1004163-2
7B8
2B6
7B7
7B6
1A2
7A2
1A1
7A4
2A8
4A8
6A8
1A8
7A8
3A8
5A8
1A10
7A7
7A6
STICK 1
STICK 2
STICK 3
STICK 4
STICK 5
STICK 6
STICK 7
5.906
5.886
2.000 PHOTO REF
TRIM LINE
3.572
3.552
2.000 PHOTO REF

Ⓑ REPLACED BY REV C WITHOUT CHANGE

MASTER

QTY REQD	PART OR IDENTIFYING NO.	NOMENCLATURE OR DESCRIPTION	FIND NO.

LIST OF MATERIALS

NEXT ASSY	USED ON
APPLICATION	

UNLESS OTHERWISE SPECIFIED DIMENSIONS ARE IN INCHES
TOLERANCES ON
FRACTIONS ± DECIMALS ± ANGLES ±
DO NOT SCALE THIS DRAWING
MATERIAL
HEAT TREATMENT
FINAL FINISH

M I T
INSTRUMENTATION LAB
CAMBRIDGE, MASS
DWG. NO. CONTRACT

DRAWN J.A. Zaffini DATE 22 AUG 63
CHECKED 26 Aug 63
APPROVAL 21 Aug 63
APPROVAL 5 Sept 63
NASA APPROVAL
MIT APPROVAL
MIT APPROVAL 9/5/63

MANNED SPACECRAFT CENTER
HOUSTON, TEXAS

INSULATOR PHOTOMASTER
RELAY MODULE
AGC DSKY, NAV & MAIN

CODE IDENT NO. —
SIZE E
NASA DRAWING NO. 1004163
SCALE 4/1
WT
SHEET 2 OF 2

INCHES
PHOTOGRAPHIC SCALE ONLY

NOTICE — WHEN GOVERNMENT DRAWINGS, SPECIFICATIONS, OR OTHER DATA ARE USED FOR ANY PURPOSE OTHER THAN IN CONNECTION WITH A DEFINITELY RELATED GOVERNMENT PROCUREMENT OPERATION, THE UNITED STATES GOVERNMENT THEREBY INCURS NO RESPONSIBILITY NOR ANY OBLIGATION WHATSOEVER; AND THE FACT THAT THE GOVERNMENT MAY HAVE FORMULATED, FURNISHED, OR IN ANY WAY SUPPLIED THE SAID DRAWINGS, SPECIFICATIONS OR OTHER DATA IS NOT TO BE REGARDED BY IMPLICATION OR OTHERWISE AS IN ANY MANNER LICENSING THE HOLDER OR ANY OTHER PERSON OR CORPORATION, OR CONVEYING ANY RIGHTS OR PERMISSION TO MANUFACTURE, USE, OR SELL ANY PATENTED INVENTION THAT MAY IN ANY WAY BE RELATED THERETO

REVISIONS 02918

SYM	DESCRIPTION	DATE	APPROVAL
C	REDRAWN WITHOUT CHANGE PER TDRR 04931	3Dec63	WK

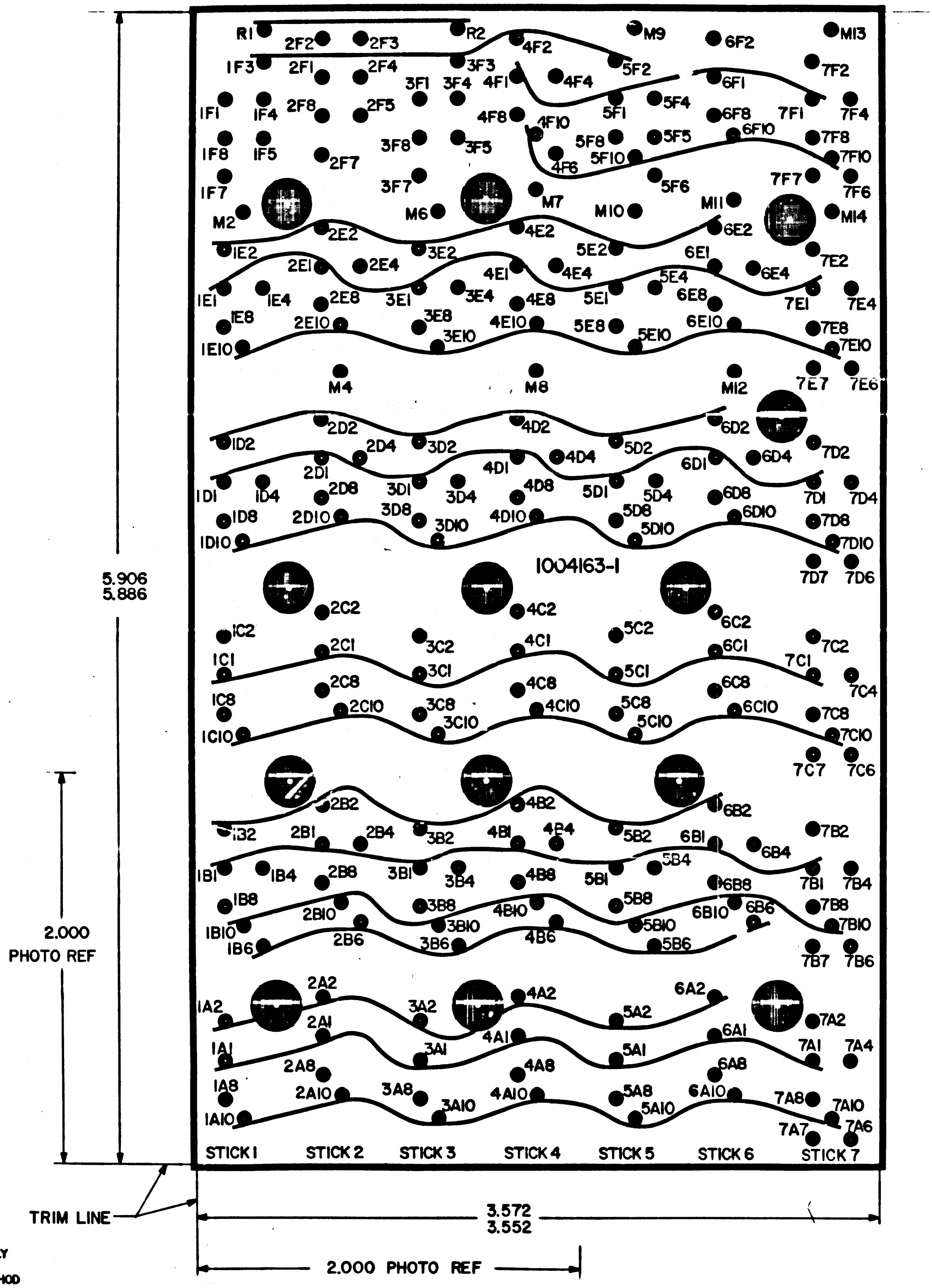
R1
2F2
2F3
R2
4F2
M9
6F2
M13
1F3
2F1
2F4
3F3
4F1
4F4
5F2
6F1
7F2
3F1
3F4
1F1
1F4
2F8
2F5
4F8
5F1
5F4
6F8
7F1
7F4
4F10
5F8
5F5
6F10
7F8
1F8
1F5
3F8
3F5
4F6
5F10
7F10
2F7
1F7
3F7
5F6
7F7
7F6
M2
M6
M7
M10
M11
M14
2E2
4E2
6E2
1E2
3E2
5E2
6E1
7E2
2E1
2E4
4E1
4E4
5E4
6E4
1E1
1E4
2E8
3E1
3E4
4E8
5E1
6E8
7E1
7E4
1E8
3E8
2E10
4E10
5E8
6E10
7E8
3E10
5E10
1E10
7E10
M4
M8
M12
7E7
7E6
2D2
4D2
6D2
1D2
2D4
3D2
4D4
5D2
6D4
7D2
2D1
4D1
6D1
1D1
1D4
2D8
3D1
3D4
4D8
5D1
5D4
6D8
7D1
7D4
1D8
2D10
3D8
4D10
5D8
6D10
7D8
3D10
5D10
1D10
7D10
1004163-1
7D7
7D6
2C2
4C2
6C2
1C2
2C1
3C2
4C1
5C2
6C1
7C2
1C1
3C1
5C1
7C1
2C8
4C8
6C8
7C4
1C8
2C10
3C8
4C10
5C8
6C10
7C8
3C10
5C10
1C10
7C10
7C7
7C6
2B2
4B2
6B2
1B2
2B1
2B4
3B2
4B1
4B4
5B2
6B1
6B4
7B2
5B4
1B1
1B4
2B8
3B1
3B4
4B8
5B1
6B8
7B1
7B4
1B8
3B8
5B8
6B6
7B8
2B10
3B10
4B10
5B10
6B10
7B10
1B10
2B6
3B6
4B6
5B6
1B6
7B7
7B6
2A2
6A2
1A2
2A1
3A2
4A2
5A2
7A2
1A1
3A1
4A1
5A1
6A1
7A1
7A4
2A8
4A8
6A8
1A8
2A10
3A8
4A10
5A8
6A10
7A8
7A10
3A10
5A10
1A10
7A7
7A6
STICK 1
STICK 2
STICK 3
STICK 4
STICK 5
STICK 6
STICK 7
5.906
5.886
2.000
PHOTO REF
TRIM LINE
3.572
3.552
2.000 PHOTO REF

Ⓒ REPLACES REV B WITHOUT CHANGE

NOTES:

1. MATERIAL: .006/.008 THICK PLASTIC SHEET, SENSITIZED, DIMENSIONALLY STABLE PER L-F340 TYPE IB, CLASS 2, STYLE IA
2. THIS DRAWING OR REPRODUCTION MADE BY A PROCESS OR METHOD SHALL INSURE DIMENSIONAL STABILITY. DIMENSIONAL STABILITY SHALL NOT EXCEED .001 INCH PER FOOT
3. MAKE PHOTOGRAPHIC MASTER NEGATIVE AND POSITIVE FILMS TO DIMENSIONS SHOWN
4. CUT TO WITHIN .010 OF TRIM LINE
5. ● DENOTES .080/.084 DIA HOLE ALL OTHERS .240/.260 DIA
6. INTERPRET DRAWING IN ACCORDANCE WITH STANDARDS PRESCRIBED BY MIL-D-70327

MASTER

QTY REQD	PART OR IDENTIFYING NO.	NOMENCLATURE OR DESCRIPTION	FIND NO.

LIST OF MATERIALS

NEXT ASSY	USED ON
1003098	

APPLICATION

UNLESS OTHERWISE SPECIFIED DIMENSIONS ARE IN INCHES
TOLERANCES ON
FRACTIONS ± DECIMALS ± ANGLES ±
DO NOT SCALE THIS DRAWING
MATERIAL
HEAT TREATMENT
FINAL FINISH

MIT
INSTRUMENTATION LAB
CAMBRIDGE MASS
DWG NO
CONTRACT
DRAWN J.F. Walsh DATE 8/23/63
CHECKED E.C. Kingsbury 27Nov63
APPROVAL
APPROVAL E.J. Duggan 12-3-63
NASA APPROVAL
MIT APPROVAL 3Dec63

MANNED SPACECRAFT CENTER
HOUSTON, TEXAS

INSULATOR PHOTOMASTER RELAY MODULE AGC DSKY, NAV & MAIN

CODE IDENT NO.
SIZE E
NASA DRAWING NO. 1004163
SCALE 4/1
WT
SHEET 1 OF 2

INCHES
PHOTOGRAPHIC SCALE ONLY

NOTICE — WHEN GOVERNMENT DRAWINGS, SPECIFICATIONS, OR OTHER DATA ARE USED FOR ANY PURPOSE OTHER THAN IN CONNECTION WITH A DEFINITELY RELATED GOVERNMENT PROCUREMENT OPERATION, THE UNITED STATES GOVERNMENT THEREBY INCURS NO RESPONSIBILITY NOR ANY OBLIGATION WHATSOEVER; AND THE FACT THAT THE GOVERNMENT MAY HAVE FORMULATED, FURNISHED, OR IN ANY WAY SUPPLIED THE SAID DRAWINGS, SPECIFICATIONS, OR OTHER DATA IS NOT TO BE REGARDED BY IMPLICATION OR OTHERWISE AS IN ANY MANNER LICENSING THE HOLDER OR ANY OTHER PERSON OR CORPORATION, OR CONVEYING ANY RIGHTS OR PERMISSION TO MANUFACTURE, USE, OR SELL ANY PATENTED INVENTION THAT MAY IN ANY WAY BE RELATED THERETO

REVISIONS 029.8			
SYM	DESCRIPTION	DATE	APPROVAL
C	REDRAWN WITHOUT CHANGE PER TDRR 04931	3 [illegible] 63	[illegible]

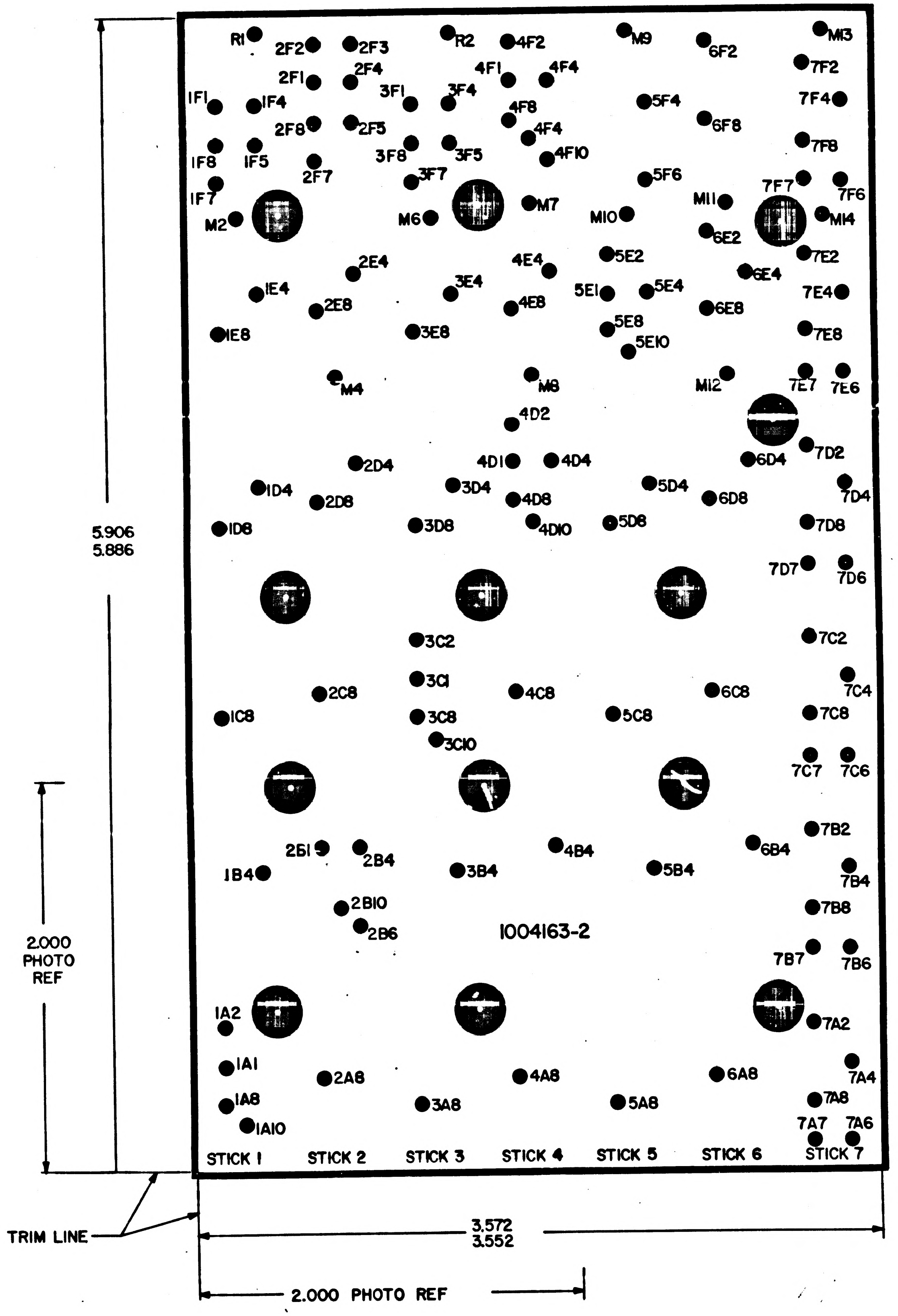
R1
2F2
2F3
R2
4F2
M9
6F2
M13
2F1
2F4
4F1
4F4
7F2
1F1
1F4
3F1
3F4
4F8
5F4
7F4
2F8
2F5
4F4
6F8
1F8
1F5
3F8
3F5
4F10
7F8
2F7
3F7
5F6
7F7
7F6
1F7
M2
M6
M7
M10
M11
M14
6E2
2E4
5E2
4E4
7E2
1E4
3E4
5E1
5E4
6E4
7E4
2E8
4E8
6E8
1E8
3E8
5E8
7E8
5E10
M4
M8
M12
7E7
7E6
4D2
7D2
2D4
4D1
4D4
6D4
1D4
3D4
5D4
7D4
2D8
4D8
6D8
1D8
3D8
4D10
5D8
7D8
7D7
7D6
3C2
7C2
3C1
7C4
2C8
4C8
6C8
1C8
3C8
5C8
7C8
3C10
7C7
7C6
7B2
2B1
2B4
4B4
6B4
1B4
3B4
5B4
7B4
2B10
7B8
2B6
1004163-2
7B7
7B6
1A2
7A2
1A1
7A4
2A8
4A8
6A8
1A8
3A8
5A8
7A8
1A10
7A7
7A6
STICK 1
STICK 2
STICK 3
STICK 4
STICK 5
STICK 6
STICK 7
5.906
5.886
2.000
PHOTO
REF
TRIM LINE
3.572
3.552
2.000 PHOTO REF

©REPLACES REV B WITHOUT CHANGE

MASTER

QTY REQD	PART OR IDENTIFYING NO.	NOMENCLATURE OR DESCRIPTION	FIND NO.

LIST OF MATERIALS

	UNLESS OTHERWISE SPECIFIED DIMENSIONS ARE IN INCHES TOLERANCES ON FRACTIONS ± DECIMALS ± ANGLES ± DO NOT SCALE THIS DRAWING	MIT INSTRUMENTATION LAB CAMBRIDGE MASS	MANNED SPACECRAFT CENTER HOUSTON, TEXAS	
	MATERIAL	DRAWN J.F. [illegible] DATE 11/22/62 CHECKED [illegible] APPROVAL APPROVAL [illegible] 12-3-62	INSULATOR PHOTOMASTER RELAY MODULE AGC DSKY, NAV&MAIN	
NEXT ASSY	USED ON	HEAT TREATMENT	NASA APPROVAL [illegible]	CODE IDENT NO.	SIZE E	NASA DRAWING NO. 1004163
APPLICATION		FINAL FINISH	MIT APPROVAL [illegible] 3 [illegible] 63	SCALE 4/1	WT	SHEET 2 OF 2

INCHES
PHOTOGRAPHIC SCALE ONLY

NOTICE — WHEN GOVERNMENT DRAWINGS, SPECIFICATIONS, OR OTHER DATA ARE USED FOR ANY PURPOSE OTHER THAN IN CONNECTION WITH A DEFINITELY RELATED GOVERNMENT PROCUREMENT OPERATION, THE UNITED STATES GOVERNMENT THEREBY INCURS NO RESPONSIBILITY NOR ANY OBLIGATION WHATSOEVER; AND THE FACT THAT THE GOVERNMENT MAY HAVE FORMULATED, FURNISHED, OR IN ANY WAY SUPPLIED THE SAID DRAWINGS, SPECIFICATIONS, OR OTHER DATA IS NOT TO BE REGARDED BY IMPLICATION OR OTHERWISE AS IN ANY MANNER LICENSING THE HOLDER OR ANY OTHER PERSON OR CORPORATION, OR CONVEYING ANY RIGHTS OR PERMISSION TO MANUFACTURE, USE, OR SELL ANY PATENTED INVENTION THAT MAY IN ANY WAY BE RELATED THERETO.

REVISIONS 82418			
SYM	DESCRIPTION	DATE	APPROVAL
C	REDRAWN WITHOUT CHANGE PER TDRR 0-4931		
D	REVISED PER TDRR 05394		

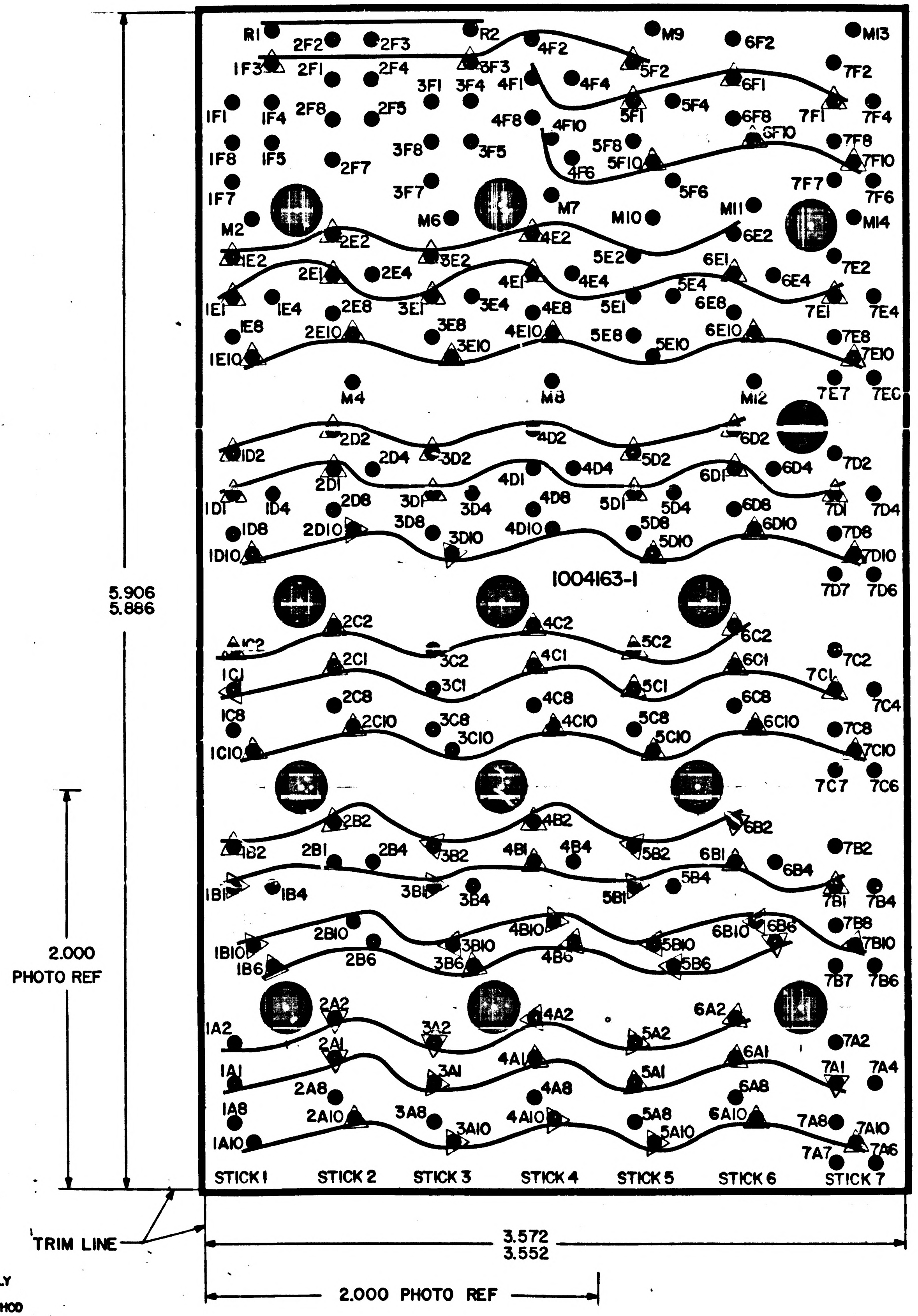

Ⓒ REPLACES REV B WITHOUT CHANGE

NOTES:

1. MATERIAL:.006/.008 THICK PLASTIC SHEET, SENSITIZED, DIMENSIONALLY STABLE PER L-F340 TYPE IB, CLASS 2, STYLE IA
2. THIS DRAWING OR REPRODUCTION MADE BY A PROCESS OR METHOD SHALL INSURE DIMENSIONAL STABILITY. DIMENSIONAL STABILITY SHALL NOT EXCEED .001 INCH PER FOOT
3. MAKE PHOTOGRAPHIC MASTER NEGATIVE AND POSITIVE FILMS TO DIMENSIONS SHOWN
4. CUT TO WITHIN .010 OF TRIM LINE
5. ● DENOTES .080/.084 DIA HOLE ALL OTHERS .240/.260 DIA
6. INTERPRET DRAWING IN ACCORDANCE WITH STANDARDS PRESCRIBED BY MIL-D-70327
7. △ INDICATES FIRST LEVEL WIRING

MASTER

QTY REQD	PART OR IDENTIFYING NO.	NOMENCLATURE OR DESCRIPTION	FIND NO.
LIST OF MATERIALS			

1003098	
NEXT ASSY	USED ON
APPLICATION	

UNLESS OTHERWISE SPECIFIED DIMENSIONS ARE IN INCHES
TOLERANCES ON
FRACTIONS ± DECIMALS ± ANGLES ±
DO NOT SCALE THIS DRAWING
MATERIAL
HEAT TREATMENT
FINAL FINISH

MIT
INSTRUMENTATION LAB
CAMBRIDGE, MASS
DWG NO. CONTRACT
DRAWN J.F. Walsh DATE 11/22/63
CHECKED R.P. Kange, Lenny Z 2 Dec 63
APPROVAL
APPROVAL E.J. Duggan 10-8-63
NASA APPROVAL 12/4/63
MIT APPROVAL 3 Dec 63

MANNED SPACECRAFT CENTER
HOUSTON, TEXAS

INSULATOR PHOTOMASTER RELAY MODULE
AGC DSKY, NAV & MAIN

CODE IDENT NO.
SIZE E
NASA DRAWING NO. 1004163
SCALE 4/1 WT SHEET 1 OF 2

NOTICE — WHEN GOVERNMENT DRAWINGS, SPECIFICATIONS, OR OTHER DATA ARE USED FOR ANY PURPOSE OTHER THAN IN CONNECTION WITH A DEFINITELY RELATED GOVERNMENT PROCUREMENT OPERATION, THE UNITED STATES GOVERNMENT THEREBY INCURS NO RESPONSIBILITY NOR ANY OBLIGATION WHATSOEVER; AND THE FACT THAT THE GOVERNMENT MAY HAVE FORMULATED, FURNISHED, OR IN ANY WAY SUPPLIED THE SAID DRAWINGS, SPECIFICATIONS, OR OTHER DATA IS NOT TO BE REGARDED BY IMPLICATION OR OTHERWISE AS IN ANY MANNER LICENSING THE HOLDER OR ANY OTHER PERSON OR CORPORATION, OR CONVEYING ANY RIGHTS OR PERMISSION TO MANUFACTURE, USE, OR SELL ANY PATENTED INVENTION THAT MAY IN ANY WAY BE RELATED THERETO.

REVISIONS 029.8

SYM	DESCRIPTION	DATE	APPROVAL
C	REDRAWN WITHOUT CHANGE PER TDRR 04931	30... 63	WK
D	REVISED PER TDRR 05394	22... 63	WK

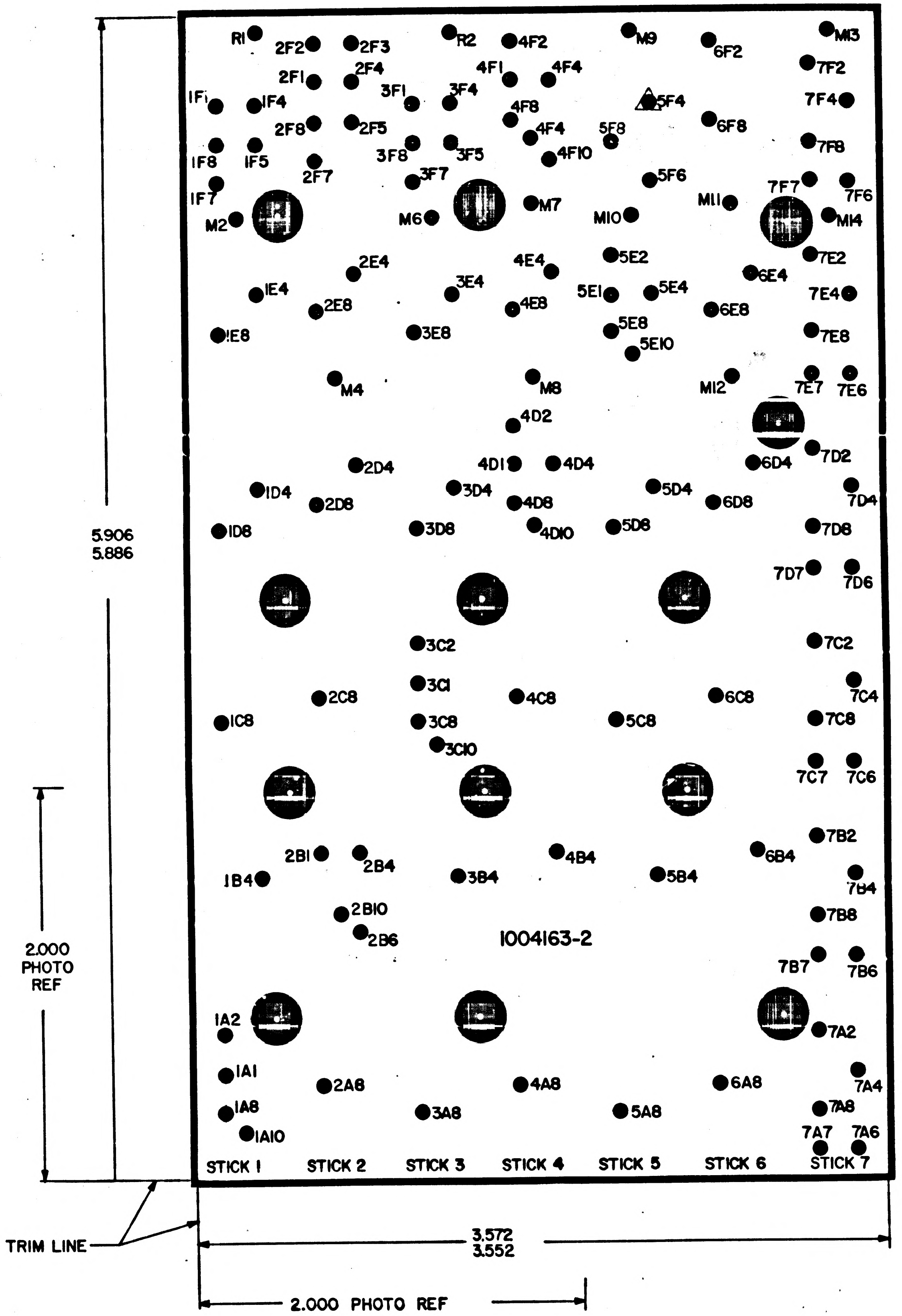
R1
2F2
2F3
R2
4F2
M9
6F2
M13
2F4
4F1
4F4
7F2
2F1
3F1
3F4
1F1
1F4
4F8
5F4
7F4
2F8
2F5
4F4
5F8
6F8
1F8
1F5
3F8
3F5
4F10
7F8
2F7
3F7
5F6
1F7
7F7
7F6
M2
M6
M7
M10
M11
M14
2E4
4E4
5E2
7E2
1E4
3E4
6E4
5E1
5E4
7E4
2E8
4E8
6E8
5E8
1E8
3E8
7E8
5E10
M4
M8
M12
7E7
7E6
4D2
2D4
4D1
4D4
6D4
7D2
1D4
3D4
5D4
2D8
4D8
6D8
7D4
1D8
3D8
4D10
5D8
7D8
7D7
7D6
3C2
7C2
3C1
2C8
4C8
6C8
7C4
1C8
3C8
5C8
7C8
3C10
7C7
7C6
7B2
2B1
2B4
4B4
6B4
1B4
3B4
5B4
7B4
2B10
7B8
1004163-2
2B6
7B7
7B6
1A2
7A2
1A1
2A8
4A8
6A8
7A4
1A8
3A8
5A8
7A8
1A10
7A7
7A6
STICK 1
STICK 2
STICK 3
STICK 4
STICK 5
STICK 6
STICK 7
5.906
5.886
2.000 PHOTO REF
TRIM LINE
3.572
3.552
2.000 PHOTO REF

Ⓒ REPLACES REV B WITHOUT CHANGE

QTY REQD	PART OR IDENTIFYING NO.	NOMENCLATURE OR DESCRIPTION	FIND NO

LIST OF MATERIALS

NEXT ASSY	USED ON
APPLICATION	

UNLESS OTHERWISE SPECIFIED DIMENSIONS ARE IN INCHES
TOLERANCES ON
FRACTIONS ± DECIMALS ± ANGLES ±
DO NOT SCALE THIS DRAWING
MATERIAL
HEAT TREATMENT
FINAL FINISH

MIT
INSTRUMENTATION LAB
CAMBRIDGE, MASS
DWG NO CONTRACT
DRAWN J.F. ... DATE ...
CHECKED ...
APPROVAL
APPROVAL E.J. ...
NASA APPROVAL ...
MIT APPROVAL ... 3 ... 63

MANNED SPACECRAFT CENTER
HOUSTON, TEXAS

INSULATOR PHOTOMASTER
RELAY MODULE
AGC DSKY, NAV&MAIN

CODE IDENT NO.
SIZE E
NASA DRAWING NO. 1004163
SCALE 4/1
WT
SHEET 2 OF 2

MASTER

REVISIONS 62918			
SYM	DESCRIPTION	DATE	APPROVAL
C	REDRAWN WITHOUT CHANGE PER TDRR 04931	3 Dec 63	
D	REVISED PER TDRR 05394		
E	REVISED PER TDRR 06050		

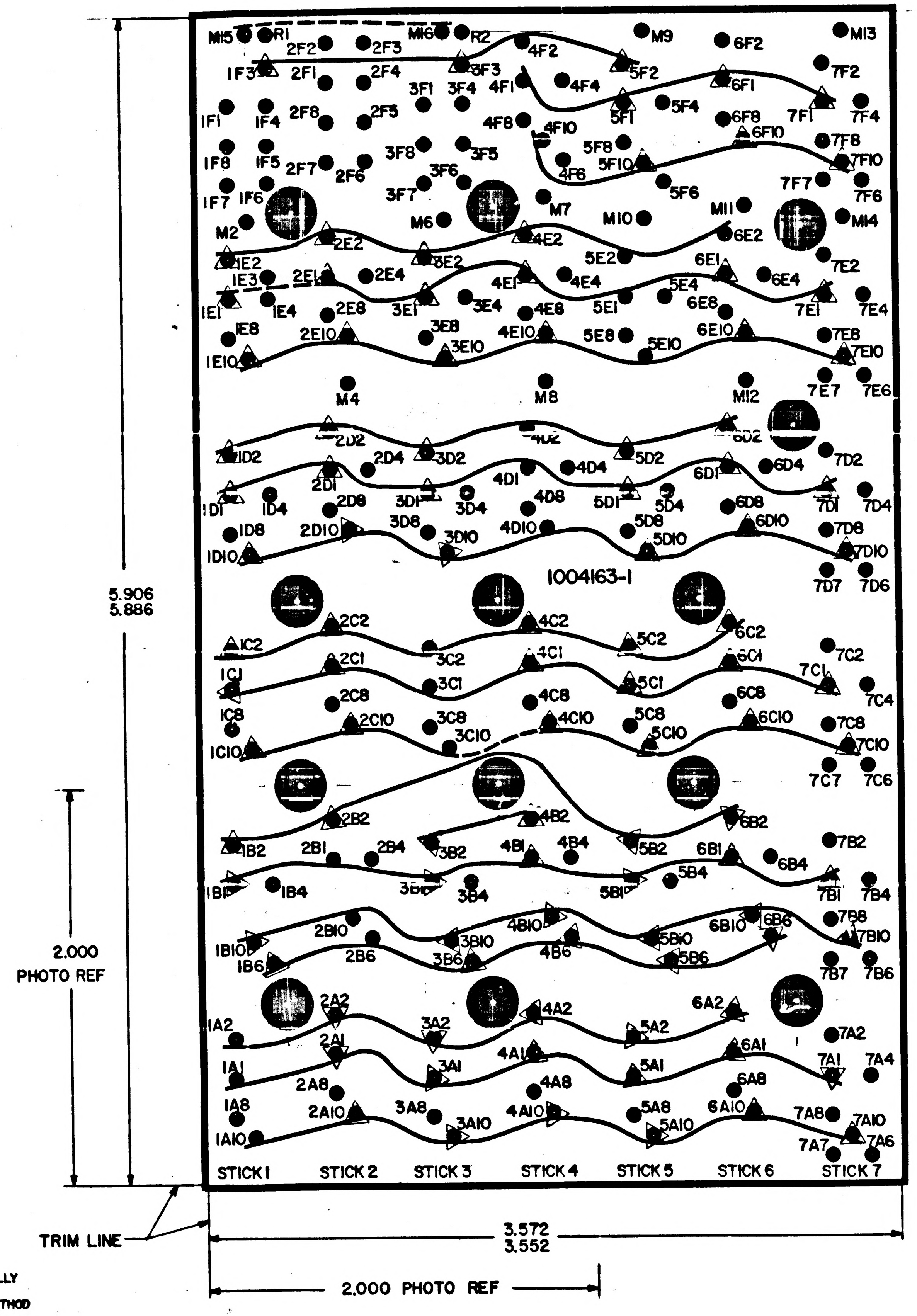

Ⓒ REPLACES REV B WITHOUT CHANGE

NOTES:

1. MATERIAL:.006/.008 THICK PLASTIC SHEET, SENSITIZED, DIMENSIONALLY STABLE PER L-F340 TYPE IB, CLASS 2, STYLE IA
2. THIS DRAWING OR REPRODUCTION MADE BY A PROCESS OR METHOD SHALL INSURE DIMENSIONAL STABILITY. DIMENSIONAL STABILITY SHALL NOT EXCEED .001 INCH PER FOOT
3. MAKE PHOTOGRAPHIC MASTER NEGATIVE AND POSITIVE FILMS TO DIMENSIONS SHOWN
4. CUT TO WITHIN .010 OF TRIM LINE
5. ● DENOTES .080/.084 DIA HOLE ALL OTHERS .240/.260 DIA
6. INTERPRET DRAWING IN ACCORDANCE WITH STANDARDS PRESCRIBED BY MIL-D-70327
7. △ INDICATES CUT LEAD AFTER WELDING
8. BROKEN LINE DENOTES SLEEVING

MASTER

QTY REQD	PART OR IDENTIFYING NO.	NOMENCLATURE OR DESCRIPTION	FIND NO.
LIST OF MATERIALS			

1003098	
NEXT ASSY	USED ON
APPLICATION	

UNLESS OTHERWISE SPECIFIED DIMENSIONS ARE IN INCHES
TOLERANCES ON
FRACTIONS ± DECIMALS ± ANGLES ±
DO NOT SCALE THIS DRAWING
MATERIAL
HEAT TREATMENT
FINAL FINISH

MIT
INSTRUMENTATION LAB
CAMBRIDGE MASS
DRAWN J.F. Walsh DATE 11/22/63
CHECKED E.C. Kemp
APPROVAL
APPROVAL E.J. Duggan 12-8-63
NASA APPROVAL
MIT APPROVAL

MANNED SPACECRAFT CENTER
HOUSTON, TEXAS

INSULATOR PHOTOMASTER
RELAY MODULE
AGC DSKY, NAV & MAIN

CODE IDENT NO.
SIZE E
NASA DRAWING NO. 1004163
SCALE 4/1
WT
SHEET 1 OF 2

INCHES
PHOTOGRAPHIC SCALE ONLY

NOTICE — WHEN GOVERNMENT DRAWINGS, SPECIFICATIONS, OR OTHER DATA ARE USED FOR ANY PURPOSE OTHER THAN IN CONNECTION WITH A DEFINITELY RELATED GOVERNMENT PROCUREMENT OPERATION, THE UNITED STATES GOVERNMENT THEREBY INCURS NO RESPONSIBILITY NOR ANY OBLIGATION WHATSOEVER, AND THE FACT THAT THE GOVERNMENT MAY HAVE FORMULATED, FURNISHED, OR IN ANY WAY SUPPLIED THE SAID DRAWINGS, SPECIFICATIONS OR OTHER DATA IS NOT TO BE REGARDED BY IMPLICATION OR OTHERWISE AS IN ANY MANNER LICENSING THE HOLDER OR ANY OTHER PERSON OR CORPORATION, OR CONVEYING ANY RIGHTS OR PERMISSION TO MANUFACTURE, USE, OR SELL ANY PATENTED INVENTION THAT MAY IN ANY WAY BE RELATED THERETO.

REVISIONS 029.8			
SYM	DESCRIPTION	DATE	APPROVAL
C	REDRAWN WITHOUT CHANGE PER TDRR 04931		
D	REVISED PER TDRR 05394		
E	REVISED PER TDRR 06050		

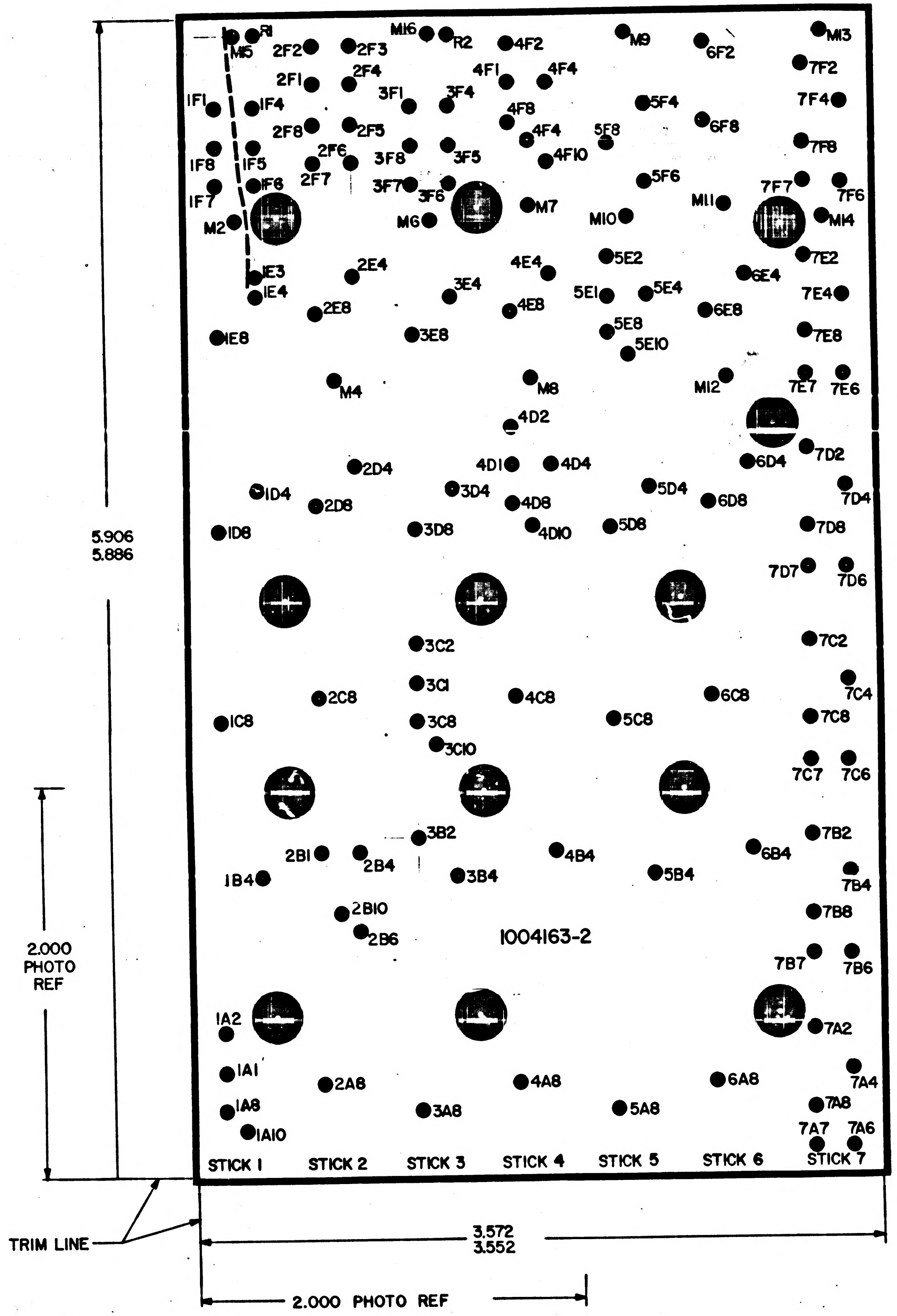

R1
M15
2F2
2F3
M16
R2
4F2
M9
6F2
M13
7F2
IF1
2F1
2F4
3F1
3F4
4F1
4F4
5F4
7F4
IF4
2F8
2F5
4F8
4F4
5F8
6F8
IF8
IF5
2F6
3F8
3F5
4F10
7F8
IF7
IF6
2F7
3F7
3F6
5F6
7F7
7F6
M2
M6
M7
M10
M11
M14
IE3
2E4
4E4
5E2
6E4
7E2
IE4
3E4
5E1
5E4
7E4
2E8
4E8
5E8
6E8
7E8
IE8
3E8
5E10
M4
M8
M12
7E7
7E6
4D2
2D4
4D1
4D4
6D4
7D2
ID4
3D4
5D4
7D4
2D8
4D8
6D8
ID8
3D8
4D10
5D8
7D8
7D7
7D6
3C2
7C2
3C1
7C4
2C8
4C8
6C8
IC8
3C8
5C8
7C8
3C10
7C7
7C6
3B2
7B2
2B1
2B4
4B4
6B4
IB4
3B4
5B4
7B4
2B10
7B8
2B6
1004163-2
7B7
7B6
IA2
7A2
IA1
7A4
2A8
4A8
6A8
IA8
3A8
5A8
7A8
IA10
7A7
7A6
STICK 1
STICK 2
STICK 3
STICK 4
STICK 5
STICK 6
STICK 7
5.906
5.886
2.000
PHOTO
REF
TRIM LINE
3.572
3.552
2.000 PHOTO REF

Ⓒ REPLACES REV B WITHOUT CHANGE

MASTER

QTY REQD	PART OR IDENTIFYING NO.	NOMENCLATURE OR DESCRIPTION	FIND NO.

LIST OF MATERIALS

NEXT ASSY	USED ON
APPLICATION	

UNLESS OTHERWISE SPECIFIED
DIMENSIONS ARE IN INCHES
TOLERANCES ON
FRACTIONS ± DECIMALS ± ANGLES ±

DO NOT SCALE THIS DRAWING

MATERIAL

HEAT TREATMENT

FINAL FINISH

MIT
INSTRUMENTATION LAB
CAMBRIDGE, MASS
DWG NO
CONTRACT

DRAWN J.F. Wolfel DATE 11/22/63
CHECKED E.P. Kangas
APPROVAL
APPROVAL E.J. Dungan
NASA APPROVAL
MIT APPROVAL W. Kupfer 3 Dec 63

MANNED SPACECRAFT CENTER
HOUSTON, TEXAS

INSULATOR PHOTOMASTER
RELAY MODULE
AGC DSKY, NAV&MAIN

CODE IDENT NO.
SIZE E
NASA DRAWING NO 1004163
SCALE 4/1
WT
SHEET 2 OF 2

1004163 E

INCHES
PHOTOGRAPHIC SCALE ONLY

NOTICE: WHEN GOVERNMENT DRAWINGS, SPECIFICATIONS, OR OTHER DATA ARE USED FOR ANY PURPOSE OTHER THAN IN CONNECTION WITH A DEFINITELY RELATED GOVERNMENT PROCUREMENT OPERATION, THE UNITED STATES GOVERNMENT THEREBY INCURS NO RESPONSIBILITY NOR ANY OBLIGATION WHATSOEVER; AND THE FACT THAT THE GOVERNMENT MAY HAVE FORMULATED, FURNISHED, OR IN ANY WAY SUPPLIED THE SAID DRAWINGS, SPECIFICATIONS, OR OTHER DATA IS NOT TO BE REGARDED BY IMPLICATION OR OTHERWISE AS IN ANY MANNER LICENSING THE HOLDER OR ANY OTHER PERSON OR CORPORATION, OR CONVEYING ANY RIGHTS OR PERMISSION TO MANUFACTURE, USE, OR SELL ANY PATENTED INVENTION THAT MAY IN ANY WAY BE RELATED THERETO.

REVISIONS 02918

SYM	DESCRIPTION	DATE	APPROVAL
C	REDRAWN WITHOUT CHANGE PER TDRR 04931	3 Dec 63	
D	REVISED PER TDRR 05394	27 Dec 63	
E	REVISED PER TDRR 06050	24 Jan 64	
F	REVISED PER TDRR 09347 DR CHK APPD	16 Nov 64	

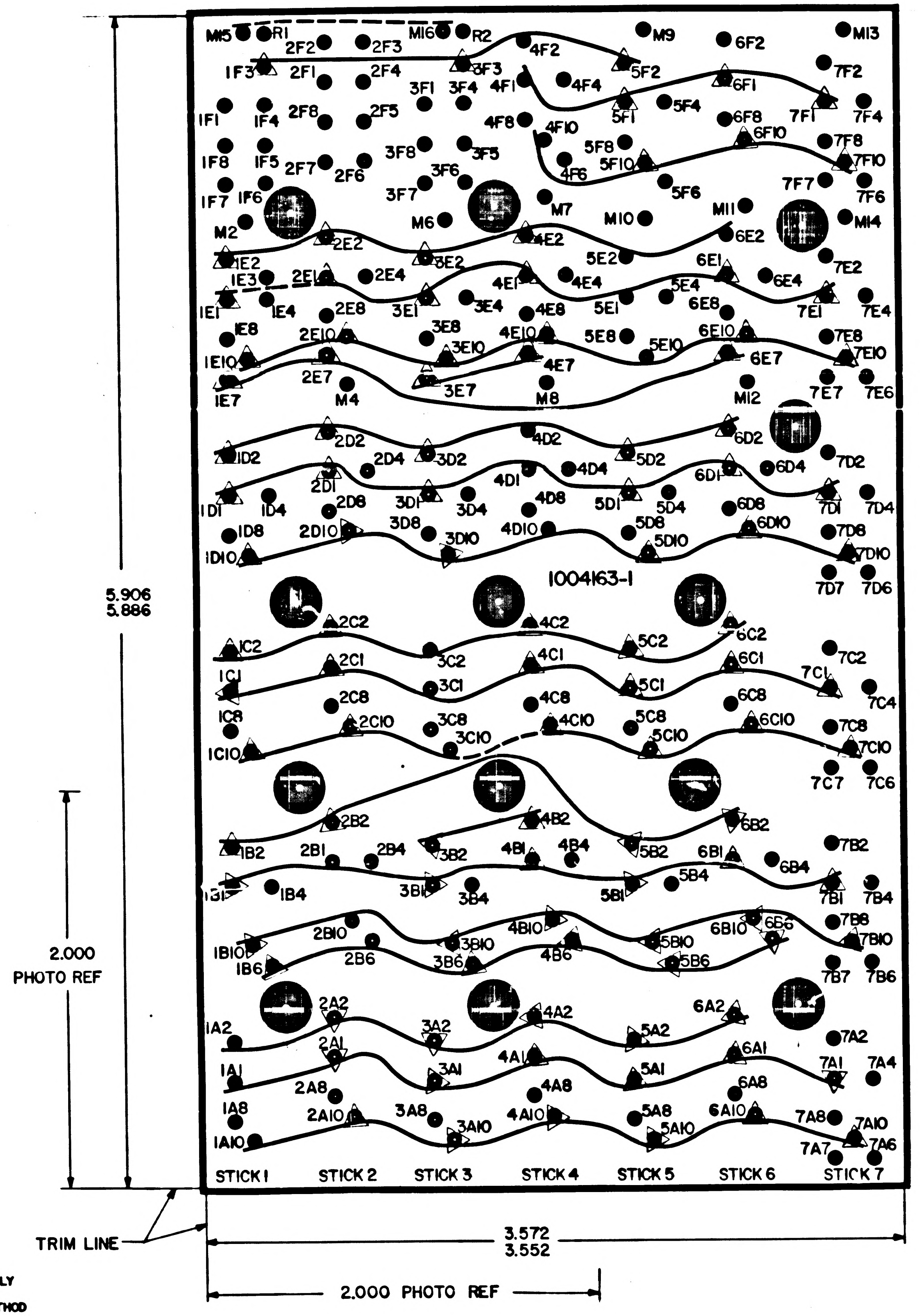

M15
R1
2F2
2F3
M16
R2
4F2
M9
6F2
M13
1F3
2F1
2F4
3F3
5F2
7F2
3F1
3F4
4F1
4F4
6F1
1F1
1F4
2F8
2F5
4F8
4F10
5F1
5F4
6F8
6F10
7F1
7F4
1F8
1F5
2F7
2F6
3F8
3F5
5F8
5F10
4F6
7F8
7F10
3F6
3F7
5F6
7F7
7F6
1F7
1F6
M7
M10
M11
M14
M2
M6
6E2
1E2
2E2
3E2
4E2
5E2
6E1
7E2
1E3
2E1
2E4
4E1
4E4
5E4
6E4
1E1
1E4
2E8
3E1
3E4
4E8
5E1
6E8
7E1
7E4
1E8
2E10
3E8
3E10
4E10
5E8
5E10
6E10
7E8
7E10
1E10
2E7
4E7
6E7
1E7
M4
3E7
M8
M12
7E7
7E6
2D2
4D2
6D2
1D2
2D4
3D2
5D2
6D4
7D2
2D1
4D1
4D4
6D1
1D1
1D4
2D8
3D1
3D4
4D8
5D1
5D4
6D8
7D1
7D4
1D8
2D10
3D8
3D10
4D10
5D8
5D10
6D10
7D8
7D10
1D10
1004163-1
7D7
7D6
2C2
4C2
5C2
6C2
1C2
3C2
7C2
1C1
2C1
3C1
4C1
5C1
6C1
7C1
2C8
4C8
6C8
7C4
1C8
2C10
3C8
4C10
5C8
5C10
6C10
7C8
1C10
3C10
7C10
7C7
7C6
2B2
4B2
6B2
1B2
2B1
2B4
3B2
4B1
4B4
5B2
6B1
6B4
7B2
1B1
1B4
3B1
3B4
5B1
5B4
7B1
7B4
2B10
4B10
6B10
6B6
7B8
1B10
3B10
5B10
7B10
1B6
2B6
3B6
4B6
5B6
7B7
7B6
2A2
4A2
6A2
1A2
3A2
5A2
7A2
2A1
4A1
6A1
7A1
7A4
1A1
3A1
5A1
2A8
4A8
6A8
1A8
2A10
3A8
4A10
5A8
6A10
7A8
7A10
1A10
3A10
5A10
7A7
7A6
STICK 1
STICK 2
STICK 3
STICK 4
STICK 5
STICK 6
STICK 7
5.906
5.886
2.000
PHOTO REF
TRIM LINE
3.572
3.552
2.000 PHOTO REF

Ⓒ REPLACES REV B WITHOUT CHANGE

NOTES:

1. MATERIAL: .006/.008 THICK PLASTIC SHEET, SENSITIZED, DIMENSIONALLY STABLE PER L-F 340 TYPE IB, CLASS 2, STYLE IA
2. THIS DRAWING OR REPRODUCTION MADE BY A PROCESS OR METHOD SHALL INSURE DIMENSIONAL STABILITY. DIMENSIONAL STABILITY SHALL NOT EXCEED .001 INCH PER FOOT
3. MAKE PHOTOGRAPHIC MASTER NEGATIVE AND POSITIVE FILMS TO DIMENSIONS SHOWN
4. CUT TO WITHIN .010 OF TRIM LINE
5. ● DENOTES .080/.084 DIA HOLE ALL OTHERS .240/.260 DIA
6. INTERPRET DRAWING IN ACCORDANCE WITH STANDARDS PRESCRIBED BY MIL-D-70327
7. △ INDICATES CUT LEAD AFTER WELDING
8. BROKEN LINE DENOTES SLEEVING

QTY REQD	PART OR IDENTIFYING NO.	NOMENCLATURE OR DESCRIPTION	FIND NO.

LIST OF MATERIALS

NEXT ASSY	USED ON
1003088	

APPLICATION

UNLESS OTHERWISE SPECIFIED DIMENSIONS ARE IN INCHES
TOLERANCES ON
FRACTIONS ± DECIMALS ± ANGLES ±
DO NOT SCALE THIS DRAWING
MATERIAL
HEAT TREATMENT
FINAL FINISH

MIT INSTRUMENTATION LAB
CAMBRIDGE MASS
DWG NO CONTRACT
DRAWN J.F. Walsh DATE
CHECKED
APPROVAL
APPROVAL E.J. Duggan 12-8-63
NASA APPROVAL
MIT APPROVAL

MANNED SPACECRAFT CENTER
HOUSTON, TEXAS

INSULATOR PHOTOMASTER
RELAY MODULE
AGC DSKY, NAV & MAIN

CODE IDENT NO. —— SIZE E NASA DRAWING NO 1004163
SCALE 4/1 WT SHEET 1 OF 2

NOTICE: WHEN GOVERNMENT DRAWINGS, SPECIFICATIONS, OR OTHER DATA ARE USED FOR ANY PURPOSE OTHER THAN IN CONNECTION WITH A DEFINITELY RELATED GOVERNMENT PROCUREMENT OPERATION, THE UNITED STATES GOVERNMENT THEREBY INCURS NO RESPONSIBILITY NOR ANY OBLIGATION WHATSOEVER; AND THE FACT THAT THE GOVERNMENT MAY HAVE FORMULATED, FURNISHED, OR IN ANY WAY SUPPLIED THE SAID DRAWINGS, SPECIFICATIONS, OR OTHER DATA IS NOT TO BE REGARDED BY IMPLICATION OR OTHERWISE AS IN ANY MANNER LICENSING THE HOLDER OR ANY OTHER PERSON OR CORPORATION, OR CONVEYING ANY RIGHTS OR PERMISSION TO MANUFACTURE, USE, OR SELL ANY PATENTED INVENTION THAT MAY IN ANY WAY BE RELATED THERETO.

REVISIONS 02418

	SY	DESCRIPTION	DATE	APPROVAL
①	C	REDRAWN WITHOUT CHANGE PER TDRR 04431	3 Dec 63	
④	D	REVISED PER TDRR 05394		
⑤	E	REVISED PER TDRR 06050		
	F	REVISED PER TDRR 07347 DR CHK APPD		

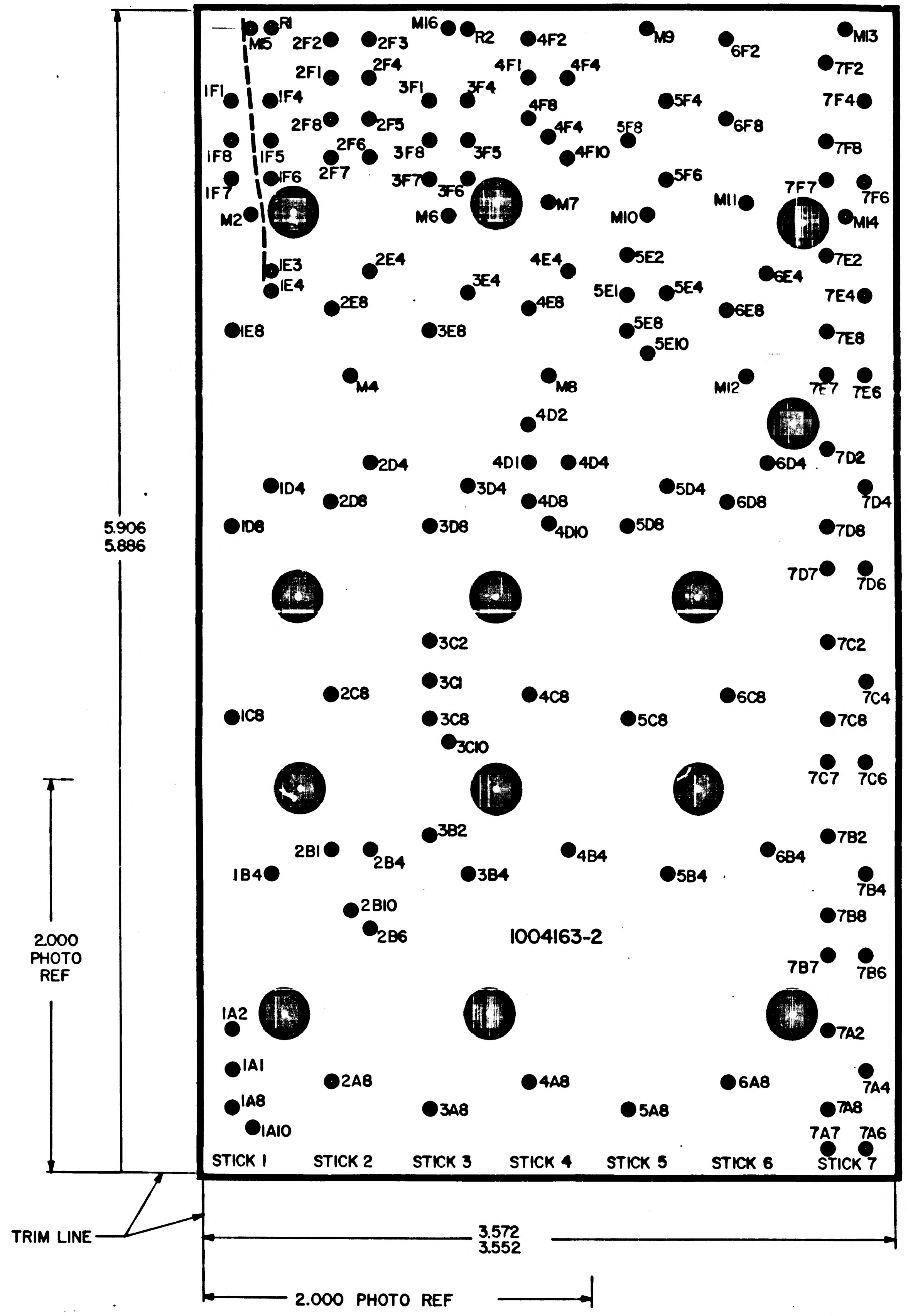
R1
M15
2F2
2F3
M16
R2
4F2
M9
6F2
M13
2F1
2F4
3F1
3F4
4F1
4F4
7F2
1F1
1F4
4F8
5F4
7F4
2F8
2F5
4F4
5F8
6F8
1F8
1F5
2F6
3F8
3F5
4F10
7F8
1F6
2F7
3F7
3F6
5F6
7F7
7F6
1F7
M2
M6
M7
M10
M11
M14
1E3
2E4
4E4
5E2
6E4
7E2
1E4
3E4
5E1
5E4
2E8
4E8
6E8
7E4
1E8
3E8
5E8
5E10
7E8
M4
M8
M12
7E7
7E6
4D2
2D4
4D1
4D4
6D4
7D2
1D4
3D4
5D4
7D4
2D8
4D8
6D8
1D8
3D8
5D8
4D10
7D8
7D7
7D6
3C2
7C2
3C1
2C8
4C8
6C8
7C4
1C8
3C8
5C8
7C8
3C10
7C7
7C6
3B2
7B2
2B1
2B4
4B4
6B4
1B4
3B4
5B4
7B4
2B10
7B8
2B6
1004163-2
7B7
7B6
1A2
7A2
1A1
2A8
4A8
6A8
7A4
1A8
3A8
5A8
7A8
1A10
7A7
7A6
STICK 1
STICK 2
STICK 3
STICK 4
STICK 5
STICK 6
STICK 7
5.906
5.886
2.000
PHOTO
REF
TRIM LINE
3.572
3.552
2.000 PHOTO REF

©REPLACES REV B WITHOUT CHANGE

1004163 F

QTY REQD	PART OR IDENTIFYING NO.	NOMENCLATURE OR DESCRIPTION	FIND NO

LIST OF MATERIALS

NEXT ASSY	USED ON
APPLICATION	

UNLESS OTHERWISE SPECIFIED
DIMENSIONS ARE IN INCHES
TOLERANCES ON
FRACTIONS ± DECIMALS ± ANGLES ±
DO NOT SCALE THIS DRAWING
MATERIAL
HEAT TREATMENT
FINAL FINISH

MIT
INSTRUMENTATION LAB
CAMBRIDGE MASS
DWG NO CONTRACT
DRAWN J.F. Walsh DATE 11/22/63
CHECKED
APPROVAL
APPROVAL
NASA APPROVAL
MIT APPROVAL 3 Dec 63

MANNED SPACECRAFT CENTER
HOUSTON, TEXAS

INSULATOR PHOTOMASTER
RELAY MODULE
AGC DSKY, NAV&MAIN

CODE IDENT NO. —— SIZE E NASA DRAWING NO. 1004163
SCALE 4/1 WT SHEET 2 OF 2

C	REDRAWN WITHOUT CHANGE PER TDRR C-431		
D	REVISED PER TDRR 05394		
E	REVISED PER TDRR 06050		
F	REVISED PER TDRR 07347 DR CHK APPD		
G	REPLACED BY REV H WITH CHANGE PER TDRR 08104 DR CHK R.E.E.		

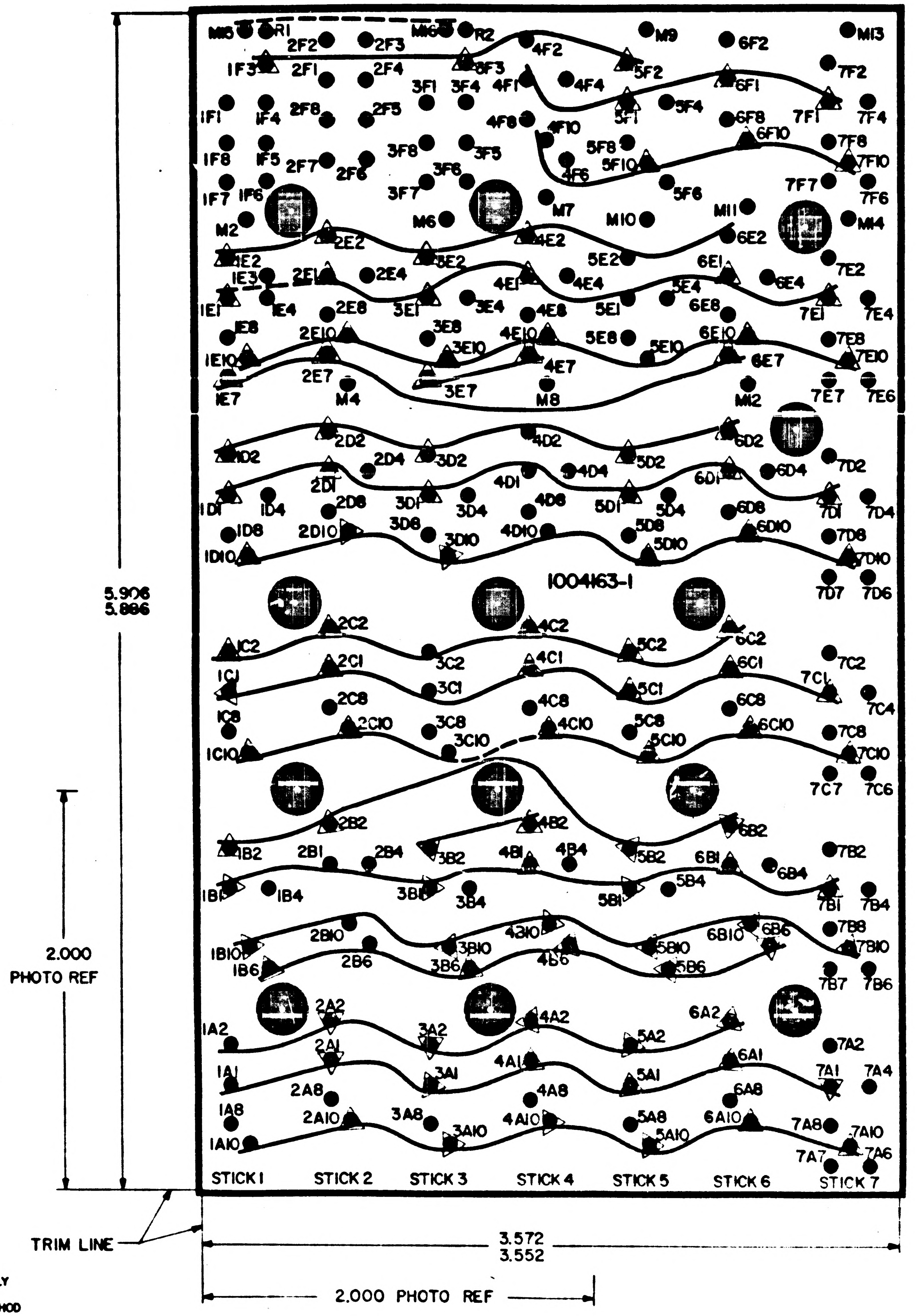

1004163-1
5.906
5.886
2.000
PHOTO REF
TRIM LINE
3.572
3.552
2.000 PHOTO REF
STICK 1
STICK 2
STICK 3
STICK 4
STICK 5
STICK 6
STICK 7

Ⓒ REPLACES REV B WITHOUT CHANGE

Ⓖ REPLACED BY REV H WITH CHANGE

NOTES:

1. MATERIAL .006/.008 THICK PLASTIC SHEET, SENSITIZED, DIMENSIONALLY STABLE PER L-F 340 TYPE IB, CLASS 2, STYLE IA
2. THIS DRAWING OR REPRODUCTION MADE BY A PROCESS OR METHOD SHALL INSURE DIMENSIONAL STABILITY. DIMENSIONAL STABILITY SHALL NOT EXCEED .001 INCH PER FOOT
3. MAKE PHOTOGRAPHIC MASTER NEGATIVE AND POSITIVE FILMS TO DIMENSIONS SHOWN
4. CUT TO WITHIN .010 OF TRIM LINE
5. ● DENOTES .080/.084 DIA HOLE ALL OTHERS .240/.260 DIA
6. INTERPRET DRAWING IN ACCORDANCE WITH STANDARDS PRESCRIBED BY MIL-D-70327
7. △ INDICATES CUT LEAD AFTER WELDING
8. BROKEN LINE DENOTES SLEEVING

1003098

M.I.T.
INSTRUMENTATION LAB

MANNED SPACECRAFT CENTER
HOUSTON, TEXAS

INSULATOR PHOTOMASTER
RELAY MODULE
AGC DSKY, NAV & MAIN

— E 1004163

4/1

SHEET 1 OF 2

REV	DESCRIPTION	DATE	APPROVAL
H	REDRAWN WITH CHANGE PER TDRR [illegible] DR [illegible] CHK [illegible]	[illegible]	

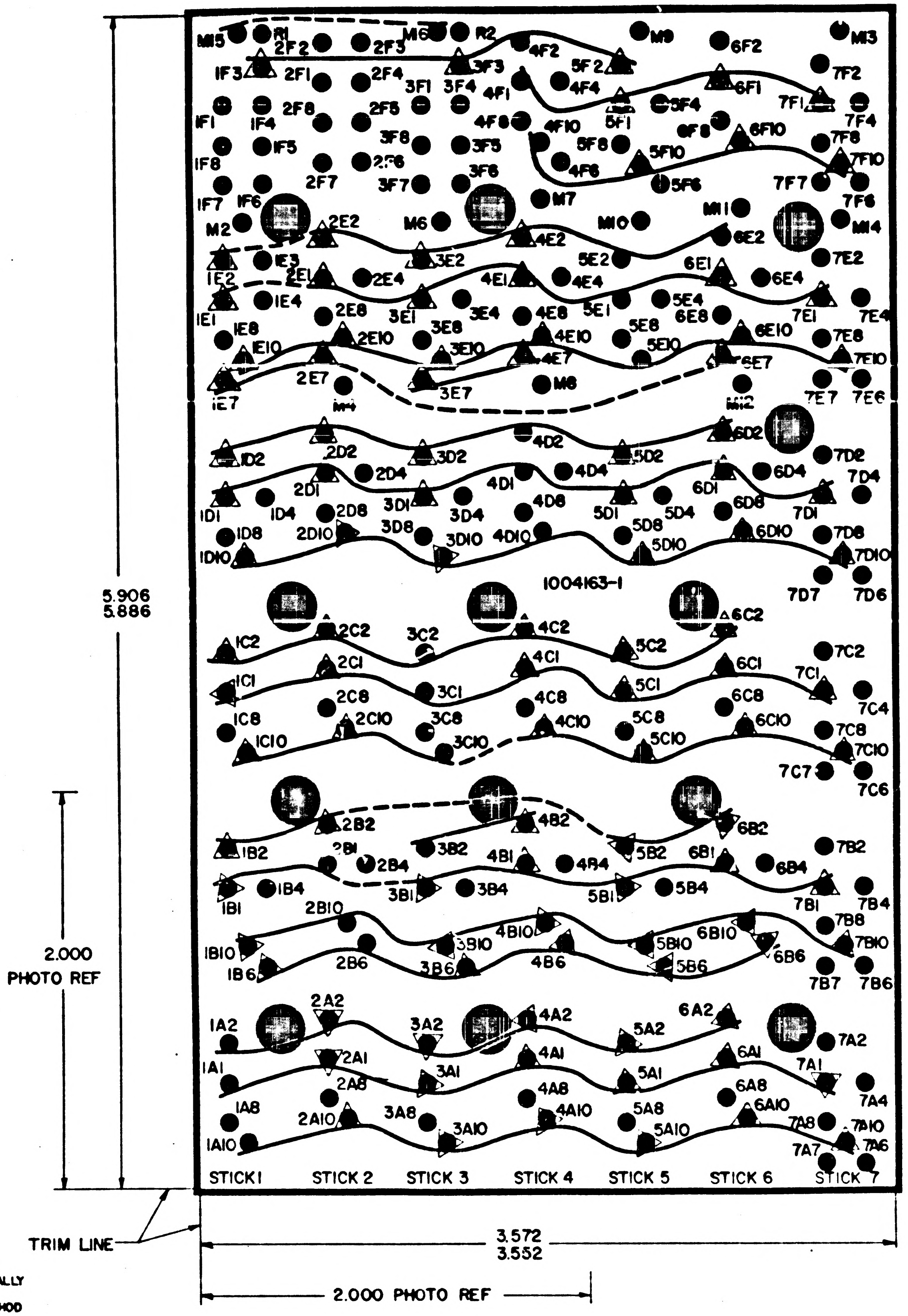

Ⓗ REPLACES REV G WITH CHANGE

NOTES:

1. MATERIAL .006/.008 THICK PLASTIC SHEET, SENSITIZED, DIMENSIONALLY STABLE PER L-F 340 TYPE IB, CLASS 2, STYLE IA
2. THIS DRAWING OR REPRODUCTION MADE BY A PROCESS OR METHOD SHALL INSURE DIMENSIONAL STABILITY. DIMENSIONAL STABILITY SHALL NOT EXCEED .001 INCH PER FOOT
3. MAKE PHOTOGRAPHIC MASTER NEGATIVE AND POSITIVE FILMS TO DIMENSIONS SHOWN
4. CUT TO WITHIN .010 OF TRIM LINE
5. ● DENOTES .080/.084 DIA HOLES ON -2 AND .102/.112 DIA HOLES ON -1, ALL OTHERS .240/.260 DIA
6. INTERPRET DRAWING IN ACCORDANCE WITH STANDARDS PRESCRIBED BY MIL-D-70327
7. △ INDICATES CUT LEAD AFTER WELDING
8. BROKEN LINE DENOTES SLEEVING

NEXT ASSY	1003098
USED ON	
APPLICATION	

UNLESS OTHERWISE SPECIFIED DIMENSIONS ARE IN INCHES
TOLERANCES ON FRACTIONS DECIMALS ANGLES
DO NOT SCALE THIS DRAWING
MATERIAL
HEAT TREATMENT
FINAL FINISH

M I T INSTRUMENTATION LAB
DRAWN
CHECKED
APPROVED
APPROVED
NASA APPROVAL
MIT APPROVAL

LIST OF MATERIALS

MANNED SPACECRAFT CENTER
HOUSTON, TEXAS

INSULATOR PHOTOMASTER
RELAY MODULE
AGC DSKY, NAV & MAIN

CODE IDENT NO —— SIZE E NASA DRAWING NO 1004163
SCALE 4/1 SHEET OF 2

	DESCRIPTION	DATE	APPROVAL
C	REDRAWN WITHOUT CHANGE PER TDRR 04431		
D	REVISED PER TDRR 05394		
E	REVISED PER TDRR 06050		
F	REVISED PER TDRR 07377 DR CHK		
H	REVISED PER TDRR 08104 DR CHK R.H.E.		

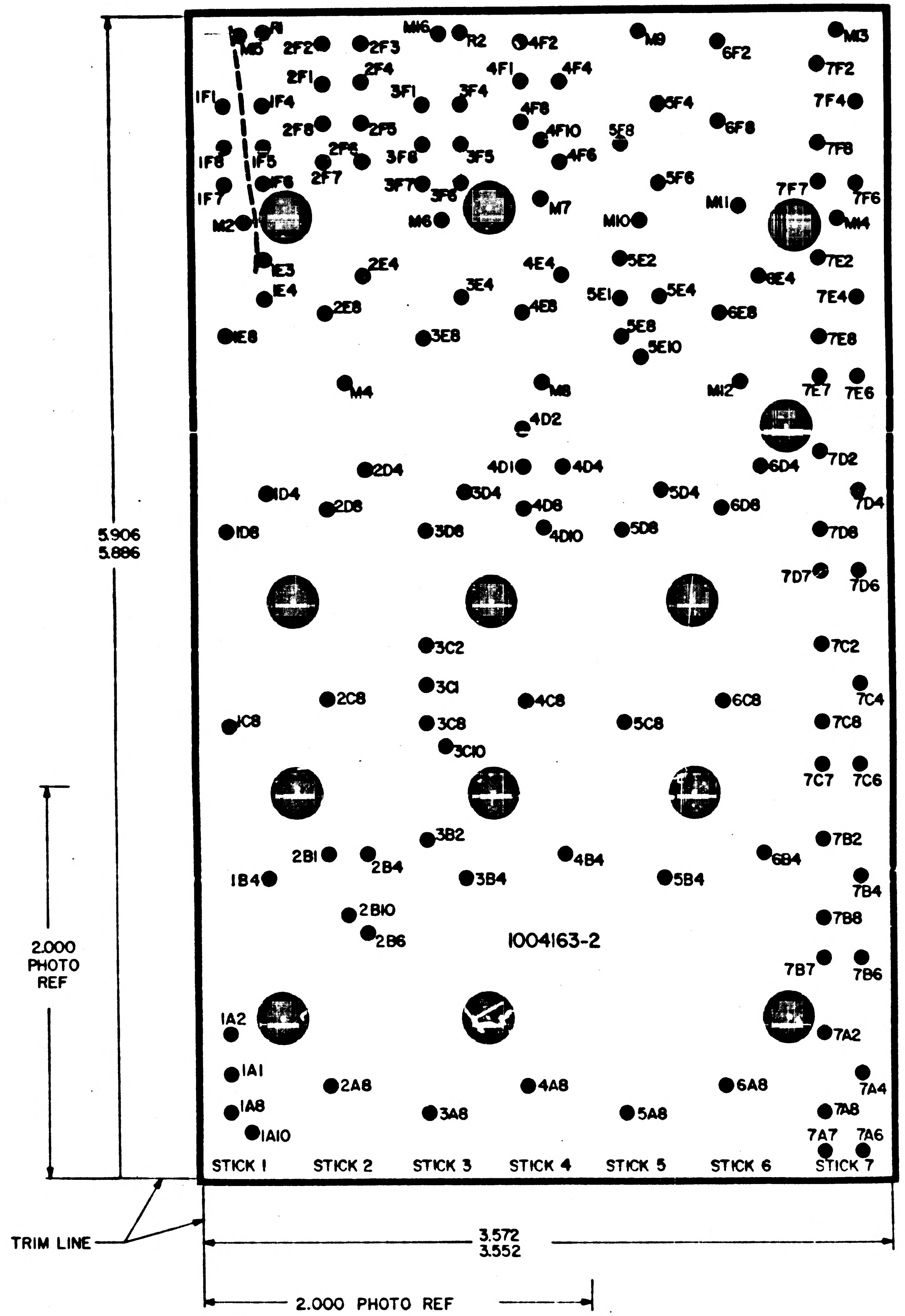

M5
R1
2F2
2F3
M16
R2
4F2
M9
6F2
M13
7F2
2F1
2F4
3F1
3F4
4F1
4F4
1F1
1F4
4F8
5F4
7F4
2F8
2F5
4F10
5F8
6F8
1F8
1F5
2F6
2F7
3F8
3F5
4F6
7F8
1F7
1F6
3F7
3F6
5F6
7F7
7F6
M2
M6
M7
M10
M11
M14
1E3
2E4
4E4
5E2
6E4
7E2
1E4
3E4
5E1
5E4
7E4
2E8
4E8
6E8
5E8
1E8
3E8
5E10
7E8
M4
M8
M12
7E7
7E6
4D2
7D2
2D4
4D1
4D4
6D4
1D4
3D4
5D4
7D4
2D8
4D8
6D8
1D8
3D8
4D10
5D8
7D8
7D7
7D6
3C2
7C2
3C1
7C4
2C8
4C8
6C8
1C8
3C8
5C8
7C8
3C10
7C7
7C6
3B2
7B2
2B1
2B4
4B4
6B4
1B4
3B4
5B4
7B4
2B10
7B8
2B6
1004163-2
7B7
7B6
1A2
7A2
1A1
7A4
2A8
4A8
6A8
1A8
3A8
5A8
7A8
1A10
7A7
7A6
STICK 1
STICK 2
STICK 3
STICK 4
STICK 5
STICK 6
STICK 7
5.906
5.886
2.000
PHOTO
REF
TRIM LINE
3.572
3.552
2.000 PHOTO REF

Ⓒ REPLACES REV B WITHOUT CHANGE

MIT
INSTRUMENTATION LAB

MANNED SPACECRAFT CENTER

INSULATOR PHOTOMASTER
RELAY MODULE
AGC DSKY, NAV&MAIN

E 1004163

4/1

SHEET 2 OF 2

SYM	DESCRIPTION	DATE	APPROVAL
—	CLASS A RELEASE PER TDRR 02918	9/6/63	

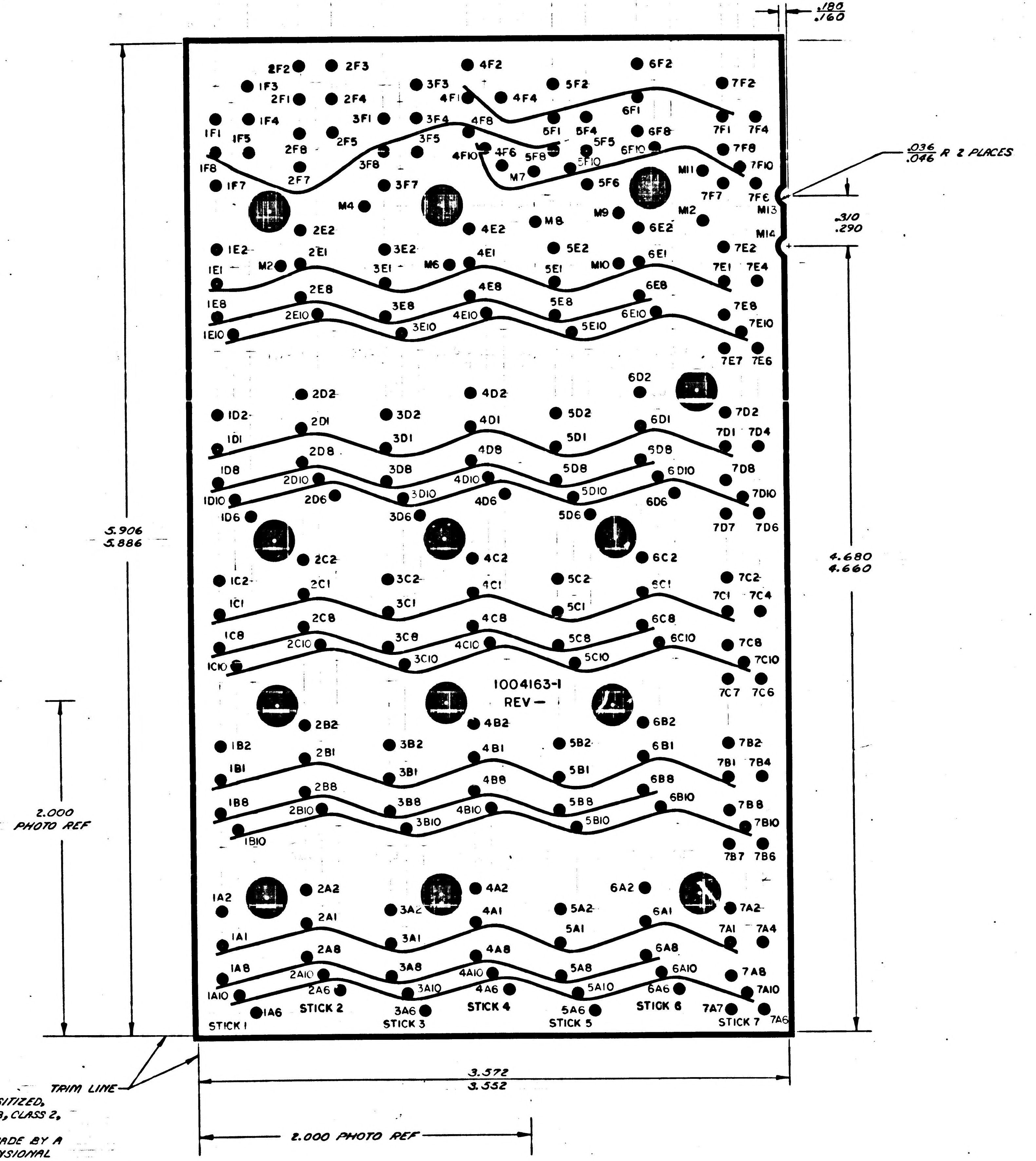
.180
.160
.036
.046 R 2 PLACES
.310
.290
5.906
5.886
4.680
4.660
2.000
PHOTO REF
1004163-1
REV —
STICK 1
STICK 2
STICK 3
STICK 4
STICK 5
STICK 6
STICK 7
TRIM LINE
3.572
3.552
2.000 PHOTO REF

NOTES

1. MATL: .006/.008 THICK PLASTIC SHEET, SENSITIZED, DIMENSIONALLY STABLE PER L-F-340 TYPE IB, CLASS 2, STYLE IA
2. THIS DRAWING OR REPRODUCTION MADE BY A PROCESS OR METHOD SHALL INSURE DIMENSIONAL STABILITY. DIMENSIONAL STABILITY SHALL NOT EXCEED .001 INCH PER FOOT
3. MAKE PHOTOGRAPHIC MASTER NEGATIVE AND POSITIVE FILMS TO DIMENSIONS SHOWN
4. CUT TO WITHIN .010 OF TRIM LINE
5. ● DENOTES .080/.084 DIA HOLE ALL OTHERS .240/.260 DIA
6. INTERPRET DRAWING IN ACCORDANCE WITH STANDARDS PRESCRIBED BY MIL-D-70327

—	—
SHEET 1	SHEET 2

REVISION STATUS OF SHEETS

MASTER

QTY REQD	PART OR IDENTIFYING NO.	NOMENCLATURE OR DESCRIPTION	FIND NO.

LIST OF MATERIALS

1003098	
NEXT ASSY	USED ON

APPLICATION

UNLESS OTHERWISE SPECIFIED DIMENSIONS ARE IN INCHES
TOLERANCES ON
FRACTIONS ± DECIMALS ± ANGLES ±
DO NOT SCALE THIS DRAWING
MATERIAL
HEAT TREATMENT
FINAL FINISH

MIT
INSTRUMENTATION LAB
CAMBRIDGE MASS
DWG NO
CONTRACT
DRAWN J.A. Zeffini DATE 22 AUG 63
CHECKED R.E. Bynch 26 Aug 63
APPROVAL Sherman 26 Aug 63
APPROVAL C. Hall 5 Sept 63
NASA APPROVAL
MIT APPROVAL
MIT APPROVAL 9/5/63

MANNED SPACECRAFT CENTER
HOUSTON, TEXAS

INSULATOR
PHOTOGRAPHIC MASTER
AGC KEYBOARD RELAY MODULE

CODE IDENT NO. —
SIZE E
NASA DRAWING NO. 1004163
SCALE 4/1
WT —
SHEET 1 OF 2

INCHES
0 1 2
PHOTOGRAPHIC SCALE ONLY

NOTICE — WHEN GOVERNMENT DRAWINGS, SPECIFICATIONS, OR OTHER DATA ARE USED FOR ANY PURPOSE OTHER THAN IN CONNECTION WITH A DEFINITELY RELATED GOVERNMENT PROCUREMENT OPERATION, THE UNITED STATES GOVERNMENT THEREBY INCURS NO RESPONSIBILITY NOR ANY OBLIGATION WHATSOEVER; AND THE FACT THAT THE GOVERNMENT MAY HAVE FORMULATED, FURNISHED, OR IN ANY WAY SUPPLIED THE SAID DRAWINGS, SPECIFICATIONS, OR OTHER DATA IS NOT TO BE REGARDED BY IMPLICATION OR OTHERWISE AS IN ANY MANNER LICENSING THE HOLDER OR ANY OTHER PERSON OR CORPORATION, OR CONVEYING ANY RIGHTS OR PERMISSION TO MANUFACTURE, USE, OR SELL ANY PATENTED INVENTION THAT MAY IN ANY WAY BE RELATED THERETO.

REVISIONS			
SYM	DESCRIPTION	DATE	APPROVAL
—	CLASS A RELEASE PER TDRR 02918	9/5/63	Dw

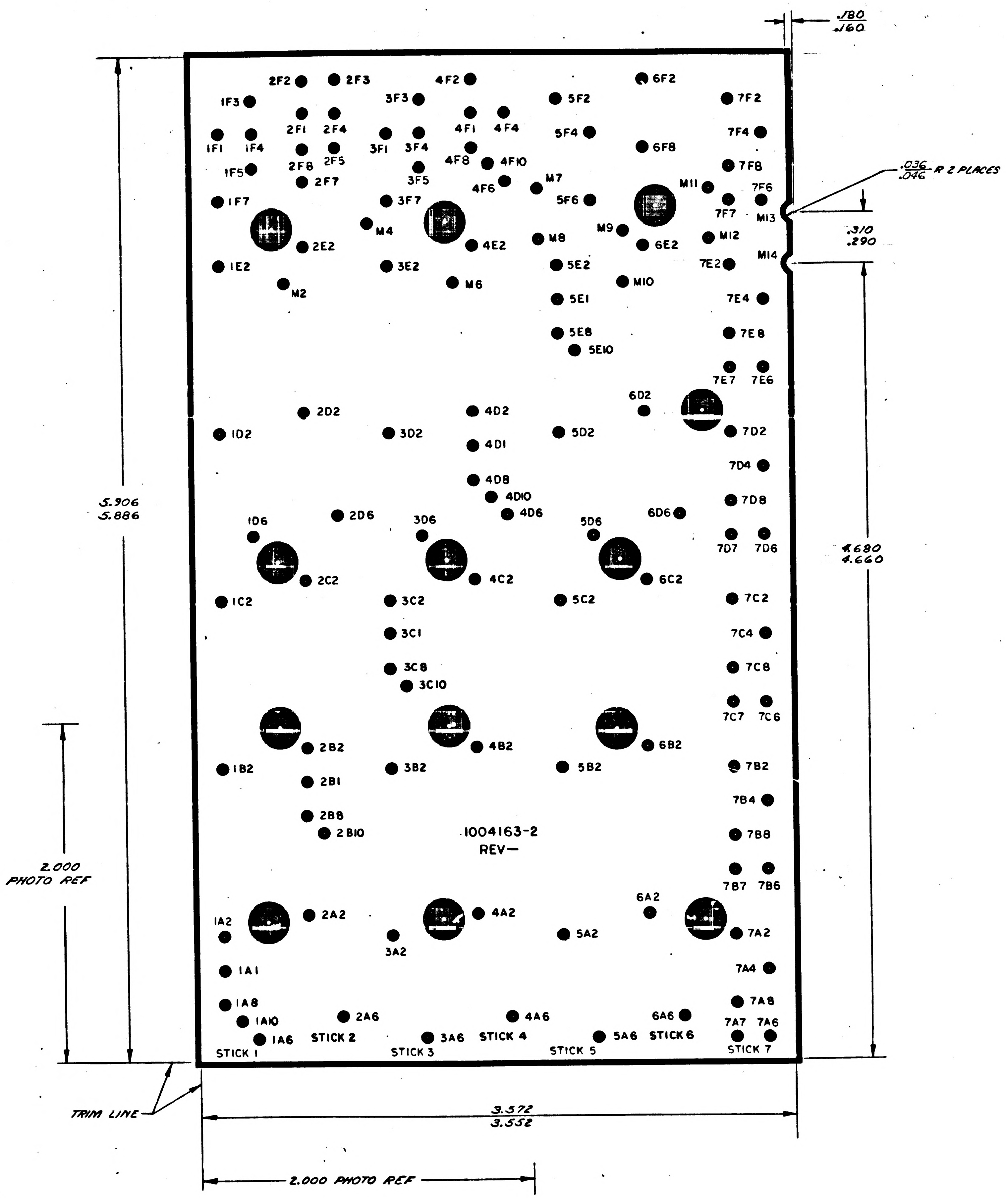

.180
.160
.036
.046
R 2 PLACES
.310
.290
5.906
5.886
4.680
4.660
2.000
PHOTO REF
TRIM LINE
3.572
3.552
2.000 PHOTO REF
1004163-2
REV—
1F3
1F1
1F4
1F5
1F7
2F2
2F3
2F1
2F4
2F8
2F5
2F7
3F3
3F1
3F4
3F5
3F7
4F2
4F1
4F4
4F8
4F10
4F6
5F2
5F4
5F6
6F2
6F8
7F2
7F4
7F8
7F6
7F7
M2
M4
M6
M7
M8
M9
M10
M11
M12
M13
M14
1E2
2E2
3E2
4E2
5E2
5E1
5E8
5E10
6E2
7E2
7E4
7E8
7E7
7E6
1D2
2D2
3D2
4D2
4D1
4D8
4D10
4D6
5D2
6D2
7D2
7D4
7D8
7D7
7D6
1D6
2D6
3D6
5D6
6D6
1C2
2C2
3C2
3C1
3C8
3C10
4C2
5C2
6C2
7C2
7C4
7C8
7C7
7C6
1B2
2B2
2B1
2B8
2B10
3B2
4B2
5B2
6B2
7B2
7B4
7B8
7B7
7B6
1A2
1A1
1A8
1A10
1A6
2A2
2A6
3A2
3A6
4A2
4A6
5A2
5A6
6A2
6A6
7A2
7A4
7A8
7A7
7A6
STICK 1
STICK 2
STICK 3
STICK 4
STICK 5
STICK 6
STICK 7

MASTER

QTY REQD	PART OR IDENTIFYING NO.	NOMENCLATURE OR DESCRIPTION	FIND NO.

LIST OF MATERIALS

NEXT ASSY	USED ON
APPLICATION	

UNLESS OTHERWISE SPECIFIED
DIMENSIONS ARE IN INCHES
TOLERANCES ON
FRACTIONS ± DECIMALS ± ANGLES ±
DO NOT SCALE THIS DRAWING
MATERIAL
HEAT TREATMENT
FINAL FINISH

MIT
INSTRUMENTATION LAB
CAMBRIDGE, MASS
DWG. NO.
CONTRACT

DRAWN J. A. Zaffini DATE 22 AUG 63
CHECKED 26 Aug 63
APPROVAL 21 Aug 63
APPROVAL C. Hall 5 Sep 63

NASA APPROVAL 9/5/63
MIT APPROVAL
MIT APPROVAL 9/5/63

MANNED SPACECRAFT CENTER
HOUSTON, TEXAS

INSULATOR
PHOTOGRAPHIC MASTER
AGC KEYBOARD RELAY MODULE

CODE IDENT NO. ——
SIZE E
NASA DRAWING NO. 1004163
SCALE 4/1
WT
SHEET 2 OF 2

1004163

INCHES
0 1 2
PHOTOGRAPHIC SCALE ONLY

REVISIONS			
SYM	DESCRIPTION	DATE	APPROVAL

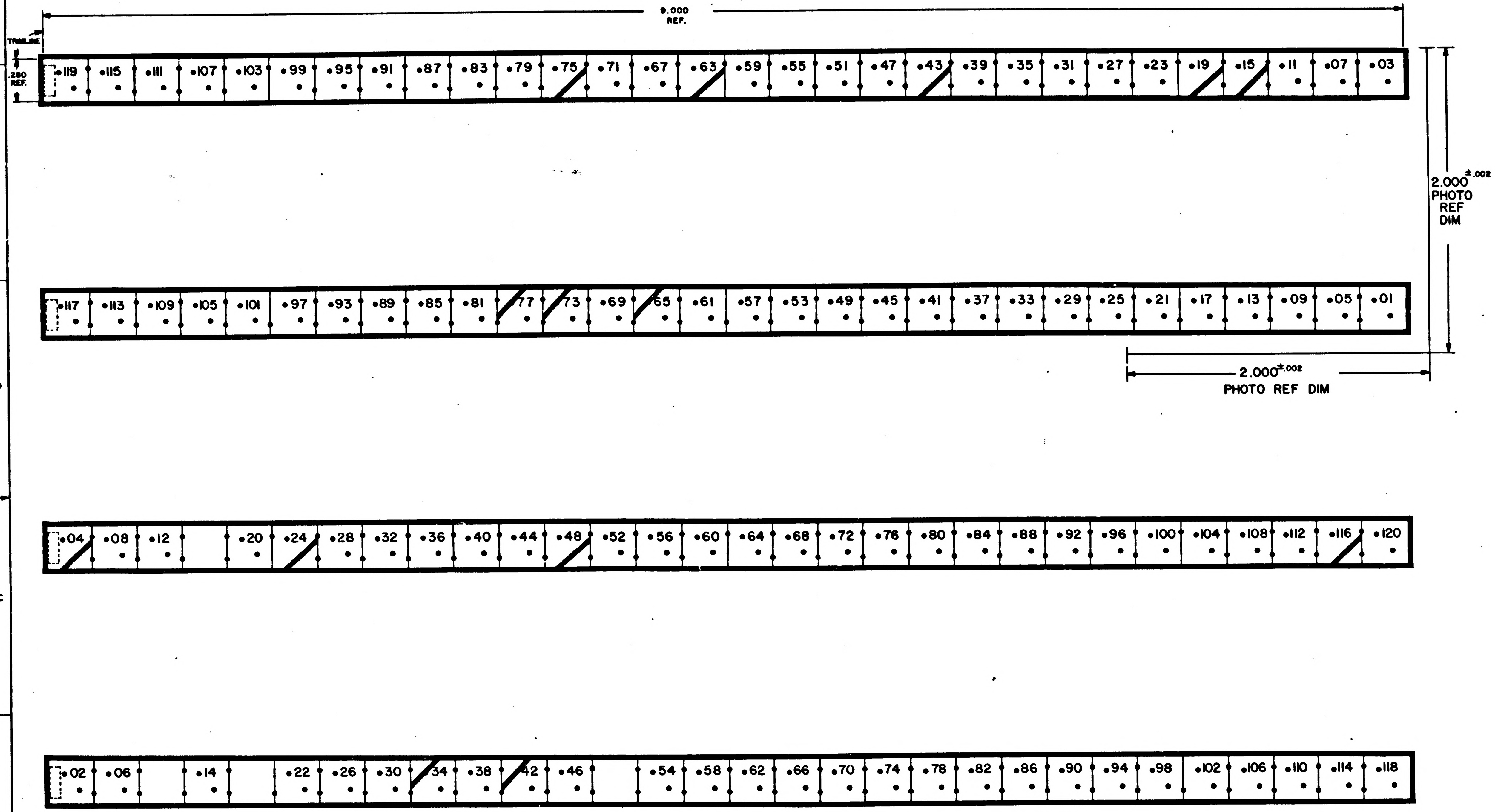
9.000 REF.
TRIMLINE
.280 REF.
119 115 111 107 103 99 95 91 87 83 79 75 71 67 63 59 55 51 47 43 39 35 31 27 23 19 15 11 07 03
2.000 ±.002 PHOTO REF DIM
117 113 109 105 101 97 93 89 85 81 77 73 69 65 61 57 53 49 45 41 37 33 29 25 21 17 13 09 05 01
2.000 ±.002 PHOTO REF DIM
04 08 12 20 24 28 32 36 40 44 48 52 56 60 64 68 72 76 80 84 88 92 96 100 104 108 112 116 120
02 06 14 22 26 30 34 38 42 46 54 58 62 66 70 74 78 82 86 90 94 98 102 106 110 114 118

NOTES:

1. INTERPRET DRAWING IN ACCORDANCE WITH STANDARDS PRESCRIBED BY MIL-D-70327
2. ORIGINAL OF THIS DRAWING OR REPRODUCTION MADE BY PROCESS OR METHOD SHALL INSURE DIMENSIONAL STABILITY. DIMENSIONAL VARIATIONS SHALL NOT EXCEED .001 INCH PER INCH
3. MAKE MASTER PATTERN POSITIVE FILMS TO DIMENSIONS SHOWN
4. CUT TO WITHIN .010 OF TRIMLINE
5. MATERIAL: .006/.008 THICK PLASTIC SHEETS, SENSITIZED, DIMENSIONALLY STABLE PER L-F-340, TYPE IB, CLASS 2, STYLE IA

6. ● PUNCH HOLES TO .04C DIAMETER

REF. DWG.
1. WIRING DIAGRAM 1006120

QTY REQD	PART OR IDENTIFYING NO	NOMENCLATURE OR DESCRIPTION	FIND NO
LIST OF MATERIALS			

NEXT ASSY	USED ON
APPLICATION	

UNLESS OTHERWISE SPECIFIED DIMENSIONS ARE IN INCHES
TOLERANCES ON
FRACTIONS ± — DECIMALS ±.006 ANGLES ± —
DO NOT SCALE THIS DRAWING
MATERIAL SEE NOTE 5
HEAT TREATMENT —
FINAL FINISH —

MIT INSTRUMENTATION LAB
CAMBRIDGE MASS
DRAWN [illegible] DATE 2/26/63
CHECKED [illegible] 4-6-63
APPROVAL [illegible] 4 JUNE
APPROVAL [illegible] 4 Jun 63
NASA APPROVAL W. J. Rhine 6-5-63
MIT APPROVAL [illegible] 6/5/63

MANNED SPACECRAFT CENTER
HOUSTON TEXAS

IDENTIFICATION TAPE
LOGIC MODULE NO.

CODE IDENT NO
SIZE E
NASA DRAWING NO 1004170
SCALE 4/1
WT
SHEET 1 OF 1

NOTICE – WHEN GOVERNMENT DRAWINGS, SPECIFICATIONS, OR OTHER DATA ARE USED FOR ANY PURPOSE OTHER THAN IN CONNECTION WITH A DEFINITELY RELATED GOVERNMENT PROCUREMENT OPERATION, THE UNITED STATES GOVERNMENT THEREBY INCURS NO RESPONSIBILITY NOR ANY OBLIGATION WHATSOEVER, AND THE FACT THAT THE GOVERNMENT MAY HAVE FORMULATED, FURNISHED, OR IN ANY WAY SUPPLIED THE SAID DRAWINGS, SPECIFICATIONS OR OTHER DATA IS NOT TO BE REGARDED BY IMPLICATION OR OTHERWISE AS IN ANY MANNER LICENSING THE HOLDER OR ANY OTHER PERSON OR CORPORATION, OR CONVEYING ANY RIGHTS OR PERMISSION TO MANUFACTURE, USE, OR SELL ANY PATENTED INVENTION THAT MAY IN ANY WAY BE RELATED THERETO

REVISIONS TRR 61811			
SYM	DESCRIPTION 7-2/63	DATE	APPROVAL
A	REVISED PER TDRR 03122	7-12-63	

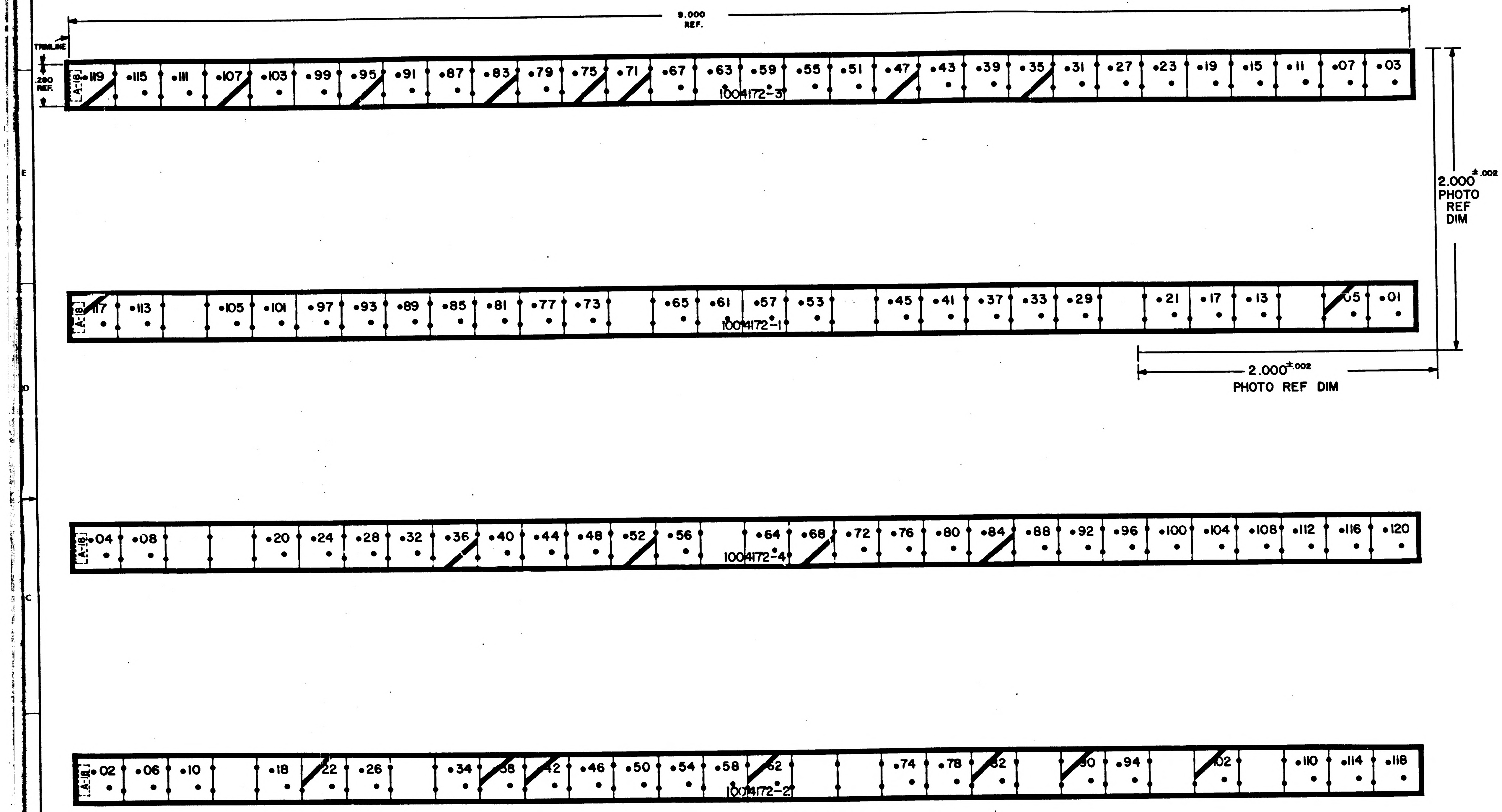
9.000 REF.
TRIMLINE
.280 REF.
A-18
•119 •115 •111 •107 •103 •99 •95 •91 •87 •83 •79 •75 •71 •67 •63 •59 •55 •51 •47 •43 •39 •35 •31 •27 •23 •19 •15 •11 •07 •03
1004172-3
•117 •113 •105 •101 •97 •93 •89 •85 •81 •77 •73 •65 •61 •57 •53 •45 •41 •37 •33 •29 •21 •17 •13 05 •01
1004172-1
2.000±.002 PHOTO REF DIM
2.000±.002 PHOTO REF DIM
•04 •08 •20 •24 •28 •32 •36 •40 •44 •48 •52 •56 •64 •68 •72 •76 •80 •84 •88 •92 •96 •100 •104 •108 •112 •116 •120
1004172-4
•02 •06 •10 •18 22 •26 •34 38 42 •46 •50 •54 •58 62 •74 •78 82 90 •94 102 •110 •114 •118
1004172-2

REFERENCE DWG.
L WIRING DIAGRAM 1006122

NOTES:
1. INTERPRET DRAWING IN ACCORDANCE WITH STANDARDS PRESCRIBED BY MIL-D-70327
2. ORIGINAL OF THIS DRAWING OR REPRODUCTION MADE BY PROCESS OR METHOD SHALL INSURE DIMENSIONAL STABILITY. DIMENSIONAL VARIATIONS SHALL NOT EXCEED .001 INCH PER INCH
3. MAKE MASTER PATTERN POSITIVE FILMS TO DIMENSIONS SHOWN
4. CUT TO WITHIN .010 OF TRIMLINE
5. MATERIAL: .006/.008 THICK PLASTIC SHEETS, SENSITIZED, DIMENSIONALLY STABLE PER L-F-340, TYPE IB, CLASS 2, STYLE IA
6. • PUNCH HOLES TO .040 DIAMETER

QTY REQD	PART OR IDENTIFYING NO	NOMENCLATURE OR DESCRIPTION	FIND NO
LIST OF MATERIALS			

NEXT ASSY	USED ON	UNLESS OTHERWISE SPECIFIED DIMENSIONS ARE IN INCHES TOLERANCES ON FRACTIONS ± — DECIMALS ±.005 ANGLES ± —	MIT INSTRUMENTATION LAB Cambridge Mass	MANNED SPACECRAFT CENTER HOUSTON, TEXAS
APPLICATION		DO NOT SCALE THIS DRAWING	DRAWN DATE 6-26-62 CHECKED APPROVAL W B Turner APPROVAL	IDENTIFICATION TAPE LOGIC MODULE NO. A-18
		MATERIAL SEE NOTE 5	NASA APPROVAL 7/16/62	CODE IDENT NO — SIZE E — NASA DRAWING NO. 1004172
		HEAT TREATMENT —		
		FINAL FINISH —	MIT APPROVAL 7/12/61	SCALE 4/1 — WT — SHEET 1 OF 1

1004172 A

INCHES
0
PHOTOGRAPHIC SCALE ONLY

NOTICE — WHEN GOVERNMENT DRAWINGS SPECIFICATIONS OR OTHER DATA ARE USED FOR ANY PURPOSE OTHER THAN IN CONNECTION WITH A DEFINITELY RELATED GOVERNMENT PROCUREMENT OPERATION THE UNITED STATES GOVERNMENT THEREBY INCURS NO RESPONSIBILITY NOR ANY OBLIGATION WHATSOEVER AND THE FACT THAT THE GOVERNMENT MAY HAVE FORMULATED FURNISHED OR IN ANY WAY SUPPLIED THE SAID DRAWINGS SPECIFICATIONS OR OTHER DATA IS NOT TO BE REGARDED BY IMPLICATION OR OTHERWISE AS IN ANY MANNER LICENSING THE HOLDER OR ANY OTHER PERSON OR CORPORATION OR CONVEYING ANY RIGHTS OR PERMISSION TO MANUFACTURE USE OR SELL ANY PATENTED INVENTION THAT MAY IN ANY WAY BE RELATED THERETO

REVISIONS 6/8/11			
SYM	DESCRIPTION 7/2/63	DATE	APPROVAL

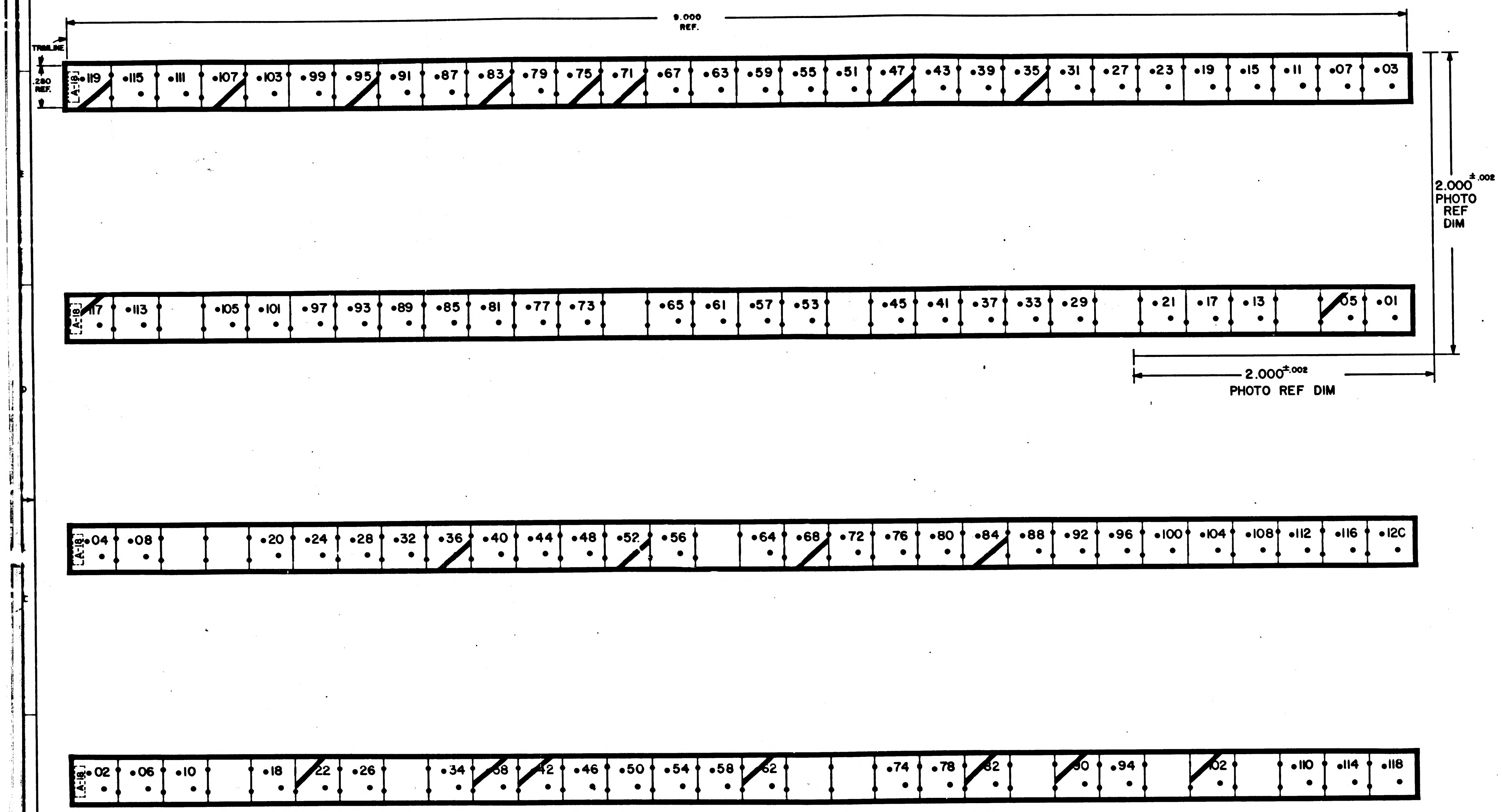
9.000
REF.
TRIMLINE
.280
REF.
A-18
•119
•115
•111
•107
•103
•99
•95
•91
•87
•83
•79
•75
•71
•67
•63
•59
•55
•51
•47
•43
•39
•35
•31
•27
•23
•19
•15
•11
•07
•03
2.000 ±.002
PHOTO
REF
DIM
A-18
117
•113
•105
•101
•97
•93
•89
•85
•81
•77
•73
•65
•61
•57
•53
•45
•41
•37
•33
•29
•21
•17
•13
05
•01
2.000 ±.002
PHOTO REF DIM
A-18
•04
•08
•20
•24
•28
•32
•36
•40
•44
•48
•52
•56
•64
•68
•72
•76
•80
•84
•88
•92
•96
•100
•104
•108
•112
•116
•120
A-18
•02
•06
•10
•18
22
•26
•34
38
42
•46
•50
•54
•58
62
•74
•78
82
90
•94
102
•110
•114
•118

REFERENCE DWG.
L WIRING DIAGRAM 1006122

NOTES:
1. INTERPRET DRAWING IN ACCORDANCE WITH STANDARDS PRESCRIBED BY MIL-D-70327
2. ORIGINAL OF THIS DRAWING OR REPRODUCTION MADE BY PROCESS OR METHOD SHALL INSURE DIMENSIONAL STABILITY. DIMENSIONAL VARIATIONS SHALL NOT EXCEED .001 INCH PER INCH
3. MAKE MASTER PATTERN POSITIVE FILMS TO DIMENSIONS SHOWN
4. CUT TO WITHIN .010 OF TRIMLINE
5. MATERIAL: .006/.008 THICK PLASTIC SHEETS, SENSITIZED, DIMENSIONALLY STABLE PER L-F-340, TYPE IB, CLASS 2, STYLE 1A

6. ● PUNCH HOLES TO .040 DIAMETER

QTY REQD	PART OR IDENTIFYING NO	NOMENCLATURE OR DESCRIPTION	FIND NO

LIST OF MATERIALS

NEXT ASSY | USED ON
APPLICATION

UNLESS OTHERWISE SPECIFIED
DIMENSIONS ARE IN INCHES
TOLERANCES ON
FRACTIONS ± — DECIMALS ±.005 ANGLES ± —
DO NOT SCALE THIS DRAWING
MATERIAL
SEE NOTE 5
HEAT TREATMENT —
FINAL FINISH —

M I T
INSTRUMENTATION LAB
CAMBRIDGE MASS
DWG NO | CONTRACT
DRAWN DATE 6-26-63
CHECKED 6/26/63
APPROVAL W B Turner
APPROVAL
NASA APPROVAL 7/2/63
MIT APPROVAL 7/2/63

MANNED SPACECRAFT CENTER
HOUSTON, TEXAS

IDENTIFICATION TAPE
LOGIC MODULE NO. A-18

CODE IDENT NO | SIZE E | NASA DRAWING NO. 1004172
SCALE 4/1 | WT | SHEET 1 OF 1

1004172

INCHES
PHOTOGRAPHIC SCALE ONLY

NOTICE - WHEN GOVERNMENT DRAWINGS, SPECIFICATIONS, OR OTHER DATA ARE USED FOR ANY PURPOSE OTHER THAN IN CONNECTION WITH A DEFINITELY RELATED GOVERNMENT PROCUREMENT OPERATION, THE UNITED STATES GOVERNMENT THEREBY INCURS NO RESPONSIBILITY NOR ANY OBLIGATION WHATSOEVER; AND THE FACT THAT THE GOVERNMENT MAY HAVE FORMULATED, FURNISHED, OR IN ANY WAY SUPPLIED THE SAID DRAWINGS, SPECIFICATIONS, OR OTHER DATA IS NOT TO BE REGARDED BY IMPLICATION OR OTHERWISE AS IN ANY MANNER LICENSING THE HOLDER OR ANY OTHER PERSON OR CORPORATION, OR CONVEYING ANY RIGHTS OR PERMISSION TO MANUFACTURE, USE, OR SELL ANY PATENTED INVENTION THAT MAY IN ANY WAY BE RELATED THERETO.

REVISIONS C1749			
SYM	DESCRIPTION	DATE	APPROVAL

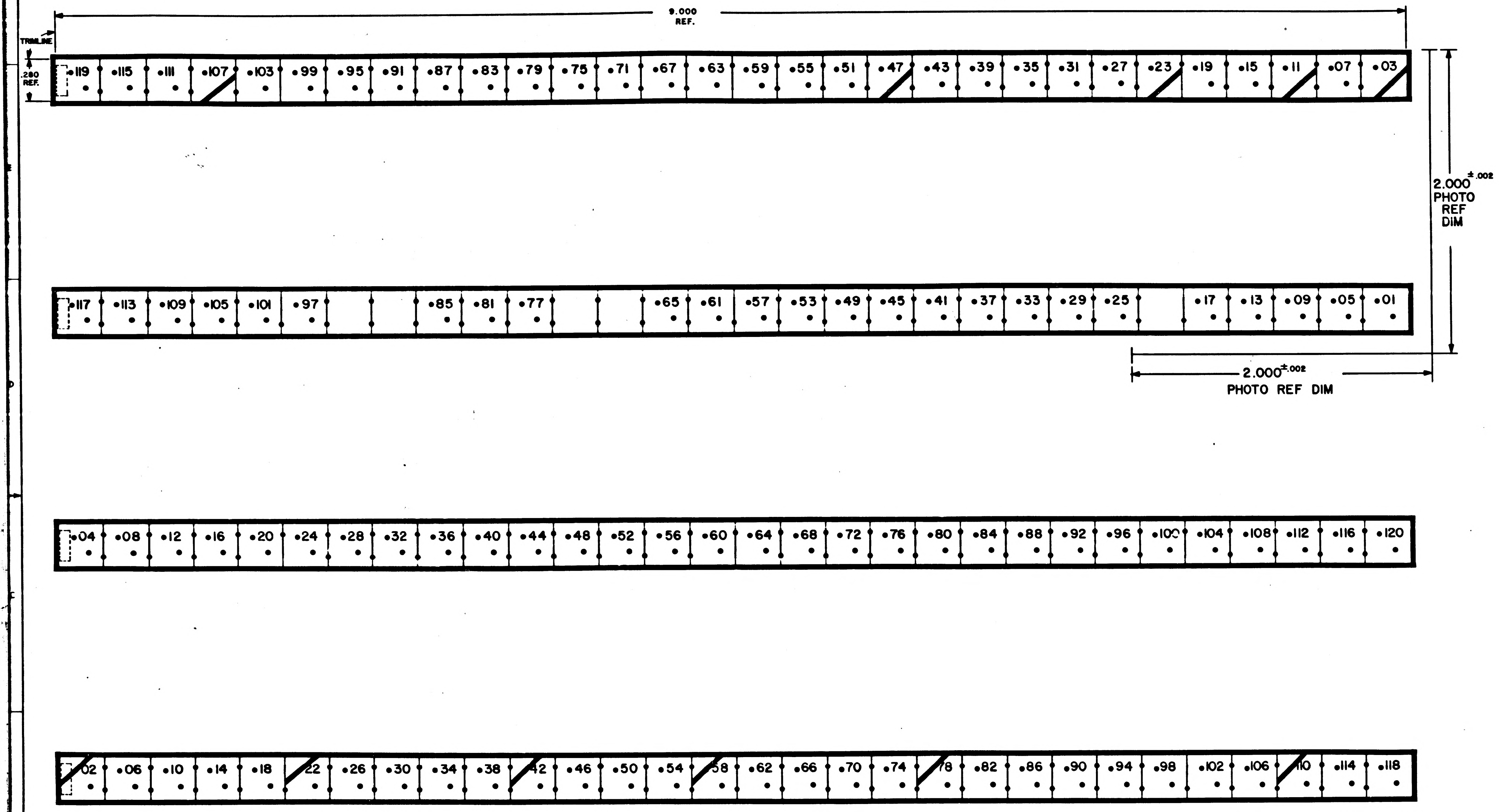
9.000
REF.
TRIMLINE
.280
REF.
•119 •115 •111 •107 •103 •99 •95 •91 •87 •83 •79 •75 •71 •67 •63 •59 •55 •51 •47 •43 •39 •35 •31 •27 •23 •19 •15 •11 •07 •03
2.000 ±.002
PHOTO
REF
DIM
•117 •113 •109 •105 •101 •97 •85 •81 •77 •65 •61 •57 •53 •49 •45 •41 •37 •33 •29 •25 •17 •13 •09 •05 •01
2.000 ±.002
PHOTO REF DIM
•04 •08 •12 •16 •20 •24 •28 •32 •36 •40 •44 •48 •52 •56 •60 •64 •68 •72 •76 •80 •84 •88 •92 •96 •100 •104 •108 •112 •116 •120
02 •06 •10 •14 •18 22 •26 •30 •34 •38 42 •46 •50 •54 58 •62 •66 •70 •74 78 •82 •86 •90 •94 •98 •102 •106 110 •114 •118

REFERENCE DWG.
1. WIRING DIAGRAM 1006123

NOTES:
1. INTERPRET DRAWING IN ACCORDANCE WITH STANDARDS PRESCRIBED BY MIL-D-70327
2. ORIGINAL OF THIS DRAWING OR REPRODUCTION MADE BY PROCESS OR METHOD SHALL INSURE DIMENSIONAL STABILITY. DIMENSIONAL VARIATIONS SHALL NOT EXCEED .001 INCH PER INCH
3. MAKE MASTER PATTERN POSITIVE FILMS TO DIMENSIONS SHOWN
4. CUT TO WITHIN .010 OF TRIMLINE
5. MATERIAL: .006/.008 THICK PLASTIC SHEETS, SENSITIZED, DIMENSIONALLY STABLE PER L-F-340, TYPE IB, CLASS 2, STYLE IA

6. ● PUNCH HOLES TO .040 DIAMETER

MASTER

QTY REQD	PART OR IDENTIFYING NO	NOMENCLATURE OR DESCRIPTION	FIND NO

LIST OF MATERIALS

NEXT ASSY	USED ON
APPLICATION	

UNLESS OTHERWISE SPECIFIED
DIMENSIONS ARE IN INCHES
TOLERANCES ON
FRACTIONS ± — DECIMALS ±.005 ANGLES ± —
DO NOT SCALE THIS DRAWING
MATERIAL SEE NOTE 5
HEAT TREATMENT —
FINAL FINISH —

M I T
INSTRUMENTATION LAB
CAMBRIDGE MASS
DWG NO CONTRACT
DRAWN L.T. BICKLEY DATE
CHECKED 25 Jun 63
APPROVAL W.S. Turner 26 Jun 63
APPROVAL 6/23/63
NASA APPROVAL W.J. Rhine 6-26-63
MIT APPROVAL W. Kopp 26 Jun 63

MANNED SPACECRAFT CENTER
HOUSTON, TEXAS

IDENTIFICATION TAPE
LOGIC MODULE NO.A17

CODE IDENT NO. | SIZE E | NASA DRAWING NO 1004173
SCALE 4/1 | WT | SHEET 1 OF 1

1004173

INCHES
PHOTOGRAPHIC SCALE ONLY

NOTICE — WHEN GOVERNMENT DRAWINGS, SPECIFICATIONS, OR OTHER DATA ARE USED FOR ANY PURPOSE OTHER THAN IN CONNECTION WITH A DEFINITELY RELATED GOVERNMENT PROCUREMENT OPERATION, THE UNITED STATES GOVERNMENT THEREBY INCURS NO RESPONSIBILITY NOR ANY OBLIGATION WHATSOEVER; AND THE FACT THAT THE GOVERNMENT MAY HAVE FORMULATED, FURNISHED, OR IN ANY WAY SUPPLIED THE SAID DRAWINGS, SPECIFICATIONS, OR OTHER DATA IS NOT TO BE REGARDED BY IMPLICATION OR OTHERWISE AS IN ANY MANNER LICENSING THE HOLDER OR ANY OTHER PERSON OR CORPORATION, OR CONVEYING ANY RIGHTS OR PERMISSION TO MANUFACTURE, USE, OR SELL ANY PATENTED INVENTION THAT MAY IN ANY WAY BE RELATED THERETO.

REVISIONS TPR 62694			
SYM	DESCRIPTION	DATE	APPROVAL

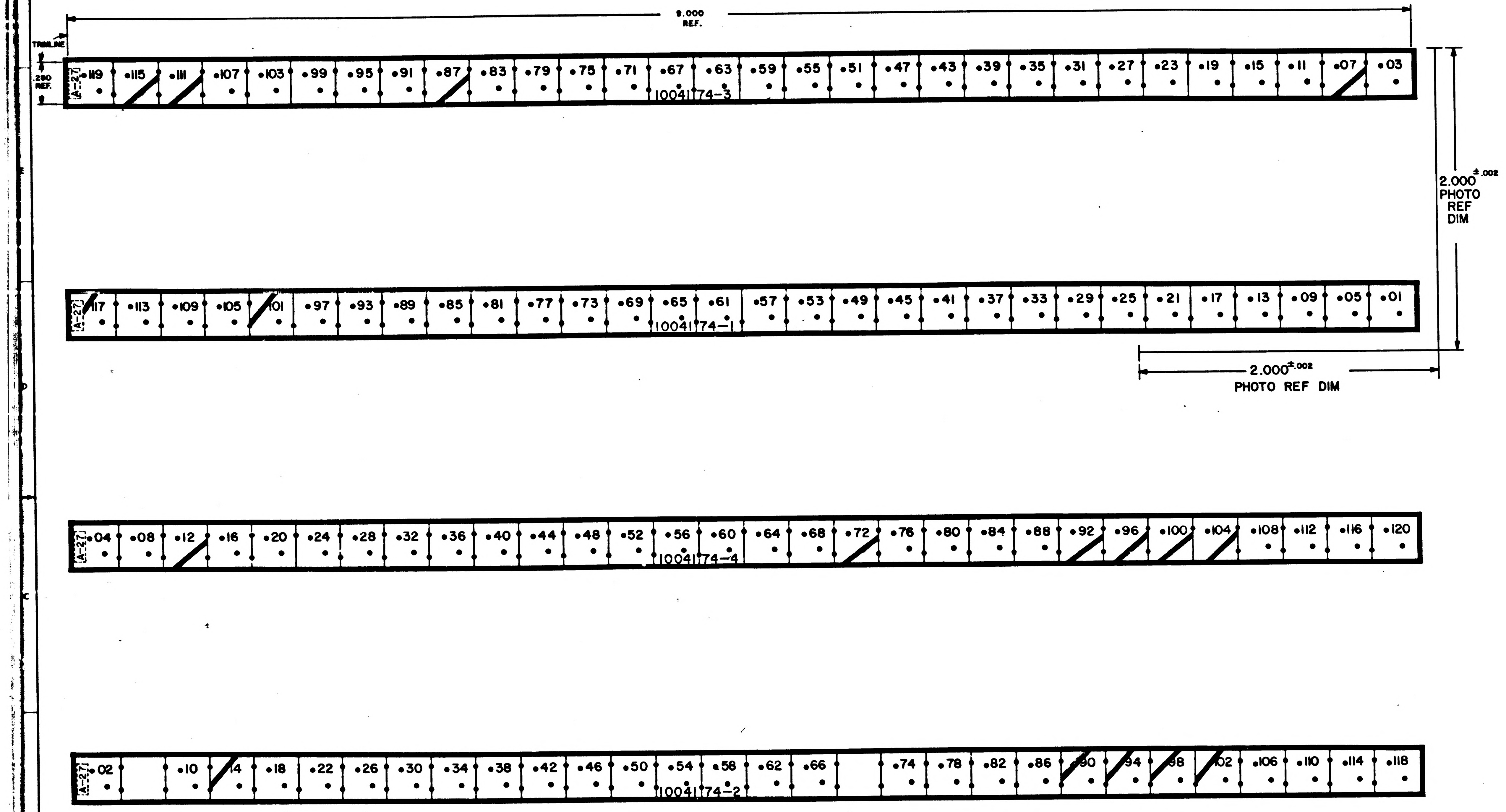
9.000
REF.
TRIMLINE
.280
REF.
A-27
119
115
111
107
103
99
95
91
87
83
79
75
71
67
63
59
55
51
47
43
39
35
31
27
23
19
15
11
07
03
1004174-3
2.000 ±.002
PHOTO
REF
DIM
A-27
117
113
109
105
101
97
93
89
85
81
77
73
69
65
61
57
53
49
45
41
37
33
29
25
21
17
13
09
05
01
1004174-1
2.000 ±.002
PHOTO REF DIM
A-27
04
08
12
16
20
24
28
32
36
40
44
48
52
56
60
64
68
72
76
80
84
88
92
96
100
104
108
112
116
120
1004174-4
A-27
02
10
14
18
22
26
30
34
38
42
46
50
54
58
62
66
74
78
82
86
90
94
98
102
106
110
114
118
1004174-2

REFERENCE DWG.
1. WIRING DIAGRAM 1006124

NOTES:
1. INTERPRET DRAWING IN ACCORDANCE WITH STANDARDS PRESCRIBED BY MIL-D-70327
2. ORIGINAL OF THIS DRAWING OR REPRODUCTION MADE BY PROCESS OR METHOD SHALL INSURE DIMENSIONAL STABILITY. DIMENSIONAL VARIATIONS SHALL NOT EXCEED .001 INCH PER INCH
3. MAKE MASTER PATTERN POSITIVE FILMS TO DIMENSIONS SHOWN
4. CUT TO WITHIN .010 OF TRIMLINE
5. MATERIAL: .006/.008 THICK PLASTIC SHEETS, SENSITIZED, DIMENSIONALLY STABLE PER L-F-340, TYPE II, CLASS 2, STYLE IA
6. ● PUNCH HOLES TO .040 DIAMETER

QTY REQD	PART OR IDENTIFYING NO	NOMENCLATURE OR DESCRIPTION	FIND NO

LIST OF MATERIALS

NEXT ASSY	USED ON

APPLICATION

UNLESS OTHERWISE SPECIFIED
DIMENSIONS ARE IN INCHES
TOLERANCES ON
FRACTIONS ± — DECIMALS ±.005 ANGLES ± —
DO NOT SCALE THIS DRAWING
MATERIAL
SEE NOTE 5
HEAT TREATMENT —
FINAL FINISH —

MIT
INSTRUMENTATION LAB
CAMBRIDGE MASS
DWG NO
CONTRACT
DRAWN [illegible] DATE [illegible]
CHECKED [illegible]
APPROVAL W. J. Turner 20 Aug 63
APPROVAL [illegible] 21 Aug 63
NASA APPROVAL [illegible]
MIT APPROVAL [illegible] 8/21/63

MANNED SPACECRAFT CENTER
HOUSTON, TEXAS

IDENTIFICATION TAPE
LOGIC MODULE NO. A-27

CODE IDENT NO.
SIZE E
NASA DRAWING NO. 1004174
SCALE 4/1
WT
SHEET 1 OF 1

1004174

INCHES
0 1 2
PHOTOGRAPHIC SCALE ONLY

NOTICE — WHEN GOVERNMENT DRAWINGS, SPECIFICATIONS, OR OTHER DATA ARE USED FOR ANY PURPOSE OTHER THAN IN CONNECTION WITH A DEFINITELY RELATED GOVERNMENT PROCUREMENT OPERATION, THE UNITED STATES GOVERNMENT THEREBY INCURS NO RESPONSIBILITY NOR ANY OBLIGATION WHATSOEVER, AND THE FACT THAT THE GOVERNMENT MAY HAVE FORMULATED, FURNISHED, OR IN ANY WAY SUPPLIED THE SAID DRAWINGS, SPECIFICATIONS OR OTHER DATA IS NOT TO BE REGARDED BY IMPLICATION OR OTHERWISE AS IN ANY MANNER LICENSING THE HOLDER OR ANY OTHER PERSON OR CORPORATION, OR CONVEYING ANY RIGHTS OR PERMISSION TO MANUFACTURE, USE OR SELL ANY PATENTED INVENTION THAT MAY IN ANY WAY BE RELATED THERETO.

REVISIONS 02545			
SYM	DESCRIPTION	DATE	APPROVAL

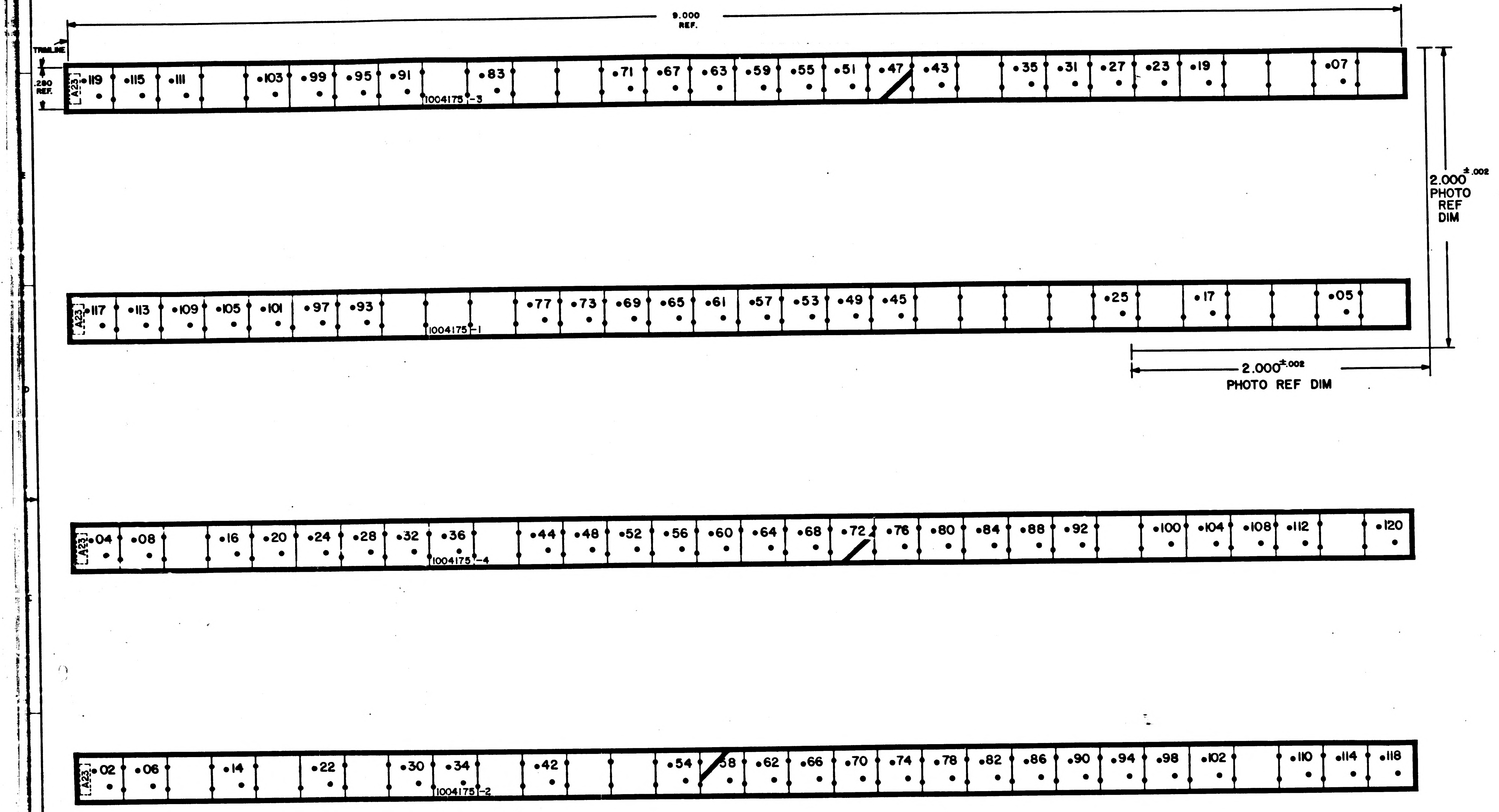
9.000
REF.
TRIMLINE
.280
REF.
A23
119
115
111
103
99
95
91
83
1004175-3
71
67
63
59
55
51
47
43
35
31
27
23
19
07
2.000 ±.002
PHOTO
REF
DIM
A23
117
113
109
105
101
97
93
1004175-1
77
73
69
65
61
57
53
49
45
25
17
05
2.000 ±.002
PHOTO REF DIM
A23
04
08
16
20
24
28
32
36
1004175-4
44
48
52
56
60
64
68
72
76
80
84
88
92
100
104
108
112
120
A23
02
06
14
22
30
34
1004175-2
42
54
58
62
66
70
74
78
82
86
90
94
98
102
110
114
118

NOTES:

1. INTERPRET DRAWING IN ACCORDANCE WITH STANDARDS PRESCRIBED BY MIL-D-70327
2. ORIGINAL OF THIS DRAWING OR REPRODUCTION MADE BY PROCESS OR METHOD SHALL INSURE DIMENSIONAL STABILITY. DIMENSIONAL VARIATIONS SHALL NOT EXCEED .001 INCH PER INCH
3. MAKE MASTER PATTERN POSITIVE FILMS TO DIMENSIONS SHOWN
4. CUT TO WITHIN .010 OF TRIMLINE
5. MATERIAL: .006/.008 THICK PLASTIC SHEETS, SENSITIZED, DIMENSIONALLY STABLE PER L-F-340, TYPE IB, CLASS 2, STYLE IA

6. ● PUNCH HOLES TO .040 DIAMETER

REFERENCE DWG.
1. WIRING DIAGRAM 1006125

QTY REQD	PART OR IDENTIFYING NO	NOMENCLATURE OR DESCRIPTION	FIND NO
1	1004175-4	IDENTIFICATION TAPE	4
1	1004175-3	IDENTIFICATION TAPE	3
1	1004175-2	IDENTIFICATION TAPE	2
1	1004175-1	IDENTIFICATION TAPE	1

LIST OF MATERIALS

NEXT ASSY	USED ON

APPLICATION

UNLESS OTHERWISE SPECIFIED DIMENSIONS ARE IN INCHES
TOLERANCES ON
FRACTIONS ± — DECIMALS ±.005 ANGLES ± —
DO NOT SCALE THIS DRAWING
MATERIAL SEE NOTE 5
HEAT TREATMENT —
FINAL FINISH —

MIT INSTRUMENTATION LAB
CAMBRIDGE MASS
DWG NO CONTRACT
DRAWN Q. Dumpels DATE
CHECKED
APPROVAL W.B. Tyson 2 Aug 63
APPROVAL
NASA APPROVAL Jack Barnard
MIT APPROVAL W. Kupfer 14 Aug 63

MANNED SPACECRAFT CENTER
HOUSTON, TEXAS

IDENTIFICATION TAPE
LOGIC MODULE NO. A23

CODE IDENT NO.
SIZE E
NASA DRAWING NO. 1004175
SCALE 4/1
WT
SHEET 1 OF 1

1004175

MASTER

INCHES
0 1 2
PHOTOGRAPHIC SCALE ONLY

NOTICE - WHEN GOVERNMENT DRAWINGS, SPECIFICATIONS, OR OTHER DATA ARE USED FOR ANY PURPOSE OTHER THAN IN CONNECTION WITH A DEFINITELY RELATED GOVERNMENT PROCUREMENT OPERATION, THE UNITED STATES GOVERNMENT THEREBY INCURS NO RESPONSIBILITY NOR ANY OBLIGATION WHATSOEVER; AND THE FACT THAT THE GOVERNMENT MAY HAVE FORMULATED, FURNISHED, OR IN ANY WAY SUPPLIED THE SAID DRAWINGS, SPECIFICATIONS, OR OTHER DATA IS NOT TO BE REGARDED BY IMPLICATION OR OTHERWISE AS IN ANY MANNER LICENSING THE HOLDER OR ANY OTHER PERSON OR CORPORATION, OR CONVEYING ANY RIGHTS OR PERMISSION TO MANUFACTURE, USE, OR SELL ANY PATENTED INVENTION THAT MAY IN ANY WAY BE RELATED THERETO.

REVISIONS			
SYM	DESCRIPTION	DATE	APPROVAL

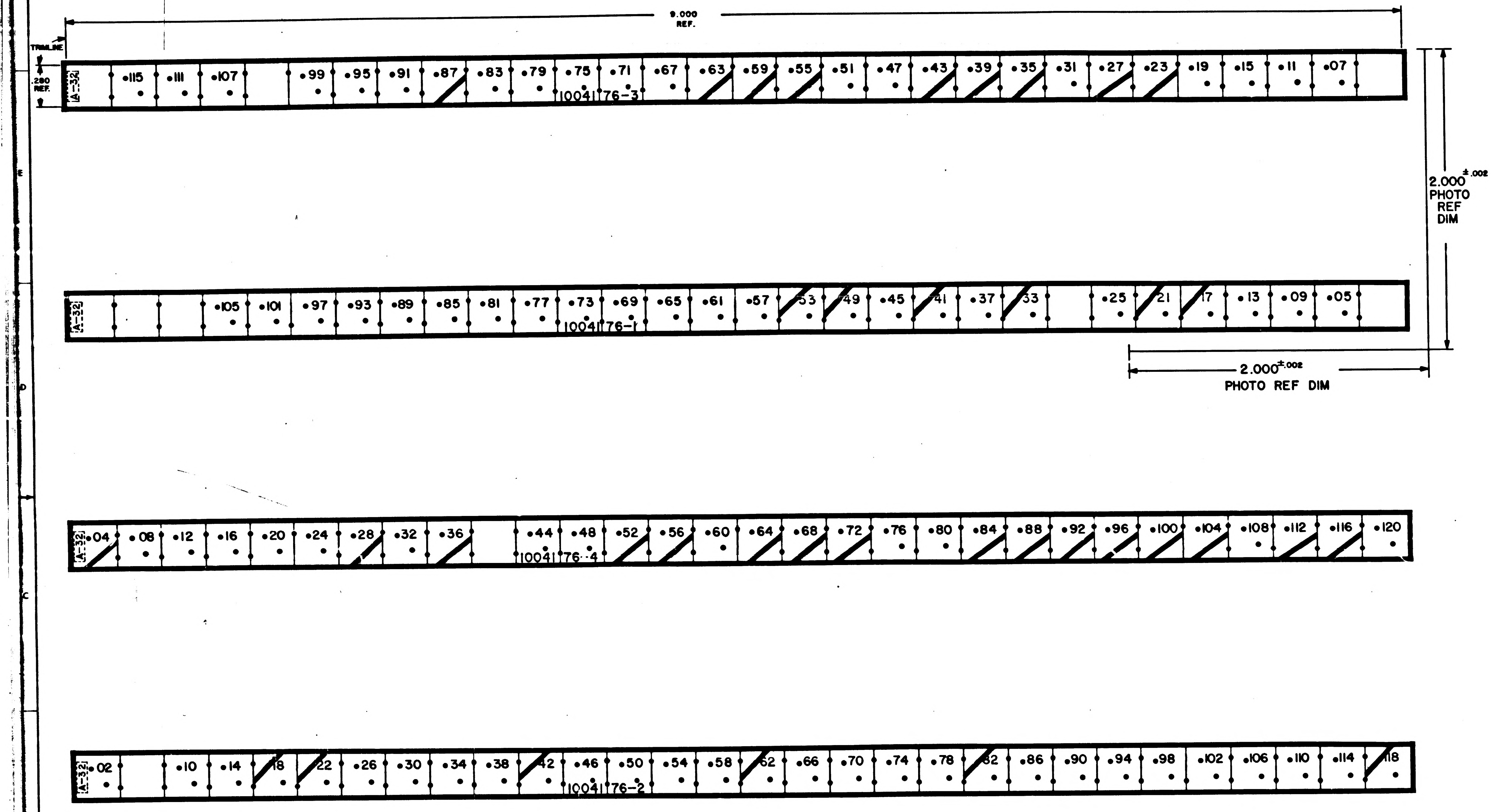
9.000
REF.
TRIMLINE
.290
REF.
A-32 •115 •111 •107 •99 •95 •91 •87 •83 •79 •75 •71 •67 •63 •59 •55 •51 •47 •43 •39 •35 •31 •27 •23 •19 •15 •11 •07
1004176-3
2.000 ±.002
PHOTO
REF
DIM
A-32 •105 •101 •97 •93 •89 •85 •81 •77 •73 •69 •65 •61 •57 •53 •49 •45 •41 •37 •33 •25 •21 •17 •13 •09 •05
1004176-1
2.000 ±.002
PHOTO REF DIM
A-32 •04 •08 •12 •16 •20 •24 •28 •32 •36 •44 •48 •52 •56 •60 •64 •68 •72 •76 •80 •84 •88 •92 •96 •100 •104 •108 •112 •116 •120
1004176-4
A-32 •02 •10 •14 •18 •22 •26 •30 •34 •38 •42 •46 •50 •54 •58 •62 •66 •70 •74 •78 •82 •86 •90 •94 •98 •102 •106 •110 •114 •118
1004176-2

REFERENCE DWG.
1. WIRING DIAGRAM 1006126

NOTES:
1. INTERPRET DRAWING IN ACCORDANCE WITH STANDARDS PRESCRIBED BY MIL-D-70327
2. ORIGINAL OF THIS DRAWING OR REPRODUCTION MADE BY PROCESS OR METHOD SHALL INSURE DIMENSIONAL STABILITY. DIMENSIONAL VARIATIONS SHALL NOT EXCEED .001 INCH PER INCH
3. MAKE MASTER PATTERN POSITIVE FILMS TO DIMENSIONS SHOWN
4. CUT TO WITHIN .010 OF TRIMLINE
5. MATERIAL: .006/.008 THICK PLASTIC SHEETS, SENSITIZED, DIMENSIONALLY STABLE PER L-F-340, TYPE II, CLASS 2, STYLE IA

6. ● PUNCH HOLES TO .040 DIAMETER

QTY REQD	PART OR IDENTIFYING NO	NOMENCLATURE OR DESCRIPTION	FIND NO

LIST OF MATERIALS

NEXT ASSY	USED ON

APPLICATION

UNLESS OTHERWISE SPECIFIED
DIMENSIONS ARE IN INCHES
TOLERANCES ON
FRACTIONS ± —#— DECIMALS ±.005 ANGLES ± —#—
DO NOT SCALE THIS DRAWING
MATERIAL
SEE NOTE 5
HEAT TREATMENT —#—
FINAL FINISH —#—

MIT
INSTRUMENTATION LAB
Cambridge Mass
DWG NO CONTRACT
DRAWN DATE 8/15/63
CHECKED
APPROVAL 20 AUG 63
APPROVAL
NASA APPROVAL
MIT APPROVAL

MANNED SPACECRAFT CENTER
HOUSTON, TEXAS

IDENTIFICATION TAPE
LOGIC MODULE NO. A-32

CODE IDENT NO.
SIZE E
NASA DRAWING NO 1004176
SCALE 4/1
WT
SHEET 1 OF 1

1004176

INCHES
0 1 2
PHOTOGRAPHIC SCALE ONLY

REVISIONS 7DRR 01591			
SYM	DESCRIPTION	DATE	APPROVAL
A	CHANGED PER TDRR 02548	9-10-65	

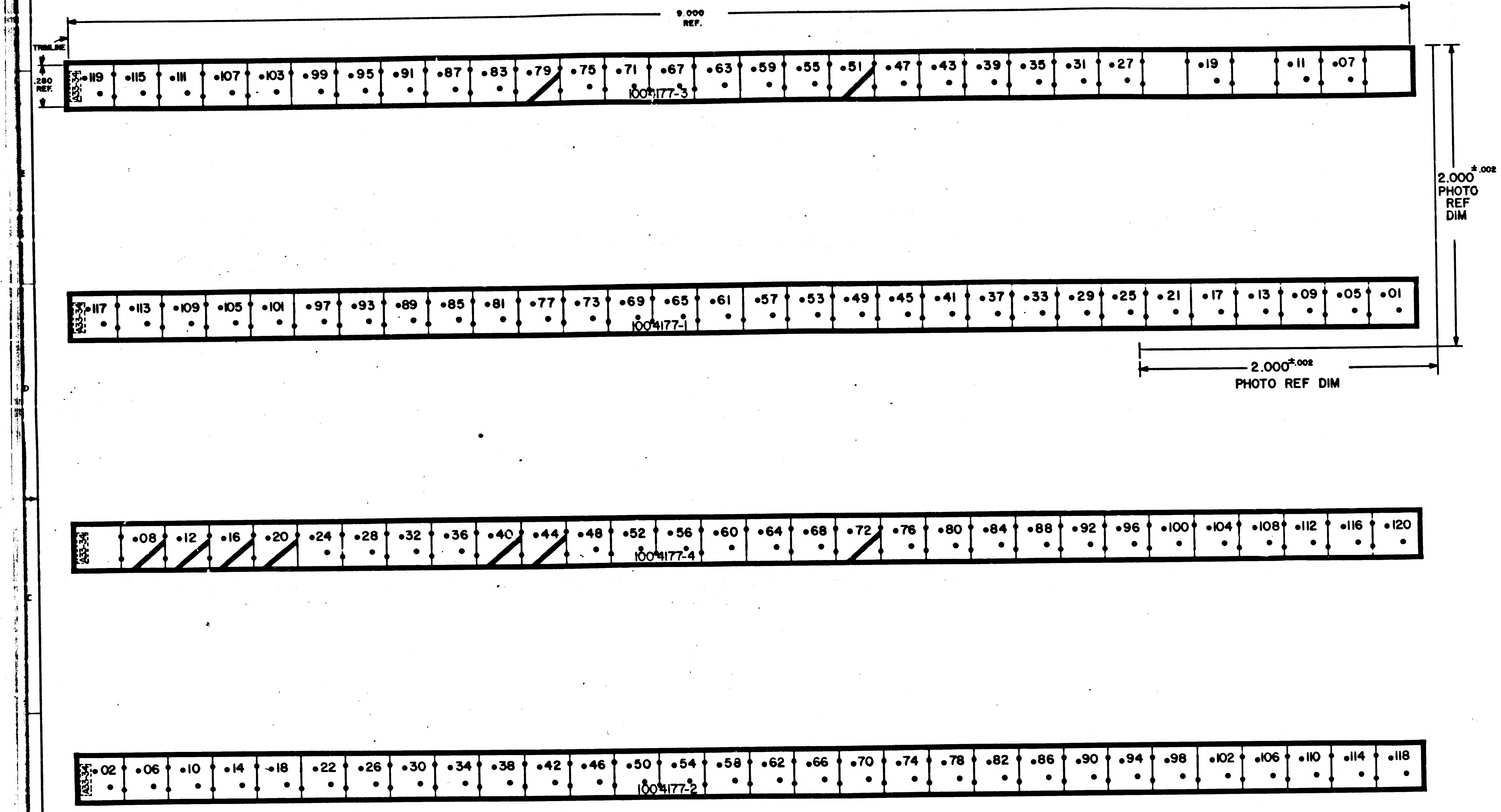
9.000 REF.
TRIMLINE
.280 REF.
A33-34 •119 •115 •111 •107 •103 •99 •95 •91 •87 •83 •79 •75 •71 •67 •63 •59 •55 •51 •47 •43 •39 •35 •31 •27 •19 •11 •07
1004177-3
2.000 ±.002 PHOTO REF DIM
A33-34 •117 •113 •109 •105 •101 •97 •93 •89 •85 •81 •77 •73 •69 •65 •61 •57 •53 •49 •45 •41 •37 •33 •29 •25 •21 •17 •13 •09 •05 •01
1004177-1
2.000 ±.002 PHOTO REF DIM
A33-34 •08 •12 •16 •20 •24 •28 •32 •36 •40 •44 •48 •52 •56 •60 •64 •68 •72 •76 •80 •84 •88 •92 •96 •100 •104 •108 •112 •116 •120
1004177-4
A33-34 •02 •06 •10 •14 •18 •22 •26 •30 •34 •38 •42 •46 •50 •54 •58 •62 •66 •70 •74 •78 •82 •86 •90 •94 •98 •102 •106 •110 •114 •118
1004177-2

REFERENCE DWG.
1. SIGNAL WIRING DIAGRAM 1006127

NOTES:
1. INTERPRET DRAWING IN ACCORDANCE WITH STANDARDS PRESCRIBED BY MIL-D-70327
2. ORIGINAL OF THIS DRAWING OR REPRODUCTION MADE BY PROCESS OR METHOD SHALL INSURE DIMENSIONAL STABILITY. DIMENSIONAL VARIATIONS SHALL NOT EXCEED .001 INCH PER INCH
3. MAKE MASTER PATTERN POSITIVE FILMS TO DIMENSIONS SHOWN
4. CUT TO WITHIN .010 OF TRIMLINE
5. MATERIAL: .006/.008 THICK PLASTIC SHEETS, SENSITIZED, DIMENSIONALLY STABLE PER L-F-340, TYPE IB, CLASS 2, STYLE IA

6. ● PUNCH HOLES TO .040 DIAMETER

QTY REQD	PART OR IDENTIFYING NO	NOMENCLATURE OR DESCRIPTION	FIND NO

LIST OF MATERIALS

NEXT ASSY	USED ON

APPLICATION

UNLESS OTHERWISE SPECIFIED DIMENSIONS ARE IN INCHES
TOLERANCES ON
FRACTIONS ± — DECIMALS ±.005 ANGLES ± —
DO NOT SCALE THIS DRAWING
MATERIAL SEE NOTE 5
HEAT TREATMENT —
FINAL FINISH —

MIT INSTRUMENTATION LAB
CAMBRIDGE MASS

DRAWN DATE
CHECKED 11 Jun 63
APPROVAL 11 JUN 63
APPROVAL 6/12/63
NASA APPROVAL
MIT APPROVAL

MANNED SPACECRAFT CENTER
HOUSTON, TEXAS

IDENTIFICATION TAPE
LOGIC MODULE NO.A33-34

CODE IDENT NO.
SIZE E
NASA DRAWING NO. 1004177
SCALE 4/1
WT
SHEET 1 OF 1

1004177 A

NOTICE — WHEN GOVERNMENT DRAWINGS, SPECIFICATIONS, OR OTHER DATA ARE USED FOR ANY PURPOSE OTHER THAN IN CONNECTION WITH A DEFINITELY RELATED GOVERNMENT PROCUREMENT OPERATION, THE UNITED STATES GOVERNMENT THEREBY INCURS NO RESPONSIBILITY NOR ANY OBLIGATION WHATSOEVER; AND THE FACT THAT THE GOVERNMENT MAY HAVE FORMULATED, FURNISHED, OR IN ANY WAY SUPPLIED THE SAID DRAWINGS, SPECIFICATIONS, OR OTHER DATA IS NOT TO BE REGARDED BY IMPLICATION OR OTHERWISE AS IN ANY MANNER LICENSING THE HOLDER OR ANY OTHER PERSON OR CORPORATION, OR CONVEYING ANY RIGHTS OR PERMISSION TO MANUFACTURE, USE, OR SELL ANY PATENTED INVENTION THAT MAY IN ANY WAY BE RELATED THERETO

REVISIONS TDRR 01591

SYM	DESCRIPTION	DATE	APPROVAL
A	CHANGED PER TDRR 02548	9-3-63	
B	CHANGED PER TDRR 03041	10/4/63	

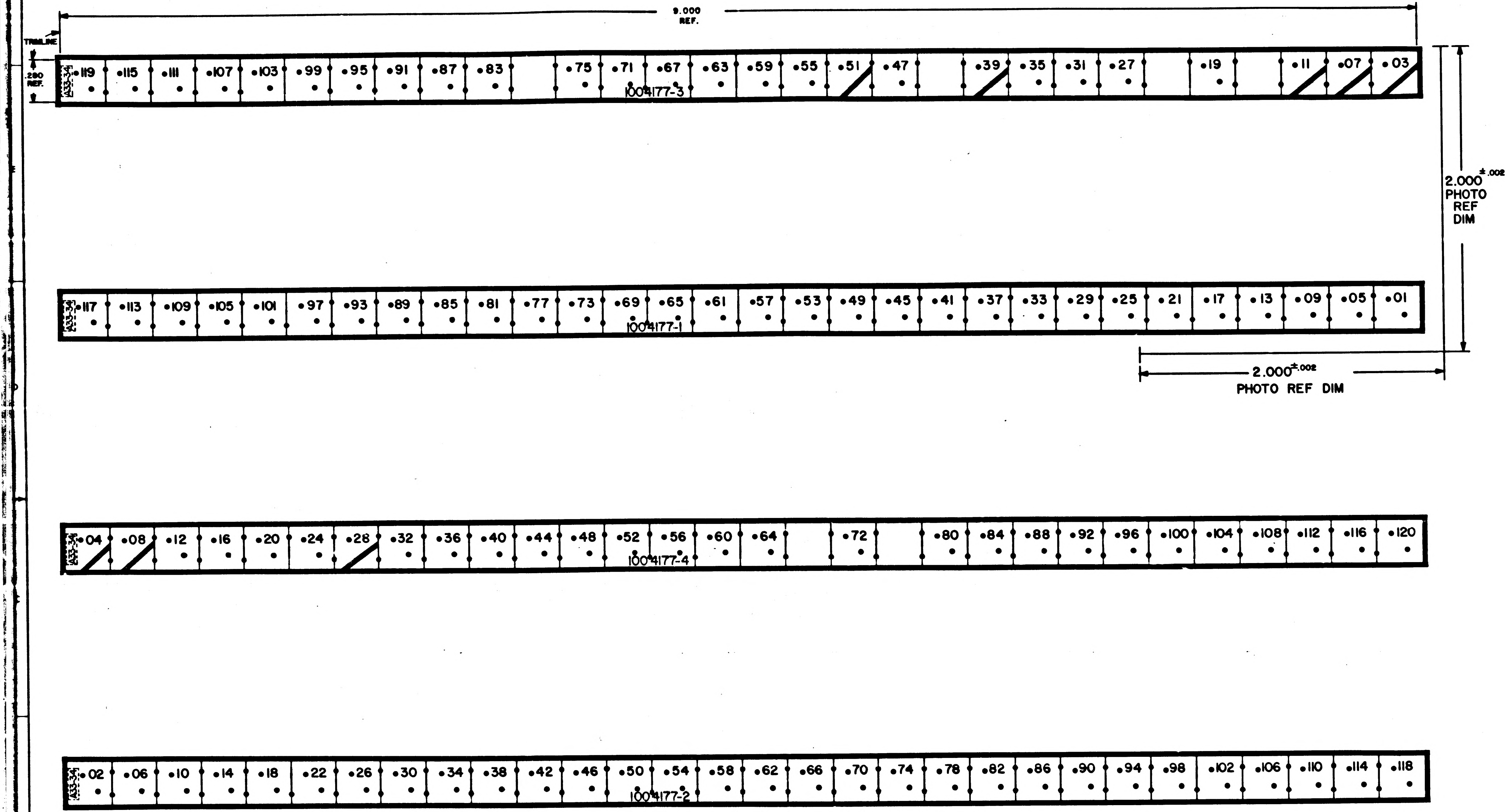

9.000
REF.
TRIMLINE
.280
REF.
A33-34
•119 •115 •111 •107 •103 •99 •95 •91 •87 •83 •75 •71 •67 •63 •59 •55 •51 •47 •39 •35 •31 •27 •19 •11 •07 •03
1004177-3
2.000 ±.002
PHOTO
REF
DIM
•117 •113 •109 •105 •101 •97 •93 •89 •85 •81 •77 •73 •69 •65 •61 •57 •53 •49 •45 •41 •37 •33 •29 •25 •21 •17 •13 •09 •05 •01
1004177-1
2.000 ±.002
PHOTO REF DIM
•04 •08 •12 •16 •20 •24 •28 •32 •36 •40 •44 •48 •52 •56 •60 •64 •72 •80 •84 •88 •92 •96 •100 •104 •108 •112 •116 •120
1004177-4
•02 •06 •10 •14 •18 •22 •26 •30 •34 •38 •42 •46 •50 •54 •58 •62 •66 •70 •74 •78 •82 •86 •90 •94 •98 •102 •106 •110 •114 •118
1004177-2

REFERENCE DWG.
1. SIGNAL WIRING DIAGRAM 1006127

NOTES:
1. INTERPRET DRAWING IN ACCORDANCE WITH STANDARDS PRESCRIBED BY MIL-D-70327
2. ORIGINAL OF THIS DRAWING OR REPRODUCTION MADE BY PROCESS OR METHOD SHALL INSURE DIMENSIONAL STABILITY. DIMENSIONAL VARIATIONS SHALL NOT EXCEED .001 INCH PER INCH
3. MAKE MASTER PATTERN POSITIVE FILMS TO DIMENSIONS SHOWN
4. CUT TO WITHIN .010 OF TRIMLINE
5. MATERIAL: .006/.008 THICK PLASTIC SHEETS, SENSITIZED, DIMENSIONALLY STABLE PER L-F-340, TYPE IB, CLASS 2, STYLE IA

6. ● PUNCH HOLES TO .040 DIAMETER

MASTER

QTY REQD	PART OR IDENTIFYING NO	NOMENCLATURE OR DESCRIPTION	FIND NO

LIST OF MATERIALS

NEXT ASSY	USED ON

APPLICATION

UNLESS OTHERWISE SPECIFIED DIMENSIONS ARE IN INCHES
TOLERANCES ON
FRACTIONS ± —//— DECIMALS ±.005 ANGLES ± —//—
DO NOT SCALE THIS DRAWING
MATERIAL SEE NOTE 5
HEAT TREATMENT —//—
FINAL FINISH —//—

MIT
INSTRUMENTATION LAB
CAMBRIDGE, MASS.
DWG NO CONTRACT
DRAWN
CHECKED 11 JUNE 63
APPROVAL 11 JUNE 63
APPROVAL 6/12/63
NASA APPROVAL Jack Barnard
MIT APPROVAL

MANNED SPACECRAFT CENTER
HOUSTON, TEXAS

IDENTIFICATION TAPE
LOGIC MODULE NO.A33-34

CODE IDENT NO. SIZE E NASA DRAWING NO. 1004177
SCALE 4/1 WT SHEET 1 OF 1

1004177

INCHES
0 1 2
PHOTOGRAPHIC SCALE ONLY

SYM	DESCRIPTION	DATE	APPROVAL
A	CHANGED PER TDRR 02548	[illegible]	[illegible]
B	CHANGED PER TDRR 03041	[illegible]	[illegible]
C	REVISED PER TDRR 09333	10-30-63	[illegible]

REVISIONS TDRR 01591

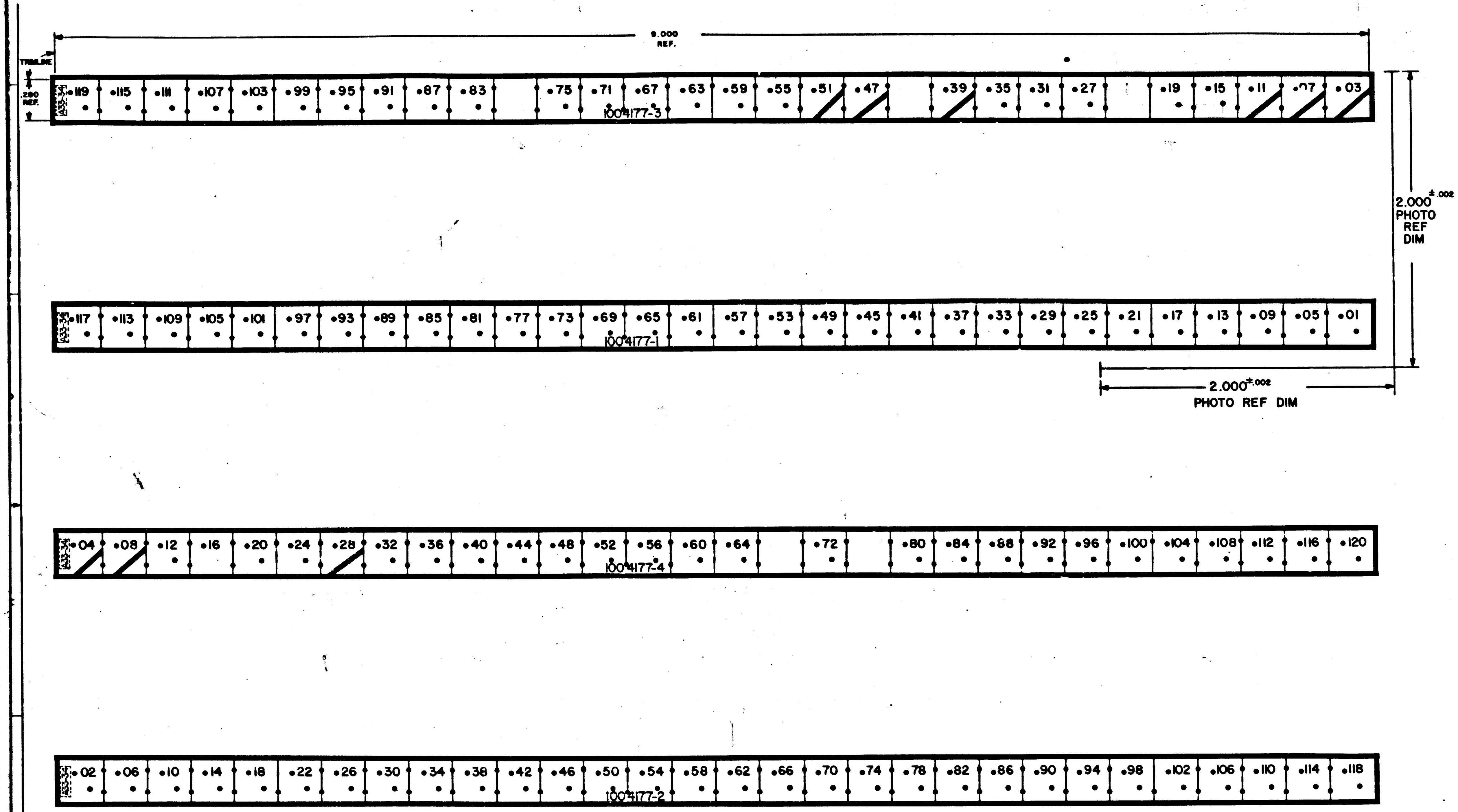

9.000 REF.
TRIMLINE
.280 REF.
A33-34
•119 •115 •111 •107 •103 •99 •95 •91 •87 •83 •75 •71 •67 •63 •59 •55 •51 •47 •39 •35 •31 •27 •19 •15 •11 •07 •03
1004177-3
2.000 ±.002 PHOTO REF DIM
A33-34
•117 •113 •109 •105 •101 •97 •93 •89 •85 •81 •77 •73 •69 •65 •61 •57 •53 •49 •45 •41 •37 •33 •29 •25 •21 •17 •13 •09 •05 •01
1004177-1
2.000 ±.002 PHOTO REF DIM
A33-34
•04 •08 •12 •16 •20 •24 •28 •32 •36 •40 •44 •48 •52 •56 •60 •64 •72 •80 •84 •88 •92 •96 •100 •104 •108 •112 •116 •120
1004177-4
A33-34
•02 •06 •10 •14 •18 •22 •26 •30 •34 •38 •42 •46 •50 •54 •58 •62 •66 •70 •74 •78 •82 •86 •90 •94 •98 •102 •106 •110 •114 •118
1004177-2

REFERENCE DWG.
1. SIGNAL WIRING DIAGRAM 1006127

NOTES:

1. INTERPRET DRAWING IN ACCORDANCE WITH STANDARDS PRESCRIBED BY MIL-D-70327
2. ORIGINAL OF THIS DRAWING OR REPRODUCTION MADE BY PROCESS OR METHOD SHALL INSURE DIMENSIONAL STABILITY. DIMENSIONAL VARIATIONS SHALL NOT EXCEED .001 INCH PER INCH
3. MAKE MASTER PATTERN POSITIVE FILMS TO DIMENSIONS SHOWN
4. CUT TO WITHIN .010 OF TRIMLINE
5. MATERIAL: .006/.008 THICK PLASTIC SHEETS, SENSITIZED, DIMENSIONALLY STABLE PER L-F-340, TYPE IB, CLASS 2, STYLE IA

6. ● PUNCH HOLES TO .040 DIAMETER

MASTER

QTY REQD	PART OR IDENTIFYING NO	NOMENCLATURE OR DESCRIPTION	FIND NO

LIST OF MATERIALS

NEXT ASSY	USED ON

APPLICATION

UNLESS OTHERWISE SPECIFIED DIMENSIONS ARE IN INCHES
TOLERANCES ON
FRACTIONS ± — DECIMALS ±.005 ANGLES ± —
DO NOT SCALE THIS DRAWING
MATERIAL SEE NOTE 5
HEAT TREATMENT —
FINAL FINISH —

MIT
INSTRUMENTATION LAB
CAMBRIDGE MASS

DRAWN [illegible]
CHECKED [illegible] 11 JUN 63
APPROVAL [illegible] 11 JUN 63
APPROVAL [illegible] 6/12/63
NASA APPROVAL
MIT APPROVAL

MANNED SPACECRAFT CENTER
HOUSTON, TEXAS

IDENTIFICATION TAPE
LOGIC MODULE NO. A33-34

CODE IDENT NO —
SIZE E
NASA DRAWING NO. 1004177
SCALE 4/1
WT
SHEET 1 OF 1

1004177 C

INCHES
PHOTOGRAPHIC SCALE ONLY

REVISIONS TDRR 01591				
SYM	DESCRIPTION	DATE	APPROVAL	
A	CHANGED PER TDRR 02548	4-10-65		
B	CHANGED PER TDRR 03041	10 Aug 63		
C	REVISED PER TDRR 09323	10-30-63		
D	REVISED PER TDRR 05793	22 Jan 64		

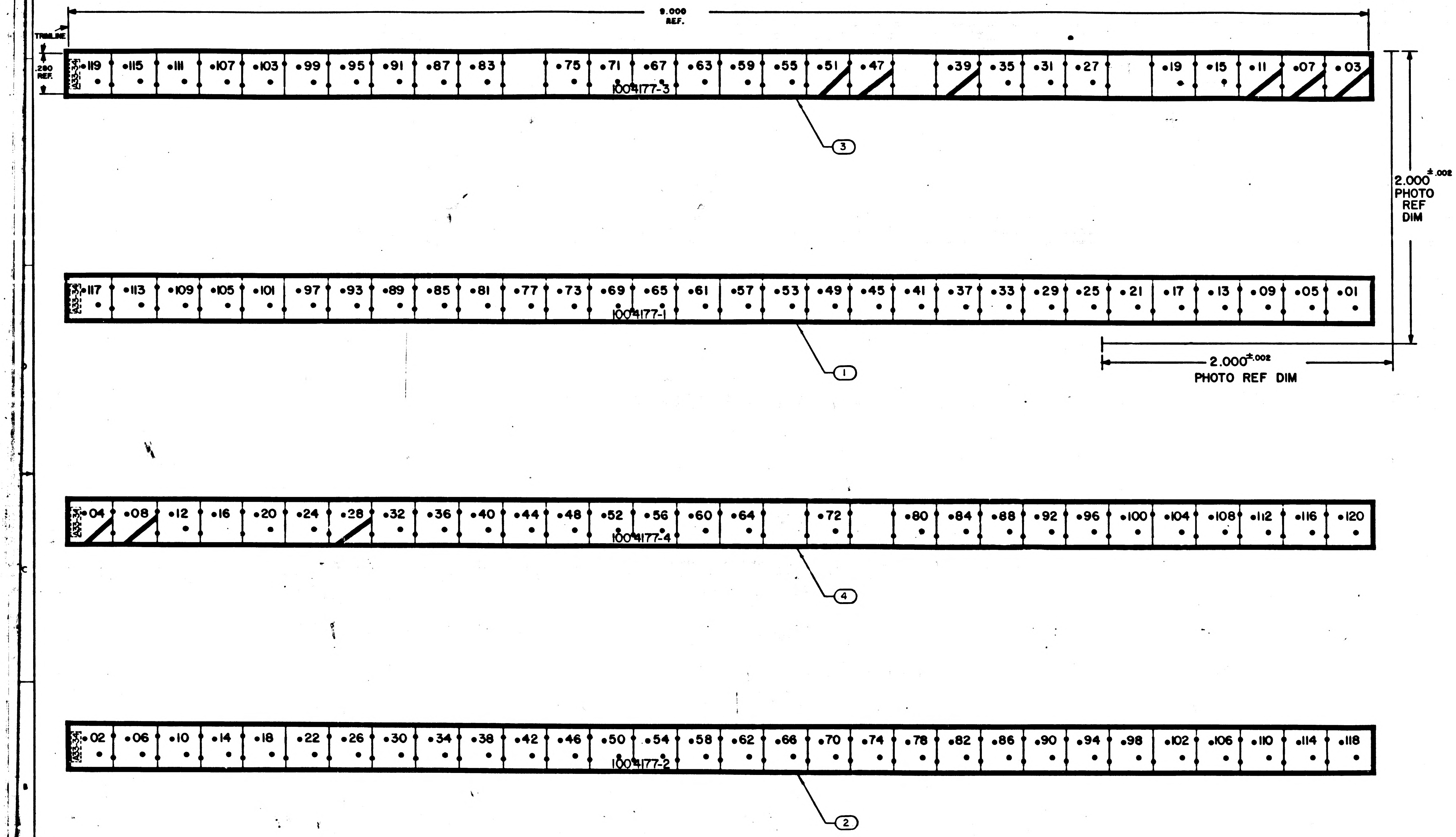
9.000
REF.
TRIMLINE
.280
REF.
A33-34
•119 •115 •111 •107 •103 •99 •95 •91 •87 •83 •75 •71 •67 •63 •59 •55 •51 •47 •39 •35 •31 •27 •19 •15 •11 •07 •03
1004177-3
3
2.000 ±.002
PHOTO
REF
DIM
•117 •113 •109 •105 •101 •97 •93 •89 •85 •81 •77 •73 •69 •65 •61 •57 •53 •49 •45 •41 •37 •33 •29 •25 •21 •17 •13 •09 •05 •01
1004177-1
1
2.000 ±.002
PHOTO REF DIM
•04 •08 •12 •16 •20 •24 •28 •32 •36 •40 •44 •48 •52 •56 •60 •64 •72 •80 •84 •88 •92 •96 •100 •104 •108 •112 •116 •120
1004177-4
4
•02 •06 •10 •14 •18 •22 •26 •30 •34 •38 •42 •46 •50 •54 •58 •62 •66 •70 •74 •78 •82 •86 •90 •94 •98 •102 •106 •110 •114 •118
1004177-2
2

NOTES:

1. INTERPRET DRAWING IN ACCORDANCE WITH STANDARDS PRESCRIBED BY MIL-D-70327
2. ORIGINAL OF THIS DRAWING OR REPRODUCTION MADE BY PROCESS OR METHOD SHALL INSURE DIMENSIONAL STABILITY. DIMENSIONAL VARIATIONS SHALL NOT EXCEED .001 INCH PER INCH
3. MAKE MASTER PATTERN POSITIVE FILMS TO DIMENSIONS SHOWN
4. CUT TO WITHIN .010 OF TRIMLINE
5. MATERIAL: .006/.008 THICK PLASTIC SHEETS, SENSITIZED, DIMENSIONALLY STABLE PER L-F-340, TYPE IB, CLASS 2, STYLE IA

6. ● PUNCH HOLES TO .040 DIAMETER

MASTER

REFERENCE DWG.
1. SIGNAL WIRING DIAGRAM 1006127

QTY REQD	PART OR IDENTIFYING NO	NOMENCLATURE OR DESCRIPTION	FIND NO
1	1004177-4	IDENTIFICATION TAPE	4
1	1004177-3	IDENTIFICATION TAPE	3
1	1004177-2	IDENTIFICATION TAPE	2
1	1004177-1	IDENTIFICATION TAPE	1

LIST OF MATERIALS

NEXT ASSY	USED ON
1003082-15	
1003081-15	

APPLICATION

UNLESS OTHERWISE SPECIFIED DIMENSIONS ARE IN INCHES
TOLERANCES ON
FRACTIONS ± — DECIMALS ±.005 ANGLES ± —
DO NOT SCALE THIS DRAWING
MATERIAL
SEE NOTE 5
HEAT TREATMENT —
FINAL FINISH —

MIT
INSTRUMENTATION LAB
Cambridge Mass
DWG NO CONTRACT
DRAWN DATE
CHECKED 11 JUNE 63
APPROVAL 11 JUN 63
APPROVAL 6/13/63
NASA APPROVAL Jack Barnard
MIT APPROVAL

MANNED SPACECRAFT CENTER
HOUSTON, TEXAS

IDENTIFICATION TAPE
LOGIC MODULE NO.A33-34

CODE IDENT NO. —
SIZE E
NASA DRAWING NO. 1004177
SCALE 4/1
WT
SHEET 1 OF 1

NOTICE WHEN GOVERNMENT DRAWINGS, SPECIFICATIONS, OR OTHER DATA ARE USED FOR ANY PURPOSE OTHER THAN IN CONNECTION WITH A DEFINITELY RELATED GOVERNMENT PROCUREMENT OPERATION, THE UNITED STATES GOVERNMENT THEREBY INCURS NO RESPONSIBILITY NOR ANY OBLIGATION WHATSOEVER; AND THE FACT THAT THE GOVERNMENT MAY HAVE FORMULATED, FURNISHED, OR IN ANY WAY SUPPLIED THE SAID DRAWINGS, SPECIFICATIONS, OR OTHER DATA IS NOT TO BE REGARDED BY IMPLICATION OR OTHERWISE AS IN ANY MANNER LICENSING THE HOLDER OR ANY OTHER PERSON OR CORPORATION, OR CONVEYING ANY RIGHTS OR PERMISSION TO MANUFACTURE, USE, OR SELL ANY PATENTED INVENTION THAT MAY IN ANY WAY BE RELATED THERETO.

SYM	DESCRIPTION	DATE	APPROVAL

REVISIONS 70RR 01591

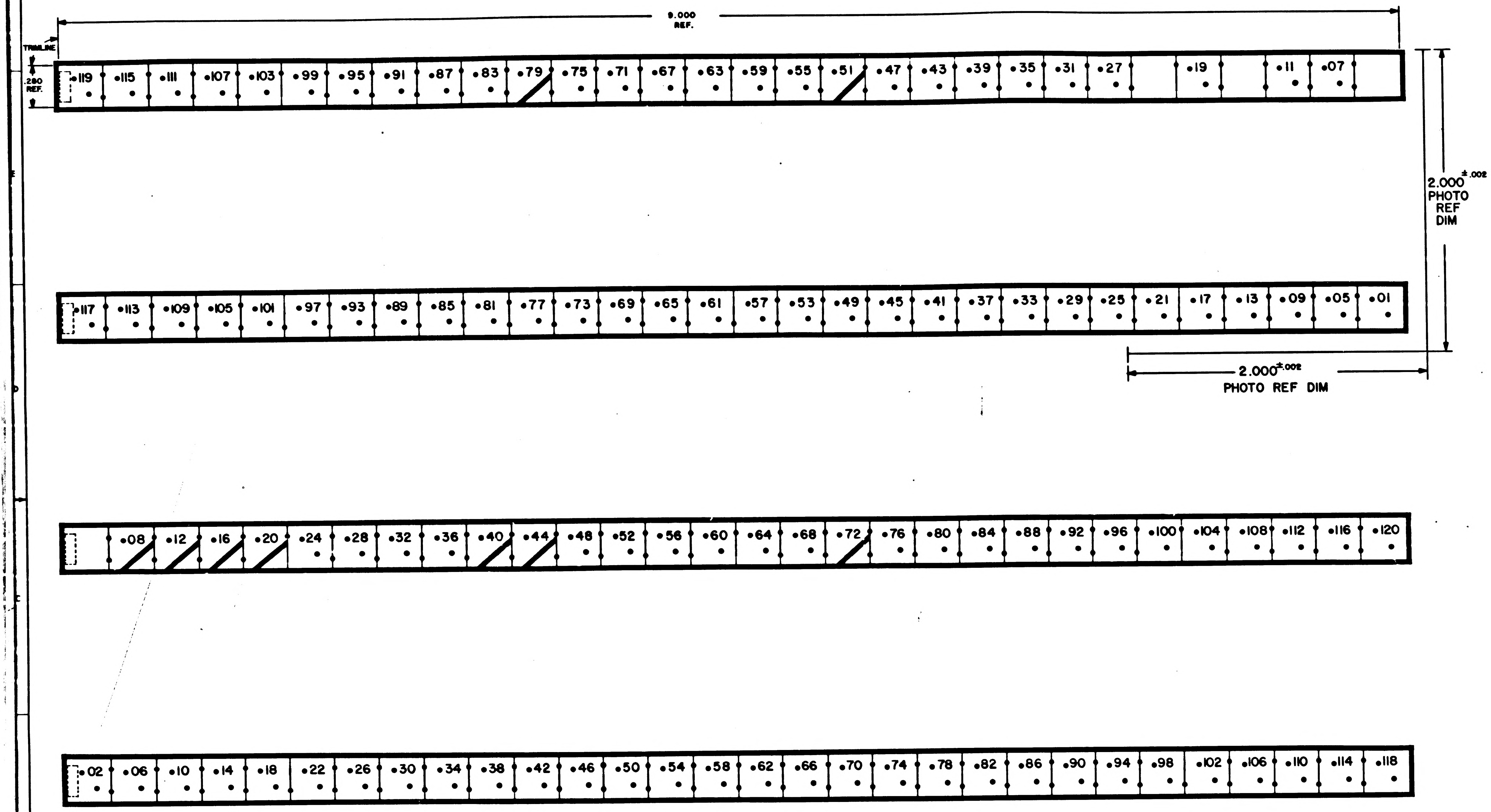

9.000 REF.
TRIMLINE
.280 REF.
119 115 111 107 103 99 95 91 87 83 79 75 71 67 63 59 55 51 47 43 39 35 31 27 19 11 07
117 113 109 105 101 97 93 89 85 81 77 73 69 65 61 57 53 49 45 41 37 33 29 25 21 17 13 09 05 01
08 12 16 20 24 28 32 36 40 44 48 52 56 60 64 68 72 76 80 84 88 92 96 100 104 108 112 116 120
02 06 10 14 18 22 26 30 34 38 42 46 50 54 58 62 66 70 74 78 82 86 90 94 98 102 106 110 114 118
2.000 ±.002 PHOTO REF DIM
2.000 ±.002 PHOTO REF DIM

REFERENCE DWG.
1. SIGNAL WIRINC DIAGRAM 1006127

NOTES:
1. INTERPRET DRAWING IN ACCORDANCE WITH STANDARDS PRESCRIBED BY MIL-D-70327
2. ORIGINAL OF THIS DRAWING OR REPRODUCTION MADE BY PROCESS OR METHOD SHALL INSURE DIMENSIONAL STABILITY. DIMENSIONAL VARIATIONS SHALL NOT EXCEED .001 INCH PER INCH
3. MAKE MASTER PATTERN POSITIVE FILMS TO DIMENSIONS SHOWN
4. CUT TO WITHIN .010 OF TRIMLINE
5. MATERIAL: .006/.008 THICK PLASTIC SHEETS, SENSITIZED, DIMENSIONALLY STABLE PER L-F-340, TYPE IB, CLASS 2, STYLE IA
6. ● PUNCH HOLES TO .040 DIAMETER

QTY REQD	PART OR IDENTIFYING NO	NOMENCLATURE OR DESCRIPTION	FIND No

LIST OF MATERIALS

NEXT ASSY	USED ON

APPLICATION

UNLESS OTHERWISE SPECIFIED DIMENSIONS ARE IN INCHES
TOLERANCES ON
FRACTIONS ± — DECIMALS ±.005 ANGLES ± —
DO NOT SCALE THIS DRAWING
MATERIAL
SEE NOTE 5
HEAT TREATMENT —
FINAL FINISH —

MIT INSTRUMENTATION LAB
Cambridge Mass
DWG NO CONTRACT
DRAWN D. Williams DATE Nov 63
CHECKED D. Lundell 11 Jun 63
APPROVAL A. L. Turner 11 Jun 63
APPROVAL 6/18/63
NASA APPROVAL Jack Barnard
MIT APPROVAL

MANNED SPACECRAFT CENTER
HOUSTON, TEXAS

IDENTIFICATION TAPE
LOGIC MODULE NO.

CODE IDENT NO
SIZE E
NASA DRAWING NO 1004177
SCALE 4/1
WT
SHEET 1 OF 1

1004177

INCHES
PHOTOGRAPHIC SCALE ONLY

NOTICE - WHEN GOVERNMENT DRAWINGS, SPECIFICATIONS, OR OTHER DATA ARE USED FOR ANY PURPOSE OTHER THAN IN CONNECTION WITH A DEFINITELY RELATED GOVERNMENT PROCUREMENT OPERATION, THE UNITED STATES GOVERNMENT THEREBY INCURS NO RESPONSIBILITY NOR ANY OBLIGATION WHATSOEVER; AND THE FACT THAT THE GOVERNMENT MAY HAVE FORMULATED, FURNISHED, OR IN ANY WAY SUPPLIED THE SAID DRAWINGS, SPECIFICATIONS, OR OTHER DATA IS NOT TO BE REGARDED BY IMPLICATION OR OTHERWISE AS IN ANY MANNER LICENSING THE HOLDER OR ANY OTHER PERSON OR CORPORATION, OR CONVEYING ANY RIGHTS OR PERMISSION TO MANUFACTURE, USE, OR SELL ANY PATENTED INVENTION THAT MAY IN ANY WAY BE RELATED THERETO.

REVISIONS			
SYM	DESCRIPTION	DATE	APPROVAL

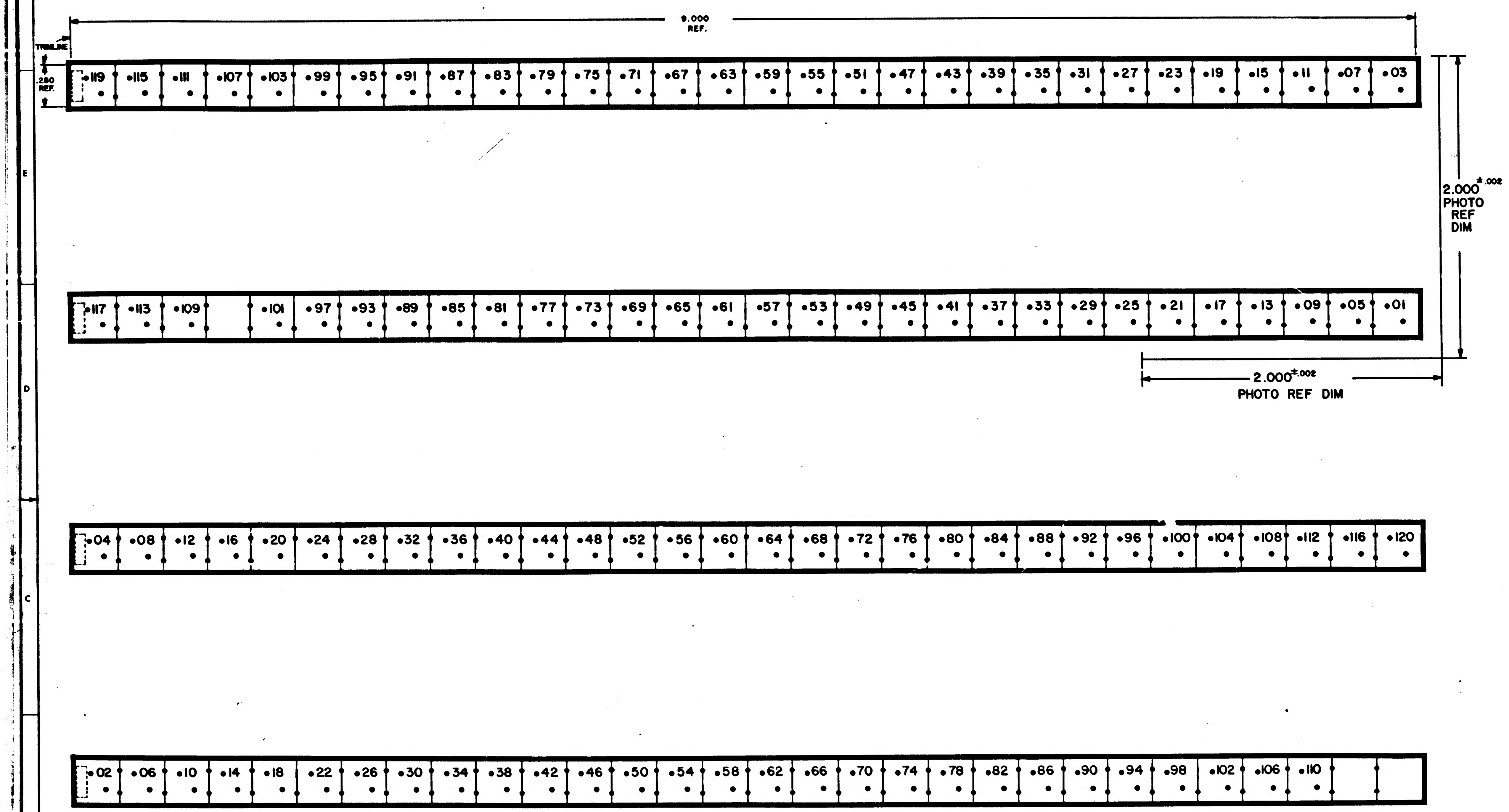
9.000
REF.
TRIMLINE
.280
REF.
•119 •115 •111 •107 •103 •99 •95 •91 •87 •83 •79 •75 •71 •67 •63 •59 •55 •51 •47 •43 •39 •35 •31 •27 •23 •19 •15 •11 •07 •03
2.000±.002
PHOTO
REF
DIM
•117 •113 •109 •101 •97 •93 •89 •85 •81 •77 •73 •69 •65 •61 •57 •53 •49 •45 •41 •37 •33 •29 •25 •21 •17 •13 •09 •05 •01
2.000±.002
PHOTO REF DIM
•04 •08 •12 •16 •20 •24 •28 •32 •36 •40 •44 •48 •52 •56 •60 •64 •68 •72 •76 •80 •84 •88 •92 •96 •100 •104 •108 •112 •116 •120
•02 •06 •10 •14 •18 •22 •26 •30 •34 •38 •42 •46 •50 •54 •58 •62 •66 •70 •74 •78 •82 •86 •90 •94 •98 •102 •106 •110

1004178

REFERENCE DWG.
1. SIGNAL WIRING DIAGRAM 1006128

NOTES:
1. INTERPRET DRAWING IN ACCORDANCE WITH STANDARDS PRESCRIBED BY MIL-D-70327
2. ORIGINAL OF THIS DRAWING OR REPRODUCTION MADE BY PROCESS OR METHOD SHALL INSURE DIMENSIONAL STABILITY. DIMENSIONAL VARIATIONS SHALL NOT EXCEED .001 INCH PER INCH
3. MAKE MASTER PATTERN POSITIVE FILMS TO DIMENSIONS SHOWN
4. CUT TO WITHIN .010 OF TRIMLINE
5. MATERIAL: .006/.008 THICK PLASTIC SHEETS, SENSITIZED, DIMENSIONALLY STABLE PER L-F-340, TYPE II, CLASS 2, STYLE IA

6. • PUNCH HOLES TO .040 DIAMETER

QTY REQD	PART OR IDENTIFYING NO	NOMENCLATURE OR DESCRIPTION	FIND NO

LIST OF MATERIALS

NEXT ASSY	USED ON

APPLICATION

UNLESS OTHERWISE SPECIFIED
DIMENSIONS ARE IN INCHES
TOLERANCES ON
FRACTIONS ± —#— DECIMALS ±.005 ANGLES ± —#—
DO NOT SCALE THIS DRAWING
MATERIAL
SEE NOTE 5
HEAT TREATMENT —#—
FINAL FINISH —#—

MIT
INSTRUMENTATION LAB
CAMBRIDGE MASS
DWG NO CONTRACT
DRAWN [illegible] DATE [illegible]
CHECKED [illegible] 11 June 63
APPROVAL W.B. Turner 11 Jun 63
APPROVAL [illegible] 6/12/63
NASA APPROVAL [illegible]
MIT APPROVAL [illegible]

MANNED SPACECRAFT CENTER
HOUSTON, TEXAS

IDENTIFICATION TAPE
LOGIC MODULE NO.

CODE IDENT NO
SIZE E
NASA DRAWING NO 1004178
SCALE 4/1
WT
SHEET 1 OF 1

INCHES
PHOTOGRAPHIC SCALE ONLY

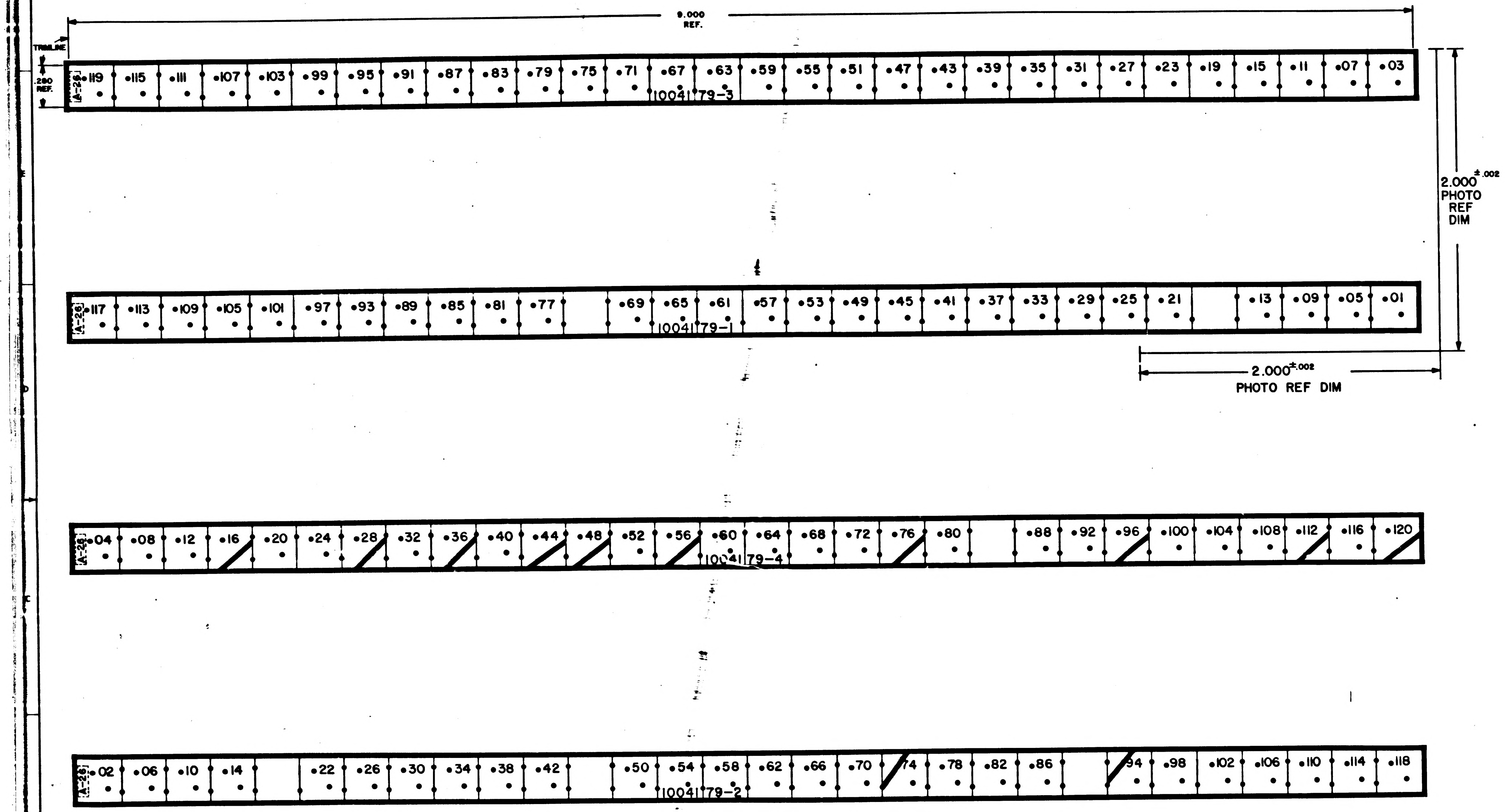
9.000
REF.
TRIMLINE
.280
REF.
A-26
119 115 111 107 103 99 95 91 87 83 79 75 71 67 63 59 55 51 47 43 39 35 31 27 23 19 15 11 07 03
1004179-3
2.000 ±.002
PHOTO
REF
DIM
A-26
117 113 109 105 101 97 93 89 85 81 77 69 65 61 57 53 49 45 41 37 33 29 25 21 13 09 05 01
1004179-1
2.000 ±.002
PHOTO REF DIM
A-26
04 08 12 16 20 24 28 32 36 40 44 48 52 56 60 64 68 72 76 80 88 92 96 100 104 108 112 116 120
1004179-4
A-26
02 06 10 14 22 26 30 34 38 42 50 54 58 62 66 70 74 78 82 86 94 98 102 106 110 114 118
1004179-2

REFERENCE DWG.
1. WIRING DIAGRAM 1006129

NOTES:

1. INTERPRET DRAWING IN ACCORDANCE WITH STANDARDS PRESCRIBED BY MIL-D-70327
2. ORIGINAL OF THIS DRAWING OR REPRODUCTION MADE BY PROCESS OR METHOD SHALL INSURE DIMENSIONAL STABILITY. DIMENSIONAL VARIATIONS SHALL NOT EXCEED .001 INCH PER INCH
3. MAKE MASTER PATTERN POSITIVE FILMS TO DIMENSIONS SHOWN
4. CUT TO WITHIN .010 OF TRIMLINE
5. MATERIAL: .006/.008 THICK PLASTIC SHEETS, SENSITIZED, DIMENSIONALLY STABLE PER L-F-340, TYPE IB, CLASS 2, STYLE IA

6. ● PUNCH HOLES TO .040 DIAMETER

QTY REQD	PART OR IDENTIFYING NO	NOMENCLATURE OR DESCRIPTION	FIND NO

LIST OF MATERIALS

NEXT ASSY | USED ON
APPLICATION

UNLESS OTHERWISE SPECIFIED DIMENSIONS ARE IN INCHES
TOLERANCES ON
FRACTIONS ± — DECIMALS ±.005 ANGLES ± —
DO NOT SCALE THIS DRAWING
MATERIAL
SEE NOTE 5
HEAT TREATMENT —
FINAL FINISH —

MIT
INSTRUMENTATION LAB
CAMBRIDGE MASS
DWG NO CONTRACT
DRAWN DATE 8/14/63
CHECKED
APPROVAL W.B. Turner 20 Aug 63
APPROVAL
NASA APPROVAL 8/21/63
MIT APPROVAL

MANNED SPACECRAFT CENTER
HOUSTON, TEXAS

IDENTIFICATION TAPE
LOGIC MODULE NO. A-26

CODE IDENT NO | SIZE E | NASA DRAWING NO 1004179
SCALE 4/1 | WT | SHEET 1 OF 1

INCHES
PHOTOGRAPHIC SCALE ONLY

REVISIONS TDRR 02694

SYM	DESCRIPTION	DATE	APPROVAL

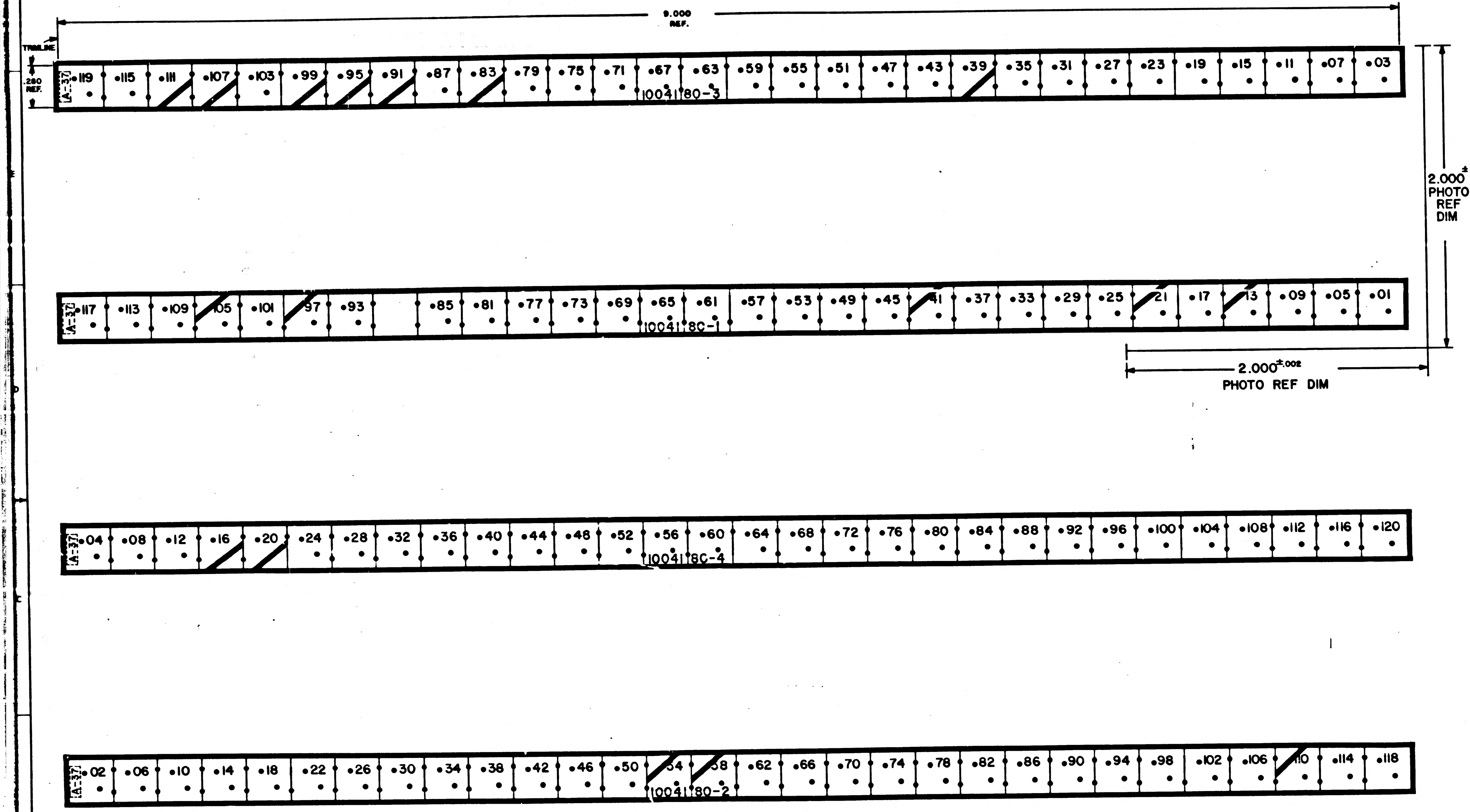
9.000 REF.
TRIMLINE
.280 REF.
A-37
•119 •115 •111 •107 •103 •99 •95 •91 •87 •83 •79 •75 •71 •67 •63 •59 •55 •51 •47 •43 •39 •35 •31 •27 •23 •19 •15 •11 •07 •03
1004180-3
•117 •113 •109 105 •101 97 •93 •85 •81 •77 •73 •69 •65 •61 •57 •53 •49 •45 41 •37 •33 •29 •25 21 •17 13 •09 •05 •01
1004180-1
•04 •08 •12 •16 •20 •24 •28 •32 •36 •40 •44 •48 •52 •56 •60 •64 •68 •72 •76 •80 •84 •88 •92 •96 •100 •104 •108 •112 •116 •120
1004180-4
•02 •06 •10 •14 •18 •22 •26 •30 •34 •38 •42 •46 •50 54 58 •62 •66 •70 •74 •78 •82 •86 •90 •94 •98 •102 •106 110 •114 •118
1004180-2
2.000 ±.002 PHOTO REF DIM
2.000 ±.002 PHOTO REF DIM

REFERENCE DWG.
1. WIRING DIAGRAM 1006130

NOTES:

1. INTERPRET DRAWING IN ACCORDANCE WITH STANDARDS PRESCRIBED BY MIL-D-70327
2. ORIGINAL OF THIS DRAWING OR REPRODUCTION MADE BY PROCESS OR METHOD SHALL INSURE DIMENSIONAL STABILITY. DIMENSIONAL VARIATIONS SHALL NOT EXCEED .001 INCH PER INCH
3. MAKE MASTER PATTERN POSITIVE FILMS TO DIMENSIONS SHOWN
4. CUT TO WITHIN .010 OF TRIMLINE
5. MATERIAL: .006/.008 THICK PLASTIC SHEETS, SENSITIZED, DIMENSIONALLY STABLE PER L-F-340, TYPE IB, CLASS 2, STYLE IA

6. ● PUNCH HOLES TO .040 DIAMETER

QTY REQD	PART OR IDENTIFYING NO	NOMENCLATURE OR DESCRIPTION	FIND NO

LIST OF MATERIALS

NEXT ASSY	USED ON

APPLICATION

UNLESS OTHERWISE SPECIFIED
DIMENSIONS ARE IN INCHES
TOLERANCES ON
FRACTIONS ± — DECIMALS ±.005 ANGLES ± —
DO NOT SCALE THIS DRAWING
MATERIAL
SEE NOTE 5
HEAT TREATMENT —
FINAL FINISH —

MIT
INSTRUMENTATION LAB
CAMBRIDGE MASS
DWG NO CONTRACT
DRAWN DATE 8/15/63
CHECKED
APPROVAL 20 Aug 63
APPROVAL
NASA APPROVAL 8/21/63
MIT APPROVAL 8/21/63

MANNED SPACECRAFT CENTER
HOUSTON, TEXAS

IDENTIFICATION TAPE
LOGIC MODULE NO. A-37

CODE IDENT NO.
SIZE E
NASA DRAWING NO. 1004180
SCALE 4/1
WT
SHEET 1 OF 1

1004180

INCHES
0 1 2
PHOTOGRAPHIC SCALE ONLY

NOTICE - WHEN GOVERNMENT DRAWINGS, SPECIFICATIONS, OR OTHER DATA ARE USED FOR ANY PURPOSE OTHER THAN IN CONNECTION WITH A DEFINITELY RELATED GOVERNMENT PROCUREMENT OPERATION, THE UNITED STATES GOVERNMENT THEREBY INCURS NO RESPONSIBILITY NOR ANY OBLIGATION WHATSOEVER; AND THE FACT THAT THE GOVERNMENT MAY HAVE FORMULATED, FURNISHED, OR IN ANY WAY SUPPLIED THE SAID DRAWINGS, SPECIFICATIONS, OR OTHER DATA IS NOT TO BE REGARDED BY IMPLICATION OR OTHERWISE AS IN ANY MANNER LICENSING THE HOLDER OR ANY OTHER PERSON OR CORPORATION, OR CONVEYING ANY RIGHTS OR PERMISSION TO MANUFACTURE, USE, OR SELL ANY PATENTED INVENTION THAT MAY IN ANY WAY BE RELATED THERETO

REVISIONS	TDRR 609		
SYM	DESCRIPTION	DATE	APPROVAL
A	CHANGED PER TDRR 02548	7-10-63	UK

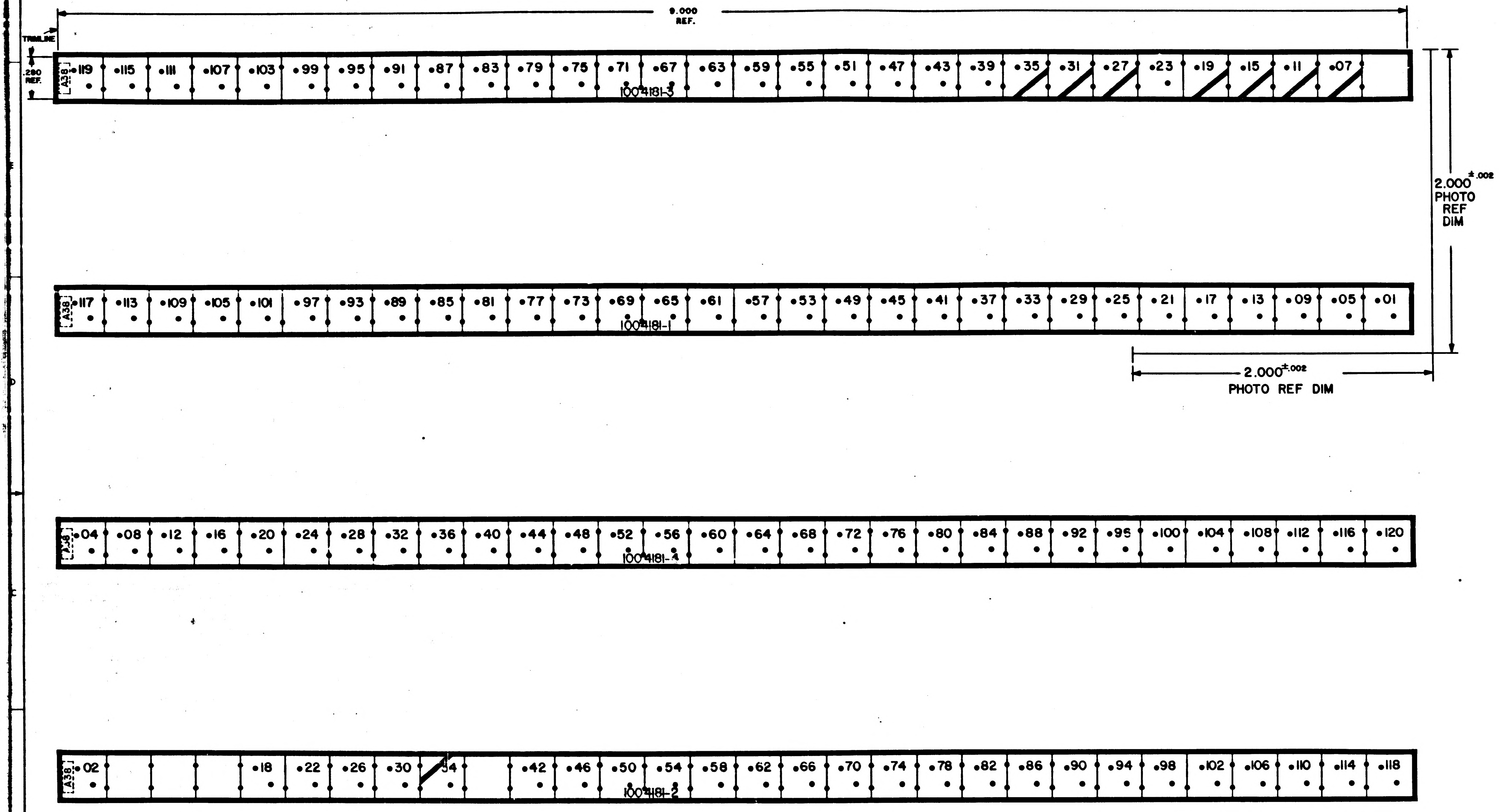
9.000
REF.
TRIMLINE
.280
REF.
A38
•119 •115 •111 •107 •103 •99 •95 •91 •87 •83 •79 •75 •71 •67 •63 •59 •55 •51 •47 •43 •39 •35 •31 •27 •23 •19 •15 •11 •07
1004181-3
2.000 ±.002
PHOTO
REF
DIM
A38
•117 •113 •109 •105 •101 •97 •93 •89 •85 •81 •77 •73 •69 •65 •61 •57 •53 •49 •45 •41 •37 •33 •29 •25 •21 •17 •13 •09 •05 •01
1004181-1
2.000 ±.002
PHOTO REF DIM
A38
•04 •08 •12 •16 •20 •24 •28 •32 •36 •40 •44 •48 •52 •56 •60 •64 •68 •72 •76 •80 •84 •88 •92 •95 •100 •104 •108 •112 •116 •120
1004181-4
A38
•02 •18 •22 •26 •30 34 •42 •46 •50 •54 •58 •62 •66 •70 •74 •78 •82 •86 •90 •94 •98 •102 •106 •110 •114 •118
1004181-2

REFERENCE DWG.
1. WIRING DIAGRAM 1006131

NOTES:
1. INTERPRET DRAWING IN ACCORDANCE WITH STANDARDS PRESCRIBED BY MIL-D-70327
2. ORIGINAL OF THIS DRAWING OR REPRODUCTION MADE BY PROCESS OR METHOD SHALL INSURE DIMENSIONAL STABILITY. DIMENSIONAL VARIATIONS SHALL NOT EXCEED .001 INCH PER INCH
3. MAKE MASTER PATTERN POSITIVE FILMS TO DIMENSIONS SHOWN
4. CUT TO WITHIN .010 OF TRIMLINE
5. MATERIAL: .006/.008 THICK PLASTIC SHEETS, SENSITIZED, DIMENSIONALLY STABLE PER L-F-340, TYPE II, CLASS 2, STYLE IA
6. ● PUNCH HOLES TO .040 DIAMETER

MASTER

QTY REQD	PART OR IDENTIFYING NO	NOMENCLATURE OR DESCRIPTION	FIND NO
LIST OF MATERIALS			

NEXT ASSY	USED ON
APPLICATION	

UNLESS OTHERWISE SPECIFIED DIMENSIONS ARE IN INCHES TOLERANCES ON
FRACTIONS ± — DECIMALS ±.005 ANGLES ± —
DO NOT SCALE THIS DRAWING
MATERIAL SEE NOTE 5
HEAT TREATMENT —
FINAL FINISH —

MIT INSTRUMENTATION LAB
Cambridge Mass
DRAWN J. Fitzgerald DATE 6/13/63
CHECKED 6/14/63
APPROVAL N. Sumner 6/18/63
APPROVAL Eldon C Hall 6/15/63
NASA APPROVAL 4/9/63
MIT APPROVAL

MANNED SPACECRAFT CENTER
HOUSTON, TEXAS

IDENTIFICATION TAPE
LOGIC MODULE NO. A38

CODE IDENT NO.
SIZE E
NASA DRAWING NO. 1004181
SCALE 4/1
WT
SHEET 1 OF 1

F 1004181 A

INCHES
0 1 2
PHOTOGRAPHIC SCALE ONLY

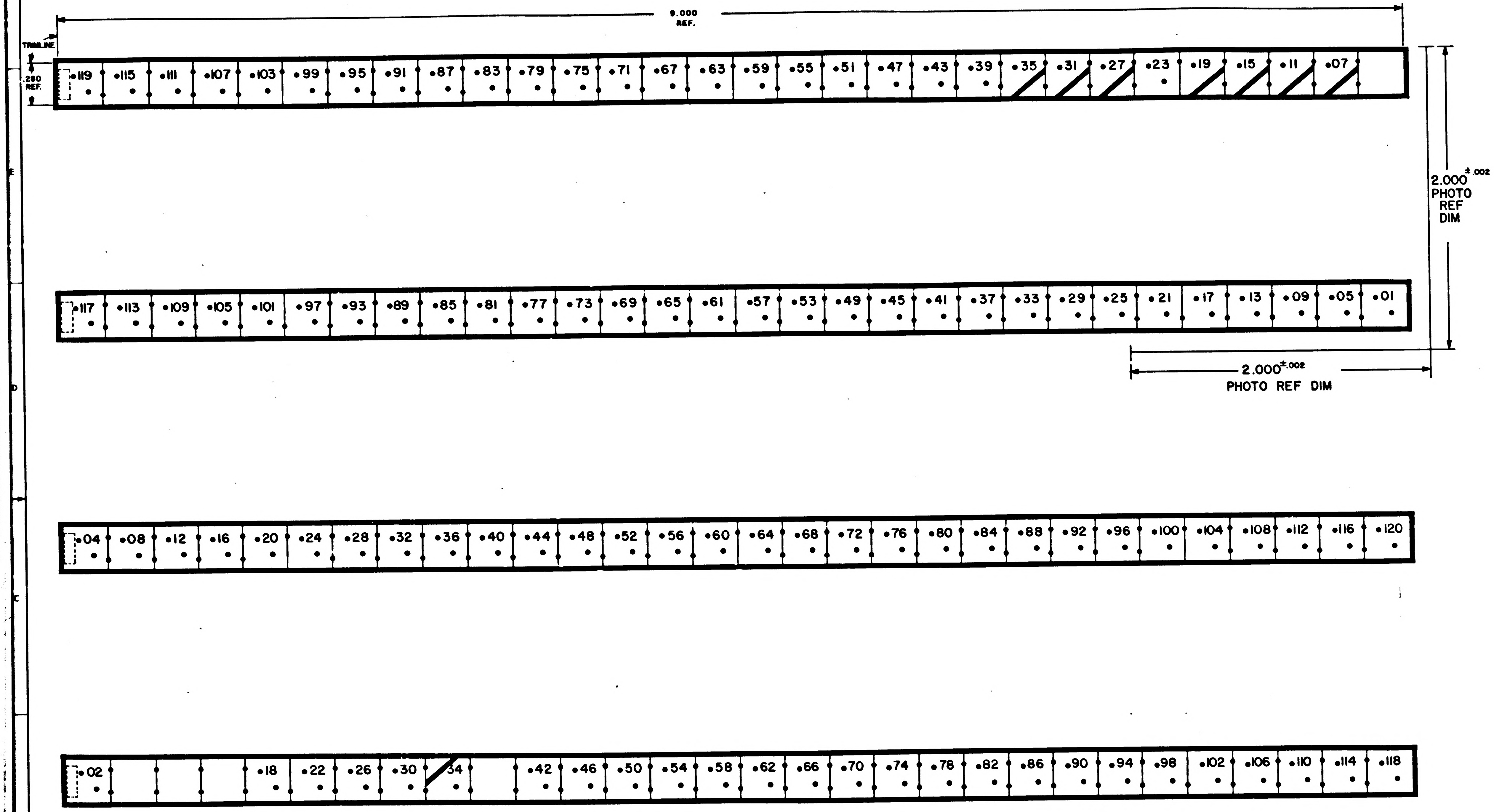
9.000
REF.
TRIMLINE
.280
REF.
2.000 ±.002
PHOTO
REF
DIM
2.000 ±.002
PHOTO REF DIM
119 115 111 107 103 99 95 91 87 83 79 75 71 67 63 59 55 51 47 43 39 35 31 27 23 19 15 11 07
117 113 109 105 101 97 93 89 85 81 77 73 69 65 61 57 53 49 45 41 37 33 29 25 21 17 13 09 05 01
04 08 12 16 20 24 28 32 36 40 44 48 52 56 60 64 68 72 76 80 84 88 92 96 100 104 108 112 116 120
02 18 22 26 30 34 42 46 50 54 58 62 66 70 74 78 82 86 90 94 98 102 106 110 114 118

REFERENCE DWG.
1. WIRING DIAGRAM 006:3!

NOTES:
1. INTERPRET DRAWING IN ACCORDANCE WITH STANDARDS PRESCRIBED BY MIL-D-70327
2. ORIGINAL OF THIS DRAWING OR REPRODUCTION MADE BY PROCESS OR METHOD SHALL INSURE DIMENSIONAL STABILITY. DIMENSIONAL VARIATIONS SHALL NOT EXCEED .001 INCH PER INCH
3. MAKE MASTER PATTERN POSITIVE FILMS TO DIMENSIONS SHOWN
4. CUT TO WITHIN .010 OF TRIMLINE
5. MATERIAL: .006/.008 THICK PLASTIC SHEETS, SENSITIZED, DIMENSIONALLY STABLE PER L-F-340, TYPE IB, CLASS 2, STYLE IA

6. ● PUNCH HOLES TO .040 DIAMETER

QTY REQD	PART OR IDENTIFYING NO	NOMENCLATURE OR DESCRIPTION	FIND NO

LIST OF MATERIALS

NEXT ASSY | USED ON
APPLICATION

UNLESS OTHERWISE SPECIFIED
DIMENSIONS ARE IN INCHES
TOLERANCES ON
FRACTIONS ± — DECIMALS ±.005 ANGLES ± —
DO NOT SCALE THIS DRAWING
MATERIAL
SEE NOTE 5
HEAT TREATMENT —
FINAL FINISH —

MIT
INSTRUMENTATION LAB
CAMBRIDGE MASS
DWG NO CONTRACT
DRAWN DATE 6/13/63
CHECKED
APPROVAL 6/18/63
APPROVAL Eldon C Hall 6/15/63
NASA APPROVAL
MIT APPROVAL

MANNED SPACECRAFT CENTER
HOUSTON, TEXAS

IDENTIFICATION TAPE
LOGIC MODULE NO.

CODE IDENT NO | SIZE E | NASA DRAWING NO 1004181
SCALE 4/1 | WT | SHEET 1 OF 1

REVISIONS TDRR 02282			
SYM	DESCRIPTION	DATE	APPROVAL
A	REVISED PER TDRR 03, 18		

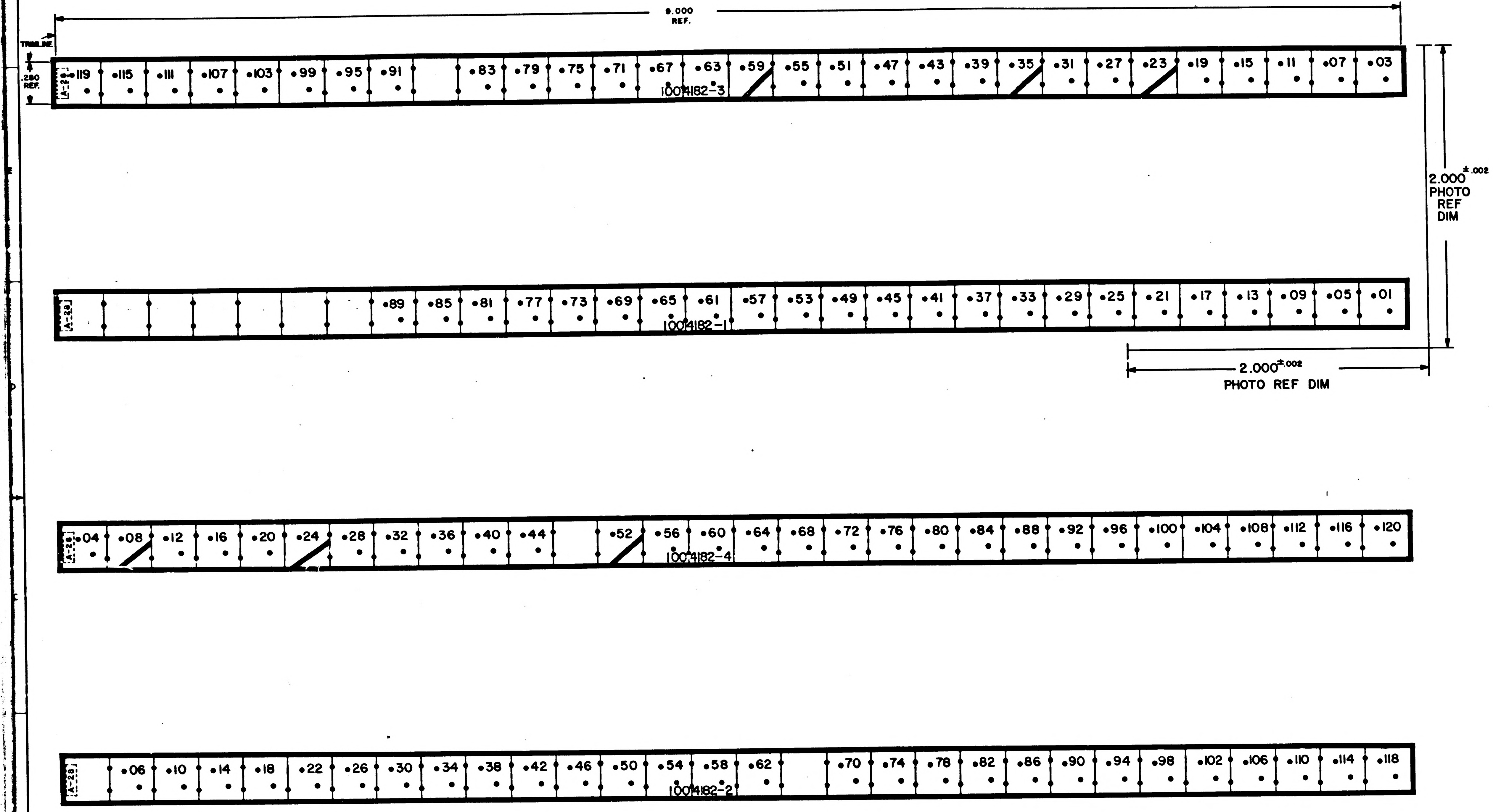
9.000
REF.
TRIMLINE
.280
REF.
A-28
•119 •115 •111 •107 •103 •99 •95 •91 •83 •79 •75 •71 •67 •63 •59 •55 •51 •47 •43 •39 •35 •31 •27 •23 •19 •15 •11 •07 •03
1004182-3
2.000 ±.002
PHOTO
REF
DIM
A-28
•89 •85 •81 •77 •73 •69 •65 •61 •57 •53 •49 •45 •41 •37 •33 •29 •25 •21 •17 •13 •09 •05 •01
1004182-1
2.000 ±.002
PHOTO REF DIM
A-28
•04 •08 •12 •16 •20 •24 •28 •32 •36 •40 •44 •52 •56 •60 •64 •68 •72 •76 •80 •84 •88 •92 •96 •100 •104 •108 •112 •116 •120
1004182-4
A-28
•06 •10 •14 •18 •22 •26 •30 •34 •38 •42 •46 •50 •54 •58 •62 •70 •74 •78 •82 •86 •90 •94 •98 •102 •106 •110 •114 •118
1004182-2

REFERENCE DWG.
1. WIRING DIAGRAM 1006132

NOTES:

1. INTERPRET DRAWING IN ACCORDANCE WITH STANDARDS PRESCRIBED BY MIL-D-70327
2. ORIGINAL OF THIS DRAWING OR REPRODUCTION MADE BY PROCESS OR METHOD SHALL INSURE DIMENSIONAL STABILITY. DIMENSIONAL VARIATIONS SHALL NOT EXCEED .001 INCH PER INCH
3. MAKE MASTER PATTERN POSITIVE FILMS TO DIMENSIONS SHOWN
4. CUT TO WITHIN .010 OF TRIMLINE
5. MATERIAL: .006/.008 THICK PLASTIC SHEETS, SENSITIZED, DIMENSIONALLY STABLE PER L-F-340, TYPE IB, CLASS 2, STYLE IA

6. ● PUNCH HOLES TO .040 DIAMETER

QTY REQD	PART OR IDENTIFYING NO	NOMENCLATURE OR DESCRIPTION	FIND NO

LIST OF MATERIALS

NEXT ASSY | USED ON
APPLICATION

UNLESS OTHERWISE SPECIFIED DIMENSIONS ARE IN INCHES
TOLERANCES ON
FRACTIONS ± — DECIMALS ±.005 ANGLES ± —
DO NOT SCALE THIS DRAWING
MATERIAL SEE NOTE 5
HEAT TREATMENT —
FINAL FINISH —

MIT
INSTRUMENTATION LAB
CAMBRIDGE MASS
DWG NO CONTRACT
DRAWN DATE 7/24/63
CHECKED
APPROVAL W. S. Turner 7/30/63
APPROVAL
NASA APPROVAL W. J. 7-31-63
MIT APPROVAL 7/31/63

MANNED SPACECRAFT CENTER
HOUSTON, TEXAS

IDENTIFICATION TAPE
LOGIC MODULE NO. A-28

CODE IDENT NO | SIZE E | NASA DRAWING NO. 1004182
SCALE 4/1 | WT | SHEET 1 OF 1

INCHES
0 1 2
PHOTOGRAPHIC SCALE ONLY

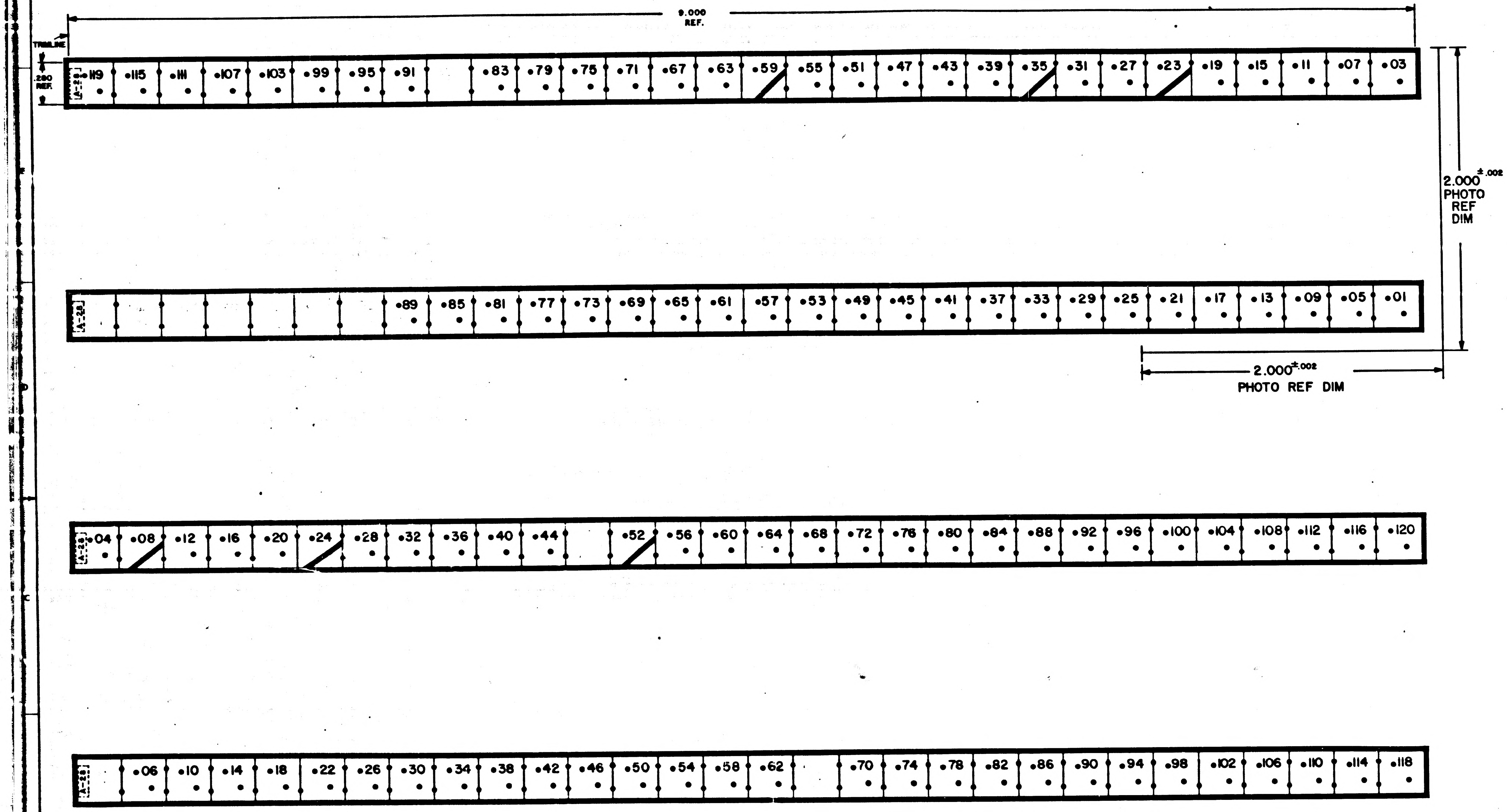
9.000
REF.
TRIMLINE
.280
REF.
A-28
119
115
111
107
103
99
95
91
83
79
75
71
67
63
59
55
51
47
43
39
35
31
27
23
19
15
11
07
03
2.000 ±.002
PHOTO
REF
DIM
A-28
89
85
81
77
73
69
65
61
57
53
49
45
41
37
33
29
25
21
17
13
09
05
01
2.000 ±.002
PHOTO REF DIM
A-28
04
08
12
16
20
24
28
32
36
40
44
52
56
60
64
68
72
76
80
84
88
92
96
100
104
108
112
116
120
A-28
06
10
14
18
22
26
30
34
38
42
46
50
54
58
62
70
74
78
82
86
90
94
98
102
106
110
114
118

REFERENCE DWG.
1. WIRING DIAGRAM 1006132

NOTES:

1. INTERPRET DRAWING IN ACCORDANCE WITH STANDARDS PRESCRIBED BY MIL-D-70327
2. ORIGINAL OF THIS DRAWING OR REPRODUCTION MADE BY PROCESS OR METHOD SHALL INSURE DIMENSIONAL STABILITY. DIMENSIONAL VARIATIONS SHALL NOT EXCEED .001 INCH PER INCH
3. MAKE MASTER PATTERN POSITIVE FILMS TO DIMENSIONS SHOWN
4. CUT TO WITHIN .010 OF TRIMLINE
5. MATERIAL: .006/.008 THICK PLASTIC SHEETS, SENSITIZED, DIMENSIONALLY STABLE PER L-F-340, TYPE II, CLASS 2, STYLE IA
6. ● PUNCH HOLES TO .040 DIAMETER

MASTER

QTY REQD	PART OR IDENTIFYING NO	NOMENCLATURE OR DESCRIPTION	FIND NO

LIST OF MATERIALS

NEXT ASSY	USED ON
APPLICATION	

UNLESS OTHERWISE SPECIFIED DIMENSIONS ARE IN INCHES
TOLERANCES ON
FRACTIONS ± — DECIMALS ±.005 ANGLES ± —
DO NOT SCALE THIS DRAWING
MATERIAL SEE NOTE 5
HEAT TREATMENT —
FINAL FINISH —

MIT INSTRUMENTATION LAB
Cambridge Mass
DWG NO CONTRACT
DRAWN DATE 7/24/63
CHECKED
APPROVAL 7/30/63
APPROVAL
NASA APPROVAL W J 7-31-63
MIT APPROVAL 7/31/63

MANNED SPACECRAFT CENTER
HOUSTON, TEXAS

IDENTIFICATION TAPE
LOGIC MODULE NO. A-28

CODE IDENT NO
SIZE E
NASA DRAWING NO. 1004182
SCALE 4/1
WT
SHEET 1 OF 1

INCHES
PHOTOGRAPHIC SCALE ONLY

NOTICE – WHEN GOVERNMENT DRAWINGS, SPECIFICATIONS, OR OTHER DATA ARE USED FOR ANY PURPOSE OTHER THAN IN CONNECTION WITH A DEFINITELY RELATED GOVERNMENT PROCUREMENT OPERATION, THE UNITED STATES GOVERNMENT THEREBY INCURS NO RESPONSIBILITY NOR ANY OBLIGATION WHATSOEVER; AND THE FACT THAT THE GOVERNMENT MAY HAVE FORMULATED, FURNISHED, OR IN ANY WAY SUPPLIED THE SAID DRAWINGS, SPECIFICATIONS, OR OTHER DATA IS NOT TO BE REGARDED BY IMPLICATION OR OTHERWISE AS IN ANY MANNER LICENSING THE HOLDER OR ANY OTHER PERSON OR CORPORATION, OR CONVEYING ANY RIGHTS OR PERMISSION TO MANUFACTURE, USE, OR SELL ANY PATENTED INVENTION THAT MAY IN ANY WAY BE RELATED THERETO

REVISIONS TDRR 03282			
SYM	DESCRIPTION	DATE	APPROVAL
A	REVISED PER TDRR 03 :4	9-12-69	RPL WC

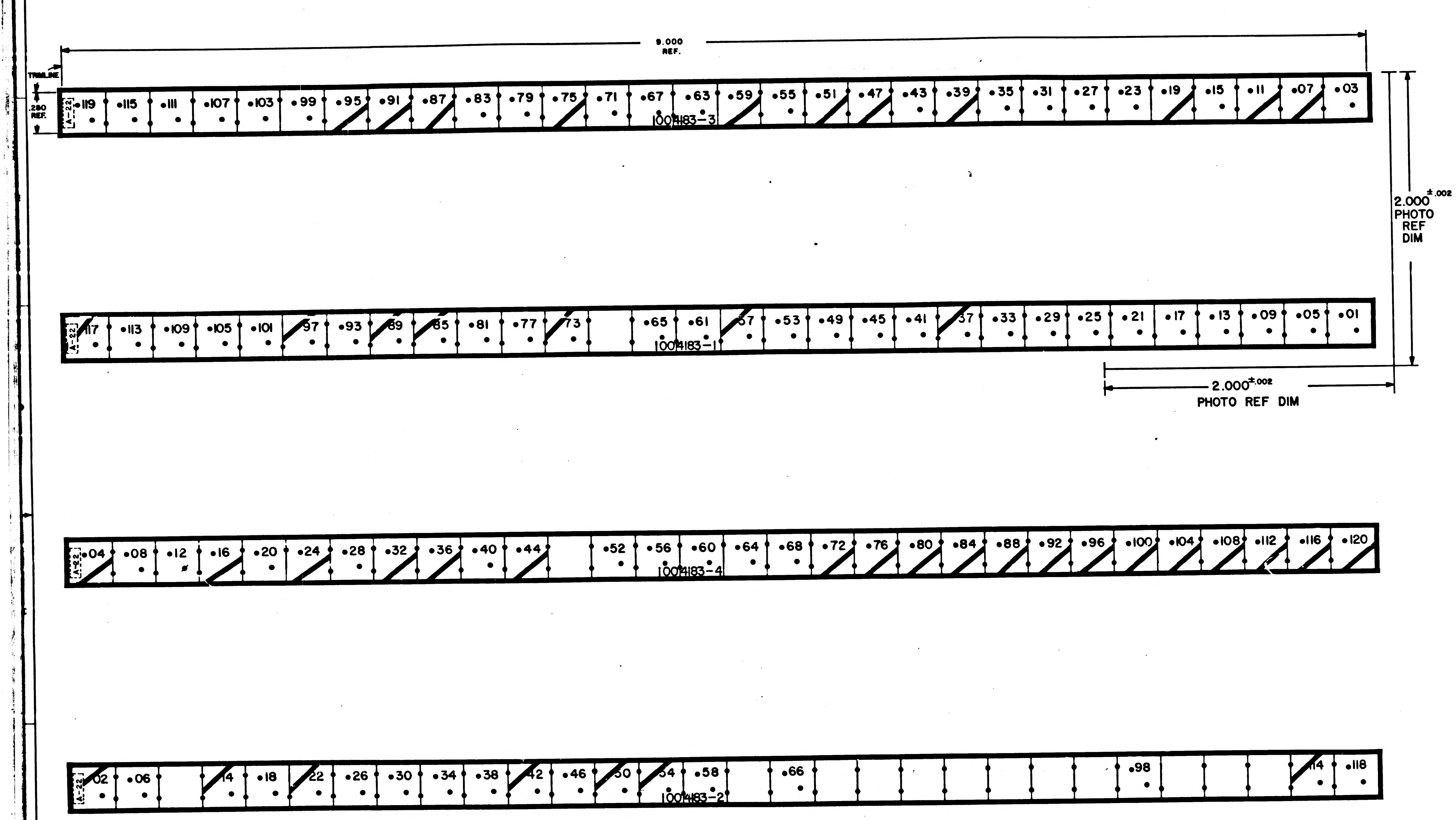
9.000
REF.
TRIMLINE
.280
REF.
A-22
119
115
111
107
103
99
95
91
87
83
79
75
71
67
63
59
55
51
47
43
39
35
31
27
23
19
15
11
07
03
1004183-3
2.000 ±.002
PHOTO
REF
DIM
A-22
117
113
109
105
101
97
93
89
85
81
77
73
65
61
57
53
49
45
41
37
33
29
25
21
17
13
09
05
01
1004183-1
2.000±.002
PHOTO REF DIM
A-22
04
08
12
16
20
24
28
32
36
40
44
52
56
60
64
68
72
76
80
84
88
92
96
100
104
108
112
116
120
1004183-4
A-22
02
06
14
18
22
26
30
34
38
42
46
50
54
58
66
98
114
118
1004183-2

REFERENCE DWG.
1. WIRING DIAGRAM 1006133

NOTES:

1. INTERPRET DRAWING IN ACCORDANCE WITH STANDARDS PRESCRIBED BY MIL-D-70327
2. ORIGINAL OF THIS DRAWING OR REPRODUCTION MADE BY PROCESS OR METHOD SHALL INSURE DIMENSIONAL STABILITY. DIMENSIONAL VARIATIONS SHALL NOT EXCEED .001 INCH PER INCH
3. MAKE MASTER PATTERN POSITIVE FILMS TO DIMENSIONS SHOWN
4. CUT TO WITHIN .010 OF TRIMLINE
5. MATERIAL: .006/.008 THICK PLASTIC SHEETS, SENSITIZED, DIMENSIONALLY STABLE PER L-F-340, TYPE IB, CLASS 2, STYLE IA
6. ● PUNCH HOLES TO .040 DIAMETER

QTY REQD	PART OR IDENTIFYING NO	NOMENCLATURE OR DESCRIPTION	FIND NO

LIST OF MATERIALS

NEXT ASSY	USED ON

APPLICATION

UNLESS OTHERWISE SPECIFIED
DIMENSIONS ARE IN INCHES
TOLERANCES ON
FRACTIONS ± — DECIMALS ±.005 ANGLES ± —
DO NOT SCALE THIS DRAWING
MATERIAL
SEE NOTE 5
HEAT TREATMENT —
FINAL FINISH —

MIT
INSTRUMENTATION LAB
CAMBRIDGE MASS
DWG NO CONTRACT
DRAWN Butler DATE 7/24/63
CHECKED Lindell
APPROVAL W.B. Duncan 7/30/63
APPROVAL D. Dugger 7/31/63
NASA APPROVAL W. J. Rathie 7-31-63
MIT APPROVAL 7/31/63

MANNED SPACECRAFT CENTER
HOUSTON, TEXAS

IDENTIFICATION TAPE
LOGIC MODULE NO. A-22

CODE IDENT NO.
SIZE E
NASA DRAWING NO. 1004183
SCALE 4/1
WT
SHEET 1 OF 1

INCHES
0 1 2
PHOTOGRAPHIC SCALE ONLY

NOTICE — WHEN GOVERNMENT DRAWINGS, SPECIFICATIONS, OR OTHER DATA ARE USED FOR ANY PURPOSE OTHER THAN IN CONNECTION WITH A DEFINITELY RELATED GOVERNMENT PROCUREMENT OPERATION, THE UNITED STATES GOVERNMENT THEREBY INCURS NO RESPONSIBILITY NOR ANY OBLIGATION WHATSOEVER AND THE FACT THAT THE GOVERNMENT MAY HAVE FORMULATED, FURNISHED, OR IN ANY WAY SUPPLIED THE SAID DRAWINGS, SPECIFICATIONS OR OTHER DATA IS NOT TO BE REGARDED BY IMPLICATION OR OTHERWISE AS IN ANY MANNER LICENSING THE HOLDER OR ANY OTHER PERSON OR CORPORATION, OR CONVEYING ANY RIGHTS OR PERMISSION TO MANUFACTURE, USE, OR SELL ANY PATENTED INVENTION THAT MAY IN ANY WAY BE RELATED THERETO

REVISIONS			
SYM	DESCRIPTION	DATE	APPROVAL

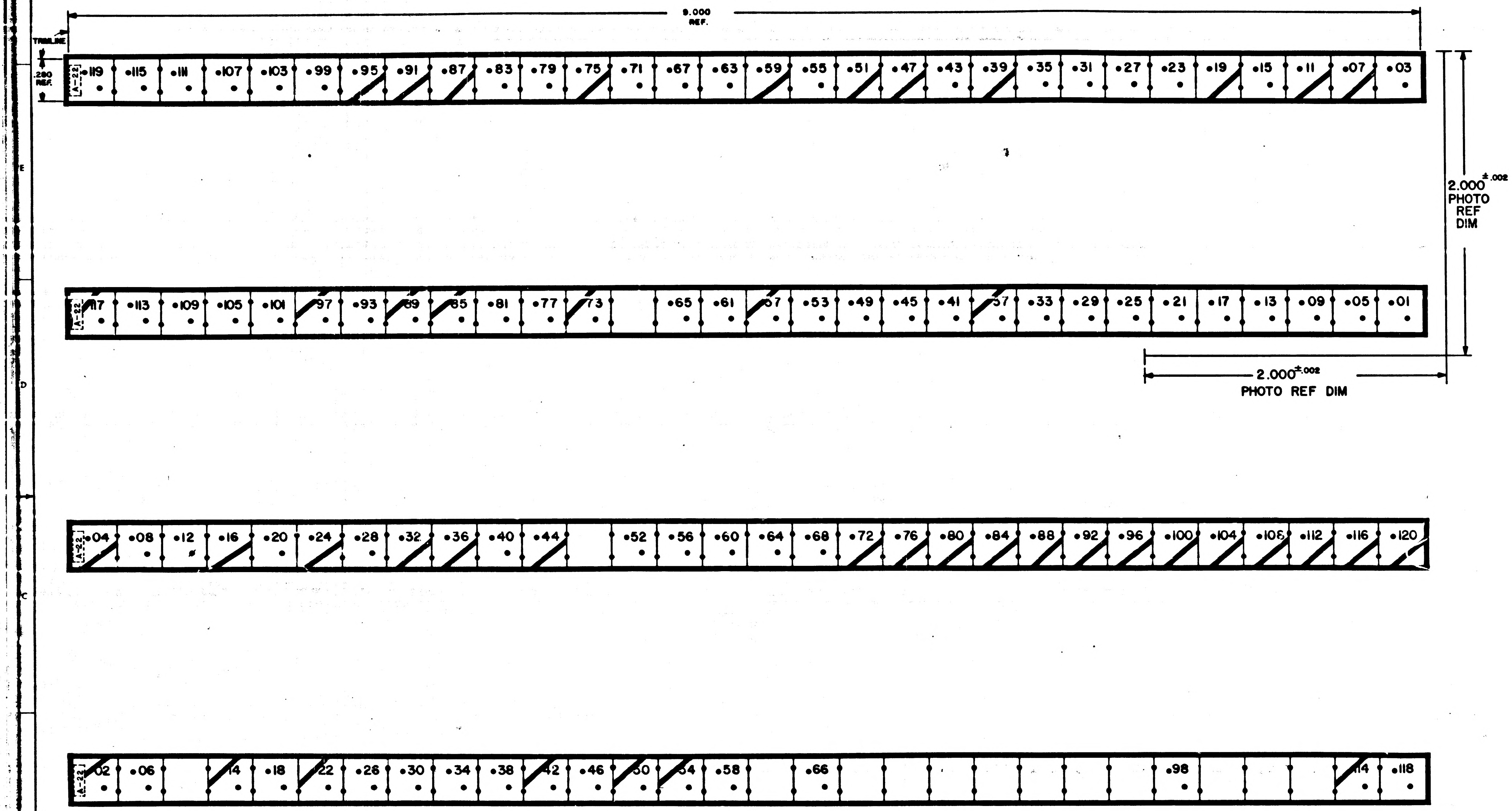

9.000
REF.
TRIMLINE
.280
REF.
A-22
•119 •115 •111 •107 •103 •99 •95 •91 •87 •83 •79 •75 •71 •67 •63 •59 •55 •51 •47 •43 •39 •35 •31 •27 •23 •19 •15 •11 •07 •03
A-22
•117 •113 •109 •105 •101 •97 •93 •89 •85 •81 •77 •73 •65 •61 •57 •53 •49 •45 •41 •37 •33 •29 •25 •21 •17 •13 •09 •05 •01
2.000 ±.002
PHOTO
REF
DIM
2.000 ±.002
PHOTO REF DIM
A-22
•04 •08 •12 •16 •20 •24 •28 •32 •36 •40 •44 •52 •56 •60 •64 •68 •72 •76 •80 •84 •88 •92 •96 •100 •104 •108 •112 •116 •120
A-22
•02 •06 •14 •18 •22 •26 •30 •34 •38 •42 •46 •50 •54 •58 •66 •98 •114 •118

REFERENCE DWG.
I. WIRING DIAGRAM 1006133

NOTES:
1. INTERPRET DRAWING IN ACCORDANCE WITH STANDARDS PRESCRIBED BY MIL-D-70327
2. ORIGINAL OF THIS DRAWING OR REPRODUCTION MADE BY PROCESS OR METHOD SHALL INSURE DIMENSIONAL STABILITY. DIMENSIONAL VARIATIONS SHALL NOT EXCEED .001 INCH PER INCH
3. MAKE MASTER PATTERN POSITIVE FILMS TO DIMENSIONS SHOWN
4. CUT TO WITHIN .010 OF TRIMLINE
5. MATERIAL: .006/.008 THICK PLASTIC SHEETS, SENSITIZED, DIMENSIONALLY STABLE PER L-F-340, TYPE II, CLASS 2, STYLE IA

6. ● PUNCH HOLES TO .040 DIAMETER

MASTER

QTY REQD	PART OR IDENTIFYING NO	NOMENCLATURE OR DESCRIPTION	FIND NO

LIST OF MATERIALS

NEXT ASSY	USED ON
APPLICATION	

UNLESS OTHERWISE SPECIFIED
DIMENSIONS ARE IN INCHES
TOLERANCES ON
FRACTIONS ± — DECIMALS ±.005 ANGLES ± —
DO NOT SCALE THIS DRAWING
MATERIAL
SEE NOTE 5
HEAT TREATMENT —
FINAL FINISH —

MIT
INSTRUMENTATION LAB
CAMBRIDGE MASS
DWG NO
CONTRACT
DRAWN DATE 7/26/63
CHECKED
APPROVAL 7/30/63
APPROVAL
NASA APPROVAL W. J. 7-31-63
MIT APPROVAL 7/31/63

MANNED SPACECRAFT CENTER
HOUSTON, TEXAS

IDENTIFICATION TAPE
LOGIC MODULE NO. A-22

CODE IDENT NO.
SIZE E
NASA DRAWING NO. 1004183
SCALE 4/1
WT
SHEET 1 OF 1

PHOTOGRAPHIC SCALE ONLY

SYM	DESCRIPTION	DATE	APPROVAL

REVISIONS 02575

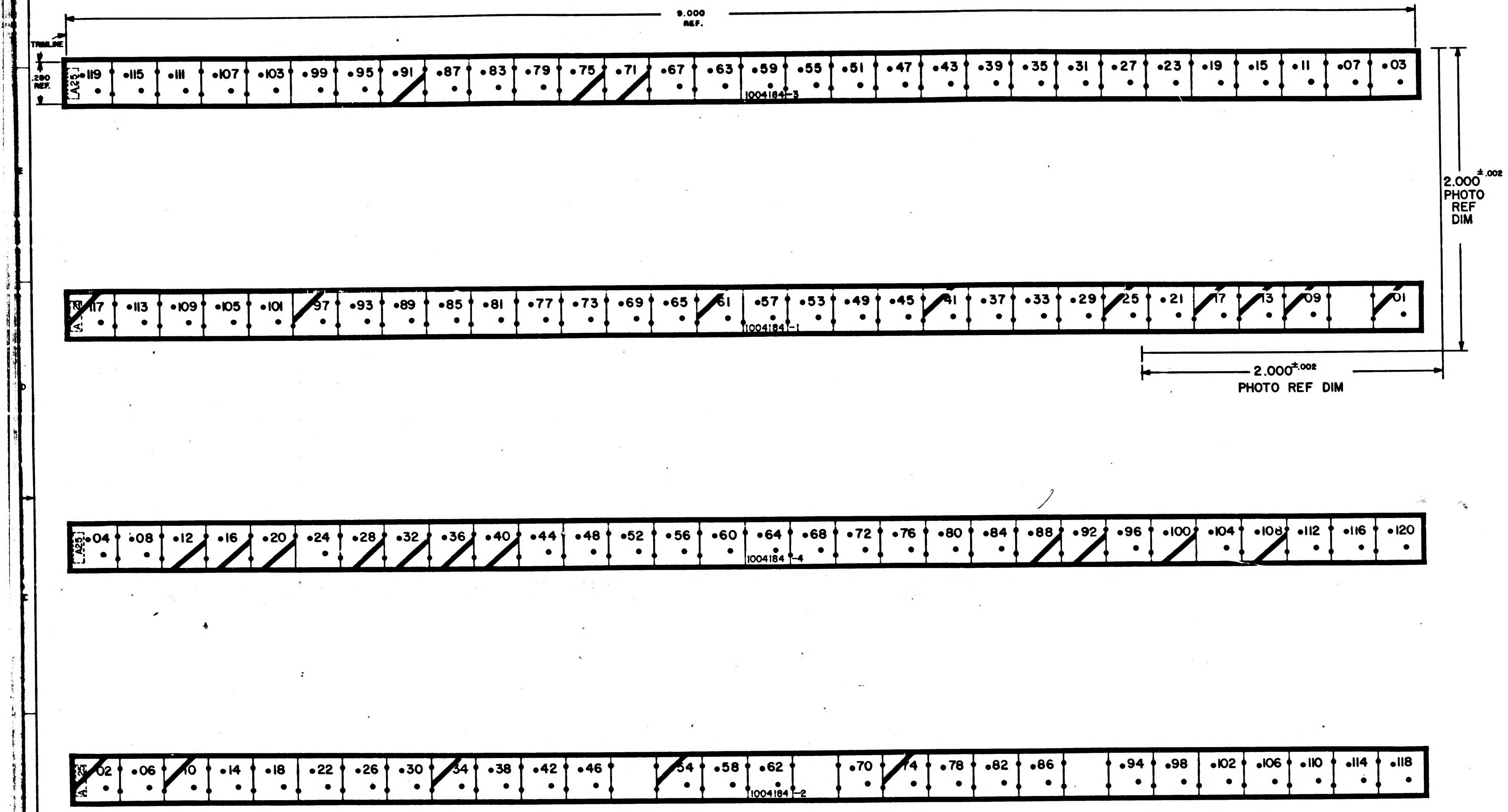

9.000 REF.
TRIMLINE
.280 REF.
A25
•119 •115 •111 •107 •103 •99 •95 •91 •87 •83 •79 •75 •71 •67 •63 •59 •55 •51 •47 •43 •39 •35 •31 •27 •23 •19 •15 •11 •07 •03
1004184-3
2.000 ±.002 PHOTO REF DIM
117 •113 •109 •105 •101 97 •93 •89 •85 •81 •77 •73 •69 •65 61 •57 •53 •49 •45 41 •37 •33 •29 25 •21 17 13 09 01
1004184-1
2.000 ±.002 PHOTO REF DIM
•04 •08 •12 •16 •20 •24 •28 •32 •36 •40 •44 •48 •52 •56 •60 •64 •68 •72 •76 •80 •84 •88 •92 •96 •100 •104 •108 •112 •116 •120
1004184-4
02 •06 10 •14 •18 •22 •26 •30 34 •38 •42 •46 54 •58 •62 •70 74 •78 •82 •86 •94 •98 •102 •106 •110 •114 •118
1004184-2

REFERENCE DWG.
L WIRINC DIAGRAM 1006134

1	1004184-4	IDENTIFICATION TAPE	4
1	1004184-3	IDENTIFICATION TAPE	3
1	1004184-2	IDENTIFICATION TAPE	2
1	1004184-1	IDENTIFICATION TAPE	1
QTY REQD	PART OR IDENTIFYING NO	NOMENCLATURE OR DESCRIPTION	FIND NO

LIST OF MATERIALS

NOTES:
1. INTERPRET DRAWING IN ACCORDANCE WITH STANDARDS PRESCRIBED BY MIL-D-70327
2. ORIGINAL OF THIS DRAWING OR REPRODUCTION MADE BY PROCESS OR METHOD SHALL INSURE DIMENSIONAL STABILITY. DIMENSIONAL VARIATIONS SHALL NOT EXCEED .001 INCH PER INCH
3. MAKE MASTER PATTERN POSITIVE FILMS TO DIMENSIONS SHOWN
4. CUT TO WITHIN .010 OF TRIMLINE
5. MATERIAL: .006/.008 THICK PLASTIC SHEETS, SENSITIZED, DIMENSIONALLY STABLE PER L-F-340, TYPE IB, CLASS 2, STYLE IA
6. ● PUNCH HOLES TO .040 DIAMETER

NEXT ASSY	USED ON
APPLICATION	

UNLESS OTHERWISE SPECIFIED
DIMENSIONS ARE IN INCHES
TOLERANCES ON
FRACTIONS ± — DECIMALS ±.005 ANGLES ± —
DO NOT SCALE THIS DRAWING
MATERIAL
SEE NOTE 5
HEAT TREATMENT —
FINAL FINISH —

MIT
INSTRUMENTATION LAB
CAMBRIDGE MASS
DWG NO CONTRACT
DRAWN DATE
CHECKED
APPROVAL WBTrageser
APPROVAL
NASA APPROVAL Jack Barnes
MIT APPROVAL W Kupfer 14 Aug 63

MANNED SPACECRAFT CENTER
HOUSTON, TEXAS

IDENTIFICATION TAPE
LOGIC MODULE NO. A25

CODE IDENT NO. | SIZE E | NASA DRAWING NO 1004184
SCALE 4/1 | WT | SHEET 1 OF 1

INCHES
0 1 2
PHOTOGRAPHIC SCALE ONLY

NOTICE — WHEN GOVERNMENT DRAWINGS, SPECIFICATIONS, OR OTHER DATA ARE USED FOR ANY PURPOSE OTHER THAN IN CONNECTION WITH A DEFINITELY RELATED GOVERNMENT PROCUREMENT OPERATION, THE UNITED STATES GOVERNMENT THEREBY INCURS NO RESPONSIBILITY NOR ANY OBLIGATION WHATSOEVER AND THE FACT THAT THE GOVERNMENT MAY HAVE FORMULATED, FURNISHED, OR IN ANY WAY SUPPLIED THE SAID DRAWINGS, SPECIFICATIONS, OR OTHER DATA IS NOT TO BE REGARDED BY IMPLICATION OR OTHERWISE AS IN ANY MANNER LICENSING THE HOLDER OR ANY OTHER PERSON OR CORPORATION, OR CONVEYING ANY RIGHTS OR PERMISSION TO MANUFACTURE, USE, OR SELL ANY PATENTED INVENTION THAT MAY IN ANY WAY BE RELATED THERETO

REVISIONS TDRR 02282			
SYM	DESCRIPTION	DATE	APPROVAL
A	REVISED PER TDRR 03 20	9-3-63	WK

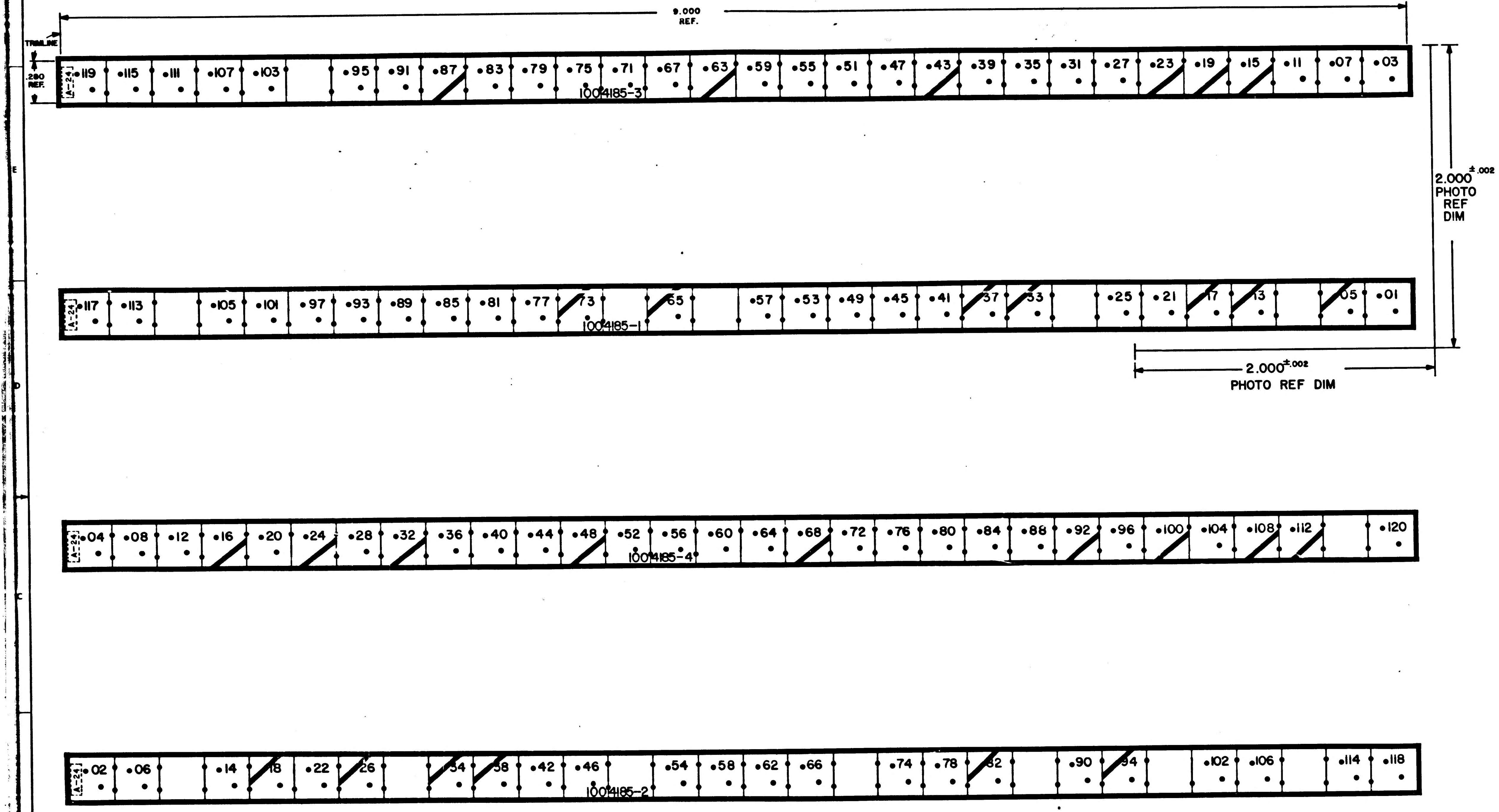
9.000
REF.
TRIMLINE
.280
REF.
A-24
119
115
111
107
103
95
91
87
83
79
75
71
67
63
59
55
51
47
43
39
35
31
27
23
19
15
11
07
03
1004185-3
2.000 ±.002
PHOTO
REF
DIM
A-24
117
113
105
101
97
93
89
85
81
77
73
65
57
53
49
45
41
37
33
25
21
17
13
05
01
1004185-1
2.000 ±.002
PHOTO REF DIM
A-24
04
08
12
16
20
24
28
32
36
40
44
48
52
56
60
64
68
72
76
80
84
88
92
96
100
104
108
112
120
1004185-4
A-24
02
06
14
18
22
26
34
38
42
46
54
58
62
66
74
78
82
90
94
102
106
114
118
1004185-2

REFERENCE DWG.
1. WIRING DIAGRAM 1006135

NOTES:

1. INTERPRET DRAWING IN ACCORDANCE WITH STANDARDS PRESCRIBED BY MIL-D-70327
2. ORIGINAL OF THIS DRAWING OR REPRODUCTION MADE BY PROCESS OR METHOD SHALL INSURE DIMENSIONAL STABILITY. DIMENSIONAL VARIATIONS SHALL NOT EXCEED .001 INCH PER INCH
3. MAKE MASTER PATTERN POSITIVE FILMS TO DIMENSIONS SHOWN
4. CUT TO WITHIN .010 OF TRIMLINE
5. MATERIAL: .006/.008 THICK PLASTIC SHEETS, SENSITIZED, DIMENSIONALLY STABLE PER L-F-340, TYPE IB, CLASS 2, STYLE IA

6. ● PUNCH HOLES TO .040 DIAMETER

QTY REQD	PART OR IDENTIFYING NO	NOMENCLATURE OR DESCRIPTION	FIND NO

LIST OF MATERIALS

NEXT ASSY	USED ON	UNLESS OTHERWISE SPECIFIED DIMENSIONS ARE IN INCHES TOLERANCES ON FRACTIONS ± — DECIMALS ±.005 ANGLES ± —	MIT INSTRUMENTATION LAB CAMBRIDGE MASS
APPLICATION		DO NOT SCALE THIS DRAWING	DRAWN DATE 7/24/63 CHECKED APPROVAL W.S. 7/30/63 APPROVAL 7/31/63
		MATERIAL SEE NOTE 5	NASA APPROVAL W.J. 7-31-63
		HEAT TREATMENT —	MIT APPROVAL 7/31/63
		FINAL FINISH —	

MANNED SPACECRAFT CENTER
HOUSTON, TEXAS

IDENTIFICATION TAPE
LOGIC MODULE NO. A-24

CODE IDENT NO.	SIZE	NASA DRAWING NO.
	E	1004185
SCALE 4/1	WT	SHEET 1 OF 1

MASTER

INCHES
0 1 2
PHOTOGRAPHIC SCALE ONLY

NOTICE — WHEN GOVERNMENT DRAWINGS, SPECIFICATIONS, OR OTHER DATA ARE USED FOR ANY PURPOSE OTHER THAN IN CONNECTION WITH A DEFINITELY RELATED GOVERNMENT PROCUREMENT OPERATION, THE UNITED STATES GOVERNMENT THEREBY INCURS NO RESPONSIBILITY NOR ANY OBLIGATION WHATSOEVER; AND THE FACT THAT THE GOVERNMENT MAY HAVE FORMULATED, FURNISHED, OR IN ANY WAY SUPPLIED THE SAID DRAWINGS, SPECIFICATIONS, OR OTHER DATA IS NOT TO BE REGARDED BY IMPLICATION OR OTHERWISE AS IN ANY MANNER LICENSING THE HOLDER OR ANY OTHER PERSON OR CORPORATION, OR CONVEYING ANY RIGHTS OR PERMISSION TO MANUFACTURE, USE, OR SELL ANY PATENTED INVENTION THAT MAY IN ANY WAY BE RELATED THERETO

REVISIONS TDRR 02282			
SYM	DESCRIPTION	DATE	APPROVAL

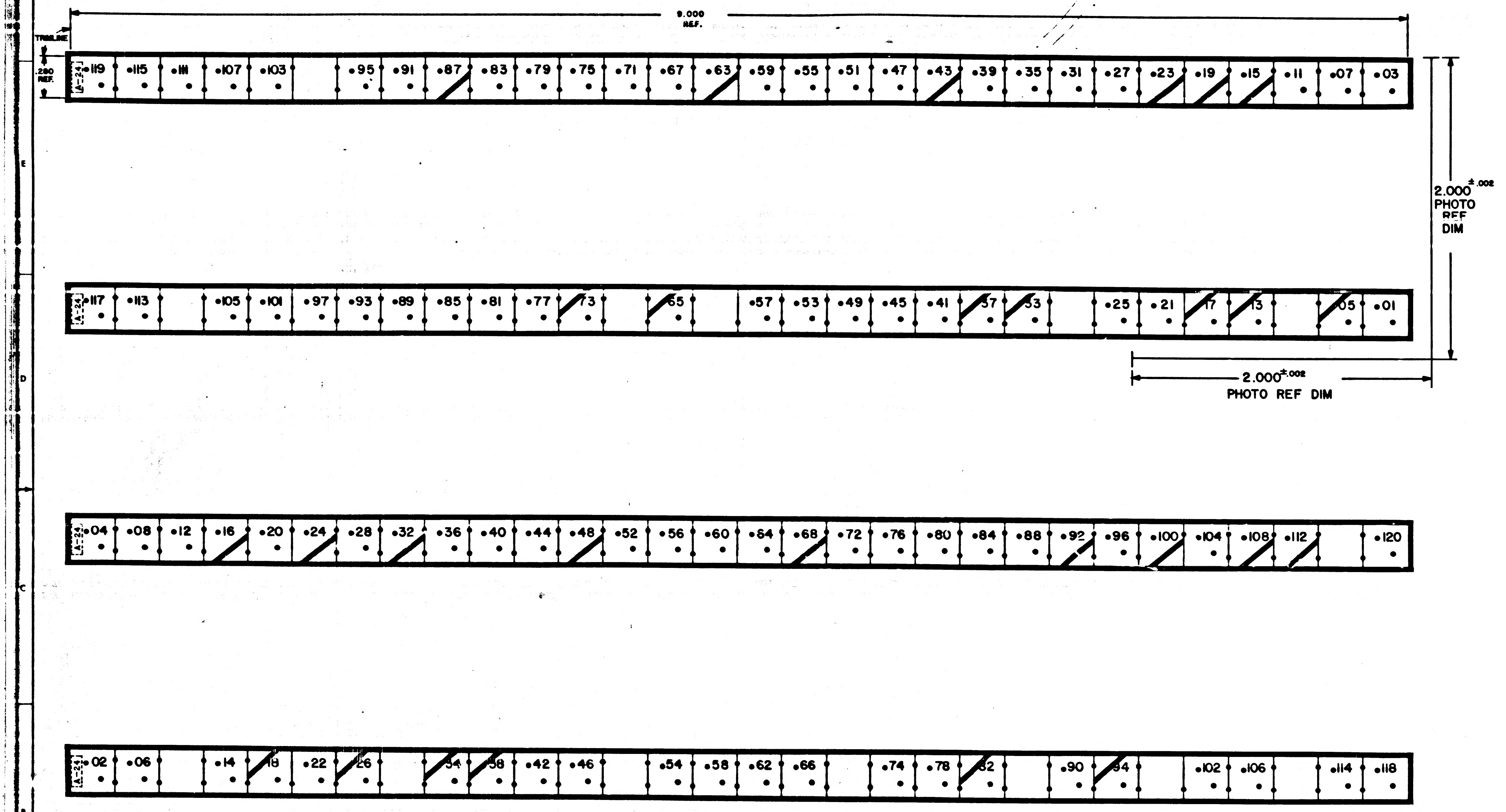

9.000 REF.
TRIMLINE
.280 REF.
A-24
119 115 111 107 103 95 91 87 83 79 75 71 67 63 59 55 51 47 43 39 35 31 27 23 19 15 11 07 03
117 113 105 101 97 93 89 85 81 77 73 65 57 53 49 45 41 37 33 25 21 17 13 05 01
04 08 12 16 20 24 28 32 36 40 44 48 52 56 60 64 68 72 76 80 84 88 92 96 100 104 108 112 120
02 06 14 18 22 26 34 38 42 46 54 58 62 66 74 78 82 90 94 102 106 114 118
2.000 ±.002 PHOTO REF DIM
2.000 ±.002 PHOTO REF DIM

REFERENCE DWG.
L WIRING DIAGRAM 1006136

NOTES:

1. INTERPRET DRAWING IN ACCORDANCE WITH STANDARDS PRESCRIBED BY MIL-D-70327
2. ORIGINAL OF THIS DRAWING OR REPRODUCTION MADE BY PROCESS OR METHOD SHALL INSURE DIMENSIONAL STABILITY. DIMENSIONAL VARIATIONS SHALL NOT EXCEED .001 INCH PER INCH
3. MAKE MASTER PATTERN POSITIVE FILMS TO DIMENSIONS SHOWN
4. CUT TO WITHIN .010 OF TRIMLINE
5. MATERIAL: .006/.008 THICK PLASTIC SHEETS, SENSITIZED, DIMENSIONALLY STABLE PER L-F-340, TYPE IB, CLASS 2, STYLE IA

6. ● PUNCH HOLES TO .040 DIAMETER

QTY REQD	PART OR IDENTIFYING NO	NOMENCLATURE OR DESCRIPTION	FIND NO

LIST OF MATERIALS

NEXT ASSY	USED ON
APPLICATION	

UNLESS OTHERWISE SPECIFIED
DIMENSIONS ARE IN INCHES
TOLERANCES ON
FRACTIONS ± — DECIMALS ±.005 ANGLES ± —
DO NOT SCALE THIS DRAWING
MATERIAL SEE NOTE 5
HEAT TREATMENT —
FINAL FINISH —

MIT
INSTRUMENTATION LAB
CAMBRIDGE MASS
DRAWN DATE 7/29/63
CHECKED
APPROVAL W. S. Dugnar 7/30/63
APPROVAL 7/31/63
NASA APPROVAL W. G. Robins 7-31-63
MIT APPROVAL 7/31/63

MANNED SPACECRAFT CENTER
HOUSTON, TEXAS

IDENTIFICATION TAPE
LOGIC MODULE NO. A-24

CODE IDENT NO. | SIZE E | NASA DRAWING NO. 1004185
SCALE 4/1 | WT | SHEET 1 OF 1

MASTER

INCHES
PHOTOGRAPHIC SCALE ONLY

SYM	DESCRIPTION	DATE	APPROVAL
A	CHANGED PER TDRR 02548	8-10-63	

REVISIONS TDRR 02049

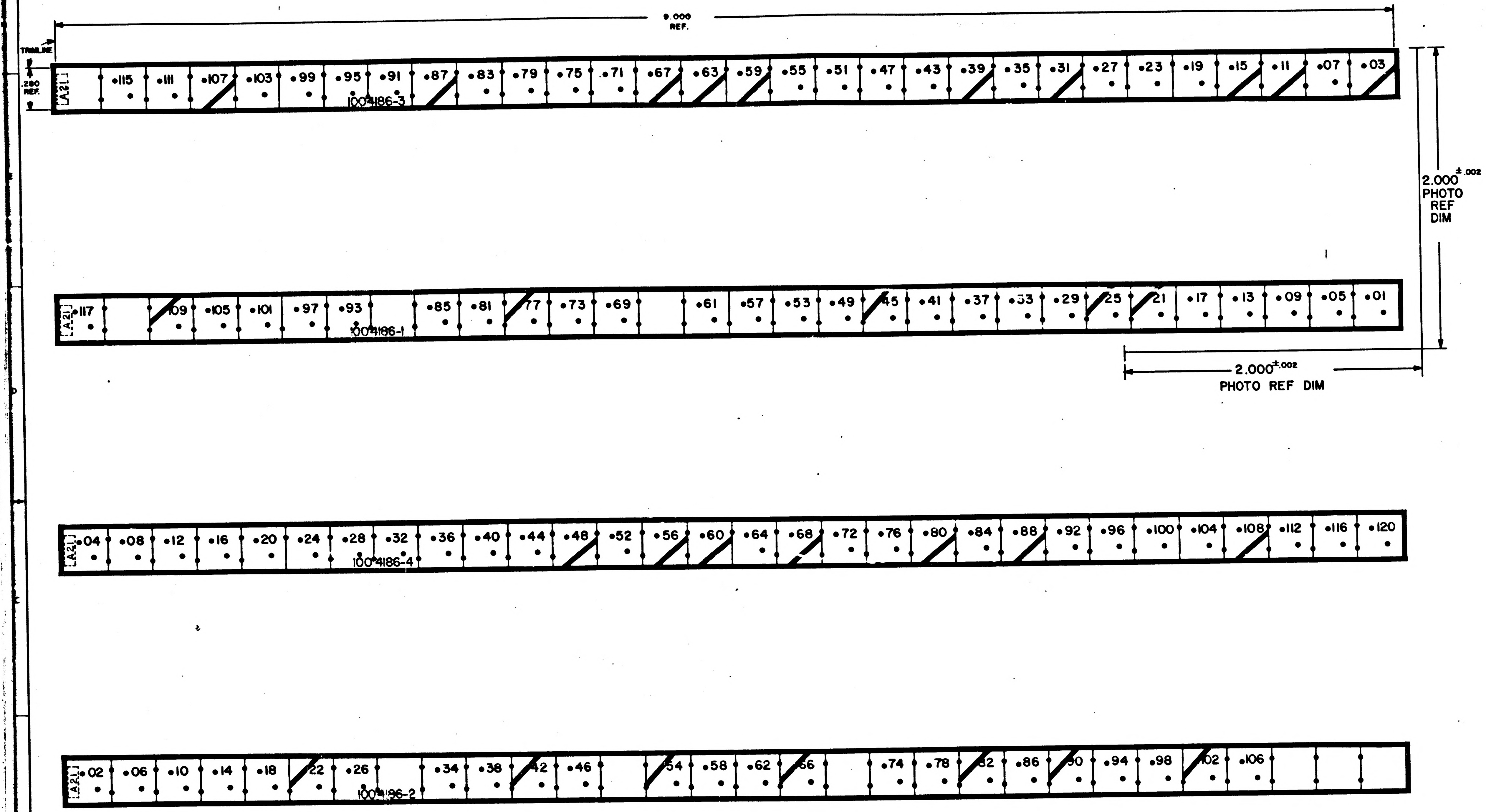
9.000
REF.
TRIMLINE
.280
REF.
A21
115
111
107
103
99
95
91
87
83
79
75
71
67
63
59
55
51
47
43
39
35
31
27
23
19
15
11
07
03
1004186-3
2.000 ±.002
PHOTO
REF
DIM
A21
117
109
105
101
97
93
85
81
77
73
69
61
57
53
49
45
41
37
33
29
25
21
17
13
09
05
01
1004186-1
2.000 ±.002
PHOTO REF DIM
A21
04
08
12
16
20
24
28
32
36
40
44
48
52
56
60
64
68
72
76
80
84
88
92
96
100
104
108
112
116
120
1004186-4
A21
02
06
10
14
18
22
26
34
38
42
46
54
58
62
66
74
78
82
86
90
94
98
102
106
1004186-2

REFERENCE DWG.
1.SIGNAL WIRING DIAGRAM 1006136

NOTES:
1. INTERPRET DRAWING IN ACCORDANCE WITH STANDARDS PRESCRIBED BY MIL-D-70327
2. ORIGINAL OF THIS DRAWING OR REPRODUCTION MADE BY PROCESS OR METHOD SHALL INSURE DIMENSIONAL STABILITY. DIMENSIONAL VARIATIONS SHALL NOT EXCEED .001 INCH PER INCH
3. MAKE MASTER PATTERN POSITIVE FILMS TO DIMENSIONS SHOWN
4. CUT TO WITHIN .010 OF TRIMLINE
5. MATERIAL: .006/.008 THICK PLASTIC SHEETS, SENSITIZED, DIMENSIONALLY STABLE PER L-F-340, TYPE IB, CLASS 2, STYLE IA

6. ● PUNCH HOLES TO .040 DIAMETER

QTY REQD	PART OR IDENTIFYING NO	NOMENCLATURE OR DESCRIPTION	FIND NO

LIST OF MATERIALS

NEXT ASSY	USED ON

APPLICATION

UNLESS OTHERWISE SPECIFIED DIMENSIONS ARE IN INCHES
TOLERANCES ON
FRACTIONS ± —— DECIMALS ±.005 ANGLES ± ——
DO NOT SCALE THIS DRAWING
MATERIAL
SEE NOTE 5
HEAT TREATMENT ——
FINAL FINISH ——

MIT
INSTRUMENTATION LAB
Cambridge Mass
DOC NO
CONTRACT
DRAWN J. F. Walsh DATE 7/16/63
CHECKED D. Lindell 7/16/63
APPROVAL
APPROVAL 7/16/63
NASA APPROVAL W. J. 7-17-63
MIT APPROVAL 7/17/63

MANNED SPACECRAFT CENTER
HOUSTON, TEXAS

IDENTIFICATION TAPE
LOGIC MODULE NO. A21

CODE IDENT NO
SIZE E
NASA DRAWING NO 1004186
SCALE 4/1
WT
SHEET 1 OF 1

INCHES
PHOTOGRAPHIC SCALE ONLY

NOTICE — WHEN GOVERNMENT DRAWINGS, SPECIFICATIONS, OR OTHER DATA ARE USED FOR ANY PURPOSE OTHER THAN IN CONNECTION WITH A DEFINITELY RELATED GOVERNMENT PROCUREMENT OPERATION, THE UNITED STATES GOVERNMENT THEREBY INCURS NO RESPONSIBILITY NOR ANY OBLIGATION WHATSOEVER; AND THE FACT THAT THE GOVERNMENT MAY HAVE FORMULATED, FURNISHED, OR IN ANY WAY SUPPLIED THE SAID DRAWINGS, SPECIFICATIONS, OR OTHER DATA IS NOT TO BE REGARDED BY IMPLICATION OR OTHERWISE AS IN ANY MANNER LICENSING THE HOLDER OR ANY OTHER PERSON OR CORPORATION, OR CONVEYING ANY RIGHTS OR PERMISSION TO MANUFACTURE, USE, OR SELL ANY PATENTED INVENTION THAT MAY IN ANY WAY BE RELATED THERETO

SYM	DESCRIPTION	DATE	APPROVAL

REVISIONS

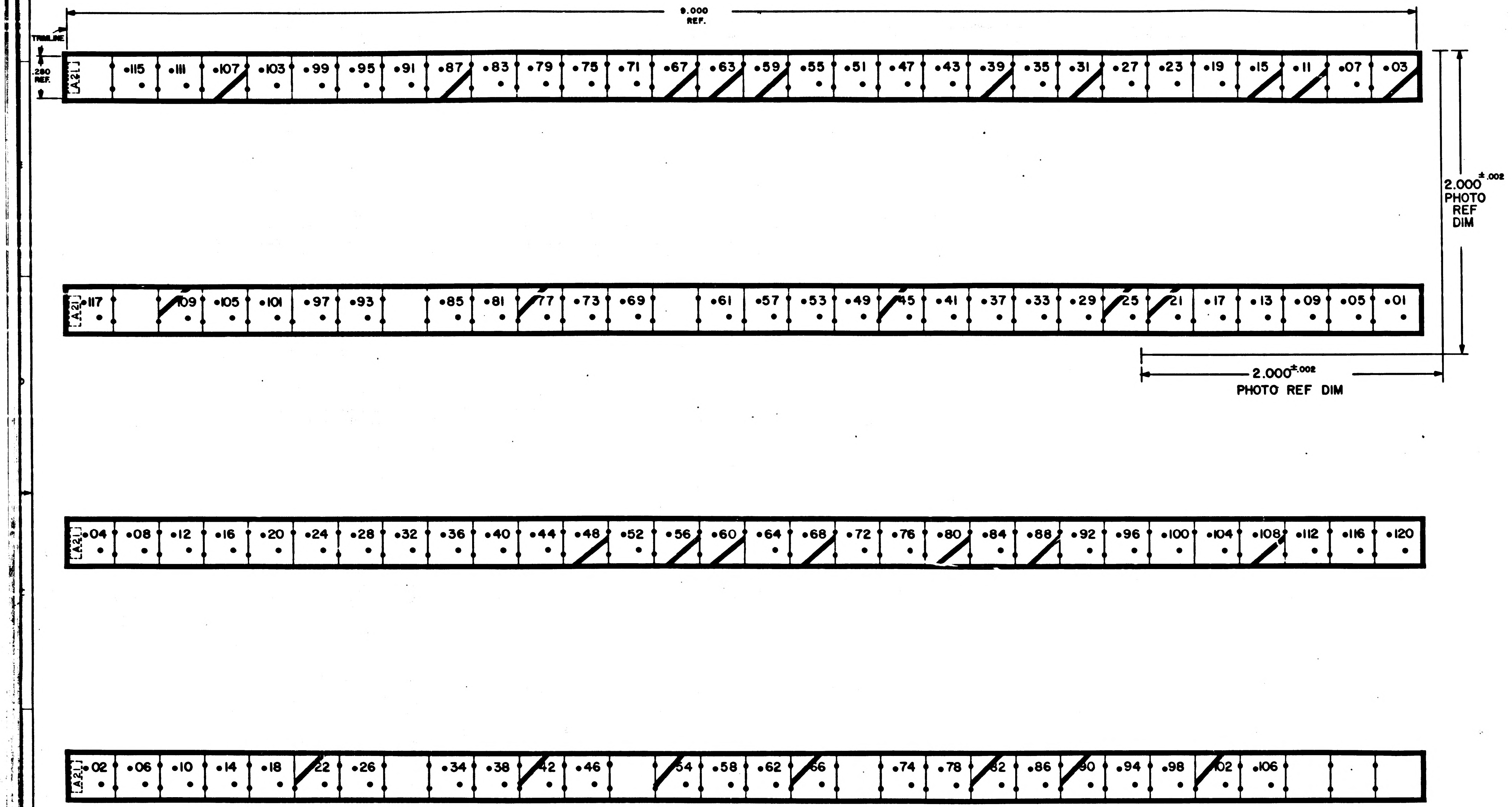
9.000
REF.
TRIMLINE
.280
REF.
A21
•115 •111 •107 •103 •99 •95 •91 •87 •83 •79 •75 •71 •67 •63 •59 •55 •51 •47 •43 •39 •35 •31 •27 •23 •19 •15 •11 •07 •03
A21
•117 109 •105 •101 •97 •93 •85 •81 77 •73 •69 •61 •57 •53 •49 45 •41 •37 •33 •29 25 21 •17 •13 •09 •05 •01
2.000 ±.002
PHOTO
REF
DIM
2.000 ±.002
PHOTO REF DIM
A21
•04 •08 •12 •16 •20 •24 •28 •32 •36 •40 •44 •48 •52 •56 •60 •64 •68 •72 •76 •80 •84 •88 •92 •96 •100 •104 •108 •112 •116 •120
A21
•02 •06 •10 •14 •18 22 •26 •34 •38 42 •46 54 •58 •62 66 •74 •78 82 •86 90 •94 •98 102 •106

REFERENCE DWG.
1. SIGNAL WIRING DIAGRAM 1006136

NOTES:

1. INTERPRET DRAWING IN ACCORDANCE WITH STANDARDS PRESCRIBED BY MIL-D-70327
2. ORIGINAL OF THIS DRAWING OR REPRODUCTION MADE BY PROCESS OR METHOD SHALL INSURE DIMENSIONAL STABILITY. DIMENSIONAL VARIATIONS SHALL NOT EXCEED .001 INCH PER INCH
3. MAKE MASTER PATTERN POSITIVE FILMS TO DIMENSIONS SHOWN
4. CUT TO WITHIN .010 OF TRIMLINE
5. MATERIAL: .006/.008 THICK PLASTIC SHEETS, SENSITIZED, DIMENSIONALLY STABLE PER L-F-340, TYPE II, CLASS 2, STYLE IA

6. ● PUNCH HOLES TO .040 DIAMETER

QTY REQD	PART OR IDENTIFYING NO	NOMENCLATURE OR DESCRIPTION	FIND NO

LIST OF MATERIALS

NEXT ASSY	USED ON

APPLICATION

UNLESS OTHERWISE SPECIFIED DIMENSIONS ARE IN INCHES
TOLERANCES ON
FRACTIONS ± — DECIMALS ±.005 ANGLES ± —
DO NOT SCALE THIS DRAWING
MATERIAL
SEE NOTE 5
HEAT TREATMENT —
FINAL FINISH —

MIT
INSTRUMENTATION LAB
CAMBRIDGE MASS
DWG NO CONTRACT
DRAWN J.F. Walsh DATE 7/6/63
CHECKED D. Ludell 7/6/63
APPROVAL E. Duggan
APPROVAL W.D. Fulton 7/6/63
NASA APPROVAL W.J. Rhine 7-12-63
MIT APPROVAL L. Hafel 7/10/63

MANNED SPACECRAFT CENTER
HOUSTON, TEXAS

IDENTIFICATION TAPE
LOGIC MODULE NO. A21

CODE IDENT NO.
SIZE E
NASA DRAWING NO. 1004186
SCALE 4/1
WT
SHEET 1 OF 1

1004186

INCHES
PHOTOGRAPHIC SCALE ONLY

NOTICE — WHEN GOVERNMENT DRAWINGS, SPECIFICATIONS, OR OTHER DATA ARE USED FOR ANY PURPOSE OTHER THAN IN CONNECTION WITH A DEFINITELY RELATED GOVERNMENT PROCUREMENT OPERATION, THE UNITED STATES GOVERNMENT THEREBY INCURS NO RESPONSIBILITY NOR ANY OBLIGATION WHATSOEVER; AND THE FACT THAT THE GOVERNMENT MAY HAVE FORMULATED, FURNISHED, OR IN ANY WAY SUPPLIED THE SAID DRAWINGS, SPECIFICATIONS, OR OTHER DATA IS NOT TO BE REGARDED BY IMPLICATION OR OTHERWISE AS IN ANY MANNER LICENSING THE HOLDER OR ANY OTHER PERSON OR CORPORATION, OR CONVEYING ANY RIGHTS OR PERMISSION TO MANUFACTURE, USE, OR SELL ANY PATENTED INVENTION THAT MAY IN ANY WAY BE RELATED THERETO

REVISIONS TDRR 02694			
SYM	DESCRIPTION	DATE	APPROVAL
A	REVISED PER TDRR 03444	8-26-63	

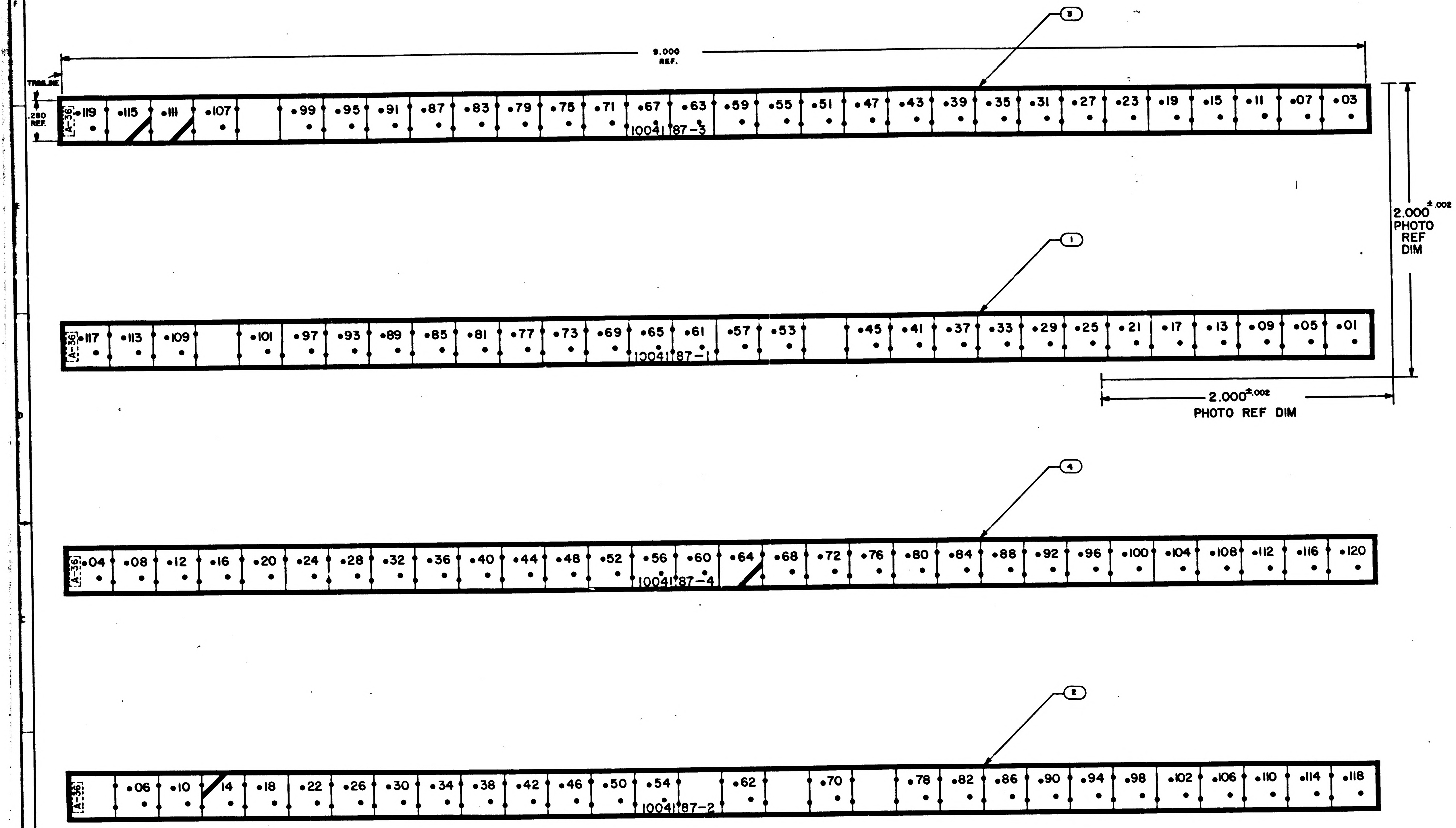
9.000
REF.
TRIMLINE
.280
REF.
③
A-36
•119 •115 •111 •107 •99 •95 •91 •87 •83 •79 •75 •71 •67 •63 •59 •55 •51 •47 •43 •39 •35 •31 •27 •23 •19 •15 •11 •07 •03
1004187-3
2.000 ±.002
PHOTO
REF
DIM
①
A-36
•117 •113 •109 •101 •97 •93 •89 •85 •81 •77 •73 •69 •65 •61 •57 •53 •45 •41 •37 •33 •29 •25 •21 •17 •13 •09 •05 •01
1004187-1
2.000 ±.002
PHOTO REF DIM
④
A-36
•04 •08 •12 •16 •20 •24 •28 •32 •36 •40 •44 •48 •52 •56 •60 •64 •68 •72 •76 •80 •84 •88 •92 •96 •100 •104 •108 •112 •116 •120
1004187-4
②
A-36
•06 •10 14 •18 •22 •26 •30 •34 •38 •42 •46 •50 •54 •62 •70 •78 •82 •86 •90 •94 •98 •102 •106 •110 •114 •118
1004187-2

REFERENCE DWG.
1. WIRING DIAGRAM 1006137

NOTES:
1. INTERPRET DRAWING IN ACCORDANCE WITH STANDARDS PRESCRIBED BY MIL-D-70327
2. ORIGINAL OF THIS DRAWING OR REPRODUCTION MADE BY PROCESS OR METHOD SHALL INSURE DIMENSIONAL STABILITY. DIMENSIONAL VARIATIONS SHALL NOT EXCEED .001 INCH PER INCH
3. MAKE MASTER PATTERN POSITIVE FILMS TO DIMENSIONS SHOWN
4. CUT TO WITHIN .010 OF TRIMLINE
5. MATERIAL: .006/.008 THICK PLASTIC SHEETS, SENSITIZED, DIMENSIONALLY STABLE PER L-F-340, TYPE IB, CLASS 2, STYLE IA
6. ● PUNCH HOLES TO .040 DIAMETER

QTY REQD	PART OR IDENTIFYING NO	NOMENCLATURE OR DESCRIPTION	FIND NO
1	1004187-4	IDENTIFICATION TAPE	4
1	1004187-3	IDENTIFICATION TAPE	3
1	1004187-2	IDENTIFICATION TAPE	2
1	1004187-1	IDENTIFICATION TAPE	1

LIST OF MATERIALS

NEXT ASSY	USED ON
1003081	
1003082	

APPLICATION

UNLESS OTHERWISE SPECIFIED DIMENSIONS ARE IN INCHES
TOLERANCES ON
FRACTIONS ± —//— DECIMALS ±.005 ANGLES ± —//—
DO NOT SCALE THIS DRAWING
MATERIAL SEE NOTE 5
HEAT TREATMENT —//—
FINAL FINISH —//—

MIT INSTRUMENTATION LAB
CAMBRIDGE MASS
DWG NO
CONTRACT
DRAWN DATE 8/14/63
CHECKED 8/14/63
APPROVAL W B Turner 20 AUG 63
APPROVAL 8/21/63
NASA APPROVAL 9/21/63
MIT APPROVAL 8/26/63

MANNED SPACECRAFT CENTER
HOUSTON, TEXAS

IDENTIFICATION TAPE
LOGIC MODULE NO. A-36

CODE IDENT NO.
SIZE E
NASA DRAWING NO. 1004187
SCALE 4/1
WT
SHEET 1 OF 1

1004187

INCHES
PHOTOGRAPHIC SCALE ONLY

NOTICE — WHEN GOVERNMENT DRAWINGS, SPECIFICATIONS, OR OTHER DATA ARE USED FOR ANY PURPOSE OTHER THAN IN CONNECTION WITH A DEFINITELY RELATED GOVERNMENT PROCUREMENT OPERATION, THE UNITED STATES GOVERNMENT THEREBY INCURS NO RESPONSIBILITY NOR ANY OBLIGATION WHATSOEVER; AND THE FACT THAT THE GOVERNMENT MAY HAVE FORMULATED, FURNISHED, OR IN ANY WAY SUPPLIED THE SAID DRAWINGS, SPECIFICATIONS, OR OTHER DATA IS NOT TO BE REGARDED BY IMPLICATION OR OTHERWISE AS IN ANY MANNER LICENSING THE HOLDER OR ANY OTHER PERSON OR CORPORATION, OR CONVEYING ANY RIGHTS OR PERMISSION TO MANUFACTURE, USE, OR SELL ANY PATENTED INVENTION THAT MAY IN ANY WAY BE RELATED THERETO

REVISIONS TDRR 02697

SYM	DESCRIPTION	DATE	APPROVAL

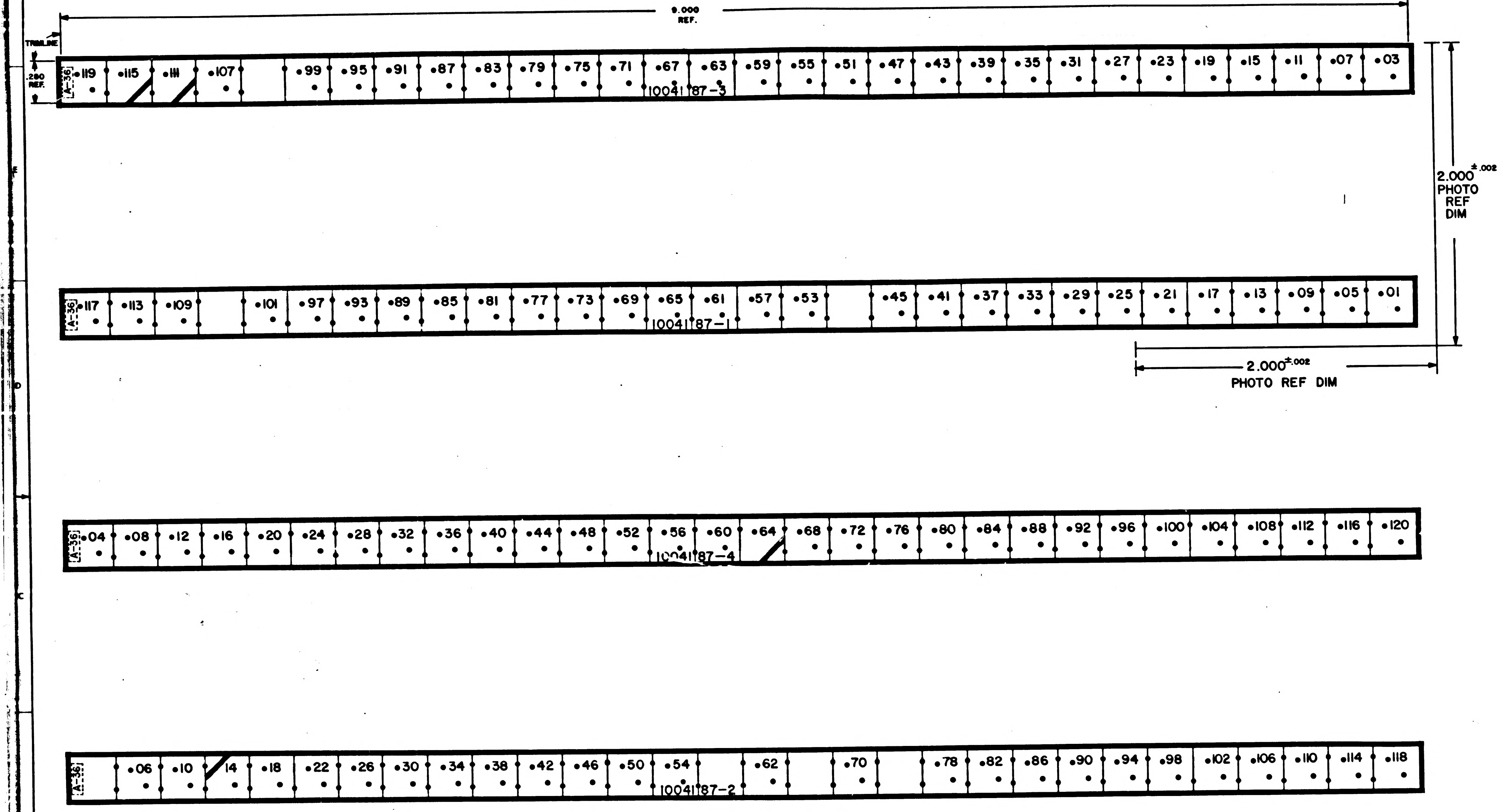
9.000 REF.
TRIMLINE
.280 REF.
A-36
•119 •115 •111 •107 •99 •95 •91 •87 •83 •79 •75 •71 •67 •63 •59 •55 •51 •47 •43 •39 •35 •31 •27 •23 •19 •15 •11 •07 •03
1004187-3
2.000 ±.002 PHOTO REF DIM
A-36
•117 •113 •109 •101 •97 •93 •89 •85 •81 •77 •73 •69 •65 •61 •57 •53 •45 •41 •37 •33 •29 •25 •21 •17 •13 •09 •05 •01
1004187-1
2.000 ±.002 PHOTO REF DIM
A-36
•04 •08 •12 •16 •20 •24 •28 •32 •36 •40 •44 •48 •52 •56 •60 •64 •68 •72 •76 •80 •84 •88 •92 •96 •100 •104 •108 •112 •116 •120
1004187-4
A-36
•06 •10 14 •18 •22 •26 •30 •34 •38 •42 •46 •50 •54 •62 •70 •78 •82 •86 •90 •94 •98 •102 •106 •110 •114 •118
1004187-2

REFERENCE DWG.
I. WIRING DIAGRAM 1006137

NOTES:

1. INTERPRET DRAWING IN ACCORDANCE WITH STANDARDS PRESCRIBED BY MIL-D-70327
2. ORIGINAL OF THIS DRAWING OR REPRODUCTION MADE BY PROCESS OR METHOD SHALL INSURE DIMENSIONAL STABILITY. DIMENSIONAL VARIATIONS SHALL NOT EXCEED .001 INCH PER INCH
3. MAKE MASTER PATTERN POSITIVE FILMS TO DIMENSIONS SHOWN
4. CUT TO WITHIN .010 OF TRIMLINE
5. MATERIAL: .006/.008 THICK PLASTIC SHEETS, SENSITIZED, DIMENSIONALLY STABLE PER L-F-340, TYPE IB, CLASS 2, STYLE IA

6. ● PUNCH HOLES TO .040 DIAMETER

MASTER

QTY REQD	PART OR IDENTIFYING NO	NOMENCLATURE OR DESCRIPTION	FIND NO

LIST OF MATERIALS

NEXT ASSY	USED ON
APPLICATION	

UNLESS OTHERWISE SPECIFIED
DIMENSIONS ARE IN INCHES
TOLERANCES ON
FRACTIONS ± — DECIMALS ±.005 ANGLES ± —
DO NOT SCALE THIS DRAWING
MATERIAL SEE NOTE 5
HEAT TREATMENT —
FINAL FINISH —

MIT
INSTRUMENTATION LAB
CAMBRIDGE, MASS
DWG NO CONTRACT
DRAWN W.F. Young DATE 8/14/63
CHECKED [illegible] 8/14/63
APPROVAL W.B. [illegible] 20 Aug 63
APPROVAL [illegible] 8/26/63
NASA APPROVAL [illegible] 9/21/63
MIT APPROVAL [illegible] 8/26/63

MANNED SPACECRAFT CENTER
HOUSTON, TEXAS

IDENTIFICATION TAPE
LOGIC MODULE NO. A-36

CODE IDENT NO
SIZE E
NASA DRAWING NO. 1004187
SCALE 4/1
WT
SHEET 1 OF 1

1004187

INCHES
0 1 2
PHOTOGRAPHIC SCALE ONLY

SYM	REVISIONS DESCRIPTION	DATE	APPROVAL

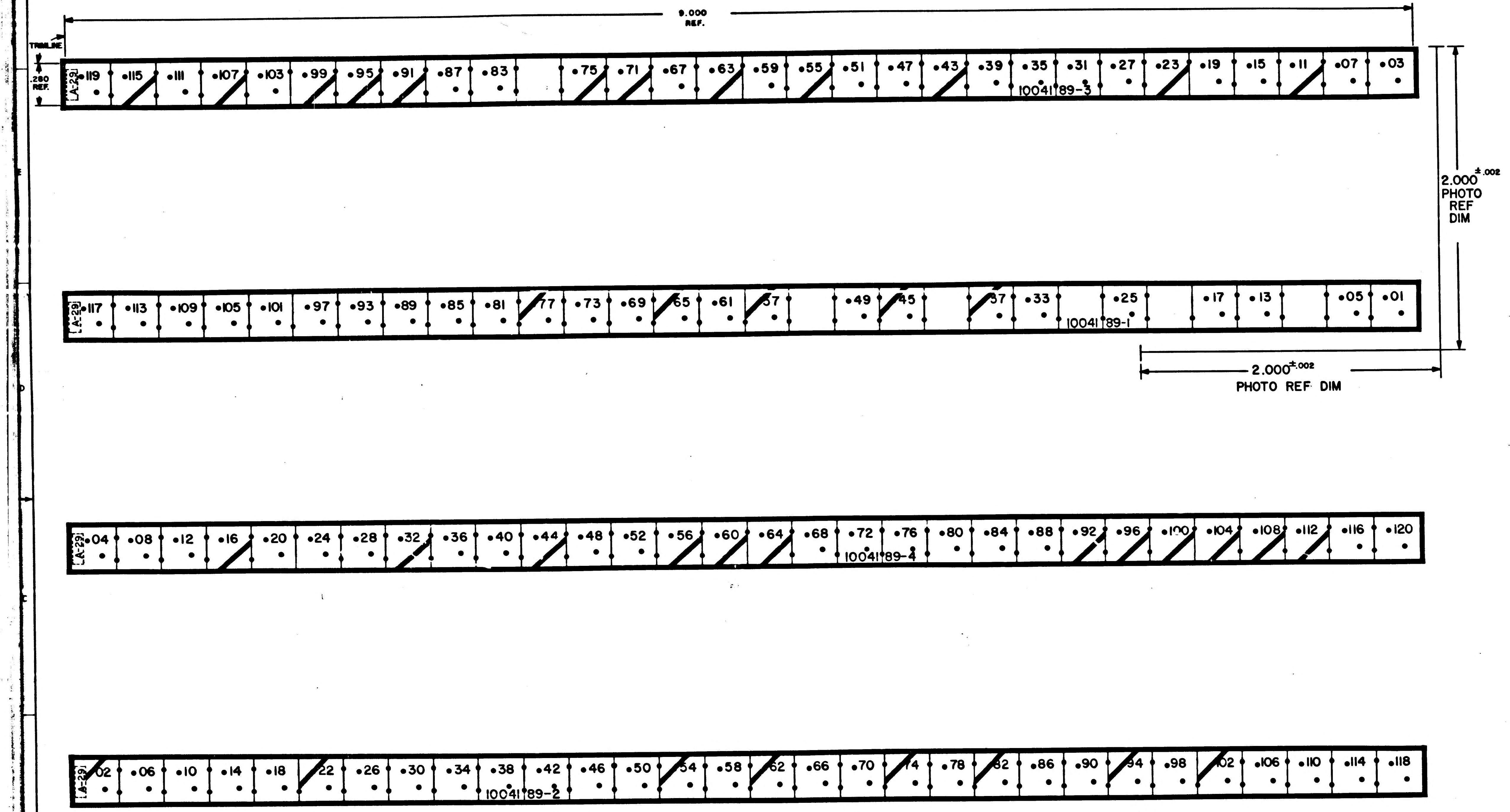
9.000
REF.
TRIMLINE
.280
REF.
LA-29
119 115 111 107 103 99 95 91 87 83 75 71 67 63 59 55 51 47 43 39 35 31 27 23 19 15 11 07 03
1004189-3
2.000 ±.002
PHOTO
REF
DIM
LA-29
117 113 109 105 101 97 93 89 85 81 77 73 69 65 61 57 49 45 37 33 25 17 13 05 01
1004189-1
2.000 ±.002
PHOTO REF DIM
LA-29
04 08 12 16 20 24 28 32 36 40 44 48 52 56 60 64 68 72 76 80 84 88 92 96 100 104 108 112 116 120
1004189-4
LA-29
02 06 10 14 18 22 26 30 34 38 42 46 50 54 58 62 66 70 74 78 82 86 90 94 98 102 106 110 114 118
1004189-2

REFERENCE DWG.
1. WIRING DIAGRAM 1006139

NOTES:

1. INTERPRET DRAWING IN ACCORDANCE WITH STANDARDS PRESCRIBED BY MIL-D-70327
2. ORIGINAL OF THIS DRAWING OR REPRODUCTION MADE BY PROCESS OR METHOD SHALL INSURE DIMENSIONAL STABILITY. DIMENSIONAL VARIATIONS SHALL NOT EXCEED .001 INCH PER INCH
3. MAKE MASTER PATTERN POSITIVE FILMS TO DIMENSIONS SHOWN
4. CUT TO WITHIN .010 OF TRIMLINE
5. MATERIAL: .006/.008 THICK PLASTIC SHEETS, SENSITIZED, DIMENSIONALLY STABLE PER L-F-340, TYPE IB, CLASS 2, STYLE IA

6. ● PUNCH HOLES TO .040 DIAMETER

QTY REQD	PART OR IDENTIFYING NO	NOMENCLATURE OR DESCRIPTION	FIND NO

LIST OF MATERIALS

NEXT ASSY	USED ON
APPLICATION	

UNLESS OTHERWISE SPECIFIED DIMENSIONS ARE IN INCHES
TOLERANCES ON
FRACTIONS ± — DECIMALS ±.005 ANGLES ± —
DO NOT SCALE THIS DRAWING
MATERIAL SEE NOTE 5
HEAT TREATMENT —
FINAL FINISH —

MIT INSTRUMENTATION LAB
Cambridge Mass
DWG NO
CONTRACT
DRAWN
CHECKED
APPROVAL W.B. Turner 9/12/63
APPROVAL
NASA APPROVAL
MIT APPROVAL 12/4/63

MANNED SPACECRAFT CENTER
HOUSTON, TEXAS

IDENTIFICATION TAPE
LOGIC MODULE NO. A-29

CODE IDENT NO.
SIZE E
NASA DRAWING NO. 1004189
SCALE 4/1
WT
SHEET 1 OF 1

1004189

INCHES
0 1 2
PHOTOGRAPHIC SCALE ONLY

1004190 A

NOTICE — WHEN GOVERNMENT DRAWINGS, SPECIFICATIONS, OR OTHER DATA ARE USED FOR ANY PURPOSE OTHER THAN IN CONNECTION WITH A DEFINITELY RELATED GOVERNMENT PROCUREMENT OPERATION, THE UNITED STATES GOVERNMENT THEREBY INCURS NO RESPONSIBILITY NOR ANY OBLIGATION WHATSOEVER; AND THE FACT THAT THE GOVERNMENT MAY HAVE FORMULATED, FURNISHED, OR IN ANY WAY SUPPLIED THE SAID DRAWINGS, SPECIFICATIONS OR OTHER DATA IS NOT TO BE REGARDED BY IMPLICATION OR OTHERWISE AS IN ANY MANNER LICENSING THE HOLDER OR ANY OTHER PERSON OR CORPORATION, OR CONVEYING ANY RIGHTS OR PERMISSION TO MANUFACTURE, USE, OR SELL ANY PATENTED INVENTION THAT MAY IN ANY WAY BE RELATED THERETO.

REVISIONS 01749

SYM	DESCRIPTION	DATE	APPROVAL
A	REVISED PER TDRR 10735 DR P. Boudreau Jr. CHK J. S. L.	7/23/64	

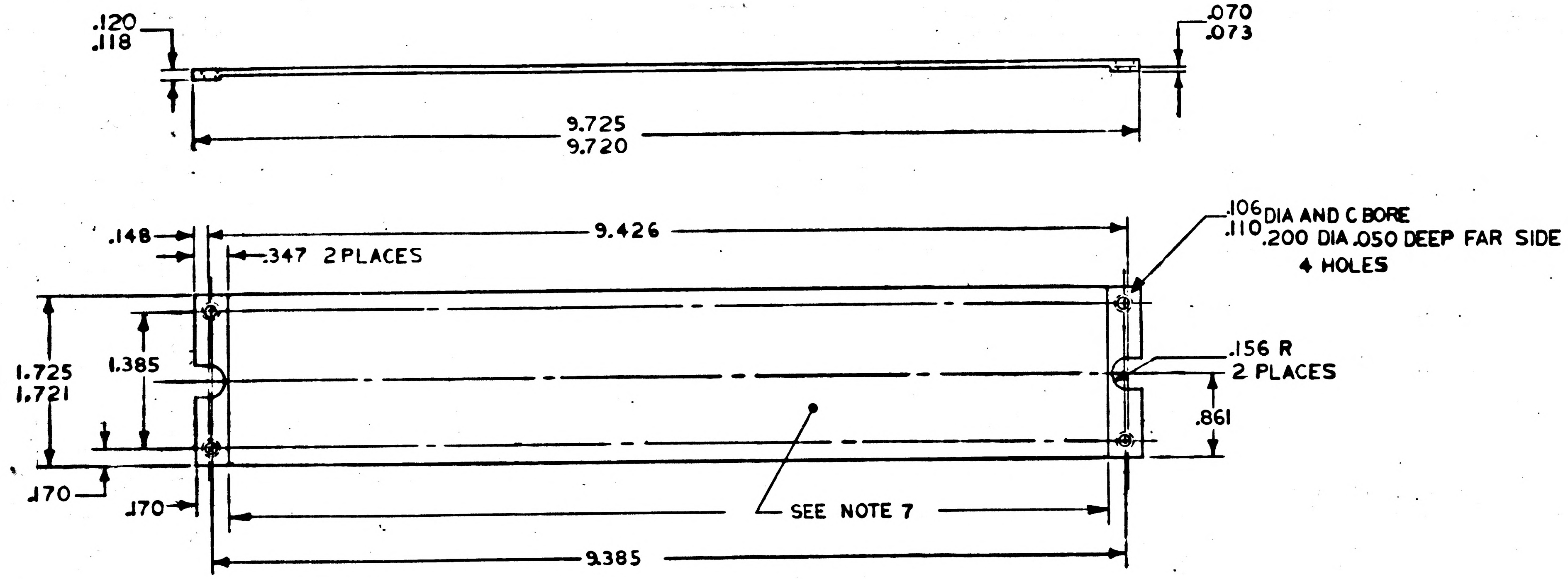

NOTES:

1. INTERPRET DRAWING IN ACCORDANCE WITH STANDARDS PRESCRIBED BY MIL-D-70327
2. MATERIAL: MAG ALLOY ZK60A-T5 PER QQ-M-31
3. FINISH: ANODIZE PER MIL-M-3171 TYPE IV
4. ALL SURFACES 125/ UNLESS OTHERWISE SPECIFIED
5. REMOVE ALL BURRS AND BREAK SHARP EDGES .005-.015
6. UNLESS OTHERWISE SPECIFIED ALL FILLETS AND RADII TO BE .010 MAX
7. SPRAY COAT INDICATED SURFACE WITH CLEAR EPOXY PER ND 1002035, EXCEPT TO .005-.015 DEPTH

MASTER

QTY REQD	PART OR IDENTIFYING NO.	NOMENCLATURE OR DESCRIPTION	FIND NO.

LIST OF MATERIALS

NEXT ASSY	USED ON
1003069	

APPLICATION

UNLESS OTHERWISE SPECIFIED DIMENSIONS ARE IN INCHES
TOLERANCES ON
FRACTIONS ± # DECIMALS ±.005 ANGLES ± #
DO NOT SCALE THIS DRAWING

MATERIAL SEE NOTE 2

HEAT TREATMENT

FINAL FINISH SEE NOTE 4

MIT INSTRUMENTATION LAB
CAMBRIDGE, MASS.
DWG. NO. CONTRACT

DRAWN J.F. Walsh DATE 6/11/63
CHECKED R.P. Kingsbury 18 Jun 63
APPROVAL 26 Jun 63
APPROVAL 6/26/63
NASA APPROVAL 6-26-63
MIT APPROVAL 26 June 63

MANNED SPACECRAFT CENTER
HOUSTON, TEXAS

COVER
ERASABLE MEMORY MODULE

CODE IDENT NO. ——
SIZE C
NASA DRAWING NO. 1004190
SCALE 1/1 WT
SHEET 1 OF 1

NOTICE — WHEN GOVERNMENT DRAWINGS, SPECIFICATIONS, OR OTHER DATA ARE USED FOR ANY PURPOSE OTHER THAN IN CONNECTION WITH A DEFINITELY RELATED GOVERNMENT PROCUREMENT OPERATION, THE UNITED STATES GOVERNMENT THEREBY INCURS NO RESPONSIBILITY NOR ANY OBLIGATION WHATSOEVER; AND THE FACT THAT THE GOVERNMENT MAY HAVE FORMULATED, FURNISHED, OR IN ANY WAY SUPPLIED THE SAID DRAWINGS, SPECIFICATIONS OR OTHER DATA IS NOT TO BE REGARDED BY IMPLICATION OR OTHERWISE AS IN ANY MANNER LICENSING THE HOLDER OR ANY OTHER PERSON OR CORPORATION, OR CONVEYING ANY RIGHTS OR PERMISSION TO MANUFACTURE, USE, OR SELL ANY PATENTED INVENTION THAT MAY IN ANY WAY BE RELATED THERETO.

1004190

SYM	DESCRIPTION	DATE	APPROVAL

REVISIONS 01749

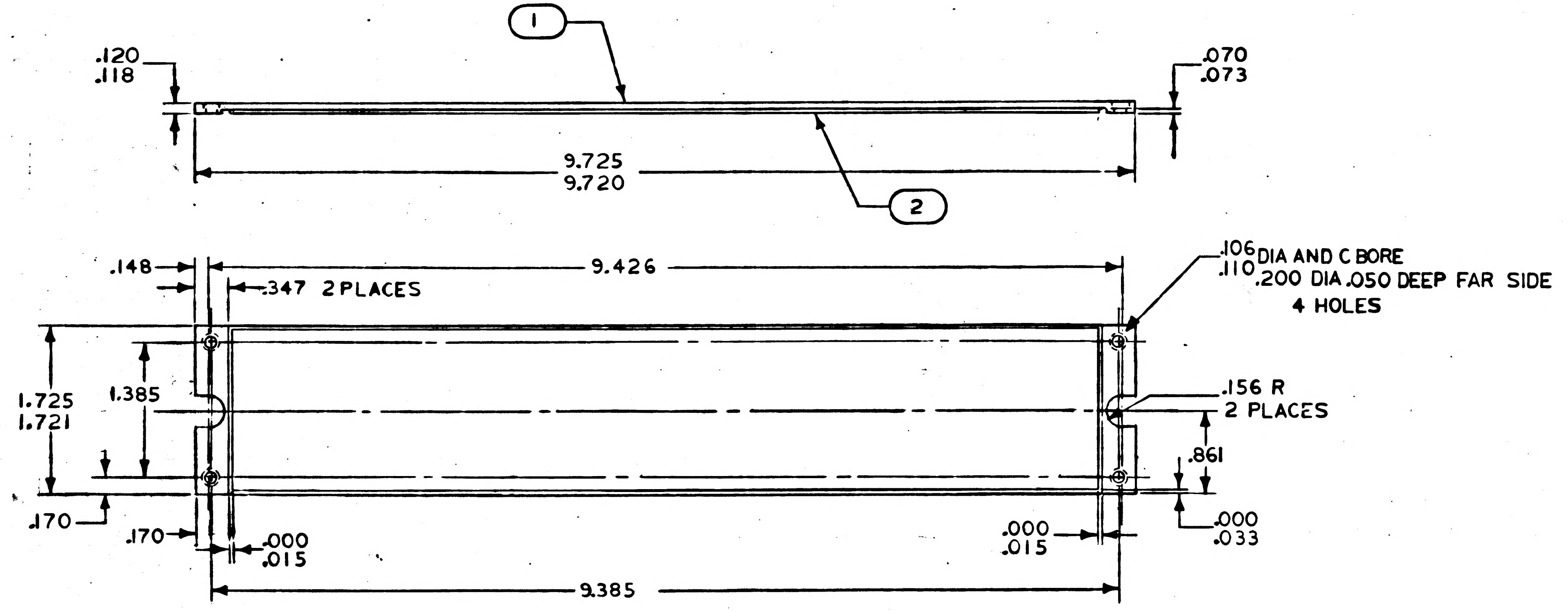

NOTES:

1. INTERPRET DRAWING IN ACCORDANCE WITH STANDARDS PRESCRIBED BY MIL-D-70327
2. MATERIAL: MAG ALLOY ZK60A-T5 PER QQ-M-31
3. FINISH: ANODIZE PER MIL-M-3171 TYPE IV
4. ALL SURFACES 125√ UNLESS OTHERWISE SPECIFIED
5. REMOVE ALL BURRS AND BREAK SHARP EDGES .005-.015
6. UNLESS OTHERWISE SPECIFIED ALL FILLETS AND RADII TO BE .010 MAX

MASTER

QTY REQD	PART OR IDENTIFYING NO.	NOMENCLATURE OR DESCRIPTION	FIND NO.
AR	1006849-6	INSULATION TAPE, ELECTRICAL	2
1	1004190-1	COVER	1

LIST OF MATERIALS

NEXT ASSY	USED ON

APPLICATION

UNLESS OTHERWISE SPECIFIED
DIMENSIONS ARE IN INCHES
TOLERANCES ON
FRACTIONS ± #   DECIMALS ±.005   ANGLES ± #
DO NOT SCALE THIS DRAWING

MATERIAL
SEE NOTE 2

HEAT TREATMENT

FINAL FINISH
SEE NOTE 4

MIT
INSTRUMENTATION LAB
CAMBRIDGE, MASS.
DWG. NO. CONTRACT

DRAWN J.F. Walsh DATE 6/11/63
CHECKED R.P. Kingsbury 18 JUN 63
APPROVAL W.B. Turner 26 JUN 63
APPROVAL E. Duggan 6/26/63

NASA APPROVAL W. J. Rhine 6-26-63

MIT APPROVAL 26 June 63

MANNED SPACECRAFT CENTER
HOUSTON, TEXAS

COVER
ERASABLE MEMORY MODULE

CODE IDENT NO. SIZE C NASA DRAWING NO. 1004190

SCALE 1/1 WT SHEET 1 OF 1

INCHES
0 1 2
PHOTOGRAPHIC SCALE ONLY

1004190

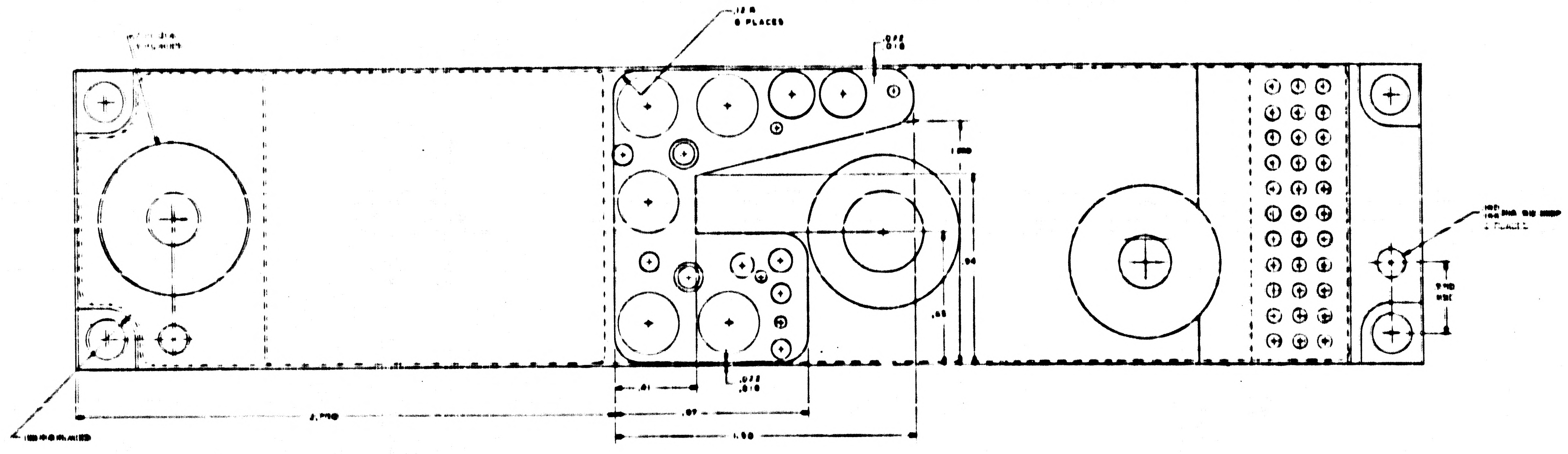
.12 R
6 PLACES
.022
.018
.022
.018
.81
.97
1.90
.65
.94

HEADER HOUSING
POWER SWITCH MODULE
A.D.C. POWER SUPPLY

J 1004191

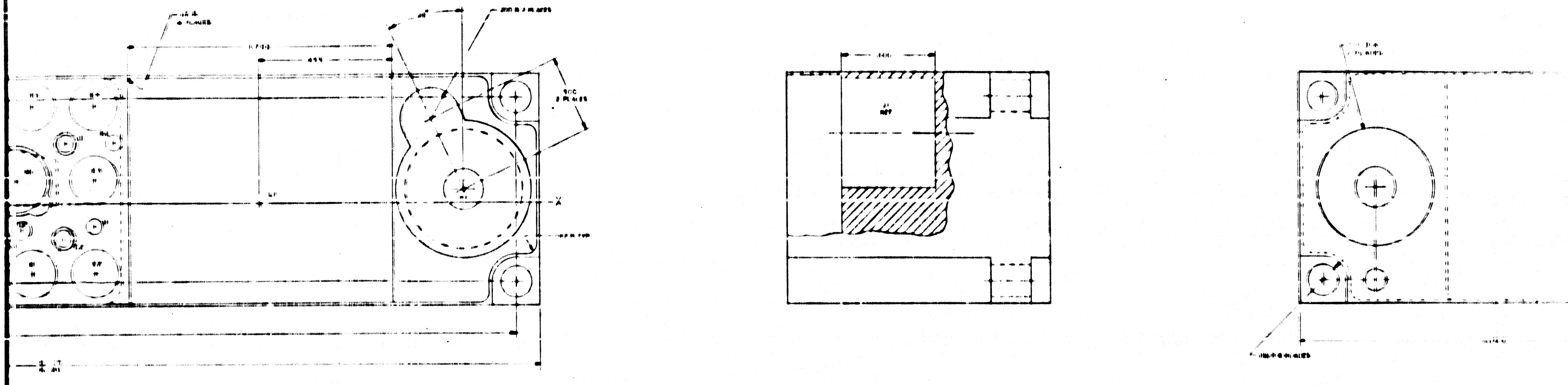

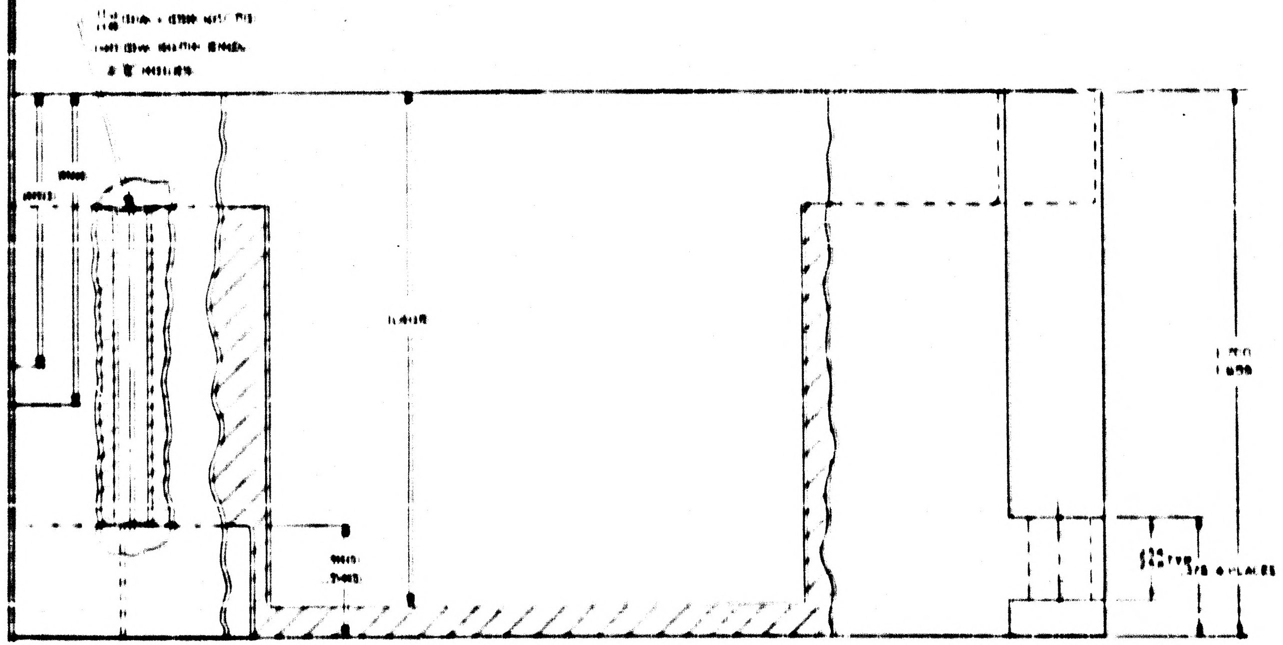

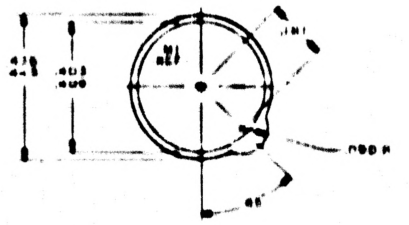

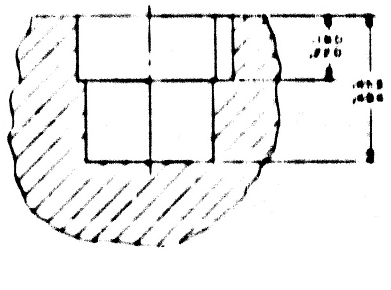

DETAIL A

HOLE IDENT	X BASIC DIM	Y BASIC DIM	⌖ DIA	HOLE DIA	QTY
[illegible]	[illegible]	[illegible]	[illegible]	[illegible]	[illegible]
[illegible]	[illegible]	[illegible]		[illegible]	[illegible]
[illegible]	[illegible]	[illegible]		[illegible] DETAIL	[illegible]
[illegible]	[illegible]	[illegible]		[illegible]	[illegible]
[illegible]	[illegible]	[illegible]		[illegible]	[illegible]
[illegible]	[illegible]	[illegible]		[illegible]	[illegible]
[illegible]	[illegible]	[illegible]		[illegible]	[illegible]
[illegible]	[illegible]	[illegible]		[illegible]	[illegible]
[illegible]	[illegible]	—		[illegible] DETAIL	[illegible]
[illegible]	[illegible]	[illegible]		[illegible] DETAIL	[illegible]
[illegible]	[illegible]	[illegible]	[illegible]	[illegible]	[illegible]

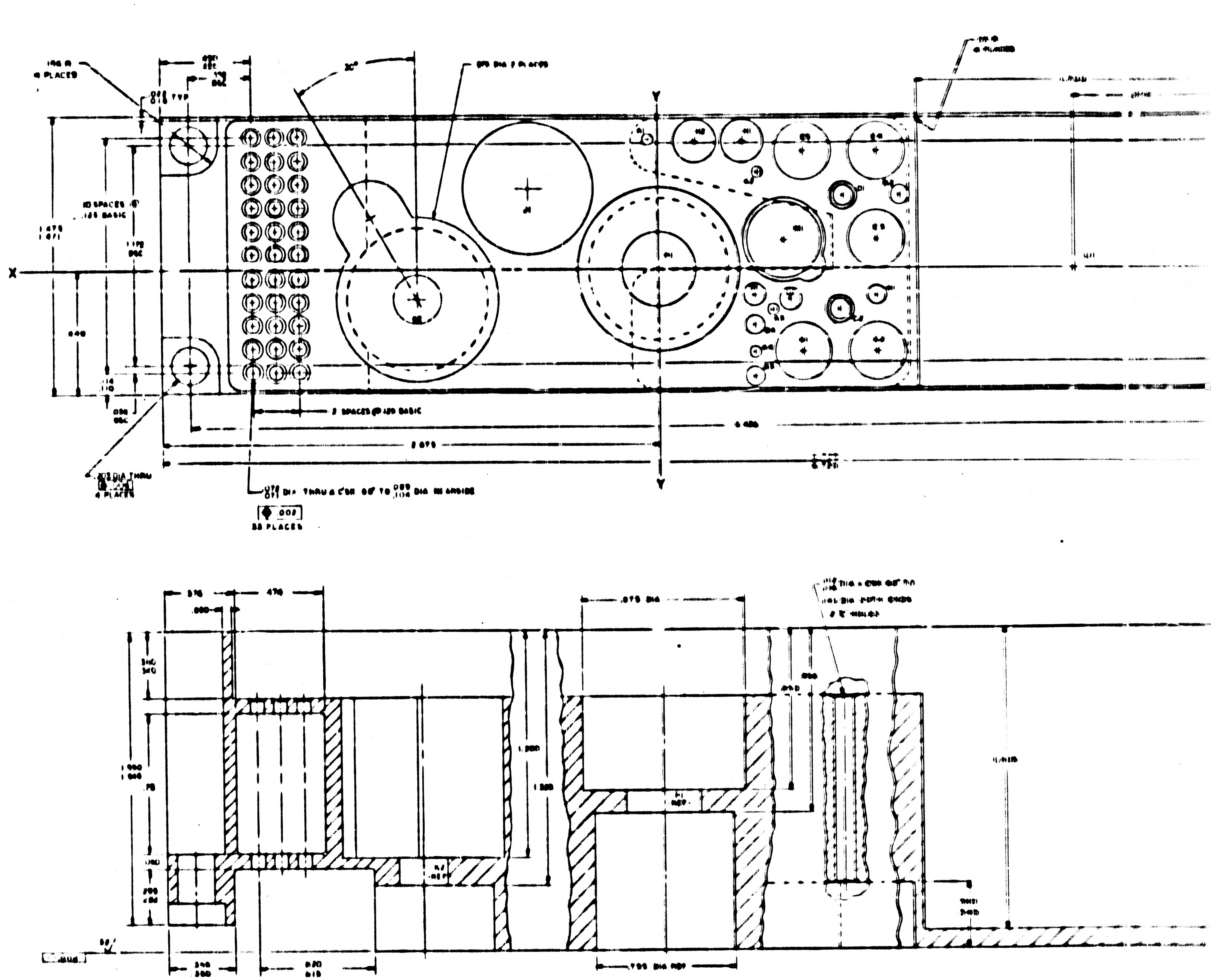
X
Y
10 SPACES @ .125 BASIC
2 SPACES @ .125 BASIC
4 PLACES
33 PLACES
.002
.075 DIA
.750 DIA REF
1.360
1.300
REF

NOTES
1. INTERPRET DRAWING IN ACCORDANCE WITH STANDARDS PRESCRIBED BY MIL-D-[illegible]
2. MATERIAL MAGNESIUM ALLOY [illegible]
3. FINISH ANODIZE PER MIL-M-[illegible] TYPE [illegible]
4. TRUE POSITIONING AS SHOWN IN CHART
5. UNLESS OTHERWISE SPECIFIED 125/ ALL OVER
6. REMOVE ALL BURRS AND BREAK SHARP EDGES [illegible]
7. UNLESS OTHERWISE SPECIFIED ALL FILLETS AND RADII [illegible] MAX

1004191

1004191 B

REVISIONS TDRR 02048

SYM	DESCRIPTION	DATE	APPROVAL
A	REVISED PER TDRR 022F5	7/24/63	7/31
B	REVISED PER TDRR 02398	8/26/63	

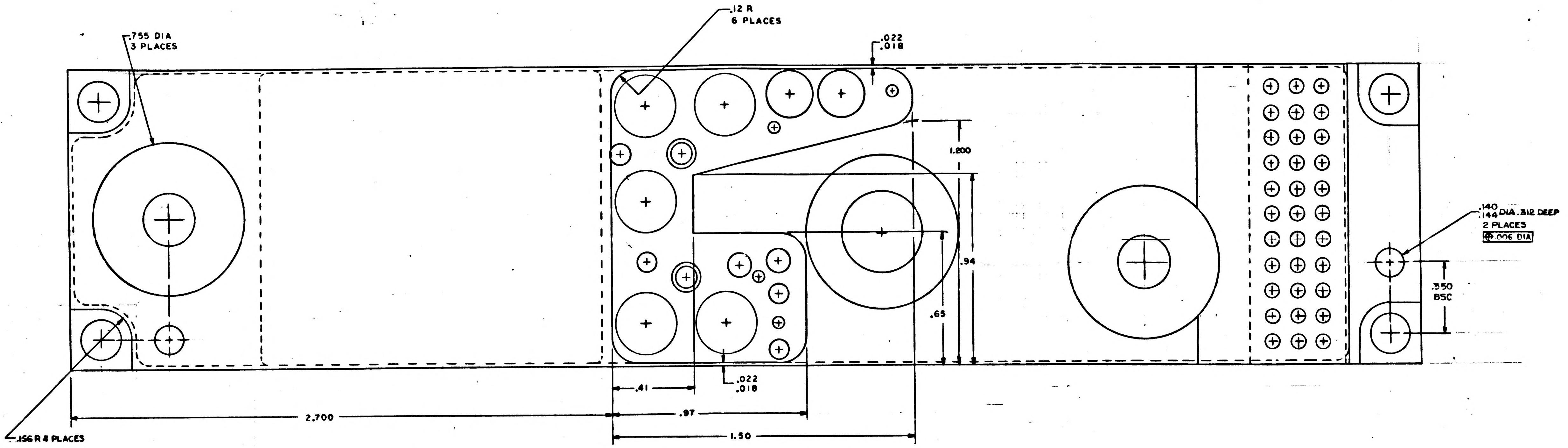

.755 DIA
3 PLACES
.12 R
6 PLACES
.022
.018
1.200
.94
.65
.140
.144 DIA. .312 DEEP
2 PLACES
⊕ .006 DIA
.350
BSC
.41
.97
1.50
.022
.018
2.700
.156 R 4 PLACES

QTY REQD	PART OR IDENTIFYING NO.	NOMENCLATURE OR DESCRIPTION	FIND NO.

LIST OF MATERIALS

UNLESS OTHERWISE SPECIFIED
DIMENSIONS ARE IN INCHES
TOLERANCES ON
FRACTIONS ± — DECIMALS ±.005 ±.02 ANGLES ±1°
DO NOT SCALE THIS DRAWING

MATERIAL
SEE NOTE 2

HEAT TREATMENT
—

FINAL FINISH
SEE NOTE 3

NEXT ASSY	USED ON
1003124	

APPLICATION

MIT
INSTRUMENTATION LAB
CAMBRIDGE, MASS

DRAWN
CHECKED
APPROVAL
APPROVAL 7/16/63
NASA APPROVAL 7-17-63
MIT APPROVAL

MANNED SPACECRAFT CENTER
HOUSTON, TEXAS

HEADER HOUSING
POWER SWITCH MODULE
A.G.C. POWER SUPPLY

CODE IDENT NO.
SIZE J
NASA DRAWING NO. 1004191
SCALE 5/1
WT
SHEET 1 OF 1

1004191 B

INCHES
0 1 2
PHOTOGRAPHIC SCALE ONLY

F-3

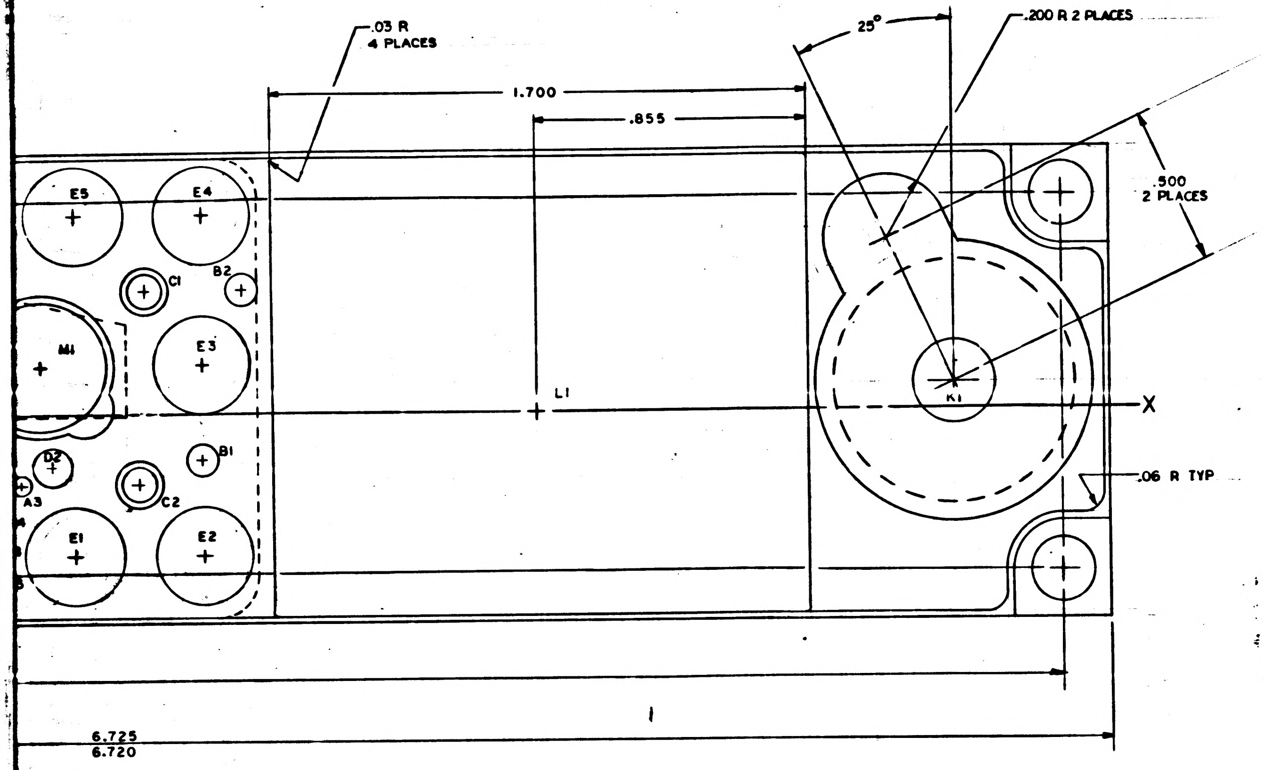
.03 R
4 PLACES
1.700
.855
25°
.200 R 2 PLACES
.500
2 PLACES
E5
E4
C1
B2
M1
E3
L1
K1
X
D2
B1
A3
C2
E1
E2
.06 R TYP
6.725
6.720

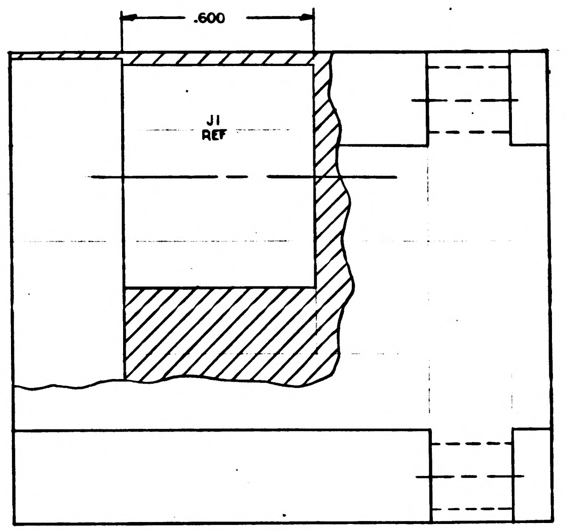

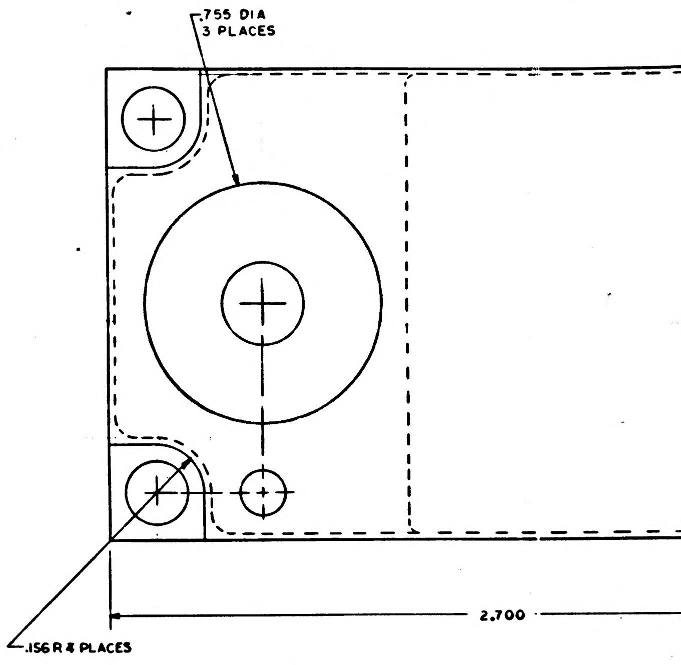
.755 DIA
3 PLACES
2.700
.156 R 4 PLACES

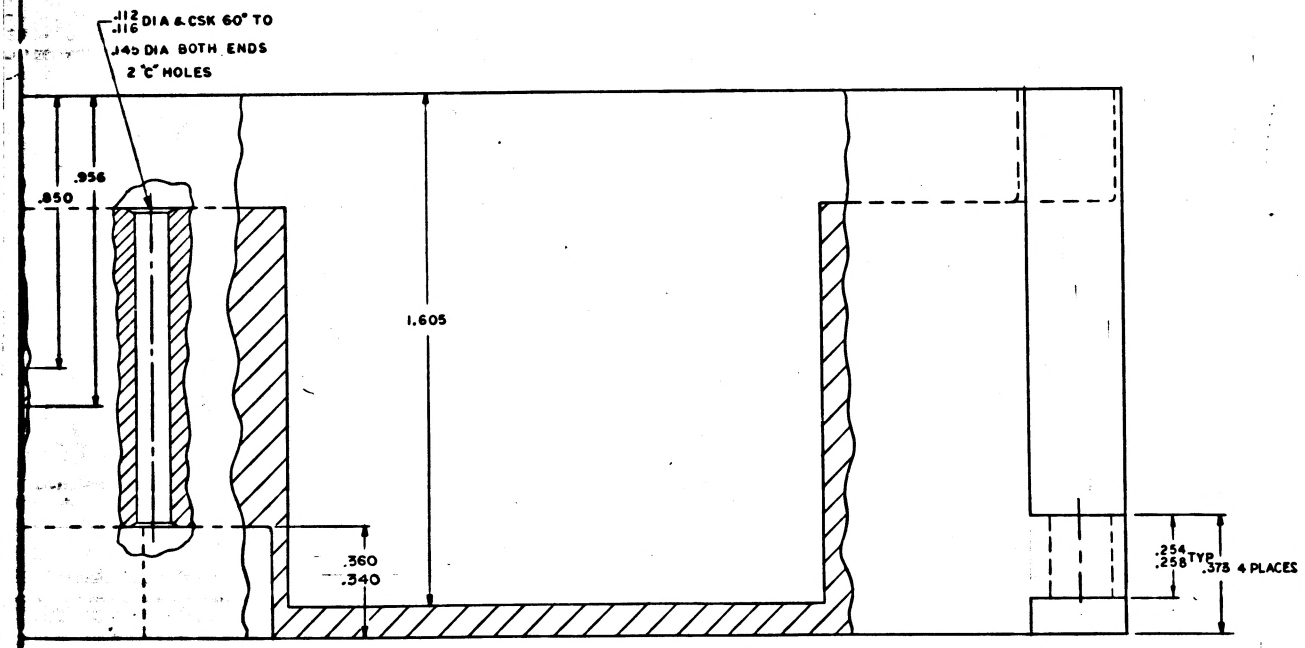
.112
.116 DIA & CSK 60° TO
.145 DIA BOTH ENDS
2 "C" HOLES
.956
.850
1.605
.360
.340
.254
.258 TYP
.375 4 PLACES

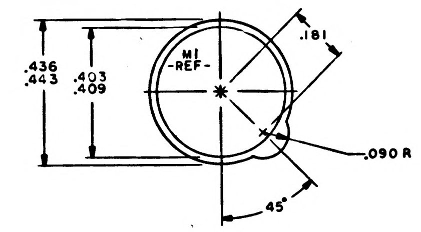
.436
.443
.403
.409
M1
-REF-
.181
.090 R
45°

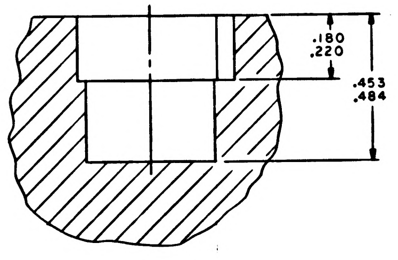
.180
.220
.453
.484

DETAIL A
1 "M" HOLE

NOTICE - WHEN GOVERNMENT DRAWINGS, SPECIFICATIONS, OR OTHER DATA ARE USED FOR ANY PURPOSE OTHER THAN IN CONNECTION WITH A DEFINITELY RELATED GOVERNMENT PROCUREMENT OPERATION, THE UNITED STATES GOVERNMENT THEREBY INCURS NO RESPONSIBILITY NOR ANY OBLIGATION WHATSOEVER; AND THE FACT THAT THE GOVERNMENT MAY HAVE FORMULATED, FURNISHED, OR IN ANY WAY SUPPLIED THE SAID DRAWINGS, SPECIFICATIONS, OR OTHER DATA IS NOT TO BE REGARDED BY IMPLICATION OR OTHERWISE AS IN ANY MANNER LICENSING THE HOLDER OR ANY OTHER PERSON OR CORPORATION, OR CONVEYING ANY RIGHTS OR PERMISSION TO MANUFACTURE, USE, OR SELL ANY PATENTED INVENTION THAT MAY IN ANY WAY BE RELATED THERETO.

HOLE IDENT	X BASIC DIM	Y BASIC DIM	⊕ DIA	HOLE DIA	QTY
A1	-.053	.690	.006	.058 .062	4
A2	.536	.510			
A3	.616	-.220			
A4	.516	-.440			
B1	1.180	-.145		.100 .104	4
B2	1.310	.385			
B3	.516	-.572			
B4	.516	-.300			
C1	1.005	.385		SEE DETAIL	2
C2	.980	-.220			
D1	.516	-.140		.115 .119	2
D2	.714	-.160			
E1	.780	-.440		.306 .313	5
E2	1.180	-.440			
E3	1.180	.150			
E4	1.180	.620			
E5	.780	.620			
H1	.456	.680		.227 .231	2
H2	.200	.680			
J1	-.700	.430		.701 .708	1
K1	3.564	.080		.260 .267	2
K2	-1.300	-.160			
L1	2.240	—		SEE DETAIL	1
M1	.680	.150		SEE DETAIL A	1
P1	.000	.000		.393 .400	1
			.006		

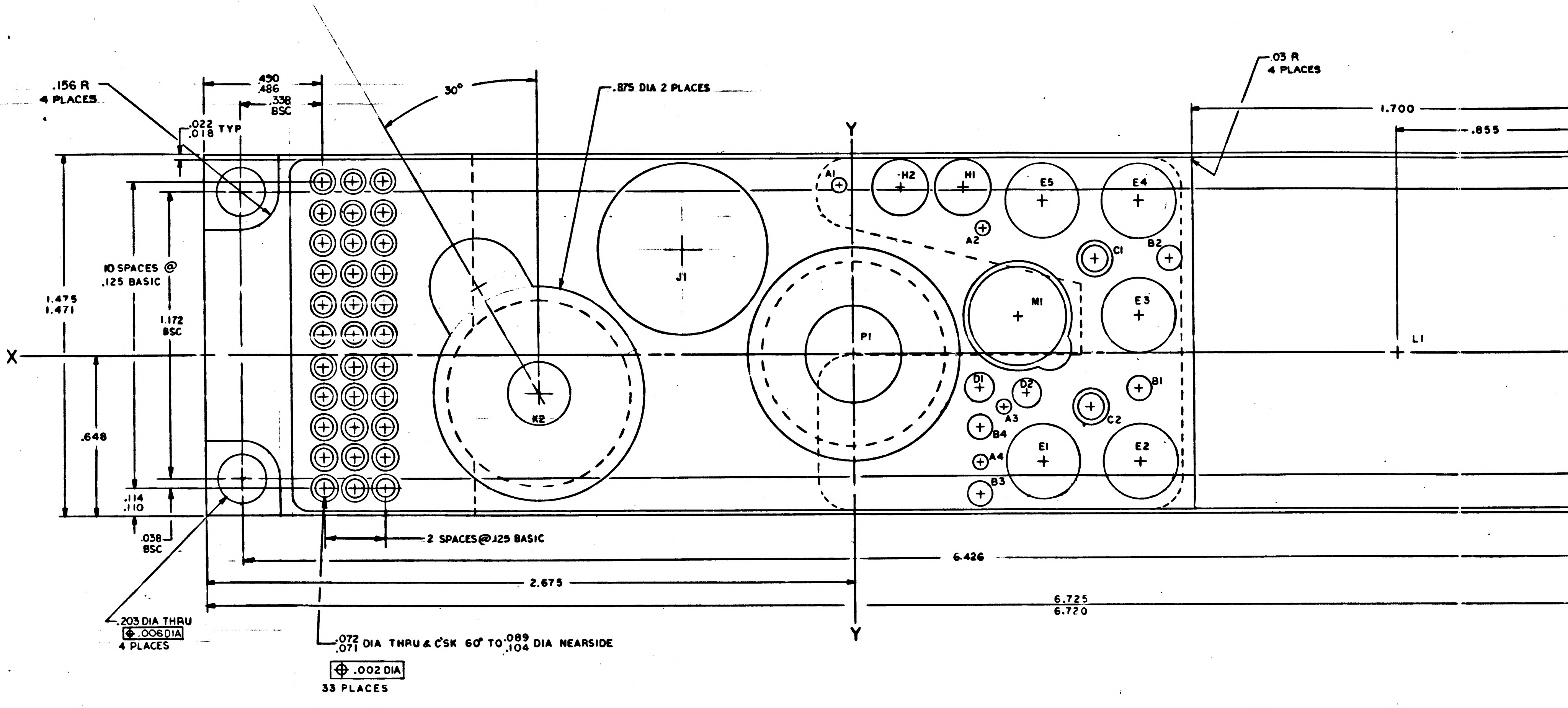
.156 R
4 PLACES
.490
.486
.338
BSC
.022
.018 TYP
30°
.875 DIA 2 PLACES
.03 R
4 PLACES
1.700
.855
10 SPACES @
.125 BASIC
1.475
1.471
1.172
BSC
X
.648
.114
.110
.038
BSC
K2
J1
P1
Y
Y
A1
H2
H1
E5
E4
A2
C1
B2
M1
E3
L1
D1
D2
A3
C2
B1
B4
A4
E1
E2
B3
2 SPACES @ .125 BASIC
6.426
2.675
6.725
6.720
.203 DIA THRU
⊕ .006 DIA
4 PLACES
.072
.071 DIA THRU & C'SK 60° TO .089
.104 DIA NEARSIDE
⊕ .002 DIA
33 PLACES

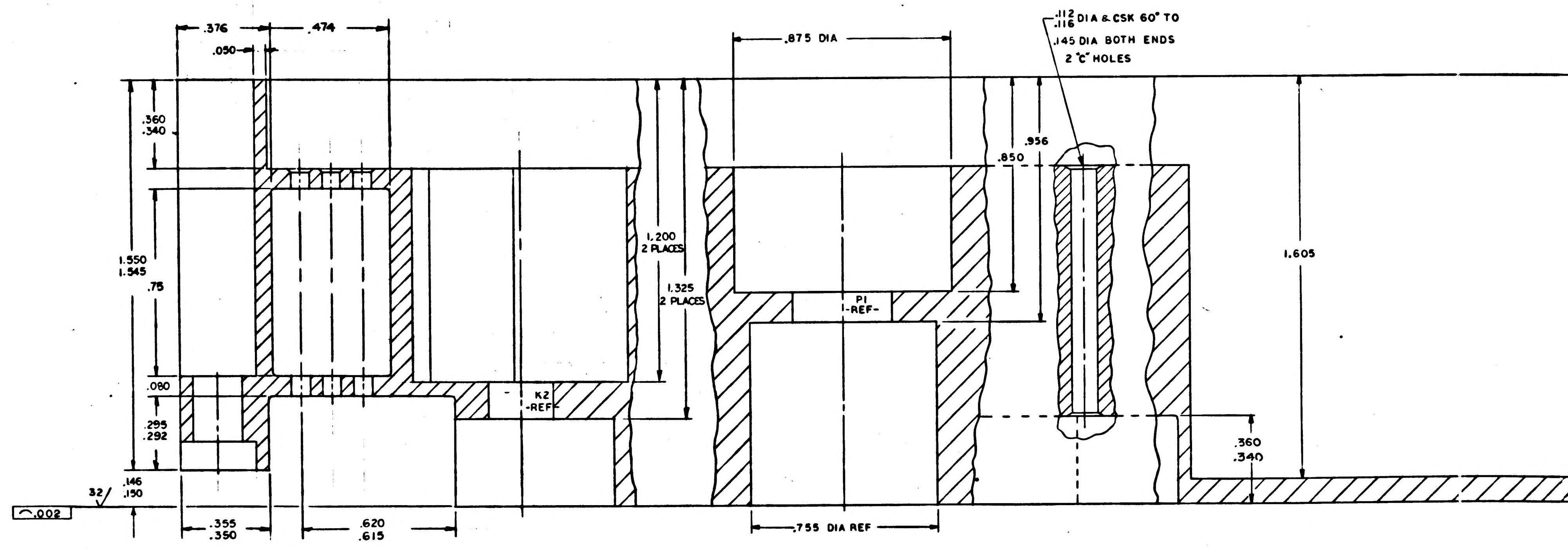
.376
.474
.050
.875 DIA
.112
.116 DIA & CSK 60° TO
.145 DIA BOTH ENDS
2 "C" HOLES
.360
.340
.956
.850
1.550
1.545
.75
1.200
2 PLACES
1.325
2 PLACES
P1
-REF-
1.605
.080
K2
-REF-
.295
.292
.360
.340
⌒.002
32/
.146
.150
.355
.350
.620
.615
.755 DIA REF

NOTES
1. INTERPRET DRAWING IN ACCORDANCE WITH STANDARDS PRESCRIBED BY MIL-D-70327
2. MATERIAL: MAGNESIUM ALLOY ZK-60A-T5 PER QQ-M-31
3. FINISH: ANODIZE PER MIL-M-3171 TYPE IV
4. TRUE POSITIONING AS SHOWN IN CHART
5. UNLESS OTHERWISE SPECIFIED 125/ ALL OVER
6. REMOVE ALL BURRS AND BREAK SHARP EDGES .005-.015
7. UNLESS OTHERWISE SPECIFIED ALL FILLETS AND RADII .010 MAX

1004191 C

SYM	DESCRIPTION	DATE	APPROVAL
	REVISIONS TDRR 02048		
A	REVISED PER TDRR 02285	7/24/63	[illegible]
B	REVISED PER TDRR 02398	8/5/63	[illegible]
C	REVISED PER TDRR 03131	9-18-63	[illegible]

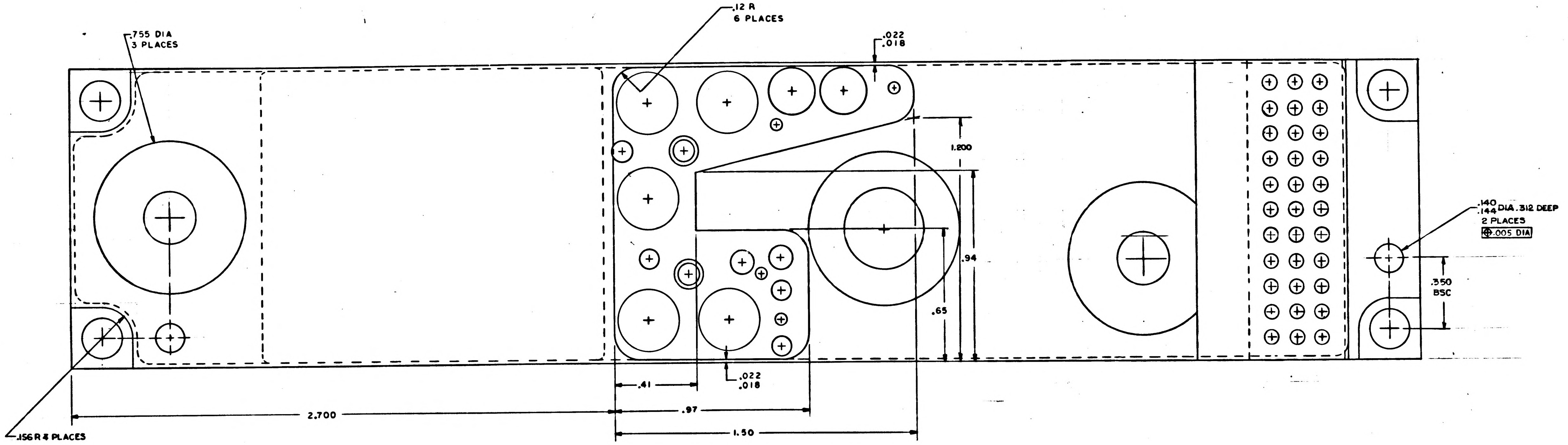

.755 DIA
3 PLACES
.12 R
6 PLACES
.022
.018
1.200
.94
.65
.140
.144 DIA .312 DEEP
2 PLACES
⊕ .005 DIA
.350
BSC
.022
.018
.41
.97
1.50
2.700
.156 R 4 PLACES

1004191 C

QTY REQD	PART OR IDENTIFYING NO.	NOMENCLATURE OR DESCRIPTION	FIND NO.

LIST OF MATERIALS

NEXT ASSY	USED ON
1003124	

APPLICATION

UNLESS OTHERWISE SPECIFIED
DIMENSIONS ARE IN INCHES
TOLERANCES ON
FRACTIONS ± — DECIMALS ±.005 ±.02 ANGLES ±1°
DO NOT SCALE THIS DRAWING

MATERIAL
SEE NOTE 2

HEAT TREATMENT
—

FINAL FINISH
SEE NOTE 3

M I T
INSTRUMENTATION LAB
CAMBRIDGE, MASS

DRAWN
DATE
CHECKED
APPROVAL
APPROVAL 7/16/63
NASA APPROVAL 7-17-63
MIT APPROVAL

MANNED SPACECRAFT CENTER
HOUSTON, TEXAS

HEADER HOUSING
POWER SWITCH MODULE
A.G.C. POWER SUPPLY

CODE IDENT NO. —
SIZE J
NASA DRAWING NO. 1004191
SCALE 5/1
SHEET 1 OF 1

1004191 C

INCHES
0 1 2
PHOTOGRAPHIC SCALE ONLY

F-3

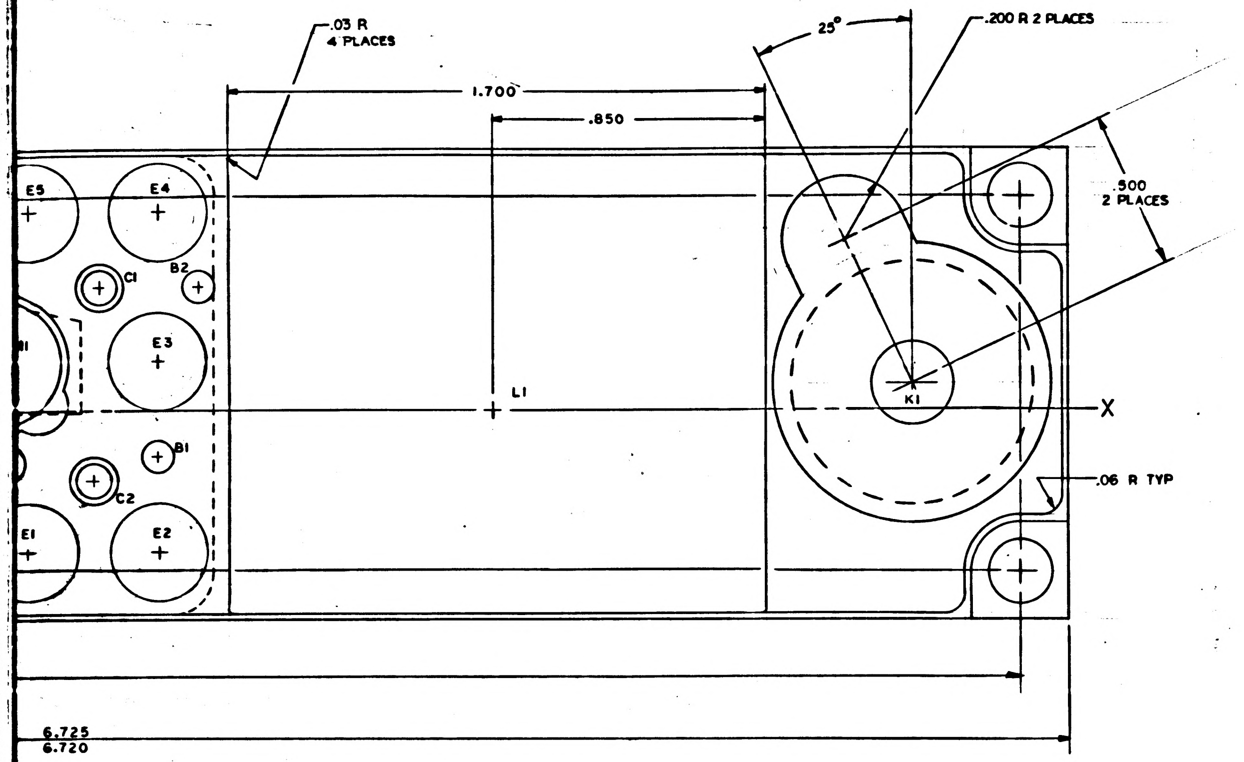
.03 R
4 PLACES
1.700
.850
25°
.200 R 2 PLACES
.500
2 PLACES
E5
E4
C1
B2
E3
L1
K1
X
B1
C2
E1
E2
.06 R TYP
6.725
6.720

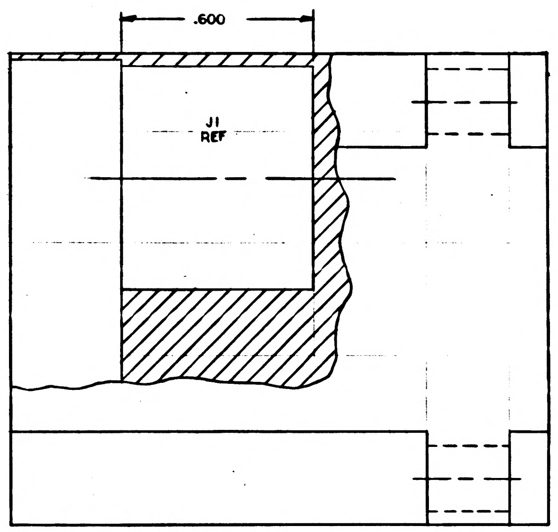

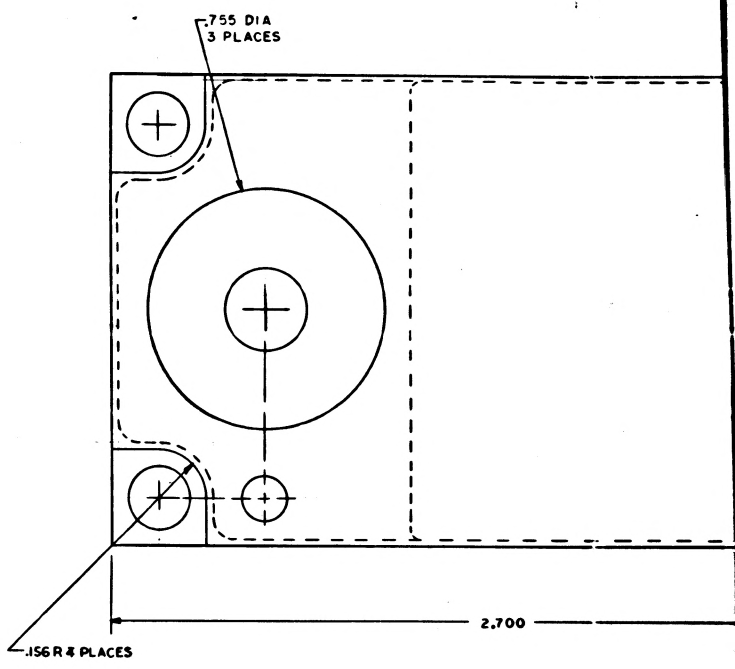
.755 DIA
3 PLACES
2.700
.156 R 4 PLACES

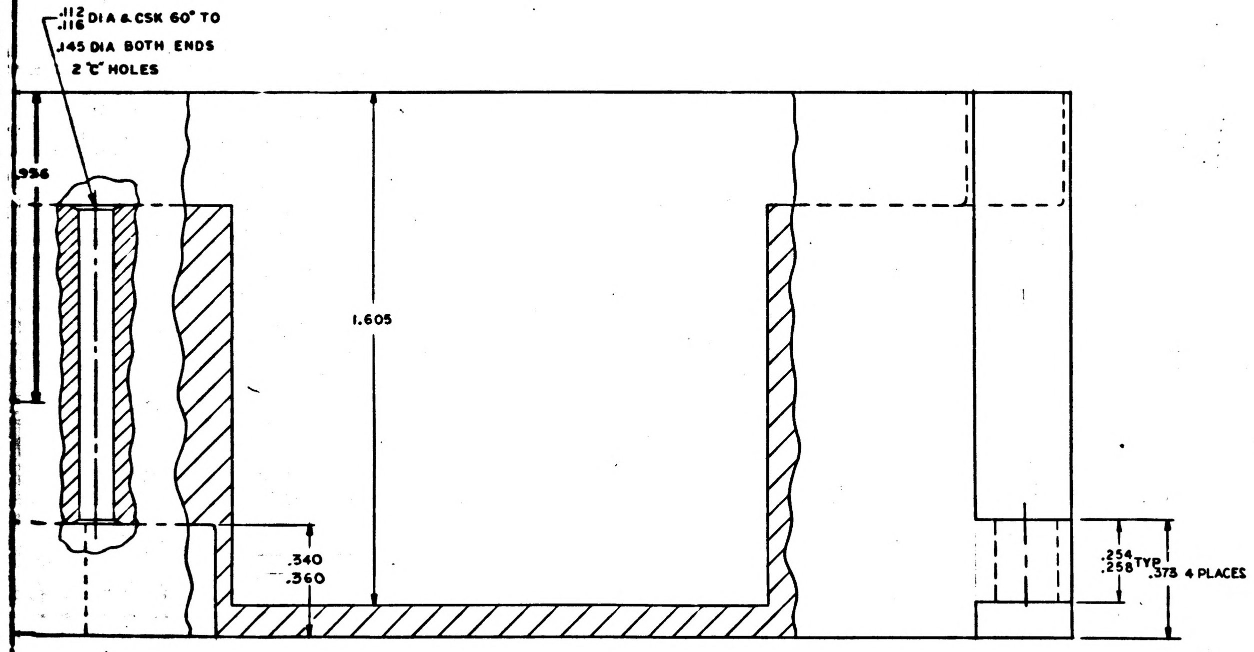
.112
.116 DIA & CSK 60° TO
.145 DIA BOTH ENDS
2 "C" HOLES
.956
1.605
.340
.360
.254
.258 TYP
.375 4 PLACES

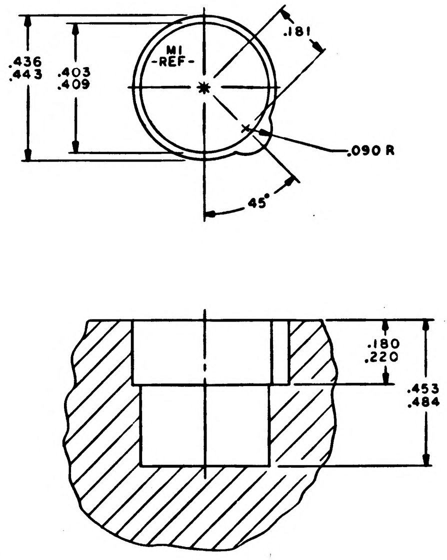
.436
.443
.403
.409
M1
-REF-
.181
.090 R
45°
.180
.220
.453
.484

DETAIL A
1 "M" HOLE

NOTICE — WHEN GOVERNMENT DRAWINGS, SPECIFICATIONS, OR OTHER DATA ARE USED FOR ANY PURPOSE OTHER THAN IN CONNECTION WITH A DEFINITELY RELATED GOVERNMENT PROCUREMENT OPERATION, THE UNITED STATES GOVERNMENT THEREBY INCURS NO RESPONSIBILITY NOR ANY OBLIGATION WHATSOEVER; AND THE FACT THAT THE GOVERNMENT MAY HAVE FORMULATED, FURNISHED, OR IN ANY WAY SUPPLIED THE SAID DRAWINGS, SPECIFICATIONS, OR OTHER DATA IS NOT TO BE REGARDED BY IMPLICATION OR OTHERWISE AS IN ANY MANNER LICENSING THE HOLDER OR ANY OTHER PERSON OR CORPORATION, OR CONVEYING ANY RIGHTS OR PERMISSION TO MANUFACTURE, USE, OR SELL ANY PATENTED INVENTION THAT MAY IN ANY WAY BE RELATED THERETO.

HOLE IDENT	X BASIC DIM	Y BASIC DIM	⌖ DIA	HOLE DIA	QTY
A1	-.053	.690	.006	.058 .062	4
A2	.536	.510			
A3	.616	-.220			
A4	.516	-.440			
B1	1.180	-.145		.100 .104	4
B2	1.310	.385			
B3	.516	-.572			
B4	.516	-.300			
C1	1.005	.385		SEE DETAIL	2
C2	.980	-.220			
D2	.714	-.160		.115 .119	1
E1	.780	-.440		.306 .313	5
E2	1.180	-.440			
E3	1.180	.150			
E4	1.180	.620			
E5	.780	.620			
H1	.456	.690		.227 .231	2
H2	.200	.680			
J1	-.700	.430		.701 .708	1
K1	3.564	.080		.260 .267	2
K2	-1.300	-.160			
L1	2.240	.000		SEE DETAIL	1
M1	.680	.150		SEE DETAIL A	1
P1	.000	.000		.393 .400	1
V1	.516	-1.40	.006	.140 .145	1

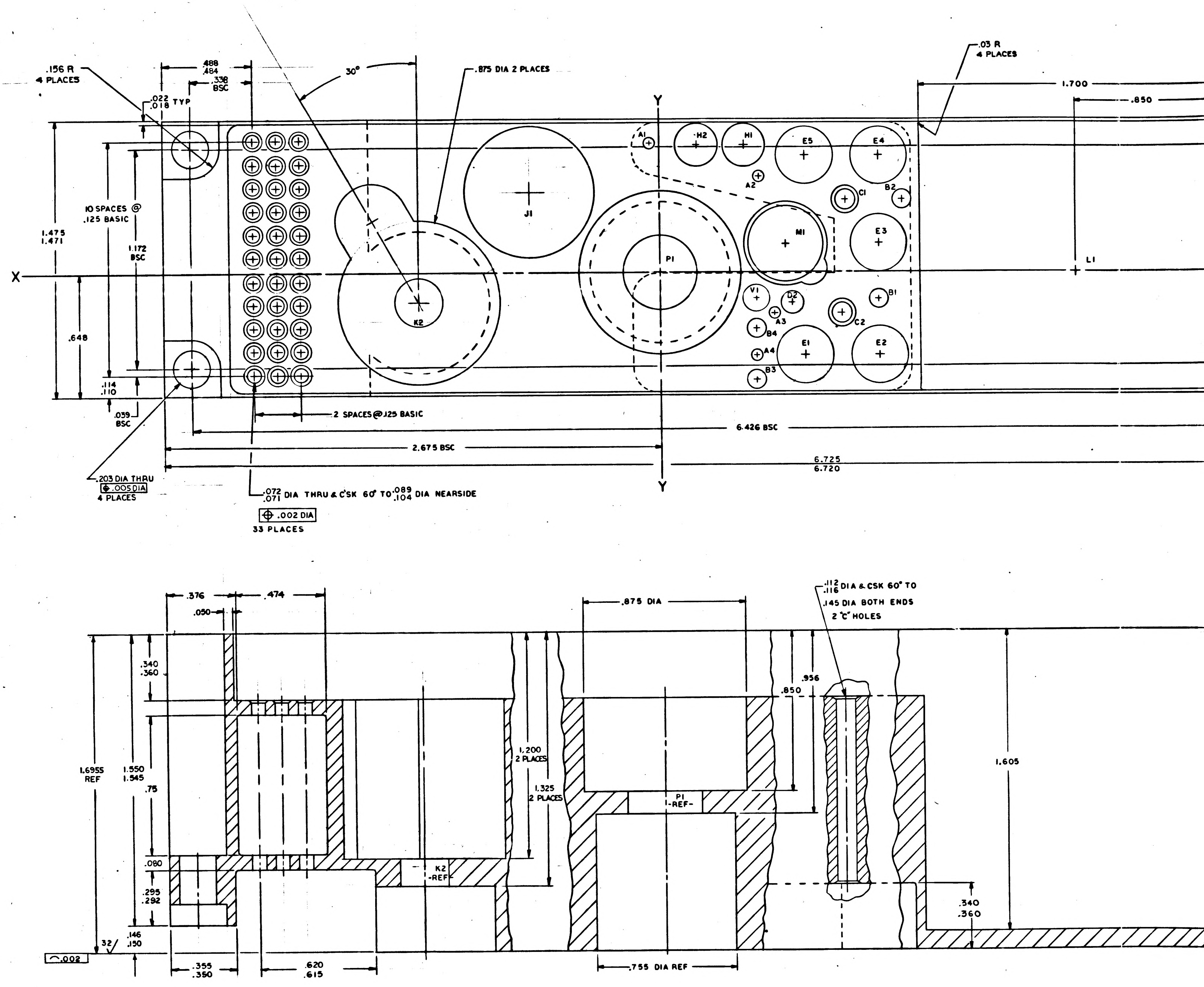
.156 R
4 PLACES
.488
.484
.338
BSC
.022
.018 TYP
30°
.875 DIA 2 PLACES
.03 R
4 PLACES
1.700
.850
Y
X
10 SPACES @ .125 BASIC
1.475
1.471
1.172
BSC
.648
.114
.110
.039
BSC
A1
H2
H1
E5
E4
A2
C1
B2
J1
K2
P1
M1
E3
L1
V1
D2
A3
B4
A4
B3
C2
B1
E1
E2
2 SPACES @ .125 BASIC
6.426 BSC
2.675 BSC
6.725
6.720
.203 DIA THRU
⌖ .005 DIA
4 PLACES
.072
.071 DIA THRU & C'SK 60° TO .089
.104 DIA NEARSIDE
⌖ .002 DIA
33 PLACES
.376
.474
.050
.875 DIA
.112
.116 DIA & CSK 60° TO
.145 DIA BOTH ENDS
2 "C" HOLES
.340
.360
.956
.850
1.200
2 PLACES
1.325
2 PLACES
1.6955
REF
1.550
1.545
.75
P1
-REF-
K2
-REF-
1.605
.080
.295
.292
.146
.150
32
.340
.360
⌒ .002
.355
.350
.620
.615
.755 DIA REF

NOTES
1. INTERPRET DRAWING IN ACCORDANCE WITH STANDARDS PRESCRIBED BY MIL-D-70327
2. MATERIAL: MAGNESIUM ALLOY ZK-60A-T5 PER QQ-M-31
3. FINISH: ANODIZE PER MIL-M-3171 TYPE IV
4. TRUE POSITIONING AS SHOWN IN CHART
5. UNLESS OTHERWISE SPECIFIED 125/ ALL OVER
6. REMOVE ALL BURRS AND BREAK SHARP EDGES .005-.015
7. UNLESS OTHERWISE SPECIFIED ALL FILLETS AND RADII .010 MAX

INCHES
0 1 2
PHOTOGRAPHIC SCALE ONLY

1004191 D

SYM	REVISIONS TDRR 02048 DESCRIPTION	DATE	APPROVAL
A	REVISED PER TDRR 022F5	7/26/63	
B	REVISED PER TDRR 02398	8/15/63	
C	REVISED PER TDRR 03131	9-12-63	
D	REVISED PER TDRR 03466	9-26-63	

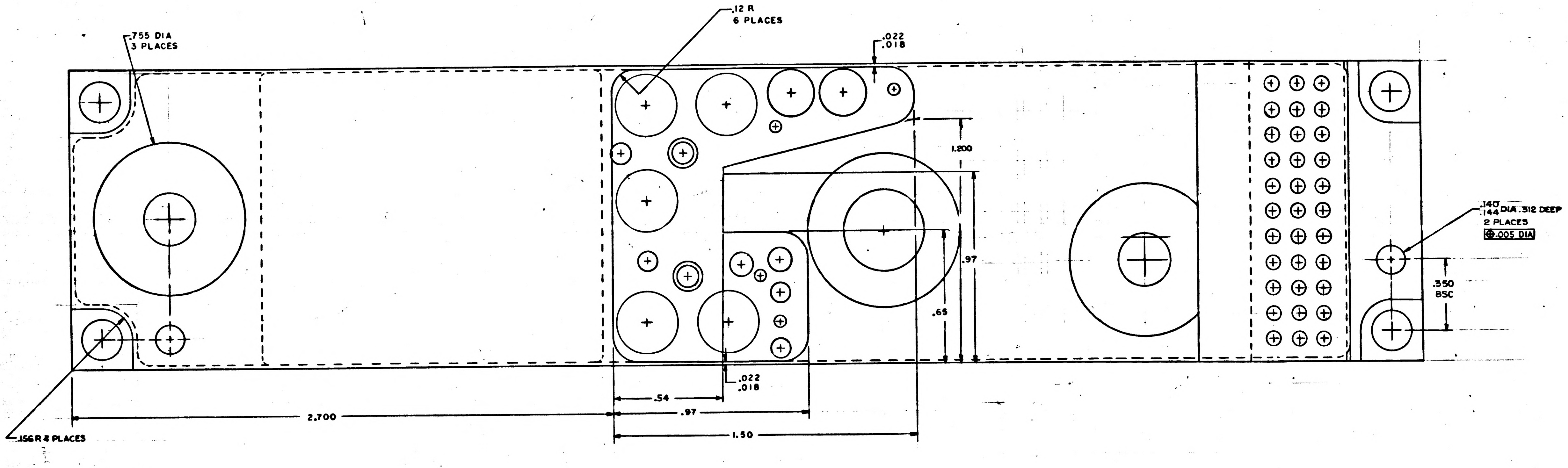
.755 DIA
3 PLACES
.12 R
6 PLACES
.022
.018
1.200
.97
.65
.140
.144 DIA .312 DEEP
2 PLACES
⊕ .005 DIA
.350
BSC
.022
.018
.54
.97
2.700
1.50
.156 R 4 PLACES

QTY REQD	PART OR IDENTIFYING NO.	NOMENCLATURE OR DESCRIPTION	FIND NO.

LIST OF MATERIALS

1003124	
NEXT ASSY	USED ON
APPLICATION	

UNLESS OTHERWISE SPECIFIED
DIMENSIONS ARE IN INCHES
TOLERANCES ON
FRACTIONS ± — DECIMALS ±.005 ±.02 ANGLES ±1°
DO NOT SCALE THIS DRAWING
MATERIAL SEE NOTE 2
HEAT TREATMENT —
FINAL FINISH SEE NOTE 3

MIT
INSTRUMENTATION LAB
CAMBRIDGE, MASS
DWG NO CONTRACT
DRAWN DATE
CHECKED
APPROVAL
APPROVAL
NASA APPROVAL 7-17-63
MIT APPROVAL

MANNED SPACECRAFT CENTER
HOUSTON, TEXAS

HEADER HOUSING
POWER SWITCH MODULE
A.G.C. POWER SUPPLY

CODE IDENT NO. — SIZE J NASA DRAWING NO. 1004191
SCALE 5/1 WT — SHEET 1 OF 1

MASTER

1004191 D

INCHES
PHOTOGRAPHIC SCALE ONLY

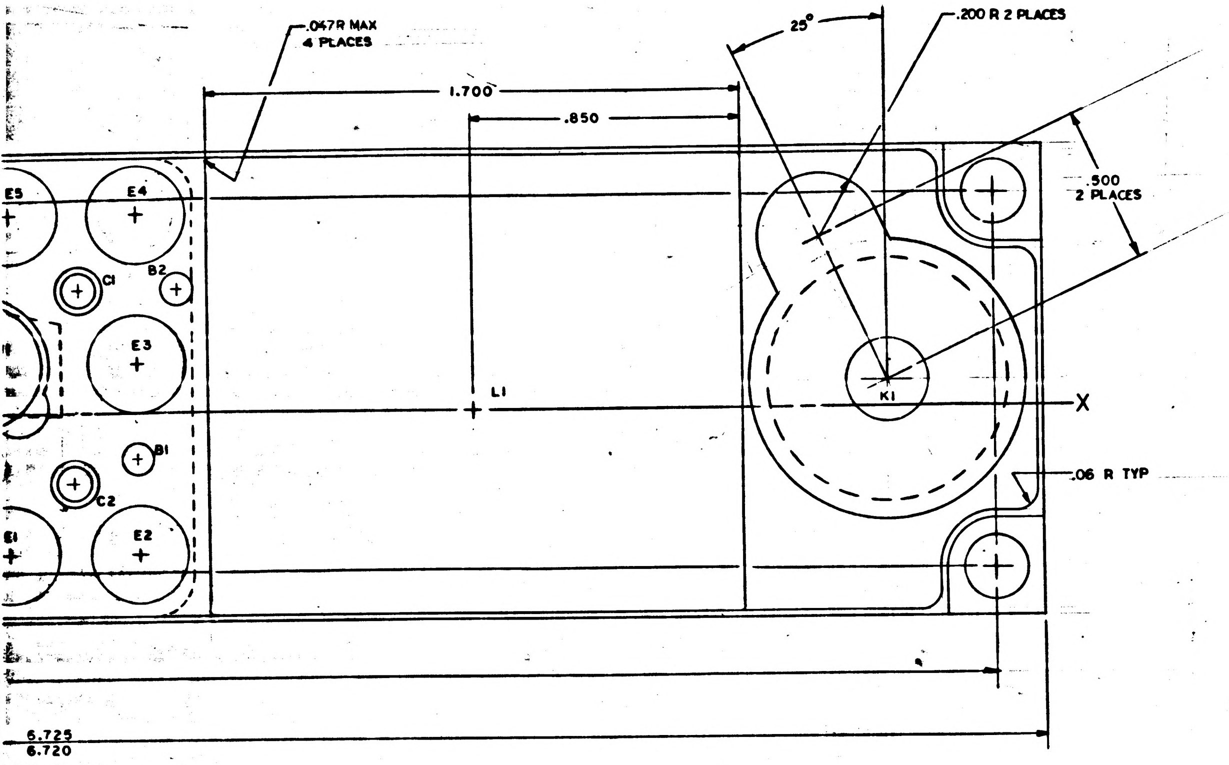

.047R MAX
4 PLACES
25°
.200 R 2 PLACES
1.700
.850
.500
2 PLACES
E5
E4
C1
B2
E3
L1
K1
X
B1
C2
E1
E2
.06 R TYP
6.725
6.720

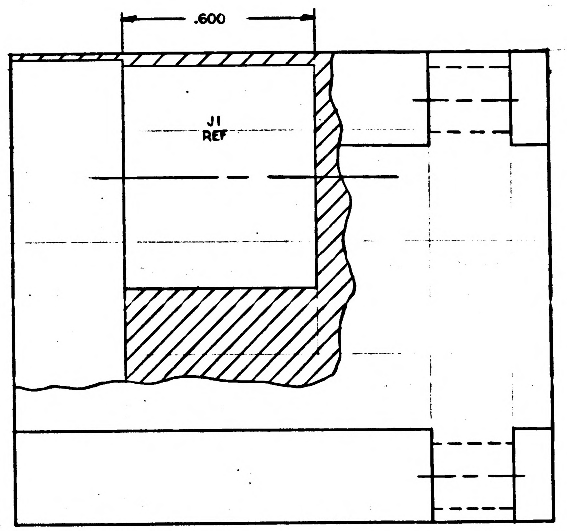

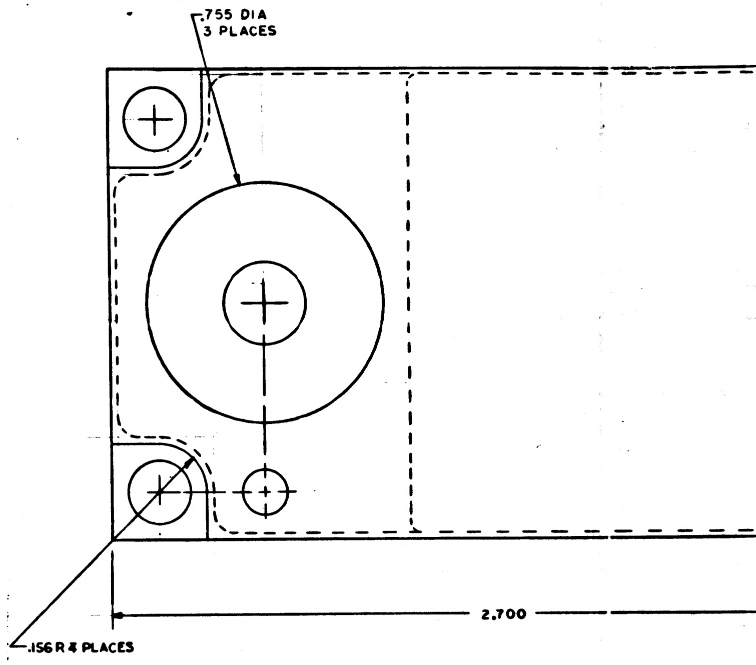

.755 DIA
3 PLACES
2.700
.156 R 4 PLACES

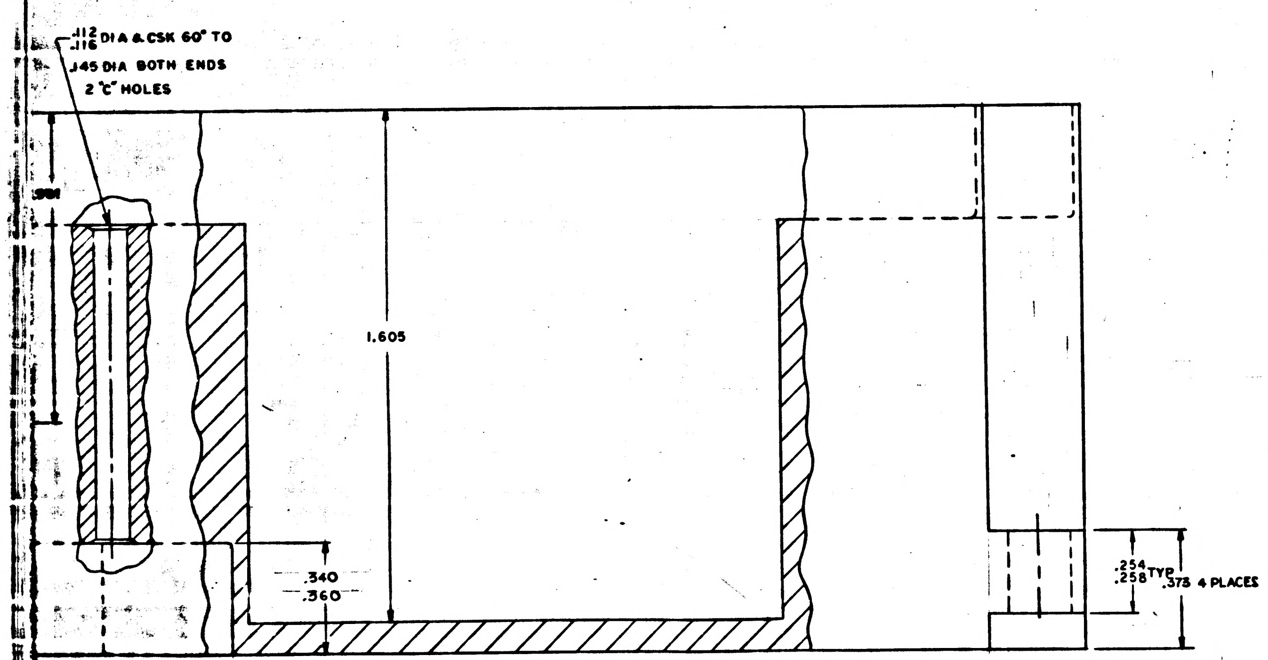

.112
.116 DIA & CSK 60° TO
.145 DIA BOTH ENDS
2 "C" HOLES
1.605
.340
.360
.254
.258 TYP
.373 4 PLACES

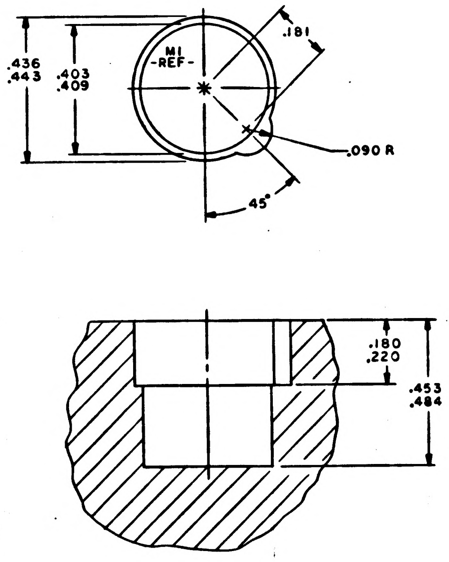

M1
-REF-
.436
.443
.403
.409
.181
.090 R
45°
.180
.220
.453
.484

DETAIL A
1 "M" HOLE

HOLE IDENT	X BASIC DIM	Y BASIC DIM	⊕ DIA	HOLE DIA	QTY
A1	−.053	.670	.006	.058 .062	4
A2	.536	.510			
A3	.616	−.220			
A4	.516	−.440			
B1	1.180	−.145		.100 .104	4
B2	1.310	.385			
B3	.516	−.572			
B4	.516	−.300			
C1	1.005	.385		SEE DETAIL	2
C2	.980	−.220			
D2	.714	−.160		.115 .119	1
E1	.780	−.440		.306 .313	5
E2	1.180	−.440			
E3	1.180	.150			
E4	1.180	.620			
E5	.780	.620			
H1	.456	.680		.227 .231	2
H2	.200	.680			
J1	−.700	.430		.701 .708	1
K1	3.564	.080		.260 .267	2
K2	−1.300	−.160			
L1	2.240	.000		SEE DETAIL	1
M1	.680	.150		SEE DETAIL A	1
P1	.000	.000		.393 .400	1
V1	.516	−1.40	.006	.140 .145	1

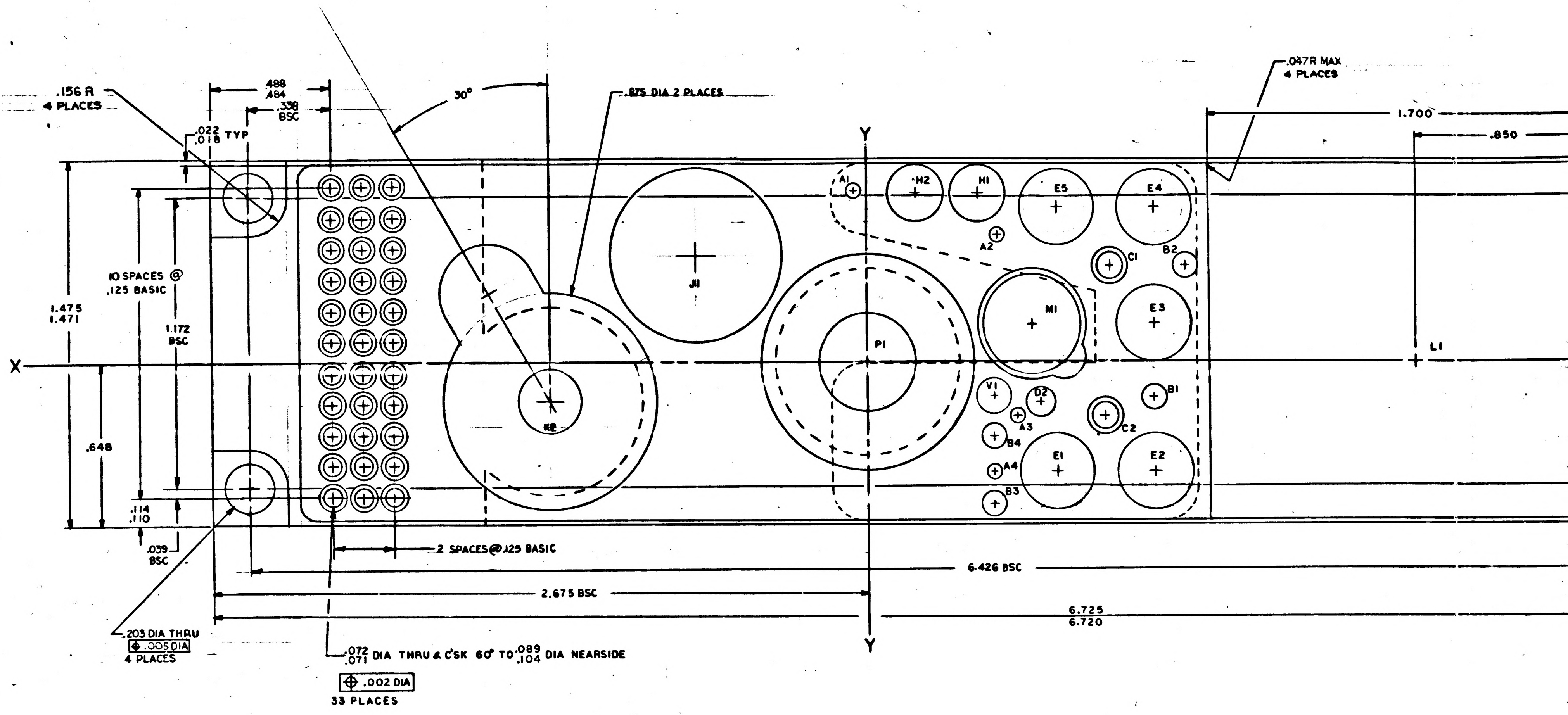
.156 R
4 PLACES
.488
.484
.338
BSC
.022
.018 TYP
30°
.875 DIA 2 PLACES
.047R MAX
4 PLACES
1.700
.850
Y
X
10 SPACES @
.125 BASIC
1.475
1.471
1.172
BSC
.648
.114
.110
.039
BSC
A1
H2
H1
E5
E4
A2
C1
B2
J1
E3
M1
P1
L1
V1
D2
B1
A3
B4
C2
E1
E2
A4
B3
K2
2 SPACES @ .125 BASIC
6.426 BSC
2.675 BSC
6.725
6.720
.203 DIA THRU
⊕ .005 DIA
4 PLACES
.072
.071 DIA THRU & CSK 60° TO .089
.104 DIA NEARSIDE
⊕ .002 DIA
33 PLACES

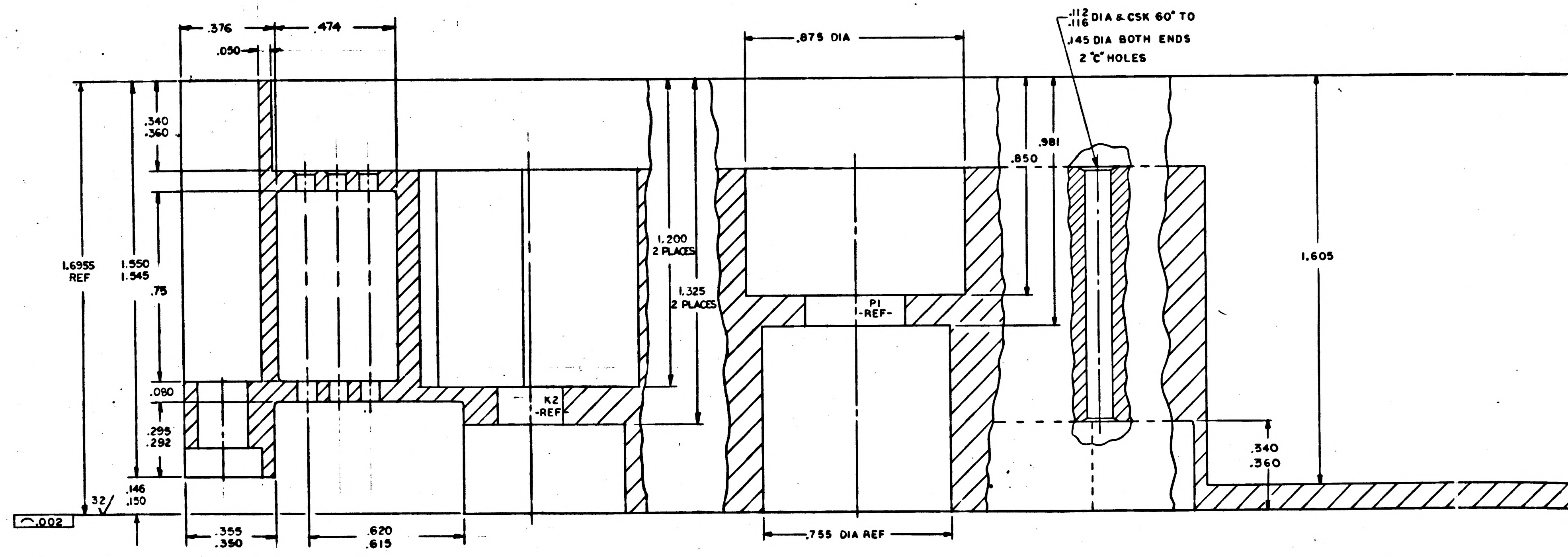
.376
.474
.050
.875 DIA
.112
.116 DIA & CSK 60° TO
.145 DIA BOTH ENDS
2 "C" HOLES
.340
.360
.981
.850
1.200
2 PLACES
1.325
2 PLACES
1.6955
REF
1.550
1.545
.75
1.605
P1
-REF-
K2
-REF-
.080
.295
.292
.340
.360
.146
.150
32
⌒ .002
.355
.350
.620
.615
.755 DIA REF

NOTES

1. INTERPRET DRAWING IN ACCORDANCE WITH STANDARDS PRESCRIBED BY MIL-D-70327
2. MATERIAL: MAGNESIUM ALLOY ZK-60A-T5 PER QQ-M-31
3. FINISH: ANODIZE PER MIL-M-3171 TYPE IV
4. TRUE POSITIONING AS SHOWN IN CHART
5. UNLESS OTHERWISE SPECIFIED 125√ ALL OVER
6. REMOVE ALL BURRS AND BREAK SHARP EDGES .005-.015
7. UNLESS OTHERWISE SPECIFIED ALL FILLETS AND RADII .010 MAX

1004191 D

INCHES
0 1 2
PHOTOGRAPHIC SCALE ONLY

1004191 E

		REVISIONS TDRR 02048		
	SYM	DESCRIPTION	DATE	APPROVAL
①	A	REVISED PER TDRR 022F5	7/24/63	
②	B	REVISED PER TDRR 02398	8/5/63	
③	C	REVISED PER TDRR 03131	9-12-63	WR
④	D	REVISED PER TDRR 03466		
	E	REVISED PER TDRR 04500	11-5-63	

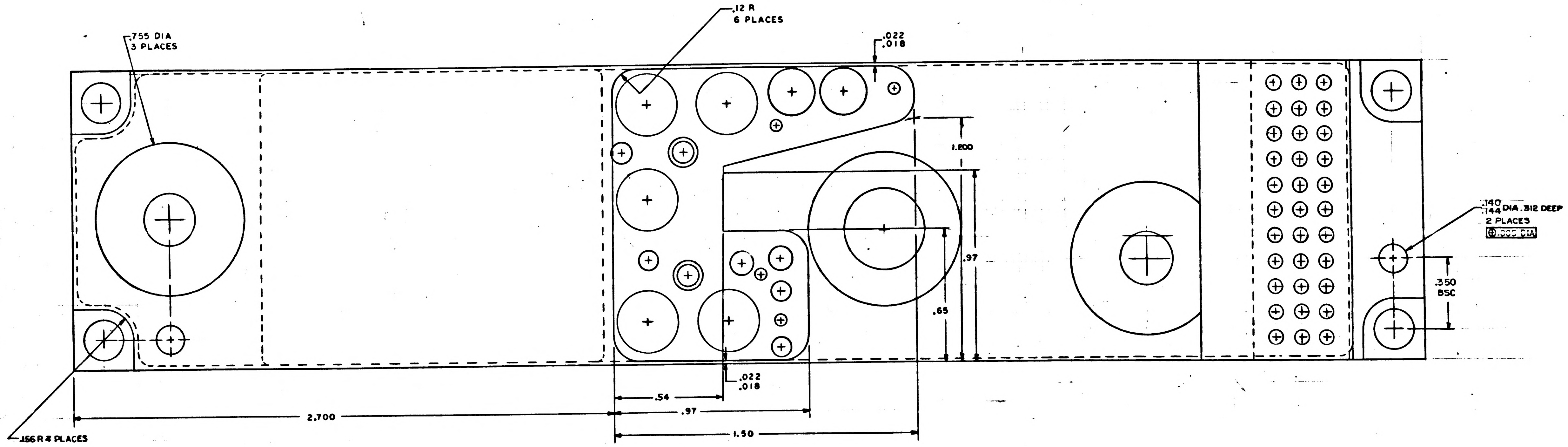
.755 DIA
3 PLACES
.12 R
6 PLACES
.022
.018
1.200
.97
.65
.140
.144 DIA .312 DEEP
2 PLACES
⊕ .005 DIA
.350
BSC
.022
.018
.54
.97
1.50
2.700
.156 R 4 PLACES

QTY REQD	PART OR IDENTIFYING NO.	NOMENCLATURE OR DESCRIPTION	FIND NO.

LIST OF MATERIALS

1003124	
NEXT ASSY	USED ON
APPLICATION	

UNLESS OTHERWISE SPECIFIED
DIMENSIONS ARE IN INCHES
TOLERANCES ON
FRACTIONS ± — DECIMALS ±.005 ±.02 ANGLES ±3°
DO NOT SCALE THIS DRAWING
MATERIAL
SEE NOTE 2
HEAT TREATMENT
—
FINAL FINISH
SEE NOTE 3

MIT
INSTRUMENTATION LAB
CAMBRIDGE MASS
DRAWN
DATE
CHECKED
APPROVAL
APPROVAL
NASA APPROVAL 7-12-63
MIT APPROVAL

MANNED SPACECRAFT CENTER
HOUSTON, TEXAS

HEADER HOUSING
POWER SWITCH MODULE
A.G.C. POWER SUPPLY

CODE IDENT NO. —
SIZE J
NASA DRAWING NO. 1004191
SCALE 5/1
SHEET 1 OF 1

MASTER

1004191 E

INCHES
0 1 2
PHOTOGRAPHIC SCALE ONLY

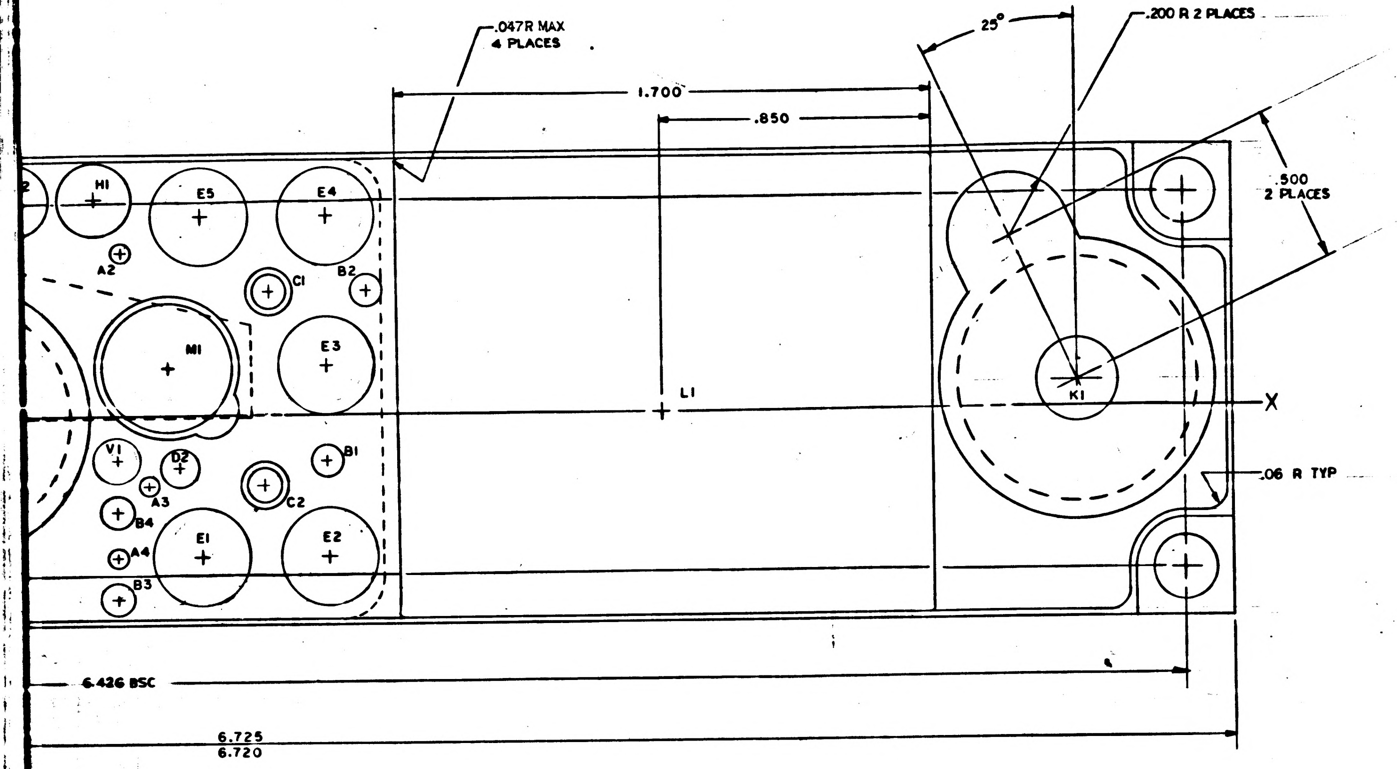
.047R MAX
4 PLACES
1.700
.850
25°
.200 R 2 PLACES
.500
2 PLACES
H1
E5
E4
A2
C1
B2
M1
E3
L1
K1
X
V1
D2
A3
B1
C2
.06 R TYP
B4
E1
E2
A4
B3
6.436 BSC
6.725
6.720

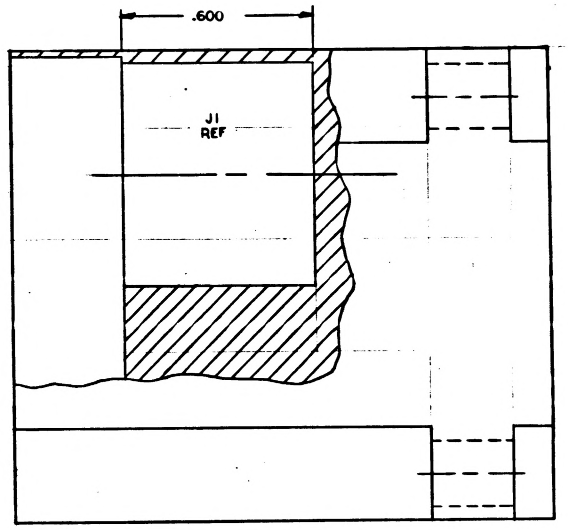

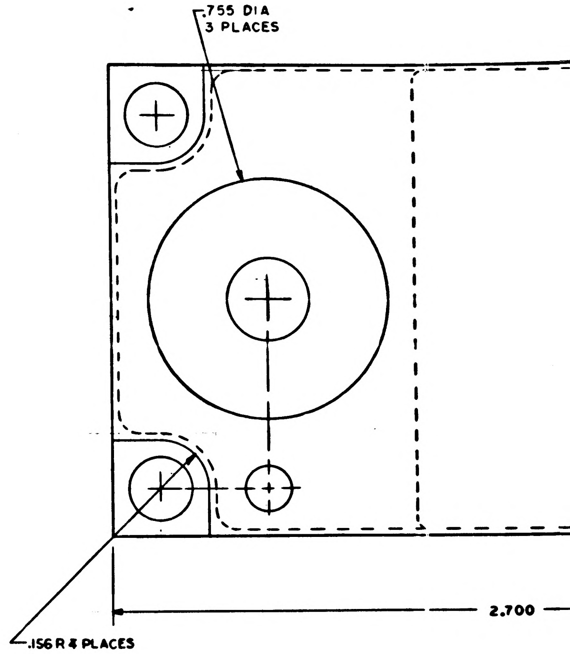
.755 DIA
3 PLACES
.156 R 4 PLACES
2.700

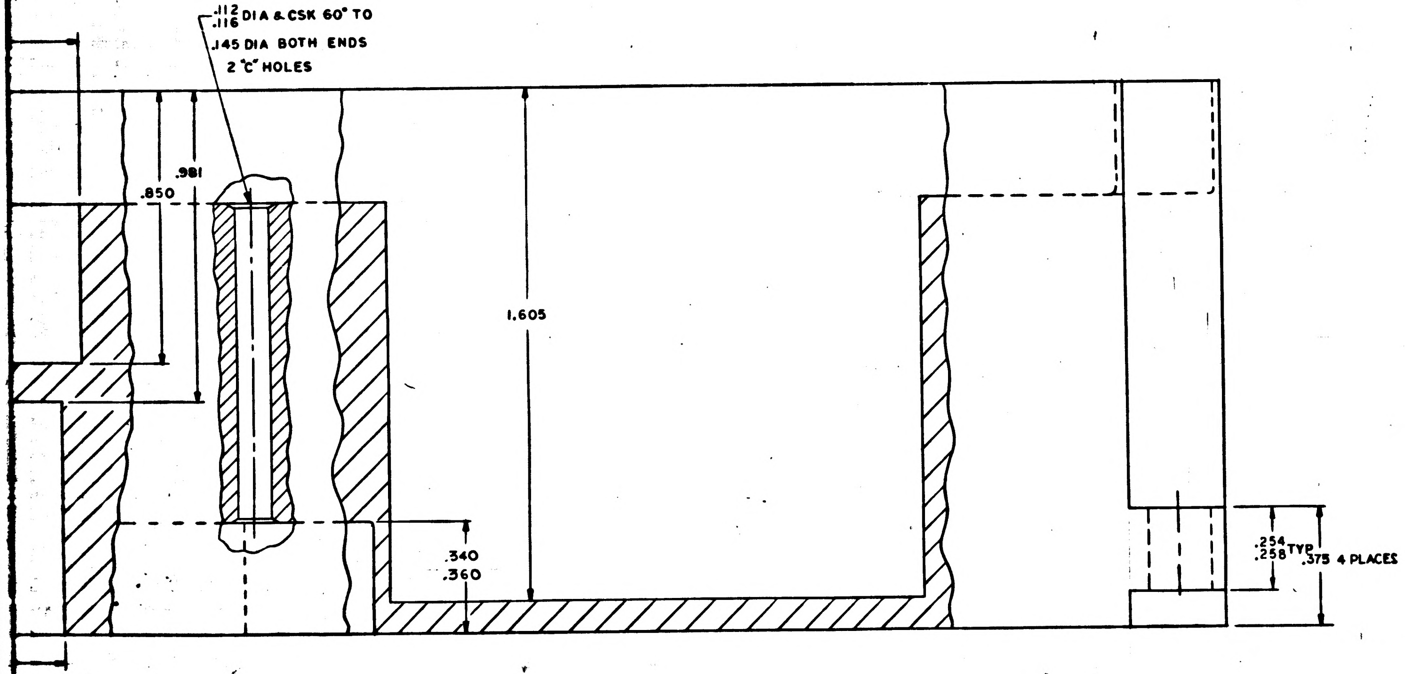
.112
.116 DIA & CSK 60° TO
.145 DIA BOTH ENDS
2 "C" HOLES
.981
.850
1.605
.340
.360
.254
.258 TYP
.375 4 PLACES

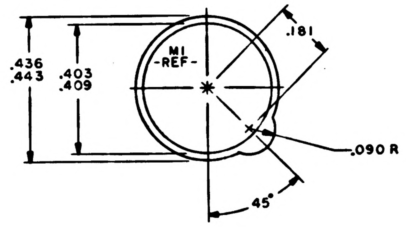
.436
.443
.403
.409
M1
-REF-
.181
.090 R
45°

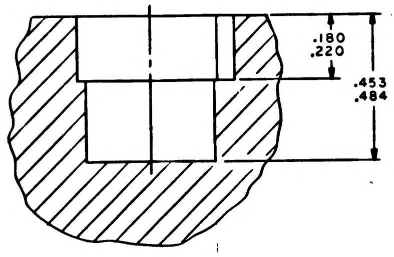
.180
.220
.453
.484

DETAIL A
1 "M" HOLE

INCHES
PHOTOGRAPHIC SCALE ONLY

F-2

HOLE IDENT	X BASIC DIM	Y BASIC DIM	⊕ DIA	HOLE DIA	QTY
A1	−.053	.690	.006	.058 .062	4
A2	.536	.510			
A3	.616	−.220			
A4	.516	−.440			
B1	1.180	−.145		.100 .104	4
B2	1.310	.385			
B3	.516	−.572			
B4	.516	−.300			
C1	1.005	.385		SEE DETAIL	2
C2	.980	−.220			
D2	.714	−.160		.115 .119	1
E1	.780	−.440		.306 .313	5
E2	1.180	−.440			
E3	1.180	.150			
E4	1.180	.620			
E5	.780	.620			
H1	.456	.680		.227 .231	2
H2	.200	.680			
J1	−.700	.430		.701 .708	1
K1	3.564	.080		.260 .267	2
K2	−1.300	−.160			
L1	2.240	.000		SEE DETAIL	1
M1	.680	.150		SEE DETAIL A	1
P1	.000	.000		.393 .400	1
V1	.516	−1.40	.006	.140 .145	1

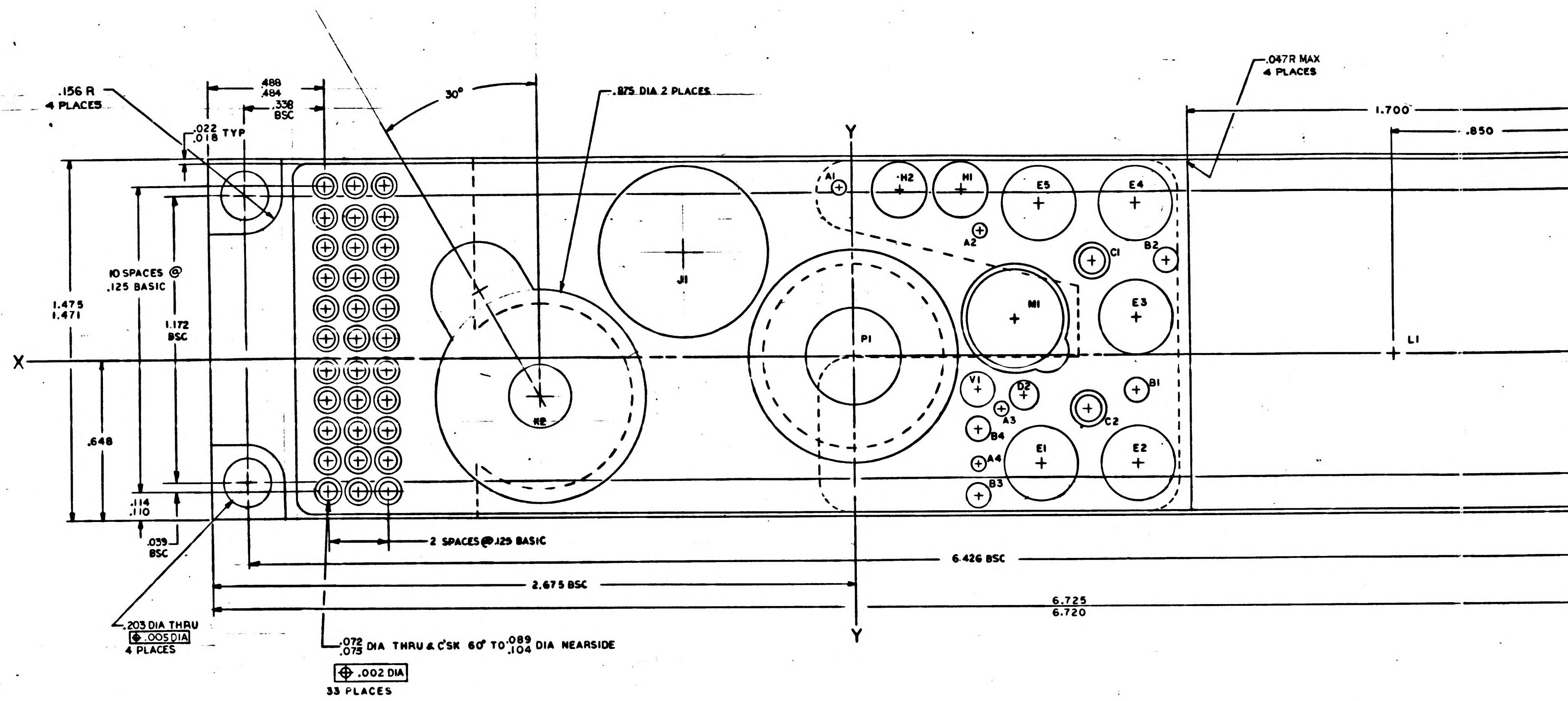

.156 R
4 PLACES
.488
.484
.338
BSC
30°
.875 DIA 2 PLACES
.047R MAX
4 PLACES
1.700
.850
.022
.018 TYP
Y
X
Y
10 SPACES @
.125 BASIC
1.475
1.471
1.172
BSC
.648
.114
.110
.059
BSC
A1
H2
H1
E5
E4
A2
C1
B2
J1
M1
E3
P1
K2
L1
V1
D2
B1
A3
C2
B4
E1
E2
A4
B3
2 SPACES @ .129 BASIC
6.426 BSC
2.675 BSC
6.725
6.720
.203 DIA THRU
⊕ .005 DIA
4 PLACES
.072
.075 DIA THRU & C'SK 60° TO .089
.104 DIA NEARSIDE
⊕ .002 DIA
33 PLACES

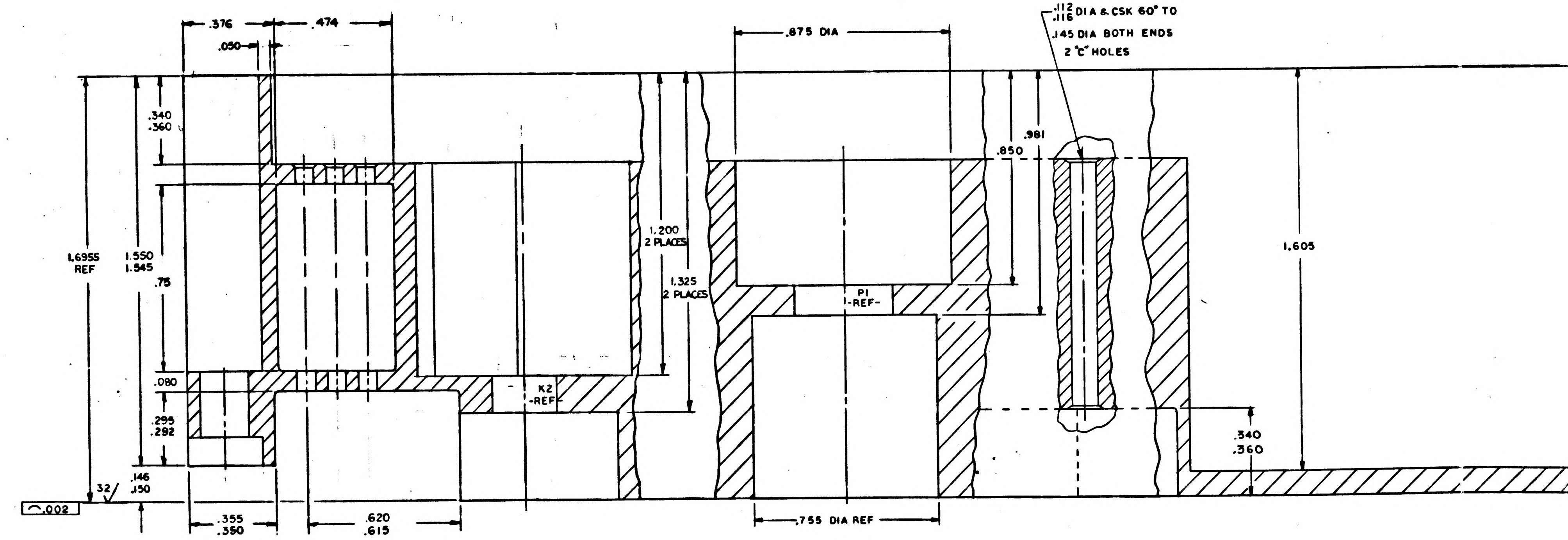

.376
.474
.050
.875 DIA
.112
.116 DIA & CSK 60° TO
.145 DIA BOTH ENDS
2 "C" HOLES
.340
.360
.981
.850
1.6955
REF
1.550
1.545
.75
1.200
2 PLACES
1.325
2 PLACES
P1
-REF-
1.605
.080
K2
-REF-
.295
.292
.146
.150
32
.002
.340
.360
.355
.350
.620
.615
.755 DIA REF

NOTES

1. INTERPRET DRAWING IN ACCORDANCE WITH STANDARDS PRESCRIBED BY MIL-D-70327
2. MATERIAL: MAGNESIUM ALLOY ZK-60A-T5 PER QQ-M-31
3. FINISH: ANODIZE PER MIL-M-3171 TYPE IV
4. TRUE POSITIONING AS SHOWN IN CHART
5. UNLESS OTHERWISE SPECIFIED 125/ ALL OVER
6. REMOVE ALL BURRS AND BREAK SHARP EDGES .005-.015
7. UNLESS OTHERWISE SPECIFIED ALL FILLETS AND RADII .005/.020

INCHES
0 1 2
PHOTOGRAPHIC SCALE ONLY

1004191 F

SYM	DESCRIPTION	DATE	APPROVAL
A	REVISED PER TDRR 02285	7/26/63	LB
B	REVISED PER TDRR 02398	9/5/63	
C	REVISED PER TDRR 03131	9-10-63	UR
D	REVISED PER TDRR 03466	2-26-64	
E	REVISED PER TDRR 04500	11-6-6?	
F	REVISED PER TDRR 05196	[illegible]	WH

REVISIONS TDRR 02848

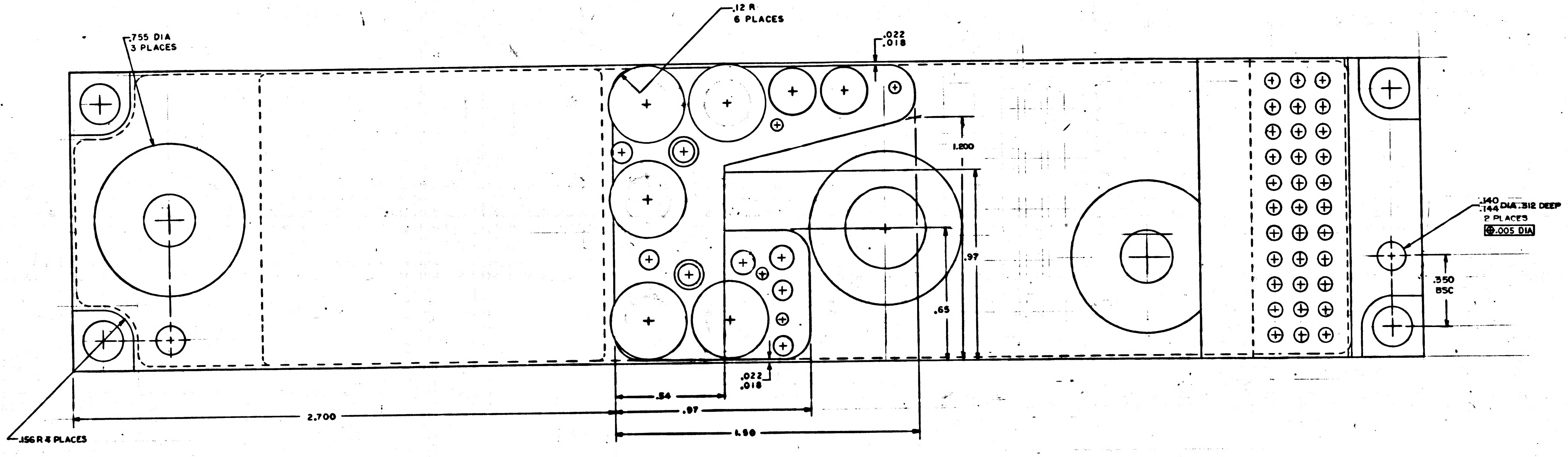

.755 DIA
3 PLACES
.12 R
6 PLACES
.022
.018
1.200
.97
.65
.140
.144 DIA .312 DEEP
2 PLACES
⊕ .005 DIA
.350
BSC
.022
.018
.54
.97
1.90
2,700
.156 R 4 PLACES

QTY REQD	PART OR IDENTIFYING NO.	NOMENCLATURE OR DESCRIPTION	FIND NO.

LIST OF MATERIALS

1003124	
NEXT ASSY	USED ON

APPLICATION

UNLESS OTHERWISE SPECIFIED
DIMENSIONS ARE IN INCHES
TOLERANCES ON
FRACTIONS ± — DECIMALS ±.005 ±.02 ANGLES ±3°
DO NOT SCALE THIS DRAWING

MATERIAL
SEE NOTE 2

HEAT TREATMENT
—

FINAL FINISH
SEE NOTE 3

MIT
INSTRUMENTATION LAB
CAMBRIDGE, MASS

DRAWN
CHECKED
APPROVAL
APPROVAL 7/4/63
NASA APPROVAL 7-12-63
MIT APPROVAL

MANNED SPACECRAFT CENTER
HOUSTON, TEXAS

HEADER HOUSING
POWER SWITCH MODULE
A.G.C. POWER SUPPLY

CODE IDENT NO. —
SIZE J
NASA DRAWING NO. 1004191
SCALE 5/1
SHEET 1 OF 1

1004191 F

1004191 E

MASTER

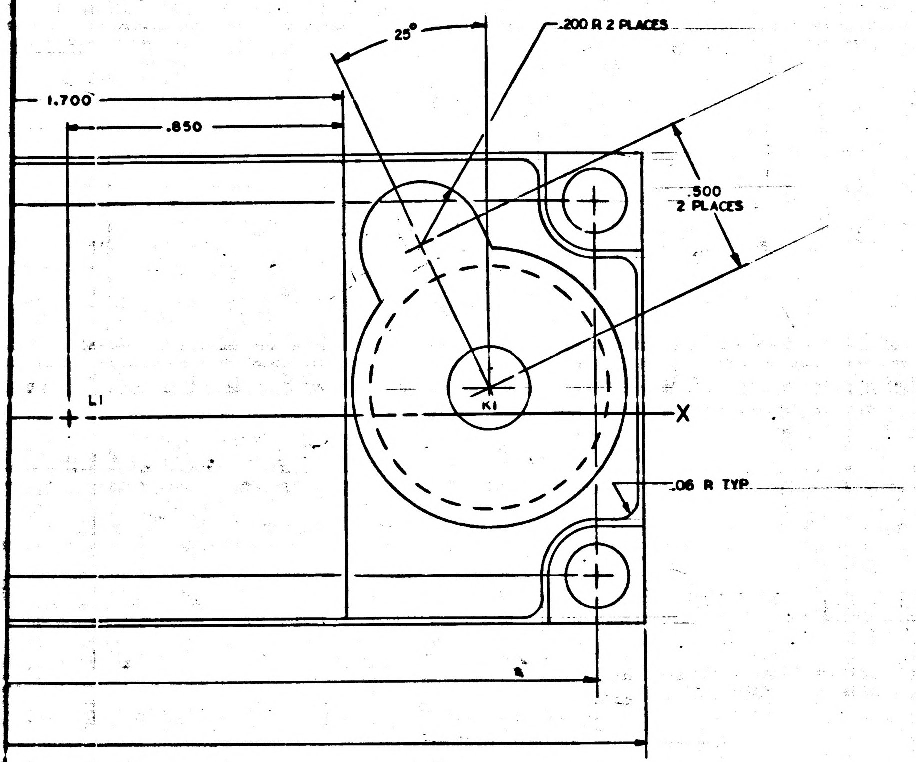
25°
.200 R 2 PLACES
1.700
.850
.500
2 PLACES
L1
K1
X
.06 R TYP

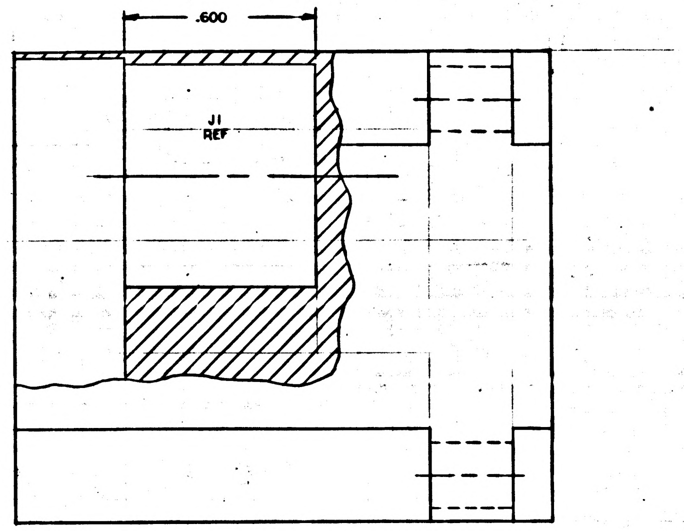

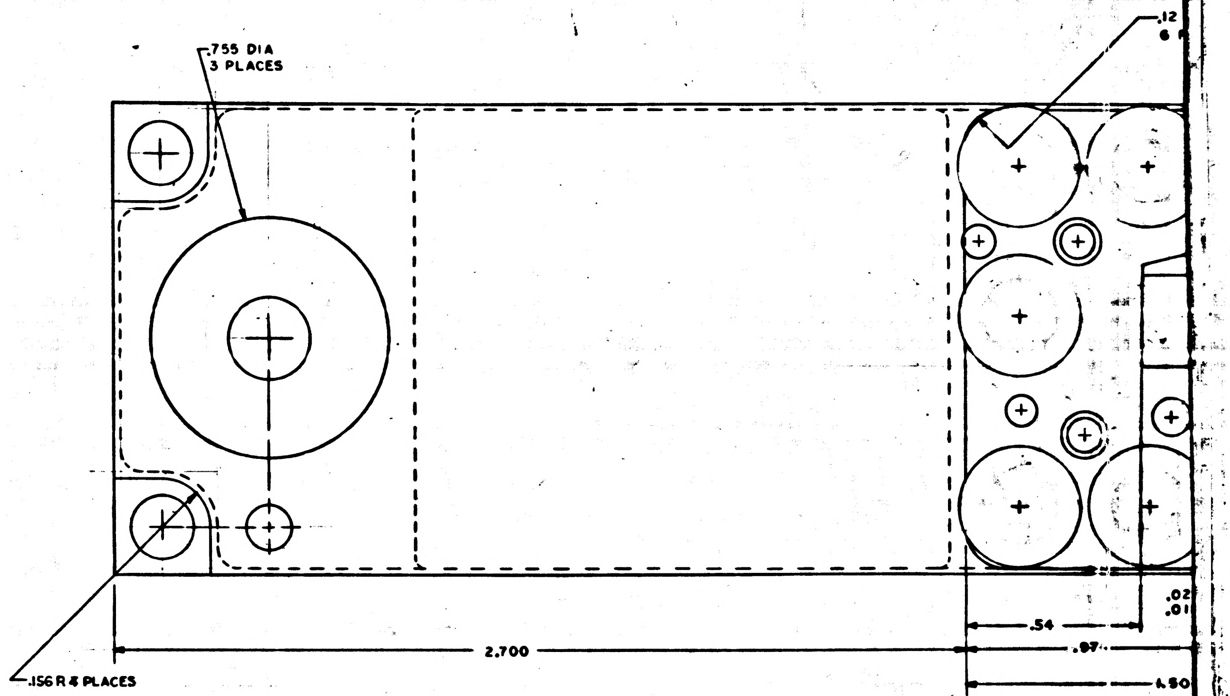
.755 DIA
3 PLACES
.12
6 P
.156 R 4 PLACES
2.700
.54
.87
1.50
.02
.01

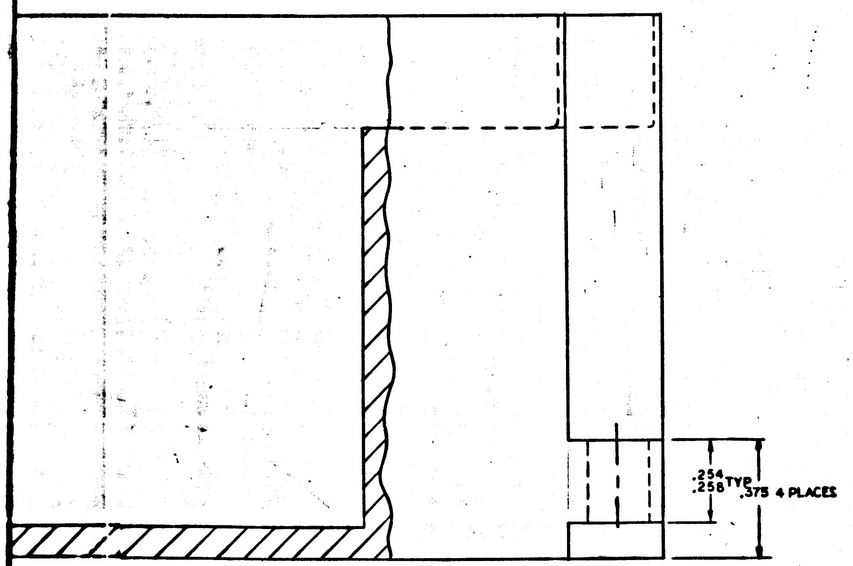
.254
.258
TYP
.375 4 PLACES

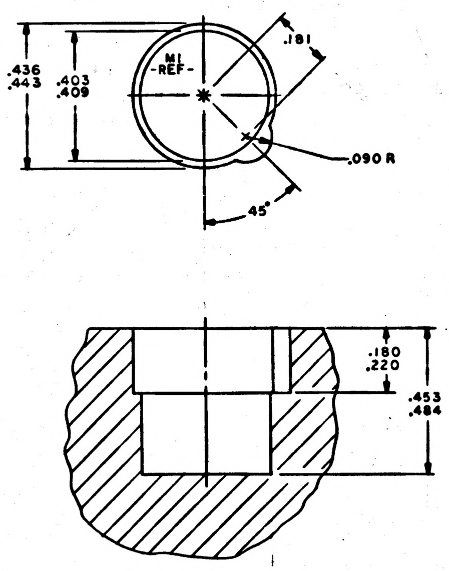
.436
.443
.403
.409
M1
-REF-
.181
.090 R
45°
.180
.220
.453
.484

DETAIL A
1 "M" HOLE

1004191 F

INCHES
PHOTOGRAMMETRIC SCALE ONLY

F-2

HOLE IDENT	X BASIC DIM	Y BASIC DIM	⊕ DIA	HOLE DIA	QTY
A1	-.053	.690	.006	.058 .062	4
A2	.536	.510			
A3	.616	-.220			
A4	.516	-.440			
B1	1.180	-.145		.100 .104	4
B2	1.310	.385			
B3	.516	-.572			
B4	.516	-.300			
C1	1.005	.385		SEE DETAIL	2
C2	.980	-.220			
D2	.714	-.160		.115 .119	1
E1	.780	-.440		.368 .375	5
E2	1.180	-.440			
E3	1.180	.150			
E4	1.180	.620			
E5	.780	.620			
H1	.456	.680		.227 .231	2
H2	.200	.680			
J1	-.700	.430		.701 .708	1
K1	3.564	.080		.260 .267	2
K2	-1.300	-.160			
L1	2.240	.000		SEE DETAIL	1
M1	.680	.150		SEE DETAIL A	1
P1	.000	.000		.393 .400	1
V1	.516	-1.40	.006	.140 .145	1

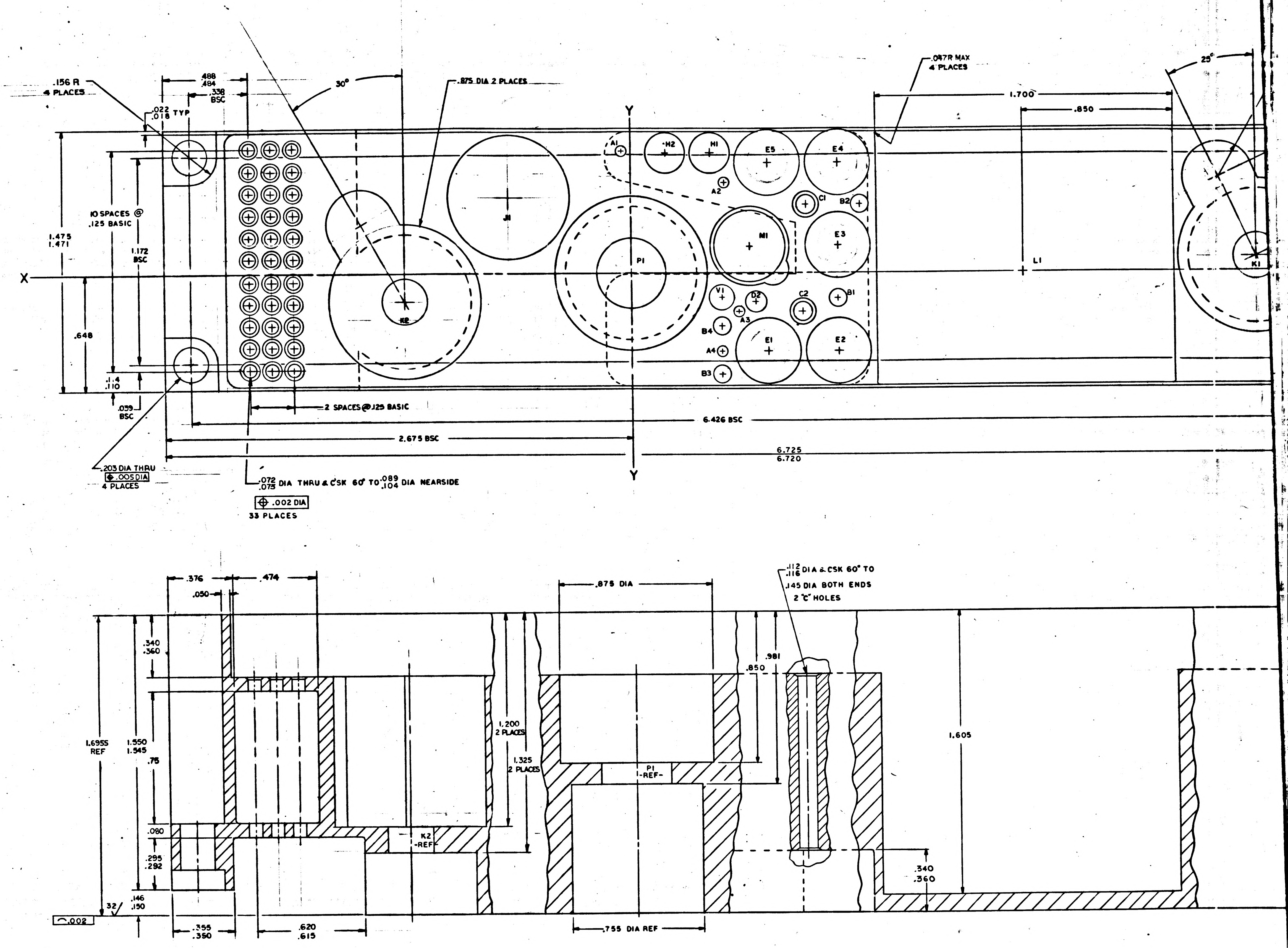

.156 R
4 PLACES
.022
.018 TYP
.488
.484
.338
BSC
30°
.875 DIA 2 PLACES
Y
.047R MAX
4 PLACES
25°
1.700
.850
10 SPACES @
.125 BASIC
1.475
1.471
1.172
BSC
X
.648
.114
.110
.039
BSC
A1
H2
H1
E5
E4
A2
C1
B2
J1
M1
E3
P1
L1
K1
V1
D2
C2
B1
A3
B4
E1
E2
A4
B3
K2
2 SPACES @ .125 BASIC
6.426 BSC
2.675 BSC
6.725
6.720
Y
.203 DIA THRU
⊕ .005 DIA
4 PLACES
.072
.075 DIA THRU & CSK 60° TO .089
.104 DIA NEARSIDE
⊕ .002 DIA
33 PLACES
.376
.474
.050
.875 DIA
.112
.116 DIA & CSK 60° TO
.145 DIA BOTH ENDS
2 "C" HOLES
.340
.360
.981
.850
1.200
2 PLACES
1.325
2 PLACES
1.6955
REF
1.550
1.545
.75
1.605
P1
-REF-
K2
-REF-
.080
.295
.292
.146
.150
32
.340
.360
.002
.355
.350
.620
.615
.755 DIA REF

NOTES

1. INTERPRET DRAWING IN ACCORDANCE WITH STANDARDS PRESCRIBED BY MIL-D-70327
2. MATERIAL: MAGNESIUM ALLOY ZK-60A-T5 PER QQ-M-31
3. FINISH: ANODIZE PER MIL-M-3171 TYPE IV
4. TRUE POSITIONING AS SHOWN IN CHART
5. UNLESS OTHERWISE SPECIFIED 125/ ALL OVER
6. REMOVE ALL BURRS AND BREAK SHARP EDGES .005-.015
7. UNLESS OTHERWISE SPECIFIED ALL FILLETS AND RADII .005/.020

1004191 G

SYM	REVISIONS TDRR 02048 DESCRIPTION	DATE	APPROVAL
A	REVISED PER TDRR 02285	7/31/63	LB
B	REVISED PER TDRR 02398	8/5/63	
C	REVISED PER TDRR 03131	9-10-63	
D	REVISED PER TDRR 03866	9-26-63	
E	REVISED PER TDRR 04500	11-6-63	WK
F	REVISED PER TDRR 05196		WK
G	REVISED PER TDRR 05757		BPK

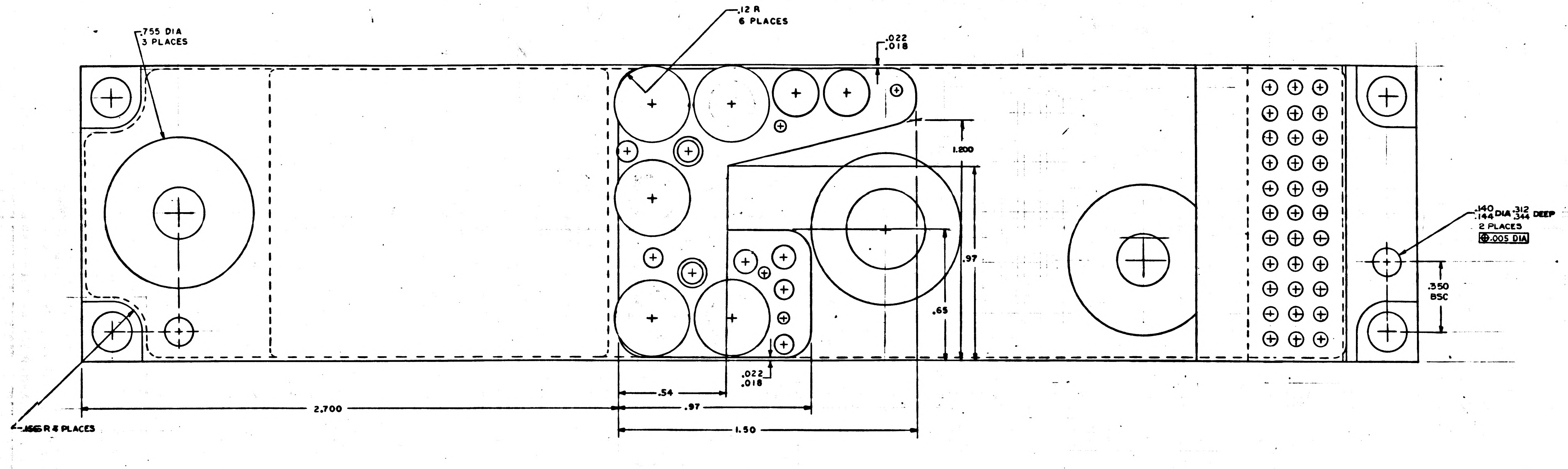

.755 DIA
3 PLACES
.12 R
6 PLACES
.022
.018
1.200
.97
.65
.140 DIA .312
.144 DIA .344 DEEP
2 PLACES
⊕ .005 DIA
.350
BSC
.022
.018
.54
.97
1.50
2.700
.156 R 4 PLACES

QTY REQD	PART OR IDENTIFYING NO.	NOMENCLATURE OR DESCRIPTION	FIND NO.

LIST OF MATERIALS

UNLESS OTHERWISE SPECIFIED
DIMENSIONS ARE IN INCHES
TOLERANCES ON
FRACTIONS ± — DECIMALS ±.005 ±.02 ANGLES ±3°
DO NOT SCALE THIS DRAWING
MATERIAL
SEE NOTE 2
HEAT TREATMENT
—
FINAL FINISH
SEE NOTE 3

NEXT ASSY	USED ON
1003124	

APPLICATION

MIT
INSTRUMENTATION LAB
CAMBRIDGE, MASS
DWG NO. CONTRACT
DRAWN DATE
CHECKED
APPROVAL
APPROVAL 7/16/63
NASA APPROVAL 7-17-63
MIT APPROVAL

MANNED SPACECRAFT CENTER
HOUSTON, TEXAS

HEADER HOUSING
POWER SWITCH MODULE
A.G.C. POWER SUPPLY

CODE IDENT NO —
SIZE J
NASA DRAWING NO 1004191
SCALE 5/1
SHEET 1 OF 1

1004191 G

1004191 F

MASTER

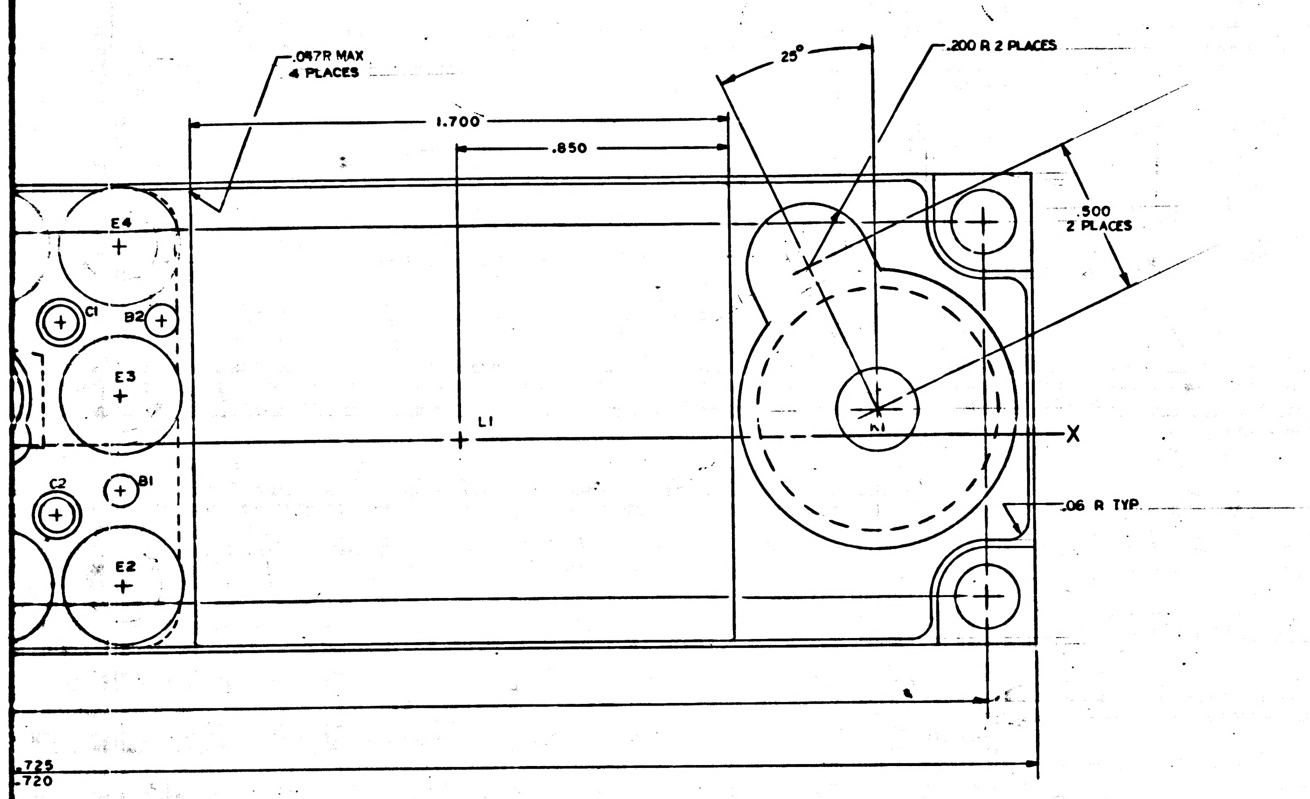
.047R MAX
4 PLACES
25°
.200 R 2 PLACES
1.700
.850
.500
2 PLACES
E4
C1
B2
E3
L1
X
K1
C2
B1
E2
.06 R TYP
.725
.720

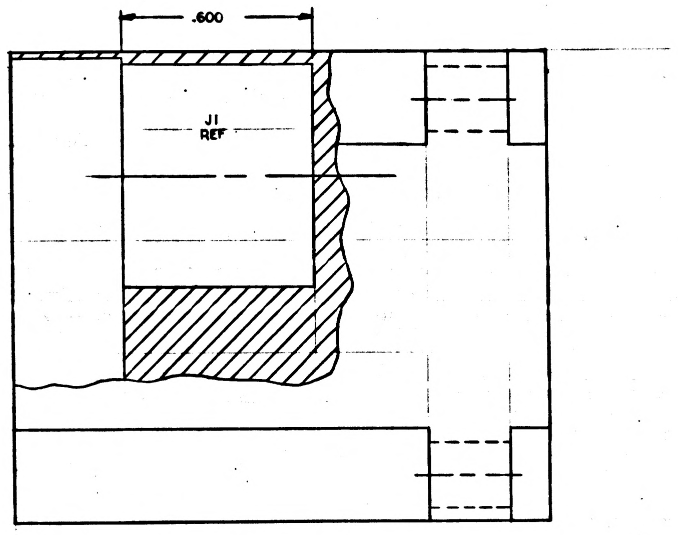

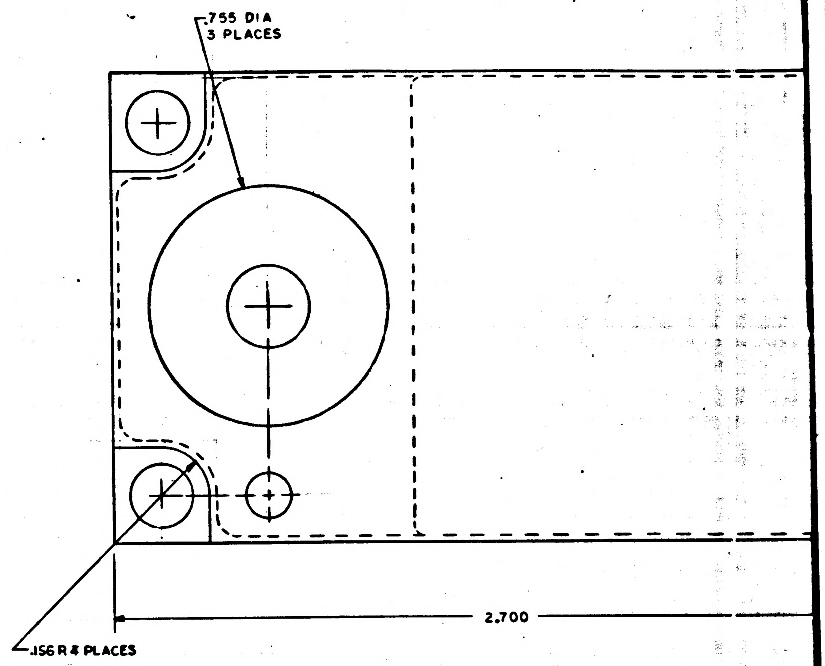
.755 DIA
3 PLACES
.156 R 4 PLACES
2.700

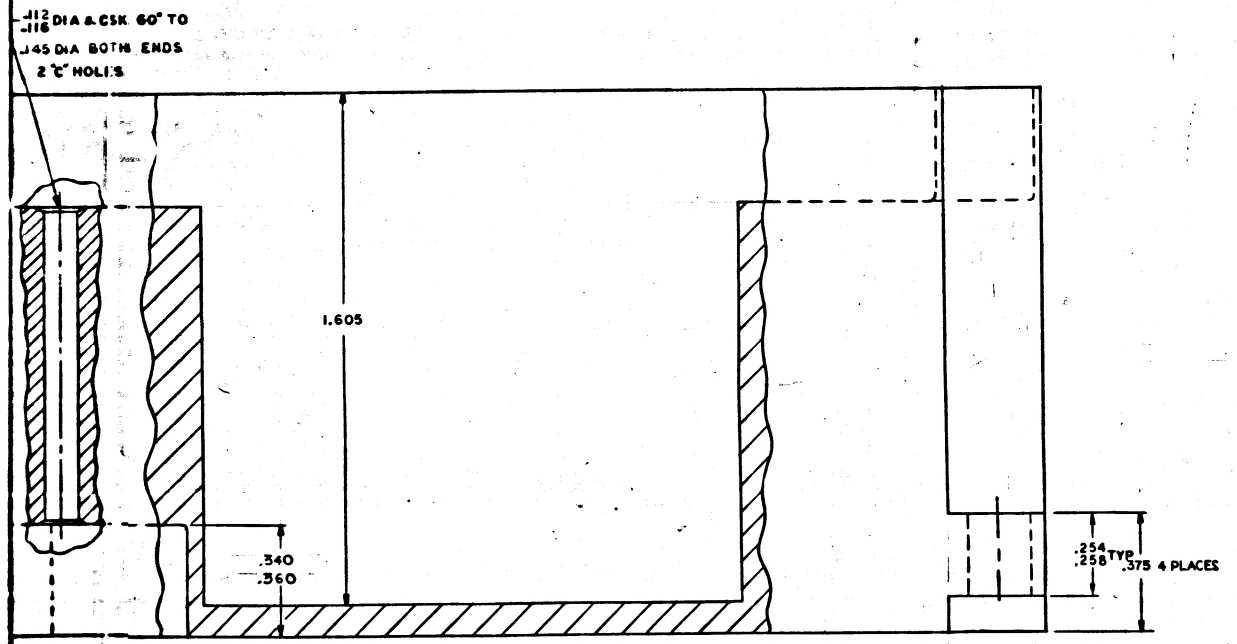
.112
.116 DIA & CSK 60° TO
.145 DIA BOTH ENDS
2 "C" HOLES
1.605
.340
.360
.254
.258 TYP
.375 4 PLACES

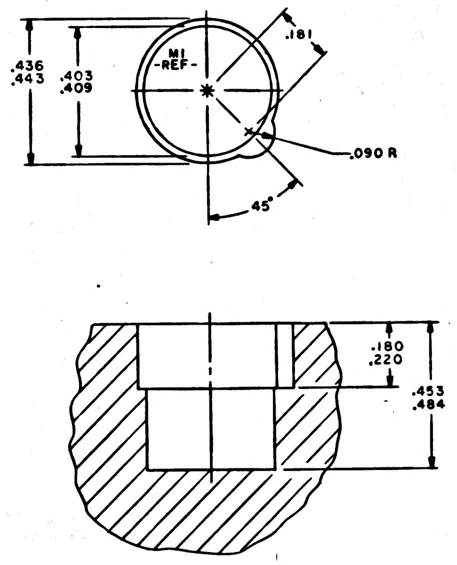
.436
.443
.403
.409
M1
-REF-
.181
.090 R
45°
.180
.220
.453
.484

DETAIL A
1 "M" HOLE

1004191 F

[illegible]

HOLE IDENT	X BASIC DIM	Y BASIC DIM	⊕ DIA	HOLE DIA	QTY
A1	−.053	.690	.006	.058 .062	4
A2	.536	.510			
A3	.616	−.220			
A4	.516	−.440			
B1	1.180	−.145		.100 .104	4
B2	1.310	.385			
B3	.516	−.572			
B4	.516	−.300			
C1	1.005	.385		SEE DETAIL	2
C2	.980	−.220			
D2	.714	−.160		.115 .119	1
E1	.780	−.430		.368 .375	5
E2	1.180	−.430			
E3	1.180	.150			
E4	1.180	.605			
E5	.780	.605			
H1	.456	.680		.227 .231	2
H2	.200	.660			
J1	−.700	.430		.701 .708	1
K1	3.564	.080		.260 .267	2
K2	−1.300	−.160			
L1	2.240	.000		SEE DETAIL	1
M1	.680	.150		SEE DETAIL A	1
P1	.000	.000		.393 .400	1
V1	.516	−.140	.006	.140 .145	1

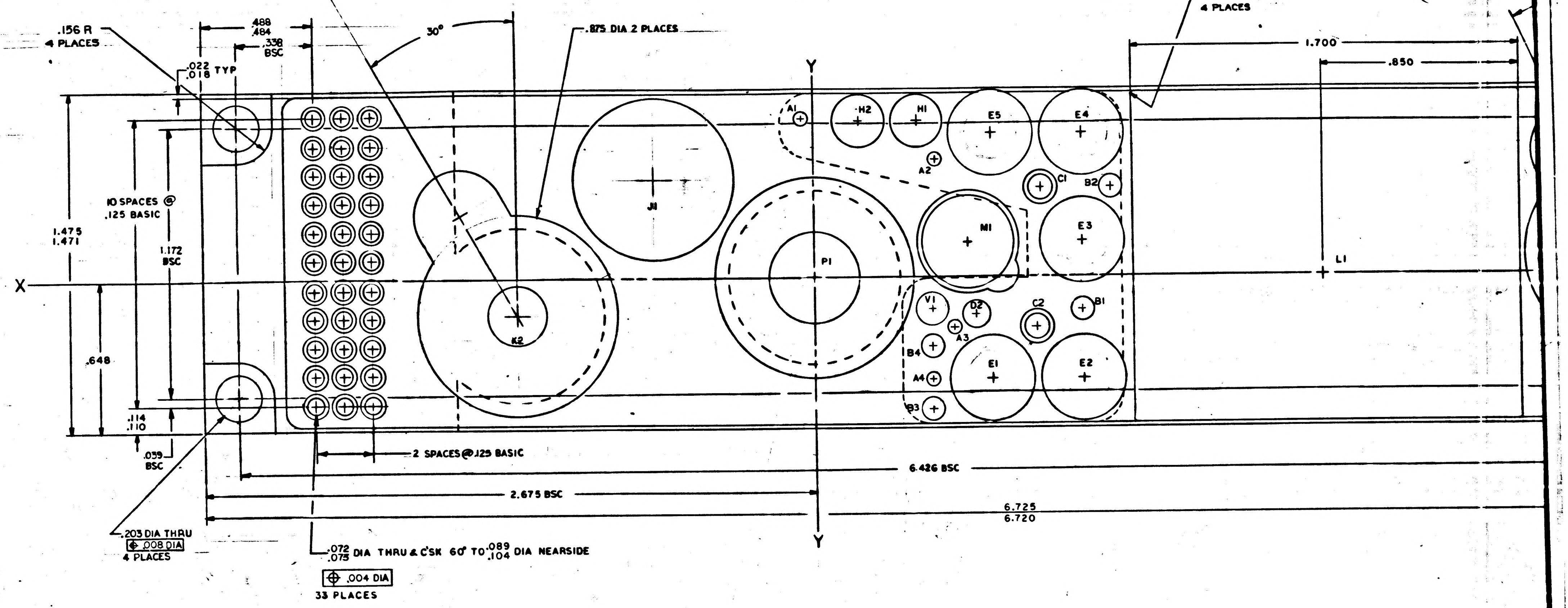

.156 R
4 PLACES
.488
.484
.338
BSC
.022
.018 TYP
30°
.875 DIA 2 PLACES
.047R MAX
4 PLACES
1.700
.850
Y
X
10 SPACES @
.125 BASIC
1.475
1.471
1.172
BSC
.648
.114
.110
.039
BSC
J1
K2
P1
A1
H2
H1
E5
E4
A2
C1
B2
M1
E3
L1
V1
D2
C2
B1
A3
B4
E1
E2
A4
B3
2 SPACES @ .125 BASIC
6.426 BSC
2.675 BSC
6.725
6.720
.203 DIA THRU
⊕ .008 DIA
4 PLACES
.072
.075 DIA THRU & C'SK 60° TO .089
.104 DIA NEARSIDE
⊕ .004 DIA
33 PLACES

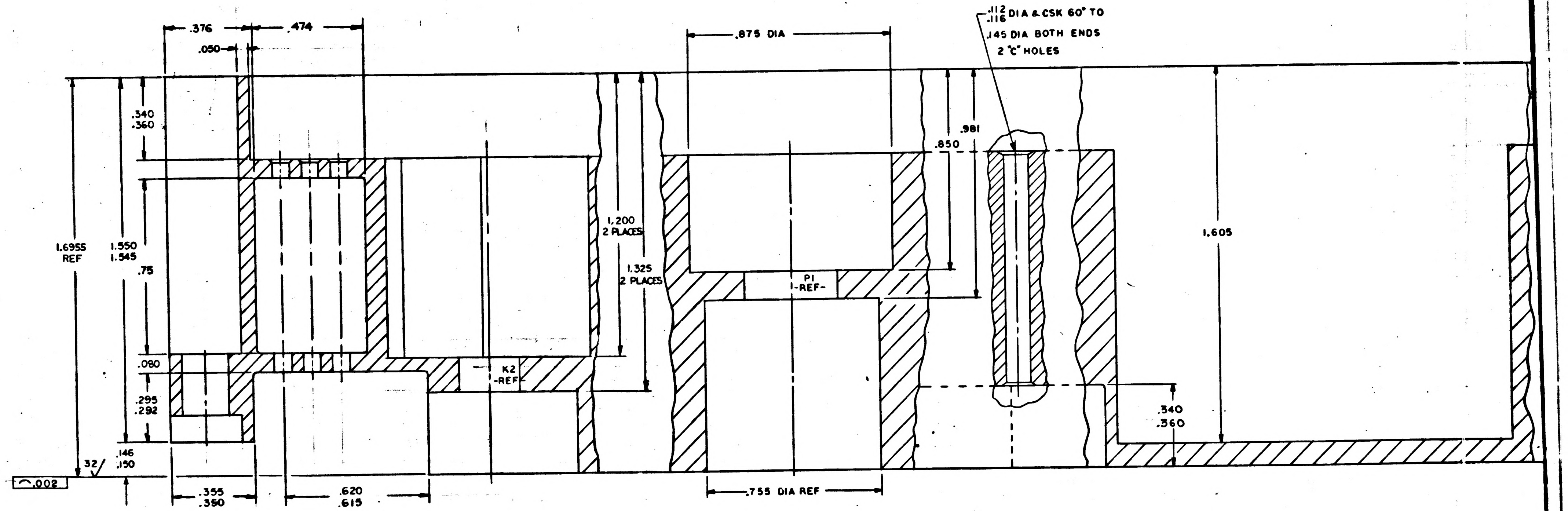

.376
.474
.050
.875 DIA
.112
.116 DIA & CSK 60° TO
.145 DIA BOTH ENDS
2 "C" HOLES
.340
.360
.981
.850
1.6955
REF
1.550
1.545
.75
1.200
2 PLACES
1.325
2 PLACES
P1
-REF-
1.605
.080
K2
-REF-
.295
.292
.340
.360
.146
.150
32
.002
.355
.350
.620
.615
.755 DIA REF

NOTES

1. INTERPRET DRAWING IN ACCORDANCE WITH STANDARDS PRESCRIBED BY MIL-D-70327
2. MATERIAL: MAGNESIUM ALLOY ZK-60A-T5 PER QQ-M-31
3. FINISH: ANODIZE PER MIL-M-3171 TYPE IV
4. TRUE POSITIONING AS SHOWN IN CHART
5. UNLESS OTHERWISE SPECIFIED 125√ ALL OVER
6. REMOVE ALL BURRS AND BREAK SHARP EDGES .005-.015
7. UNLESS OTHERWISE SPECIFIED ALL FILLETS AND RADII .005/.020

H 1004191

SYM	DESCRIPTION	DATE	APPROVAL
A	REVISED PER TDRR 02285		
B	REVISED PER TDRR 02398		
C	REVISED PER TDRR 03131	9-10-63	
D	REVISED PER TDRR 03466	8-26-63	
E	REVISED PER TDRR 04500	11-6-63	
F	REVISED PER TDRR 05196		
G	REVISED PER TDRR 05757		
H	REVISED PER TDRR 12245 DR S.P. CHK RTW	9/30/64	Hal

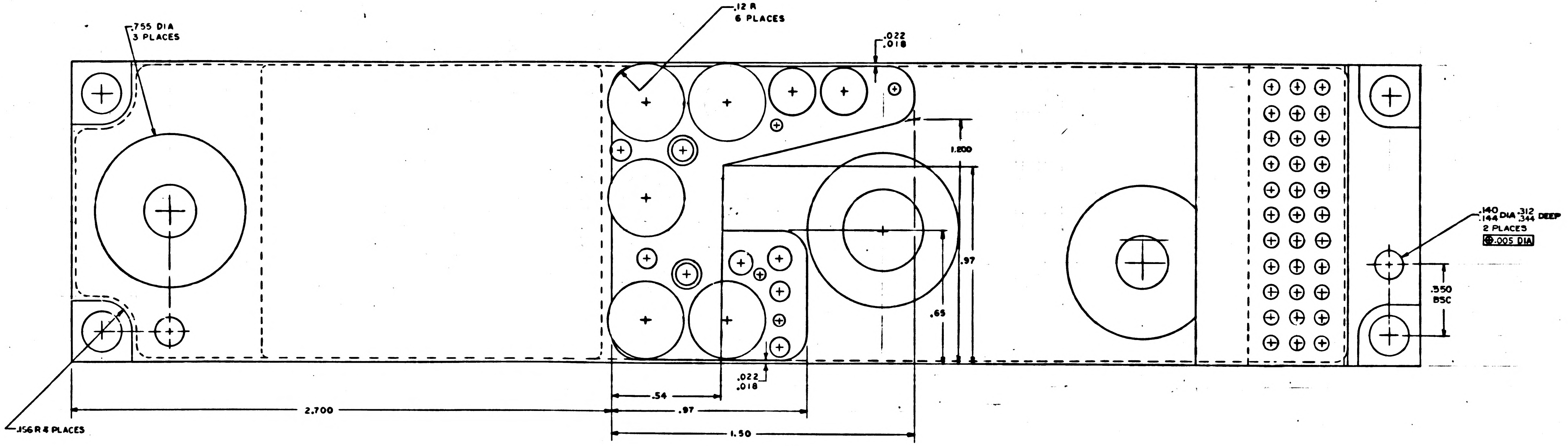
.755 DIA
3 PLACES
.12 R
6 PLACES
.022
.018
1.200
.97
.65
.140 / .144 DIA .312 / .344 DEEP
2 PLACES
⊕ .005 DIA
.550
BSC
.022
.018
.54
.97
1.50
2.700
.156 R 4 PLACES

QTY REQD	PART OR IDENTIFYING NO.	NOMENCLATURE OR DESCRIPTION	FIND NO.

LIST OF MATERIALS

NEXT ASSY	USED ON
1003124	

APPLICATION

UNLESS OTHERWISE SPECIFIED
DIMENSIONS ARE IN INCHES
TOLERANCES ON
FRACTIONS ± — DECIMALS ±.005 ±.02 ANGLES ±3°
DO NOT SCALE THIS DRAWING

MATERIAL
SEE NOTE 2

HEAT TREATMENT
—

FINAL FINISH
SEE NOTE 3

M I T
INSTRUMENTATION LAB
CAMBRIDGE, MASS

DRAWN
DATE
CHECKED
APPROVAL
APPROVAL 7/16/63
NASA APPROVAL 7-17-63
MIT APPROVAL

MANNED SPACECRAFT CENTER
HOUSTON, TEXAS

HEADER HOUSING
POWER SWITCH MODULE
A.G.C. POWER SUPPLY

CODE IDENT NO. —
SIZE J
NASA DRAWING NO. 1004191
SCALE 5/1
SHEET 1 OF 1

1004191 H

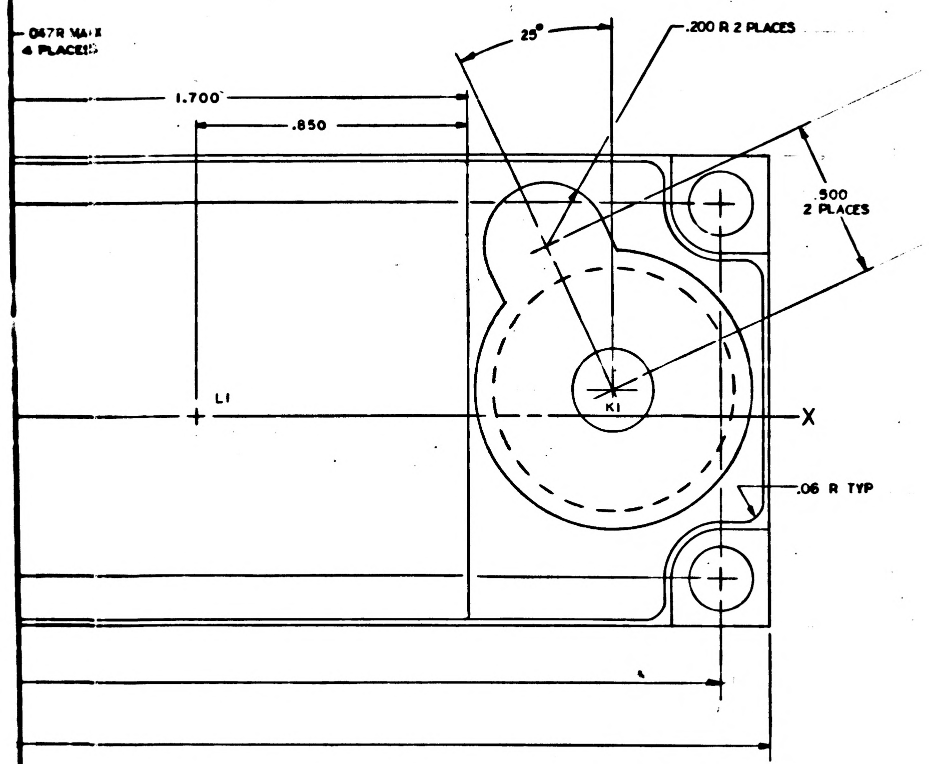
.047R MAX
4 PLACES
25°
.200 R 2 PLACES
1.700
.850
.500
2 PLACES
L1
K1
X
.06 R TYP

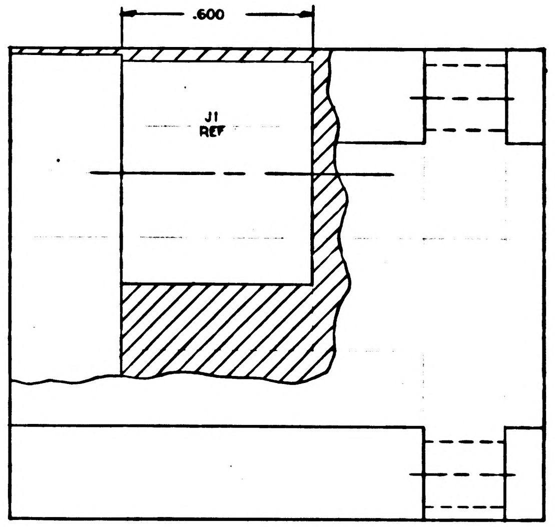

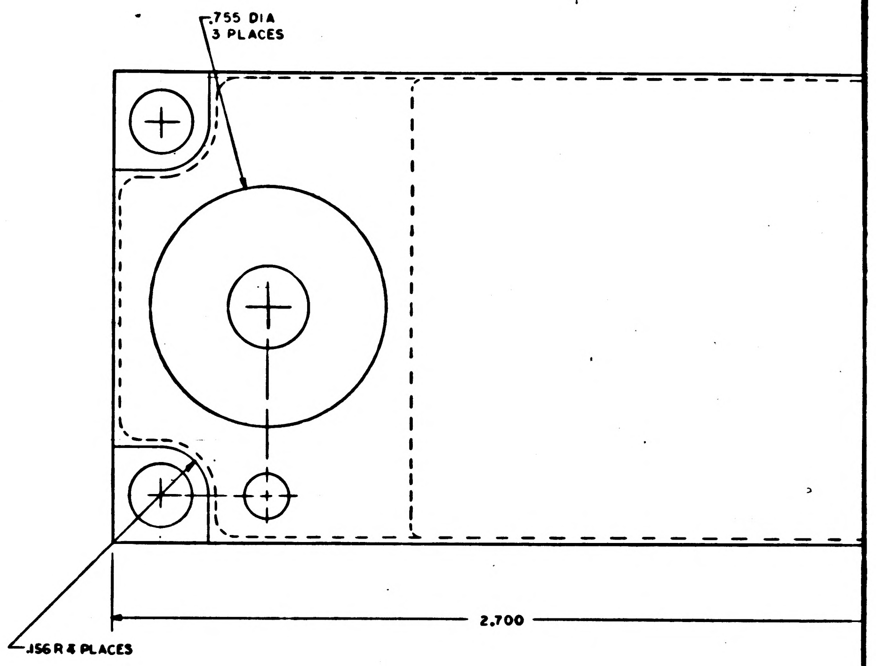
.755 DIA
3 PLACES
2.700
.156 R 4 PLACES

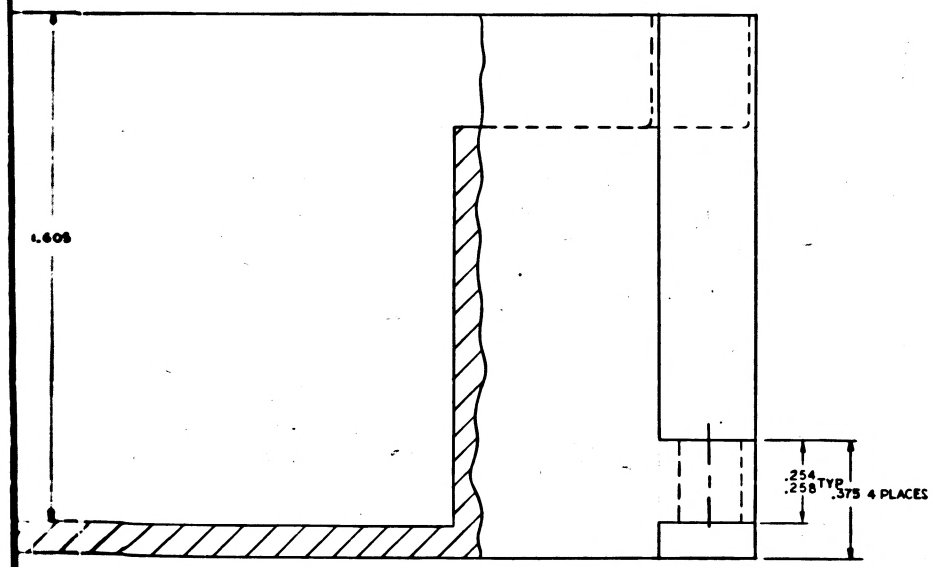
1.605
.254
.258
TYP
.375 4 PLACES

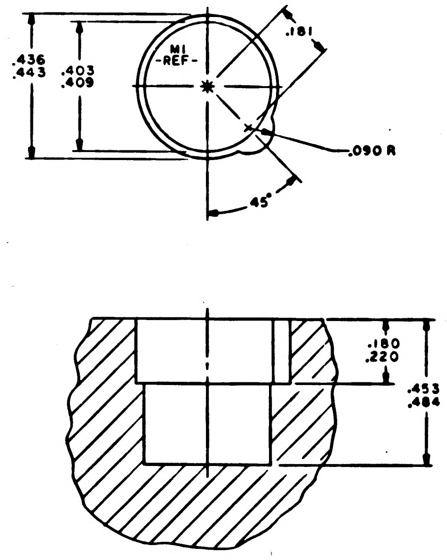
.436
.443
.403
.409
M1
-REF-
.181
.090 R
45°
.180
.220
.453
.484

DETAIL A
1 "M" HOLE

HOLE IDENT	X BASIC DIM	Y BASIC DIM	⊕ DIA	HOLE DIA	QTY
A1	-.053	.690	.006	.058 .062	4
A2	.536	.510			
A3	.616	-.220			
A4	.516	-.440			
B1	1.180	-.145		.100 .104	4
B2	1.310	.385			
B3	.516	-.572			
B4	.516	-.300			
C1	1.005	.385		SEE DETAIL	2
C2	.980	-.220			
D2	.714	-.160		.115 .119	1
E1	.780	-.430		.368 .375	5
E2	1.180	-.430			
E3	1.180	.150			
E4	1.180	.605			
E5	.780	.605			
H1	.456	.680		.227 .231	2
H2	.200	.680			
J1	-.700	.430		.701 .708	1
K1	3.564	.080		.260 .267	2
K2	-1.300	-.160			
L1	2.240	.000		SEE DETAIL	1
M1	.680	.150		SEE DETAIL A	1
P1	.000	.000		.393 .400	1
V1	.516	-1.40	.006	.140 .145	1

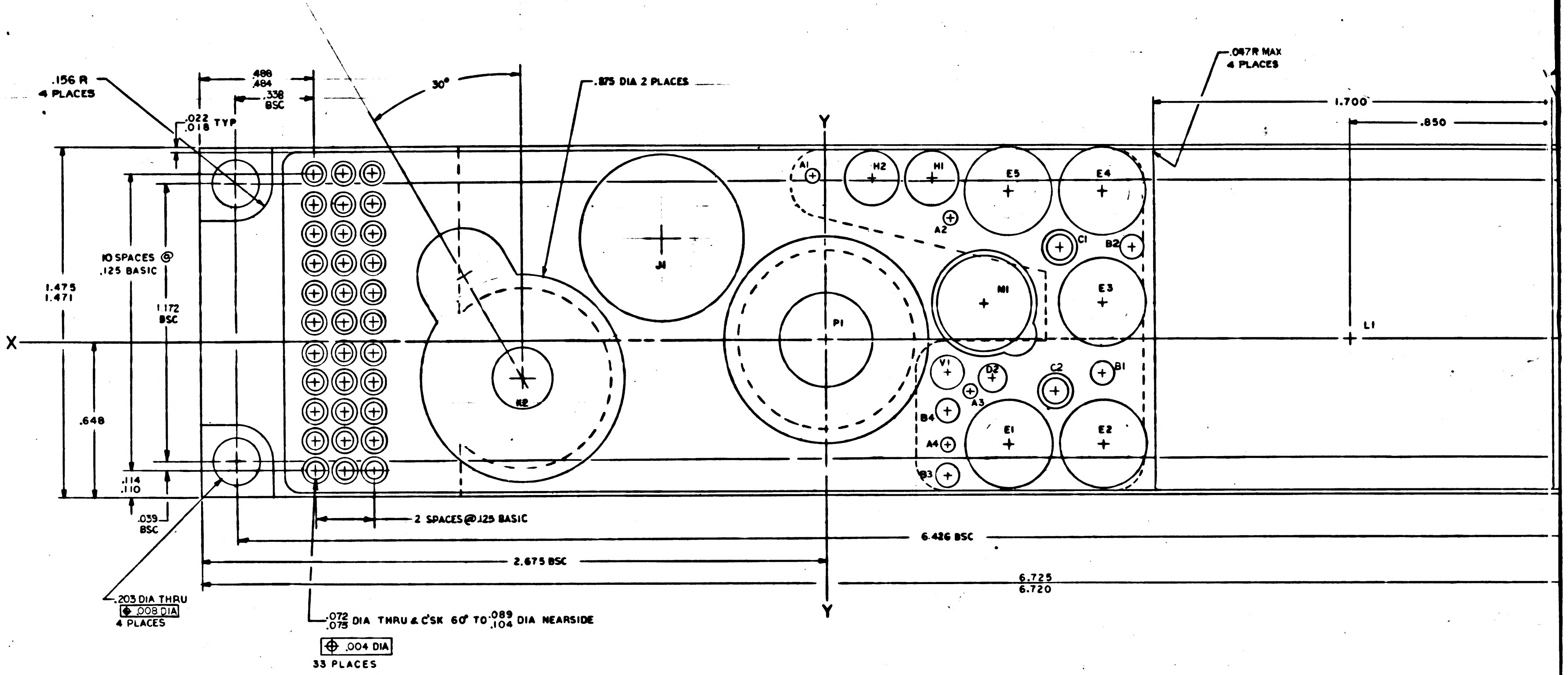
.156 R
4 PLACES
.488
.484
.338
BSC
.022
.018 TYP
30°
.875 DIA 2 PLACES
.047R MAX
4 PLACES
1.700
.850
10 SPACES @ .125 BASIC
1.172
BSC
1.475
1.471
X
.648
.114
.110
.039
BSC
Y
J1
K2
P1
A1
H2
H1
E5
E4
A2
C1
B2
M1
E3
L1
V1
D2
A3
C2
B1
B4
A4
E1
E2
B3
2 SPACES @ .125 BASIC
6.426 BSC
2.675 BSC
6.725
6.720
.203 DIA THRU
⊕ .008 DIA
4 PLACES
.072
.075 DIA THRU & C'SK 60° TO .089
.104 DIA NEARSIDE
⊕ .004 DIA
33 PLACES

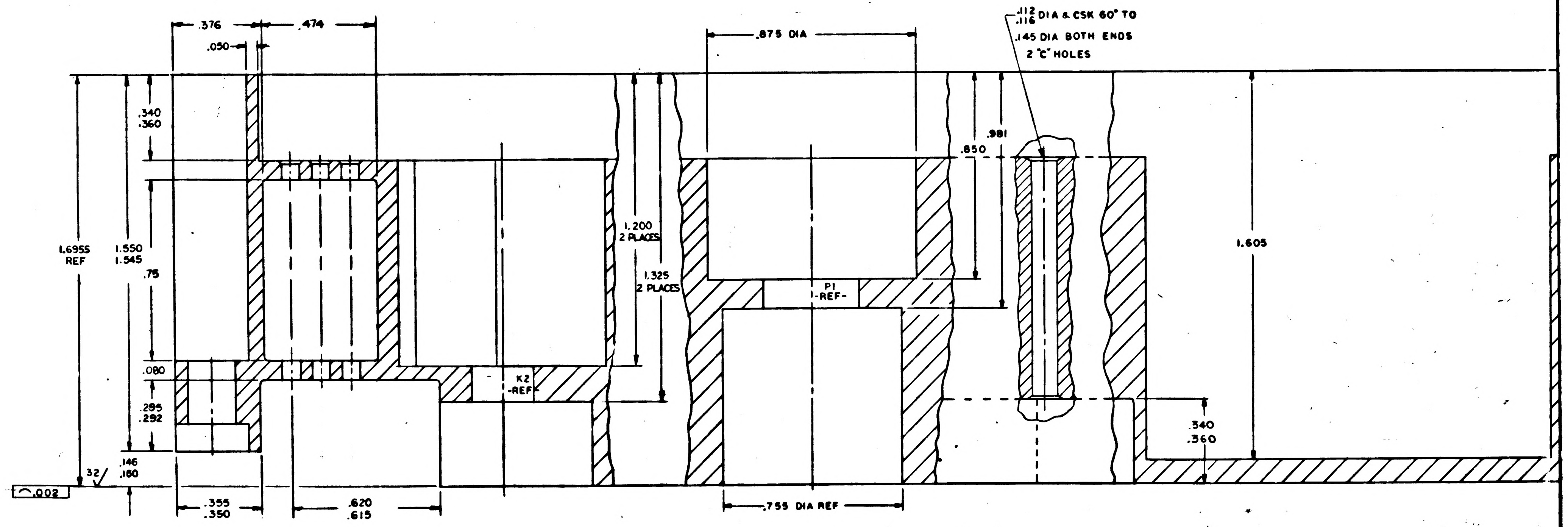
.376
.474
.050
.875 DIA
.112
.116 DIA & CSK 60° TO
.145 DIA BOTH ENDS
2 "C" HOLES
.340
.360
.981
.850
1.6955
REF
1.550
1.545
.75
1.200
2 PLACES
1.325
2 PLACES
P1
-REF-
1.605
.080
K2
-REF-
.295
.292
.340
.360
32
.146
.180
⌒.002
.355
.350
.620
.615
.755 DIA REF

NOTES

1. INTERPRET DRAWING IN ACCORDANCE WITH STANDARDS PRESCRIBED BY MIL-D-70327
2. MATERIAL: MAGNESIUM ALLOY ZK-60A-T5 PER QQ-M-31
3. FINISH: ANODIZE PER MIL-M-45202, TYPE I, CLASS C
4. TRUE POSITIONING AS SHOWN IN CHART
5. UNLESS OTHERWISE SPECIFIED 125√ ALL OVER
6. REMOVE ALL BURRS AND BREAK SHARP EDGES .005-.015
7. UNLESS OTHERWISE SPECIFIED ALL FILLETS AND RADII .005/.020

1004191 J

REVISIONS TDRR 02095

SYM	DESCRIPTION	DATE	APPROVED
A	REVISED PER TDRR 02285	7/25/63	
B	REVISED PER TDRR 02398	9/5/63	
C	REVISED PER TDRR 03131	9-10-63	
D	REVISED PER TDRR 03426	9-26-63	
E	REVISED PER TDRR 04500	11-6-63	
F	REVISED PER TDRR 05196		
G	REVISED PER TDRR 05757		
H	REVISED PER TDRR 12245 DR CHK RTM	9/30/64	
J	REVISED PER TDRR 13111 DR CHK RTM	10/6/64	

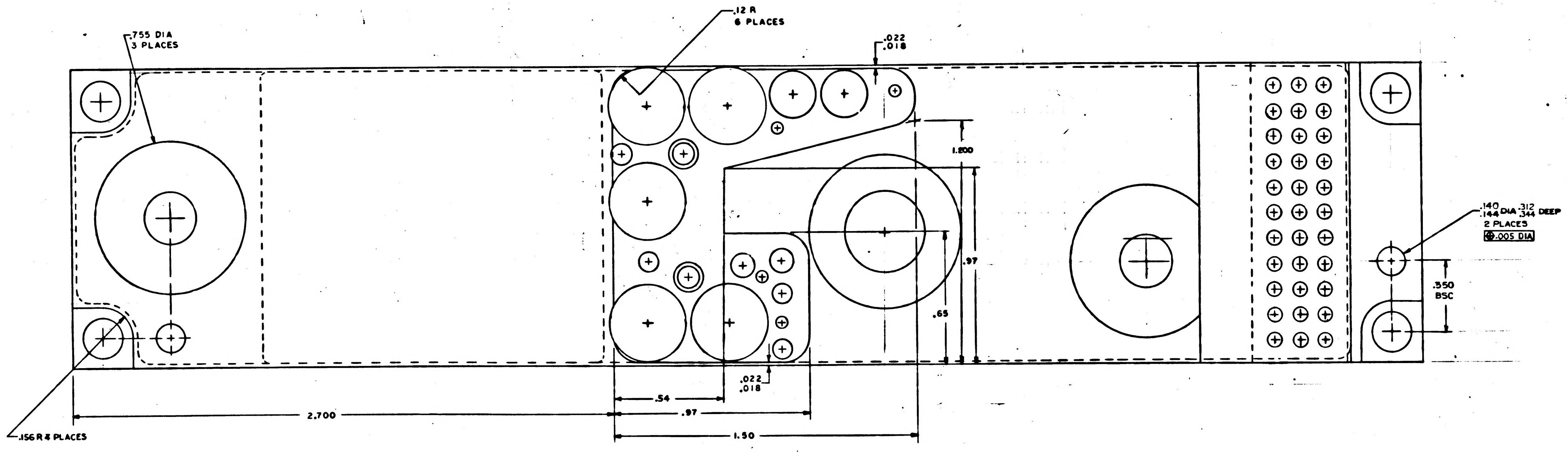

.755 DIA
3 PLACES
.12 R
6 PLACES
.022
.018
1.200
.97
.65
.140
.144 DIA
.312
.344 DEEP
2 PLACES
⊕.005 DIA
.350
BSC
.022
.018
.54
.97
2.700
1.50
.156 R 4 PLACES

QTY REQD	PART OR IDENTIFYING NO.	NOMENCLATURE OR DESCRIPTION	FIND NO.

LIST OF MATERIALS

UNLESS OTHERWISE SPECIFIED
DIMENSIONS ARE IN INCHES
TOLERANCES ON
FRACTIONS ± DECIMALS ±.005 ±.02 ANGLES ±3°
DO NOT SCALE THIS DRAWING

MATERIAL
SEE NOTE 2

HEAT TREATMENT

FINAL FINISH
SEE NOTE 3

1003124
NEXT ASSY | USED ON
APPLICATION

MIT
INSTRUMENTATION LAB
CAMBRIDGE, MASS
DRAWN DATE
CHECKED
APPROVAL
APPROVAL
NASA APPROVAL 7-17-63
MIT APPROVAL

MANNED SPACECRAFT CENTER
HOUSTON, TEXAS

HEADER HOUSING
POWER SWITCH MODULE
A.G.C. POWER SUPPLY

CODE IDENT NO —
SIZE J
NASA DRAWING NO. 1004191
SCALE 5/1
WT
SHEET 1 OF 1

1004191 J

1004191 J

MASTER

F3 / 3

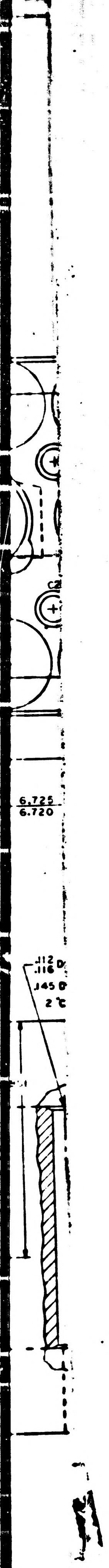
6.725
6.720
.112
.116
.145
2

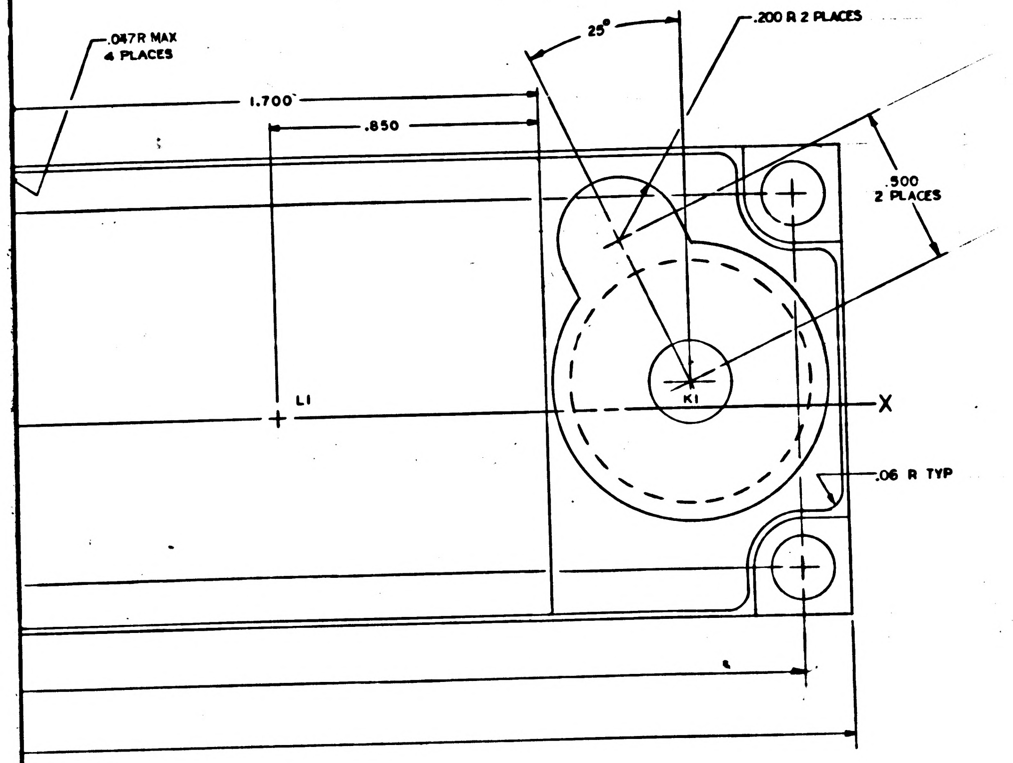
.047R MAX
4 PLACES
25°
.200 R 2 PLACES
1.700
.850
.500
2 PLACES
L1
K1
X
.06 R TYP

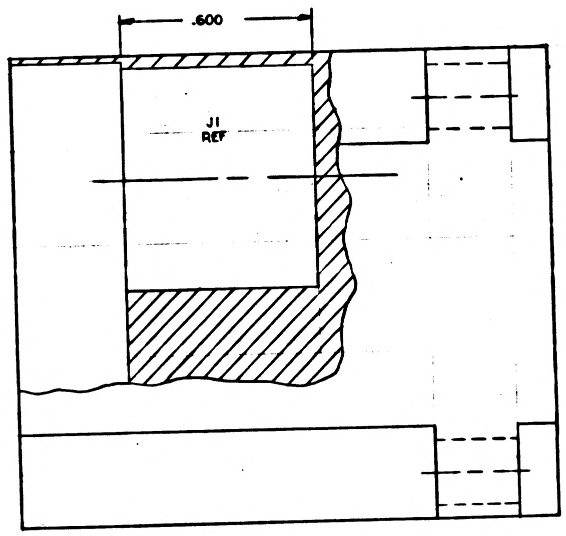

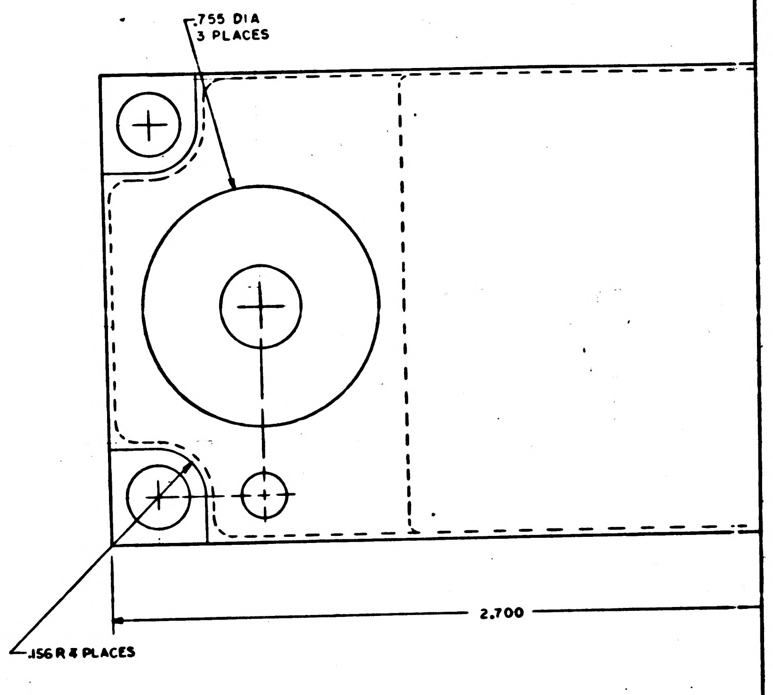
.755 DIA
3 PLACES
2.700
.156 R 4 PLACES

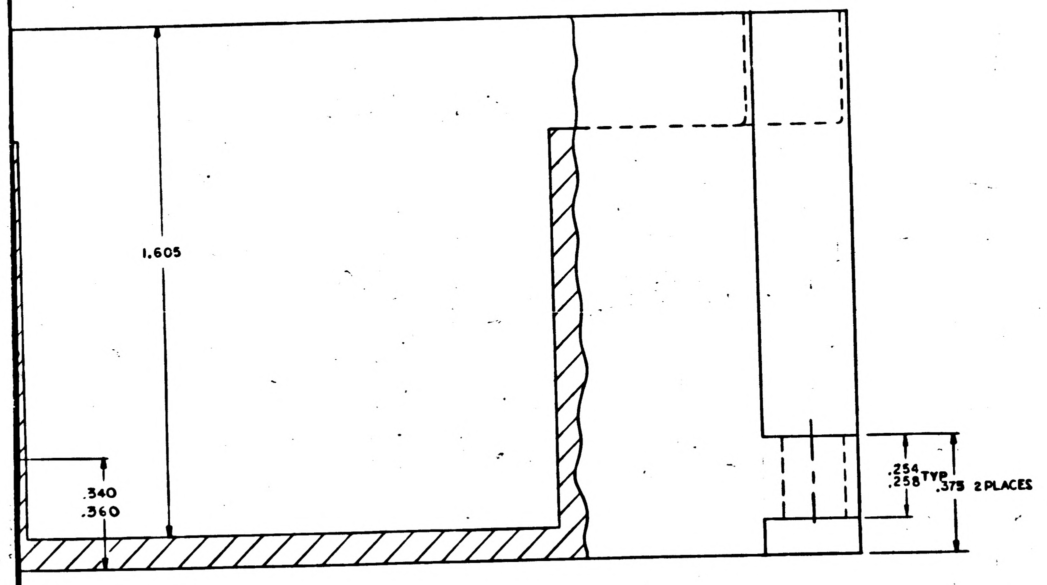
1.605
.340
.360
.254
.258 TYP
.375 2 PLACES

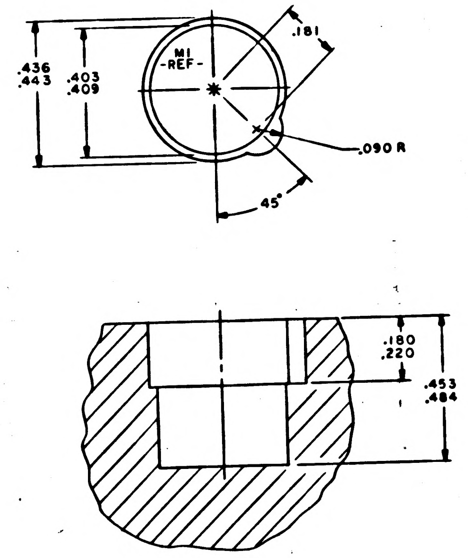
.436
.443
.403
.409
M1
-REF-
.181
.090 R
45°
.180
.220
.453
.484

DETAIL A
1"M" HOLE

HOLE IDENT	X BASIC DIM	Y BASIC DIM	⌖ DIA	HOLE DIA	QTY
A1	−.053	.690	.006	.058 .062	4
A2	.536	.510			
A3	.616	−.220			
A4	.516	−.440			
B1	1.180	−.145		.100 .104	4
B2	1.310	.385			
B3	.516	−.572			
B4	.516	−.300			
C1	1.005	.385		SEE DETAIL	2
C2	.980	−.220			
D2	.714	−.160		.115 .119	1
E1	.780	−.430		.368 .375	5
E2	1.180	−.430			
E3	1.180	.150			
E4	1.180	.605			
E5	.780	.605			
H1	.456	.680		.227 .231	2
H2	.200	.680			
J1	−.700	.430		.701 .708	1
K1	3.564	.080		.260 .267	2
K2	−1.300	−.160			
L1	2.240	.000		SEE DETAIL	1
M1	.680	.150		SEE DETAIL A	1
P1	.000	.000		.393 .400	1
V1	.516	−1.40	.006	.140 .145	1

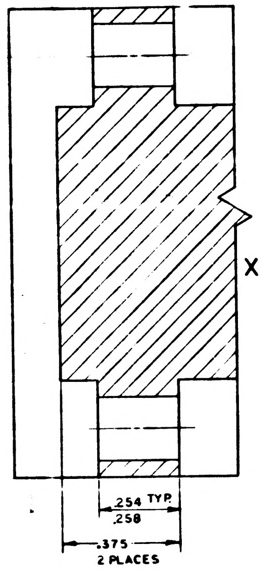

.254 TYP
.258
.375
2 PLACES

SECTION AA

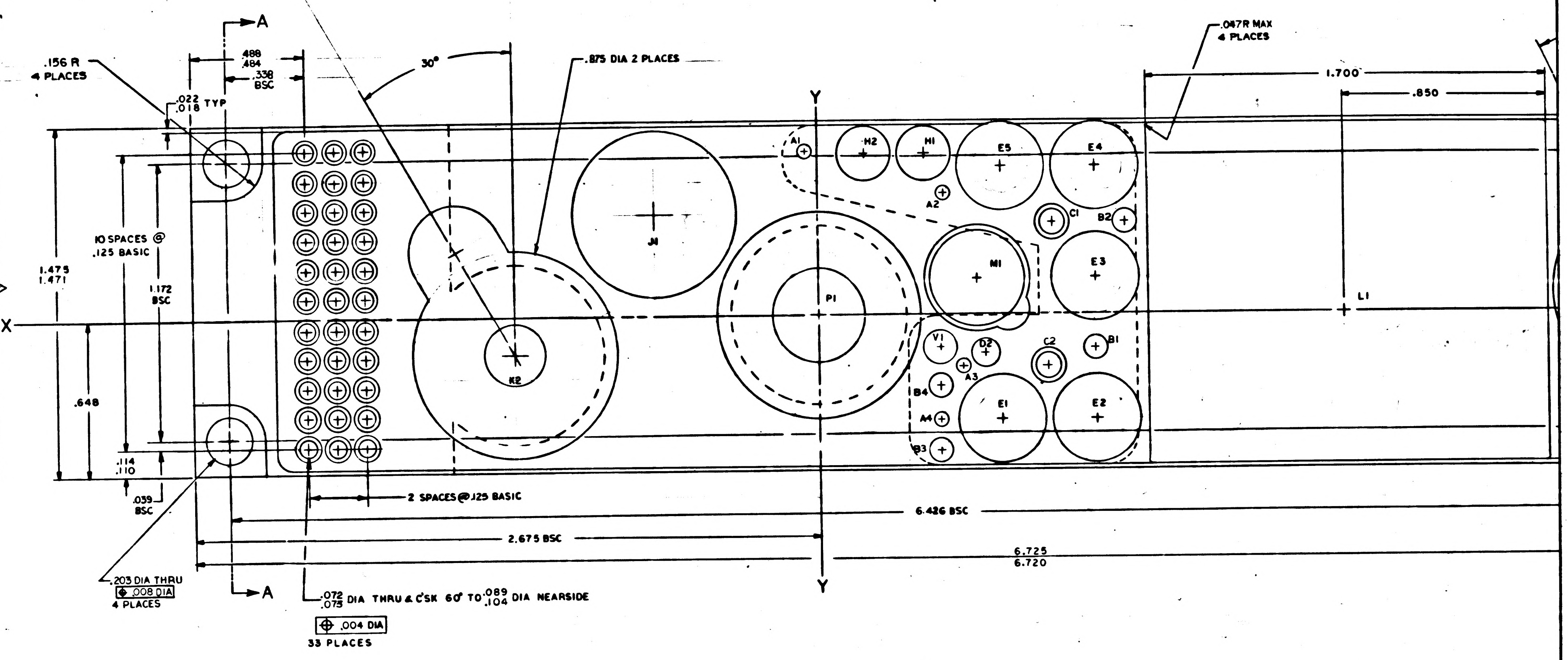

A
A
.156 R
4 PLACES
.488
.484
.338
BSC
.022
.018 TYP
30°
.875 DIA 2 PLACES
.047R MAX
4 PLACES
1.700
.850
Y
Y
X
10 SPACES @
.125 BASIC
1.475
1.471
1.172
BSC
.648
.114
.110
.039
BSC
A1
H2
H1
E5
E4
A2
C1
B2
J1
M1
E3
P1
L1
K2
V1
D2
C2
B1
A3
B4
E1
E2
A4
B3
2 SPACES @ .125 BASIC
6.426 BSC
2.675 BSC
6.725
6.720
.203 DIA THRU
⌖ .008 DIA
4 PLACES
.072
.075 DIA THRU & CSK 60° TO .089
.104 DIA NEARSIDE
⌖ .004 DIA
33 PLACES

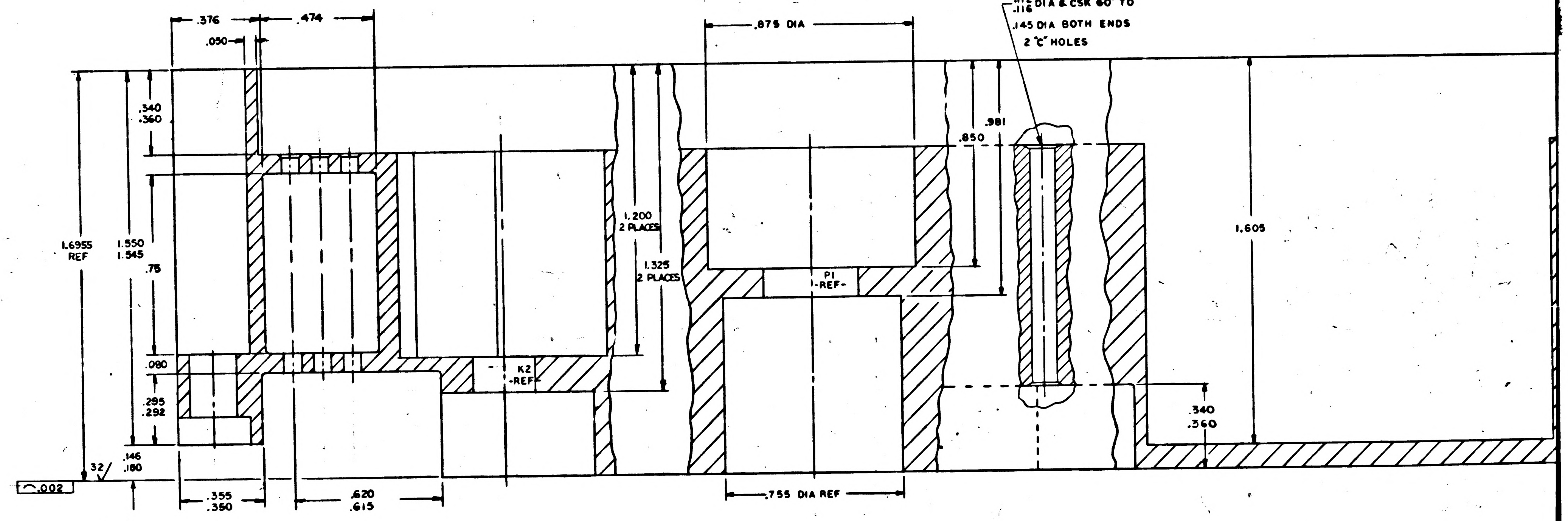

.376
.474
.050
.875 DIA
.112
.116 DIA & CSK 60° TO
.145 DIA BOTH ENDS
2 "C" HOLES
.340
.360
.981
.850
1.6955
REF
1.550
1.545
.75
1.200
2 PLACES
1.325
2 PLACES
P1
-REF-
K2
-REF-
1.605
.080
.295
.292
.146
.180
32
.002
.355
.350
.620
.615
.755 DIA REF
.340
.360

NOTES

1. INTERPRET DRAWING IN ACCORDANCE WITH STANDARDS PRESCRIBED BY MIL-D-70327
2. MATERIAL: MAGNESIUM ALLOY ZK-60A-T5 PER QQ-M-31.
3. FINISH: ANODIZE PER MIL-M-45202, TYPE I, CLASS C
4. TRUE POSITIONING AS SHOWN IN CHART
5. UNLESS OTHERWISE SPECIFIED 125√ ALL OVER
6. REMOVE ALL BURRS AND BREAK SHARP EDGES .005-.015
7. UNLESS OTHERWISE SPECIFIED ALL FILLETS AND RADII .005/.020

1004191 K

REVISIONS TDRR 02048

SYM	DESCRIPTION	DATE	APPROVAL
A	REVISED PER TDRR 02255	[illegible]	
B	REVISED PER TDRR 02398	[illegible]	
C	REVISED PER TDRR 03131	9-10-63	
D	REVISED PER TDRR 03466	[illegible]	
E	REVISED PER TDRR 04500	11-6-63	
F	REVISED PER TDRR 05196	[illegible]	
G	REVISED PER TDRR 5757	[illegible]	
H	REVISED PER TDRR 12245 DR CHK	9/30/64	
J	REVISED PER TDRR 13111 DR CHK	10/6/64	
K	REVISED PER TDRR 20566 DR CHK	[illegible]	

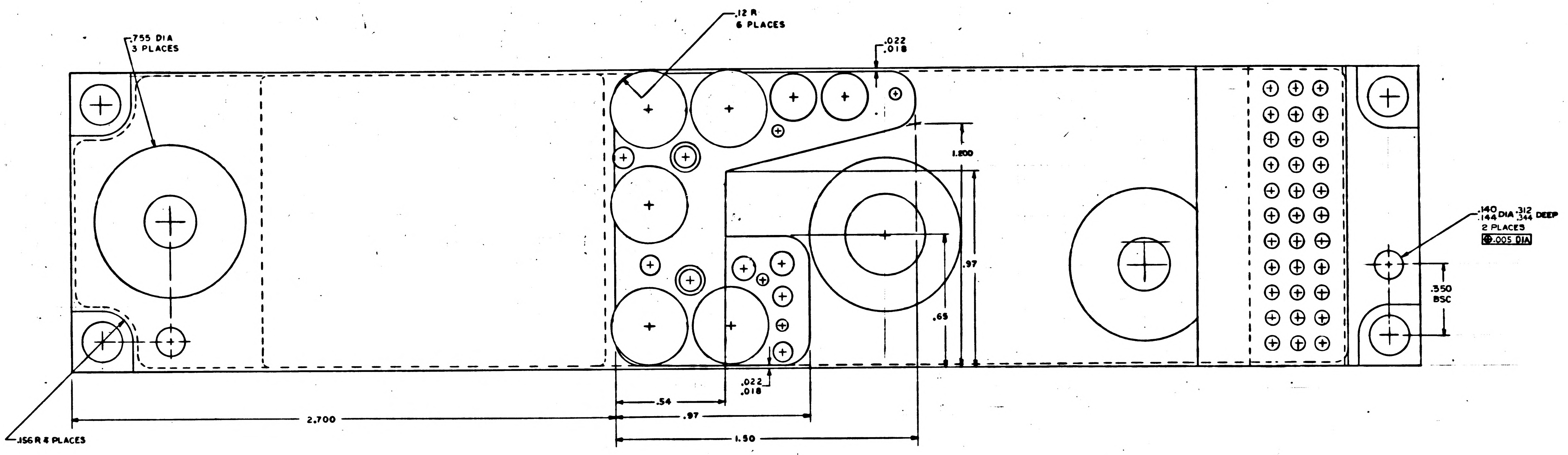

.755 DIA
3 PLACES
.12 R
6 PLACES
.022
.018
1.200
.97
.65
.140
.144 DIA .312
.344 DEEP
2 PLACES
⊕.005 DIA
.350
BSC
.156 R 4 PLACES
2.700
.54
.97
1.50
.022
.018

QTY REQD	PART OR IDENTIFYING NO.	NOMENCLATURE OR DESCRIPTION	FIND NO.

LIST OF MATERIALS

1003124	
NEXT ASSY	USED ON

UNLESS OTHERWISE SPECIFIED
DIMENSIONS ARE IN INCHES
TOLERANCES ON
FRACTIONS ± — DECIMALS ±.005 ±.02 ANGLES ±3°
DO NOT SCALE THIS DRAWING

MATERIAL
SEE NOTE 2

HEAT TREATMENT
—

FINAL FINISH
SEE NOTE 3

MIT
INSTRUMENTATION LAB
CAMBRIDGE, MASS

DRAWN
CHECKED
APPROVAL
APPROVAL
NASA APPROVAL 7-17-63
MIT APPROVAL

MANNED SPACECRAFT CENTER
HOUSTON, TEXAS

HEADER HOUSING
POWER SWITCH MODULE
A.G.C. POWER SUPPLY

CODE IDENT NO. —
SIZE J
NASA DRAWING NO. 1004191
SCALE 5/1
SHEET 1 OF 1

E3/3

1004191 K

1004191 K

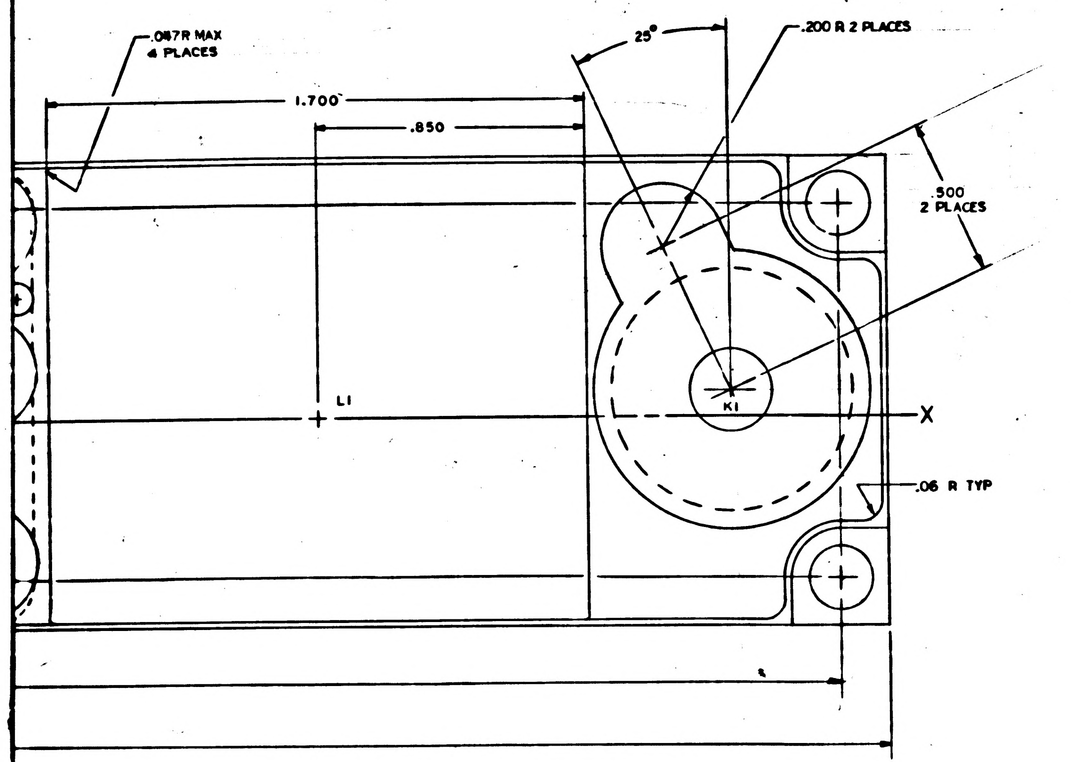
.087R MAX
4 PLACES
25°
.200 R 2 PLACES
1.700
.850
.500
2 PLACES
L1
K1
X
.06 R TYP

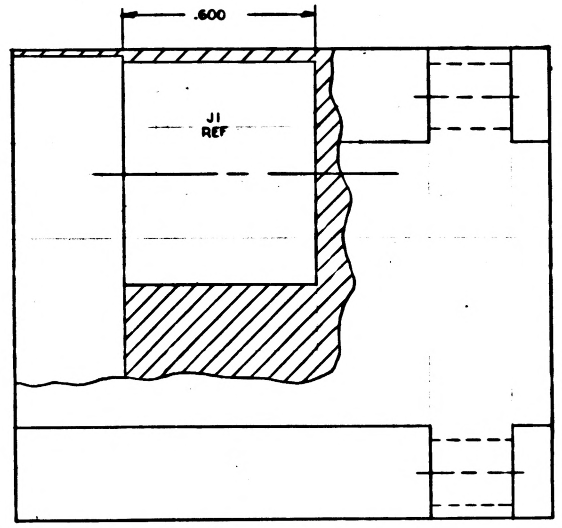

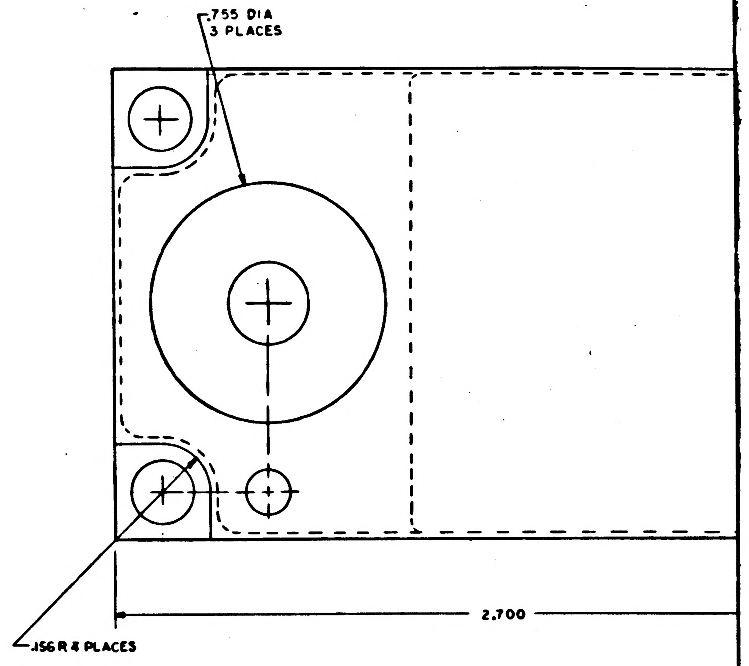
.755 DIA
3 PLACES
.156 R 4 PLACES
2.700

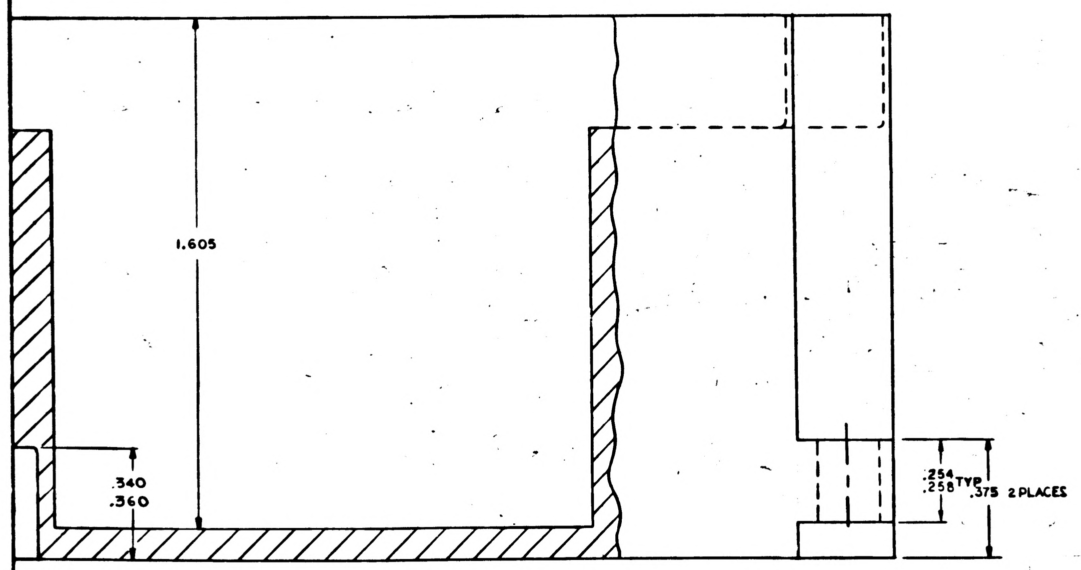
1.605
.340
.360
.254
.258
TYP
.375 2 PLACES

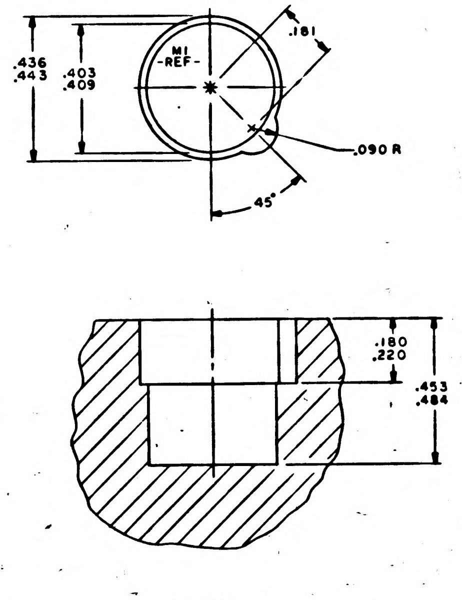
M1
-REF-
.436
.443
.403
.409
.181
.090 R
45°
.180
.220
.453
.484

DETAIL A
1 "M" HOLE

1004191 K E 2/3

HOLE IDENT	X BASIC DIM	Y BASIC DIM	⌖ DIA	HOLE DIA-000	HOLE DIA-001	QTY
A1	-.053	.690	.006	.058 .062	.058 .062	4
A2	.536	.510				
A3	.616	-.220				
A4	.516	-.440				
B1	1.180	-.145		.100 .104	.100 .104	4
B2	1.310	.385				
B3	.516	-.572				
B4	.516	-.300				
C1	1.005	.385		SEE DETAIL	SEE DETAIL	2
C2	.980	-.220				
D2	.714	-.160		.115 .119	.115 .119	1
E1	.780	-.430		.368 .375	.368 .375	5
E2	1.180	-.430				
E3	1.180	.150				
E4	1.180	.605				
E5	.780	.605				
H1	.456	.680		.227 .231	.227 .231	2
H2	.200	.680				
J1	-.700	.430		.701 .708	.701 .708	1
K1	3.564	.080		.260 .267	.393 .400	2
K2	-1.300	-.160				
L1	2.240	.000		SEE DETAIL	SEE DETAIL	1
M1	.680	.150		SEE DETAIL A	SEE DETAIL A	1
P1	.000	.000		.393 .400	.393 .400	1
V1	.516	-1.40	.006	.140 .145	.140 .145	1

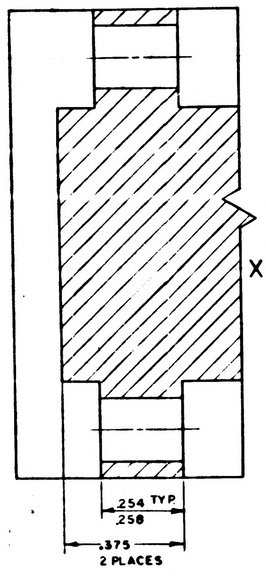
.254 TYP
.258
.375
2 PLACES

SECTION AA

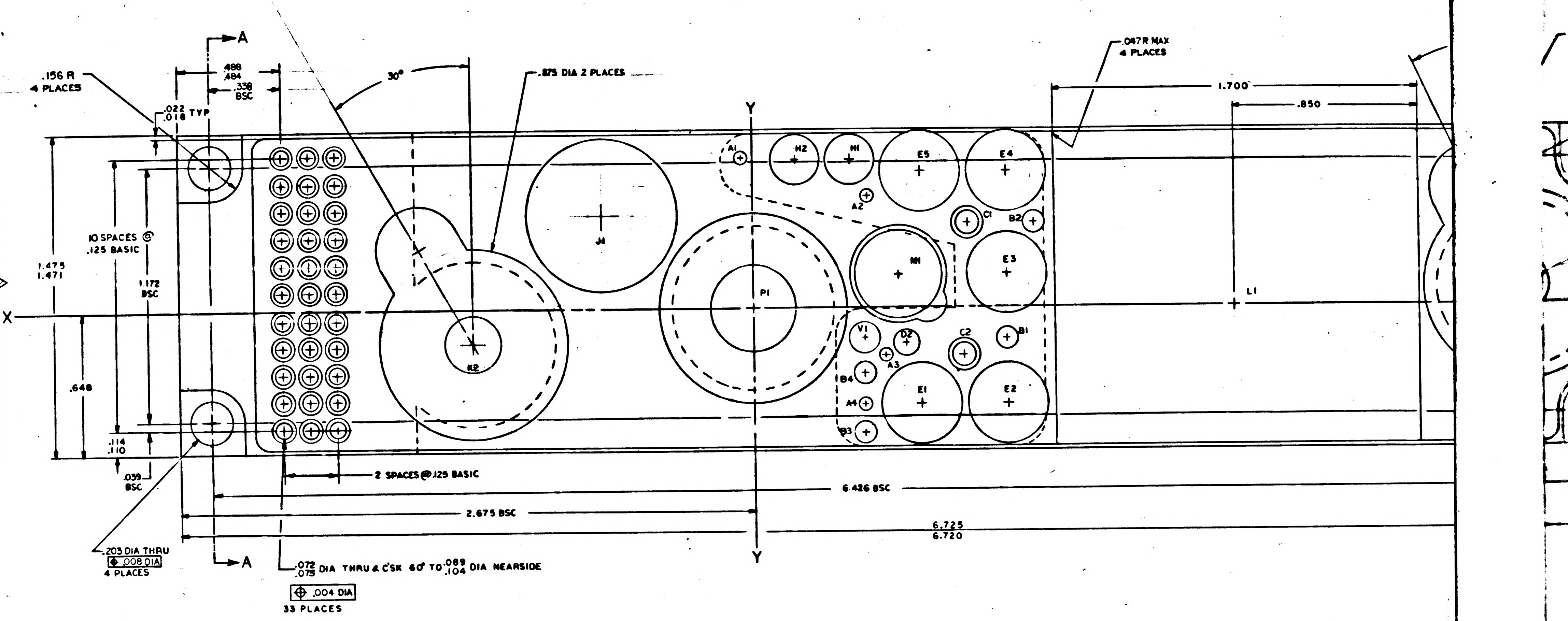
A
A
X
Y
Y
.156 R
4 PLACES
.488
.484
.338
BSC
.022
.018 TYP
30°
.875 DIA 2 PLACES
.047R MAX
4 PLACES
1.700
.850
10 SPACES @ .125 BASIC
1.475
1.471
1.172
BSC
.648
.114
.110
.039
BSC
2 SPACES @ .129 BASIC
6.426 BSC
2.675 BSC
6.725
6.720
.203 DIA THRU
⌖ .008 DIA
4 PLACES
.072
.075 DIA THRU & C'SK 60° TO .089
.104 DIA NEARSIDE
⌖ .004 DIA
33 PLACES
A1
H2
H1
E5
E4
A2
C1
B2
J1
M1
E3
P1
L1
K2
V1
D2
A3
C2
B1
B4
E1
E2
A4
B3

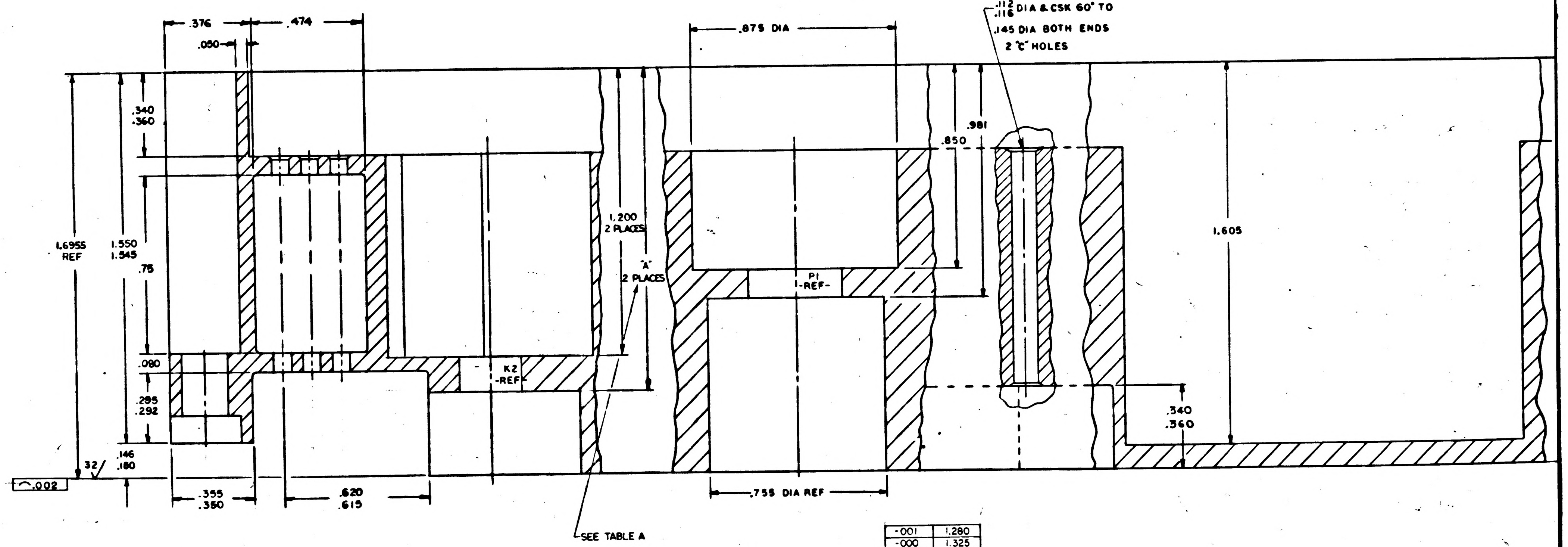
.376
.474
.050
.340
.360
1.6955
REF
1.550
1.545
.75
.080
.285
.292
.146
.180
32
⌒ .002
.355
.350
.620
.615
K2
-REF-
1.200
2 PLACES
"A"
2 PLACES
SEE TABLE A
.875 DIA
P1
-REF-
.755 DIA REF
.850
.981
.112
.116 DIA & CSK 60° TO
.145 DIA BOTH ENDS
2 "C" HOLES
1.605
.340
.360

-001	1.280
-000	1.325
DASH NO	DIM. A

TABLE A

NOTES

1. INTERPRET DRAWING IN ACCORDANCE WITH STANDARDS PRESCRIBED BY MIL-D-70327
2. MATERIAL: MAGNESIUM ALLOY ZK-60A-T5 PER QQ-M-31.
3. FINISH: ANODIZE PER MIL-M-45202, TYPE I, CLASS C
4. TRUE POSITIONING AS SHOWN IN CHART
5. UNLESS OTHERWISE SPECIFIED 125√ ALL OVER
6. REMOVE ALL BURRS AND BREAK SHARP EDGES .005-.015
7. UNLESS OTHERWISE SPECIFIED ALL FILLETS AND RADII .005/.020
8. THE ORIGINAL CONFIGURATION OF THIS DWG IS INDICATED BY THE DASH NO. AND A -000 SUFFIX

1004191

REVISIONS TDRR 02048

SYM	DESCRIPTION	DATE	APPROVAL

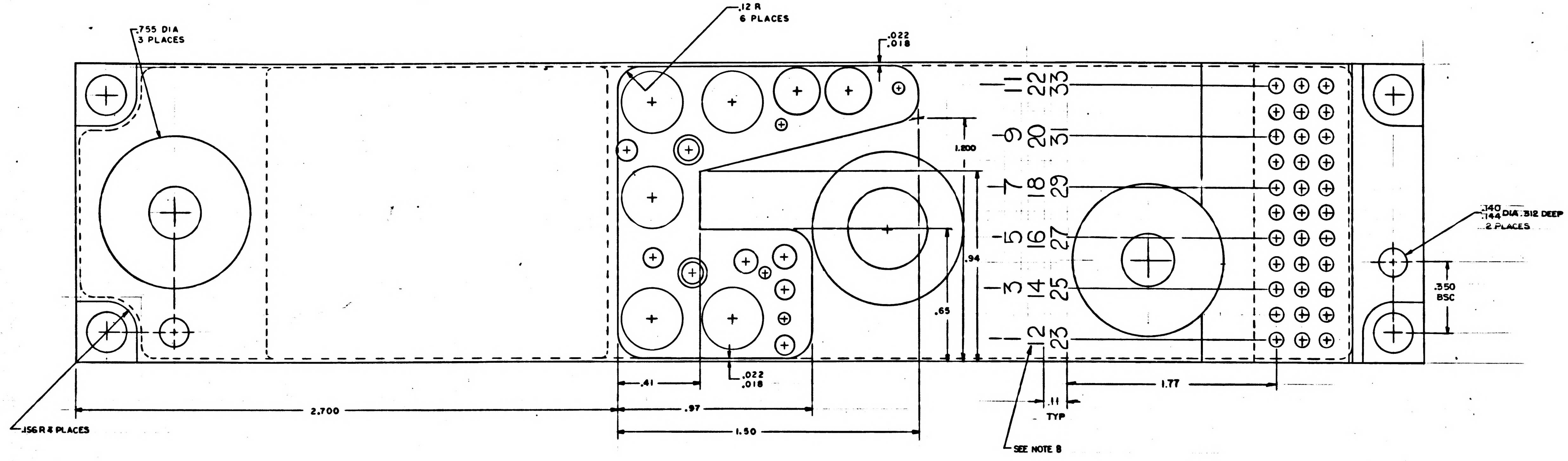
.755 DIA
3 PLACES
.12 R
6 PLACES
.022
.018
11 22 33
9 20 31
7 18 29
5 16 27
3 14 25
1 12 23
1.200
.94
.65
.140
.144 DIA .312 DEEP
2 PLACES
.350
BSC
.41
.022
.018
2.700
.97
1.50
.11
TYP
1.77
.156 R 4 PLACES
SEE NOTE 8

QTY REQD	PART OR IDENTIFYING NO.	NOMENCLATURE OR DESCRIPTION	FIND NO.

LIST OF MATERIALS

UNLESS OTHERWISE SPECIFIED
DIMENSIONS ARE IN INCHES
TOLERANCES ON
FRACTIONS ± — DECIMALS ±.005 ±.02 ANGLES ±1°
DO NOT SCALE THIS DRAWING

MATERIAL SEE NOTE 2

HEAT TREATMENT —

FINAL FINISH SEE NOTE 3

NEXT ASSY | USED ON
APPLICATION

MIT INSTRUMENTATION LAB
CAMBRIDGE, MASS

DRAWN
DATE
CHECKED
APPROVAL
APPROVAL 7/16/63
NASA APPROVAL 7-17-63
MIT APPROVAL

MANNED SPACECRAFT CENTER
HOUSTON, TEXAS

HEADER HOUSING
POWER SWITCH MODULE
A.G.C. POWER SUPPLY

CODE IDENT NO.
SIZE J
NASA DRAWING NO. 1004191
SCALE 5/1
WT
SHEET 1 OF 1

1004191

MASTER

E-3

6

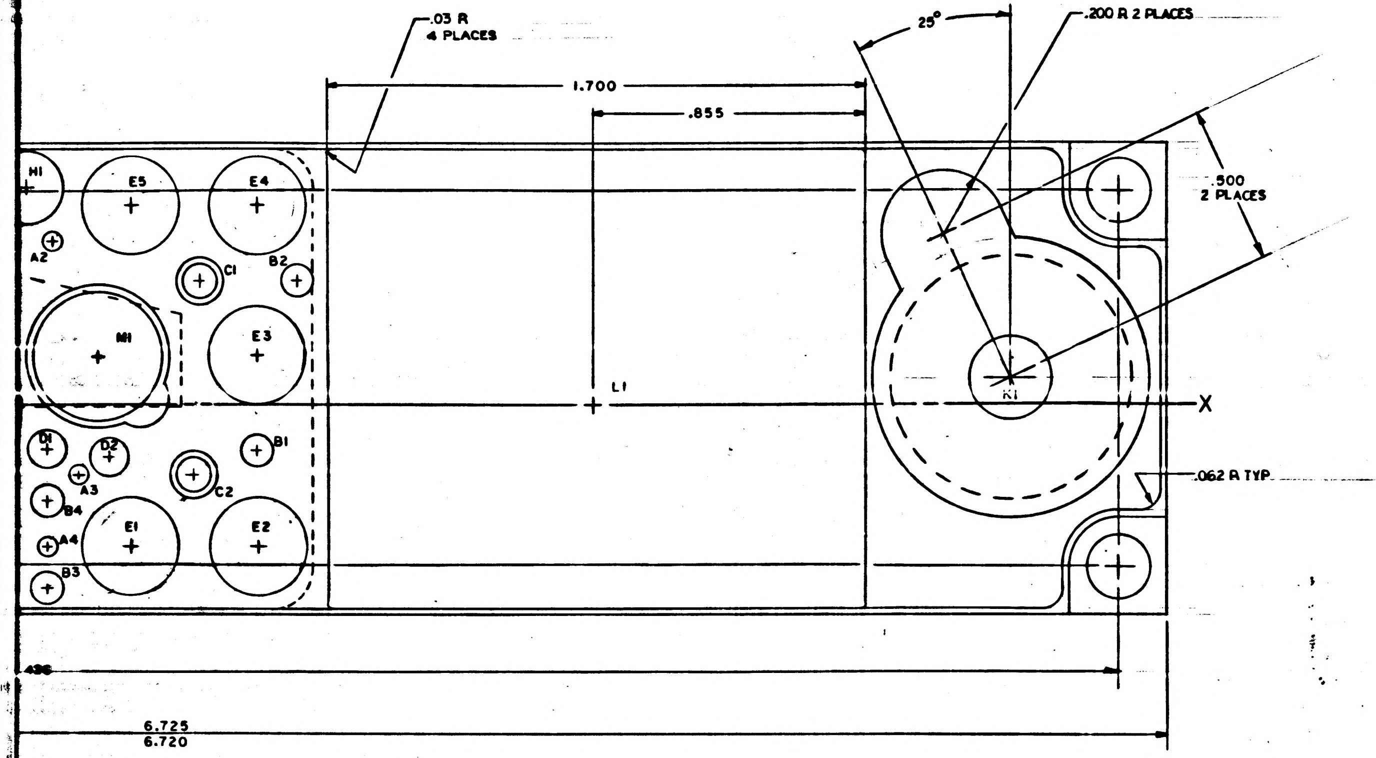
.03 R
4 PLACES
1.700
.855
25°
.200 R 2 PLACES
.500
2 PLACES
H1
E5
E4
A2
C1
B2
M1
E3
L1
K1
X
D1
D2
B1
A3
C2
B4
E1
E2
A4
B3
.062 R TYP
.436
6.725
6.720

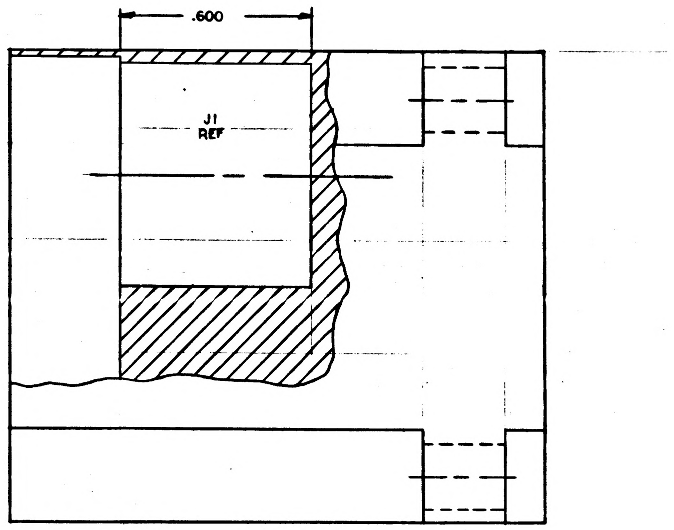

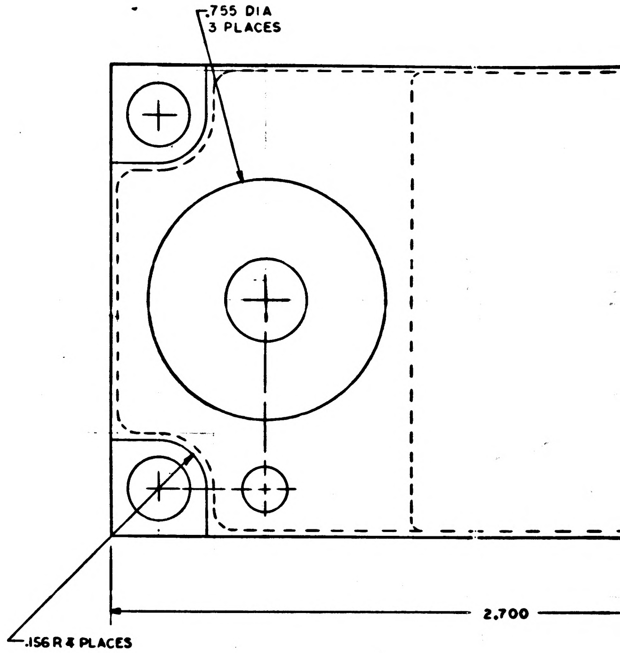
.755 DIA
3 PLACES
.156 R 4 PLACES
2.700

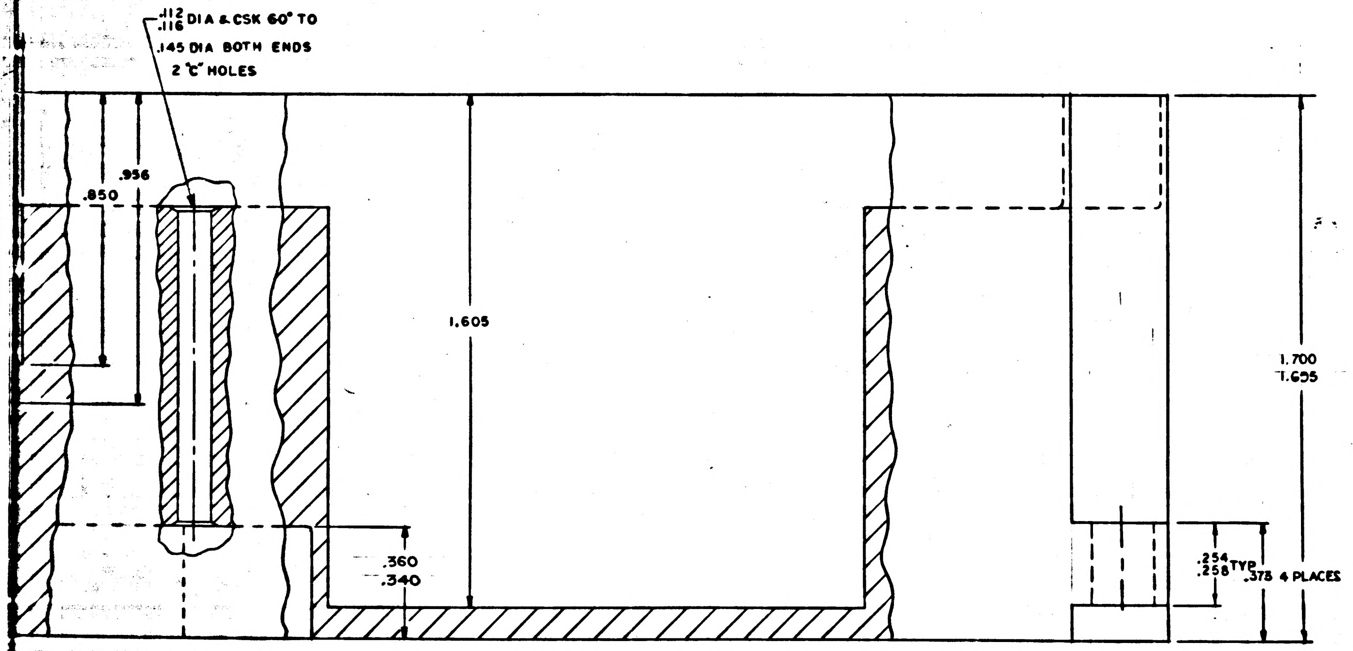
.112
.116 DIA & CSK 60° TO
.145 DIA BOTH ENDS
2 "C" HOLES
.956
.850
1.605
1.700
1.655
.360
.340
.254
.258 TYP
.378 4 PLACES

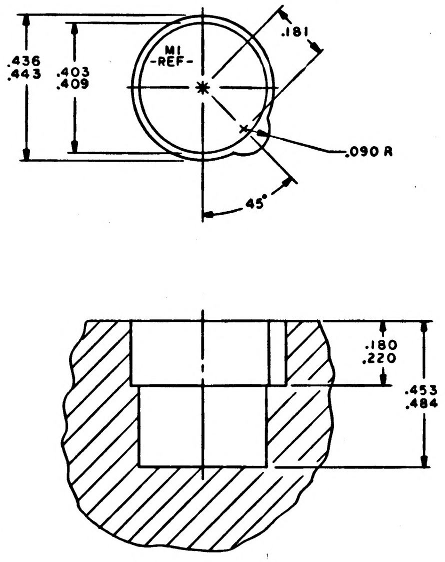
.436
.443
.403
.409
M1
-REF-
.181
.090 R
45°
.180
.220
.453
.484

DETAIL A
1 "M" HOLE

INCHES
PHOTOGRAPHIC SCALE ONLY

NOTICE — WHEN GOVERNMENT DRAWINGS, SPECIFICATIONS, OR OTHER DATA ARE USED FOR ANY PURPOSE OTHER THAN IN CONNECTION WITH A DEFINITELY RELATED GOVERNMENT PROCUREMENT OPERATION, THE UNITED STATES GOVERNMENT THEREBY INCURS NO RESPONSIBILITY NOR ANY OBLIGATION WHATSOEVER; AND THE FACT THAT THE GOVERNMENT MAY HAVE FORMULATED, FURNISHED, OR IN ANY WAY SUPPLIED THE SAID DRAWINGS, SPECIFICATIONS, OR OTHER DATA IS NOT TO BE REGARDED BY IMPLICATION OR OTHERWISE AS IN ANY MANNER LICENSING THE HOLDER OR ANY OTHER PERSON OR CORPORATION, OR CONVEYING ANY RIGHTS OR PERMISSION TO MANUFACTURE, USE, OR SELL ANY PATENTED INVENTION THAT MAY IN ANY WAY BE RELATED THERETO.

HOLE IDENT	X BASIC DIM	Y BASIC DIM	⊕ DIA	HOLE DIA	QTY
A1	-.053	.690	.006	.058 .062	4
A2	.536	.510			
A3	.616	-.220			
A4	.516	-.440			
B1	1.180	-.145		.100 .104	4
B2	1.310	.385			
B3	.516	-.572			
B4	.516	-.300			
C1	1.005	.385		SEE DETAIL	2
C2	.980	-.220			
D1	.516	-.140		.115 .119	2
D2	.714	-.160			
E1	.780	-.440		.306 .313	5
E2	1.180	-.440			
E3	1.180	.150			
E4	1.180	.620			
E5	.780	.620			
H1	.456	.680		.227 .231	2
H2	.200	.680			
J1	-.700	.430		.701 .708	1
K1	3.564	.080		.260 .267	2
K2	-1.300	-.160			
L1	2.240	—		SEE DETAIL	1
M1	.680	.150		SEE DETAIL A	1
P1	.000	.000		.393 .400	1
			.006		

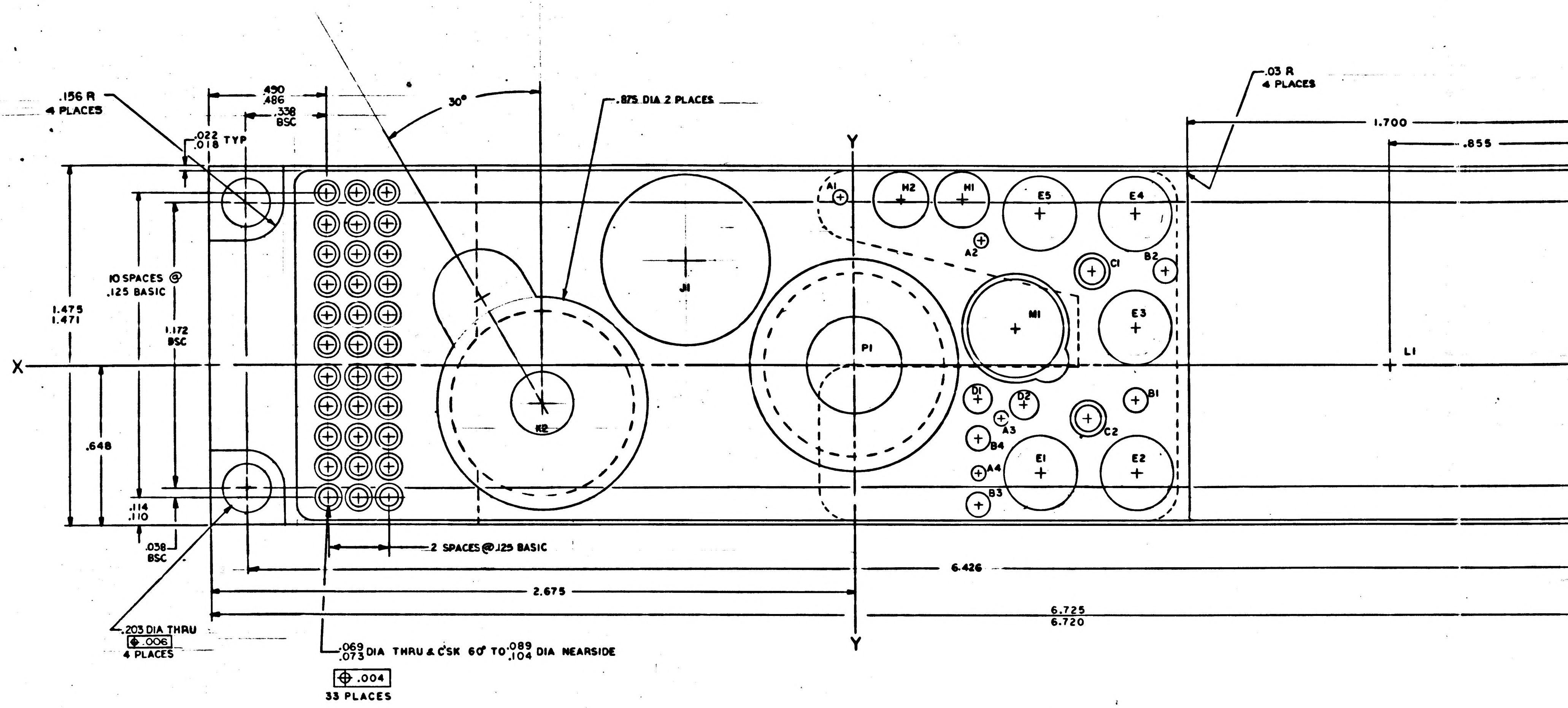
.156 R
4 PLACES
.490
.486
.338
BSC
.022
.018 TYP
30°
.875 DIA 2 PLACES
.03 R
4 PLACES
1.700
.855
Y
X
10 SPACES @
.125 BASIC
1.475
1.471
1.172
BSC
.648
.114
.110
.038
BSC
2 SPACES @ .125 BASIC
J1
K2
P1
M1
A1
A2
A3
A4
B1
B2
B3
B4
C1
C2
D1
D2
E1
E2
E3
E4
E5
H1
H2
L1
6.426
2.675
6.725
6.720
.203 DIA THRU
⊕ .006
4 PLACES
.069
.073 DIA THRU & C'SK 60° TO .089
.104 DIA NEARSIDE
⊕ .004
33 PLACES

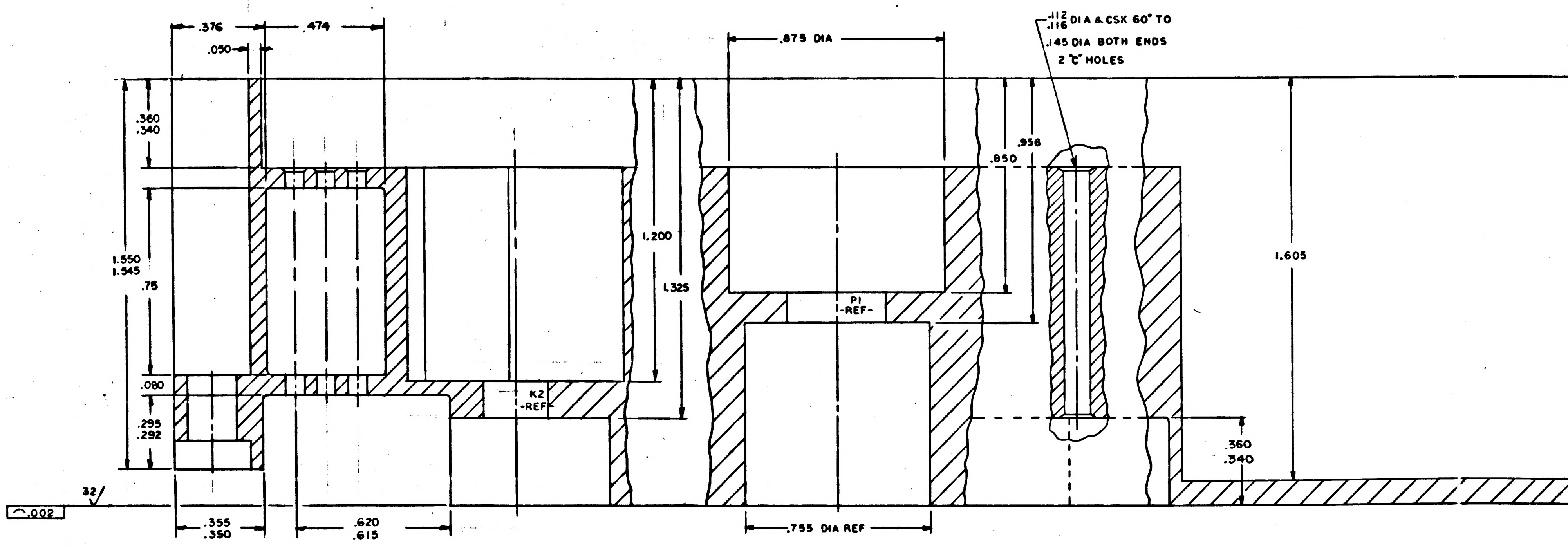
.376
.474
.050
.875 DIA
.112
.116 DIA & CSK 60° TO
.145 DIA BOTH ENDS
2 "C" HOLES
.360
.340
.956
.850
1.200
1.325
1.550
1.545
.75
1.605
P1
-REF-
K2
-REF-
.080
.295
.292
.360
.340
32
⌒ .002
.355
.350
.620
.615
.755 DIA REF

NOTES

1. INTERPRET DRAWING IN ACCORDANCE WITH STANDARDS PRESCRIBED BY MIL-D-70327
2. MATERIAL: MAGNESIUM ALLOY ZK-60A-T5 PER QQ-M-31
3. FINISH: ANODIZE PER MIL-M-3171 TYPE IV
4. TRUE POSITIONING AS SHOWN IN CHART
5. UNLESS OTHERWISE SPECIFIED 125√ ALL OVER
6. REMOVE ALL BURRS AND BREAK SHARP EDGES .005-.015
7. UNLESS OTHERWISE SPECIFIED ALL FILLETS AND RADII .010 MAX
8. SILKSCREEN .060/.080 HIGH CHARACTERS PER ND1002112 USING ENAMAL, LUSTERLESS WHITE PER ND1002111

NOTICE — WHEN GOVERNMENT DRAWINGS, SPECIFICATIONS, OR OTHER DATA ARE USED FOR ANY PURPOSE OTHER THAN IN CONNECTION WITH A DEFINITELY RELATED GOVERNMENT PROCUREMENT OPERATION, THE UNITED STATES GOVERNMENT THEREBY INCURS NO RESPONSIBILITY NOR ANY OBLIGATION WHATSOEVER; AND THE FACT THAT THE GOVERNMENT MAY HAVE FORMULATED, FURNISHED, OR IN ANY WAY SUPPLIED THE SAID DRAWINGS, SPECIFICATIONS, OR OTHER DATA IS NOT TO BE REGARDED BY IMPLICATION OR OTHERWISE AS IN ANY MANNER LICENSING THE HOLDER OR ANY OTHER PERSON OR CORPORATION, OR CONVEYING ANY RIGHTS OR PERMISSION TO MANUFACTURE, USE, OR SELL ANY PATENTED INVENTION THAT MAY IN ANY WAY BE RELATED THERETO

REVISIONS TDAR 02048

SYM	DESCRIPTION	DATE	APPROVAL
A	REVISED PER TDRR 04353		

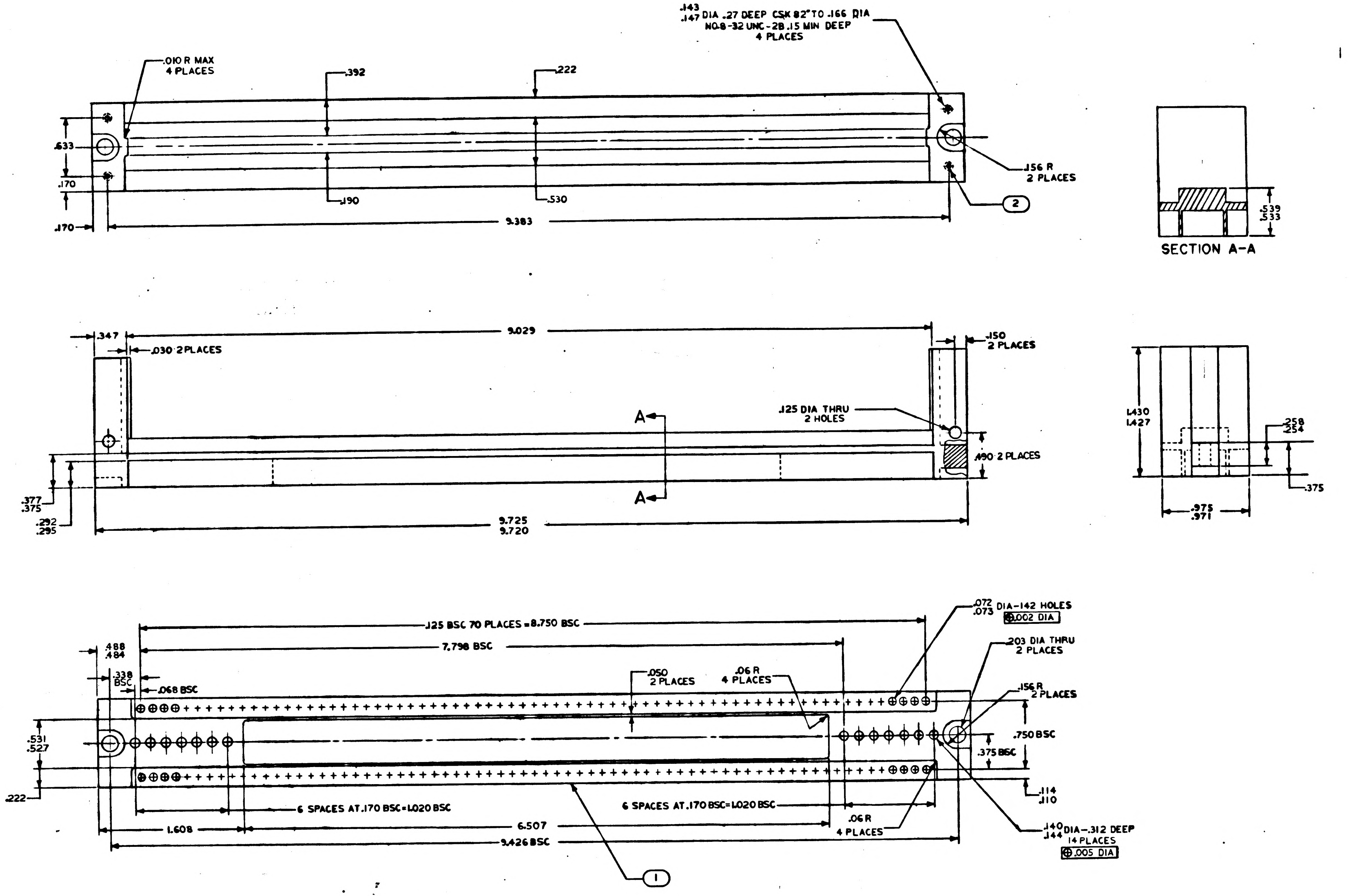
.143
.147 DIA .27 DEEP CSK 82° TO .166 DIA
NO.8-32 UNC-2B .15 MIN DEEP
4 PLACES
.010 R MAX
4 PLACES
.392
.222
.633
.170
.170
.190
.530
9.383
.156 R
2 PLACES
2
.539
.533
SECTION A-A
.347
.030 2 PLACES
9.029
.150
2 PLACES
.125 DIA THRU
2 HOLES
A
A
.190 2 PLACES
.377
.375
.292
.295
9.725
9.720
1.430
1.427
.258
.254
.375
.975
.971
.125 BSC 70 PLACES = 8.750 BSC
.072
.073 DIA-142 HOLES
⊕ .002 DIA
7.798 BSC
.488
.484
.338
BSC
.068 BSC
.050
2 PLACES
.06 R
4 PLACES
.203 DIA THRU
2 PLACES
.156 R
2 PLACES
.531
.527
.750 BSC
.375 BSC
.114
.110
.222
6 SPACES AT .170 BSC = 1.020 BSC
6 SPACES AT .170 BSC = 1.020 BSC
1.608
6.507
9.426 BSC
.06 R
4 PLACES
.140
.144 DIA-.312 DEEP
14 PLACES
⊕ .005 DIA
1

NOTES:

1. INTERPRET DRAWING IN ACCORDANCE WITH STANDARDS PRESCRIBED BY MIL-D-70327
2. MATERIAL: MAG ALLOY ZK60A-T5 PER QQ-M-31
3. FINISH: ANODIZE PER MIL-M-3171 TYPE IV
4. ALL SURFACES 125√ UNLESS OTHERWISE SPECIFIED
5. INSTALL FIND NO.2 PER ND-1002121
6. REMOVE ALL BURRS AND BREAK SHARP EDGES .005-.015
7. UNLESS OTHERWISE SPECIFIED ALL FILLETS AND RADII TO BE .010 MAX

QTY REQD	PART OR IDENTIFYING NO.	NOMENCLATURE OR DESCRIPTION	FIND NO.
4	1000115-1	INSERT, THREADED SELF LOCKING	2
1	1004192-1	HEADER HOUSING	1

LIST OF MATERIALS

NEXT ASSY	USED ON

APPLICATION

UNLESS OTHERWISE SPECIFIED
DIMENSIONS ARE IN INCHES
TOLERANCES ON
FRACTIONS ± DECIMALS XX ± .02 XXX ± .005 ANGLES ± 1°
DO NOT SCALE THIS DRAWING

MATERIAL
SEE NOTE 2

HEAT TREATMENT

FINAL FINISH
SEE NOTE 3

MIT
INSTRUMENTATION LAB
CAMBRIDGE, MASS.

DRAWN J.F. Walsh DATE 6/26/63
CHECKED C.P. Kuppferman 11/16/63
APPROVAL
APPROVAL W.B. Turner 7/16/63
NASA APPROVAL W.J. Rhine 7-17-63
MIT APPROVAL 7/12/63

MANNED SPACECRAFT CENTER
HOUSTON, TEXAS

HEADER HOUSING

CODE IDENT NO. SIZE E NASA DRAWING NO. 1004192
SCALE 2/1 WT SHEET 1 OF 1

MASTER

INCHES 0 1 2
PHOTOGRAPHIC SCALE ONLY

NOTICE — [illegible]

1004192 B

SYM	DESCRIPTION	DATE	APPROVAL
A	REVISED PER TDRR 04353		
B	REVISED PER TDRR 08411 DR S. A. Clement CHK R.P.B.	5/14	

REVISIONS TDRR 02048

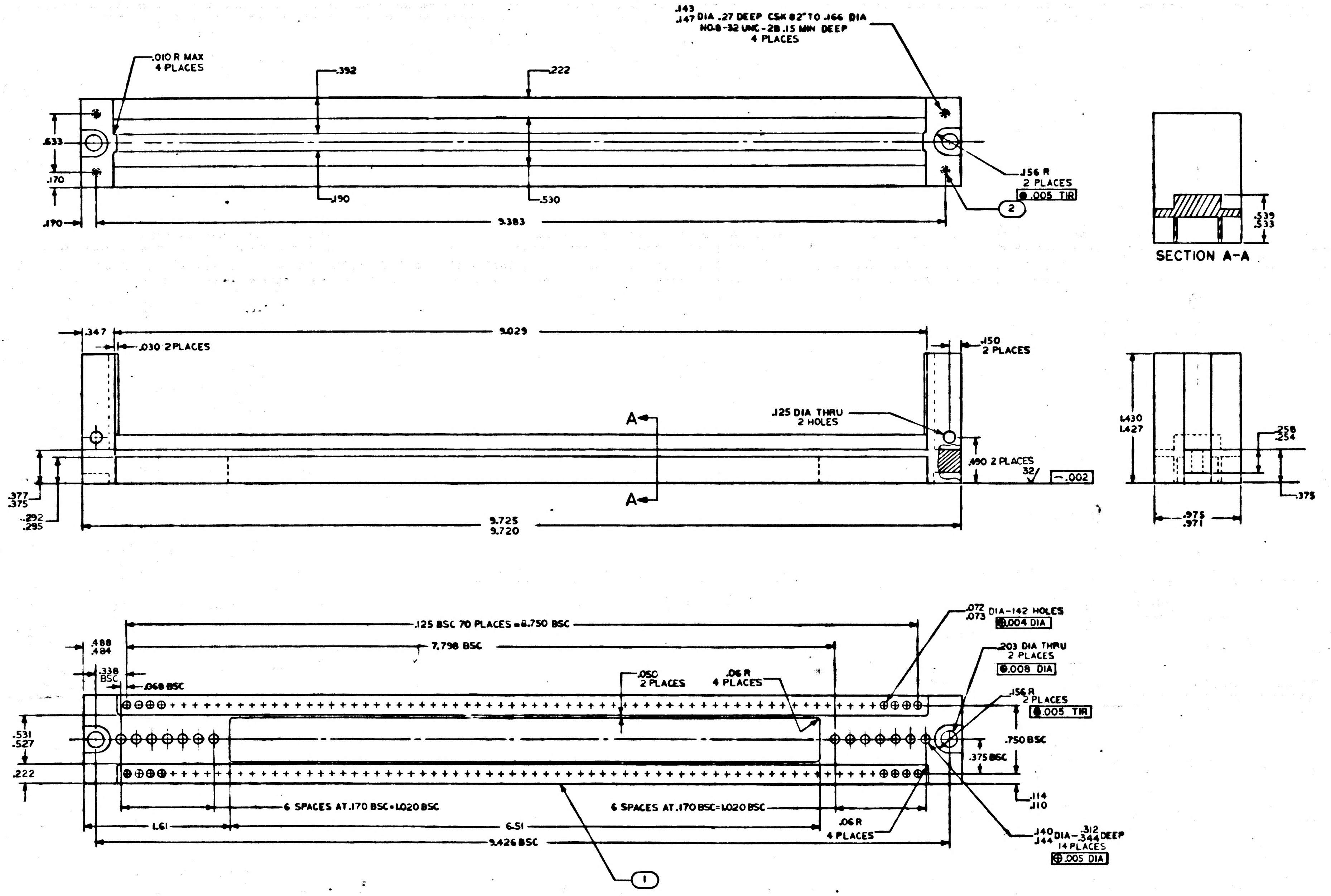

.143
.147 DIA .27 DEEP CSK 82° TO .166 DIA
NO.8-32 UNC-2B .15 MIN DEEP
4 PLACES
.010 R MAX
4 PLACES
.392
.222
.633
.170
.170
.190
.530
9.383
.156 R
2 PLACES
.005 TIR
2
SECTION A-A
.539
.533
.347
.030 2 PLACES
9.029
.150
2 PLACES
A
A
.125 DIA THRU
2 HOLES
.190 2 PLACES
32
.002
.377
.375
.292
.295
9.725
9.720
1.430
1.427
.258
.254
.375
.975
.971
.125 BSC 70 PLACES=6.750 BSC
7.798 BSC
.488
.484
.338
BSC
.068 BSC
.050
2 PLACES
.06 R
4 PLACES
.072
.073 DIA-142 HOLES
.004 DIA
.203 DIA THRU
2 PLACES
.008 DIA
.156 R
2 PLACES
.005 TIR
.750 BSC
.375 BSC
.531
.527
.222
.114
.110
6 SPACES AT .170 BSC=1.020 BSC
6 SPACES AT .170 BSC=1.020 BSC
1.61
6.51
9.426 BSC
.06 R
4 PLACES
.140
.144 DIA-.312
.344 DEEP
14 PLACES
.005 DIA
1

NOTES:
1. INTERPRET DRAWING IN ACCORDANCE WITH STANDARDS PRESCRIBED BY MIL-D-70327
2. MATERIAL: MAG ALLOY ZK60A-T5 PER QQ-M-31
3. FINISH: ANODIZE PER MIL-M-45202, TYPE I, CLASS C
4. ALL SURFACES 125 UNLESS OTHERWISE SPECIFIED
5. INSTALL FIND NO. 2 PER ND-1002121
6. REMOVE ALL BURRS AND BREAK SHARP EDGES .005-.015
7. UNLESS OTHERWISE SPECIFIED ALL FILLETS AND RADII TO BE .010 MAX

QTY REQD	PART OR IDENTIFYING NO.	NOMENCLATURE OR DESCRIPTION	FIND NO
4	1000115-1	INSERT, THREADED SELF LOCKING	2
1	1004192-1	HEADER HOUSING	1

LIST OF MATERIALS

NEXT ASSY	USED ON
1003165	
1003153	
1003132	

APPLICATION

UNLESS OTHERWISE SPECIFIED
DIMENSIONS ARE IN INCHES
TOLERANCES ON
FRACTIONS ± DECIMALS XX ±.02 XXX ±.005 ANGLES ± 3°
DO NOT SCALE THIS DRAWING

MATERIAL
SEE NOTE 2

HEAT TREATMENT

FINAL FINISH
SEE NOTE 3

MIT
INSTRUMENTATION LAB
CAMBRIDGE, MASS.

DWG NO
CONTRACT

DRAWN J.F. Walsh DATE 6/20/63
CHECKED 11/4/63
APPROVAL
APPROVAL B. Turner 7/6/63
NASA APPROVAL W. J. 7-19-63
MIT APPROVAL 7/19/63

MANNED SPACECRAFT CENTER
HOUSTON, TEXAS

HEADER HOUSING

CODE IDENT NO. —
SIZE E
NASA DRAWING NO. 1004192
SCALE 2/1
WT
SHEET 1 OF 1

REVISIONS TDRR 02048			
SYM	DESCRIPTION	DATE	APPROVAL

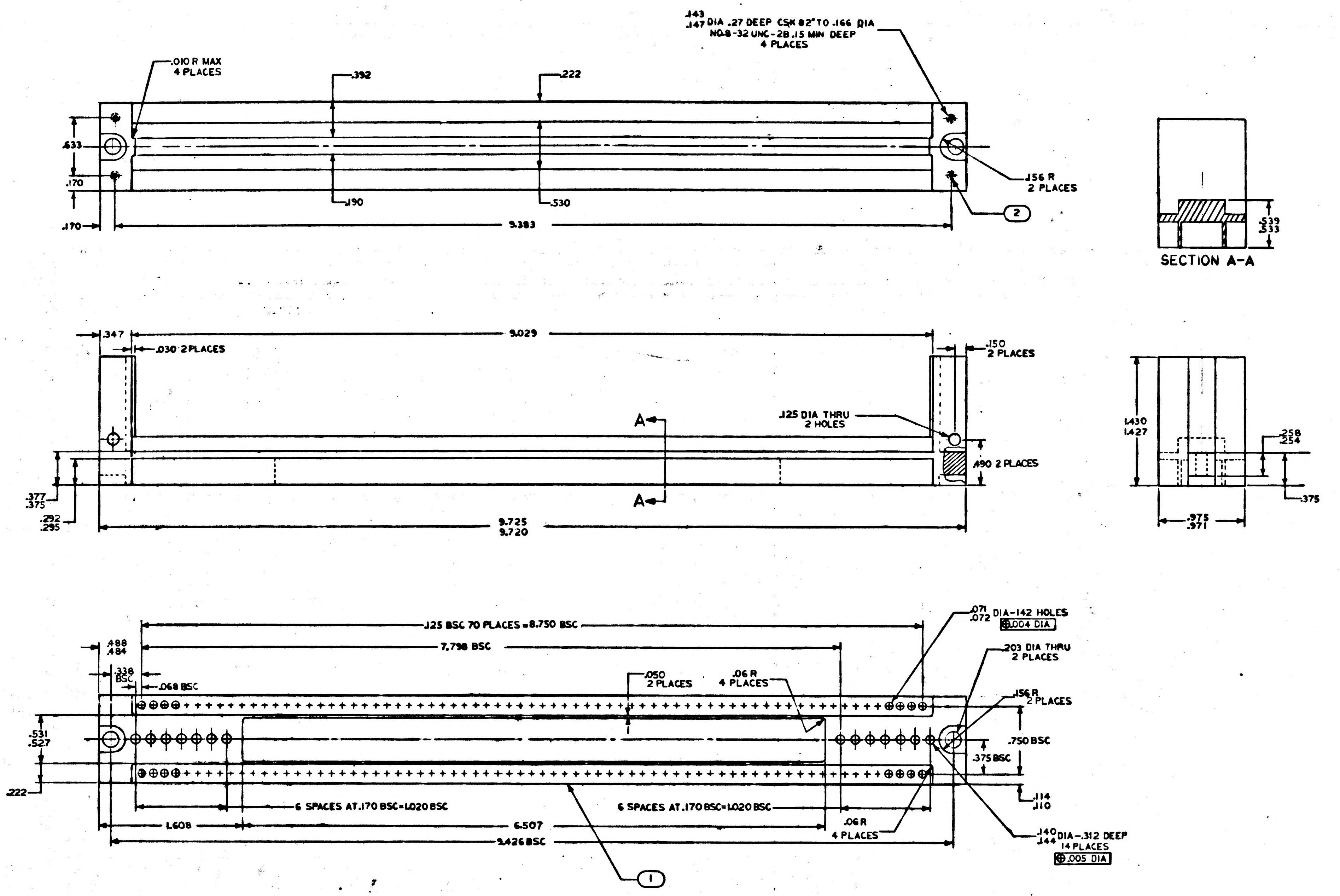
.143
.147 DIA .27 DEEP CSK 82° TO .166 DIA
NO.8-32 UNC-2B .15 MIN DEEP
4 PLACES
.010 R MAX
4 PLACES
.392
.222
.633
.170
.190
.530
.156 R
2 PLACES
2
.170
9.383
SECTION A-A
.539
.533
.347
9.029
.030 2 PLACES
.150
2 PLACES
.125 DIA THRU
2 HOLES
A
A
.190 2 PLACES
.377
.375
.292
.295
9.725
9.720
1.430
1.427
.258
.254
.375
.975
.971
.125 BSC 70 PLACES = 8.750 BSC
7.798 BSC
.071
.072 DIA-142 HOLES
.004 DIA
.203 DIA THRU
2 PLACES
.488
.484
.338
BSC
.068 BSC
.050
2 PLACES
.06 R
4 PLACES
.156 R
2 PLACES
.531
.527
.750 BSC
.375 BSC
.222
.114
.110
6 SPACES AT .170 BSC = 1.020 BSC
6 SPACES AT .170 BSC = 1.020 BSC
1.608
6.507
9.426 BSC
.06 R
4 PLACES
.140
.144 DIA - .312 DEEP
14 PLACES
.005 DIA
1

NOTES:
1. INTERPRET DRAWING IN ACCORDANCE WITH STANDARDS PRESCRIBED BY MIL-D-70327
2. MATERIAL: MAG ALLOY ZK60A-T5 PER QQ-M-31
3. FINISH: ANODIZE PER MIL-M-3171 TYPE IV
4. ALL SURFACES 125 UNLESS OTHERWISE SPECIFIED
5. INSTALL FIND NO. 2 PER ND-1002121
6. REMOVE ALL BURRS AND BREAK SHARP EDGES .005-.015
7. UNLESS OTHERWISE SPECIFIED ALL FILLETS AND RADII TO BE .010 MAX

1004192

MASTER

QTY REQD	PART OR IDENTIFYING NO.	NOMENCLATURE OR DESCRIPTION	FIND NO.
4	1000115-1	INSERT, THREADED SELF LOCKING	2
1	1004192-1	HEADER HOUSING	1

LIST OF MATERIALS

NEXT ASSY	USED ON

APPLICATION

UNLESS OTHERWISE SPECIFIED
DIMENSIONS ARE IN INCHES
TOLERANCES ON
FRACTIONS ±
DECIMALS XX ± .02 XXX ± .005
ANGLES ± 1°
DO NOT SCALE THIS DRAWING

MATERIAL
SEE NOTE 2

HEAT TREATMENT

FINAL FINISH
SEE NOTE 3

MIT
INSTRUMENTATION LAB
CAMBRIDGE, MASS
DWG NO.
CONTRACT

DRAWN J.F. Walsh DATE 6/20/63
CHECKED C. Kurzhausen 16 Jul 63
APPROVAL
APPROVAL W.B. Turner 7/16/63

NASA APPROVAL W.J. Rhine 7-17-63

MIT APPROVAL 7/17/63

MANNED SPACECRAFT CENTER
HOUSTON, TEXAS

HEADER HOUSING

CODE IDENT NO.
SIZE E
NASA DRAWING NO. 1004192

SCALE 2/1
WT
SHEET 1 OF 1

INCHES
PHOTOGRAPHIC SCALE ONLY

1004194 A

SYM	DESCRIPTION	DATE	APPROVAL
	REVISIONS TDRR 02048		
A	REV PER TDRR 02396	8/5/63	

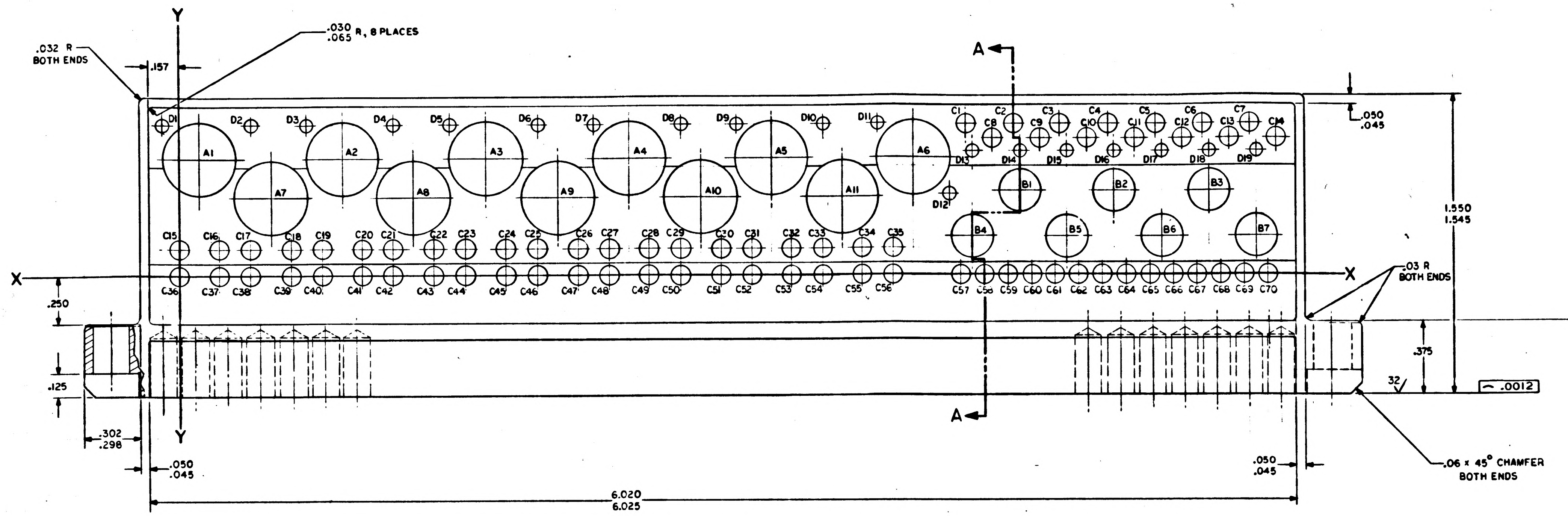

.032 R
BOTH ENDS
.157
.030
.065 R, 8 PLACES
Y
A
D1 D2 D3 D4 D5 D6 D7 D8 D9 D10 D11 D12 D13 D14 D15 D16 D17 D18 D19
A1 A2 A3 A4 A5 A6 A7 A8 A9 A10 A11
B1 B2 B3 B4 B5 B6 B7
C1 C2 C3 C4 C5 C6 C7 C8 C9 C10 C11 C12 C13 C14
C15 C16 C17 C18 C19 C20 C21 C22 C23 C24 C25 C26 C27 C28 C29 C30 C31 C32 C33 C34 C35
C36 C37 C38 C39 C40 C41 C42 C43 C44 C45 C46 C47 C48 C49 C50 C51 C52 C53 C54 C55 C56
C57 C58 C59 C60 C61 C62 C63 C64 C65 C66 C67 C68 C69 C70
X
X
.050
.045
1.550
1.545
.03 R
BOTH ENDS
.250
.375
.125
32
.0012
.302
.298
Y
A
.050
.045
.050
.045
6.020
6.025
.06 x 45° CHAMFER
BOTH ENDS

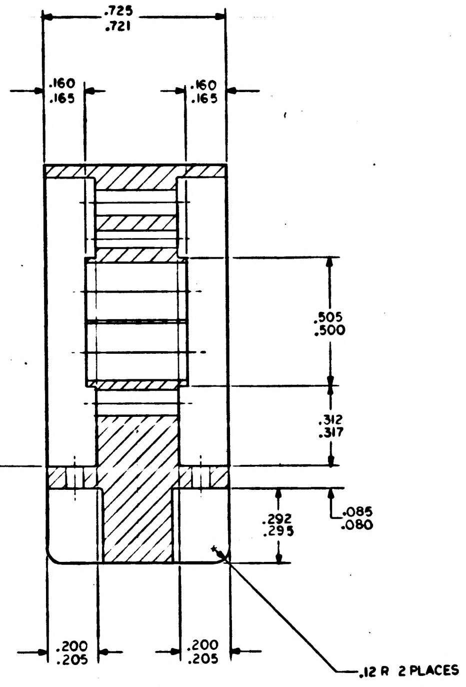

.725
.721
.160
.165
.160
.165
.505
.500
.312
.317
.085
.080
.292
.295
.200
.205
.200
.205
.12 R 2 PLACES

SECTION A-A

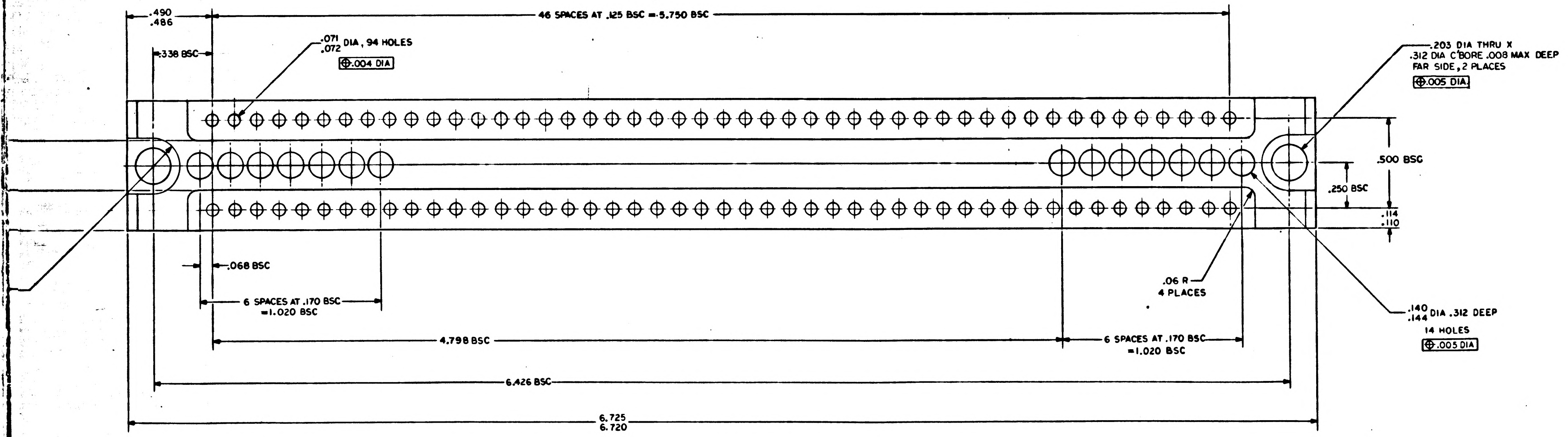

.490
.486
.338 BSC
46 SPACES AT .125 BSC =5.750 BSC
.071
.072 DIA, 94 HOLES
⌖ .004 DIA
.203 DIA THRU X
.312 DIA C'BORE .008 MAX DEEP
FAR SIDE, 2 PLACES
⌖ .005 DIA
.500 BSC
.250 BSC
.114
.110
.068 BSC
6 SPACES AT .170 BSC
=1.020 BSC
.06 R
4 PLACES
.140
.144 DIA .312 DEEP
14 HOLES
⌖ .005 DIA
4.798 BSC
6 SPACES AT .170 BSC
=1.020 BSC
6.426 BSC
6.725
6.720

QTY REQD	PART OR IDENTIFYING NO.	NOMENCLATURE OR DESCRIPTION	FIND NO.

LIST OF MATERIALS

1003125	
NEXT ASSY	USED ON
APPLICATION	

UNLESS OTHERWISE SPECIFIED
DIMENSIONS ARE IN INCHES
TOLERANCES ON
FRACTIONS ± DECIMALS ±.005 ±.02 ANGLES ±
DO NOT SCALE THIS DRAWING

MATERIAL
SEE NOTE 2

HEAT TREATMENT

FINAL FINISH
SEE NOTE 9

M I T
INSTRUMENTATION LAB
CAMBRIDGE, MASS

DRAWN W. Horgan DATE 6-28-63
CHECKED
APPROVAL
APPROVAL 7/1/63
NASA APPROVAL W J 7-17-63
MIT APPROVAL 7/1/63

MANNED SPACECRAFT CENTER
HOUSTON, TEXAS

HEADER HOUSING
INTERFACE MODULE
A19 OR A39

CODE IDENT NO	SIZE	NASA DRAWING NO.
	J	1004194
SCALE 4/1	WT	SHEET 1 OF 1

1004194 A

1004194 A

MASTER

INCHES
0 1 2
PHOTOGRAPHIC SCALE ONLY

F2

NOTICE — WHEN GOVERNMENT DRAWINGS, SPECIFICATIONS, OR OTHER DATA ARE USED FOR ANY PURPOSE OTHER THAN IN CONNECTION WITH A DEFINITELY RELATED GOVERNMENT PROCUREMENT OPERATION, THE UNITED STATES GOVERNMENT THEREBY INCURS NO RESPONSIBILITY NOR ANY OBLIGATION WHATSOEVER, AND THE FACT THAT THE GOVERNMENT MAY HAVE FORMULATED, FURNISHED, OR IN ANY WAY SUPPLIED THE SAID DRAWINGS, SPECIFICATIONS, OR OTHER DATA IS NOT TO BE REGARDED BY IMPLICATION OR OTHERWISE AS IN ANY MANNER LICENSING THE HOLDER OR ANY OTHER PERSON OR CORPORATION, OR CONVEYING ANY RIGHTS OR PERMISSION TO MANUFACTURE, USE, OR SELL ANY PATENTED INVENTION THAT MAY IN ANY WAY BE RELATED THERETO.

HOLE IDENT	X BASIC DIM	Y BASIC DIM	⌖ DIA	HOLE DIA	QTY
A1	.105	.610	.006	.381 .388	11
A2	.855	.610			
A3	1.605	.610			
A4	2.355	.610			
A5	3.105	.610			
A6	3.855	.610			
A7	.480	.405			
A8	1.230	.405			
A9	1.980	.405			
A10	2.730	.405			
A11	3.480	.405			
B1	4.417	.435	.006	.216 .220	7
B2	4.917	.435			
B3	5.417	.435			
B4	4.167	.200			
B5	4.667	.200			
B6	5.167	.200			
B7	5.667	.200			
C1	4.132	.785	.006	.100 .104	70
C2	4.382	.785			
C3	4.632	.785			
C4	4.882	.785			
C5	5.132	.785			
C6	5.382	.785			
C7	5.632	.785			
C8	4.277	.710			
C9	4.527	.710			
C10	4.777	.710			
C11	5.027	.710			
C12	5.277	.710			
C13	5.527	.710			
C14	5.777	.710			
C15	.000	.136			
C16	.210	.136			
C17	.374	.136			
C18	.584	.136			
C19	.748	.136			
C20	.960	.136			
C21	1.125	.136			
C22	1.355	.136			
C23	1.500	.136			
C24	1.710	.136			
C25	1.875	.136			
C26	2.085	.136			
C27	2.250	.136			
C28	2.460	.136			
C29	2.625	.136			
C30	2.835	.136			
C31	3.000	.136			
C32	3.210	.136			
C33	3.375	.136			
C34	3.585	.136			
C35	3.750	.136			
C36	.000	.000			
C37	.210	.000			
C38	.374	.000			
C39	.584	.000			
C40	.748	.000			
C41	.960	.000			
C42	1.125	.000			
C43	1.335	.000			
C44	1.500	.000			
C45	1.710	.000			
C46	1.875	.000			
C47	2.085	.000			
C48	2.250	.000			
C49	2.460	.000			
C50	2.625	.000			
C51	2.835	.000			
C52	3.000	.000			
C53	3.210	.000			
C54	3.375	.000			
C55	3.585	.000			
C56	3.750	.000			
C57	4.105	.000			
C58	4.229	.000			
C59	4.355	.000			
C60	4.479	.000			
C61	4.605	.000			
C62	4.729	.000			
C63	4.855	.000			
C64	4.979	.000			
C65	5.105	.000			
C66	5.229	.000			
C67	5.355	.000			
C68	5.479	.000			
C69	5.605	.000			
C70	5.729	.000			

HOLE IDENT	X BASIC DIM	Y BASIC DIM	⌖ DIA	HOLE DIA	QTY
D1	-.085	.785	.006	.058 .062	19
D2	.375	.785			
D3	.665	.785			
D4	1.125	.785			
D5	1.415	.785			
D6	1.875	.785			
D7	2.165	.785			
D8	2.625	.785			
D9	2.915	.785			
D10	3.375	.785			
D11	3.665	.785			
D12	4.045	.420			
D13	4.167	.640			
D14	4.417	.640			
D15	4.667	.640			
D16	4.917	.640			
D17	5.167	.640			
D18	5.417	.640			
D19	5.667	.640			

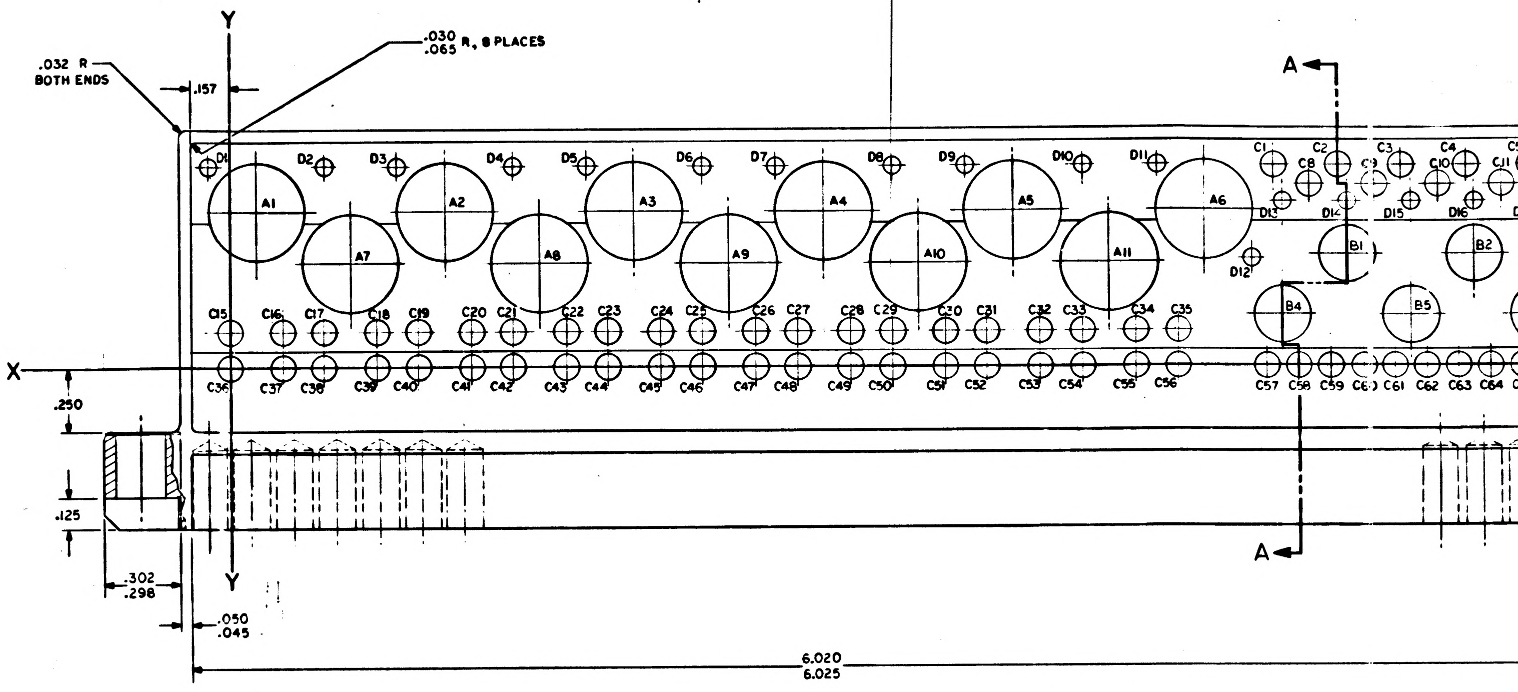
.032 R
BOTH ENDS
.157
.030
.065 R, 8 PLACES
Y
X
A
A1 A2 A3 A4 A5 A6 A7 A8 A9 A10 A11
B1 B2 B4 B5
D1 D2 D3 D4 D5 D6 D7 D8 D9 D10 D11 D12 D13 D14 D15 D16
C1 C2 C3 C4 C8 C9 C10 C11
C15 C16 C17 C18 C19 C20 C21 C22 C23 C24 C25 C26 C27 C28 C29 C30 C31 C32 C33 C34 C35
C36 C37 C38 C39 C40 C41 C42 C43 C44 C45 C46 C47 C48 C49 C50 C51 C52 C53 C54 C55 C56 C57 C58 C59 C60 C61 C62 C63 C64
.250
.125
.302
.298
.050
.045
6.020
6.025

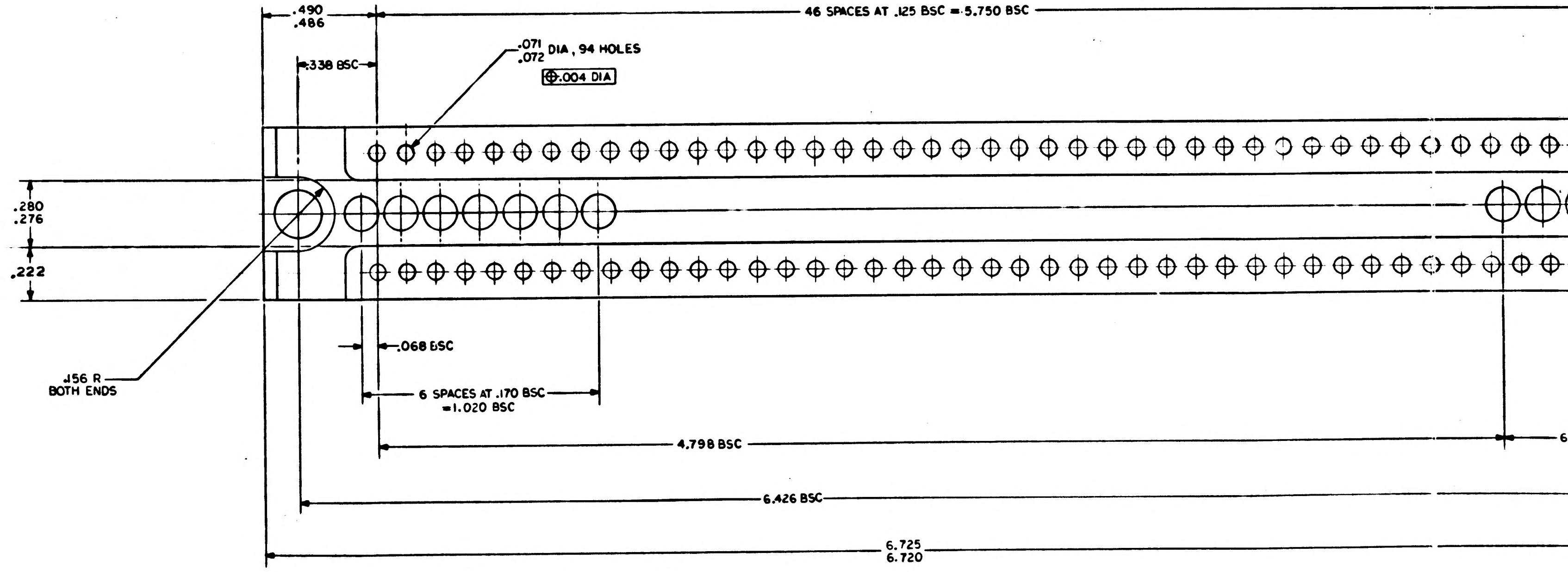
.490
.486
46 SPACES AT .125 BSC = 5.750 BSC
.338 BSC
.071
.072 DIA, 94 HOLES
⌖.004 DIA
.280
.276
.222
.156 R
BOTH ENDS
.068 BSC
6 SPACES AT .170 BSC
=1.020 BSC
4.798 BSC
6.426 BSC
6.725
6.720

NOTES:
1. INTERPRET DRAWING IN ACCORDANCE WITH STANDARDS PRESCRIBED BY MIL-D-70327
2. MATERIAL: MAGNESIUM ALLOY ZK-60A-T5 PER QQ-M-31A
3. UNLESS OTHERWISE SPECIFIED ALL FILLETS AND RADII .005-.020
4. UNLESS OTHERWISE SPECIFIED $\overset{125}{\vee}$ ALL OVER
5. REMOVE ALL BURRS AND BREAK SHARP EDGES .005-.015
6. FINISH: ANODIZE PER MIL-M-317A, TYPE IV

INCHES
0 1 2
PHOTOGRAPHIC SCALE ONLY

B	1004194

REVISIONS TDRR 02048

SYM	DESCRIPTION	DATE	APPROVAL
A	REV PER IDRR C 2593	8/15/63	
B	REVISED PER TDRR 02698		

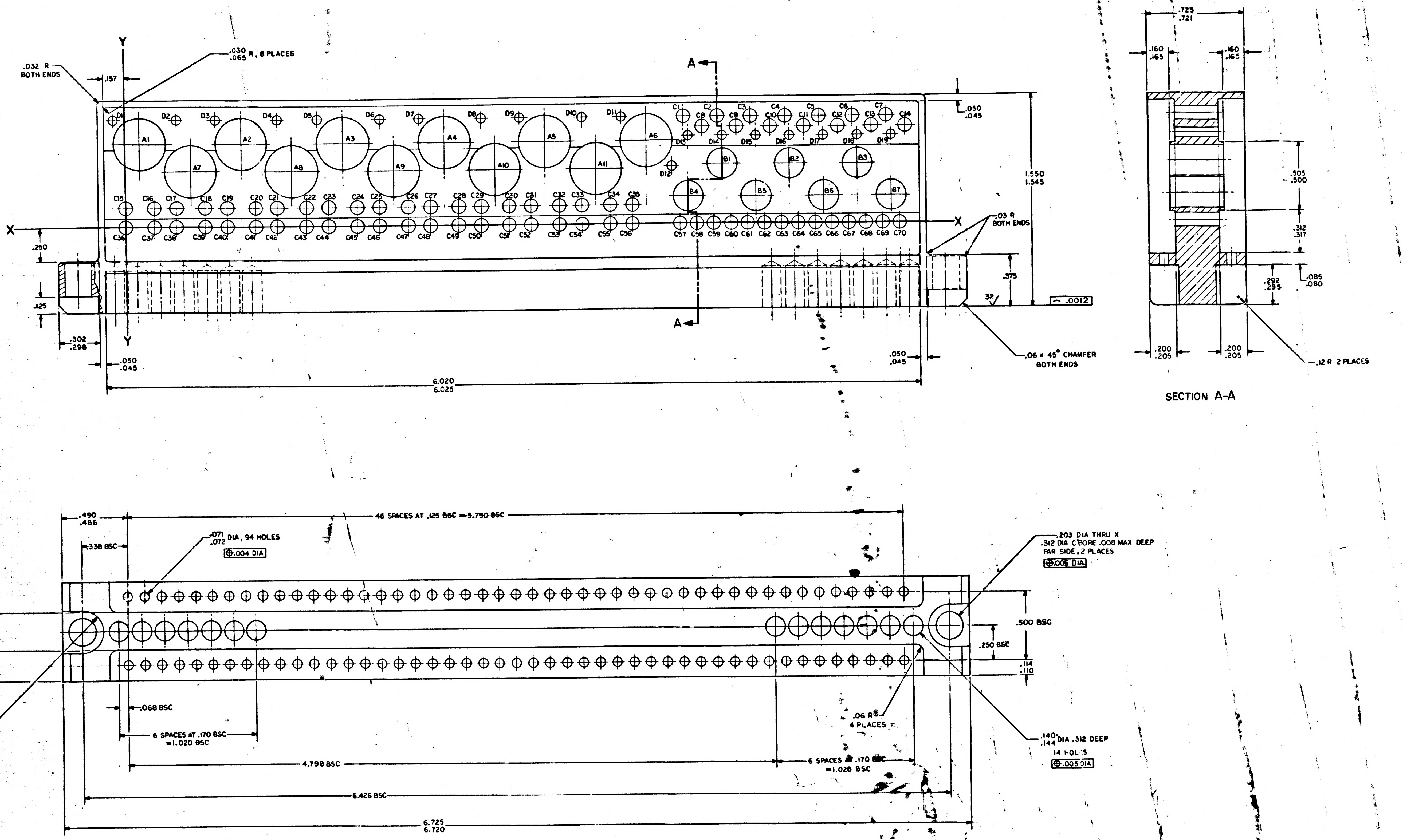

Y
.032 R BOTH ENDS
.157
.030 .065 R, 8 PLACES
A
D1 D2 D3 D4 D5 D6 D7 D8 D9 D10 D11 D12 D13 D14 D15 D16 D17 D18 D19
A1 A2 A3 A4 A5 A6 A7 A8 A9 A10 A11
B1 B2 B3 B4 B5 B6 B7
C1 … C70
.050 .045
1.550 1.545
X
.03 R BOTH ENDS
.250
.125
.375
32
.0012
.302 .298
.050 .045
6.020 6.025
.06 x 45° CHAMFER BOTH ENDS
.725 .721
.160 .165
.505 .500
.312 .317
.292 .295
.085 .080
.200 .205
.12 R 2 PLACES
SECTION A-A
.490 .486
46 SPACES AT .125 BSC =5.750 BSC
.338 BSC
.071 .072 DIA, 94 HOLES
⊕.004 DIA
.203 DIA THRU X
.312 DIA C'BORE .008 MAX DEEP FAR SIDE, 2 PLACES
⊕.005 DIA
.500 BSC
.250 BSC
.114 .110
.068 BSC
6 SPACES AT .170 BSC =1.020 BSC
.06 R 4 PLACES
.140 .144 DIA .312 DEEP 14 HOLES
⊕.005 DIA
4.798 BSC
6 SPACES AT .170 BSC =1.020 BSC
6.426 BSC
6.725 6.720

QTY REQD	PART OR IDENTIFYING NO.	NOMENCLATURE OR DESCRIPTION	FIND NO

LIST OF MATERIALS

1003125	
NEXT ASSY	USED ON
APPLICATION	

UNLESS OTHERWISE SPECIFIED DIMENSIONS ARE IN INCHES
TOLERANCES ON
FRACTIONS ± DECIMALS ±.005 ±.02 ANGLES ±
DO NOT SCALE THIS DRAWING
MATERIAL SEE NOTE 2
HEAT TREATMENT
FINISH SEE NOTE 9

MIT INSTRUMENTATION LAB
CAMBRIDGE, MASS.
DRAWN W. Horgan DATE 6-28-63
CHECKED
APPROVAL
APPROVAL
NASA APPROVAL 7-17-63
MIT APPROVAL

MANNED SPACECRAFT CENTER
HOUSTON, TEXAS

HEADER HOUSING
INTERFACE MODULE
A19 OR A39

CODE IDENT NO
SIZE J
NASA DRAWING NO. 1004194
SCALE 4/1
WT
SHEET 1 OF 1

1004194 B

INCHES
PHOTOGRAPHIC SCALE ONLY

F-2

NOTICE — WHEN GOVERNMENT DRAWINGS, SPECIFICATIONS, OR OTHER DATA ARE USED FOR ANY PURPOSE OTHER THAN IN CONNECTION WITH A DEFINITELY RELATED GOVERNMENT PROCUREMENT OPERATION, THE UNITED STATES GOVERNMENT THEREBY INCURS NO RESPONSIBILITY NOR ANY OBLIGATION WHATSOEVER; AND THE FACT THAT THE GOVERNMENT MAY HAVE FORMULATED, FURNISHED, OR IN ANY WAY SUPPLIED THE SAID DRAWINGS, SPECIFICATIONS, OR OTHER DATA IS NOT TO BE REGARDED BY IMPLICATION OR OTHERWISE AS IN ANY MANNER LICENSING THE HOLDER OR ANY OTHER PERSON OR CORPORATION, OR CONVEYING ANY RIGHTS OR PERMISSION TO MANUFACTURE, USE, OR SELL ANY PATENTED INVENTION THAT MAY IN ANY WAY BE RELATED THERETO.

HOLE IDENT	X BASIC DIM	Y BASIC DIM	⊕ DIA	HOLE DIA	QTY
A1	.105	.610	.006	.381 .388	11
A2	.855	.610			
A3	1.605	.610			
A4	2.355	.610			
A5	3.105	.610			
A6	3.855	.610			
A7	.480	.405			
A8	1.230	.405			
A9	1.980	.405			
A10	2.730	.405			
A11	3.480	.405			
B1	4.417	.435	.006	.216 .220	7
B2	4.917	.435			
B3	5.417	.435			
B4	4.167	.200			
B5	4.667	.200			
B6	5.167	.200			
B7	5.667	.200			
C1	4.132	.785	.006	.100 .104	70
C2	4.382	.785			
C3	4.632	.785			
C4	4.882	.785			
C5	5.132	.785			
C6	5.382	.785			
C7	5.632	.785			
C8	4.277	.710			
C9	4.527	.710			
C10	4.777	.710			
C11	5.027	.710			
C12	5.277	.710			
C13	5.527	.710			
C14	5.777	.710			
C15	.000	.136			
C16	.210	.136			
C17	.374	.136			
C18	.584	.136			
C19	.748	.136			
C20	.960	.136			
C21	1.125	.136			
C22	1.335	.136			
C23	1.500	.136			
C24	1.710	.136			
C25	1.875	.136			
C26	2.085	.136			
C27	2.250	.136			
C28	2.460	.136			
C29	2.625	.136			
C30	2.835	.136			
C31	3.000	.136			
C32	3.210	.136			
C33	3.375	.136			
C34	3.585	.136			
C35	3.750	.136			
C36	.000	.000			
C37	.210	.000			
C38	.374	.000			
C39	.584	.000			
C40	.748	.000			
C41	.960	.000			
C42	1.125	.000			
C43	1.335	.000			
C44	1.500	.000			
C45	1.710	.000			
C46	1.875	.000			
C47	2.085	.000			
C48	2.250	.000			
C49	2.460	.000			
C50	2.625	.000			
C51	2.835	.000			
C52	3.000	.000			
C53	3.210	.000			
C54	3.375	.000			
C55	3.585	.000			
C56	3.750	.000			
C57	4.105	.000			
C58	4.229	.000			
C59	4.355	.000			
C60	4.479	.000			
C61	4.605	.000			
C62	4.729	.000			
C63	4.855	.000			
C64	4.979	.000			
C65	5.105	.000			
C66	5.229	.000			
C67	5.355	.000			
C68	5.479	.000			
C69	5.605	.000			
C70	5.729	.000			

HOLE IDENT	X BASIC DIM	Y BASIC DIM	⊕ DIA	HOLE DIA	QTY
D1	−.085	.785	.006	.058 .062	19
D2	.375	.785			
D3	.665	.785			
D4	1.125	.785			
D5	1.415	.785			
D6	1.875	.785			
D7	2.165	.785			
D8	2.625	.785			
D9	2.915	.785			
D10	3.375	.785			
D11	3.665	.785			
D12	4.045	.420			
D13	4.167	.640			
D14	4.417	.640			
D15	4.667	.640			
D16	4.917	.640			
D17	5.167	.640			
D18	5.417	.640			
D19	5.667	.640			

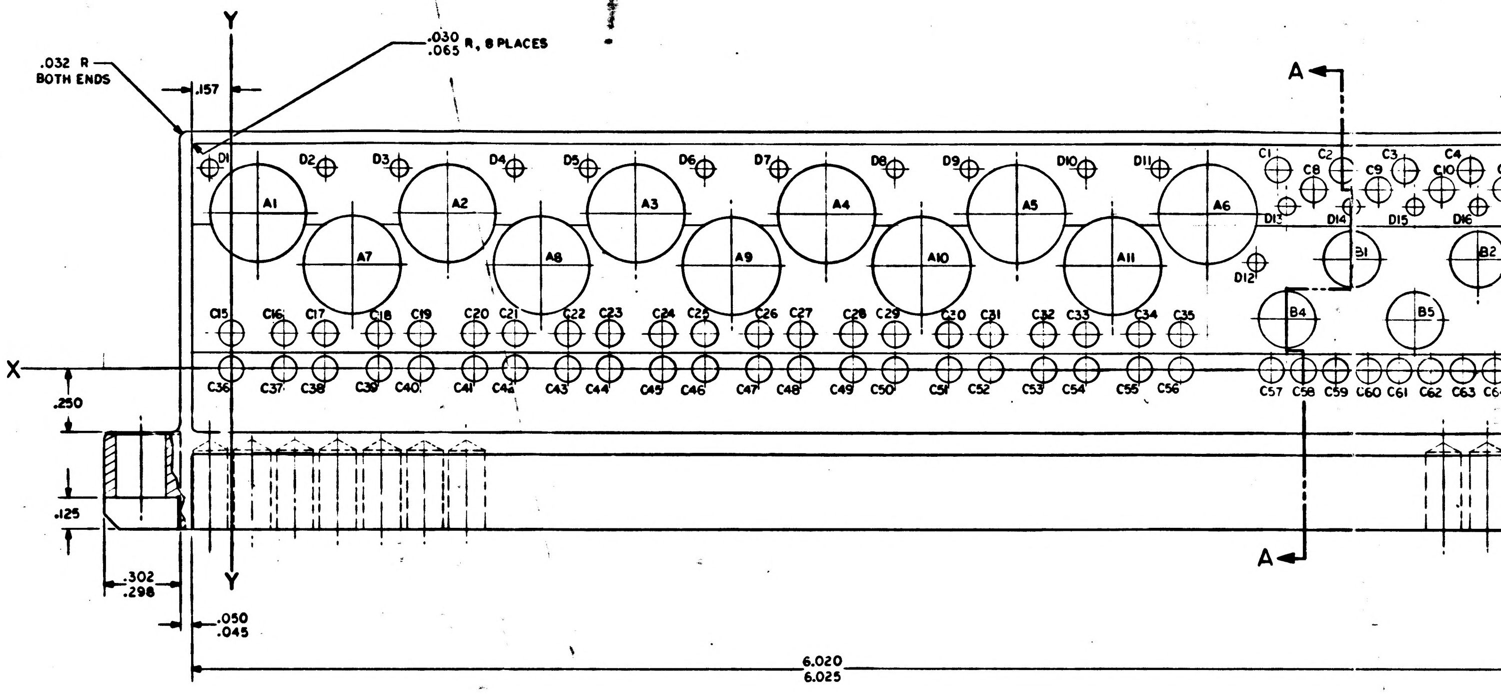
.032 R BOTH ENDS
.157
.030 .065 R, 8 PLACES
Y
X
A
A1 A2 A3 A4 A5 A6 A7 A8 A9 A10 A11
B1 B2 B4 B5
D1 D2 D3 D4 D5 D6 D7 D8 D9 D10 D11 D12 D13 D14 D15 D16
C1 C2 C3 C4 C8 C9 C10
C15 C16 C17 C18 C19 C20 C21 C22 C23 C24 C25 C26 C27 C28 C29 C30 C31 C32 C33 C34 C35
C36 C37 C38 C39 C40 C41 C42 C43 C44 C45 C46 C47 C48 C49 C50 C51 C52 C53 C54 C55 C56
C57 C58 C59 C60 C61 C62 C63
.250
.125
.302 .298
.050 .045
6.020 6.025

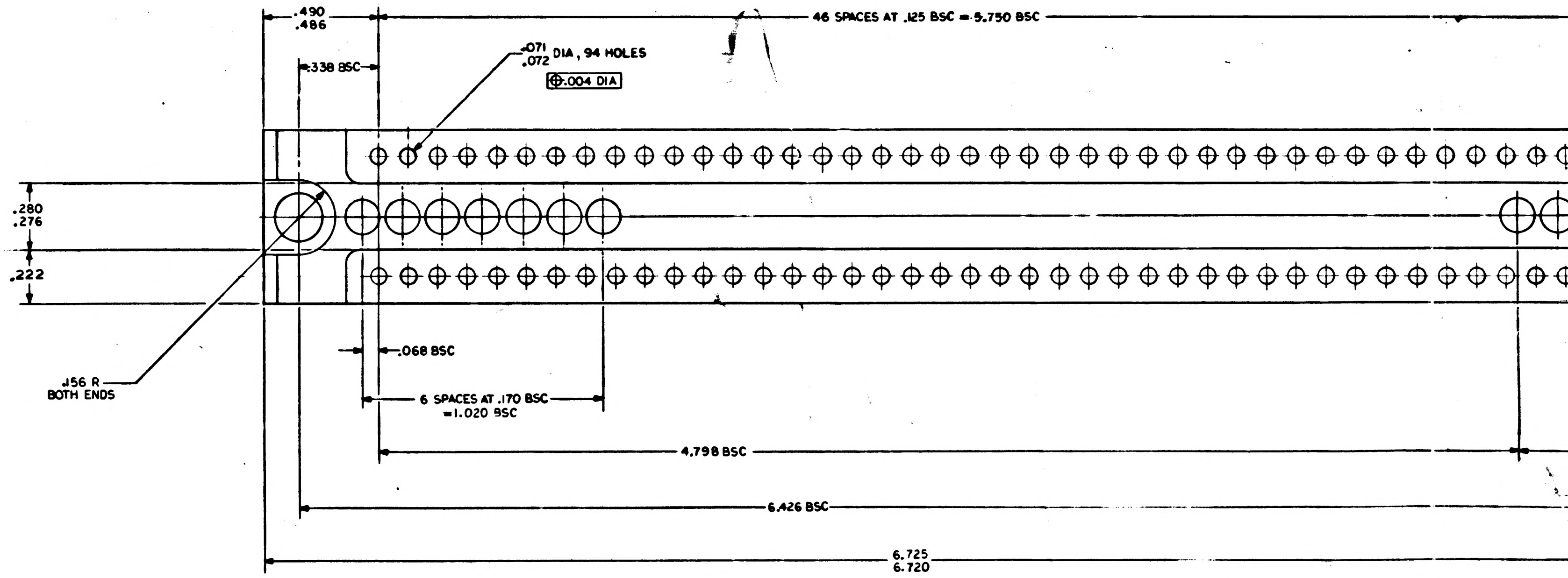
.490 .486
46 SPACES AT .125 BSC = 5.750 BSC
.338 BSC
.071 .072 DIA, 94 HOLES
⊕ .004 DIA
.280 .276
.222
.156 R BOTH ENDS
.068 BSC
6 SPACES AT .170 BSC =1.020 BSC
4.798 BSC
6.426 BSC
6.725 6.720

NOTES:

1. INTERPRET DRAWING IN ACCORDANCE WITH STANDARDS PRESCRIBED BY MIL-D-70327
2. MATERIAL: MAGNESIUM ALLOY ZK-60A-T5 PER QQ-M-31A
3. UNLESS OTHERWISE SPECIFIED ALL FILLETS AND RADII .005–.020
4. UNLESS OTHERWISE SPECIFIED $\overset{125}{\vee}$ ALL OVER
5. REMOVE ALL BURRS AND BREAK SHARP EDGES .005-.015
6. FINISH: ANODIZE PER MIL-M-317A, TYPE IV

INCHES 0 1 2
PHOTOGRAPHIC SCALE ONLY

1004194 C

SYM	DESCRIPTION	DATE	APPROVAL
A	REV PER IDRR 02896	5/63	
B	REVISED PER TDRR 02698		
C	REVISED PER TDRR 04282		

REVISIONS TDRR 02048

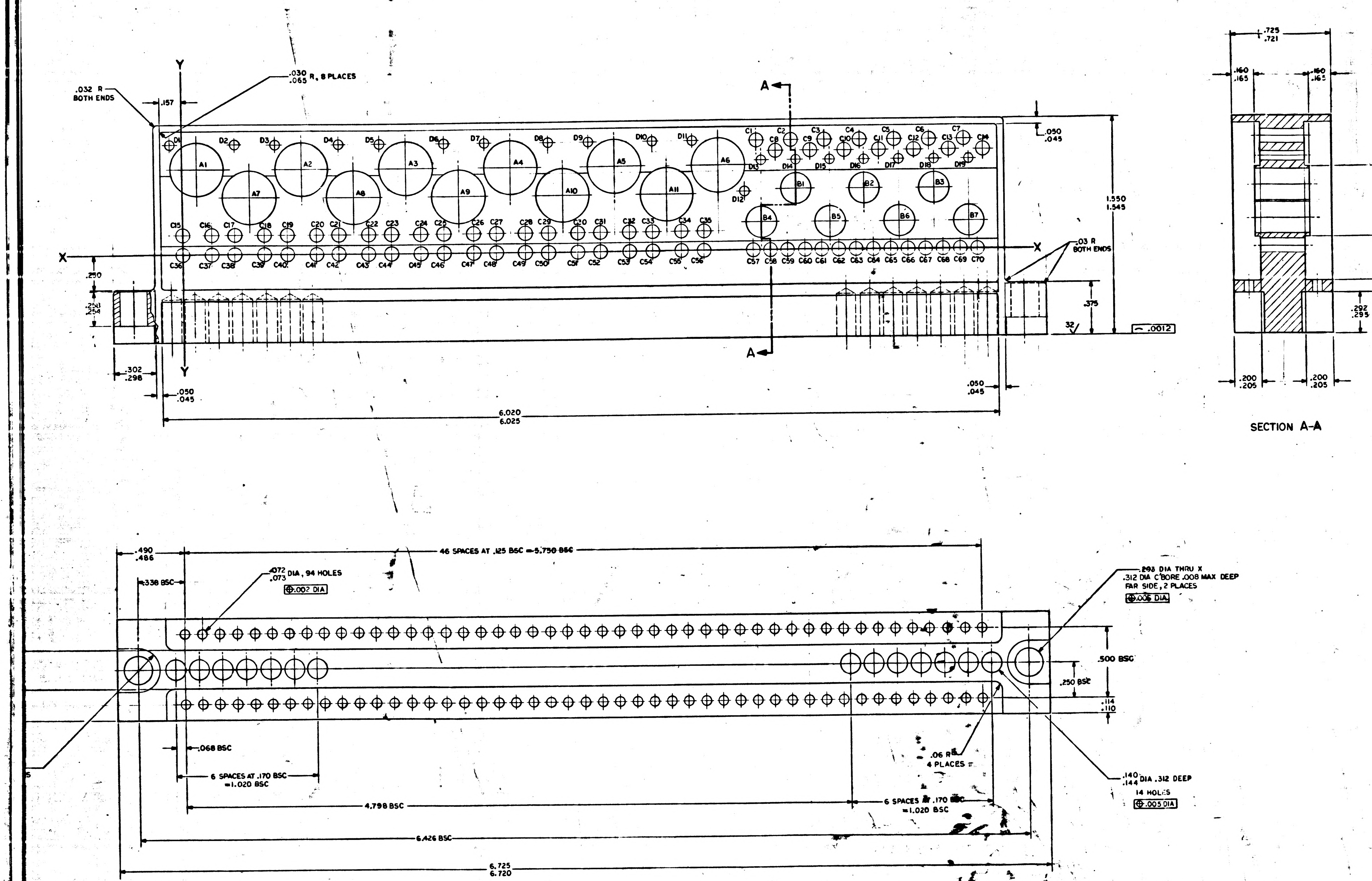

.032 R BOTH ENDS
.157
.030 .065 R, 8 PLACES
Y
A
X
A1
A2
A3
A4
A5
A6
A7
A8
A9
A10
A11
B1
B2
B3
B4
B5
B6
B7
.050 .045
1.550 1.545
.03 R BOTH ENDS
.250
.250 .254
.375
32
⌒ .0012
.302 .298
.050 .045
6.020 6.025
.725 .721
.160 .165
.160 .165
.505 .500
.312 .317
.292 .295
.085 .080
.200 .205
.200 .205
SECTION A-A
.490 .486
.338 BSC
46 SPACES AT .125 BSC = 5.750 BSC
.072 .073 DIA, 94 HOLES
⊕ .002 DIA
.293 DIA THRU X .312 DIA C'BORE .008 MAX DEEP FAR SIDE, 2 PLACES
⊕ .005 DIA
.500 BSC
.250 BSC
.114 .110
.068 BSC
6 SPACES AT .170 BSC = 1.020 BSC
4.798 BSC
6 SPACES AT .170 BSC = 1.020 BSC
6.426 BSC
6.725 6.720
.06 R 4 PLACES
.140 .144 DIA .312 DEEP 14 HOLES
⊕ .005 DIA

QTY REQD	PART OR IDENTIFYING NO.	NOMENCLATURE OR DESCRIPTION	FIND NO.

LIST OF MATERIALS

1003125	
NEXT ASSY	USED ON
APPLICATION	

UNLESS OTHERWISE SPECIFIED DIMENSIONS ARE IN INCHES
TOLERANCES ON
FRACTIONS ± DECIMALS ±.05 ±.02 ANGLES ±
DO NOT SCALE THIS DRAWING
MATERIAL
SEE NOTE 2
HEAT TREATMENT
FINAL FINISH
SEE NOTE 9

MIT INSTRUMENTATION LAB
CAMBRIDGE, MASS
DRAWN W. Hegan DATE
CHECKED
APPROVAL
APPROVAL
NASA APPROVAL 7-17-63
MIT APPROVAL

MANNED SPACECRAFT CENTER
HOUSTON, TEXAS

HEADER HOUSING
INTERFACE MODULE
A19 OR A39

CODE IDENT NO
SIZE J
NASA DRAWING NO. 1004194
SCALE 4/1
WT
SHEET 1 OF 1

1004194 C

HOLE IDENT	X BASIC DIM	Y BASIC DIM	⌖ DIA	HOLE DIA	QTY
A1	.105	.610	.006	.381 .388	11
A2	.855	.610			
A3	1.605	.610			
A4	2.355	.610			
A5	3.105	.610			
A6	3.855	.610			
A7	.480	.405			
A8	1.230	.405			
A9	1.980	.405			
A10	2.730	.405			
A11	3.480	.405			
B1	4.417	.435	.006	.216 .220	7
B2	4.917	.435			
B3	5.417	.435			
B4	4.167	.200			
B5	4.667	.200			
B6	5.167	.200			
B7	5.667	.200			
C1	4.132	.785	.006	.100 .104	70
C2	4.382	.785			
C3	4.632	.785			
C4	4.882	.785			
C5	5.132	.785			
C6	5.382	.785			
C7	5.632	.785			
C8	4.277	.710			
C9	4.527	.710			
C10	4.777	.710			
C11	5.027	.710			
C12	5.277	.710			
C13	5.527	.710			
C14	5.777	.710			
C15	.000	.136			
C16	.210	.136			
C17	.374	.136			
C18	.584	.136			
C19	.748	.136			
C20	.960	.136			
C21	1.125	.136			
C22	1.335	.136			
C23	1.500	.136			
C24	1.710	.136			
C25	1.875	.136			
C26	2.085	.136			
C27	2.250	.136			
C28	2.460	.136			
C29	2.625	.136			
C30	2.835	.136			
C31	3.000	.136			
C32	3.210	.136			
C33	3.375	.136			
C34	3.585	.136			
C35	3.750	.136			
C36	.000	.000			
C37	.210	.000			
C38	.374	.000			
C39	.584	.000			
C40	.748	.000			
C41	.960	.000			
C42	1.125	.000			
C43	1.335	.000			
C44	1.500	.000			
C45	1.710	.000			
C46	1.875	.000			
C47	2.085	.000			
C48	2.250	.000			
C49	2.460	.000			
C50	2.625	.000			
C51	2.835	.000			
C52	3.000	.000			
C53	3.210	.000			
C54	3.375	.000			
C55	3.585	.000			
C56	3.750	.000			
C57	4.105	.000			
C58	4.229	.000			
C59	4.355	.000			
C60	4.479	.000			
C61	4.605	.000			
C62	4.729	.000			
C63	4.855	.000			
C64	4.979	.000			
C65	5.105	.000			
C66	5.229	.000			
C67	5.355	.000			
C68	5.479	.000			
C69	5.605	.000			
C70	5.729	.000			

HOLE IDENT	X BASIC DIM	Y BASIC DIM	⌖ DIA	HOLE DIA	QTY
D1	−.085	.785	.006	.058 .062	19
D2	.375	.785			
D3	.665	.785			
D4	1.125	.785			
D5	1.415	.785			
D6	1.875	.785			
D7	2.165	.785			
D8	2.625	.785			
D9	2.915	.785			
D10	3.375	.785			
D11	3.665	.785			
D12	4.045	.420			
D13	4.167	.640			
D14	4.417	.640			
D15	4.667	.640			
D16	4.917	.640			
D17	5.167	.640			
D18	5.417	.640			
D19	5.667	.640			

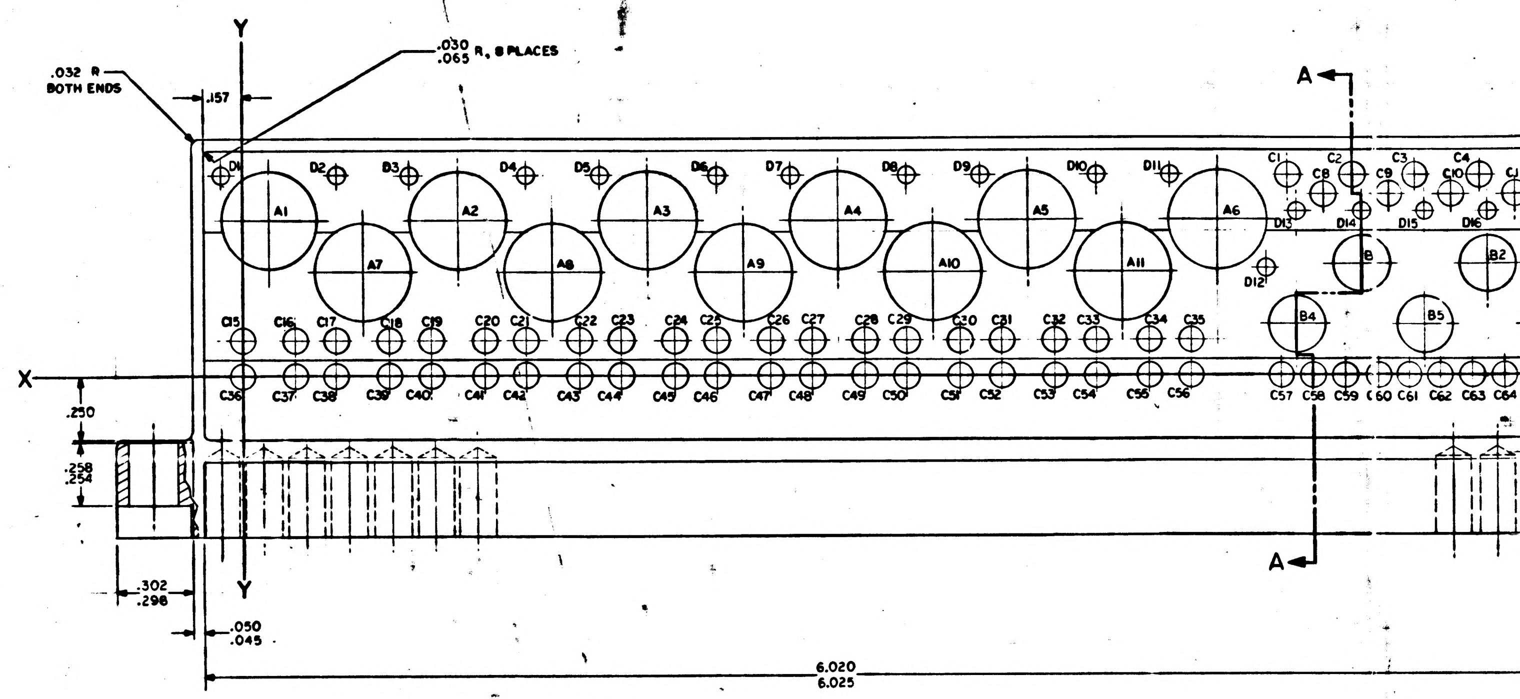
Y
.030
.065 R, 8 PLACES
.032 R
BOTH ENDS
.157
A
A1
A2
A3
A4
A5
A6
A7
A8
A9
A10
A11
B4
B5
B2
D1
D2
D3
D4
D5
D6
D7
D8
D9
D10
D11
D12
D13
D14
D15
D16
C1
C2
C3
C4
C8
C9
C10
C15
C16
C17
C18
C19
C20
C21
C22
C23
C24
C25
C26
C27
C28
C29
C30
C31
C32
C33
C34
C35
C36
C37
C38
C39
C40
C41
C42
C43
C44
C45
C46
C47
C48
C49
C50
C51
C52
C53
C54
C55
C56
C57
C58
C59
C60
C61
C62
C63
C64
X
.250
.258
.254
.302
.298
Y
.050
.045
6.020
6.025
A

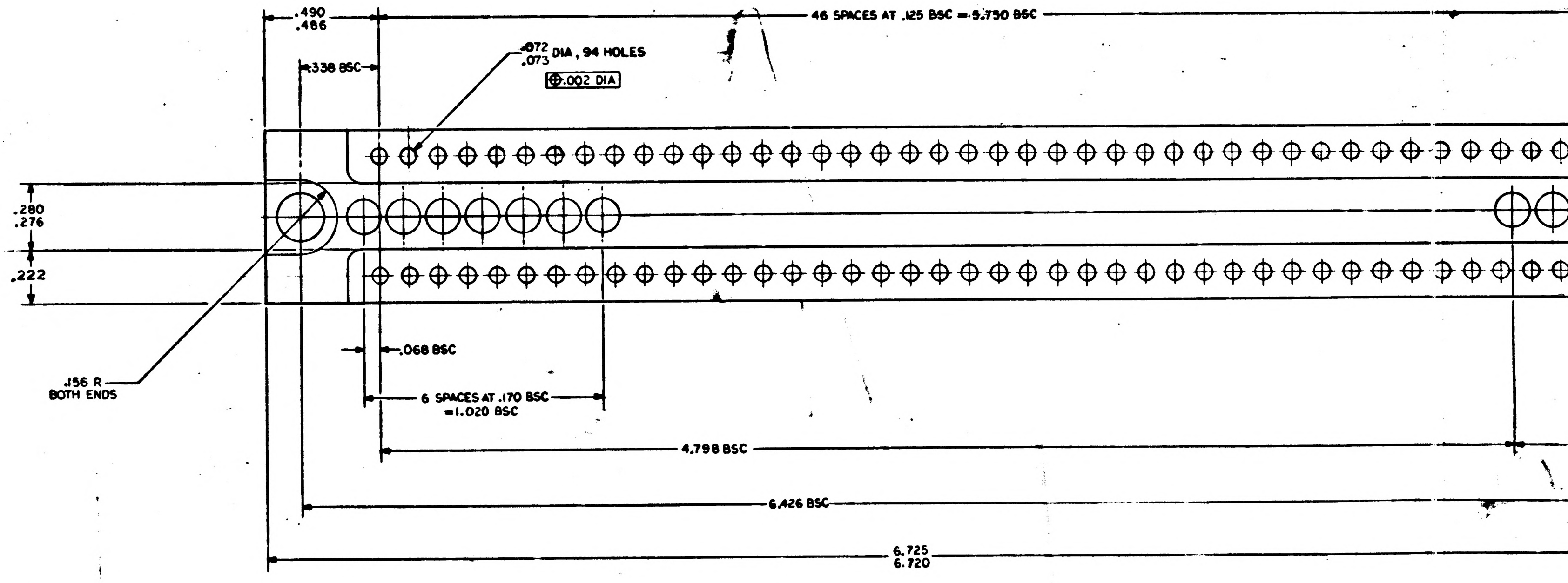
.490
.486
46 SPACES AT .125 BSC = 5.750 BSC
.072
.073 DIA, 94 HOLES
⌖.002 DIA
.338 BSC
.280
.276
.222
.156 R
BOTH ENDS
.068 BSC
6 SPACES AT .170 BSC
=1.020 BSC
4.798 BSC
6.426 BSC
6.725
6.720

NOTES:
1. INTERPRET DRAWING IN ACCORDANCE WITH STANDARDS PRESCRIBED BY MIL-D-70327
2. MATERIAL: MAGNESIUM ALLOY ZK-60A-T5 PER QQ-M-31A
3. UNLESS OTHERWISE SPECIFIED ALL FILLETS AND RADII .005–.020
4. UNLESS OTHERWISE SPECIFIED $\overset{125}{\bigtriangledown}$ ALL OVER
5. REMOVE ALL BURRS AND BREAK SHARP EDGES .005-.015
6. FINISH: ANODIZE PER MIL-M-3171, TYPE IV

1004194 C

REVISIONS TDRR 02048			
SYM	DESCRIPTION	DATE	APPROVAL

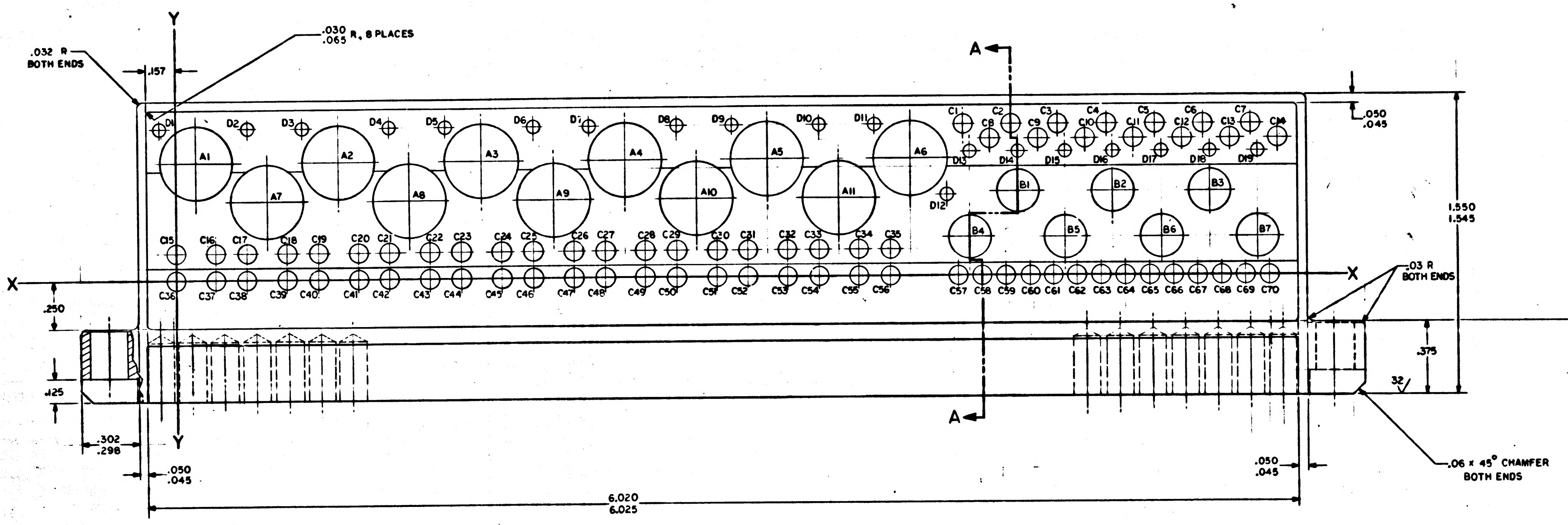
Y
.032 R BOTH ENDS
.157
.030
.065 R, 8 PLACES
A
D1
D2
D3
D4
D5
D6
D7
D8
D9
D10
D11
D12
D13
D14
D15
D16
D17
D18
D19
A1
A2
A3
A4
A5
A6
A7
A8
A9
A10
A11
B1
B2
B3
B4
B5
B6
B7
C1
C2
C3
C4
C5
C6
C7
C8
C9
C10
C11
C12
C13
C14
C15
C16
C17
C18
C19
C20
C21
C22
C23
C24
C25
C26
C27
C28
C29
C30
C31
C32
C33
C34
C35
C36
C37
C38
C39
C40
C41
C42
C43
C44
C45
C46
C47
C48
C49
C50
C51
C52
C53
C54
C55
C56
C57
C58
C59
C60
C61
C62
C63
C64
C65
C66
C67
C68
C69
C70
X
X
.050
.045
1.550
1.545
.03 R
BOTH ENDS
.250
.375
.125
32
.302
.298
.050
.045
.050
.045
.06 x 45° CHAMFER
BOTH ENDS
6.020
6.025
A
Y

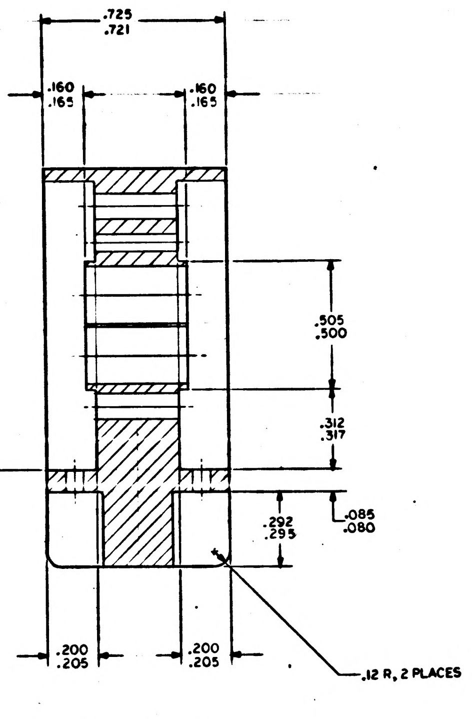
.725
.721
.160
.165
.160
.165
.505
.500
.312
.317
.085
.080
.292
.295
.200
.205
.200
.205
.12 R, 2 PLACES

SECTION A-A

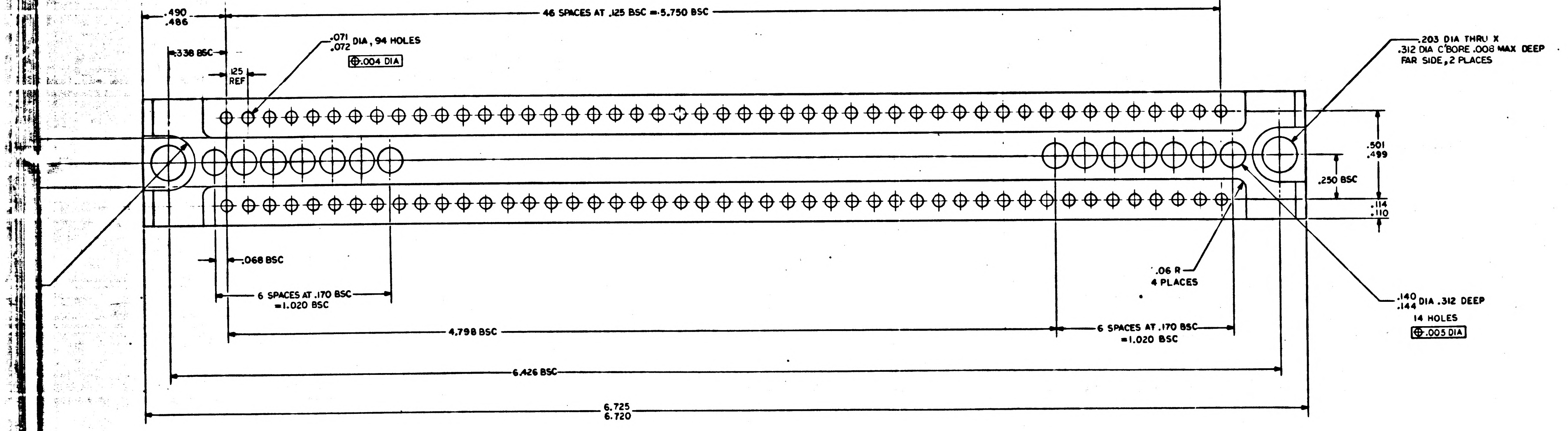
.490
.486
46 SPACES AT .125 BSC = 5.750 BSC
.338 BSC
.125
REF
.071
.072 DIA, 94 HOLES
⊕ .004 DIA
.203 DIA THRU X
.312 DIA C'BORE .008 MAX DEEP
FAR SIDE, 2 PLACES
.501
.499
.250 BSC
.114
.110
.068 BSC
6 SPACES AT .170 BSC
=1.020 BSC
.06 R
4 PLACES
.140
.144 DIA .312 DEEP
14 HOLES
⊕ .005 DIA
4.798 BSC
6 SPACES AT .170 BSC
=1.020 BSC
6.426 BSC
6.725
6.720

QTY REQD	PART OR IDENTIFYING NO.	NOMENCLATURE OR DESCRIPTION	FIND NO.

LIST OF MATERIALS

NEXT ASSY	USED ON
APPLICATION	

UNLESS OTHERWISE SPECIFIED
DIMENSIONS ARE IN INCHES
TOLERANCES ON
FRACTIONS ± — DECIMALS ±.005 ±.02 ANGLES ± —
DO NOT SCALE THIS DRAWING

MATERIAL
SEE NOTE 2

HEAT TREATMENT
—

FINAL FINISH
SEE NOTE 9

MIT
INSTRUMENTATION LAB
CAMBRIDGE, MASS.

DRAWN W. Horgan DATE 6-20-63
CHECKED
APPROVAL
APPROVAL 11/6/63
NASA APPROVAL W J Blaine 7-17-63
MIT APPROVAL 7/17/63

MANNED SPACECRAFT CENTER
HOUSTON, TEXAS

HEADER HOUSING
INTERFACE MODULE
A19 OR A39

CODE IDENT NO
SIZE J
NASA DRAWING NO. 1004194
SCALE 4:1
WT
SHEET 1 OF 1

1004194

MASTER

INCHES
PHOTOGRAPHIC SCALE ONLY

F2 1004194

HOLE IDENT	X BASIC DIM	Y BASIC DIM	⌖ DIA	HOLE DIA	QTY
A1	.105	.610	.006	.381 .388	11
A2	.855	.610			
A3	1.605	.610			
A4	2.355	.610			
A5	3.105	.610			
A6	3.855	.610			
A7	.480	.405			
A8	1.230	.405			
A9	1.980	.405			
A10	2.730	.405			
A11	3.480	.405			
B1	4.417	.435	.006	.216 .220	7
B2	4.917	.435			
B3	5.417	.435			
B4	4.167	.200			
B5	4.667	.200			
B6	5.167	.200			
B7	5.667				
C1	4.132	.785	.006	.100 .104	70
C2	4.382	.785			
C3	4.632	.785			
C4	4.882	.785			
C5	5.132	.785			
C6	5.382	.785			
C7	5.632	.785			
C8	4.277	.710			
C9	4.527	.710			
C10	4.777	.710			
C11	5.027	.710			
C12	5.277	.710			
C13	5.527	.710			
C14	5.777	.710			
C15	.000	.136			
C16	.210	.136			
C17	.374	.136			
C18	.584	.136			
C19	.748	.136			
C20	.960	.136			
C21	1.125	.136			
C22	1.355	.136			
C23	1.500	.136			
C24	1.710	.136			
C25	1.875	.136			
C26	1.085	.136			
C27	2.250	.136			
C28	2.460	.136			
C29	2.625	.136			
C30	2.835	.136			
C31	3.000	.136			
C32	3.210	.136			
C33	3.375	.136			
C34	3.585	.136			
C35	3.750	.136			
C36	.000	.000			
C37	.210	.000			
C38	.374	.000			
C39	.584	.000			
C40	.748	.000			
C41	.960	.000			
C42	1.125	.000			
C43	1.335	.000			
C44	1.500	.000			
C45	1.710	.000			
C46	1.875	.000			
C47	2.085	.000			
C48	2.250	.000			
C49	2.460	.000			
C50	2.625	.000			
C51	2.835	.000			
C52	3.000	.000			
C53	3.210	.000			
C54	3.375	.000			
C55	3.585	.000			
C56	3.750	.000			
C57	4.105	.000			
C58	4.229	.000			
C59	4.355	.000			
C60	4.479	.000			
C61	4.605	.000			
C62	4.729	.000			
C63	4.855	.000			
C64	4.979	.000			
C65	5.105	.000			
C66	5.229	.000			
C67	5.355	.000			
C68	5.479	.000			
C69	5.605	.000			
C70	5.729	.000			

HOLE IDENT	X BASIC DIM	Y BASIC DIM	⌖ DIA	HOLE DIA	QTY
D1	-.085	.785	.006	.058 .062	19
D2	.375	.785			
D3	.665	.785			
D4	1.125	.785			
D5	1.415	.785			
D6	1.875	.785			
D7	2.165	.785			
D8	2.625	.785			
D9	2.915	.785			
D10	3.375	.785			
D11	3.665	.785			
D12	4.045	.420			
D13	4.167	.640			
D14	4.417	.640			
D15	4.667	.640			
D16	4.917	.640			
D17	5.167	.640			
D18	5.417	.640			
D19	5.667	.640			

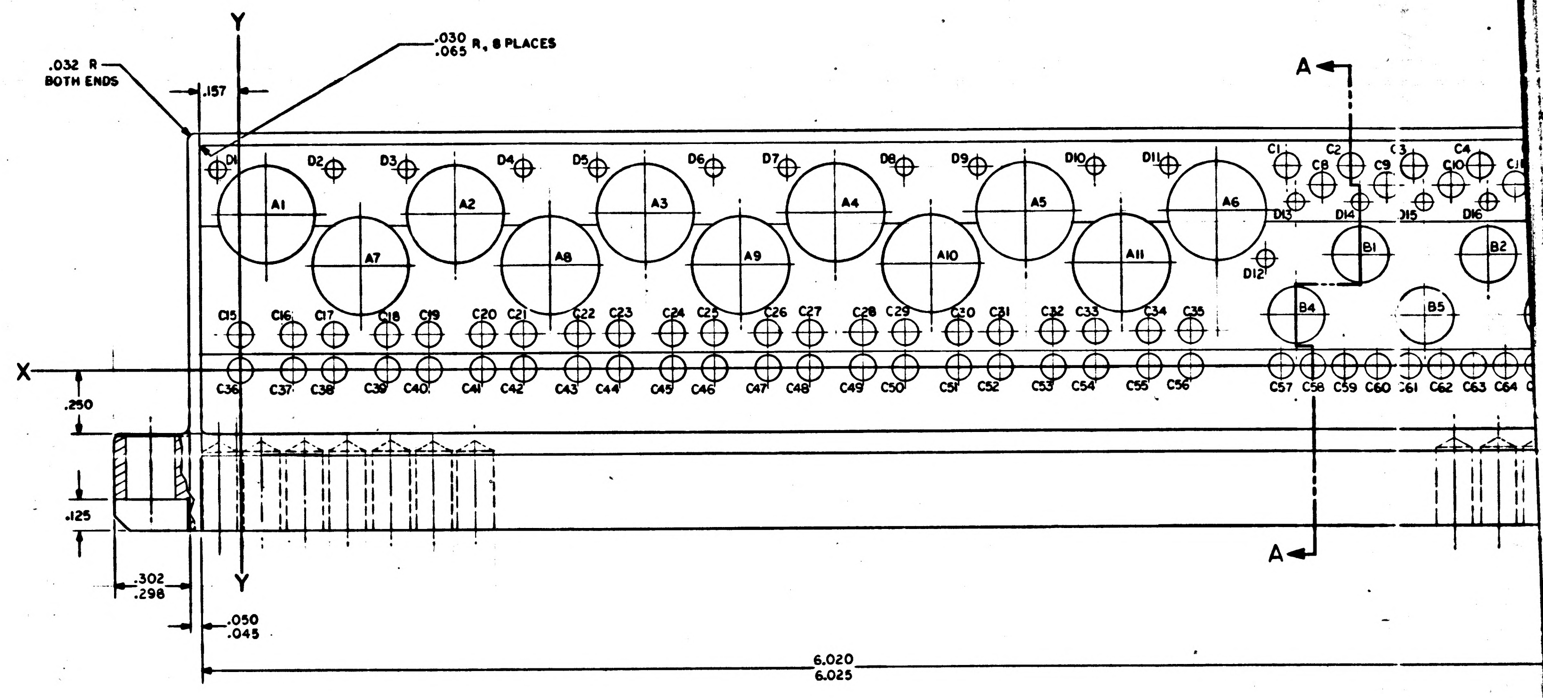
Y
.032 R
BOTH ENDS
.030
.065 R, 8 PLACES
.157
A
A1 A2 A3 A4 A5 A6 A7 A8 A9 A10 A11
B1 B2 B4 B5
D1 D2 D3 D4 D5 D6 D7 D8 D9 D10 D11 D12 D13 D14 D15 D16
C1 C2 C3 C4 C8 C9 C10
C15 C16 C17 C18 C19 C20 C21 C22 C23 C24 C25 C26 C27 C28 C29 C30 C31 C32 C33 C34 C35
C36 C37 C38 C39 C40 C41 C42 C43 C44 C45 C46 C47 C48 C49 C50 C51 C52 C53 C54 C55 C56
C57 C58 C59 C60 C61 C62 C63 C64
X
.250
.125
.302
.298
Y
.050
.045
6.020
6.025

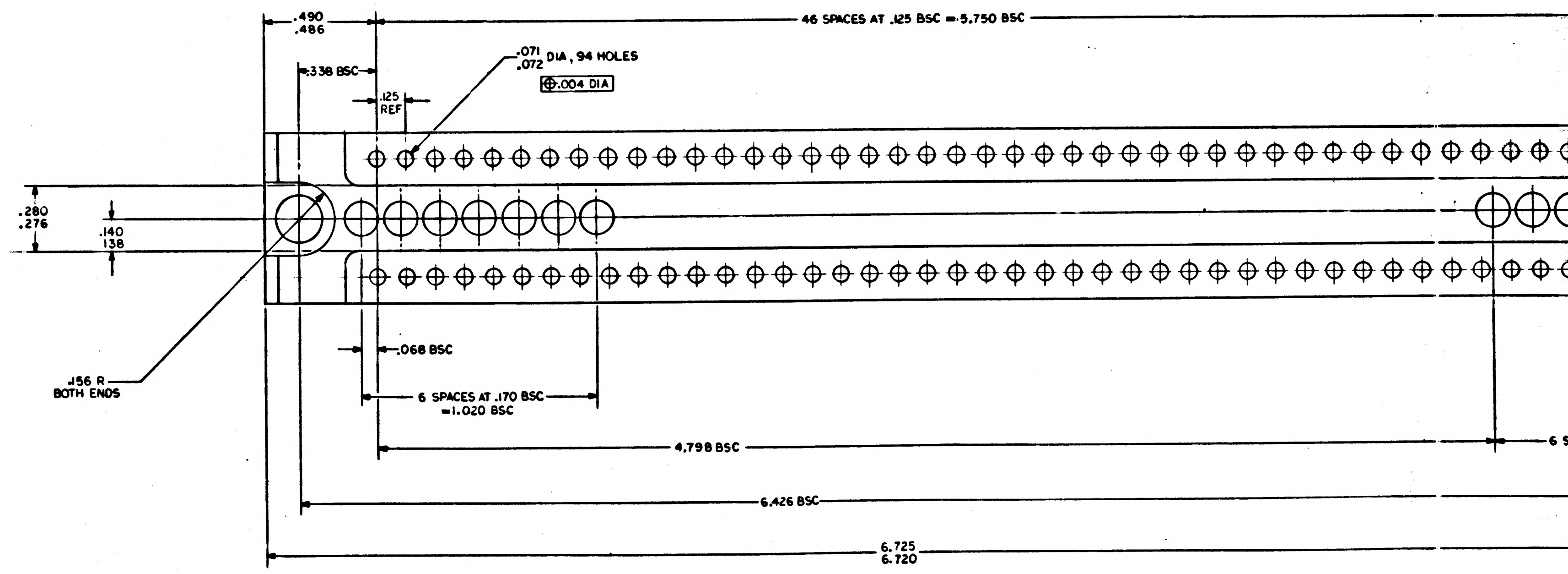
.490
.486
46 SPACES AT .125 BSC = 5.750 BSC
.338 BSC
.071
.072 DIA, 94 HOLES
⌖ .004 DIA
.125
REF
.280
.276
.140
138
.068 BSC
.156 R
BOTH ENDS
6 SPACES AT .170 BSC
=1.020 BSC
4.798 BSC
6.426 BSC
6.725
6.720

NOTES:

1. INTERPRET DRAWING IN ACCORDANCE WITH STANDARDS PRESCRIBED BY MIL-D-70327
2. MATERIAL: MAGNESIUM ALLOY ZK-60A-T5 PER QQ-M-31A
3. UNLESS OTHERWISE SPECIFIED ALL FILLETS AND RADII .005–.020
4. TRUE POSITIONING AS SHOWN IN CHART
5. FLATNESS TO BE WITHIN .010
6. UNLESS OTHERWISE SPECIFIED $\sqrt{}^{125}$ ALL OVER
7. ALL FLAT SURFACES TO BE SQUARE AND/OR PARALLEL WITHIN .010
8. REMOVE ALL BURRS AND BREAK SHARP EDGES .005-.015
9. FINISH: ANODIZE PER MIL-M-3171A, TYPE IV

INCHES
PHOTOGRAPHIC SCALE ONLY

REVISIONS	TDRR 02048		
SYM	DESCRIPTION	DATE	APPROVAL
A	REVISED PER TDRR 02700		RPK

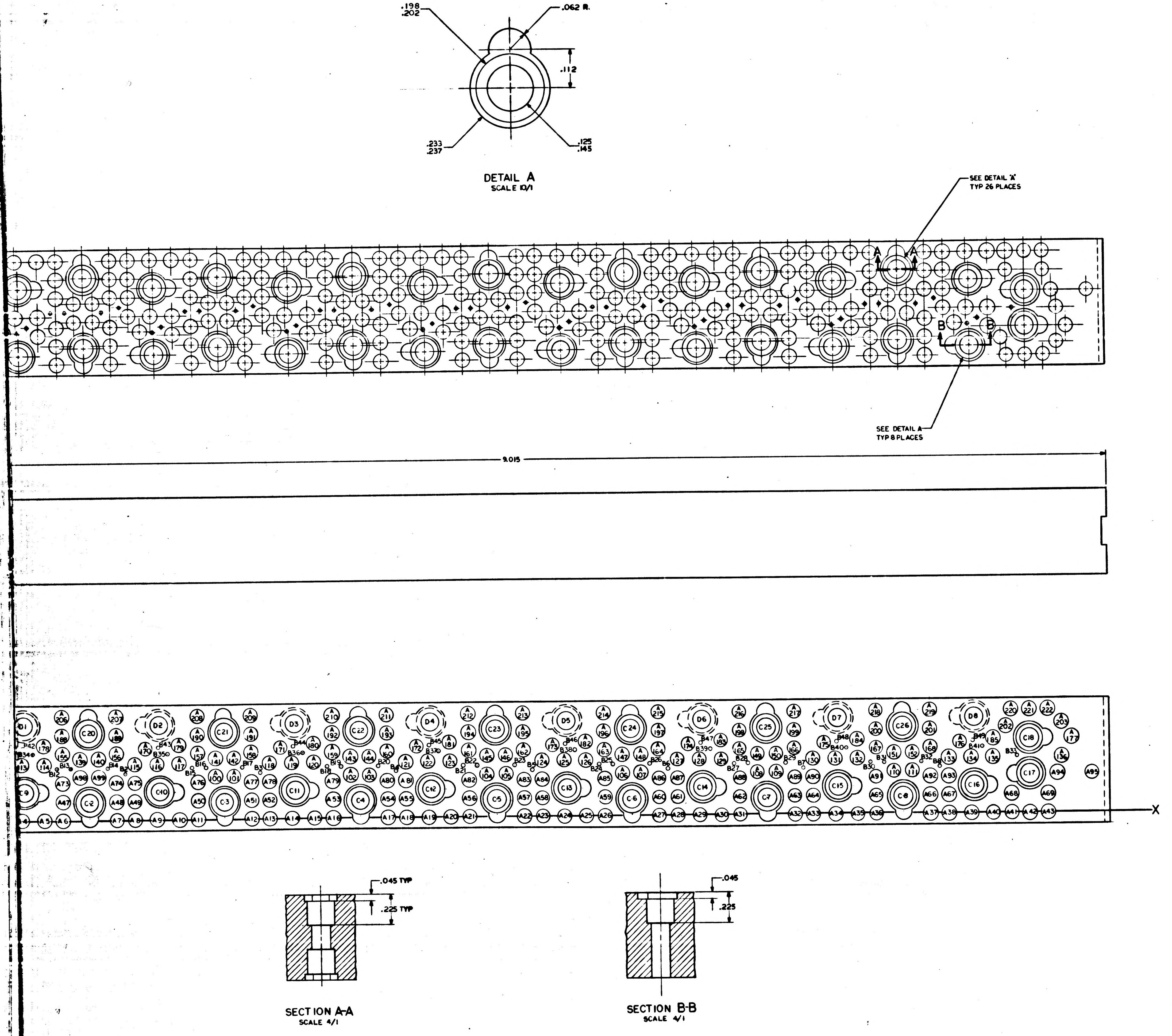

.198
.202
.062 R.
.112
.233
.237
.125
.145
DETAIL A
SCALE 10/1
SEE DETAIL "A"
TYP 26 PLACES
SEE DETAIL A
TYP 8 PLACES
A
A
B
B
9.015
X
.045 TYP
.225 TYP
.045
.225
SECTION A-A
SCALE 4/1
SECTION B-B
SCALE 4/1

QTY REQD	PART OR IDENTIFYING NO.	NOMENCLATURE OR DESCRIPTION	FIND NO.

LIST OF MATERIALS

NEXT ASSY	USED ON

APPLICATION

UNLESS OTHERWISE SPECIFIED
DIMENSIONS ARE IN INCHES
TOLERANCES ON
FRACTIONS ± — DECIMALS ± .005 ANGLES ± —
DO NOT SCALE THIS DRAWING

MATERIAL
SEE NOTE 2

HEAT TREATMENT
—

FINAL FINISH
SEE NOTE 2

MIT
INSTRUMENTATION LAB
CAMBRIDGE, MASS

DRAWN DATE 6/3/63
CHECKED
APPROVAL
APPROVAL
NASA APPROVAL
MIT APPROVAL

MANNED SPACECRAFT CENTER
HOUSTON, TEXAS

HOLDER, COMPONENT
ROPE STRAND SELECT MODULE

CODE IDENT NO. | SIZE J | NASA DRAWING NO. 1004195
SCALE 4/1 | WT | SHEET 1 OF 1

1004195 A

NOTICE — WHEN GOVERNMENT DRAWINGS, SPECIFICATIONS, OR OTHER DATA ARE USED FOR ANY PURPOSE OTHER THAN IN CONNECTION WITH A DEFINITELY RELATED GOVERNMENT PROCUREMENT OPERATION, THE UNITED STATES GOVERNMENT THEREBY INCURS NO RESPONSIBILITY NOR ANY OBLIGATION WHATSOEVER; AND THE FACT THAT THE GOVERNMENT MAY HAVE FORMULATED, FURNISHED, OR IN ANY WAY SUPPLIED THE SAID DRAWINGS, SPECIFICATIONS, OR OTHER DATA IS NOT TO BE REGARDED BY IMPLICATION OR OTHERWISE AS IN ANY MANNER LICENSING THE HOLDER OR ANY OTHER PERSON OR CORPORATION, OR CONVEYING ANY RIGHTS OR PERMISSION TO MANUFACTURE, USE, OR SELL ANY PATENTED INVENTION THAT MAY IN ANY WAY BE RELATED THERETO.

HOLE IDENT	BASIC X DIM	BASIC Y DIM	HOLE DIA	⌖ TOL	QTY.
A 1	0.000	0.000	.100 .104	.005	108
A 2	0.400				
A 3	0.536				
A 4	0.700				
A 5	0.862				
A 6	1.000				
A 7	1.400				
A 8	1.536				
A 9	1.700				
A 10	1.862				
A 11	2.000				
A 12	2.400				
A 13	2.536				
A 14	2.700				
A 15	2.862				
A 16	3.000				
A 17	3.400				
A 18	3.536				
A 19	3.700				
A 20	3.862				
A 21	4.000				
A 22	4.400				
A 23	4.536				
A 24	4.700				
A 25	4.862				
A 26	5.000				
A 27	5.400				
A 28	5.536				
A 29	5.700				
A 30	5.862				
A 31	6.000				
A 32	6.400				
A 33	6.536				
A 34	6.700				
A 35	6.862				
A 36	7.000				
A 37	7.400				
A 38	7.536				
A 39	7.700				
A 40	7.862				
A 41	8.000				
A 42	8.137				
A 43	8.274	0.000			
A 44	0.000	0.136			
A 45	0.400				
A 46	0.536				
A 47	1.000				
A 48	1.400				
A 49	1.536				
A 50	2.000				
A 51	2.400				
A 52	2.536				
A 53	3.000				
A 54	3.400				
A 55	3.536				
A 56	4.000				
A 57	4.400				
A 58	4.536				
A 59	5.000				
A 60	5.400				
A 61	5.536				
A 62	6.000				
A 63	6.400				
A 64	6.536				
A 65	7.000				
A 66	7.400				
A 67	7.536	0.136			
A 68	8.000	0.137			
A 69	8.274	0.137			
A 70	0.000	0.274			
A 71	0.400				
A 72	0.536				
A 73	1.000				
A 74	1.400				
A 75	1.536				
A 76	2.000				
A 77	2.400				
A 78	2.536				
A 79	3.000				
A 80	3.400				
A 81	3.536				
A 82	4.000				
A 83	4.400				
A 84	4.536				
A 85	5.000				
A 86	5.400				
A 87	5.536				
A 88	6.000				
A 89	6.400				
A 90	6.536				
A 91	7.000				
A 92	7.400				
A 93	7.536	0.274			
A 94	8.342	0.284			
A 95	8.600	0.284			
A 96	0.132	0.312			
A 97	0.268				
A 98	1.132				
A 99	1.268				
A 100	2.132				
A 101	2.268				
A 102	3.132				
A 103	3.268				
A 104	4.132				
A 105	4.268				
A 106	5.132				
A 107	5.268				
A 108	6.132	0.312			

HOLE IDENT	BASIC X DIM	BASIC Y DIM	HOLE DIA	⌖ TOL	QTY
A 109	6.268	0.312	.100 .104	.005	108
A 110	7.132	0.312			
A 111	7.268	0.312			
A 112	0.536	0.410			
A 113	0.700				
A 114	0.862				
A 115	1.536				
A 116	1.700				
A 117	1.862				
A 118	2.536				
A 119	2.700				
A 120	2.862				
A 121	3.536				
A 122	3.700				
A 123	3.862				
A 124	4.536				
A 125	4.700				
A 126	4.862				
A 127	5.536				
A 128	5.700				
A 129	5.862				
A 130	6.536				
A 131	6.700				
A 132	6.862				
A 133	7.536				
A 134	7.700				
A 135	7.862	0.410			
A 136	8.410	0.412			
A 137	0.132	0.450			
A 138	0.268				
A 139	1.132				
A 140	1.268				
A 141	2.132				
A 142	2.268				
A 143	3.132				
A 144	3.268				
A 145	4.132				
A 146	4.268				
A 147	5.132				
A 148	5.268				
A 149	6.132				
A 150	6.268				
A 151	7.132				
A 152	7.268	0.450			
A 153	0.000	0.483			
A 154	0.400				
A 155	1.000				
A 156	1.400				
A 157	2.000				
A 158	2.400				
A 159	3.000				
A 160	3.400				
A 161	4.000				
A 162	4.400				
A 163	5.000				
A 164	5.400				
A 165	6.000				
A 166	6.400				
A 167	7.000				
A 168	7.400	0.483			
A 169	0.620	0.520			
A 170	1.620				
A 171	2.620				
A 172	3.620				
A 173	4.620				
A 174	5.620				
A 175	6.620				
A 176	7.620	0.520			
A 177	8.450	0.545			
A 178	0.862	0.546			
A 179	1.862				
A 180	2.862				
A 181	3.362				
A 182	4.862				
A 183	5.862				
A 184	6.862				
A 185	7.862	0.546			
A 186	0.000	0.619			
A 187	0.400				
A 188	1.000				
A 189	1.400				
A 190	2.000				
A 191	2.400				
A 192	3.000				
A 193	3.400				
A 194	4.000				
A 195	4.400				
A 196	5.000				
A 197	5.400				
A 198	6.000				
A 199	6.400				
A 200	7.000				
A 201	7.400	0.619			
A 202	7.960	0.632			
A 203	8.375	0.663			
A 204	0.000	0.756			
A 205	0.400				
A 206	1.000				
A 207	1.400				
A 208	2.000				
A 209	2.400				
A 210	3.000				
A 211	3.400				
A 212	4.000				
A 213	4.400				
A 214	5.000				
A 215	5.400				
A 216	6.000	0.756			

HOLE IDENT	BASIC X DIM	BASIC Y DIM	HOLE DIA	⌖ TOL	QTY
A 217	6.400	0.756	.100 .104	.005	6
A 218	7.000				
A 219	7.400				
A 220	8.000				
A 221	8.137				
A 222	8.274	0.756			
B 1	0.470	0.340	.023 .027	.005	49
B 2	1.470				
B 3	2.470				
B 4	3.470				
B 5	4.470				
B 6	5.470				
B 7	6.470				
B 8	7.470	0.340			
B 9	-0.040	0.378			
B 10	0.063				
B 11	0.335				
B 12	0.960				
B 13	1.063				
B 14	1.335				
B 15	1.960				
B 16	2.063				
B 17	2.335				
B 18	2.960				
B 19	3.063				
B 20	3.335				
B 21	3.960				
B 22	4.063				
B 23	4.335				
B 24	4.960				
B 25	5.063				
B 26	5.335				
B 27	5.960				
B 28	6.063				
B 29	6.335				
B 30	6.960				
B 31	7.063				
B 32	7.335	0.378			
B 33	8.040	0.412			
B 34	0.784	0.482			
B 35	1.784				
B 36	2.784				
B 37	3.784				
B 38	4.784				
B 39	5.784				
B 40	6.784				
B 41	7.784	0.482			
B 42	0.715	0.527			
B 43	1.715				
B 44	2.715				
B 45	3.715				
B 46	4.715				
B 47	5.715				
B 48	6.715				
B 49	7.715	0.527			
C 1	0.200	0.125	SEE DETAIL A AND SECTION A-A	.005	26
C 2	1.200				
C 3	2.200				
C 4	3.200				
C 5	4.200				
C 6	5.200				
C 7	6.200				
C 8	7.200	0.125			
C 9	0.724	0.204			
C 10	1.724				
C 11	2.724				
C 12	3.724				
C 13	4.724				
C 14	5.724				
C 15	6.724				
C 16	7.724	0.204			
C 17	8.137	0.284			
C 18	8.137	0.454			
C 19	0.200	0.640			
C 20	1.200				
C 21	2.200				
C 22	3.200				
C 23	4.200				
C 24	5.200				
C 25	6.200				
C 26	7.200	0.640			
D 1	0.724	0.694	SEE DETAIL A AND SECTION BB	.005	8
D 2	1.724				
D 3	2.724				
D 4	3.724				
D 5	4.724				
D 6	5.724				
D 7	6.724				
D 8	7.724	0.694			

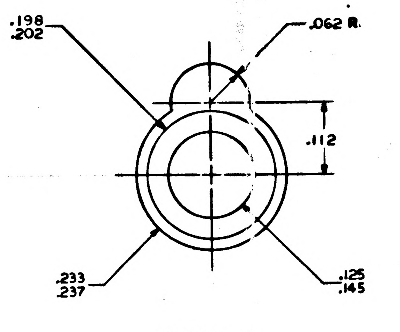

DETAIL A
SCALE 10/1

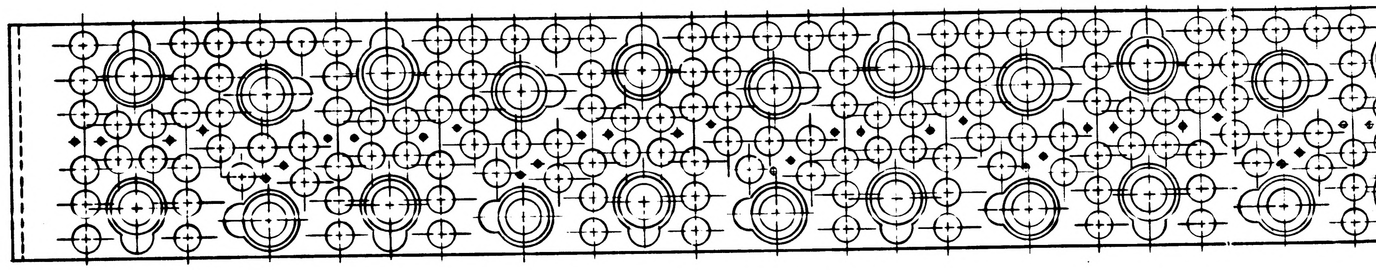

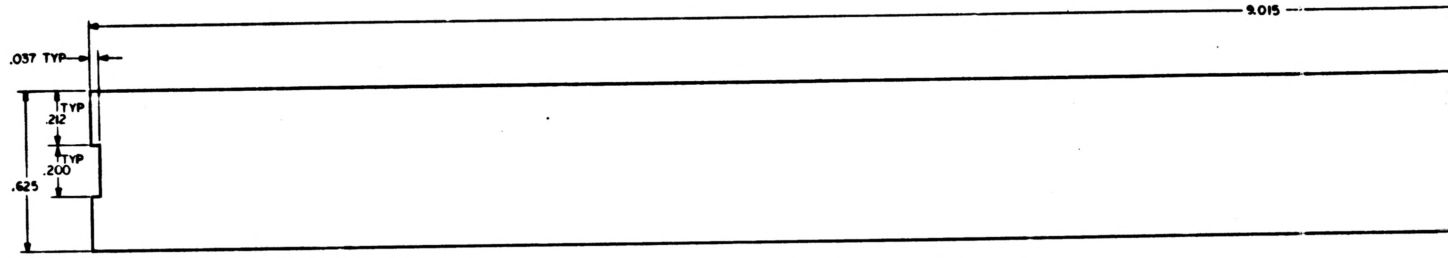

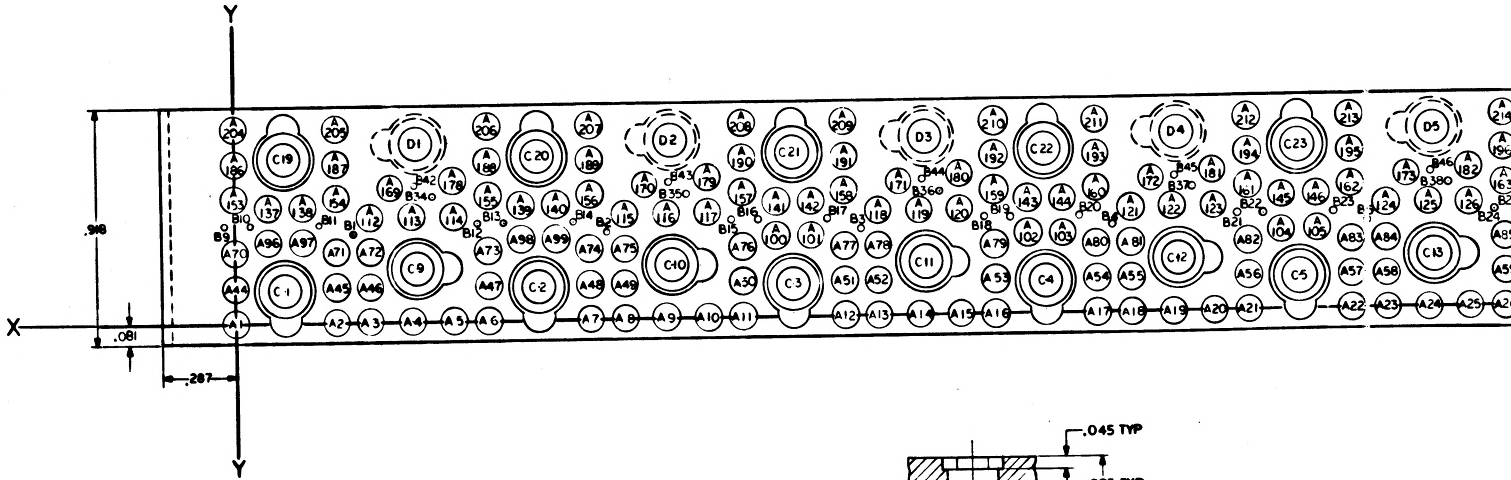

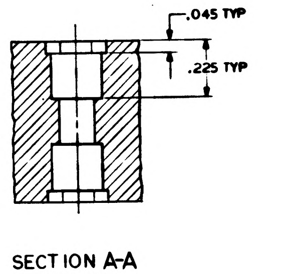

SECTION A-A
SCALE 4/1

NOTES:

1. INTERPRET DRAWING IN ACCORDANCE WITH STANDARDS PRESCRIBED BY MIL-D-70327
2. MATL: PLASTIC CLEAR ACRILIC PER MIL-P-8184 FINISH B
3. TRUE POSITION AS SHOWN IN CHART
4. REMOVE ALL SHARP EDGES

INCHES
0 1 2
PHOTOGRAPHIC SCALE ONLY

SYM	DESCRIPTION	DATE	APPROVAL
A	REVISED PER TDRR 02708	8/21/63	RPK
B	REVISED PER TDRR 02151	9/6/63	RPK

REVISIONS TDRR 02098

1004195 B

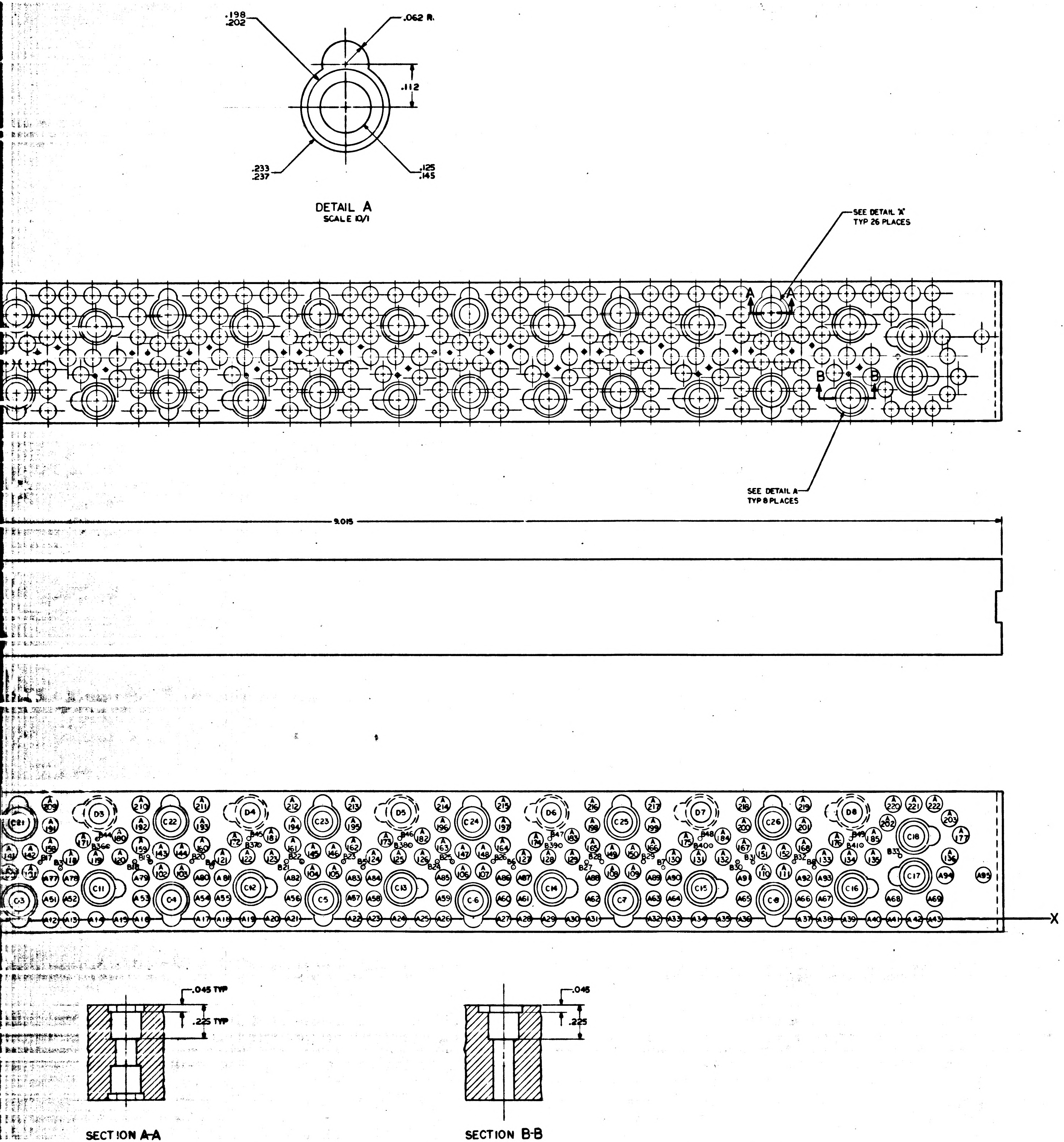

.198
.202
.062 R.
.112
.233
.237
.125
.145
DETAIL A
SCALE 10/1
SEE DETAIL "A"
TYP 26 PLACES
A
A
B
B
SEE DETAIL A
TYP 8 PLACES
9.015
D3
D4
D5
D6
D7
D8
C21
C22
C23
C24
C25
C26
C18
C3
C11
C4
C12
C5
C13
C6
C14
C7
C15
C8
C16
C17
X
.045 TYP
.225 TYP
.045
.225
SECTION A-A
SCALE 4/1
SECTION B-B
SCALE 4/1

QTY REQD	PART OR IDENTIFYING NO.	NOMENCLATURE OR DESCRIPTION	FIND NO.

LIST OF MATERIALS

NEXT ASSY	USED ON
1003131	

APPLICATION

UNLESS OTHERWISE SPECIFIED DIMENSIONS ARE IN INCHES

TOLERANCES ON FRACTIONS ± 1/64 DECIMALS ± .005 ANGLES ± 1/4

DO NOT SCALE THIS DRAWING

MATERIAL SEE NOTE 2

HEAT TREATMENT —"—

FINAL FINISH SEE NOTE 2

M I T
INSTRUMENTATION LAB
CAMBRIDGE, MASS

DRAWN DATE 6/3/63

CHECKED

APPROVAL

APPROVAL

NASA APPROVAL

MIT APPROVAL 7/17/63

MANNED SPACECRAFT CENTER
HOUSTON, TEXAS

HOLDER, COMPONENT
ROPE STRAND SELECT MODULE

CODE IDENT NO.

SIZE J

NASA DRAWING NO. 1004195

SCALE 4/1

WT

SHEET 1 OF 1

1004195 B

MASTER

INCHES
0 1 2
PHOTOGRAPHING SCALE ONLY

F2

NOTICE — WHEN GOVERNMENT DRAWINGS, SPECIFICATIONS, OR OTHER DATA ARE USED FOR ANY PURPOSE OTHER THAN IN CONNECTION WITH A DEFINITELY RELATED GOVERNMENT PROCUREMENT OPERATION, THE UNITED STATES GOVERNMENT THEREBY INCURS NO RESPONSIBILITY NOR ANY OBLIGATION WHATSOEVER; AND THE FACT THAT THE GOVERNMENT MAY HAVE FORMULATED, FURNISHED, OR IN ANY WAY SUPPLIED THE SAID DRAWINGS, SPECIFICATIONS, OR OTHER DATA IS NOT TO BE REGARDED BY IMPLICATION OR OTHERWISE AS IN ANY MANNER LICENSING THE HOLDER OR ANY OTHER PERSON OR CORPORATION, OR CONVEYING ANY RIGHTS OR PERMISSION TO MANUFACTURE, USE, OR SELL ANY PATENTED INVENTION THAT MAY IN ANY WAY BE RELATED THERETO.

HOLE IDENT	BASIC X DIM	BASIC Y DIM	HOLE DIA	⊕ TOL	QTY.
A 1	0.000	0.000	.100 .104	.005	108
A 2	0.400				
A 3	0.536				
A 4	0.700				
A 5	0.862				
A 6	1.000				
A 7	1.400				
A 8	1.536				
A 9	1.700				
A 10	1.862				
A 11	2.000				
A 12	2.400				
A 13	2.536				
A 14	2.700				
A 15	2.862				
A 16	3.000				
A 17	3.400				
A 18	3.536				
A 19	3.700				
A 20	3.862				
A 21	4.000				
A 22	4.400				
A 23	4.536				
A 24	4.700				
A 25	4.862				
A 26	5.000				
A 27	5.400				
A 28	5.536				
A 29	5.700				
A 30	5.862				
A 31	6.000				
A 32	6.400				
A 33	6.536				
A 34	6.700				
A 35	6.862				
A 36	7.000				
A 37	7.400				
A 38	7.536				
A 39	7.700				
A 40	7.862				
A 41	8.000				
A 42	8.137				
A 43	8.274	0.000			
A 44	0.000	0.136			
A 45	0.400				
A 46	0.536				
A 47	1.000				
A 48	1.400				
A 49	1.536				
A 50	2.000				
A 51	2.400				
A 52	2.536				
A 53	3.000				
A 54	3.400				
A 55	3.536				
A 56	4.000				
A 57	4.400				
A 58	4.536				
A 59	5.000				
A 60	5.400				
A 61	5.536				
A 62	6.000				
A 63	6.400				
A 64	6.536				
A 65	7.000				
A 66	7.400				
A 67	7.536	0.136			
A 68	8.000	0.137			
A 69	8.274	0.137			
A 70	0.000	0.274			
A 71	0.400				
A 72	0.536				
A 73	1.000				
A 74	1.400				
A 75	1.536				
A 76	2.000				
A 77	2.400				
A 78	2.536				
A 79	3.000				
A 80	3.400				
A 81	3.536				
A 82	4.000				
A 83	4.400				
A 84	4.536				
A 85	5.000				
A 86	5.400				
A 87	5.536				
A 88	6.000				
A 89	6.400				
A 90	6.536				
A 91	7.000				
A 92	7.400				
A 93	7.536	0.274			
A 94	8.342	0.284			
A 95	8.600	0.284			
A 96	0.132	0.312			
A 97	0.268				
A 98	1.132				
A 99	1.268				
A 100	2.132				
A 101	2.268				
A 102	3.132				
A 103	3.268				
A 104	4.132				
A 105	4.268				
A 106	5.132				
A 107	5.268				
A 108	6.132	0.312			

HOLE IDENT	BASIC X DIM	BASIC Y DIM	HOLE DIA	⊕ TOL	QTY
A 109	6.268	0.312	.100 .104	.005	108
A 110	7.132	0.312			
A 111	7.268	0.312			
A 112	0.536	0.410			
A 113	0.700				
A 114	0.862				
A 115	1.536				
A 116	1.700				
A 117	1.862				
A 118	2.536				
A 119	2.700				
A 120	2.862				
A 121	3.536				
A 122	3.700				
A 123	3.862				
A 124	4.536				
A 125	4.700				
A 126	4.862				
A 127	5.536				
A 128	5.700				
A 129	5.862				
A 130	6.536				
A 131	6.700				
A 132	6.862				
A 133	7.536				
A 134	7.700				
A 135	7.862	0.410			
A 136	8.410	0.412			
A 137	0.132	0.450			
A 138	0.268				
A 139	1.132				
A 140	1.268				
A 141	2.132				
A 142	2.268				
A 143	3.132				
A 144	3.268				
A 145	4.132				
A 146	4.268				
A 147	5.132				
A 148	5.268				
A 149	6.132				
A 150	6.268				
A 151	7.132				
A 152	7.268	0.450			
A 153	0.000	0.483			
A 154	0.400				
A 155	1.000				
A 156	1.400				
A 157	2.000				
A 158	2.400				
A 159	3.000				
A 160	3.400				
A 161	4.000				
A 162	4.400				
A 163	5.000				
A 164	5.400				
A 165	6.000				
A 166	6.400				
A 167	7.000				
A 168	7.400	0.483			
A 169	0.620	0.520			
A 170	1.620				
A 171	2.620				
A 172	3.620				
A 173	4.620				
A 174	5.620				
A 175	6.620				
A 176	7.620	0.520			
A 177	8.450	0.545			
A 178	0.862	0.546			
A 179	1.862				
A 180	2.862				
A 181	3.862				
A 182	4.862				
A 183	5.862				
A 184	6.862				
A 185	7.862	0.546			
A 186	0.000	0.619			
A 187	0.400				
A 188	1.000				
A 189	1.400				
A 190	2.000				
A 191	2.400				
A 192	3.000				
A 193	3.400				
A 194	4.000				
A 195	4.400				
A 196	5.000				
A 197	5.400				
A 198	6.000				
A 199	6.400				
A 200	7.000				
A 201	7.400	0.619			
A 202	7.960	0.632			
A 203	8.375	0.663			
A 204	0.000	0.756			
A 205	0.400				
A 206	1.000				
A 207	1.400				
A 208	2.000				
A 209	2.400				
A 210	3.000				
A 211	3.400				
A 212	4.000				
A 213	4.400				
A 214	5.000				
A 215	5.400				
A 216	6.000	0.756			

HOLE IDENT	BASIC X DIM	BASIC Y DIM	HOLE DIA	⊕ TOL	QTY
A 217	6.400	0.756	.100 .104	.005	6
A 218	7.000				
A 219	7.400				
A 220	8.000				
A 221	8.137				
A 222	8.274	0.756			
B 1	0.470	0.340	.023 .027	.005	49
B 2	1.470				
B 3	2.470				
B 4	3.470				
B 5	4.470				
B 6	5.470				
B 7	6.470				
B 8	7.470	0.340			
B 9	-0.040	0.378			
B 10	0.063				
B 11	0.335				
B 12	0.960				
B 13	1.063				
B 14	1.335				
B 15	1.960				
B 16	2.063				
B 17	2.335				
B 18	2.960				
B 19	3.063				
B 20	3.335				
B 21	3.960				
B 22	4.063				
B 23	4.335				
B 24	4.960				
B 25	5.063				
B 26	5.335				
B 27	5.960				
B 28	6.063				
B 29	6.335				
B 30	6.960				
B 31	7.063				
B 32	7.335	0.378			
B 33	8.040	0.412			
B 34	0.784	0.482			
B 35	1.784				
B 36	2.784				
B 37	3.784				
B 38	4.784				
B 39	5.784				
B 40	6.784				
B 41	7.784	0.482			
B 42	0.715	0.527			
B 43	1.715				
B 44	2.715				
B 45	3.715				
B 46	4.715				
B 47	5.715				
B 48	6.715				
B 49	7.715	0.527			
C 1	0.200	0.125	SEE DETAIL A AND SECTION A-A	.005	26
C 2	1.200				
C 3	2.200				
C 4	3.200				
C 5	4.200				
C 6	5.200				
C 7	6.200				
C 8	7.200	0.125			
C 9	0.724	0.204			
C 10	1.724				
C 11	2.724				
C 12	3.724				
C 13	4.724				
C 14	5.724				
C 15	6.724				
C 16	7.724	0.204			
C 17	8.137	0.284			
C 18	8.137	0.545			
C 19	0.200	0.640			
C 20	1.200				
C 21	2.200				
C 22	3.200				
C 23	4.200				
C 24	5.200				
C 25	6.200				
C 26	7.200	0.640			
D 1	0.724	0.694	SEE DETAIL A AND SECTION BB	.005	8
D 2	1.724				
D 3	2.724				
D 4	3.724				
D 5	4.724				
D 6	5.724				
D 7	6.724				
D 8	7.724	0.694			

NOTES:

1. INTERPRET DRAWING IN ACCORDANCE WITH STANDARDS PRESCRIBED BY MIL-D-70327
2. MATL: PLASTIC CLEAR ACRILIC PER MIL-P-8184 FINISH B
3. TRUE POSITION AS SHOWN IN CHART
4. REMOVE ALL SHARP EDGES

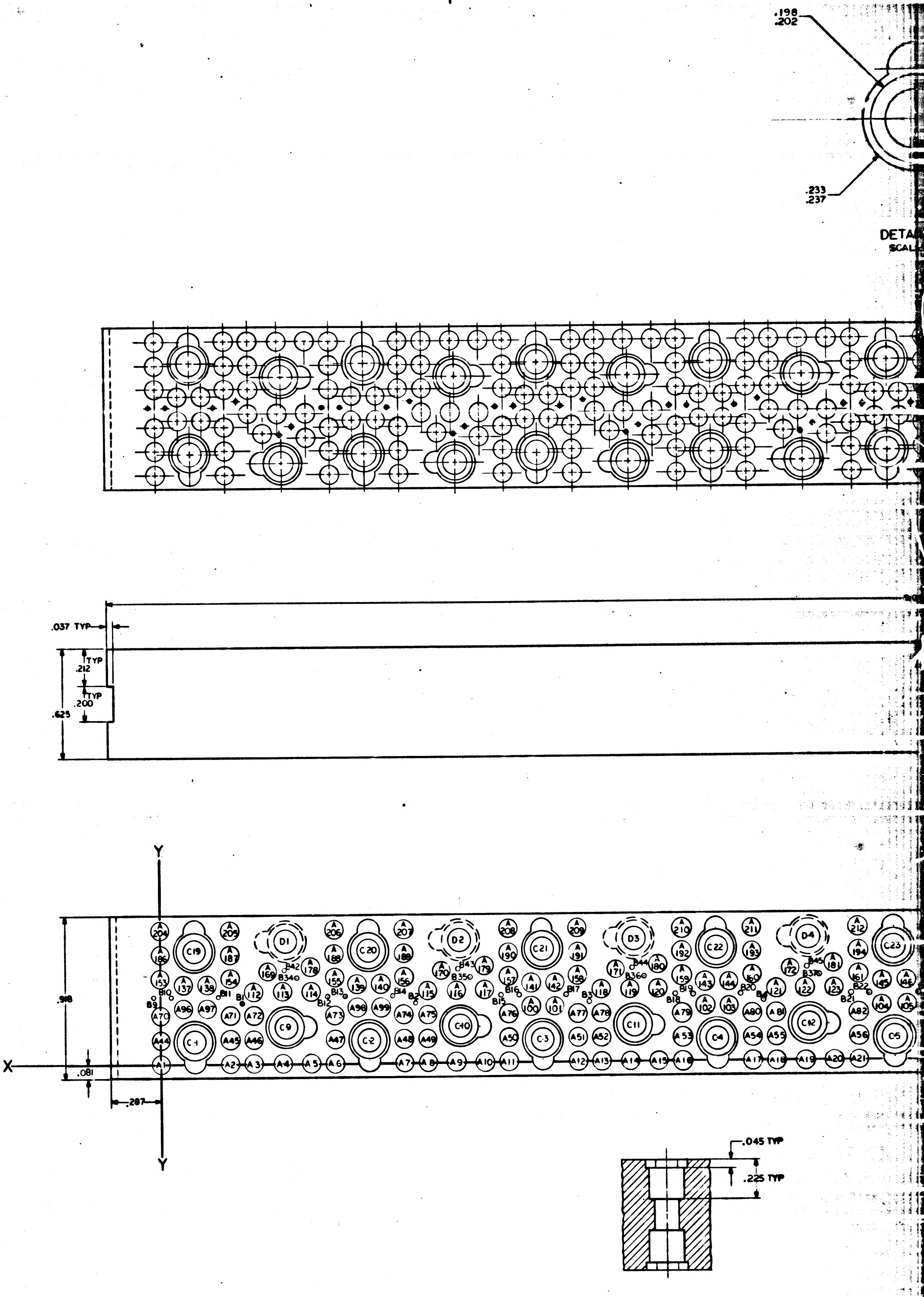
.198
.202
.233
.237
.037 TYP
.212
TYP
.200
TYP
.625
Y
X
.918
.081
.287
A204
C19
A205
D1
A206
C20
A207
D2
A208
C21
A209
D3
A210
C22
A211
D4
A212
C23
A186
A187
A188
A189
A190
A191
A192
A193
A194
A169
B42
A178
B34
A170
B43
A179
B35
A171
B44
A180
B36
A172
B45
A181
B37
A153
A137
A138
A154
A155
A139
A140
A156
A157
A141
A142
A158
A159
A143
A144
A160
A161
A145
A146
B10
B11
B1
A112
A113
A114
B13
B14
B2
A115
A116
A117
B16
B17
B3
A118
A119
A120
B19
B20
B4
A121
A122
A123
B22
B9
B12
B15
B18
B21
A70
A96
A97
A71
A72
C9
A73
A98
A99
A74
A75
C10
A76
A100
A101
A77
A78
C11
A79
A102
A103
A80
A81
C12
A82
A104
A105
A44
C1
A45
A46
A47
C2
A48
A49
A50
C3
A51
A52
A53
C4
A54
A55
A56
C5
A1
A2
A3
A4
A5
A6
A7
A8
A9
A10
A11
A12
A13
A14
A15
A16
A17
A18
A19
A20
A21
.045 TYP
.225 TYP

SECTION A-A
SCALE 4/1

1004195 B

SYM	REVISIONS TDRR 02048 DESCRIPTION	DATE	APPROVAL
A	REVISED PER TDRR 02700	8/12/63	RPK
B	REVISED PER TDRR 02851	9/26/63	RPK
C	REVISED PER TDRR 04510	11-6-63	

1004195 C

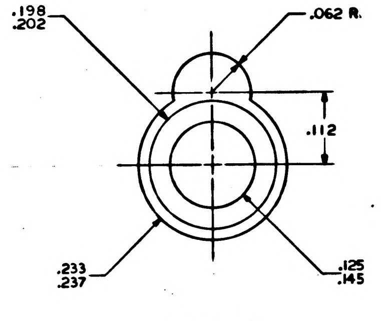

.198
.202
.062 R.
.112
.233
.237
.125
.145

DETAIL A
SCALE 10/1

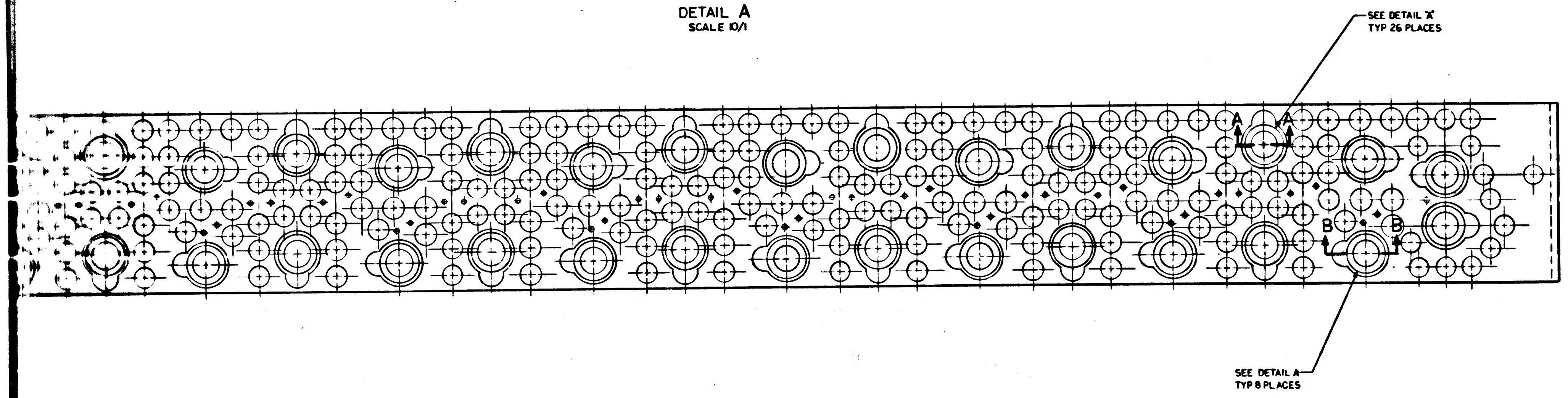

SEE DETAIL "A" TYP 26 PLACES
A
A
B
B
SEE DETAIL A TYP 8 PLACES

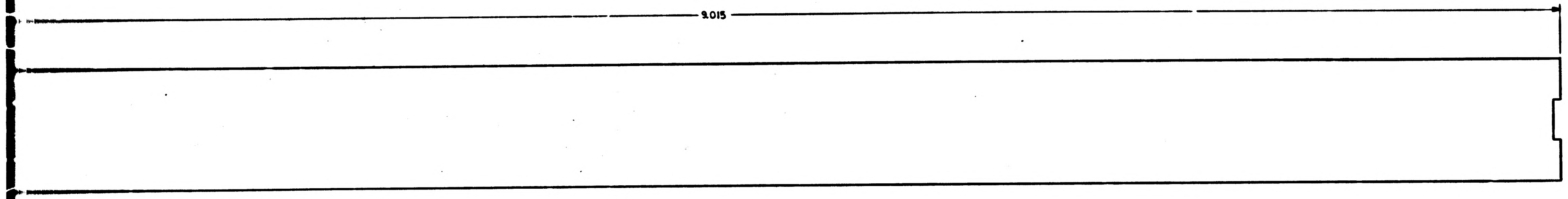

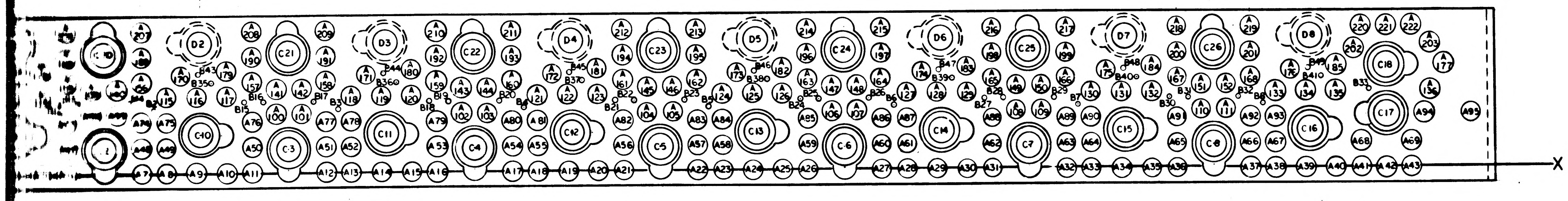

D2
D3
D4
D5
D6
D7
D8
C21
C22
C23
C24
C25
C26
C18
C17
C10
C3
C11
C4
C12
C5
C13
C6
C14
C7
C15
C8
C16
X

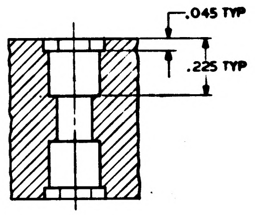

.045 TYP
.225 TYP

SECTION A-A
SCALE 4/1

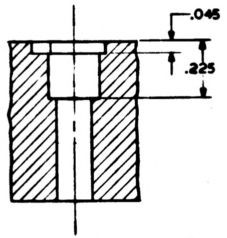

SECTION B-B
SCALE 4/1

QTY REQD	PART OR IDENTIFYING NO.	NOMENCLATURE OR DESCRIPTION	FIND NO.

LIST OF MATERIALS

NEXT ASSY	USED ON
1003131	

APPLICATION

UNLESS OTHERWISE SPECIFIED
DIMENSIONS ARE IN INCHES
TOLERANCES ON
FRACTIONS ± 1/64 DECIMALS ± .005 ANGLES ± 0° 30'
DO NOT SCALE THIS DRAWING
MATERIAL SEE NOTE 2
HEAT TREATMENT —
FINAL FINISH SEE NOTE 2

MIT
INSTRUMENTATION LAB
CAMBRIDGE, MASS
DRAWN DATE 6/3/63
CHECKED
APPROVAL
APPROVAL
NASA APPROVAL 7-12-63
MIT APPROVAL 7/12/63

MANNED SPACECRAFT CENTER
HOUSTON, TEXAS

HOLDER, COMPONENT
ROPE STRAND SELECT MODULE

CODE IDENT NO. —
SIZE J
NASA DRAWING NO. 1004195
SCALE 4/1
WT
SHEET 1 OF 1

1004195 C

F-2

NOTICE — WHEN GOVERNMENT DRAWINGS, SPECIFICATIONS, OR OTHER DATA ARE USED FOR ANY PURPOSE OTHER THAN IN CONNECTION WITH A DEFINITELY RELATED GOVERNMENT PROCUREMENT OPERATION THE UNITED STATES GOVERNMENT THEREBY INCURS NO RESPONSIBILITY NOR ANY OBLIGATION WHATSOEVER AND THE FACT THAT THE GOVERNMENT MAY HAVE FORMULATED FURNISHED OR IN ANY WAY SUPPLIED THE SAID DRAWINGS SPECIFICATIONS OR OTHER DATA IS NOT TO BE REGARDED BY IMPLICATION OR OTHERWISE AS IN ANY MANNER LICENSING THE HOLDER OR ANY OTHER PERSON OR CORPORATION, OR CONVEYING ANY RIGHTS OR PERMISSION TO MANUFACTURE, USE, OR SELL ANY PATENTED INVENTION THAT MAY IN ANY WAY BE RELATED THERETO.

HOLE IDENT	BASIC X DIM	BASIC Y DIM	HOLE DIA	⊕ TOL	QTY
A 1	0.000	0.000	.100 .104	.005	108
A 2	0.400				
A 3	0.536				
A 4	0.700				
A 5	0.862				
A 6	1.000				
A 7	1.400				
A 8	1.536				
A 9	1.700				
A 10	1.862				
A 11	2.000				
A 12	2.400				
A 13	2.536				
A 14	2.700				
A 15	2.862				
A 16	3.000				
A 17	3.400				
A 18	3.536				
A 19	3.700				
A 20	3.862				
A 21	4.000				
A 22	4.400				
A 23	4.536				
A 24	4.700				
A 25	4.862				
A 26	5.000				
A 27	5.400				
A 28	5.536				
A 29	5.700				
A 30	5.862				
A 31	6.000				
A 32	6.400				
A 33	6.536				
A 34	6.700				
A 35	6.862				
A 36	7.000				
A 37	7.400				
A 38	7.536				
A 39	7.700				
A 40	7.862				
A 41	8.000				
A 42	8.137				
A 43	8.274	0.000			
A 44	0.000	0.136			
A 45	0.400				
A 46	0.536				
A 47	1.000				
A 48	1.400				
A 49	1.536				
A 50	2.000				
A 51	2.400				
A 52	2.536				
A 53	3.000				
A 54	3.400				
A 55	3.536				
A 56	4.000				
A 57	4.400				
A 58	4.536				
A 59	5.000				
A 60	5.400				
A 61	5.536				
A 62	6.000				
A 63	6.400				
A 64	6.536				
A 65	7.000				
A 66	7.400				
A 67	7.536	0.136			
A 68	8.000	0.137			
A 69	8.274	0.137			
A 70	0.000	0.274			
A 71	0.400				
A 72	0.536				
A 73	1.000				
A 74	1.400				
A 75	1.536				
A 76	2.000				
A 77	2.400				
A 78	2.536				
A 79	3.000				
A 80	3.400				
A 81	3.536				
A 82	4.000				
A 83	4.400				
A 84	4.536				
A 85	5.000				
A 86	5.400				
A 87	5.536				
A 88	6.000				
A 89	6.400				
A 90	6.536				
A 91	7.000				
A 92	7.400				
A 93	7.536	0.274			
A 94	8.342	0.284			
A 95	8.600	0.284			
A 96	0.132	0.312			
A 97	0.268				
A 98	1.132				
A 99	1.268				
A 100	2.132				
A 101	2.268				
A 102	3.132				
A 103	3.268				
A 104	4.132				
A 105	4.268				
A 106	5.132				
A 107	5.268				
A 108	6.132	0.312			

HOLE IDENT	BASIC X DIM	BASIC Y DIM	HOLE DIA	⊕ TOL	QTY
A 109	6.268	0.312	.100 .104	.005	108
A 110	7.132	0.312			
A 111	7.268	0.312			
A 112	0.536	0.410			
A 113	0.700				
A 114	0.862				
A 115	1.536				
A 116	1.700				
A 117	1.862				
A 118	2.536				
A 119	2.700				
A 120	2.862				
A 121	3.536				
A 122	3.700				
A 123	3.862				
A 124	4.536				
A 125	4.700				
A 126	4.862				
A 127	5.536				
A 128	5.700				
A 129	5.862				
A 130	6.536				
A 131	6.700				
A 132	6.862				
A 133	7.536				
A 134	7.700				
A 135	7.862	0.410			
A 136	8.410	0.412			
A 137	0.132	0.450			
A 138	0.268				
A 139	1.132				
A 140	1.268				
A 141	2.132				
A 142	2.268				
A 143	3.132				
A 144	3.268				
A 145	4.132				
A 146	4.263				
A 147	5.132				
A 148	5.268				
A 149	6.132				
A 150	6.266				
A 151	7.132				
A 152	7.268	0.450			
A 153	0.000	0.483			
A 154	0.400				
A 155	1.000				
A 156	1.400				
A 157	2.000				
A 158	2.400				
A 159	3.000				
A 160	3.400				
A 161	4.000				
A 162	4.400				
A 163	5.000				
A 164	5.400				
A 165	6.000				
A 166	6.400				
A 167	7.000				
A 168	7.400	0.483			
A 169	0.620	0.520			
A 170	1.620				
A 171	2.620				
A 172	3.620				
A 173	4.620				
A 174	5.620				
A 175	6.620				
A 176	7.620	0.520			
A 177	8.450	0.545			
A 178	0.862	0.546			
A 179	1.862				
A 180	2.862				
A 181	3.862				
A 182	4.862				
A 183	5.862				
A 184	6.862				
A 185	7.862	0.546			
A 186	0.000	0.619			
A 187	0.400				
A 188	1.000				
A 189	1.400				
A 190	2.000				
A 191	2.400				
A 192	3.000				
A 193	3.400				
A 194	4.000				
A 195	4.400				
A 196	5.000				
A 197	5.400				
A 198	6.000				
A 199	6.400				
A 200	7.000				
A 201	7.400	0.619			
A 202	7.960	0.632			
A 203	8.375	0.663			
A 204	0.000	0.756			
A 205	0.400				
A 206	1.000				
A 207	1.400				
A 208	2.000				
A 209	2.400				
A 210	3.000				
A 211	3.400				
A 212	4.000				
A 213	4.400				
A 214	5.000				
A 215	5.400				
A 216	6.000	0.756			

HOLE IDENT	BASIC X DIM	BASIC Y DIM	HOLE DIA	⊕ TOL	QTY
A 217	6.400	0.756	.100 .104	.005	6
A 218	7.000				
A 219	7.400				
A 220	8.000				
A 221	8.137				
A 222	8.274	0.756			
B 1	0.470	0.340	.023 .027	.005	49
B 2	1.470				
B 3	2.470				
B 4	3.470				
B 5	4.470				
B 6	5.470				
B 7	6.470				
B 8	7.470	0.340			
B 9	-0.040	0.378			
B 10	0.063				
B 11	0.335				
B 12	0.960				
B 13	1.063				
B 14	1.335				
B 15	1.960				
B 16	2.063				
B 17	2.335				
B 18	2.960				
B 19	3.063				
B 20	3.335				
B 21	3.960				
B 22	4.063				
B 23	4.335				
B 24	4.960				
B 25	5.063				
B 26	5.335				
B 27	5.960				
B 28	6.063				
B 29	6.335				
B 30	6.960				
B 31	7.063				
B 32	7.335	0.378			
B 33	8.040	0.412			
B 34	0.784	0.482			
B 35	1.784				
B 36	2.784				
B 37	3.784				
B 38	4.784				
B 39	5.784				
B 40	6.784				
B 41	7.784	0.482			
B 42	0.715	0.527			
B 43	1.715				
B 44	2.715				
B 45	3.715				
B 46	4.715				
B 47	5.715				
B 48	6.715				
B 49	7.715	0.527			
C 1	0.200	0.125	SEE DETAIL A AND SECTION A-A	.005	26
C 2	1.200				
C 3	2.200				
C 4	3.200				
C 5	4.200				
C 6	5.200				
C 7	6.200				
C 8	7.200	0.125			
C 9	0.724	0.204			
C 10	1.724				
C 11	2.724				
C 12	3.724				
C 13	4.724				
C 14	5.724				
C 15	6.724				
C 16	7.724	0.204			
C 17	8.137	0.284			
C 18	8.137	0.545			
C 19	0.200	0.640			
C 20	1.200				
C 21	2.200				
C 22	3.200				
C 23	4.200				
C 24	5.200				
C 25	6.200				
C 26	7.200	0.640			
D 1	0.724	0.694	SEE DETAIL A AND SECTION BB	.005	8
D 2	1.724				
D 3	2.724				
D 4	3.724				
D 5	4.724				
D 6	5.724				
D 7	6.724				
D 8	7.724	0.694			

NOTES:

1. INTERPRET DRAWING IN ACCORDANCE WITH STANDARDS PRESCRIBED BY MIL-D-70327
2. MATL: PLASTIC CLEAR ACRILIC PER MIL-P-8184 FINISH B, ALT: MIL-P-5425B FINISH B
3. TRUE POSITION AS SHOWN IN CHART
4. REMOVE ALL SHARP EDGES

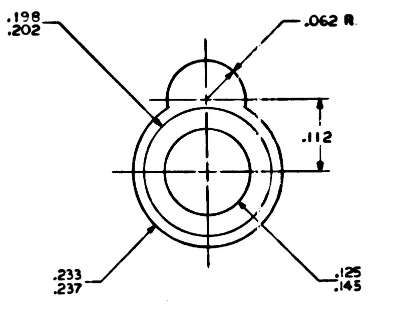

DETAIL A
SCALE 10/1

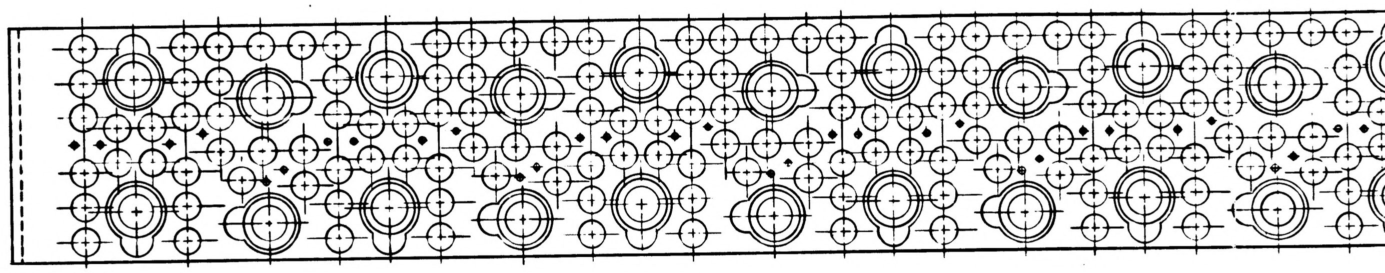

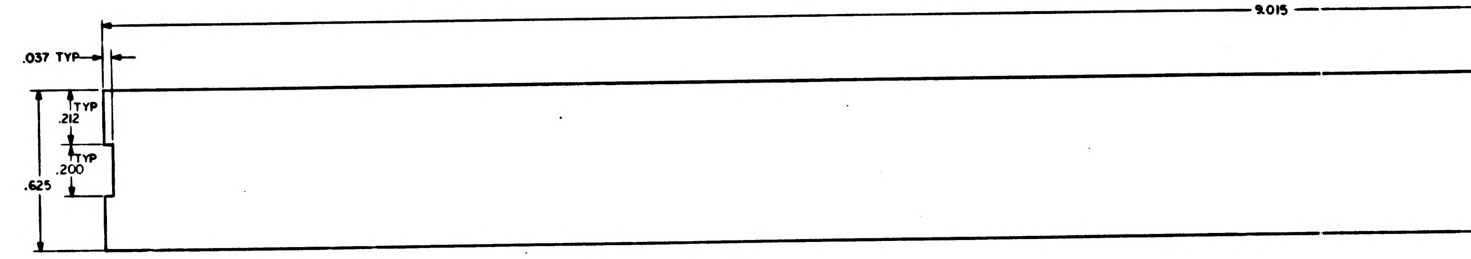

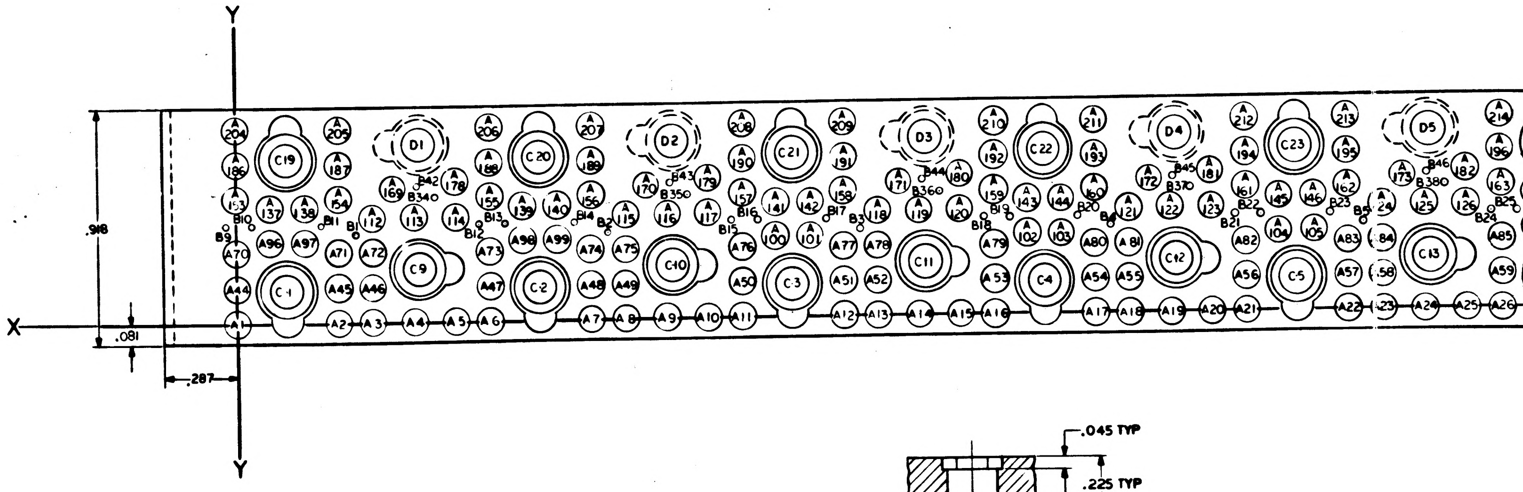

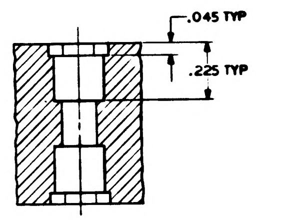

SECTION A-A
SCALE 4/1

1004195 C

1004195

SYM	DESCRIPTION	DATE	APPROVAL

REVISIONS TDRR 02C48

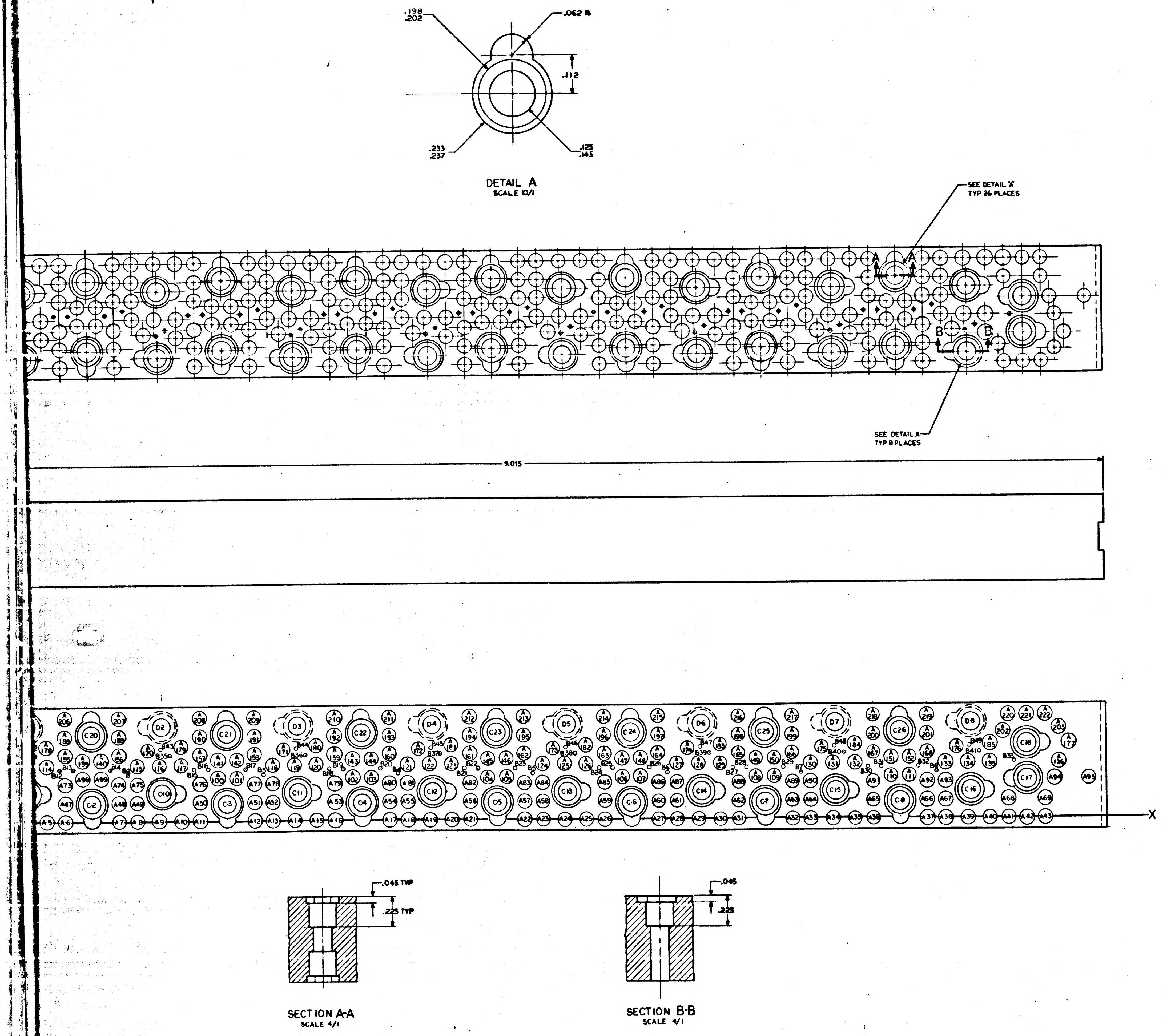

.198
.202
.062 R.
.112
.233
.237
.125
.145
DETAIL A
SCALE 10/1
SEE DETAIL "A"
TYP 26 PLACES
SEE DETAIL A
TYP 8 PLACES
A
A
B
B
2.015
X
.045 TYP
.225 TYP
SECTION A-A
SCALE 4/1
.045
.225
SECTION B-B
SCALE 4/1

QTY REQD	PART OR IDENTIFYING NO.	NOMENCLATURE OR DESCRIPTION	FIND NO

LIST OF MATERIALS

NEXT ASSY	USED ON
APPLICATION	

UNLESS OTHERWISE SPECIFIED
DIMENSIONS ARE IN INCHES
TOLERANCES ON
FRACTIONS ± DECIMALS ± ANGLES ±
DO NOT SCALE THIS DRAWING
MATERIAL SEE NOTE 2
HEAT TREATMENT //
FINAL FINISH SEE NOTE 2

MIT
INSTRUMENTATION LAB
CAMBRIDGE, MASS
DWG. NO. CONTRACT
DRAWN Tony Bold DATE 6/3/63
CHECKED
APPROVAL
APPROVAL
NASA APPROVAL W. J. Rhine 7-17-63
MIT APPROVAL 7/17/63

MANNED SPACECRAFT CENTER
HOUSTON, TEXAS

HOLDER, COMPONENT
ROPE STRAND SELECT MODULE

CODE IDENT NO.
SIZE J
NASA DRAWING NO. 1004195
SCALE 4/1
WT
SHEET 1 OF 1

1004195

MASTER

INCHES
PHOTOGRAPHIC SCALE ONLY

E-2

NOTICE — WHEN GOVERNMENT DRAWINGS, SPECIFICATIONS, OR OTHER DATA ARE USED FOR ANY PURPOSE OTHER THAN IN CONNECTION WITH A DEFINITELY RELATED GOVERNMENT PROCUREMENT OPERATION, THE UNITED STATES GOVERNMENT THEREBY INCURS NO RESPONSIBILITY NOR ANY OBLIGATION WHATSOEVER; AND THE FACT THAT THE GOVERNMENT MAY HAVE FORMULATED, FURNISHED, OR IN ANY WAY SUPPLIED THE SAID DRAWINGS, SPECIFICATIONS, OR OTHER DATA IS NOT TO BE REGARDED BY IMPLICATION OR OTHERWISE AS IN ANY MANNER LICENSING THE HOLDER OR ANY OTHER PERSON OR CORPORATION, OR CONVEYING ANY RIGHTS OR PERMISSION TO MANUFACTURE, USE, OR SELL ANY PATENTED INVENTION THAT MAY IN ANY WAY BE RELATED THERETO.

HOLE IDENT	BASIC X DIM	BASIC Y DIM	HOLE DIA	⌖ TOL	QTY.
A 1	0.000	0.000	.100 .104	.005	108
A 2	0.400				
A 3	0.536				
A 4	0.700				
A 5	0.862				
A 6	1.000				
A 7	1.400				
A 8	1.536				
A 9	1.700				
A 10	1.862				
A 11	2.000				
A 12	2.400				
A 13	2.536				
A 14	2.700				
A 15	2.862				
A 16	3.000				
A 17	3.400				
A 18	3.536				
A 19	3.700				
A 20	3.862				
A 21	4.000				
A 22	4.400				
A 23	4.536				
A 24	4.700				
A 25	4.862				
A 26	5.000				
A 27	5.400				
A 28	5.536				
A 29	5.700				
A 30	5.862				
A 31	6.000				
A 32	6.400				
A 33	6.536				
A 34	6.700				
A 35	6.862				
A 36	7.000				
A 37	7.400				
A 38	7.536				
A 39	7.700				
A 40	7.862				
A 41	8.000				
A 42	8.137				
A 43	8.274	0.000			
A 44	0.000	0.136			
A 45	0.400				
A 46	0.536				
A 47	1.000				
A 48	1.400				
A 49	1.536				
A 50	2.000				
A 51	2.400				
A 52	2.536				
A 53	3.000				
A 54	3.400				
A 55	3.536				
A 56	4.000				
A 57	4.400				
A 58	4.536				
A 59	5.000				
A 60	5.400				
A 61	5.536				
A 62	6.000				
A 63	6.400				
A 64	6.536				
A 65	7.000				
A 66	7.400				
A 67	7.536	0.136			
A 68	8.000	0.137			
A 69	8.274	0.137			
A 70	0.000	0.274			
A 71	0.400				
A 72	0.536				
A 73	1.000				
A 74	1.400				
A 75	1.536				
A 76	2.000				
A 77	2.400				
A 78	2.536				
A 79	3.000				
A 80	3.400				
A 81	3.536				
A 82	4.000				
A 83	4.400				
A 84	4.536				
A 85	5.000				
A 86	5.400				
A 87	5.536				
A 88	6.000				
A 89	6.400				
A 90	6.536				
A 91	7.000				
A 92	7.400				
A 93	7.536	0.274			
A 94	8.342	0.284			
A 95	8.600	0.284			
A 96	0.132	0.312			
A 97	0.268				
A 98	1.132				
A 99	1.268				
A 100	2.132				
A 101	2.268				
A 102	3.132				
A 103	3.268				
A 104	4.132				
A 105	4.268				
A 106	5.132				
A 107	5.268				
A 108	6.132	0.312			

HOLE IDENT	BASIC X DIM	BASIC Y DIM	HOLE DIA	⌖ TOL	QTY
A 109	6.268	0.312	.100 .104	.005	108
A 110	7.132	0.312			
A 111	7.268	0.312			
A 112	0.536	0.410			
A 113	0.700				
A 114	0.862				
A 115	1.536				
A 116	1.700				
A 117	1.862				
A 118	2.536				
A 119	2.700				
A 120	2.862				
A 121	3.536				
A 122	3.700				
A 123	3.862				
A 124	4.536				
A 125	4.700				
A 126	4.862				
A 127	5.536				
A 128	5.700				
A 129	5.862				
A 130	6.536				
A 131	6.700				
A 132	6.862				
A 133	7.536				
A 134	7.700				
A 135	7.862	0.410			
A 136	8.410	0.412			
A 137	0.132	0.450			
A 138	0.268				
A 139	1.132				
A 140	1.268				
A 141	2.132				
A 142	2.268				
A 143	3.132				
A 144	3.268				
A 145	4.132				
A 146	4.268				
A 147	5.132				
A 148	5.268				
A 149	6.132				
A 150	6.268				
A 151	7.132				
A 152	7.268	0.450			
A 153	0.000	0.483			
A 154	0.400				
A 155	1.000				
A 156	1.400				
A 157	2.000				
A 158	2.400				
A 159	3.000				
A 160	3.400				
A 161	4.000				
A 162	4.400				
A 163	5.000				
A 164	5.400				
A 165	6.000				
A 166	6.400				
A 167	7.000				
A 168	7.400	0.483			
A 169	0.620	0.520			
A 170	1.620				
A 171	2.620				
A 172	3.620				
A 173	4.620				
A 174	5.620				
A 175	6.620				
A 176	7.620	0.520			
A 177	8.450	0.545			
A 178	0.862	0.546			
A 179	1.862				
A 180	2.862				
A 181	3.862				
A 182	4.862				
A 183	5.362				
A 184	6.862				
A 185	7.862	0.546			
A 186	0.000	0.619			
A 187	0.400				
A 188	1.000				
A 189	1.400				
A 190	2.000				
A 191	2.400				
A 192	3.000				
A 193	3.400				
A 194	4.000				
A 195	4.400				
A 196	5.000				
A 197	5.400				
A 198	6.000				
A 199	6.400				
A 200	7.000				
A 201	7.400	0.619			
A 202	8.040	0.632			
A 203	8.375	0.663			
A 204	0.000	0.756			
A 205	0.400				
A 206	1.000				
A 207	1.400				
A 208	2.000				
A 209	2.400				
A 210	3.000				
A 211	3.400				
A 212	4.000				
A 213	4.400				
A 214	5.000				
A 215	5.400				
A 216	6.000	0.756			

HOLE IDENT	BASIC X DIM	BASIC Y DIM	HOLE DIA	⌖ TOL	QTY
A 217	6.400	0.756	.100 .104	.005	6
A 218	7.000				
A 219	7.400				
A 220	8.000				
A 221	8.137				
A 222	8.274	0.756			
B 1	0.470	0.340	.023 .027	.005	49
B 2	1.470				
B 3	2.470				
B 4	3.470				
B 5	4.470				
B 6	5.470				
B 7	6.470				
B 8	7.470	0.340			
B 9	-0.040	0.378			
B 10	0.063				
B 11	0.335				
B 12	0.960				
B 13	1.063				
B 14	1.335				
B 15	1.960				
B 16	2.063				
B 17	2.335				
B 18	2.960				
B 19	3.063				
B 20	3.335				
B 21	3.960				
B 22	4.063				
B 23	4.335				
B 24	4.960				
B 25	5.063				
B 26	5.335				
B 27	5.960				
B 28	6.063				
B 29	6.335				
B 30	6.960				
B 31	7.063				
B 32	7.335	0.378			
B 33	7.960	0.412			
B 34	0.784	0.482			
B 35	1.784				
B 36	2.784				
B 37	3.784				
B 38	4.784				
B 39	5.784				
B 40	6.784				
B 41	7.784	0.482			
B 42	0.715	0.527			
B 43	1.715				
B 44	2.715				
B 45	3.715				
B 46	4.715				
B 47	5.715				
B 48	6.715				
B 49	7.715	0.527			
C 1	0.200	0.125	SEE DETAIL A AND SECTION A-A	.005	26
C 2	1.200				
C 3	2.200				
C 4	3.200				
C 5	4.200				
C 6	5.200				
C 7	6.200				
C 8	7.200	0.125			
C 9	0.724	0.204			
C 10	1.724				
C 11	2.724				
C 12	3.724				
C 13	4.724				
C 14	5.724				
C 15	6.724				
C 16	7.724	0.204			
C 17	8.137	0.284			
C 18	8.137	0.454			
C 19	0.200	0.640			
C 20	1.200				
C 21	2.200				
C 22	3.200				
C 23	4.200				
C 24	5.200				
C 25	6.200				
C 26	7.200	0.640			
D 1	0.724	0.694	SEE DETAIL A AND SECTION B-B	.005	8
D 2	1.724				
D 3	2.724				
D 4	3.724				
D 5	4.724				
D 6	5.724				
D 7	6.724				
D 8	7.724	0.694			

NOTES:
1. INTERPRET DRAWING IN ACCORDANCE WITH STANDARDS PRESCRIBED BY MIL-D-70327
2. MATL: PLASTIC CLEAR ACRILIC PER MIL-P-8184 FINISH B
3. TRUE POSITION AS SHOWN IN CHART
4. REMOVE ALL SHARP EDGES

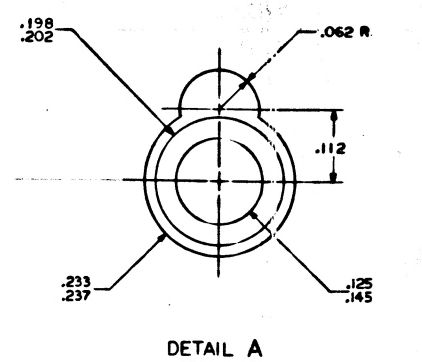

DETAIL A
SCALE 10/1

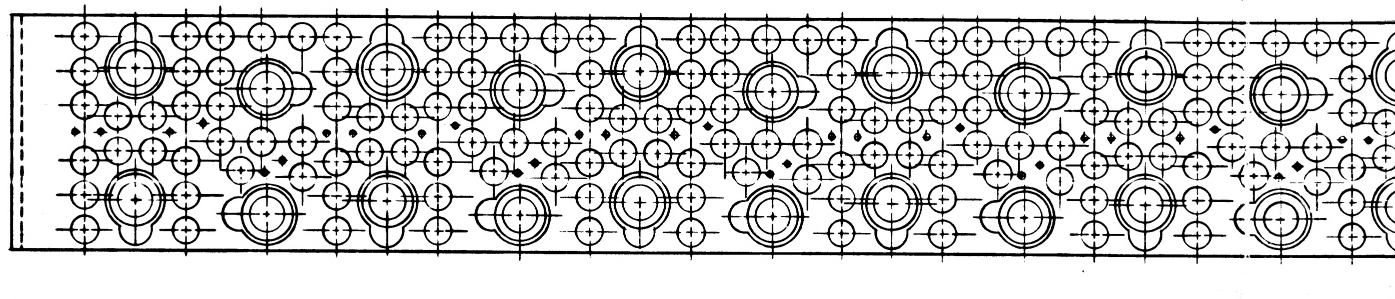

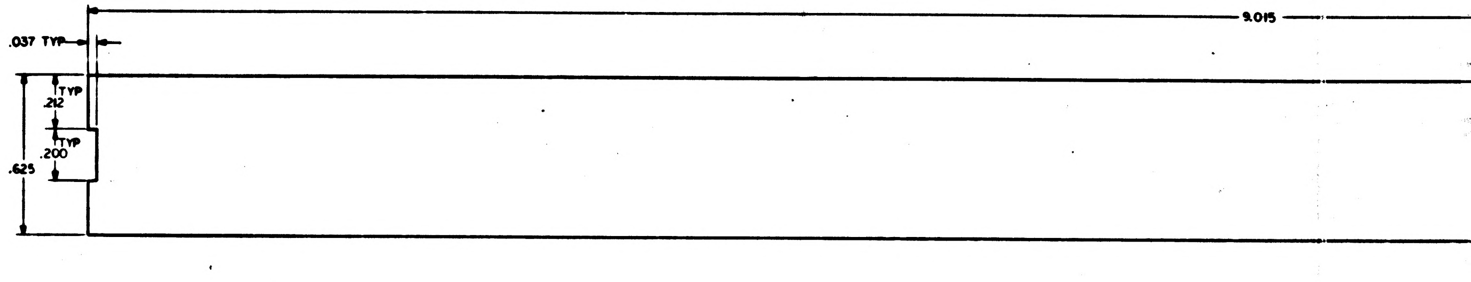

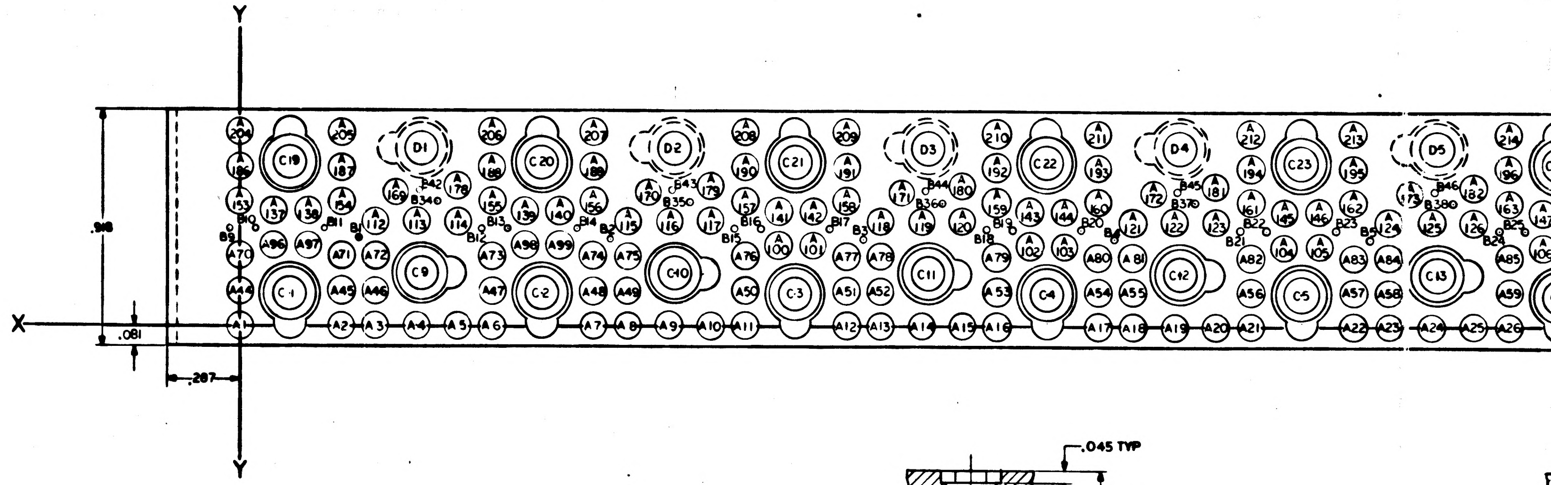

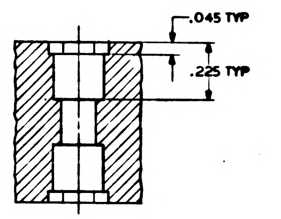

SECTION A-A
SCALE 4/1

1004195

INCHES
PHOTOGRAPHIC SCALE ONLY

(24)

A 1004197

SYM	DESCRIPTION	DATE	APPROVAL
A	REVISED PER TDRR 03697	11-3-70	WK

REVISIONS TDRR 02048

BASIC X DIM	BASIC Y DIM	HOLE DIA	⌖ TOL	QTY
2.187	-0.150			
2.812		.092 .096	.006	8
3.187				
3.312				
3.812				
4.312				
4.812				
5.187	-0.150			

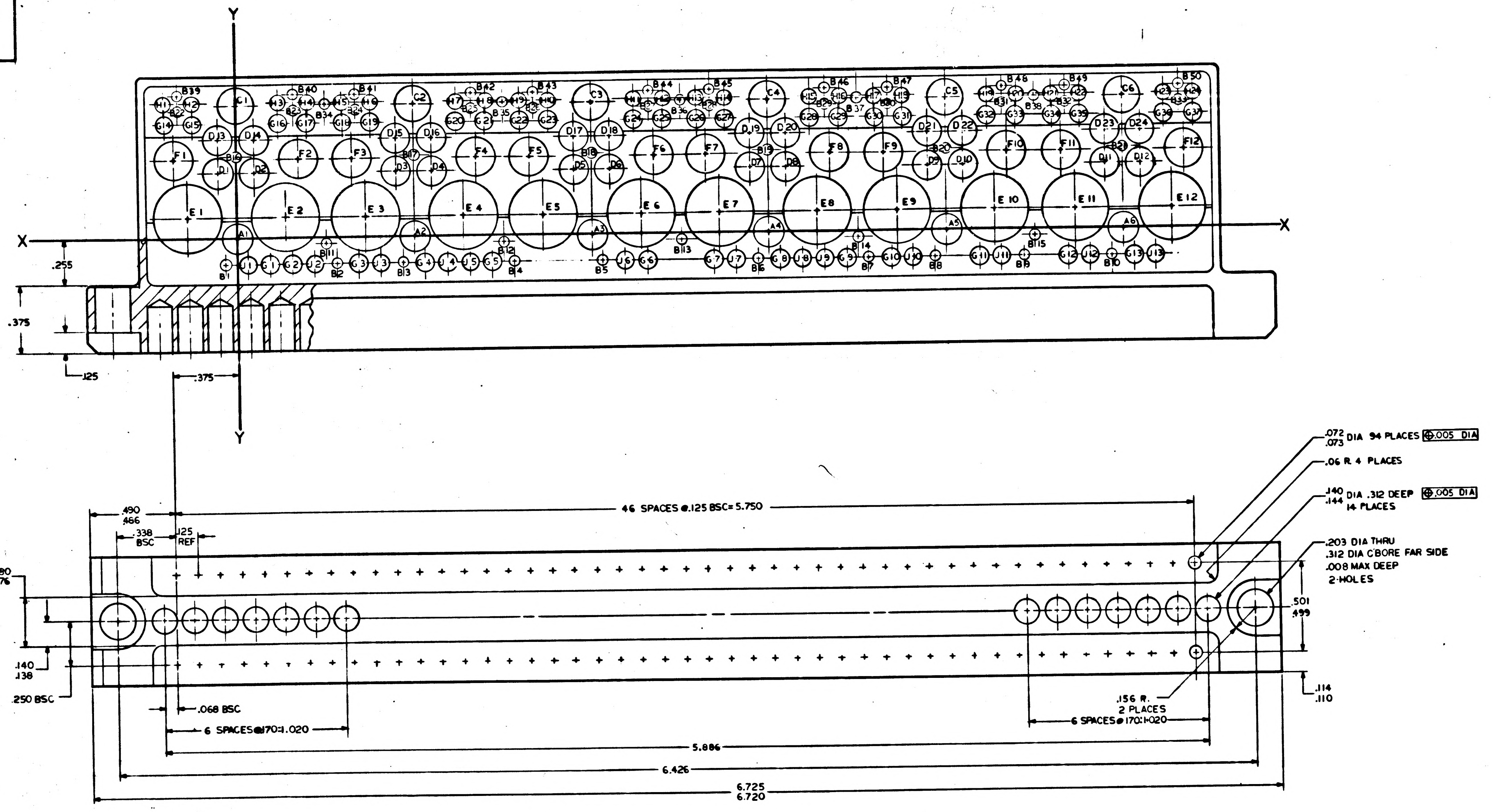

Y
X
Y
X
A1
A2
A3
A4
A5
A6
B1
B2
B3
B4
B5
B6
B7
B8
B9
B10
B11
B12
B13
B14
B15
B16
B17
B18
B19
B20
B21
B22
B34
B35
B37
B38
B39
B40
B41
B42
B43
B44
B45
B46
B47
B48
B49
B50
C1
C2
C3
C4
C5
C6
D1
D2
D3
D4
D5
D6
D7
D8
D9
D10
D11
D12
D13
D14
D15
D16
D17
D18
D19
D20
D21
D22
D23
D24
E1
E2
E3
E4
E5
E6
E7
E8
E9
E10
E11
E12
F1
F2
F3
F4
F5
F6
F7
F8
F9
F10
F11
F12
.255
.375
.125
.375
.072 .073 DIA 94 PLACES ⌖.005 DIA
.06 R 4 PLACES
.140 .144 DIA .312 DEEP ⌖.005 DIA 14 PLACES
.203 DIA THRU .312 DIA C'BORE FAR SIDE .008 MAX DEEP 2-HOLES
46 SPACES @ .125 BSC = 5.750
.490 .466
.338 BSC
.125 REF
.280 .276
.140 .138
.250 BSC
.501 .499
.114 .110
.068 BSC
6 SPACES @ .170 = 1.020
.156 R. 2 PLACES
6 SPACES @ .170 = 1.020
5.886
6.426
6.725 6.720

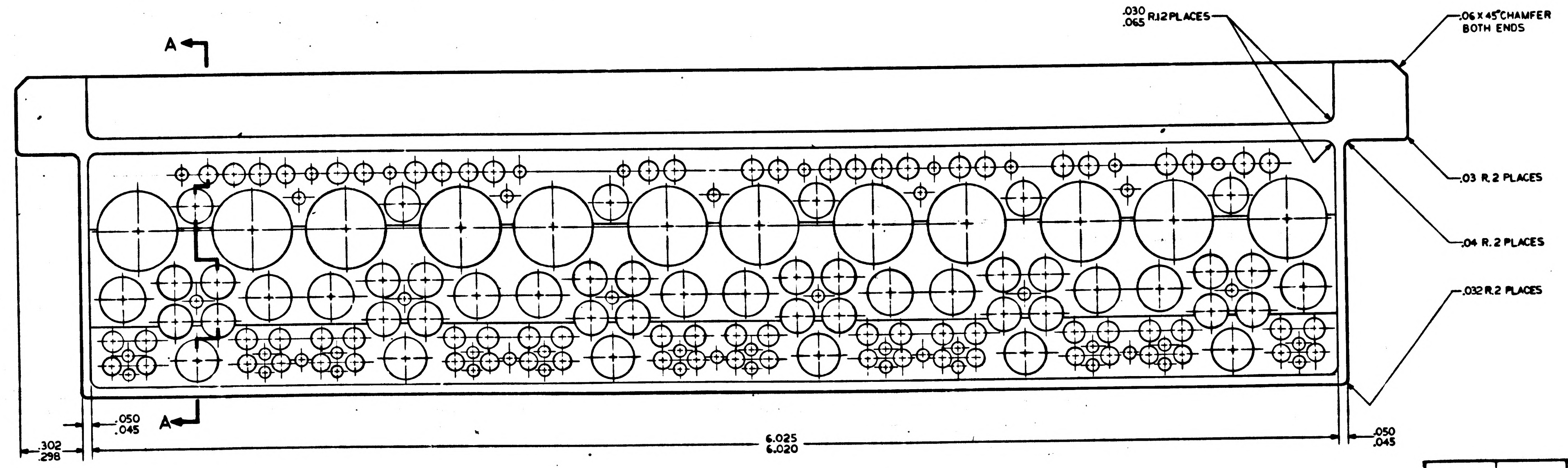

A
A
.030 .065 R 12 PLACES
.06 X 45° CHAMFER BOTH ENDS
.03 R 2 PLACES
.04 R 2 PLACES
.032 R 2 PLACES
.050 .045
.050 .045
.302 .298
6.025 6.020

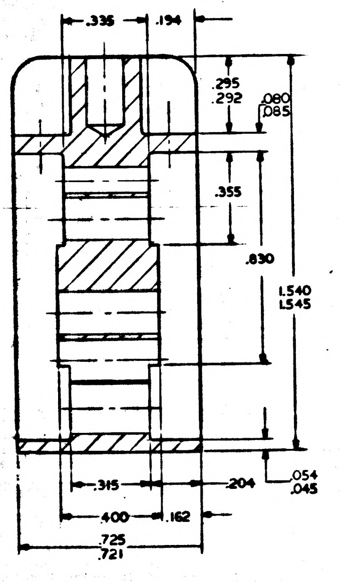

.336
.194
.295 .292
.080 .085
.355
.830
1.540 1.545
.315
.204
.054 .045
.400
.162
.725 .721

SECTION A-A
SCALE: 4/1

QTY REQD	PART OR IDENTIFYING NO.	NOMENCLATURE OR DESCRIPTION	FIND NO.

LIST OF MATERIALS

1003129	
NEXT ASSY	USED ON
APPLICATION	

UNLESS OTHERWISE SPECIFIED
DIMENSIONS ARE IN INCHES
TOLERANCES ON
FRACTIONS ± DECIMALS ± ANGLES ±
DO NOT SCALE THIS DRAWING
MATERIAL SEE NOTE 2
HEAT TREATMENT
FINAL FINISH SEE NOTE 3

M I T
INSTRUMENTATION LAB
CAMBRIDGE, MASS
DRAWN DATE
CHECKED
APPROVAL
APPROVAL 7/10/63
NASA APPROVAL 7-17-63
MIT APPROVAL 7/13/63

MANNED SPACECRAFT CENTER
HOUSTON, TEXAS

HEADER, HOUSING
INTERFACE MODULE
A20 OR A40

CODE IDENT NO.
SIZE J
NASA DRAWING NO. 1004197
SCALE 4/1
WT
SHEET 1 OF 1

1004197 A

MASTER

E-2

NOTICE — WHEN GOVERNMENT DRAWINGS, SPECIFICATIONS, OR OTHER DATA ARE USED FOR ANY PURPOSE OTHER THAN IN CONNECTION WITH A DEFINITELY RELATED GOVERNMENT PROCUREMENT OPERATION, THE UNITED STATES GOVERNMENT THEREBY INCURS NO RESPONSIBILITY NOR ANY OBLIGATION WHATSOEVER; AND THE FACT THAT THE GOVERNMENT MAY HAVE FORMULATED, FURNISHED, OR IN ANY WAY SUPPLIED THE SAID DRAWINGS, SPECIFICATIONS OR OTHER DATA IS NOT TO BE REGARDED BY IMPLICATION OR OTHERWISE AS IN ANY MANNER LICENSING THE HOLDER OR ANY OTHER PERSON OR CORPORATION, OR CONVEYING ANY RIGHTS OR PERMISSION TO MANUFACTURE, USE, OR SELL ANY PATENTED INVENTION THAT MAY IN ANY WAY BE RELATED THERETO.

HOLE IDENT	BASIC X DIM	BASIC Y DIM	HOLE DIA	⌖ TOL	QTY
A 1	0.000	0.000			
A 2	1.000		.170 .174	.006	6
A 3	2.000				
A 4	3.000				
A 5	4.000				
A 6	5.000	0.000			
B 1	-0.062	-0.150	.058 .062	.006	50
B 2	0.562				
B 3	0.937				
B 4	1.562				
B 5	2.062				
B 6	2.937				
B 7	3.562				
B 8	3.937				
B 9	4.437				
B 10	4.937	-0.150			
B 11	0.500	-0.035			
B 12	1.500				
B 13	2.500				
B 14	3.500				
B 15	4.500	-0.035			
B 16	0.000	0.455			
B 17	1.000				
B 18	2.000				
B 19	3.000				
B 20	4.000				
B 21	5.000	0.455			
B 22	-0.325	0.710			
B 23	0.325				
B 24	0.675				
B 25	1.325				
B 26	1.675				
B 27	2.325				
B 28	2.675				
B 29	3.325				
B 30	3.675				
B 31	4.325				
B 32	4.675				
B 33	5.325	0.710			
B 34	0.500	0.745			
B 35	1.500				
B 36	2.500				
B 37	3.500				
B 38	4.500	0.745			
B 39	-0.325	0.800			
B 40	0.325				
B 41	0.675				
B 42	1.325				
B 43	1.675				
B 44	2.325				
B 45	2.675				
B 46	3.325				
B 47	3.675				
B 48	4.325				
B 49	4.675				
B 50	5.325	0.800			
C 1	0.000	0.740	.204 .207	.006	6
C 2	1.000				
C 3	2.000				
C 4	3.000				
C 5	4.000				
C 6	5.000	0.740			
D 1	-0.100	0.365	.165 .168	.006	24
D 2	0.100				
D 3	0.900				
D 4	1.100				
D 5	1.900				
D 6	2.100				
D 7	2.900				
D 8	3.100				
D 9	3.900				
D 10	4.100				
D 11	4.900				
D 12	5.100	0.365			
D 13	-0.100	0.550			
D 14	0.100				
D 15	0.900				
D 16	1.100				
D 17	1.900				
D 18	2.100				
D 19	2.900				
D 20	3.100				
D 21	3.900				
D 22	4.100				
D 23	4.900				
D 24	5.100	0.550			
E 1	-0.275	0.115	.381 .388	.006	2
E 2	0.275	0.115			

HOLE IDENT	BASIC X DIM	BASIC Y DIM	HOLE DIA	⌖ TOL	QTY
E 3	0.725	0.115			
E 4	1.275		.381 .388	.006	10
E 5	1.725				
E 6	2.275				
E 7	2.725				
E 8	3.275				
E 9	3.725				
E 10	4.275				
E 11	4.725				
E 12	5.275	0.115			
F 1	-0.350	0.440	.221 .217	.006	12
F 2	0.350				
F 3	0.650				
F 4	1.350				
F 5	1.650				
F 6	2.350				
F 7	2.650				
F 8	3.350				
F 9	3.650				
F 10	4.350				
F 11	4.650				
F 12	5.350	0.440			
G 1	0.187	-0.150	.100 .104	.006	37
G 2	0.312				
G 3	0.687				
G 4	1.062				
G 5	1.437				
G 6	2.312				
G 7	2.687				
G 8	3.062				
G 9	3.437				
G 10	3.687				
G 11	4.187				
G 12	4.687				
G 13	5.062	-0.150			
G 14	-0.400	0.640			
G 15	-0.240				
G 16	0.240				
G 17	0.400				
G 18	0.600				
G 19	0.760				
G 20	1.240				
G 21	1.400				
G 22	1.600				
G 23	1.760				
G 24	2.240				
G 25	2.400				
G 26	2.600				
G 27	2.760				
G 28	3.240				
G 29	3.400				
G 30	3.600				
G 31	3.760				
G 32	4.240				
G 33	4.400				
G 34	4.600				
G 35	4.760				
G 36	5.240				
G 37	5.400	0.640			
H 1	-0.405	0.755	.085 .089	.006	24
H 2	-0.240				
H 3	0.240				
H 4	0.405				
H 5	0.595				
H 6	0.760				
H 7	1.240				
H 8	1.405				
H 9	1.595				
H 10	1.760				
H 11	2.240				
H 12	2.405				
H 13	2.595				
H 14	2.760				
H 15	3.240				
H 16	3.405				
H 17	3.595				
H 18	3.760				
H 19	4.240				
H 20	4.405				
H 21	4.595				
H 22	4.760				
H 23	5.240				
H 24	5.405	0.755			
J 1	0.062	-0.150	.092 .096	.006	5
J 2	0.437				
J 3	0.812				
J 4	1.187				
J 5	1.312	-0.150			

HOLE IDENT	BASIC X DIM	BASIC Y DIM	HOLE DIA	⌖ TOL	QTY
J 6	2.187	-0.150			
J 7	2.812		.092 .096	.006	8
J 8	3.187				
J 9	3.312				
J 10	3.812				
J 11	4.312				
J 12	4.812				
J 13	5.187	-0.150			

NOTES
1. INTERPRET DRAWING IN ACCORDANCE WITH STANDARDS PRESCRIBED BY MIL-D-70327
2. MATERIAL: MAGNESIUM ALLOY ZK 60A T5 PER-QQ-M-31
3. FINISH. PLUG INSERT HOLES AND ANODIZE PER MIL M 3171 TYPE IV
4. TRUE POSITIONING AS SHOWN IN CHART
5. UNLESS OTHERWISE SPECIFIED 125√ ALL OVER
6. UNLESS OTHERWISE SPECIFIED ALL FILLETS AND RADII .010 MAX.
7. REMOVE ALL BURRS AND BREAK SHARP EDGES .005-.015

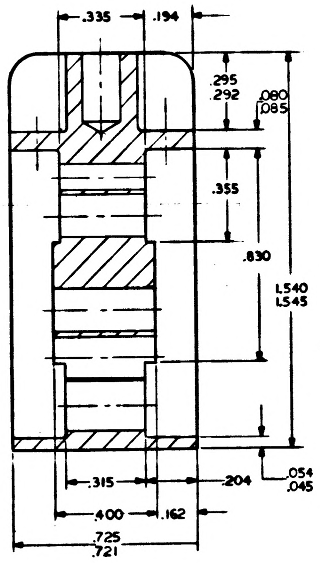

SECTION A-A
SCALE: 4/1

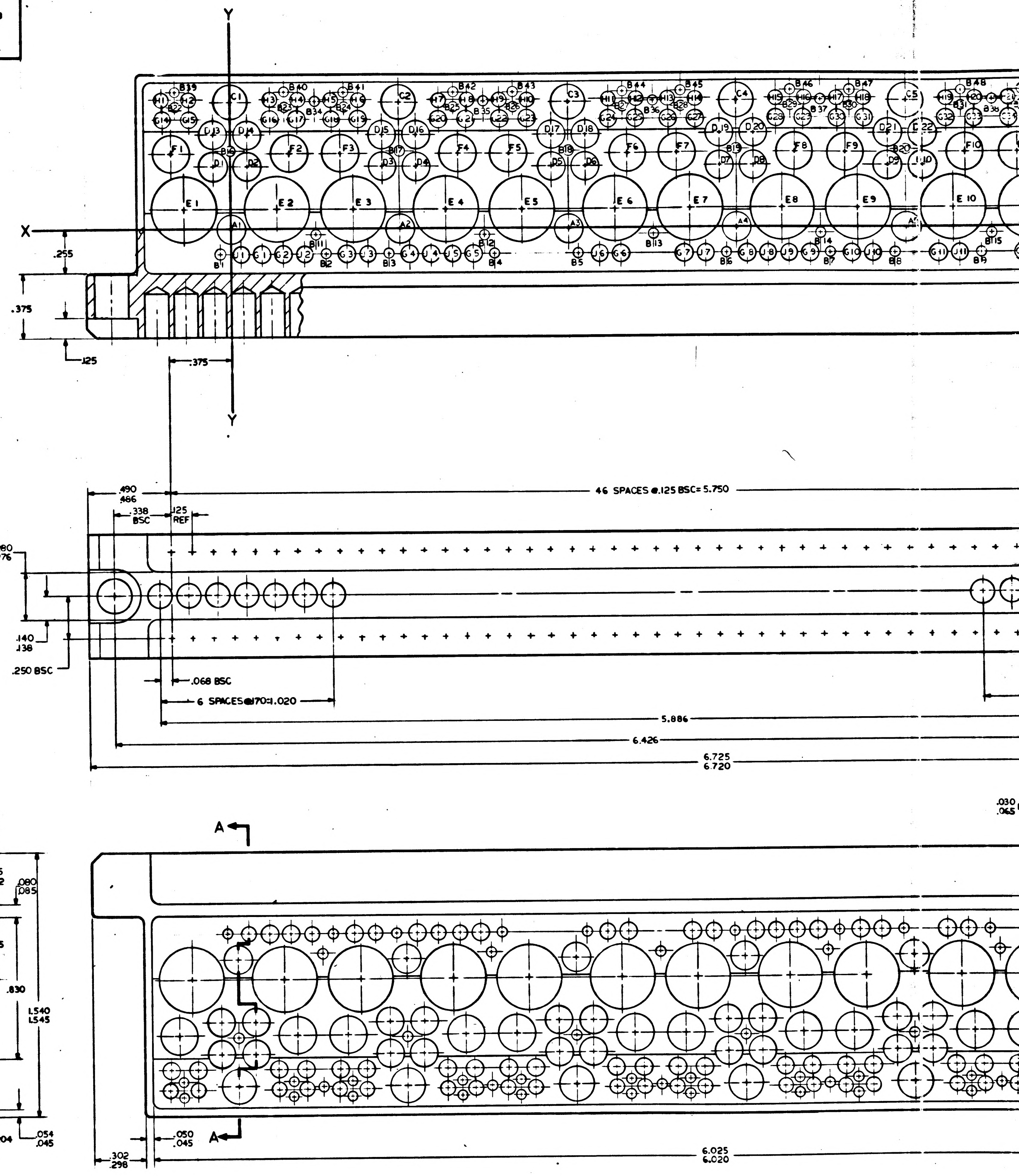

1004197 A

1004197

Revisions TDRR 02048

BASIC X DIM	BASIC Y DIM	HOLE DIA	⌖ TOL	QTY
2.187	-0.150			
2.812		.092 .096	.006	8
3.187				
3.312				
3.812				
4.312				
4.812				
5.187	-0.150			

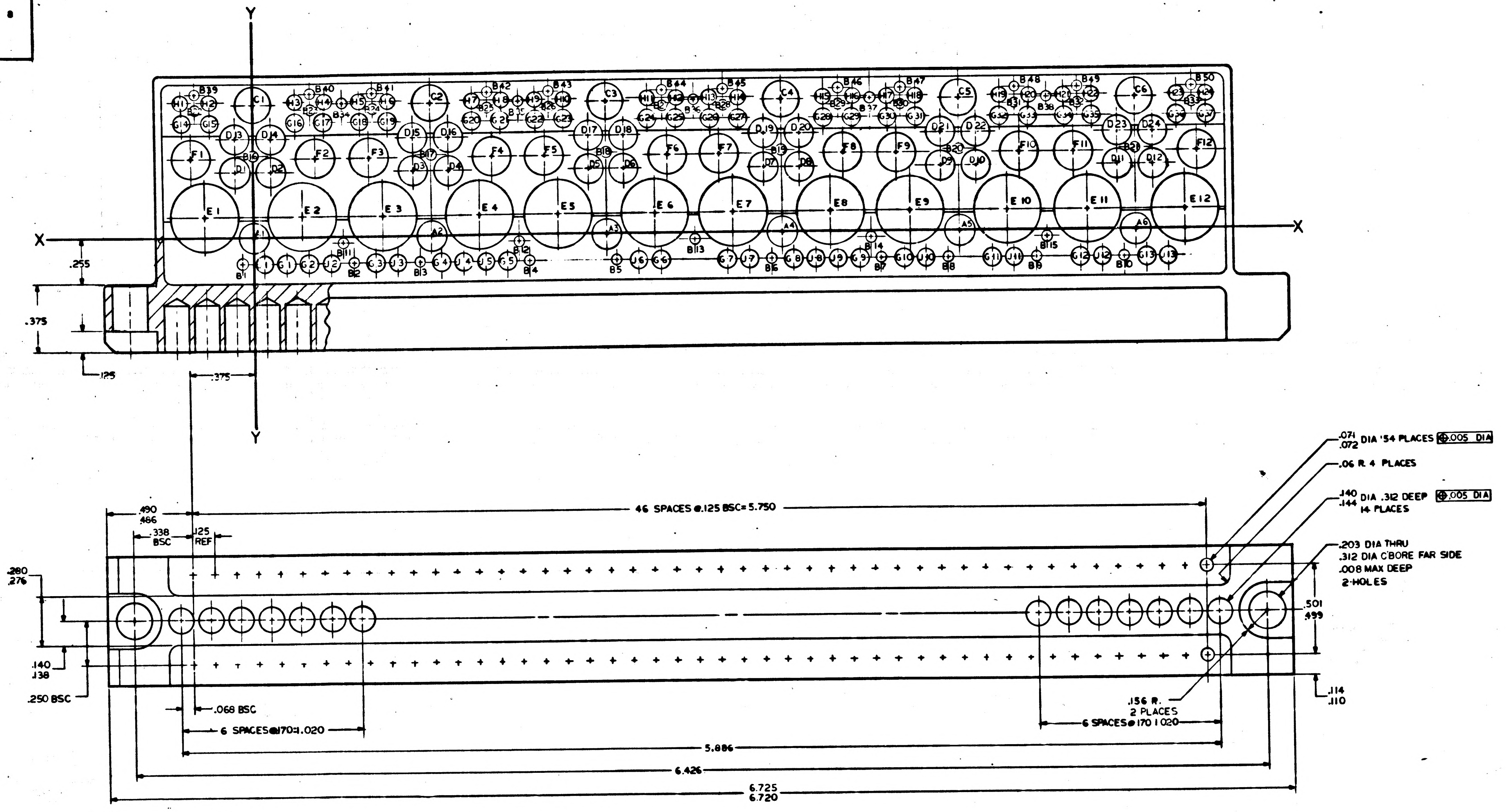

Y
Y
X
X
.255
.375
.125
.375
E1 E2 E3 E4 E5 E6 E7 E8 E9 E10 E11 E12
F1 F2 F3 F4 F5 F6 F7 F8 F9 F10 F11 F12
C1 C2 C3 C4 C5 C6
A1 A2 A3 A4 A5 A6
.071 .072 DIA '54 PLACES ⌖.005 DIA
.06 R. 4 PLACES
.140 .144 DIA .312 DEEP ⌖.005 DIA
14 PLACES
.203 DIA THRU
.312 DIA C'BORE FAR SIDE
.008 MAX DEEP
2-HOLES
46 SPACES @.125 BSC=5.750
.490 .466
.338 BSC
.125 REF
.280 .276
.140 .138
.250 BSC
.068 BSC
6 SPACES@.170=1.020
.501 .499
.114 .110
.156 R. 2 PLACES
6 SPACES@.170 1.020
5.886
6.426
6.725 6.720

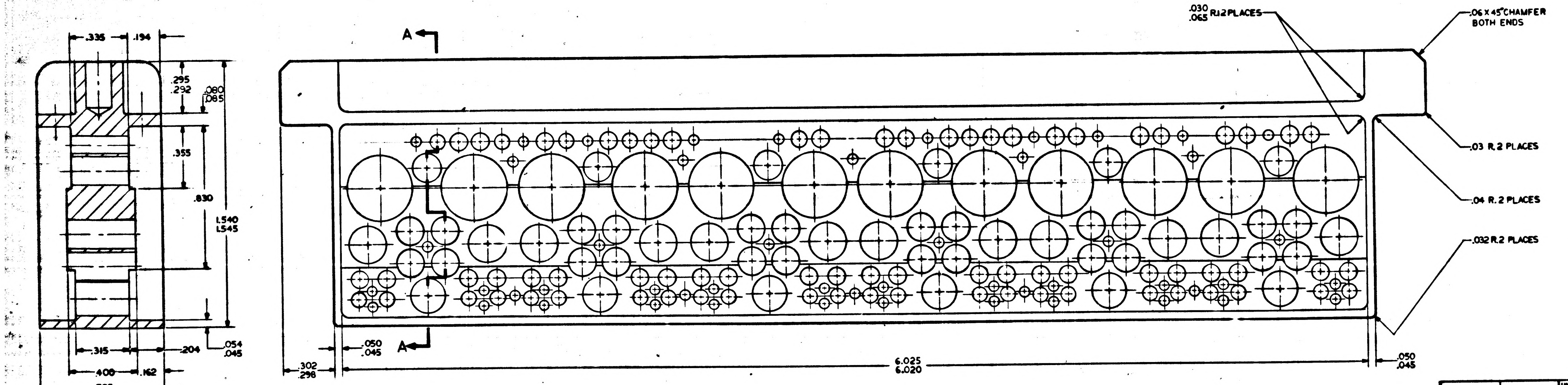

A
A
.030 .065 R.12 PLACES
.06 X 45° CHAMFER BOTH ENDS
.03 R.2 PLACES
.04 R.2 PLACES
.032 R.2 PLACES
.050 .045
.302 .296
6.025 6.020
.050 .045
.335
.194
.295 .292
.080 .085
.355
.830
1.540 1.545
.054 .045
.315
.204
.400
.162
.725 .721

SECTION A-A
SCALE: 4/1

1004197

QTY REQD	PART OR IDENTIFYING NO.	NOMENCLATURE OR DESCRIPTION	FIND NO

LIST OF MATERIALS

UNLESS OTHERWISE SPECIFIED
DIMENSIONS ARE IN INCHES
TOLERANCES ON
FRACTIONS ± DECIMALS ± ANGLES ±
DO NOT SCALE THIS DRAWING

MATERIAL
SEE NOTE 2

HEAT TREATMENT

FINAL FINISH
SEE NOTE 3

NEXT ASSY | USED ON
APPLICATION

MIT
INSTRUMENTATION LAB
Cambridge, Mass.

DRAWN DATE 6/12/63
CHECKED
APPROVAL
APPROVAL 7/10/63
NASA APPROVAL 7-17-63
MIT APPROVAL 7/17/63

MANNED SPACECRAFT CENTER
HOUSTON, TEXAS

HEADER, HOUSING
INTERFACE MODULE
A20 OR A40

CODE IDENT NO. | SIZE J | NASA DRAWING NO. 1004197
SCALE 4/1 | WT | SHEET 1 OF 1

1004197

MASTER

INCHES
PHOTOGRAPHIC SCALE ONLY

F-2

HOLE IDENT	BASIC X DIM	BASIC Y DIM	HOLE DIA	⌖ TOL	QTY
A 1	0.000	0.000	.170 .174	.006	6
A 2	1.000				
A 3	2.000				
A 4	3.000				
A 5	4.000				
A 6	5.000	0.000			
B 1	-0.062	0.150	.058 .062	.006	50
B 2	0.562				
B 3	0.937				
B 4	1.562				
B 5	2.062				
B 6	2.937				
B 7	3.562				
B 8	3.937				
B 9	4.437				
B 10	4.937	0.150			
B 11	0.500	0.035			
B 12	1.500				
B 13	2.500				
B 14	3.500				
B 15	4.500	0.035			
B 16	0.000	0.455			
B 17	1.000				
B 18	2.000				
B 19	3.000				
B 20	4.000				
B 21	5.000	0.455			
B 22	-0.325	0.710			
B 23	0.325				
B 24	0.675				
B 25	1.325				
B 26	1.675				
B 27	2.325				
B 28	2.675				
B 29	3.325				
B 30	3.675				
B 31	4.325				
B 32	4.675				
B 33	5.325	0.710			
B 34	0.500	0.745			
B 35	1.500				
B 36	2.500				
B 37	3.500				
B 38	4.500	0.745			
B 39	-0.325	0.800			
B 40	0.325				
B 41	0.675				
B 42	1.325				
B 43	1.675				
B 44	2.325				
B 45	2.675				
B 46	3.325				
B 47	3.675				
B 48	4.325				
B 48	4.675				
B 50	5.325	0.800			
C 1	0.000	0.740	.204 .207	.006	6
C 2	1.000				
C 3	2.000				
C 4	3.000				
C 5	4.000				
C 6	5.000	0.740			
D 1	-0.100	0.365	.165 .168	.006	24
D 2	0.100				
D 3	0.900				
D 4	1.100				
D 5	1.900				
D 6	2.100				
D 7	2.900				
D 8	3.100				
D 9	3.900				
D 10	4.100				
D 11	4.900				
D 12	5.100	0.365			
D 13	-0.100	0.550			
D 14	0.100				
D 15	0.900				
D 16	1.100				
D 17	1.900				
D 18	2.100				
D 19	2.900				
D 20	3.100				
D 21	3.900				
D 22	4.100				
D 23	4.900				
D 24	5.100	0.550			
E 1	-0.275	0.115	.381 .388	.006	2
E 2	0.275	0.115			

HOLE IDENT	BASIC X DIM	BASIC Y DIM	HOLE DIA	⌖ TOL	QTY
E 3	0.725	0.115	.381 .388	.006	10
E 4	1.275				
E 5	1.725				
E 6	2.275				
E 7	2.725				
E 8	3.275				
E 9	3.725				
E 10	4.275				
E 11	4.725				
E 12	5.275	0.115			
F 1	-0.350	0.440	.221 .217	.006	12
F 2	0.350				
F 3	0.650				
F 4	1.350				
F 5	1.650				
F 6	2.350				
F 7	2.650				
F 8	3.350				
F 9	3.650				
F 10	4.350				
F 11	4.650				
F 12	5.350	0.440			
G 1	0.187	0.150	.100 .104	.006	37
G 2	0.312				
G 3	0.687				
G 4	1.062				
G 5	1.437				
G 6	2.312				
G 7	2.687				
G 8	3.062				
G 9	3.437				
G 10	3.687				
G 11	4.187				
G 12	4.687				
G 13	5.062	0.150			
G 14	-0.400	0.640			
G 15	-0.240				
G 16	0.240				
G 17	0.400				
G 18	0.600				
G 19	0.760				
G 20	1.240				
G 21	1.400				
G 22	1.600				
G 23	1.760				
G 24	2.240				
G 25	2.400				
G 26	2.600				
G 27	2.760				
G 28	3.240				
G 29	3.400				
G 30	3.600				
G 31	3.760				
G 32	4.240				
G 33	4.400				
G 34	4.600				
G 35	4.760				
G 36	5.240				
G 37	5.400	0.640			
H 1	-0.405	0.755	.085 .089	.006	24
H 2	-0.240				
H 3	0.240				
H 4	0.405				
H 5	0.595				
H 6	0.760				
H 7	1.240				
H 8	1.405				
H 9	1.595				
H 10	1.760				
H 11	2.240				
H 12	2.405				
H 13	2.595				
H 14	2.760				
H 15	3.240				
H 16	3.405				
H 17	3.595				
H 18	3.760				
H 19	4.240				
H 20	4.405				
H 21	4.595				
H 22	4.760				
H 23	5.240				
H 24	5.405	0.755			
J 1	0.062	-0.150	.092 .096	.006	5
J 2	0.437				
J 3	0.812				
J 4	1.187				
J 5	1.312	-0.150			

HOLE IDENT	BASIC X DIM	BASIC Y DIM	HOLE DIA	⌖ TOL	QTY
J 6	2.187	-0.150	.092 .096	.006	8
J 7	2.812				
J 8	3.187				
J 9	3.312				
J 10	3.812				
J 11	4.312				
J 12	4.812				
J 13	5.187	-0.150			

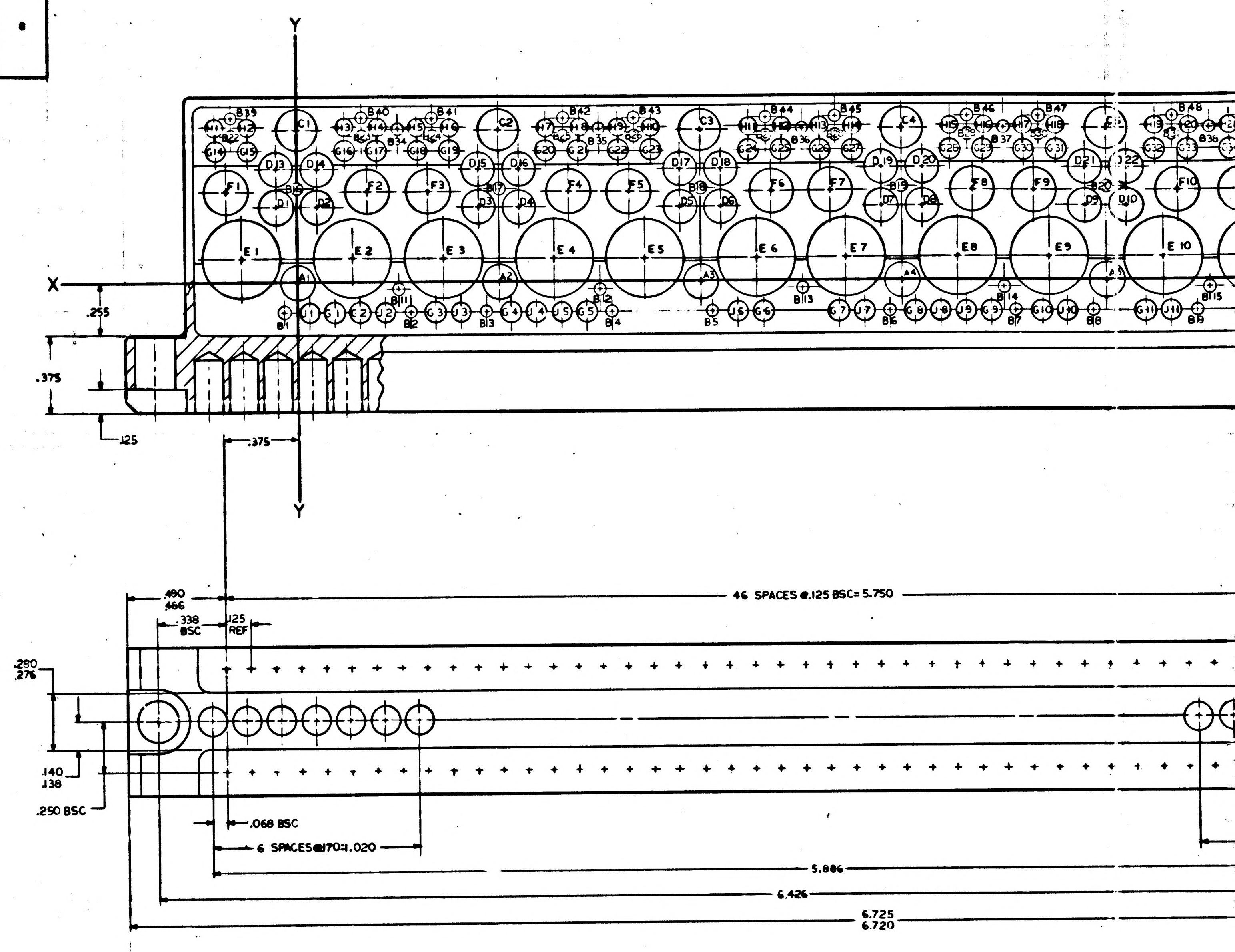

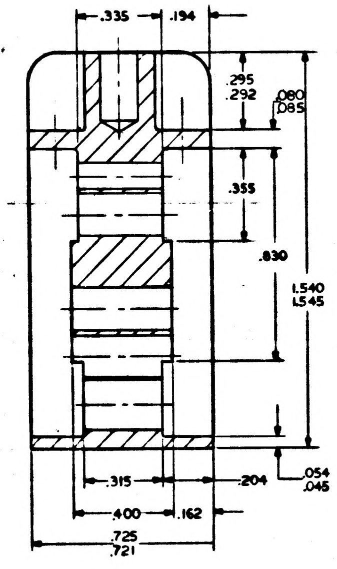

SECTION A-A
SCALE: 4/1

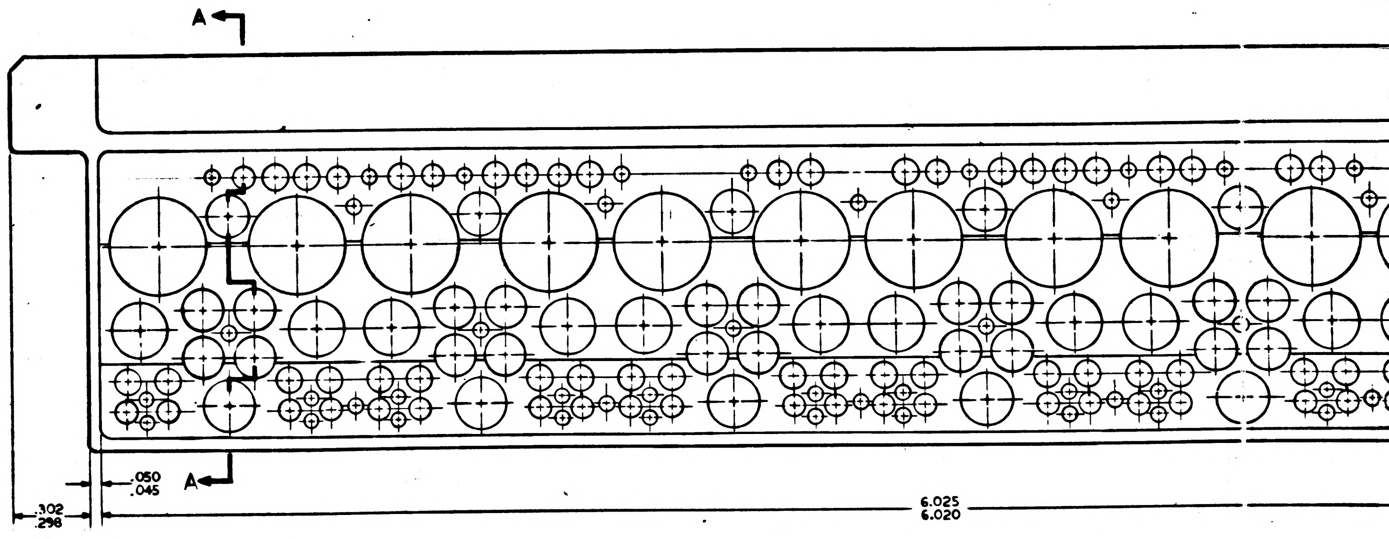

NOTES
1. INTERPRET DRAWING IN ACCORDANCE WITH STANDARDS PRESCRIBED BY MIL-D-70327
2. MATERIAL MAGNESIUM ALLOY ZK 60A T5 PER QQ-M-31
3. FINISH: PLUG INSERT HOLES AND ANODIZE PER MIL M 3171 TYPE III
4. TRUE POSITIONING AS SHOWN IN CHART
5. UNLESS OTHERWISE SPECIFIED $\sqrt{125}$ ALL OVER
6. UNLESS OTHERWISE SPECIFIED ALL FILLETS AND RADII .010 MAX.
7. REMOVE ALL BURRS AND BREAK SHARP EDGES .005-.015

1004197

REVISIONS TDRR 02048			
SYM	DESCRIPTION	DATE	APPROVAL
A	REVISED PER TDRR 02294	7-30-63	

1004198 A

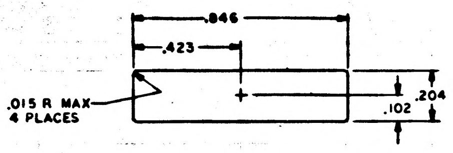
.846
.423
.015 R MAX
4 PLACES
.204
.102

DETAIL A
2 "K" HOLES

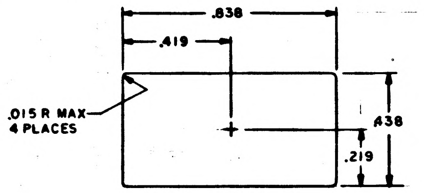
.838
.419
.015 R MAX
4 PLACES
.438
.219

DETAIL B
1 "L" HOLE

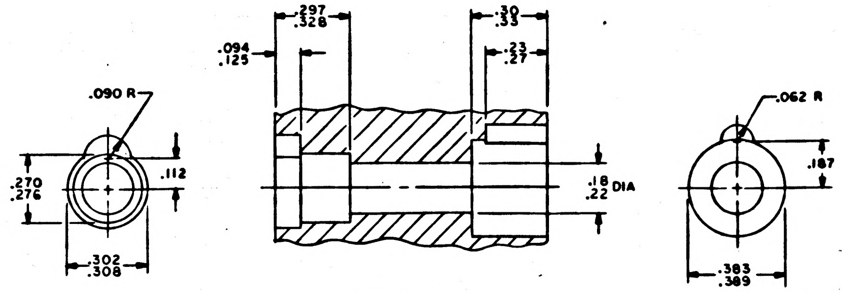
.090 R
.270
.276
.112
.302
.308
.297
.328
.094
.125
.30
.33
.23
.27
.18
.22 DIA
.062 R
.187
.383
.389

DETAIL D
2 "N" HOLES

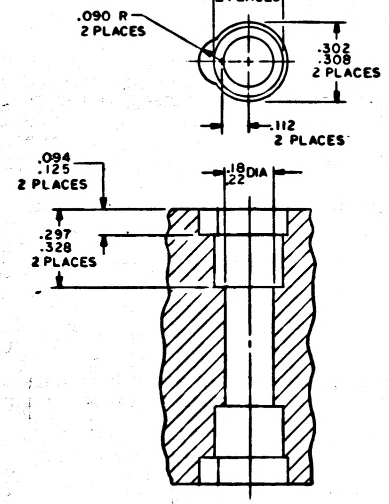
.270
.276
2 PLACES
.090 R
2 PLACES
.302
.308
2 PLACES
.112
2 PLACES
.094
.125
2 PLACES
.18
.22 DIA
.297
.328
2 PLACES

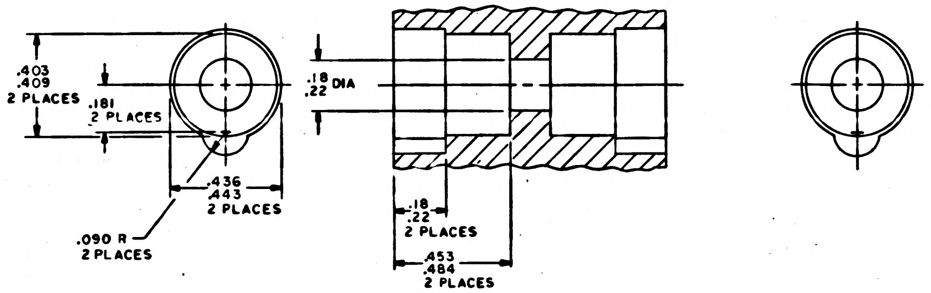
.403
.409
2 PLACES
.181
2 PLACES
.090 R
2 PLACES
.436
.443
2 PLACES
.18
.22 DIA
.18
.22
2 PLACES
.453
.484
2 PLACES

DETAIL E
1 "P" HOLE

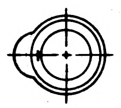

DETAIL C
3 "M" HOLES

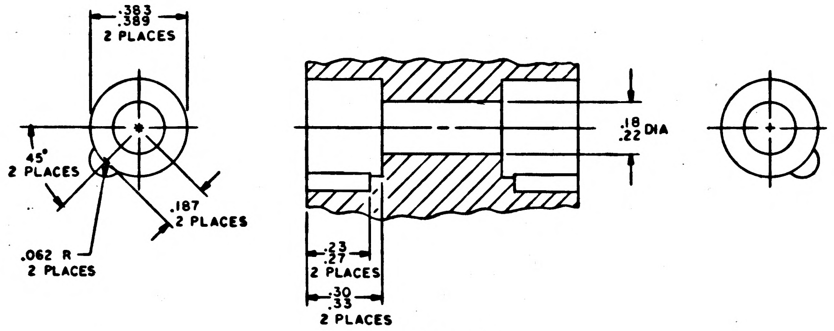
.383
.389
2 PLACES
45°
2 PLACES
.187
2 PLACES
.062 R
2 PLACES
.18
.22 DIA
.23
.27
2 PLACES
.30
.33
2 PLACES

DETAIL F
2 "S" HOLES

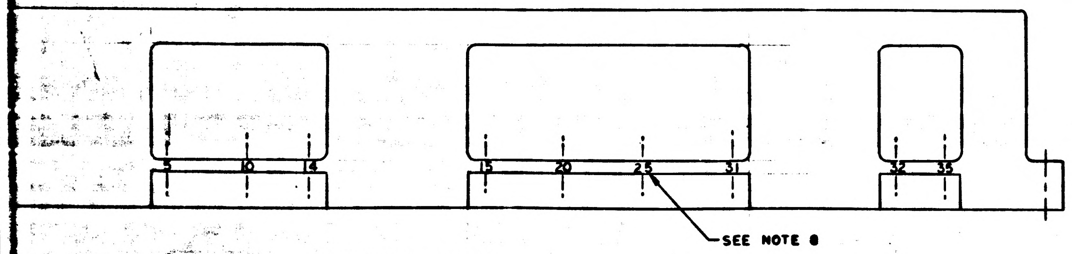
5
10
14
15
20
25
31
32
35
SEE NOTE 8

MARKING VIEW
SCALE 2/1

QTY REQD	PART OR IDENTIFYING NO.	NOMENCLATURE OR DESCRIPTION	FIND NO.

LIST OF MATERIALS

NEXT ASSY	USED ON	UNLESS OTHERWISE SPECIFIED DIMENSIONS ARE IN INCHES TOLERANCES ON FRACTIONS ± DECIMALS .XXX ±.005 .XX ±.02 ANGLES ± DO NOT SCALE THIS DRAWING	M I T INSTRUMENTATION LAB CAMBRIDGE, MASS
APPLICATION		MATERIAL SEE NOTE 2	DRAWN DATE CHECKED APPROVAL APPROVAL
		HEAT TREATMENT —	NASA APPROVAL 7-12-63
		FINAL FINISH SEE NOTE 2	MIT APPROVAL

MANNED SPACECRAFT CENTER
HOUSTON, TEXAS

HEADER HOUSING
CONTROL MODULE
A.G.C. POWER SUPPLY

CODE IDENT NO.	SIZE	NASA DRAWING NO.
	J	1004198
SCALE 9/1	WT	SHEET 1 OF 1

1004198 A

004198

MASTER

INCHES
PHOTOGRAPHIC SCALE ORIG.

E3

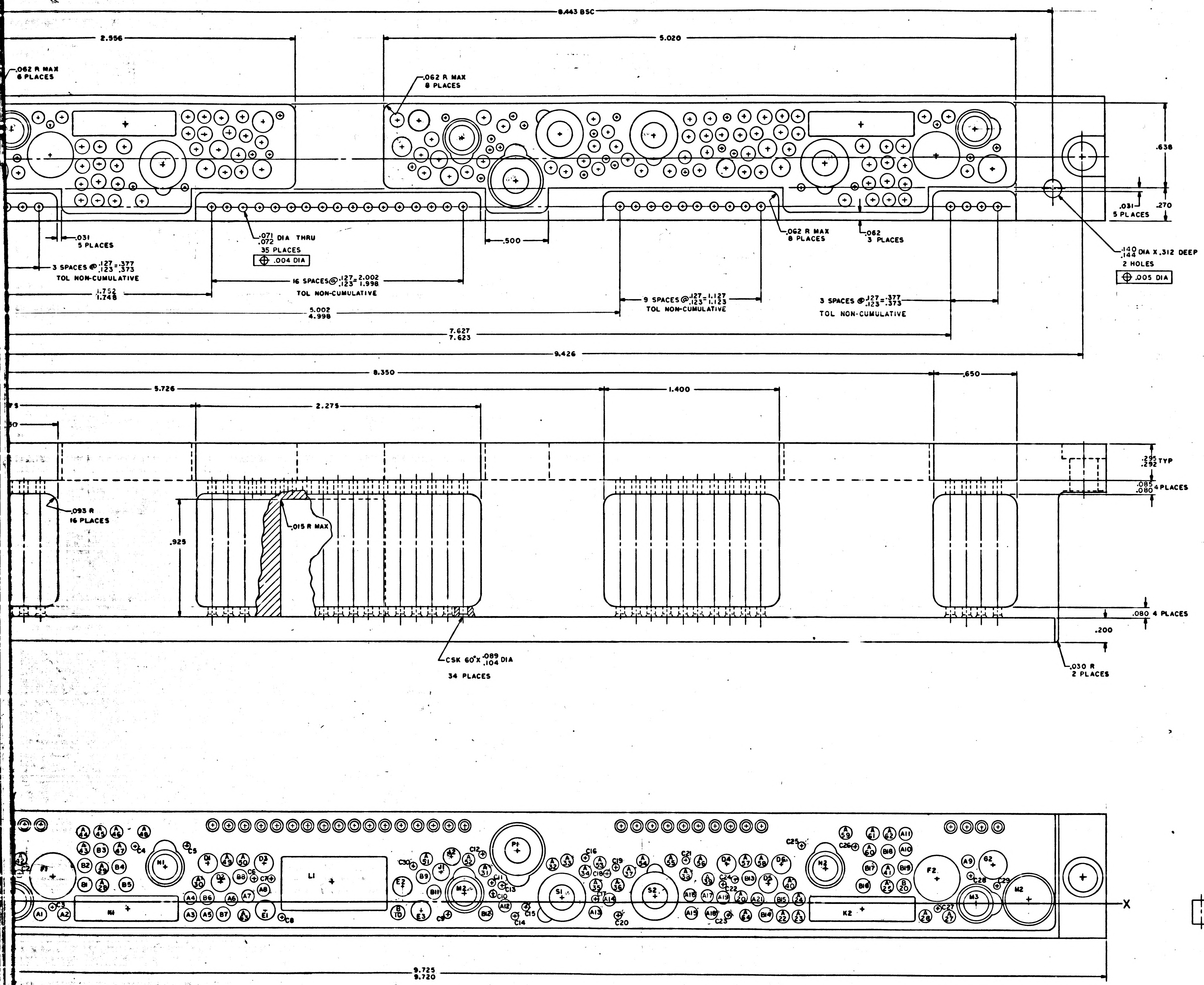
8.443 BSC
2.556
5.020
.062 R MAX
6 PLACES
.062 R MAX
8 PLACES
.638
.031
5 PLACES
.270
.031
5 PLACES
.071 DIA THRU
.072
35 PLACES
⊕ .004 DIA
.500
.062 R MAX
8 PLACES
.062
3 PLACES
.140 DIA X .312 DEEP
.144
2 HOLES
⊕ .005 DIA
3 SPACES @ .127/.123 = .377/.373
TOL NON-CUMULATIVE
1.752
1.748
16 SPACES @ .127/.123 = 2.002/1.998
TOL NON-CUMULATIVE
9 SPACES @ .127/.123 = 1.127/1.123
TOL NON-CUMULATIVE
3 SPACES @ .127/.123 = .377/.373
TOL NON-CUMULATIVE
5.002
4.998
7.627
7.623
9.426
8.350
5.726
2.275
1.400
.650
.295
.292 TYP
.085
.080 4 PLACES
.093 R
16 PLACES
.925
.015 R MAX
.080 4 PLACES
.200
CSK 60° X .089/.104 DIA
34 PLACES
.030 R
2 PLACES
A1 A2 A3 A4 A5 A6 A7 A8 A9 A10 A11 A12 A13 A14 A15 A16 A17 A18 A19 A20 A21 A22 A23 A24 A25 A26 A27 A28 A29 A30 A31 A32 A33 A34 A35 A36 A37 A38 A39 A40 A41 A42 A43 A44 A45 A46 A47 A48 A49 A50 A51 A52 A53 A54 A55 A56 A57 A58 A59 A60 A61 A62 A63
B1 B2 B3 B4 B5 B6 B7 B8 B9 B10 B11 B12 B13 B14 B15 B16 B17 B18 B19 B20 B21 B22
C3 C4 C5 C6 C7 C8 C9 C10 C11 C12 C13 C14 C15 C16 C17 C18 C19 C20 C21 C22 C23 C24 C25 C26 C27 C28 C29 C30
D1 D2 D3 D4 D5 D6
E1 E2 E3
F1 F2
G2
K1 K2
L1
M1 M2 M3
N1 N2
P1
S1 S2
X
9.725
9.720

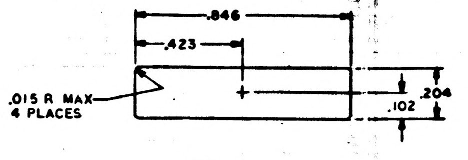
.846
.423
.015 R MAX
4 PLACES
.204
.102

DETAIL A
2 "K" HOLES

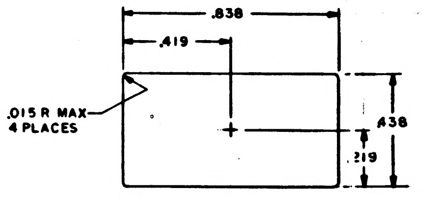
.838
.419
.015 R MAX
4 PLACES
.438
.219

DETAIL B
1 "L" HOLE

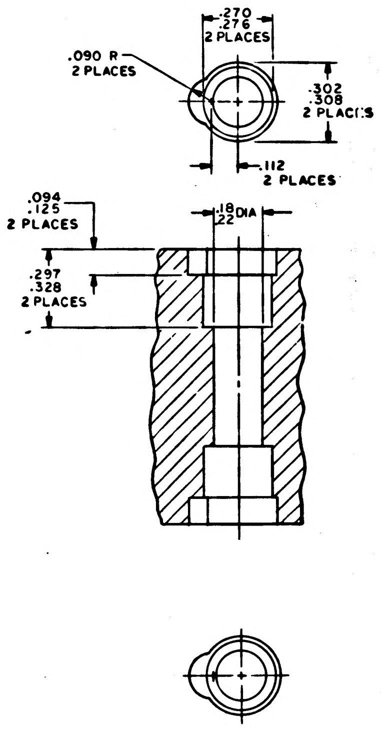
.270
.276
2 PLACES
.090 R
2 PLACES
.302
.308
2 PLACES
.112
2 PLACES
.094
.125
2 PLACES
.18
.22 DIA
.297
.328
2 PLACES

DETAIL C
3 "M" HOLES

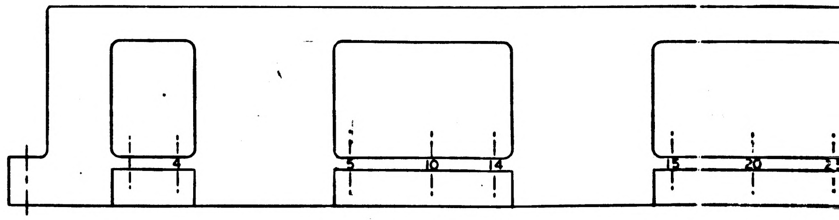
4
5
10
14
15
20
2

MARKING VIEW
SCALE 2/1

INCHES
PHOTOGRAPHIC SCALE ONLY

E-2

NOTICE - WHEN GOVERNMENT DRAWINGS, SPECIFICATIONS, OR OTHER DATA ARE USED FOR ANY PURPOSE OTHER THAN IN CONNECTION WITH A DEFINITELY RELATED GOVERNMENT PROCUREMENT OPERATION, THE UNITED STATES GOVERNMENT THEREBY INCURS NO RESPONSIBILITY NOR ANY OBLIGATION WHATSOEVER; AND THE FACT THAT THE GOVERNMENT MAY HAVE FORMULATED, FURNISHED, OR IN ANY WAY SUPPLIED THE SAID DRAWINGS, SPECIFICATIONS, OR OTHER DATA IS NOT TO BE REGARDED BY IMPLICATION OR OTHERWISE AS IN ANY MANNER LICENSING THE HOLDER OR ANY OTHER PERSON OR CORPORATION, OR CONVEYING ANY RIGHTS OR PERMISSION TO MANUFACTURE, USE, OR SELL ANY PATENTED INVENTION THAT MAY IN ANY WAY BE RELATED THERETO.

HOLE IDENT	X BASIC DIM.	Y BASIC DIM.	⊕ DIA	HOLE DIA	QTY
A1	.208	−.103	.006	.100 .104	64
A2	.393	−.103			
A3	1.402	−.103			
A4	1.402	.030			
A5	1.532	−.103			
A6	1.730	.030			
A7	1.863	.041			
A8	1.985	.098			
A9	7.605	.333			
A10	7.101	.420			
A11	7.101	.550			
A12	3.908	−.028			
A13	4.626	−.082			
A14	4.743	.030			
A15	5.394	−.082			
A16	5.380	.054			
A17	5.520	.054			
A18	5.552	−.078			
A19	5.652	.041			
A20	5.797	.041			
A21	5.930	.023			
A22	6.128	−.103			
A23	6.258	−.103			
A24	6.258	.030			
A25	6.961	.133			
A26	7.267	−.103			
A27	7.452	−.103			
A28	.691	.133			
A29	.691	.262			
A30	1.471	.152			
A31	3.746	.246			
A32	4.284	.296			
A33	4.407	.330			
A34	4.547	.240			
A35	4.634	.136			
A36	4.806	.140			
A37	4.899	.242			
A38	5.350	.221			
A39	5.532	.187			
A40	6.189	.152			
A41	6.961	.262			
A42	.055	.333			
A43	.550	.420			
A44	.550	.550			
A45	.691	.550			
A46	.836	.550			
A47	.836	.420			
A48	1.032	.550			
A49	1.694	.333			
A50	1.825	.333			
A51	3.284	.333			
A52	3.620	.333			
A53	4.660	.312			
A54	5.006	.333			
A55	5.234	.333			
A56	5.470	.333			
A57	5.835	.333			
A58	5.966	.333			
A59	6.628	.550			
A60	6.824	.420			
A61	6.824	.550			
A62	6.961	.550			
A63	1.827	−.103			
A64	5.833	−.103			
B1	.564	.139		.108 .112	20
B2	.564	.287			
B3	.691	.405			
B4	.835	.287			
B5	.888	.139			
B6	1.537	.034			
B7	1.664	−.095			
B8	1.800	.199			
B9	3.254	.199			
B10	3.051	−.095			
B11	3.338	.077			
B12	3.754	−.095	.006		

HOLE IDENT	X BASIC DIM	Y BASIC DIM	⊕ DIA	HOLE DIA	QTY
B13	5.860	.199	.006	.108 .112	20
B14	5.996	−.095			
B15	6.123	.030			
B16	6.772	.139			
B17	6.825	.287			
B18	6.961	.405			
B19	7.101	.287			
B20	7.101	.139			
C1	−.170	.133		.058 .062	30
C2	.038	.218			
C3	.300	−.040			
C4	.954	.440			
C5	1.378	.440			
C6	1.915	.190			
C7	2.049	.190			
C8	2.127	−.122			
C9	3.448	−.122			
C10	3.800	.060			
C11	3.800	.150			
C12	3.726	.372			
C13	3.884	.133			
C14	3.984	−.122			
C15	4.070	−.040			
C16	4.543	.372			
C17	4.626	.027			
C18	4.717	.221			
C19	4.788	.276			
C20	4.788	−.122			
C21	5.350	.372			
C22	5.652	.150			
C23	5.684	−.122			
C24	5.745	.187			
C25	6.282	.440			
C26	6.706	.440			
C27	7.360	−.040			
C28	7.622	.218			
C29	7.830	.133			
C30	3.174	.276			
D1	1.540	.306		.153 .157	6
D2	1.646	.155			
D3	1.979	.306			
D4	5.681	.306			
D5	6.014	.155			
D6	6.120	.306			
				.165 .169	3
E1	1.995	−.065			
E2	3.092	.144			
E3	3.236	−.065			
F1	.305	.200		.362 .369	2
F2	7.355	.200			
G1	−.136	.308		.227 .231	2
G2	7.796	.308			
H1	−.420	.036		SEE DETAIL	2
H2	8.076	.036			
J1	3.399	.229		.127 .131	2
J2	3.480	.356			
K1	.897	−.050		SEE DETAIL A	2
K2	6.763	−.050			
L1	2.530	.162		SEE DETAIL B	1
M1	.000	.000		SEE DETAIL C	3
M2	3.583	.066			
M3	7.660	.000			
N1	1.195	.275		SEE DETAIL D	2
N2	6.469	.275			
P1	4.007	.402		SEE DETAIL E	1
S1	4.357	.039		SEE DETAIL F	2
S2	5.104	.039			
			.006		

NOTES:

1. INTERPRET DRAWING IN ACCORDANCE WITH STANDARDS PRESCRIBED BY MIL-D-70327
2. MATERIAL: MAGNESIUM ALLOY ZK-60A-T5 PER QQ-M-31
3. FINISH: ANODIZE PER MIL-M-3171 TYPE IV
4. TRUE POSITIONING AS SHOWN IN CHART
5. UNLESS OTHERWISE SPECIFIED 125/ ALL OVER
6. REMOVE ALL BURRS AND BREAK SHARP EDGES .005-.015
7. UNLESS OTHERWISE SPECIFIED ALL FILLETS AND RADII .010 MAX
8. MARK .060-.080 HIGH CHARACTERS PER ND1002112 USING ENEMAL, LUSTERLESS WHITE PER ND1002111

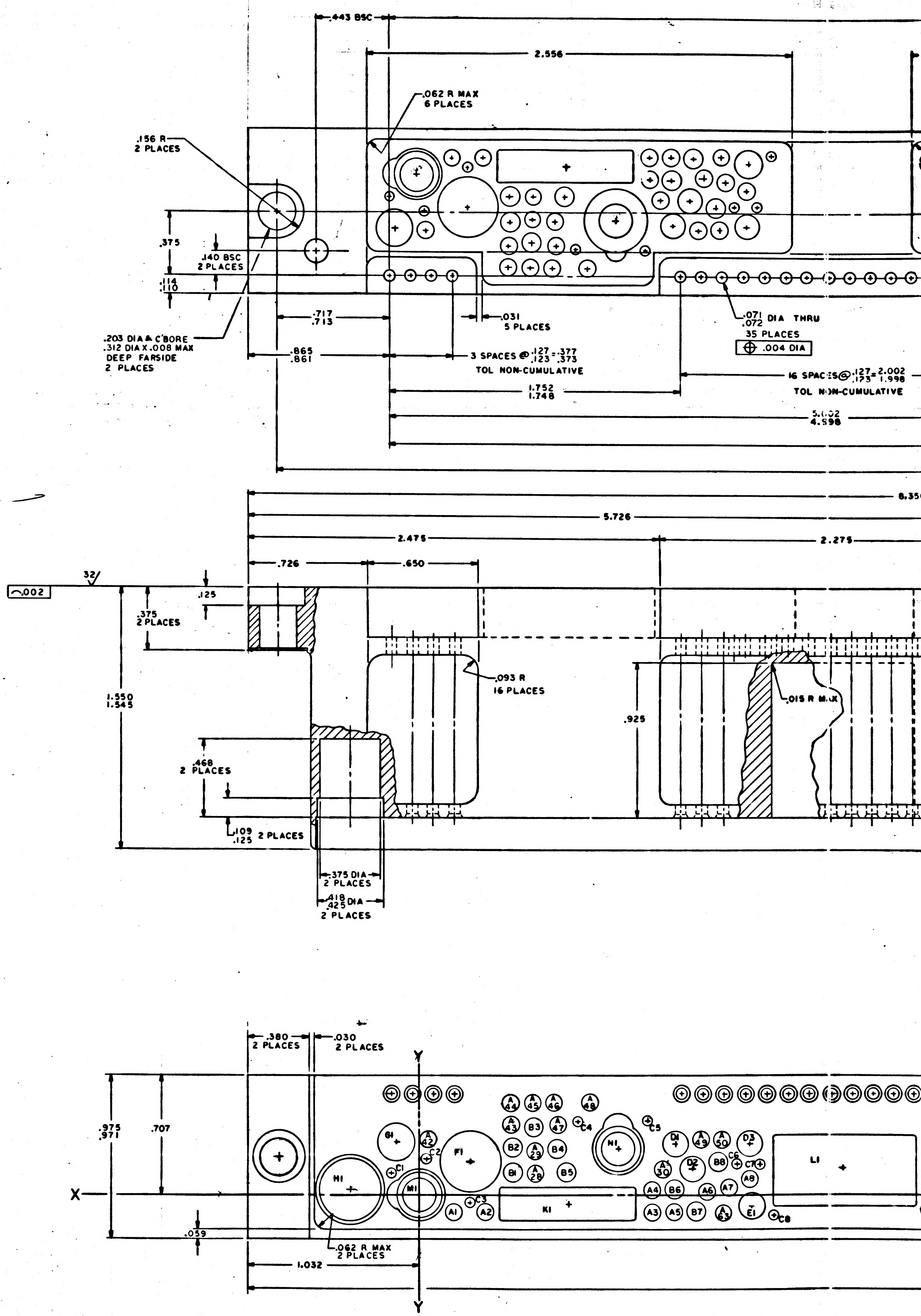
.443 BSC
2.556
.062 R MAX 6 PLACES
.156 R 2 PLACES
.375
.140 BSC 2 PLACES
.114 .110
.203 DIA ⌴ C'BORE .312 DIA X .008 MAX DEEP FARSIDE 2 PLACES
.717 .713
.031 5 PLACES
.865 .861
3 SPACES @ .127-.377 .123-.373
TOL NON-CUMULATIVE
1.752 1.748
.071 .072 DIA THRU 35 PLACES
⊕ .004 DIA
16 SPACES @ .127 2.002 .123 1.998
TOL NON-CUMULATIVE
5.002 4.998
8.35
5.726
2.475
2.275
.726
.650
32
.002
.125
.375 2 PLACES
1.550 1.545
.093 R 16 PLACES
.015 R MAX
.925
.468 2 PLACES
.109 .125 2 PLACES
.375 DIA 2 PLACES
.418 .425 DIA 2 PLACES
.380 2 PLACES
.030 2 PLACES
Y
X
.975 .971
.707
.059
1.032
.062 R MAX 2 PLACES
H1
M1
F1
K1
L1
N1
C1
C2
C3
C4
C5
C6
C7
C8
A1
A2
A3
A4
A5
A6
A7
A8
B1
B2
B3
B4
B5
B6
B7
B8
D1
D2
D3
E1
G1

1004198 B

SYM	DESCRIPTION	DATE	APPROVAL
A	REVISED PER TDRR 02294	9-30-63	
B	REVISED PER TDRR 03132	9-18-63	

REVISIONS TDRR 02048

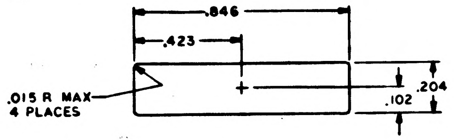

.846
.423
.015 R MAX
4 PLACES
.204
.102

DETAIL A
2 "K" HOLES

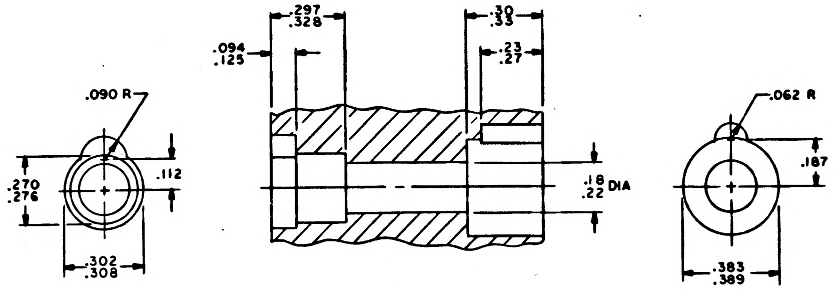

.297
.328
.30
.33
.094
.125
.23
.27
.090 R
.062 R
.270
.276
.112
.18
.22 DIA
.187
.302
.308
.383
.389

DETAIL D
2 "N" HOLES

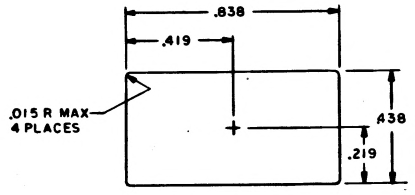

.838
.419
.015 R MAX
4 PLACES
.438
.219

DETAIL B
1 "L" HOLE

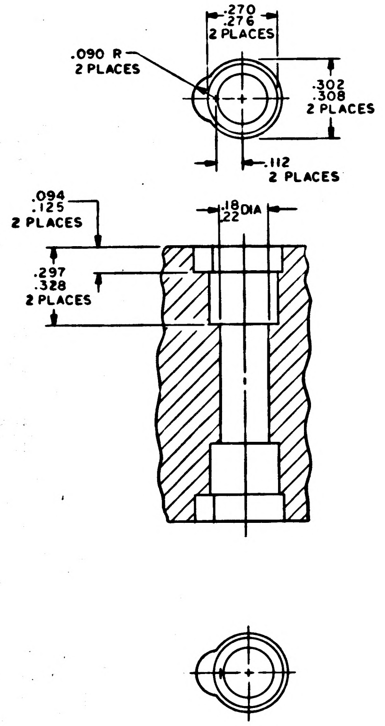

.270
.276
2 PLACES
.090 R
2 PLACES
.302
.308
2 PLACES
.112
2 PLACES
.094
.125
2 PLACES
.18
.22 DIA
.297
.328
2 PLACES

DETAIL C
3 "M" HOLES

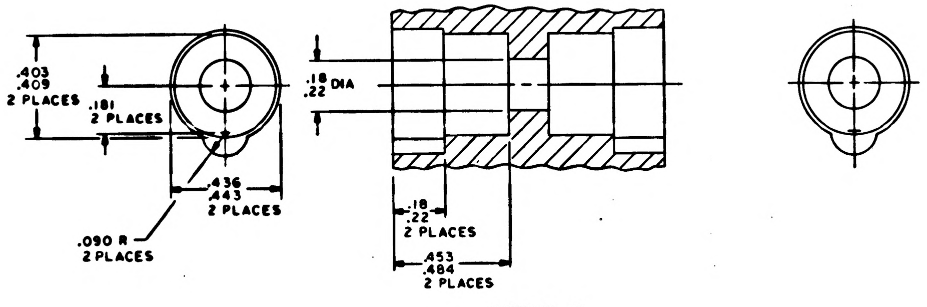

.403
.409
2 PLACES
.181
2 PLACES
.18
.22 DIA
.436
.443
2 PLACES
.090 R
2 PLACES
.18
.22
2 PLACES
.453
.484
2 PLACES

DETAIL E
1 "P" HOLE

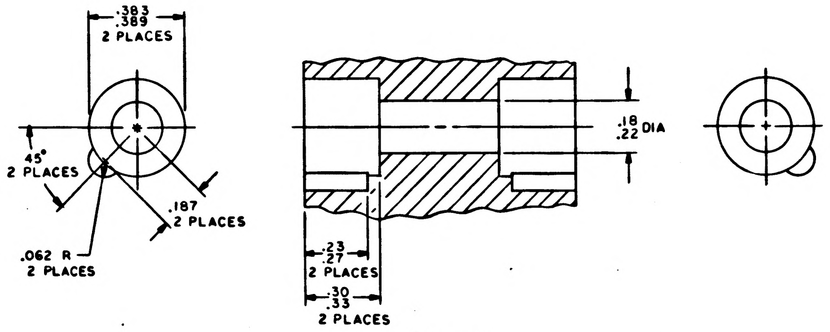

.383
.389
2 PLACES
45°
2 PLACES
.187
2 PLACES
.062 R
2 PLACES
.18
.22 DIA
.23
.27
2 PLACES
.30
.33
2 PLACES

DETAIL F
2 "S" HOLES

QTY REQD	PART OR IDENTIFYING NO.	NOMENCLATURE OR DESCRIPTION	FIND NO.

LIST OF MATERIALS

NEXT ASSY	USED ON

APPLICATION

UNLESS OTHERWISE SPECIFIED
DIMENSIONS ARE IN INCHES
TOLERANCES ON
FRACTIONS ± DECIMALS .XXX ±.005 .XX ±.02 ANGLES ±2°
DO NOT SCALE THIS DRAWING

MATERIAL
SEE NOTE 2

HEAT TREATMENT
—

FINAL FINISH
SEE NOTE 2

MIT
INSTRUMENTATION LAB
CAMBRIDGE, MASS
DWG NO CONTRACT

DRAWN DATE
CHECKED
APPROVAL
APPROVAL
NASA APPROVAL W J 7-12-63
MIT APPROVAL

MANNED SPACECRAFT CENTER
HOUSTON, TEXAS

HEADER HOUSING
CONTROL MODULE
A.G.C. POWER SUPPLY

CODE IDENT NO.	SIZE	NASA DRAWING NO.
—	J	1004198

SCALE 4/1 WT SHEET 1 OF 1

1004198 B

MASTER

INCHES
PHOTOGRAPHIC SCALE ONLY

F3

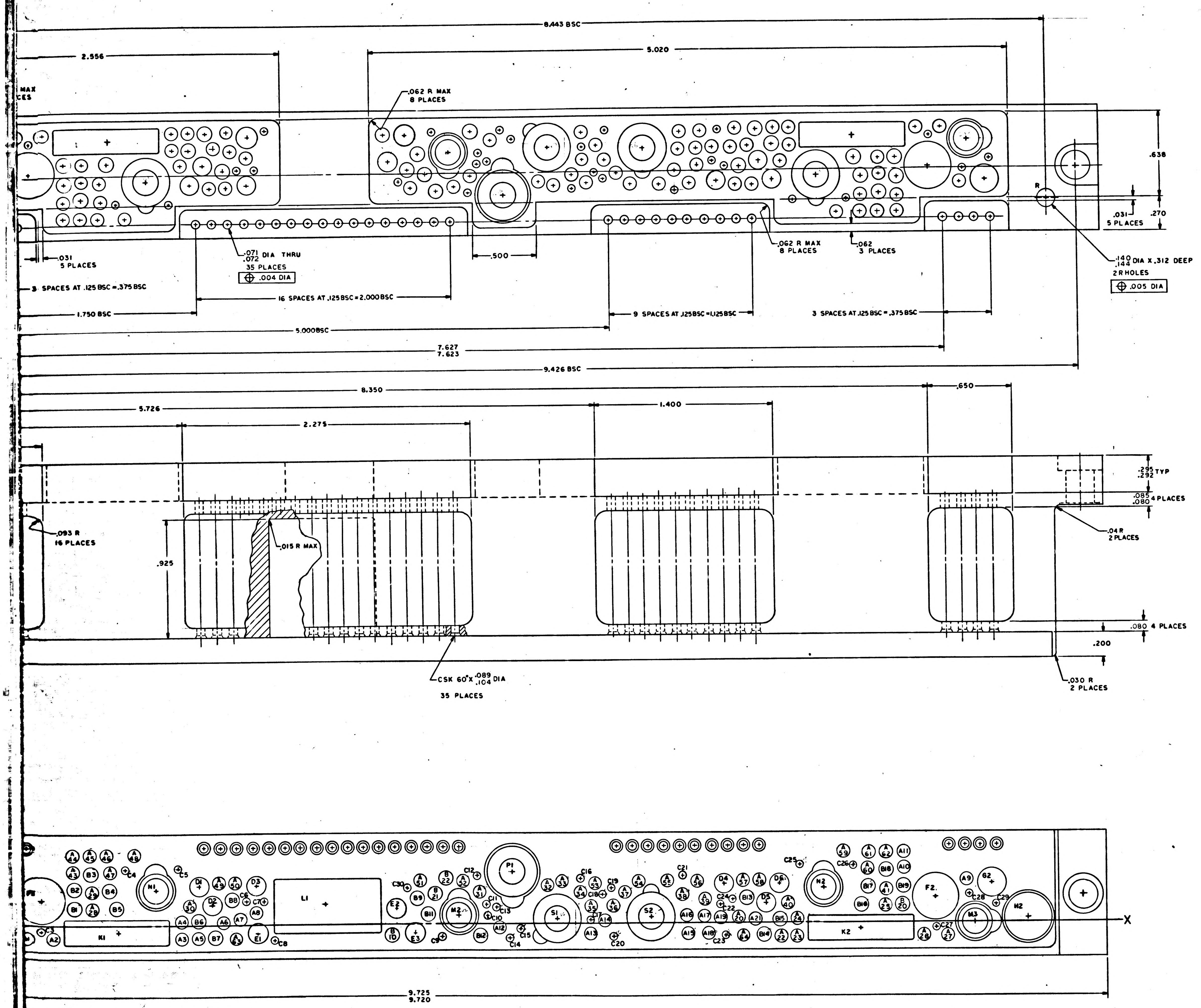
8.443 BSC
2.556
5.020
MAX
CES
.062 R MAX
8 PLACES
R
.638
.031
5 PLACES
.270
.031
5 PLACES
.071
.072 DIA THRU
35 PLACES
⊕ .004 DIA
.500
.062 R MAX
8 PLACES
.062
3 PLACES
.140
.144 DIA X .312 DEEP
2 R HOLES
⊕ .005 DIA
3 SPACES AT .125 BSC = .375 BSC
16 SPACES AT .125 BSC = 2.000 BSC
1.750 BSC
9 SPACES AT .125 BSC = 1.125 BSC
3 SPACES AT .125 BSC = .375 BSC
5.000 BSC
7.627
7.623
9.426 BSC
8.350
.650
5.726
1.400
2.275
.295
.292 TYP
.085
.080 4 PLACES
.093 R
16 PLACES
.015 R MAX
.925
.04 R
2 PLACES
.080 4 PLACES
.200
CSK 60° X .089
.104 DIA
35 PLACES
.030 R
2 PLACES
P1
N1
N2
L1
K1
K2
S1
S2
M1
M2
M3
F1
F2
E1
E2
E3
X
9.725
9.720

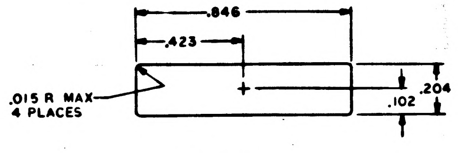
.846
.423
.015 R MAX
4 PLACES
.204
.102

DETAIL A
2 "K" HOLES

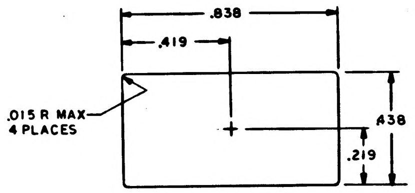
.838
.419
.015 R MAX
4 PLACES
.438
.219

DETAIL B
1 "L" HOLE

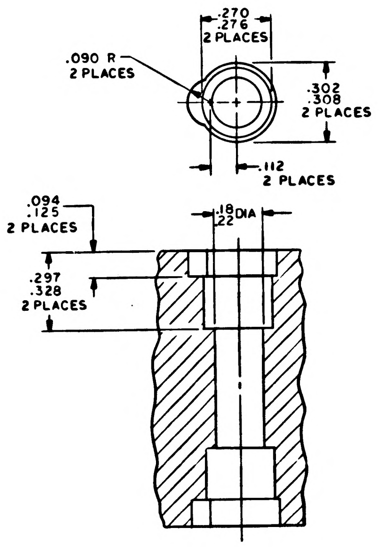
.270
.276
2 PLACES
.090 R
2 PLACES
.302
.308
2 PLACES
.112
2 PLACES
.094
.125
2 PLACES
.18
.22 DIA
.297
.328
2 PLACES

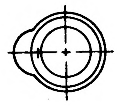

DETAIL C
3 "M" HOLES

1004198 B

NOTICE — WHEN GOVERNMENT DRAWINGS, SPECIFICATIONS, OR OTHER DATA ARE USED FOR ANY PURPOSE OTHER THAN IN CONNECTION WITH A DEFINITELY RELATED GOVERNMENT PROCUREMENT OPERATION, THE UNITED STATES GOVERNMENT THEREBY INCURS NO RESPONSIBILITY NOR ANY OBLIGATION WHATSOEVER; AND THE FACT THAT THE GOVERNMENT MAY HAVE FORMULATED, FURNISHED, OR IN ANY WAY SUPPLIED THE SAID DRAWINGS, SPECIFICATIONS, OR OTHER DATA IS NOT TO BE REGARDED BY IMPLICATION OR OTHERWISE AS IN ANY MANNER LICENSING THE HOLDER OR ANY OTHER PERSON OR CORPORATION, OR CONVEYING ANY RIGHTS OR PERMISSION TO MANUFACTURE, USE, OR SELL ANY PATENTED INVENTION THAT MAY IN ANY WAY BE RELATED THERETO

HOLE IDENT	X BASIC DIM.	Y BASIC DIM.	⊕ DIA	HOLE DIA	QTY
A1	.208	-.103	.006	.100 .104	64
A2	.393	-.103			
A3	1.402	-.103			
A	1.402	.030			
A5	1.532	-.103			
A6	1.730	.030			
A7	1.863	.041			
A8	1.985	.098			
A9	7.605	.333			
A10	7.101	.420			
A11	7.101	.550			
A12	3.908	-.028			
A13	4.626	-.082			
A14	4.743	.030			
A15	5.394	-.082			
A16	5.380	.054			
A17	5.520	.054			
A18	5.552	-.078			
A19	5.652	.041			
A20	5.797	.041			
A21	5.930	.023			
A22	6.128	-.103			
A23	6.258	-.103			
A24	6.258	.030			
A25	6.961	.133			
A26	7.267	-.103			
A27	7.452	-.103			
A28	.691	.133			
A29	.691	.262			
A30	1.471	.152			
A31	3.748	.246			
A32	4.284	.298			
A33	4.407	.330			
A34	4.547	.240			
A35	4.634	.136			
A36	4.806	.140			
A37	4.699	.242			
A38	5.350	.221			
A39	5.532	.187			
A40	6.189	.152			
A41	6.961	.262			
A42	.055	.333			
A43	.550	.420			
A44	.550	.550			
A45	.691	.550			
A46	.836	.550			
A47	.836	.420			
A48	1.032	.550			
A49	1.694	.333			
A50	1.825	.333			
A51	3.284	.333			
A52	3.620	.333			
A53	4.660	.312			
A54	5.006	.333			
A55	5.234	.333			
A56	5.470	.333			
A57	5.835	.333			
A58	5.966	.333			
A59	6.628	.550			
A60	6.824	.420			
A61	6.824	.550			
A62	6.961	.550			
A63	1.827	-.103			
A64	5.833	-.103			
B1	.564	.139		.108 .112	12
B2	.564	.287			
B3	.691	.405			
B4	.835	.287			
B5	.888	.139			
B6	1.537	.034			
B7	1.664	-.095			
B8	1.800	.199			
B9	3.254	.199			
B10	3.051	-.095			
B11	3.338	-.077			
B12	3.754	-.095	.006		

HOLE IDENT	X BASIC DIM	Y BASIC DIM	⊕ DIA	HOLE DIA	QTY
B13	5.860	.199	.006	.108 .112	10
B14	5.996	-.095			
B15	6.123	.030			
B16	6.772	.139			
B17	6.825	.287			
B18	6.961	.405			
B19	7.101	.287			
B20	7.101	.139			
B21	3.399	.229			
B22	3.480	.356			
C1	-.170	.133		.058 .062	30
C2	.038	.218			
C3	.300	-.040			
C4	.954	.440			
C5	1.378	.440			
C6	1.915	.190			
C7	2.049	.190			
C8	2.127	-.122			
C9	3.448	-.122			
C10	3.800	.060			
C11	3.800	.150			
C12	3.726	.372			
C13	3.884	.133			
C14	3.984	-.122			
C15	4.070	-.040			
C16	4.543	.372			
C17	4.626	.027			
C18	4.717	.221			
C19	4.788	.276			
C20	4.788	-.122			
C21	5.350	.372			
C22	5.652	.150			
C23	5.684	-.122			
C24	5.745	.187			
C25	6.282	.440			
C26	6.706	.440			
C27	7.360	-.040			
C28	7.622	.218			
C29	7.830	.133			
C30	3.174	.276			
D1	1.540	.306		.153 .157	6
D2	1.646	.155			
D3	1.979	.306			
D4	5.681	.306			
D5	6.014	.155			
D6	6.120	.306			
				.165 .169	3
E1	1.995	-.065			
E2	3.092	.144			
E3	3.236	-.065			
F1	.305	.200		.368 .375	2
F2	7.355	.200			
G1	-.136	.308		.227 .231	2
G2	7.796	.308			
H1	-.420	.036		SEE DETAIL	2
H2	8.076	.036			
K1	.897	-.050		SEE DETAIL A	2
K2	6.763	-.050			
L1	2.530	.162		SEE DETAIL B	1
M1	.000	.000		SEE DETAIL C	3
M2	3.583	.066			
M3	7.660	.000			
N1	1.195	.275		SEE DETAIL D	2
N2	6.469	.275			
P1	4.007	.402		SEE DETAIL E	1
S1	4.357	.039		SEE DETAIL F	2
S2	5.104	.039			
			.006		

NOTES:

1. INTERPRET DRAWING IN ACCORDANCE WITH STANDARDS PRESCRIBED BY MIL-D-70327
2. MATERIAL: MAGNESIUM ALLOY ZK-60A-T5 PER QQ-M-31
3. FINISH: ANODIZE PER MIL-M-3171 TYPE IV
4. TRUE POSITIONING AS SHOWN IN CHART
5. UNLESS OTHERWISE SPECIFIED $\sqrt{125}$ ALL OVER
6. REMOVE ALL BURRS AND BREAK SHARP EDGES .005-.015
7. UNLESS OTHERWISE SPECIFIED ALL FILLETS AND RADII .010 MAX

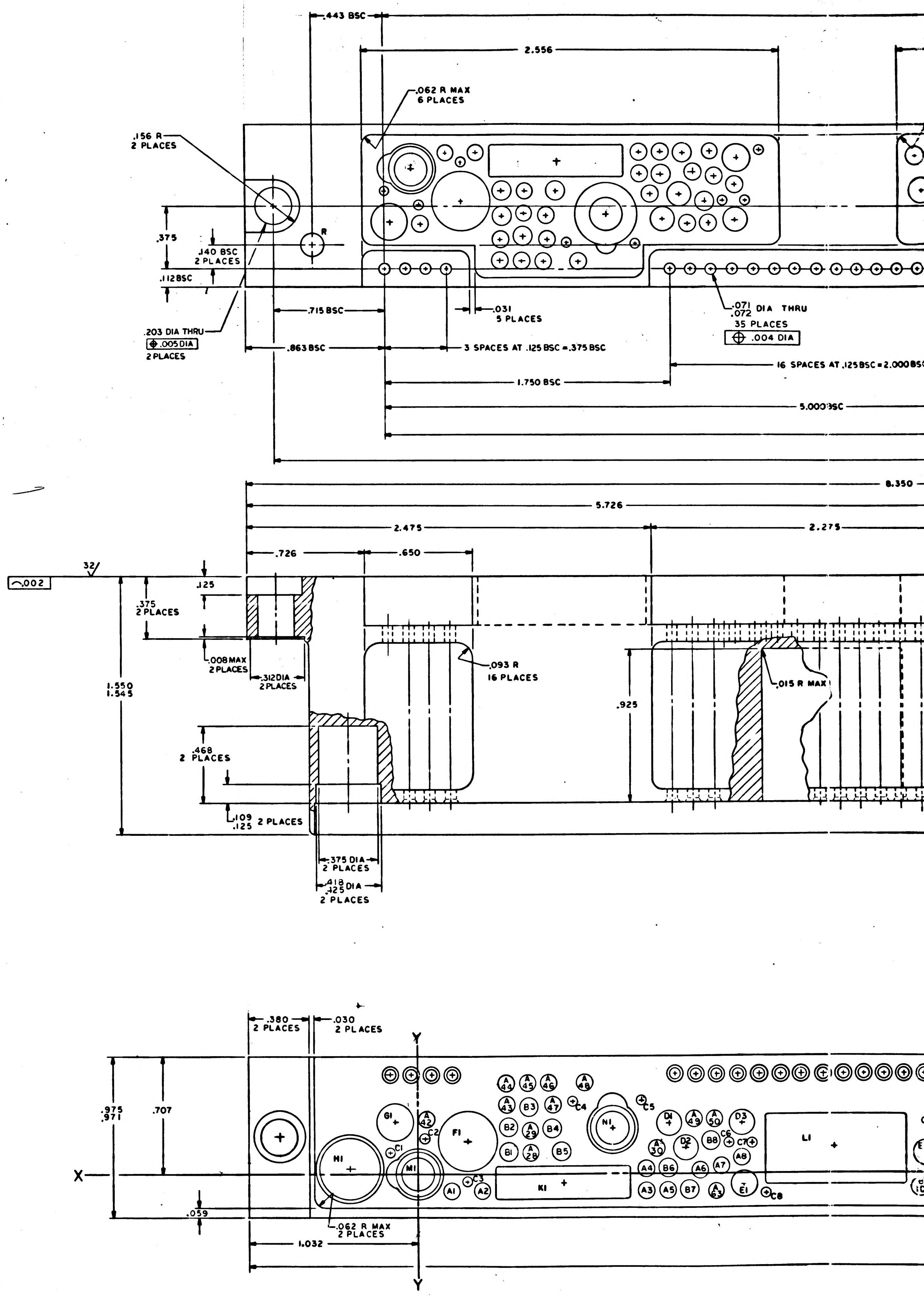
.443 BSC
2.556
.062 R MAX
6 PLACES
.156 R
2 PLACES
.375
.140 BSC
2 PLACES
.112 BSC
.715 BSC
.031
5 PLACES
.071
.072 DIA THRU
35 PLACES
⊕ .004 DIA
.203 DIA THRU
⊕ .005 DIA
2 PLACES
.863 BSC
3 SPACES AT .125 BSC = .375 BSC
16 SPACES AT .125 BSC = 2.000 BSC
1.750 BSC
5.000 BSC
8.350
5.726
2.475
2.275
.726
.650
.002
32
.125
.375
2 PLACES
1.550
1.545
.008 MAX
2 PLACES
.312 DIA
2 PLACES
.093 R
16 PLACES
.015 R MAX
.925
.468
2 PLACES
.109
.125 2 PLACES
.375 DIA
2 PLACES
.418
.425 DIA
2 PLACES
.380
2 PLACES
.030
2 PLACES
Y
X
.975
.971
.707
.059
.062 R MAX
2 PLACES
1.032
H1
M1
G1
F1
K1
N1
L1

1004198 B

INCHES
PHOTOGRAPHIC SCALE ONLY

1004198	C

		REVISIONS TDRR 02048		
SYM	DESCRIPTION	DATE	APPROVAL	
A	REVISED PER TDRR 02294	9-30-63		
B	REVISED PER TDRR 03132	9-13-63		WK
C	REVISED PER TDRR 04028	10-11-63		WK.

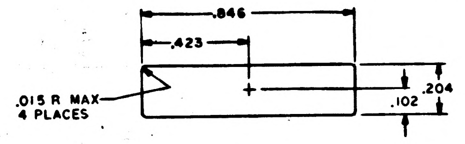
.846
.423
.015 R MAX
4 PLACES
.204
.102

DETAIL A
2 "K" HOLES

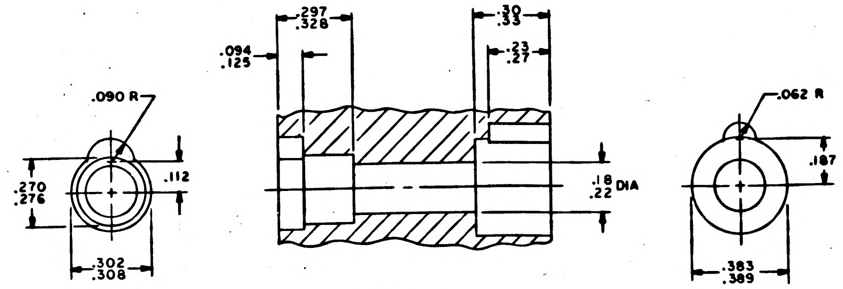
.090 R
.270
.276
.112
.302
.308
.094
.125
.297
.328
.30
.33
.23
.27
.18
.22 DIA
.062 R
.187
.383
.389

DETAIL D
2 "N" HOLES

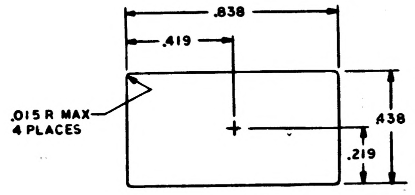
.838
.419
.015 R MAX
4 PLACES
.438
.219

DETAIL B
1 "L" HOLE

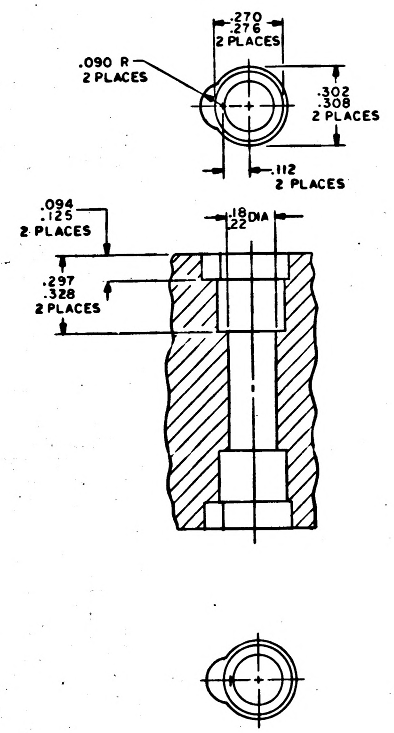
.270
.276
2 PLACES
.090 R
2 PLACES
.302
.308
2 PLACES
.112
2 PLACES
.094
.125
2 PLACES
.18
.22 DIA
.297
.328
2 PLACES

DETAIL C
3 "M" HOLES

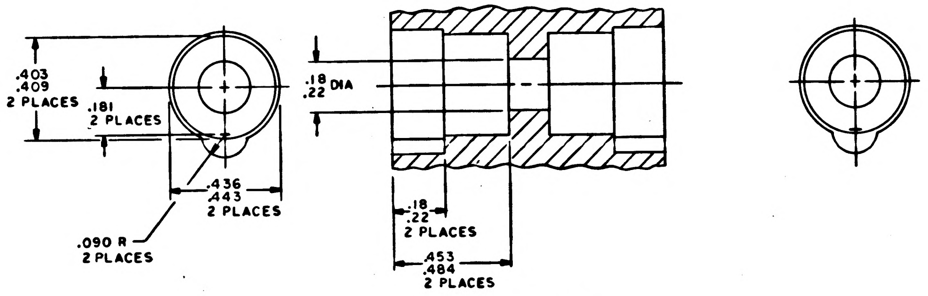
.403
.409
2 PLACES
.181
2 PLACES
.436
.443
2 PLACES
.090 R
2 PLACES
.18
.22 DIA
.18
.22
2 PLACES
.453
.484
2 PLACES

DETAIL E
1 "P" HOLE

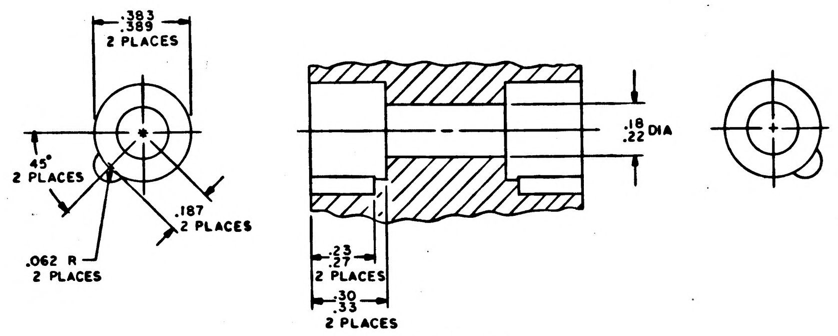
.383
.389
2 PLACES
45°
2 PLACES
.187
2 PLACES
.062 R
2 PLACES
.18
.22 DIA
.23
.27
2 PLACES
.30
.33
2 PLACES

DETAIL F
2 "S" HOLES

QTY REQD	PART OR IDENTIFYING NO.	NOMENCLATURE OR DESCRIPTION	FIND NO.

LIST OF MATERIALS

1003151	
NEXT ASSY	USED ON
APPLICATION	

UNLESS OTHERWISE SPECIFIED
DIMENSIONS ARE IN INCHES
TOLERANCES ON
FRACTIONS ± DECIMALS .XXX ±.005 .XX ±.02 ANGLES ±2°
DO NOT SCALE THIS DRAWING
MATERIAL SEE NOTE 2
HEAT TREATMENT —
FINAL FINISH SEE NOTE 2

MIT
INSTRUMENTATION LAB
CAMBRIDGE, MASS
DRAWN DATE
CHECKED
APPROVAL
APPROVAL
NASA APPROVAL W J 7-12-63
MIT APPROVAL

MANNED SPACECRAFT CENTER
HOUSTON, TEXAS

HEADER HOUSING
CONTROL MODULE
A.G.C. POWER SUPPLY

CODE IDENT NO.	SIZE	NASA DRAWING NO.
—	J	1004198
SCALE 4/1	WT	SHEET 1 OF 1

1004198	C

INCHES
PHOTOGRAPHIC SCALE ONLY

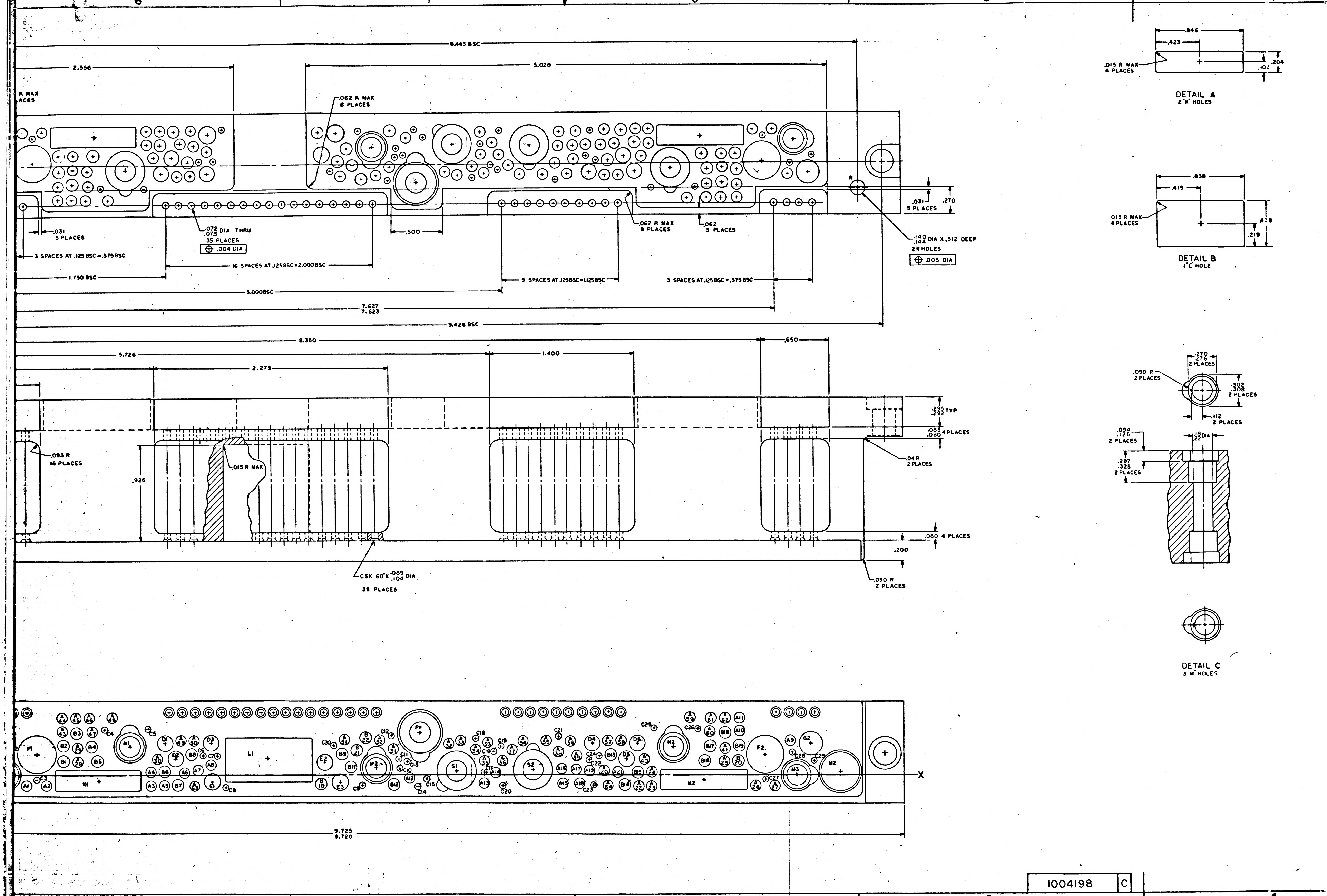
8.443 BSC
2.556
5.020
R MAX
ACES
.062 R MAX
6 PLACES
.031
5 PLACES
.072 .073 DIA THRU
35 PLACES
⌖ .004 DIA
.500
.062 R MAX
8 PLACES
.062
3 PLACES
.031
5 PLACES
.270
R
.140 .144 DIA X .312 DEEP
2 R HOLES
⌖ .005 DIA
3 SPACES AT .125 BSC = .375 BSC
1.750 BSC
16 SPACES AT .125 BSC = 2.000 BSC
9 SPACES AT .125 BSC = 1.125 BSC
3 SPACES AT .125 BSC = .375 BSC
5.000 BSC
7.627 7.623
9.426 BSC
8.350
.650
5.726
1.400
2.275
.295 .292 TYP
.085 .080 4 PLACES
.093 R
16 PLACES
.015 R MAX
.925
.04 R
2 PLACES
.080 4 PLACES
.200
CSK 60° X .089 .104 DIA
35 PLACES
.030 R
2 PLACES
.846
.423
.015 R MAX
4 PLACES
.204
.101
DETAIL A
2 "K" HOLES
.838
.419
.015 R MAX
4 PLACES
.438
.219
DETAIL B
1 "L" HOLE
.270 .276
2 PLACES
.090 R
2 PLACES
.302 .308
2 PLACES
.112
2 PLACES
.094 .125
2 PLACES
.18 .22 DIA
.297 .328
2 PLACES
DETAIL C
3 "M" HOLES
9.725 9.720
X
P1 N1 N2 N3 M1 M2 M3 L1 K1 K2 S1 S2 F1 F2 E1 E2 E3 D1 D2 D3 D4 D5 D6
A1 A2 A3 A4 A5 A6 A7 A8 A9 A10 A11 A12 A13 A14 A15 A16 A17 A18 A19 A20 A21
B1 B2 B3 B4 B5 B6 B7 B8 B9 B10 B11 B12 B13 B14 B15 B16 B17 B18 B19 B20 B21 B22
C3 C4 C5 C6 C7 C8 C9 C10 C11 C12 C13 C14 C15 C16 C17 C18 C19 C20 C21 C22 C23 C24 C25 C26 C27 C28 C29 C30
8 7 6 5 4

1004198 C

F-2

INCHES
PHOTOGRAPHIC SCALE ONLY

HOLE IDENT	X BASIC DIM.	Y BASIC DIM.	⊕ DIA	HOLE DIA	QTY
A1	.208	-.103	.006	.100 .104	64
A2	.393	-.103			
A3	1.402	-.103			
A4	1.402	.030			
A5	1.532	-.103			
A6	1.730	.030			
A7	1.863	.041			
A8	1.985	.098			
A9	7.605	.333			
A10	7.101	.420			
A11	7.101	.550			
A12	3.908	-.028			
A13	4.626	-.082			
A14	4.743	.030			
A15	5.394	-.082			
A16	5.380	.054			
A17	5.520	.054			
A18	5.552	-.078			
A19	5.652	.041			
A20	5.797	.041			
A21	5.930	.023			
A22	6.128	-.103			
A23	6.258	-.103			
A24	6.258	.030			
A25	6.961	.133			
A26	7.267	-.103			
A27	7.452	-.103			
A28	.691	.133			
A29	.691	.262			
A30	1.471	.152			
A31	3.748	.246			
A32	4.284	.296			
A33	4.407	.330			
A34	4.547	.240			
A35	4.634	.136			
A36	4.806	.140			
A37	4.899	.242			
A38	5.350	.221			
A39	5.532	.187			
A40	6.189	.152			
A41	6.961	.262			
A42	.055	.333			
A43	.550	.420			
A44	.550	.550			
A45	.691	.550			
A46	.836	.550			
A47	.836	.420			
A48	1.032	.550			
A49	1.694	.333			
A50	1.825	.333			
A51	3.284	.333			
A52	3.620	.333			
A53	4.660	.312			
A54	5.006	.333			
A55	5.234	.333			
A56	5.470	.333			
A57	5.835	.333			
A58	5.966	.333			
A59	6.628	.550			
A60	6.824	.420			
A61	6.824	.550			
A62	6.961	.550			
A63	1.827	-.103			
A64	5.833	-.103			
B1	.534	.139		.108 .112	12
B2	.564	.287			
B3	.691	.405			
B4	.835	.287			
B5	.888	.139			
B6	1.537	.034			
B7	1.664	-.095			
B8	1.800	.199			
B9	3.254	.199			
B10	3.051	-.095			
B11	3.338	-.077			
B12	3.754	-.095	.006		

HOLE IDENT	X BASIC DIM	Y BASIC DIM	⊕ DIA	HOLE DIA	QTY
B13	5.860	.199	.006	.108 .112	10
B14	5.996	-.095			
B15	6.123	.030			
B16	6.772	.139			
B17	6.825	.287			
B18	6.961	.405			
B19	7.101	.287			
B20	7.101	.139			
B21	3.399	.229			
B22	3.480	.356			
C1	-.170	.133		.058 .062	30
C2	.038	.218			
C3	.300	-.040			
C4	.954	.440			
C5	1.378	.440			
C6	1.915	.190			
C7	2.049	.190			
C8	2.127	-.122			
C9	3.448	-.122			
C10	3.800	.060			
C11	3.800	.150			
C12	3.726	.372			
C13	3.884	.133			
C14	3.984	-.122			
C15	4.070	-.040			
C16	4.543	.372			
C17	4.626	.027			
C18	4.717	.221			
C19	4.788	.276			
C20	4.788	-.122			
C21	5.350	.372			
C22	5.652	.150			
C23	5.684	-.122			
C24	5.745	.187			
C25	6.282	.440			
C26	6.706	.440			
C27	7.360	-.040			
C28	7.622	.218			
C29	7.830	.133			
C30	3.174	.276			
D1	1.540	.306		.153 .157	6
D2	1.646	.155			
D3	1.979	.306			
D4	5.681	.306			
D5	6.014	.155			
D6	6.120	.306			
				.165 .169	3
E1	1.995	-.065			
E2	3.092	.144			
E3	3.236	-.065			
F1	.305	.200		.368 .375	2
F2	7.355	.200			
G1	-.136	.308		.227 .231	2
G2	7.796	.308			
H1	-.420	.036		SEE DETAIL	2
H2	8.076	.036			
K1	.897	-.050		SEE DETAIL A	2
K2	6.763	-.050			
L1	2.530	.162		SEE DETAIL B	1
M1	.000	.000		SEE DETAIL C	3
M2	3.583	.066			
M3	7.660	.000			
N1	1.195	.275		SEE DETAIL D	2
N2	6.469	.275			
P1	4.007	.402		SEE DETAIL E	1
S1	4.357	.039		SEE DETAIL F	2
S2	5.104	.039			
			.006		

NOTES:

1. INTERPRET DRAWING IN ACCORDANCE WITH STANDARDS PRESCRIBED BY MIL-D-70327
2. MATERIAL: MAGNESIUM ALLOY ZK-60A-T5 PER QQ-M-31
3. FINISH: ANODIZE PER MIL-M-3171 TYPE IV
4. TRUE POSITIONING AS SHOWN IN CHART
5. UNLESS OTHERWISE SPECIFIED $\overset{125}{\checkmark}$ ALL OVER
6. REMOVE ALL BURRS AND BREAK SHARP EDGES .005-.015
7. UNLESS OTHERWISE SPECIFIED ALL FILLETS AND RADII .010 MAX

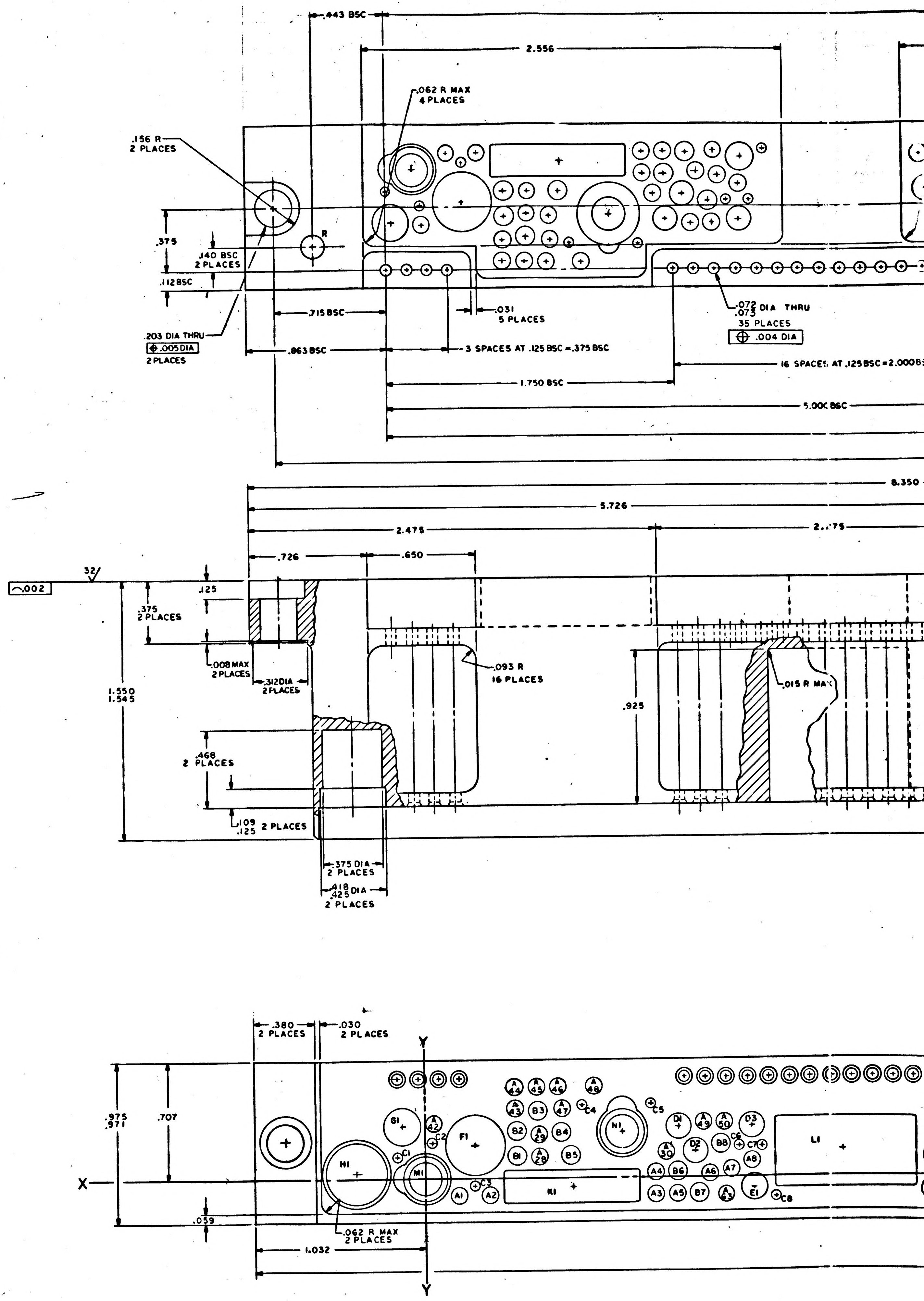
.443 BSC
2.556
.062 R MAX
4 PLACES
.156 R
2 PLACES
.375
.140 BSC
2 PLACES
.112BSC
R
.203 DIA THRU
⊕ .005DIA
2 PLACES
.715BSC
.863BSC
.031
5 PLACES
3 SPACES AT .125BSC=.375BSC
.072
.073 DIA THRU
35 PLACES
⊕ .004 DIA
16 SPACES AT .125BSC=2.000BS
1.750 BSC
5.000 BSC
8.350
5.726
2.475
.726
.650
32
.002
.125
.375
2 PLACES
.008MAX
2 PLACES
.312DIA
2PLACES
.093 R
16 PLACES
.015 R MA
1.550
1.545
.925
.468
2 PLACES
.109
.125 2 PLACES
.375 DIA
2 PLACES
.418
.425 DIA
2 PLACES
.380
2 PLACES
.030
2 PLACES
Y
X
.975
.971
.707
.059
.062 R MAX
2 PLACES
1.032
H1
M1
G1
F1
K1
N1
L1
A1
A2
A3
A4
A5
A6
A7
A8
B1
B2
B3
B4
B5
B6
B7
B8
C1
C2
C3
C4
C5
C6
C7
C8
D1
D2
D3
E1

1004198 C

F-1

1004198 D

SYM	DESCRIPTION	DATE	APPROVAL
	REVISIONS TDRR 02048		
A	REVISED PER TDRR 02294	9-30-63	
B	REVISED PER TDRR 03132	9-12-63	WK
C	REVISED PER TDRR 04028	10-11-63	WK
D	REVISED PER TDRR 04517	11-6-63	

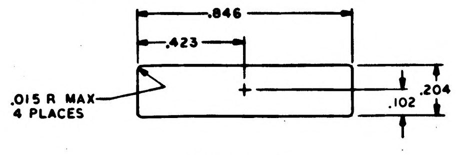
.846
.423
.015 R MAX
4 PLACES
.204
.102

DETAIL A
2 "K" HOLES

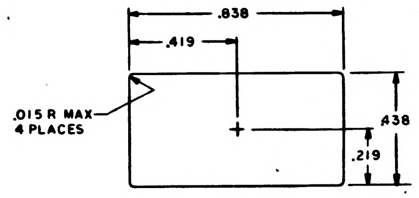
.838
.419
.015 R MAX
4 PLACES
.438
.219

DETAIL B
1 "L" HOLE

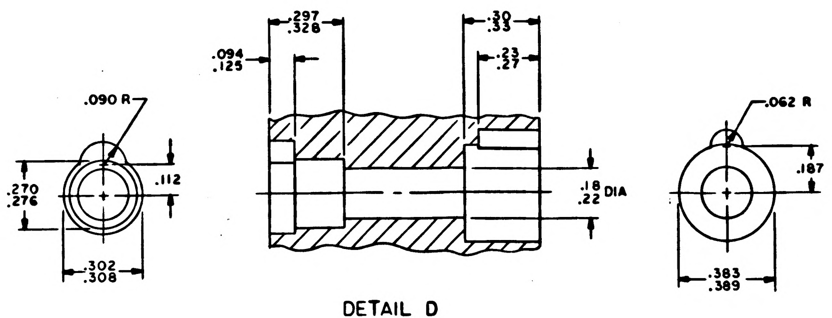
.090 R
.270
.276
.112
.302
.308
.297
.328
.094
.125
.30
.33
.23
.27
.18
.22 DIA
.062 R
.187
.383
.389

DETAIL D
2 "N" HOLES

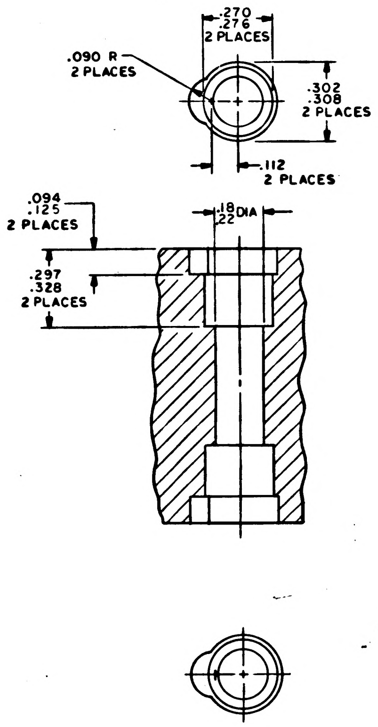
.270
.276
2 PLACES
.090 R
2 PLACES
.302
.308
2 PLACES
.112
2 PLACES
.094
.125
2 PLACES
.18
.22 DIA
.297
.328
2 PLACES

DETAIL C
3 "M" HOLES

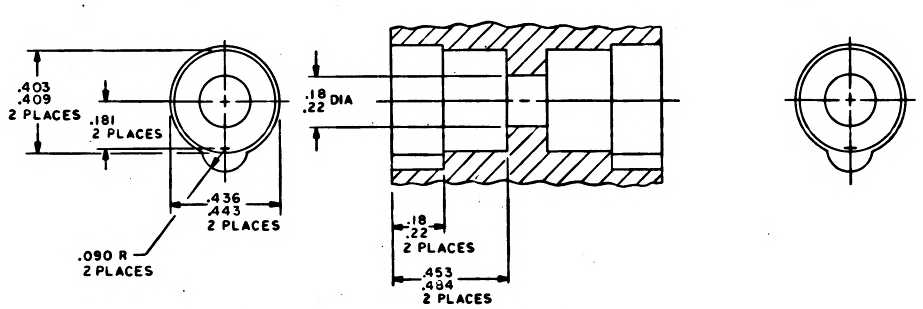
.403
.409
2 PLACES
.181
2 PLACES
.090 R
2 PLACES
.436
.443
2 PLACES
.18
.22 DIA
.18
.22
2 PLACES
.453
.484
2 PLACES

DETAIL E
1 "P" HOLE

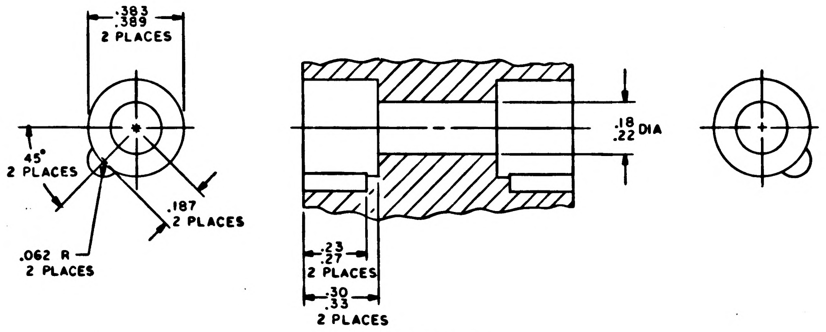
.383
.389
2 PLACES
45°
2 PLACES
.187
2 PLACES
.062 R
2 PLACES
.18
.22 DIA
.23
.27
2 PLACES
.30
.33
2 PLACES

DETAIL F
2 "S" HOLES

MASTER

QTY REQD	PART OR IDENTIFYING NO.	NOMENCLATURE OR DESCRIPTION	FIND NO

LIST OF MATERIALS

1003151	
NEXT ASSY	USED ON
APPLICATION	

UNLESS OTHERWISE SPECIFIED
DIMENSIONS ARE IN INCHES
TOLERANCES ON
FRACTIONS ± DECIMALS .XXX ±.005 .XX ±.02 ANGLES ±3°
DO NOT SCALE THIS DRAWING

MATERIAL
SEE NOTE 2

HEAT TREATMENT
—

FINAL FINISH
SEE NOTE 2

MIT
INSTRUMENTATION LAB
CAMBRIDGE MASS

DRAWN DATE
CHECKED
APPROVAL
APPROVAL
NASA APPROVAL 7-17-63
MIT APPROVAL

MANNED SPACECRAFT CENTER
HOUSTON, TEXAS

HEADER HOUSING
CONTROL MODULE
A.G.C. POWER SUPPLY

CODE IDENT NO. —
SIZE J
NASA DRAWING NO. 1004198
SCALE 4/1
WT
SHEET 1 OF 1

D

INCHES
PHOTOGRAPHIC SCALE ONLY

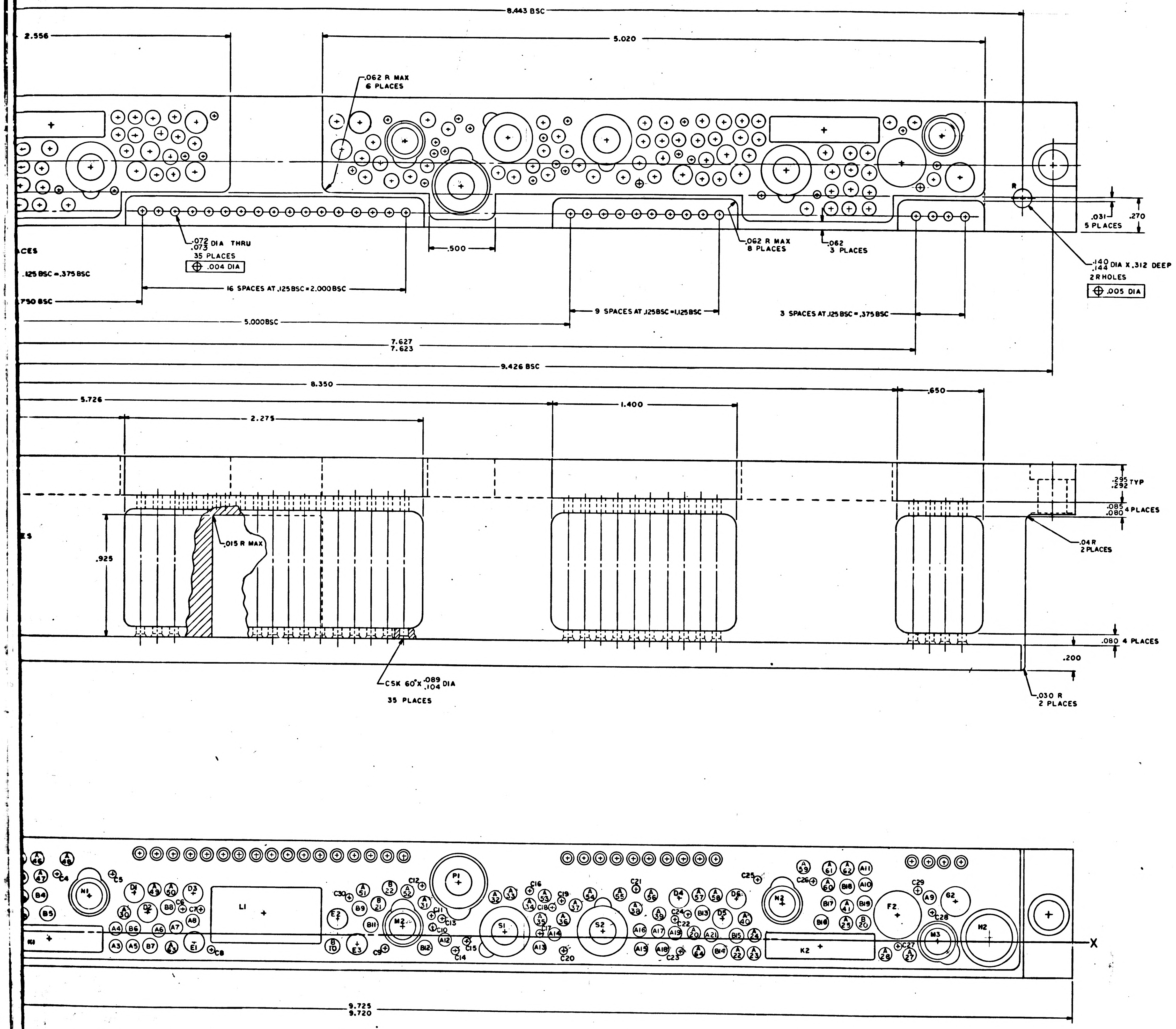

8.443 BSC
2.556
5.020
.062 R MAX 6 PLACES
ACES
.125 BSC = .375 BSC
.750 BSC
.072 .073 DIA THRU 35 PLACES
⊕ .004 DIA
16 SPACES AT .125 BSC = 2.000 BSC
.500
.062 R MAX 8 PLACES
.062 3 PLACES
R
.031 5 PLACES
.270
.140 .144 DIA X .312 DEEP 2 R HOLES
⊕ .005 DIA
9 SPACES AT .125 BSC = 1.125 BSC
3 SPACES AT .125 BSC = .375 BSC
5.000 BSC
7.627 7.623
9.426 BSC
8.350
5.726
2.275
1.400
.650
.295 .292 TYP
.085 .080 4 PLACES
.015 R MAX
.925
ES
.04 R 2 PLACES
.080 4 PLACES
.200
CSK 60° X .089 .104 DIA 35 PLACES
.030 R 2 PLACES
N1 L1 P1 M2 S1 S2 N2 F2 M3 M2 K2 E1 E2 E3
C4 C5 C6 C7 C8 C9 C10 C11 C12 C13 C14 C15 C16 C17 C18 C19 C20 C21 C22 C23 C24 C25 C26 C27 C28 C29 C30
X
9.725 9.720

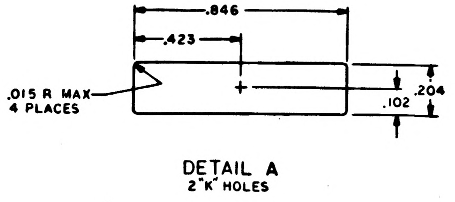
DETAIL A
2 "K" HOLES

.846
.423
.015 R MAX 4 PLACES
.204
.102

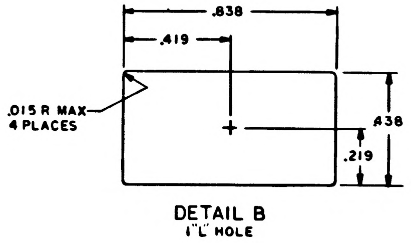
DETAIL B
1 "L" HOLE

.838
.419
.015 R MAX 4 PLACES
.438
.219

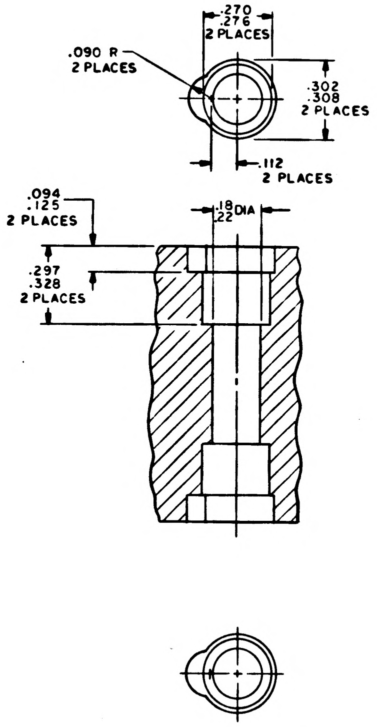
DETAIL C
3 "M" HOLES

.270 .276 2 PLACES
.090 R 2 PLACES
.302 .308 2 PLACES
.112 2 PLACES
.094 .125 2 PLACES
.18 .22 DIA
.297 .328 2 PLACES

PHOTOGRAPHIC SCALE ONLY

E-2

HOLE IDENT	X BASIC DIM.	Y BASIC DIM.	⊕ DIA	HOLE DIA	QTY
A1	.208	-.103	.006	.100 .104	64
A2	.393	-.103			
A3	1.402	-.103			
A4	1.402	.030			
A5	1.532	-.103			
A6	1.730	.030			
A7	1.863	.041			
A8	1.985	.098			
A9	7.605	.333			
A10	7.101	.420			
A11	7.101	.550			
A12	3.908	-.028			
A13	4.626	-.082			
A14	4.743	.030			
A15	5.394	-.082			
A16	5.380	.054			
A17	5.520	.054			
A18	5.552	-.078			
A19	5.652	.041			
A20	5.797	.041			
A21	5.930	.023			
A22	6.128	-.103			
A23	6.258	-.103			
A24	6.258	.030			
A25	6.961	.133			
A26	7.267	-.103			
A27	7.452	-.103			
A28	.691	.133			
A29	.691	.262			
A30	1.471	.152			
A31	3.748	.246			
A32	4.284	.296			
A33	4.407	.330			
A34	4.547	.240			
A35	4.634	.136			
A36	4.806	.140			
A37	4.899	.242			
A38	5.350	.221			
A39	5.532	.187			
A40	6.189	.152			
A41	6.961	.262			
A42	.055	.333			
A43	.550	.420			
A44	.550	.550			
A45	.691	.550			
A46	.836	.550			
A47	.836	.420			
A48	1.032	.550			
A49	1.694	.333			
A50	1.825	.333			
A51	3.284	.333			
A52	3.620	.333			
A53	4.660	.312			
A54	5.006	.333			
A55	5.234	.333			
A56	5.470	.333			
A57	5.835	.333			
A58	5.966	.333			
A59	6.628	.550			
A60	6.824	.420			
A61	6.824	.550			
A62	6.961	.550			
A63	1.827	-.103			
A64	5.833	-.103			
B1	.564	.139		.108 .112	12
B2	.564	.287			
B3	.691	.405			
B4	.835	.287			
B5	.888	.139			
B6	1.537	.034			
B7	1.664	-.095			
B8	1.800	.199			
B9	3.254	.199			
B10	3.051	-.095			
B11	3.338	.077			
B12	3.754	-.095	.006		

HOLE IDENT	X BASIC DIM	Y BASIC DIM	⊕ DIA	HOLE DIA	QTY
B13	5.860	.199	.006	.108 .112	10
B14	5.996	-.095			
B15	6.123	.030			
B16	6.772	.139			
B17	6.825	.287			
B18	6.961	.405			
B19	7.101	.287			
B20	7.101	.139			
B21	3.399	.229			
B22	3.480	.356			
C1	.143	.383		.058 .062	30
C2	.038	.218			
C3	.300	-.040			
C4	.954	.440			
C5	1.378	.440			
C6	1.915	.190			
C7	2.049	.190			
C8	2.127	-.122			
C9	3.448	-.122			
C10	3.800	.060			
C11	3.800	.150			
C12	3.726	.372			
C13	3.884	.133			
C14	3.984	-.122			
C15	4.070	-.040			
C16	4.543	.372			
C17	4.626	.027			
C18	4.717	.221			
C19	4.788	.276			
C20	4.788	-.122			
C21	5.350	.372			
C22	5.652	.150			
C23	5.684	-.122			
C24	5.745	.187			
C25	6.282	.440			
C26	6.706	.440			
C27	7.360	-.040			
C28	7.622	.218			
C29	7.505	.383			
C30	3.174	.276			
D1	1.540	.306		.153 .157	6
D2	1.646	.155			
D3	1.979	.306			
D4	5.681	.306			
D5	6.014	.155			
D6	6.120	.306			
				.165 .169	3
E1	1.995	-.065			
E2	3.092	.144			
E3	3.236	-.065			
F1	.305	.200		.368 .375	2
F2	7.355	.200			
G1	-.136	.308		.227 .231	2
G2	7.796	.308			
H1	-.398	.036		SEE DETAIL	2
H2	8.054	.036			
K1	.897	-.050		SEE DETAIL A	2
K2	6.763	-.050			
L1	2.530	.162		SEE DETAIL B	1
M1	.000	.000		SEE DETAIL C	3
M2	3.583	.066			
M3	7.660	.000			
N1	1.195	.275		SEE DETAIL D	2
N2	6.469	.275			
P1	4.007	.402		SEE DETAIL E	1
S1	4.357	.039		SEE DETAIL F	2
S2	5.104	.039			
			.006		

NOTES:

1. INTERPRET DRAWING IN ACCORDANCE WITH STANDARDS PRESCRIBED BY MIL-D-70327
2. MATERIAL: MAGNESIUM ALLOY ZK-60A-T5 PER QQ-M-31
3. FINISH: ANODIZE PER MIL-M-3171 TYPE IV
4. TRUE POSITIONING AS SHOWN IN CHART
5. UNLESS OTHERWISE SPECIFIED 125√ ALL OVER
6. REMOVE ALL BURRS AND BREAK SHARP EDGES .005-.015
7. UNLESS OTHERWISE SPECIFIED ALL FILLETS AND RADII .010 MAX

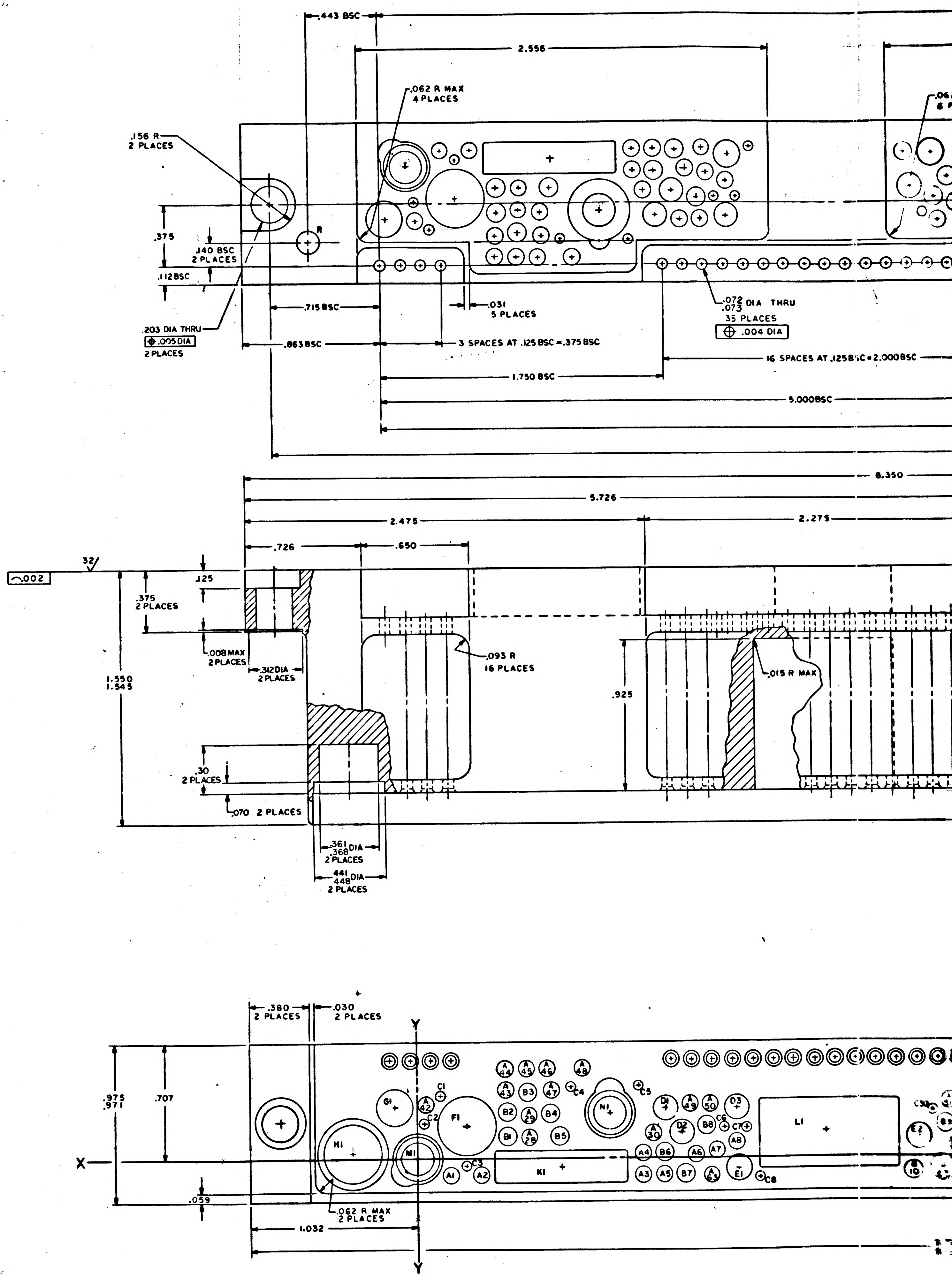
.443 BSC
2.556
.062 R MAX
4 PLACES
.156 R
2 PLACES
.375
.140 BSC
2 PLACES
.112 BSC
.715 BSC
.031
5 PLACES
.072 .073 DIA THRU
35 PLACES
⊕ .004 DIA
.203 DIA THRU
⊕ .005 DIA
2 PLACES
.863 BSC
3 SPACES AT .125 BSC = .375 BSC
16 SPACES AT .125 BSC = 2.000 BSC
1.750 BSC
5.000 BSC
8.350
5.726
2.475
2.275
.726
.650
.002
32
.125
.375
2 PLACES
.008 MAX
2 PLACES
.312 DIA
2 PLACES
.093 R
16 PLACES
.015 R MAX
1.550
1.545
.925
.30
2 PLACES
.070 2 PLACES
.361 .368 DIA
2 PLACES
.441 .448 DIA
2 PLACES
.380
2 PLACES
.030
2 PLACES
Y
X
.975
.971
.707
.059
.062 R MAX
2 PLACES
1.032
G1
H1
F1
M1
K1
N1
L1
A1
A2
A3
A4
A5
A6
A7
A8
B1
B2
B3
B4
B5
B6
B7
B8
C1
C2
C3
C4
C5
C6
C7
C8
D1
D2
D3
E1

1004198 D

1004198 E

SYM	DESCRIPTION	DATE	APPROVAL
A	REVISED PER TDRR 02294	9-30-63	
B	REVISED PER TDRR 03132	9-18-63	
C	REVISED PER TDRR 04028	10-11-63	
D	REVISED PER TDRR 04517	11-6-63	
E	REVISED PER TDRR 05183		

REVISIONS TDRR 02048

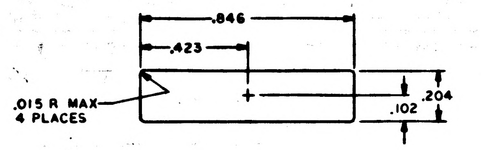

.846
.423
.015 R MAX
4 PLACES
.204
.102

DETAIL A
2 "K" HOLES

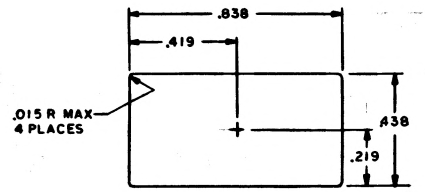

.838
.419
.015 R MAX
4 PLACES
.438
.219

DETAIL B
1 "L" HOLE

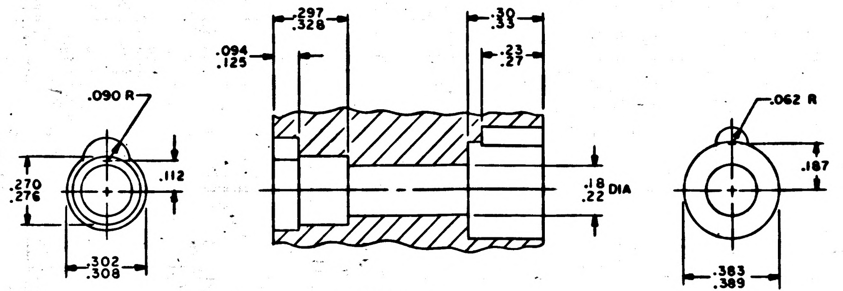

.297
.328
.30
.33
.094
.125
.23
.27
.090 R
.270
.276
.112
.302
.308
.18
.22 DIA
.062 R
.187
.383
.389

DETAIL D
2 "N" HOLES

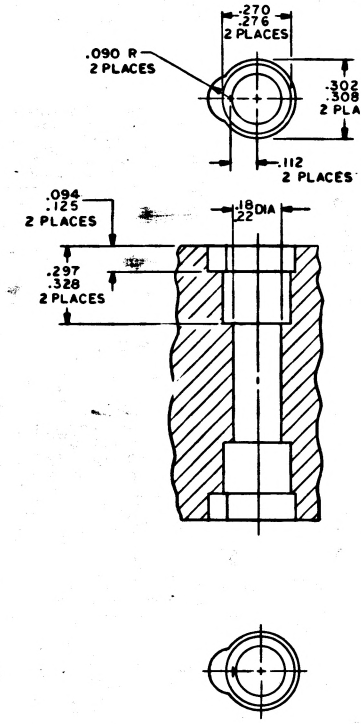

.270
.276
2 PLACES
.090 R
2 PLACES
.302
.308
2 PLACES
.112
2 PLACES
.094
.125
2 PLACES
.18
.22 DIA
.297
.328
2 PLACES

DETAIL C
1 "M" HOLE

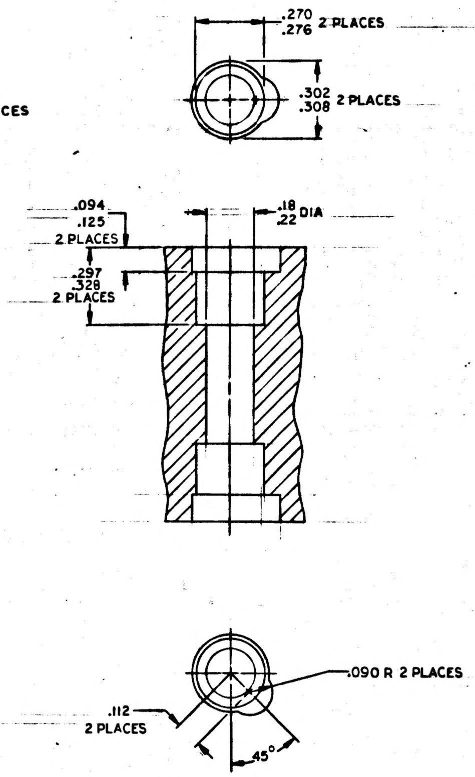

.270
.276 2 PLACES
.302
.308 2 PLACES
.094
.125
2 PLACES
.18
.22 DIA
.297
.328
2 PLACES
.090 R 2 PLACES
.112
2 PLACES
45°

DETAIL G
2 "T" HOLES

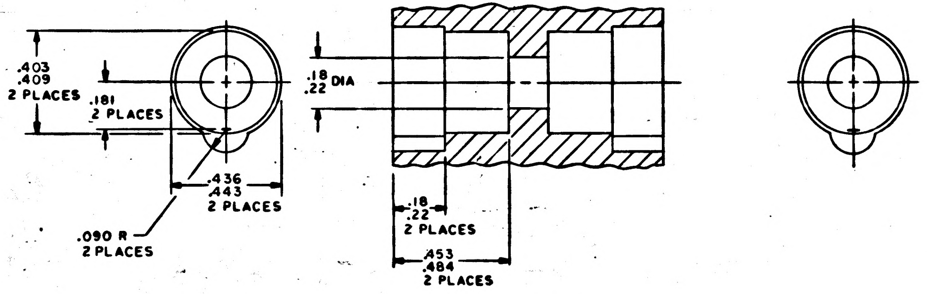

.403
.409
2 PLACES
.181
2 PLACES
.436
.443
2 PLACES
.090 R
2 PLACES
.18
.22 DIA
.18
.22
2 PLACES
.453
.484
2 PLACES

DETAIL E
1 "P" HOLE

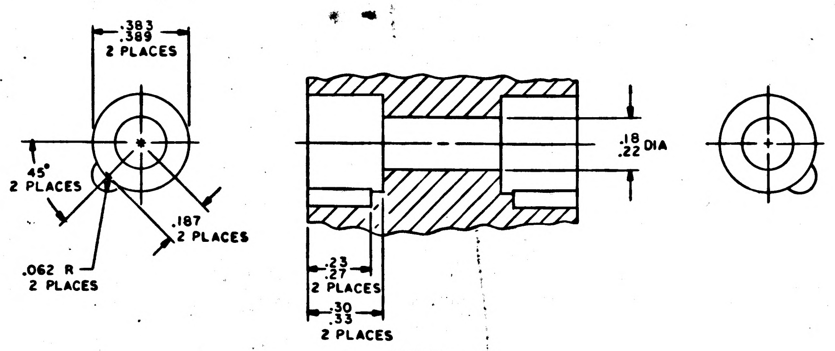

.383
.389
2 PLACES
45°
2 PLACES
.187
2 PLACES
.062 R
2 PLACES
.18
.22 DIA
.23
.27
2 PLACES
.30
.33
2 PLACES

DETAIL F
2 "S" HOLES

QTY REQD	PART OR IDENTIFYING NO.	NOMENCLATURE OR DESCRIPTION	FIND NO.

LIST OF MATERIALS

1003151	
NEXT ASSY	USED ON
APPLICATION	

UNLESS OTHERWISE SPECIFIED
DIMENSIONS ARE IN INCHES
TOLERANCES ON
FRACTIONS ± DECIMALS .XXX ±.005 .XX ±.02 ANGLES ±3°
DO NOT SCALE THIS DRAWING
MATERIAL SEE NOTE 2
HEAT TREATMENT —
FINAL FINISH SEE NOTE 2

MIT
INSTRUMENTATION LAB
CAMBRIDGE, MASS
DRAWN DATE
CHECKED
APPROVAL
APPROVAL
NASA APPROVAL W J 7-17-63
MIT APPROVAL

MANNED SPACECRAFT CENTER
HOUSTON, TEXAS

HEADER HOUSING
CONTROL MODULE
A.G.C. POWER SUPPLY

CODE IDENT NO. —— SIZE J NASA DRAWING NO. 1004198
SCALE 4/1 WT SHEET 1 OF 1

1004198 E

MASTER

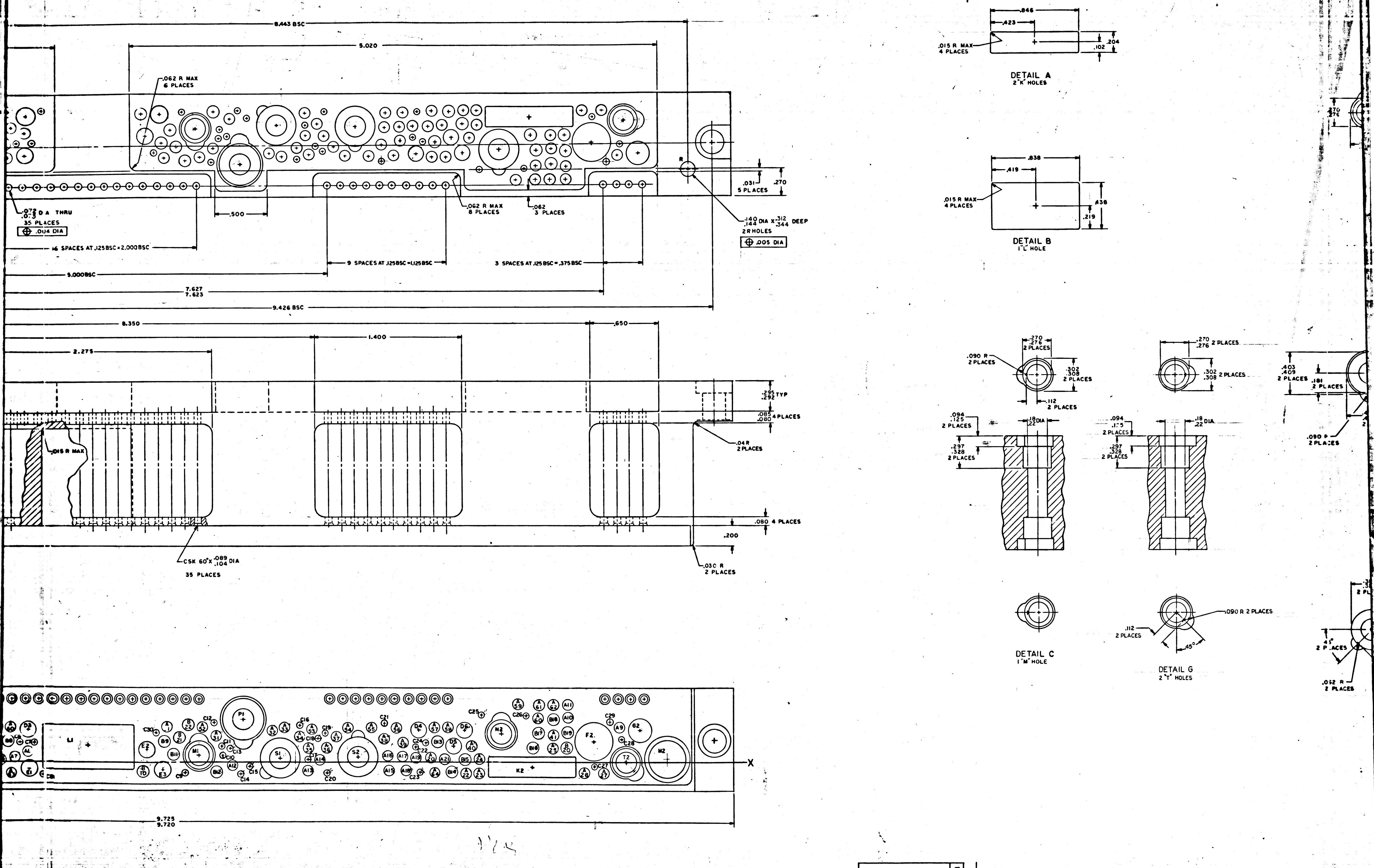
8.443 BSC
5.020
.062 R MAX
6 PLACES
.500
.062 R MAX
8 PLACES
.062
3 PLACES
.031
5 PLACES
.270
R
.140 .144 DIA X .312 .344 DEEP
2 R HOLES
⊕ .005 DIA
.072 .073 DIA THRU
35 PLACES
⊕ .004 DIA
16 SPACES AT .125BSC=2.000BSC
9 SPACES AT .125BSC=1.125BSC
3 SPACES AT .125BSC=.375BSC
5.000BSC
7.627
7.623
9.426 BSC
8.350
.650
1.400
2.275
.295 .292 TYP
.085 .080 4 PLACES
.04 R
2 PLACES
.015 R MAX
.080 4 PLACES
.200
CSK 60° X .089 .104 DIA
35 PLACES
.030 R
2 PLACES
X
9.725
9.720
P1
S1
S2
M1
M2
M3
L1
K2
F2
T2
G2
.846
.423
.015 R MAX
4 PLACES
.204
.102
DETAIL A
2 "K" HOLES
.838
.419
.015 R MAX
4 PLACES
.438
.219
DETAIL B
1 "L" HOLE
.270 .276
2 PLACES
.090 R
2 PLACES
.302 .308
2 PLACES
.112
2 PLACES
.094 .125
2 PLACES
.18 .22 DIA
.297 .328
2 PLACES
DETAIL C
1 "M" HOLE
.270 .276 2 PLACES
.302 .308 2 PLACES
.094 .125
2 PLACES
.18 .22 DIA
.297 .328
2 PLACES
.090 R 2 PLACES
.112
2 PLACES
45°
DETAIL G
2 "T" HOLES
.270 .276
.403 .409
2 PLACES
.181
2 PLACES
.090 R
2 PLACES
45°
2 PLACES
.062 R
2 PLACES

1004198 E

INCHES
PHOTOGRAPHIC SCALE ONLY

NOTICE - WHEN GOVERNMENT [illegible] SPECIFICATIONS OR OTHER DATA ARE USED FOR ANY PURPOSE OTHER THAN IN CONNECTION WITH A DEFINITELY RELATED GOVERNMENT PROCUREMENT OPERATION, THE UNITED STATES GOVERNMENT THEREBY INCURS NO [illegible] SUPPLIED THE SAID [illegible] SPECIFICATIONS OR OTHER [illegible] LICENSING THE HOLDER OR ANY OTHER PERSON OR CORPORATION, OR CONVEYING ANY RIGHTS OR PERMISSION TO MANUFACTURE, USE, OR SELL ANY PATENTED INVENTION THAT MAY IN ANY WAY BE RELATED THERETO.

HOLE IDENT	X BASIC DIM.	Y BASIC DIM.	⊕ DIA	HOLE DIA	QTY
A1	.208	-.103	.006	.100 .104	64
A2	.393	-.103			
A3	1.402	-.103			
A4	1.402	.030			
A5	1.532	-.103			
A6	1.730	.030			
A7	1.863	.041			
A8	1.985	.098			
A9	7.605	.333			
A10	7.101	.420			
A11	7.101	.550			
A12	3.908	-.028			
A13	4.626	-.082			
A14	4.743	.030			
A15	5.394	-.082			
A16	5.380	.054			
A17	5.520	.054			
A18	5.552	-.078			
A19	5.652	.041			
A20	5.797	.041			
A21	5.930	.023			
A22	6.128	-.103			
A23	6.258	-.103			
A24	6.258	.030			
A25	6.961	.133			
A26	7.267	-.103			
A27	7.452	-.103			
A28	.691	.133			
A29	.691	.262			
A30	1.471	.152			
A31	3.748	.246			
A32	4.284	.296			
A33	4.407	.330			
A34	4.547	.240			
A35	4.634	.136			
A36	4.806	.140			
A37	4.899	.242			
A38	5.350	.221			
A39	5.532	.187			
A40	6.189	.152			
A41	6.961	.262			
A42	.055	.333			
A43	.550	.420			
A44	.550	.550			
A45	.691	.550			
A46	.836	.550			
A47	.836	.420			
A48	1.032	.550			
A49	1.694	.333			
A50	1.825	.333			
A51	3.284	.333			
A52	3.620	.333			
A53	4.660	.312			
A54	5.006	.333			
A55	5.234	.333			
A56	5.470	.333			
A57	5.835	.333			
A58	5.966	.333			
A59	6.628	-.550			
A60	6.824	.420			
A61	6.824	.550			
A62	6.961	.550			
A63	1.827	-.103			
A64	5.833	-.103			
B1	.564	.139		.108 .112	12
B2	.564	.287			
B3	.691	.405			
B4	.835	.287			
B5	.888	.139			
B6	1.537	.034			
B7	1.664	-.095			
B8	1.800	.199			
B9	3.254	.199			
B10	3.051	-.095			
B11	3.338	-.077			
B12	3.754	-.095	.006		

HOLE IDENT	X BASIC DIM	Y BASIC DIM	⊕ DIA	HOLE DIA	QTY
B13	5.860	.199	.006	.108 .112	10
B14	5.996	-.095			
B15	6.123	.030			
B16	6.772	.139			
B17	6.825	.287			
B18	6.961	.405			
B19	7.101	.287			
B20	7.101	.139			
B21	3.399	.229			
B22	3.480	.356			
C1	.143	.383		.058 .062	30
C2	.038	.218			
C3	.300	-.040			
C4	.954	.440			
C5	1.378	.440			
C6	1.915	.190			
C7	2.049	.190			
C8	2.127	-.122			
C9	3.448	-.122			
C10	3.800	.060			
C11	3.800	.150			
C12	3.726	.372			
C13	3.884	.133			
C14	3.984	-.122			
C15	4.070	-.040			
C16	4.543	.372			
C17	4.626	.027			
C18	4.717	.221			
C19	4.788	.276			
C20	4.788	-.122			
C21	5.350	.372			
C22	5.652	.150			
C23	5.684	-.122			
C24	5.745	.187			
C25	6.282	.440			
C26	6.706	.440			
C27	7.360	-.040			
C28	7.622	.218			
C29	7.505	.383			
C30	3.174	.276			
D1	1.540	.306		.153 .157	6
D2	1.646	.155			
D3	1.979	.306			
D4	5.681	.306			
D5	6.014	.155			
D6	6.120	.306			
				.165 .169	3
E1	1.995	-.065			
E2	3.092	.144			
E3	3.236	-.065			
F1	.305	.200		.368 .375	2
F2	7.355	.200			
G1	-.136	.308		.227 .231	2
G2	7.796	.308			
H1	-.398	.036		SEE DETAIL	2
H2	8.054	.036			
K1	.897	-.050		SEE DETAIL A	2
K2	6.763	-.050			
L1	2.530	.162		SEE DETAIL B	1
				SEE DETAIL C	1
M1	3.583	.066			
N1	1.195	.275		SEE DETAIL D	2
N2	6.469	.275			
P1	4.007	.402		SEE DETAIL E	1
S1	4.357	.039		SEE DETAIL F	2
S2	5.104	.039			
T1	.000	.000		SEE DETAIL 6	2
T2	7.660	.000			
			.006		

NOTES:

1. INTERPRET DRAWING IN ACCORDANCE WITH STANDARDS PRESCRIBED BY MIL-D-70327
2. MATERIAL: MAGNESIUM ALLOY ZK-60A-T5 PER QQ-M-31
3. FINISH: ANODIZE PER MIL-M-3171 TYPE IV
4. TRUE POSITIONING AS SHOWN IN CHART
5. UNLESS OTHERWISE SPECIFIED 125√ ALL OVER
6. REMOVE ALL BURRS AND BREAK SHARP EDGES .005-.015
7. UNLESS OTHERWISE SPECIFIED ALL FILLETS AND RADII .010 MAX

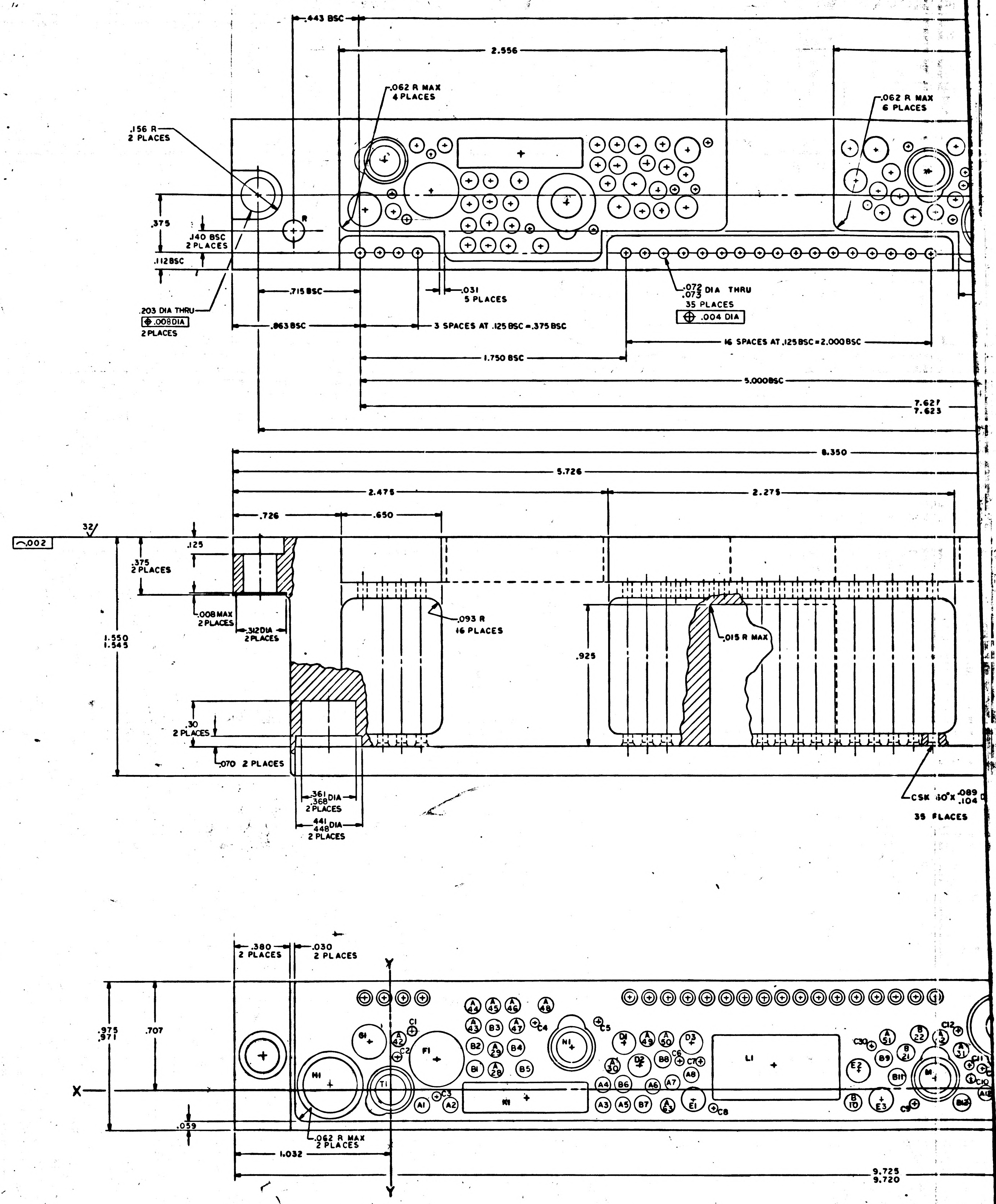
.443 BSC
2.556
.062 R MAX
4 PLACES
.062 R MAX
6 PLACES
.156 R
2 PLACES
R
.375
.140 BSC
2 PLACES
.112 BSC
.203 DIA THRU
⊕ .008 DIA
2 PLACES
.715 BSC
.031
5 PLACES
.072
.073 DIA THRU
35 PLACES
⊕ .004 DIA
.863 BSC
3 SPACES AT .125 BSC = .375 BSC
16 SPACES AT .125 BSC = 2.000 BSC
1.750 BSC
5.000 BSC
7.627
7.623
8.350
5.726
2.475
2.275
.726
.650
32
⌒ .002
.125
.375
2 PLACES
.008 MAX
2 PLACES
.312 DIA
2 PLACES
.093 R
16 PLACES
.015 R MAX
1.550
1.545
.925
.30
2 PLACES
.070 2 PLACES
.361
.368 DIA
2 PLACES
.441
.448 DIA
2 PLACES
CSK 100° X .089
.104
35 PLACES
.380
2 PLACES
.030
2 PLACES
Y
.975
.971
.707
X
.059
.062 R MAX
2 PLACES
1.032
9.725
9.720
H1
T1
G1
F1
C1
C2
C3
A1
A2
A42
A43
A44
A45
A46
A47
B1
B2
B3
B4
B5
A28
A29
C4
C5
N1
K1
D1
D2
D3
A49
A50
A4
A3
A5
B6
B7
A6
A7
A8
B8
C6
C7
C8
E1
E2
E3
L1
B9
B10
B11
B12
B21
B22
C9
C10
C11
C12
C30
A31
A51
M1

1004198 F

SYM	DESCRIPTION	DATE	APPROVAL
	REVISIONS TDRR 02048		
A	REVISED PER TDRR 02294	9-30-63	[illegible]
B	REVISED PER TDRR 03132	[illegible]-63	[illegible]
C	REVISED PER TDRR 04028	10-11-63	WR
D	REVISED PER TDRR 04517	11-6-63	WR
E	REVISED PER TDRR 05183	[illegible]	[illegible]
F	REVISED PER TDRR 12246 DR J.P. [illegible] CHK [illegible]	9/21/64	[illegible]

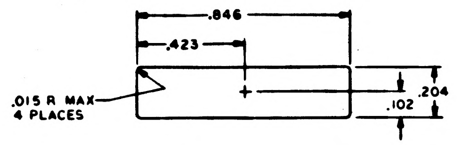

.846
.423
.015 R MAX
4 PLACES
.204
.102

DETAIL A
2 "K" HOLES

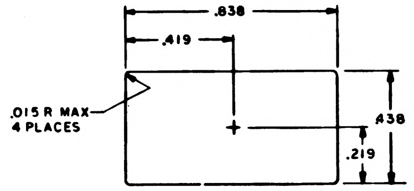

.838
.419
.015 R MAX
4 PLACES
.438
.219

DETAIL B
1 "L" HOLE

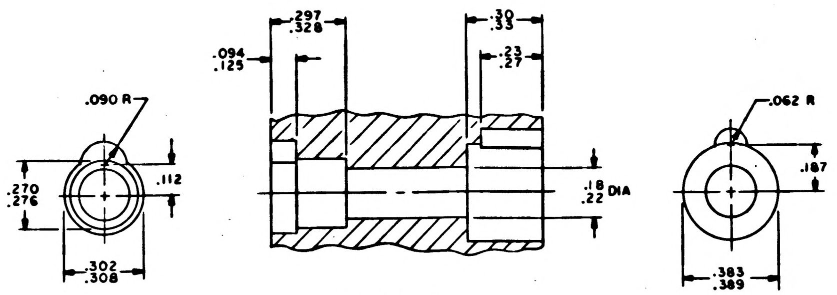

.090 R
.270
.276
.112
.302
.308
.094
.125
.297
.328
.30
.33
.23
.27
.18
.22 DIA
.062 R
.187
.383
.389

DETAIL D
2 "N" HOLES

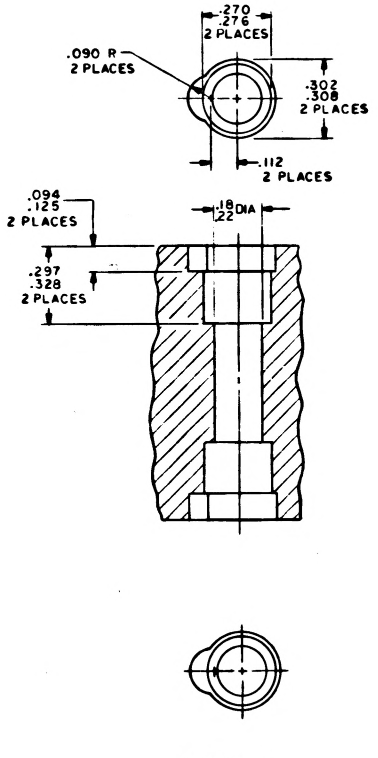

.090 R
2 PLACES
.270
.276
2 PLACES
.302
.308
2 PLACES
.112
2 PLACES
.094
.125
2 PLACES
.18
.22 DIA
.297
.328
2 PLACES

DETAIL C
1 "M" HOLE

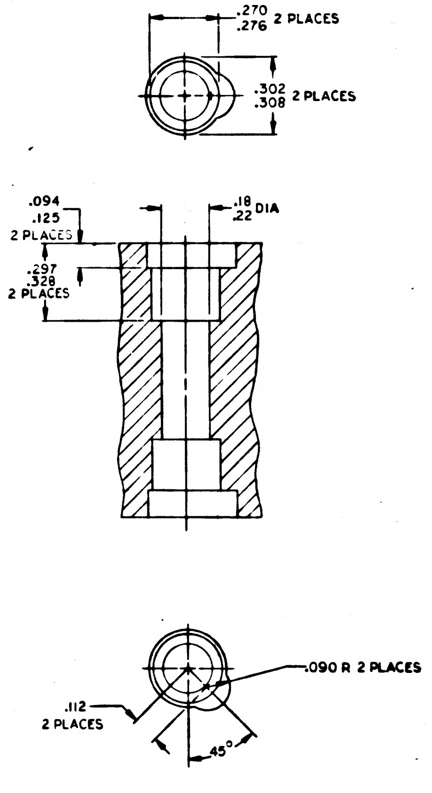

.270
.276 2 PLACES
.302
.308 2 PLACES
.094
.125
2 PLACES
.297
.328
2 PLACES
.18
.22 DIA
.090 R 2 PLACES
.112
2 PLACES
45°

DETAIL G
2 "T" HOLES

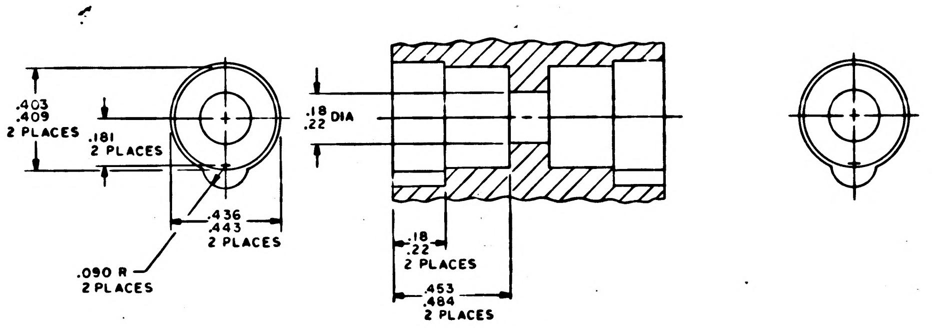

.403
.409
2 PLACES
.181
2 PLACES
.436
.443
2 PLACES
.090 R
2 PLACES
.18
.22 DIA
.18
2 PLACES
.453
.484
2 PLACES

DETAIL E
1 "P" HOLE

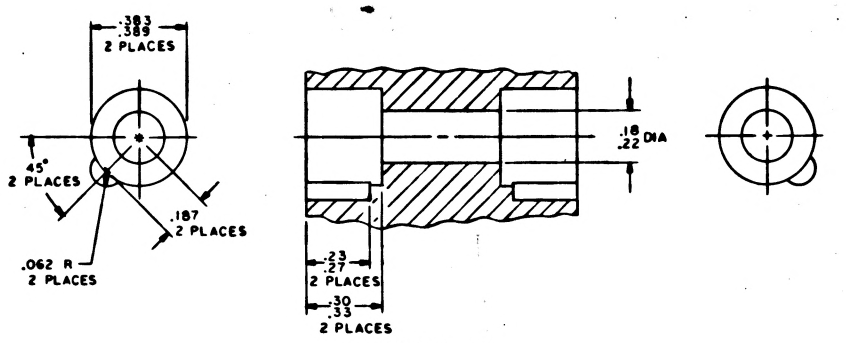

.383
.389
2 PLACES
45°
2 PLACES
.187
2 PLACES
.062 R
2 PLACES
.18
.22 DIA
.23
.27
2 PLACES
.30
.33
2 PLACES

DETAIL F
2 "S" HOLES

QTY REQD	PART OR IDENTIFYING NO.	NOMENCLATURE OR DESCRIPTION	FIND NO

LIST OF MATERIALS

1003151	
NEXT ASSY	USED ON
APPLICATION	

UNLESS OTHERWISE SPECIFIED
DIMENSIONS ARE IN INCHES
TOLERANCES ON
FRACTIONS ± DECIMALS .XXX ±.005 .XX ±.02 ANGLES ±3°
DO NOT SCALE THIS DRAWING
MATERIAL
SEE NOTE 2
HEAT TREATMENT
—
FINAL FINISH
SEE NOTE 2

M I T
INSTRUMENTATION LAB
CAMBRIDGE MASS.
DRAWN [illegible] DATE [illegible]
CHECKED
APPROVAL [illegible]
APPROVAL [illegible]
NASA APPROVAL W.J. [illegible] 7-12-63

MANNED SPACECRAFT CENTER
HOUSTON, TEXAS

HEADER HOUSING
CONTROL MODULE
A.G.C. POWER SUPPLY

CODE IDENT NO. — SIZE J NASA DRAWING NO. 1004198
SCALE 4/1 WT SHEET 1 OF 1

04198 F

E3 / 3

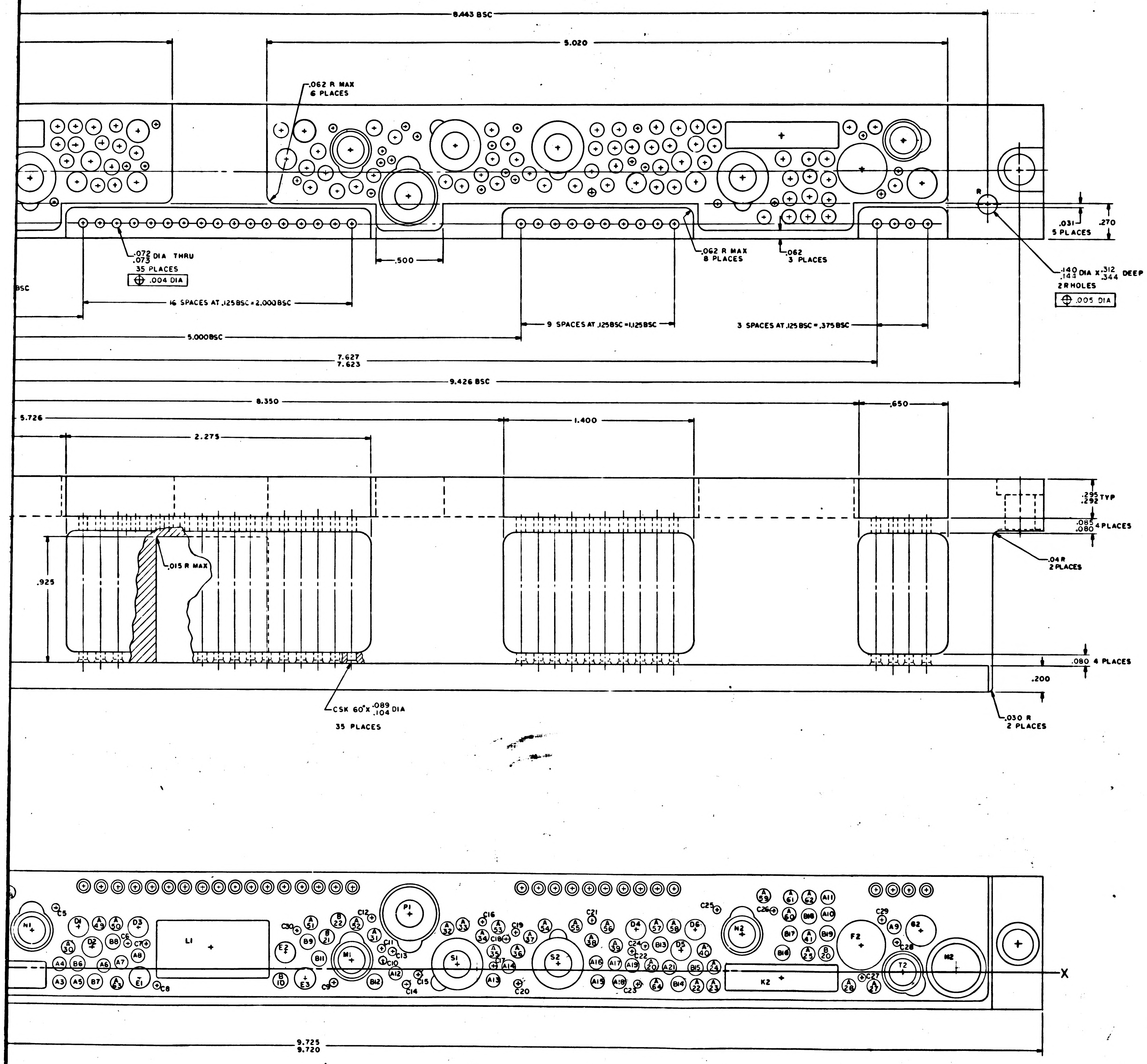
8.443 BSC
5.020
.062 R MAX
6 PLACES
R
.031
5 PLACES
.270
.072 .073 DIA THRU
35 PLACES
.004 DIA
.500
.062 R MAX
8 PLACES
.062
3 PLACES
.140 .144 DIA X .312 .344 DEEP
2 R HOLES
.005 DIA
16 SPACES AT .125 BSC = 2.000 BSC
9 SPACES AT .125 BSC = 1.125 BSC
3 SPACES AT .125 BSC = .375 BSC
5.000 BSC
7.627
7.623
9.426 BSC
8.350
5.726
2.275
1.400
.650
.295 .292 TYP
.085 .080 4 PLACES
.04 R
2 PLACES
.015 R MAX
.925
.080 4 PLACES
.200
CSK 60° X .089 .104 DIA
35 PLACES
.030 R
2 PLACES
N1
L1
P1
S1
S2
N2
F2
K2
T2
M2
M1
X
9.725
9.720

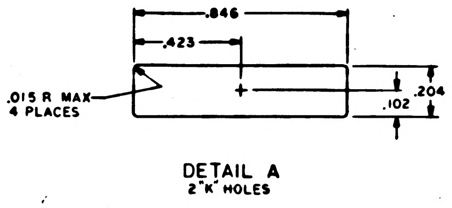
.846
.423
.015 R MAX
4 PLACES
.204
.102

DETAIL A
2 "K" HOLES

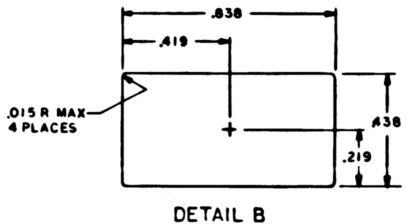
.838
.419
.015 R MAX
4 PLACES
.438
.219

DETAIL B
1 "L" HOLE

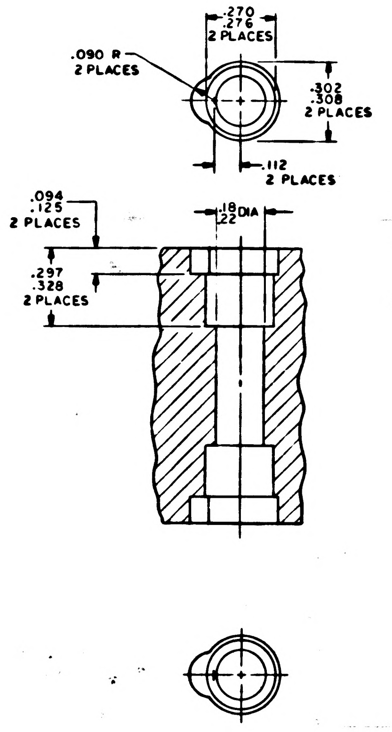
.270 .276
2 PLACES
.090 R
2 PLACES
.302 .308
2 PLACES
.112
2 PLACES
.094 .125
2 PLACES
.18 .22 DIA
.297 .328
2 PLACES

DETAIL C
1 "M" HOLE

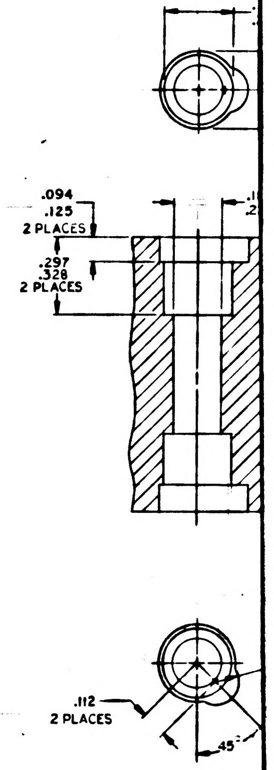
.094
.125
2 PLACES
.297 .328
2 PLACES
.112
2 PLACES
45°

DETAIL G
2 "T" HOLES

HOLE IDENT	X BASIC DIM.	Y BASIC DIM.	⊕ DIA	HOLE DIA	QTY
A1	.208	-.103	.006	.100 .104	64
A2	.393	-.103			
A3	1.402	-.103			
A4	1.402	.030			
A5	1.532	-.103			
A6	1.730	.030			
A7	1.863	.041			
A8	1.985	.098			
A9	7.605	.333			
A10	7.101	.420			
A11	7.101	.550			
A12	3.908	-.028			
A13	4.626	-.082			
A14	4.743	.030			
A15	5.394	-.082			
A16	5.380	.054			
A17	5.520	.054			
A18	5.552	-.078			
A19	5.652	.041			
A20	5.797	.041			
A21	5.930	.023			
A22	6.128	-.103			
A23	6.258	-.103			
A24	6.258	.030			
A25	6.961	.133			
A26	7.267	-.103			
A27	7.452	-.103			
A28	.691	.133			
A29	.691	.262			
A30	1.471	.152			
A31	3.748	.246			
A32	4.284	.296			
A33	4.407	.330			
A34	4.547	.240			
A35	4.634	.136			
A36	4.806	.140			
A37	4.899	.242			
A38	5.350	.221			
A39	5.532	.187			
A40	6.189	.152			
A41	6.961	.262			
A42	.055	.333			
A43	.550	.420			
A44	.550	.550			
A45	.691	.550			
A46	.836	.550			
A47	.836	.420			
A48	1.032	.550			
A49	1.694	.333			
A50	1.825	.333			
A51	3.284	.333			
A52	3.620	.333			
A53	4.660	.312			
A54	5.006	.333			
A55	5.234	.333			
A56	5.470	.333			
A57	5.835	.333			
A58	5.966	.333			
A59	6.628	.550			
A60	6.824	.420			
A61	6.824	.550			
A62	6.961	.550			
A63	1.827	-.103			
A64	5.833	-.103			
B1	.564	.139		.108 .112	12
B2	.564	.287			
B3	.691	.405			
B4	.835	.287			
B5	.888	.139			
B6	1.537	.034			
B7	1.664	-.095			
B8	1.800	.199			
B9	3.254	.199			
B10	3.051	-.095			
B11	3.338	.077			
B12	3.754	-.095	.006		

HOLE IDENT	X BASIC DIM	Y BASIC DIM	⊕ DIA	HOLE DIA	QTY
B13	5.860	.199	.006	.108 .112	10
B14	5.996	-.095			
B15	6.123	.030			
B16	6.772	.139			
B17	6.825	.287			
B18	6.961	.405			
B19	7.101	.287			
B20	7.101	.139			
B21	3.399	.229			
B22	3.480	.356			
C1	.143	.383		.058 .062	30
C2	.038	.218			
C3	.300	-.040			
C4	.954	.440			
C5	1.378	.440			
C6	1.915	.190			
C7	2.049	.190			
C8	2.127	-.122			
C9	3.448	-.122			
C10	3.800	.060			
C11	3.800	.150			
C12	3.726	.372			
C13	3.884	.133			
C14	3.984	-.122			
C15	4.070	-.040			
C16	4.543	.372			
C17	4.626	.027			
C18	4.717	.221			
C19	4.788	.276			
C20	4.788	-.122			
C21	5.350	.372			
C22	5.652	.150			
C23	5.684	-.122			
C24	5.745	.187			
C25	6.282	.440			
C26	6.706	.440			
C27	7.360	-.040			
C28	7.622	.218			
C29	7.505	.383			
C30	3.174	.276			
D1	1.540	.306		.153 .157	6
D2	1.646	.155			
D3	1.979	.306			
D4	5.681	.306			
D5	6.014	.155			
D6	6.120	.306			
				.165 .169	3
E1	1.995	-.065			
E2	3.092	.144			
E3	3.236	-.065			
F1	.305	.200		.368 .375	2
F2	7.355	.200			
G1	-.136	.308		.227 .231	2
G2	7.796	.308			
H1	-.398	.036		SEE DETAIL	2
H2	8.054	.036			
K1	.897	-.050		SEE DETAIL A	2
K2	6.763	-.050			
L1	2.530	.162		SEE DETAIL B	1
				SEE DETAIL C	1
M1	3.583	.066			
N1	1.195	.275		SEE DETAIL D	2
N2	6.469	.275			
P1	4.007	.402		SEE DETAIL E	1
S1	4.357	.039		SEE DETAIL F	2
S2	5.104	.039			
T1	.000	.000		SEE DETAIL 6	2
T2	7.660	.000			
			.006		

NOTES:

1. INTERPRET DRAWING IN ACCORDANCE WITH STANDARDS PRESCRIBED BY MIL-D-70327
2. MATERIAL: MAGNESIUM ALLOY ZK-60A-T5 PER QQ-M-31
3. FINISH: ANODIZE PER MIL-M-45202, TYPE I, CLASS C
4. TRUE POSITIONING AS SHOWN IN CHART
5. UNLESS OTHERWISE SPECIFIED $\sqrt{125}$ ALL OVER
6. REMOVE ALL BURRS AND BREAK SHARP EDGES .005-.015
7. UNLESS OTHERWISE SPECIFIED ALL FILLETS AND RADII .010 MAX

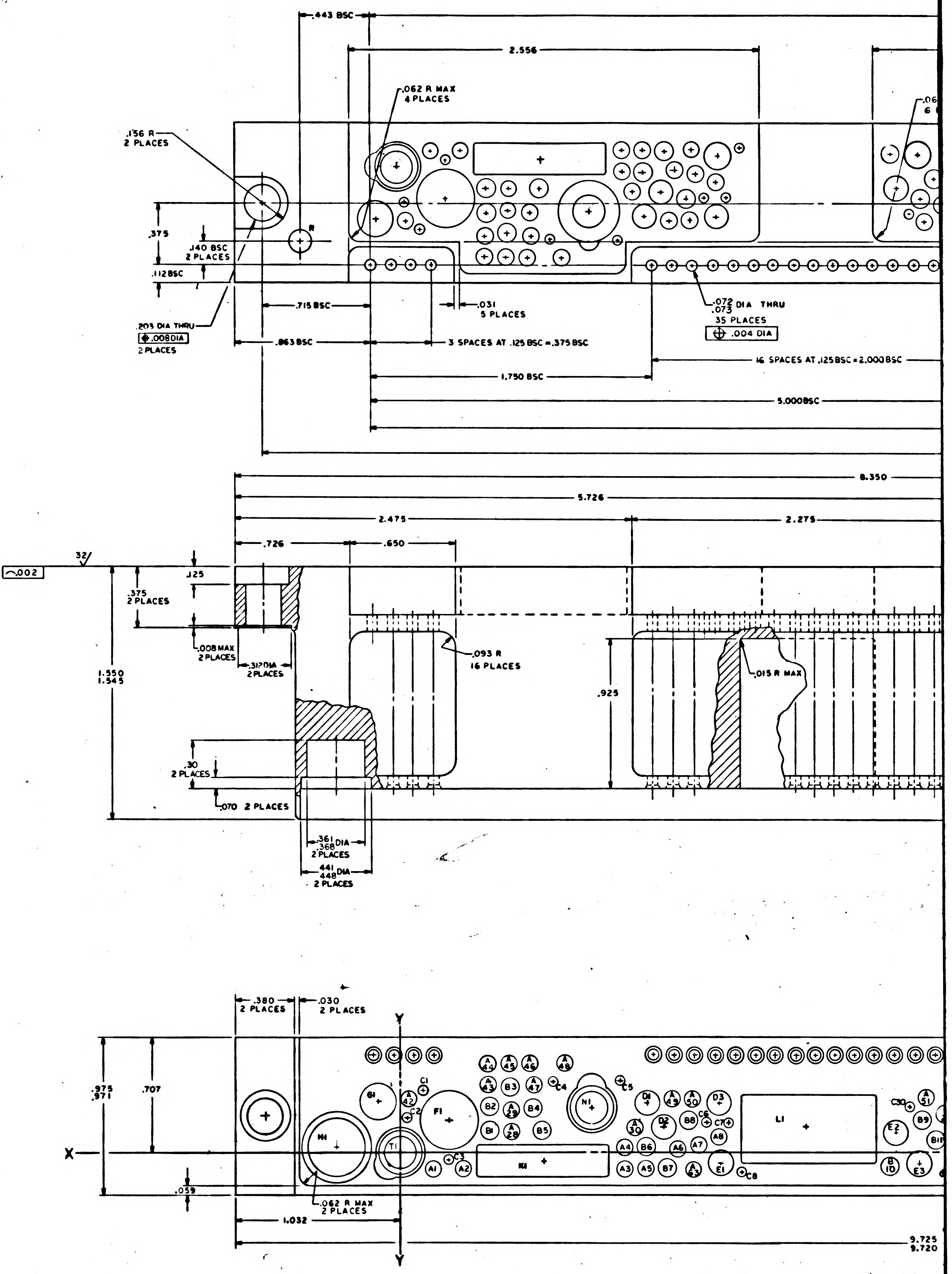
.443 BSC
2.556
.062 R MAX
4 PLACES
.156 R
2 PLACES
.375
.140 BSC
2 PLACES
.112 BSC
.203 DIA THRU
.008 DIA
2 PLACES
.715 BSC
.031
5 PLACES
.072
.073 DIA THRU
35 PLACES
.004 DIA
.863 BSC
3 SPACES AT .125 BSC = .375 BSC
16 SPACES AT .125 BSC = 2.000 BSC
1.750 BSC
5.000 BSC
8.350
5.726
2.475
2.275
.726
.650
32
.002
.125
.375
2 PLACES
1.550
1.545
.008 MAX
2 PLACES
.317 DIA
2 PLACES
.093 R
16 PLACES
.015 R MAX
.925
.30
2 PLACES
.070 2 PLACES
.361
.368 DIA
2 PLACES
.441
.448 DIA
2 PLACES
.380
2 PLACES
.030
2 PLACES
Y
X
.975
.971
.707
.059
.062 R MAX
2 PLACES
1.032
9.725
9.720

1004198

REVISIONS TDRR 02045

SYM	DESCRIPTION	DATE	APPROVAL

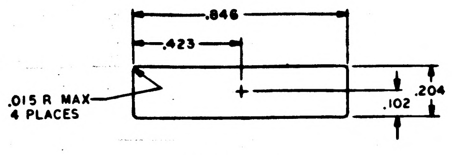
.846
.423
.015 R MAX
4 PLACES
.204
.102

DETAIL A
2 "K" HOLES

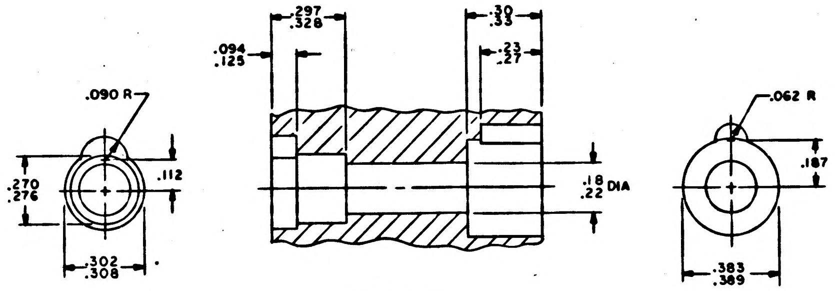
.094
.125
.297
.328
.30
.33
.23
.27
.090 R
.270
.276
.112
.302
.308
.18
.22 DIA
.062 R
.187
.383
.389

DETAIL D
2 "N" HOLES

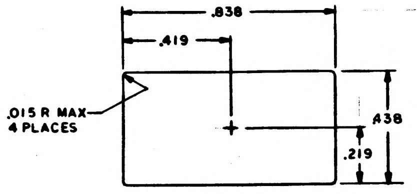
.838
.419
.015 R MAX
4 PLACES
.438
.219

DETAIL B
1 "L" HOLE

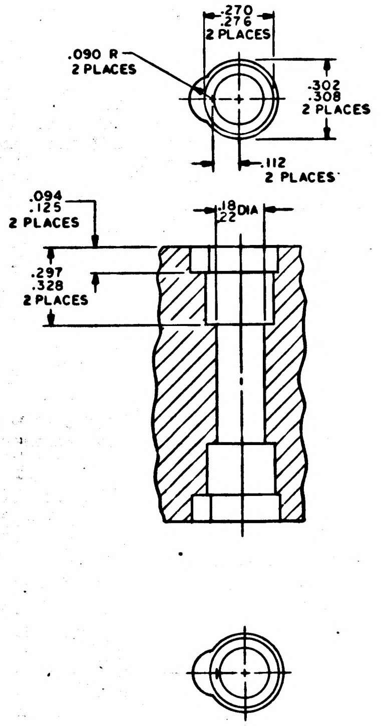
.270
.276
2 PLACES
.090 R
2 PLACES
.302
.308
2 PLACES
.112
2 PLACES
.094
.125
2 PLACES
.18
.22 DIA
.297
.328
2 PLACES

DETAIL C
3 "M" HOLES

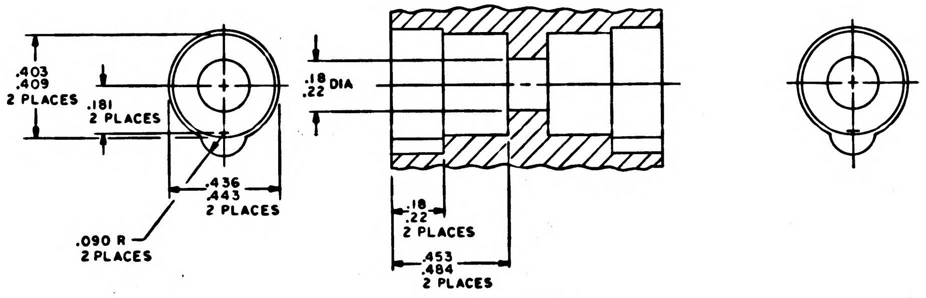
.403
.409
2 PLACES
.181
2 PLACES
.436
.443
2 PLACES
.090 R
2 PLACES
.18
.22 DIA
.18
.22
2 PLACES
.453
.484
2 PLACES

DETAIL E
1 "P" HOLE

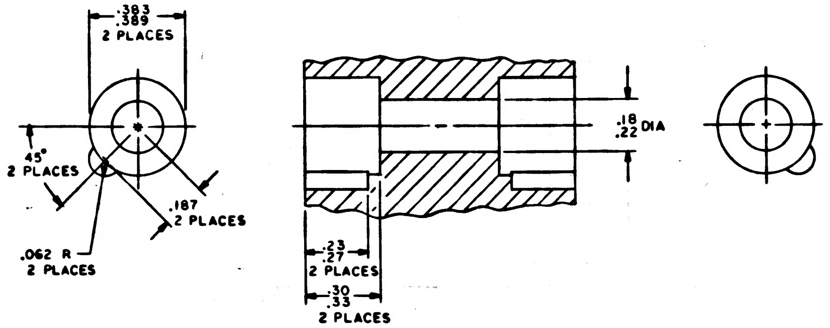
.383
.389
2 PLACES
45°
2 PLACES
.187
2 PLACES
.062 R
2 PLACES
.18
.22 DIA
.23
.27
2 PLACES
.30
.33
2 PLACES

DETAIL F
2 "S" HOLES

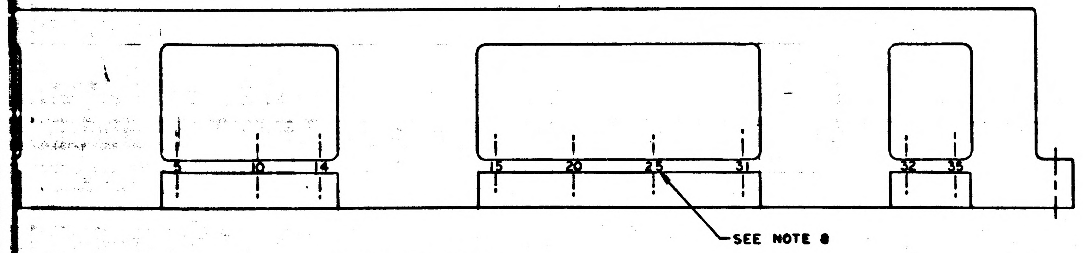
5
10
14
15
20
25
31
32
35
SEE NOTE 8

MARKING VIEW
SCALE 2/1

QTY REQD	PART OR IDENTIFYING NO.	NOMENCLATURE OR DESCRIPTION	FIND NO.

LIST OF MATERIALS

NEXT ASSY	USED ON
APPLICATION	

UNLESS OTHERWISE SPECIFIED
DIMENSIONS ARE IN INCHES
TOLERANCES ON
FRACTIONS ± DECIMALS .XXX ±.005 .XX ±.02 ANGLES ±
DO NOT SCALE THIS DRAWING

MATERIAL
SEE NOTE 2

HEAT TREATMENT
—

FINAL FINISH
SEE NOTE 2

MIT
INSTRUMENTATION LAB
CAMBRIDGE, MASS
DWG NO
CONTRACT
DRAWN
DATE
CHECKED
APPROVAL
APPROVAL
NASA APPROVAL 7-12-63
MIT APPROVAL 7/12/63

MANNED SPACECRAFT CENTER
HOUSTON, TEXAS

HEADER HOUSING
CONTROL MODULE
A.G.C. POWER SUPPLY

CODE IDENT NO.	SIZE	NASA DRAWING NO.
	J	1004198

SCALE 5/1 WT SHEET 1 OF 1

1004198

1004198

MASTER

INCHES
PHOTOGRAPHIC SCALE ONLY

F3

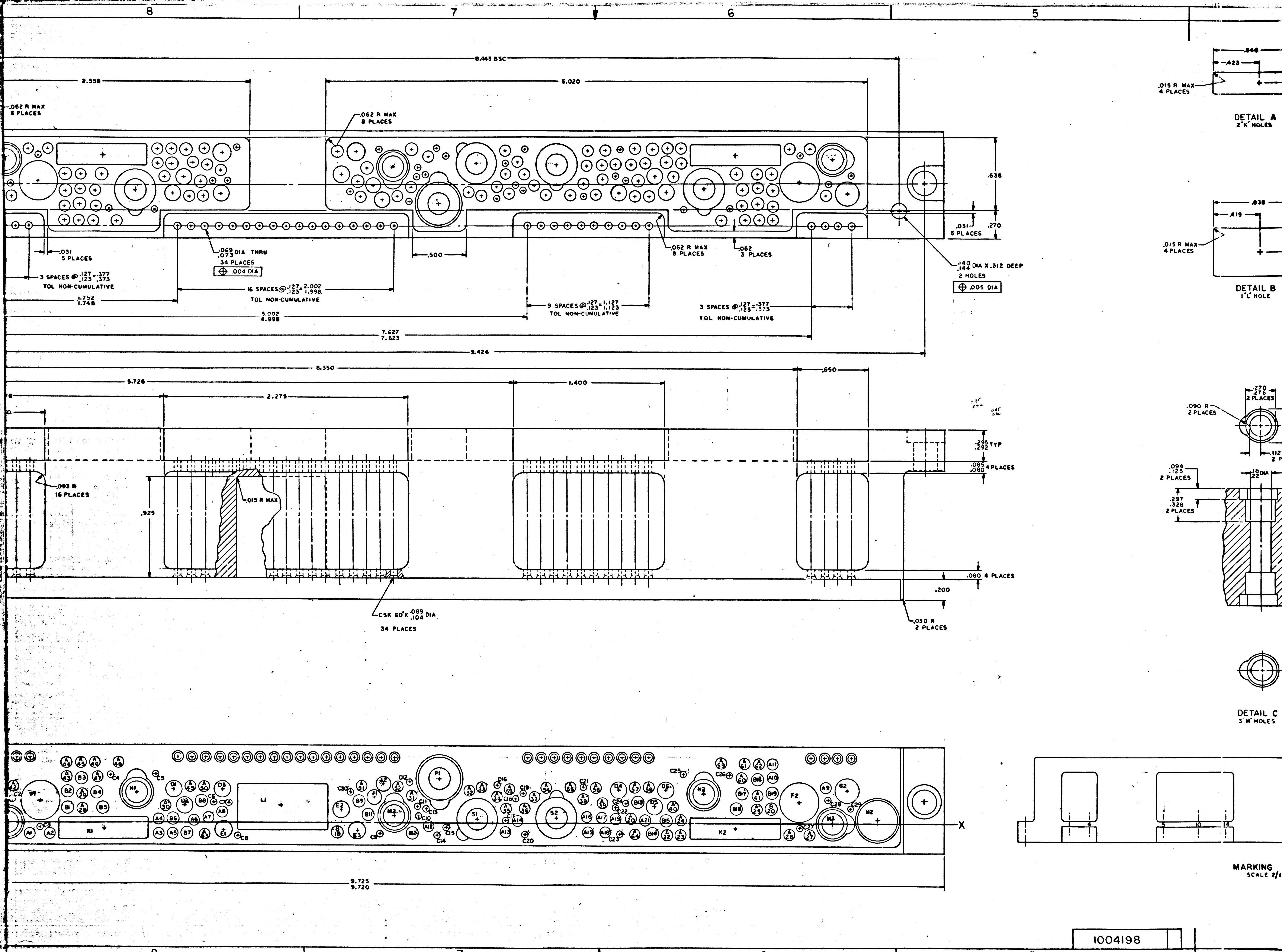
8
7
6
5
8.443 BSC
2.556
5.020
.062 R MAX
6 PLACES
.062 R MAX
8 PLACES
.638
.031
5 PLACES
.270
.031
5 PLACES
.069
.073 DIA THRU
34 PLACES
⊕ .004 DIA
.500
.062 R MAX
8 PLACES
.062
3 PLACES
.140
.144 DIA X .312 DEEP
2 HOLES
⊕ .005 DIA
3 SPACES @ .127
.123 = .377
.373
TOL NON-CUMULATIVE
1.752
1.748
16 SPACES @ .127
.123 = 2.002
1.998
TOL NON-CUMULATIVE
5.002
4.998
9 SPACES @ .127
.123 = 1.127
1.123
TOL NON-CUMULATIVE
3 SPACES @ .127
.123 = .377
.373
TOL NON-CUMULATIVE
7.627
7.623
9.426
8.350
5.726
2.275
1.400
.650
.295
.292 TYP
.085
.080 4 PLACES
.093 R
16 PLACES
.015 R MAX
.925
.080 4 PLACES
.200
CSK 60° X .089
.104 DIA
34 PLACES
.030 R
2 PLACES
.295
.292
.085
.080
.846
.423
.015 R MAX
4 PLACES
DETAIL A
2 "K" HOLES
.838
.419
.015 R MAX
4 PLACES
DETAIL B
1 "L" HOLE
.270
.276
2 PLACES
.090 R
2 PLACES
.112
2 P
.094
.125
2 PLACES
.18
.22 DIA
.297
.328
2 PLACES
DETAIL C
3 "M" HOLES
P1
N1
N2
S1
S2
M1
M2
M3
F2
E1
E2
E3
J1
K1
K2
R1
U
X
9.725
9.720
4
5
10
14
MARKING
SCALE 2/1

1004198

INCHES
0 2
PHOTOGRAPHIC SCALE ONLY

F-2

NOTICE — WHEN GOVERNMENT DRAWINGS, SPECIFICATIONS, OR OTHER DATA ARE USED FOR ANY PURPOSE OTHER THAN IN CONNECTION WITH A DEFINITELY RELATED GOVERNMENT PROCUREMENT OPERATION, THE UNITED STATES GOVERNMENT THEREBY INCURS NO RESPONSIBILITY NOR ANY OBLIGATION WHATSOEVER; AND THE FACT THAT THE GOVERNMENT MAY HAVE FORMULATED, FURNISHED, OR IN ANY WAY SUPPLIED THE SAID DRAWINGS, SPECIFICATIONS, OR OTHER DATA IS NOT TO BE REGARDED BY IMPLICATION OR OTHERWISE AS IN ANY MANNER LICENSING THE HOLDER OR ANY OTHER PERSON OR CORPORATION, OR CONVEYING ANY RIGHTS OR PERMISSION TO MANUFACTURE, USE, OR SELL ANY PATENTED INVENTION THAT MAY IN ANY WAY BE RELATED THERETO.

HOLE IDENT	X BASIC DIM.	Y BASIC DIM.	⊕ DIA	HOLE DIA	QTY
A1	.208	-.103	.006	.100 .104	64
A2	.393	-.103			
A3	1.402	-.103			
A4	1.402	.030			
A5	1.532	-.103			
A6	1.730	.030			
A7	1.863	.041			
A8	1.985	.098			
A9	7.605	.333			
A10	7.101	.420			
A11	7.101	.550			
A12	3.908	-.028			
A13	4.626	-.082			
A14	4.743	.030			
A15	5.394	-.082			
A16	5.380	.054			
A17	5.520	.054			
A18	5.552	-.078			
A19	5.652	.041			
A20	5.797	.041			
A21	5.930	.023			
A22	6.128	-.103			
A23	6.258	-.103			
A24	6.258	.030			
A25	6.961	.133			
A26	7.267	-.103			
A27	7.452	-.103			
A28	.691	.133			
A29	.691	.262			
A30	1.471	.152			
A31	3.748	.246			
A32	4.284	.296			
A33	4.407	.330			
A34	4.547	.240			
A35	4.634	.136			
A36	4.806	.140			
A37	4.899	.242			
A38	5.350	.221			
A39	5.532	.187			
A40	6.189	.152			
A41	6.961	.262			
A42	.055	.333			
A43	.550	.420			
A44	.550	.550			
A45	.691	.550			
A46	.836	.550			
A47	.836	.420			
A48	1.032	.550			
A49	1.694	.333			
A50	1.825	.333			
A51	3.284	.333			
A52	3.620	.333			
A53	4.660	.312			
A54	5.006	.333			
A55	5.234	.333			
A56	5.470	.333			
A57	5.835	.333			
A58	5.966	.333			
A59	6.628	.550			
A60	6.824	.420			
A61	6.824	.550			
A62	6.961	.550			
A63	1.827	-.103			
A64	5.833	-.103			
B1	.564	.139		.108 .112	20
B2	.564	.287			
B3	.691	.405			
B4	.835	.287			
B5	.888	.139			
B6	1.537	.034			
B7	1.664	-.095			
B8	1.800	.199			
B9	3.254	.199			
B10	3.051	-.095			
B11	3.338	.077			
B12	3.754	-.095	.006		
B13	5.860	.199	.006	.108 .112	20
B14	5.996	-.095			
B15	6.123	.030			
B16	6.772	.139			
B17	6.825	.287			
B18	6.961	.405			
B19	7.101	.287			
B20	7.101	.139			
C1	-.170	.133		.058 .062	30
C2	.038	.218			
C3	.300	-.040			
C4	.954	.440			
C5	1.378	.440			
C6	1.915	.190			
C7	2.049	.190			
C8	2.127	-.122			
C9	3.448	-.122			
C10	3.800	.060			
C11	3.800	.150			
C12	3.726	.372			
C13	3.884	.133			
C14	3.984	-.122			
C15	4.070	-.040			
C16	4.543	.372			
C17	4.626	.027			
C18	4.717	.221			
C19	4.788	.276			
C20	4.788	-.122			
C21	5.350	.372			
C22	5.652	.150			
C23	5.684	-.122			
C24	5.745	.187			
C25	6.282	.440			
C26	6.706	.440			
C27	7.360	-.040			
C28	7.622	.218			
C29	7.830	.133			
C30	3.174	.276			
D1	1.540	.306		.153 .157	6
D2	1.646	.155			
D3	1.979	.306			
D4	5.681	.306			
D5	6.014	.155			
D6	6.120	.306			
E1	1.995	-.065		.165 .169	3
E2	3.092	.144			
E3	3.236	-.065			
F1	.305	.200		.362 .369	2
F2	7.355	.200			
G1	-.136	.308		.227 .231	2
G2	7.796	.308			
H1	-.420	.036		SEE DETAIL	2
H2	8.076	.036			
J1	3.399	.229		.127 .131	2
J2	3.480	.356			
K1	.897	-.050		SEE DETAIL A	2
K2	6.763	-.050			
L1	2.530	.162		SEE DETAIL B	1
M1	.000	.000		SEE DETAIL C	3
M2	3.583	.066			
M3	7.660	.000			
N1	1.195	.275		SEE DETAIL D	2
N2	6.469	.275			
P1	4.007	.402		SEE DETAIL E	1
S1	4.357	.039		SEE DETAIL F	2
S2	5.104	.039			
			.006		

NOTES:

1. INTERPRET DRAWING IN ACCORDANCE WITH STANDARDS PRESCRIBED BY MIL-D-70327
2. MATERIAL: MAGNESIUM ALLOY ZK-60A-T5 PER QQ-M-31
3. FINISH: ANODIZE PER MIL-M-3171 TYPE IV
4. TRUE POSITIONING AS SHOWN IN CHART
5. UNLESS OTHERWISE SPECIFIED 125√ ALL OVER
6. REMOVE ALL BURRS AND BREAK SHARP EDGES .005-.015
7. UNLESS OTHERWISE SPECIFIED ALL FILLETS AND RADII .010 MAX
8. MARK .060-.080 HIGH CHARACTERS PER ND1002112 USING ENEMAL, LUSTERLESS WHITE PER ND1002111

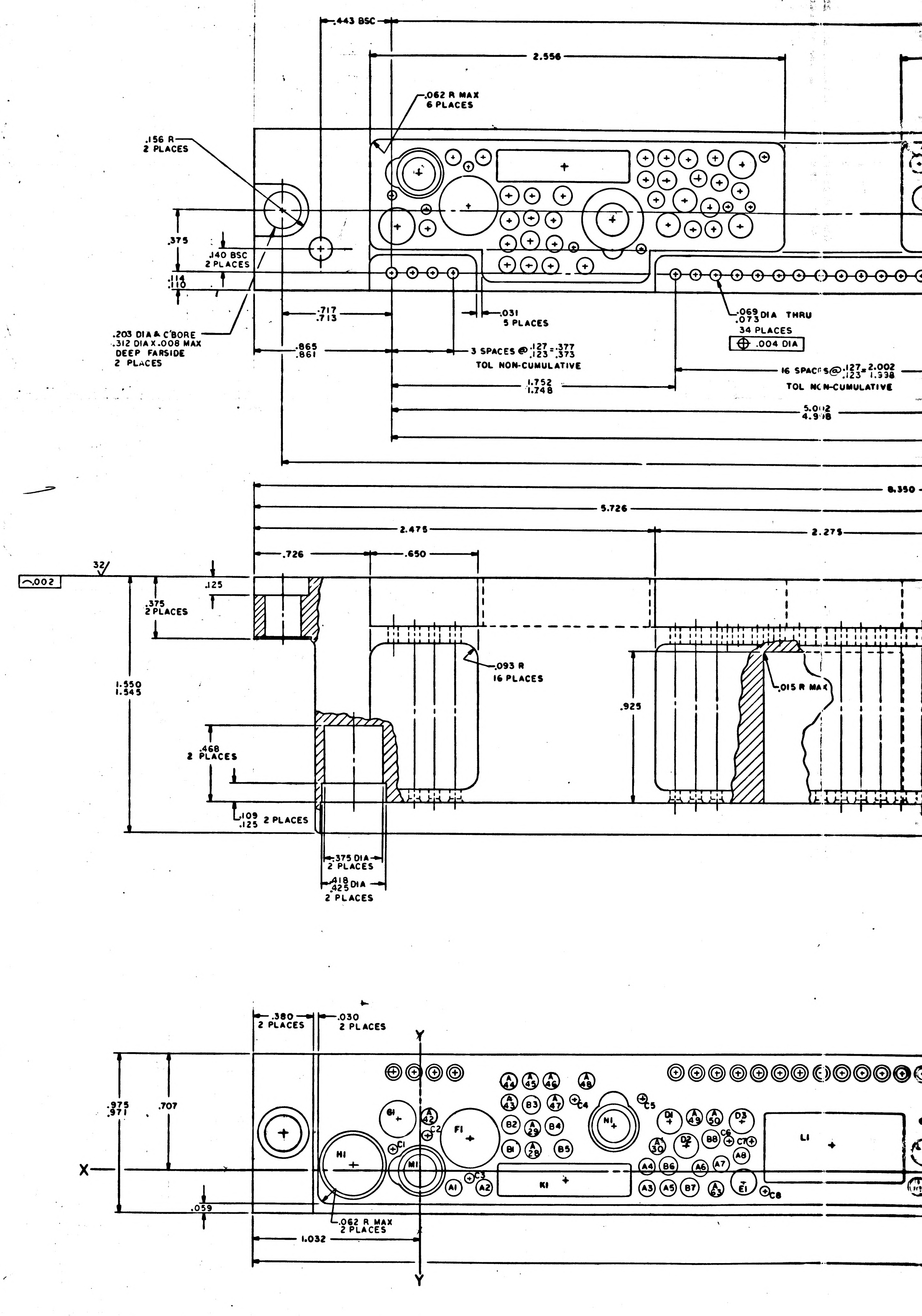
.443 BSC
2.556
.062 R MAX
6 PLACES
.156 R
2 PLACES
.375
.140 BSC
2 PLACES
.114
.110
.717
.713
.031
5 PLACES
.069
.073 DIA THRU
34 PLACES
⊕ .004 DIA
.203 DIA & C'BORE
.312 DIA X .008 MAX
DEEP FARSIDE
2 PLACES
.865
.861
3 SPACES @ .127/.123 = .377/.373
TOL NON-CUMULATIVE
1.752
1.748
16 SPACES @ .127/.123 = 2.002/1.338
TOL NON-CUMULATIVE
5.002
4.998
8.350
5.726
2.475
2.275
.726
.650
.002
32
.125
.375
2 PLACES
1.550
1.545
.093 R
16 PLACES
.015 R MAX
.925
.468
2 PLACES
.109
.125 2 PLACES
.375 DIA
2 PLACES
.418
.425 DIA
2 PLACES
.380
2 PLACES
.030
2 PLACES
Y
X
.975
.971
.707
.059
.062 R MAX
2 PLACES
1.032
Y
G1
H1
A42
C1
C2
M1
F1
A1
C3
A2
A44
A45
A46
A48
A43
B3
A47
C4
B2
A29
B4
B1
A28
B5
K1
N1
C5
D1
A49
A50
D3
A30
D2
B8
C6
C7
A8
A4
B6
A6
A7
A3
A5
B7
A63
E1
C8
L1

NOTICE — WHEN GOVERNMENT DRAWINGS, SPECIFICATIONS, OR OTHER DATA ARE USED FOR ANY PURPOSE OTHER THAN IN CONNECTION WITH A DEFINITELY RELATED GOVERNMENT PROCUREMENT OPERATION, THE UNITED STATES GOVERNMENT THEREBY INCURS NO RESPONSIBILITY NOR ANY OBLIGATION WHATSOEVER AND THE FACT THAT THE GOVERNMENT MAY HAVE FORMULATED, FURNISHED, OR IN ANY WAY SUPPLIED THE SAID DRAWINGS, SPECIFICATIONS OR OTHER DATA IS NOT TO BE REGARDED BY IMPLICATION OR OTHERWISE AS IN ANY MANNER LICENSING THE HOLDER OR ANY OTHER PERSON OR CORPORATION, OR CONVEYING ANY RIGHTS OR PERMISSION TO MANUFACTURE, USE, OR SELL ANY PATENTED INVENTION THAT MAY IN ANY WAY BE RELATED THERETO

REVISIONS	TDRR 1610		
SYM	DESCRIPTION	DATE	APPROVAL
A	REVISED PER TDRR 04609	4-13-63	GH
B	REVISED PER TDRR 04608	4-13-63	GH

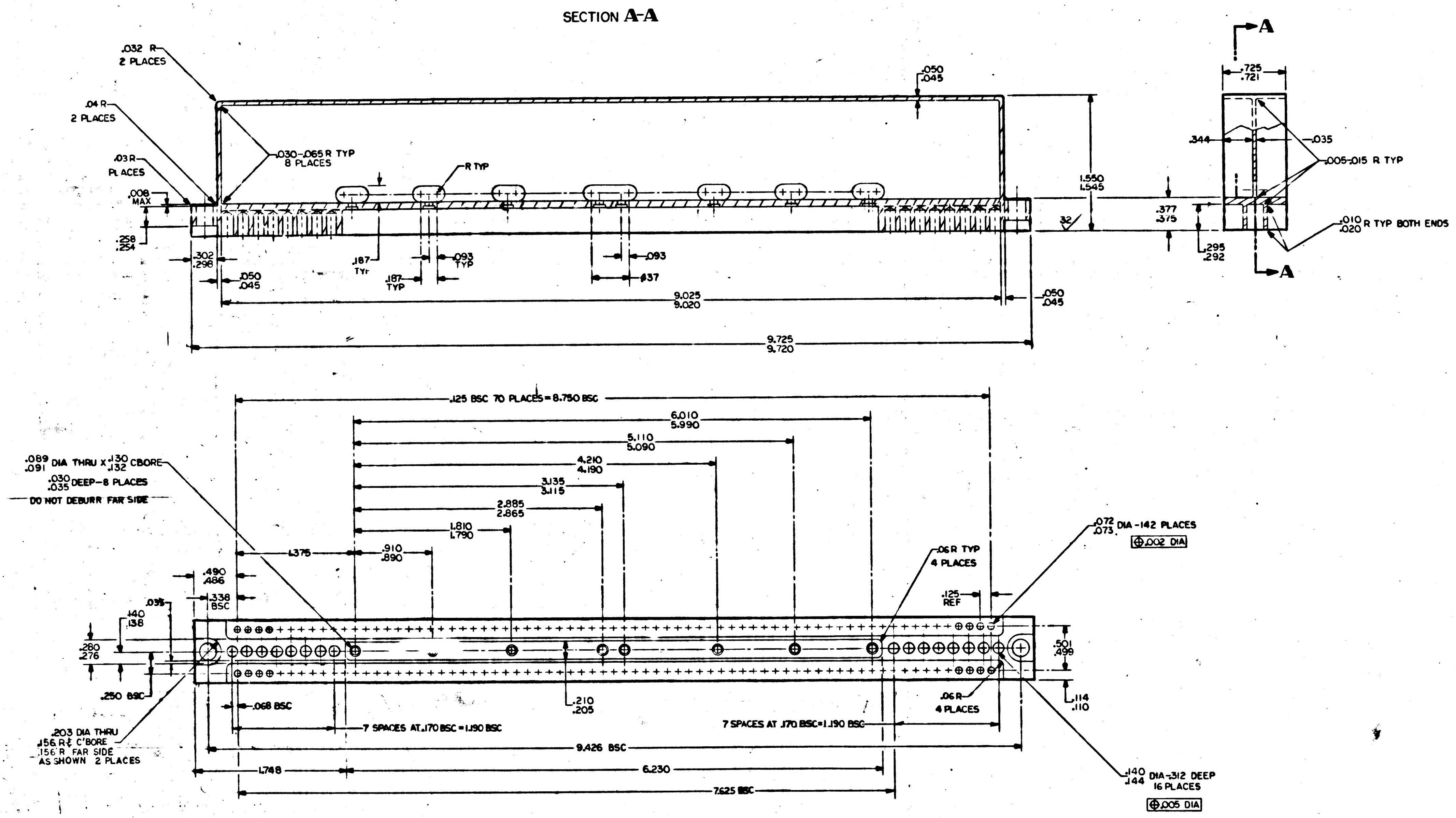
SECTION A-A
.032 R
2 PLACES
.04 R
2 PLACES
.03 R
PLACES
.008
MAX
.030-.065 R TYP
8 PLACES
R TYP
.050
.045
1.550
1.545
.377
.375
32
.258
.254
.302
.298
.050
.045
.187
TYP
.187
TYP
.093
TYP
.093
.437
9.025
9.020
.050
.045
9.725
9.720
A
A
.725
.721
.344
.035
.005-.015 R TYP
.010
.020 R TYP BOTH ENDS
.295
.292
.125 BSC 70 PLACES = 8.750 BSC
6.010
5.990
5.110
5.090
4.210
4.190
3.135
3.115
2.885
2.865
1.810
1.790
.910
.890
1.375
.089
.091 DIA THRU X .130
.132 CBORE
.030
.035 DEEP-8 PLACES
DO NOT DEBURR FAR SIDE
.490
.486
.338
BSC
.035
.140
.138
.280
.276
.250 BSC
.068 BSC
7 SPACES AT .170 BSC = 1.190 BSC
.210
.205
7 SPACES AT .170 BSC = 1.190 BSC
9.426 BSC
1.748
6.230
7.625 BSC
.203 DIA THRU
.156 R ℄ C'BORE
.156 R FAR SIDE
AS SHOWN 2 PLACES
.06 R TYP
4 PLACES
.125
REF
.072
.073 DIA -142 PLACES
⊕ .002 DIA
.501
.499
.06 R
4 PLACES
.114
.110
.140
.144 DIA-.312 DEEP
16 PLACES
⊕ .005 DIA

NOTES:

1. INTERRET DRAWING IN ACCORDANCE WITH STANDARDS PRESCRIBED BY MIL-D-70327
2. MATERIAL- MAG. ALLOY ZK60A-T5 PER QQ-M-31α COMP ZK60A TEMPER T5
3. FINISH-GALVANIC ANODIZE PER MIL-M-3171A TYPE IV
4. ALL SURFACES 125 UNLESS OTHERWISE SPECIFIED
5. REMOVE ALL BURRS AND BREAK SHARP EDGES .005-.015

MASTER

QTY REQD	PART OR IDENTIFYING NO.	NOMENCLATURE OR DESCRIPTION	FIND NO.
LIST OF MATERIALS			

1003110	
NEXT ASSY	USED ON
APPLICATION	

UNLESS OTHERWISE SPECIFIED
DIMENSIONS ARE IN INCHES
TOLERANCES ON
FRACTIONS DECIMALS ANGLES
XX±.02 ±5°
XXX±.005
DO NOT SCALE THIS DRAWING

MATERIAL SEE NOTE 2
HEAT TREATMENT —
FINAL FINISH SEE NOTE 3

MIT
INSTRUMENTATION LAB
CAMBRIDGE, MASS
DWG. NO. CONTRACT

DRAWN Mahoney DATE 4-26-63
CHECKED [illegible]
APPROVAL [illegible]
APPROVAL [illegible] 5-14-63
NASA APPROVAL [illegible]
MIT APPROVAL [illegible]

MANNED SPACECRAFT CENTER
HOUSTON, TEXAS

HEADER HOUSING
LOGIC MODULE

CODE IDENT NO.	SIZE	NASA DRAWING NO.
	E	1004201
SCALE 2/1	WT	SHEET 1 OF 1

INCHES
0 1 2
PHOTOGRAPHIC SCALE ONLY

NOTICE — WHEN GOVERNMENT DRAWINGS, SPECIFICATIONS, OR OTHER DATA ARE USED FOR ANY PURPOSE OTHER THAN IN CONNECTION WITH A DEFINITELY RELATED GOVERNMENT PROCUREMENT OPERATION, THE UNITED STATES GOVERNMENT THEREBY INCURS NO RESPONSIBILITY NOR ANY OBLIGATION WHATSOEVER; AND THE FACT THAT THE GOVERNMENT MAY HAVE FORMULATED, FURNISHED, OR IN ANY WAY SUPPLIED THE SAID DRAWINGS, SPECIFICATIONS, OR OTHER DATA IS NOT TO BE REGARDED BY IMPLICATION OR OTHERWISE AS IN ANY MANNER LICENSING THE HOLDER OR ANY OTHER PERSON OR CORPORATION, OR CONVEYING ANY RIGHTS OR PERMISSION TO MANUFACTURE, USE, OR SELL ANY PATENTED INVENTION THAT MAY IN ANY WAY BE RELATED THERETO.

REVISIONS TDRR 1610

SYM	DESCRIPTION	DATE	APPROVAL
A	REVISED PER TDRR 04609	11-19-63	
B	REVISED PER TDRR 04608	11-13-63	
C	REVISED PER TDRR 05776	1-24-64	

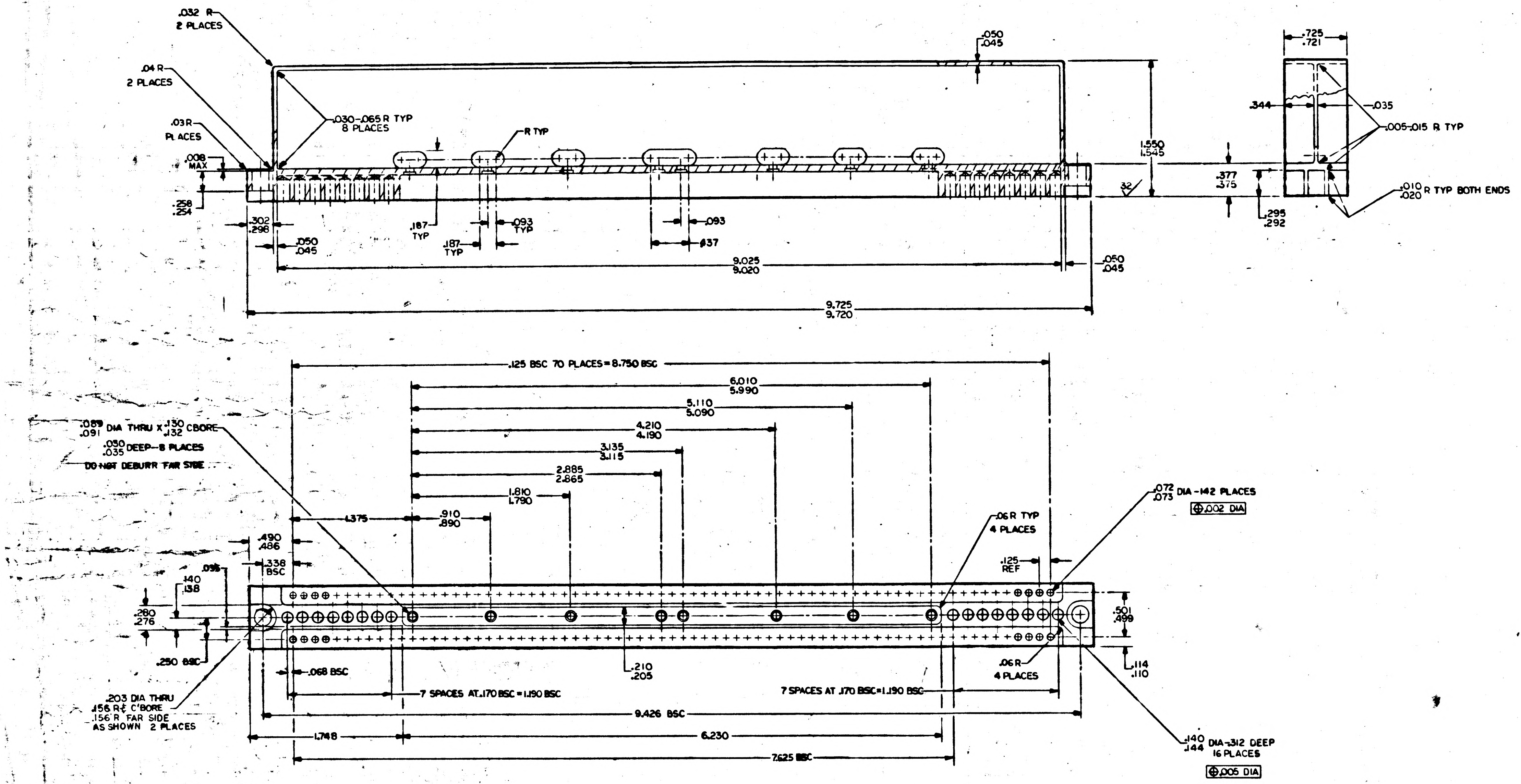
.032 R
2 PLACES
.04 R
2 PLACES
.03 R
PLACES
.008 MAX
.030-.065 R TYP
8 PLACES
R TYP
.050
.045
1.550
1.545
.258
.254
.302
.298
.050
.045
.187 TYP
.187 TYP
.093 TYP
.093
.437
9.025
9.020
.050
.045
9.725
9.720
.725
.721
.344
.035
.005-.015 R TYP
.377
.375
.295
.292
.010
.020 R TYP BOTH ENDS
.125 BSC 70 PLACES = 8.750 BSC
6.010
5.990
5.110
5.090
4.210
4.190
3.135
3.115
2.885
2.865
1.810
1.790
1.375
.910
.890
.089
.091 DIA THRU X .130
.132 CBORE
.030
.035 DEEP—8 PLACES
DO NOT DEBURR FAR SIDE
.490
.486
.338 BSC
.035
.140
.138
.280
.276
.250 BSC
.068 BSC
.203 DIA THRU
.156 R ℄ C'BORE
.156 R FAR SIDE
AS SHOWN 2 PLACES
.072
.075 DIA -142 PLACES
⊕ .002 DIA
.06 R TYP
4 PLACES
.125 REF
.501
.499
.210
.205
.06 R
4 PLACES
.114
.110
7 SPACES AT .170 BSC = 1.190 BSC
7 SPACES AT .170 BSC = 1.190 BSC
9.426 BSC
1.748
6.230
7.625 BSC
.140
.144 DIA -.312 DEEP
16 PLACES
⊕ .005 DIA

NOTES:

1. INTERRET DRAWING IN ACCORDANCE WITH STANDARDS PRESCRIBED BY MIL-D-70327
2. MATERIAL- MAG. ALLOY ZK60A-T5 PER QQ-M-31 COMP ZK60A TEMPER T5
3. FINISH- GALVANIC ANODIZE PER MIL-M-3171A TYPE IV
4. ALL SURFACES 125 UNLESS OTHERWISE SPECIFIED
5. REMOVE ALL BURRS AND BREAK SHARP EDGES .005-.015

MASTER

QTY REQD	PART OR IDENTIFYING NO.	NOMENCLATURE OR DESCRIPTION	FIND NO.

LIST OF MATERIALS

1003110	
NEXT ASSY	USED ON
APPLICATION	

UNLESS OTHERWISE SPECIFIED
DIMENSIONS ARE IN INCHES
TOLERANCES ON
FRACTIONS — DECIMALS XX±.02 XXX±.005 — ANGLES ±5°
DO NOT SCALE THIS DRAWING

MATERIAL SEE NOTE 2

HEAT TREATMENT —

FINAL FINISH SEE NOTE 3

MIT INSTRUMENTATION LAB
CAMBRIDGE, MASS
DWG. NO. CONTRACT

DRAWN Mahoney DATE 4-26-63
CHECKED
APPROVAL 4-2-63
APPROVAL 5-4-63
NASA APPROVAL
MIT APPROVAL

MANNED SPACECRAFT CENTER
HOUSTON, TEXAS

HEADER HOUSING
LOGIC MODULE

CODE IDENT NO.
SIZE E
NASA DRAWING NO. 1004201
SCALE 2/1
WT
SHEET 1 OF 1

NOTICE — WHEN GOVERNMENT DRAWINGS, SPECIFICATIONS, OR OTHER DATA ARE USED FOR ANY PURPOSE OTHER THAN IN CONNECTION WITH A DEFINITELY RELATED GOVERNMENT PROCUREMENT OPERATION, THE UNITED STATES GOVERNMENT THEREBY INCURS NO RESPONSIBILITY NOR ANY OBLIGATION WHATSOEVER AND THE FACT THAT THE GOVERNMENT MAY HAVE FORMULATED, FURNISHED, OR IN ANY WAY SUPPLIED THE SAID DRAWINGS, SPECIFICATIONS OR OTHER DATA IS NOT TO BE REGARDED BY IMPLICATION OR OTHERWISE AS IN ANY MANNER LICENSING THE HOLDER OR ANY OTHER PERSON OR CORPORATION, OR CONVEYING ANY RIGHTS OR PERMISSION TO MANUFACTURE, USE, OR SELL ANY PATENTED INVENTION THAT MAY IN ANY WAY BE RELATED THERETO

REVISIONS TDRR 1610

SYM	DESCRIPTION	DATE	APPROVAL
A	REVISED PER TDRR 04609	11-13-63	WM
B	REVISED PER TDRR 04608	11-13-63	WM
C	REVISED PER TDRR 05776	1-24-64	WM
D	REVISED PER TDRR 08411 DR CHK A.R.B.	3/7/64	

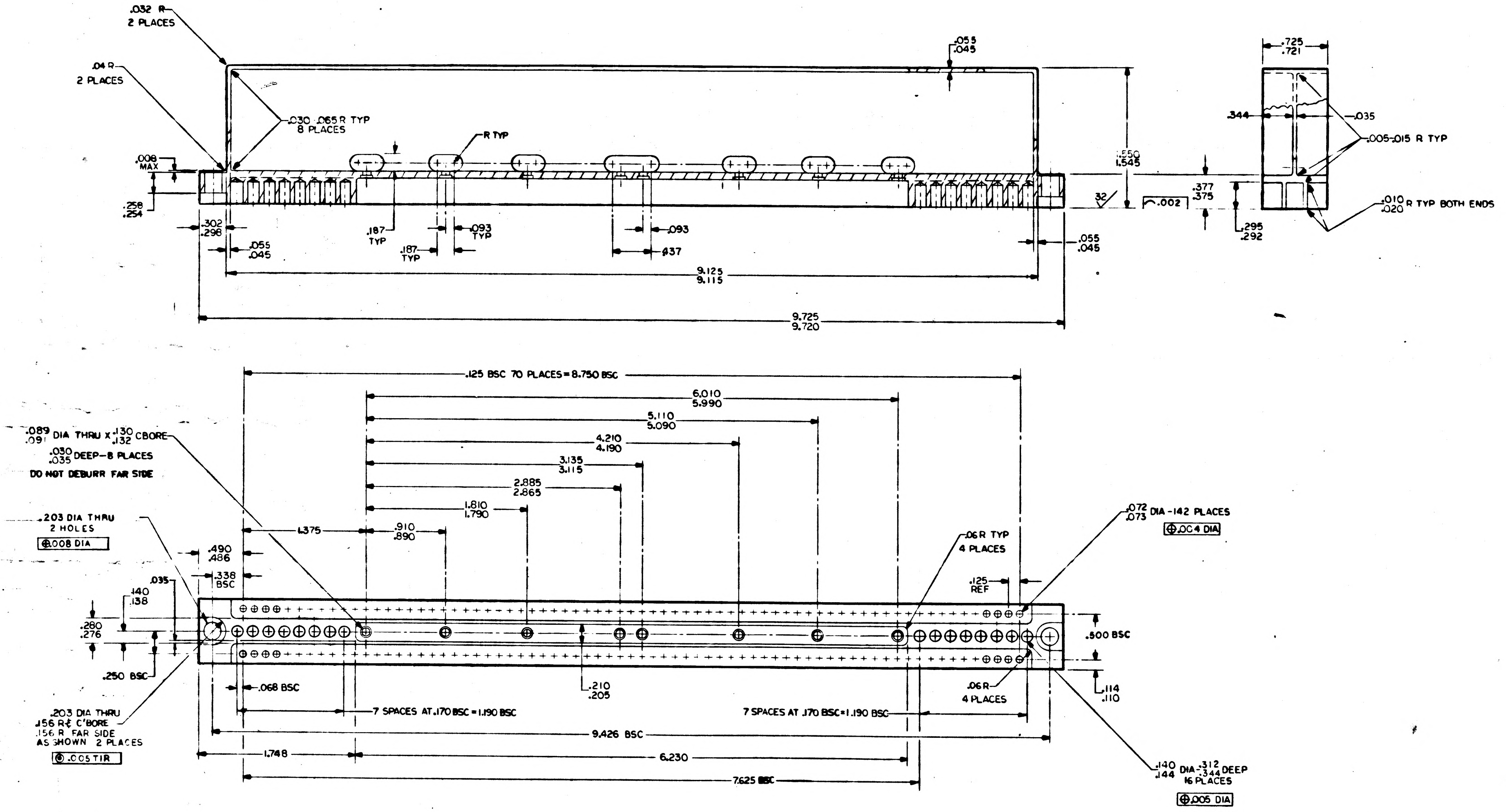
.032 R
2 PLACES
.04 R
2 PLACES
.030 .065 R TYP
8 PLACES
R TYP
.008 MAX
.258
.254
.302
.298
.055
.045
.187 TYP
.187 TYP
.093 TYP
.093
.437
.055
.045
1.550
1.545
32
⌒.002
.377
.375
.055
.045
9.125
9.115
9.725
9.720
.725
.721
.344
.035
.005-.015 R TYP
.010
.020 R TYP BOTH ENDS
.295
.292
.125 BSC 70 PLACES = 8.750 BSC
6.010
5.990
5.110
5.090
4.210
4.190
3.135
3.115
2.885
2.865
1.810
1.790
.910
.890
1.375
.089
.091 DIA THRU X .130
.132 CBORE
.030
.035 DEEP—8 PLACES
DO NOT DEBURR FAR SIDE
.203 DIA THRU
2 HOLES
⊕.008 DIA
.490
.486
.338 BSC
.035
.140
.138
.280
.276
.250 BSC
.068 BSC
7 SPACES AT .170 BSC = 1.190 BSC
.210
.205
7 SPACES AT .170 BSC = 1.190 BSC
.203 DIA THRU
.156 R ℄ C'BORE
.156 R FAR SIDE
AS SHOWN 2 PLACES
◎.005 TIR
9.426 BSC
1.748
6.230
7.625 BSC
.06 R TYP
4 PLACES
.125 REF
.072
.073 DIA - 142 PLACES
⊕.004 DIA
.500 BSC
.06 R
4 PLACES
.114
.110
.140
.144 DIA - .312
.344 DEEP
16 PLACES
⊕.005 DIA

NOTES:

1. INTERRET DRAWING IN ACCORDANCE WITH STANDARDS PRESCRIBED BY MIL-D-70327
2. MATERIAL- MAG. ALLOY ZK60A-T5 PER QQ-M-31 COMP ZK60A TEMPER T5
3. FINISH- ANODIZE PER MIL-M-45202, TYPE I, CLASS C
4. ALL SURFACES 125√ UNLESS OTHERWISE SPECIFIED
5. REMOVE ALL BURRS AND BREAK SHARP EDGES .005-.015

MASTER

QTY REQD	PART OR IDENTIFYING NO.	NOMENCLATURE OR DESCRIPTION	FIND NO

LIST OF MATERIALS

NEXT ASSY	USED ON
1003110	

APPLICATION

UNLESS OTHERWISE SPECIFIED
DIMENSIONS ARE IN INCHES
TOLERANCES ON
FRACTIONS DECIMALS ANGLES
XX ±.02
XXX ±.005
DO NOT SCALE THIS DRAWING

MATERIAL SEE NOTE 2
HEAT TREATMENT —
FINAL FINISH SEE NOTE 3

MIT
INSTRUMENTATION LAB
CAMBRIDGE, MASS
DWG NO. CONTRACT

DRAWN Mahoney DATE 4-26-63
CHECKED
APPROVAL
APPROVAL 5-14-63
NASA APPROVAL
MIT APPROVAL

MANNED SPACECRAFT CENTER
HOUSTON, TEXAS

HEADER HOUSING
LOGIC MODULE

CODE IDENT NO. —
SIZE E
NASA DRAWING NO. 1004201
SCALE 2/1
WT
SHEET 1 OF 1

NOTICE — WHEN GOVERNMENT DRAWINGS, SPECIFICATIONS, OR OTHER DATA ARE USED FOR ANY PURPOSE OTHER THAN IN CONNECTION WITH A DEFINITELY RELATED GOVERNMENT PROCUREMENT OPERATION, THE UNITED STATES GOVERNMENT THEREBY INCURS NO RESPONSIBILITY NOR ANY OBLIGATION WHATSOEVER; AND THE FACT THAT THE GOVERNMENT MAY HAVE FORMULATED, FURNISHED, OR IN ANY WAY SUPPLIED THE SAID DRAWINGS, SPECIFICATIONS, OR OTHER DATA IS NOT TO BE REGARDED BY IMPLICATION OR OTHERWISE AS IN ANY MANNER LICENSING THE HOLDER OR ANY OTHER PERSON OR CORPORATION, OR CONVEYING ANY RIGHTS OR PERMISSION TO MANUFACTURE, USE, OR SELL ANY PATENTED INVENTION THAT MAY IN ANY WAY BE RELATED THERETO

REVISIONS		TDRR 1610	
SYM	DESCRIPTION	DATE	APPROVAL

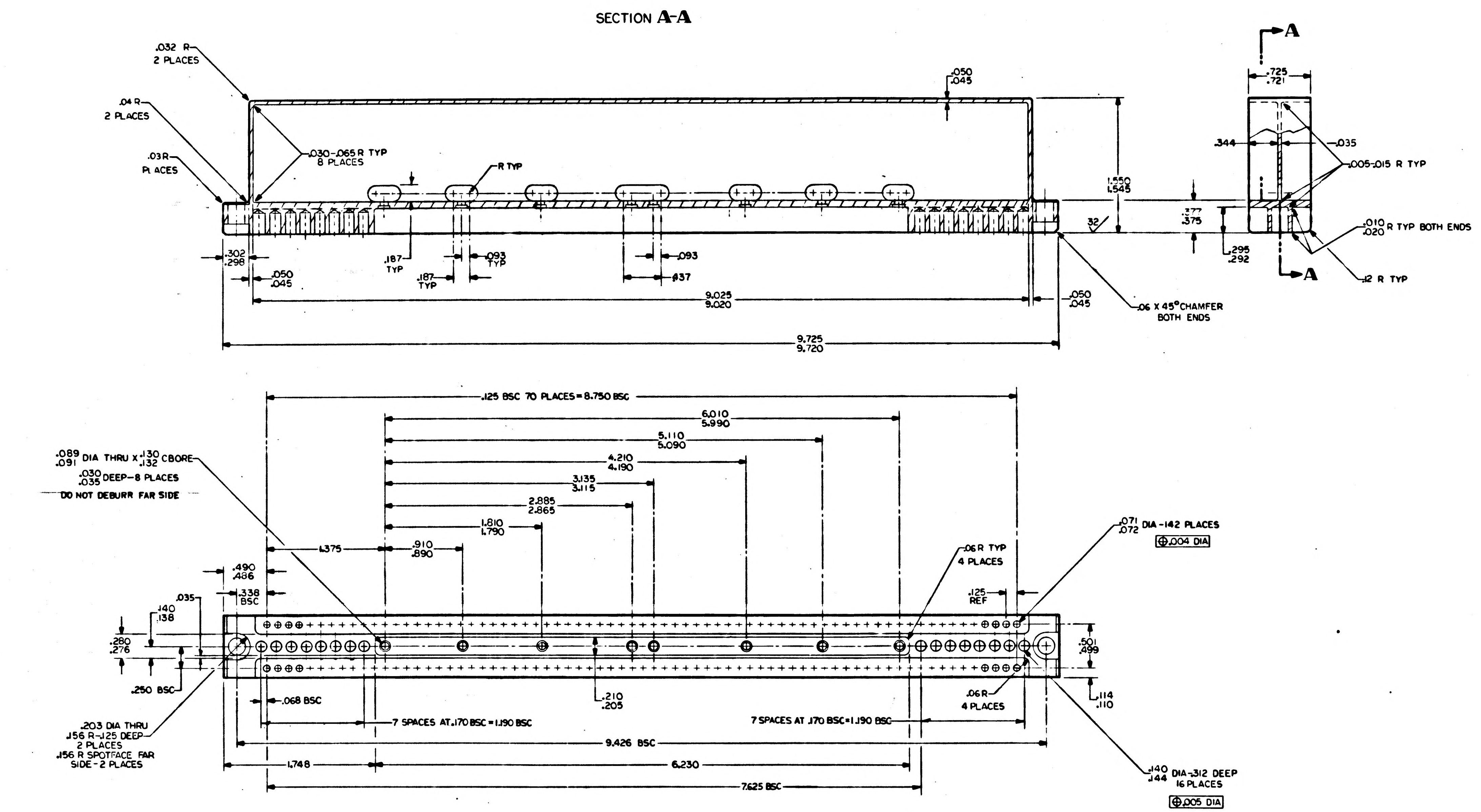
SECTION A-A
.032 R
2 PLACES
.04 R
2 PLACES
.03 R
PLACES
.030-.065 R TYP
8 PLACES
R TYP
.050
.045
1.550
1.545
32
.377
.375
.302
.298
.187
TYP
.093
TYP
.187
TYP
.093
.437
.050
.045
9.025
9.020
.050
.045
.06 X 45° CHAMFER
BOTH ENDS
9.725
9.720
A
A
.725
.721
.344
.035
.005-.015 R TYP
.010
.020 R TYP BOTH ENDS
.295
.292
.12 R TYP
.125 BSC 70 PLACES = 8.750 BSC
6.010
5.990
5.110
5.090
4.210
4.190
3.135
3.115
2.885
2.865
1.810
1.790
.910
.890
1.375
.089
.091 DIA THRU X .130
.132 CBORE
.030
.035 DEEP-8 PLACES
DO NOT DEBURR FAR SIDE
.490
.486
.338
BSC
.035
.140
.138
.280
.276
.250 BSC
.068 BSC
.203 DIA THRU
.156 R-.125 DEEP
2 PLACES
.156 R SPOTFACE FAR
SIDE-2 PLACES
7 SPACES AT .170 BSC = 1.190 BSC
.210
.205
9.426 BSC
1.748
6.230
7.625 BSC
.06 R TYP
4 PLACES
.125
REF
.071
.072 DIA -142 PLACES
⊕ .004 DIA
.501
.499
.06 R
4 PLACES
.114
.110
7 SPACES AT .170 BSC = 1.190 BSC
.140
.144 DIA-.312 DEEP
16 PLACES
⊕ .005 DIA

NOTES:

1. INTERRET DRAWING IN ACCORDANCE WITH STANDARDS PRESCRIBED BY MIL-D-70327
2. MATERIAL- MAG. ALLOY ZK60A-T5 PER QQ-M-31a COMP ZK60A TEMPER T5
3. FINISH- GALVANIC ANODIZE PER MIL-M-3171A TYPE IV
4. ALL SURFACES 125 UNLESS OTHERWISE SPECIFIED
5. REMOVE ALL BURRS AND BREAK SHARP EDGES .005-.015

MASTER

QTY REQD	PART OR IDENTIFYING NO.	NOMENCLATURE OR DESCRIPTION	FIND NO

LIST OF MATERIALS

NEXT ASSY	USED ON

APPLICATION

UNLESS OTHERWISE SPECIFIED
DIMENSIONS ARE IN INCHES
TOLERANCES ON
FRACTIONS DECIMALS ANGLES
XX ±.02 ± 5°
XXX ±.005
DO NOT SCALE THIS DRAWING

MATERIAL SEE NOTE 2
HEAT TREATMENT —
FINAL FINISH SEE NOTE 3

MIT
INSTRUMENTATION LAB
CAMBRIDGE MASS
DWG NO CONTRACT

DRAWN Mahoney DATE 4-26-63
CHECKED
APPROVAL
APPROVAL 5-14-63
NASA APPROVAL
MIT APPROVAL

MANNED SPACECRAFT CENTER
HOUSTON, TEXAS

HEADER HOUSING
LOGIC MODULE

CODE IDENT NO.
SIZE E
NASA DRAWING NO 1004201
SCALE 2/1
WT
SHEET 1 OF 1

1004201

NOTICE — WHEN GOVERNMENT DRAWINGS, SPECIFICATIONS, OR OTHER DATA ARE USED FOR ANY PURPOSE OTHER THAN IN CONNECTION WITH A DEFINITELY RELATED GOVERNMENT PROCUREMENT OPERATION, THE UNITED STATES GOVERNMENT THEREBY INCURS NO RESPONSIBILITY NOR ANY OBLIGATION WHATSOEVER; AND THE FACT THAT THE GOVERNMENT MAY HAVE FORMULATED, FURNISHED, OR IN ANY WAY SUPPLIED THE SAID DRAWINGS, SPECIFICATIONS OR OTHER DATA IS NOT TO BE REGARDED BY IMPLICATION OR OTHERWISE AS IN ANY MANNER LICENSING THE HOLDER OR ANY OTHER PERSON OR CORPORATION, OR CONVEYING ANY RIGHTS OR PERMISSION TO MANUFACTURE, USE, OR SELL ANY PATENTED INVENTION THAT MAY IN ANY WAY BE RELATED THERETO.

1004206. | B

Ⓜ

REVISIONS 01749

SYM	DESCRIPTION	DATE	APPROVAL
A	OBSOLETE PER TDRR 04746	11-19-63	
B	REACTIVATED PER TDRR 05710	10 JAN 64	RPK

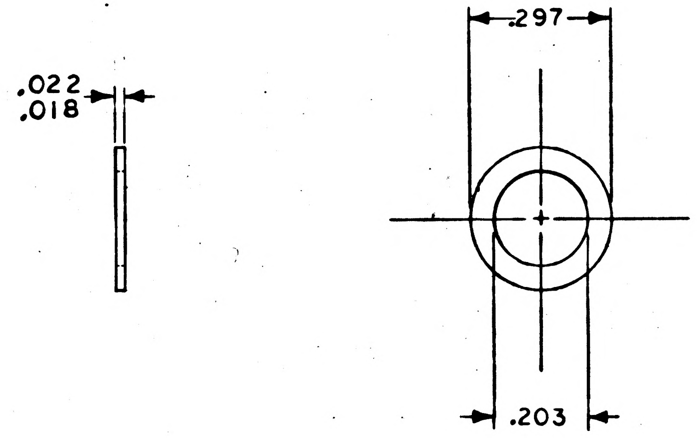

NOTES:

1. INTERPRET DRAWING IN ACCORDANCE WITH STANDARDS PRESCRIBED BY MIL-D-70327.
2. MATERIAL: PHOSPHOR BRONZE, HALF HARD PER QQ-B-750 COMPOSITION A ALTERNATE MATERIAL: 303 CRES CLASS 303 COND. A PER QQ-S-763; PASSIVATE PER MIL-F-14072 FINISH E300 TYPE I
3. SURFACE QUALITY: 32√
4. REMOVE ALL BURRS AND SHARP EDGES .005/.015

MASTER

QTY REQD	PART OR IDENTIFYING NO.	NOMENCLATURE OR DESCRIPTION	FIND NO.

LIST OF MATERIALS

NEXT ASSY	USED ON
1007150	
THRU	
1007141	

APPLICATION

UNLESS OTHERWISE SPECIFIED DIMENSIONS ARE IN INCHES
TOLERANCES ON
FRACTIONS ± DECIMALS ±.005 ANGLES ±
DO NOT SCALE THIS DRAWING
MATERIAL SEE NOTE 2
HEAT TREATMENT
FINAL FINISH

MIT
INSTRUMENTATION LAB
CAMBRIDGE, MASS.
DWG. NO. CONTRACT

DRAWN J.F. Welch DATE 5/9/63
CHECKED 17 JUN 63
APPROVAL W.B. Turner 26 JUN 63
APPROVAL 6/21/63
NASA APPROVAL 6-26-63
MIT APPROVAL 26 Jun 63

MANNED SPACECRAFT CENTER
HOUSTON, TEXAS

WASHER, THRUST

CODE IDENT NO.
SIZE C
NASA DRAWING NO. 1004206
SCALE 4/1
WT
SHEET 1 OF 1

NOTICE — WHEN GOVERNMENT DRAWINGS, SPECIFICATIONS, OR OTHER DATA ARE USED FOR ANY PURPOSE OTHER THAN IN CONNECTION WITH A DEFINITELY RELATED GOVERNMENT PROCUREMENT OPERATION, THE UNITED STATES GOVERNMENT THEREBY INCURS NO RESPONSIBILITY NOR ANY OBLIGATION WHATSOEVER; AND THE FACT THAT THE GOVERNMENT MAY HAVE FORMULATED, FURNISHED, OR IN ANY WAY SUPPLIED THE SAID DRAWINGS, SPECIFICATIONS OR OTHER DATA IS NOT TO BE REGARDED BY IMPLICATION OR OTHERWISE AS IN ANY MANNER LICENSING THE HOLDER OR ANY OTHER PERSON OR CORPORATION, OR CONVEYING ANY RIGHTS OR PERMISSION TO MANUFACTURE, USE, OR SELL ANY PATENTED INVENTION THAT MAY IN ANY WAY BE RELATED THERETO.

1004206.

REVISIONS 01749			
SYM	DESCRIPTION	DATE	APPROVAL

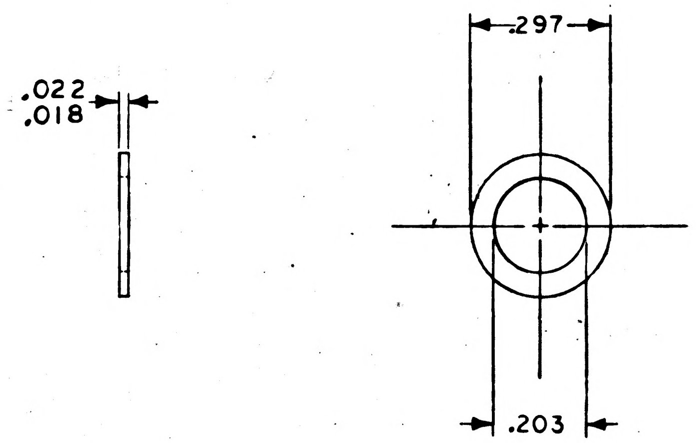

NOTES:

1. INTERPRET DRAWING IN ACCORDANCE WITH STANDARDS PRESCRIBED BY MIL-D-70327.
2. MATERIAL: PHOSPHOR BRONZE, HALF HARD PER QQ-B-750 COMPOSITION A
3. SURFACE QUALITY: 32√
4. REMOVE ALL BURRS AND SHARP EDGES .005/.015

MASTER

QTY REQD	PART OR IDENTIFYING NO.	NOMENCLATURE OR DESCRIPTION	FIND NO.

LIST OF MATERIALS

NEXT ASSY	USED ON
APPLICATION	

UNLESS OTHERWISE SPECIFIED DIMENSIONS ARE IN INCHES
TOLERANCES ON
FRACTIONS ± DECIMALS ±.005 ANGLES ±
DO NOT SCALE THIS DRAWING
MATERIAL SEE NOTE 2
HEAT TREATMENT
FINAL FINISH

MIT
INSTRUMENTATION LAB
CAMBRIDGE, MASS.
DWG. NO. CONTRACT

DRAWN J.F. Welch DATE 5/9/63
CHECKED 17 JUN 63
APPROVAL W.B. Turner 26 JUN 63
APPROVAL 6/21/63
NASA APPROVAL 6-26-63
MIT APPROVAL 26 Jun 63

MANNED SPACECRAFT CENTER
HOUSTON, TEXAS

WASHER, THRUST

CODE IDENT NO.
SIZE C
NASA DRAWING NO. 1004206
SCALE 4/1
WT
SHEET 1 OF 1

1004206

INCHES
0 1 2
PHOTOGRAPHIC SCALE ONLY

NOTICE — WHEN GOVERNMENT DRAWINGS, SPECIFICATIONS, OR OTHER DATA ARE USED FOR ANY PURPOSE OTHER THAN IN CONNECTION WITH A DEFINITELY RELATED GOVERNMENT PROCUREMENT OPERATION, THE UNITED STATES GOVERNMENT THEREBY INCURS NO RESPONSIBILITY NOR ANY OBLIGATION WHATSOEVER; AND THE FACT THAT THE GOVERNMENT MAY HAVE FORMULATED, FURNISHED, OR IN ANY WAY SUPPLIED THE SAID DRAWINGS, SPECIFICATIONS OR OTHER DATA IS NOT TO BE REGARDED BY IMPLICATION OR OTHERWISE AS IN ANY MANNER LICENSING THE HOLDER OR ANY OTHER PERSON OR CORPORATION, OR CONVEYING ANY RIGHTS OR PERMISSION TO MANUFACTURE, USE, OR SELL ANY PATENTED INVENTION THAT MAY IN ANY WAY BE RELATED THERETO.

1004207

REVISIONS 01749			
SYM	DESCRIPTION	DATE	APPROVAL

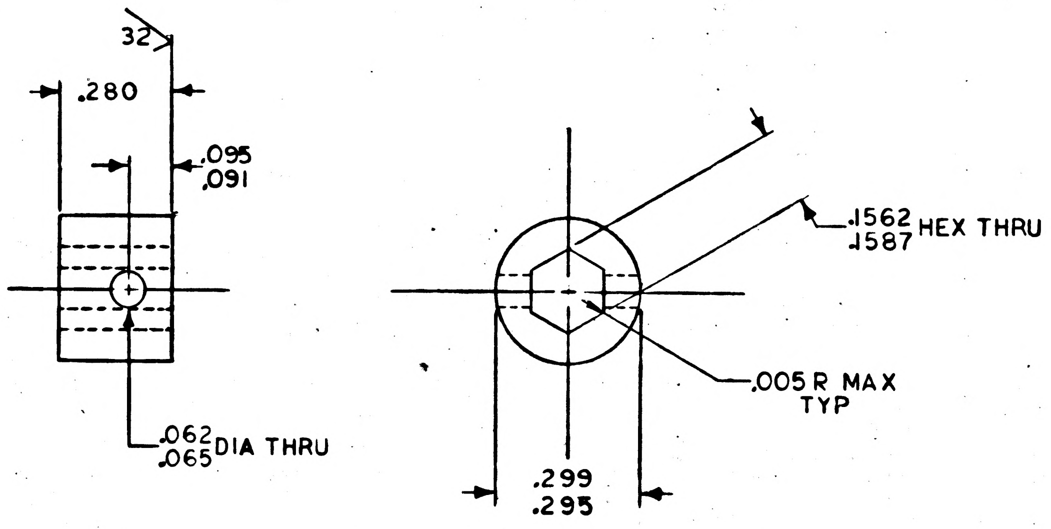

NOTES:

1. INTERPRET DRAWING IN ACCORDANCE WITH STANDARDS PRESCRIBED BY MIL-D-70327
2. MATERIAL: 416 CRES PER QQ-S-763 CONDITION A
3. HEAT TREAT TO ROCKWELL C35-C40
4. SURFACE QUALITY: .125√ UNLESS OTHERWISE SPECIFIED
5. REMOVE ALL BURRS AND SHARP EDGES .005/.015
6. FINISH: PASSIVATE PER MIL-F-14072 E300

MASTER

QTY REQD	PART OR IDENTIFYING NO.	NOMENCLATURE OR DESCRIPTION	FIND NO.

LIST OF MATERIALS

NEXT ASSY	USED ON
APPLICATION	

UNLESS OTHERWISE SPECIFIED DIMENSIONS ARE IN INCHES
TOLERANCES ON
FRACTIONS ± DECIMALS ±.005 ANGLES ±
DO NOT SCALE THIS DRAWING
MATERIAL SEE NOTE 2
HEAT TREATMENT SEE NOTE 3
FINAL FINISH SEE NOTE 6

MIT
INSTRUMENTATION LAB
CAMBRIDGE, MASS.
DWG. NO. CONTRACT

DRAWN J F Walsh DATE 5/9/63
CHECKED [illegible] 17 Jun 63
APPROVAL W B Turner 26 JUN 63
APPROVAL [illegible] 6/31/63
NASA APPROVAL W J [illegible] 6-26-63
MIT APPROVAL W [illegible] 26 Jun 63

MANNED SPACECRAFT CENTER
HOUSTON, TEXAS

DRIVE CYLINDER, EJECTION SCREW

CODE IDENT NO. SIZE C NASA DRAWING NO. 1004207
SCALE 4/1 WT SHEET 1 OF 1

INCHES
0 1 2
PHOTOGRAPHIC SCALE ONLY

1004213 A

REVISIONS TDRR 03221			
SYM	DESCRIPTION	DATE	APPROVAL
A	REVISED PER TDRR 03221	9-1-63	

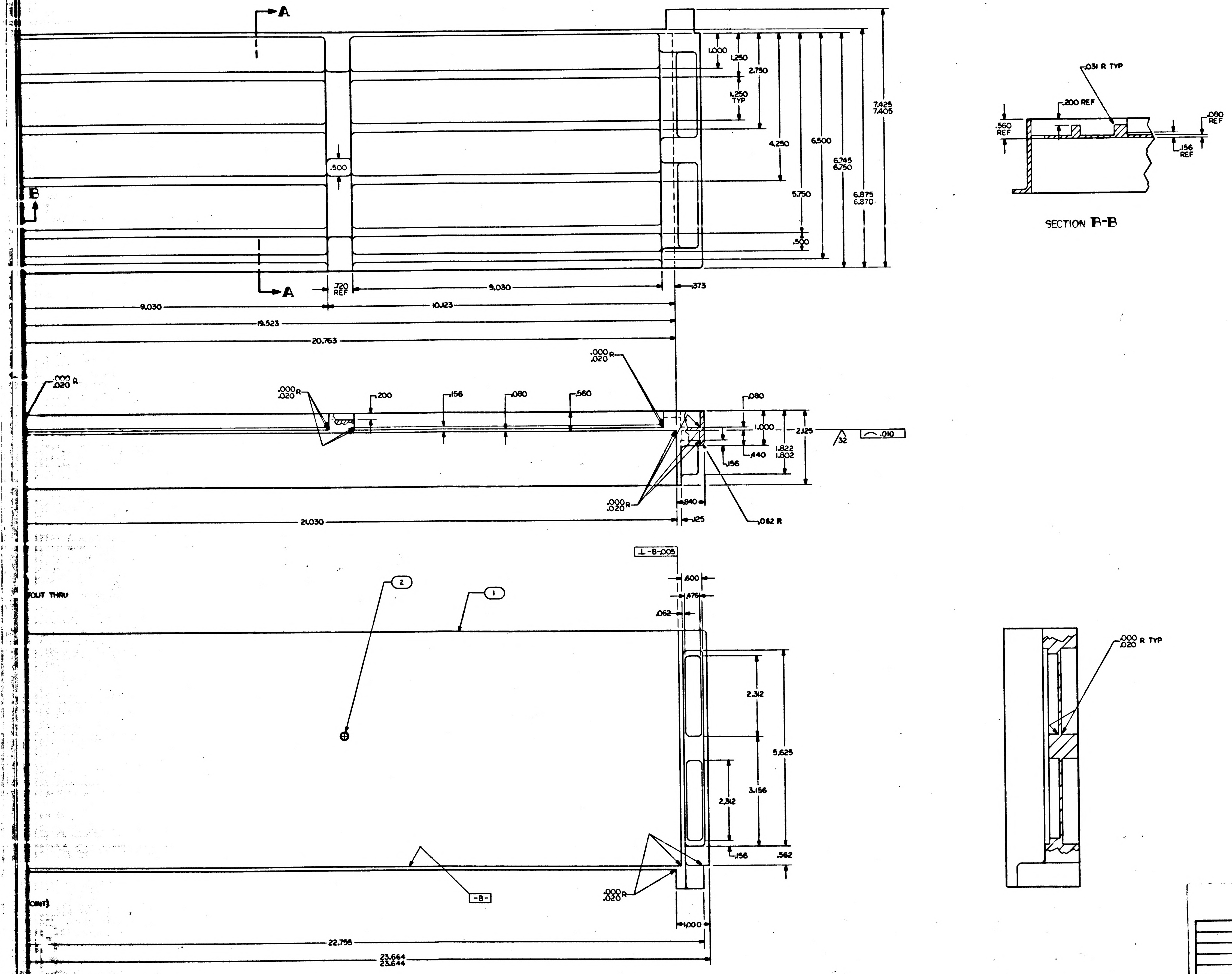

A
B
A
1.000
1.250
2.750
1.250 TYP
4.250
6.500
7.425 7.405
.500
5.750
6.745 6.750
6.875 6.870
.500
.720 REF
9.030
.373
9.030
10.123
19.523
20.763
.000 .020 R
.000 .020 R
.200
.156
.080
.560
.000 .020 R
.080
1.000
2.125
32
.010
.440
1.822 1.802
.156
.000 .020 R
.840
21.030
.125
.062 R
.031 R TYP
.200 REF
.560 REF
.080 REF
.156 REF
SECTION B-B
⊥ -B- .005
.600
.476
.062
2
1
CUT THRU
2.312
5.625
3.156
2.312
.156
.562
-B-
.000 .020 R
.000 .020 R TYP
1.000
22.755
23.664 23.644

QTY REQD	PART OR IDENTIFYING No.	NOMENCLATURE OR DESCRIPTION	FIND NO.
1	NAS1394CA-08	INSERT, THREADED	2
1	1004213-1	TRAY A, LEFT HAND	1

LIST OF MATERIALS

NEXT ASSY	USED ON
1003126	

APPLICATION

UNLESS OTHERWISE SPECIFIED DIMENSIONS ARE IN INCHES
TOLERANCES ON
FRACTIONS ± —— DECIMALS ±.005 ANGLES ± 0°30'
DO NOT SCALE THIS DRAWING
MATERIAL SEE NOTE 2
HEAT TREATMENT ——
FINAL FINISH ——

MIT INSTRUMENTATION LAB
CAMBRIDGE, MASS.

DRAWN Mahoney DATE 6-13-63
CHECKED 7-2-63
APPROVAL 7-3-63
APPROVAL
NASA APPROVAL W. J. Rhine 7-31-63
MIT APPROVAL

MANNED SPACECRAFT CENTER
HOUSTON, TEXAS

TRAY A
LEFT HAND

CODE IDENT NO. | SIZE | NASA DRAWING NO. 1004213
SCALE 1/1 | WT | SHEET 1 OF 2

1004213

MASTER

INCHES 0 1 2 PHOTOGRAPHIC SCALE ONLY

F2

NOTICE — WHEN GOVERNMENT DRAWINGS, SPECIFICATIONS, OR OTHER DATA ARE USED FOR ANY PURPOSE OTHER THAN IN CONNECTION WITH A DEFINITELY RELATED GOVERNMENT PROCUREMENT OPERATION, THE UNITED STATES GOVERNMENT THEREBY INCURS NO RESPONSIBILITY NOR ANY OBLIGATION WHATSOEVER; AND THE FACT THAT THE GOVERNMENT MAY HAVE FORMULATED, FURNISHED, OR IN ANY WAY SUPPLIED THE SAID DRAWINGS, SPECIFICATIONS OR OTHER DATA IS NOT TO BE REGARDED BY IMPLICATION OR OTHERWISE AS IN ANY MANNER LICENSING THE HOLDER OR ANY OTHER PERSON OR CORPORATION, OR CONVEYING ANY RIGHTS OR PERMISSION TO MANUFACTURE, USE, OR SELL ANY PATENTED INVENTION THAT MAY IN ANY WAY BE RELATED THERETO.

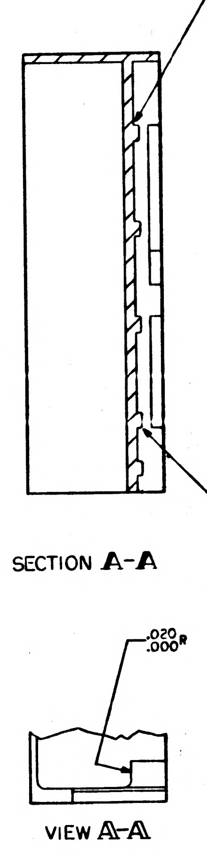
ALL INSIDE RADII IN THIS VIEW .000 .020
.031 R TYP
.020 .000 R

SECTION A-A

VIEW A-A

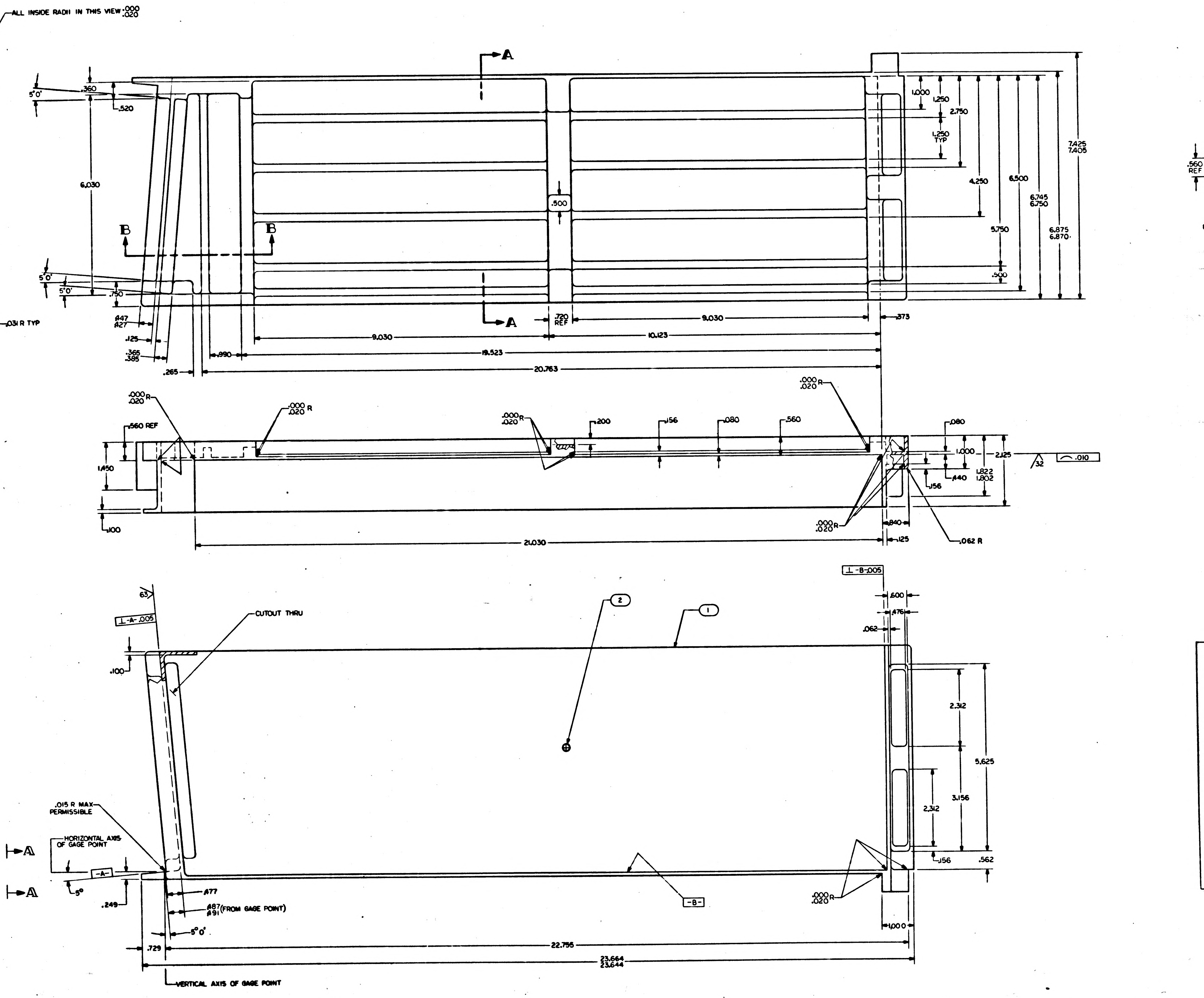
A
B
B
A
5°0'
.360
.520
6.030
5°0'
5°0'
.750
.500
1.000
1.250
2.750
1.250 TYP
4.250
5.750
6.500
6.745 6.750
6.875 6.870
7.425 7.405
.500
.560 REF
.447 .427
.125
.365 .385
.265
.990
9.030
19.523
20.763
.720 REF
9.030
10.123
.373
.000 .020 R
.000 .020 R
.000 .020 R
.000 .020 R
.560 REF
1.450
.100
.200
.156
.080
.560
.080
1.000
2.125
32
.010
1.822 1.802
.440
.156
.000 .020 R
.840
.125
.062 R
21.030
⊥ -B- .005
.600
.476
.062
63
⊥ -A- .005
CUTOUT THRU
2
1
.100
2.312
5.625
2.312
3.156
.156
.562
.015 R MAX PERMISSIBLE
HORIZONTAL AXIS OF GAGE POINT
-A-
5°
.249
.477
.487 .491 (FROM GAGE POINT)
5°0'
-B-
.000 .020 R
1.000
.729
22.755
23.664 23.644
VERTICAL AXIS OF GAGE POINT

NOTES-

1. INTERPRET DRAWING IN ACCORDANCE WITH STANDARDS PRESCRIBED BY MIL-D-70327
2. MAKE FROM NASA DWG 1004150
3. REMOVE BURRS AND BREAK SHARP EDGES .005-.015
4. UNLESS OTHERWISE SPECIFIED, FINISH 125
5. ALL RADII AND FILLETS TO BE .125 UNLESS OTHERWISE SPECIFIED
6. COAT FIND NO.1 & NO 2 WITH MIL-P-8585 WET ZINC CHROMATE PRIMER
7. INSTALL FIND NO.2 / ND1002121

1004213

INCHES
PHOTOGRAPHIC SCALE ONLY

1004213 A

REVISIONS TDRR 02282

SYM	DESCRIPTION	DATE	APPROVAL
A	REVISED PER TDRR 03229	7-1-65	W.C.

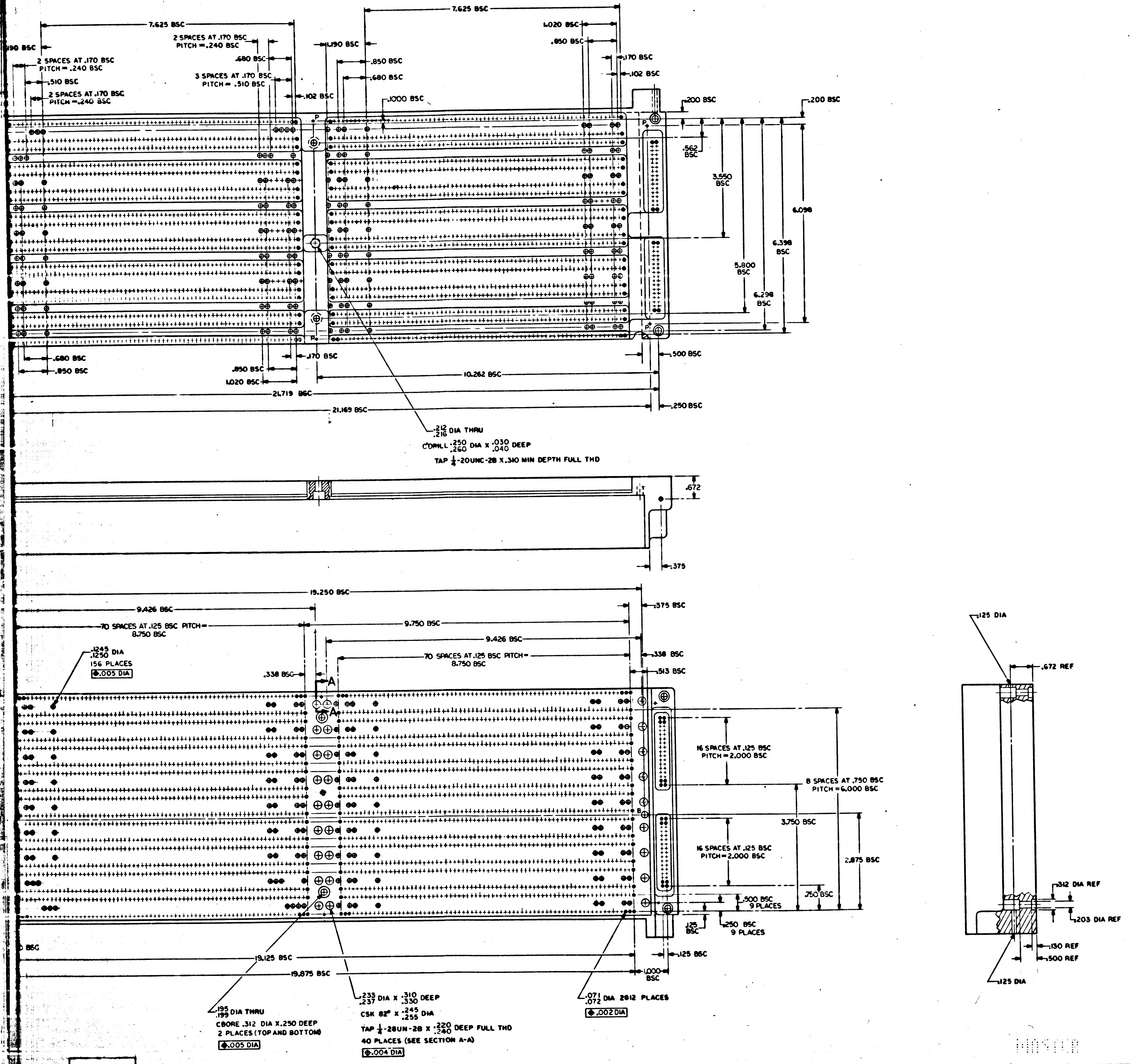

7.625 BSC
2 SPACES AT .170 BSC PITCH = .240 BSC
.680 BSC
3 SPACES AT .170 BSC PITCH = .510 BSC
.190 BSC
.510 BSC
2 SPACES AT .170 BSC PITCH = .240 BSC
.102 BSC
1.190 BSC
.850 BSC
.680 BSC
.1000 BSC
1.020 BSC
.850 BSC
.170 BSC
.102 BSC
.200 BSC
.200 BSC
.562 BSC
3.550 BSC
6.098
6.398 BSC
5.800 BSC
6.298 BSC
P
.680 BSC
.850 BSC
.850 BSC
1.020 BSC
.170 BSC
.500 BSC
10.262 BSC
21.719 BSC
21.169 BSC
.250 BSC
.212 .216 DIA THRU
C'DRILL .250 .260 DIA X .030 .040 DEEP
TAP 1/4-20UNC-2B X .310 MIN DEPTH FULL THD
.672
.375
19.250 BSC
9.426 BSC
.375 BSC
70 SPACES AT .125 BSC PITCH = 8.750 BSC
9.750 BSC
9.426 BSC
70 SPACES AT .125 BSC PITCH = 8.750 BSC
.338 BSC
.513 BSC
.1245 .1250 DIA 156 PLACES
⊕ .005 DIA
.338 BSC
A
A
16 SPACES AT .125 BSC PITCH = 2.000 BSC
8 SPACES AT .750 BSC PITCH = 6.000 BSC
3.750 BSC
16 SPACES AT .125 BSC PITCH = 2.000 BSC
2.875 BSC
.500 BSC 9 PLACES
.750 BSC
.125 BSC
.250 BSC 9 PLACES
.125 BSC
19.125 BSC
19.875 BSC
1.000 BSC
.195 .199 DIA THRU
CBORE .312 DIA X .250 DEEP
2 PLACES (TOP AND BOTTOM)
⊕ .005 DIA
.233 .237 DIA X .310 .330 DEEP
CSK 82° X .245 .255 DIA
TAP 1/4-28UN-2B X .220 .240 DEEP FULL THD
40 PLACES (SEE SECTION A-A)
⊕ .004 DIA
.071 .072 DIA 2812 PLACES
⊕ .002 DIA
.125 DIA
.672 REF
.312 DIA REF
.203 DIA REF
.130 REF
.500 REF
.125 DIA

QTY REQD	PART OR IDENTIFYING NO.	NOMENCLATURE OR DESCRIPTION	FIND NO.

LIST OF MATERIALS

NEXT ASSY	USED ON
1003126	

APPLICATION

UNLESS OTHERWISE SPECIFIED DIMENSIONS ARE IN INCHES
TOLERANCES ON
FRACTIONS ± —/— DECIMALS ± .005 ANGLES ± 0°30'
DO NOT SCALE THIS DRAWING

MATERIAL
SEE NOTE 2

HEAT TREATMENT —/—

FINAL FINISH —/—

MIT INSTRUMENTATION LAB
CAMBRIDGE, MASS

DRAWN McKinney DATE 23 July 63
CHECKED 7/30/63
APPROVAL 7/30/63
APPROVAL 7/31/63
NASA APPROVAL 7-31-63
MIT APPROVAL 7/31/63

MANNED SPACECRAFT CENTER
HOUSTON, TEXAS

TRAY A
LEFT HAND

CODE IDENT NO.
SIZE J
NASA DRAWING NO. 1004213
SCALE 1/1
WT
SHEET 2 OF 2

INCHES
PHOTOGRAPHIC SCALE ONLY

E2

1004213

NOTICE — WHEN GOVERNMENT DRAWINGS, SPECIFICATIONS, OR OTHER DATA ARE USED FOR ANY PURPOSE OTHER THAN IN CONNECTION WITH A DEFINITELY RELATED GOVERNMENT PROCUREMENT OPERATION, THE UNITED STATES GOVERNMENT THEREBY INCURS NO RESPONSIBILITY NOR ANY OBLIGATION WHATSOEVER; AND THE FACT THAT THE GOVERNMENT MAY HAVE FORMULATED, FURNISHED, OR IN ANY WAY SUPPLIED THE SAID DRAWINGS, SPECIFICATIONS, OR OTHER DATA IS NOT TO BE REGARDED BY IMPLICATION OR OTHERWISE AS IN ANY MANNER LICENSING THE HOLDER OR ANY OTHER PERSON OR CORPORATION, OR CONVEYING ANY RIGHTS OR PERMISSION TO MANUFACTURE, USE, OR SELL ANY PATENTED INVENTION THAT MAY IN ANY WAY BE RELATED THERETO.

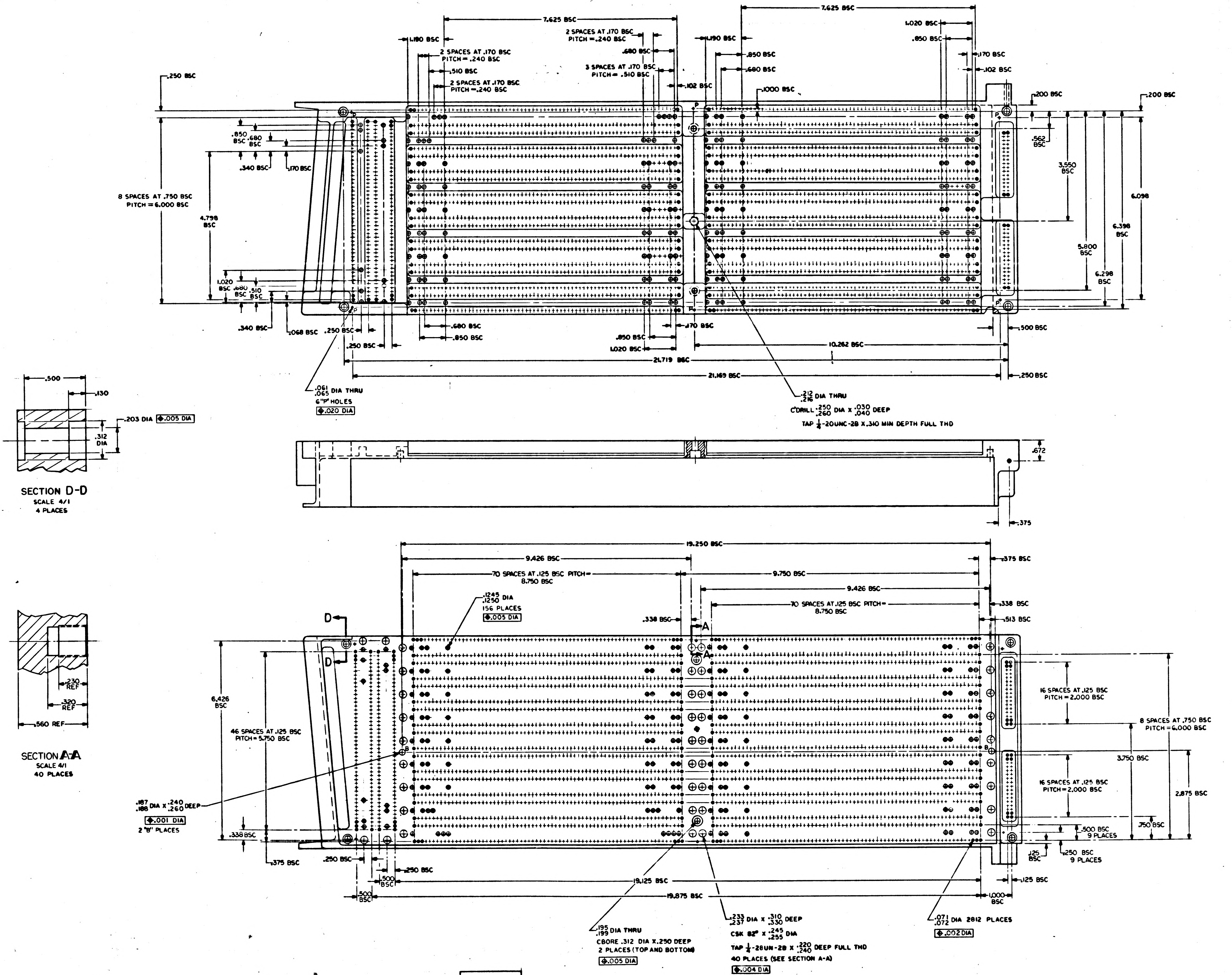
6
5
4
3
D
C
B
A
7.625 BSC
7.625 BSC
1.190 BSC
1.190 BSC
2 SPACES AT .170 BSC PITCH = .240 BSC
.510 BSC
2 SPACES AT .170 BSC PITCH = .240 BSC
2 SPACES AT .170 BSC PITCH = .240 BSC
.680 BSC
3 SPACES AT .170 BSC PITCH = .510 BSC
.102 BSC
.850 BSC
.680 BSC
1.000 BSC
1.020 BSC
.850 BSC
.170 BSC
.102 BSC
.200 BSC
.200 BSC
.250 BSC
.850 BSC
.680 BSC
.340 BSC
.170 BSC
8 SPACES AT .750 BSC PITCH = 6.000 BSC
4.798 BSC
1.020 BSC
.680 BSC
.510 BSC
.340 BSC
.068 BSC
.250 BSC
.250 BSC
.562 BSC
3.550 BSC
5.800 BSC
6.098
6.398 BSC
6.298 BSC
.680 BSC
.850 BSC
.850 BSC
1.020 BSC
.170 BSC
10.262 BSC
21.719 BSC
21.169 BSC
.500 BSC
.250 BSC
.061 .065 DIA THRU
6 "P" HOLES
⌖.020 DIA
.212 .216 DIA THRU
C'DRILL .250 .260 DIA X .030 .040 DEEP
TAP 1/4-20UNC-2B X .310 MIN DEPTH FULL THD
.672
.375
.500
.130
.203 DIA ⌖.005 DIA
.312 DIA
.230 REF
.320 REF
.560 REF
19.250 BSC
9.426 BSC
.375 BSC
70 SPACES AT .125 BSC PITCH = 8.750 BSC
9.750 BSC
9.426 BSC
70 SPACES AT .125 BSC PITCH = 8.750 BSC
.338 BSC
.513 BSC
.1245 .1250 DIA
156 PLACES
⌖.005 DIA
.338 BSC
A
A
D
D
6.426 BSC
46 SPACES AT .125 BSC PITCH = 5.750 BSC
16 SPACES AT .125 BSC PITCH = 2.000 BSC
8 SPACES AT .750 BSC PITCH = 6.000 BSC
3.750 BSC
16 SPACES AT .125 BSC PITCH = 2.000 BSC
2.875 BSC
.750 BSC
.500 BSC 9 PLACES
.250 BSC 9 PLACES
.125 BSC
.187 .188 DIA X .240 .260 DEEP
⌖.001 DIA
2 "B" PLACES
.338 BSC
.375 BSC
.250 BSC
.250 BSC
.500 BSC
.500 BSC
19.125 BSC
19.875 BSC
1.000 BSC
.125 BSC
.195 .199 DIA THRU
CBORE .312 DIA X .250 DEEP
2 PLACES (TOP AND BOTTOM)
⌖.005 DIA
.233 .237 DIA X .310 .330 DEEP
CSK 82° X .245 .255 DIA
TAP 1/4-28UN-2B X .220 .240 DEEP FULL THD
40 PLACES (SEE SECTION A-A)
⌖.004 DIA
.071 .072 DIA 2812 PLACES
⌖.002 DIA

SECTION D-D
SCALE 4/1
4 PLACES

SECTION A-A
SCALE 4/1
40 PLACES

INCHES
0 1 2
PHOTOGRAPHIC SCALE ONLY

F-1

1004213

1004213 B

SYM	DESCRIPTION	DATE	APPROVAL
A	REVISED PER TDRR 032[illegible]	[illegible]	[illegible]
B	REVISED PER TDRR 03[illegible]	[illegible]-63	[illegible]

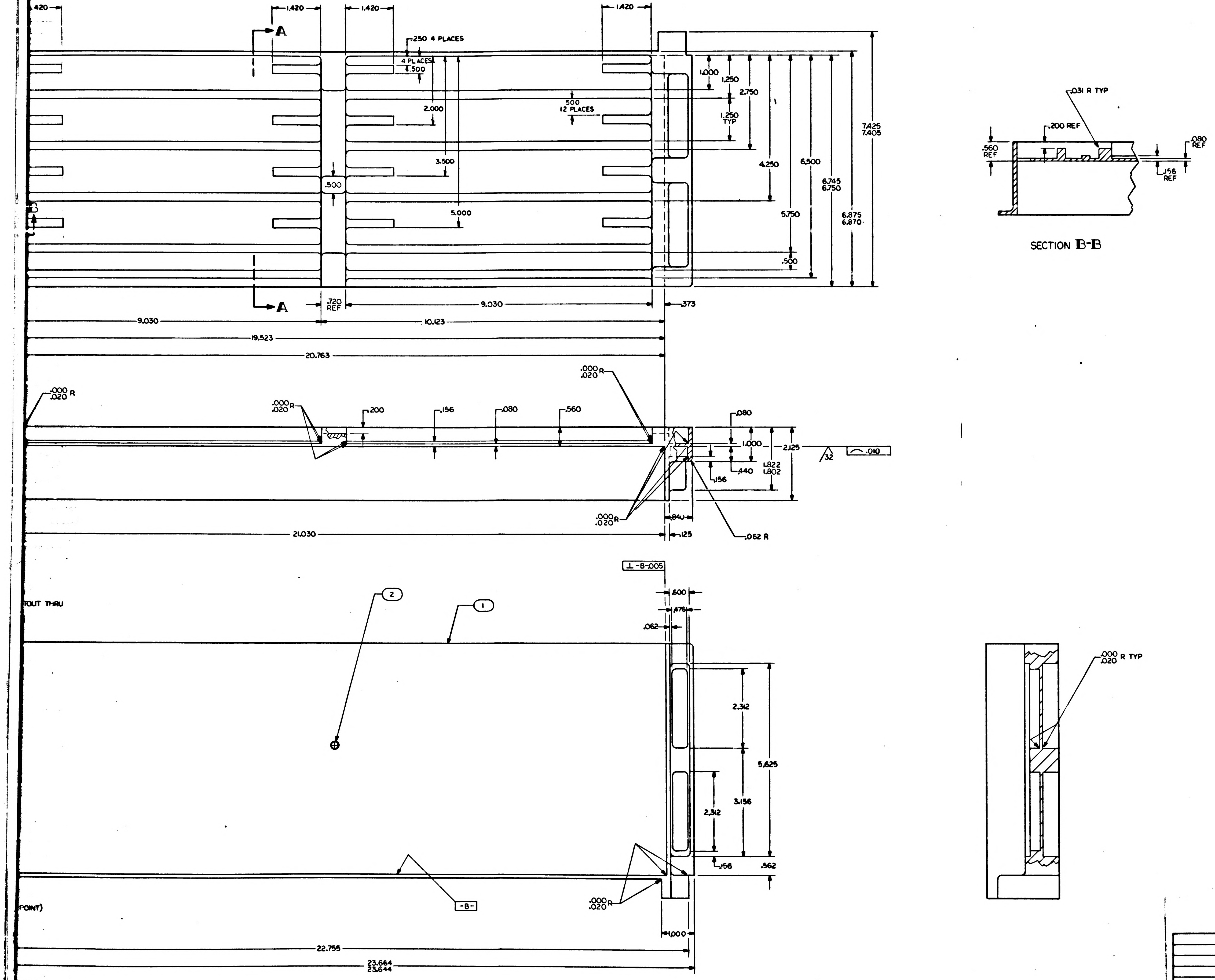

A
A
1.420
1.420
1.420
.420
.250 4 PLACES
4 PLACES
.500
2.000
.500 12 PLACES
3.500
5.000
.500
1.000
1.250
2.750
1.250 TYP
4.250
6.500
5.750
.500
6.745 6.750
7.425 7.405
6.875 6.870
.720 REF
9.030
.373
9.030
10.123
19.523
20.763
.031 R TYP
.200 REF
.560 REF
.080 REF
.156 REF
SECTION B-B
.000 .020 R
.000 .020 R
.200
.156
.080
.560
.000 .020 R
.080
1.000
.440
.156
1.822 1.802
2.125
32
.010
.000 .020 R
.840
.125
.062 R
21.030
500-8-T
.600
.476
.062
2
1
OUT THRU
2.312
5.625
3.156
2.312
.156
.562
-B-
.000 .020 R
.000 .020 R TYP
POINT)
1.000
22.755
23.664 23.644
POINT

QTY REQD	PART OR IDENTIFYING NO.	NOMENCLATURE OR DESCRIPTION	FIND NO.
1	NAS1394CA-08	INSERT, THREADED	2
1	1004213-1	TRAY A, LEFT HAND	1

LIST OF MATERIALS

1003126	
NEXT ASSY	USED ON
APPLICATION	

UNLESS OTHERWISE SPECIFIED DIMENSIONS ARE IN INCHES
TOLERANCES ON
FRACTIONS ± — DECIMALS ±.005 ANGLES ± 0° 30'
DO NOT SCALE THIS DRAWING
MATERIAL SEE NOTE 2
HEAT TREATMENT —
FINAL FINISH —

MIT INSTRUMENTATION LAB
CAMBRIDGE, MASS.
DWG NO. CONTRACT
DRAWN Mahoney DATE 6-5-63
CHECKED [illegible] 7/[illegible]/63
APPROVAL [illegible] 7/3/63
APPROVAL [illegible]
NASA APPROVAL W J [illegible] 7-31-63
MIT APPROVAL [illegible]

MANNED SPACECRAFT CENTER
HOUSTON, TEXAS

TRAY A
LEFT HAND

CODE IDENT NO.
SIZE
NASA DRAWING NO. 1004213
SCALE 1/1
WT
SHEET 1 OF 2

1004213 A

INCHES
PHOTOGRAPHIC SCALE ONLY

NOTICE — WHEN GOVERNMENT DRAWINGS, SPECIFICATIONS, OR OTHER DATA ARE USED FOR ANY PURPOSE OTHER THAN IN CONNECTION WITH A DEFINITELY RELATED GOVERNMENT PROCUREMENT OPERATION, THE UNITED STATES GOVERNMENT THEREBY INCURS NO RESPONSIBILITY NOR ANY OBLIGATION WHATSOEVER; AND THE FACT THAT THE GOVERNMENT MAY HAVE FORMULATED, FURNISHED, OR IN ANY WAY SUPPLIED THE SAID DRAWINGS, SPECIFICATIONS, OR OTHER DATA IS NOT TO BE REGARDED BY IMPLICATION OR OTHERWISE AS IN ANY MANNER LICENSING THE HOLDER OR ANY OTHER PERSON OR CORPORATION, OR CONVEYING ANY RIGHTS OR PERMISSION TO MANUFACTURE, USE, OR SELL ANY PATENTED INVENTION THAT MAY IN ANY WAY BE RELATED THERETO.

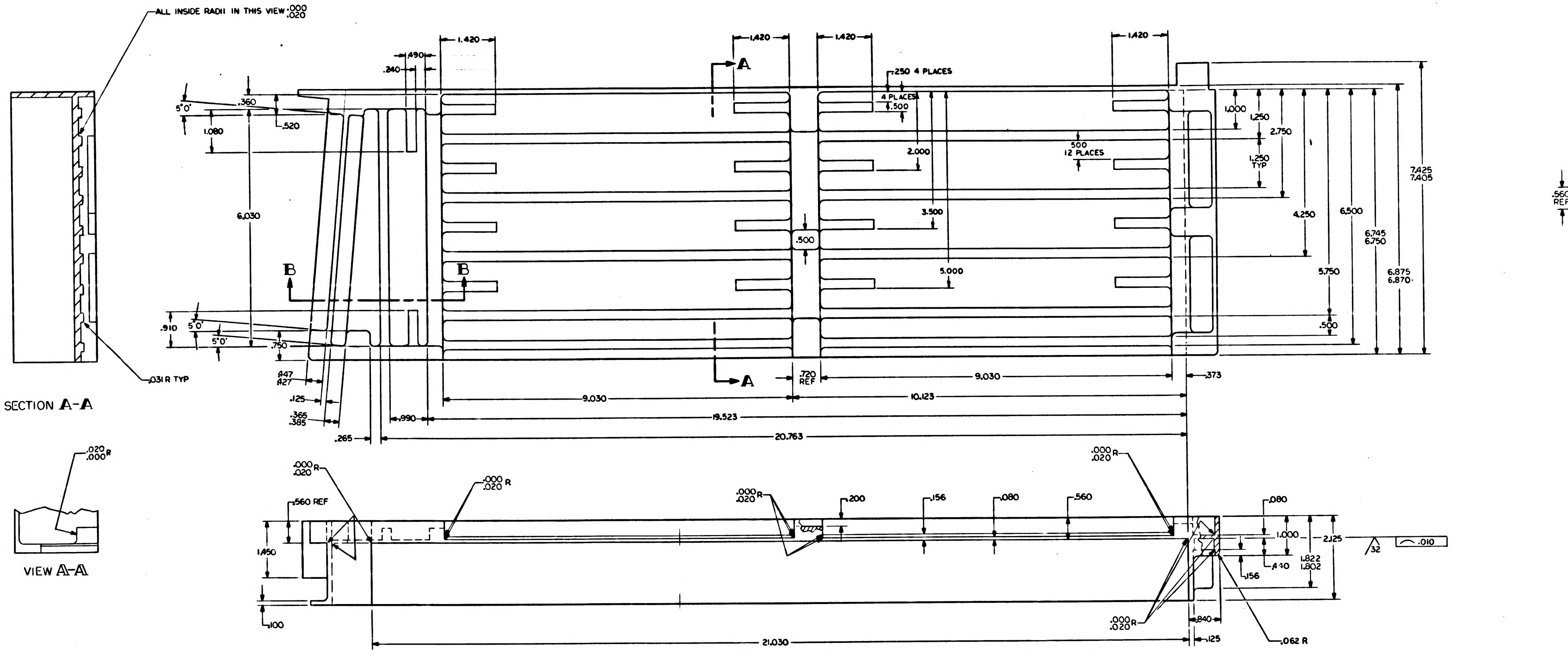
ALL INSIDE RADII IN THIS VIEW .000 .020
SECTION A-A
.031 R TYP
VIEW A-A
.020 .000 R
1.420
.490
.240
.250 4 PLACES
4 PLACES .500
.500 12 PLACES
2.000
3.500
5.000
.500
1.000
1.250
2.750
1.250 TYP
4.250
5.750
6.500
6.745 6.750
6.875 6.870
7.425 7.405
.560 REF
5°0'
.360
.520
1.080
6.030
.910
.750
.447 .427
.125
.365 .385
.265
.990
9.030
19.523
20.763
10.123
.720 REF
.373
B
A
.560 REF
1.450
.100
.200
.156
.080
.560
.000 .020 R
1.000
2.125
1.822 1.802
.440
.156
.840
.125
.062 R
.010
32
21.030

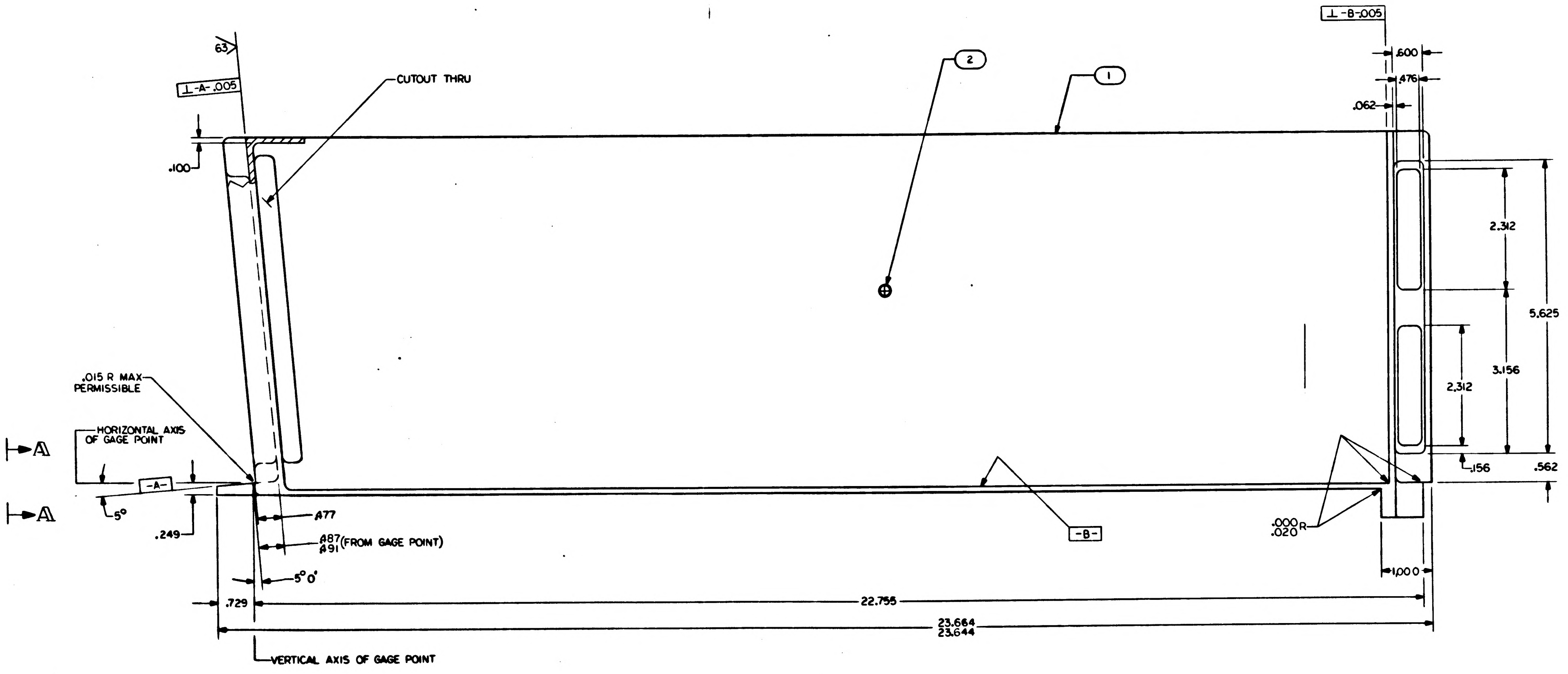
⊥ -B- .005
⊥ -A- .005
63
CUTOUT THRU
2
1
.600
.476
.062
.100
2.312
5.625
3.156
2.312
.156
.562
.015 R MAX PERMISSIBLE
HORIZONTAL AXIS OF GAGE POINT
-A-
A
5°
.249
.477
.487 .491 (FROM GAGE POINT)
5°0'
-B-
.000 .020 R
1.000
.729
22.755
23.664 23.644
VERTICAL AXIS OF GAGE POINT

NOTES-
1. INTERPRET DRAWING IN ACCORDANCE WITH STANDARDS PRESCRIBED BY MIL-D-70327
2. MAKE FROM NASA DWG 1004150
3. REMOVE BURRS AND BREAK SHARP EDGES .005-.015
4. UNLESS OTHERWISE SPECIFIED, FINISH 125
5. ALL RADII AND FILLETS TO BE .125 UNLESS OTHERWISE SPECIFIED
6. COAT FIND NO.1 & NO 2 WITH MIL-P-8585 WET ZINC CHROMATE PRIMER
7. INSTALL FIND NO.2 / ND1002121

1004213 A

INCHES
PHOTOGRAPHIC SCALE ONLY

1004213 B

SYM	DESCRIPTION	DATE	APPROVAL
A	REVISED PER TDRR 03227	9-19-63	
B	REVISEL PER TDRR 03848	10-6-63	

REVISIONS TDRR 02282

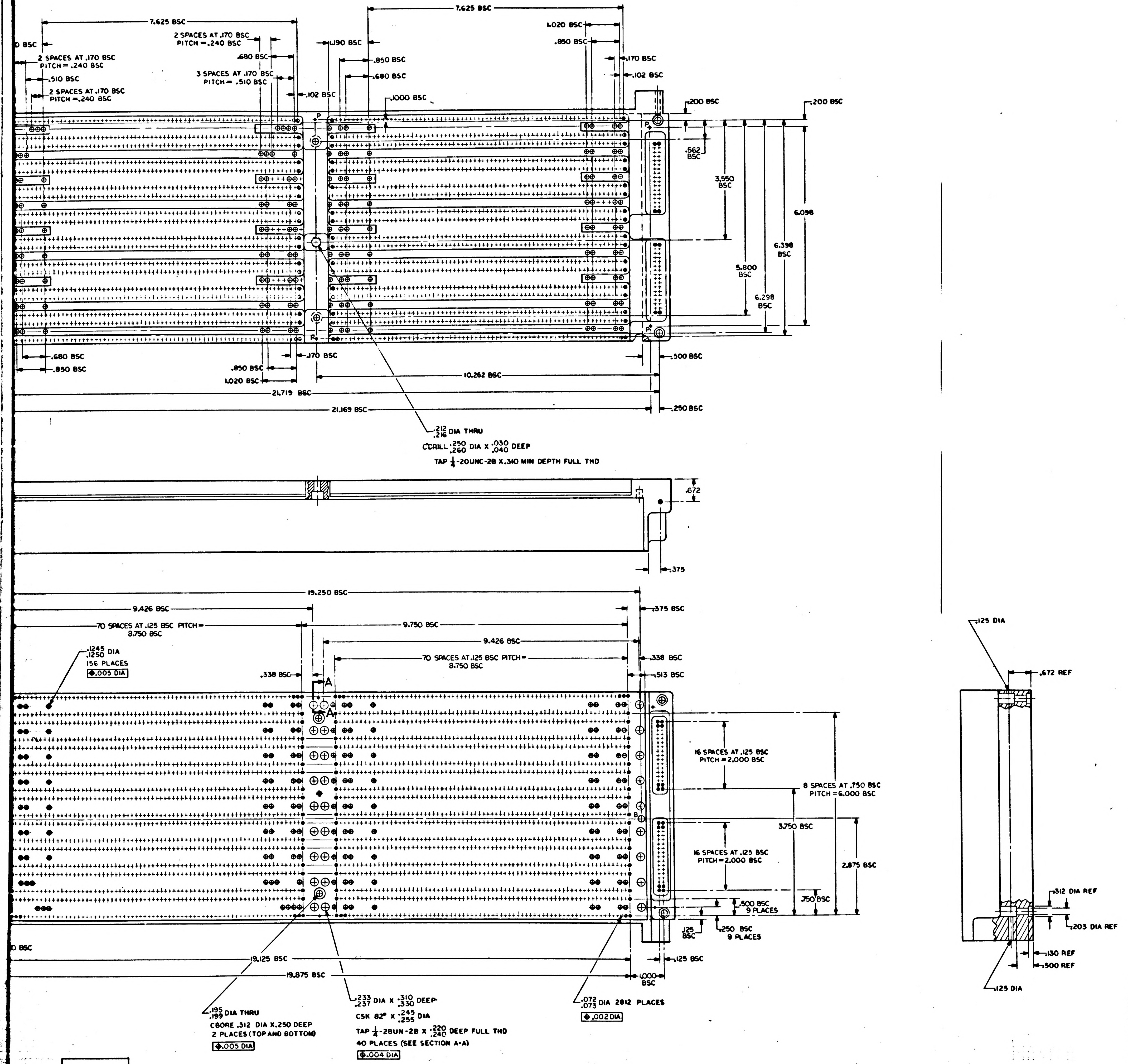

7.625 BSC
2 SPACES AT .170 BSC PITCH = .240 BSC
.680 BSC
3 SPACES AT .170 BSC PITCH = .510 BSC
.510 BSC
.102 BSC
1.190 BSC
.850 BSC
.680 BSC
.1000 BSC
1.020 BSC
.170 BSC
.200 BSC
.562 BSC
3.550 BSC
6.098
6.398 BSC
5.800 BSC
6.298 BSC
.500 BSC
10.262 BSC
21.719 BSC
21.169 BSC
.250 BSC
.212 .216 DIA THRU
C'DRILL .250 .260 DIA X .030 .040 DEEP
TAP 1/4-20UNC-2B X .310 MIN DEPTH FULL THD
.672
.375
19.250 BSC
9.426 BSC
70 SPACES AT .125 BSC PITCH = 8.750 BSC
9.750 BSC
.338 BSC
.513 BSC
.1245 .1250 DIA 156 PLACES
⌖ .005 DIA
16 SPACES AT .125 BSC PITCH = 2.000 BSC
8 SPACES AT .750 BSC PITCH = 6.000 BSC
3.750 BSC
2.875 BSC
.750 BSC
.500 BSC 9 PLACES
.250 BSC 9 PLACES
.125 BSC
19.125 BSC
19.875 BSC
1.000 BSC
.195 .199 DIA THRU
CBORE .312 DIA X .250 DEEP
2 PLACES (TOP AND BOTTOM)
⌖ .005 DIA
.233 .237 DIA X .310 .330 DEEP
CSK 82° X .245 .255 DIA
TAP 1/4-28UN-2B X .220 .240 DEEP FULL THD
40 PLACES (SEE SECTION A-A)
⌖ .004 DIA
.072 .073 DIA 2812 PLACES
⌖ .002 DIA
.125 DIA
.672 REF
.312 DIA REF
.203 DIA REF
.130 REF
.500 REF
.125 DIA
A

QTY REQD	PART OR IDENTIFYING NO.	NOMENCLATURE OR DESCRIPTION	FIND NO.

LIST OF MATERIALS

NEXT ASSY	USED ON
1003126	

APPLICATION

UNLESS OTHERWISE SPECIFIED DIMENSIONS ARE IN INCHES
TOLERANCES ON
FRACTIONS ± —— DECIMALS ± .005 ANGLES ± 0°30'
DO NOT SCALE THIS DRAWING

MATERIAL SEE NOTE 2
HEAT TREATMENT ——
FINAL FINISH ——

MIT INSTRUMENTATION LAB
CAMBRIDGE, MASS.

DRAWN Mahoney DATE 7-23-63
CHECKED 7/30/63
APPROVAL W. Turner 7/30/63
APPROVAL 7/30/63
NASA APPROVAL W J Rhine 7-31-63
MIT APPROVAL 7/31/63

MANNED SPACECRAFT CENTER
HOUSTON, TEXAS

TRAY A
LEFT HAND

CODE IDENT NO.
SIZE J
NASA DRAWING NO. 1004213
SCALE 1/1
WT
SHEET 2 OF 2

INCHES
PHOTOGRAPHIC SCALE ONLY

F2

1004213

NOTICE — WHEN GOVERNMENT DRAWINGS, SPECIFICATIONS, OR OTHER DATA ARE USED FOR ANY PURPOSE OTHER THAN IN CONNECTION WITH A DEFINITELY RELATED GOVERNMENT PROCUREMENT OPERATION, THE UNITED STATES GOVERNMENT THEREBY INCURS NO RESPONSIBILITY NOR ANY OBLIGATION WHATSOEVER; AND THE FACT THAT THE GOVERNMENT MAY HAVE FORMULATED, FURNISHED, OR IN ANY WAY SUPPLIED THE SAID DRAWINGS, SPECIFICATIONS, OR OTHER DATA IS NOT TO BE REGARDED BY IMPLICATION OR OTHERWISE AS IN ANY MANNER LICENSING THE HOLDER OR ANY OTHER PERSON OR CORPORATION, OR CONVEYING ANY RIGHTS OR PERMISSION TO MANUFACTURE, USE, OR SELL ANY PATENTED INVENTION THAT MAY IN ANY WAY BE RELATED THERETO.

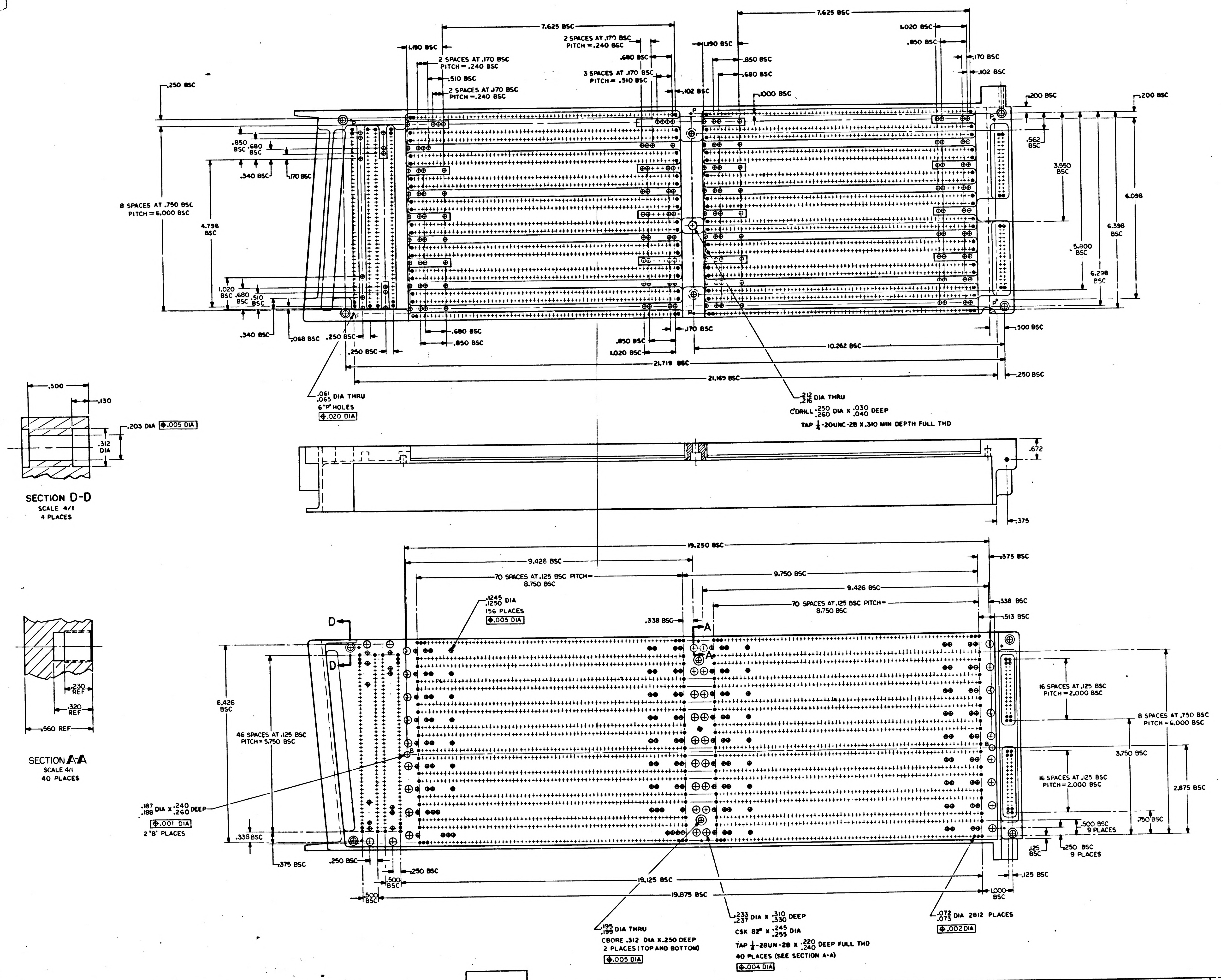
7.625 BSC
1.190 BSC
2 SPACES AT .170 BSC
PITCH = .240 BSC
.510 BSC
2 SPACES AT .170 BSC
PITCH = .240 BSC
2 SPACES AT .170 BSC
PITCH = .240 BSC
.680 BSC
3 SPACES AT .170 BSC
PITCH = .510 BSC
.102 BSC
7.625 BSC
1.020 BSC
.850 BSC
1.190 BSC
.850 BSC
.680 BSC
.1000 BSC
.170 BSC
.102 BSC
.200 BSC
.200 BSC
.250 BSC
.850 BSC
.680 BSC
.340 BSC
.170 BSC
8 SPACES AT .750 BSC
PITCH = 6.000 BSC
4.798 BSC
1.020 BSC
.680 BSC
.510 BSC
.340 BSC
.068 BSC
.250 BSC
.250 BSC
P
.562 BSC
3.550 BSC
5.800 BSC
6.298 BSC
6.398 BSC
6.098
.680 BSC
.850 BSC
.850 BSC
1.020 BSC
.170 BSC
10.262 BSC
21.719 BSC
21.169 BSC
.500 BSC
.250 BSC
.061 .065 DIA THRU
6"P" HOLES
⊕.020 DIA
.212 .216 DIA THRU
C'DRILL .250 .260 DIA X .030 .040 DEEP
TAP 1/4-20UNC-2B X .310 MIN DEPTH FULL THD
.500
.130
.203 DIA ⊕.005 DIA
.312 DIA
.672
.375
.230 REF
.320 REF
.560 REF
19.250 BSC
9.426 BSC
70 SPACES AT .125 BSC PITCH = 8.750 BSC
9.750 BSC
9.426 BSC
70 SPACES AT .125 BSC PITCH = 8.750 BSC
.375 BSC
.338 BSC
.513 BSC
.338 BSC
.1245 .1250 DIA
156 PLACES
⊕.005 DIA
A
A
D
D
B
6.426 BSC
46 SPACES AT .125 BSC
PITCH = 5.750 BSC
.187 .188 DIA X .240 .260 DEEP
⊕.001 DIA
2 "B" PLACES
.338 BSC
.375 BSC
.250 BSC
.250 BSC
.500 BSC
.500 BSC
16 SPACES AT .125 BSC
PITCH = 2.000 BSC
8 SPACES AT .750 BSC
PITCH = 6.000 BSC
3.750 BSC
16 SPACES AT .125 BSC
PITCH = 2.000 BSC
2.875 BSC
.750 BSC
.500 BSC
9 PLACES
.125 BSC
.250 BSC
9 PLACES
.125 BSC
1.000 BSC
19.125 BSC
19.875 BSC
.195 .199 DIA THRU
CBORE .312 DIA X .250 DEEP
2 PLACES (TOP AND BOTTOM)
⊕.005 DIA
.233 .237 DIA X .310 .330 DEEP
CSK 82° X .245 .255 DIA
TAP 1/4-28UN-2B X .220 .240 DEEP FULL THD
40 PLACES (SEE SECTION A-A)
⊕.004 DIA
.072 .073 DIA 2812 PLACES
⊕.002 DIA

SECTION D-D
SCALE 4/1
4 PLACES

SECTION A-A
SCALE 4/1
40 PLACES

INCHES
0 1 2
PHOTOGRAPHIC SCALE ONLY

E1

1004213

1004213 C

SYM	DESCRIPTION	DATE	APPROVAL
	REVISIONS TDRR 0382		
A	REVISED PER TDRR 0322	9-11-63	
B	REVISED PER TDRR 038	10-10-63	
C	REVISED PER TDRR 04175	10-24-63	

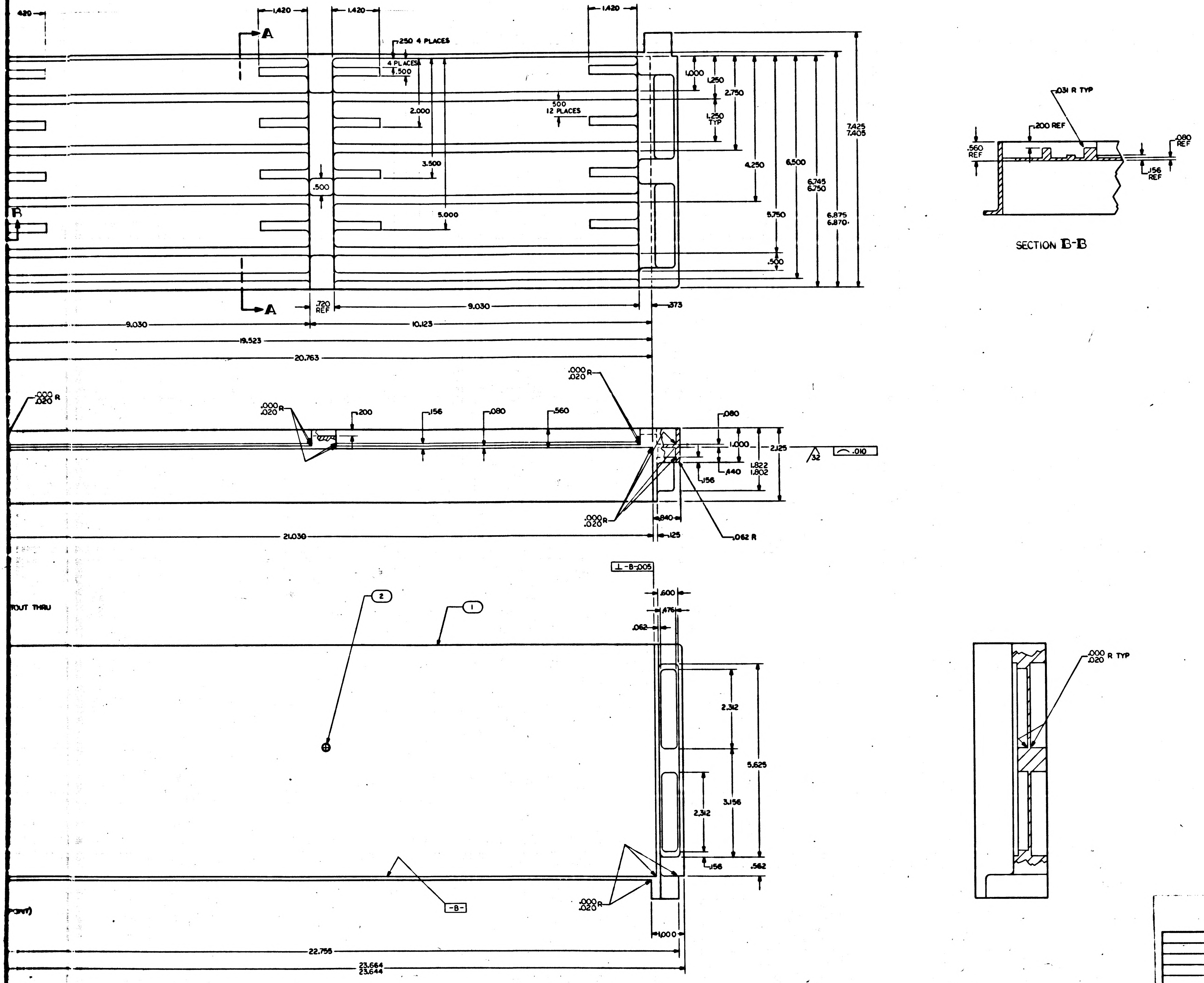

.420
1.420
1.420
1.420
A
.250 4 PLACES
4 PLACES
.500
1.000
1.250
2.750
.500
12 PLACES
2.000
1.250 TYP
7.425
7.405
3.500
4.250
6.500
6.745
6.750
.500
5.000
5.750
6.875
6.870
B
.500
A
.720 REF
9.030
.373
9.030
10.123
19.523
20.763
.000
.020 R
.000
.020 R
.000
.020 R
.200
.156
.080
.560
.080
1.000
2.125
32
.010
.440
1.822
1.802
.156
.000
.020 R
.840
.125
21.030
.062 R
.031 R TYP
.200 REF
.560 REF
.080 REF
.156 REF
SECTION B-B
-B-
.005
CUTOUT THRU
2
1
.600
.476
.062
2.312
5.625
3.156
2.312
.156
.562
.000
.020 R TYP
-B-
.000
.020 R
1.000
22.755
23.664
23.644

MASTER

QTY REQD	PART OR IDENTIFYING NO.	NOMENCLATURE OR DESCRIPTION	FIND NO.
1	NAS1394CA-08	INSERT, THREADED	2
1	1004213-1	TRAY A, LEFT HAND	1

LIST OF MATERIALS

1003126	
NEXT ASSY	USED ON
APPLICATION	

UNLESS OTHERWISE SPECIFIED DIMENSIONS ARE IN INCHES
TOLERANCES ON
FRACTIONS ± —
DECIMALS ±.005
ANGLES ± 0°30'
DO NOT SCALE THIS DRAWING
MATERIAL SEE NOTE 2
HEAT TREATMENT —
FINAL FINISH —

MIT INSTRUMENTATION LAB
CAMBRIDGE, MASS
DWG. NO. CONTRACT
DRAWN Mahoney DATE 6-18-63
CHECKED 7-24-63
APPROVAL W. Turner 7/3/63
APPROVAL
NASA APPROVAL W. J. Rh 7-31-63
MIT APPROVAL

MANNED SPACECRAFT CENTER
HOUSTON, TEXAS

TRAY A
LEFT HAND

CODE IDENT NO.
SIZE
NASA DRAWING NO. 1004213
SCALE 1/1
WT
SHEET 1 OF 2

1004213 C

INCHES
PHOTOGRAPHIC SCALE ONLY

F2

NOTICE — WHEN GOVERNMENT DRAWINGS, SPECIFICATIONS, OR OTHER DATA ARE USED FOR ANY PURPOSE OTHER THAN IN CONNECTION WITH A DEFINITELY RELATED GOVERNMENT PROCUREMENT OPERATION, THE UNITED STATES GOVERNMENT THEREBY INCURS NO RESPONSIBILITY NOR ANY OBLIGATION WHATSOEVER; AND THE FACT THAT THE GOVERNMENT MAY HAVE FORMULATED, FURNISHED, OR IN ANY WAY SUPPLIED THE SAID DRAWINGS, SPECIFICATIONS OR OTHER DATA IS NOT TO BE REGARDED BY IMPLICATION OR OTHERWISE AS IN ANY MANNER LICENSING THE HOLDER OR ANY OTHER PERSON OR CORPORATION, OR CONVEYING ANY RIGHTS OR PERMISSION TO MANUFACTURE, USE, OR SELL ANY PATENTED INVENTION THAT MAY IN ANY WAY BE RELATED THERETO.

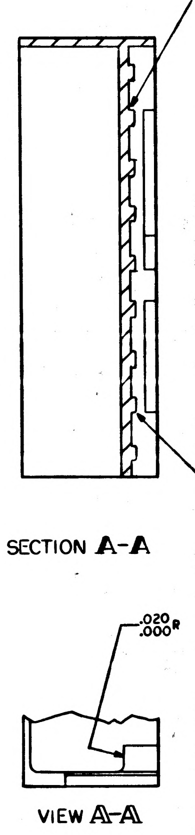
.031 R TYP
SECTION A-A
.020
.000 R
VIEW A-A

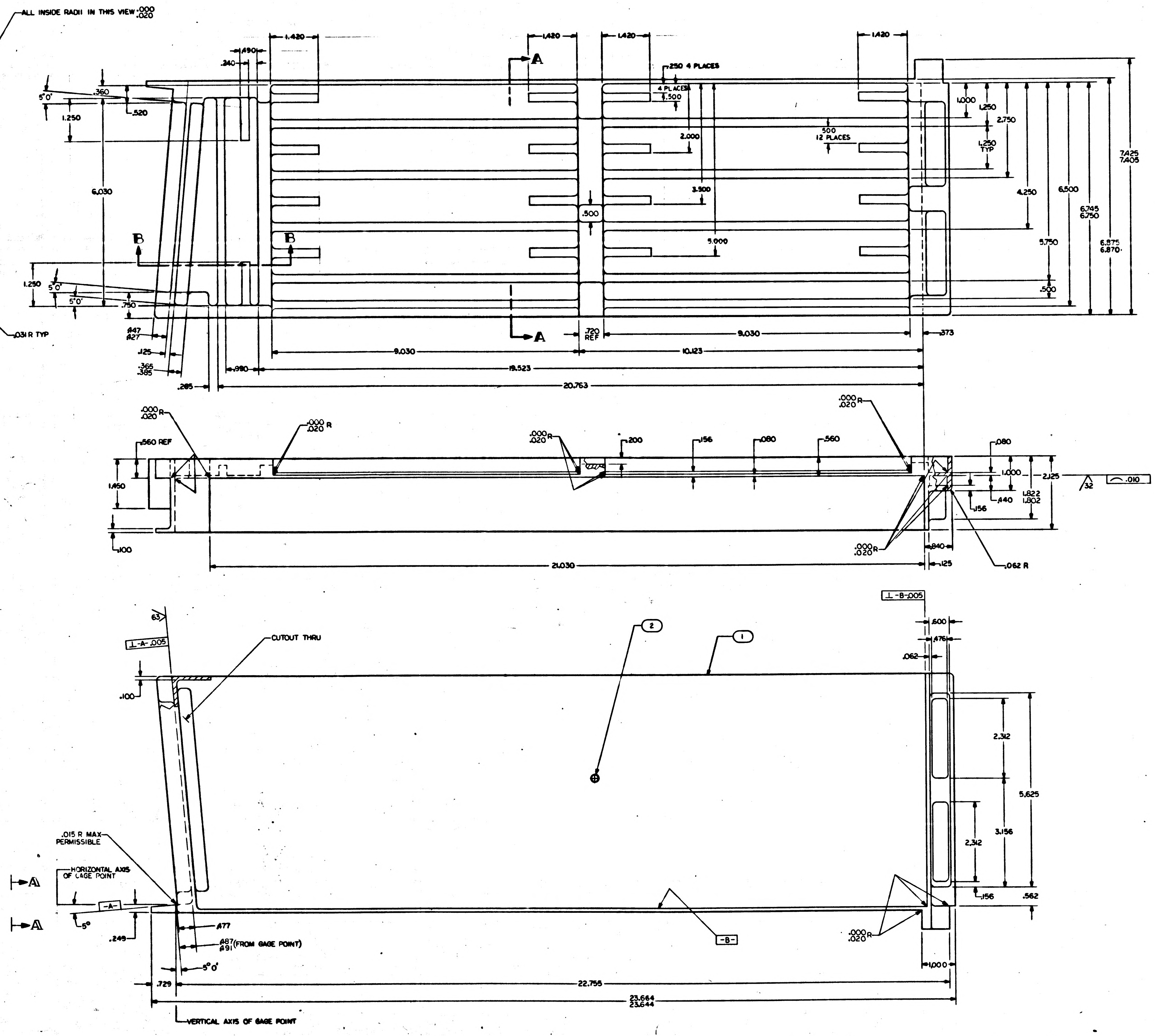
ALL INSIDE RADII IN THIS VIEW .000 .020
1.420
.490
.240
1.420
1.420
1.420
A
A
.250 4 PLACES
4 PLACES
.500
500
12 PLACES
5°0'
.360
.520
1.250
6.030
2.000
3.500
5.000
.500
B
B
1.250
5°0'
5°0'
.750
.447
.427
.125
.365
.385
.285
.980
9.030
19.523
20.763
.720 REF
9.030
10.123
.373
1.000
1.250
2.750
1.250 TYP
4.250
5.750
6.500
.500
6.745
6.750
6.875
6.870
7.425
7.405
.000 .020 R
.560 REF
1.450
.100
.000 .020 R
.000 .020 R
.200
.156
.080
.560
.000 .020 R
.080
1.000
2.125
.440
1.822
1.802
.156
32
.010
.000 .020 R
.840
.125
.062 R
21.030
⊥-B-.005
.600
.476
.062
63
⊥-A-.005
CUTOUT THRU
2
1
.100
2.312
5.625
3.156
2.312
.156
.562
.015 R MAX PERMISSIBLE
HORIZONTAL AXIS OF GAGE POINT
A
A
-A-
5°
.249
.477
.487
.491 (FROM GAGE POINT)
5°0'
-B-
.000 .020 R
1.000
.729
22.755
23.664
23.644
VERTICAL AXIS OF GAGE POINT

NOTES-

1. INTERPRET DRAWING IN ACCORDANCE WITH STANDARDS PRESCRIBED BY MIL-D-70327
2. MAKE FROM NASA DWG 1004150
3. REMOVE BURRS AND BREAK SHARP EDGES .005-.015
4. UNLESS OTHERWISE SPECIFIED, FINISH 125
5. ALL RADII AND FILLETS TO BE .125 UNLESS OTHERWISE SPECIFIED
6. COAT FIND NO.1 & NO 2 WITH MIL-P-8585 WET ZINC CHROMATE PRIMER
7. INSTALL FIND NO.2 / ND1002121

1004213 C

INCHES
PHOTOGRAPHIC SCALE ONLY

1004213	C

REVISIONS TDRR 03282			
SYM	DESCRIPTION	DATE	APPROVAL
A	REVISED PER TDRR 03227	9-19-63	WR
B	REVISED PER TDRR 03848	10-10-63	WR
C	REVISED PER TDRR 04175	10-31-63	WR

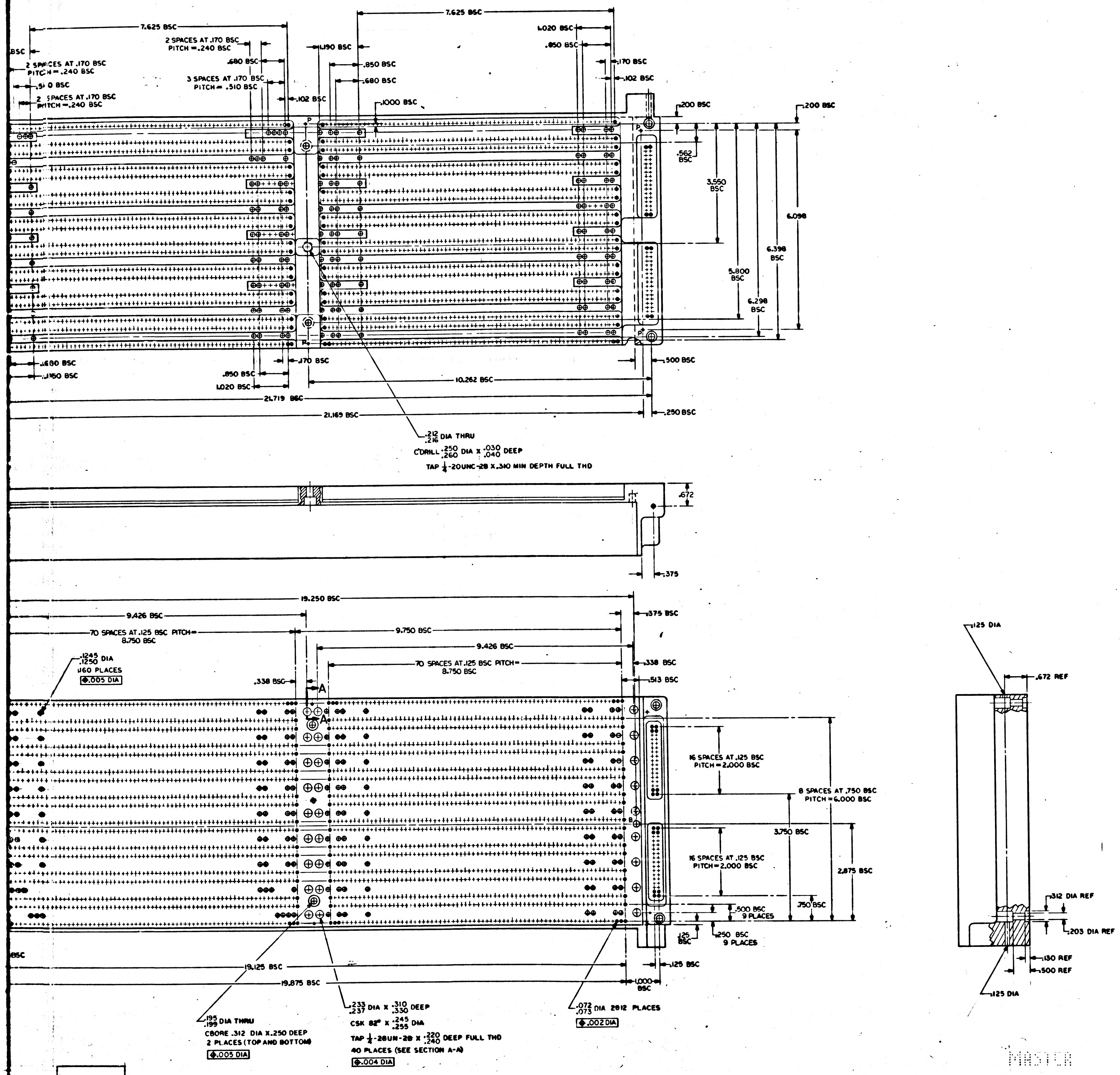

7.625 BSC
2 SPACES AT .170 BSC PITCH = .240 BSC
.680 BSC
3 SPACES AT .170 BSC PITCH = .510 BSC
.102 BSC
1.190 BSC
.850 BSC
.680 BSC
1.000 BSC
1.020 BSC
.170 BSC
.102 BSC
.200 BSC
.562 BSC
3.550 BSC
5.800 BSC
6.298 BSC
6.398 BSC
6.098
.500 BSC
.170 BSC
.850 BSC
1.020 BSC
10.262 BSC
21.719 BSC
21.169 BSC
.250 BSC
.1680 BSC
.1160 BSC
.212/.216 DIA THRU
C'DRILL .250/.260 DIA X .030/.040 DEEP
TAP 1/4-20UNC-2B X .310 MIN DEPTH FULL THD
.672
.375
19.250 BSC
9.426 BSC
70 SPACES AT .125 BSC PITCH = 8.750 BSC
9.750 BSC
.375 BSC
.338 BSC
.513 BSC
.1245/.1250 DIA 1160 PLACES
⌖ .005 DIA
A
16 SPACES AT .125 BSC PITCH = 2.000 BSC
8 SPACES AT .750 BSC PITCH = 6.000 BSC
3.750 BSC
2.875 BSC
.750 BSC
.500 BSC 9 PLACES
.250 BSC 9 PLACES
.125 BSC
19.125 BSC
19.875 BSC
1.000 BSC
.195/.199 DIA THRU
CBORE .312 DIA X .250 DEEP 2 PLACES (TOP AND BOTTOM)
⌖ .005 DIA
.233/.237 DIA X .310/.330 DEEP
CSK 82° X .245/.255 DIA
TAP 1/4-28UN-2B X .220/.240 DEEP FULL THD
40 PLACES (SEE SECTION A-A)
⌖ .004 DIA
.072/.073 DIA 2812 PLACES
⌖ .002 DIA
.125 DIA
.672 REF
.312 DIA REF
.203 DIA REF
.130 REF
.500 REF
.125 DIA
MASTER

QTY REQD	PART OR IDENTIFYING NO.	NOMENCLATURE OR DESCRIPTION	FIND NO.

LIST OF MATERIALS

1003126	
NEXT ASSY	USED ON
APPLICATION	

UNLESS OTHERWISE SPECIFIED
DIMENSIONS ARE IN INCHES
TOLERANCES ON
FRACTIONS ± —//— DECIMALS ± .005 ANGLES ± 0°30'
DO NOT SCALE THIS DRAWING
MATERIAL SEE NOTE 2
HEAT TREATMENT —//—
FINAL FINISH —//—

MIT INSTRUMENTATION LAB
CAMBRIDGE, MASS.
DRAWN Mahoney DATE 23 July 63
CHECKED 7/30/63
APPROVAL W Turner 7/30/63
APPROVAL 7/31/63
NASA APPROVAL W.J. Rhine 7-31-63
MIT APPROVAL 7/31/63

MANNED SPACECRAFT CENTER
HOUSTON, TEXAS

TRAY A
LEFT HAND

CODE IDENT NO. | SIZE J | NASA DRAWING NO. 1004213
SCALE 1/1 | WT | SHEET 2 OF 2

F-2 1004213

NOTICE — WHEN GOVERNMENT DRAWINGS, SPECIFICATIONS, OR OTHER DATA ARE USED FOR ANY PURPOSE OTHER THAN IN CONNECTION WITH A DEFINITELY RELATED GOVERNMENT PROCUREMENT OPERATION, THE UNITED STATES GOVERNMENT THEREBY INCURS NO RESPONSIBILITY NOR ANY OBLIGATION WHATSOEVER; AND THE FACT THAT THE GOVERNMENT MAY HAVE FORMULATED, FURNISHED, OR IN ANY WAY SUPPLIED THE SAID DRAWINGS, SPECIFICATIONS, OR OTHER DATA IS NOT TO BE REGARDED BY IMPLICATION OR OTHERWISE AS IN ANY MANNER LICENSING THE HOLDER OR ANY OTHER PERSON OR CORPORATION, OR CONVEYING ANY RIGHTS OR PERMISSION TO MANUFACTURE, USE, OR SELL ANY PATENTED INVENTION THAT MAY IN ANY WAY BE RELATED THERETO.

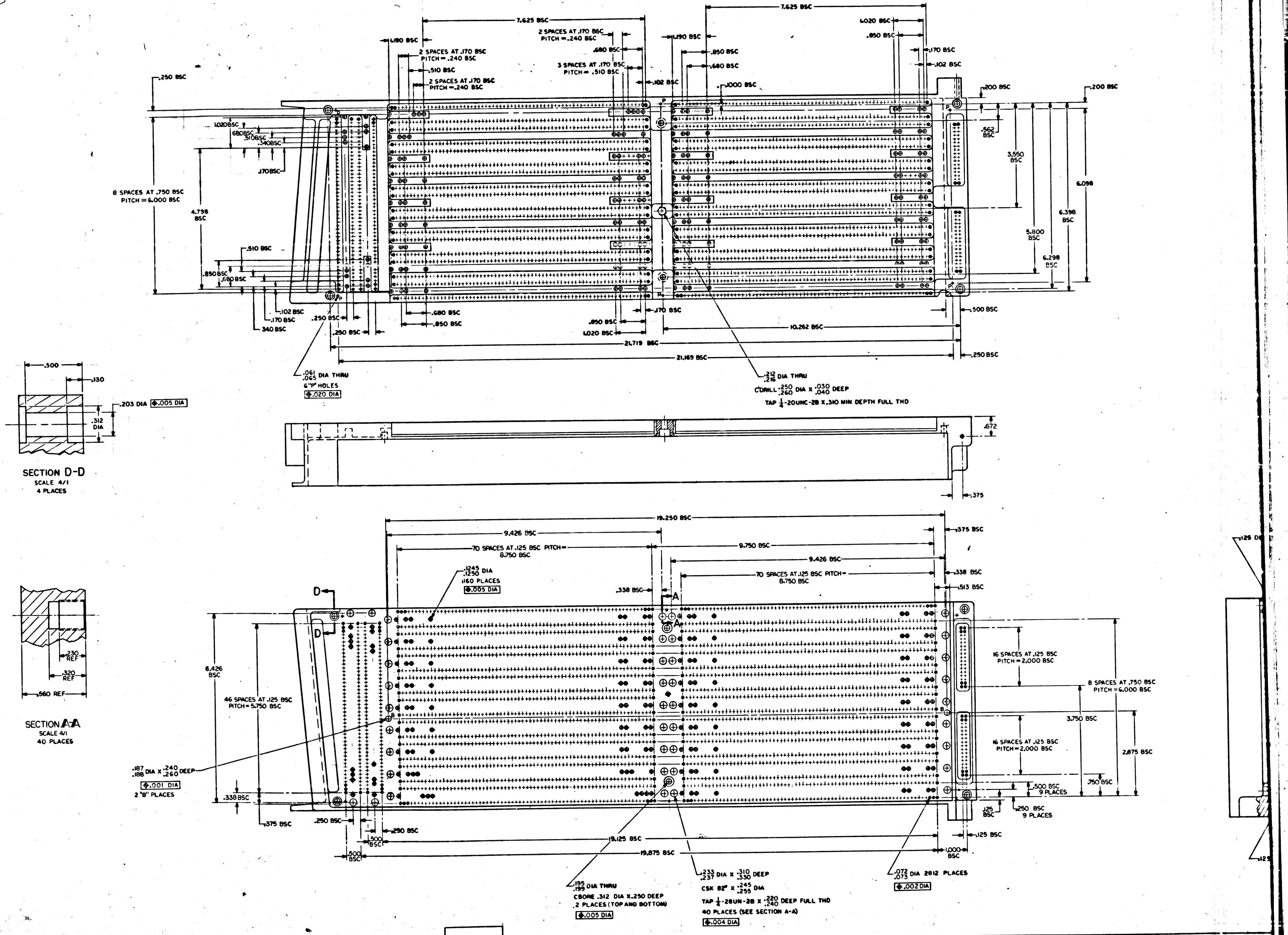

6
5
4
3
D
C
B
A
7.625 BSC
1.190 BSC
2 SPACES AT .170 BSC PITCH = .240 BSC
.680 BSC
3 SPACES AT .170 BSC PITCH = .510 BSC
.510 BSC
2 SPACES AT .170 BSC PITCH = .240 BSC
.102 BSC
.850 BSC
.680 BSC
1.000 BSC
1.020 BSC
.170 BSC
.250 BSC
.200 BSC
1.020 BSC
.680 BSC
.510 BSC
.340 BSC
.170 BSC
8 SPACES AT .750 BSC PITCH = 6.000 BSC
4.798 BSC
.562 BSC
3.550 BSC
6.098
6.398 BSC
5.800 BSC
6.298 BSC
.510 BSC
.850 BSC
.680 BSC
.102 BSC
.170 BSC
.340 BSC
.250 BSC
.250 BSC
.680 BSC
.850 BSC
.850 BSC
1.020 BSC
.170 BSC
10.262 BSC
.500 BSC
21.719 BSC
21.169 BSC
.250 BSC
P
.061 .065 DIA THRU
6 "P" HOLES
⌖.020 DIA
.212 .216 DIA THRU
C'DRILL .250 .260 DIA X .030 .040 DEEP
TAP 1/4-20UNC-2B X .310 MIN DEPTH FULL THD
.500
.130
.203 DIA ⌖.005 DIA
.312 DIA
SECTION D-D
SCALE 4/1
4 PLACES
.672
.375
19.250 BSC
9.426 BSC
.375 BSC
70 SPACES AT .125 BSC PITCH = 8.750 BSC
9.750 BSC
9.426 BSC
70 SPACES AT .125 BSC PITCH = 8.750 BSC
.338 BSC
.513 BSC
.1245 .1250 DIA
1160 PLACES
⌖.005 DIA
.338 BSC
A
A
D
D
.230 REF
.320 REF
.560 REF
SECTION A-A
SCALE 4/1
40 PLACES
6.426 BSC
46 SPACES AT .125 BSC PITCH = 5.750 BSC
16 SPACES AT .125 BSC PITCH = 2.000 BSC
8 SPACES AT .750 BSC PITCH = 6.000 BSC
3.750 BSC
16 SPACES AT .125 BSC PITCH = 2.000 BSC
2.875 BSC
.750 BSC
.500 BSC 9 PLACES
.250 BSC 9 PLACES
.125 BSC
B
.187 .188 DIA X .240 .260 DEEP
⌖.001 DIA
2 "B" PLACES
.338 BSC
.375 BSC
.250 BSC
.250 BSC
.500 BSC
.500 BSC
19.125 BSC
19.875 BSC
.125 BSC
1.000 BSC
.195 .199 DIA THRU
CBORE .312 DIA X .250 DEEP
2 PLACES (TOP AND BOTTOM)
⌖.005 DIA
.233 .237 DIA X .310 .330 DEEP
CSK 82° X .245 .255 DIA
TAP 1/4-28UN-2B X .220 .240 DEEP FULL THD
40 PLACES (SEE SECTION A-A)
⌖.004 DIA
.072 .073 DIA 2812 PLACES
⌖.002 DIA
.125 D
.125

6

5

4

3

INCHES
0 1 2
PHOTOGRAPHIC SCALE ONLY

F1

1004213

1004213 D

LTR	DESCRIPTION	DATE	APPROVAL
A	REVISED PER TDRR 0323	[illegible]	[illegible]
B	REVISED PER TDRR 038	10-10-63	[illegible]
C	REVISED PER TDRR 04175	10-24-63	[illegible]
D	REVISED PER TDRR 0434	10-30-63	[illegible]

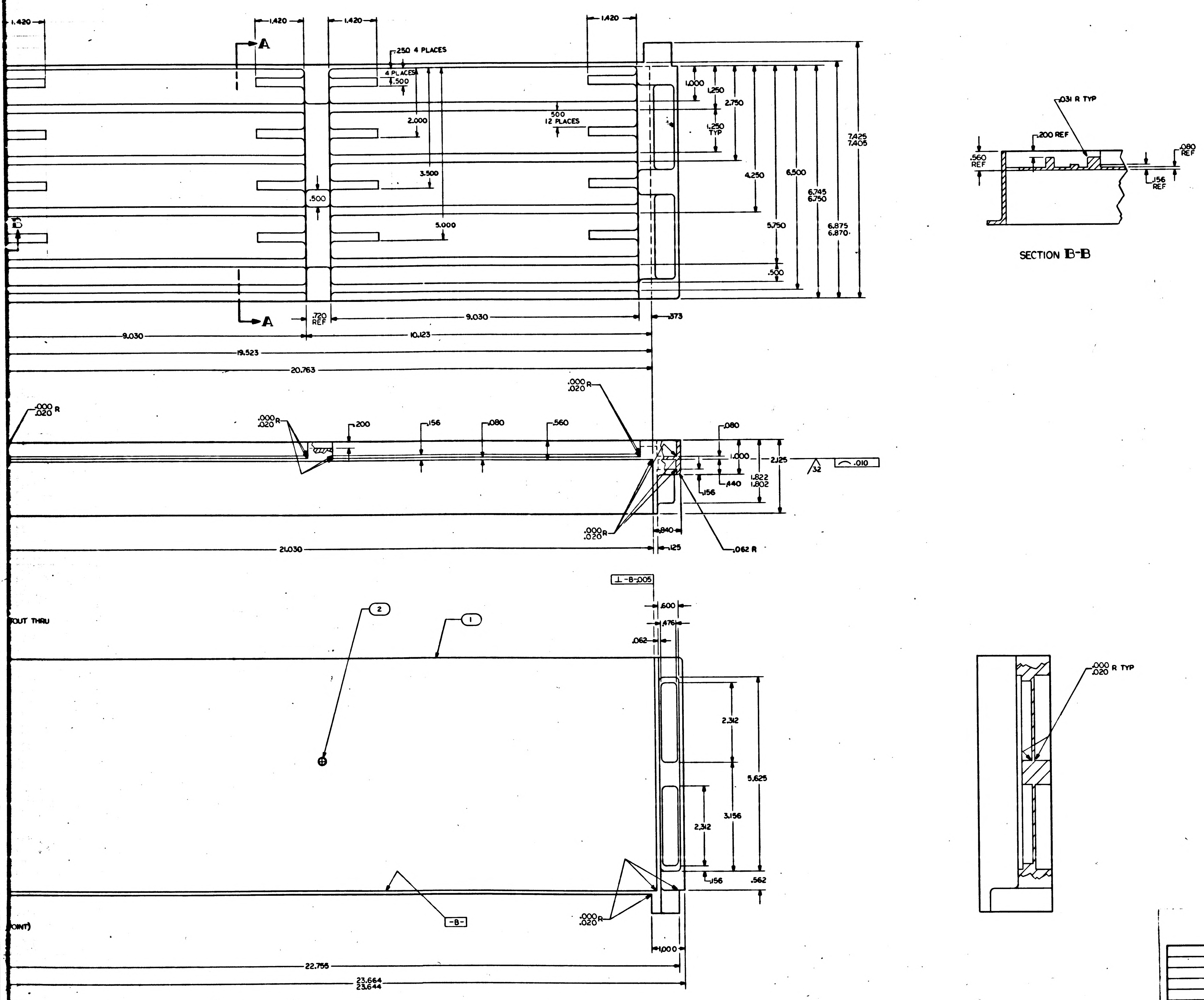

1.420
1.420
1.420
1.420
A
A
.250 4 PLACES
4 PLACES
.500
.500 12 PLACES
2.000
3.500
5.000
.500
1.000
1.250
2.750
1.250 TYP
4.250
6.500
5.750
.500
6.745 6.750
6.875 6.870
7.425 7.405
.720 REF
9.030
.373
9.030
10.123
19.523
20.763
.000 .020 R
.000 .020 R
.000 .020 R
.200
.156
.080
.560
.080
1.000
2.125
1.822 1.802
.440
.156
.010
32
.000 .020 R
.840
.125
.062 R
21.030
SECTION B-B
.031 R TYP
.200 REF
.560 REF
.080 REF
.156 REF
-B- .005
.600
.476
.062
2
1
CUTOUT THRU
2.312
5.625
3.156
2.312
.156
.562
-B-
.000 .020 R
1.000
22.755
23.664 23.644
.000 .020 R TYP
(POINT)

QTY REQD	PART OR IDENTIFYING N	NOMENCLATURE OR DESCRIPTION	FIND NO.
1	NAS1394CA-08	INSERT, THREADED	2
1	1004213-1	TRAY A, LEFT HAND	1

LIST OF MATERIALS

NEXT ASSY	USED ON
1003126	

APPLICATION

UNLESS OTHERWISE SPECIFIED DIMENSIONS ARE IN INCHES
TOLERANCES ON
FRACTIONS ± —
DECIMALS ±.005
ANGLES ± 0° 30'
DO NOT SCALE THIS DRAWING
MATERIAL SEE NOTE 2
HEAT TREATMENT —
FINAL FINISH —

MIT INSTRUMENTATION LAB
CAMBRIDGE, MASS
DRAWN Mahoney DATE 6-19-63
CHECKED [illegible]
APPROVAL [illegible] 7/3/63
APPROVAL [illegible]
NASA APPROVAL W. J. Rh[illegible] 7-31-63
MIT APPROVAL [illegible]

MANNED SPACECRAFT CENTER
HOUSTON, TEXAS

TRAY A
LEFT HAND

CODE IDENT NO.
SIZE J
NASA DRAWING NO. 1004213
SCALE 1/1
WT
SHEET 1 OF 2

1004213 D

MASTER

INCHES
PHOTOGRAPHIC SCALE ONLY

F-2

NOTICE: WHEN GOVERNMENT DRAWINGS, SPECIFICATIONS, OR OTHER DATA ARE USED FOR ANY PURPOSE OTHER THAN IN CONNECTION WITH A DEFINITELY [illegible] UNITED STATES GOVERNMENT THEREBY INCURS NO RESPONSIBILITY NOR ANY OBLIGATION WHATSOEVER; AND THE FACT THAT THE GOVERNMENT MAY HAVE FORMULATED, FURNISHED, OR IN ANY WAY SUPPLIED THE SAID DRAWINGS, SPECIFICATIONS OR OTHER DATA IS NOT TO BE REGARDED BY IMPLICATION OR OTHERWISE AS IN ANY MANNER LICENSING THE HOLDER OR ANY OTHER PERSON OR CORPORATION, OR CONVEYING ANY RIGHTS OR PERMISSION TO MANUFACTURE, USE, OR SELL ANY PATENTED INVENTION THAT MAY IN ANY WAY BE RELATED THERETO.

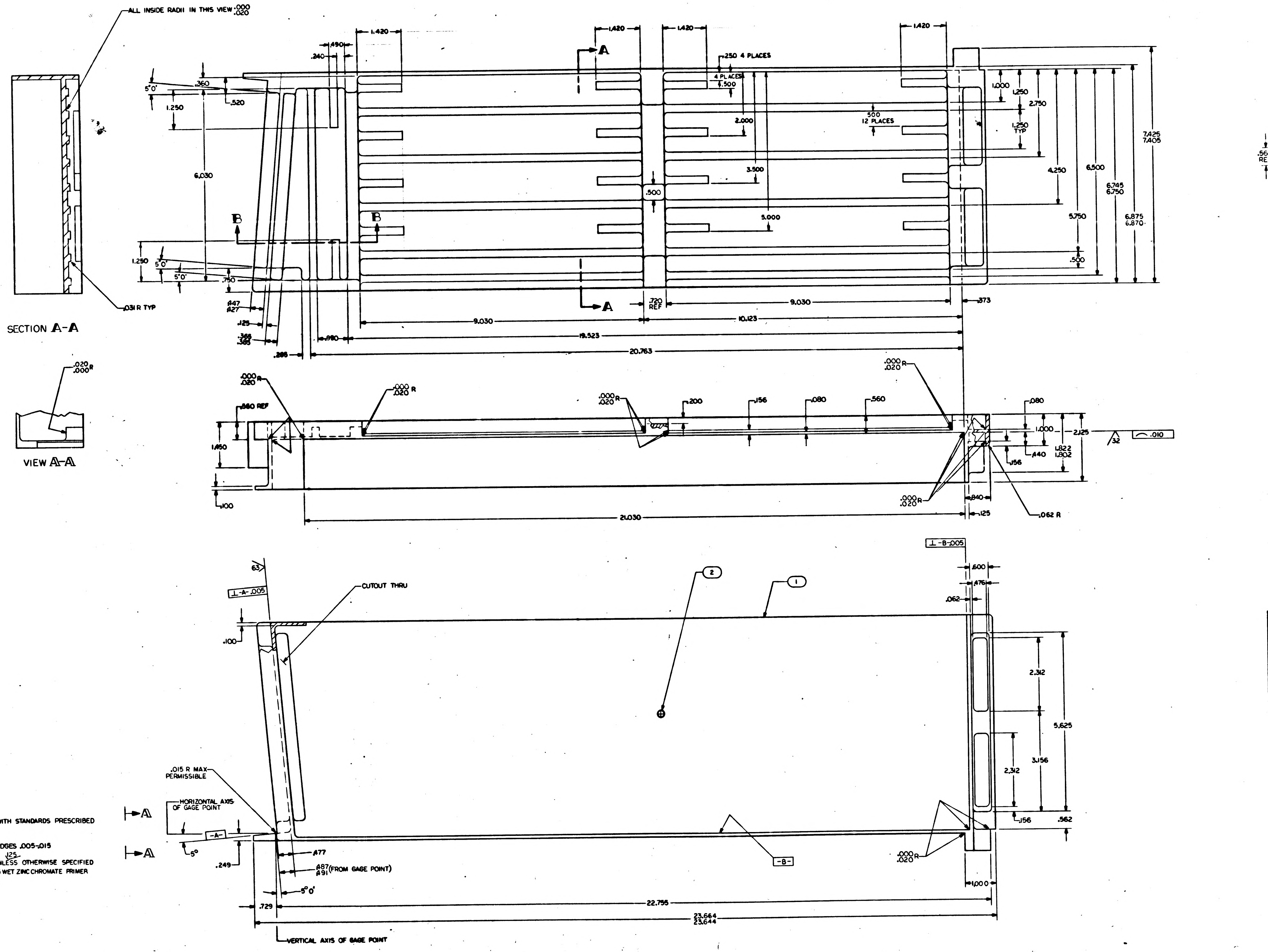
ALL INSIDE RADII IN THIS VIEW .000 .020
.031 R TYP
SECTION A-A
.020 .000 R
VIEW A-A
1.420
1.420
1.420
1.420
.490
.240
.250 4 PLACES
4 PLACES .500
500 12 PLACES
2.000
3.500
5.000
.500
1.000
1.250
2.750
1.250 TYP
4.250
5.750
6.500
6.745 6.750
6.875 6.870
7.425 7.405
.500
5°0'
.360
.520
1.250
6.030
1.250
5°0'
5°0'
.750
.447 .427
.125
.365 .385
.286
.980
9.030
.720 REF
9.030
10.123
19.523
20.763
.373
A
A
B
B
.000 .020 R
.000 .020 R
.000 .020 R
.000 .020 R
.860 REF
1.450
.100
.200
.156
.080
.560
.080
1.000
2.125
.440
1.822 1.802
.156
32
⌒ .010
.000 .020 R
.840
.125
.062 R
21.030
⊥ -B- .005
.600
.476
.062
63
⊥ -A- .005
CUTOUT THRU
2
1
.100
2.312
5.625
3.156
2.312
.156
.562
.015 R MAX PERMISSIBLE
HORIZONTAL AXIS OF GAGE POINT
-A-
5°
.249
.477
.487 .491 (FROM GAGE POINT)
5°0'
-B-
.000 .020 R
1.000
.729
22.755
23.664 23.644
VERTICAL AXIS OF GAGE POINT
A
A

NOTES-
1. INTERPRET DRAWING IN ACCORDANCE WITH STANDARDS PRESCRIBED BY MIL-D-70327
2. MAKE FROM NASA DWG 1004150
3. REMOVE BURRS AND BREAK SHARP EDGES .005-.015
4. UNLESS OTHERWISE SPECIFIED, FINISH √125
5. ALL RADII AND FILLETS TO BE .125 UNLESS OTHERWISE SPECIFIED
6. COAT FIND NO.1 & NO 2 WITH MIL-P-8585 WET ZINC CHROMATE PRIMER
7. INSTALL FIND NO.2 / ND1002121

INCHES
PHOTOGRAPHIC SCALE ONLY

1004213 D

LTR	DESCRIPTION	DATE	APPROVAL
A	REVISED PER TDRR 03229	9-19-63	WK
B	REVISED PER TDRR 03841	10-10-63	WK
C	REVISED PER TDRR 04195	10-31-63	WK
D	REVISED PER TDRR 04349	[illegible]	WK

REVISIONS TM 31181

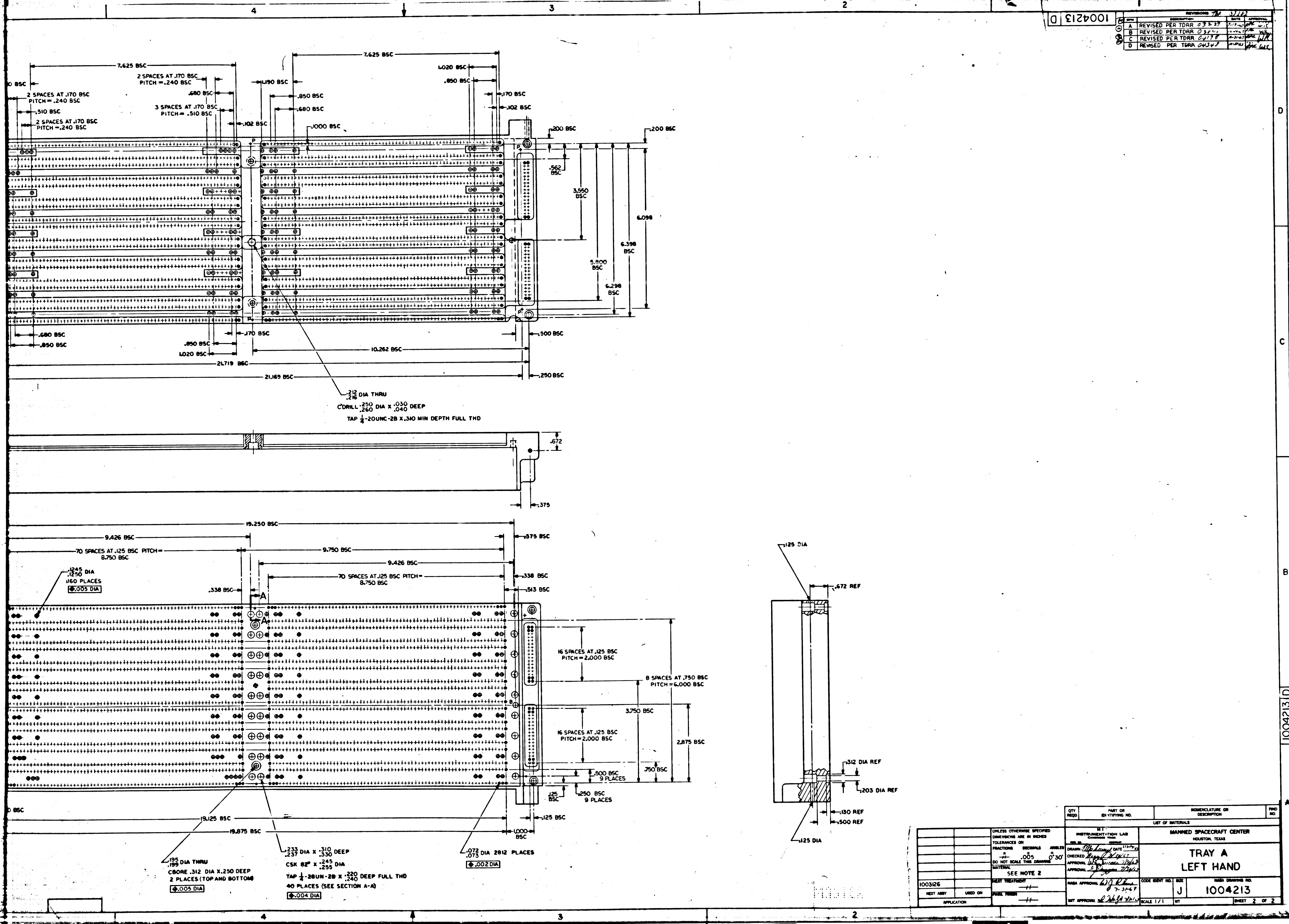

4
3
2
1
D
C
B
A
7.625 BSC
2 SPACES AT .170 BSC PITCH = .240 BSC
.510 BSC
2 SPACES AT .170 BSC PITCH = .240 BSC
2 SPACES AT .170 BSC PITCH = .240 BSC
.680 BSC
3 SPACES AT .170 BSC PITCH = .510 BSC
.102 BSC
1.190 BSC
.850 BSC
.680 BSC
.1000 BSC
1.020 BSC
.850 BSC
.170 BSC
.102 BSC
.200 BSC
.200 BSC
.562 BSC
3.550 BSC
5.800 BSC
6.298 BSC
6.398 BSC
6.098
.680 BSC
.850 BSC
.850 BSC
1.020 BSC
.170 BSC
10.262 BSC
21.719 BSC
21.169 BSC
.500 BSC
.250 BSC
.212/.216 DIA THRU
C'DRILL .250/.260 DIA X .030/.040 DEEP
TAP 1/4-20UNC-2B X .310 MIN DEPTH FULL THD
.672
.375
19.250 BSC
9.426 BSC
70 SPACES AT .125 BSC PITCH = 8.750 BSC
9.750 BSC
9.426 BSC
70 SPACES AT .125 BSC PITCH = 8.750 BSC
.375 BSC
.338 BSC
.513 BSC
.338 BSC
.1245/.1250 DIA
1160 PLACES
⌖ .005 DIA
A
A
16 SPACES AT .125 BSC PITCH = 2.000 BSC
8 SPACES AT .750 BSC PITCH = 6.000 BSC
3.750 BSC
16 SPACES AT .125 BSC PITCH = 2.000 BSC
2.875 BSC
.750 BSC
.500 BSC 9 PLACES
.125 BSC
.250 BSC 9 PLACES
.125 BSC
19.125 BSC
19.875 BSC
1.000 BSC
.195/.199 DIA THRU
CBORE .312 DIA X .250 DEEP
2 PLACES (TOP AND BOTTOM)
⌖ .005 DIA
.233/.237 DIA X .310/.330 DEEP
CSK 82° X .245/.255 DIA
TAP 1/4-28UN-2B X .220/.240 DEEP FULL THD
40 PLACES (SEE SECTION A-A)
⌖ .004 DIA
.072/.073 DIA 2812 PLACES
⌖ .002 DIA
.125 DIA
.672 REF
.312 DIA REF
.203 DIA REF
.130 REF
.500 REF
.125 DIA

QTY REQD	PART OR IDENTIFYING NO.	NOMENCLATURE OR DESCRIPTION	FIND NO.

LIST OF MATERIALS

1003126	
NEXT ASSY	USED ON
APPLICATION	

UNLESS OTHERWISE SPECIFIED
DIMENSIONS ARE IN INCHES
TOLERANCES ON
FRACTIONS ± —//— DECIMALS ± .005 ANGLES ± 0°30'
DO NOT SCALE THIS DRAWING
MATERIAL
SEE NOTE 2
HEAT TREATMENT —//—
FINAL FINISH —//—

MIT
INSTRUMENTATION LAB
CAMBRIDGE, MASS.
DRAWN Mahoney DATE 23 July 63
CHECKED 7/31/63
APPROVAL W. E. Turner 7/31/63
APPROVAL 7/31/63
NASA APPROVAL W J Rhine 7-31-63
MIT APPROVAL 7/31/63

MANNED SPACECRAFT CENTER
HOUSTON, TEXAS

TRAY A
LEFT HAND

CODE IDENT NO.
SIZE J
NASA DRAWING NO. 1004213
SCALE 1/1
WT
SHEET 2 OF 2

1004213 D

INCHES
PHOTOGRAPHIC SCALE ONLY

F-2

NOTICE — WHEN GOVERNMENT DRAWINGS, SPECIFICATIONS, OR OTHER DATA ARE USED FOR ANY PURPOSE OTHER THAN IN CONNECTION WITH A DEFINITELY RELATED GOVERNMENT PROCUREMENT OPERATION, THE UNITED STATES GOVERNMENT THEREBY INCURS NO RESPONSIBILITY NOR ANY OBLIGATION WHATSOEVER; AND THE FACT THAT THE GOVERNMENT MAY HAVE FORMULATED, FURNISHED, OR IN ANY WAY SUPPLIED THE SAID DRAWINGS, SPECIFICATIONS, OR OTHER DATA IS NOT TO BE REGARDED BY IMPLICATION OR OTHERWISE AS IN ANY MANNER LICENSING THE HOLDER OR ANY OTHER PERSON OR CORPORATION, OR CONVEYING ANY RIGHTS OR PERMISSION TO MANUFACTURE, USE, OR SELL ANY PATENTED INVENTION THAT MAY IN ANY WAY BE RELATED THERETO.

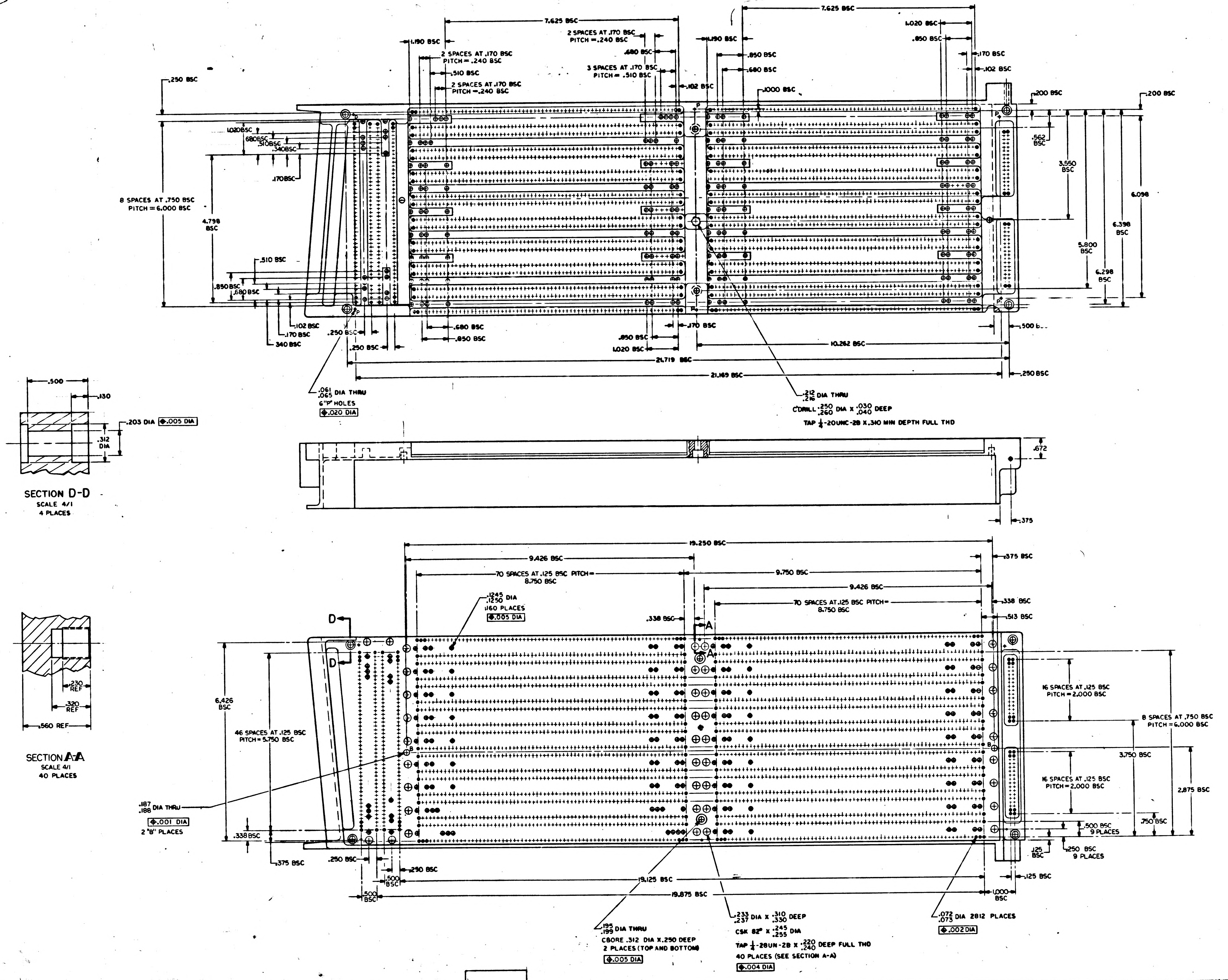
SECTION D-D
SCALE 4/1
4 PLACES

SECTION A-A
SCALE 4/1
40 PLACES

6
5
4
3
D
C
B
A
7.625 BSC
1.190 BSC
2 SPACES AT .170 BSC
PITCH = .240 BSC
.510 BSC
2 SPACES AT .170 BSC
PITCH = .240 BSC
.250 BSC
1.020 BSC
.680 BSC
.510 BSC
.340 BSC
.170 BSC
8 SPACES AT .750 BSC
PITCH = 6.000 BSC
4.798
BSC
.510 BSC
.850 BSC
.680 BSC
.102 BSC
.170 BSC
.340 BSC
.250 BSC
.250 BSC
.680 BSC
.850 BSC
.061
.065 DIA THRU
6 "P" HOLES
⌖ .020 DIA
2 SPACES AT .170 BSC
PITCH = .240 BSC
.680 BSC
3 SPACES AT .170 BSC
PITCH = .510 BSC
.102 BSC
1.190 BSC
.850 BSC
.680 BSC
1.000 BSC
7.625 BSC
1.020 BSC
.850 BSC
.170 BSC
.102 BSC
.200 BSC
.200 BSC
.562
BSC
3.550
BSC
6.098
6.398
BSC
5.800
BSC
6.298
BSC
P
.170 BSC
.850 BSC
1.020 BSC
10.262 BSC
21.719 BSC
21.169 BSC
.500 BSC
.250 BSC
.212
.216 DIA THRU
C'DRILL .250
.260 DIA X .030
.040 DEEP
TAP 1/4-20UNC-2B X .310 MIN DEPTH FULL THD
.672
.375
.500
.130
.203 DIA ⌖ .005 DIA
.312
DIA
.230
REF
.320
REF
.560 REF
19.250 BSC
9.426 BSC
70 SPACES AT .125 BSC PITCH =
8.750 BSC
.1245
.1250 DIA
1160 PLACES
⌖ .005 DIA
.338 BSC
A
9.750 BSC
9.426 BSC
70 SPACES AT .125 BSC PITCH =
8.750 BSC
.375 BSC
.338 BSC
.513 BSC
D
D
B
6.426
BSC
46 SPACES AT .125 BSC
PITCH = 5.750 BSC
.187
.188 DIA THRU
⌖ .001 DIA
2 "B" PLACES
.338 BSC
.375 BSC
.250 BSC
.250 BSC
.500
BSC
.500
BSC
16 SPACES AT .125 BSC
PITCH = 2.000 BSC
8 SPACES AT .750 BSC
PITCH = 6.000 BSC
3.750 BSC
16 SPACES AT .125 BSC
PITCH = 2.000 BSC
2.875 BSC
.750 BSC
.500 BSC
9 PLACES
.125
BSC
.250 BSC
9 PLACES
.125 BSC
1.000
BSC
19.125 BSC
19.875 BSC
.195
.199 DIA THRU
CBORE .312 DIA X .250 DEEP
2 PLACES (TOP AND BOTTOM)
⌖ .005 DIA
.233
.237 DIA X .310
.330 DEEP
CSK 82° X .245
.255 DIA
TAP 1/4-28UN-2B X .220
.240 DEEP FULL THD
40 PLACES (SEE SECTION A-A)
⌖ .004 DIA
.072
.073 DIA 2812 PLACES
⌖ .002 DIA

INCHES
0 2
PHOTOGRAPHIC SCALE ONLY

1004213 E

SYM	DESCRIPTION	DATE	APPROVAL
A	REVISED PER TDRR 0322	[illegible]	[illegible]
B	REVISED PER TDRR 0384	10-10-63	[illegible]
C	REVISED PER TDRR 04175	[illegible]	[illegible]
D	REVISED PER TDRR 0434	[illegible]	[illegible]
E	REVISED PER TDRR 05112	12/3/63	[illegible]

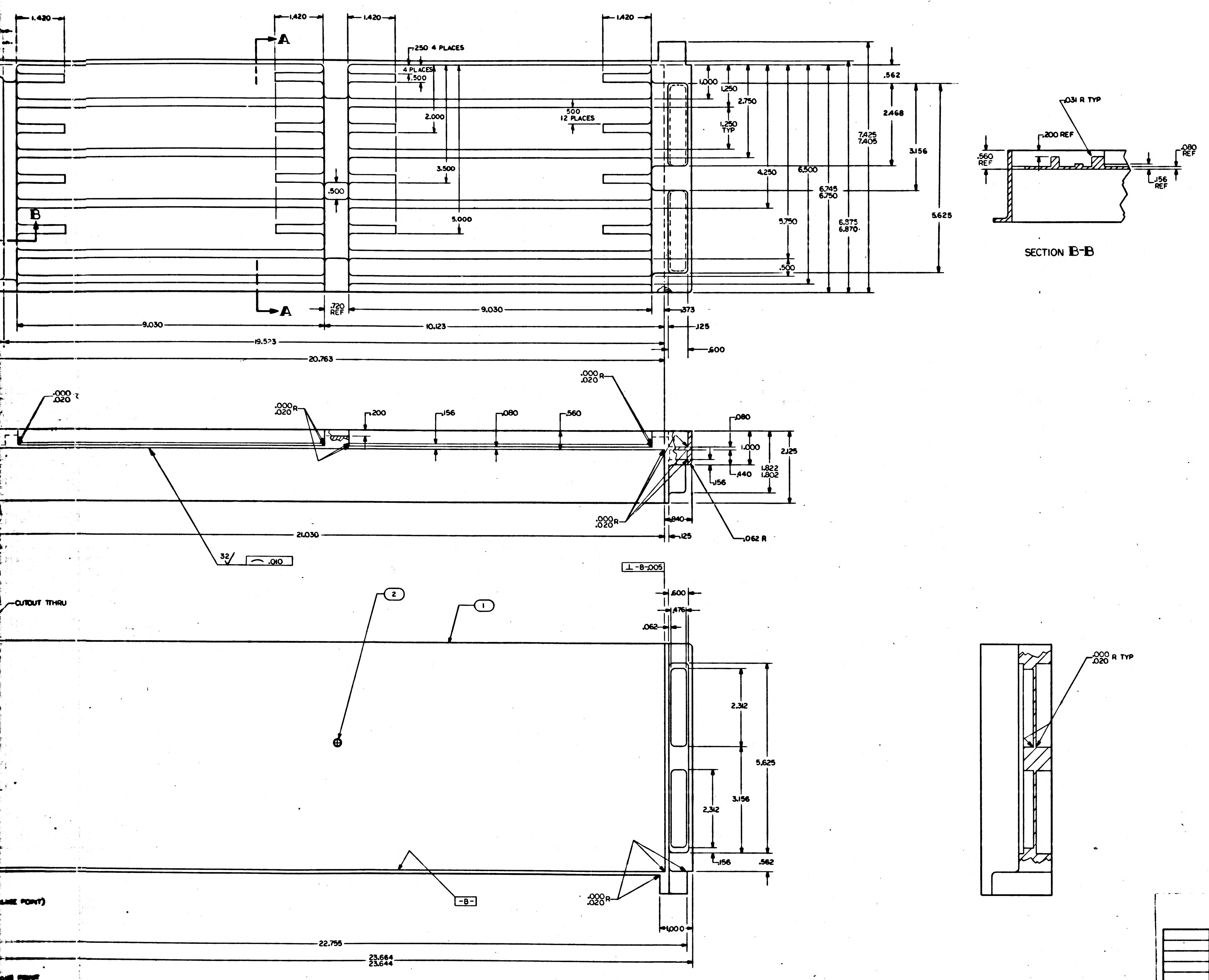

1.420
A
A
B
.250 4 PLACES
4 PLACES .500
.500 12 PLACES
2.000
3.500
5.000
.500
1.000
1.250
2.750
1.250 TYP
4.250
6.500
5.750
.500
6.745 6.750
6.875 6.870
7.425 7.405
.562
2.468
3.156
5.625
.720 REF
9.030
10.123
19.523
20.763
.373
.125
.600
.031 R TYP
.200 REF
.560 REF
.080 REF
.156 REF
SECTION B-B
.000 .020 R
.200
.156
.080
.560
.080
1.000
.440
.156
1.822 1.802
2.125
.840
.125
.062 R
21.030
32/ ⌒ .010
⊥ -B- .005
.600
.476
.062
CUTOUT THRU
2
1
2.312
5.625
3.156
2.312
.156
.562
-B-
.000 .020 R TYP
1.000
22.755
23.664 23.644

1	NAS1394CA-08	INSERT, THREADED	2
1	1004213-1	TRAY A, LEFT HAND	1
QTY REQD	PART OR IDENTIFYING NO.	NOMENCLATURE OR DESCRIPTION	FIND NO.

LIST OF MATERIALS

NEXT ASSY	USED ON
1003126	

APPLICATION

UNLESS OTHERWISE SPECIFIED
DIMENSIONS ARE IN INCHES
TOLERANCES ON
FRACTIONS ± — DECIMALS ±.005 ANGLES ± 0°30'
DO NOT SCALE THIS DRAWING
MATERIAL SEE NOTE 2
HEAT TREATMENT —
FINAL FINISH —

MIT
INSTRUMENTATION LAB
CAMBRIDGE, MASS

DRAWN Mahoney DATE 6-63
CHECKED [illegible] 7/2/63
APPROVAL [illegible] 7/3/63
APPROVAL [illegible]
NASA APPROVAL W. J. R[illegible] 7-31-63
MIT APPROVAL [illegible]

MANNED SPACECRAFT CENTER
HOUSTON, TEXAS

TRAY A
LEFT HAND

CODE IDENT NO. — SIZE J NASA DRAWING NO. 1004213
SCALE 1/1 WT SHEET 1 OF 2

1004213 E SH 1 OF 2

MASTER

NOTICE — WHEN GOVERNMENT DRAWINGS, SPECIFICATIONS, OR OTHER DATA ARE USED FOR ANY PURPOSE OTHER THAN IN CONNECTION WITH A DEFINITELY RELATED GOVERNMENT PROCUREMENT OPERATION, THE UNITED STATES GOVERNMENT THEREBY INCURS NO RESPONSIBILITY NOR ANY OBLIGATION WHATSOEVER; AND THE FACT THAT THE GOVERNMENT MAY HAVE FORMULATED, FURNISHED, OR IN ANY WAY SUPPLIED THE SAID DRAWINGS, SPECIFICATIONS, OR OTHER DATA IS NOT TO BE REGARDED BY IMPLICATION OR OTHERWISE AS IN ANY MANNER LICENSING THE HOLDER OR ANY OTHER PERSON OR CORPORATION, OR CONVEYING ANY RIGHTS OR PERMISSION TO MANUFACTURE, USE, OR SELL ANY PATENTED INVENTION THAT MAY IN ANY WAY BE RELATED THERETO.

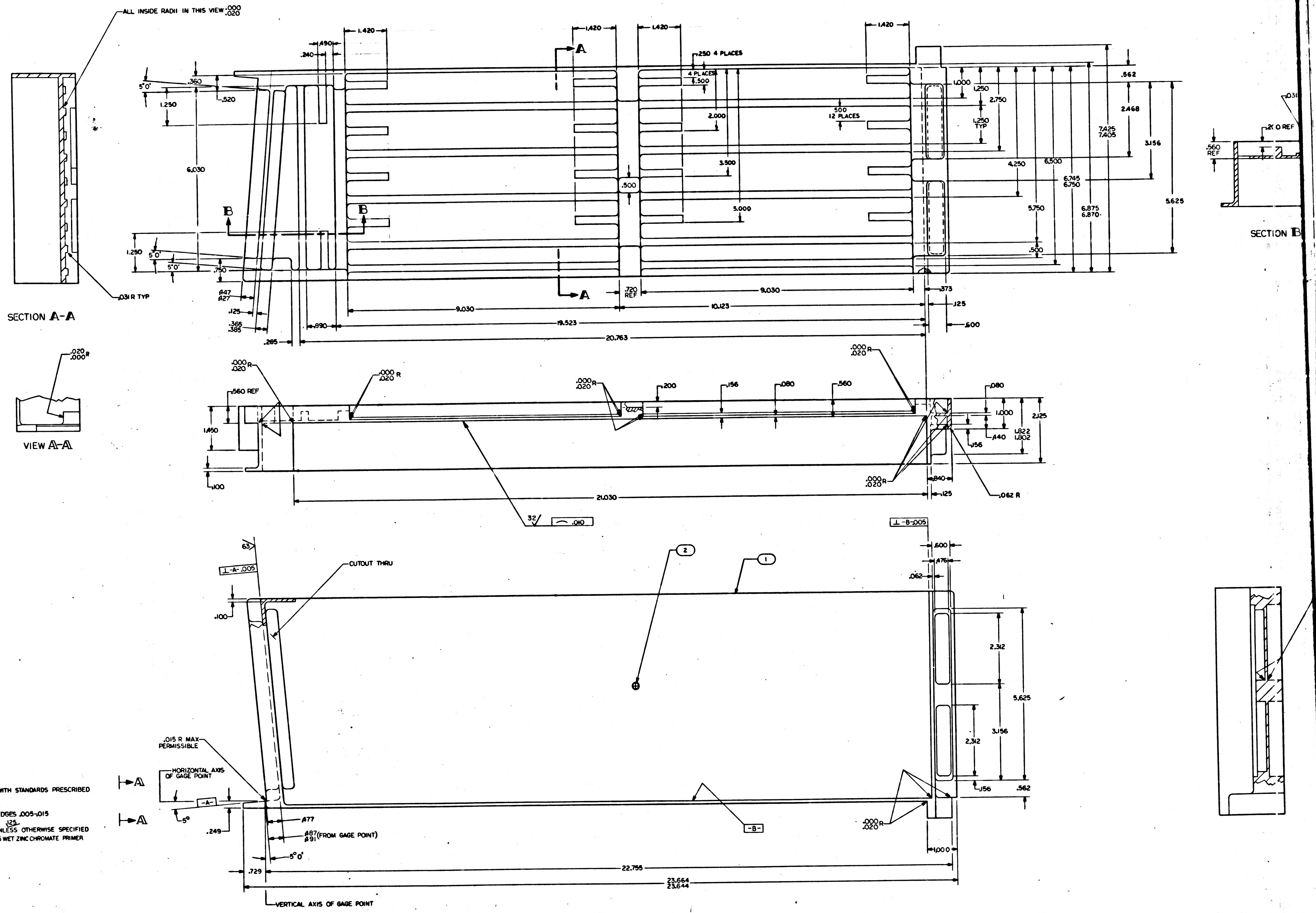
ALL INSIDE RADII IN THIS VIEW .000 .020
SECTION A-A
.031 R TYP
VIEW A-A
.020 .000 R
1.420
.240
.490
.360
5°0'
.520
1.250
6.030
B
B
1.250
5°0'
5°0'
.750
.047
.027
.125
.365
.385
.285
.990
9.030
19.523
20.763
A
A
.250 4 PLACES
4 PLACES
.500
2.000
3.500
5.000
.500
.720 REF
9.030
10.123
.500 12 PLACES
1.250 TYP
1.000
1.250
2.750
.562
2.468
7.425
7.405
3.156
4.250
6.500
6.745
6.750
5.750
6.875
6.870
5.625
.500
.373
.125
.600
.031
2.0 REF
.560 REF
SECTION B
.560 REF
1.450
.100
.000 .020 R
.200
.156
.080
.560
.080
1.000
2.125
1.822
1.802
.440
.156
.840
.125
.062 R
21.030
32
.010
⊥ -B- .005
63
⊥ -A- .005
CUTOUT THRU
②
①
.600
.476
.062
.100
2.312
5.625
3.156
2.312
.562
.156
.015 R MAX PERMISSIBLE
HORIZONTAL AXIS OF GAGE POINT
-A-
5°
.249
.477
.487
.491 (FROM GAGE POINT)
5°0'
-B-
1.000
.729
22.755
23.664
23.644
VERTICAL AXIS OF GAGE POINT

NOTES-
1. INTERPRET DRAWING IN ACCORDANCE WITH STANDARDS PRESCRIBED BY MIL-D-70327
2. MAKE FROM NASA DWG 1004150
3. REMOVE BURRS AND BREAK SHARP EDGES .005-.015
4. UNLESS OTHERWISE SPECIFIED, FINISH 125
5. ALL RADII AND FILLETS TO BE .125 UNLESS OTHERWISE SPECIFIED
6. COAT FIND NO.1 & NO 2 WITH MIL-P-8585 WET ZINC CHROMATE PRIMER
7. INSTALL FIND NO.2 / ND1002121

1004213E SH 1 OF 2

INCHES
PHOTOGRAPHIC SCALE ONLY

1004213	E

REVISIONS TDRR 05112

SYM	DESCRIPTION	DATE	APPROVAL
A	REVISED PER TDRR 03227	9-19-63	
B	REVISED PER TDRR 03848	10-10-63	
C	REVISED PER TDRR 04175	10-31-63	WR
D	REVISED PER TDRR 04348		
E	REVISED PER TDRR 05112	12/10/63	

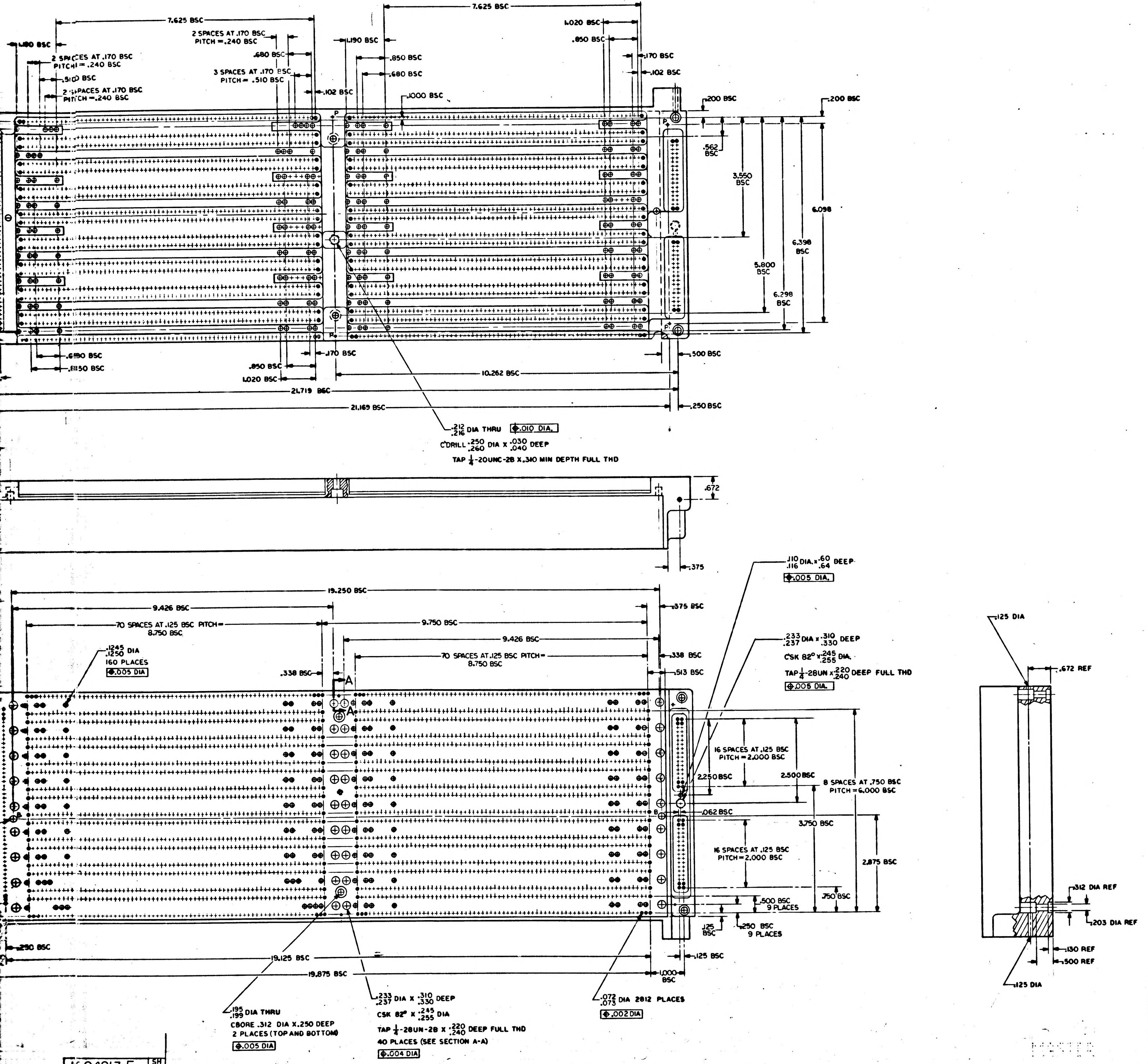

7.625 BSC
1.180 BSC
2 SPACES AT .170 BSC PITCH = .240 BSC
.510 BSC
2 SPACES AT .170 BSC PITCH = .240 BSC
2 SPACES AT .170 BSC PITCH = .240 BSC
.680 BSC
3 SPACES AT .170 BSC PITCH = .510 BSC
.102 BSC
1.190 BSC
.850 BSC
.680 BSC
1.000 BSC
7.625 BSC
1.020 BSC
.850 BSC
.170 BSC
.102 BSC
.200 BSC
.200 BSC
.562 BSC
3.550 BSC
6.098
6.398 BSC
5.800 BSC
6.298 BSC
.6190 BSC
1.1150 BSC
.850 BSC
1.020 BSC
.170 BSC
10.262 BSC
21.719 BSC
21.169 BSC
.500 BSC
.250 BSC
.212 .216 DIA THRU ⌖.010 DIA.
C'DRILL .250 .260 DIA X .030 .040 DEEP
TAP 1/4-20UNC-2B X .310 MIN DEPTH FULL THD
.672
.375
.110 .116 DIA X .60 .64 DEEP ⌖.005 DIA.
19.250 BSC
9.426 BSC
.375 BSC
70 SPACES AT .125 BSC PITCH = 8.750 BSC
9.750 BSC
9.426 BSC
70 SPACES AT .125 BSC PITCH = 8.750 BSC
.1245 .1250 DIA 160 PLACES ⌖.005 DIA
.338 BSC
.338 BSC
.513 BSC
A
A
.233 .237 DIA X .310 .330 DEEP
CSK 82° X .245 .255 DIA.
TAP 1/4-28UN X .220 .240 DEEP FULL THD ⌖.005 DIA.
16 SPACES AT .125 BSC PITCH = 2.000 BSC
2.250 BSC
2.500 BSC
8 SPACES AT .750 BSC PITCH = 6.000 BSC
.062 BSC
3.750 BSC
16 SPACES AT .125 BSC PITCH = 2.000 BSC
2.875 BSC
.750 BSC
.500 BSC 9 PLACES
.125 BSC
.250 BSC 9 PLACES
.290 BSC
19.125 BSC
19.875 BSC
.125 BSC
1.000 BSC
.195 .199 DIA THRU
CBORE .312 DIA X .250 DEEP 2 PLACES (TOP AND BOTTOM) ⌖.005 DIA
.233 .237 DIA X .310 .330 DEEP
CSK 82° X .245 .255 DIA
TAP 1/4-28UN-2B X .220 .240 DEEP FULL THD
40 PLACES (SEE SECTION A-A) ⌖.004 DIA
.072 .075 DIA 2812 PLACES ⌖.002 DIA
.125 DIA
.672 REF
.312 DIA REF
.203 DIA REF
.130 REF
.500 REF
.125 DIA

QTY REQD	PART OR IDENTIFYING NO.	NOMENCLATURE OR DESCRIPTION	FIND NO.

LIST OF MATERIALS

1003126	
NEXT ASSY	USED ON

APPLICATION

UNLESS OTHERWISE SPECIFIED
DIMENSIONS ARE IN INCHES
TOLERANCES ON
FRACTIONS ± —/— DECIMALS ± .005 ANGLES ± 0°30'
DO NOT SCALE THIS DRAWING
MATERIAL
SEE NOTE 2
HEAT TREATMENT —/—
FINAL FINISH —/—

MIT
INSTRUMENTATION LAB
CAMBRIDGE MASS.
DRAWN DATE 23 July 63
CHECKED 7/31/63
APPROVAL W Turner 7/30/63
APPROVAL 7/31/63
NASA APPROVAL 7-31-63
MIT APPROVAL 7/31/63

MANNED SPACECRAFT CENTER
HOUSTON, TEXAS

TRAY A
LEFT HAND

CODE IDENT NO. —
SIZE J
NASA DRAWING NO. 1004213
SCALE 1/1
WT
SHEET 2 OF 2

1004213 E	SH 2 OF 2

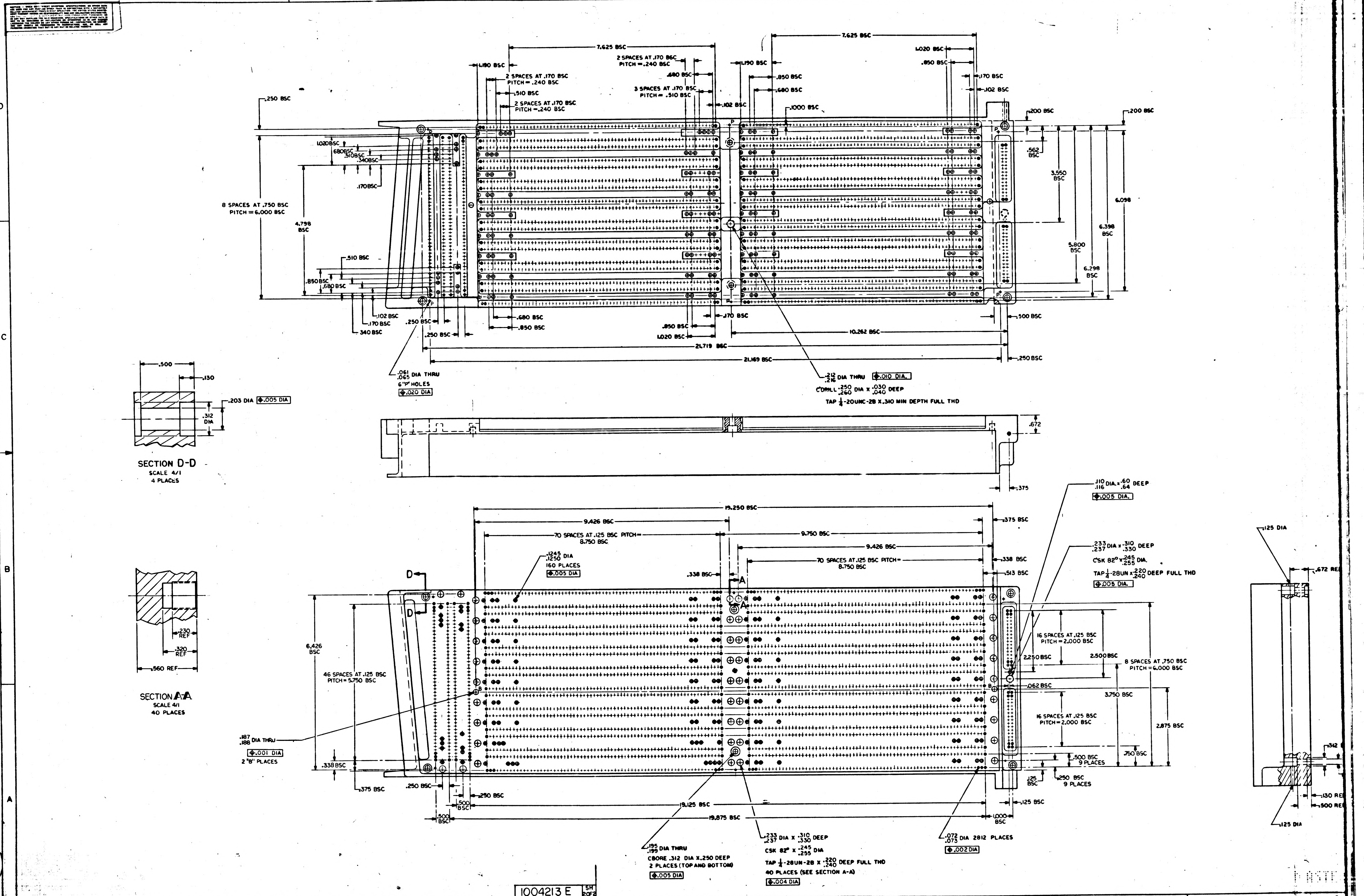
6
5
4
3
2
D
C
B
A
7.625 BSC
2 SPACES AT .170 BSC PITCH = .240 BSC
1.190 BSC
2 SPACES AT .170 BSC PITCH = .240 BSC
.680 BSC
.510 BSC
3 SPACES AT .170 BSC PITCH = .510 BSC
2 SPACES AT .170 BSC PITCH = .240 BSC
.102 BSC
1.190 BSC
.850 BSC
.680 BSC
1.000 BSC
1.020 BSC
.850 BSC
.170 BSC
.102 BSC
.250 BSC
.200 BSC
.200 BSC
1.020 BSC
.680 BSC
.510 BSC
.340 BSC
.170 BSC
8 SPACES AT .750 BSC PITCH = 6.000 BSC
4.798 BSC
.562 BSC
3.550 BSC
6.098
6.398 BSC
5.800 BSC
6.298 BSC
.510 BSC
.850 BSC
.680 BSC
.102 BSC
.170 BSC
.340 BSC
.250 BSC
.250 BSC
.680 BSC
.850 BSC
.850 BSC
1.020 BSC
.170 BSC
10.262 BSC
.500 BSC
21.719 BSC
21.169 BSC
.250 BSC
.061 .065 DIA THRU 6 "P" HOLES ⌖.020 DIA
.212 .216 DIA THRU ⌖.010 DIA.
C'DRILL .250 .260 DIA X .030 .040 DEEP
TAP 1/4-20UNC-2B X .310 MIN DEPTH FULL THD
P
.500
.130
.203 DIA ⌖.005 DIA
.312 DIA
SECTION D-D
SCALE 4/1
4 PLACES
.672
.375
.110 .116 DIA x .60 .64 DEEP
⌖.005 DIA.
19.250 BSC
9.426 BSC
.375 BSC
70 SPACES AT .125 BSC PITCH = 8.750 BSC
9.750 BSC
9.426 BSC
.338 BSC
70 SPACES AT .125 BSC PITCH = 8.750 BSC
.513 BSC
.233 .237 DIA x .310 .330 DEEP
CSK 82° x .245 .255 DIA.
TAP 1/4-28UN x .220 .240 DEEP FULL THD
⌖.005 DIA.
.1245 .1250 DIA
160 PLACES
⌖.005 DIA
.338 BSC
D
D
A
A
.230 REF
.320 REF
.560 REF
SECTION A-A
SCALE 4/1
40 PLACES
6.426 BSC
46 SPACES AT .125 BSC PITCH = 5.750 BSC
16 SPACES AT .125 BSC PITCH = 2.000 BSC
2.250 BSC
2.500 BSC
8 SPACES AT .750 BSC PITCH = 6.000 BSC
.062 BSC
3.750 BSC
16 SPACES AT .125 BSC PITCH = 2.000 BSC
2.875 BSC
B
B
.187 .188 DIA THRU
⌖.001 DIA
2 "B" PLACES
.338 BSC
.500 BSC 9 PLACES
.750 BSC
.125 BSC
.250 BSC 9 PLACES
.375 BSC
.250 BSC
.250 BSC
.500 BSC
.500 BSC
19.125 BSC
19.875 BSC
1.000 BSC
.125 BSC
.195 .199 DIA THRU
CBORE .312 DIA X .250 DEEP
2 PLACES (TOP AND BOTTOM)
⌖.005 DIA
.233 .237 DIA x .310 .330 DEEP
CSK 82° x .245 .255 DIA
TAP 1/4-28UN-2B x .220 .240 DEEP FULL THD
40 PLACES (SEE SECTION A-A)
⌖.004 DIA
.072 .073 DIA 2812 PLACES
⌖.002 DIA
.125 DIA
.672 REF
.312
.130 REF
.500 REF
.125 DIA

INCHES
PHOTOGRAPHIC SCALE ONLY

1004213 F

SYM	DESCRIPTION	DATE	APPROVAL
A	REVISED PER TDRR 03221	9-17-63	WK
B	REVISED PER TDRR 03848	10-10-63	WK
C	REVISED PER TDRR 04175	10-30-63	WK
D	REVISED PER TDRR 04347	10-30-63	WK
E	REVISED PER TDRR 05112	12/9/63	
F	REVISED PER TDRR 05775		WK

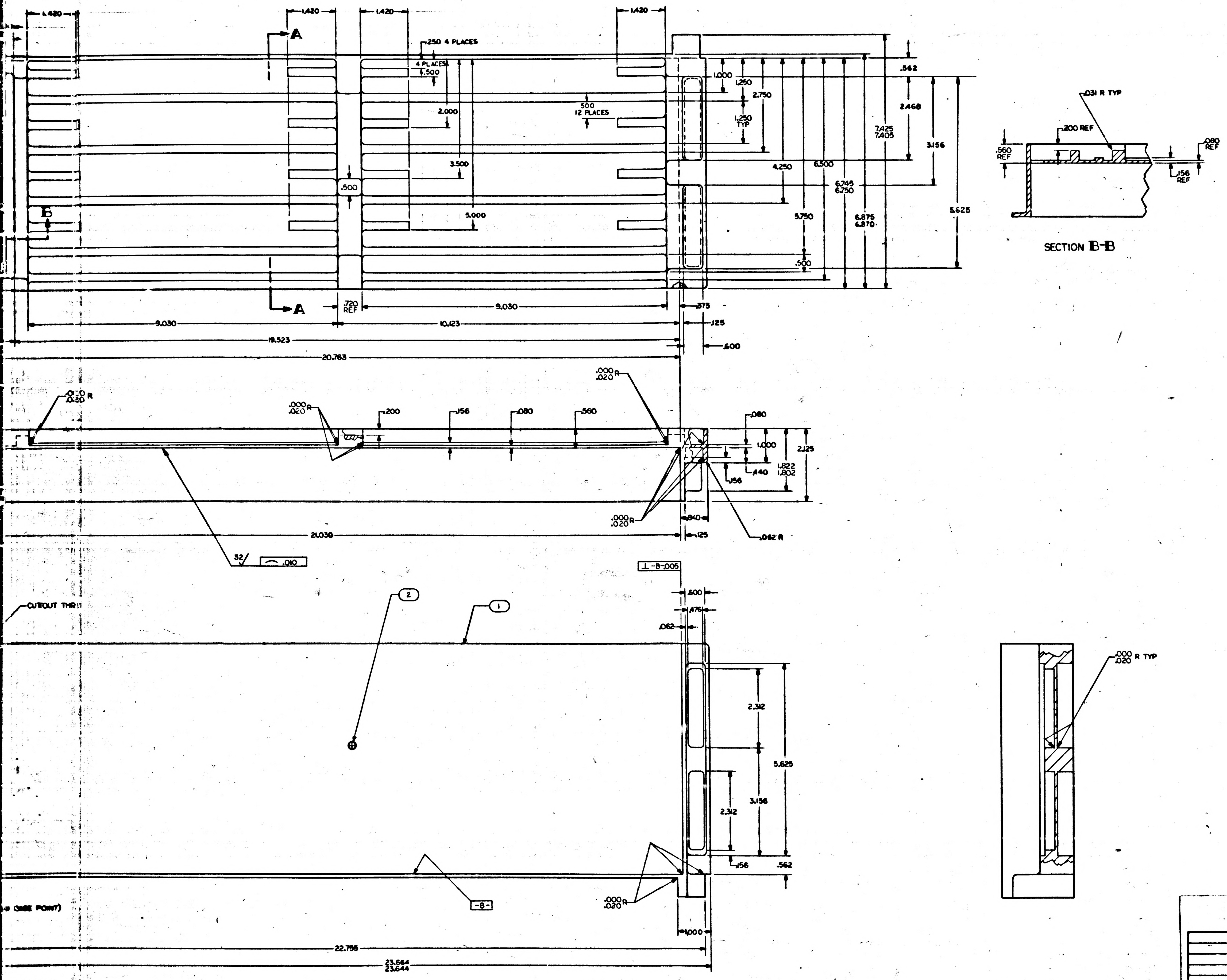

1.430
1.420
1.420
1.420
A
A
B
.250 4 PLACES
4 PLACES
.500
2.000
.500 12 PLACES
3.500
.500
5.000
1.000
1.250
2.750
1.250 TYP
4.250
6.500
6.745
6.750
5.750
.500
7.425
7.405
6.875
6.870
.562
2.468
3.156
5.625
.720 REF
9.030
9.030
10.123
19.523
20.763
.375
.125
.600
SECTION B-B
.031 R TYP
.200 REF
.560 REF
.080 REF
.156 REF
.010 R .030
.000 R .020
.200
.156
.080
.560
.080
1.000
2.125
1.822
1.802
.440
.156
.840
.125
.062 R
21.030
32
.010
⊥ -B- .005
2
1
CUTOUT THRU
.600
.476
.062
2.312
5.625
3.156
2.312
.156
.562
-B-
.000 R .020
BASE POINT
1.000
22.755
23.664
23.644
.000 R .020 TYP

QTY REQD	PART OR IDENTIFYING NO.	NOMENCLATURE OR DESCRIPTION	FIND NO.
1	NAS1394CA-08	INSERT, THREADED	2
1	1004213-1	TRAY A, LEFT HAND	1

LIST OF MATERIALS

1003126	
NEXT ASSY	USED ON
APPLICATION	

UNLESS OTHERWISE SPECIFIED
DIMENSIONS ARE IN INCHES
TOLERANCES ON
FRACTIONS ± — DECIMALS ±.005 ANGLES ± 0° 30'
DO NOT SCALE THIS DRAWING
MATERIAL SEE NOTE 2
HEAT TREATMENT —
FINAL FINISH —

MIT INSTRUMENTATION LAB
CAMBRIDGE, MASS.
DRAWN Mahoney DATE 6-3-63
CHECKED
APPROVAL
APPROVAL
NASA APPROVAL 7-31-63
MIT APPROVAL

MANNED SPACECRAFT CENTER
HOUSTON, TEXAS

TRAY A
LEFT HAND

CODE IDENT NO. —
SIZE J
NASA DRAWING NO. 1004213
SCALE 1/1
WT
SHEET 1 OF 2

1004213 F SH 1 OF 2

MASTER

NOTICE — WHEN GOVERNMENT DRAWINGS, SPECIFICATIONS, OR OTHER DATA ARE USED FOR ANY PURPOSE OTHER THAN IN CONNECTION WITH A DEFINITELY RELATED GOVERNMENT PROCUREMENT OPERATION, THE UNITED STATES GOVERNMENT THEREBY INCURS NO RESPONSIBILITY NOR ANY OBLIGATION WHATSOEVER AND THE FACT THAT THE GOVERNMENT MAY HAVE FORMULATED, FURNISHED, OR IN ANY WAY SUPPLIED THE SAID DRAWINGS, SPECIFICATIONS OR OTHER DATA IS NOT TO BE REGARDED BY IMPLICATION OR OTHERWISE AS IN ANY MANNER LICENSING THE HOLDER OR ANY OTHER PERSON OR CORPORATION, OR CONVEYING ANY RIGHTS OR PERMISSION TO MANUFACTURE, USE, OR SELL ANY PATENTED INVENTION THAT MAY IN ANY WAY BE RELATED THERETO.

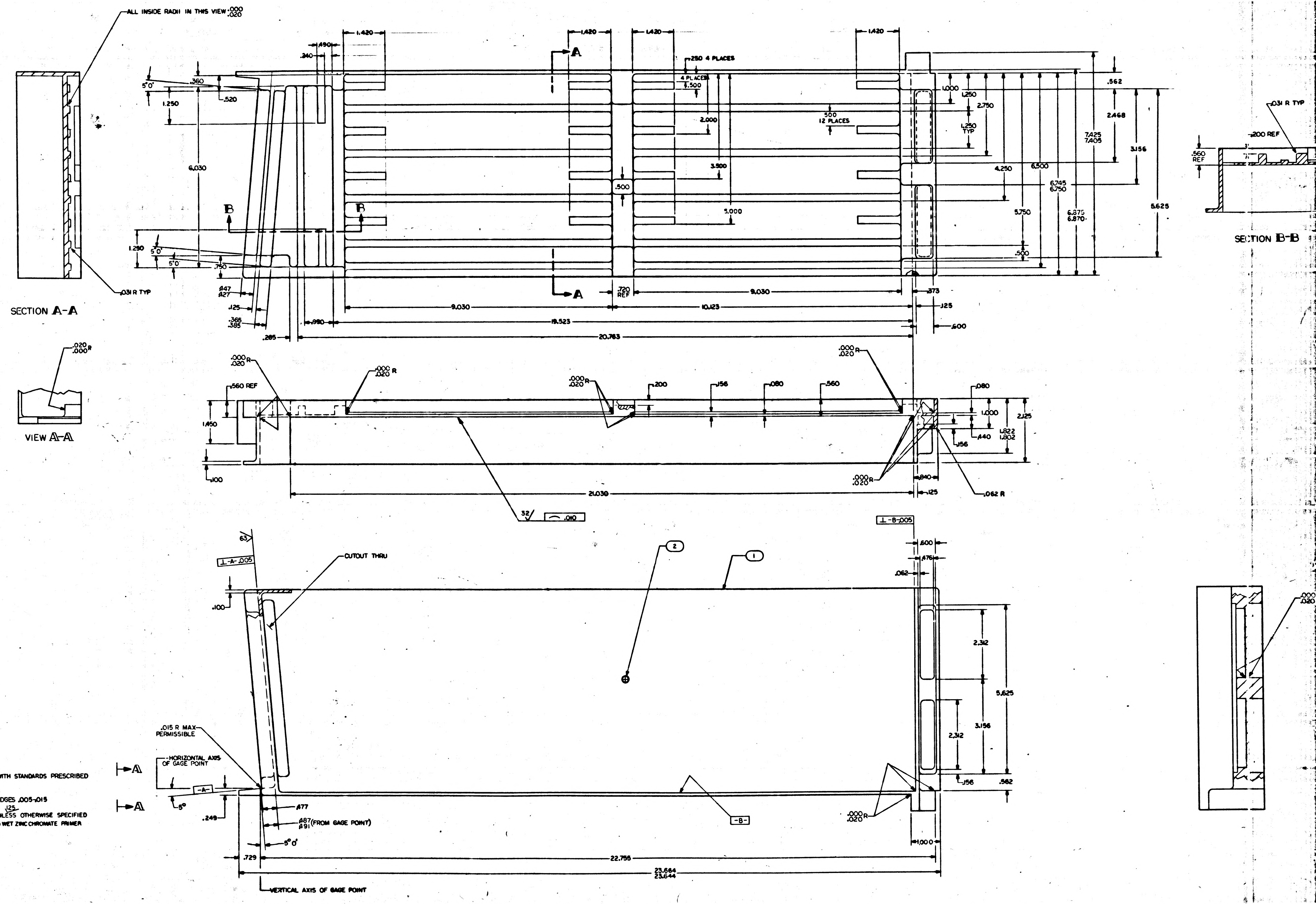
ALL INSIDE RADII IN THIS VIEW .000 .020
SECTION A-A
.031 R TYP
.020 .000 R
VIEW A-A
A
B
1.420
.490
.240
5°0'
.360
.520
1.250
6.030
1.290
.750
.447
.427
.125
.365
.385
.285
.980
9.030
19.523
20.763
.250 4 PLACES
4 PLACES .500
2.000
3.900
5.000
.500
.500 12 PLACES
1.250 TYP
.720 REF
10.123
1.000
2.750
2.468
3.156
4.250
6.500
5.750
7.425 7.405
6.745 6.750
6.875 6.870
5.625
.562
.373
.125
.600
.031 R TYP
.200 REF
.560 REF
SECTION B-B
.000 .020 R
.560 REF
1.450
.100
.200
.156
.080
.560
.080
1.000
2.125
1.822 1.802
.440
.156
.840
.125
.062 R
21.030
32
.010
⊥ -B- .005
⊥ -A- .005
63
CUTOUT THRU
2
1
.600
.476
.062
.100
2.312
5.625
3.156
2.312
.156
.562
.015 R MAX PERMISSIBLE
HORIZONTAL AXIS OF GAGE POINT
-A-
-B-
5°
.249
.477
.487 .491 (FROM GAGE POINT)
5°0'
.729
22.755
23.664 23.644
1.000
VERTICAL AXIS OF GAGE POINT

NOTES-

1. INTERPRET DRAWING IN ACCORDANCE WITH STANDARDS PRESCRIBED BY MIL-D-70327
2. MAKE FROM NASA DWG 1004150
3. REMOVE BURRS AND BREAK SHARP EDGES .005-.015
4. UNLESS OTHERWISE SPECIFIED, FINISH 125
5. ALL RADII AND FILLETS TO BE .125 UNLESS OTHERWISE SPECIFIED
6. COAT FIND NO.1 & NO 2 WITH MIL-P-8585 WET ZINC CHROMATE PRIMER
7. INSTALL FIND NO.2 / ND1002121

1004213F SH 1 OF 2

SYM	DESCRIPTION	DATE	APPROVAL
A	REVISED PER TDRR 03237	[illegible]	[illegible]
B	REVISED PER TDRR 03848	10-16-63	[illegible]
C	REVISED PER TDRR 04175	10-31-63	[illegible]
D	REVISED PER TDRR 04348	[illegible]	[illegible]
E	REVISED PER TDRR 05112	12/10/63	[illegible]
F	REVISED PER TDRR 05775	[illegible]	[illegible]

1004213 F

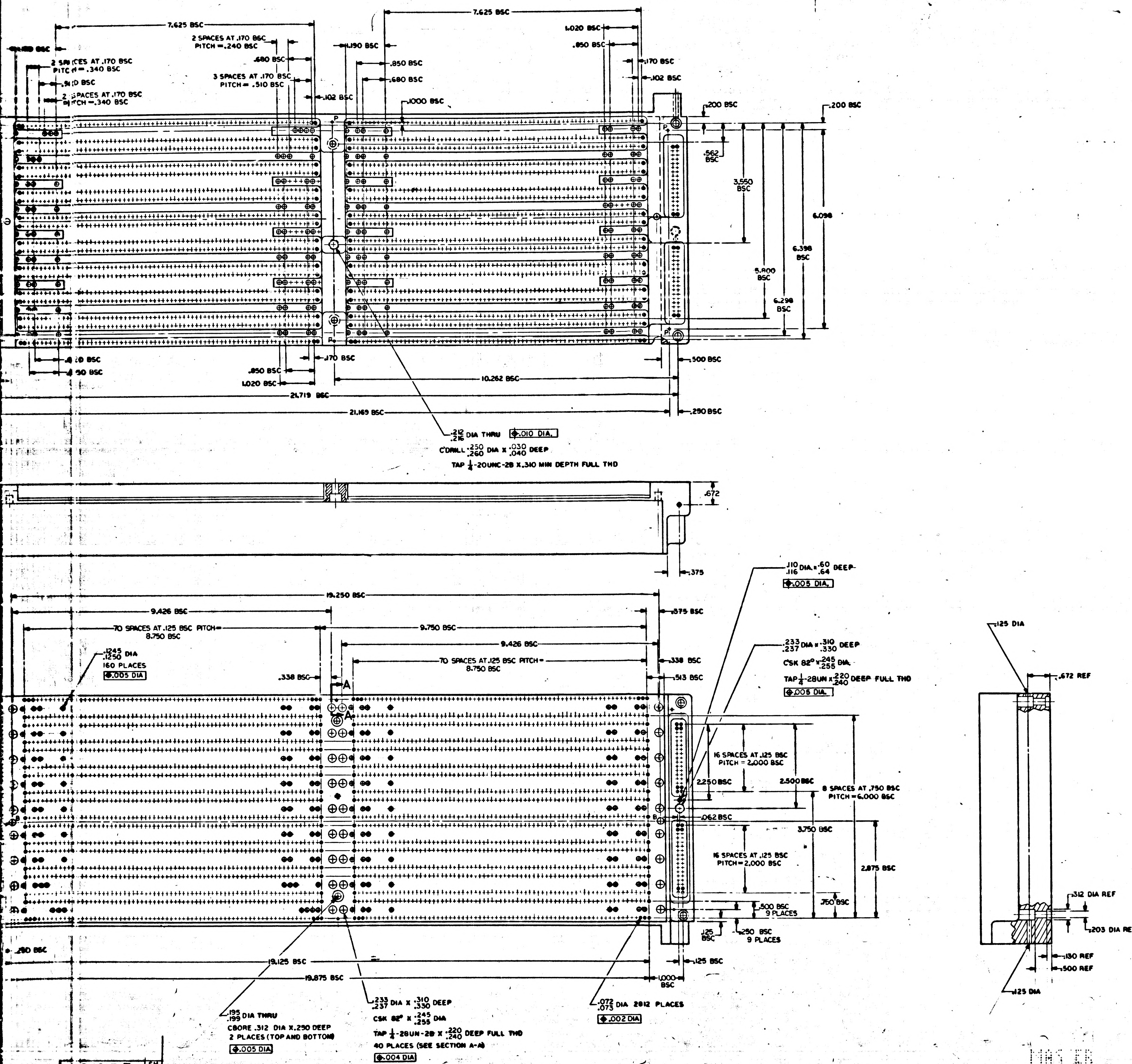
7.625 BSC
2 SPACES AT .170 BSC PITCH = .240 BSC
.680 BSC
3 SPACES AT .170 BSC PITCH = .510 BSC
.102 BSC
2 SPACES AT .170 BSC PITCH = .340 BSC
1.190 BSC
.850 BSC
.680 BSC
.1000 BSC
1.020 BSC
.850 BSC
.170 BSC
.102 BSC
.200 BSC
.200 BSC
.562 BSC
3.550 BSC
6.098
6.398 BSC
5.800 BSC
6.298 BSC
P
.170 BSC
.850 BSC
1.020 BSC
.500 BSC
10.262 BSC
21.719 BSC
21.169 BSC
.290 BSC
.212/.216 DIA THRU ⌖.010 DIA.
C'DRILL .250/.260 DIA X .030/.040 DEEP
TAP 1/4-20UNC-2B X .310 MIN DEPTH FULL THD
.672
.375
.110/.116 DIA. X .60/.64 DEEP ⌖.005 DIA.
19.250 BSC
9.426 BSC
70 SPACES AT .125 BSC PITCH = 8.750 BSC
9.750 BSC
9.426 BSC
70 SPACES AT .125 BSC PITCH = 8.750 BSC
.375 BSC
.338 BSC
.513 BSC
.338 BSC
.1245/.1250 DIA 160 PLACES ⌖.005 DIA
A
.233/.237 DIA X .310/.330 DEEP
CSK 82° X .245/.255 DIA.
TAP 1/4-28UN X .220/.240 DEEP FULL THD ⌖.005 DIA.
16 SPACES AT .125 BSC PITCH = 2.000 BSC
2.250 BSC
2.500 BSC
8 SPACES AT .750 BSC PITCH = 6.000 BSC
.062 BSC
3.750 BSC
16 SPACES AT .125 BSC PITCH = 2.000 BSC
2.875 BSC
.750 BSC
.500 BSC 9 PLACES
.125 BSC
.250 BSC 9 PLACES
.125 BSC
1.000 BSC
.280 BSC
19.125 BSC
19.875 BSC
.195/.199 DIA THRU
CBORE .312 DIA X .250 DEEP 2 PLACES (TOP AND BOTTOM) ⌖.005 DIA
.233/.237 DIA X .310/.330 DEEP
CSK 82° X .245/.255 DIA
TAP 1/4-28UN-2B X .220/.240 DEEP FULL THD 40 PLACES (SEE SECTION A-A) ⌖.004 DIA
.072/.073 DIA 2812 PLACES ⌖.002 DIA
.125 DIA
.672 REF
.312 DIA REF
.203 DIA REF
.130 REF
.500 REF
.125 DIA

QTY REQD	PART OR IDENTIFYING NO.	NOMENCLATURE OR DESCRIPTION	FIND NO.
LIST OF MATERIALS			

1003126	
NEXT ASSY	USED ON
APPLICATION	

UNLESS OTHERWISE SPECIFIED DIMENSIONS ARE IN INCHES
TOLERANCES ON
FRACTIONS ± —— DECIMALS ± .005 ANGLES ± 0°30'
DO NOT SCALE THIS DRAWING
MATERIAL SEE NOTE 2
HEAT TREATMENT ——
FINAL FINISH ——

MIT INSTRUMENTATION LAB CAMBRIDGE MASS.
DRAWN [illegible] DATE 23 July 63
CHECKED [illegible] 7/30/63
APPROVAL W. C. [illegible] 7/30/63
APPROVAL [illegible] 7/31/63
NASA APPROVAL W J [illegible] 7-31-63
MIT APPROVAL [illegible] 7/31/63

MANNED SPACECRAFT CENTER
HOUSTON, TEXAS

TRAY A
LEFT HAND

CODE IDENT NO. —— SIZE J NASA DRAWING NO. 1004213
SCALE 1/1 WT SHEET 2 OF 2

1004213 F SH 2 OF 2

MASTER

E-2

NOTICE — WHEN GOVERNMENT DRAWINGS, SPECIFICATIONS, OR OTHER DATA ARE USED FOR ANY PURPOSE OTHER THAN IN CONNECTION WITH A DEFINITELY RELATED GOVERNMENT PROCUREMENT OPERATION, THE UNITED STATES GOVERNMENT THEREBY INCURS NO RESPONSIBILITY NOR ANY OBLIGATION WHATSOEVER; AND THE FACT THAT THE GOVERNMENT MAY HAVE FORMULATED, FURNISHED, OR IN ANY WAY SUPPLIED THE SAID DRAWINGS, SPECIFICATIONS, OR OTHER DATA IS NOT TO BE REGARDED BY IMPLICATION OR OTHERWISE AS IN ANY MANNER LICENSING THE HOLDER OR ANY OTHER PERSON OR CORPORATION, OR CONVEYING ANY RIGHTS OR PERMISSION TO MANUFACTURE, USE, OR SELL ANY PATENTED INVENTION THAT MAY IN ANY WAY BE RELATED THERETO.

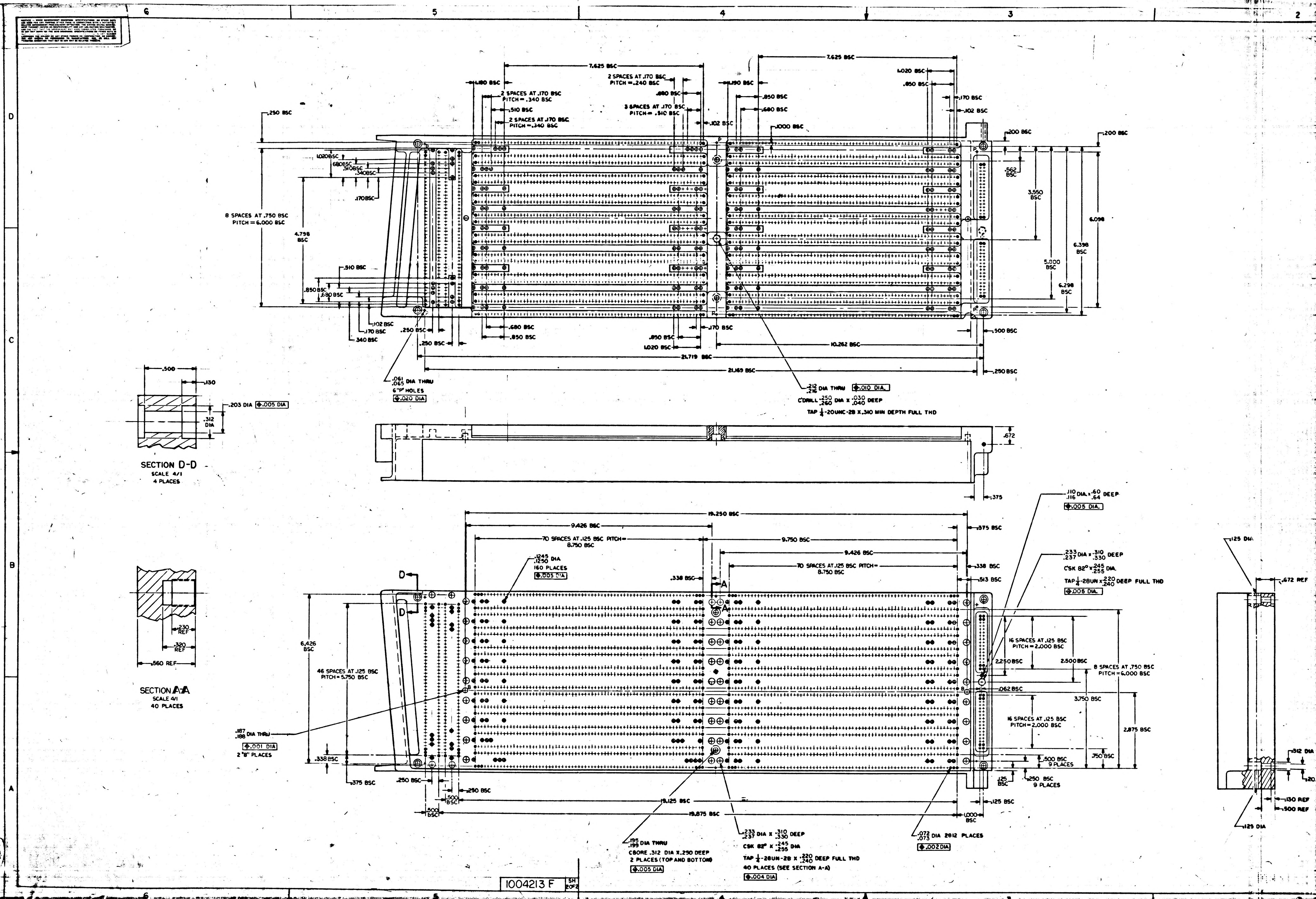
6
5
4
3
2
D
C
B
A
7.625 BSC
2 SPACES AT .170 BSC PITCH = .240 BSC
.180 BSC
2 SPACES AT .170 BSC PITCH = .340 BSC
.510 BSC
2 SPACES AT .170 BSC PITCH = .340 BSC
.680 BSC
3 SPACES AT .170 BSC PITCH = .510 BSC
.190 BSC
.850 BSC
.680 BSC
.102 BSC
1.000 BSC
1.020 BSC
.850 BSC
.170 BSC
.102 BSC
.250 BSC
.200 BSC
.200 BSC
1.020 BSC
.680 BSC
.510 BSC
.340 BSC
.170 BSC
8 SPACES AT .750 BSC PITCH = 6.000 BSC
4.798 BSC
.562 BSC
3.550 BSC
6.098
6.398 BSC
5.000 BSC
6.298 BSC
.510 BSC
.850 BSC
.680 BSC
.102 BSC
.170 BSC
.340 BSC
.250 BSC
.250 BSC
.680 BSC
.850 BSC
.850 BSC
1.020 BSC
.170 BSC
.500 BSC
10.262 BSC
21.719 BSC
21.169 BSC
.250 BSC
.061 .065 DIA THRU
6 "P" HOLES
⌖ .020 DIA
.212 .216 DIA THRU ⌖ .010 DIA.
C'DRILL .250 .260 DIA X .030 .040 DEEP
TAP 1/4-20UNC-2B X .340 MIN DEPTH FULL THD
.500
.130
.203 DIA ⌖ .005 DIA
.312 DIA
SECTION D-D
SCALE 4/1
4 PLACES
.672
.375
.230 REF
.320 REF
.560 REF
SECTION A-A
SCALE 4/1
40 PLACES
19.250 BSC
9.426 BSC
.375 BSC
70 SPACES AT .125 BSC PITCH = 8.750 BSC
9.750 BSC
.1245 .1250 DIA
160 PLACES
⌖ .005 DIA
9.426 BSC
.338 BSC
70 SPACES AT .125 BSC PITCH = 8.750 BSC
.338 BSC
.513 BSC
D
D
A
A
6.426 BSC
46 SPACES AT .125 BSC PITCH = 5.750 BSC
.187 .188 DIA THRU
⌖ .001 DIA
2 "B" PLACES
.338 BSC
.375 BSC
.250 BSC
.500 BSC
.250 BSC
.500 BSC
19.125 BSC
19.875 BSC
.110 .116 DIA x .60 .64 DEEP
⌖ .005 DIA.
.233 .237 DIA x .310 .330 DEEP
CSK 82° x .245 .255 DIA.
TAP 1/4-28UN x .220 .240 DEEP FULL THD
⌖ .005 DIA.
16 SPACES AT .125 BSC PITCH = 2.000 BSC
2.250 BSC
2.500 BSC
8 SPACES AT .750 BSC PITCH = 6.000 BSC
.062 BSC
3.750 BSC
16 SPACES AT .125 BSC PITCH = 2.000 BSC
2.875 BSC
.750 BSC
.500 BSC 9 PLACES
.125 BSC
.250 BSC 9 PLACES
.125 BSC
1.000 BSC
.195 .199 DIA THRU
CBORE .312 DIA X .250 DEEP
2 PLACES (TOP AND BOTTOM)
⌖ .005 DIA
.233 .237 DIA X .310 .330 DEEP
CSK 82° X .245 .255 DIA
TAP 1/4-28UN-2B X .220 .240 DEEP FULL THD
40 PLACES (SEE SECTION A-A)
⌖ .004 DIA
.072 .073 DIA 2812 PLACES
⌖ .002 DIA
.125 DIA
.672 REF
.312 DIA
.130 REF
.500 REF
.125 DIA

1004213 F SH 2 OF 2

SYM	DESCRIPTION	DATE	APPROVAL
A	REVISED PER TDRR 03227	[illegible]	[illegible]
B	REVISED PER TDRR 03844	10-10-[illegible]	[illegible]
C	REVISED PER TDRR 04175	[illegible]	[illegible]
D	REVISED PER TDRR [illegible]	[illegible]	[illegible]
E	REVISED PER TDRR 05112	[illegible]	[illegible]
F	REVISED PER TDRR 05[illegible]5	[illegible]	[illegible]
G	REVISED PER TDRR 07502 DRF CHK	4/4/69	[illegible]
H	REVISED PER TDRR 08018 DR CHK	4/23/69	Awc

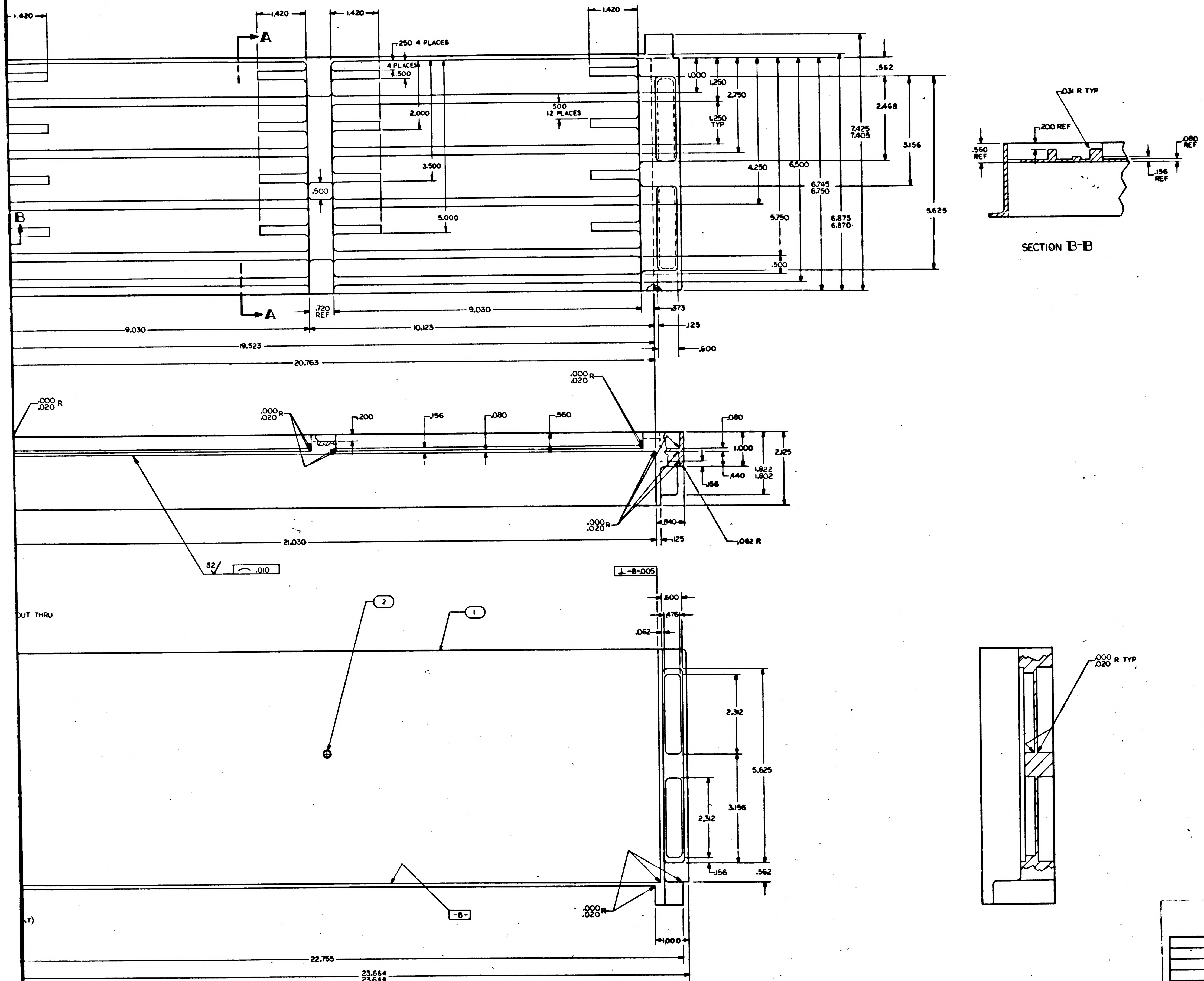

4
3
2
1.420
1.420
1.420
1.420
A
A
B
.250 4 PLACES
4 PLACES
.500
2.000
.500
12 PLACES
3.500
.500
5.000
1.000
1.250
2.750
1.250
TYP
.562
2.468
7.425
7.405
3.156
4.250
6.500
6.745
6.750
5.750
6.875
6.870
5.625
.500
.720
REF
9.030
.373
9.030
10.123
.125
19.523
.600
20.763
.031 R TYP
.200 REF
.560
REF
.080
REF
.156
REF
SECTION B-B
.000
.020 R
.200
.156
.080
.560
.080
1.000
2.125
1.822
1.802
.440
.156
.840
.125
.062 R
21.030
32
.010
⊥ -B- .005
2
1
OUT THRU
.600
.476
.062
2.312
5.625
3.156
2.312
.156
.562
-B-
1.000
22.755
23.664
23.644
.000
.020 R TYP

QTY REQD	PART OR IDENTIFYING NO.	NOMENCLATURE OR DESCRIPTION	FIND NO.
1	NAS1394CA-08	INSERT, THREADED	2
1	1004213-1	TRAY A, LEFT HAND	1

LIST OF MATERIALS

NEXT ASSY	USED ON
1003126	

APPLICATION

UNLESS OTHERWISE SPECIFIED DIMENSIONS ARE IN INCHES
TOLERANCES ON
FRACTIONS ± DECIMALS ±.005 ANGLES ±0°30'
DO NOT SCALE THIS DRAWING
MATERIAL SEE NOTE 2
HEAT TREATMENT —
FINAL FINISH —

MIT INSTRUMENTATION LAB
CAMBRIDGE, MASS
DRAWN Mahoney DATE 6-27-63
CHECKED [illegible]
APPROVAL [illegible]
APPROVAL [illegible]
NASA APPROVAL W J R[illegible] 7-31-63
MIT APPROVAL [illegible]

MANNED SPACECRAFT CENTER
HOUSTON, TEXAS

TRAY A
LEFT HAND

CODE IDENT NO. —
SIZE J
NASA DRAWING NO. 1004213
SCALE 1/1
WT
SHEET 1 OF 2

NOTICE – WHEN GOVERNMENT DRAWINGS, SPECIFICATIONS, OR OTHER DATA ARE USED FOR ANY PURPOSE OTHER THAN IN CONNECTION WITH A DEFINITELY RELATED GOVERNMENT PROCUREMENT OPERATION, THE UNITED STATES GOVERNMENT THEREBY INCURS NO RESPONSIBILITY NOR ANY OBLIGATION WHATSOEVER; AND THE FACT THAT THE GOVERNMENT MAY HAVE FORMULATED, FURNISHED, OR IN ANY WAY SUPPLIED THE SAID DRAWINGS, SPECIFICATIONS, OR OTHER DATA IS NOT TO BE REGARDED BY IMPLICATION OR OTHERWISE AS IN ANY MANNER LICENSING THE HOLDER OR ANY OTHER PERSON OR CORPORATION, OR CONVEYING ANY RIGHTS OR PERMISSION TO MANUFACTURE, USE, OR SELL ANY PATENTED INVENTION THAT MAY IN ANY WAY BE RELATED THERETO.

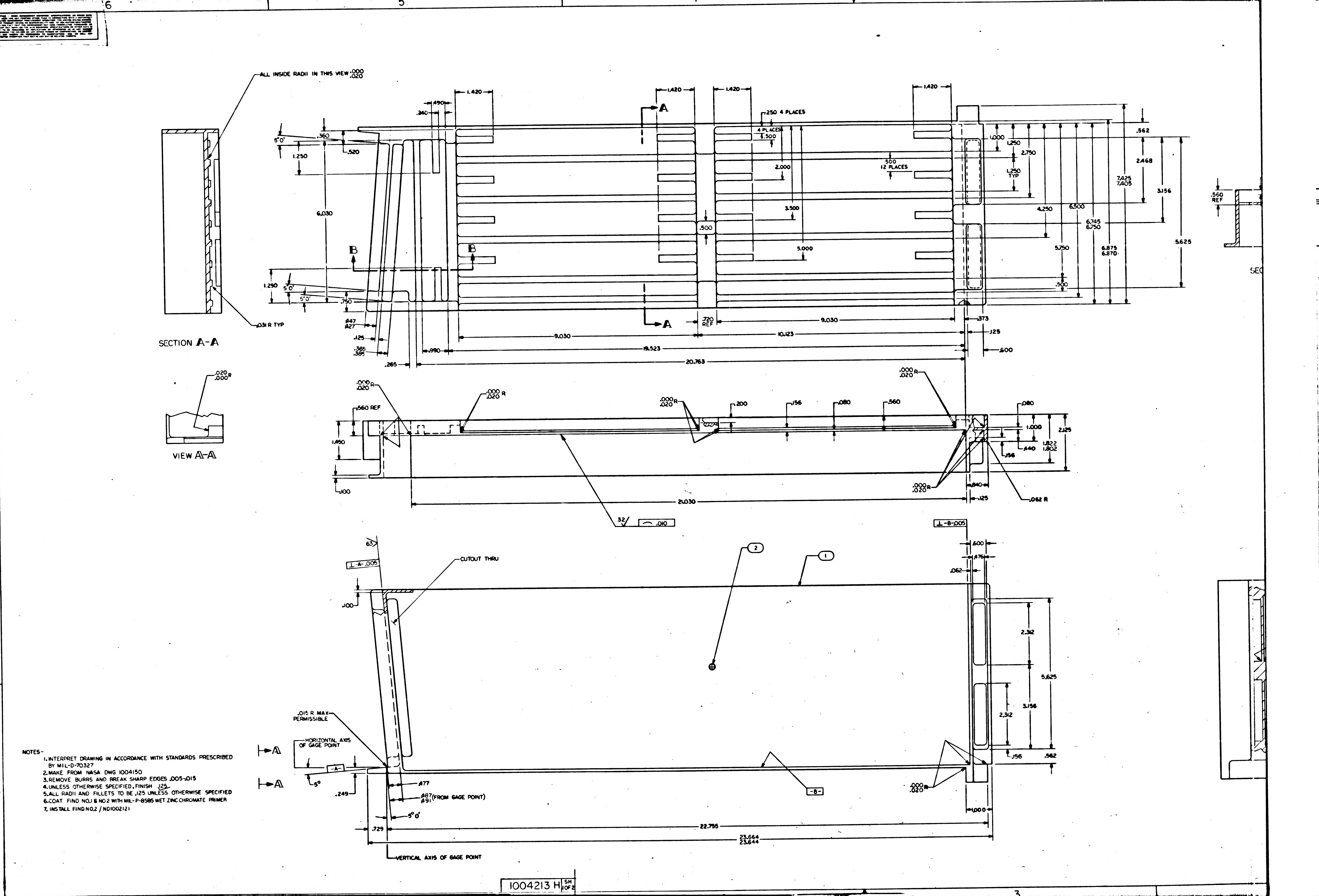
6
5
4
3
D
C
B
A
ALL INSIDE RADII IN THIS VIEW .000 .020
SECTION A-A
.031 R TYP
VIEW A-A
.020 R .000
A
B
1.420
.490
.240
.360
5°0'
.520
1.250
6.030
.750
.447 .427
.125
.365 .385
.265
.990
1.420
.250 4 PLACES
4 PLACES .500
2.000
3.500
5.000
.500
.500 12 PLACES
1.000
1.250
2.750
1.250 TYP
.562
2.468
7.425 7.405
3.156
4.250
6.500
6.745 6.750
5.750
6.875 6.870
5.625
.720 REF
9.030
10.123
19.523
20.763
.373
.125
.600
.560 REF
.000 .020 R
.000 R .020
.200
.156
.080
.560
1.450
.100
1.000
2.125
1.822 1.802
.440
.156
.840
.125
.062 R
21.030
32
.010
⊥ -B- .005
⊥ -A- .005
63
CUTOUT THRU
2
1
.600
.476
.062
.100
2.312
5.625
3.156
2.312
.562
.156
.015 R MAX PERMISSIBLE
HORIZONTAL AXIS OF GAGE POINT
-A-
5°
.249
.477
.487 .491 (FROM GAGE POINT)
5°0'
-B-
.000 .020 R
1.000
.729
22.755
23.664 23.644
VERTICAL AXIS OF GAGE POINT
SEC

NOTES-
1. INTERPRET DRAWING IN ACCORDANCE WITH STANDARDS PRESCRIBED BY MIL-D-70327
2. MAKE FROM NASA DWG 1004150
3. REMOVE BURRS AND BREAK SHARP EDGES .005-.015
4. UNLESS OTHERWISE SPECIFIED, FINISH $\sqrt{125}$
5. ALL RADII AND FILLETS TO BE .125 UNLESS OTHERWISE SPECIFIED
6. COAT FIND NO.1 & NO 2 WITH MIL-P-8585 WET ZINC CHROMATE PRIMER
7. INSTALL FIND NO.2 / ND1002121

1004213 H SH 1 OF 2

1004213 H F 1/2

SHEET 1

1004213 H

REVISIONS

SYM	DESCRIPTION	DATE	APPROVAL
A	REVISED PER TDRR 03227		
B	REVISED PER TDRR 03848		
C	REVISED PER TDRR 04175		
D	REVISED PER TDRR 04349		
E	REVISED PER TDRR 05112	12/10/63	
F	REVISED PER TDRR 05775		
G	REVISED PER TDRR 07502 DR CHK	4/2/64	
H	REVISED PER TDRR 08018 DR CHK G.R.B.	4/23/64	

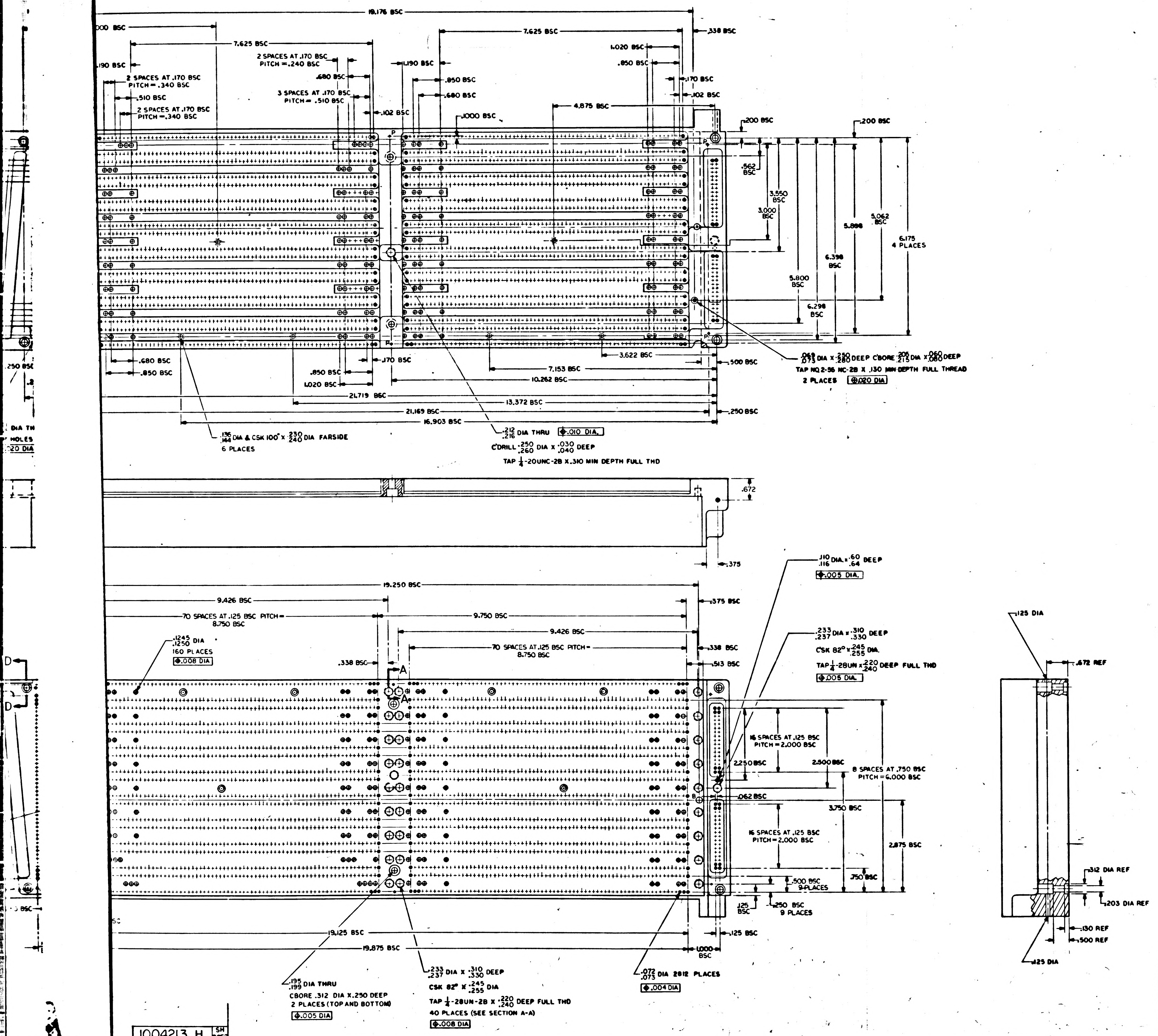

19.176 BSC
7.625 BSC
.338 BSC
2 SPACES AT .170 BSC PITCH = .340 BSC
.510 BSC
2 SPACES AT .170 BSC PITCH = .340 BSC
2 SPACES AT .170 BSC PITCH = .240 BSC
3 SPACES AT .170 BSC PITCH = .510 BSC
.680 BSC
.102 BSC
1.190 BSC
.850 BSC
.680 BSC
1.000 BSC
1.020 BSC
.170 BSC
4.875 BSC
.200 BSC
.562 BSC
3.550 BSC
3.000 BSC
5.062 BSC
5.888
6.175 4 PLACES
6.398 BSC
5.800 BSC
6.298 BSC
3.622 BSC
.500 BSC
7.153 BSC
10.262 BSC
13.372 BSC
21.719 BSC
21.169 BSC
16.903 BSC
.250 BSC
.680 BSC
.850 BSC
.850 BSC
1.020 BSC
.170 BSC
.069/.073 DIA x .250/.280 DEEP C'BORE .205/.215 DIA x .050/.060 DEEP
TAP NO 2-56 NC-2B X .130 MIN DEPTH FULL THREAD
2 PLACES ⌖.020 DIA
.212/.216 DIA THRU ⌖.010 DIA.
C'DRILL .250/.260 DIA x .030/.040 DEEP
TAP 1/4-20UNC-2B X .310 MIN DEPTH FULL THD
.136/.144 DIA & CSK 100° x .230/.240 DIA FARSIDE
6 PLACES
.672
.375
.110/.116 DIA x .60/.64 DEEP
⌖.005 DIA.
19.250 BSC
9.426 BSC
.375 BSC
70 SPACES AT .125 BSC PITCH = 8.750 BSC
9.750 BSC
9.426 BSC
.233/.237 DIA x .310/.330 DEEP
CSK 82° x .245/.255 DIA.
TAP 1/4-28UN x .220/.240 DEEP FULL THD
⌖.005 DIA.
.1245/.1250 DIA
160 PLACES
⌖.008 DIA
.338 BSC
70 SPACES AT .125 BSC PITCH = 8.750 BSC
.338 BSC
.513 BSC
A
A
16 SPACES AT .125 BSC PITCH = 2.000 BSC
2.250 BSC
2.500 BSC
8 SPACES AT .750 BSC PITCH = 6.000 BSC
.062 BSC
3.750 BSC
16 SPACES AT .125 BSC PITCH = 2.000 BSC
2.875 BSC
.750 BSC
.500 BSC 9-PLACES
.125 BSC
.250 BSC 9 PLACES
.125 BSC
19.125 BSC
19.875 BSC
1.000 BSC
.195/.199 DIA THRU
CBORE .312 DIA X .250 DEEP
2 PLACES (TOP AND BOTTOM)
⌖.005 DIA
.233/.237 DIA X .310/.330 DEEP
CSK 82° X .245/.255 DIA
TAP 1/4-28UN-2B X .220/.240 DEEP FULL THD
40 PLACES (SEE SECTION A-A)
⌖.008 DIA
.072/.073 DIA 2812 PLACES
⌖.004 DIA
.125 DIA
.672 REF
.312 DIA REF
.203 DIA REF
.130 REF
.500 REF
.125 DIA

1004213 H SH 2 OF 2

QTY REQD	PART OR IDENTIFYING NO.	NOMENCLATURE OR DESCRIPTION	FIND NO.

LIST OF MATERIALS

UNLESS OTHERWISE SPECIFIED
DIMENSIONS ARE IN INCHES
TOLERANCES ON
FRACTIONS ± — DECIMALS ± .005 ANGLES ± 0°30'
DO NOT SCALE THIS DRAWING
MATERIAL
SEE NOTE 2
HEAT TREATMENT —
FINAL FINISH —

1003126
NEXT ASSY | USED ON
APPLICATION

M I T
INSTRUMENTATION LAB
CAMBRIDGE MASS
DRAWN DATE 23 July 63
CHECKED 7/31/63
APPROVAL W.C. Turner 7/30/63
APPROVAL 7/31/63
NASA APPROVAL 7-31-63
MIT APPROVAL

MANNED SPACECRAFT CENTER
HOUSTON, TEXAS

TRAY A
LEFT HAND

CODE IDENT NO. —
SIZE J
NASA DRAWING NO. 1004213
SCALE 1/1
WT
SHEET 2 OF 2

F 2 / 2

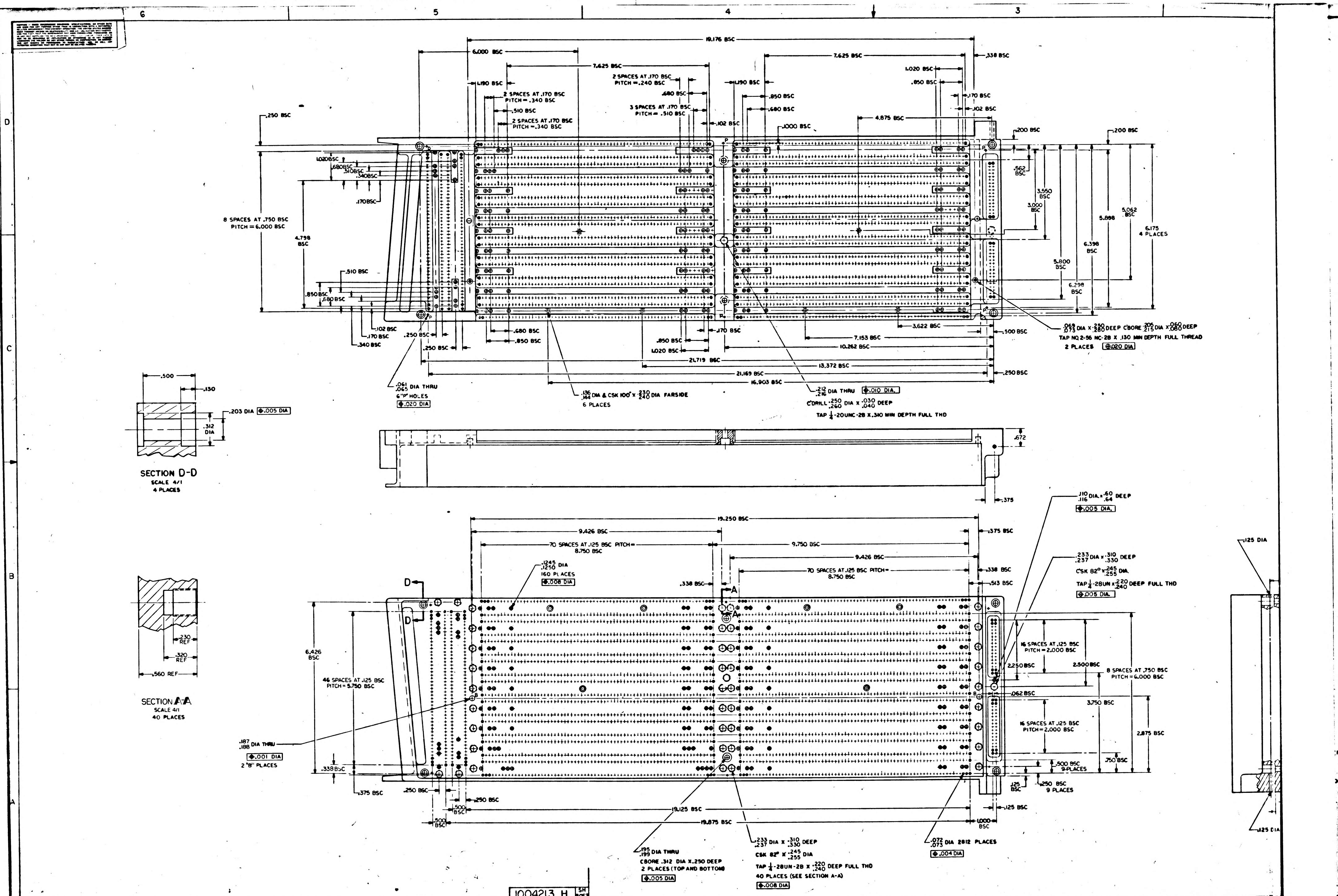

6
5
4
3
D
C
B
A
19.176 BSC
6.000 BSC
7.625 BSC
7.625 BSC
.338 BSC
1.190 BSC
2 SPACES AT .170 BSC PITCH = .340 BSC
2 SPACES AT .170 BSC PITCH = .240 BSC
3 SPACES AT .170 BSC PITCH = .510 BSC
2 SPACES AT .170 BSC PITCH = .340 BSC
.510 BSC
.680 BSC
.102 BSC
1.000 BSC
4.875 BSC
1.020 BSC
.850 BSC
.170 BSC
.680 BSC
.250 BSC
.200 BSC
.200 BSC
8 SPACES AT .750 BSC PITCH = 6.000 BSC
4.798 BSC
1.020BSC
.680BSC
.510BSC
.340BSC
.170BSC
.510 BSC
.850 BSC
.680 BSC
.102 BSC
.170 BSC
.340 BSC
.250 BSC
.250 BSC
.680 BSC
.850 BSC
.850 BSC
1.020 BSC
.170 BSC
21.719 BSC
21.169 BSC
16.903 BSC
13.372 BSC
10.262 BSC
7.153 BSC
3.622 BSC
.500 BSC
.250 BSC
.562 BSC
3.550 BSC
3.000 BSC
5.898
5.062 BSC
6.175 4 PLACES
6.398 BSC
5.800 BSC
6.298 BSC
P
.061 .065 DIA THRU 6 "P" HOLES ⌖.020 DIA
.136 .144 DIA & CSK 100° X .230 .240 DIA FARSIDE 6 PLACES
.212 .216 DIA THRU ⌖.010 DIA.
C'DRILL .250 .260 DIA X .030 .040 DEEP
TAP 1/4-20UNC-2B X .310 MIN DEPTH FULL THD
.069 .073 DIA X .250 .280 DEEP C'BORE .205 .215 DIA X .060 .080 DEEP
TAP NO 2-56 NC-2B X .130 MIN DEPTH FULL THREAD
2 PLACES ⌖.020 DIA
.500
.130
.203 DIA ⌖.005 DIA
.312 DIA
SECTION D-D
SCALE 4/1
4 PLACES
.672
.375
.230 REF
.320 REF
.560 REF
SECTION A-A
SCALE 4/1
40 PLACES
19.250 BSC
9.426 BSC
.375 BSC
70 SPACES AT .125 BSC PITCH = 8.750 BSC
9.750 BSC
9.426 BSC
70 SPACES AT .125 BSC PITCH = 8.750 BSC
.338 BSC
.338 BSC
.513 BSC
.1245 .1250 DIA 160 PLACES ⌖.008 DIA
D
A
6.426 BSC
46 SPACES AT .125 BSC PITCH = 5.750 BSC
.187 .188 DIA THRU ⌖.001 DIA 2 "B" PLACES
B
.338 BSC
.375 BSC
.250 BSC
.250 BSC
.500 BSC
.500 BSC
19.125 BSC
19.875 BSC
1.000 BSC
.125 BSC
.125 BSC
.250 BSC 9 PLACES
.500 BSC 9 PLACES
.750 BSC
2.875 BSC
3.750 BSC
8 SPACES AT .750 BSC PITCH = 6.000 BSC
16 SPACES AT .125 BSC PITCH = 2.000 BSC
16 SPACES AT .125 BSC PITCH = 2.000 BSC
2.250 BSC
2.500 BSC
.062 BSC
.110 .116 DIA X .60 .64 DEEP ⌖.005 DIA.
.233 .237 DIA X .310 .330 DEEP
CSK 82° X .245 .255 DIA
TAP 1/4-28UN X .220 .240 DEEP FULL THD ⌖.005 DIA.
.195 .199 DIA THRU
C'BORE .312 DIA X .250 DEEP
2 PLACES (TOP AND BOTTOM) ⌖.005 DIA
.233 .237 DIA X .310 .330 DEEP
CSK 82° X .245 .255 DIA
TAP 1/4-28UN-2B X .220 .240 DEEP FULL THD
40 PLACES (SEE SECTION A-A) ⌖.008 DIA
.072 .073 DIA 2812 PLACES ⌖.004 DIA
.125 DIA
.125 DIA

1004213 H SH 2 OF 2

1004213 H F1/2

SHEET 2

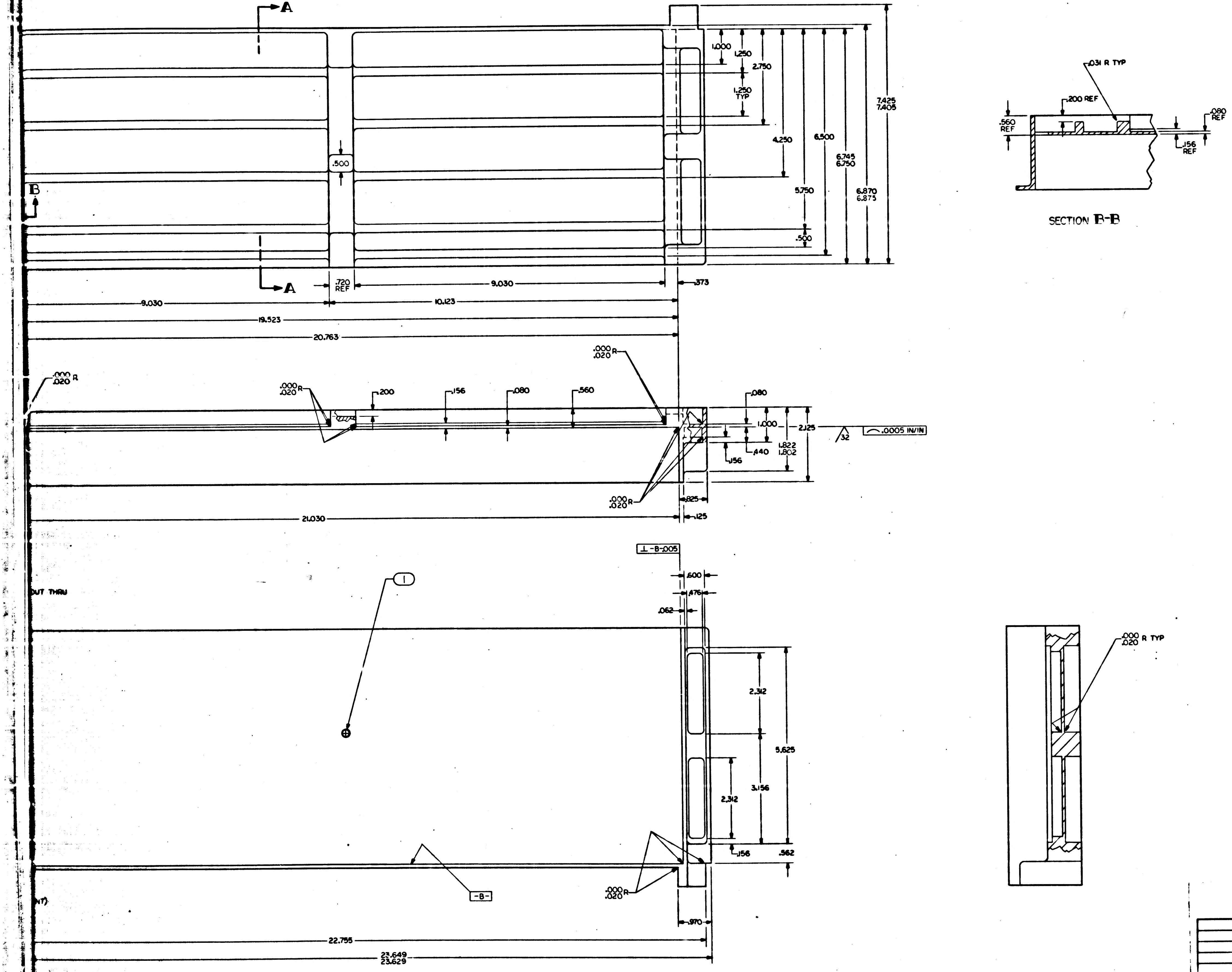
A
A
B
.500
1.000
1.250
2.750
1.250 TYP
4.250
6.500
6.745
6.750
7.425
7.405
5.750
6.870
6.875
.500
.720 REF
9.030
.373
9.030
10.123
19.523
20.763
.031 R TYP
.200 REF
.560 REF
.080 REF
.156 REF
SECTION B-B
.000 R .020
.200
.156
.080
.560
.080
1.000
2.125
.0005 IN/IN
32
.440
1.822
1.802
.156
.825
.125
21.030
⊥ -B- .005
.600
.476
.062
1
CUT THRU
2.312
5.625
3.156
2.312
.156
.562
-B-
.970
.000 R TYP .020
22.755
23.649
23.629

1	NAS1394C-08L	INSERT	1
QTY REQD	PART OR IDENTIFYING N	NOMENCLATURE OR DESCRIPTION	FIND NO.

LIST OF MATERIALS

UNLESS OTHERWISE SPECIFIED
DIMENSIONS ARE IN INCHES
TOLERANCES ON
FRACTIONS ± — DECIMALS ±.005 ANGLES ±1/2°
DO NOT SCALE THIS DRAWING
MATERIAL SEE NOTE 2
HEAT TREATMENT —
FINAL FINISH —

NEXT ASSY	USED ON
1003126	

APPLICATION

MIT
INSTRUMENTATION LAB
CAMBRIDGE, MASS
DRAWN Mahoney DATE 6-5-63
CHECKED Henry 7/26/63
APPROVAL W. Turner 7/30/63
APPROVAL Duggan 7/31/63
NASA APPROVAL W. J. Rhine 7-31-63
MIT APPROVAL

MANNED SPACECRAFT CENTER
HOUSTON, TEXAS

TRAY A
LEFT HAND

CODE IDENT NO. SIZE NASA DRAWING NO. 1004213
SCALE 1/1 WT SHEET 1 OF 2

PHOTOGRAPHIC SCALE ONLY
INCHES

E2

NOTICE — WHEN GOVERNMENT DRAWINGS, SPECIFICATIONS, OR OTHER DATA ARE USED FOR ANY PURPOSE OTHER THAN IN CONNECTION WITH A DEFINITELY RELATED GOVERNMENT PROCUREMENT OPERATION, THE UNITED STATES GOVERNMENT THEREBY INCURS NO RESPONSIBILITY NOR ANY OBLIGATION WHATSOEVER; AND THE FACT THAT THE GOVERNMENT MAY HAVE FORMULATED, FURNISHED, OR IN ANY WAY SUPPLIED THE SAID DRAWINGS, SPECIFICATIONS, OR OTHER DATA IS NOT TO BE REGARDED BY IMPLICATION OR OTHERWISE AS IN ANY MANNER LICENSING THE HOLDER OR ANY OTHER PERSON OR CORPORATION, OR CONVEYING ANY RIGHTS OR PERMISSION TO MANUFACTURE, USE, OR SELL ANY PATENTED INVENTION THAT MAY IN ANY WAY BE RELATED THERETO.

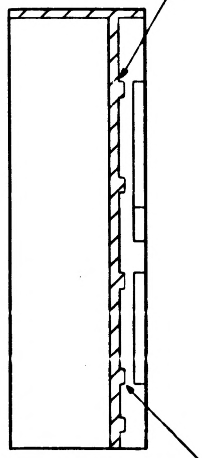

SECTION A-A

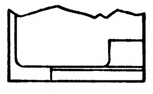

VIEW A-A

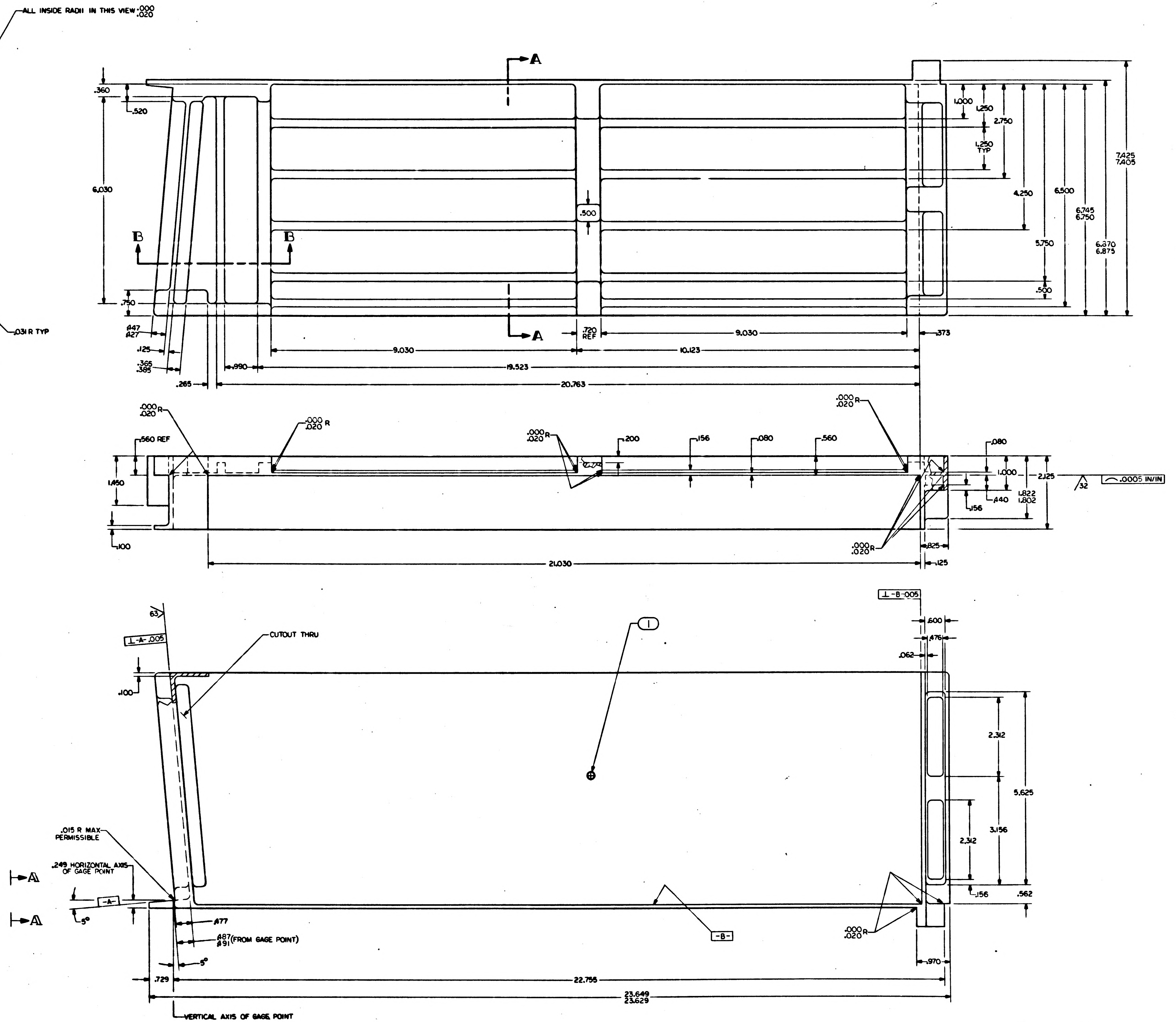
ALL INSIDE RADII IN THIS VIEW .000 .020
.031 R TYP
A
A
B
B
.360
.520
6.030
.750
.447 .427
.125
.365 .385
.265
.990
.500
.720 REF
9.030
9.030
10.123
19.523
20.763
.373
1.000
1.250
1.250 TYP
2.750
4.250
5.750
.500
6.500
6.745 6.750
6.870 6.875
7.425 7.405
.000 .020 R
.000 .020 R
.000 .020 R
.000 .020 R
.560 REF
1.450
.100
.200
.156
.080
.560
.080
1.000
2.125
.440
.156
1.822 1.802
32
.0005 IN/IN
.000 .020 R
.825
.125
21.030
⊥ -B- .005
.600
.476
.062
1
63
⊥ -A- .005
CUTOUT THRU
.100
2.312
2.312
3.156
5.625
.156
.562
.015 R MAX PERMISSIBLE
.249 HORIZONTAL AXIS OF GAGE POINT
A
A
-A-
5°
.477
.487 .491 (FROM GAGE POINT)
5°
-B-
.000 .020 R
.970
.729
22.755
23.649 23.629
VERTICAL AXIS OF GAGE POINT

NOTES-

1. INTERPRET DRAWING IN ACCORDANCE WITH STANDARDS PRESCRIBED BY MIL-D-70327
2. MAKE FROM NASA DWG 1004150
3. REMOVE BURRS AND BREAK SHARP EDGES .005-.015
4. UNLESS OTHERWISE SPECIFIED, FINISH 125
5. ALL RADII AND FILLETS TO BE .125 UNLESS OTHERWISE SPECIFIED
6. COAT FIND NO.1 WITH MIL-P-8585 WET ZINC CHROMATE PRIMER

1004213

INCHES
PHOTOGRAPHIC SCALE ONLY

1004213

SYM	DESCRIPTION	DATE	APPROVAL

REVISIONS TDRA 02282

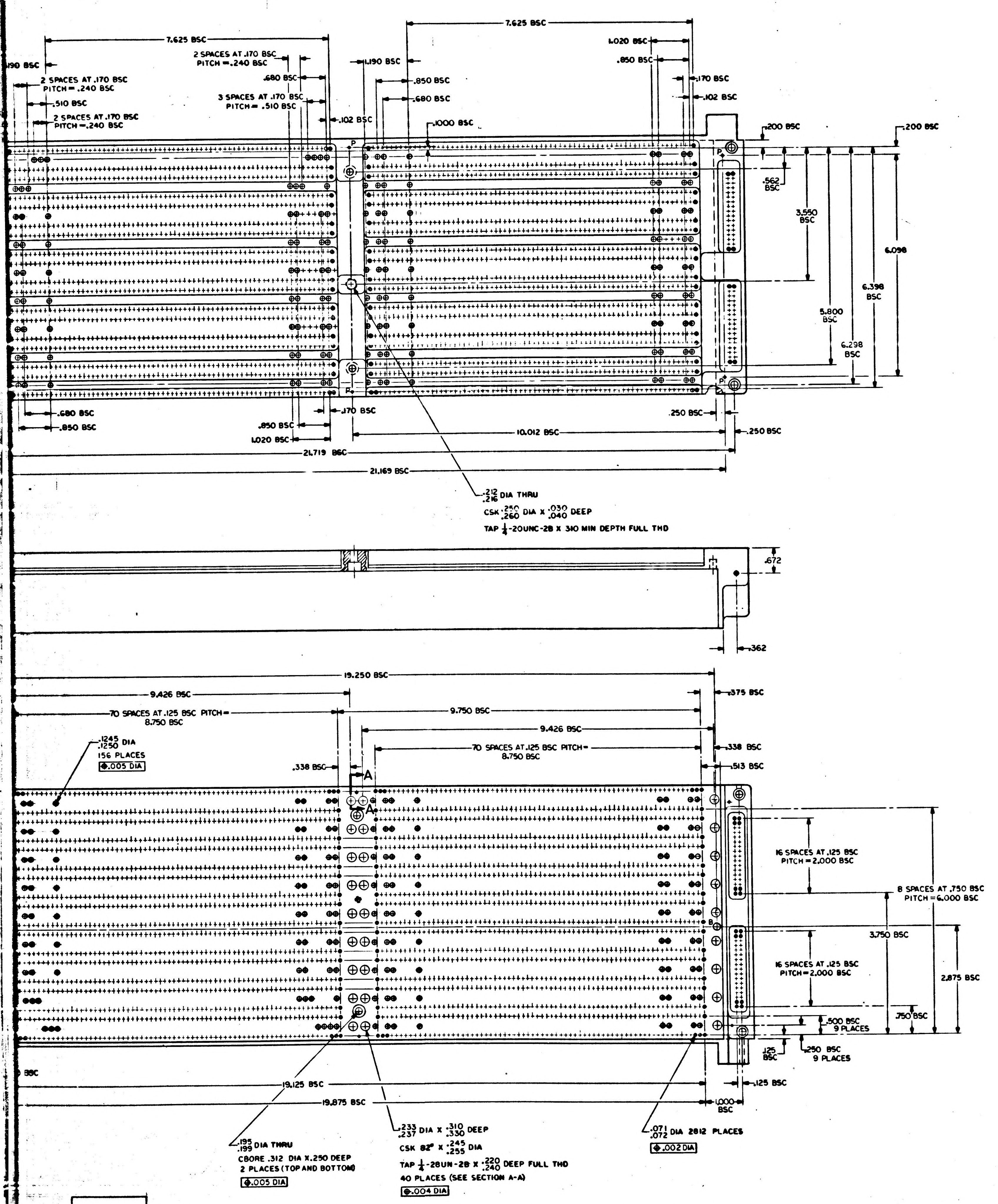
4
3
2
7.625 BSC
1.190 BSC
2 SPACES AT .170 BSC PITCH = .240 BSC
.510 BSC
2 SPACES AT .170 BSC PITCH = .240 BSC
2 SPACES AT .170 BSC PITCH = .240 BSC
.680 BSC
3 SPACES AT .170 BSC PITCH = .510 BSC
.102 BSC
1.190 BSC
.850 BSC
.680 BSC
.1000 BSC
7.625 BSC
1.020 BSC
.850 BSC
.170 BSC
.102 BSC
.200 BSC
.200 BSC
P
P1
.562 BSC
3.550 BSC
5.800 BSC
6.298 BSC
6.398 BSC
6.098
.680 BSC
.850 BSC
.850 BSC
1.020 BSC
.170 BSC
.250 BSC
10.012 BSC
.250 BSC
21.719 BSC
21.169 BSC
.212/.216 DIA THRU
CSK .250/.260 DIA X .030/.040 DEEP
TAP 1/4-20UNC-2B X .310 MIN DEPTH FULL THD
.672
.362
19.250 BSC
9.426 BSC
.375 BSC
70 SPACES AT .125 BSC PITCH = 8.750 BSC
9.750 BSC
9.426 BSC
.338 BSC
70 SPACES AT .125 BSC PITCH = 8.750 BSC
.338 BSC
.513 BSC
.1245/.1250 DIA
156 PLACES
⌖ .005 DIA
A
A
B
16 SPACES AT .125 BSC PITCH = 2.000 BSC
8 SPACES AT .750 BSC PITCH = 6.000 BSC
3.750 BSC
16 SPACES AT .125 BSC PITCH = 2.000 BSC
2.875 BSC
.750 BSC
.500 BSC 9 PLACES
.125 BSC
.250 BSC 9 PLACES
.125 BSC
BSC
19.125 BSC
19.875 BSC
1.000 BSC
.195/.199 DIA THRU
CBORE .312 DIA X .250 DEEP
2 PLACES (TOP AND BOTTOM)
⌖ .005 DIA
.233/.237 DIA X .310/.330 DEEP
CSK 82° X .245/.255 DIA
TAP 1/4-28UN-2B X .220/.240 DEEP FULL THD
40 PLACES (SEE SECTION A-A)
⌖ .004 DIA
.071/.072 DIA 2812 PLACES
⌖ .002 DIA
4
3

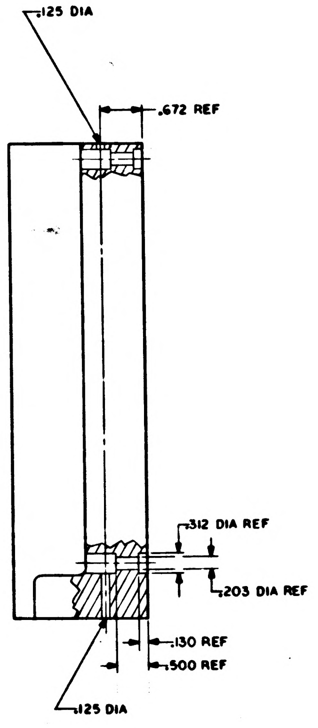
.125 DIA
.672 REF
.312 DIA REF
.203 DIA REF
.130 REF
.500 REF
.125 DIA

QTY REQD	PART OR IDENTIFYING NO.	NOMENCLATURE OR DESCRIPTION	FIND NO.

LIST OF MATERIALS

NEXT ASSY	USED ON
1003126	

APPLICATION

UNLESS OTHERWISE SPECIFIED
DIMENSIONS ARE IN INCHES
TOLERANCES ON
FRACTIONS ± —//— DECIMALS ± .005 ANGLES ± 1/2
DO NOT SCALE THIS DRAWING

MATERIAL
SEE NOTE 2

HEAT TREATMENT
—//—

FINAL FINISH
—//—

MIT
INSTRUMENTATION LAB
CAMBRIDGE, MASS

DRAWN Mahoney DATE 23 July 63
CHECKED 7/31/63
APPROVAL W. Turner 7/30/63
APPROVAL 7/30/63
NASA APPROVAL W.J. 7-31-63
MIT APPROVAL 7/31/63

MANNED SPACECRAFT CENTER
HOUSTON, TEXAS

TRAY A
LEFT HAND

CODE IDENT NO.
SIZE J
NASA DRAWING NO. 1004213
SCALE 1/1
WT
SHEET 2 OF 2

INCHES
PHOTOGRAPHIC SCALE ONLY

E-2

1004213

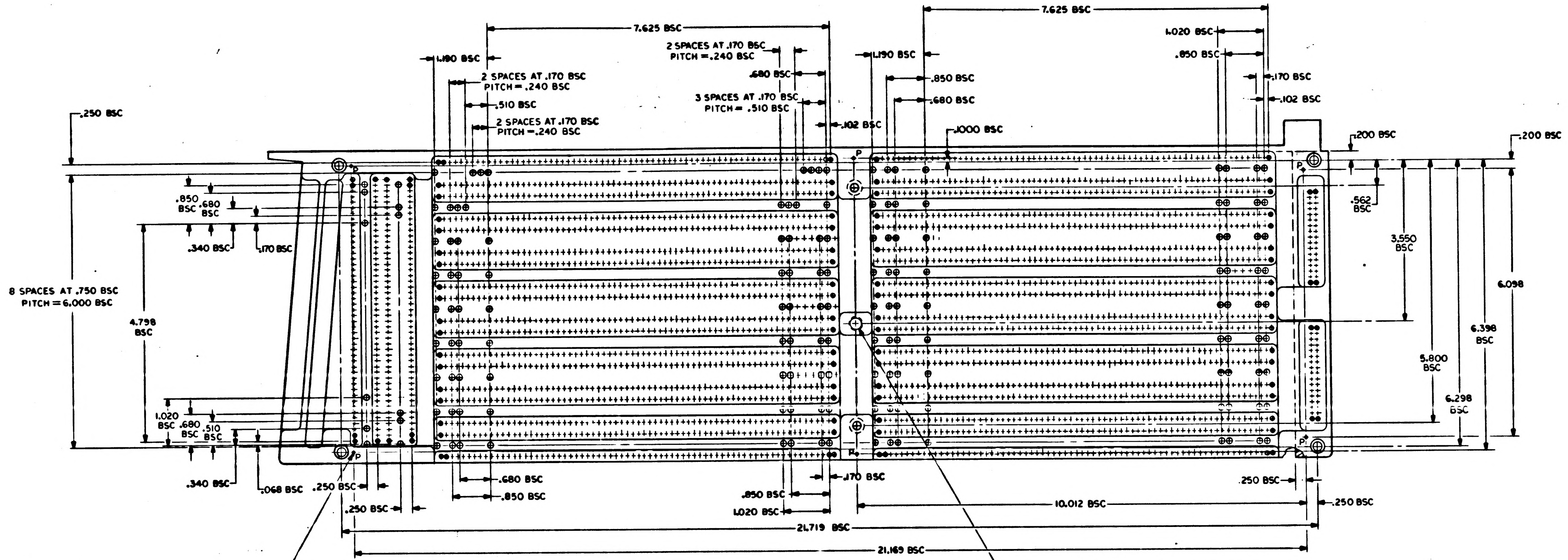
7.625 BSC
1.190 BSC
2 SPACES AT .170 BSC PITCH = .240 BSC
.510 BSC
2 SPACES AT .170 BSC PITCH = .240 BSC
.680 BSC
3 SPACES AT .170 BSC PITCH = .510 BSC
.102 BSC
1.190 BSC
.850 BSC
.680 BSC
1.000 BSC
7.625 BSC
1.020 BSC
.850 BSC
.170 BSC
.102 BSC
.200 BSC
.200 BSC
.250 BSC
.850 BSC
.680 BSC
.340 BSC
.170 BSC
8 SPACES AT .750 BSC PITCH = 6.000 BSC
4.798 BSC
1.020 BSC
.680 BSC
.510 BSC
.340 BSC
.068 BSC
.250 BSC
.250 BSC
.680 BSC
.850 BSC
.850 BSC
1.020 BSC
.170 BSC
10.012 BSC
.250 BSC
.250 BSC
21.719 BSC
21.169 BSC
.562 BSC
3.550 BSC
5.800 BSC
6.098
6.398 BSC
6.298 BSC
P

.061/.065 DIA THRU
6 "P" HOLES
⌖ .004 DIA

.212/.216 DIA THRU
CSK .250/.260 DIA X .030/.040 DEEP
TAP 1/4-20UNC-2B X .310 MIN DEPTH FULL THD

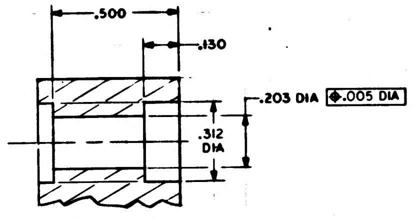
.500
.130
.203 DIA ⌖ .005 DIA
.312 DIA

SECTION D-D
SCALE 4/1
4 PLACES

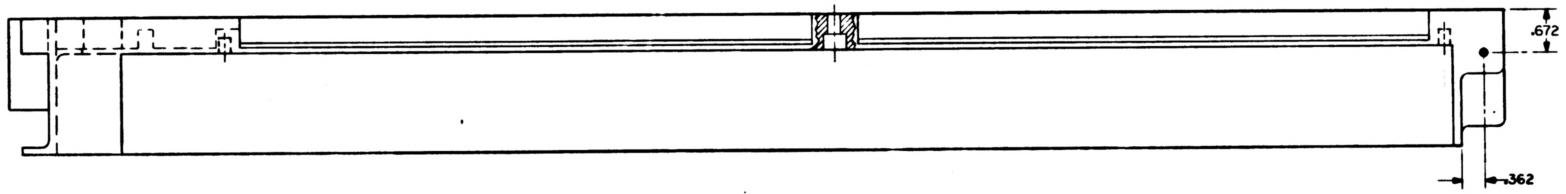

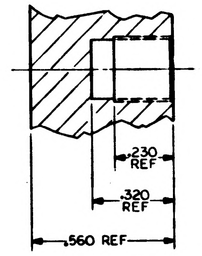
.230 REF
.320 REF
.560 REF

SECTION A-A
SCALE 4/1
40 PLACES

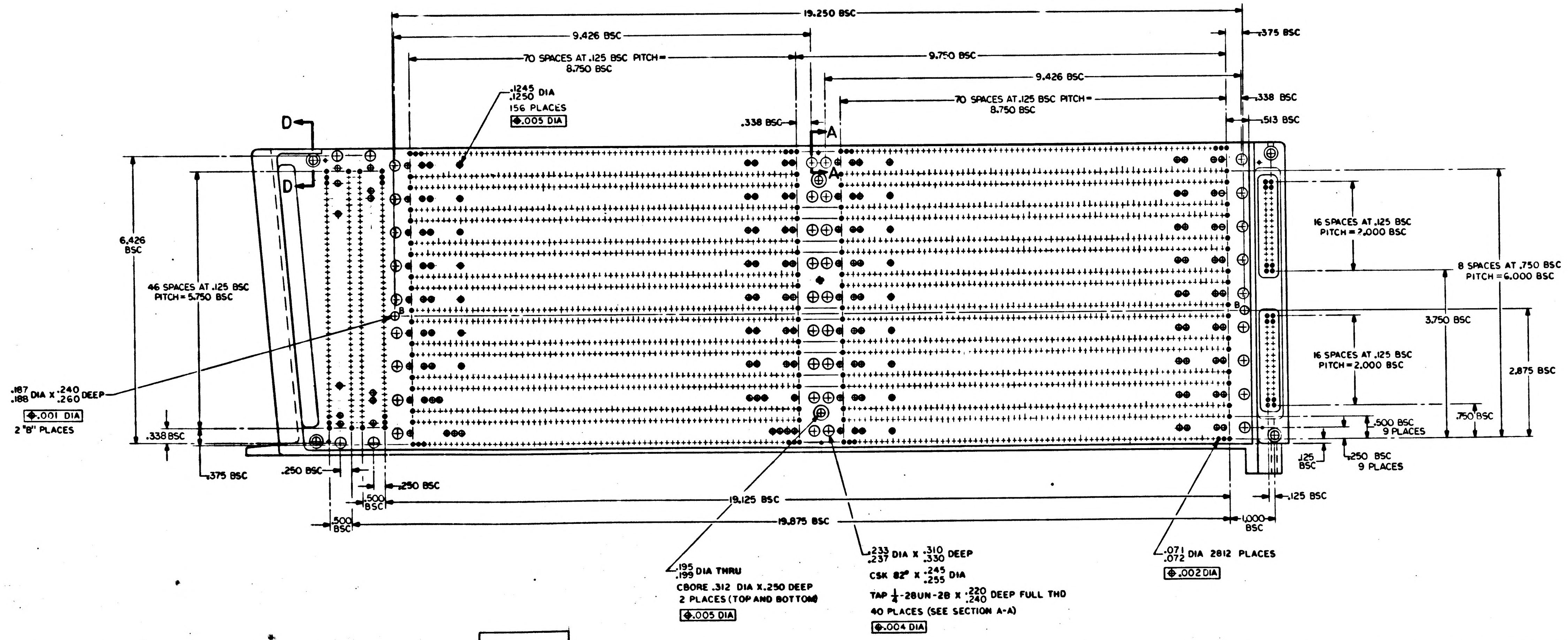
19.250 BSC
9.426 BSC
.375 BSC
70 SPACES AT .125 BSC PITCH = 8.750 BSC
9.750 BSC
9.426 BSC
.1245/.1250 DIA
156 PLACES
⌖ .005 DIA
70 SPACES AT .125 BSC PITCH = 8.750 BSC
.338 BSC
.338 BSC
.513 BSC
D
D
A
A
6.426 BSC
46 SPACES AT .125 BSC PITCH = 5.750 BSC
16 SPACES AT .125 BSC PITCH = 2.000 BSC
8 SPACES AT .750 BSC PITCH = 6.000 BSC
3.750 BSC
16 SPACES AT .125 BSC PITCH = 2.000 BSC
2.875 BSC
.750 BSC
.500 BSC 9 PLACES
.125 BSC
.250 BSC 9 PLACES
.125 BSC
.187/.188 DIA X .240/.260 DEEP
⌖ .001 DIA
2 "B" PLACES
B
B
.338 BSC
.375 BSC
.250 BSC
.250 BSC
.500 BSC
.500 BSC
19.125 BSC
19.875 BSC
1.000 BSC
.195/.199 DIA THRU
CBORE .312 DIA X .250 DEEP
2 PLACES (TOP AND BOTTOM)
⌖ .005 DIA
.233/.237 DIA X .310/.330 DEEP
CSK 82° X .245/.255 DIA
TAP 1/4-28UN-2B X .220/.240 DEEP FULL THD
40 PLACES (SEE SECTION A-A)
⌖ .004 DIA
.071/.072 DIA 2812 PLACES
⌖ .002 DIA

INCHES
PHOTOGRAPHIC SCALE ONLY

F1

1004213

NOTICE – WHEN GOVERNMENT DRAWINGS, SPECIFICATIONS, OR OTHER DATA ARE USED FOR ANY PURPOSE OTHER THAN IN CONNECTION WITH A DEFINITELY RELATED GOVERNMENT PROCUREMENT OPERATION, THE UNITED STATES GOVERNMENT THEREBY INCURS NO RESPONSIBILITY NOR ANY OBLIGATION WHATSOEVER, AND THE FACT THAT THE GOVERNMENT MAY HAVE FORMULATED, FURNISHED, OR IN ANY WAY SUPPLIED THE SAID DRAWINGS, SPECIFICATIONS OR OTHER DATA IS NOT TO BE REGARDED BY IMPLICATION OR OTHERWISE AS IN ANY MANNER LICENSING THE HOLDER OR ANY OTHER PERSON OR CORPORATION, OR CONVEYING ANY RIGHTS OR PERMISSION TO MANUFACTURE, USE, OR SELL ANY PATENTED INVENTION THAT MAY IN ANY WAY BE RELATED THERETO.

REVISIONS TDRR 02695			
SYM	DESCRIPTION	DATE	APPROVAL
A	REVISED PER TDRR 03840	10-10-63	

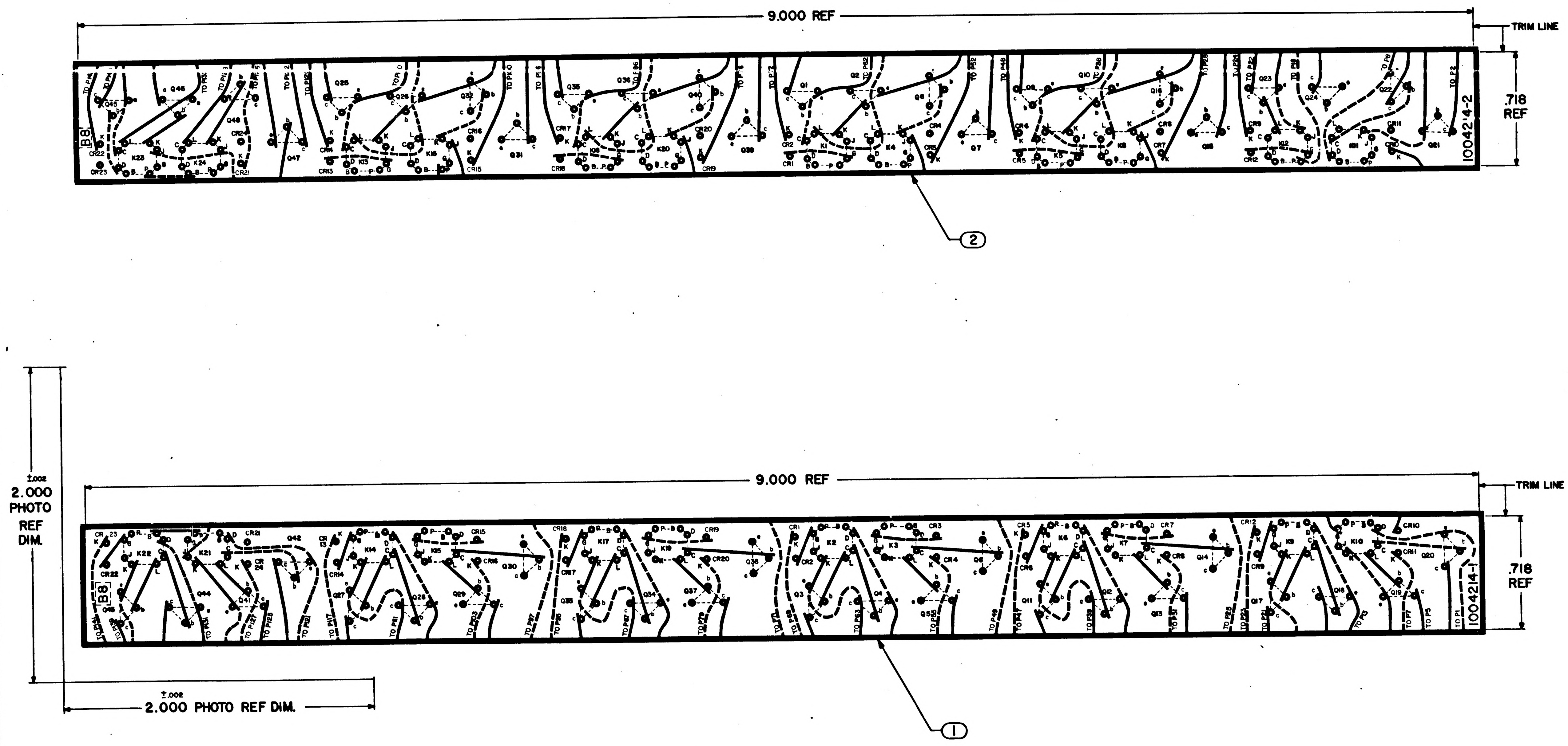

NOTES
1. INTERPRET DRAWING IN ACCORDANCE WITH STANDARDS PRESCRIBED BY MIL-D-70327
2. ORIGINAL OF THIS DRAWING OR REPRODUCTION MADE BY PROCESS OR METHOD SHALL INSURE DIMENSIONAL STABILITY. DIMENSIONAL STABILITY SHALL NOT EXCEED .001 INCH PER INCH
3. CUT TO WITHIN .010 OF TRIMLINE
4. MAKE MASTER PATTERN POSITIVE FILMS TO DIMENSIONS SHOWN
5. MATERIAL: FILM .006/.008 THICK PER L-F-340, TYPE IB, CLASS 2, STYLE IA
6. ● .045/.050 DIA PUNCH ALL HOLES

MASTER

QTY REQD	PART OR IDENTIFYING NO.	NOMENCLATURE OR DESCRIPTION	FIND NO
1	1004214-2	INSULATOR	2
1	1004214-1	INSULATOR	1

LIST OF MATERIALS

NEXT ASSY	USED ON
1003152	

APPLICATION

UNLESS OTHERWISE SPECIFIED DIMENSIONS ARE IN INCHES
TOLERANCES ON
FRACTIONS ± — DECIMALS ± — ANGLES ± —
DO NOT SCALE THIS DRAWING
MATERIAL
SEE NOTE 5
HEAT TREATMENT —
FINAL FINISH —

MIT
INSTRUMENTATION LAB
CAMBRIDGE, MASS
DWG NO CONTRACT
DRAWN Tony Gibbons DATE 18 Jul 63
CHECKED C.P. Kingsbury 19 Jul 63
APPROVAL W.B. Fennell 20 Jul 63
APPROVAL Diggs 8/21
NASA APPROVAL 8/21/63
MIT APPROVAL 8/21/63

MANNED SPACECRAFT CENTER
HOUSTON, TEXAS

INSULATOR
PHOTOGRAPHIC MASTER
CURRENT SWITCH MODULE B8

CODE IDENT NO. | SIZE E | NASA DRAWING NO. 1004214
SCALE 4/1 | WT | SHEET 1 OF 1

INCHES
PHOTOGRAPHIC SCALE ONLY

SYM	REVISIONS DESCRIPTION	DATE	APPROVAL

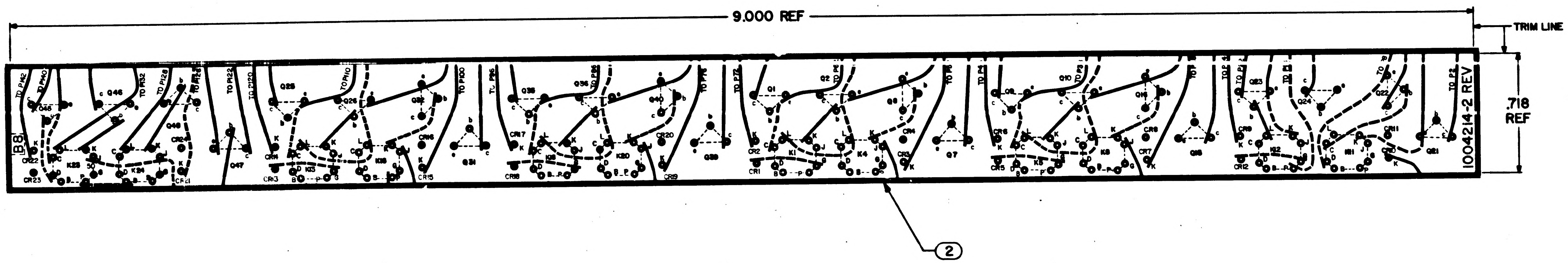

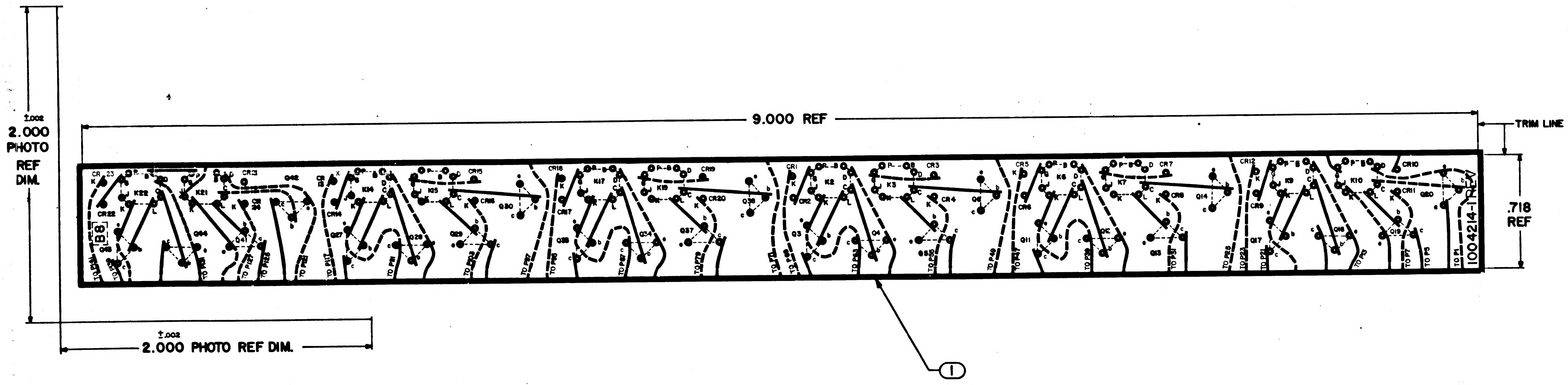

NOTES

1. INTERPRET DRAWING IN ACCORDANCE WITH STANDARDS PRESCRIBED BY MIL-D-70327
2. ORIGINAL OF THIS DRAWING OR REPRODUCTION MADE BY PROCESS OR METHOD SHALL INSURE DIMENSIONAL STABILITY. DIMENSIONAL STABILITY SHALL NOT EXCEED .001 INCH PER INCH
3. CUT TO WITHIN .010 OF TRIMLINE
4. MAKE MASTER PATTERN POSITIVE FILMS TO DIMENSIONS SHOWN
5. MATERIAL: FILM .006/.008 THICK PER L-F-340, TYPE IB, CLASS 2, STYLE IA
6. ● .046/.050 DIA PUNCH ALL HOLES

QTY REQD	PART OR IDENTIFYING NO.	NOMENCLATURE OR DESCRIPTION	FIND NO
1	1004214-2	INSULATOR	2
1	1004214-1	INSULATOR	1

LIST OF MATERIALS

NEXT ASSY	USED ON
1003182	

APPLICATION

UNLESS OTHERWISE SPECIFIED DIMENSIONS ARE IN INCHES
TOLERANCES ON FRACTIONS ± — DECIMALS ± — ANGLES ± —
DO NOT SCALE THIS DRAWING
MATERIAL SEE NOTE 5
HEAT TREATMENT —
FINAL FINISH —

MIT INSTRUMENTATION LAB
CAMBRIDGE, MASS

DRAWN DATE 10 JUL 63
CHECKED 19 Jul 63
APPROVAL 20 Jul 63
APPROVAL 8/21
NASA APPROVAL 8/21/63
MIT APPROVAL

MANNED SPACECRAFT CENTER
HOUSTON, TEXAS

INSULATOR PHOTOGRAPHIC MASTER
CURRENT SWITCH MODULE B8

CODE IDENT NO. SIZE E NASA DRAWING NO. 1004214
SCALE 4/1 WT SHEET 1 OF 1

MASTER

INCHES
PHOTOGRAPHIC SCALE ONLY

NOTICE — WHEN GOVERNMENT DRAWINGS, SPECIFICATIONS, OR OTHER DATA ARE USED FOR ANY PURPOSE OTHER THAN IN CONNECTION WITH A DEFINITELY RELATED GOVERNMENT PROCUREMENT OPERATION, THE UNITED STATES GOVERNMENT THEREBY INCURS NO RESPONSIBILITY NOR ANY OBLIGATION WHATSOEVER, AND THE FACT THAT THE GOVERNMENT MAY HAVE FORMULATED, FURNISHED, OR IN ANY WAY SUPPLIED THE SAID DRAWINGS, SPECIFICATIONS OR OTHER DATA IS NOT TO BE REGARDED BY IMPLICATION OR OTHERWISE AS IN ANY MANNER LICENSING THE HOLDER OR ANY OTHER PERSON OR CORPORATION, OR CONVEYING ANY RIGHTS OR PERMISSION TO MANUFACTURE, USE, OR SELL ANY PATENTED INVENTION THAT MAY IN ANY WAY BE RELATED THERETO.

REVISIONS 02394

SYM	DESCRIPTION	DATE	APPROVAL
A	CHANGED PER TDRR 02903	7-5-63	RPK JW

①

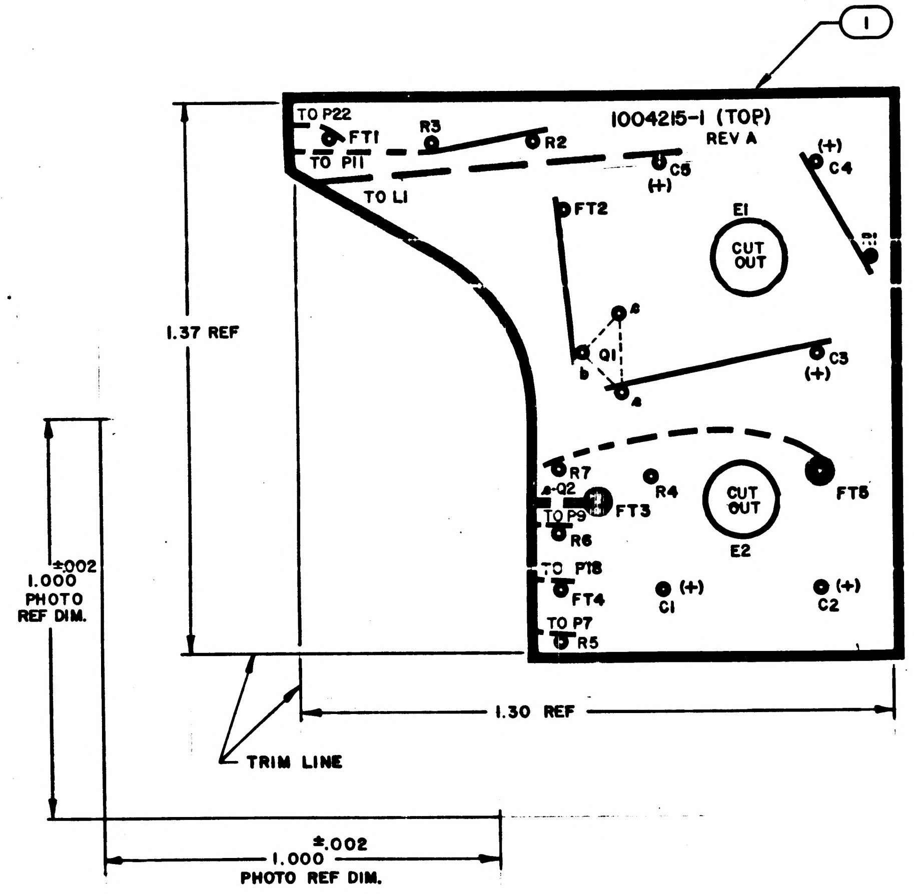
1004215-1 (TOP)
REV A
TO P22
FT1
TO P11
TO L1
R3
R2
C5
(+)
(+)
C4
FT2
E1
CUT OUT
Q1
a
b
c
C3
(+)
R7
Q2
R4
CUT OUT
FT3
FT5
TO P9
R6
E2
TO P18
FT4
(+)
C1
(+)
C2
TO P7
R5
1.37 REF
1.30 REF
±.002
1.000
PHOTO
REF DIM.
TRIM LINE
±.002
1.000
PHOTO REF DIM.

②

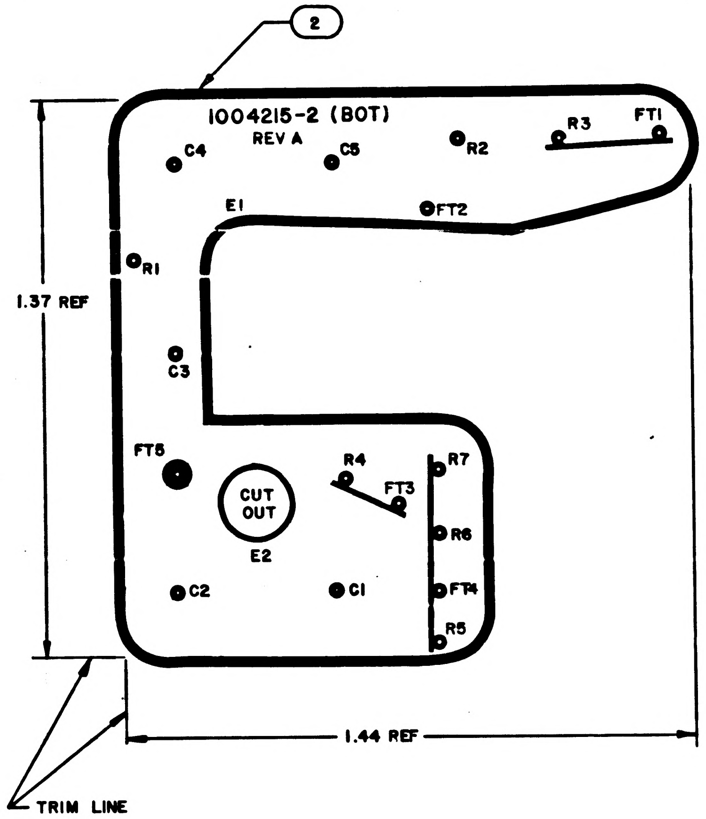
1004215-2 (BOT)
REV A
C4
C5
R2
R3
FT1
E1
FT2
R1
C3
1.37 REF
FT5
CUT OUT
E2
R4
FT3
R7
R6
FT4
R5
C2
C1
1.44 REF
TRIM LINE

NOTES:

1. INTERPRET DRAWING IN ACCORDANCE WITH STANDARDS PRESCRIBED BY MIL-D-70327
2. ORIGINAL OF THIS DRAWING OR REPRODUCTION MADE BY PROCESS OR METHOD SHALL INSURE DIMENSIONAL STABILITY. DIMENSIONAL STABILITY SHALL NOT EXCEED .001 INCH PER INCH
3. CUT TO WITHIN .010 OF TRIM LINE
4. MAKE MASTER PATTERN POSITIVE FILMS TO DIMENSIONS SHOWN
5. MATERIAL: FILM .006/.008 THK PER L-F-340, TYPE IB, CL 2, STYLE IA
6. BROKEN LINES DENOTE SLEEVING
7. ⊙ 045/.055 DIA PUNCH
8. ● .110/.120 DIA PUNCH

QTY REQD	PART OR IDENTIFYING NO.	NOMENCLATURE OR DESCRIPTION	FIND NO.
1	1004215-2	INSULATOR, BOTTOM	2
1	1004215-1	INSULATOR, TOP	1

LIST OF MATERIALS

1003113	
NEXT ASSY	USED ON
APPLICATION	

UNLESS OTHERWISE SPECIFIED DIMENSIONS ARE IN INCHES
TOLERANCES ON
FRACTIONS ± DECIMALS ± ANGLES ±
DO NOT SCALE THIS DRAWING
MATERIAL SEE NOTE 5
HEAT TREATMENT
FINAL FINISH

MIT INSTRUMENTATION LAB
CAMBRIDGE, MASS.
DWG. NO.
CONTRACT
DRAWN DATE
CHECKED
APPROVAL 6 AUG 63
APPROVAL 8-6-39
NASA APPROVAL 9/7/63
MIT APPROVAL 8/7/63

MANNED SPACECRAFT CENTER
HOUSTON, TEXAS

INSULATOR
PHOTOGRAPHIC MASTER
POWER SWITCH MODULE

CODE IDENT NO.
SIZE D
NASA DRAWING NO. 1004215
SCALE 5/1
WT
SHEET 1 OF 1

1004215 A

MASTER

INCHES
0 1 2
PHOTOGRAPHIC SCALE ONLY

NOTICE — WHEN GOVERNMENT DRAWINGS, SPECIFICATIONS, OR OTHER DATA ARE USED FOR ANY PURPOSE OTHER THAN IN CONNECTION WITH A DEFINITELY RELATED GOVERNMENT PROCUREMENT OPERATION, THE UNITED STATES GOVERNMENT THEREBY INCURS NO RESPONSIBILITY NOR ANY OBLIGATION WHATSOEVER; AND THE FACT THAT THE GOVERNMENT MAY HAVE FORMULATED, FURNISHED, OR IN ANY WAY SUPPLIED THE SAID DRAWINGS, SPECIFICATIONS OR OTHER DATA IS NOT TO BE REGARDED BY IMPLICATION OR OTHERWISE AS IN ANY MANNER LICENSING THE HOLDER OR ANY OTHER PERSON OR CORPORATION, OR CONVEYING ANY RIGHTS OR PERMISSION TO MANUFACTURE, USE, OR SELL ANY PATENTED INVENTION THAT MAY IN ANY WAY BE RELATED THERETO.

REVISIONS 02394

SYM	DESCRIPTION	DATE	APPROVAL
A	CHANGED PER TDRR 02903	7-5-63	RPK
B	CHANGED PER TDRR 03841	10-10-63	RPK

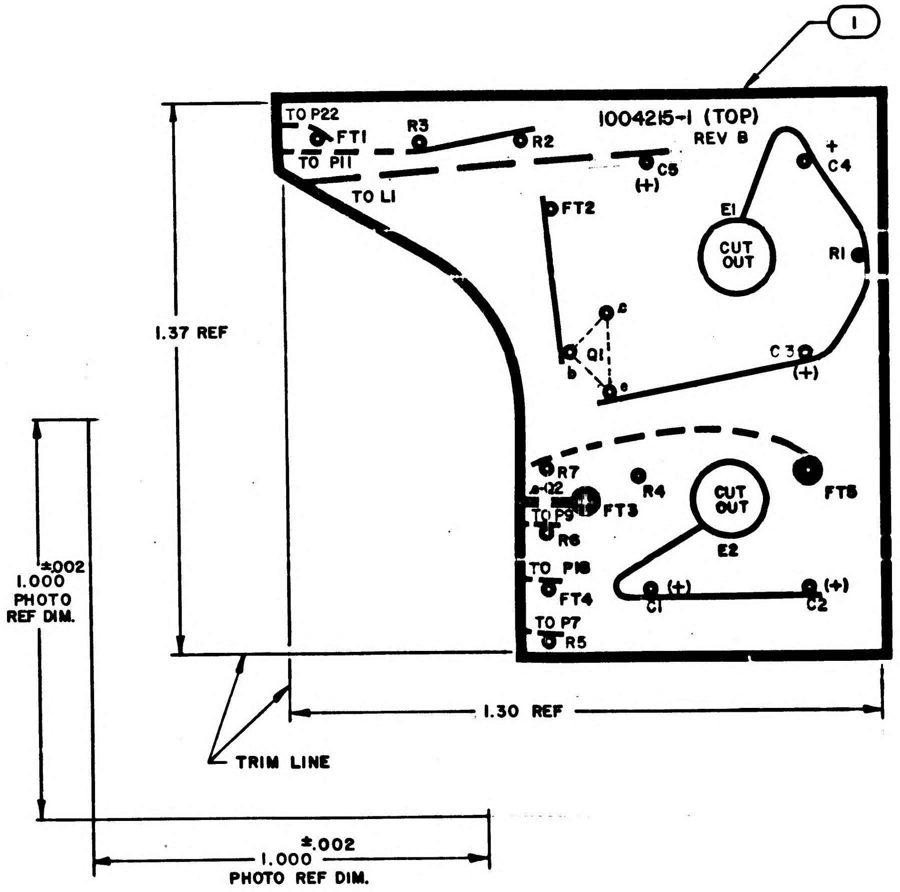

1
TO P22
FT1
R3
R2
1004215-1 (TOP)
REV B
TO P11
C5
(+)
+
C4
TO L1
FT2
E1
CUT OUT
R1
c
Q1
b
e
C3
(+)
R7
Q2
R4
CUT OUT
FT5
TO P9
FT3
R6
E2
TO P18
(+)
(+)
FT4
C1
C2
TO P7
R5
1.37 REF
±.002
1.000
PHOTO REF DIM.
1.30 REF
TRIM LINE
±.002
1.000
PHOTO REF DIM.

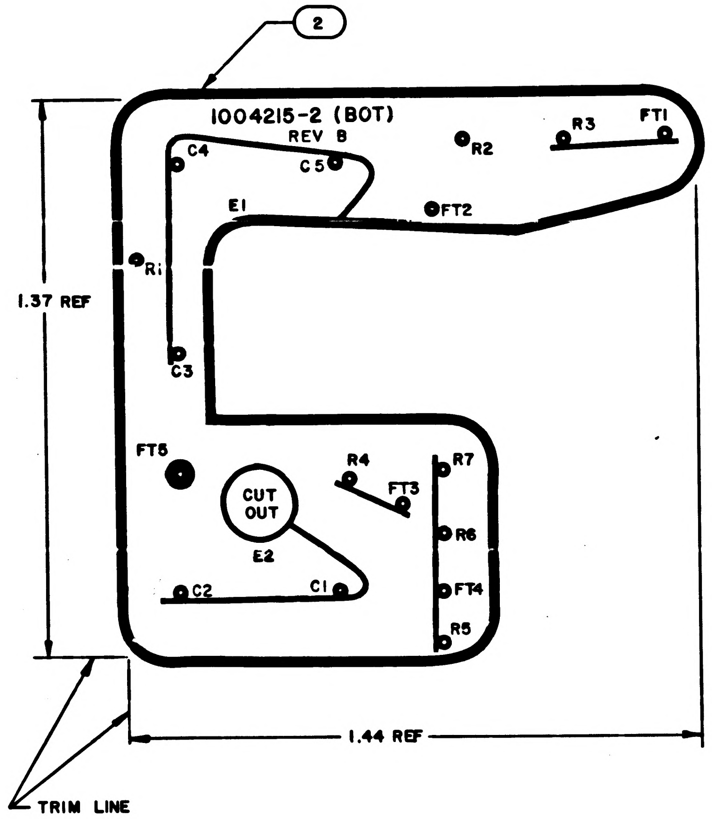

2
1004215-2 (BOT)
REV B
R3
FT1
C4
R2
C5
E1
FT2
R1
1.37 REF
C3
FT5
R4
R7
FT3
CUT OUT
R6
E2
C2
C1
FT4
R5
1.44 REF
TRIM LINE

NOTES:

1. INTERPRET DRAWING IN ACCORDANCE WITH STANDARDS PRESCRIBED BY MIL-D-70327
2. ORIGINAL OF THIS DRAWING OR REPRODUCTION MADE BY PROCESS OR METHOD SHALL INSURE DIMENSIONAL STABILITY. DIMENSIONAL STABILITY SHALL NOT EXCEED .001 INCH PER INCH
3. CUT TO WITHIN .010 OF TRIM LINE
4. MAKE MASTER PATTERN POSITIVE FILMS TO DIMENSIONS SHOWN
5. MATERIAL: FILM .006/.008 THK PER L-F-340, TYPE IB, CL 2, STYLE IA
6. BROKEN LINES DENOTE SLEEVING
7. ● .045/.055 DIA PUNCH
8. ● .110/.120 DIA PUNCH

MASTER

QTY REQD	PART OR IDENTIFYING NO.	NOMENCLATURE OR DESCRIPTION	FIND NO.
1	1004215-2	INSULATOR, BOTTOM	2
1	1004215-1	INSULATOR, TOP	1

LIST OF MATERIALS

NEXT ASSY	USED ON
1003113	

APPLICATION

UNLESS OTHERWISE SPECIFIED
DIMENSIONS ARE IN INCHES
TOLERANCES ON
FRACTIONS ± DECIMALS ± ANGLES ±
DO NOT SCALE THIS DRAWING
MATERIAL
SEE NOTE 5
HEAT TREATMENT
FINAL FINISH

MIT
INSTRUMENTATION LAB
CAMBRIDGE, MASS.
DWG. NO.
CONTRACT
DRAWN
DATE
CHECKED
APPROVAL
APPROVAL
NASA APPROVAL
MIT APPROVAL

MANNED SPACECRAFT CENTER
HOUSTON, TEXAS

INSULATOR
PHOTOGRAPHIC MASTER
POWER SWITCH MODULE

CODE IDENT NO.	SIZE	NASA DRAWING NO.
	D	1004215

SCALE 5/1 WT SHEET 1 OF 1

INCHES
0 1 2
PHOTOGRAPHIC SCALE ONLY

1004215 B

NOTICE — WHEN GOVERNMENT DRAWINGS, SPECIFICATIONS, OR OTHER DATA ARE USED FOR ANY PURPOSE OTHER THAN IN CONNECTION WITH A DEFINITELY RELATED GOVERNMENT PROCUREMENT OPERATION, THE UNITED STATES GOVERNMENT THEREBY INCURS NO RESPONSIBILITY NOR ANY OBLIGATION WHATSOEVER; AND THE FACT THAT THE GOVERNMENT MAY HAVE FORMULATED, FURNISHED, OR IN ANY WAY SUPPLIED THE SAID DRAWINGS, SPECIFICATIONS OR OTHER DATA IS NOT TO BE REGARDED BY IMPLICATION OR OTHERWISE AS IN ANY MANNER LICENSING THE HOLDER OR ANY OTHER PERSON OR CORPORATION, OR CONVEYING ANY RIGHTS OR PERMISSION TO MANUFACTURE, USE, OR SELL ANY PATENTED INVENTION THAT MAY IN ANY WAY BE RELATED THERETO.

REVISIONS 02394

SYM	DESCRIPTION	DATE	APPROVAL
A	CHANGED PER TDRR 02903	7-5-63	RPK
B	CHANGED PER TDRR 03841	10-10-63	RPK
C	CHANGED PER TDRR 07345 DR CHK APPD	18 Nov 64	

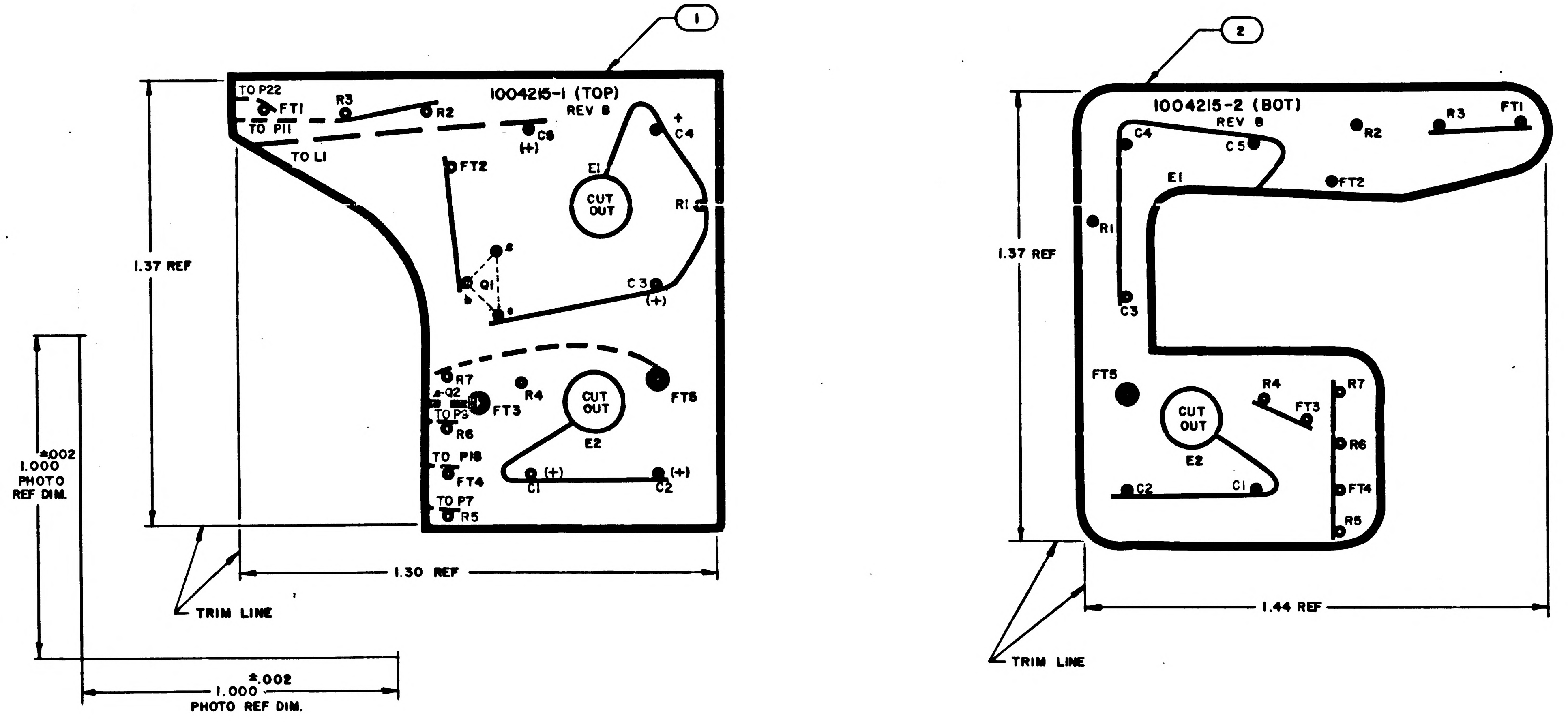

1
1004215-1 (TOP)
REV B
TO P22
FT1
R3
R2
TO P11
TO L1
C5
(+)
+
C4
FT2
E1
CUT OUT
R1
Q1
C3
(+)
R7
Q2
TO P9
FT3
R4
FT5
R6
E2
TO P18
FT4
C1
C2
(+)
TO P7
R5
1.37 REF
1.30 REF
±.002
1.000
PHOTO REF DIM.
TRIM LINE
2
1004215-2 (BOT)
REV B
C4
C5
R2
R3
FT1
E1
FT2
R1
C3
1.37 REF
FT5
R4
FT3
CUT OUT
R7
R6
E2
C2
C1
FT4
R5
1.44 REF
TRIM LINE

NOTES:

1. INTERPRET DRAWING IN ACCORDANCE WITH STANDARDS PRESCRIBED BY MIL-D-70327
2. ORIGINAL OF THIS DRAWING OR REPRODUCTION MADE BY PROCESS OR METHOD SHALL INSURE DIMENSIONAL STABILITY. DIMENSIONAL STABILITY SHALL NOT EXCEED .001 INCH PER INCH
3. CUT TO WITHIN .010 OF TRIM LINE
4. MAKE MASTER PATTERN POSITIVE FILMS TO DIMENSIONS SHOWN
5. MATERIAL: FILM .006/.008 THK PER L-F-340, TYPE IB, CL 2, STYLE IA
6. BROKEN LINES DENOTE SLEEVING
7. ● .045/.055 DIA PUNCH
8. ● .110/.120 DIA PUNCH

MASTER

QTY REQD	PART OR IDENTIFYING NO.	NOMENCLATURE OR DESCRIPTION	FIND NO.
1	1004215-3	INSULATOR	3
1	1004215-2	INSULATOR, BOTTOM	2
1	1004215-1	INSULATOR, TOP	1

LIST OF MATERIALS

NEXT ASSY	1003113
USED ON	
APPLICATION	

UNLESS OTHERWISE SPECIFIED DIMENSIONS ARE IN INCHES
TOLERANCES ON
FRACTIONS ± DECIMALS ± ANGLES ±
DO NOT SCALE THIS DRAWING
MATERIAL SEE NOTE 5
HEAT TREATMENT
FINAL FINISH

MIT INSTRUMENTATION LAB
CAMBRIDGE, MASS.
DWG. NO. CONTRACT
DRAWN DATE
CHECKED
APPROVAL
APPROVAL 8-6-39
NASA APPROVAL 9/1/63
MIT APPROVAL George J Hutton 8/7/63

MANNED SPACECRAFT CENTER
HOUSTON, TEXAS

INSULATOR PHOTOGRAPHIC MASTER
POWER SWITCH MODULE

CODE IDENT NO. —
SIZE D
NASA DRAWING NO. 1004215
SCALE 5/1
WT
SHEET 1 OF 2

NOTICE — WHEN GOVERNMENT DRAWINGS, SPECIFICATIONS, OR OTHER DATA ARE USED FOR ANY PURPOSE OTHER THAN IN CONNECTION WITH A DEFINITELY RELATED GOVERNMENT PROCUREMENT OPERATION, THE UNITED STATES GOVERNMENT THEREBY INCURS NO RESPONSIBILITY NOR ANY OBLIGATION WHATSOEVER, AND THE FACT THAT THE GOVERNMENT MAY HAVE FORMULATED, FURNISHED, OR IN ANY WAY SUPPLIED THE SAID DRAWINGS, SPECIFICATIONS OR OTHER DATA IS NOT TO BE REGARDED BY IMPLICATION OR OTHERWISE AS IN ANY MANNER LICENSING THE HOLDER OR ANY OTHER PERSON OR CORPORATION, OR CONVEYING ANY RIGHTS OR PERMISSION TO MANUFACTURE, USE, OR SELL ANY PATENTED INVENTION THAT MAY IN ANY WAY BE RELATED THERETO.

1004215 C

REVISIONS			
SYM	DESCRIPTION	DATE	APPROVAL
C	THIS SHEET ADDED PER TDRR 07345	3/31/64	[illegible]

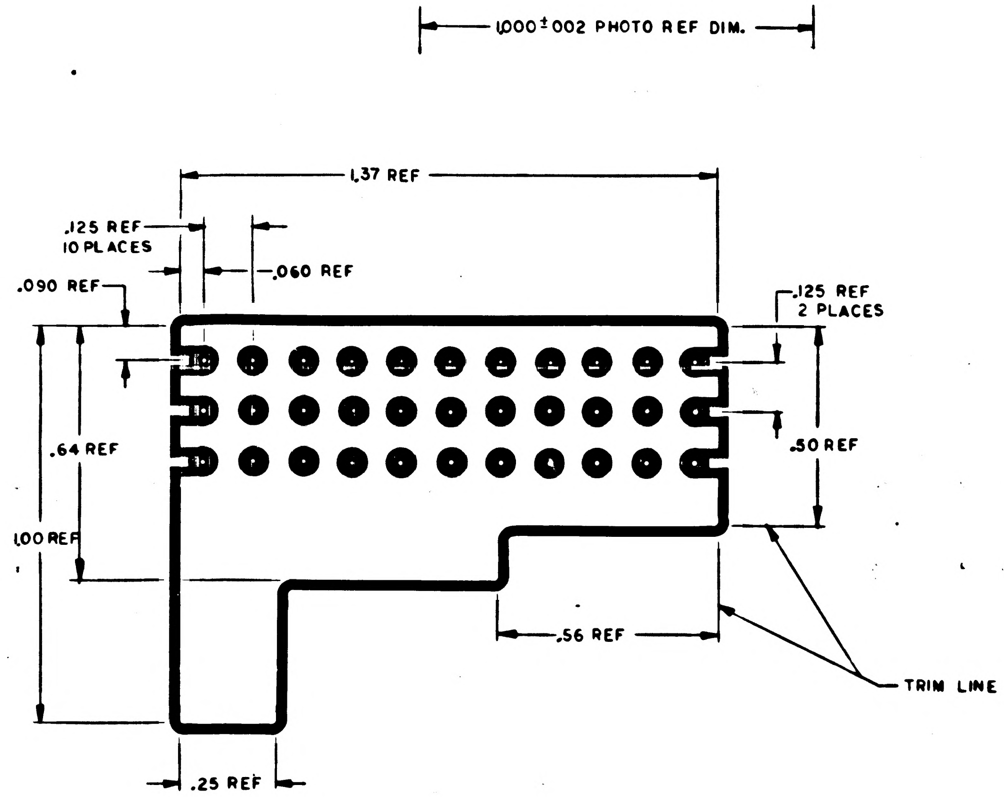

Ⓒ THIS SHEET ADDED

QTY REQD	PART OR IDENTIFYING NO.	NOMENCLATURE OR DESCRIPTION	FIND NO.

LIST OF MATERIALS

NEXT ASSY	USED ON
APPLICATION	

UNLESS OTHERWISE SPECIFIED
DIMENSIONS ARE IN INCHES
TOLERANCES ON
FRACTIONS ± DECIMALS ± ANGLES ±
DO NOT SCALE THIS DRAWING

MATERIAL

HEAT TREATMENT

FINAL FINISH

MIT
INSTRUMENTATION LAB
CAMBRIDGE, MASS.
DWG. NO. CONTRACT

DRAWN Cutrona DATE 11 Mar 64
CHECKED [illegible] 10 Mar 64
APPROVAL
APPROVAL Eldon C Hall 27 March 64
NASA APPROVAL W. J. R[illegible] 3-3-64
MIT APPROVAL [illegible] 3/31/64

MANNED SPACECRAFT CENTER
HOUSTON, TEXAS

INSULATOR
PHOTOGRAPHIC MASTER
POWER SWITCH MODULE

CODE IDENT NO.	SIZE	NASA DRAWING NO.
———	D	1004215

SCALE 5/1 WT SHEET 2 OF 2

NOTICE — WHEN GOVERNMENT DRAWINGS, SPECIFICATIONS, OR OTHER DATA ARE USED FOR ANY PURPOSE OTHER THAN IN CONNECTION WITH A DEFINITELY RELATED GOVERNMENT PROCUREMENT OPERATION, THE UNITED STATES GOVERNMENT THEREBY INCURS NO RESPONSIBILITY NOR ANY OBLIGATION WHATSOEVER; AND THE FACT THAT THE GOVERNMENT MAY HAVE FORMULATED, FURNISHED, OR IN ANY WAY SUPPLIED THE SAID DRAWINGS, SPECIFICATIONS OR OTHER DATA IS NOT TO BE REGARDED BY IMPLICATION OR OTHERWISE AS IN ANY MANNER LICENSING THE HOLDER OR ANY OTHER PERSON OR CORPORATION, OR CONVEYING ANY RIGHTS OR PERMISSION TO MANUFACTURE, USE, OR SELL ANY PATENTED INVENTION THAT MAY IN ANY WAY BE RELATED THERETO.

REVISIONS 02394

SYM	DESCRIPTION	DATE	APPROVAL
A	CHANGED PER TDRR 02903	7-5-63	
B	CHANGED PER TDRR 03841	10-10-63	
C	CHANGED PER TDRR 07345 DR CHK APPD	15 Nov 64	
D	CHANGED PER TDRR 13994 DR CHK	12/2/64	

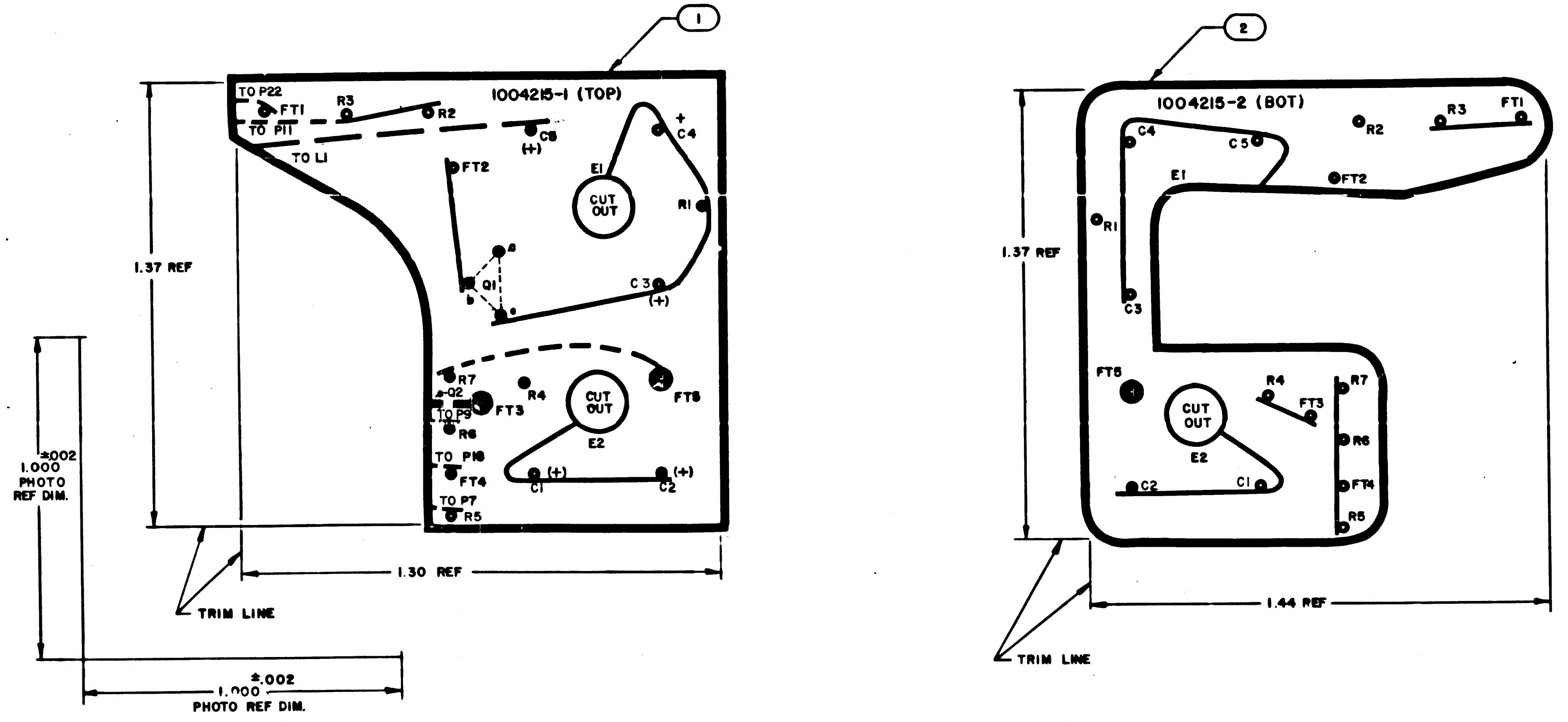

①
1004215-1 (TOP)
TO P22
FT1
R3
R2
TO P11
C5
(+)
TO L1
FT2
E1
CUT OUT
+
C4
R1
Q1
a
b
e
C3
(+)
R7
Q2
TO P5
FT3
R4
CUT OUT
FT5
R6
E2
TO P16
FT4
C1
(+)
C2
(+)
TO P7
R5
1.37 REF
1.30 REF
±.002
1.000
PHOTO
REF DIM.
TRIM LINE
±.002
1.000
PHOTO REF DIM.
②
1004215-2 (BOT)
R3
FT1
C4
R2
C5
E1
FT2
R1
C3
FT5
R4
FT3
R7
CUT OUT
R6
E2
C2
C1
FT4
R5
1.37 REF
1.44 REF
TRIM LINE

NOTES:

1. INTERPRET DRAWING IN ACCORDANCE WITH STANDARDS PRESCRIBED BY MIL-D-70327
2. ORIGINAL OF THIS DRAWING OR REPRODUCTION MADE BY PROCESS OR METHOD SHALL INSURE DIMENSIONAL STABILITY. DIMENSIONAL STABILITY SHALL NOT EXCEED .001 INCH PER INCH
3. CUT TO WITHIN .010 OF TRIM LINE
4. MAKE MASTER PATTERN POSITIVE FILMS TO DIMENSIONS SHOWN
5. MATERIAL: FILM .006/.008 THK PER L-F-340, TYPE IB, CL 2, STYLE IA
6. BROKEN LINES DENOTE SLEEVING
7. ● .046/.055 DIA PUNCH
8. ● .065/.075 DIA PUNCH

QTY REQD	PART OR IDENTIFYING NO.	NOMENCLATURE OR DESCRIPTION	FIND NO.
1	1004215-3	INSULATOR	3
1	1004215-2	INSULATOR, BOTTOM	2
1	1004215-1	INSULATOR, TOP	1

LIST OF MATERIALS

NEXT ASSY	USED ON
1003113	

APPLICATION

UNLESS OTHERWISE SPECIFIED DIMENSIONS ARE IN INCHES
TOLERANCES ON
FRACTIONS ± DECIMALS ± ANGLES ±
DO NOT SCALE THIS DRAWING
MATERIAL SEE NOTE 5
HEAT TREATMENT
FINAL FINISH

MIT INSTRUMENTATION LAB
CAMBRIDGE, MASS.
DWG. NO. CONTRACT
DRAWN DATE
CHECKED
APPROVAL 6 Aug 63
APPROVAL 8-6-63
NASA APPROVAL 9/1963
MIT APPROVAL 8/7/63

MANNED SPACECRAFT CENTER
HOUSTON, TEXAS

INSULATOR
PHOTOGRAPHIC MASTER
POWER SWITCH MODULE

CODE IDENT NO. —
SIZE D
NASA DRAWING NO. 1004215
SCALE 5/1
WT
SHEET 1 OF 2

NOTICE: WHEN GOVERNMENT DRAWINGS, SPECIFICATIONS, OR OTHER DATA ARE USED FOR ANY PURPOSE OTHER THAN IN CONNECTION WITH A DEFINITELY RELATED GOVERNMENT PROCUREMENT OPERATION, THE UNITED STATES GOVERNMENT THEREBY INCURS NO RESPONSIBILITY NOR ANY OBLIGATION WHATSOEVER; AND THE FACT THAT THE GOVERNMENT MAY HAVE FORMULATED, FURNISHED, OR IN ANY WAY SUPPLIED THE SAID DRAWINGS, SPECIFICATIONS OR OTHER DATA IS NOT TO BE REGARDED BY IMPLICATION OR OTHERWISE AS IN ANY MANNER LICENSING THE HOLDER OR ANY OTHER PERSON OR CORPORATION, OR CONVEYING ANY RIGHTS OR PERMISSION TO MANUFACTURE, USE, OR SELL ANY PATENTED INVENTION THAT MAY IN ANY WAY BE RELATED THERETO.

1004215 D

REVISIONS

SYM	DESCRIPTION	DATE	APPROVAL
C	THIS SHEET ADDED PER TDRR 07345	3/31/64	JV
D	CHANGED PER TDRR 13994 DR CHK R.W.I.	12/2/64	

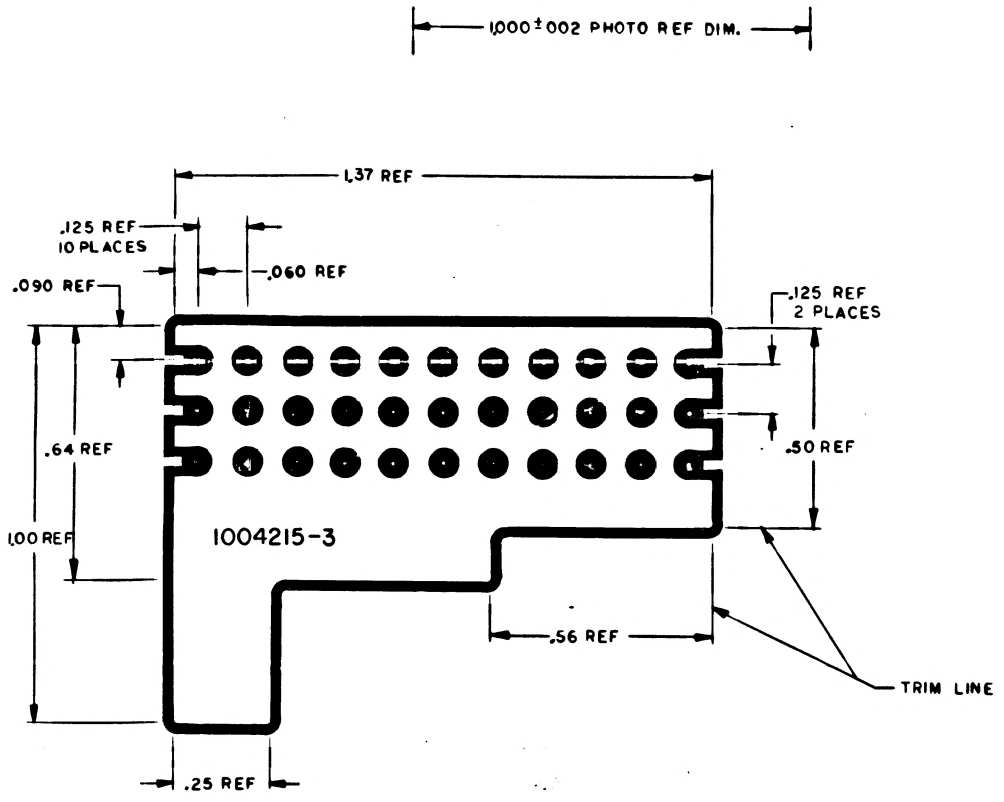

Ⓒ THIS SHEET ADDED

QTY REQD	PART OR IDENTIFYING NO.	NOMENCLATURE OR DESCRIPTION	FIND NO.

LIST OF MATERIALS

NEXT ASSY	USED ON
APPLICATION	

UNLESS OTHERWISE SPECIFIED
DIMENSIONS ARE IN INCHES
TOLERANCES ON
FRACTIONS ± DECIMALS ± ANGLES ±
DO NOT SCALE THIS DRAWING
MATERIAL
HEAT TREATMENT
FINAL FINISH

MIT
INSTRUMENTATION LAB
CAMBRIDGE, MASS.
DRAWN Antrea DATE 11 Mar 64
CHECKED
APPROVAL
APPROVAL Eldon C Hall 27 March 64
NASA APPROVAL W. J. R 3/31/64
MIT APPROVAL

MANNED SPACECRAFT CENTER
HOUSTON, TEXAS

INSULATOR
PHOTOGRAPHIC MASTER
POWER SWITCH MODULE

CODE IDENT NO. ——
SIZE D
NASA DRAWING NO. 1004215
SCALE 5/1
WT
SHEET 2 OF 2

NOTICE — WHEN GOVERNMENT DRAWINGS, SPECIFICATIONS, OR OTHER DATA ARE USED FOR ANY PURPOSE OTHER THAN IN CONNECTION WITH A DEFINITELY RELATED GOVERNMENT PROCUREMENT OPERATION, THE UNITED STATES GOVERNMENT THEREBY INCURS NO RESPONSIBILITY NOR ANY OBLIGATION WHATSOEVER; AND THE FACT THAT THE GOVERNMENT MAY HAVE FORMULATED, FURNISHED, OR IN ANY WAY SUPPLIED THE SAID DRAWINGS, SPECIFICATIONS OR OTHER DATA IS NOT TO BE REGARDED BY IMPLICATION OR OTHERWISE AS IN ANY MANNER LICENSING THE HOLDER OR ANY OTHER PERSON OR CORPORATION, OR CONVEYING ANY RIGHTS OR PERMISSION TO MANUFACTURE, USE, OR SELL ANY PATENTED INVENTION THAT MAY IN ANY WAY BE RELATED THERETO.

SYM	DESCRIPTION	DATE	APPROVAL

REVISIONS 02394

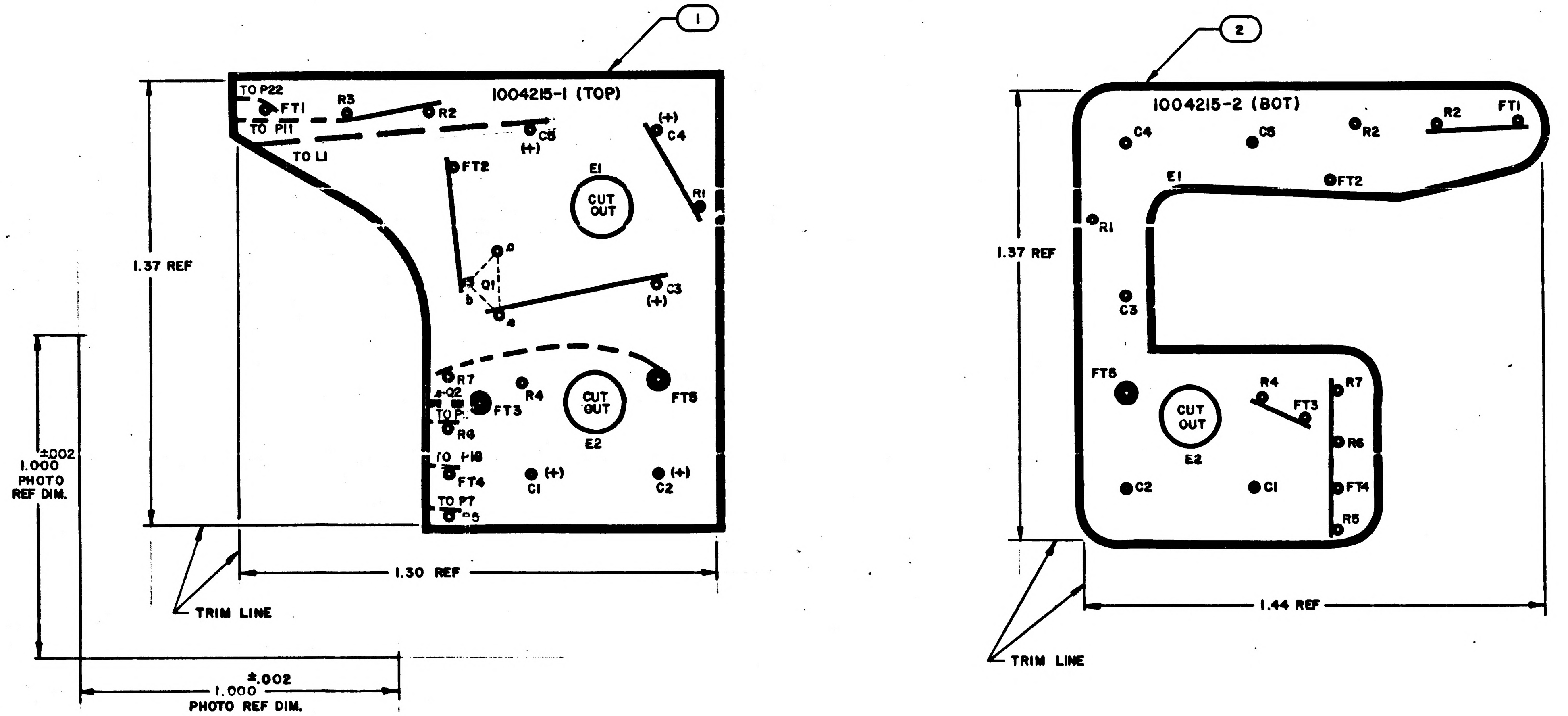

①
1004215-1 (TOP)
TO P22
FT1
TO P11
TO L1
R3
R2
C5
(+)
(+)
C4
FT2
E1
CUT OUT
R1
Q1
a
b
c
C3
(+)
R7
Q2
FT3
R4
CUT OUT
E2
FT5
TO P
R6
TO P18
FT4
TO P7
R5
(+)
C1
(+)
C2
1.37 REF
±.002
1.000
PHOTO
REF DIM.
1.30 REF
TRIM LINE
±.002
1.000
PHOTO REF DIM.
②
1004215-2 (BOT)
C4
C5
R2
R2
FT1
E1
FT2
R1
C3
FT5
CUT OUT
E2
R4
FT3
R7
R6
FT4
R5
C2
C1
1.37 REF
1.44 REF
TRIM LINE

NOTES:

1. INTERPRET DRAWING IN ACCORDANCE WITH STANDARDS PRESCRIBED BY MIL-D-70327
2. ORIGINAL OF THIS DRAWING OR REPRODUCTION MADE BY PROCESS OR METHOD SHALL INSURE DIMENSIONAL STABILITY. DIMENSIONAL STABILITY SHALL NOT EXCEED .001 INCH PER INCH
3. CUT TO WITHIN .010 OF TRIM LINE
4. MAKE MASTER PATTERN POSITIVE FILMS TO DIMENSIONS SHOWN
5. MATERIAL: FILM .006/.008 THK PER L-F-340, TYPE IB, CL 2, STYLE IA
6. BROKEN LINES DENOTE SLEEVING
7. ● .045/.055 DIA PUNCH
8. ● .110/.120 DIA PUNCH

QTY REQD	PART OR IDENTIFYING NO.	NOMENCLATURE OR DESCRIPTION	FIND NO.
1	1004215-2	INSULATOR, BOTTOM	2
1	1004215-1	INSULATOR, TOP	1

LIST OF MATERIALS

MASTER

NEXT ASSY	USED ON
1003113	

APPLICATION

UNLESS OTHERWISE SPECIFIED
DIMENSIONS ARE IN INCHES
TOLERANCES ON
FRACTIONS ± DECIMALS ± ANGLES ±
DO NOT SCALE THIS DRAWING
MATERIAL
SEE NOTE 5
HEAT TREATMENT
FINAL FINISH

MIT
INSTRUMENTATION LAB
CAMBRIDGE, MASS.
DWG. NO.
CONTRACT
DRAWN [illegible] DATE [illegible]
CHECKED [illegible]
APPROVAL W. Fuller 6Aug63
APPROVAL [illegible] 8-6-39
NASA APPROVAL [illegible] 9/7/63
MIT APPROVAL George J. Mueller 3/3/63

MANNED SPACECRAFT CENTER
HOUSTON, TEXAS

INSULATOR
PHOTOGRAPHIC MASTER
POWER SWITCH MODULE

CODE IDENT NO.
SIZE D
NASA DRAWING NO. 1004215
SCALE 5/1
WT
SHEET 1 OF 1

1004215

INCHES
0 2
PHOTOGRAPHIC SCALE ONLY

1004216 A

SYM	DESCRIPTION	DATE	APPROVAL
A	REVISED PER TDRR 03224		

REVISIONS TDRR 03282

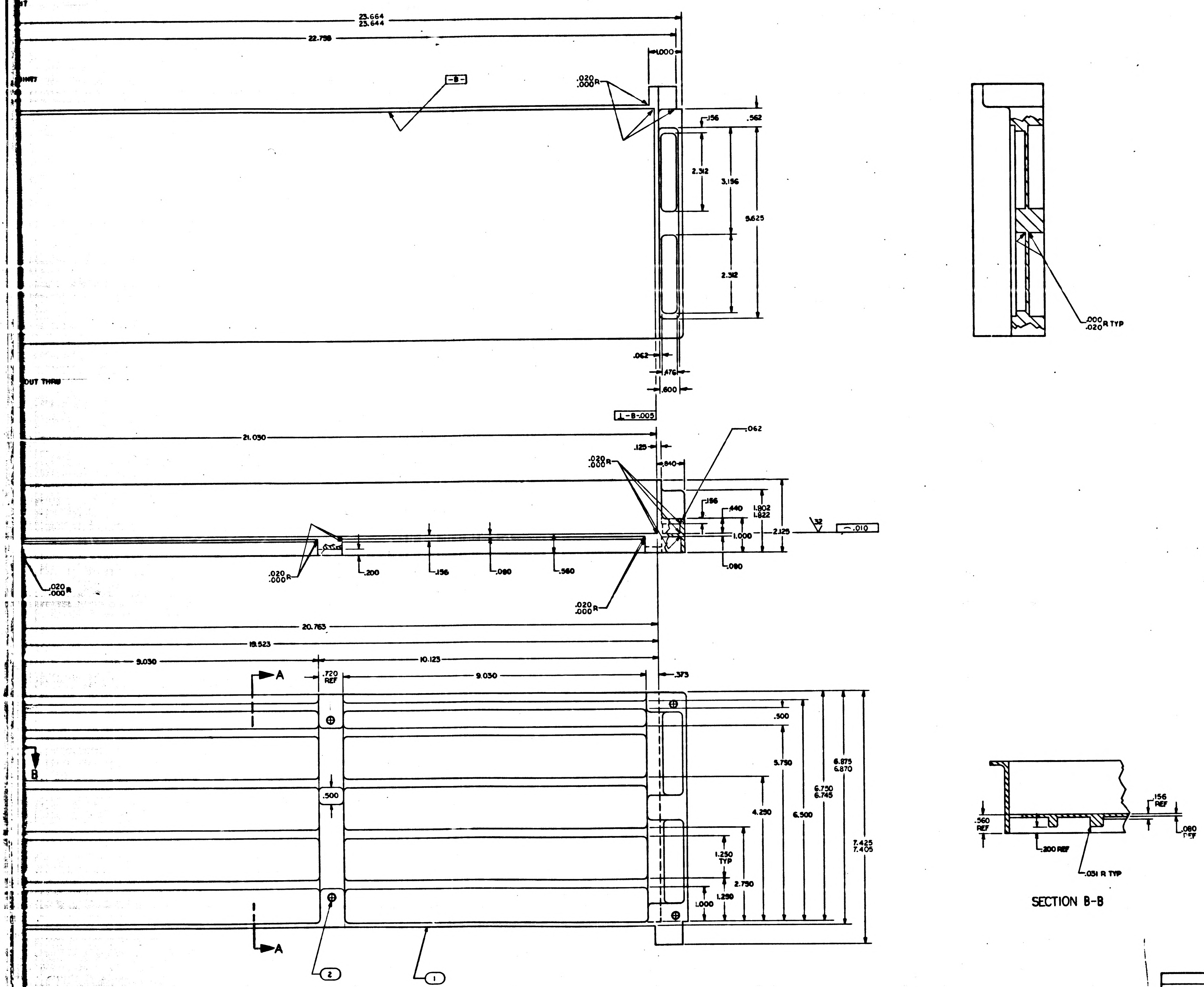

23.664
23.644
22.758
1.000
-B-
.020
.000 R
.156
.562
2.312
3.156
5.625
2.312
.062
.476
.600
⊥ -B- .005
21.030
.125
.840
.062
.020
.000 R
.156
.440
1.902
1.822
1.000
2.125
32
⌒ .010
.080
.020
.000 R
.200
.156
.080
.560
.020
.000 R
.000
.020 R TYP
20.763
19.523
9.030
10.123
.720
REF
9.030
.373
A
A
B
.500
.500
5.750
4.250
6.500
6.750
6.745
6.875
6.870
7.425
7.405
1.250
TYP
2.750
1.250
1.000
②
①
.560
REF
.156
REF
.080
REF
.200 REF
.031 R TYP
SECTION B-B

6	NAS1394CA-08L	INSERT, THREADED, SELF LOCKING	2
1	1004216-1	TRAY A RIGHT HAND	1
QTY REQD	PART OR IDENTIFYING NO.	NOMENCLATURE OR DESCRIPTION	FIND NO.

LIST OF MATERIALS

1003126	
NEXT ASSY	USED ON
APPLICATION	

UNLESS OTHERWISE SPECIFIED DIMENSIONS ARE IN INCHES
TOLERANCES ON
FRACTIONS ± —
DECIMALS ±.005
ANGLES ± 0° 30'
DO NOT SCALE THIS DRAWING
MATERIAL SEE NOTE 2
HEAT TREATMENT —
FINAL FINISH —

MIT INSTRUMENTATION LAB
CAMBRIDGE, MASS.
DRAWN W. Williams DATE 12/26/62
CHECKED Hong 7/26/63
APPROVAL W. Tessman 7/30/63
APPROVAL Duggan 7/31/63
NASA APPROVAL W. G. Rhine 7-31-63
MIT APPROVAL R. Hafeld 7/31/63

MANNED SPACECRAFT CENTER
HOUSTON, TEXAS

TRAY A
RIGHT HAND

CODE IDENT NO. | SIZE J | NASA DRAWING NO. 1004216
SCALE 1/1 | WT | SHEET 1 OF 2

MASTER

1004216

INCHES
PHOTOGRAPHIC SCALE ONLY

E2

NOTICE — WHEN GOVERNMENT DRAWINGS, SPECIFICATIONS, OR OTHER DATA ARE USED FOR ANY PURPOSE OTHER THAN IN CONNECTION WITH A DEFINITELY RELATED GOVERNMENT PROCUREMENT OPERATION, THE UNITED STATES GOVERNMENT THEREBY INCURS NO RESPONSIBILITY NOR ANY OBLIGATION WHATSOEVER; AND THE FACT THAT THE GOVERNMENT MAY HAVE FORMULATED, FURNISHED, OR IN ANY WAY SUPPLIED THE SAID DRAWINGS, SPECIFICATIONS OR OTHER DATA IS [illegible] LICENSING THE HOLDER OR ANY OTHER PERSON OR CORPORATION, OR CONVEYING ANY RIGHTS OR PERMISSION TO MANUFACTURE, USE, OR SELL ANY PATENTED INVENTION THAT MAY IN ANY WAY BE RELATED THERETO.

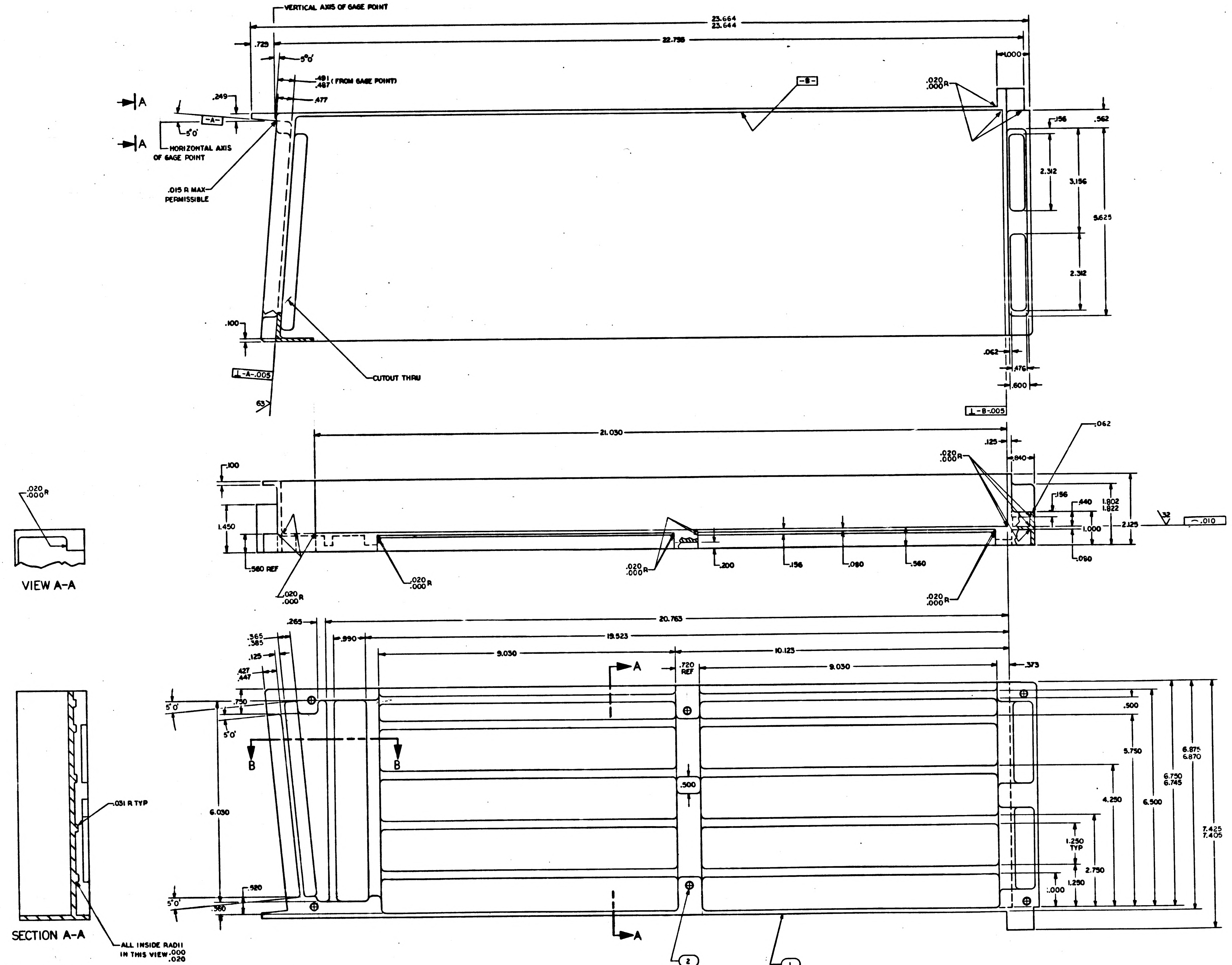
VERTICAL AXIS OF GAGE POINT
23.664
23.644
22.756
.725
5°0'
.491
.487 (FROM GAGE POINT)
.477
.249
A
A
-A-
5°0'
HORIZONTAL AXIS OF GAGE POINT
-B-
1.000
.020
.000 R
.156
.562
2.312
3.156
5.625
2.312
.015 R MAX PERMISSIBLE
.100
CUTOUT THRU
⊥ -A- .005
63
.062
.476
.600
⊥ -B- .005
21.030
.125
.840
.062
.020
.000 R
.100
1.450
.560 REF
.156
.440
1.802
1.822
1.000
2.125
32
⌒ .010
.090
.200
.156
.080
.560
.020
.000 R
.020
.000 R
.020
.000 R
.020
.000 R
.020
.000 R
VIEW A-A
20.763
.265
.365
.385
.990
19.523
.125
9.030
10.125
.427
.447
A
.720 REF
9.030
.373
5°0'
.750
5°0'
B
B
.500
.500
5.750
6.875
6.870
6.750
6.745
4.250
6.500
6.030
1.250 TYP
2.750
1.250
.000
7.425
7.405
.520
5°0'
.360
A
2
1
.031 R TYP
SECTION A-A
ALL INSIDE RADII IN THIS VIEW .000 .020

NOTES

1. INTERPRET DRAWING IN ACCORDANCE WITH STANDARDS PRESCRIBED BY MIL-D-70327
2. MAKE FROM NASA DWG 1004150
3. REMOVE BURRS AND BREAK SHARP EDGES .005 -.015
4. UNLESS OTHERWISE SPECIFIED, FINSH $\sqrt{125}$
5. ALL RADII AND FILLETS TO BE .125 UNLESS OTHERWISE SPECIFIED
6. COAT FIND NO.1 AND FIND NO.2 WITH MIL-P-8585 WET ZINC CHROMATE PRIMER
7. INSTALL FIND NO.2 / ND1002121

1004216

INCHES
PHOTOGRAPHIC SCALE ONLY

SYM	DESCRIPTION	DATE	APPROVAL
A	REVISED PER TDRR 03224	8-4-63	Wix

REVISIONS TDRR 03252

1004216 A

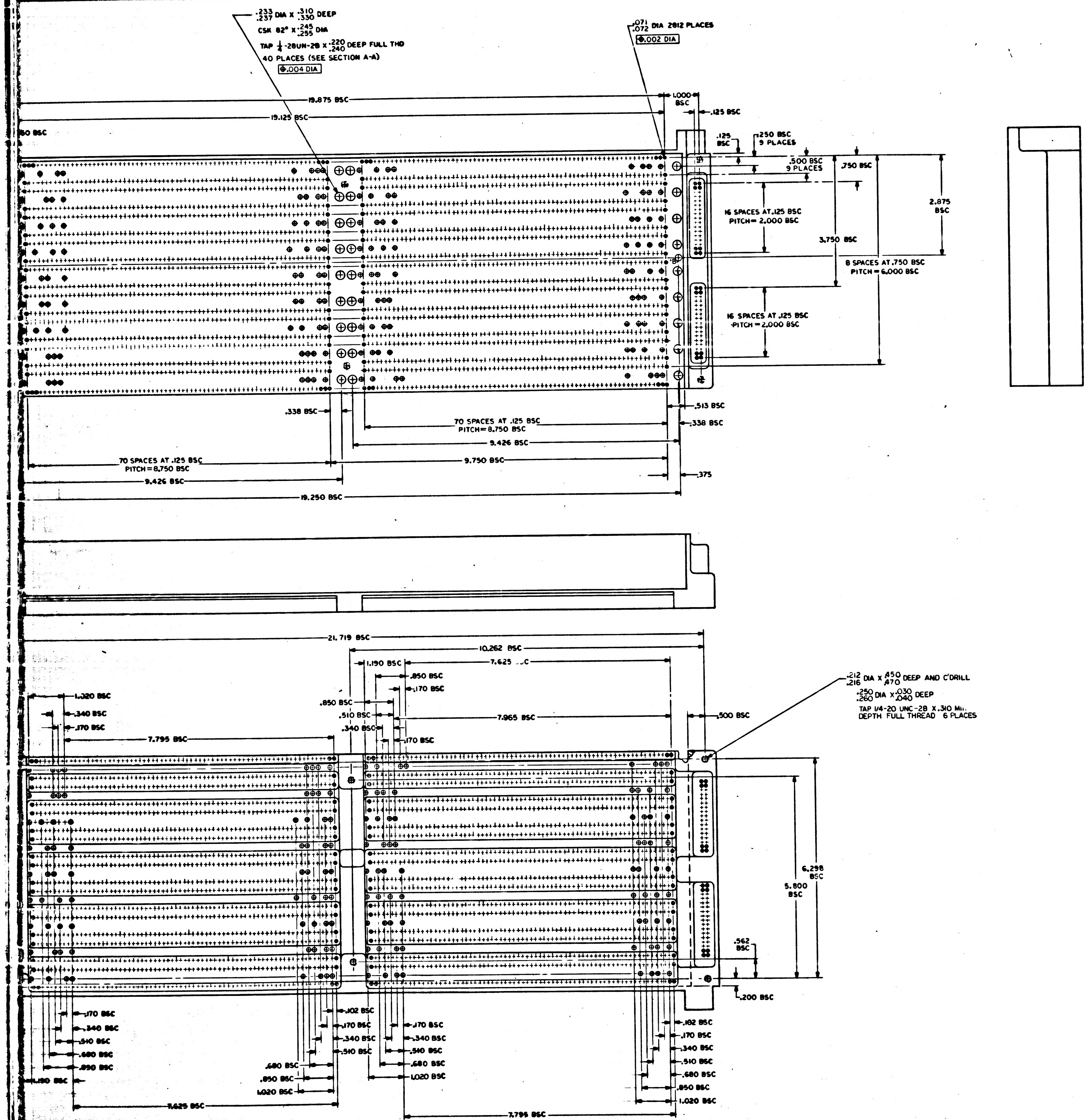

.233/.237 DIA X .310/.330 DEEP
CSK 82° X .245/.255 DIA
TAP 1/4-28UN-2B X .220/.240 DEEP FULL THD
40 PLACES (SEE SECTION A-A)
⊕.004 DIA
.071/.072 DIA 2812 PLACES
⊕.002 DIA
19.875 BSC
19.125 BSC
1.000 BSC
.125 BSC
.125 BSC
.250 BSC 9 PLACES
.500 BSC 9 PLACES
.750 BSC
2.875 BSC
3.750 BSC
16 SPACES AT .125 BSC PITCH = 2.000 BSC
8 SPACES AT .750 BSC PITCH = 6.000 BSC
16 SPACES AT .125 BSC PITCH = 2.000 BSC
.338 BSC
.513 BSC
.338 BSC
70 SPACES AT .125 BSC PITCH = 8.750 BSC
9.426 BSC
9.750 BSC
70 SPACES AT .125 BSC PITCH = 8.750 BSC
9.426 BSC
.375
19.250 BSC
21.719 BSC
10.262 BSC
1.190 BSC
7.625 BSC
.850 BSC
.170 BSC
1.020 BSC
.340 BSC
.170 BSC
7.795 BSC
.850 BSC
.510 BSC
.340 BSC
.170 BSC
7.965 BSC
.500 BSC
.212/.216 DIA X .450/.470 DEEP AND C'DRILL
.250/.260 DIA X .030/.040 DEEP
TAP 1/4-20 UNC-2B X .310 MIN. DEPTH FULL THREAD 6 PLACES
6.298 BSC
5.800 BSC
.562 BSC
.200 BSC
.170 BSC
.340 BSC
.510 BSC
.680 BSC
.850 BSC
1.190 BSC
.102 BSC
.170 BSC
.340 BSC
.510 BSC
.680 BSC
.850 BSC
1.020 BSC
.170 BSC
.340 BSC
.510 BSC
.680 BSC
.850 BSC
1.020 BSC
.102 BSC
.170 BSC
.340 BSC
.510 BSC
.680 BSC
.850 BSC
1.020 BSC
7.625 BSC
7.795 BSC

QTY REQD	PART OR IDENTIFYING NO.	NOMENCLATURE OR DESCRIPTION	FIND NO.

LIST OF MATERIALS

UNLESS OTHERWISE SPECIFIED
DIMENSIONS ARE IN INCHES
TOLERANCES ON
FRACTIONS ± —//— DECIMALS ± .005 ANGLES ± 0° 30'
DO NOT SCALE THIS DRAWING

MATERIAL
SEE NOTE 2

HEAT TREATMENT —//—

FINAL FINISH —//—

NEXT ASSY	USED ON
1003126	

APPLICATION

M I T
INSTRUMENTATION LAB
CAMBRIDGE, MASS.

DRAWN Fazzano DATE 2/24/63
CHECKED Hine 7/30/63
APPROVAL [illegible] 7/30/63
APPROVAL Duggan 7/31/63
NASA APPROVAL W.J. Rhine 7-31-63
MIT APPROVAL O. Hafel 7/31/63

MANNED SPACECRAFT CENTER
HOUSTON, TEXAS

TRAY A
RIGHT HAND

CODE IDENT NO.
SIZE J
NASA DRAWING NO. 1004216
SCALE 1/1
WT
SHEET 2 OF 2

MASTER

INCHES
PHOTOGRAPHIC SCALE ONLY

F-2

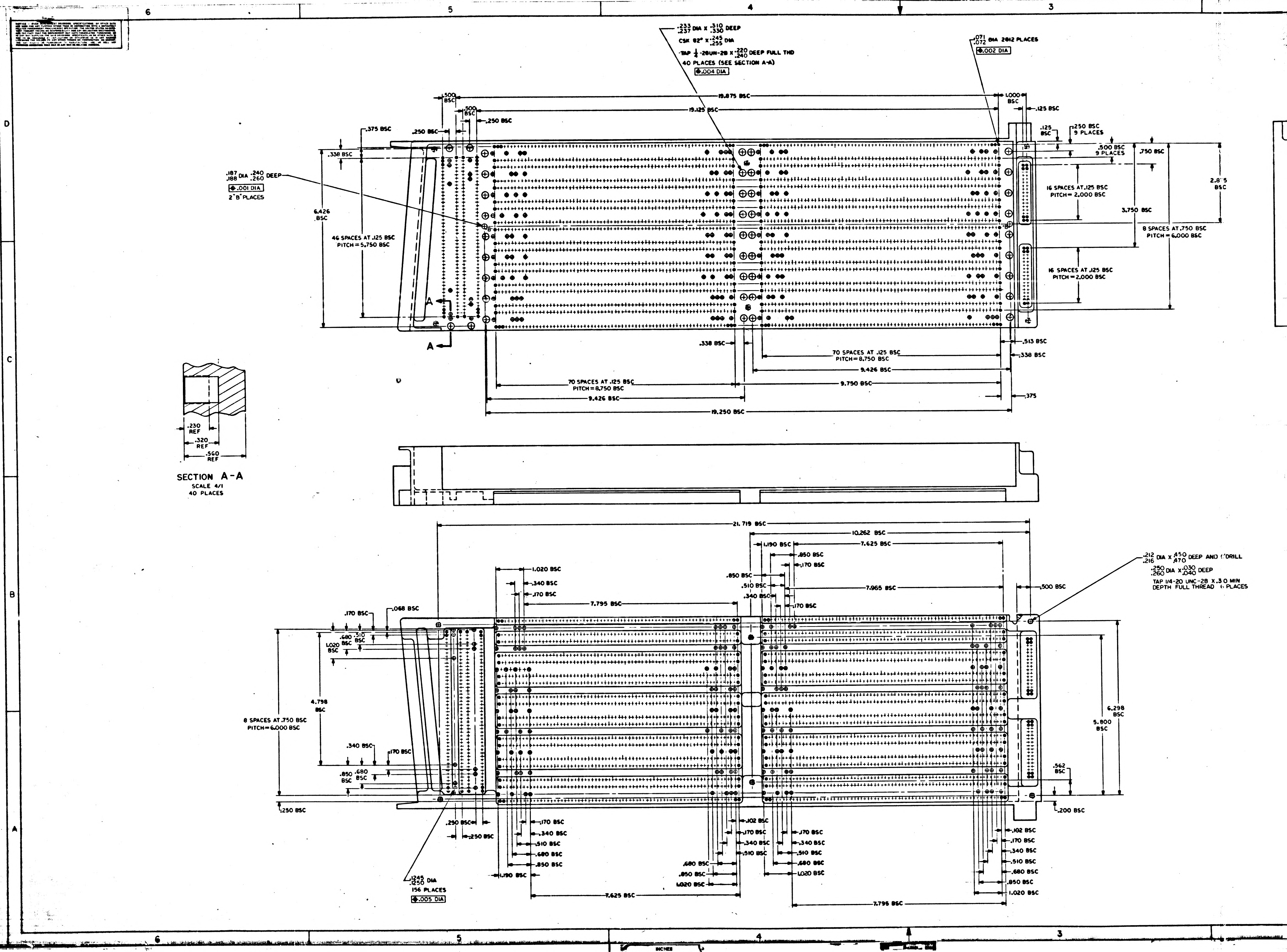6
5
4
3
D
C
B
A
.233 .237 DIA X .310 .330 DEEP
CSK 82° X .245 .255 DIA
TAP 1/4-28UN-2B X .220 .240 DEEP FULL THD
40 PLACES (SEE SECTION A-A)
.004 DIA
.071 .072 DIA 2812 PLACES
.002 DIA
19.875 BSC
19.125 BSC
1.000 BSC
.125 BSC
.500 BSC
.500 BSC
.250 BSC
.375 BSC
.250 BSC
.338 BSC
.125 BSC
.250 BSC 9 PLACES
.500 BSC 9 PLACES
.750 BSC
2.875 BSC
.187 .188 DIA .240 .260 DEEP
.001 DIA
2 "B" PLACES
6.426 BSC
46 SPACES AT .125 BSC PITCH = 5.750 BSC
16 SPACES AT .125 BSC PITCH = 2.000 BSC
3.750 BSC
8 SPACES AT .750 BSC PITCH = 6.000 BSC
16 SPACES AT .125 BSC PITCH = 2.000 BSC
A
A
.338 BSC
.513 BSC
.338 BSC
70 SPACES AT .125 BSC PITCH = 8.750 BSC
9.426 BSC
9.750 BSC
.375
70 SPACES AT .125 BSC PITCH = 8.750 BSC
9.426 BSC
19.250 BSC
.230 REF
.320 REF
.560 REF
SECTION A-A
SCALE 4/1
40 PLACES
21.719 BSC
10.262 BSC
1.190 BSC
7.625 BSC
.850 BSC
.170 BSC
.850 BSC
.510 BSC
.340 BSC
.170 BSC
7.965 BSC
.500 BSC
1.020 BSC
.340 BSC
.170 BSC
7.795 BSC
.170 BSC
.068 BSC
.212 .216 DIA X .450 .470 DEEP AND C'DRILL
.250 .260 DIA X .030 .040 DEEP
TAP 1/4-20 UNC-2B X .30 MIN DEPTH FULL THREAD 6 PLACES
.680 BSC
.510 BSC
1.020 BSC
4.798 BSC
8 SPACES AT .750 BSC PITCH = 6.000 BSC
.340 BSC
.170 BSC
.850 BSC
.680 BSC
.250 BSC
6.298 BSC
5.800 BSC
.562 BSC
.200 BSC
.290 BSC
.250 BSC
.170 BSC
.340 BSC
.510 BSC
.680 BSC
.850 BSC
1.190 BSC
.102 BSC
.170 BSC
.340 BSC
.510 BSC
.680 BSC
.850 BSC
1.020 BSC
.170 BSC
.340 BSC
.510 BSC
.680 BSC
1.020 BSC
.102 BSC
.170 BSC
.340 BSC
.510 BSC
.680 BSC
.850 BSC
1.020 BSC
.1245 .1250 DIA
156 PLACES
.005 DIA
7.625 BSC
7.795 BSC
INCHES
PHOTOGRAPHIC SCALE ONLY

1004216 B

SYM	DESCRIPTION	DATE	APPROVAL
A	REVISED PER TDRR 03224	8-1-63	EPK WK
B	REVISED PER TDRR 03648	1 OCT 63	EPK WK

REVISIONS TDRR 02282

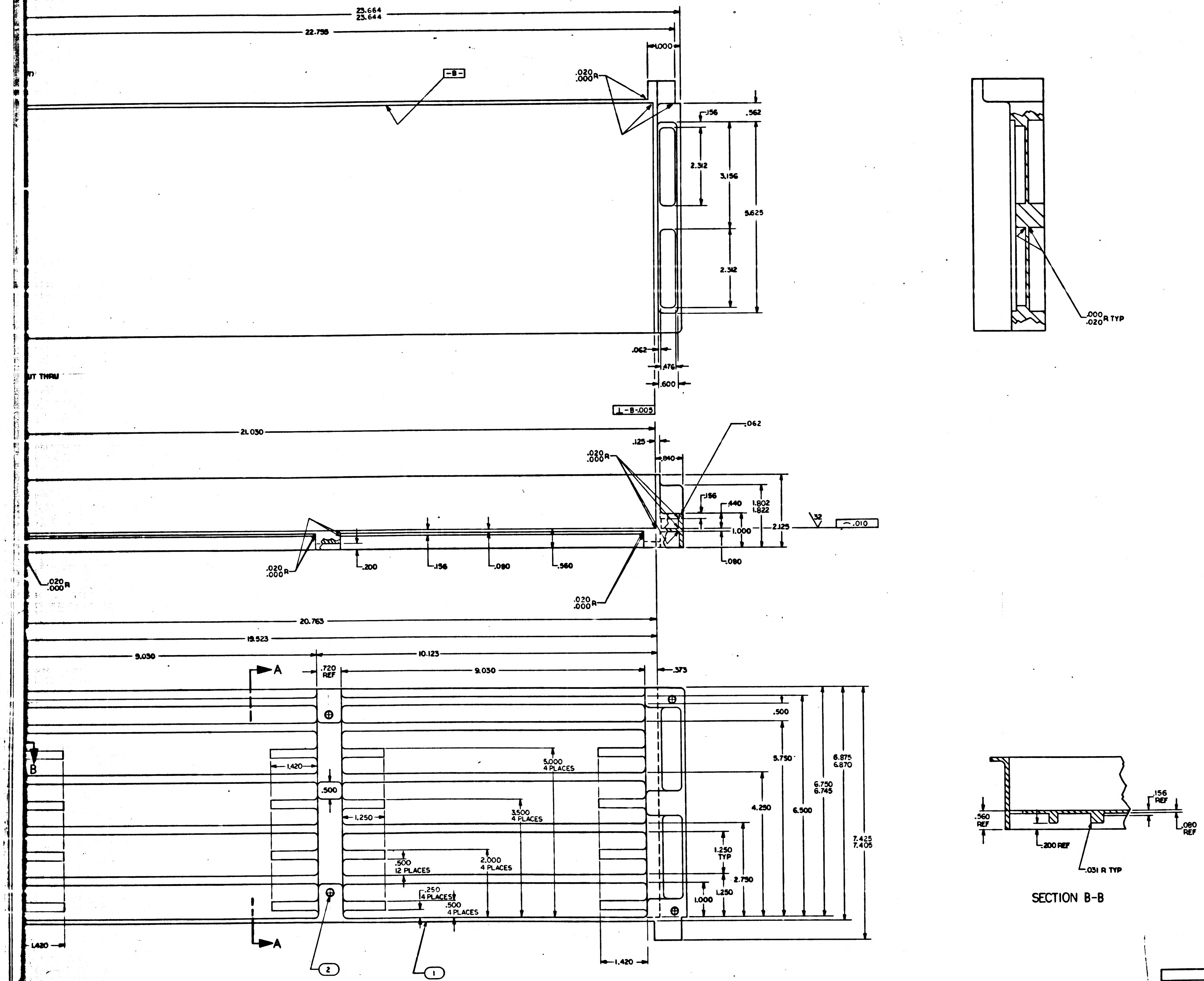

23.664
23.644
22.755
1.000
-B-
.020
.000 R
.156
.562
2.312
3.156
5.625
2.312
.062
.476
.600
UT THRU
⊥ -B- .005
21.030
.062
.125
.840
.020
.000 R
.156
.440
1.802
1.822
1.000
2.125
32
⌒ .010
.080
.020
.000 R
.200
.156
.080
.560
.020
.000 R
.020
.000 R
20.763
19.523
9.030
10.123
A
.720
REF
9.030
.373
.500
5.750
6.875
6.870
6.750
6.745
7.425
7.405
B
1.420
5.000
4 PLACES
.500
3.500
4 PLACES
4.250
6.500
1.250
1.250
TYP
.500
12 PLACES
2.000
4 PLACES
.250
4 PLACES
.500
4 PLACES
2.750
1.250
1.000
1.420
1.420
2
1
A
.000
.020 R TYP
.560
REF
.156
REF
.080
REF
.200 REF
.031 R TYP
SECTION B-B

QTY REQD	PART OR IDENTIFYING NO.	NOMENCLATURE OR DESCRIPTION	FIND NO.
6	NAS1394CA-08L	INSERT, THREADED, SELF LOCKING	2
1	1004216-1	TRAY A RIGHT HAND	1

LIST OF MATERIALS

NEXT ASSY	USED ON
1003126	

APPLICATION

UNLESS OTHERWISE SPECIFIED
DIMENSIONS ARE IN INCHES
TOLERANCES ON
FRACTIONS ± — DECIMALS ±.005 ANGLES ± 0° 30'
DO NOT SCALE THIS DRAWING
MATERIAL
SEE NOTE 2
HEAT TREATMENT
—
FINAL FINISH
—

MIT
INSTRUMENTATION LAB
CAMBRIDGE, MASS.
DWG. NO. CONTRACT
DRAWN D. Williams DATE 12-20-62
CHECKED King 7/31/63
APPROVAL W. Turner 7/30/63
APPROVAL Duggan 7/30/63
NASA APPROVAL W. G. Rhea 7-31-63
MIT APPROVAL 7/31/63

MANNED SPACECRAFT CENTER
HOUSTON, TEXAS

TRAY A
RIGHT HAND

CODE IDENT NO. —
SIZE J
NASA DRAWING NO. 1004216
SCALE 1/1
WT
SHEET 1 OF 2

1004216

MASTER

F-2

NOTICE — WHEN GOVERNMENT DRAWINGS, SPECIFICATIONS, OR OTHER DATA ARE USED FOR ANY PURPOSE OTHER THAN IN CONNECTION WITH A DEFINITELY RELATED GOVERNMENT PROCUREMENT OPERATION, THE UNITED STATES GOVERNMENT THEREBY INCURS NO RESPONSIBILITY NOR ANY OBLIGATION WHATSOEVER; AND THE FACT THAT THE GOVERNMENT MAY HAVE FORMULATED, FURNISHED, OR IN ANY WAY SUPPLIED THE SAID DRAWINGS, SPECIFICATIONS, OR OTHER DATA IS NOT TO BE REGARDED BY IMPLICATION OR OTHERWISE AS IN ANY MANNER LICENSING THE HOLDER OR ANY OTHER PERSON OR CORPORATION, OR CONVEYING ANY RIGHTS OR PERMISSION TO MANUFACTURE, USE, OR SELL ANY PATENTED INVENTION THAT MAY IN ANY WAY BE RELATED THERETO.

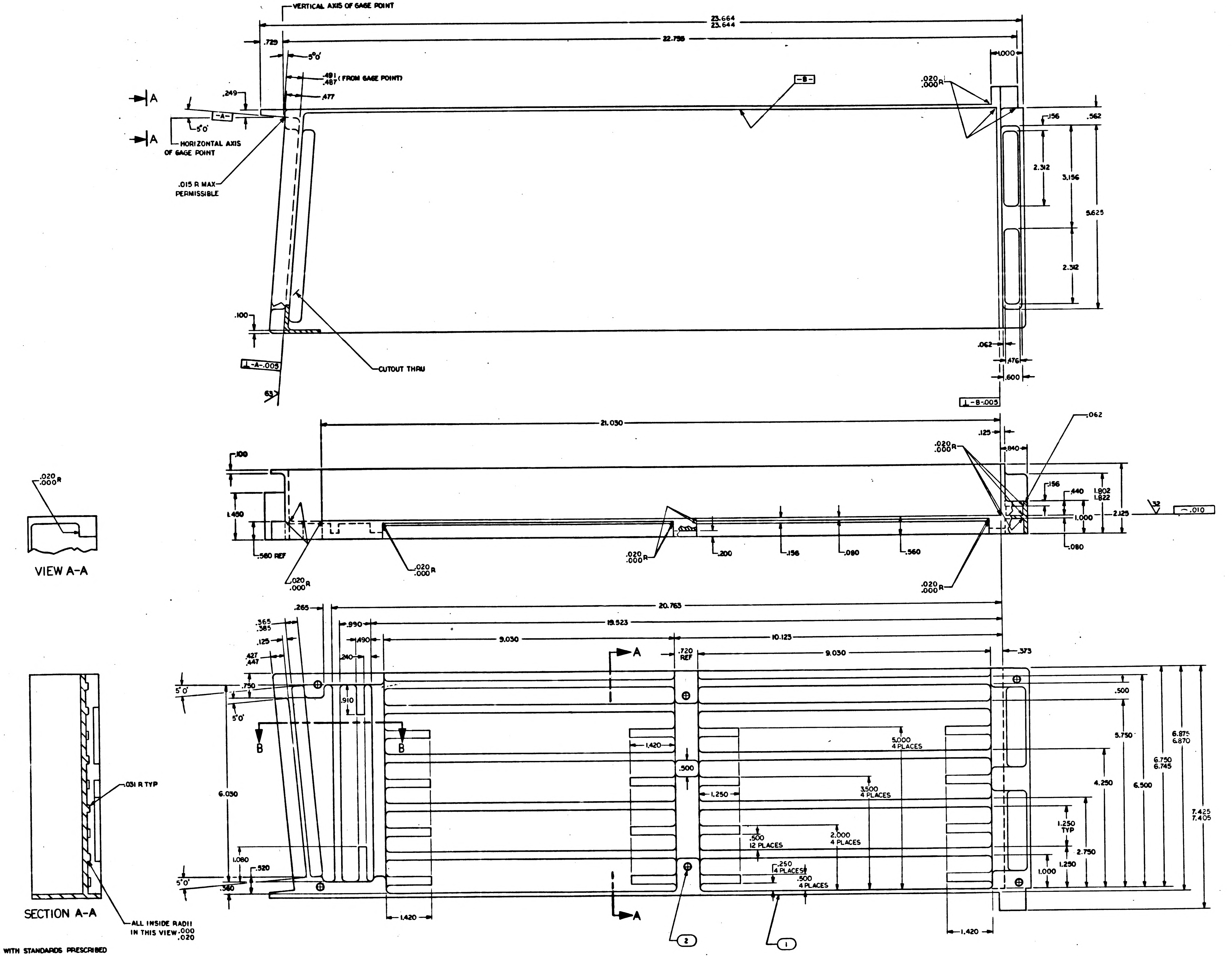
VERTICAL AXIS OF GAGE POINT
23.664
23.644
22.758
.729
5°0'
.491
.487 (FROM GAGE POINT)
.477
.249
A
-A-
5°0'
HORIZONTAL AXIS OF GAGE POINT
.015 R MAX PERMISSIBLE
-B-
.020
.000 R
1.000
.156
.562
2.312
3.156
5.625
2.312
.100
⊥ -A- .005
63
CUTOUT THRU
.062
.476
.600
⊥ -B- .005
21.030
.125
.062
.840
.100
1.450
.560 REF
.020
.000 R
.200
.156
.080
.560
.156
.440
1.802
1.822
1.000
2.125
32
⌒ .010
.080
VIEW A-A
20.763
.265
19.523
.365
.385
.990
.125
.490
9.030
10.123
.427
.447
.240
.720 REF
9.030
.373
.750
5°0'
.910
.500
B
B
1.420
5.000 4 PLACES
5.750
6.875
6.870
6.750
6.745
.500
6.030
1.250
3.500 4 PLACES
4.250
6.500
7.425
7.405
.500 12 PLACES
2.000 4 PLACES
1.250 TYP
2.750
1.080
.520
.250 4 PLACES
.500 4 PLACES
1.250
1.000
5°0'
.360
1.420
2
1
1.420
.031 R TYP
SECTION A-A
ALL INSIDE RADII IN THIS VIEW .000 .020

NOTES
1. INTERPRET DRAWING IN ACCORDANCE WITH STANDARDS PRESCRIBED BY MIL-D-70327
2. MAKE FROM NASA DWG 1004150
3. REMOVE BURRS AND BREAK SHARP EDGES .005 -.015
4. UNLESS OTHERWISE SPECIFIED, FINSH 125
5. ALL RADII AND FILLETS TO BE .125 UNLESS OTHERWISE SPECIFIED
6. COAT FIND NO.1 AND FIND NO.2 WITH MIL-P-8585 WET ZINC CHROMATE PRIMER
7. INSTALL FIND NO.2 / ND1002121

B	1004216

REVISIONS TDRR [illegible]

SYM	DESCRIPTION	DATE	APPROVAL
A	REVISED PER TDRR [illegible]	[illegible]	[illegible]
B	REVISED PER TDRR 136VP	1 OCT 63	[illegible]

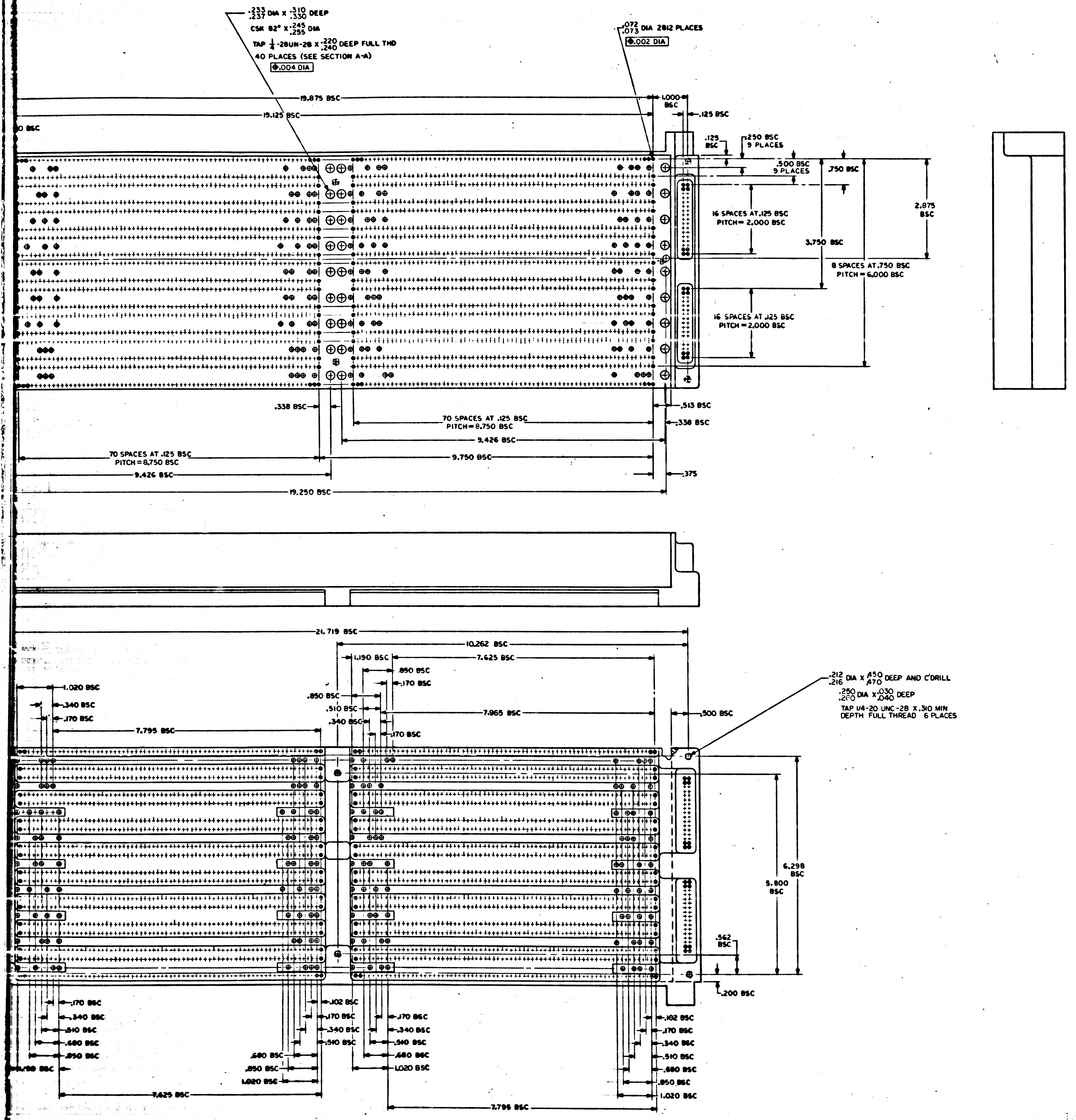

$\frac{.233}{.237}$ DIA X $\frac{.310}{.330}$ DEEP
CSK 82° X $\frac{.245}{.255}$ DIA
TAP $\frac{1}{4}$-28UN-2B X $\frac{.220}{.240}$ DEEP FULL THD
40 PLACES (SEE SECTION A-A)
⌖.004 DIA
$\frac{.072}{.073}$ DIA 2812 PLACES
⌖.002 DIA
19.875 BSC
19.125 BSC
0 BSC
1.000 BSC
.125 BSC
.125 BSC
.250 BSC 9 PLACES
.500 BSC 9 PLACES
.750 BSC
16 SPACES AT .125 BSC PITCH = 2.000 BSC
2.875 BSC
3.750 BSC
8 SPACES AT .750 BSC PITCH = 6.000 BSC
16 SPACES AT .125 BSC PITCH = 2.000 BSC
.338 BSC
70 SPACES AT .125 BSC PITCH = 8.750 BSC
9.426 BSC
9.750 BSC
.513 BSC
.338 BSC
70 SPACES AT .125 BSC PITCH = 8.750 BSC
9.426 BSC
.375
19.250 BSC
21.719 BSC
10.262 BSC
1.190 BSC
7.625 BSC
.850 BSC
.170 BSC
1.020 BSC
.340 BSC
.170 BSC
.850 BSC
.510 BSC
.340 BSC
7.965 BSC
.170 BSC
7.795 BSC
.500 BSC
$\frac{.212}{.216}$ DIA X $\frac{.450}{.470}$ DEEP AND C'DRILL
$\frac{.250}{.260}$ DIA X $\frac{.030}{.040}$ DEEP
TAP 1/4-20 UNC-2B X .310 MIN DEPTH FULL THREAD 6 PLACES
6.298 BSC
5.800 BSC
.562 BSC
.200 BSC
.170 BSC
.340 BSC
.510 BSC
.680 BSC
.850 BSC
1.190 BSC
.102 BSC
.170 BSC
.340 BSC
.510 BSC
.680 BSC
.850 BSC
1.020 BSC
7.625 BSC
.170 BSC
.340 BSC
.510 BSC
.680 BSC
1.020 BSC
.102 BSC
.170 BSC
.340 BSC
.510 BSC
.680 BSC
.850 BSC
1.020 BSC
7.795 BSC

QTY REQD	PART OR IDENTIFYING NO.	NOMENCLATURE OR DESCRIPTION	FIND NO.

LIST OF MATERIALS

UNLESS OTHERWISE SPECIFIED
DIMENSIONS ARE IN INCHES
TOLERANCES ON
FRACTIONS ± — DECIMALS ± .005 ANGLES ± 0° 30'
DO NOT SCALE THIS DRAWING

MATERIAL
SEE NOTE 2

HEAT TREATMENT
—

FINAL FINISH
—

NEXT ASSY	USED ON
1003126	

APPLICATION

MIT
INSTRUMENTATION LAB
CAMBRIDGE, MASS

DRAWN J. Fazzano DATE 22 Jul 63
CHECKED [illegible] 7/30/63
APPROVAL [illegible] 7/30/63
APPROVAL [illegible] 7/31/63
NASA APPROVAL W.J. Rhine 7-31-63
MIT APPROVAL [illegible] 7/31/63

MANNED SPACECRAFT CENTER
HOUSTON, TEXAS

TRAY A
RIGHT HAND

CODE IDENT NO. —
SIZE J
NASA DRAWING NO. 1004216
SCALE 1/1
WT
SHEET 2 OF 2

MASTER

F-2

NOTICE — WHEN GOVERNMENT DRAWINGS, SPECIFICATIONS, OR OTHER DATA ARE USED FOR ANY PURPOSE OTHER THAN IN CONNECTION WITH A DEFINITELY RELATED GOVERNMENT PROCUREMENT OPERATION, THE UNITED STATES GOVERNMENT THEREBY INCURS NO RESPONSIBILITY NOR ANY OBLIGATION WHATSOEVER; AND THE FACT THAT THE GOVERNMENT MAY HAVE FORMULATED, FURNISHED, OR IN ANY WAY SUPPLIED THE SAID DRAWINGS, SPECIFICATIONS, OR OTHER DATA IS NOT TO BE REGARDED BY IMPLICATION OR OTHERWISE AS IN ANY MANNER LICENSING THE HOLDER OR ANY OTHER PERSON OR CORPORATION, OR CONVEYING ANY RIGHTS OR PERMISSION TO MANUFACTURE, USE, OR SELL ANY PATENTED INVENTION THAT MAY IN ANY WAY BE RELATED THERETO.

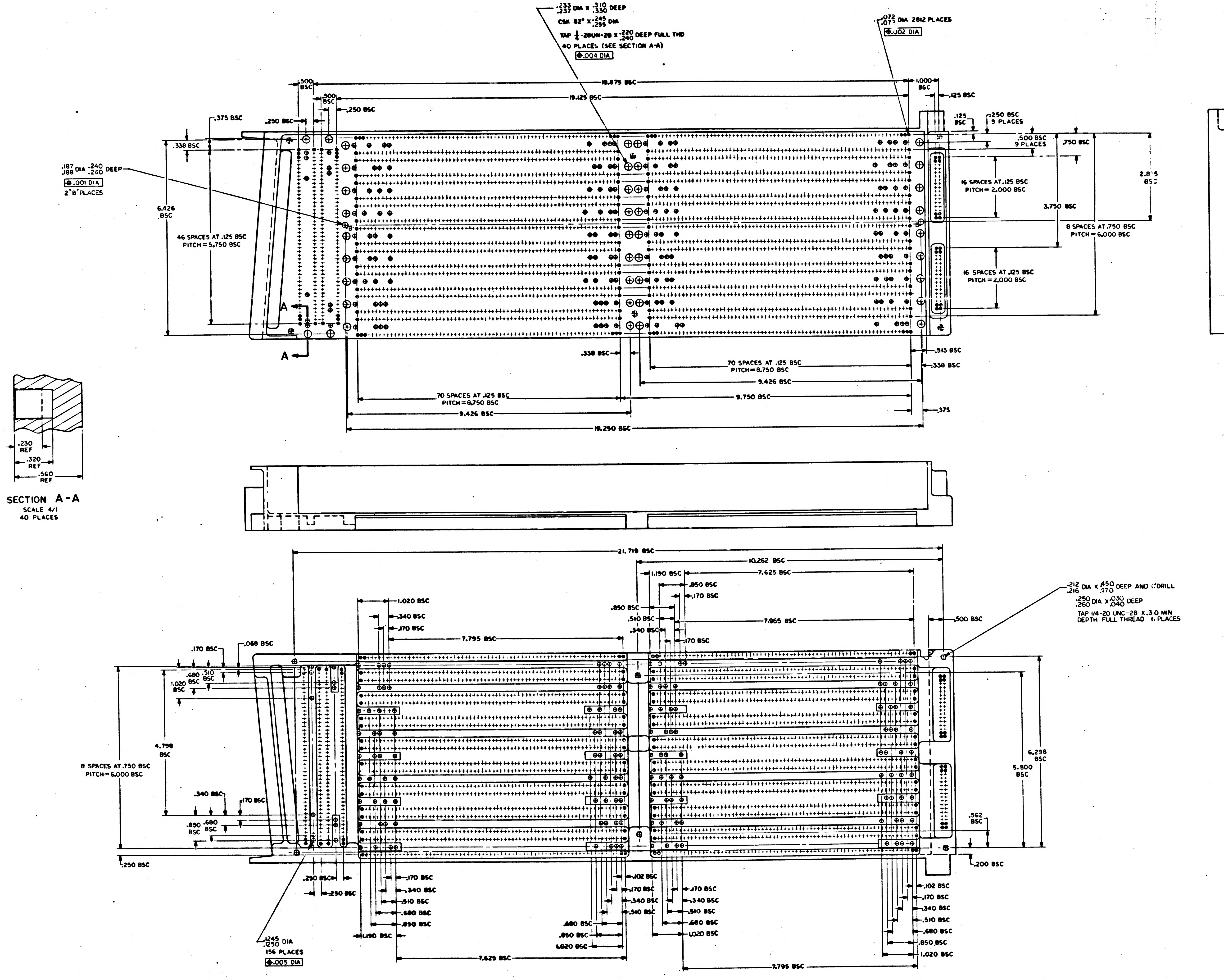
.233/.237 DIA X .310/.330 DEEP
CSK 82° X .245/.255 DIA
TAP 1/4-28UN-2B X .220/.240 DEEP FULL THD
40 PLACES (SEE SECTION A-A)
⊕ .004 DIA
.072/.073 DIA 2812 PLACES
⊕ .002 DIA
.500 BSC
19.875 BSC
.500 BSC
19.125 BSC
1.000 BSC
.125 BSC
.250 BSC
.250 BSC
.375 BSC
.338 BSC
.125 BSC
.250 BSC 9 PLACES
.500 BSC 9 PLACES
.750 BSC
2.875 BSC
.187/.188 DIA .240/.260 DEEP
⊕ .001 DIA
2 "B" PLACES
6.426 BSC
46 SPACES AT .125 BSC PITCH = 5.750 BSC
16 SPACES AT .125 BSC PITCH = 2.000 BSC
3.750 BSC
8 SPACES AT .750 BSC PITCH = 6.000 BSC
16 SPACES AT .125 BSC PITCH = 2.000 BSC
A
A
B
.513 BSC
.338 BSC
.338 BSC
70 SPACES AT .125 BSC PITCH = 8.750 BSC
9.426 BSC
70 SPACES AT .125 BSC PITCH = 8.750 BSC
9.750 BSC
9.426 BSC
.375
19.250 BSC
.230 REF
.320 REF
.560 REF
21.719 BSC
10.262 BSC
1.190 BSC
7.625 BSC
.850 BSC
.170 BSC
1.020 BSC
.850 BSC
.510 BSC
7.965 BSC
.340 BSC
.340 BSC
.170 BSC
.500 BSC
.170 BSC
7.795 BSC
.170 BSC
.068 BSC
.212/.216 DIA X .450/.470 DEEP AND C'DRILL
.250/.260 DIA X .030/.040 DEEP
TAP 1/4-20 UNC-2B X .30 MIN DEPTH FULL THREAD 6 PLACES
.680 BSC
.510 BSC
1.020 BSC
4.798 BSC
8 SPACES AT .750 BSC PITCH = 6.000 BSC
.340 BSC
.170 BSC
.850 BSC
.680 BSC
6.298 BSC
5.800 BSC
.562 BSC
.250 BSC
.200 BSC
.250 BSC
.250 BSC
.170 BSC
.340 BSC
.510 BSC
.680 BSC
.850 BSC
1.190 BSC
.102 BSC
.170 BSC
.340 BSC
.510 BSC
.680 BSC
.850 BSC
1.020 BSC
.170 BSC
.340 BSC
.510 BSC
.680 BSC
1.020 BSC
.102 BSC
.170 BSC
.340 BSC
.510 BSC
.680 BSC
.850 BSC
1.020 BSC
.1245/.1250 DIA
156 PLACES
⊕ .005 DIA
7.625 BSC
7.795 BSC

SECTION A-A
SCALE 4/1
40 PLACES

1004216 C

SYM	DESCRIPTION	DATE	APPROVAL
A	REVISED PER TDRR 03224	8-1-63	
B	REVISED PER TDRR 03648	1 OCT 63	
C	REVISED PER TDRR 04178	11/23/63	

REVISIONS TDRR 02272

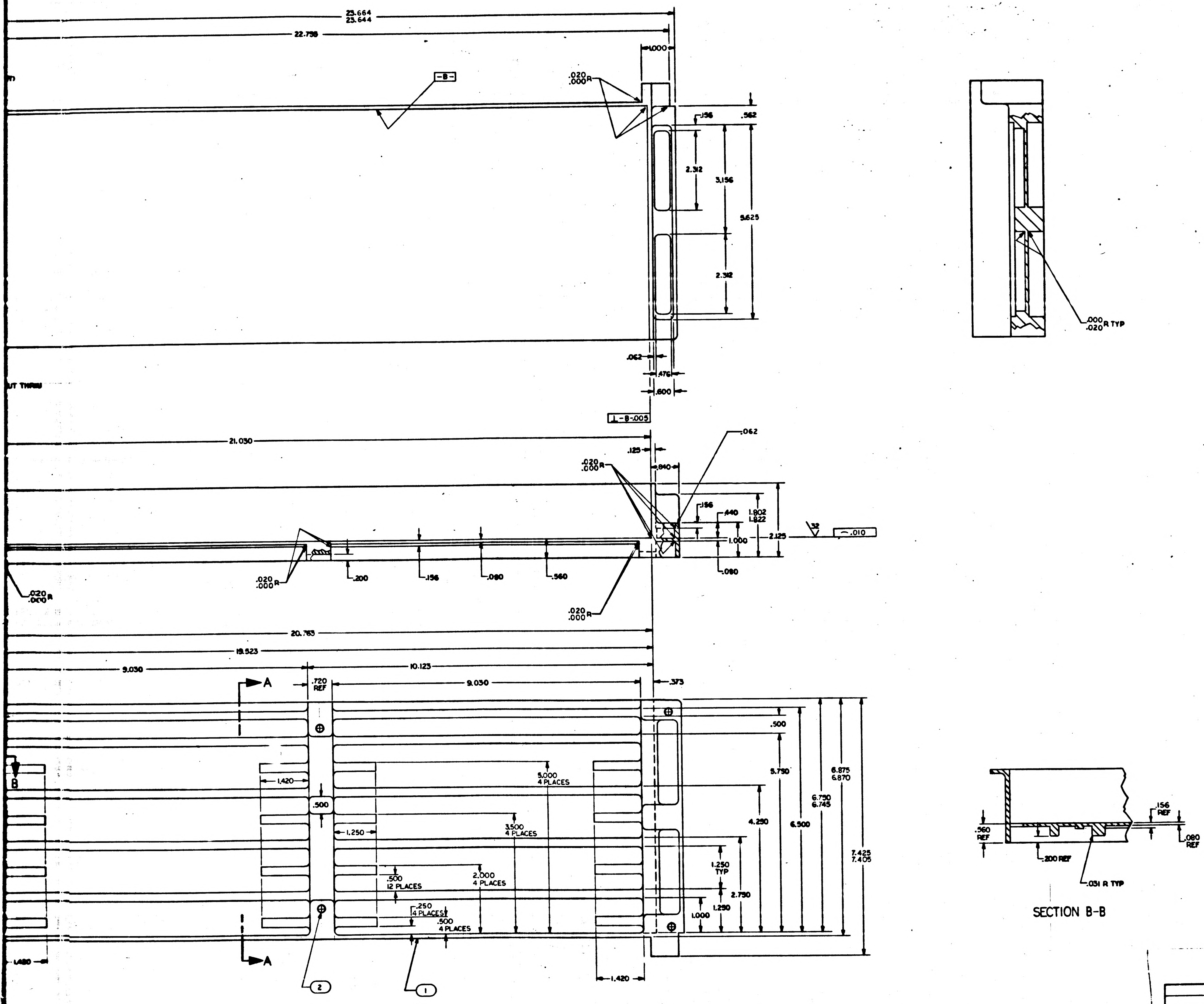

23.664
23.644
22.798
1.000
-B-
.020
.000 R
.156
.562
2.312
3.156
5.625
2.312
.062
.476
.600
⊥ -B- .005
UT THRU
.000
.020 R TYP
21.030
.125
.840
.062
.020
.000 R
.156
.440
1.902
1.822
2.125
1.000
.080
32
⌒ .010
.020
.000 R
.200
.156
.080
.560
.020
.000 R
20.763
19.523
9.030
.720 REF
10.123
9.030
.373
A
A
B
1.420
.500
5.000
4 PLACES
5.750
6.875
6.870
6.750
6.745
.500
4.250
6.500
7.425
7.405
3.500
4 PLACES
1.250
.500
12 PLACES
2.000
4 PLACES
1.250 TYP
2.750
.250
4 PLACES
.500
4 PLACES
1.290
1.000
1.480
1.420
2
1
.560 REF
.156 REF
.080 REF
.200 REF
.031 R TYP
SECTION B-B

QTY REQD	PART OR IDENTIFYING NO.	NOMENCLATURE OR DESCRIPTION	FIND NO.
6	NAS1394CA-08L	INSERT, THREADED, SELF LOCKING	2
1	1004216-1	TRAY A RIGHT HAND	1

LIST OF MATERIALS

NEXT ASSY	USED ON
1003126	

APPLICATION

UNLESS OTHERWISE SPECIFIED
DIMENSIONS ARE IN INCHES
TOLERANCES ON
FRACTIONS ± — DECIMALS ±.005 ANGLES ± 0° 30'
DO NOT SCALE THIS DRAWING
MATERIAL
SEE NOTE 2
HEAT TREATMENT
—
FINAL FINISH
—

MIT
INSTRUMENTATION LAB
CAMBRIDGE MASS
DWG. NO. CONTRACT
DRAWN DATE
CHECKED
APPROVAL 7/30/63
APPROVAL 7/30/63
NASA APPROVAL 7-31-63
MIT APPROVAL 7/31/63

MANNED SPACECRAFT CENTER
HOUSTON, TEXAS

TRAY A
RIGHT HAND

CODE IDENT NO. — SIZE J NASA DRAWING NO. 1004216
SCALE 1/1 WT SHEET 1 OF 2

1004216 C

04216 C

MASTER

INCHES
PHOTOGRAPHIC SCALE ONLY

F-2

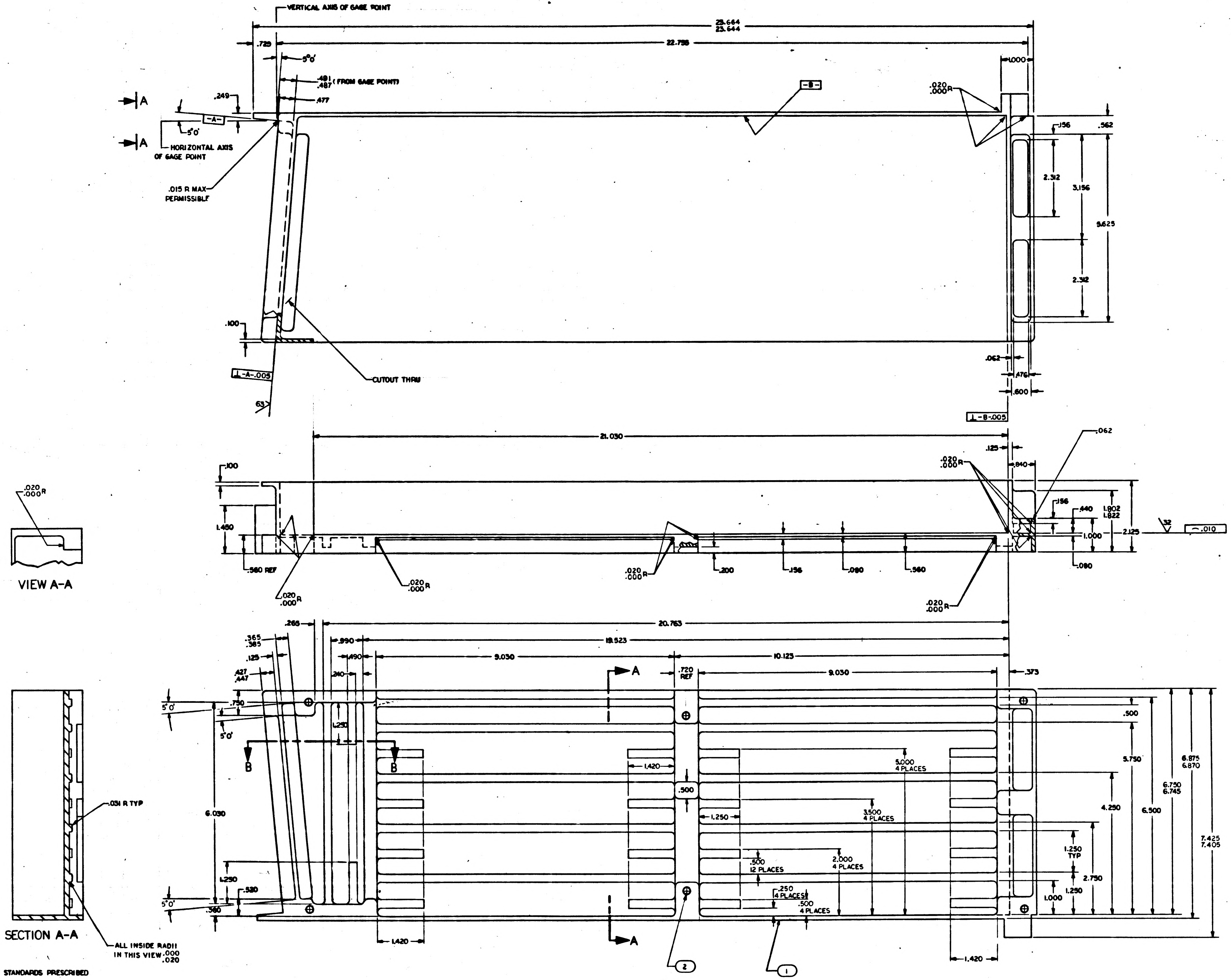
VERTICAL AXIS OF GAGE POINT
23.664
23.644
.729
22.798
5°0'
.481
.487 (FROM GAGE POINT)
.477
.249
-A-
5°0'
HORIZONTAL AXIS OF GAGE POINT
.015 R MAX PERMISSIBLE
-B-
1.000
.020
.000 R
.156
.562
2.312
3.156
5.625
2.312
.100
CUTOUT THRU
⊥ -A- .005
63
.062
.476
.600
⊥ -B- .005
21.030
.125
.062
.840
.100
.020
.000 R
1.450
.560 REF
.020
.000 R
.200
.156
.080
.560
.440
1.902
1.822
1.000
2.125
.010
.090
VIEW A-A
.265
20.763
.365
.385
.990
19.523
.125
.490
9.030
10.123
.720 REF
9.030
.373
.427
.447
.240
A
A
B
B
5°0'
.750
1.250
1.420
.500
5.000
4 PLACES
3.500
4 PLACES
.500
12 PLACES
2.000
4 PLACES
.250
4 PLACES
.500
4 PLACES
1.250
6.030
1.250
.520
.560
1.420
1.420
.500
5.750
4.250
6.500
6.750
6.745
6.875
6.870
7.425
7.405
1.250 TYP
2.750
1.250
1.000
.560 REF
2
1
.031 R TYP
SECTION A-A
ALL INSIDE RADII IN THIS VIEW .000 .020

NOTES

1. INTERPRET DRAWING IN ACCORDANCE WITH STANDARDS PRESCRIBED BY MIL-D-70327
2. MAKE FROM NASA DWG 1004150
3. REMOVE BURRS AND BREAK SHARP EDGES .005 -.015
4. UNLESS OTHERWISE SPECIFIED, FINSH 125
5. ALL RADII AND FILLETS TO BE .125 UNLESS OTHERWISE SPECIFIED
6. COAT FIND NO.1 AND FIND NO.2 WITH MIL-P-8585 WET ZINC CHROMATE PRIMER
7. INSTALL FIND NO.2 / ND1002121

1004216 C

INCHES
PHOTOGRAPHIC SCALE ONLY

1004216	C

SYM	DESCRIPTION	DATE	APPROVAL
A	REVISED PER TDRR 032[illegible]	[illegible]	[illegible]
B	REVISED PER TDRR 136VP	1 OCT 63	WK
C	REVISED PER TDRR 04,[illegible]	[illegible] 63	[illegible]

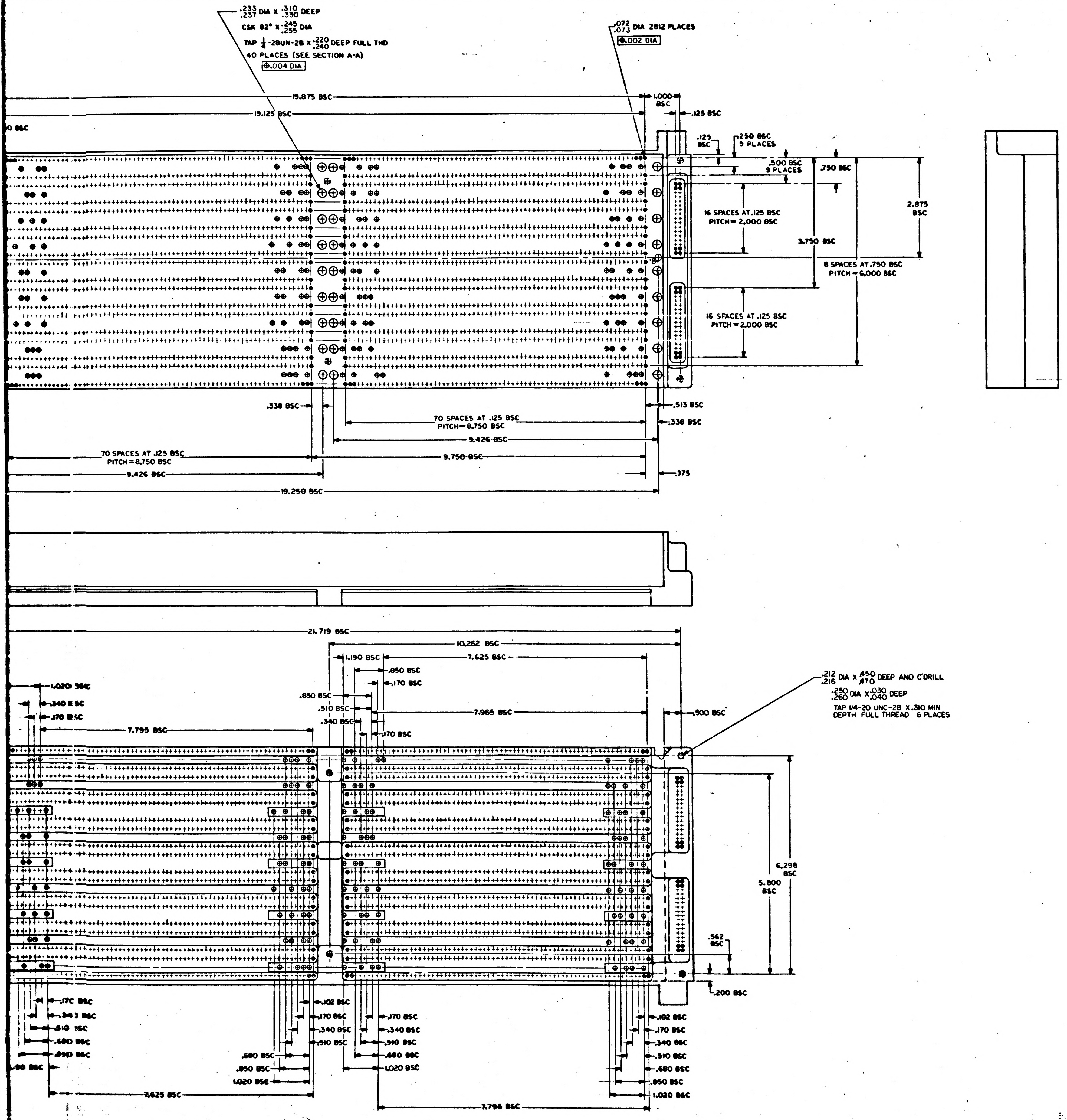

.233/.237 DIA X .310/.330 DEEP
CSK 82° X .245/.255 DIA
TAP 1/4-28UN-2B X .220/.240 DEEP FULL THD
40 PLACES (SEE SECTION A-A)
⊕.004 DIA
.072/.073 DIA 2812 PLACES
⊕.002 DIA
19.875 BSC
19.125 BSC
1.000 BSC
.125 BSC
.125 BSC
.250 BSC 9 PLACES
.500 BSC 9 PLACES
.750 BSC
2.875 BSC
16 SPACES AT .125 BSC PITCH = 2.000 BSC
3.750 BSC
8 SPACES AT .750 BSC PITCH = 6.000 BSC
16 SPACES AT .125 BSC PITCH = 2.000 BSC
.338 BSC
.513 BSC
70 SPACES AT .125 BSC PITCH = 8.750 BSC
.338 BSC
9.426 BSC
70 SPACES AT .125 BSC PITCH = 8.750 BSC
9.750 BSC
9.426 BSC
.375
19.250 BSC
21.719 BSC
10.262 BSC
1.190 BSC
7.625 BSC
.850 BSC
.170 BSC
1.020 BSC
.340 BSC
.170 BSC
.850 BSC
.510 BSC
.340 BSC
7.965 BSC
.500 BSC
7.795 BSC
.170 BSC
.212/.216 DIA X .450/.470 DEEP AND C'DRILL
.250/.260 DIA X .030/.040 DEEP
TAP 1/4-20 UNC-2B X .310 MIN DEPTH FULL THREAD 6 PLACES
6.298 BSC
5.800 BSC
.562 BSC
.200 BSC
.170 BSC
.340 BSC
.510 BSC
.680 BSC
.850 BSC
.102 BSC
.170 BSC
.340 BSC
.510 BSC
.680 BSC
.850 BSC
1.020 BSC
.170 BSC
.340 BSC
.510 BSC
.680 BSC
1.020 BSC
.102 BSC
.170 BSC
.340 BSC
.510 BSC
.680 BSC
.850 BSC
1.020 BSC
7.625 BSC
7.795 BSC

QTY REQD	PART OR IDENTIFYING NO.	NOMENCLATURE OR DESCRIPTION	FIND NO.

LIST OF MATERIALS

NEXT ASSY	USED ON
1003126	

APPLICATION

UNLESS OTHERWISE SPECIFIED
DIMENSIONS ARE IN INCHES
TOLERANCES ON
FRACTIONS ± — DECIMALS ± .005 ANGLES ± 0° 30'
DO NOT SCALE THIS DRAWING

MATERIAL
SEE NOTE 2

HEAT TREATMENT —

FINAL FINISH —

MIT
INSTRUMENTATION LAB
CAMBRIDGE, MASS

DRAWN J. Fazzano DATE [illegible] 63
CHECKED [illegible] 7/30/63
APPROVAL [illegible] 7/30/63
APPROVAL [illegible]
NASA APPROVAL W.J. [illegible] 7-31-63
MIT APPROVAL [illegible] 7/31/63

MANNED SPACECRAFT CENTER
HOUSTON, TEXAS

TRAY A
RIGHT HAND

CODE IDENT NO.	SIZE	NASA DRAWING NO.
—	J	1004216

SCALE 1/1 WT SHEET 2 OF 2

1004216 C

MASTER

INCHES
PHOTOGRAPHIC SCALE ONLY

E2

1004216

NOTICE — WHEN GOVERNMENT DRAWINGS, SPECIFICATIONS, OR OTHER DATA ARE USED FOR ANY PURPOSE OTHER THAN IN CONNECTION WITH A DEFINITELY RELATED GOVERNMENT PROCUREMENT OPERATION, THE UNITED STATES GOVERNMENT THEREBY INCURS NO RESPONSIBILITY NOR ANY OBLIGATION WHATSOEVER; AND THE FACT THAT THE GOVERNMENT MAY HAVE FORMULATED, FURNISHED, OR IN ANY WAY SUPPLIED THE SAID DRAWINGS, SPECIFICATIONS OR OTHER DATA IS NOT TO BE REGARDED BY IMPLICATION OR OTHERWISE AS IN ANY MANNER LICENSING THE HOLDER OR ANY OTHER PERSON OR CORPORATION, OR CONVEYING ANY RIGHTS OR PERMISSION TO MANUFACTURE, USE, OR SELL ANY PATENTED INVENTION THAT MAY IN ANY WAY BE RELATED THERETO.

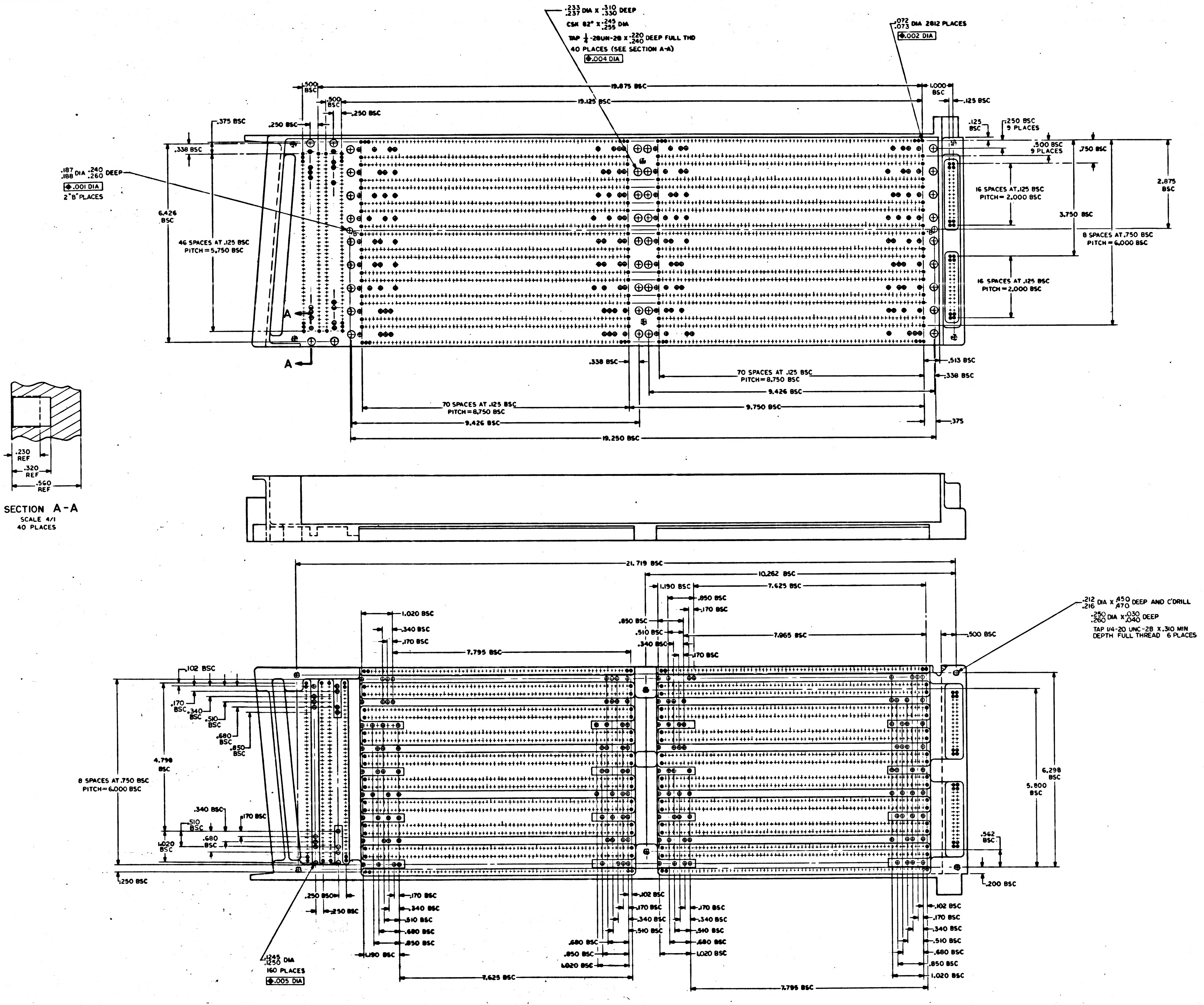
.233 .237 DIA X .310 .330 DEEP
CSK 82° X .245 .255 DIA
TAP 1/4-28UN-2B X .220 .240 DEEP FULL THD
40 PLACES (SEE SECTION A-A)
.004 DIA
.072 .073 DIA 2812 PLACES
.002 DIA
.500 BSC
.500 BSC
.250 BSC
19.875 BSC
19.125 BSC
1.000 BSC
.125 BSC
.375 BSC
.250 BSC
.338 BSC
.187 .188 DIA .240 .260 DEEP
.001 DIA
2 "B" PLACES
6.426 BSC
46 SPACES AT .125 BSC
PITCH = 5.750 BSC
A
A
B
.125 BSC
.250 BSC 9 PLACES
.500 BSC 9 PLACES
.750 BSC
2.875 BSC
16 SPACES AT .125 BSC
PITCH = 2.000 BSC
3.750 BSC
8 SPACES AT .750 BSC
PITCH = 6.000 BSC
16 SPACES AT .125 BSC
PITCH = 2.000 BSC
.338 BSC
.513 BSC
.338 BSC
70 SPACES AT .125 BSC
PITCH = 8.750 BSC
9.426 BSC
70 SPACES AT .125 BSC
PITCH = 8.750 BSC
9.750 BSC
9.426 BSC
.375
19.250 BSC
.230 REF
.320 REF
.560 REF
SECTION A-A
SCALE 4/1
40 PLACES
21.719 BSC
10.262 BSC
1.190 BSC
7.625 BSC
.850 BSC
.170 BSC
.850 BSC
.510 BSC
7.965 BSC
.340 BSC
.170 BSC
.500 BSC
1.020 BSC
.340 BSC
.170 BSC
7.795 BSC
.212 .216 DIA X .450 .470 DEEP AND C'DRILL
.250 .260 DIA X .030 .040 DEEP
TAP 1/4-20 UNC-2B X .310 MIN
DEPTH FULL THREAD 6 PLACES
.102 BSC
.170 BSC
.340 BSC
.510 BSC
.680 BSC
.850 BSC
4.798 BSC
8 SPACES AT .750 BSC
PITCH = 6.000 BSC
.340 BSC
.170 BSC
.510 BSC
.680 BSC
1.020 BSC
.250 BSC
6.298 BSC
5.800 BSC
.562 BSC
.200 BSC
.250 BSC
.250 BSC
.1245 .1250 DIA
160 PLACES
.005 DIA
.170 BSC
.340 BSC
.510 BSC
.680 BSC
.850 BSC
1.190 BSC
7.625 BSC
.102 BSC
.170 BSC
.340 BSC
.510 BSC
.680 BSC
.850 BSC
1.020 BSC
.170 BSC
.340 BSC
.510 BSC
.680 BSC
1.020 BSC
.102 BSC
.170 BSC
.340 BSC
.510 BSC
.680 BSC
.850 BSC
1.020 BSC
7.795 BSC

INCHES
0 1 2
PHOTOGRAPHIC SCALE ONLY

F1

10004216

	1004216	D

		REVISIONS TDRR 03282		
	SYM	DESCRIPTION	DATE	APPROVAL
⑥	A	REVISED PER TDRR 03224	8-1-63	
⑥	B	REVISED PER TDRR 03648	1 OCT 63	
⑥	C	REVISED PER TDRR 04178	11-13-63	
⑦	D	REVISED PER TDRR 04397	10-30-63	

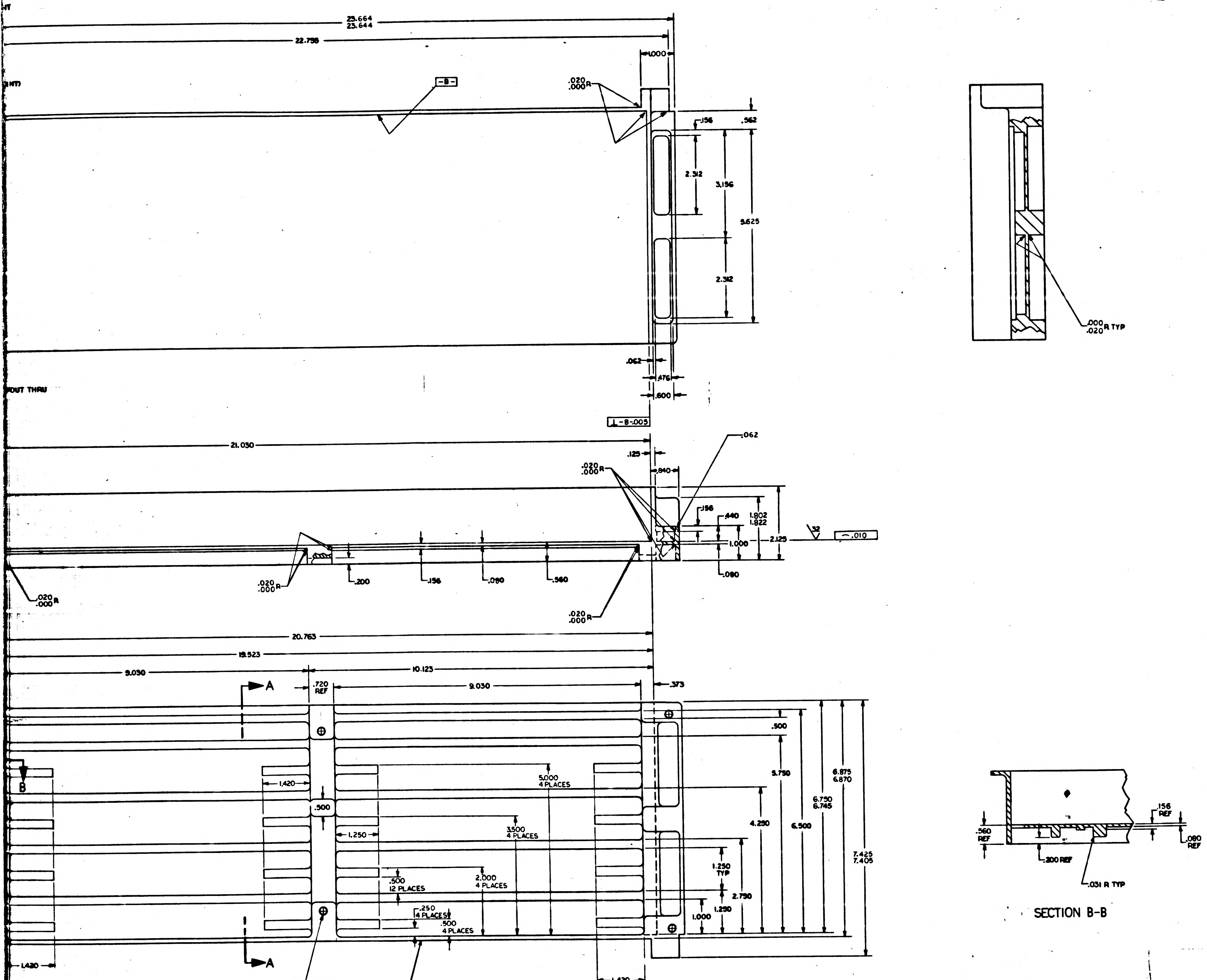

4
3
2
D
C
B
A
25.664
25.644
22.756
1.000
.020
.000 R
B
.156
.562
2.312
3.156
5.625
2.312
.062
.476
.600
⊥ B .005
21.030
.062
.125
.840
.020
.000 R
.156
.440
1.902
1.822
1.000
2.125
32
⌒ .010
.080
.200
.156
.080
.560
.020
.000 R
20.763
19.523
9.030
10.123
9.030
.720 REF
.373
A
B
.500
1.420
.500
5.000 4 PLACES
5.750
6.875
6.870
6.750
6.745
1.250
3.500 4 PLACES
4.250
6.500
7.425
7.405
1.250 TYP
.500 12 PLACES
2.000 4 PLACES
2.750
.250 4 PLACES
.500 4 PLACES
1.250
1.000
1.420
1.420
2
1
.000
.020 R TYP
.560 REF
.156 REF
.080 REF
.200 REF
.031 R TYP
SECTION B-B
(INT)
(INT)
OUT THRU

MASTER

6	NAS1394CA-08L	INSERT, THREADED, SELF LOCKING	2
1	1004216-1	TRAY A RIGHT HAND	1
QTY REQD	PART OR IDENTIFYING NO.	NOMENCLATURE OR DESCRIPTION	FIND NO.

LIST OF MATERIALS

NEXT ASSY	USED ON
1003126	

APPLICATION

UNLESS OTHERWISE SPECIFIED
DIMENSIONS ARE IN INCHES
TOLERANCES ON
FRACTIONS ± — DECIMALS ±.005 ANGLES ±0°30'
DO NOT SCALE THIS DRAWING
MATERIAL
SEE NOTE 2
HEAT TREATMENT
—
FINAL FINISH
—

M I T
INSTRUMENTATION LAB
CAMBRIDGE, MASS.
DWG. NO. CONTRACT
DRAWN DATE
CHECKED 7/26/63
APPROVAL 7/30/63
APPROVAL 7/30/63
NASA APPROVAL 7-31-63
MIT APPROVAL 7/26/63

MANNED SPACECRAFT CENTER
HOUSTON, TEXAS

TRAY A
RIGHT HAND

CODE IDENT NO.	SIZE	NASA DRAWING NO.
—	J	1004216
SCALE 1/1	WT	SHEET 1 OF 2

1004216 D

1004216 D

INCHES
PHOTOGRAPHIC SCALE ONLY

F-2

NOTICE — WHEN GOVERNMENT DRAWINGS, SPECIFICATIONS, OR OTHER DATA ARE USED FOR ANY PURPOSE OTHER THAN IN CONNECTION WITH A DEFINITELY RELATED GOVERNMENT PROCUREMENT OPERATION, THE UNITED STATES GOVERNMENT THEREBY INCURS NO RESPONSIBILITY NOR ANY OBLIGATION WHATSOEVER; AND THE FACT THAT THE GOVERNMENT MAY HAVE FORMULATED, FURNISHED, OR IN ANY WAY SUPPLIED THE SAID DRAWINGS, SPECIFICATIONS, OR OTHER DATA IS NOT TO BE REGARDED BY IMPLICATION OR OTHERWISE AS IN ANY MANNER LICENSING THE HOLDER OR ANY OTHER PERSON OR CORPORATION, OR CONVEYING ANY RIGHTS OR PERMISSION TO MANUFACTURE, USE, OR SELL ANY PATENTED INVENTION THAT MAY IN ANY WAY BE RELATED THERETO.

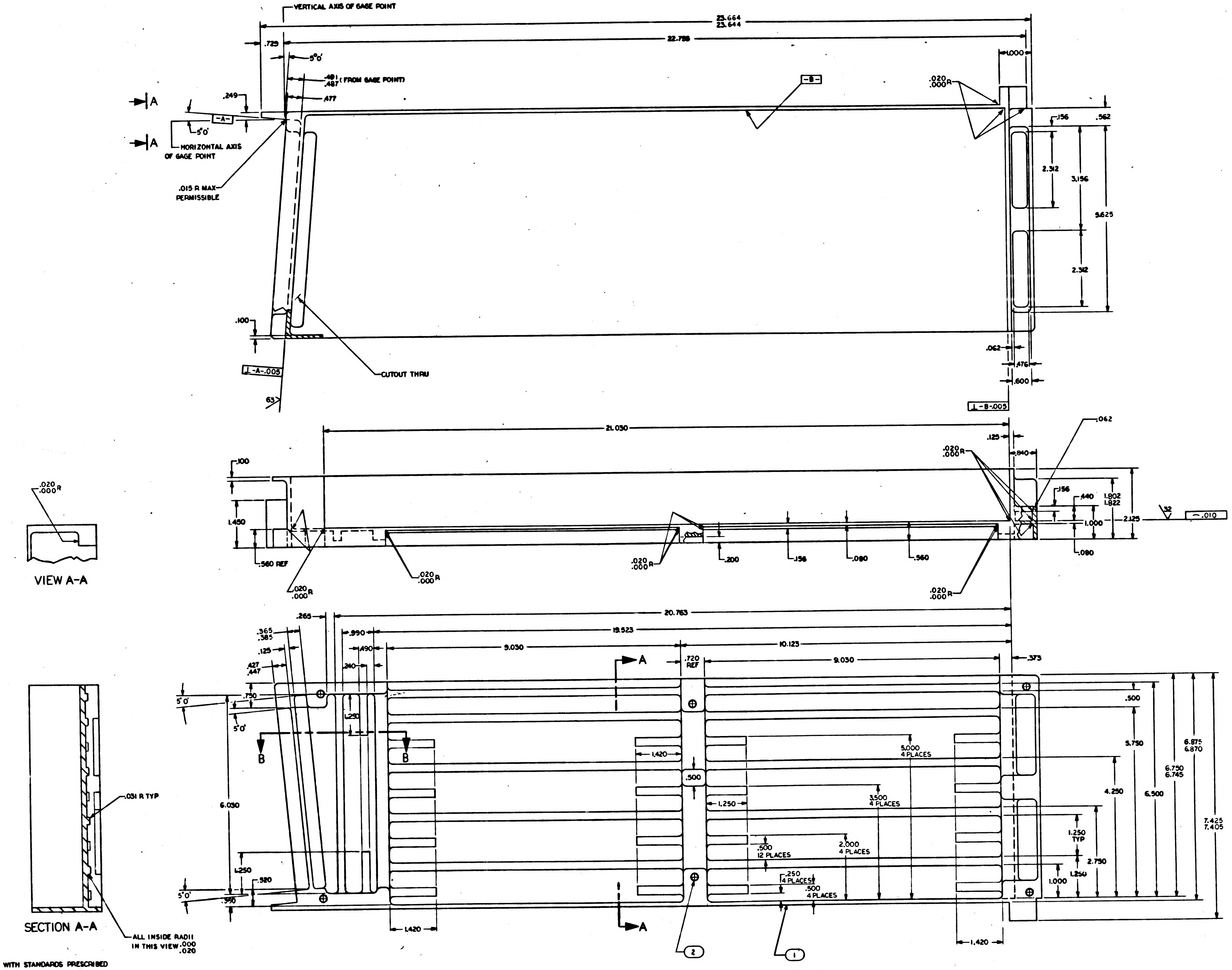
VERTICAL AXIS OF GAGE POINT
23.664
23.644
.729
22.788
5°0'
.491
.487 (FROM GAGE POINT)
.477
1.000
.249
A
A
-A-
5°0'
HORIZONTAL AXIS OF GAGE POINT
-B-
.020
.000 R
.156
.562
2.312
3.156
5.625
2.312
.015 R MAX PERMISSIBLE
.100
CUTOUT THRU
⊥ -A- .005
63
.062
.476
.600
⊥ -B- .005
21.030
.125
.062
.840
.020
.000 R
.100
1.450
.560 REF
.020
.000 R
.020
.000 R
.020
.000 R
.200
.156
.090
.560
.156
.440
1.802
1.822
1.000
2.125
.090
32
⌒ .010
.020
.000 R
.020
.000 R
VIEW A-A
20.763
.265
19.523
.365
.385
.990
10.123
.125
.490
9.030
.720 REF
9.030
.373
.427
.447
.240
A
5°0'
.730
.250
5°0'
B
B
.500
5.750
6.875
6.870
5.000 4 PLACES
6.750
6.745
1.420
.500
3.500 4 PLACES
4.250
6.500
6.030
1.250
7.425
7.405
1.250 TYP
.500 12 PLACES
2.000 4 PLACES
2.750
1.250
.250 4 PLACES
1.250
1.000
.520
.500 4 PLACES
5°0'
.350
1.420
A
1.420
2
1
.031 R TYP
SECTION A-A
ALL INSIDE RADII IN THIS VIEW .000 .020

NOTES
1. INTERPRET DRAWING IN ACCORDANCE WITH STANDARDS PRESCRIBED BY MIL-D-70327
2. MAKE FROM NASA DWG 1004150
3. REMOVE BURRS AND BREAK SHARP EDGES .005 -.015
4. UNLESS OTHERWISE SPECIFIED, FINSH $\sqrt{125}$
5. ALL RADII AND FILLETS TO BE .125 UNLESS OTHERWISE SPECIFIED
6. COAT FIND NO.1 AND FIND NO.2 WITH MIL-P-8585 WET ZINC CHROMATE PRIMER
7. INSTALL FIND NO.2 / ND1002121

1004216 D

INCHES
PHOTOGRAPHIC SCALE ONLY

1004216 D

SYM	DESCRIPTION	DATE	APPROVAL
	REVISIONS TDRR 02252		
A	REVISED PER TDRR 0329		
B	REVISED PER TDRR 1364F	1 OCT 63	
C	REVISED PER TDRR 0417	10-24-63	
D	REVISED PER TDRR 04347	12-3-63	

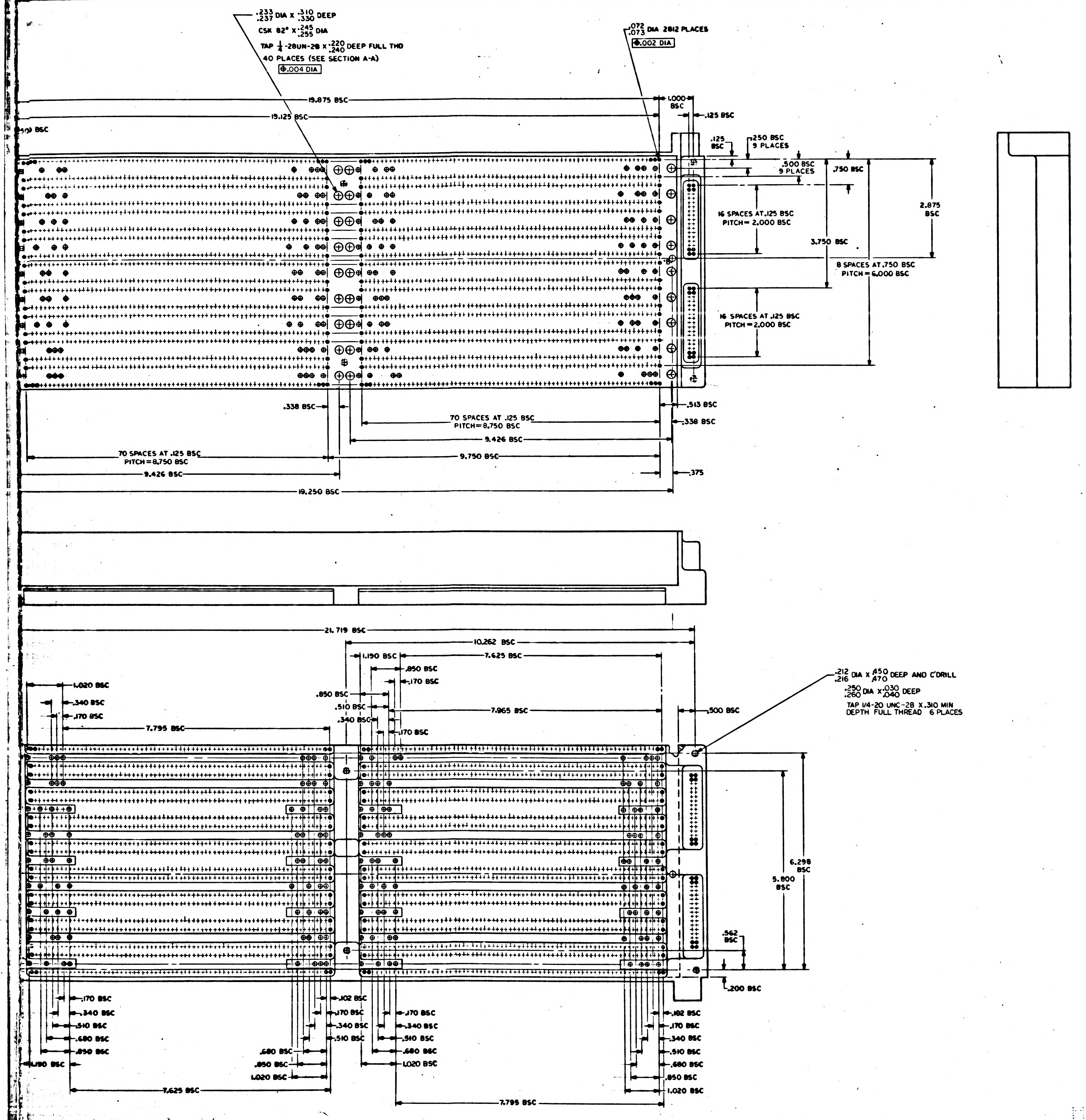

4
3
2
1
.233 .237 DIA X .310 .330 DEEP
CSK 82° X .245 .255 DIA
TAP 1/4-28UN-2B X .220 .240 DEEP FULL THD
40 PLACES (SEE SECTION A-A)
⊕.004 DIA
.072 .073 DIA 2812 PLACES
⊕.002 DIA
19.875 BSC
19.125 BSC
.500 BSC
1.000 BSC
.125 BSC
.125 BSC
.250 BSC 9 PLACES
.500 BSC 9 PLACES
.750 BSC
16 SPACES AT .125 BSC PITCH = 2.000 BSC
2.875 BSC
3.750 BSC
8 SPACES AT .750 BSC PITCH = 6.000 BSC
16 SPACES AT .125 BSC PITCH = 2.000 BSC
.338 BSC
.513 BSC
.338 BSC
70 SPACES AT .125 BSC PITCH = 8.750 BSC
9.426 BSC
70 SPACES AT .125 BSC PITCH = 8.750 BSC
9.750 BSC
9.426 BSC
.375
19.250 BSC
21.719 BSC
10.262 BSC
1.190 BSC
7.625 BSC
.850 BSC
.170 BSC
1.020 BSC
.340 BSC
.170 BSC
.850 BSC
.510 BSC
.340 BSC
7.965 BSC
.170 BSC
7.795 BSC
.500 BSC
.212 .216 DIA X .450 .470 DEEP AND C'DRILL
.250 .260 DIA X .030 .040 DEEP
TAP 1/4-20 UNC-2B X .310 MIN
DEPTH FULL THREAD 6 PLACES
6.298 BSC
5.800 BSC
.562 BSC
.200 BSC
.170 BSC
.340 BSC
.510 BSC
.680 BSC
.850 BSC
1.190 BSC
.102 BSC
.170 BSC
.340 BSC
.510 BSC
.680 BSC
.850 BSC
1.020 BSC
.170 BSC
.340 BSC
.510 BSC
.680 BSC
1.020 BSC
.102 BSC
.170 BSC
.340 BSC
.510 BSC
.680 BSC
.850 BSC
1.020 BSC
7.625 BSC
7.795 BSC
D
C
B
A

MASTER

QTY REQD	PART OR IDENTIFYING NO.	NOMENCLATURE OR DESCRIPTION	FIND NO.

LIST OF MATERIALS

1003126		UNLESS OTHERWISE SPECIFIED DIMENSIONS ARE IN INCHES TOLERANCES ON FRACTIONS ± — DECIMALS ± .005 ANGLES ± 0° 30' DO NOT SCALE THIS DRAWING	MIT INSTRUMENTATION LAB CAMBRIDGE, MASS	MANNED SPACECRAFT CENTER HOUSTON, TEXAS	
NEXT ASSY	USED ON	MATERIAL SEE NOTE 2	DRAWN Fagone DATE 24 Jul 63 CHECKED 7/30/63 APPROVAL 7/30/63 APPROVAL 7/31/63	TRAY A RIGHT HAND	
APPLICATION		HEAT TREATMENT — FINAL FINISH —	NASA APPROVAL 7-31-63 MIT APPROVAL 7/31/63	CODE IDENT NO. — SIZE J	NASA DRAWING NO. 1004216
				SCALE 1/1	WT — SHEET 2 OF 2

1004216 D

INCHES
PHOTOGRAPHIC SCALE ONLY

NOTICE — WHEN GOVERNMENT DRAWINGS, SPECIFICATIONS, OR OTHER DATA ARE USED FOR ANY PURPOSE OTHER THAN IN CONNECTION WITH A DEFINITELY RELATED GOVERNMENT PROCUREMENT OPERATION, THE UNITED STATES GOVERNMENT THEREBY INCURS NO RESPONSIBILITY NOR ANY OBLIGATION WHATSOEVER, AND THE FACT THAT THE GOVERNMENT MAY HAVE FORMULATED, FURNISHED, OR IN ANY WAY SUPPLIED THE SAID DRAWINGS, SPECIFICATIONS, OR OTHER DATA IS NOT TO BE REGARDED BY IMPLICATION OR OTHERWISE AS IN ANY MANNER LICENSING THE HOLDER OR ANY OTHER PERSON OR CORPORATION, OR CONVEYING ANY RIGHTS OR PERMISSION TO MANUFACTURE, USE, OR SELL ANY PATENTED INVENTION THAT MAY IN ANY WAY BE RELATED THERETO.

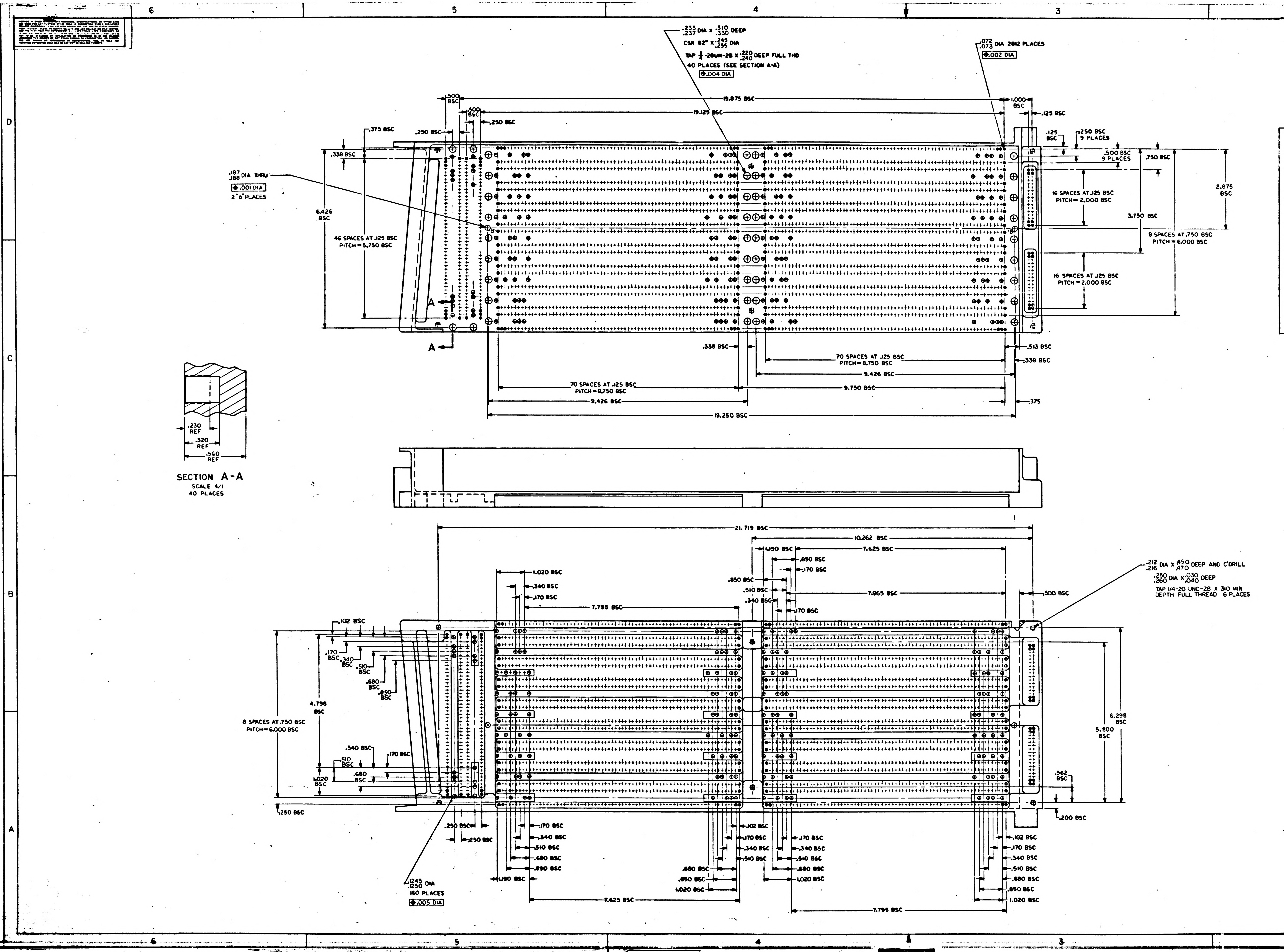
6
5
4
3
D
C
B
A
.233 .237 DIA X .310 .330 DEEP
CSK 82° X .245 .255 DIA
TAP 1/4 -28UN-2B X .220 .240 DEEP FULL THD
40 PLACES (SEE SECTION A-A)
⌖.004 DIA
.072 .073 DIA 2812 PLACES
⌖.002 DIA
19.875 BSC
19.125 BSC
1.000 BSC
.125 BSC
.500 BSC
.500 BSC
.250 BSC
.375 BSC
.250 BSC
.338 BSC
.187 .188 DIA THRU
⌖.001 DIA
2-8 PLACES
6.426 BSC
46 SPACES AT .125 BSC
PITCH = 5.750 BSC
.125 BSC
.250 BSC 9 PLACES
.500 BSC 9 PLACES
.750 BSC
2.875 BSC
16 SPACES AT .125 BSC
PITCH = 2.000 BSC
3.750 BSC
8 SPACES AT .750 BSC
PITCH = 6.000 BSC
16 SPACES AT .125 BSC
PITCH = 2.000 BSC
A
A
.338 BSC
70 SPACES AT .125 BSC
PITCH = 8.750 BSC
9.426 BSC
9.750 BSC
70 SPACES AT .125 BSC
PITCH = 8.750 BSC
9.426 BSC
19.250 BSC
.513 BSC
.338 BSC
.375
.230 REF
.320 REF
.560 REF
SECTION A-A
SCALE 4/1
40 PLACES
21.719 BSC
10.262 BSC
1.190 BSC
7.625 BSC
.850 BSC
.170 BSC
.850 BSC
.510 BSC
.340 BSC
7.965 BSC
.170 BSC
1.020 BSC
.340 BSC
.170 BSC
7.795 BSC
.500 BSC
.212 .216 DIA X .450 .470 DEEP AND C'DRILL
.250 .260 DIA X .030 .040 DEEP
TAP 1/4-20 UNC-2B X .310 MIN
DEPTH FULL THREAD 6 PLACES
.102 BSC
.170 BSC
.340 BSC
.510 BSC
.680 BSC
.850 BSC
4.798 BSC
8 SPACES AT .750 BSC
PITCH = 6.000 BSC
.340 BSC
.170 BSC
.510 BSC
.680 BSC
1.020 BSC
.250 BSC
6.298 BSC
5.800 BSC
.562 BSC
.200 BSC
.250 BSC
.250 BSC
.170 BSC
.340 BSC
.510 BSC
.680 BSC
.850 BSC
1.190 BSC
.1245 .1250 DIA
160 PLACES
⌖.005 DIA
.102 BSC
.170 BSC
.340 BSC
.510 BSC
.680 BSC
.850 BSC
1.020 BSC
7.625 BSC
.170 BSC
.340 BSC
.510 BSC
.680 BSC
1.020 BSC
.102 BSC
.170 BSC
.340 BSC
.510 BSC
.680 BSC
.850 BSC
1.020 BSC
7.795 BSC
INCHES
PHOTOGRAPHIC SCALE ONLY

1004216 E

SYM	DESCRIPTION	DATE	APPROVAL
A	REVISED PER TDRR 03227	8-1-63	[illegible]
B	REVISED PER TDRR 03648	1 OCT 63	[illegible]
C	REVISED PER TDRR 04178	11/23/63	[illegible]
D	REVISED PER TDRR 04377	10-30-63	[illegible]
E	REVISED PER TDRR 05112	12-10-63	[illegible]

REVISIONS TDRR 02282

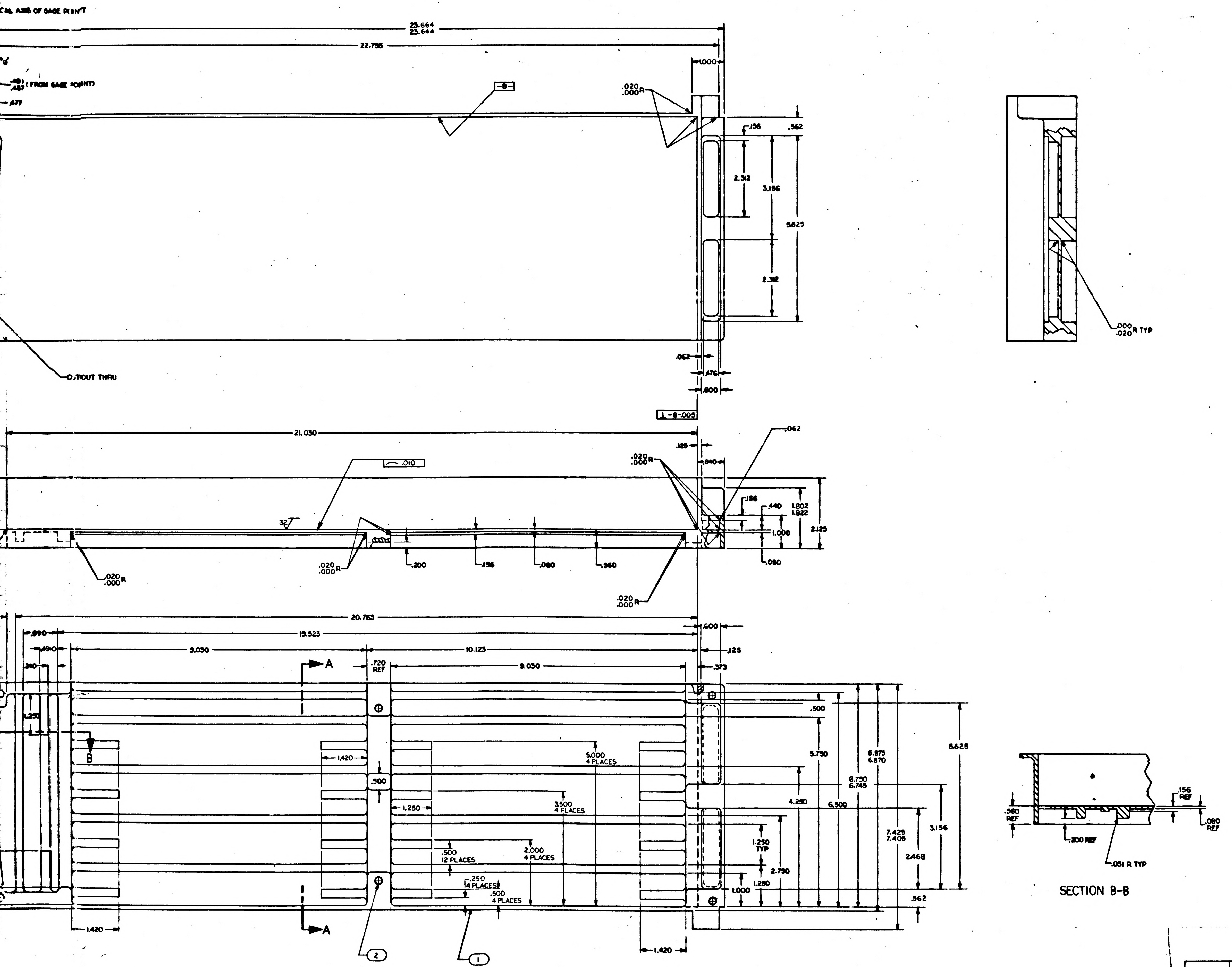

CAL AXIS OF GAGE POINT
23.664
23.644
22.755
.481
.487 (FROM GAGE POINT)
.477
-B-
.020
.000 R
1.000
.156
.562
2.312
3.156
5.625
2.312
.062
.476
.600
CUTOUT THRU
⊥ -B- .005
21.030
.125
.062
.020
.000 R
.010
.840
32
.156
.440
1.802
1.822
1.000
2.125
.020
.000 R
.200
.156
.080
.560
.080
.020
.000 R
.020
.000 R
20.763
.600
.890
19.523
.490
9.030
10.123
.125
.240
A
.720 REF
9.030
.373
1.250
.500
B
5.750
6.875
6.870
5.625
1.420
5.000 4 PLACES
.500
6.750
6.745
3.500 4 PLACES
4.250
6.500
1.250
7.425
7.405
3.156
.500 12 PLACES
2.000 4 PLACES
1.250 TYP
2.468
.250 4 PLACES
2.790
.500 4 PLACES
1.250
1.000
.562
A
2
1
1.420
1.420
.000
.020 R TYP
.560 REF
.156 REF
.080 REF
.200 REF
.031 R TYP
SECTION B-B

QTY REQD	PART OR IDENTIFYING NO.	NOMENCLATURE OR DESCRIPTION	FIND NO.
6	NAS1394CA-08L	INSERT, THREADED, SELF LOCKING	2
1	1004216-1	TRAY A RIGHT HAND	1

LIST OF MATERIALS

NEXT ASSY	USED ON
1003126	

APPLICATION

UNLESS OTHERWISE SPECIFIED
DIMENSIONS ARE IN INCHES
TOLERANCES ON
FRACTIONS ± — DECIMALS ±.005 ANGLES ± 0° 30'
DO NOT SCALE THIS DRAWING
MATERIAL
SEE NOTE 2
HEAT TREATMENT
—
FINAL FINISH
—

MIT
INSTRUMENTATION LAB
CAMBRIDGE, MASS
DWG. NO. CONTRACT
DRAWN W. Walker DATE 6/26/63
CHECKED [illegible] 7/26/63
APPROVAL W. [illegible] 7/30/63
APPROVAL [illegible] 7/30/63
NASA APPROVAL [illegible] 7-31-63
MIT APPROVAL [illegible] 7/31/63

MANNED SPACECRAFT CENTER
HOUSTON, TEXAS

TRAY A
RIGHT HAND

CODE IDENT NO. —
SIZE J
NASA DRAWING NO. 1004216
SCALE 1/1
WT
SHEET 1 OF 2

1004216 E SH 1 OF 2

INCHES
PHOTOGRAPHIC SCALE ONLY

NOTICE — WHEN GOVERNMENT DRAWINGS, SPECIFICATIONS, OR OTHER DATA ARE USED FOR ANY PURPOSE OTHER THAN IN CONNECTION WITH A DEFINITELY RELATED GOVERNMENT PROCUREMENT OPERATION, THE UNITED STATES GOVERNMENT THEREBY INCURS NO RESPONSIBILITY NOR ANY OBLIGATION WHATSOEVER; AND THE FACT THAT THE GOVERNMENT MAY HAVE FORMULATED, FURNISHED, OR IN ANY WAY SUPPLIED THE SAID DRAWINGS, SPECIFICATIONS, OR OTHER DATA IS NOT TO BE REGARDED BY IMPLICATION OR OTHERWISE AS IN ANY MANNER LICENSING THE HOLDER OR ANY OTHER PERSON OR CORPORATION, OR CONVEYING ANY RIGHTS OR PERMISSION TO MANUFACTURE, USE, OR SELL ANY PATENTED INVENTION THAT MAY IN ANY WAY BE RELATED THERETO.

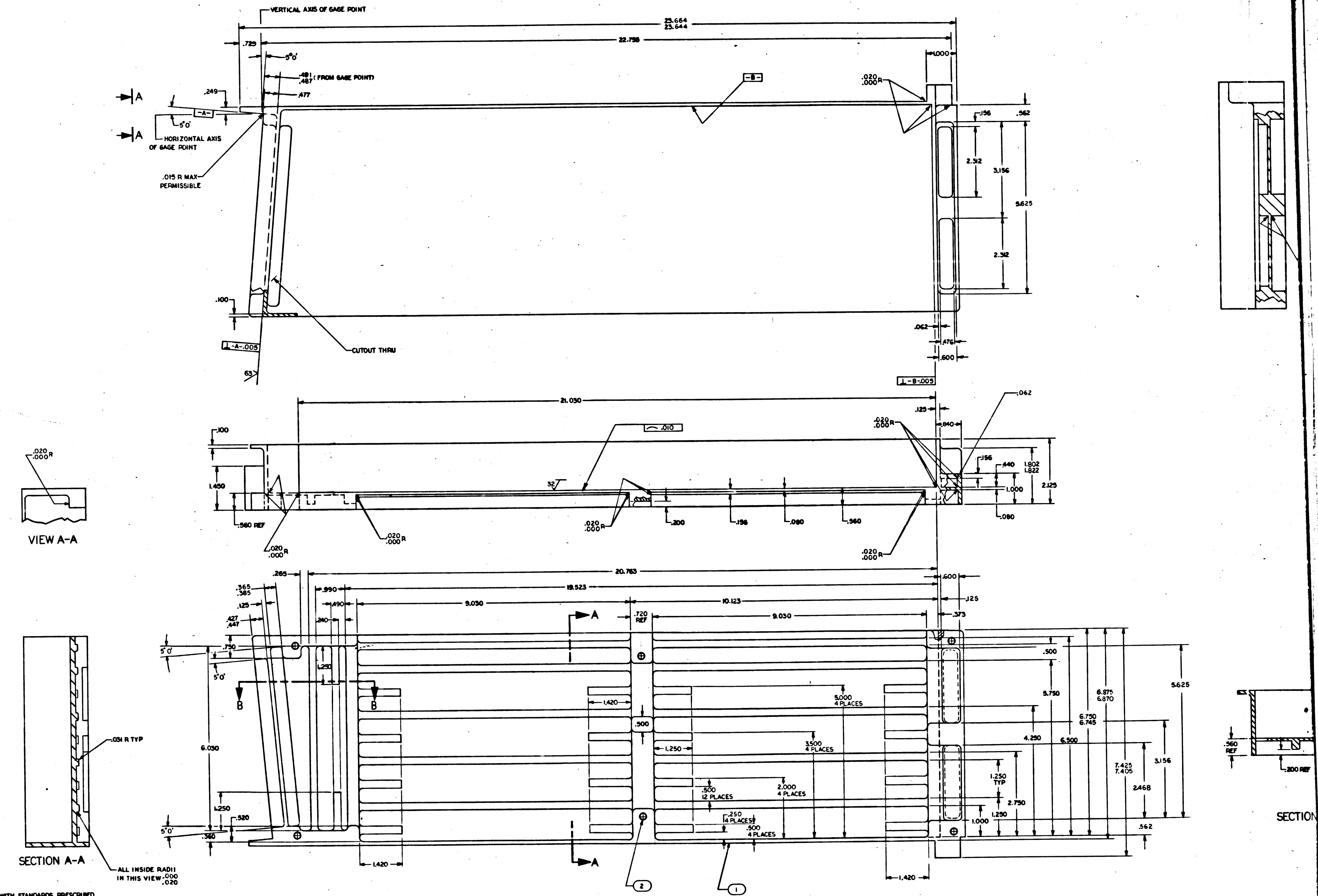
VERTICAL AXIS OF GAGE POINT
25.664
25.644
22.756
.729
5°0'
.491
.487 (FROM GAGE POINT)
.477
.249
A
A
-A-
5°0'
HORIZONTAL AXIS
OF GAGE POINT
.015 R MAX
PERMISSIBLE
-B-
1.000
.020
.000 R
.156
.562
2.312
3.156
5.625
2.312
.100
⊥ -A- .005
63
CUTOUT THRU
.062
.476
.600
⊥ -B- .005
21.030
.125
.062
.020
.000 R
.840
⌒ .010
.100
.020
.000 R
1.450
.560 REF
32
.020
.000 R
.156
.440
1.802
1.822
2.125
1.000
.080
.200
.156
.080
.560
.020
.000 R
.020
.000 R
.020
.000 R
VIEW A-A
20.763
.265
.600
.365
.385
.990
19.523
.125
.490
9.030
10.123
.125
.427
.447
.240
A
.720 REF
9.030
.373
5°0'
.750
1.250
.500
5°0'
B
B
5.000
4 PLACES
5.750
6.875
6.870
5.625
1.420
.500
6.750
6.745
4.250
6.500
6.030
.031 R TYP
1.250
3.500
4 PLACES
1.250 TYP
7.425
7.405
3.156
.500
12 PLACES
2.000
4 PLACES
2.468
2.750
1.250
.560 REF
.200 REF
.250
4 PLACES
1.250
1.000
.520
5°0'
.500
4 PLACES
.562
.360
A
1.420
1.420
②
①
SECTION A-A
ALL INSIDE RADII
IN THIS VIEW .000
.020
SECTION

NOTES
1. INTERPRET DRAWING IN ACCORDANCE WITH STANDARDS PRESCRIBED BY MIL-D-70327
2. MAKE FROM NASA DWG 1004150
3. REMOVE BURRS AND BREAK SHARP EDGES .005 -.015
4. UNLESS OTHERWISE SPECIFIED, FINSH 125
5. ALL RADII AND FILLETS TO BE .125 UNLESS OTHERWISE SPECIFIED
6. COAT FIND NO.1 AND FIND NO.2 WITH MIL-P-8585 WET ZINC CHROMATE PRIMER
7. INSTALL FIND NO.2 / ND1002121

1004216 E SH 1 OF 2

INCHES
PHOTOGRAPHIC SCALE ONLY

SYM	DESCRIPTION	DATE	APPROVAL
A	REVISED PER TURR 03820	7-7-63	
B	REVISED PER TDRR 1364P	1 OCT 63	
C	REVISED PER TDRR 041??	63	
D	REVISED PER TDRR 04367	11-3-63	
E	REVISED PER TDRR 0512	12-10-63	

1004216 E

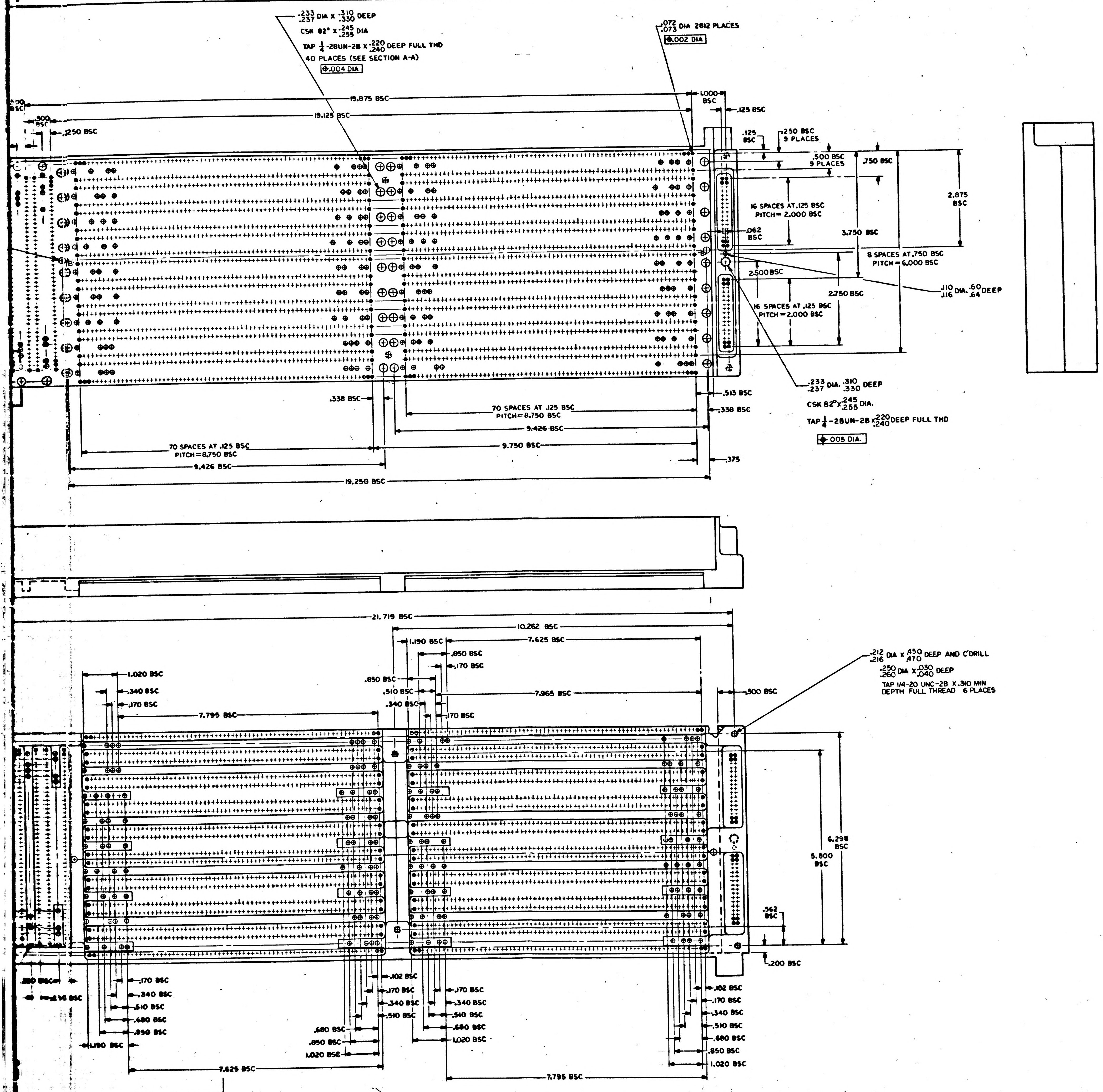

.233/.237 DIA X .310/.330 DEEP
CSK 82° X .245/.255 DIA
TAP 1/4-28UN-2B X .220/.240 DEEP FULL THD
40 PLACES (SEE SECTION A-A)
⊕.004 DIA
.072/.073 DIA 2812 PLACES
⊕.002 DIA
19.875 BSC
19.125 BSC
1.000 BSC
.125 BSC
.250 BSC
.500 BSC
.125 BSC
.250 BSC 9 PLACES
.500 BSC 9 PLACES
.750 BSC
2.875 BSC
16 SPACES AT .125 BSC PITCH = 2.000 BSC
.062 BSC
3.750 BSC
8 SPACES AT .750 BSC PITCH = 6.000 BSC
2.500 BSC
2.750 BSC
16 SPACES AT .125 BSC PITCH = 2.000 BSC
.110/.116 DIA. .60/.64 DEEP
.233/.237 DIA. .310/.330 DEEP
CSK 82° X .245/.255 DIA.
TAP 1/4-28UN-2B X .220/.240 DEEP FULL THD
⊕.005 DIA.
.338 BSC
.513 BSC
.338 BSC
70 SPACES AT .125 BSC PITCH = 8.750 BSC
9.426 BSC
70 SPACES AT .125 BSC PITCH = 8.750 BSC
9.750 BSC
.375
9.426 BSC
19.250 BSC
21.719 BSC
10.262 BSC
1.190 BSC
7.625 BSC
.850 BSC
.170 BSC
1.020 BSC
.850 BSC
.510 BSC
.340 BSC
.170 BSC
7.965 BSC
.500 BSC
.340 BSC
.170 BSC
7.795 BSC
.212/.216 DIA X .450/.470 DEEP AND C'DRILL
.250/.260 DIA X .030/.040 DEEP
TAP 1/4-20 UNC-2B X .310 MIN DEPTH FULL THREAD 6 PLACES
6.298 BSC
5.800 BSC
.562 BSC
.200 BSC
.170 BSC
.340 BSC
.510 BSC
.680 BSC
.850 BSC
1.190 BSC
.102 BSC
.170 BSC
.340 BSC
.510 BSC
.170 BSC
.340 BSC
.510 BSC
.680 BSC
1.020 BSC
.680 BSC
.850 BSC
1.020 BSC
.102 BSC
.170 BSC
.340 BSC
.510 BSC
.680 BSC
.850 BSC
1.020 BSC
7.625 BSC
7.795 BSC

QTY REQD	PART OR IDENTIFYING NO.	NOMENCLATURE OR DESCRIPTION	FIND NO.

LIST OF MATERIALS

NEXT ASSY	USED ON
1003126	

APPLICATION

UNLESS OTHERWISE SPECIFIED
DIMENSIONS ARE IN INCHES
TOLERANCES ON
FRACTIONS ± —— DECIMALS ± .005 ANGLES ± 0° 30'
DO NOT SCALE THIS DRAWING

MATERIAL
SEE NOTE 2

HEAT TREATMENT
——

FINAL FINISH
——

MIT
INSTRUMENTATION LAB
CAMBRIDGE, MASS
DWG NO CONTRACT
DRAWN DATE
CHECKED 7/30/63
APPROVAL 7/30/63
APPROVAL
NASA APPROVAL 7-31-63
MIT APPROVAL 7/31/63

MANNED SPACECRAFT CENTER
HOUSTON, TEXAS

TRAY A
RIGHT HAND

CODE IDENT NO. ——
SIZE J
NASA DRAWING NO. 1004216
SCALE 1/1
WT
SHEET 2 OF 2

1004216 E SH 2 OF 2

INCHES
PHOTOGRAPHIC SCALE ONLY

NOTICE — WHEN GOVERNMENT DRAWINGS, SPECIFICATIONS, OR OTHER DATA ARE USED FOR ANY PURPOSE OTHER THAN IN CONNECTION WITH A DEFINITELY RELATED GOVERNMENT PROCUREMENT OPERATION, THE UNITED STATES GOVERNMENT THEREBY INCURS NO RESPONSIBILITY NOR ANY OBLIGATION WHATSOEVER; AND THE FACT THAT THE GOVERNMENT MAY HAVE FORMULATED, FURNISHED, OR IN ANY WAY SUPPLIED THE SAID DRAWINGS, SPECIFICATIONS OR OTHER DATA IS NOT TO BE REGARDED BY IMPLICATION OR OTHERWISE AS IN ANY MANNER LICENSING THE HOLDER OR ANY OTHER PERSON OR CORPORATION, OR CONVEYING ANY RIGHTS OR PERMISSION TO MANUFACTURE, USE, OR SELL ANY PATENTED INVENTION THAT MAY IN ANY WAY BE RELATED THERETO.

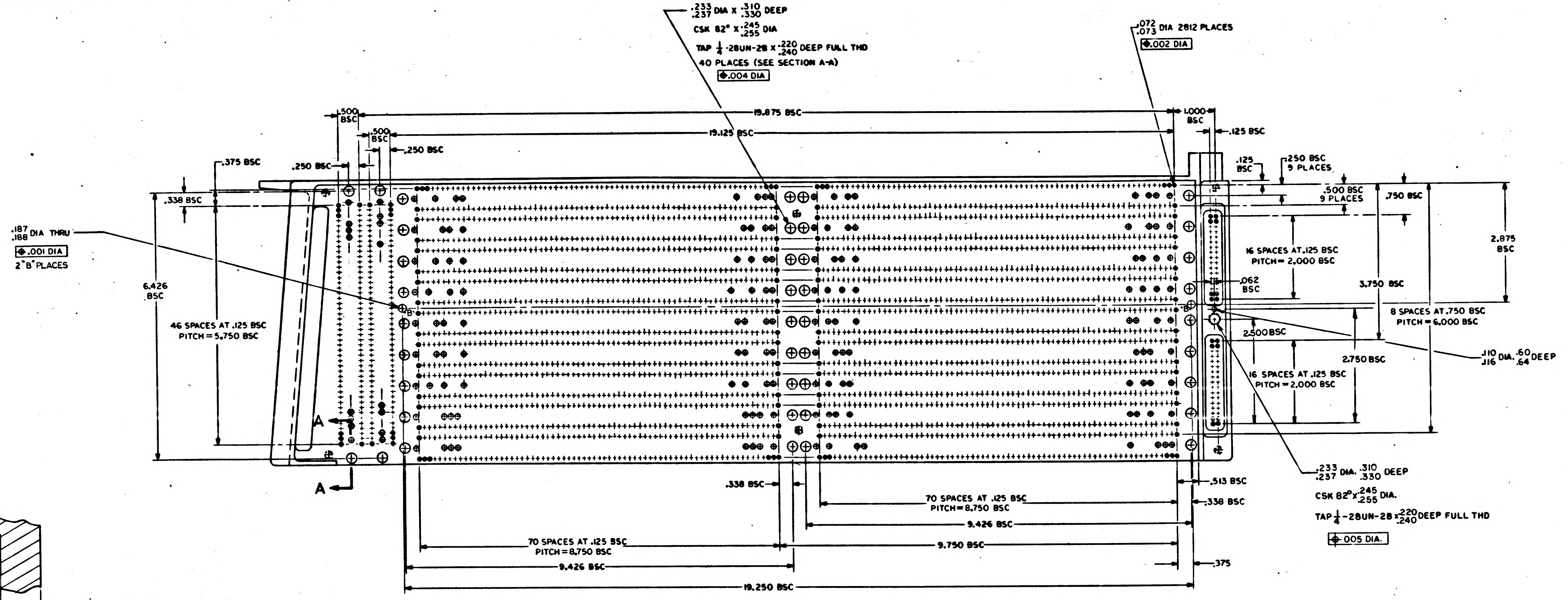
.233 .237 DIA X .310 .330 DEEP
CSK 82° X .245 .255 DIA
TAP 1/4-28UN-2B X .220 .240 DEEP FULL THD
40 PLACES (SEE SECTION A-A)
.004 DIA
.072 .073 DIA 2812 PLACES
.002 DIA
19.875 BSC
19.125 BSC
1.000 BSC
.125 BSC
.500 BSC
.500 BSC
.250 BSC
.250 BSC
.375 BSC
.338 BSC
.187 .188 DIA THRU
.001 DIA
2 "B" PLACES
6.426 BSC
46 SPACES AT .125 BSC
PITCH = 5.750 BSC
A
A
.125 BSC
.250 BSC
9 PLACES
.500 BSC
9 PLACES
.750 BSC
2.875 BSC
16 SPACES AT .125 BSC
PITCH = 2.000 BSC
.062 BSC
3.750 BSC
8 SPACES AT .750 BSC
PITCH = 6.000 BSC
2.500 BSC
.110 .116 DIA. .60 .64 DEEP
2.750 BSC
16 SPACES AT .125 BSC
PITCH = 2.000 BSC
.233 .237 DIA. .310 .330 DEEP
CSK 82° X .245 .255 DIA.
TAP 1/4-28UN-2B X .220 .240 DEEP FULL THD
.005 DIA.
.338 BSC
.513 BSC
.338 BSC
70 SPACES AT .125 BSC
PITCH = 8.750 BSC
9.426 BSC
9.750 BSC
70 SPACES AT .125 BSC
PITCH = 8.750 BSC
9.426 BSC
.375
19.250 BSC

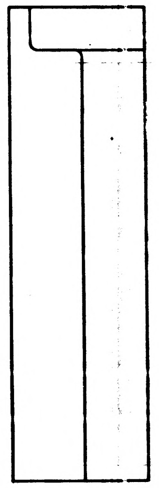

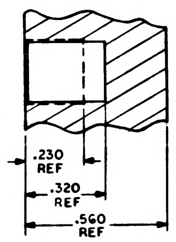
.230 REF
.320 REF
.560 REF

SECTION A-A
SCALE 4/1
40 PLACES

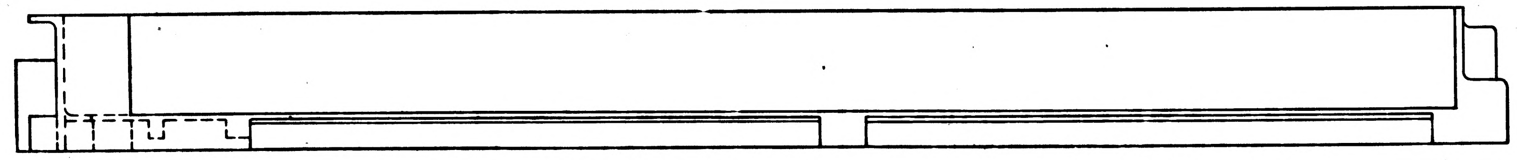

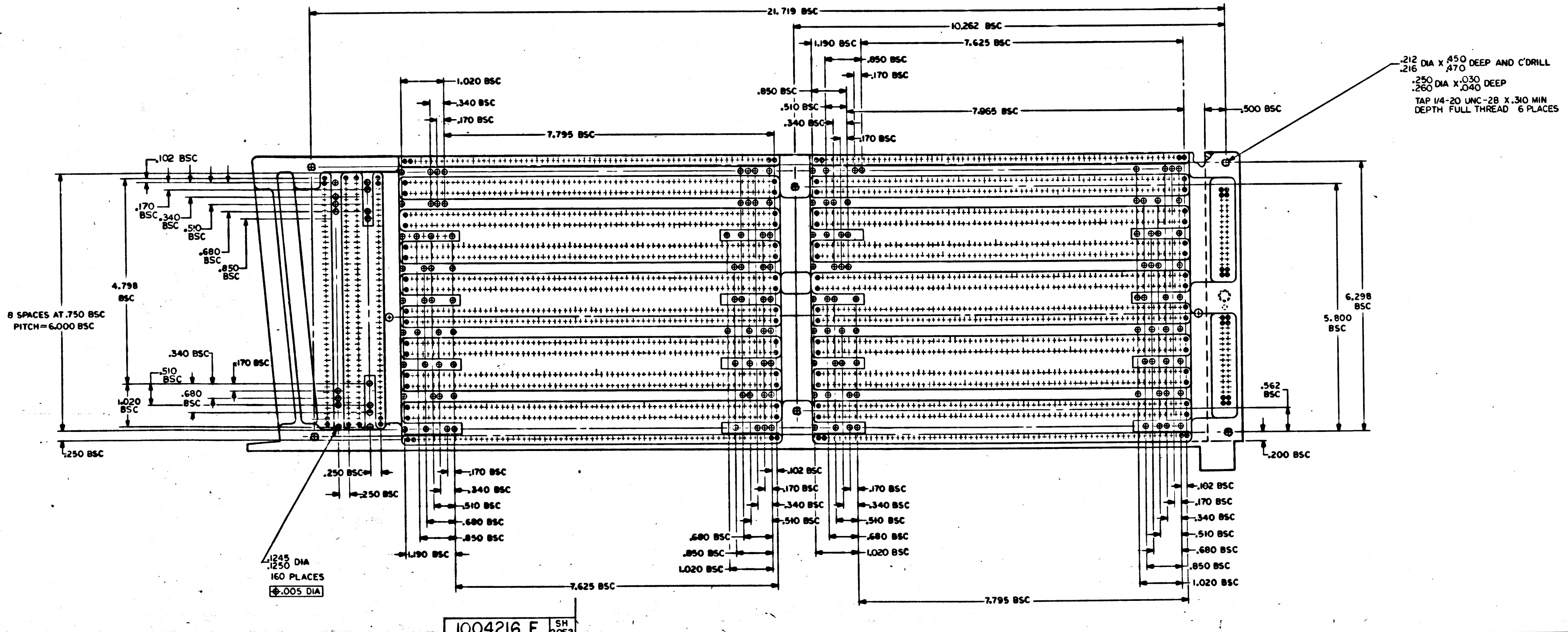
21.719 BSC
10.262 BSC
1.190 BSC
7.625 BSC
.850 BSC
.170 BSC
.850 BSC
.510 BSC
7.965 BSC
.340 BSC
.170 BSC
.500 BSC
1.020 BSC
.340 BSC
.170 BSC
7.795 BSC
.212 .216 DIA X .450 .470 DEEP AND C'DRILL
.250 .260 DIA X .030 .040 DEEP
TAP 1/4-20 UNC-2B X .310 MIN
DEPTH FULL THREAD 6 PLACES
.102 BSC
.170 BSC
.340 BSC
.510 BSC
.680 BSC
.850 BSC
4.798 BSC
8 SPACES AT .750 BSC
PITCH = 6.000 BSC
.340 BSC
.510 BSC
.170 BSC
.680 BSC
1.020 BSC
.250 BSC
6.298 BSC
5.800 BSC
.562 BSC
.200 BSC
.250 BSC
.250 BSC
.170 BSC
.340 BSC
.510 BSC
.680 BSC
.850 BSC
1.190 BSC
.1245 .1250 DIA
160 PLACES
.005 DIA
.102 BSC
.170 BSC
.340 BSC
.510 BSC
.680 BSC
.850 BSC
1.020 BSC
7.625 BSC
.170 BSC
.340 BSC
.510 BSC
.680 BSC
1.020 BSC
.102 BSC
.170 BSC
.340 BSC
.510 BSC
.680 BSC
.850 BSC
1.020 BSC
7.795 BSC

1004216 E SH 2OF2

0 1 2
PHOTOGRAPHIC SCALE ONLY

1004216 F

SYM	DESCRIPTION	DATE	APPROVAL
A	REVISED PER TDRR [illegible]	[illegible]	WR
B	REVISED PER TDRR 036[illegible]	[illegible]	WR
C	REVISED PER TDRR [illegible]	[illegible]	WR
D	REVISED PER TDRR [illegible]	[illegible]	WR
E	REVISED PER TDRR 05112	12-10-63	[illegible]
F	REVISED PER TDRR 07502 DR [illegible] CHK [illegible]	4/2/64	[illegible]

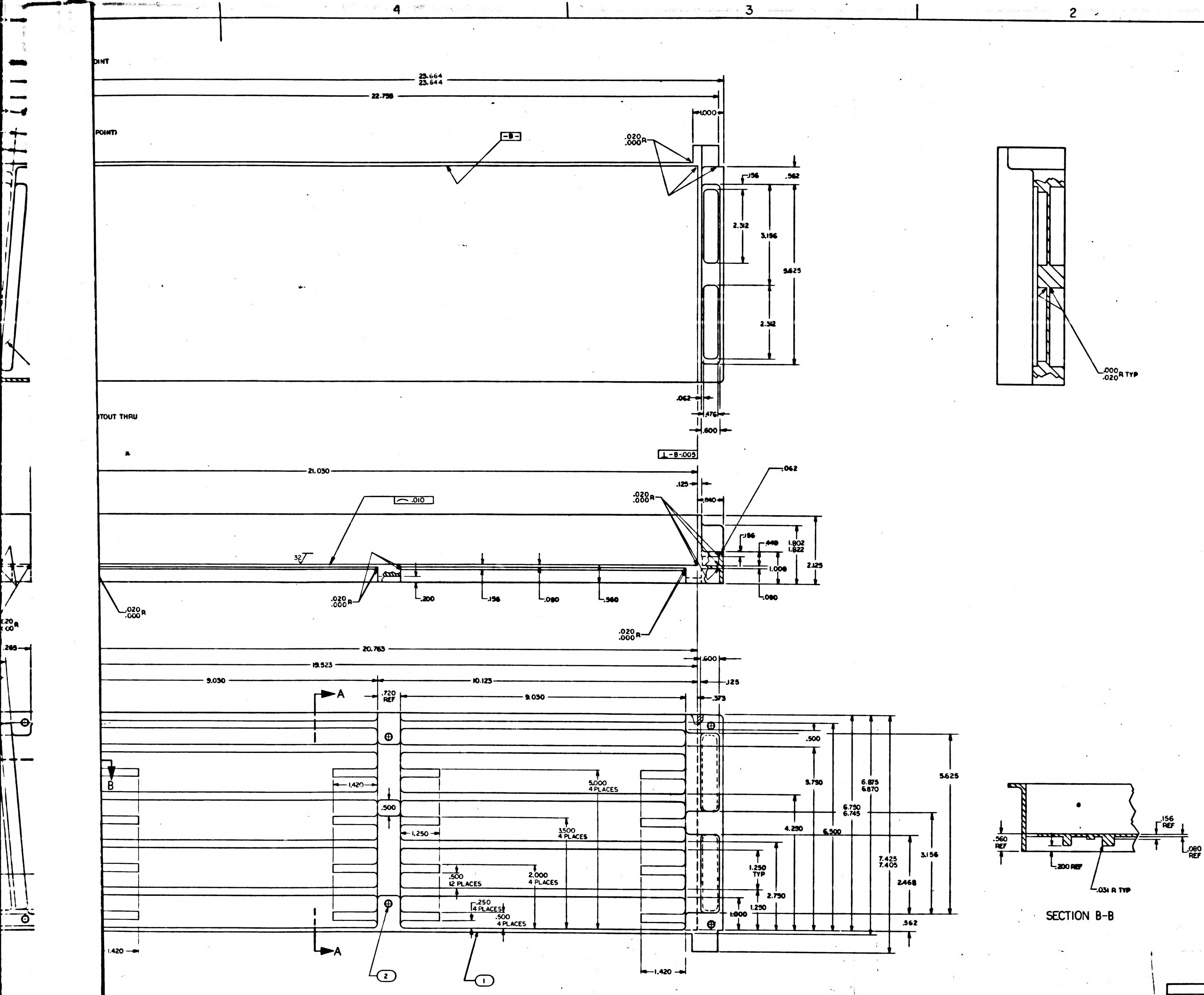

4
3
2
1
D
C
B
A
DINT
(POINT)
TOUT THRU
25.664
25.644
22.758
1.000
-B-
.020
.000R
.156
.562
2.312
3.156
5.625
2.312
.062
.476
.600
⊥ -B-.005
21.030
.125
.840
.062
⌒ .010
32
.156
.440
1.802
1.822
2.125
1.008
.080
.200
.156
.080
.560
.020
.000R
.000
.020R TYP
20.763
19.523
.600
9.030
10.125
.125
.720 REF
9.030
.373
A
A
B
1.420
.500
5.000 4 PLACES
3.750
6.875
6.870
5.625
.500
6.750
6.745
1.250
3.500 4 PLACES
4.250
6.500
.500 12 PLACES
2.000 4 PLACES
1.250 TYP
7.425
7.405
3.156
2.468
.250 4 PLACES
.500 4 PLACES
2.750
1.250
1.000
.562
1.420
1.420
2
1
.156 REF
.560 REF
.080 REF
.200 REF
.031 R TYP

SECTION B-B

1004216 F SH 1 OF 2

QTY REQD	PART OR IDENTIFYING NO.	NOMENCLATURE OR DESCRIPTION	FIND NO.
6	NAS1394CA-08L	INSERT, THREADED, SELF LOCKING	2
1	1004216-1	TRAY A RIGHT HAND	1

LIST OF MATERIALS

1003126	
NEXT ASSY	USED ON
APPLICATION	

UNLESS OTHERWISE SPECIFIED
DIMENSIONS ARE IN INCHES
TOLERANCES ON
FRACTIONS ± — DECIMALS ±.005 ANGLES ± 0° 30'
DO NOT SCALE THIS DRAWING
MATERIAL SEE NOTE 2
HEAT TREATMENT —
FINAL FINISH —

MIT INSTRUMENTATION LAB
CAMBRIDGE, MASS

DRAWN [illegible] DATE [illegible]
CHECKED [illegible]
APPROVAL [illegible] 7/30/63
APPROVAL [illegible] 7/30/63
NASA APPROVAL [illegible] 7-31-63
MIT APPROVAL [illegible] 7/31/63

MANNED SPACECRAFT CENTER
HOUSTON, TEXAS

TRAY A
RIGHT HAND

CODE IDENT NO. —
SIZE J
NASA DRAWING NO. 1004216
SCALE 1/1
WT
SHEET 1 OF 2

NOTICE — WHEN GOVERNMENT DRAWINGS, SPECIFICATIONS, OR OTHER DATA ARE USED FOR ANY PURPOSE OTHER THAN IN CONNECTION WITH A DEFINITELY RELATED GOVERNMENT PROCUREMENT OPERATION, THE UNITED STATES GOVERNMENT THEREBY INCURS NO RESPONSIBILITY NOR ANY OBLIGATION WHATSOEVER; AND THE FACT THAT THE GOVERNMENT MAY HAVE FORMULATED, FURNISHED, OR IN ANY WAY SUPPLIED THE SAID DRAWINGS, SPECIFICATIONS OR OTHER DATA IS NOT TO BE REGARDED BY IMPLICATION OR OTHERWISE AS IN ANY MANNER LICENSING THE HOLDER OR ANY OTHER PERSON OR CORPORATION, OR CONVEYING ANY RIGHTS OR PERMISSION TO MANUFACTURE, USE, OR SELL ANY PATENTED INVENTION THAT MAY IN ANY WAY BE RELATED THERETO

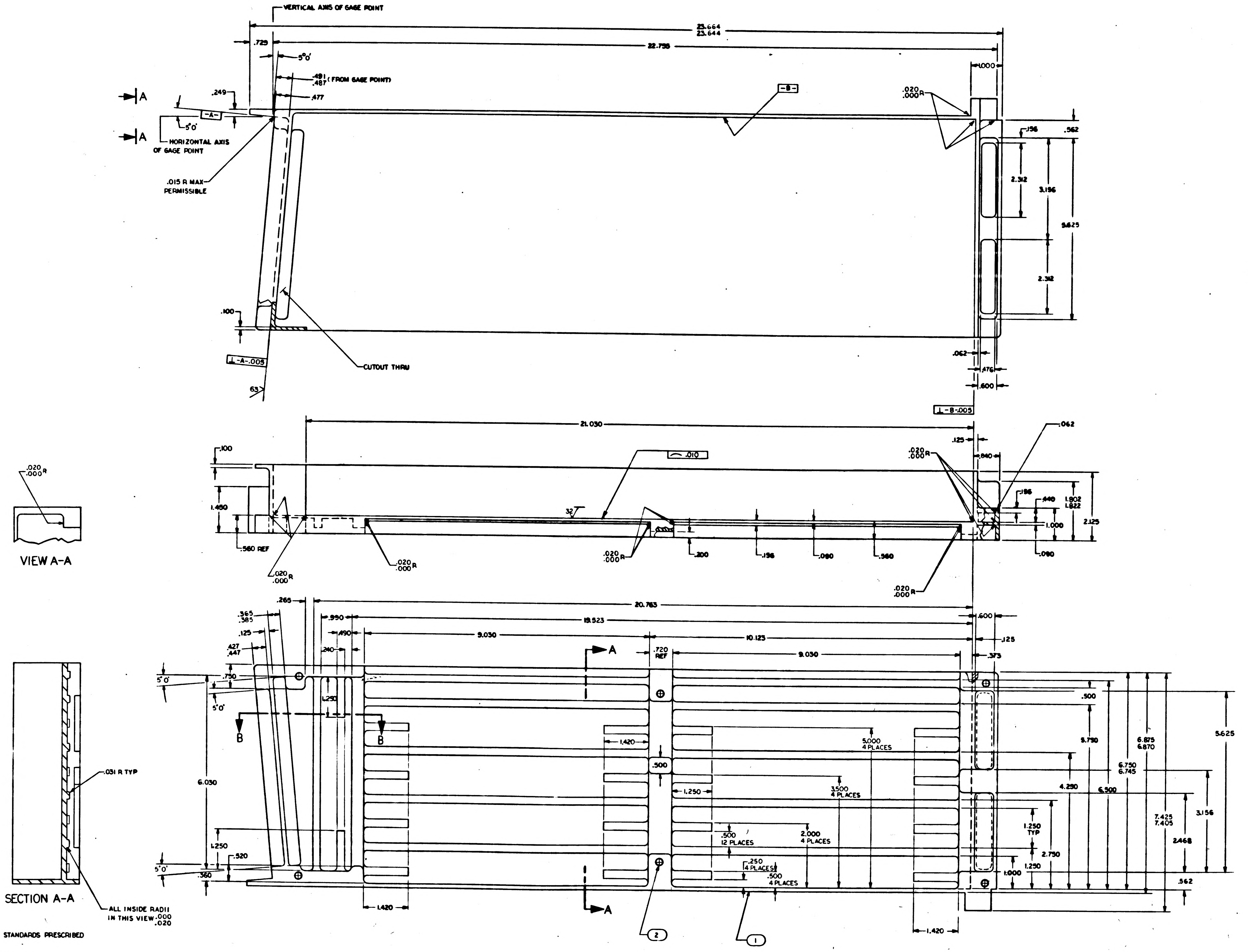
6
5
4
3
D
C
B
A
VERTICAL AXIS OF GAGE POINT
23.664
23.644
.729
22.756
5°0'
.491
.487 (FROM GAGE POINT)
.477
A
A
.249
-A-
5°0'
HORIZONTAL AXIS OF GAGE POINT
.015 R MAX PERMISSIBLE
-B-
1.000
.020
.000 R
.156
.562
2.312
3.156
5.625
2.312
.100
⊥-A-.005
63
CUTOUT THRU
.062
.476
.600
⊥-B-.005
21.030
.100
1.460
.560 REF
.020
.000 R
⌒ .010
32
.020
.000 R
.125
.840
.062
.156
.440
1.802
1.822
1.000
2.125
.080
.200
.156
.080
.560
.020
.000 R
VIEW A-A
.265
.365
.385
.125
.427
.447
20.763
19.523
.990
.490
9.030
10.125
.720 REF
9.030
.600
.125
.373
A
A
.240
1.250
5°0'
.750
5°0'
B
B
1.420
5.000
4 PLACES
.500
3.500
4 PLACES
1.250
6.030
.500
12 PLACES
2.000
4 PLACES
.250
4 PLACES
.500
4 PLACES
1.250
.520
5°0'
.360
1.420
1.420
.500
5.750
4.290
6.500
6.875
6.870
6.750
6.745
7.425
7.405
5.625
3.156
2.468
1.250 TYP
2.750
1.250
1.000
.562
1
2
.031 R TYP
SECTION A-A
ALL INSIDE RADII IN THIS VIEW .000
.020

NOTES

1. INTERPRET DRAWING IN ACCORDANCE WITH STANDARDS PRESCRIBED BY MIL-D-70327
2. MAKE FROM NASA DWG 1004150
3. REMOVE BURRS AND BREAK SHARP EDGES .005 -.015
4. UNLESS OTHERWISE SPECIFIED, FINSH $\sqrt{125}$
5. ALL RADII AND FILLETS TO BE .125 UNLESS OTHERWISE SPECIFIED
6. COAT FIND NO.1 AND FIND NO.2 WITH MIL-P-8585 WET ZINC CHROMATE PRIMER
7. INSTALL FIND NO.2 / ND1002121

1004216 F SH 1 OF 2

1004216 F 1/2

SHEET 1

1004216 F

SYM	DESCRIPTION	DATE	APPROVAL
A	REVISED PER TDRR 07280	[illegible]	[illegible]
B	REVISED PER TDRR 13648	1 OCT 63	[illegible]
C	REVISED PER TDRR 04179	10-DEC 63	[illegible]
D	REVISED PER TDRR 04909	10-31-63	[illegible]
E	REVISED PER TDRR 0512	12-10-63	[illegible]
F	REVISED PER TDRR 07502 DR [illegible] CHK [illegible]	4/2/64	[illegible]

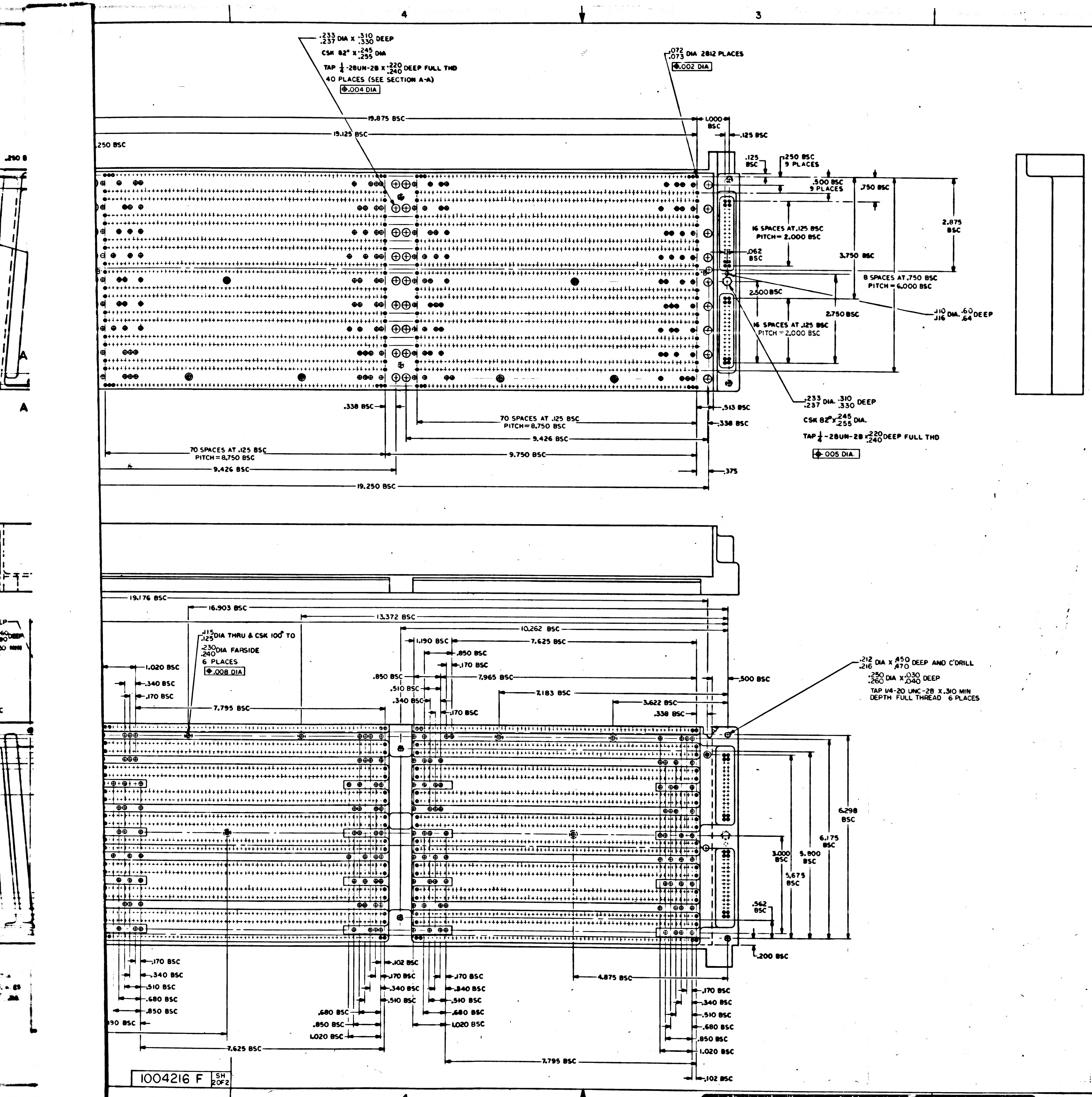

4
3
2
1
.233/.237 DIA X .310/.330 DEEP
CSK 82° X .245/.255 DIA
TAP 1/4-28UN-2B X .220/.240 DEEP FULL THD
40 PLACES (SEE SECTION A-A)
⌖ .004 DIA
.072/.073 DIA 2812 PLACES
⌖ .002 DIA
19.875 BSC
19.125 BSC
1.000 BSC
.125 BSC
.250 BSC
.125 BSC
.250 BSC 9 PLACES
.500 BSC 9 PLACES
.750 BSC
2.875 BSC
16 SPACES AT .125 BSC PITCH = 2.000 BSC
3.750 BSC
.062 BSC
8 SPACES AT .750 BSC PITCH = 6.000 BSC
2.500 BSC
2.750 BSC
.110/.116 DIA. .60/.64 DEEP
16 SPACES AT .125 BSC PITCH = 2.000 BSC
.338 BSC
.513 BSC
.338 BSC
70 SPACES AT .125 BSC PITCH = 8.750 BSC
9.426 BSC
70 SPACES AT .125 BSC PITCH = 8.750 BSC
9.750 BSC
9.426 BSC
.375
19.250 BSC
.233/.237 DIA. .310/.330 DEEP
CSK 82° X .245/.255 DIA.
TAP 1/4-28UN-2B X .220/.240 DEEP FULL THD
⌖ .005 DIA
19.176 BSC
16.903 BSC
13.372 BSC
10.262 BSC
.115/.125 DIA THRU & CSK 100° TO .230/.240 DIA FARSIDE
6 PLACES
⌖ .008 DIA
1.190 BSC
7.625 BSC
.850 BSC
.170 BSC
1.020 BSC
.340 BSC
.170 BSC
.850 BSC
.510 BSC
.340 BSC
7.965 BSC
7.183 BSC
3.622 BSC
.338 BSC
.170 BSC
7.795 BSC
.500 BSC
.212/.216 DIA X .450/.470 DEEP AND C'DRILL
.250/.260 DIA X .030/.040 DEEP
TAP 1/4-20 UNC-2B X .310 MIN DEPTH FULL THREAD 6 PLACES
6.298 BSC
6.175 BSC
5.800 BSC
3.000 BSC
5.675 BSC
.562 BSC
.200 BSC
.170 BSC
.340 BSC
.510 BSC
.680 BSC
.850 BSC
.102 BSC
.170 BSC
.340 BSC
.510 BSC
.680 BSC
.850 BSC
1.020 BSC
.170 BSC
.340 BSC
.510 BSC
.680 BSC
1.020 BSC
4.875 BSC
.170 BSC
.340 BSC
.510 BSC
.680 BSC
.850 BSC
1.020 BSC
7.625 BSC
7.795 BSC
.102 BSC
A
B
C
D

1004216 F SH 2 OF 2

QTY REQD	PART OR IDENTIFYING NO.	NOMENCLATURE OR DESCRIPTION	FIND NO.

LIST OF MATERIALS

1003126	
NEXT ASSY	USED ON

APPLICATION

UNLESS OTHERWISE SPECIFIED
DIMENSIONS ARE IN INCHES
TOLERANCES ON
FRACTIONS ± — DECIMALS ± .005 ANGLES ± 0° 30'
DO NOT SCALE THIS DRAWING
MATERIAL
SEE NOTE 2
HEAT TREATMENT
—
FINAL FINISH
—

MIT
INSTRUMENTATION LAB
CAMBRIDGE MASS

DRAWN [illegible] DATE [illegible]
CHECKED [illegible] 7/30/63
APPROVAL [illegible] 7/30/63
APPROVAL [illegible]
NASA APPROVAL [illegible] 7-31-63
MIT APPROVAL D Hazel 7/31/63

MANNED SPACECRAFT CENTER
HOUSTON, TEXAS

TRAY A
RIGHT HAND

CODE IDENT NO. —
SIZE J
NASA DRAWING NO. 1004216
SCALE 1/1
WT
SHEET 2 OF 2

1004216 F

F 2 / 2

NOTICE — WHEN GOVERNMENT DRAWINGS, SPECIFICATIONS, OR OTHER DATA ARE USED FOR ANY PURPOSE OTHER THAN IN CONNECTION WITH A DEFINITELY RELATED GOVERNMENT PROCUREMENT OPERATION, THE UNITED STATES GOVERNMENT THEREBY INCURS NO RESPONSIBILITY NOR ANY OBLIGATION WHATSOEVER; AND THE FACT THAT THE GOVERNMENT MAY HAVE FORMULATED, FURNISHED, OR IN ANY WAY SUPPLIED THE SAID DRAWINGS, SPECIFICATIONS, OR OTHER DATA IS NOT TO BE REGARDED BY IMPLICATION OR OTHERWISE AS IN ANY MANNER LICENSING THE HOLDER OR ANY OTHER PERSON OR CORPORATION, OR CONVEYING ANY RIGHTS OR PERMISSION TO MANUFACTURE, USE, OR SELL ANY PATENTED INVENTION THAT MAY IN ANY WAY BE RELATED THERETO.

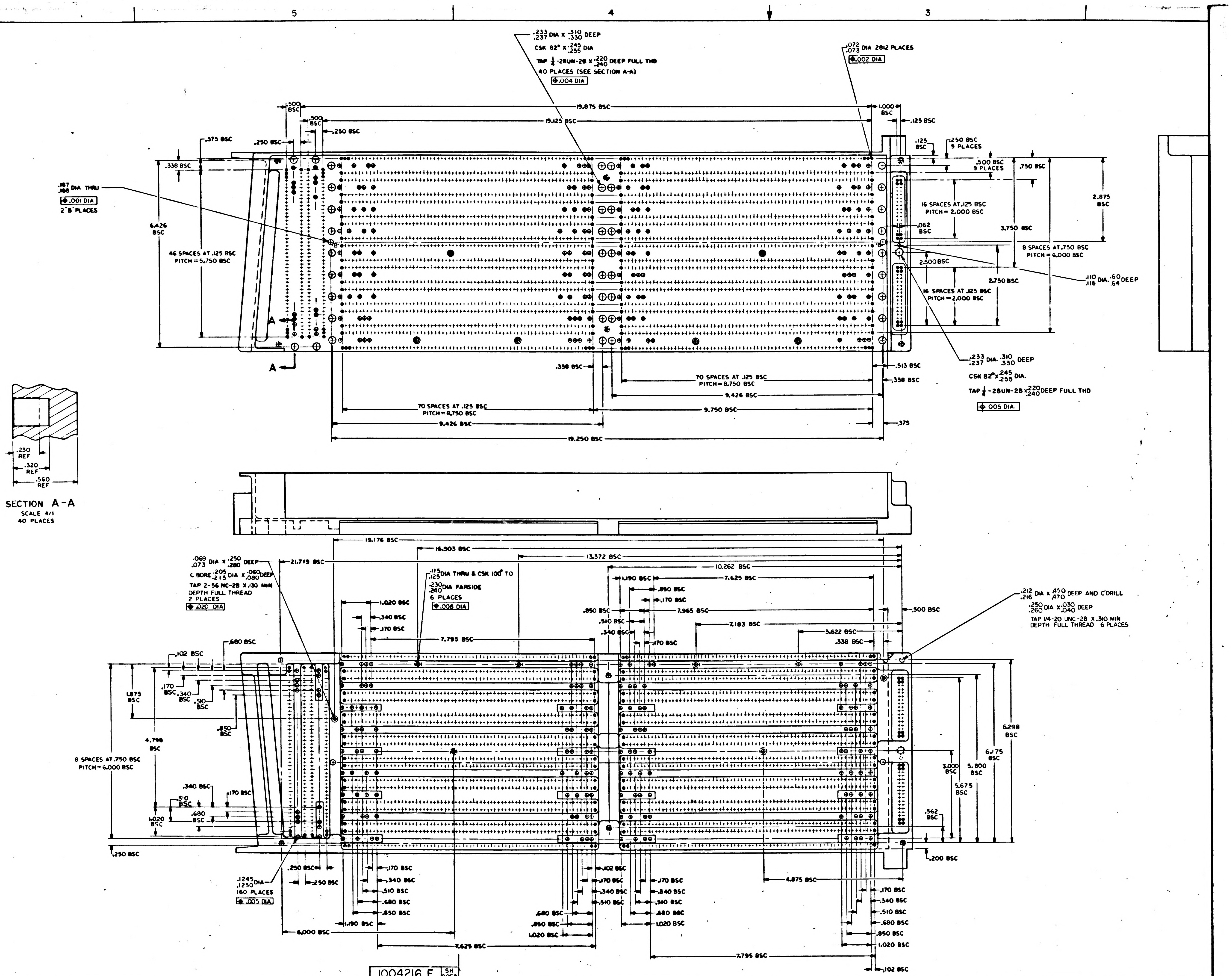
6
5
4
3
D
C
B
.233/.237 DIA X .310/.330 DEEP
CSK 82° X .245/.255 DIA
TAP 1/4-28UN-2B X .220/.240 DEEP FULL THD
40 PLACES (SEE SECTION A-A)
⌖.004 DIA
.072/.073 DIA 2812 PLACES
⌖.002 DIA
19.875 BSC
19.125 BSC
1.000 BSC
.125 BSC
.500 BSC
.500 BSC
.250 BSC
.250 BSC
.375 BSC
.338 BSC
.187/.188 DIA THRU
⌖.001 DIA
2 "B" PLACES
6.426 BSC
46 SPACES AT .125 BSC
PITCH = 5.750 BSC
A
A
B
.125 BSC
.250 BSC 9 PLACES
.500 BSC 9 PLACES
.750 BSC
2.875 BSC
16 SPACES AT .125 BSC
PITCH = 2.000 BSC
.062 BSC
3.750 BSC
8 SPACES AT .750 BSC
PITCH = 6.000 BSC
2.500 BSC
2.750 BSC
.110/.116 DIA. .60/.64 DEEP
16 SPACES AT .125 BSC
PITCH = 2.000 BSC
.233/.237 DIA. .310/.330 DEEP
CSK 82° X .245/.255 DIA.
TAP 1/4-28UN-2B X .220/.240 DEEP FULL THD
⌖.005 DIA.
.338 BSC
.513 BSC
.338 BSC
70 SPACES AT .125 BSC
PITCH = 8.750 BSC
9.426 BSC
70 SPACES AT .125 BSC
PITCH = 8.750 BSC
9.750 BSC
9.426 BSC
.375
19.250 BSC
.230 REF
.320 REF
.560 REF
SECTION A-A
SCALE 4/1
40 PLACES
19.176 BSC
16.903 BSC
13.372 BSC
10.262 BSC
.069/.073 DIA X .250/.280 DEEP
C BORE .205/.215 DIA X .060/.080 DEEP
TAP 2-56 NC-2B X .130 MIN
DEPTH FULL THREAD
2 PLACES
⌖.020 DIA
21.719 BSC
.115/.125 DIA THRU & CSK 100° TO
.230/.240 DIA FARSIDE
6 PLACES
⌖.008 DIA
1.020 BSC
.340 BSC
.170 BSC
7.795 BSC
1.190 BSC
7.625 BSC
.850 BSC
.170 BSC
.850 BSC
7.965 BSC
.510 BSC
.340 BSC
.170 BSC
7.183 BSC
3.622 BSC
.338 BSC
.500 BSC
.212/.216 DIA X .450/.470 DEEP AND C'DRILL
.250/.260 DIA X .030/.040 DEEP
TAP 1/4-20 UNC-2B X .310 MIN
DEPTH FULL THREAD 6 PLACES
.680 BSC
.102 BSC
.170 BSC
.340 BSC
.510 BSC
1.875 BSC
.850 BSC
4.798 BSC
8 SPACES AT .750 BSC
PITCH = 6.000 BSC
.340 BSC
.170 BSC
.510 BSC
.680 BSC
1.020 BSC
.250 BSC
6.298 BSC
6.175 BSC
5.800 BSC
3.000 BSC
5.675 BSC
.562 BSC
.200 BSC
.250 BSC
.250 BSC
.1245/.1250 DIA
160 PLACES
⌖.005 DIA
.170 BSC
.340 BSC
.510 BSC
.680 BSC
.850 BSC
1.190 BSC
6.000 BSC
.102 BSC
.170 BSC
.340 BSC
.510 BSC
.680 BSC
.850 BSC
1.020 BSC
.170 BSC
.340 BSC
.510 BSC
.680 BSC
1.020 BSC
7.625 BSC
4.875 BSC
.170 BSC
.340 BSC
.510 BSC
.680 BSC
.850 BSC
1.020 BSC
7.795 BSC
.102 BSC

SHEET 2

1004216 G

SYM	DESCRIPTION	DATE	APPROVAL
A	REVISED PER TDRR 03324		
B	REVISED PER TDRR 03648	1 OCT 63	
C	REVISED PER TDRR 04178	11/23/63	
D	REVISED PER TDRR 04377	10-30-63	
E	REVISED PER TDRR 05112	12-10-63	
F	REVISED PER TDRR 07502 DR CHK	4/2/64	
G	REVISED PER TDRR 08018 DR CHK A.R.B.	4/23/64	

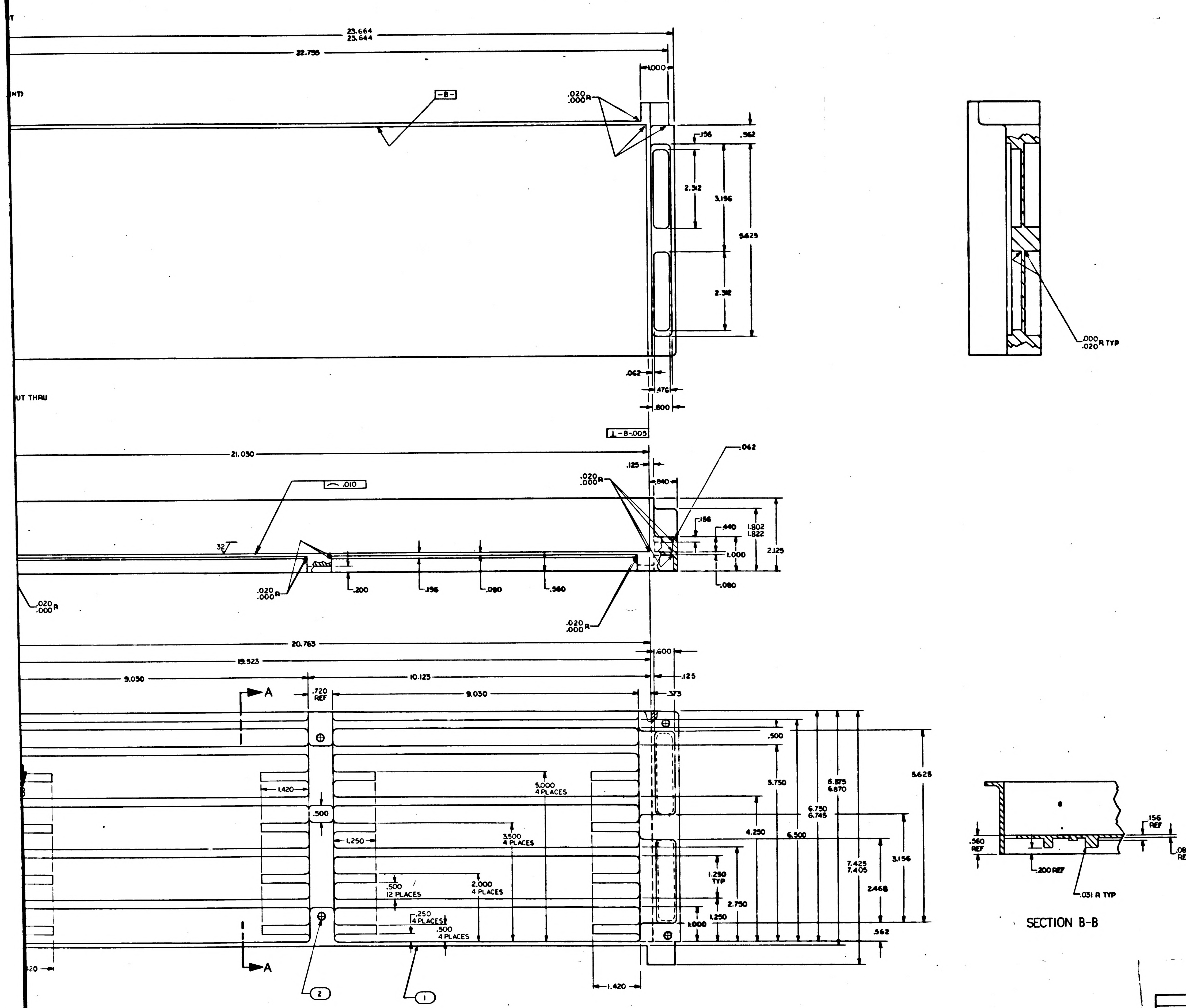

23.664
23.644
22.756
1.000
-B-
.020
.000 R
.156
.562
2.312
3.156
5.625
2.312
.062
.476
.600
⊥-B-.005
21.030
.010
.125
.840
.062
.020
.000 R
.156
.440
1.802
1.822
1.000
2.125
32
.020
.000 R
.200
.156
.080
.560
.080
.020
.000 R
.020
.000 R
.000
.020 R TYP
20.763
19.523
9.030
10.123
9.030
.600
.125
.373
A
.720 REF
A
.500
5.750
6.875
6.870
5.625
1.420
5.000 4 PLACES
.500
6.750
6.745
1.250
3.500 4 PLACES
4.250
6.500
3.156
.500 12 PLACES
2.000 4 PLACES
1.250 TYP
7.425
7.405
2.468
2.750
.250 4 PLACES
.500 4 PLACES
1.250
1.000
.562
2
1
1.420
.560 REF
.156 REF
.080 REF
.200 REF
.031 R TYP

SECTION B-B

6	NAS1394CA-08L	INSERT, THREADED, SELF LOCKING	2
1	1004216-1	TRAY A RIGHT HAND	1
QTY REQD	PART OR IDENTIFYING NO.	NOMENCLATURE OR DESCRIPTION	FIND NO

LIST OF MATERIALS

1003126	
NEXT ASSY	USED ON

APPLICATION

UNLESS OTHERWISE SPECIFIED DIMENSIONS ARE IN INCHES
TOLERANCES ON
FRACTIONS ± — DECIMALS ±.005 ANGLES ± 0° 30'
DO NOT SCALE THIS DRAWING
MATERIAL SEE NOTE 2
HEAT TREATMENT —
FINAL FINISH —

MIT INSTRUMENTATION LAB
CAMBRIDGE, MASS.
CONTRACT
DRAWN DATE
CHECKED
APPROVAL 7/30/63
APPROVAL 7/30/63
NASA APPROVAL 7-31-63
MIT APPROVAL 7/31/63

MANNED SPACECRAFT CENTER
HOUSTON, TEXAS

TRAY A
RIGHT HAND

CODE IDENT NO. —
SIZE J
NASA DRAWING NO. 1004216
SCALE 1/1
WT
SHEET OF 2

1004216 G SH 1 OF 2

F 2/2

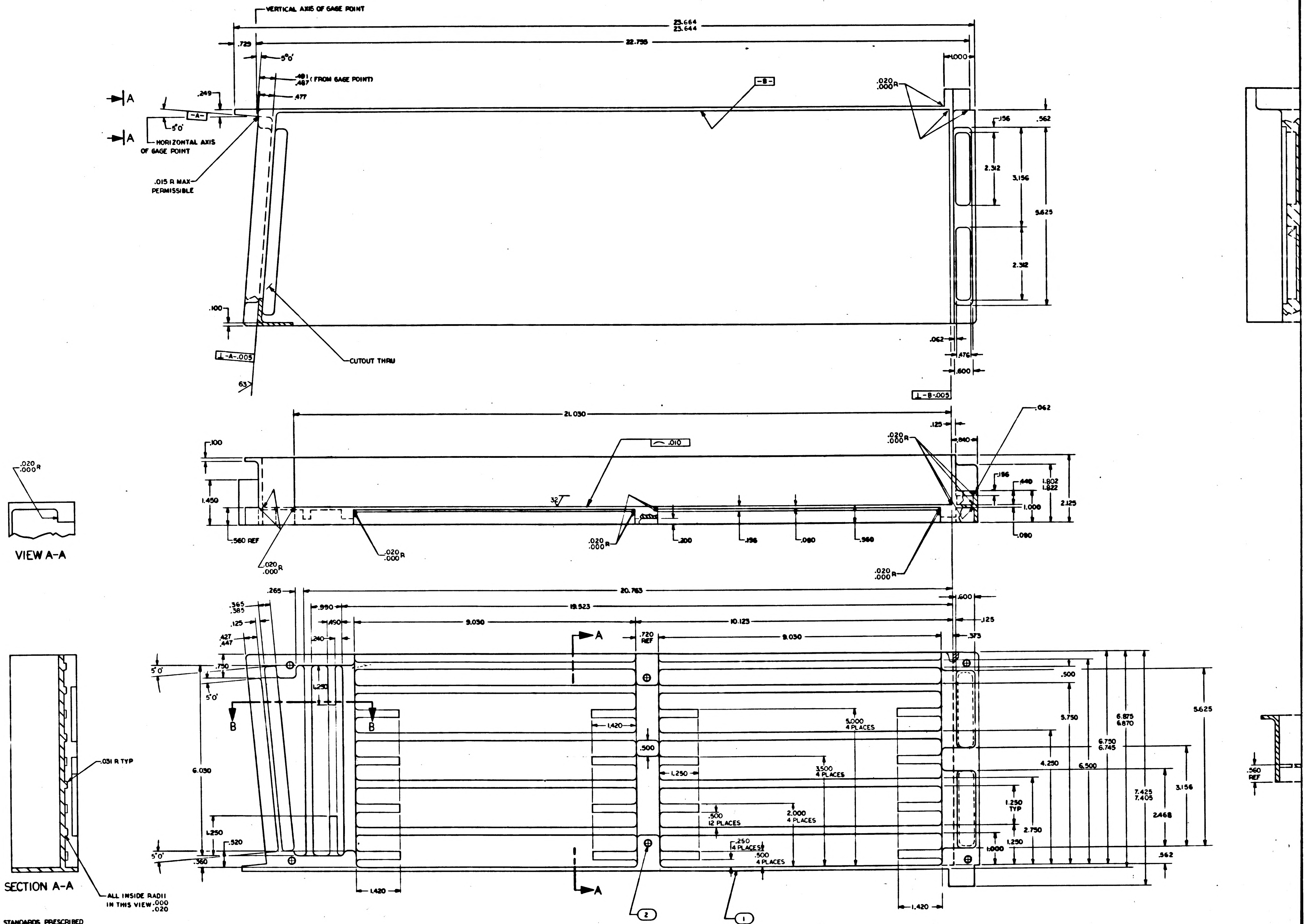
VERTICAL AXIS OF GAGE POINT
23.664
23.644
22.735
.729
5°0'
.491
.487 (FROM GAGE POINT)
.477
.249
-A-
5°0'
HORIZONTAL AXIS OF GAGE POINT
.015 R MAX PERMISSIBLE
-B-
.020
.000 R
1.000
.156
.562
2.312
3.156
5.625
2.312
.100
⊥ -A- .005
63
CUTOUT THRU
.062
.476
.600
⊥ -B- .005
21.030
.125
.062
.100
.020
.000 R
.010
.840
1.450
32
.156
.440
1.802
1.822
1.000
2.125
.560 REF
.020
.000 R
.020
.000 R
.020
.000 R
.200
.156
.080
.360
.080
.020
.000 R
VIEW A-A
.265
20.763
.365
.385
.125
.990
19.923
.600
.125
.427
.447
.490
9.030
10.125
.720 REF
9.030
.373
.240
A
5°0'
.750
5°0'
1.250
B
B
1.420
.500
5.000 4 PLACES
5.750
6.875
6.870
5.625
.500
.031 R TYP
6.030
1.250
3.500 4 PLACES
4.250
6.750
6.745
6.500
1.250 TYP
7.425
7.405
3.156
2.468
.500 12 PLACES
2.000 4 PLACES
2.750
1.250
.250 4 PLACES
.500 4 PLACES
1.000
.562
1.250
.520
5°0'
.360
1.420
A
1.420
2
1
SECTION A-A
ALL INSIDE RADII IN THIS VIEW .000 .020
.560 REF

NOTES

1. INTERPRET DRAWING IN ACCORDANCE WITH STANDARDS PRESCRIBED BY MIL-D-70327
2. MAKE FROM NASA DWG 1004150
3. REMOVE BURRS AND BREAK SHARP EDGES .005 -.015
4. UNLESS OTHERWISE SPECIFIED, FINSH 125
5. ALL RADII AND FILLETS TO BE .125 UNLESS OTHERWISE SPECIFIED
6. COAT FIND NO. 1 AND FIND NO. 2 WITH MIL-P-8585 WET ZINC CHROMATE PRIMER
7. INSTALL FIND NO. 2 / ND1002121

1004216 G SH 1 OF 2

1004216 G

SYM	DESCRIPTION	DATE	APPROVAL
A	REVISED PER TDRR [illegible]	[illegible]	[illegible]
B	REVISED PER TDRR 13648	1 OCT 63	[illegible]
C	REVISED PER TDRR 04178	10-[illegible]-63	[illegible]
D	REVISED PER TDRR 04[illegible]	[illegible]	[illegible]
E	REVISED PER TDRR 0512	12-[illegible]-63	[illegible]
F	REVISED PER TDRR 07502 DR a Wheeler CHK [illegible]	4/2/64	[illegible]
G	REVISED PER TDRR 0[illegible] DR [illegible] CHK R.R.B.	4/23/64	[illegible]

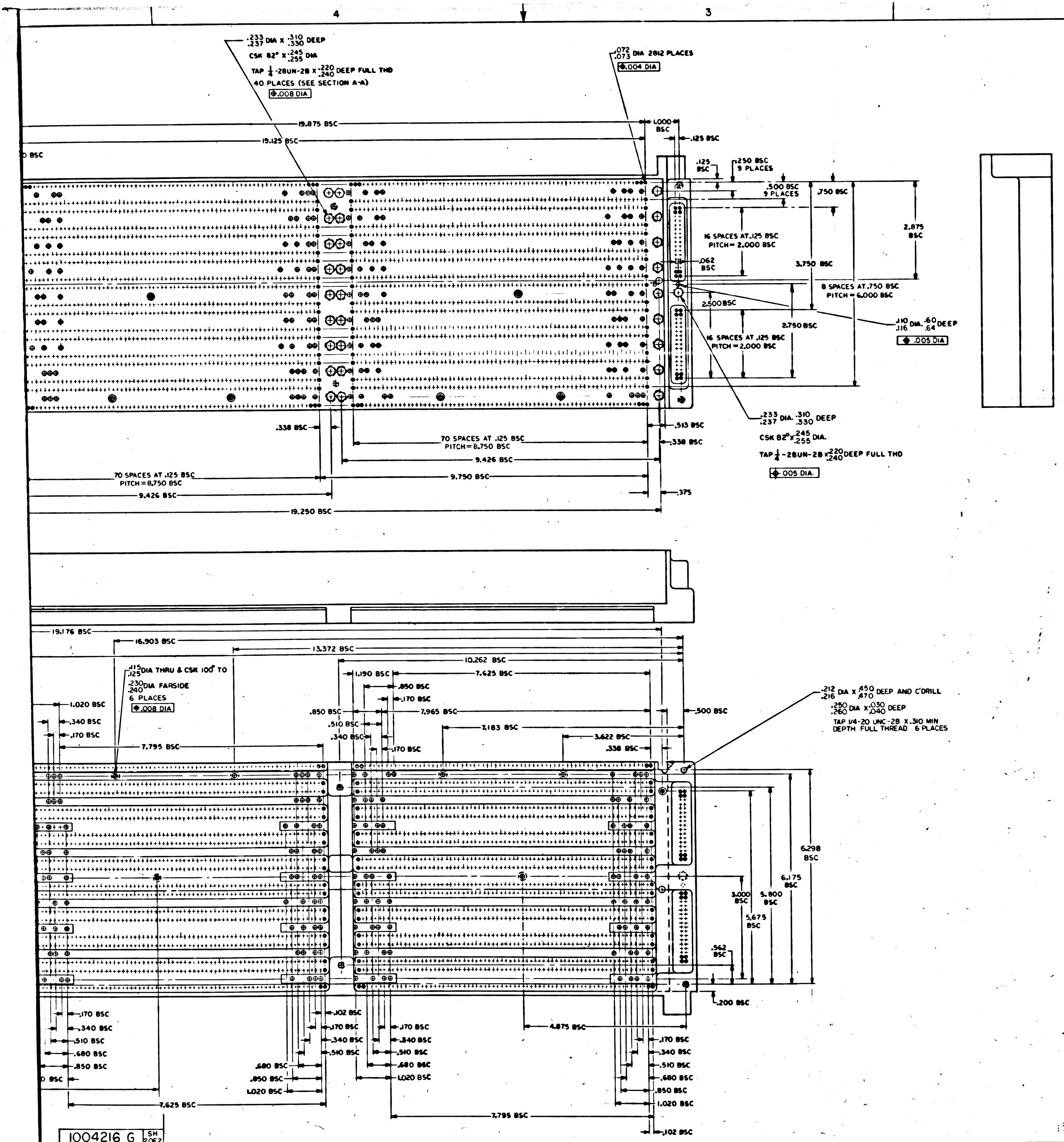

.233/.237 DIA x .310/.330 DEEP
CSK 82° x .245/.255 DIA
TAP 1/4-28UN-2B x .220/.240 DEEP FULL THD
40 PLACES (SEE SECTION A-A)
⌖ .008 DIA
.072/.073 DIA 2812 PLACES
⌖ .004 DIA
19.875 BSC
19.125 BSC
1.000 BSC
.125 BSC
.125 BSC
.250 BSC 9 PLACES
.500 BSC 9 PLACES
.750 BSC
2.875 BSC
16 SPACES AT .125 BSC PITCH = 2.000 BSC
.062 BSC
3.750 BSC
8 SPACES AT .750 BSC PITCH = 6.000 BSC
2.500 BSC
.110/.116 DIA .60/.64 DEEP
⌖ .005 DIA
2.750 BSC
16 SPACES AT .125 BSC PITCH = 2.000 BSC
.338 BSC
.513 BSC
70 SPACES AT .125 BSC PITCH = 8.750 BSC
.338 BSC
9.426 BSC
.233/.237 DIA .310/.330 DEEP
CSK 82° x .245/.255 DIA.
TAP 1/4-28UN-2B x .220/.240 DEEP FULL THD
⌖ .005 DIA.
70 SPACES AT .125 BSC PITCH = 8.750 BSC
9.750 BSC
.375
9.426 BSC
19.250 BSC
19.176 BSC
16.903 BSC
13.372 BSC
10.262 BSC
.115/.125 DIA THRU & CSK 100° TO .230/.240 DIA FARSIDE 6 PLACES
⌖ .008 DIA
1.190 BSC
7.625 BSC
.850 BSC
.170 BSC
.850 BSC
7.965 BSC
.500 BSC
1.020 BSC
.510 BSC
.340 BSC
7.183 BSC
.340 BSC
.170 BSC
3.622 BSC
.170 BSC
.338 BSC
7.795 BSC
.212/.216 DIA x .450/.470 DEEP AND C'DRILL .250/.260 DIA x .030/.040 DEEP
TAP 1/4-20 UNC-2B X .310 MIN DEPTH FULL THREAD 6 PLACES
6.298 BSC
6.175 BSC
3.000 BSC
5.800 BSC
5.675 BSC
.562 BSC
.200 BSC
.170 BSC
.340 BSC
.510 BSC
.680 BSC
.850 BSC
.102 BSC
.170 BSC
.340 BSC
.510 BSC
.170 BSC
.340 BSC
.510 BSC
.680 BSC
1.020 BSC
4.875 BSC
.170 BSC
.340 BSC
.510 BSC
.680 BSC
.850 BSC
1.020 BSC
.680 BSC
.850 BSC
1.020 BSC
7.625 BSC
7.795 BSC
.102 BSC
A
A

1004216 G SH 2 OF 2

1004216 G

QTY REQD	PART OR IDENTIFYING NO.	NOMENCLATURE OR DESCRIPTION	FIND NO.

LIST OF MATERIALS

NEXT ASSY	USED ON
1003126	

APPLICATION

UNLESS OTHERWISE SPECIFIED DIMENSIONS ARE IN INCHES
TOLERANCES ON
FRACTIONS ± — DECIMALS ± .005 ANGLES ± 0° 30'
DO NOT SCALE THIS DRAWING
MATERIAL SEE NOTE 2
HEAT TREATMENT —
FINAL FINISH —

MIT INSTRUMENTATION LAB CAMBRIDGE, MASS
DWG NO. CONTRACT
DRAWN [illegible] DATE [illegible]
CHECKED [illegible] 7/30/63
APPROVAL [illegible] 7/30/63
APPROVAL [illegible] 7/30/63
NASA APPROVAL [illegible] 7-31-63
MIT APPROVAL [illegible] 7/31/63

MANNED SPACECRAFT CENTER
HOUSTON, TEXAS

TRAY A
RIGHT HAND

CODE IDENT NO. —
SIZE J
NASA DRAWING NO. 1004216
SCALE 1/1
WT
SHEET 2 OF 2

F 2 / 2

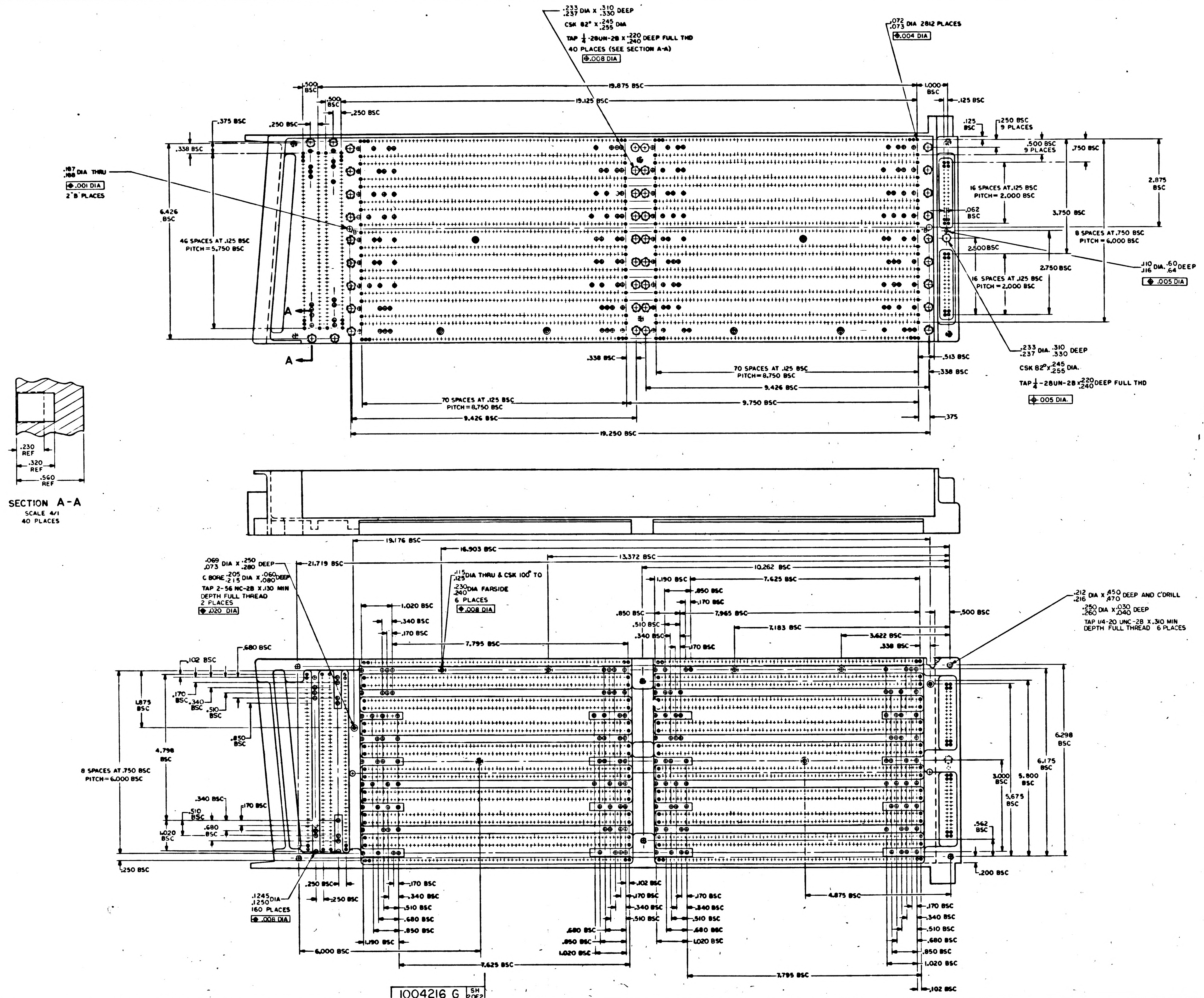
6
5
4
3
D
C
B
A
.233/.237 DIA X .310/.330 DEEP
CSK 82° X .245/.255 DIA
TAP 1/4-28UN-2B X .220/.240 DEEP FULL THD
40 PLACES (SEE SECTION A-A)
⌖.008 DIA
.072/.073 DIA 2812 PLACES
⌖.004 DIA
19.875 BSC
19.125 BSC
1.000 BSC
.125 BSC
.500 BSC
.500 BSC
.250 BSC
.250 BSC
.375 BSC
.338 BSC
.187/.188 DIA THRU
⌖.001 DIA
2 "B" PLACES
6.426 BSC
46 SPACES AT .125 BSC
PITCH = 5.750 BSC
A
A
B
.125 BSC
.250 BSC
9 PLACES
.500 BSC
9 PLACES
.750 BSC
2.875 BSC
16 SPACES AT .125 BSC
PITCH = 2.000 BSC
.062 BSC
3.750 BSC
8 SPACES AT .750 BSC
PITCH = 6.000 BSC
2.500 BSC
2.750 BSC
.110/.116 DIA. .60/.64 DEEP
⌖.005 DIA
16 SPACES AT .125 BSC
PITCH = 2.000 BSC
.233/.237 DIA. .310/.330 DEEP
CSK 82° X .245/.255 DIA.
TAP 1/4-28UN-2B X .220/.240 DEEP FULL THD
⌖.005 DIA.
.338 BSC
.513 BSC
.338 BSC
70 SPACES AT .125 BSC
PITCH = 8.750 BSC
9.426 BSC
9.750 BSC
70 SPACES AT .125 BSC
PITCH = 8.750 BSC
9.426 BSC
.375
19.250 BSC
.230 REF
.320 REF
.560 REF
SECTION A-A
SCALE 4/1
40 PLACES
19.176 BSC
16.903 BSC
13.372 BSC
10.262 BSC
21.719 BSC
.069/.073 DIA X .250/.280 DEEP
C BORE .205/.215 DIA X .060/.080 DEEP
TAP 2-56 NC-2B X .130 MIN
DEPTH FULL THREAD
2 PLACES
⌖.020 DIA
.115/.125 DIA THRU & CSK 100° TO
.230/.240 DIA FARSIDE
6 PLACES
⌖.008 DIA
1.020 BSC
.340 BSC
.170 BSC
7.795 BSC
1.190 BSC
7.625 BSC
.850 BSC
.170 BSC
.850 BSC
7.965 BSC
.510 BSC
.340 BSC
.170 BSC
7.183 BSC
3.622 BSC
.338 BSC
.500 BSC
.212/.216 DIA X .450/.470 DEEP AND C'DRILL
.250/.260 DIA X .030/.040 DEEP
TAP 1/4-20 UNC-2B X .310 MIN
DEPTH FULL THREAD 6 PLACES
.680 BSC
.102 BSC
.170 BSC
.340 BSC
.510 BSC
.850 BSC
1.875 BSC
4.798 BSC
8 SPACES AT .750 BSC
PITCH = 6.000 BSC
.340 BSC
.170 BSC
.510 BSC
.680 BSC
1.020 BSC
.250 BSC
6.298 BSC
6.175 BSC
5.800 BSC
3.000 BSC
5.675 BSC
.562 BSC
.200 BSC
.250 BSC
.250 BSC
.1245/.1250 DIA
160 PLACES
⌖.008 DIA
.170 BSC
.340 BSC
.510 BSC
.680 BSC
.850 BSC
1.190 BSC
6.000 BSC
7.625 BSC
.102 BSC
.170 BSC
.340 BSC
.510 BSC
.680 BSC
.850 BSC
1.020 BSC
.170 BSC
.340 BSC
.510 BSC
.680 BSC
1.020 BSC
4.875 BSC
.170 BSC
.340 BSC
.510 BSC
.680 BSC
.850 BSC
1.020 BSC
7.795 BSC
.102 BSC

1004216 G SH 2 OF 2

1004216 G F1/2

SHEET 2

3

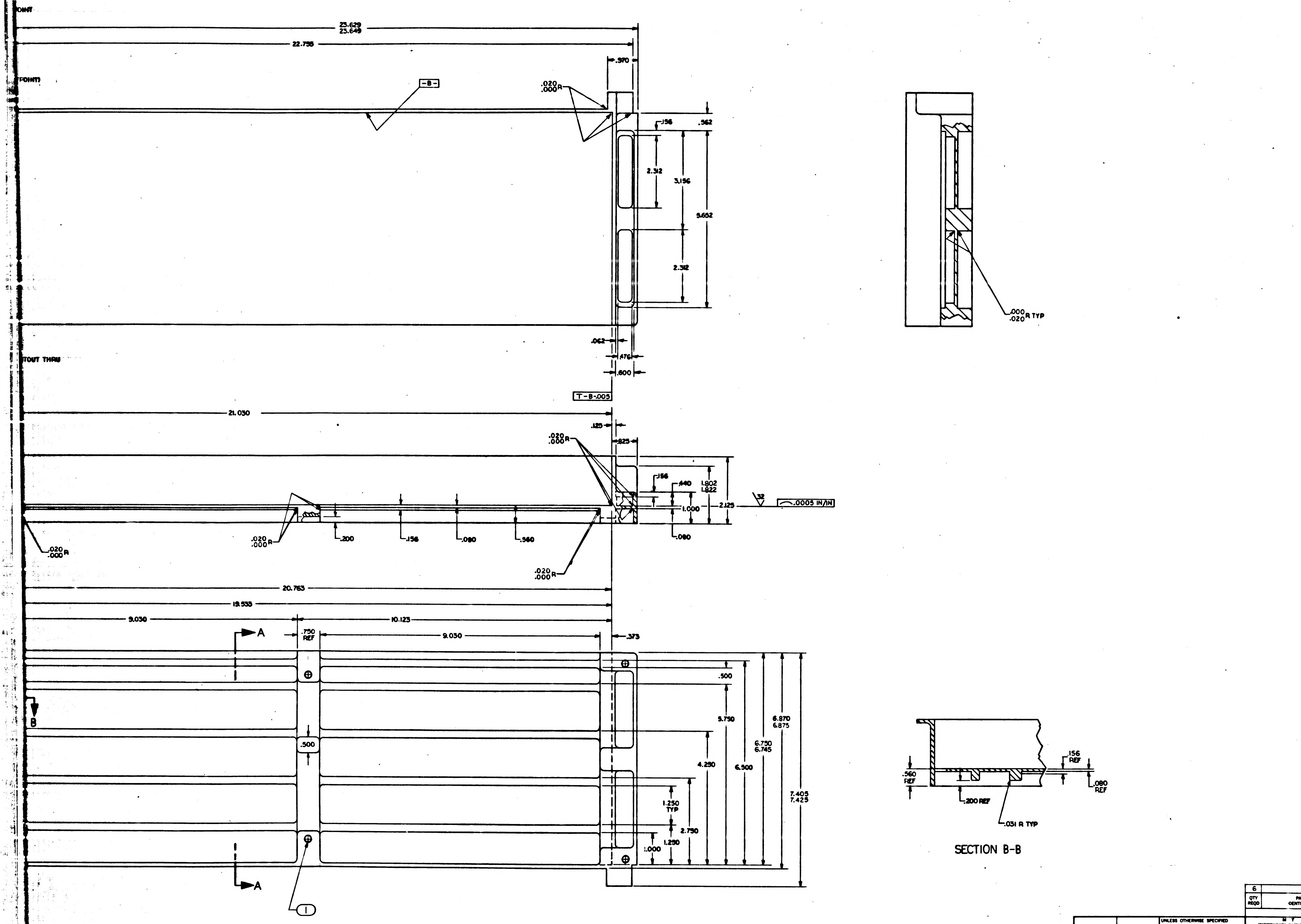

POINT
(POINT)
CUTOUT THRU
23.629
23.649
22.755
.370
-B-
.020
.000 R
.156
.562
2.312
3.156
5.652
2.312
.062
.476
.600
T - B - .005
21.030
.125
.825
.020
.000 R
.156
.440
1.802
1.822
1.000
2.125
32
.0005 IN/IN
.020
.000 R
.200
.156
.080
.560
.080
.020
.000 R
.020
.000 R
20.763
19.533
9.030
10.125
A
.750
REF
9.030
.373
.500
5.750
6.870
6.875
B
.500
4.250
6.750
6.745
6.500
7.405
7.425
1.250
TYP
2.750
1.250
1.000
A
1
.000
.020 R TYP
.156
REF
.560
REF
.080
REF
.200 REF
.031 R TYP

SECTION B-B

6		INSERT	1
QTY REQD	PART OR IDENTIFYING NO.	NOMENCLATURE OR DESCRIPTION	FIND NO

LIST OF MATERIALS

1003126	
NEXT ASSY	USED ON
APPLICATION	

UNLESS OTHERWISE SPECIFIED DIMENSIONS ARE IN INCHES
TOLERANCES ON
FRACTIONS ± — DECIMALS ±.005 ANGLES ±1/2°
DO NOT SCALE THIS DRAWING
MATERIAL SEE NOTE 2
HEAT TREATMENT —
FINAL FINISH —

M I T
INSTRUMENTATION LAB
CAMBRIDGE, MASS
DWG. NO. CONTRACT
DRAWN DATE
CHECKED Hong 7/26/63
APPROVAL W. Turner 7/30/63
APPROVAL 7/30/63
NASA APPROVAL 7-31-63
MIT APPROVAL 7/31/63

MANNED SPACECRAFT CENTER
HOUSTON, TEXAS

TRAY A
RIGHT HAND

CODE IDENT NO.
SIZE J
NASA DRAWING NO. 1004216
SCALE 1/1 WT SHEET 1 OF 2

INCHES
PHOTOGRAPHIC SCALE ONLY

F-2

NOTICE — WHEN GOVERNMENT DRAWINGS, SPECIFICATIONS, OR OTHER DATA ARE USED FOR ANY PURPOSE OTHER THAN IN CONNECTION WITH A DEFINITELY RELATED GOVERNMENT PROCUREMENT OPERATION, THE UNITED STATES GOVERNMENT THEREBY INCURS NO RESPONSIBILITY NOR ANY OBLIGATION WHATSOEVER; AND THE FACT THAT THE GOVERNMENT MAY HAVE FORMULATED, FURNISHED, OR IN ANY WAY SUPPLIED THE SAID DRAWINGS, SPECIFICATIONS, OR OTHER DATA IS NOT TO BE REGARDED BY IMPLICATION OR OTHERWISE AS IN ANY MANNER LICENSING THE HOLDER OR ANY OTHER PERSON OR CORPORATION, OR CONVEYING ANY RIGHTS OR PERMISSION TO MANUFACTURE, USE, OR SELL ANY PATENTED INVENTION THAT MAY IN ANY WAY BE RELATED THERETO.

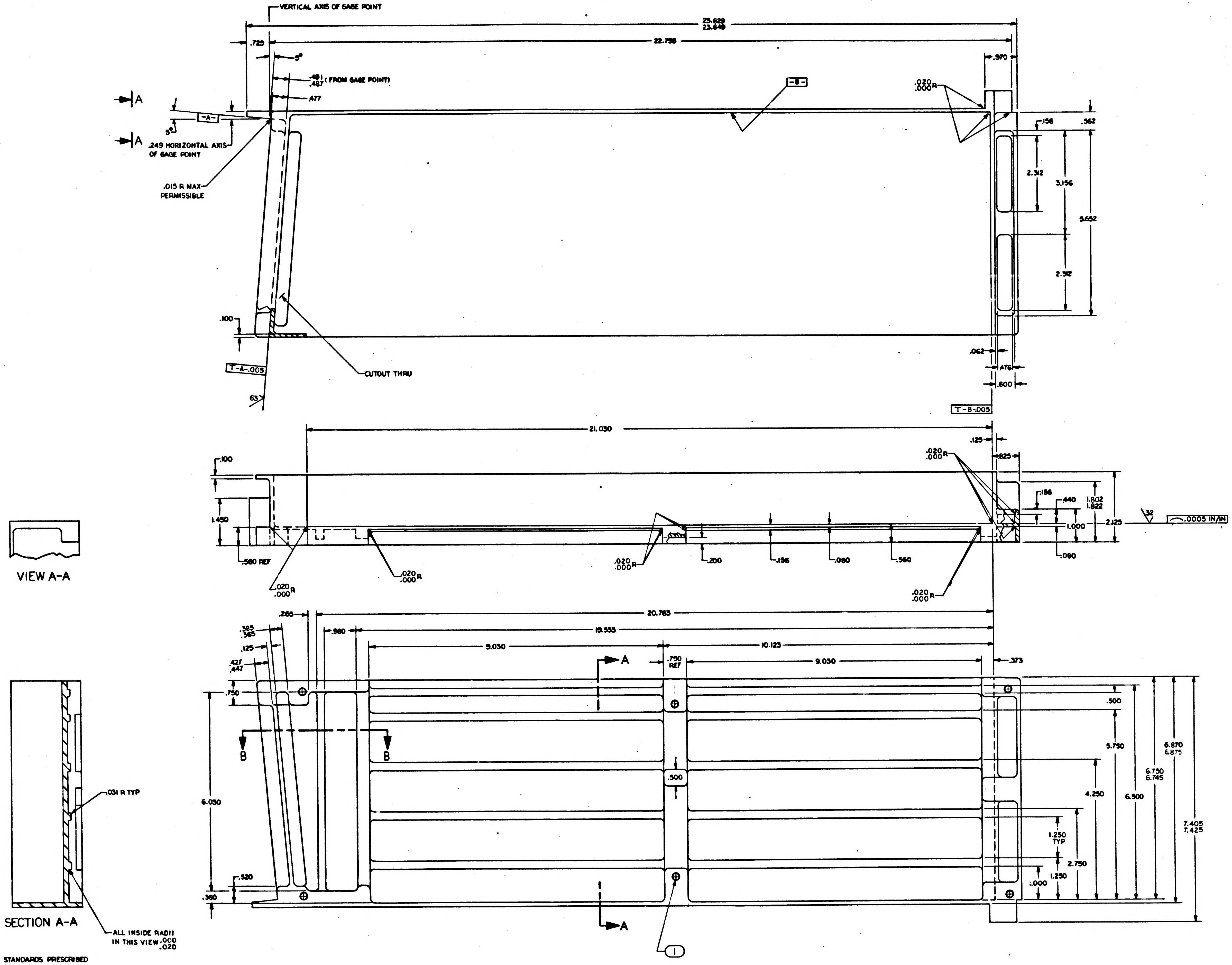
VERTICAL AXIS OF GAGE POINT
23.629
23.640
22.798
.729
5°
.491
.487 (FROM GAGE POINT)
.477
A
A
-A-
5°
.249 HORIZONTAL AXIS OF GAGE POINT
.015 R MAX PERMISSIBLE
-B-
.020
.000 R
.970
.156
.562
2.312
3.156
5.652
2.312
.100
T-A-.005
63
CUTOUT THRU
.062
.476
.600
T-B-.005
21.030
.125
.825
.020
.000 R
.100
1.450
.560 REF
.020
.000 R
.020
.000 R
.020
.000 R
.200
.156
.080
.560
.020
.000 R
.156
.440
1.802
1.822
1.000
2.125
.080
32
.0005 IN/IN
VIEW A-A
20.763
.265
.385
.365
.980
19.533
.125
9.030
10.123
.427
.447
A
.750 REF
9.030
.373
.750
.500
B
B
5.750
6.870
6.875
6.750
6.745
.500
6.030
4.250
6.500
7.405
7.425
1.250 TYP
2.750
.520
1.250
1.000
.360
A
1
.031 R TYP
SECTION A-A
ALL INSIDE RADII IN THIS VIEW .000 .020

NOTES
1. INTERPRET DRAWING IN ACCORDANCE WITH STANDARDS PRESCRIBED BY MIL-D-70327
2. MAKE FROM NASA DWG 1004150
3. REMOVE BURRS AND BREAK SHARP EDGES .005 -.015
4. UNLESS OTHERWISE SPECIFIED, FINSH 125
5. ALL RADII AND FILLETS TO BE .125 UNLESS OTHERWISE SPECIFIED

INCHES
PHOTOGRAPHIC SCALE ONLY

1004216

QTY REQD	REVISIONS	DESCRIPTION	DATE	APPROVAL

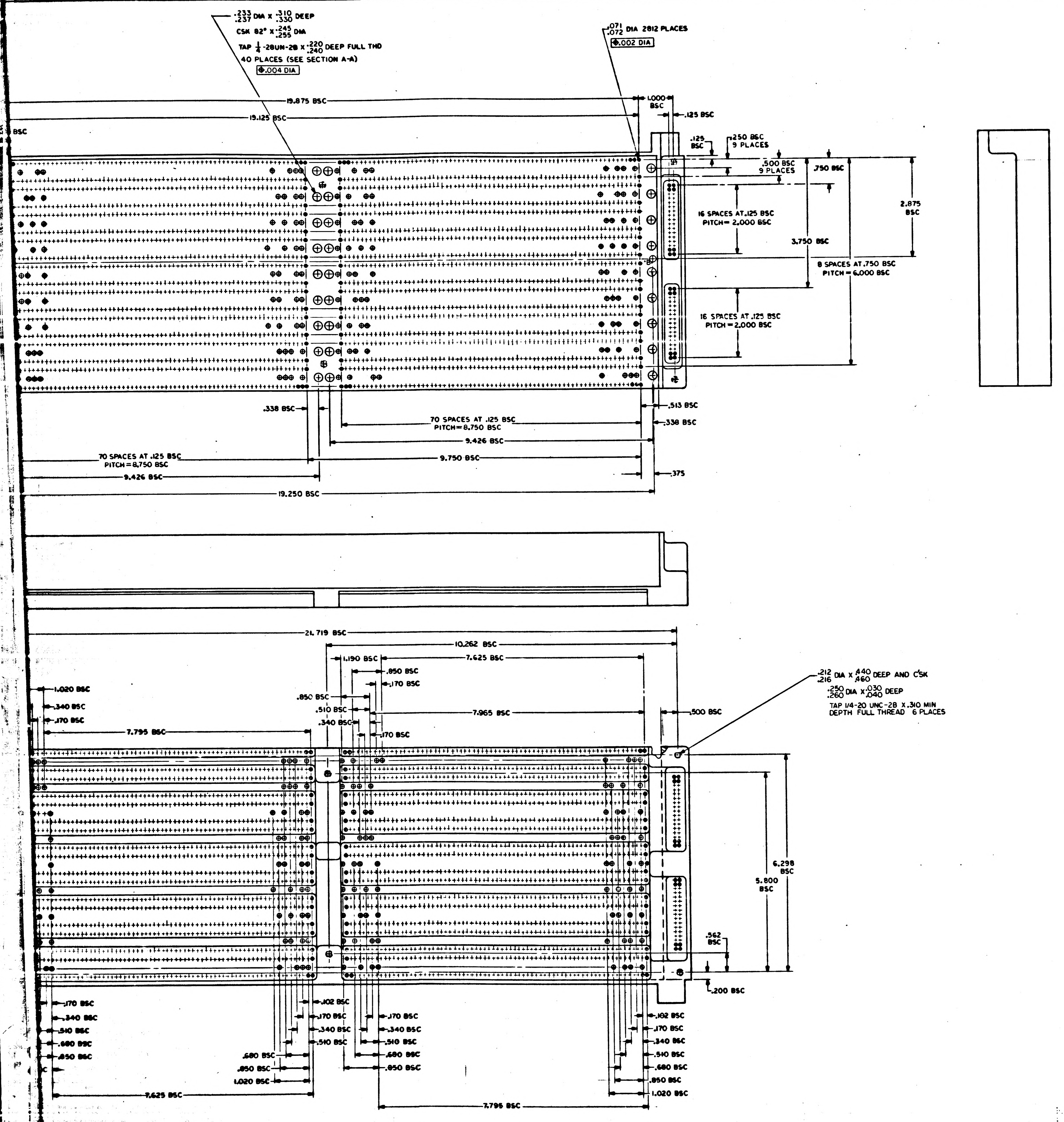
4
3
2
D
C
B
A
$\frac{.233}{.237}$ DIA X $\frac{.310}{.330}$ DEEP
CSK 82° X $\frac{.245}{.255}$ DIA
TAP $\frac{1}{4}$-28UN-2B X $\frac{.220}{.240}$ DEEP FULL THD
40 PLACES (SEE SECTION A-A)
⌖.004 DIA
$\frac{.071}{.072}$ DIA 2812 PLACES
⌖.002 DIA
19.875 BSC
19.125 BSC
1.000 BSC
.125 BSC
BSC
.125 BSC
.250 BSC 9 PLACES
.500 BSC 9 PLACES
.750 BSC
2.875 BSC
16 SPACES AT .125 BSC PITCH = 2.000 BSC
3.750 BSC
8 SPACES AT .750 BSC PITCH = 6.000 BSC
16 SPACES AT .125 BSC PITCH = 2.000 BSC
.338 BSC
70 SPACES AT .125 BSC PITCH = 8.750 BSC
9.426 BSC
9.750 BSC
.513 BSC
.338 BSC
70 SPACES AT .125 BSC PITCH = 8.750 BSC
9.426 BSC
.375
19.250 BSC
21.719 BSC
10.262 BSC
1.190 BSC
7.625 BSC
.850 BSC
.170 BSC
.850 BSC
.510 BSC
.340 BSC
7.965 BSC
.170 BSC
.500 BSC
1.020 BSC
.340 BSC
.170 BSC
7.795 BSC
$\frac{.212}{.216}$ DIA X $\frac{.440}{.460}$ DEEP AND C'SK
$\frac{.250}{.260}$ DIA X $\frac{.030}{.040}$ DEEP
TAP 1/4-20 UNC-2B X .310 MIN DEPTH FULL THREAD 6 PLACES
6.298 BSC
5.800 BSC
.562 BSC
.200 BSC
.170 BSC
.340 BSC
.510 BSC
.680 BSC
.850 BSC
.680 BSC
.850 BSC
1.020 BSC
.102 BSC
.170 BSC
.340 BSC
.510 BSC
.170 BSC
.340 BSC
.510 BSC
.680 BSC
.850 BSC
.102 BSC
.170 BSC
.340 BSC
.510 BSC
.680 BSC
.850 BSC
1.020 BSC
7.625 BSC
7.795 BSC

QTY REQD	PART OR IDENTIFYING NO.	NOMENCLATURE OR DESCRIPTION	FIND NO.
LIST OF MATERIALS			

1003126	
NEXT ASSY	USED ON
APPLICATION	

UNLESS OTHERWISE SPECIFIED DIMENSIONS ARE IN INCHES
TOLERANCES ON
FRACTIONS ± —
DECIMALS ± .005
ANGLES ± 1/2°
DO NOT SCALE THIS DRAWING
MATERIAL
SEE NOTE 2
HEAT TREATMENT
—
FINAL FINISH
—

MIT
INSTRUMENTATION LAB
CAMBRIDGE, MASS
DWG. NO. CONTRACT
DRAWN Fagan DATE 7/30/63
CHECKED Hing 7/30/63
APPROVAL Turner 7/30/63
APPROVAL Duggan 7/30/63
NASA APPROVAL W.J. Rhine 7-31-63
MIT APPROVAL Wahl 7/31/63

MANNED SPACECRAFT CENTER
HOUSTON, TEXAS

TRAY A
RIGHT HAND

CODE IDENT NO.
SIZE J
NASA DRAWING NO. 1004216
SCALE 1/1
WT
SHEET 2 OF 2

MASTER

INCHES
PHOTOGRAPHIC SCALE ONLY

F2

1004216

NOTICE — WHEN GOVERNMENT DRAWINGS, SPECIFICATIONS, OR OTHER DATA ARE USED FOR ANY PURPOSE OTHER THAN IN CONNECTION WITH A DEFINITELY RELATED GOVERNMENT PROCUREMENT OPERATION, THE UNITED STATES GOVERNMENT THEREBY INCURS NO RESPONSIBILITY NOR ANY OBLIGATION WHATSOEVER; AND THE FACT THAT THE GOVERNMENT MAY HAVE FORMULATED, FURNISHED, OR IN ANY WAY SUPPLIED THE SAID DRAWINGS, SPECIFICATIONS, OR OTHER DATA IS NOT TO BE REGARDED BY IMPLICATION OR OTHERWISE AS IN ANY MANNER LICENSING THE HOLDER OR ANY OTHER PERSON OR CORPORATION, OR CONVEYING ANY RIGHTS OR PERMISSION TO MANUFACTURE, USE, OR SELL ANY PATENTED INVENTION THAT MAY IN ANY WAY BE RELATED THERETO.

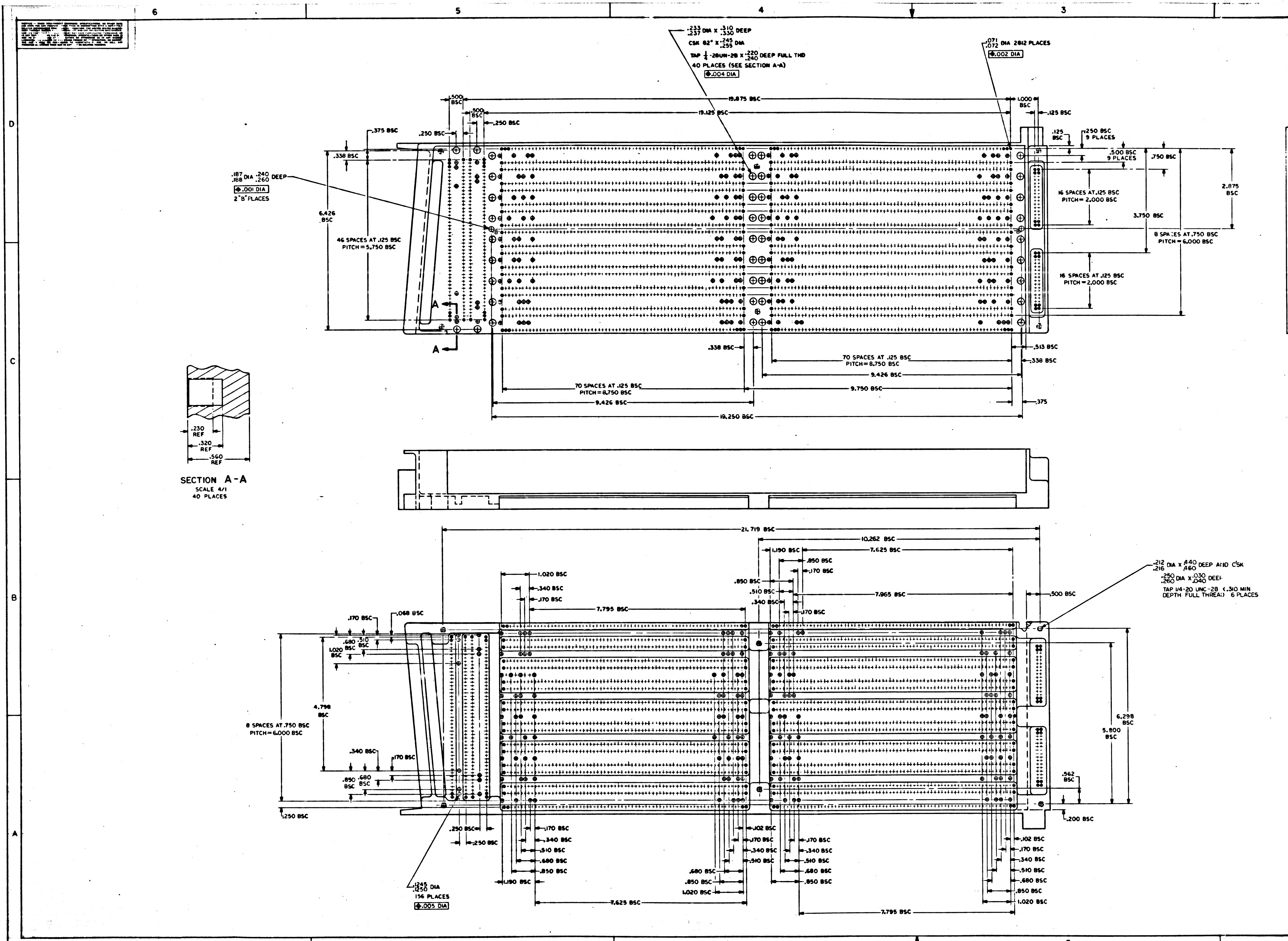
6
5
4
3
D
C
B
A
.233 .237 DIA X .310 .330 DEEP
CSK 82° X .245 .255 DIA
TAP 1/4-28UN-2B X .220 .240 DEEP FULL THD
40 PLACES (SEE SECTION A-A)
⌖.004 DIA
.071 .072 DIA 2812 PLACES
⌖.002 DIA
19.875 BSC
19.125 BSC
1.000 BSC
.125 BSC
.500 BSC
.500 BSC
.250 BSC
.375 BSC
.250 BSC
.338 BSC
.187 .188 DIA .240 .260 DEEP
⌖.001 DIA
2 "B" PLACES
6.426 BSC
46 SPACES AT .125 BSC
PITCH = 5.750 BSC
.125 BSC
.250 BSC
9 PLACES
.500 BSC
9 PLACES
.750 BSC
16 SPACES AT .125 BSC
PITCH = 2.000 BSC
2.875 BSC
3.750 BSC
8 SPACES AT .750 BSC
PITCH = 6.000 BSC
16 SPACES AT .125 BSC
PITCH = 2.000 BSC
A
A
B
.338 BSC
.513 BSC
70 SPACES AT .125 BSC
PITCH = 8.750 BSC
.338 BSC
9.426 BSC
9.750 BSC
70 SPACES AT .125 BSC
PITCH = 8.750 BSC
9.426 BSC
.375
19.250 BSC
.230 REF
.320 REF
.560 REF
SECTION A-A
SCALE 4/1
40 PLACES
21.719 BSC
10.262 BSC
1.190 BSC
7.625 BSC
.850 BSC
.170 BSC
.850 BSC
.510 BSC
.340 BSC
.170 BSC
7.965 BSC
.500 BSC
.212 .216 DIA X .440 .460 DEEP AND C'SK
.250 .260 DIA X .030 .040 DEEP
TAP 1/4-20 UNC-2B (.310 MIN DEPTH FULL THREAD) 6 PLACES
1.020 BSC
.340 BSC
.170 BSC
7.795 BSC
.170 BSC
.068 BSC
.680 BSC
.510 BSC
1.020 BSC
4.798 BSC
8 SPACES AT .750 BSC
PITCH = 6.000 BSC
.340 BSC
.170 BSC
.850 BSC
.680 BSC
.250 BSC
6.298 BSC
5.800 BSC
.562 BSC
.200 BSC
.250 BSC
.250 BSC
.170 BSC
.340 BSC
.510 BSC
.680 BSC
.850 BSC
1.190 BSC
.1245 .1250 DIA
156 PLACES
⌖.005 DIA
.102 BSC
.170 BSC
.340 BSC
.510 BSC
.680 BSC
.850 BSC
1.020 BSC
7.625 BSC
.170 BSC
.340 BSC
.510 BSC
.680 BSC
.850 BSC
.102 BSC
.170 BSC
.340 BSC
.510 BSC
.680 BSC
.850 BSC
1.020 BSC
7.795 BSC

NOTICE — WHEN GOVERNMENT DRAWINGS, SPECIFICATIONS, OR OTHER DATA ARE USED FOR ANY PURPOSE OTHER THAN IN CONNECTION WITH A DEFINITELY RELATED GOVERNMENT PROCUREMENT OPERATION, THE UNITED STATES GOVERNME[illegible]ER, AND THE FACT THAT THE GOVERNMENT MAY HAVE FORMULATED, FURNISHED, OR IN ANY WAY SUPPLIED THE SAID DRAWINGS, SPECIFICATIONS OR OTHER DATA IS NOT TO BE REGARDED BY IMPLICATION OR OTHERWISE AS IN ANY MANNER LICENSING THE HOLDER OR ANY OTHER PERSON OR CORPORATION, OR CONVEYING ANY RIGHTS OR PERMISSION TO MANUFACTURE, USE, OR SELL ANY PATENTED INVENTION THAT MAY IN ANY WAY BE RELATED THERETO.

REVISIONS 02545			
SYM	DESCRIPTION	DATE	APPROVAL
A	REPLACED WITH CHANGE PER TDRR 04018	10-17-63	RPK WK

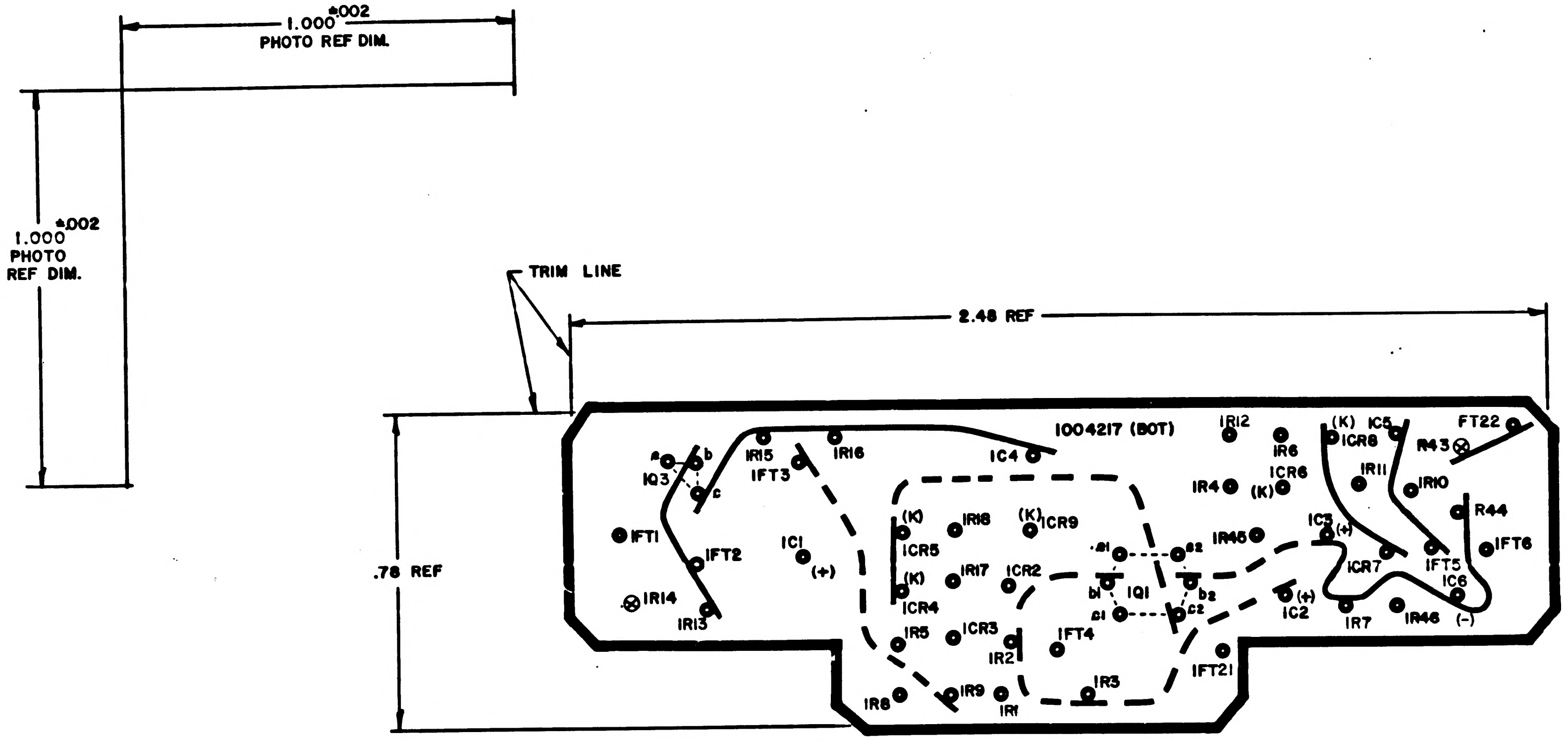
1.000 ±.002
PHOTO REF DIM.
1.000 ±.002
PHOTO
REF DIM.
TRIM LINE
2.48 REF
.78 REF
1004217 (BOT)
a
b
c
IQ3
IR15
IFT3
IR16
IC4
IR12
IR6
(K)
IC5
ICR8
FT22
R43
IR11
IR10
IR4
ICR6
(K)
R44
IFT1
IFT2
IC1
(+)
(K)
ICR5
IR18
(K)
ICR9
a1
a2
IR45
IC3
(+)
ICR7
IFT5
IC6
IFT6
IR14
IR13
(K)
ICR4
IR17
ICR2
b1
IQ1
b2
c1
c2
IC2
(+)
IR7
IR46
(-)
IR5
ICR3
IR2
IFT4
IFT21
IR8
IR9
IR1
IR3

NOTES:

1. INTERPRET DRAWING IN ACCORDANCE WITH STANDARDS PRESCRIBED BY MIL-D-70327
2. ORIGINAL OF THIS DRAWING OR REPRODUCTION MADE BY PROCESS OR METHOD SHALL INSURE DIMENSIONAL STABILITY. DIMENSIONAL STABILITY SHALL NOT EXCEED .001 INCH PER INCH
3. CUT TO WITHIN .010 OF TRIM LINE
4. MAKE MASTER PATTERN POSITIVE FILMS TO DIMENSIONS SHOWN
5. MATERIAL: FILM .006/.008 THK PER L-F-340, TYPE IB, CL 2, STYLE IA
6. BROKEN LINES DENOTE SLEEVING
7. ● .035/.045 DIA PUNCH.
8. ⊗ .047/.057 DIA PUNCH

Ⓐ REPLACED WITH CHANGE BY REV B

INACTIVATE

QTY REQD	PART OR IDENTIFYING NO.	NOMENCLATURE OR DESCRIPTION	FIND NO.

LIST OF MATERIALS

1003150	
NEXT ASSY	USED ON
APPLICATION	

UNLESS OTHERWISE SPECIFIED DIMENSIONS ARE IN INCHES
TOLERANCES ON
FRACTIONS ± — DECIMALS ± — ANGLES ± —
DO NOT SCALE THIS DRAWING
MATERIAL SEE NOTE 5
HEAT TREATMENT —
FINAL FINISH —

MIT INSTRUMENTATION LAB
CAMBRIDGE, MASS.
DRAWN DATE
CHECKED
APPROVAL 13 AUG 63
APPROVAL
NASA APPROVAL Jack Bearman
MIT APPROVAL 14 Aug 63

MANNED SPACECRAFT CENTER
HOUSTON, TEXAS

INSULATOR
PHOTOGRAPHIC MASTER
CONTROL MODULE

CODE IDENT NO.
SIZE D
NASA DRAWING NO. 1004217
SCALE 5/1
WT
SHEET 1 OF 1

INCHES
0 1 2
PHOTOGRAPHIC SCALE ONLY

NOTICE - WHEN GOVERNMENT DRAWINGS, SPECIFICATIONS, OR OTHER DATA ARE USED FOR ANY PURPOSE OTHER THAN IN CONNECTION WITH A DEFINITELY RELATED GOVERNMENT PROCUREMENT OPERATION, THE UNITED STATES GOVERNMENT THEREBY INCURS NO RESPONSIBILITY NOR ANY OBLIGATION WHATSOEVER; AND THE FACT THAT THE GOVERNMENT MAY HAVE FORMULATED, FURNISHED, OR IN ANY WAY SUPPLIED THE SAID DRAWINGS, SPECIFICATIONS OR OTHER DATA IS NOT TO BE REGARDED BY IMPLICATION OR OTHERWISE AS IN ANY MANNER LICENSING THE HOLDER OR ANY OTHER PERSON OR CORPORATION, OR CONVEYING ANY RIGHTS OR PERMISSION TO MANUFACTURE, USE, OR SELL ANY PATENTED INVENTION THAT MAY IN ANY WAY BE RELATED THERETO.

REVISIONS			
SYM	DESCRIPTION	DATE	APPROVAL
B	REPLACES REV A WITH CHANGE PER TDRR 04018	16-11-63	RPK WK

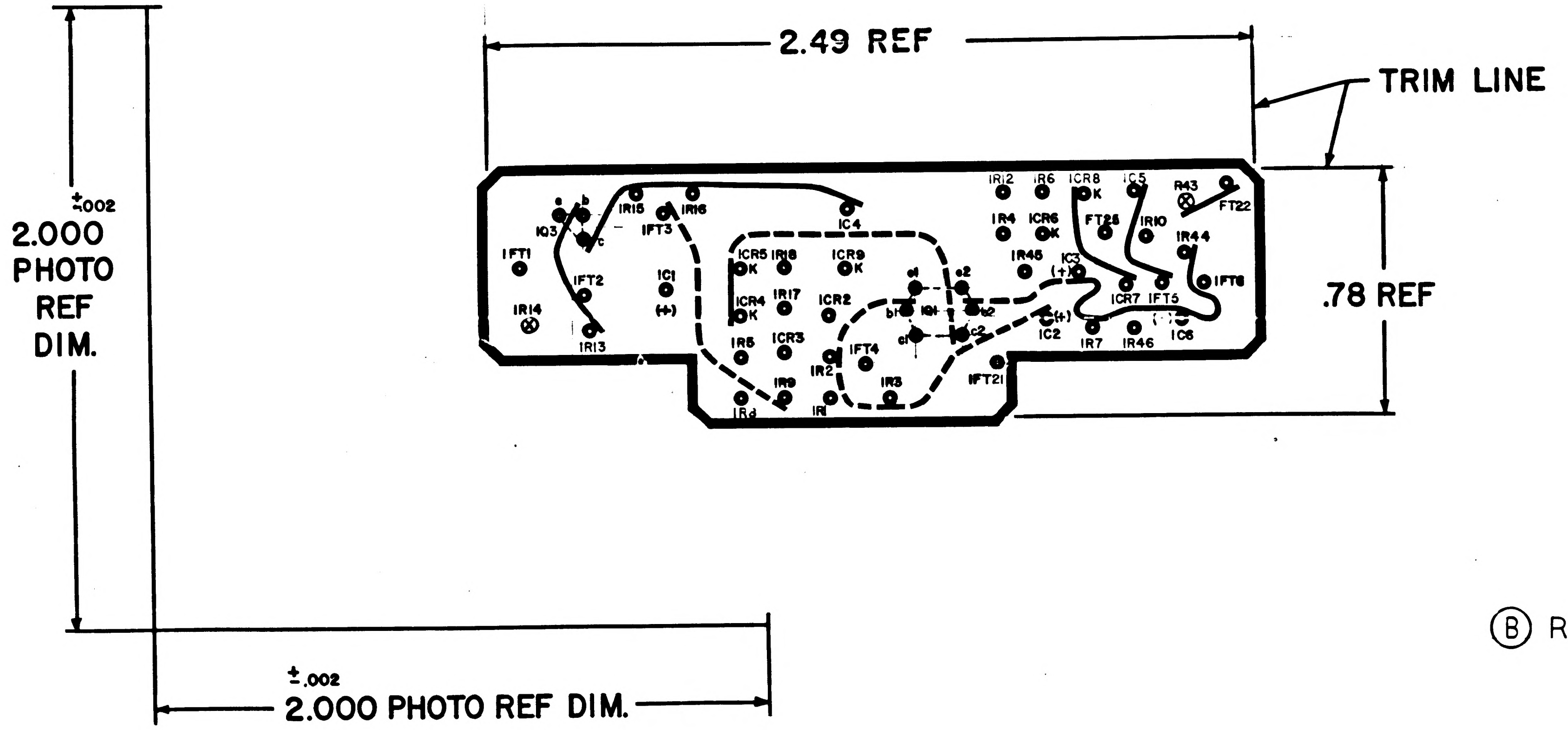
2.49 REF
TRIM LINE
.78 REF
±.002
2.000
PHOTO
REF
DIM.
±.002
2.000 PHOTO REF DIM.
a
b
c
IQ3
IFT1
IR14
IFT2
IR13
IR15
IFT3
IR16
IC1
(+)
IC4
ICR5
IR18
ICR9
K
ICR4
IR17
ICR2
IR5
ICR3
IR9
IR2
IR8
IR1
IFT4
IR3
e1
e2
b1
IQ1
b2
c1
c2
IFT21
IR12
IR6
ICR8
IC5
R43
FT22
IR4
ICR6
FT28
IR10
IR44
IR45
IC3
(+)
IFT6
ICR7
IFT5
IC2
IR7
IR46
IC6

Ⓑ REPLACES REV A WITH CHANGE

NOTES
1. INTERPRET DRAWING IN ACCORDANCE WITH STANDARDS PRESCRIBED BY MIL-D-70327
2. ORIGINAL OF THIS DRAWING OR REPRODUCTION MADE BY PROCESS OR METHOD SHALL INSURE DIMENSIONAL STABILITY. DIMENSIONAL STABILITY SHALL NOT EXCEED .001 INCH PER INCH
3. CUT TO WITHIN .010 OF TRIM LINE
4. MAKE MASTER PATTERN POSITIVE FILMS TO DIMENSIONS SHOWN
5. MATERIAL: FILM .006/.008 THK PER L-F-340, TYPE IB, CL 2, STYLE IA
6. ⊙ .035/.045 DIA PUNCH
7. BROKEN LINES DENOTE SLEEVING
8. ⊗ .047/.057 DIA PUNCH

QTY REQD	PART OR IDENTIFYING NO.	NOMENCLATURE OR DESCRIPTION	FIND NO.
LIST OF MATERIALS			

1003150	
NEXT ASSY	USED ON
APPLICATION	

UNLESS OTHERWISE SPECIFIED DIMENSIONS ARE IN INCHES
TOLERANCES ON
FRACTIONS ± DECIMALS ± ANGLES ±
DO NOT SCALE THIS DRAWING
MATERIAL SEE NOTE 5
HEAT TREATMENT
FINAL FINISH

MIT INSTRUMENTATION LAB
CAMBRIDGE, MASS.
DWG. NO.
CONTRACT
DRAWN D. O. Sullivan DATE 20 Sep 63
CHECKED R. P. Kung Jung 16 Oct 63
APPROVAL
APPROVAL
NASA APPROVAL
MIT APPROVAL WK 17 Oct 63

MANNED SPACECRAFT CENTER
HOUSTON, TEXAS

INSULATOR PHOTOGRAPHIC MASTER
CONTROL MODULE

CODE IDENT NO.
SIZE D
NASA DRAWING NO. 1004217
SCALE 4/1
WT
SHEET 1 OF 1

INCHES
0 1 2
PHOTOGRAPHIC SCALE ONLY

NOTICE — WHEN GOVERNMENT DRAWINGS, SPECIFICATIONS, OR OTHER DATA ARE USED FOR ANY PURPOSE OTHER THAN IN CONNECTION WITH A DEFINITELY RELATED GOVERNMENT PROCUREMENT OPERATION, THE UNITED STATES GOVERNMENT THEREBY INCURS NO RESPONSIBILITY NOR ANY OBLIGATION WHATSOEVER; AND THE FACT THAT THE GOVERNMENT MAY HAVE FORMULATED, FURNISHED, OR IN ANY WAY SUPPLIED THE SAID DRAWINGS, SPECIFICATIONS OR OTHER DATA IS NOT TO BE REGARDED BY IMPLICATION OR OTHERWISE AS IN ANY MANNER LICENSING THE HOLDER OR ANY OTHER PERSON OR CORPORATION, OR CONVEYING ANY RIGHTS OR PERMISSION TO MANUFACTURE, USE, OR SELL ANY PATENTED INVENTION THAT MAY IN ANY WAY BE RELATED THERETO.

REVISIONS			
SYM	DESCRIPTION	DATE	APPROVAL
B	REPLACES REV A WITH CHANGE PER TDRR 04018	10-17-63	RPK WK
C	REVISED PER TDRR 04504	11-6-63	WK

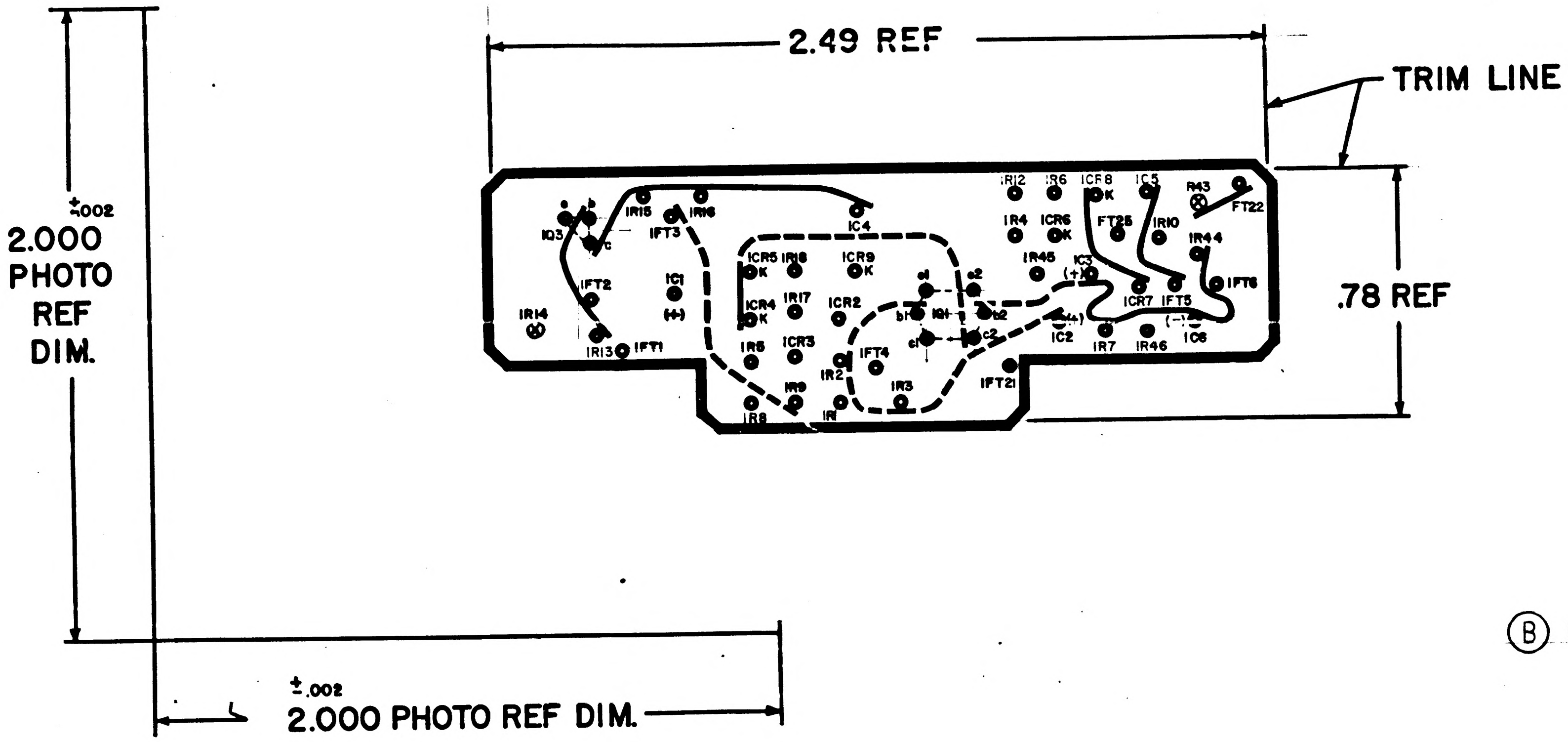
2.49 REF
TRIM LINE
±.002
2.000 PHOTO REF DIM.
.78 REF
±.002
2.000 PHOTO REF DIM.
IQ3
a
b
c
IR15
IR16
IFT3
IC4
IFT2
IC1
(+)
IR14
IR13
IFT1
ICR5
K
IR18
ICR9
K
ICR4
K
IR17
ICR2
IR5
ICR3
IR9
IR8
IR2
IR1
IFT4
IR3
e1
e2
b1
IQ1
b2
c1
c2
IR12
IR6
ICR8
K
IC5
R43
FT22
IR4
ICR6
K
FT25
IR10
IR44
IR45
IC3
(+)
IFT6
ICR7
IFT5
(+)
IC2
IR7
IR46
(−)
IC6
IFT21

Ⓑ REPLACES REV A WITH CHANGE

NOTES
1. INTERPRET DRAWING IN ACCORDANCE WITH STANDARDS PRESCRIBED BY MIL-D-70327
2. ORIGINAL OF THIS DRAWING OR REPRODUCTION MADE BY PROCESS OR METHOD SHALL INSURE DIMENSIONAL STABILITY. DIMENSIONAL STABILITY SHALL NOT EXCEED .001 INCH PER INCH
3. CUT TO WITHIN .010 OF TRIM LINE
4. MAKE MASTER PATTERN POSITIVE FILMS TO DIMENSIONS SHOWN
5. MATERIAL: FILM .006/.008 THK PER L-F-340, TYPE IB, CL 2, STYLE IA
6. ● .035/.045 DIA PUNCH
7. BROKEN LINES DENOTE SLEEVING
8. ⊗ .047/.057 DIA PUNCH

QTY REQD	PART OR IDENTIFYING NO.	NOMENCLATURE OR DESCRIPTION	FIND NO.
LIST OF MATERIALS			

1003150	
NEXT ASSY	USED ON
APPLICATION	

UNLESS OTHERWISE SPECIFIED
DIMENSIONS ARE IN INCHES
TOLERANCES ON
FRACTIONS ± DECIMALS ± ANGLES ±
DO NOT SCALE THIS DRAWING
MATERIAL SEE NOTE 5
HEAT TREATMENT
FINAL FINISH

MIT
INSTRUMENTATION LAB
CAMBRIDGE, MASS.
DWG. NO. CONTRACT
DRAWN DATE 20 Sept 63
CHECKED 16 Oct 63
APPROVAL
APPROVAL
NASA APPROVAL
MIT APPROVAL WK 17 Oct 63

MANNED SPACECRAFT CENTER
HOUSTON, TEXAS

INSULATOR PHOTOGRAPHIC MASTER
CONTROL MODULE

CODE IDENT NO.
SIZE D
NASA DRAWING NO. 1004217
SCALE 4/1
WT
SHEET 1 OF 1

INCHES
0 1 2
PHOTOGRAPHIC SCALE ONLY

1004217 C

REVISIONS 02545			
SYM	DESCRIPTION	DATE	APPROVAL

NOTICE — WHEN GOVERNMENT DRAWINGS, SPECIFICATIONS, OR OTHER DATA ARE USED FOR ANY PURPOSE OTHER THAN IN CONNECTION WITH A DEFINITELY RELATED GOVERNMENT PROCUREMENT OPERATION, THE UNITED STATES GOVERNMENT THEREBY INCURS NO RESPONSIBILITY NOR ANY OBLIGATION WHATSOEVER; AND THE FACT THAT THE GOVERNMENT MAY HAVE FORMULATED, FURNISHED, OR IN ANY WAY SUPPLIED THE SAID DRAWINGS, SPECIFICATIONS, OR OTHER DATA IS NOT TO BE REGARDED BY IMPLICATION OR OTHERWISE AS IN ANY MANNER LICENSING THE HOLDER OR ANY OTHER PERSON OR CORPORATION, OR CONVEYING ANY RIGHTS OR PERMISSION TO MANUFACTURE, USE, OR SELL ANY PATENTED INVENTION THAT MAY IN ANY WAY BE RELATED THERETO.

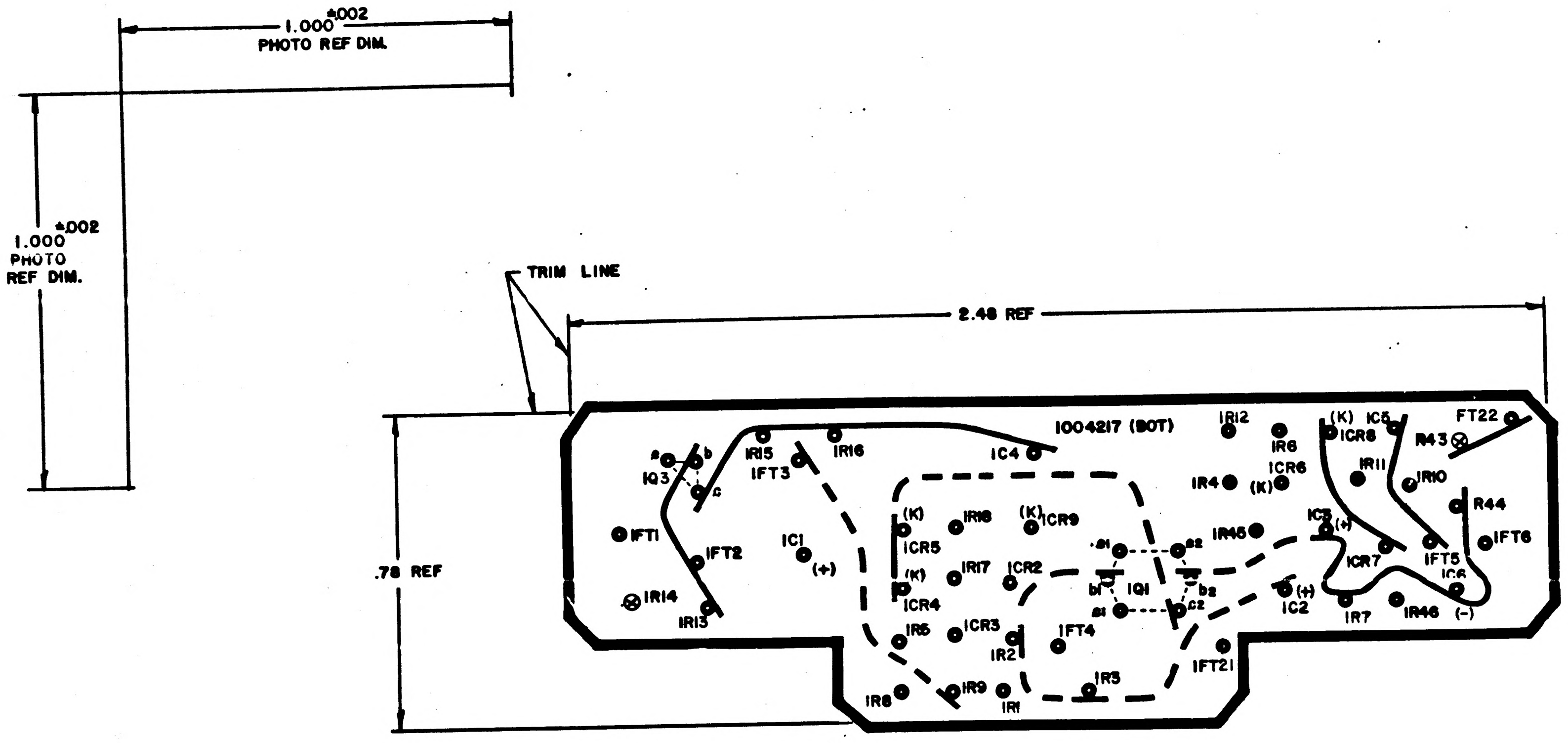
1.000 ±.002
PHOTO REF DIM.
1.000 ±.002
PHOTO
REF DIM.
TRIM LINE
2.48 REF
.78 REF
1004217 (BOT)
a
b
c
IQ3
IR15
IFT3
IR16
IC4
IFT1
IFT2
IC1
(+)
IR14
IR13
(K)
ICR5
IR18
(K)
ICR9
(K)
ICR4
IR17
ICR2
IR5
ICR3
IR2
IFT4
IR8
IR9
IR1
IR3
e1
b1
IQ1
e2
b2
c2
IR12
IR6
ICR6
(K)
IR4
IR45
IC3
(+)
(K)
IC5
ICR8
IR11
R43
FT22
IR10
R44
ICR7
IFT5
IC6
IFT6
IC2
(+)
IR7
IR46
(-)
IFT21

NOTES:

1. INTERPRET DRAWING IN ACCORDANCE WITH STANDARDS PRESCRIBED BY MIL-D-70327
2. ORIGINAL OF THIS DRAWING OR REPRODUCTION MADE BY PROCESS OR METHOD SHALL INSURE DIMENSIONAL STABILITY. DIMENSIONAL STABILITY SHALL NOT EXCEED .001 INCH PER INCH
3. CUT TO WITHIN .010 OF TRIM LINE
4. MAKE MASTER PATTERN POSITIVE FILMS TO DIMENSIONS SHOWN
5. MATERIAL: FILM .006/.008 THK PER L-F-340, TYPE IB, CL 2, STYLE IA
6. BROKEN LINES DENOTE SLEEVING
7. ● .035/.045 DIA PUNCH
8. ⊗ .047/.057 DIA PUNCH

MASTER

QTY REQD	PART OR IDENTIFYING NO.	NOMENCLATURE OR DESCRIPTION	FIND NO.
LIST OF MATERIALS			

1003150		UNLESS OTHERWISE SPECIFIED DIMENSIONS ARE IN INCHES TOLERANCES ON FRACTIONS ±— DECIMALS ±— ANGLES ±— DO NOT SCALE THIS DRAWING	MIT INSTRUMENTATION LAB CAMBRIDGE, MASS. DWG. NO. CONTRACT	MANNED SPACECRAFT CENTER HOUSTON, TEXAS
NEXT ASSY	USED ON	MATERIAL SEE NOTE 5	DRAWN DATE CHECKED APPROVAL 13 Aug 63 APPROVAL	INSULATOR PHOTOGRAPHIC MASTER CONTROL MODULE
APPLICATION		HEAT TREATMENT —	NASA APPROVAL	CODE IDENT NO. SIZE D NASA DRAWING NO. 1004217
		FINAL FINISH —	MIT APPROVAL 14 Aug 63	SCALE 5/1 WT SHEET 1 OF 1

INCHES
0 1 2
PHOTOGRAPHIC SCALE ONLY

1004217

NOTICE — WHEN GOVERNMENT DRAWINGS, SPECIFICATIONS, OR OTHER DATA ARE USED FOR ANY PURPOSE OTHER THAN IN CONNECTION WITH A DEFINITELY RELATED GOVERNMENT PROCUREMENT OPERATION THE UNITED STATES GOVERNMENT THEREBY INCURS NO RESPONSIBILITY NOR ANY OBLIGATION WHATSOEVER, AND THE FACT THAT THE GOVERNMENT MAY HAVE FORMULATED, FURNISHED, OR IN ANY WAY SUPPLIED THE SAID DRAWINGS, SPECIFICATIONS OR OTHER DATA IS NOT TO BE REGARDED BY IMPLICATION OR OTHERWISE AS IN ANY MANNER LICENSING THE HOLDER OR ANY OTHER PERSON OR CORPORATION, OR CONVEYING ANY RIGHTS OR PERMISSION TO MANUFACTURE USE OR SELL ANY PATENTED INVENTION THAT MAY IN ANY WAY BE RELATED THERETO.

REVISIONS 02545

SYM	DESCRIPTION	DATE	APPROVAL
A	REPLACED WITH CHANGE PER TDRR 04018	[illegible]	WK.

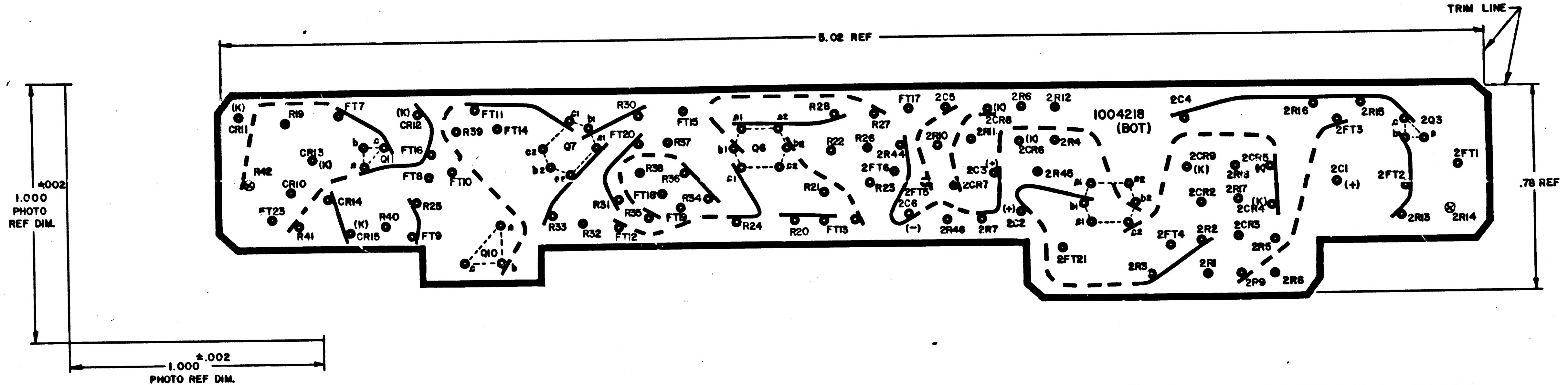
TRIM LINE
5.02 REF
.78 REF
1.000 ±.002 PHOTO REF DIM.
1.000 ±.002 PHOTO REF DIM.
1004218
(BOT)
(K) CR11
R19
FT7
(K) CR12
FT11
R39
FT14
R30
FT15
R28
FT17
2C5
2R6
2R12
2C4
2R16
2R15
2Q3
CR13 (K)
Q11
FT16
Q7
FT20
R37
Q6
R22
R26
R27
2R44
2R10
2R11
(K) 2CR8
(K) 2CR6
2R4
2FT3
2FT1
R42
CR10
CR14
FT8
FT10
R38
R36
R34
FT18
R31
R35
FT19
R21
2FT6
R23
2FT5
2C6
(–)
2C3 (+)
2CR7
2R45
2CR9 (K)
2CR5 (K)
2R13
2R17
2CR2
(K) 2CR4
2C1 (+)
2FT2
2R18
2R14
FT23
R41
(K) CR15
R40
R25
FT9
Q10
R33
R32
FT12
R24
R20
FT13
2R46
2R7
(+) 2C2
2FT4
2R2
2CR3
2R5
2FT21
2R3
2R1
2P9
2R8

Ⓐ REPLACED WITH CHANGE BY REV B

INACTIVATE

NOTES:

1. INTERPRET DRAWING IN ACCORDANCE WITH STANDARDS PRESCRIBED BY MIL-D-70327
2. ORIGINAL OF THIS DRAWING OR REPRODUCTION MADE BY PROCESS OR METHOD SHALL INSURE DIMENSIONAL STABILITY. DIMENSIONAL STABILITY SHALL NOT EXCEED .001 INCH PER INCH
3. CUT TO WITHIN .010 OF TRIM LINE
4. MAKE MASTER PATTERN POSITIVE FILMS TO DIMENSIONS SHOWN
5. MATERIAL: FILM .006/.008 THK PER L-F-340, TYPE IB, CL 2, STYLE IA
6. ● .035/.045 DIA PUNCH
7. BROKEN LINES DENOTE SLEEVING
8. ⊗ .047/.057 DIA PUNCH

QTY REQD	PART OR IDENTIFYING NO.	NOMENCLATURE OR DESCRIPTION	FIND NO.

LIST OF MATERIALS

NEXT ASSY	USED ON
1003150	

APPLICATION

UNLESS OTHERWISE SPECIFIED
DIMENSIONS ARE IN INCHES
TOLERANCES ON
FRACTIONS ± —— DECIMALS ± —— ANGLES ± ——
DO NOT SCALE THIS DRAWING
MATERIAL
SEE NOTE 5
HEAT TREATMENT ——
FINAL FINISH ——

MIT
INSTRUMENTATION LAB
CAMBRIDGE, MASS.
DWG. NO. CONTRACT
DRAWN DATE
CHECKED 13 Aug 63
APPROVAL 13 Aug 63
APPROVAL
NASA APPROVAL Jack Barnes
MIT APPROVAL 14 Aug 63

MANNED SPACECRAFT CENTER
HOUSTON, TEXAS

INSULATOR
PHOTOGRAPHIC MASTER
CONTROL MODULE

CODE IDENT NO.
SIZE D
NASA DRAWING NO. 1004218
SCALE 5/1
WT
SHEET 1 OF 1

MASTER

INCHES
0 1 2
PHOTOGRAPHIC SCALE ONLY

1004218

NOTICE — WHEN GOVERNMENT DRAWINGS, SPECIFICATIONS, OR OTHER DATA ARE USED FOR ANY PURPOSE OTHER THAN IN CONNECTION WITH A DEFINITELY RELATED GOVERNMENT PROCUREMENT OPERATION THE UNITED STATES GOVERNMENT THEREBY INCURS NO RESPONSIBILITY NOR ANY OBLIGATION WHATSOEVER; AND THE FACT THAT THE GOVERNMENT MAY HAVE FORMULATED, FURNISHED OR IN ANY WAY SUPPLIED THE SAID DRAWINGS, SPECIFICATIONS OR OTHER DATA IS NOT TO BE REGARDED BY IMPLICATION OR OTHERWISE AS IN ANY MANNER LICENSING THE HOLDER OR ANY OTHER PERSON OR CORPORATION, OR CONVEYING ANY RIGHTS OR PERMISSION TO MANUFACTURE, USE, OR SELL ANY PATENTED INVENTION THAT MAY IN ANY WAY BE RELATED THERETO.

REVISIONS			
SYM	DESCRIPTION	DATE	APPROVAL
B	REPLACES REV A WITH CHANGE PER TDRR 04018	10-11-63	

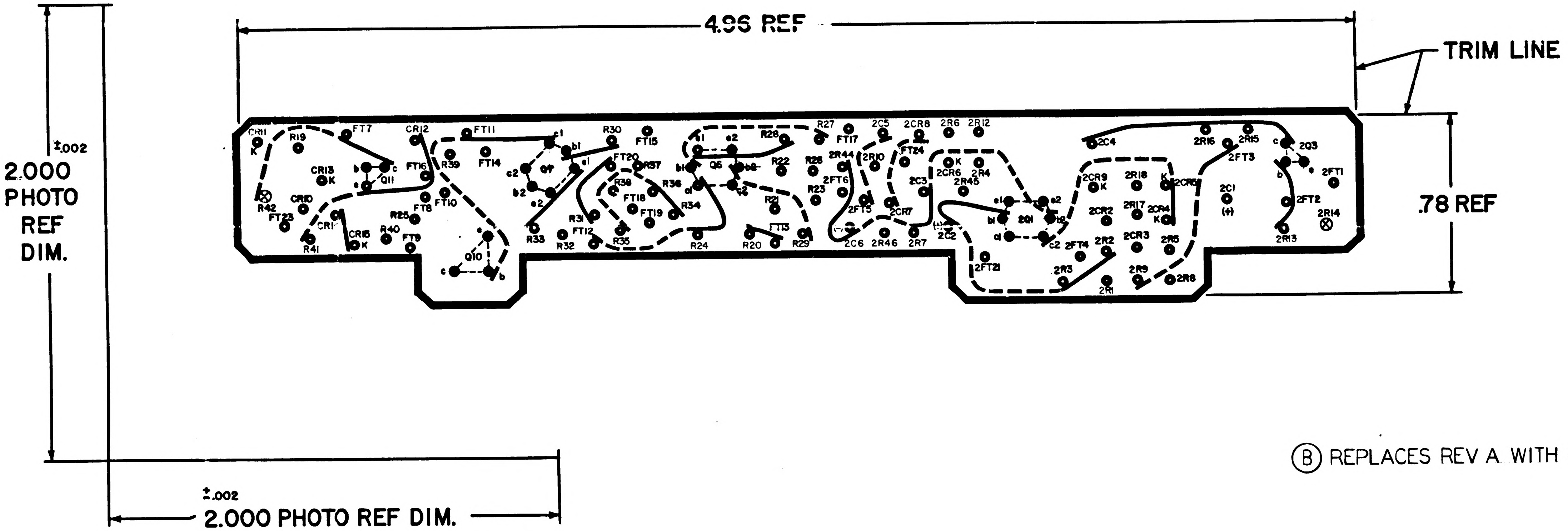
4.96 REF
TRIM LINE
.78 REF
±.002
2.000 PHOTO REF DIM.
±.002
2.000 PHOTO REF DIM.
CR11
K
R19
FT7
CR12
FT11
R30
FT15
R27
FT17
2C5
2CR8
2R6
2R12
CR13
K
b
c
e
Q11
FT16
R39
FT14
c1
b1
e1
e2
c2
b2
Q7
FT20
R37
R38
R36
FT18
FT19
R34
R31
FT12
R33
R32
R35
R42
FT23
CR10
CR1
CR15
K
R25
FT8
FT10
R40
FT9
R41
Q10
c
b
e
e1
e2
R28
b1
Q6
b2
c1
c2
R22
R26
R23
R21
FT13
R24
R20
R29
2R44
2R10
FT24
2FT6
2FT5
2CR7
2C3
2C6
2R46
2R7
2C2
(-)
(+)
2CR6
K
2R4
2R45
2Q1
b1
b2
c1
c2
2FT21
2C4
2CR9
K
2R18
2CR5
K
2CR2
2R17
2CR4
K
2FT4
2R2
2CR3
2R5
2R3
2R1
2R9
2R8
2R16
2R15
2FT3
2Q3
c
b
e
2C1
(+)
2FT1
2FT2
2R14
2R13

Ⓑ REPLACES REV A WITH CHANGE

NOTES
1. INTERPRET DRAWING IN ACCORDANCE WITH STANDARDS PRESCRIBED BY MIL-D-70327
2. ORIGINAL OF THIS DRAWING OR REPRODUCTION MADE BY PROCESS OR METHOD SHALL INSURE DIMENSIONAL STABILITY. DIMENSIONAL STABILITY SHALL NOT EXCEED .001 INCH PER INCH
3. CUT TO WITHIN .010 OF TRIM LINE
4. MAKE MASTER PATTERN POSITIVE FILMS TO DIMENSIONS SHOWN
5. MATERIAL: FILM .006/.008 THK PER L-F-340, TYPE IB, CL 2, STYLE IA
6. ● .035/.045 DIA PUNCH
7. BROKEN LINES DENOTE SLEEVING
8. ⊗ .047/.057 DIA PUNCH

QTY REQD	PART OR IDENTIFYING NO.	NOMENCLATURE OR DESCRIPTION	FIND NO.
LIST OF MATERIALS			

1003150		UNLESS OTHERWISE SPECIFIED DIMENSIONS ARE IN INCHES TOLERANCES ON FRACTIONS ± DECIMALS ± ANGLES ± DO NOT SCALE THIS DRAWING	MIT INSTRUMENTATION LAB CAMBRIDGE, MASS. DWG. NO. CONTRACT	MANNED SPACECRAFT CENTER HOUSTON, TEXAS	
NEXT ASSY	USED ON	MATERIAL SEE NOTE 5	DRAWN DATE 63 CHECKED C.P. Kingsbury 16 Oct 63 APPROVAL APPROVAL	INSULATOR PHOTOGRAPHIC MASTER CONTROL MODULE	
APPLICATION		HEAT TREATMENT	NASA APPROVAL	CODE IDENT NO.	SIZE D · NASA DRAWING NO. 1004218
		FINAL FINISH	MIT APPROVAL W Kupfer 17 Oct 63	SCALE 4/1	WT · SHEET 1 OF 1

INCHES
0 1 2
PHOTOGRAPHIC SCALE ONLY

NOTICE — WHEN GOVERNMENT DRAWINGS, SPECIFICATIONS, OR OTHER DATA ARE USED FOR ANY PURPOSE OTHER THAN IN CONNECTION WITH A DEFINITELY RELATED GOVERNMENT PROCUREMENT OPERATION, THE UNITED STATES GOVERNMENT THEREBY INCURS NO RESPONSIBILITY NOR ANY OBLIGATION WHATSOEVER; AND THE FACT THAT THE GOVERNMENT MAY HAVE FORMULATED, FURNISHED, OR IN ANY WAY SUPPLIED THE SAID DRAWINGS, SPECIFICATIONS OR OTHER DATA IS NOT TO BE REGARDED BY IMPLICATION OR OTHERWISE AS IN ANY MANNER LICENSING THE HOLDER OR ANY OTHER PERSON OR CORPORATION, OR CONVEYING ANY RIGHTS OR PERMISSION TO MANUFACTURE, USE, OR SELL ANY PATENTED INVENTION THAT MAY IN ANY WAY BE RELATED THERETO.

REVISIONS			
SYM	DESCRIPTION	DATE	APPROVAL
Ⓑ B	REPLACES REV A WITH CHANGE PER TDRR 04018	10-11-63	WK.
C	REVISED PER TDRR 04498	11-6-63	WK

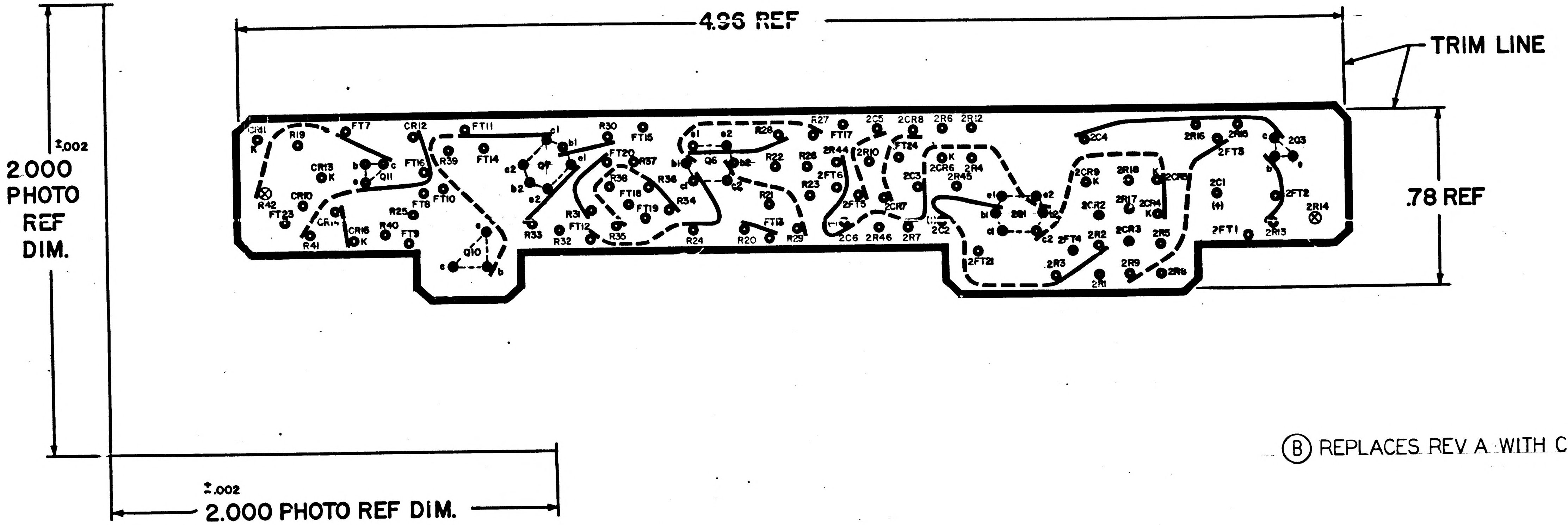
4.96 REF
TRIM LINE
.78 REF
±.002
2.000 PHOTO REF DIM.
±.002
2.000 PHOTO REF DIM.
CR11
K
R19
FT7
CR12
FT11
c1
b1
R30
FT15
e1
e2
R28
R27
FT17
2C5
2CR8
2R6
2R12
2C4
2R16
2R15
c
2Q3
b
e
2FT3
CR13
K
b
c
Q11
e
FT16
R39
FT14
e2
Q7
b2
e2
FT20
R37
R38
R36
FT18
FT19
R34
b1
Q6
b2
c1
c2
R22
R26
R23
R21
2R44
2R10
FT24
2C3
2CR6
K
2R4
2R45
2FT6
2FT5
2CR7
e1
e2
b1
2Q1
b2
c1
c2
2CR9
K
2R18
K
2CR5
2CR2
2R17
2CR4
K
2C1
(+)
2FT2
2R14
R42
CR10
FT23
CR14
R41
CR16
K
R40
FT9
R25
FT8
FT10
Q10
e
c
b
R33
R31
FT12
R32
R35
R24
R20
FT13
R29
2C6
2R46
2R7
2C2
2FT4
2R2
2CR3
2R5
2FT1
2R13
2FT21
2R3
2R1
2R9
2R8

Ⓑ REPLACES REV A WITH CHANGE

1004218 | C

NOTES

1. INTERPRET DRAWING IN ACCORDANCE WITH STANDARDS PRESCRIBED BY MIL-D-70327
2. ORIGINAL OF THIS DRAWING OR REPRODUCTION MADE BY PROCESS OR METHOD SHALL INSURE DIMENSIONAL STABILITY. DIMENSIONAL STABILITY SHALL NOT EXCEED .001 INCH PER INCH
3. CUT TO WITHIN .010 OF TRIM LINE
4. MAKE MASTER PATTERN POSITIVE FILMS TO DIMENSIONS SHOWN
5. MATERIAL: FILM .006/.008 THK PER L-F-340, TYPE IB, CL 2, STYLE IA
6. ● .035/.045 DIA PUNCH
7. BROKEN LINES DENOTE SLEEVING
8. ⊗ .047/.057 DIA PUNCH

MASTER

QTY REQD	PART OR IDENTIFYING NO.	NOMENCLATURE OR DESCRIPTION	FIND NO.
LIST OF MATERIALS			

1003150	
NEXT ASSY	USED ON
APPLICATION	

UNLESS OTHERWISE SPECIFIED
DIMENSIONS ARE IN INCHES
TOLERANCES ON
FRACTIONS ± DECIMALS ± ANGLES ±
DO NOT SCALE THIS DRAWING
MATERIAL SEE NOTE 5
HEAT TREATMENT
FINAL FINISH

MIT
INSTRUMENTATION LAB
CAMBRIDGE, MASS.
DWG. NO. CONTRACT
DRAWN [illegible] DATE [illegible]/63
CHECKED E.P. Kingsbury 11-6-63
APPROVAL
APPROVAL
NASA APPROVAL
MIT APPROVAL W Kupfer 11-7-63

MANNED SPACECRAFT CENTER
HOUSTON, TEXAS

INSULATOR PHOTOGRAPHIC MASTER

CONTROL MODULE

CODE IDENT NO.
SIZE D
NASA DRAWING NO. 1004218
SCALE 4/1
WT
SHEET 1 OF 1

INCHES
0 1 2
PHOTOGRAPHIC SCALE ONLY

NOTICE — WHEN GOVERNMENT DRAWINGS, SPECIFICATIONS, OR OTHER DATA ARE USED FOR ANY PURPOSE OTHER THAN IN CONNECTION WITH A DEFINITELY RELATED GOVERNMENT PROCUREMENT OPERATION, THE UNITED STATES GOVERNMENT THEREBY INCURS NO RESPONSIBILITY NOR ANY OBLIGATION WHATSOEVER, AND THE FACT THAT THE GOVERNMENT MAY HAVE FORMULATED, FURNISHED, OR IN ANY WAY SUPPLIED THE SAID DRAWINGS, SPECIFICATIONS, OR OTHER DATA IS NOT TO BE REGARDED BY IMPLICATION OR OTHERWISE AS IN ANY MANNER LICENSING THE HOLDER OR ANY OTHER PERSON OR CORPORATION, OR CONVEYING ANY RIGHTS OR PERMISSION TO MANUFACTURE, USE, OR SELL ANY PATENTED INVENTION THAT MAY IN ANY WAY BE RELATED THERETO.

REVISIONS

SYM	DESCRIPTION	DATE	APPROVAL
B	REPLACES REV A WITH CHANGE PER TDRR 04018		WK
C	REVISED PER TDRR 04498	11-6-63	WK
D	REVISED PER TDRR 13667 DR R. [illegible] CHK [illegible] RTM	10/29/64	HWC

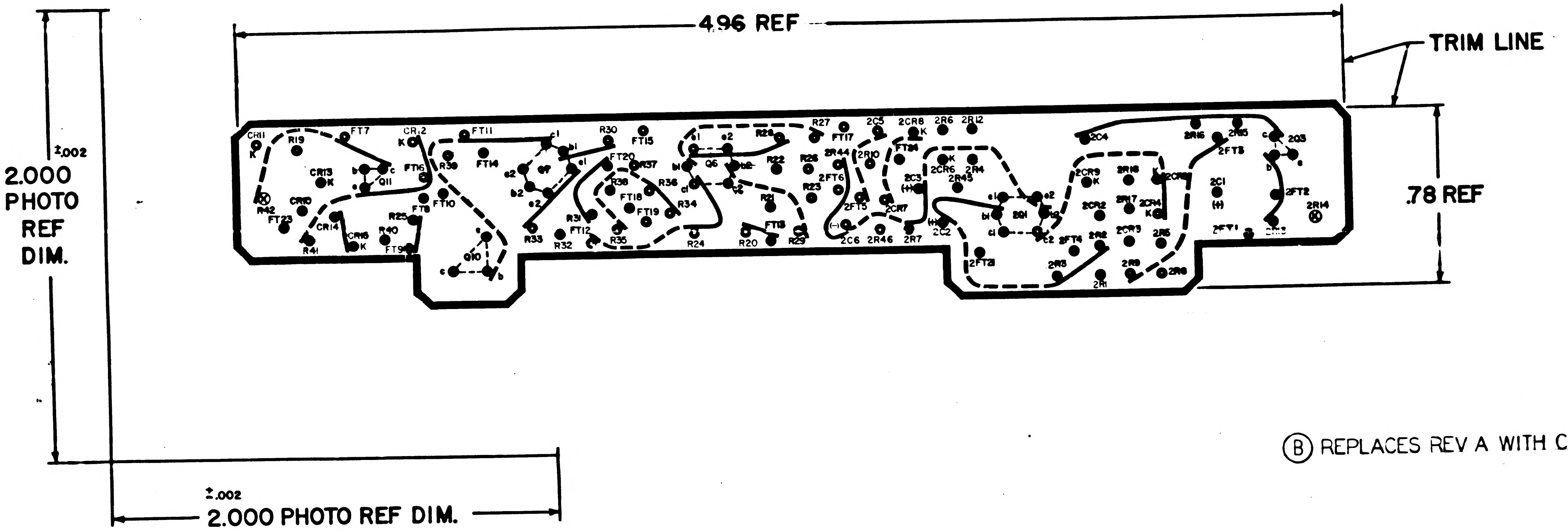
4.96 REF
TRIM LINE
.78 REF
2.000 PHOTO REF DIM.
±.002
2.000 PHOTO REF DIM.
±.002
CR11
K
R19
FT7
CR12
K
FT11
c1
R30
FT15
e1
e2
R28
R27
FT17
2C5
2CR8
K
2R6
2R12
2C4
2R16
2R15
c
2Q3
CR13
K
b
c
Q11
e
FT16
R39
FT14
e2
Q7
b1
e1
b2
e2
FT20
R37
R38
R36
FT18
FT19
R34
b1
Q6
b2
c1
c2
R22
R26
2R44
2R10
FT24
2C3
(+)
2CR6
K
2R4
2R45
2FT3
b
e
2FT2
2R14
R42
FT23
CR10
CR14
CR16
K
R41
R40
FT9
R25
FT8
FT10
Q10
c
b
e
R33
R32
FT12
R31
R35
R24
R20
FT13
R29
R21
R23
2FT6
2FT5
(−)
2C6
2R46
2CR7
2R7
(+)
2C2
e1
e2
b1
2Q1
c1
c2
2CR9
K
2R18
2CR5
2R17
2CR4
K
2C1
(+)
2CR2
2CR3
2R5
2FT1
2R13
2FT4
2R2
2R3
2R9
2R8
2R1
2FT21

Ⓑ REPLACES REV A WITH CHANGE

NOTES
1. INTERPRET DRAWING IN ACCORDANCE WITH STANDARDS PRESCRIBED BY MIL-D-70327
2. ORIGINAL OF THIS DRAWING OR REPRODUCTION MADE BY PROCESS OR METHOD SHALL INSURE DIMENSIONAL STABILITY. DIMENSIONAL STABILITY SHALL NOT EXCEED .001 INCH PER INCH
3. CUT TO WITHIN .010 OF TRIM LINE
4. MAKE MASTER PATTERN POSITIVE FILMS TO DIMENSIONS SHOWN
5. MATERIAL: FILM .006/.008 THK PER L-F-340, TYPE IB, CL 2, STYLE IA
6. ● .035/.045 DIA PUNCH
7. BROKEN LINES DENOTE SLEEVING
8. ⊗ .047/.057 DIA PUNCH

QTY REQD	PART OR IDENTIFYING NO.	NOMENCLATURE OR DESCRIPTION	FIND NO.

LIST OF MATERIALS

NEXT ASSY	USED ON
1003150	

APPLICATION

UNLESS OTHERWISE SPECIFIED
DIMENSIONS ARE IN INCHES
TOLERANCES ON
FRACTIONS ± DECIMALS ± ANGLES ±
DO NOT SCALE THIS DRAWING
MATERIAL SEE NOTE 5
HEAT TREATMENT
FINAL FINISH

M I T
INSTRUMENTATION LAB
CAMBRIDGE MASS
DWG. NO. CONTRACT
DRAWN [illegible] DATE [illegible]/63
CHECKED C. P. [illegible]
APPROVAL
APPROVAL [illegible]
NASA APPROVAL [illegible]
MIT APPROVAL W Kupfer 1-70-63

MANNED SPACECRAFT CENTER
HOUSTON, TEXAS

INSULATOR PHOTOGRAPHIC MASTER
CONTROL MODULE

CODE IDENT NO.
SIZE D
NASA DRAWING NO. 1004218
SCALE 4/1
WT
SHEET 1 OF 1

NOTICE — WHEN GOVERNMENT DRAWINGS, SPECIFICATIONS, OR OTHER DATA ARE USED FOR ANY PURPOSE OTHER THAN IN CONNECTION WITH A DEFINITELY RELATED GOVERNMENT PROCUREMENT OPERATION, THE UNITED STATES GOVERNMENT THEREBY INCURS NO RESPONSIBILITY NOR ANY OBLIGATION WHATSOEVER; AND THE FACT THAT THE GOVERNMENT MAY HAVE FORMULATED, FURNISHED, OR IN ANY WAY SUPPLIED THE SAID DRAWINGS, SPECIFICATIONS OR OTHER DATA IS NOT TO BE REGARDED BY IMPLICATION OR OTHERWISE AS IN ANY MANNER [illegible] OR CONVEY[illegible] ANY RIGHTS OR PERMISSION TO MANUFACTURE, USE, OR SELL ANY PATENTED INVENTION THAT MAY IN ANY WAY BE RELATED THERETO.

REVISIONS 02545

SYM	DESCRIPTION	DATE	APPROVAL

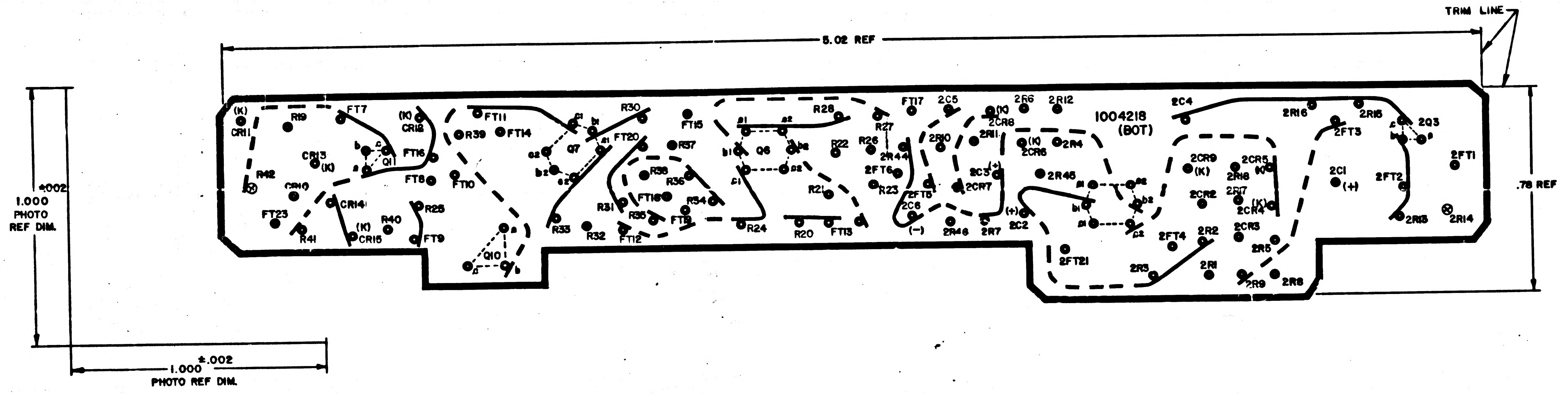
TRIM LINE
5.02 REF
.78 REF
1.000 ±.002 PHOTO REF DIM.
1.000 ±.002 PHOTO REF DIM.
1004218 (BOT)
(K) CR11
R19
FT7
(K) CR12
FT11
R39
FT14
R30
FT15
R28
FT17
2C5
(K) 2CR8
2R6
2R12
2C4
2R16
2R15
2Q3
CR13 (K)
Q11
FT16
R42
CR10
CR14
FT8
FT10
Q7
FT20
R37
Q6
R22
R26
R27
2R44
2FT6
R23
R38
R36
FT18
R34
R31
R35
FT19
R21
FT23
R41
(K) CR15
R40
R25
FT9
Q10
R33
R32
FT12
R24
R20
FT13
2FT5
2C6
(−)
2R46
2R7
2R10
2R11
2C3 (+)
2CR7
(K) 2CR6
2R4
2R45
(+) 2C2
2FT21
2CR9 (K)
2CR2
2R18
2R17
2CR5 (K)
(K) 2CR4
2CR3
2FT4
2R2
2R3
2R1
2R5
2R9
2R8
2FT3
2C1 (+)
2FT2
2FT1
2R13
2R14
a b c
a1 a2 b1 b2 c1 c2

NOTES:

1. INTERPRET DRAWING IN ACCORDANCE WITH STANDARDS PRESCRIBED BY MIL-D-70327
2. ORIGINAL OF THIS DRAWING OR REPRODUCTION MADE BY PROCESS OR METHOD SHALL INSURE DIMENSIONAL STABILITY. DIMENSIONAL STABILITY SHALL NOT EXCEED .001 INCH PER INCH
3. CUT TO WITHIN .010 OF TRIM LINE
4. MAKE MASTER PATTERN POSITIVE FILMS TO DIMENSIONS SHOWN
5. MATERIAL: FILM .006/.008 THK PER L-F-340, TYPE IB, CL 2, STYLE IA
6. ● .055/.045 DIA PUNCH.
7. BROKEN LINES DENOTE SLEEVING
8. ⊗ .067/.057 DIA PUNCH

QTY REQD	PART OR IDENTIFYING NO.	NOMENCLATURE OR DESCRIPTION	FIND NO.

LIST OF MATERIALS

1003150	
NEXT ASSY	USED ON

APPLICATION

UNLESS OTHERWISE SPECIFIED
DIMENSIONS ARE IN INCHES
TOLERANCES ON
FRACTIONS ± — DECIMALS ± — ANGLES ± —
DO NOT SCALE THIS DRAWING
MATERIAL
SEE NOTE 5
HEAT TREATMENT —
FINAL FINISH —

MIT
INSTRUMENTATION LAB
CAMBRIDGE, MASS.
DWG. NO. CONTRACT
DRAWN DATE
CHECKED 13 Aug 63
APPROVAL 13 Aug 63
APPROVAL
NASA APPROVAL Jack
MIT APPROVAL 14 Aug 63

MANNED SPACECRAFT CENTER
HOUSTON, TEXAS

INSULATOR
PHOTOGRAPHIC MASTER
CONTROL MODULE

CODE IDENT NO.
SIZE D
NASA DRAWING NO. 1004218
SCALE 5/1
WT
SHEET 1 OF 1

MASTER

INCHES
0 1 2
PHOTOGRAPHIC SCALE ONLY

1004218

4 3 2

1004219

SYM	DESCRIPTION	DATE	APPROVAL
	REVISIONS 02545		
A	REPLACED WITH CHANGE PER TDRR 04018	10-12-63	WK

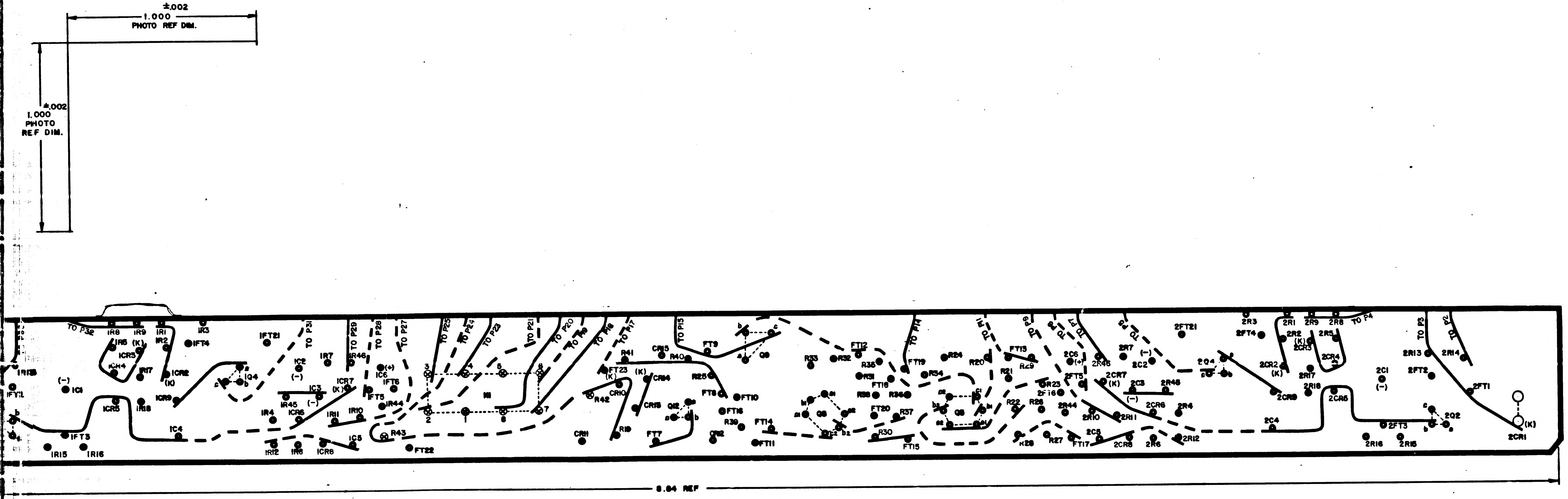
±.002
1.000
PHOTO REF DIM.
±.002
1.000
PHOTO
REF DIM.
TO P32
TO P31
TO P29
TO P28
TO P27
TO P25
TO P24
TO P23
TO P21
TO P20
TO P19
TO P18
TO P17
TO P15
TO P14
TO P11
TO P9
TO P7
TO P6
TO P4
TO P3
TO P2
8.84 REF

Ⓐ REPLACED WITH CHANGE BY REV B

INACTIVATE

TH STANDARDS PRESCRIBED BY MIL-D-70327
ION MADE BY PROCESS OR METHOD SHALL
AL STABILITY SHALL NOT EXCEED .001 INCH

TO DIMENSIONS SHOWN
SiO$_2$, TYPE IB, CL2, STYLE IA

D
C
B
A

1004219

QTY REQD	PART OR IDENTIFYING NO.	NOMENCLATURE OR DESCRIPTION	FIND NO.

LIST OF MATERIALS

1003150		UNLESS OTHERWISE SPECIFIED DIMENSIONS ARE IN INCHES TOLERANCES ON FRACTIONS ± DECIMALS ± ANGLES ±	MIT INSTRUMENTATION LAB CAMBRIDGE, MASS
NEXT ASSY	USED ON	DO NOT SCALE THIS DRAWING	DRAWN DATE
APPLICATION		MATERIAL SEE NOTE 5	CHECKED 13 Aug 63
		HEAT TREATMENT	APPROVAL 13 Aug 63
		FINAL FINISH	APPROVAL
			NASA APPROVAL
			MIT APPROVAL

MANNED SPACECRAFT CENTER
HOUSTON, TEXAS

INSULATOR
PHOTOGRAPHIC MASTER
CONTROL MODULE

CODE IDENT NO.	SIZE	NASA DRAWING NO.
	J	1004219
SCALE 5/1	WT	SHEET 1 OF 1

1004219

4 3 2

INCHES
PHOTOGRAPHIC SCALE ONLY

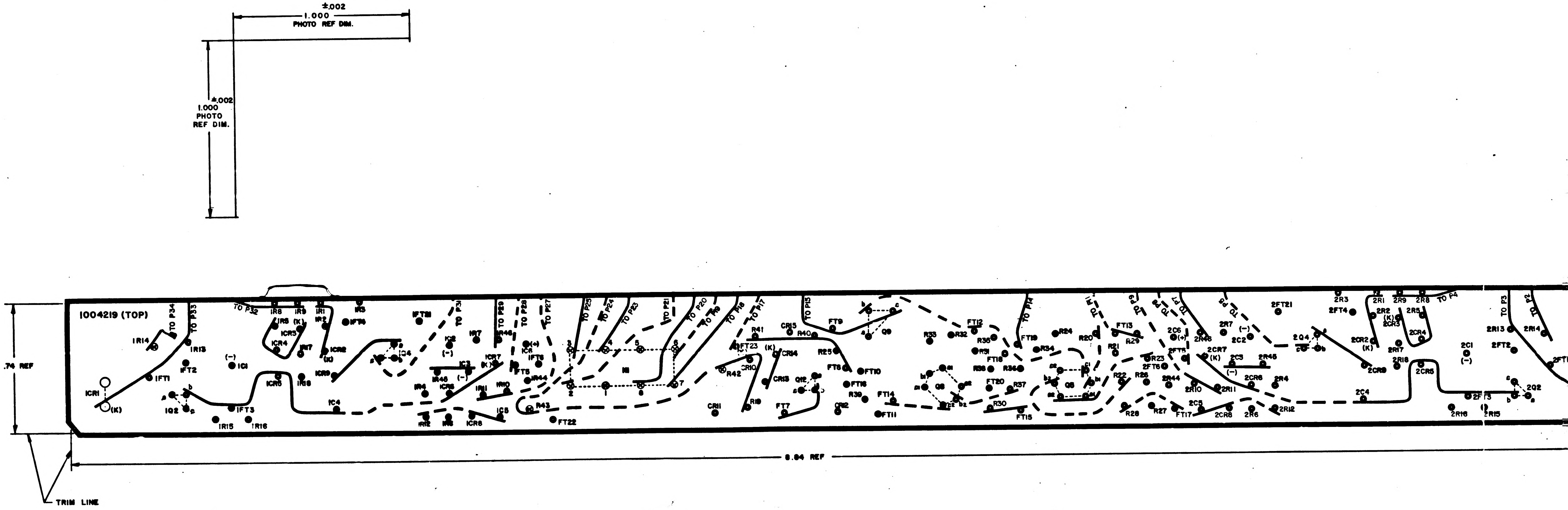
±.002
1.000
PHOTO REF DIM.
±.002
1.000
PHOTO
REF DIM.
1004219 (TOP)
.74 REF
8.84 REF
TRIM LINE
TO P34
TO P33
TO P32
TO P31
TO P29
TO P28
TO P27
TO P25
TO P24
TO P23
TO P21
TO P20
TO P19
TO P18
TO P17
TO P15
TO P14
TO P11
TO P9
TO P8
TO P7
TO P5
TO P4
TO P3
TO P2
1CR1
(K)
1R14
1R13
1FT1
1FT2
1Q2
1FT3
1R15
1R16
1C1
(−)
1R8
1R9
1R1
1R2
1R6
1CR3
1CR4
1R17
1CR2
1CR5
1R18
1CR9
1C4
1R3
1FT19
1FT21
1Q4
1C2
1R7
1R46
1CR7
1C3
1R45
1R4
1CR6
1R11
1R10
1R12
1R5
1CR8
1C5
1C6
(+)
1FT6
1FT5
1R44
R43
FT22
K1
1
2
3
4
5
6
7
8
R41
CR15
R40
FT23
CR14
CR10
R42
CR13
Q12
R19
CR11
FT7
R25
FT8
FT10
FT16
R39
CR12
FT14
FT11
FT9
Q9
R33
R32
FT12
R35
R31
FT18
R38
R36
FT20
R37
R30
FT15
Q8
FT19
R34
R24
Q5
R20
FT13
R29
R21
R22
R28
R26
R27
R23
2FT6
2FT5
2C6
2R46
2R44
2R10
2R11
FT17
2C5
2CR8
2R6
2R7
2C2
2CR7
2C3
2R45
2CR6
2R4
2R12
2FT21
2Q4
2CR9
2R3
2FT4
2R1
2R9
2R8
2R2
2R5
2CR3
2CR4
2CR2
2R17
2R18
2CR5
2C4
2C1
2FT3
2R16
2R15
2Q2
2R13
2R14
2FT2

NOTES:
1. INTERPRET DRAWING IN ACCORDANCE WITH STANDARDS PRESCRIBED BY MIL-D-70327
2. ORIGINAL OF THIS DRAWING OR REPRODUCTION MADE BY PROCESS OR METHOD SHALL INSURE DIMENSIONAL STABILITY. DIMENSIONAL STABILITY SHALL NOT EXCEED .001 INCH PER INCH
3. CUT TO WITHIN .010 OF TRIM LINE
4. MAKE MASTER PATTERN POSITIVE FILMS TO DIMENSIONS SHOWN
5. MATERIAL: FILM .006 /.008 THK PER L-F-340, TYPE IB, CL2, STYLE IA
6. BROKEN LINES DENOTE SLEEVING
7. ● .035 /.045 DIA PUNCH
8. ◉ .047/ .057 DIA PUNCH
9. ○ .057/ 067 DIA PUNCH

Ⓐ REPLACED WITH CHA

NACTIVATE

1003150	
NEXT ASSY	USED ON
APPLICATION	

UNLESS OTHERWISE SPECIFIED
DIMENSIONS ARE IN INCHES
TOLERANCES ON
FRACTIONS ± — DECIMALS ± —
DO NOT SCALE THIS DRAWING
MATERIAL
SEE NOTE 5
HEAT TREATMENT
—
FINAL FINISH
—

1004219

INCHES
PHOTOGRAPHIC SCALE ONLY

NOTICE — WHEN GOVERNMENT DRAWINGS, SPECIFICATIONS, OR OTHER DATA ARE USED FOR ANY PURPOSE OTHER THAN IN CONNECTION WITH A DEFINITELY RELATED GOVERNMENT PROCUREMENT OPERATION, THE UNITED STATES GOVERNMENT THEREBY INCURS NO RESPONSIBILITY NOR ANY OBLIGATION WHATSOEVER; AND THE FACT THAT THE GOVERNMENT MAY HAVE FORMULATED, FURNISHED, OR IN ANY WAY SUPPLIED THE SAID DRAWINGS, SPECIFICATIONS OR OTHER DATA IS NOT TO BE REGARDED BY IMPLICATION OR OTHERWISE AS IN ANY MANNER LICENSING THE HOLDER OR ANY OTHER PERSON OR CORPORATION, OR CONVEYING ANY RIGHTS OR PERMISSION TO MANUFACTURE, USE, OR SELL ANY PATENTED INVENTION THAT MAY IN ANY WAY BE RELATED THERETO.

REVISIONS

SYM	DESCRIPTION	DATE	APPROVAL
B	REPLACES REV A WITH CHANGE PER TDRR 04018	10-17-63	WK.

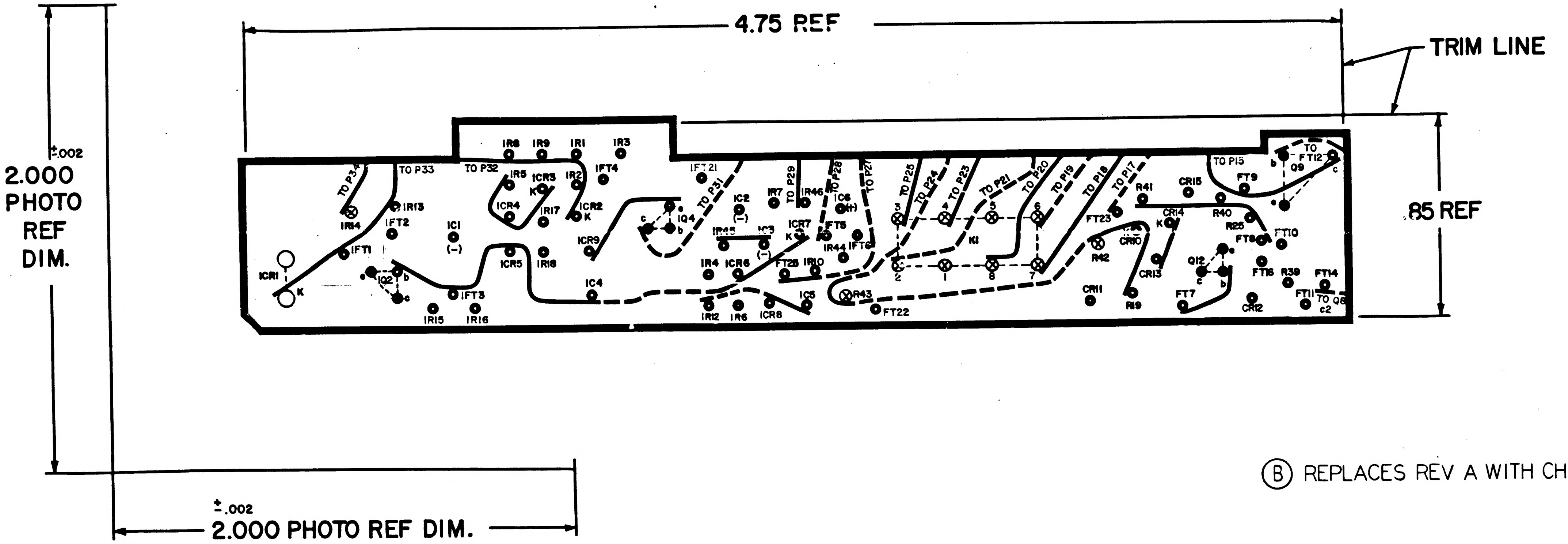
4.75 REF
TRIM LINE
.85 REF
2.000 PHOTO REF DIM.
±.002
2.000 PHOTO REF DIM.
±.002
TO P34
TO P33
TO P32
IR8
IR9
IR1
IR3
IR5
ICR3
K
IR2
IFT4
IFT21
TO P31
IC2
(−)
IR7
TO P29
IR46
TO P28
IC6
(+)
TO P27
TO P25
TO P24
TO P23
TO P21
TO P20
TO P19
TO P18
TO P17
R41
CR15
TO P15
TO FT12
b
Q9
c
FT9
IR13
IR14
IFT2
IC1
(−)
ICR4
IR17
ICR2
K
c
e
IQ4
b
IR45
IC3
(−)
ICR7
K
FT5
IR44
IFT6
3
4
5
6
K1
FT23
CR14
K
CR10
R40
R25
FT8
FT10
ICR1
K
IFT1
e
IQ2
b
c
ICR5
IR18
ICR9
IR4
ICR6
FT25
IR10
2
1
8
7
R42
CR13
Q12
e
c
b
FT16
R39
FT14
IFT3
IR15
IR16
IC4
IR12
IR6
ICR8
IC5
R43
FT22
CR11
R19
FT7
CR12
FT11
TO Q8 c2

Ⓑ REPLACES REV A WITH CHANGE

NOTES

1. INTERPRET DRAWING IN ACCORDANCE WITH STANDARDS PRESCRIBED BY MIL-D-70327
2. ORIGINAL OF THIS DRAWING OR REPRODUCTION MADE BY PROCESS OR METHOD SHALL INSURE DIMENSIONAL STABILITY. DIMENSIONAL STABILITY SHALL NOT EXCEED .001 INCH PER INCH
3. CUT TO WITHIN .010 OF TRIM LINE
4. MAKE MASTER PATTERN POSITIVE FILMS TO DIMENSIONS SHOWN
5. MATERIAL: FILM .006/.008 THK PER L-F-340, TYPE IB, CL 2, STYLE IA
6. ● .035/.045 DIA PUNCH
7. BROKEN LINES DENOTE SLEEVING
8. ⊗ .047/.057 DIA PUNCH
9. ○ .057/.067 DIA PUNCH

QTY REQD	PART OR IDENTIFYING NO.	NOMENCLATURE OR DESCRIPTION	FIND NO.

LIST OF MATERIALS

NEXT ASSY	USED ON
1003150	

APPLICATION

UNLESS OTHERWISE SPECIFIED DIMENSIONS ARE IN INCHES
TOLERANCES ON
FRACTIONS ± DECIMALS ± ANGLES ±
DO NOT SCALE THIS DRAWING
MATERIAL
SEE NOTE 5
HEAT TREATMENT
FINAL FINISH

MIT
INSTRUMENTATION LAB
CAMBRIDGE, MASS.
DWG. NO.
CONTRACT
DRAWN
DATE
CHECKED
APPROVAL
APPROVAL
NASA APPROVAL
MIT APPROVAL

MANNED SPACECRAFT CENTER
HOUSTON, TEXAS

INSULATOR PHOTOGRAPHIC MASTER
CONTROL MODULE

CODE IDENT NO.
SIZE D
NASA DRAWING NO. 1004219
SCALE 4/1
WT
SHEET 1 OF 1

INCHES
0 1 2
PHOTOGRAPHIC SCALE ONLY

NOTICE — WHEN GOVERNMENT DRAWINGS, SPECIFICATIONS, OR OTHER DATA ARE USED FOR ANY PURPOSE OTHER THAN IN CONNECTION WITH A DEFINITELY RELATED GOVERNMENT PROCUREMENT OPERATION, THE UNITED STATES GOVERNMENT THEREBY INCURS NO RESPONSIBILITY NOR ANY OBLIGATION WHATSOEVER; AND THE FACT THAT THE GOVERNMENT MAY HAVE FORMULATED, FURNISHED, OR IN ANY WAY SUPPLIED THE SAID DRAWINGS, SPECIFICATIONS OR OTHER DATA IS NOT TO BE REGARDED BY IMPLICATION OR OTHERWISE AS IN ANY MANNER LICENSING THE HOLDER OR ANY OTHER PERSON OR CORPORATION, OR CONVEYING ANY RIGHTS OR PERMISSION TO MANUFACTURE, USE, OR SELL ANY PATENTED INVENTION THAT MAY IN ANY WAY BE RELATED THERETO.

REVISIONS

SYM	DESCRIPTION	DATE	APPROVAL
B	REPLACES REV A WITH CHANGE PER TDRR 04018	10-17-63	WK.
C	REVISED PER TDRR 04496	11-6-63	PPK WK.

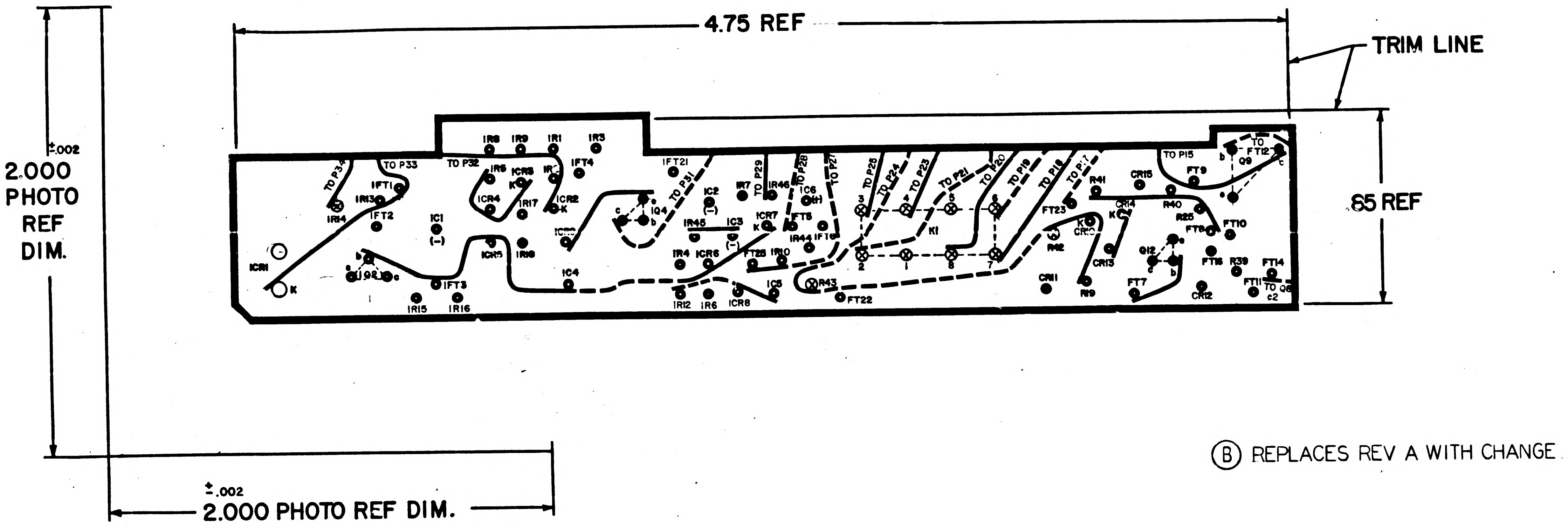
4.75 REF
TRIM LINE
.85 REF
±.002
2.000 PHOTO REF DIM.
±.002
2.000 PHOTO REF DIM.
TO P34
TO P33
TO P32
IR8
IR9
IR1
IR3
IFT4
IR5
ICR3
IR2
IFT1
IR13
IR14
IFT2
IC1
(–)
ICR4
IR17
ICR2
K
ICR1
K
b
e
IQ2
c
ICR5
IR18
ICR9
IFT3
IR15
IR16
IC4
IFT21
TO P31
c
e
IQ4
b
IC2
(–)
IR7
TO P29
IR46
TO P28
IC6
(+)
TO P27
IR45
IC3
(–)
ICR7
K
IFT5
IR4
ICR6
FT25
IR10
IR44
IFT6
IR12
IR6
ICR8
IC5
R43
FT22
TO P25
TO P24
TO P23
TO P21
TO P20
TO P19
TO P18
TO P17
3
4
5
6
2
1
8
7
K1
FT23
R41
CR15
CR14
K
R40
R25
K
CR10
R42
CR13
CR11
R19
TO P15
FT9
b
TO FT12
Q9
c
FT10
FT8
Q12
e
c
b
FT16
R39
FT14
FT7
CR12
FT11
TO Q8
c2

Ⓑ REPLACES REV A WITH CHANGE

NOTES

1. INTERPRET DRAWING IN ACCORDANCE WITH STANDARDS PRESCRIBED BY MIL-D-70327
2. ORIGINAL OF THIS DRAWING OR REPRODUCTION MADE BY PROCESS OR METHOD SHALL INSURE DIMENSIONAL STABILITY. DIMENSIONAL STABILITY SHALL NOT EXCEED .001 INCH PER INCH
3. CUT TO WITHIN .010 OF TRIM LINE
4. MAKE MASTER PATTERN POSITIVE FILMS TO DIMENSIONS SHOWN
5. MATERIAL: FILM .006/.008 THK PER L-F-340, TYPE IB, CL 2, STYLE IA
6. ● .035/.045 DIA PUNCH
7. BROKEN LINES DENOTE SLEEVING
8. ⊗ .047/.057 DIA PUNCH
9. ○ .057/.067 DIA PUNCH

QTY REQD	PART OR IDENTIFYING NO.	NOMENCLATURE OR DESCRIPTION	FIND NO.

LIST OF MATERIALS

NEXT ASSY	USED ON
1003150	

APPLICATION

UNLESS OTHERWISE SPECIFIED DIMENSIONS ARE IN INCHES
TOLERANCES ON
FRACTIONS ± DECIMALS ± ANGLES ±
DO NOT SCALE THIS DRAWING
MATERIAL SEE NOTE 5
HEAT TREATMENT
FINAL FINISH

MIT INSTRUMENTATION LAB
CAMBRIDGE, MASS.
DWG. NO. CONTRACT
DRAWN Al Sullivan DATE
CHECKED
APPROVAL
APPROVAL
NASA APPROVAL
MIT APPROVAL WKupfer 1 Nov 63

MANNED SPACECRAFT CENTER.
HOUSTON, TEXAS

INSULATOR PHOTOGRAPHIC MASTER
CONTROL MODULE

CODE IDENT NO.
SIZE D
NASA DRAWING NO. 1004219
SCALE 4/1
WT
SHEET 1 OF 1

1004219 C

INCHES
0 1 2
PHOTOGRAPHIC SCALE ONLY

NOTICE — WHEN GOVERNMENT DRAWINGS, SPECIFICATIONS, OR OTHER DATA ARE USED FOR ANY PURPOSE OTHER THAN IN CONNECTION WITH A DEFINITELY RELATED GOVERNMENT PROCUREMENT OPERATION, THE UNITED STATES GOVERNMENT THEREBY INCURS NO RESPONSIBILITY NOR ANY OBLIGATION WHATSOEVER; AND THE FACT THAT THE GOVERNMENT MAY HAVE FORMULATED, FURNISHED, OR IN ANY WAY SUPPLIED THE SAID DRAWINGS, SPECIFICATIONS OR OTHER DATA IS NOT TO BE REGARDED BY IMPLICATION OR OTHERWISE AS IN ANY MANNER LICENSING THE HOLDER OR ANY OTHER PERSON OR CORPORATION, OR CONVEYING ANY RIGHTS OR PERMISSION TO MANUFACTURE, USE, OR SELL ANY PATENTED INVENTION THAT MAY IN ANY WAY BE RELATED THERETO.

REVISIONS

SYM	DESCRIPTION	DATE	APPROVAL
B	REPLACES REV A WITH CHANGE PER TDRR 04018	10-17-63	WK
C	REVISED PER TDRR 04496	11-6-63	WK
D	REVISED PER TDRR 07264 DR CHK APPD	3/22/64	HC

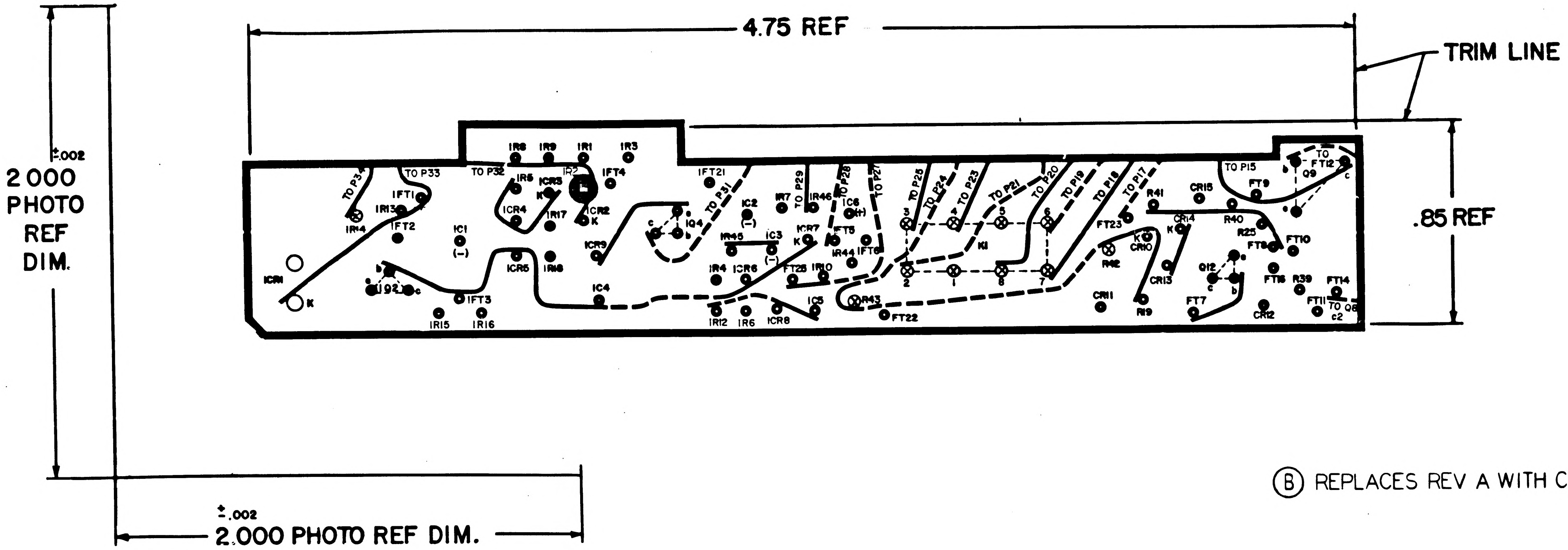
4.75 REF
TRIM LINE
.85 REF
±.002
2.000 PHOTO REF DIM.
±.002
2.000 PHOTO REF DIM.
IR8
IR9
IR1
IR3
TO P34
TO P33
TO P32
IR5
ICR3
IR2
IFT4
IFT21
TO P31
IC2
(−)
IR7
TO P29
IR46
TO P28
IC6
(+)
TO P27
TO P25
TO P24
TO P23
TO P21
TO P20
TO P19
TO P18
TO P17
R41
CR15
TO P15
FT9
TO FT12
Q9
b
c
e
IFT1
IR13
IR14
IFT2
IC1
(−)
ICR4
IR17
ICR2
K
c
e
IQ4
b
IR45
IC3
(−)
ICR7
K
IFT5
IR44
IFT6
3
4
5
6
K1
2
1
8
7
FT23
CR14
K
CR10
R40
R25
FT8
FT10
ICR1
K
b
e
IQ2
c
IFT3
IR15
IR16
ICR5
IR18
ICR9
IC4
IR4
ICR6
FT25
IR10
IR12
IR6
ICR8
IC5
R43
FT22
R42
CR11
R19
CR13
Q12
e
c
b
FT7
FT16
R39
CR12
FT14
FT11
TO Q8
c2

Ⓑ REPLACES REV A WITH CHANGE

NOTES
1. INTERPRET DRAWING IN ACCORDANCE WITH STANDARDS PRESCRIBED BY MIL-D-70327
2. ORIGINAL OF THIS DRAWING OR REPRODUCTION MADE BY PROCESS OR METHOD SHALL INSURE DIMENSIONAL STABILITY. DIMENSIONAL STABILITY SHALL NOT EXCEED .001 INCH PER INCH
3. CUT TO WITHIN .010 OF TRIM LINE
4. MAKE MASTER PATTERN POSITIVE FILMS TO DIMENSIONS SHOWN
5. MATERIAL: FILM .006/.008 THK PER L-F-340, TYPE IB, CL 2, STYLE IA
6. ● .035/.045 DIA PUNCH
7. BROKEN LINES DENOTE SLEEVING
8. ⊗ .047/.057 DIA PUNCH
9. ○ .057/.067 DIA PUNCH
10. ⊖ .111/.121 DIA PUNCH

QTY REQD	PART OR IDENTIFYING NO.	NOMENCLATURE OR DESCRIPTION	FIND NO.

LIST OF MATERIALS

NEXT ASSY	USED ON
1003150	

APPLICATION

UNLESS OTHERWISE SPECIFIED DIMENSIONS ARE IN INCHES
TOLERANCES ON
FRACTIONS ± DECIMALS ± ANGLES ±
DO NOT SCALE THIS DRAWING
MATERIAL SEE NOTE 5
HEAT TREATMENT
FINAL FINISH

MIT INSTRUMENTATION LAB
CAMBRIDGE, MASS
DWG. NO. CONTRACT
DRAWN Al Sullivan DATE
CHECKED
APPROVAL
APPROVAL
NASA APPROVAL
MIT APPROVAL W Kupfer

MANNED SPACECRAFT CENTER.
HOUSTON, TEXAS

INSULATOR PHOTOGRAPHIC MASTER
CONTROL MODULE

CODE IDENT NO. —— SIZE D NASA DRAWING NO. 1004219
SCALE 4/1 WT SHEET 1 OF 1

1004219

REVISIONS 02545

SYM	DESCRIPTION	DATE	APPROVAL

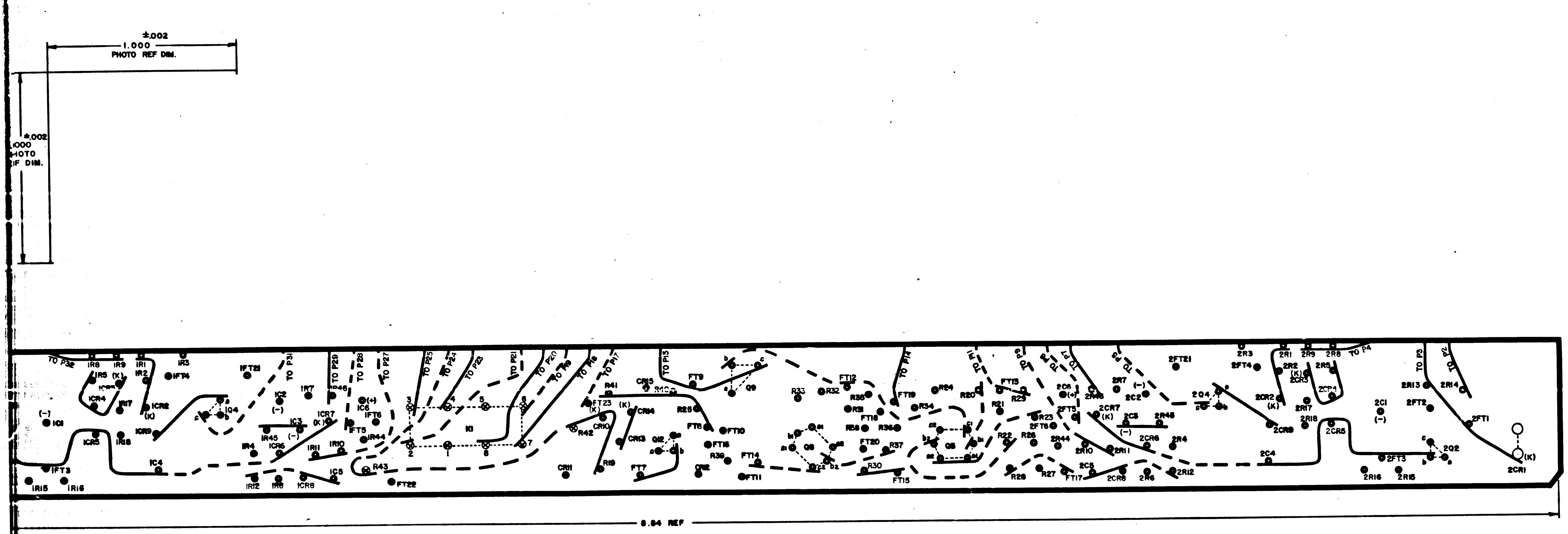
±.002
1.000
PHOTO REF DIM.
±.002
.000
HOTO
IF DIM.
8.84 REF
TO P32
IR8
IR9
IR1
IR3
IR5
(K)
IR2
IFT4
IFT21
TO P31
TO P29
TO P28
TO P27
TO P25
TO P24
TO P23
TO P21
TO P20
TO P19
TO P18
TO P17
TO P15
ICR4
IR17
ICR2
(K)
IQ4
IC2
(−)
IR7
IR46
(+)
IC6
IFT6
ICR7
(K)
IC3
(−)
(−)
IC1
ICR5
IR18
ICR9
IR4
IR45
ICR6
IR11
IR10
IFT5
IR44
IC4
IC5
R43
IFT3
IR15
IR16
IR12
IR6
ICR8
FT22
3
4
5
6
K1
2
1
8
7
R41
CR15
R40
FT23
(K)
CR14
CR10
R42
CR13
Q12
R25
FT8
FT10
FT16
R39
FT14
FT11
CR11
R19
FT7
CR12
FT9
Q9
b
c
e
R33
R32
FT12
R35
R31
FT18
R58
R36
FT20
R37
R30
FT15
Q8
Q6
b1
b2
e1
e2
c1
c2
TO P14
FT19
R34
R24
R20
TO P11
TO P9
TO P8
TO P7
TO P5
FT13
R29
R21
R22
R23
2FT6
R26
R28
R27
FT17
2C6
(+)
2R46
2FT5
2CR7
(K)
2R7
2C2
(−)
2C3
(−)
2R45
2R44
2R10
2R11
2CR6
2C5
2CR8
2R6
2R4
2R12
2FT21
2Q4
2CR9
2R3
2FT4
2R1
2R9
2R8
TO P4
2R2
(K)
2CR3
2R5
2CR4
2CR2
(K)
2R17
2R18
2CR5
2C4
2C1
(−)
2FT3
2R16
2R15
TO P3
TO P2
2R13
2R14
2FT2
2FT1
2Q2
(K)
2CR1

ANDARDS PRESCRIBED BY MIL-D-70327
DE BY PROCESS OR METHOD SHALL
BILITY SHALL NOT EXCEED .001 INCH

NSIONS SHOWN
TYPE IB, CL2, STYLE IA

QTY REQD	PART OR IDENTIFYING NO.	NOMENCLATURE OR DESCRIPTION	FIND NO.

LIST OF MATERIALS

1003150	
NEXT ASSY	USED ON

APPLICATION

UNLESS OTHERWISE SPECIFIED
DIMENSIONS ARE IN INCHES
TOLERANCES ON
FRACTIONS ± DECIMALS ± ANGLES ±
DO NOT SCALE THIS DRAWING
MATERIAL
SEE NOTE 5
HEAT TREATMENT
FINAL FINISH

MIT
INSTRUMENTATION LAB
CAMBRIDGE, MASS
DWG NO. CONTRACT
DRAWN DATE
CHECKED 13 AUG 63
APPROVAL 13 AUG 63
APPROVAL
NASA APPROVAL
MIT APPROVAL Aug 63

MANNED SPACECRAFT CENTER
HOUSTON, TEXAS

INSULATOR
PHOTOGRAPHIC MASTER
CONTROL MODULE

CODE IDENT NO.
SIZE J
NASA DRAWING NO. 1004219
SCALE 5/1
WT
SHEET 1 OF 1

1004219

4219

INCHES
0 1 2
PHOTOGRAPHIC SCALE ONLY

F-2

5 4 3 2

D

C

B

A

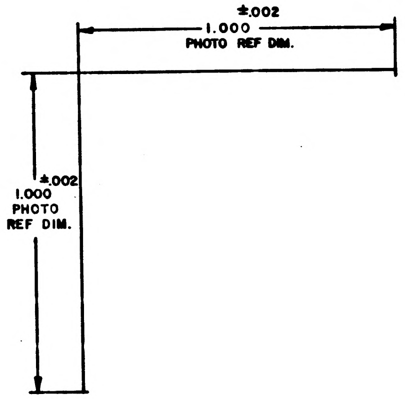

±.002
1.000
PHOTO REF DIM.
±.002
1.000
PHOTO
REF DIM.

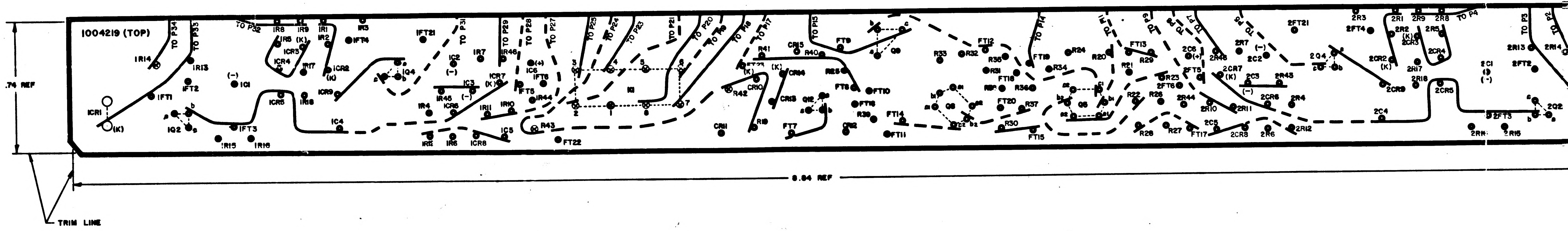

1004219 (TOP)
.74 REF
8.84 REF
TRIM LINE
TO P34
TO P35
TO P32
TO P31
TO P29
TO P28
TO P27
TO P25
TO P24
TO P23
TO P21
TO P20
TO P18
TO P17
TO P15
TO P14
TO P4
TO P3
1CR1
(K)
1R14
1R13
1FT1
1FT2
1Q1
1Q2
1FT3
1R15
1R16
1R8
1R9
1R1
1R2
1R3
1R5
1CR3
1CR4
1R17
1CR2
1CR9
1CR5
1R18
1C4
1Q4
1FT21
1FT4
1C2
1R7
1R46
1C3
1CR7
1R45
1R4
1CR6
1R11
1R10
1C5
1R12
1R6
1CR8
1C6
1FT5
1R44
R43
FT22
1C1
R42
CR10
R41
CR15
R40
FT9
Q9
CR14
R28
FT8
FT10
CR13
Q12
R19
CR11
FT7
CR12
FT14
FT11
R39
FT16
R33
R32
FT12
R35
R31
FT18
R36
FT19
R24
R34
FT20
R37
R30
FT15
Q6
Q5
R20
R21
FT13
R29
R22
R25
R23
2FT6
R26
R27
FT17
2C6
2R48
2R7
2C2
2CR7
2C3
2R45
2CR6
2R4
2R44
2R10
2R11
2C5
2CR8
2R6
2R12
2FT21
2Q4
2R3
2FT4
2R1
2R9
2R8
2R2
2R5
2CR3
2CR4
2CR2
2R17
2R18
2CR9
2CR5
2C4
2C1
2R13
2R14
2FT2
2FT3
2Q2
2R15

NOTES:
1. INTERPRET DRAWING IN ACCORDANCE WITH STANDARDS PRESCRIBED BY MIL-D-70327
2. ORIGINAL OF THIS DRAWING OR REPRODUCTION MADE BY PROCESS OR METHOD SHALL INSURE DIMENSIONAL STABILITY. DIMENSIONAL STABILITY SHALL NOT EXCEED .001 INCH PER INCH
3. CUT TO WITHIN .010 OF TRIM LINE
4. MAKE MASTER PATTERN POSITIVE FILMS TO DIMENSIONS SHOWN
5. MATERIAL: FILM .006/.008 THK PER L-F-340, TYPE IB, CL2, STYLE IA
6. BROKEN LINES DENOTE SLEEVING
7. ● .035/.045 DIA PUNCH
8. ◉ .047/.057 DIA PUNCH
9. ○ .067/.067 DIA PUNCH

1003150	
NEXT ASSY	USED ON
APPLICATION	

UNLESS OTHERWISE
DIMENSIONS ARE IN
TOLERANCES ON
FRACTIONS DECIM
DO NOT SCALE THIS
MATERIAL
SEE NOTE
HEAT TREATMENT
FINAL FINISH

1004219

INCHES
0 1
PHOTOGRAPHIC SCALE ONLY

NOTICE — [illegible] DRAWINGS, SPECIFICATIONS, OR OTHER DATA ARE USED FOR ANY PURPOSE OTHER THAN IN CONNECTION WITH A DEFINITELY RELATED GOVERNMENT PROCUREMENT OPERATION, THE UNITED STATES GOVERNMENT THEREBY INCURS NO RESPONSIBILITY NOR ANY OBLIGATION WHATSOEVER; AND THE FACT THAT THE GOVERNMENT MAY HAVE FORMULATED, FURNISHED, OR IN ANY WAY SUPPLIED THE SAID DRAWINGS, SPECIFICATIONS, OR OTHER DATA IS NOT TO BE REGARDED BY IMPLICATION OR OTHERWISE AS IN ANY MANNER LICENSING THE HOLDER OR ANY OTHER PERSON OR CORPORATION, OR CONVEYING ANY RIGHTS OR PERMISSION TO MANUFACTURE, USE, OR SELL ANY PATENTED INVENTION THAT MAY IN ANY WAY BE RELATED THERETO.

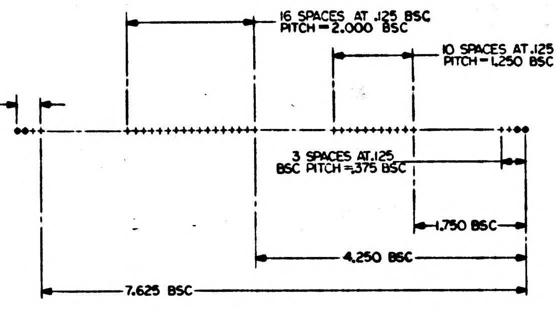

16 SPACES AT .125 BSC PITCH = 2.000 BSC
10 SPACES AT .125 BSC PITCH = 1.250 BSC
3 SPACES AT .125 BSC PITCH = .375 BSC
3 SPACES AT .125 BSC PITCH = .375 BSC
1.750 BSC
4.250 BSC
7.625 BSC

DETAIL A

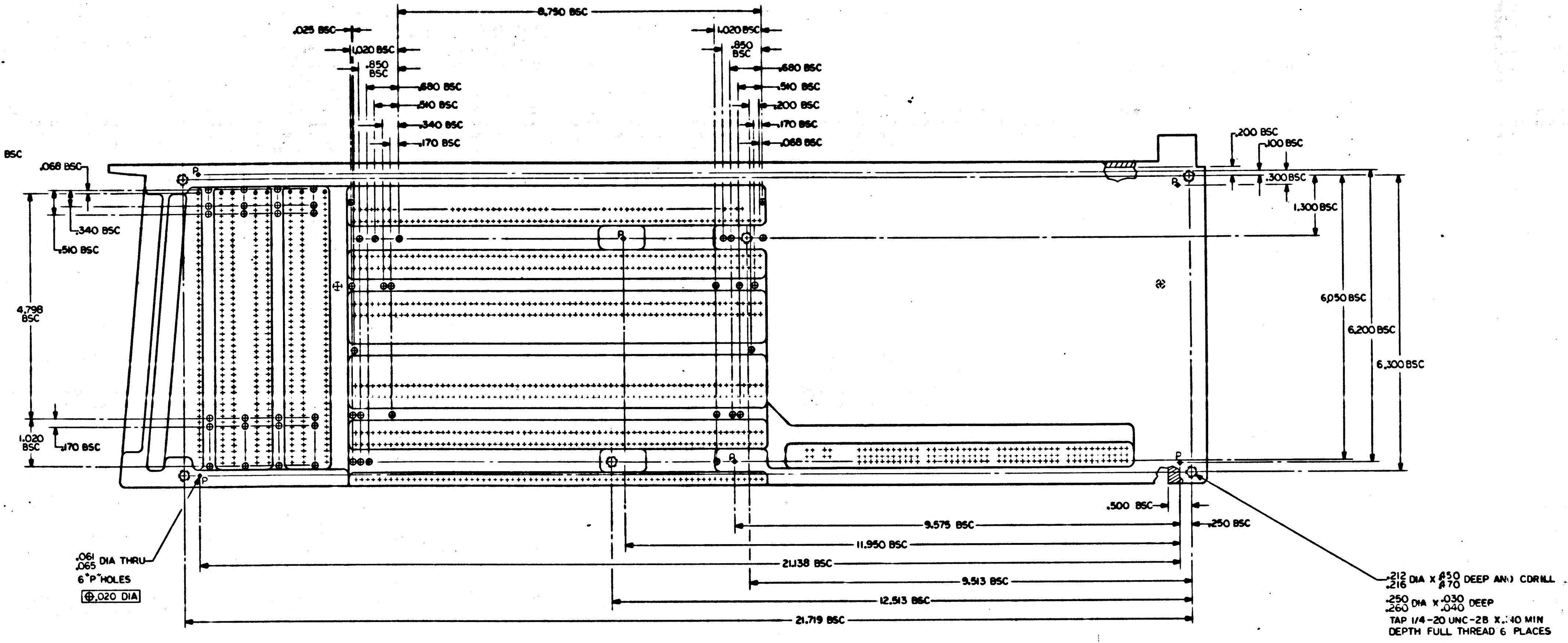

8.750 BSC
.025 BSC
1.020 BSC
.850 BSC
.680 BSC
.510 BSC
.340 BSC
.170 BSC
1.020 BSC
.850 BSC
.680 BSC
.510 BSC
.200 BSC
.170 BSC
.068 BSC
.068 BSC
.340 BSC
.510 BSC
4.798 BSC
1.020 BSC
.170 BSC
P
B
.200 BSC
.100 BSC
.300 BSC
1.300 BSC
6.050 BSC
6.200 BSC
6.300 BSC
.500 BSC
.250 BSC
9.575 BSC
11.950 BSC
21.138 BSC
9.513 BSC
12.513 BSC
21.719 BSC
.061 .065 DIA THRU
6 "P" HOLES
⊕ .020 DIA
.212 .216 DIA X .450 .470 DEEP AND CDRILL
.250 .260 DIA X .030 .040 DEEP
TAP 1/4-20 UNC-2B X .340 MIN DEPTH FULL THREAD 6 PLACES

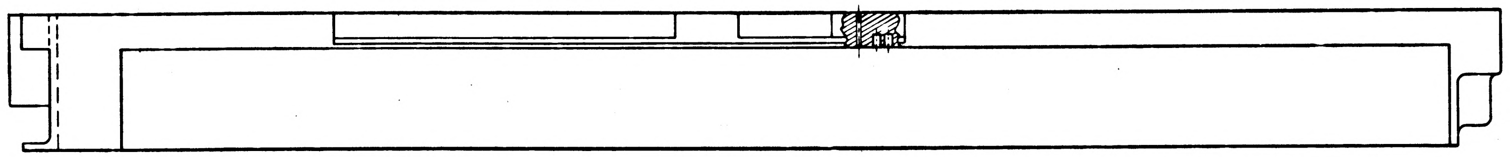

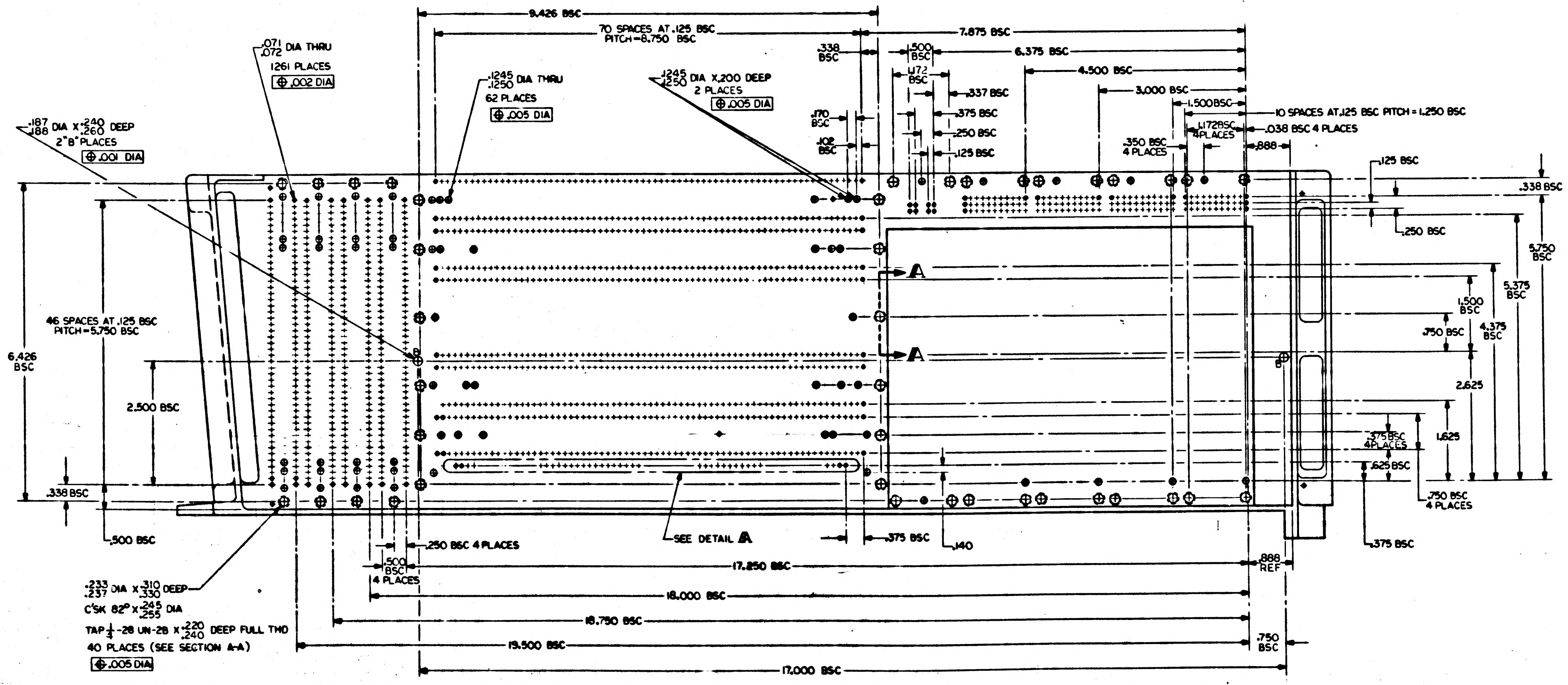

9.426 BSC
70 SPACES AT .125 BSC PITCH = 8.750 BSC
7.875 BSC
.071 .072 DIA THRU
1261 PLACES
⊕ .002 DIA
.1245 .1250 DIA THRU
62 PLACES
⊕ .005 DIA
.1245 .1250 DIA X .200 DEEP
2 PLACES
⊕ .005 DIA
.187 .188 DIA X .240 .260 DEEP
2 "B" PLACES
⊕ .001 DIA
.338 BSC
.500 BSC
1.172 BSC
6.375 BSC
4.500 BSC
3.000 BSC
1.500 BSC
.337 BSC
.375 BSC
.250 BSC
.125 BSC
.170 BSC
.102 BSC
10 SPACES AT .125 BSC PITCH = 1.250 BSC
1.172 BSC 4 PLACES
.038 BSC 4 PLACES
.350 BSC 4 PLACES
.888
.125 BSC
.338 BSC
.250 BSC
5.750 BSC
5.375 BSC
4.375 BSC
1.500 BSC
.750 BSC
2.625
1.625
.375 BSC 4 PLACES
.625 BSC
.750 BSC 4 PLACES
.375 BSC
A
A
B
46 SPACES AT .125 BSC PITCH = 5.750 BSC
6.426 BSC
2.500 BSC
.338 BSC
.500 BSC
.250 BSC 4 PLACES
.500 BSC 4 PLACES
SEE DETAIL A
.375 BSC
.140
17.250 BSC
.888 REF
18.000 BSC
18.750 BSC
19.500 BSC
.750 BSC
17.000 BSC
.233 .237 DIA X .310 .330 DEEP
C'SK 82° X .245 .255 DIA
TAP 1/4-28 UN-2B X .220 .240 DEEP FULL THD
40 PLACES (SEE SECTION A-A)
⊕ .005 DIA

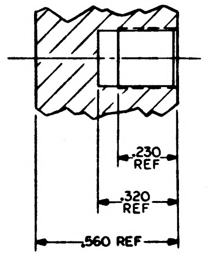

.230 REF
.320 REF
.560 REF

SECTION A-A
SCALE 4/1
40 PLACES

1004220A SHT 2-2

INCHES
PHOTOGRAPHIC SCALE ONLY

NOTICE — WHEN GOVERNMENT DRAWINGS, SPECIFICATIONS, OR OTHER DATA ARE USED FOR ANY PURPOSE OTHER THAN IN CONNECTION WITH A DEFINITELY RELATED GOVERNMENT PROCUREMENT OPERATION, THE UNITED STATES GOVERNMENT THEREBY INCURS NO RESPONSIBILITY NOR ANY OBLIGATION WHATSOEVER; AND THE FACT THAT THE GOVERNMENT MAY HAVE FORMULATED, FURNISHED, OR IN ANY WAY SUPPLIED THE SAID DRAWINGS, SPECIFICATIONS, OR OTHER DATA IS NOT TO BE REGARDED BY IMPLICATION OR OTHERWISE AS IN ANY MANNER LICENSING THE HOLDER OR ANY OTHER PERSON OR CORPORATION, OR CONVEYING ANY RIGHTS OR PERMISSION TO MANUFACTURE, USE, OR SELL ANY PATENTED INVENTION THAT MAY IN ANY WAY BE RELATED THERETO.

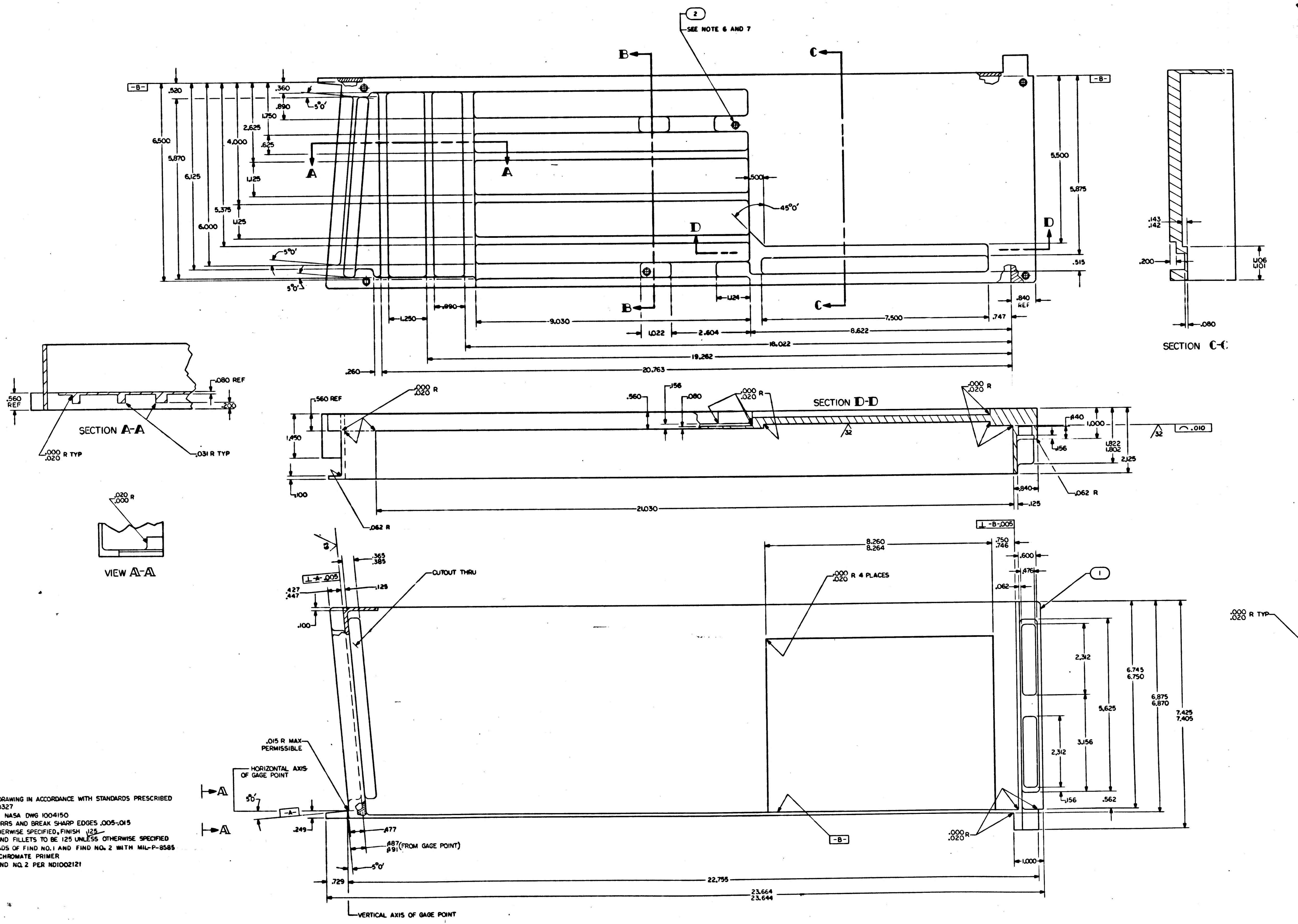

② SEE NOTE 6 AND 7
B
C
-B-
.520
.360
.890
5°0'
1.750
2.625
4.000
.625
6.500
5.870
6.125
1.125
5.375
6.000
A
.500
45°0'
D
5.500
5.875
.515
.840 REF
1.250
.890
9.030
1.124
7.500
.747
1.022
2.604
8.622
18.022
19.262
.260
20.763
SECTION C-C
.143
.142
.200
1.106
1.101
.080
SECTION D-D
.560 REF
.000 R
.020
.156
.080
.560
1.450
.100
.062 R
21.030
1.000
.840
.032
1.822
1.802
2.125
.840
.125
32
⌒ .010
⊥ -B- .005
.365
.385
.125
⊥ -A- .005
.427
.447
.100
CUTOUT THRU
8.260
8.264
.750
.746
.600
.476
.062
.000 R 4 PLACES
.020
①
.000 R TYP
.020
2.312
5.625
3.156
2.312
6.745
6.750
6.875
6.870
7.425
7.405
.156
.562
.015 R MAX
PERMISSIBLE
HORIZONTAL AXIS OF GAGE POINT
5°0'
-A-
.249
.477
.487
.491 (FROM GAGE POINT)
5°0'
.000 R
.020
-B-
1.000
.729
22.755
23.664
23.644
VERTICAL AXIS OF GAGE POINT

.080 REF
.560 REF
.200
SECTION A-A
.000 R TYP
.020
.031 R TYP
.020 R
.000
VIEW A-A

NOTES-

1. INTERPRET DRAWING IN ACCORDANCE WITH STANDARDS PRESCRIBED BY MIL-D-70327
2. MAKE FROM NASA DWG 1004150
3. REMOVE BURRS AND BREAK SHARP EDGES .005-.015
4. UNLESS OTHERWISE SPECIFIED, FINISH 125
5. ALL RADII AND FILLETS TO BE 125 UNLESS OTHERWISE SPECIFIED
6. COAT THREADS OF FIND NO. 1 AND FIND NO. 2 WITH MIL-P-8585 WET ZINC CHROMATE PRIMER
7. INSTALL FIND NO. 2 PER ND1002121

1004220

SYM	DESCRIPTION	DATE	APPROVAL
A	REVISED PER TDRR 03464		

REVISIONS 02545

1004220 A

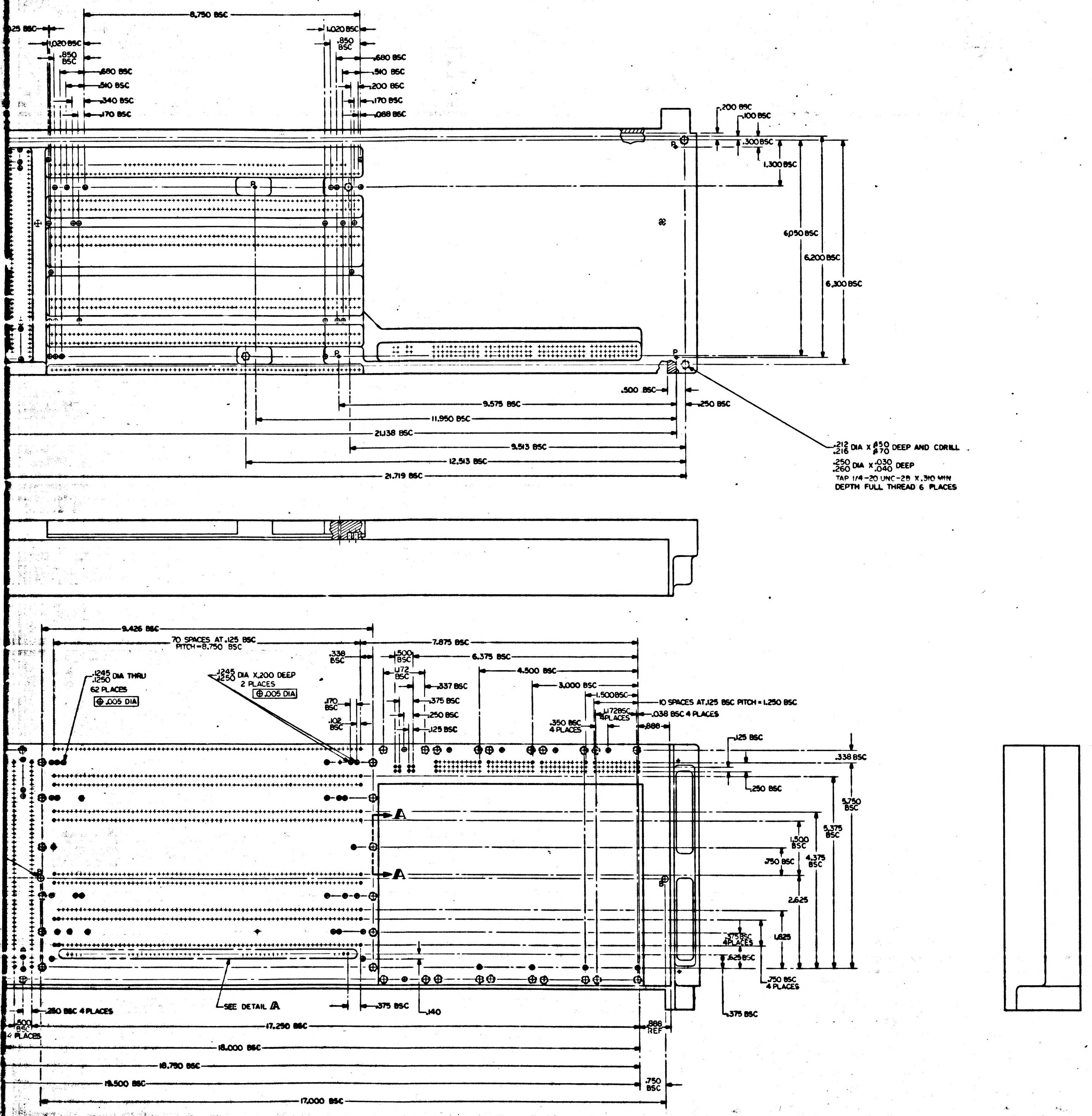

8.750 BSC
1.020 BSC
.850 BSC
.680 BSC
.510 BSC
.340 BSC
.170 BSC
.200 BSC
.088 BSC
.200 BSC
.100 BSC
.300 BSC
1.300 BSC
6.050 BSC
6.200 BSC
6.300 BSC
.500 BSC
.250 BSC
9.575 BSC
11.950 BSC
21.138 BSC
9.513 BSC
12.513 BSC
21.719 BSC
.212/.216 DIA X .650/.670 DEEP AND CDRILL
.250/.260 DIA X .030/.040 DEEP
TAP 1/4-20 UNC-2B X .310 MIN DEPTH FULL THREAD 6 PLACES
9.426 BSC
70 SPACES AT .125 BSC PITCH = 8.750 BSC
7.875 BSC
6.375 BSC
4.500 BSC
3.000 BSC
1.500 BSC
10 SPACES AT .125 BSC PITCH = 1.250 BSC
.038 BSC 4 PLACES
.1245/.1250 DIA THRU 62 PLACES ⊕ .005 DIA
.1245/.1250 DIA X .200 DEEP 2 PLACES ⊕ .005 DIA
.338 BSC
1.500 BSC
1.172 BSC
.337 BSC
.375 BSC
.250 BSC
.125 BSC
.170 BSC
.102 BSC
.350 BSC 4 PLACES
1.172 BSC 4 PLACES
.888
.125 BSC
.338 BSC
.250 BSC
5.750 BSC
5.375 BSC
4.375 BSC
1.500 BSC
.750 BSC
2.625
1.625
.375 BSC 4 PLACES
.625 BSC
.750 BSC 4 PLACES
.375 BSC
A
A
SEE DETAIL A
.375 BSC
.140
.250 BSC 4 PLACES
.500 BSC 4 PLACES
17.250 BSC
.888 REF
18.000 BSC
18.750 BSC
19.500 BSC
.750 BSC
17.000 BSC

MASTER

1004220A SHT 2-2

QTY REQD	PART OR IDENTIFYING NO.	NOMENCLATURE OR DESCRIPTION	FIND NO.

LIST OF MATERIALS

1003127	
NEXT ASSY	USED ON
APPLICATION	

UNLESS OTHERWISE SPECIFIED DIMENSIONS ARE IN INCHES
TOLERANCES ON
FRACTIONS ± — DECIMALS ±.005 ANGLES ±0°30'
DO NOT SCALE THIS DRAWING
MATERIAL —
HEAT TREATMENT —
FINAL FINISH —

MIT INSTRUMENTATION LAB
CAMBRIDGE, MASS.
DRAWN DATE 8-20-63
CHECKED
APPROVAL 8 AUG 63
APPROVAL
NASA APPROVAL
MIT APPROVAL 14 Aug 63

MANNED SPACECRAFT CENTER
HOUSTON, TEXAS

TRAY B
LEFT HAND

CODE IDENT NO.
SIZE
NASA DRAWING NO. 1004220
SCALE 1/1
WT
SHEET 2 OF 2

1004220 A

1004220	A	A	REVISED PER TDRR 03464	2-26-63	

REVISIONS 02545

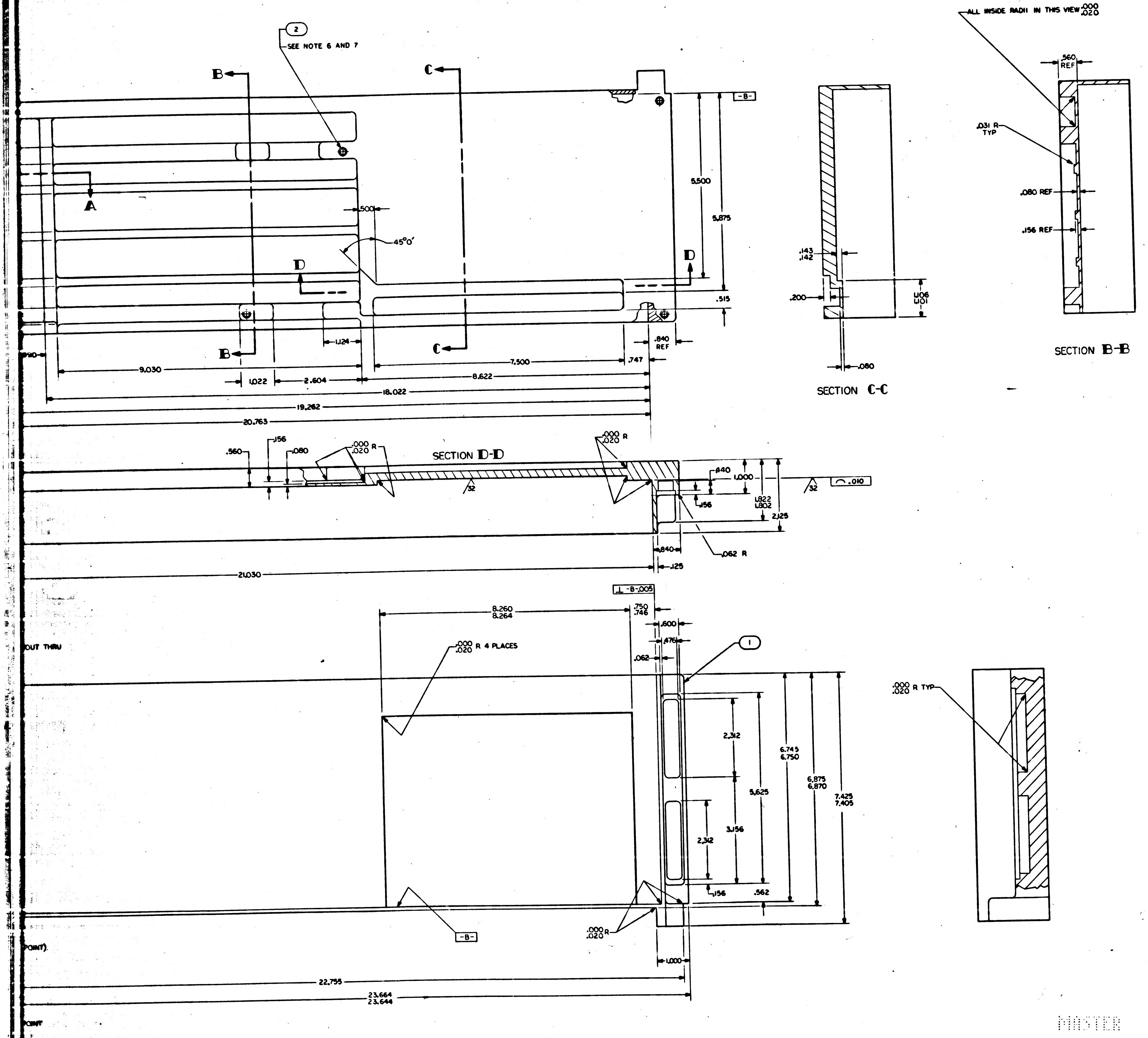

SEE NOTE 6 AND 7
2
1
A
B
C
D
SECTION C-C
SECTION B-B
SECTION D-D
ALL INSIDE RADII IN THIS VIEW .000 .020
.031 R TYP
.080 REF
.156 REF
.560 REF
45°0'
.000 R 4 PLACES .020
.000 R TYP .020
-B-
9.030
1.022
2.604
18.022
19.262
20.763
21.030
7.500
8.622
.747
5.500
5.875
.515
.840 REF
1.124
.500
8.260 8.264
.750 .746
22.755
23.664 23.644
6.745 6.750
6.875 6.870
7.425 7.405
5.625
3.156
2.312
.562
1.000
.010
OUT THRU
POINT
MASTER

QTY REQD	PART OR IDENTIFYING NO.	NOMENCLATURE OR DESCRIPTION	FIND NO.
6	NAS1394CA-08L	INSERT, THREADED, SELF LOCKING	2
1	1004220-1	TRAY B - LEFT HAND	1

LIST OF MATERIALS

NEXT ASSY	USED ON
1003127	

APPLICATION

UNLESS OTHERWISE SPECIFIED DIMENSIONS ARE IN INCHES
TOLERANCES ON FRACTIONS ± DECIMALS ±.005 ANGLES ±0 30
DO NOT SCALE THIS DRAWING
MATERIAL SEE NOTE 3
HEAT TREATMENT —
FINAL FINISH —

MIT INSTRUMENTATION LAB
CAMBRIDGE, MASS.

DRAWN Mahoney DATE 2-30-63
CHECKED
APPROVAL 13 Aug 63
APPROVAL
NASA APPROVAL
MIT APPROVAL 14 Aug 63

MANNED SPACECRAFT CENTER
HOUSTON, TEXAS

TRAY B
LEFT HAND

CODE IDENT NO. | SIZE J | NASA DRAWING NO. 1004220
SCALE 1/1 | WT | SHEET 1 OF 2

1004220

INCHES
PHOTOGRAPHIC SCALE ONLY

E-2

1004220 B

SYM	DESCRIPTION	DATE	APPROVAL
A	REVISED PER TDRR 03464	9-26-63	
B	REVISED PER TDRR 03636	10-3-63	WK

REVISIONS 02545

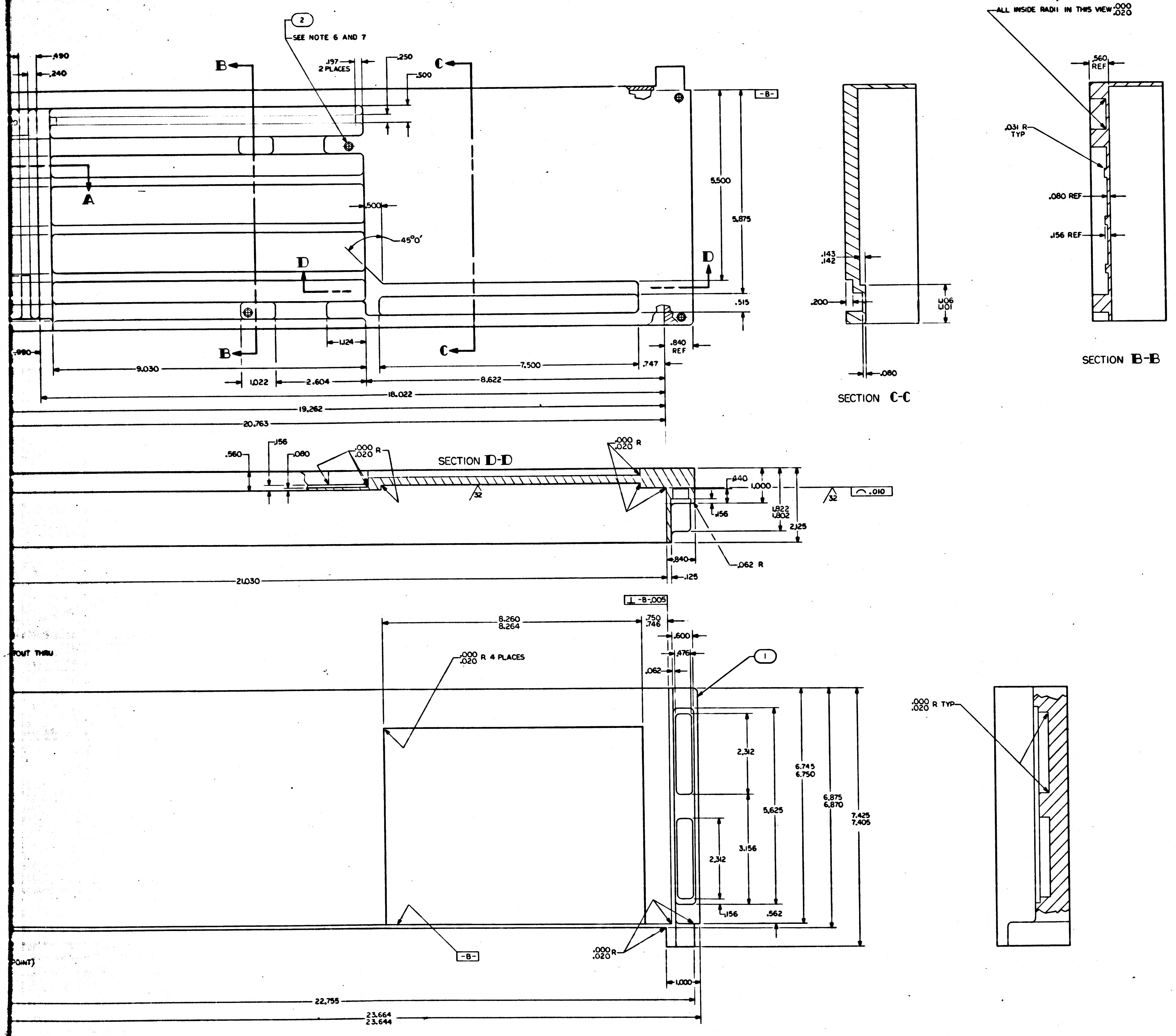

2
SEE NOTE 6 AND 7
.490
.240
.197 2 PLACES
.250
.500
B
C
A
D
-B-
5.500
5.875
.500
45°0'
.515
.840 REF
.124
9.030
1.022
2.604
7.500
.747
8.622
18.022
19.262
20.763
.980
SECTION C-C
.143 .142
.200
1.106 1.101
.080
ALL INSIDE RADII IN THIS VIEW .000 .020
.560 REF
.031 R TYP
.080 REF
.156 REF
SECTION B-B
SECTION D-D
.560
.156
.080
.000 .020 R
32
.440
1.000
.010
1.822 1.802
2.125
.156
.840
.062 R
.125
21.030
⊥ -B- .005
8.260 8.264
.750 .746
.600
.476
.062
1
.000 .020 R 4 PLACES
OUT THRU
2.312
5.625
3.156
2.312
.156
.562
6.745 6.750
6.875 6.870
7.425 7.405
.000 .020 R TYP
.000 .020 R
-B-
1.000
22.755
23.664 23.644
POINT

6	NAS1394CA-08L	INSERT, THREADED, SELF LOCKING	2
1	1004220-1	TRAY B - LEFT HAND	1
QTY REQD	PART OR IDENTIFYING NO.	NOMENCLATURE OR DESCRIPTION	FIND NO.

LIST OF MATERIALS

NEXT ASSY	USED ON
1003127	

APPLICATION

UNLESS OTHERWISE SPECIFIED DIMENSIONS ARE IN INCHES
TOLERANCES ON
FRACTIONS ± DECIMALS ±.005 ANGLES ±0°30'
DO NOT SCALE THIS DRAWING
MATERIAL SEE NOTE 3
HEAT TREATMENT —
FINAL FINISH —

MIT INSTRUMENTATION LAB CAMBRIDGE, MASS
DRAWN Mahoney DATE 7-30-63
CHECKED
APPROVAL 13 Aug 63
APPROVAL
NASA APPROVAL
MIT APPROVAL 14 Aug 63

MANNED SPACECRAFT CENTER
HOUSTON, TEXAS

TRAY B
LEFT HAND

CODE IDENT NO. | SIZE J | NASA DRAWING NO. 1004220
SCALE 1/1 | WT | SHEET 1 OF 2

MASTER

1004220 B

F-2

NOTICE — WHEN GOVERNMENT DRAWINGS, SPECIFICATIONS, OR OTHER DATA ARE USED FOR ANY PURPOSE OTHER THAN IN CONNECTION WITH A DEFINITELY RELATED GOVERNMENT PROCUREMENT OPERATION, THE UNITED STATES GOVERNMENT THEREBY INCURS NO RESPONSIBILITY NOR ANY OBLIGATION WHATSOEVER; AND THE FACT THAT THE GOVERNMENT MAY HAVE FORMULATED, FURNISHED, OR IN ANY WAY SUPPLIED THE SAID DRAWINGS, SPECIFICATIONS, OR OTHER DATA IS NOT TO BE REGARDED BY IMPLICATION OR OTHERWISE AS IN ANY MANNER LICENSING THE HOLDER OR ANY OTHER PERSON OR CORPORATION, OR CONVEYING ANY RIGHTS OR PERMISSION TO MANUFACTURE, USE, OR SELL ANY PATENTED INVENTION THAT MAY IN ANY WAY BE RELATED THERETO.

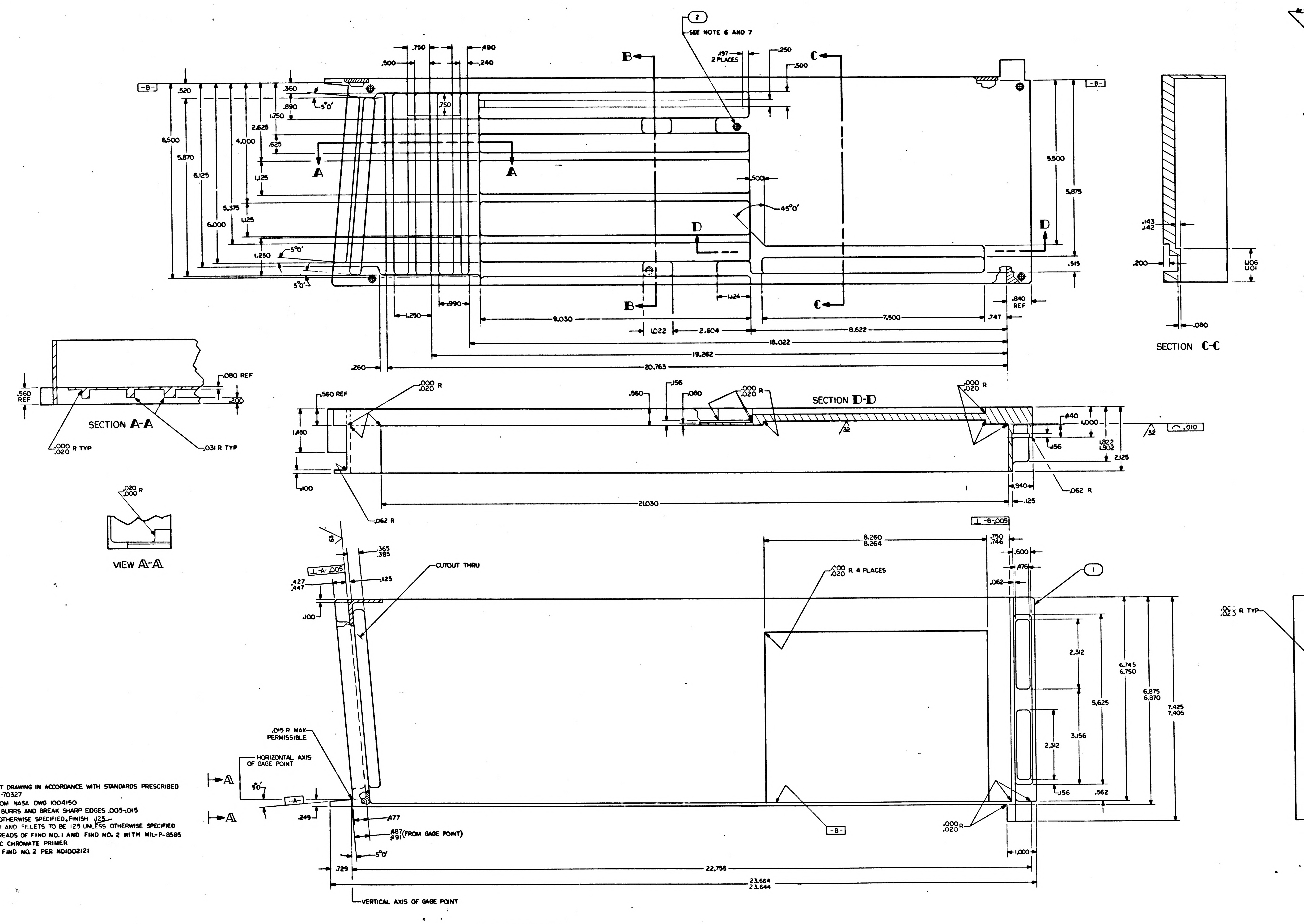

D
C
B
A
② SEE NOTE 6 AND 7
.750
.490
.500
.240
.197 2 PLACES
.250
.500
B
C
-B-
.520
.360
.890
5°0'
.750
1.750
2.625
.625
4.000
6.500
5.870
6.125
A
A
1.125
5.375
1.125
6.000
.500
45°0'
D
D
1.250
5°0'
5°0'
5.500
5.875
.515
.840 REF
1.250
.890
1.124
9.030
7.500
.747
1.022
2.604
8.622
18.022
19.262
.260
20.763
SECTION C-C
.143
.142
.200
1.106
1.101
.080
.080 REF
.560 REF
.200
SECTION A-A
.000 R TYP
.020
.031 R TYP
.020 R
.000
VIEW A-A
.560 REF
.000 R
.020
.560
.156
.080
SECTION D-D
32
.640
1.000
1.822
1.802
2.125
.156
1.450
.100
21.030
.840
.125
.062 R
.062 R
⊥ -B- .005
8.260
8.264
.750
.746
.600
.476
.062
①
.365
.385
CUTOUT THRU
⊥ -A- .005
.427
.447
.125
.100
.000 R 4 PLACES
.020
.025 R TYP
2.312
6.745
6.750
6.875
6.870
7.425
7.405
5.625
3.156
2.312
.156
.562
.015 R MAX PERMISSIBLE
HORIZONTAL AXIS OF GAGE POINT
A
A
5°0'
-A-
.249
.477
.487
.491 (FROM GAGE POINT)
5°0'
-B-
.000 R
.020
1.000
.729
22.755
23.664
23.644
VERTICAL AXIS OF GAGE POINT

NOTES-

1. INTERPRET DRAWING IN ACCORDANCE WITH STANDARDS PRESCRIBED BY MIL-D-70327
2. MAKE FROM NASA DWG 1004150
3. REMOVE BURRS AND BREAK SHARP EDGES .005-.015
4. UNLESS OTHERWISE SPECIFIED, FINISH 125
5. ALL RADII AND FILLETS TO BE 125 UNLESS OTHERWISE SPECIFIED
6. COAT THREADS OF FIND NO. 1 AND FIND NO. 2 WITH MIL-P-8585 WET ZINC CHROMATE PRIMER
7. INSTALL FIND NO. 2 PER ND1002121

1004220 B

1004220 | B

SYM	DESCRIPTION	DATE	APPROVAL
A	REVISED PER TDRR 03464	5-26-63	JM
B	REVISED PER TDRR 03636	10-3-63	WK

REVISIONS 02555

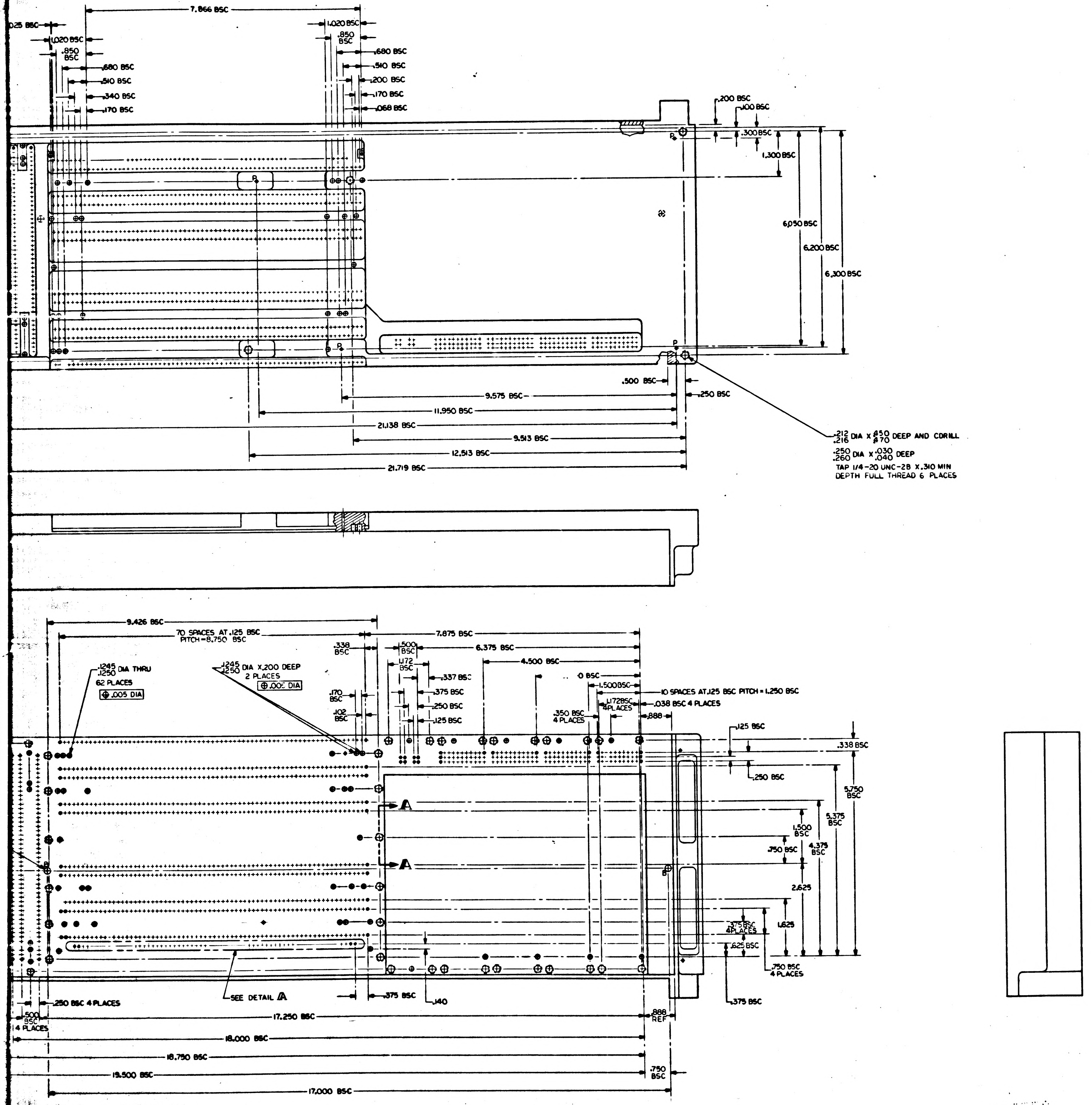

7.866 BSC
.025 BSC
1.020 BSC
.850 BSC
.680 BSC
.510 BSC
.340 BSC
.170 BSC
.200 BSC
.068 BSC
.200 BSC
.100 BSC
.300 BSC
1.300 BSC
6.050 BSC
6.200 BSC
6.300 BSC
P
.500 BSC
.250 BSC
9.575 BSC
11.950 BSC
21.138 BSC
9.513 BSC
12.513 BSC
21.719 BSC
.212 .216 DIA X .450 .470 DEEP AND CDRILL
.250 .260 DIA X .030 .040 DEEP
TAP 1/4-20 UNC-2B X.310 MIN
DEPTH FULL THREAD 6 PLACES
9.426 BSC
70 SPACES AT .125 BSC PITCH=8.750 BSC
.1245 .1250 DIA THRU
62 PLACES
⊕ .005 DIA
.1245 .1250 DIA X.200 DEEP
2 PLACES
⊕ .005 DIA
.338 BSC
.170 BSC
.102 BSC
.500 BSC
1.172 BSC
.337 BSC
.375 BSC
.250 BSC
.125 BSC
7.875 BSC
6.375 BSC
4.500 BSC
0 BSC
1.500 BSC
10 SPACES AT .125 BSC PITCH = 1.250 BSC
1.172 BSC 4 PLACES
.038 BSC 4 PLACES
.350 BSC 4 PLACES
.888
.125 BSC
.338 BSC
.250 BSC
5.750 BSC
5.375 BSC
4.375 BSC
1.500 BSC
.750 BSC
2.625
1.625
.375 BSC 4 PLACES
.625 BSC
.750 BSC 4 PLACES
.375 BSC
A
A
B
SEE DETAIL A
.250 BSC 4 PLACES
.500 BSC 4 PLACES
.375 BSC
.140
17.250 BSC
.888 REF
18.000 BSC
18.750 BSC
19.500 BSC
.750 BSC
17.000 BSC

1004220B SHT 2-2

QTY REQD	PART R IDENTIFYING NO.	NOMENCLATURE OR DESCRIPTION	FIND NO.

LIST OF MATERIALS

1003127	
NEXT ASSY	USED ON
APPLICATION	

UNLESS OTHERWISE SPECIFIED
DIMENSIONS ARE IN INCHES
TOLERANCES ON
FRACTIONS ± — DECIMALS ±.005 ANGLES ±0°30'
DO NOT SCALE THIS DRAWING
MATERIAL —
HEAT TREATMENT —
FINAL FINISH —

MIT
INSTRUMENTATION LAB
CAMBRIDGE, MASS
DRAWN Mahony DATE 5-10-63
CHECKED
APPROVAL W. Barrows 8 Aug 63
APPROVAL
NASA APPROVAL Jack Barnard
MIT APPROVAL W Kupfer 14 Aug 63

MANNED SPACECRAFT CENTER
HOUSTON, TEXAS

TRAY B
LEFT HAND

CODE IDENT NO. | SIZE | NASA DRAWING NO. 1004220
SCALE 1/1 | WT | SHEET 2 OF 2

MASTER

F-2

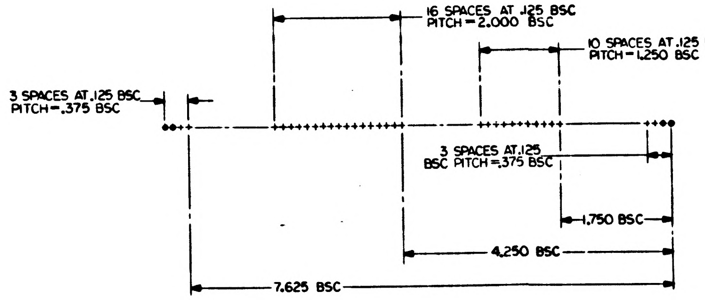
16 SPACES AT .125 BSC
PITCH = 2.000 BSC
10 SPACES AT .125 BSC
PITCH = 1.250 BSC
3 SPACES AT .125 BSC
PITCH = .375 BSC
3 SPACES AT .125
BSC PITCH = .375 BSC
1.750 BSC
4.250 BSC
7.625 BSC

DETAIL A

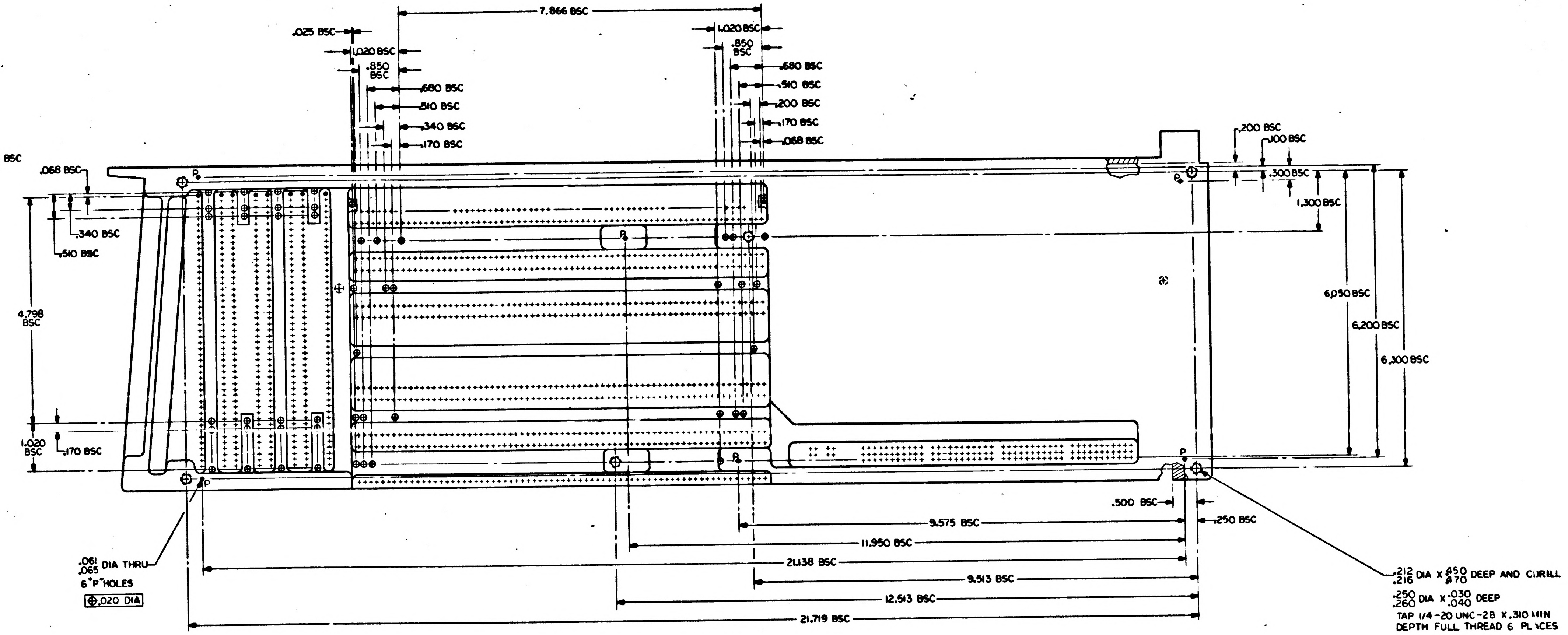
7.866 BSC
.025 BSC
1.020 BSC
.850 BSC
.680 BSC
.510 BSC
.340 BSC
.170 BSC
1.020 BSC
.850 BSC
.680 BSC
.510 BSC
.200 BSC
.170 BSC
.068 BSC
.200 BSC
.100 BSC
.300 BSC
1.300 BSC
.068 BSC
.340 BSC
.510 BSC
4.798 BSC
1.020 BSC
.170 BSC
6.050 BSC
6.200 BSC
6.300 BSC
P
.500 BSC
.250 BSC
9.575 BSC
11.950 BSC
21.138 BSC
9.513 BSC
12.513 BSC
21.719 BSC
.061 .065 DIA THRU
6 "P" HOLES
⊕ .020 DIA
.212 .216 DIA X .850 .870 DEEP AND C'DRILL
.250 .260 DIA X .030 .040 DEEP
TAP 1/4-20 UNC-2B X .310 MIN
DEPTH FULL THREAD 6 PLACES

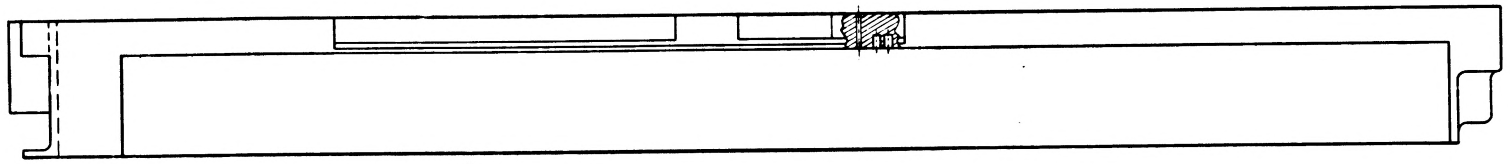

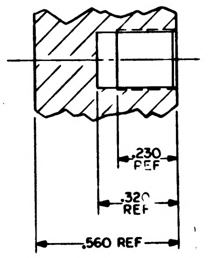
.230 REF
.320 REF
.560 REF

SECTION A-A
SCALE 4/1
40 PLACES

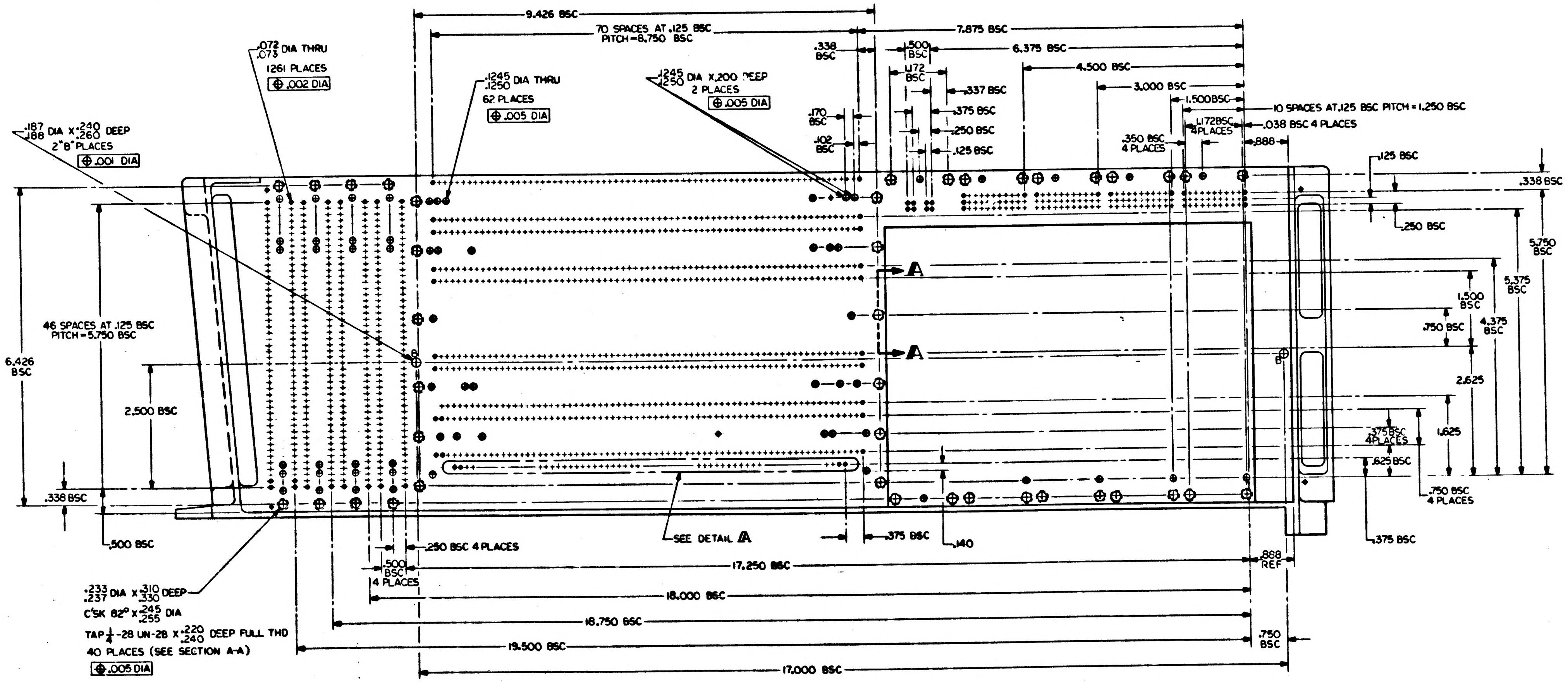
9.426 BSC
70 SPACES AT .125 BSC
PITCH = 8.750 BSC
7.875 BSC
6.375 BSC
4.500 BSC
3.000 BSC
1.500 BSC
1.172 BSC 4 PLACES
.038 BSC 4 PLACES
.888
.350 BSC 4 PLACES
10 SPACES AT .125 BSC PITCH = 1.250 BSC
.072 .075 DIA THRU
1261 PLACES
⊕ .002 DIA
.1245 .1250 DIA THRU
62 PLACES
⊕ .005 DIA
.1245 .1250 DIA X .200 DEEP
2 PLACES
⊕ .005 DIA
.187 .188 DIA X .240 .260 DEEP
2 "B" PLACES
⊕ .001 DIA
.338 BSC
.500 BSC
.172 BSC
.337 BSC
.375 BSC
.250 BSC
.125 BSC
.170 BSC
.102 BSC
.125 BSC
.338 BSC
.250 BSC
5.750 BSC
5.375 BSC
1.500 BSC
.750 BSC
4.375 BSC
2.625
1.625
.375 BSC 4 PLACES
.625 BSC
.750 BSC 4 PLACES
.375 BSC
A
A
B
46 SPACES AT .125 BSC
PITCH = 5.750 BSC
6.426 BSC
2.500 BSC
.338 BSC
.500 BSC
.250 BSC 4 PLACES
.500 BSC
4 PLACES
SEE DETAIL A
.375 BSC
.140
.888 REF
17.250 BSC
18.000 BSC
18.750 BSC
19.500 BSC
.750 BSC
17.000 BSC
.233 .237 DIA X .310 .330 DEEP
C'SK 82° X .245 .255 DIA
TAP 1/4-28 UN-2B X .220 .240 DEEP FULL THD
40 PLACES (SEE SECTION A-A)
⊕ .005 DIA

1004220 C

REVISIONS 02545

SYM	DESCRIPTION	DATE	APPROVAL
A	REVISED PER TDRR 03464	9-26-63	WK
B	REVISED PER TDRR 03636	8-7-63	WK
C	REVISED PER TDRR 04161	10-24-63	WK

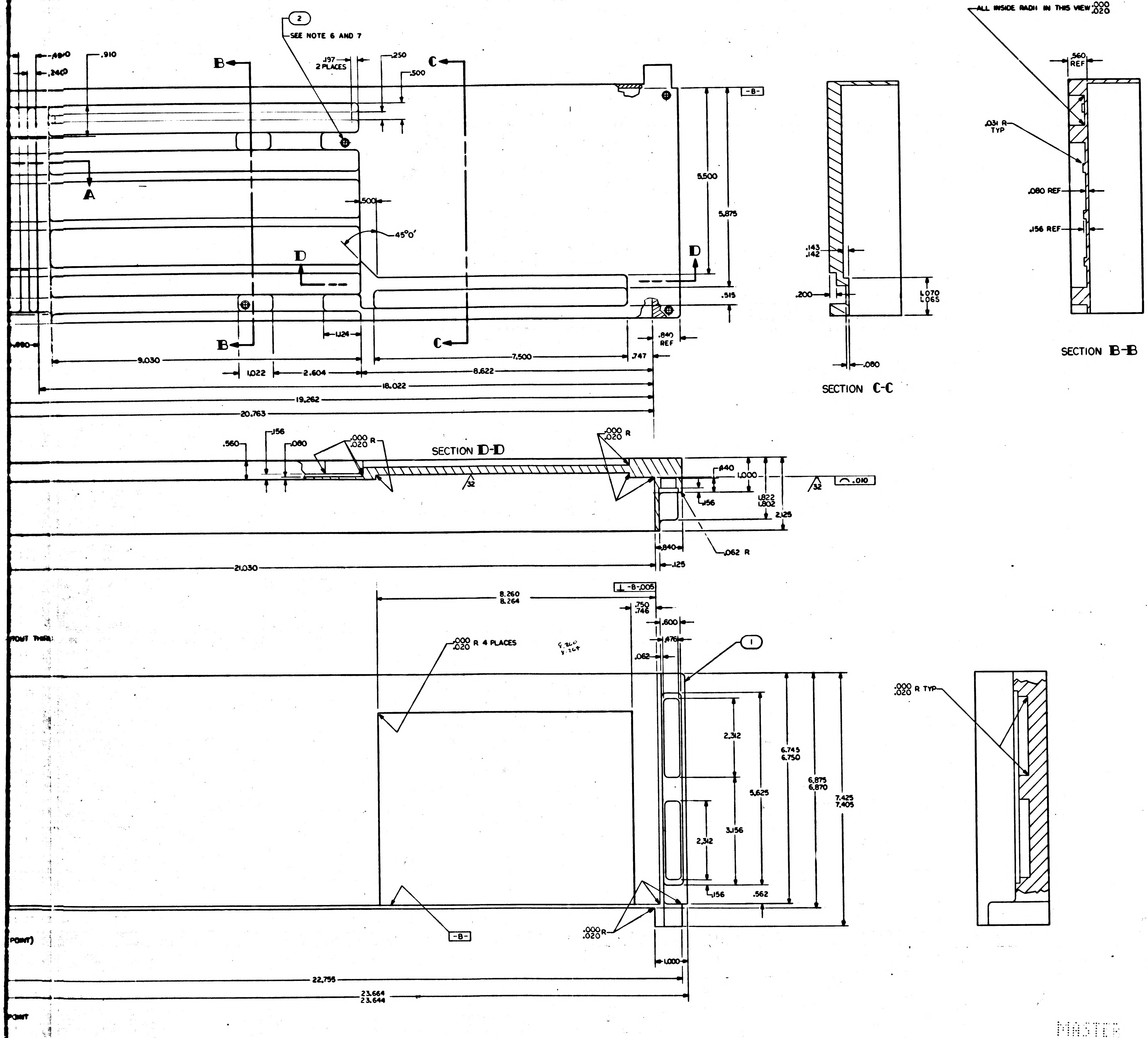

2
SEE NOTE 6 AND 7
.910
.480
.240
.197
2 PLACES
.250
.500
B
C
-B-
A
.500
45°0'
5.500
5.875
D
D
.515
1.124
.840
REF
B
C
.080
9.030
7.500
.747
1.022
2.604
8.622
18.022
19.262
20.763
SECTION C-C
.143
.142
.200
1.070
1.065
.080
ALL INSIDE RADII IN THIS VIEW .000 .020
.560 REF
.031 R TYP
.080 REF
.156 REF
SECTION B-B
.560
.156
.080
.000 .020 R
SECTION D-D
.000 .020 R
32
.840
1.000
1.822
1.802
2.125
.156
.010
32
.840
.125
.062 R
21.030
8.260
8.264
-B- .005
.750
.746
.600
.476
.062
1
.000 .020 R 4 PLACES
8.260 8.264
2.312
5.625
3.156
2.312
6.745
6.750
6.875
6.870
7.425
7.405
.156
.562
.000 .020 R TYP
-B-
.000 .020 R
1.000
22.755
23.664
23.644

QTY REQD	PART OR IDENTIFYING NO.	NOMENCLATURE OR DESCRIPTION	FIND NO.
6	NAS1394CA-08L	INSERT, THREADED, SELF LOCKING	2
1	1004220-1	TRAY B - LEFT HAND	1

LIST OF MATERIALS

NEXT ASSY	USED ON
1003127	

APPLICATION

UNLESS OTHERWISE SPECIFIED DIMENSIONS ARE IN INCHES
TOLERANCES ON
FRACTIONS ±
DECIMALS ±.005
ANGLES ±0°30'
DO NOT SCALE THIS DRAWING
MATERIAL SEE NOTE 3
HEAT TREATMENT
FINAL FINISH

MIT INSTRUMENTATION LAB
CAMBRIDGE, MASS.
DRAWN Mahoney DATE 7-30-63
CHECKED
APPROVAL 13 Aug 63
APPROVAL Driggs
NASA APPROVAL
MIT APPROVAL 14 Aug 63

MANNED SPACECRAFT CENTER
HOUSTON, TEXAS

TRAY B
LEFT HAND

CODE IDENT NO.
SIZE J
NASA DRAWING NO. 1004220
SCALE 1/1
WT
SHEET 1 OF 2

MASTER

1004220 C

NOTICE — WHEN GOVERNMENT DRAWINGS, SPECIFICATIONS, OR OTHER DATA ARE USED FOR ANY PURPOSE OTHER THAN IN CONNECTION WITH A DEFINITELY RELATED GOVERNMENT PROCUREMENT OPERATION, THE UNITED STATES GOVERNMENT THEREBY INCURS NO RESPONSIBILITY NOR ANY OBLIGATION WHATSOEVER; AND THE FACT THAT THE GOVERNMENT MAY HAVE FORMULATED, FURNISHED, OR IN ANY WAY SUPPLIED THE SAID DRAWINGS, SPECIFICATIONS, OR OTHER DATA IS NOT TO BE REGARDED BY IMPLICATION OR OTHERWISE AS IN ANY MANNER LICENSING THE HOLDER OR ANY OTHER PERSON OR CORPORATION, OR CONVEYING ANY RIGHTS OR PERMISSION TO MANUFACTURE, USE, OR SELL ANY PATENTED INVENTION THAT MAY IN ANY WAY BE RELATED THERETO.

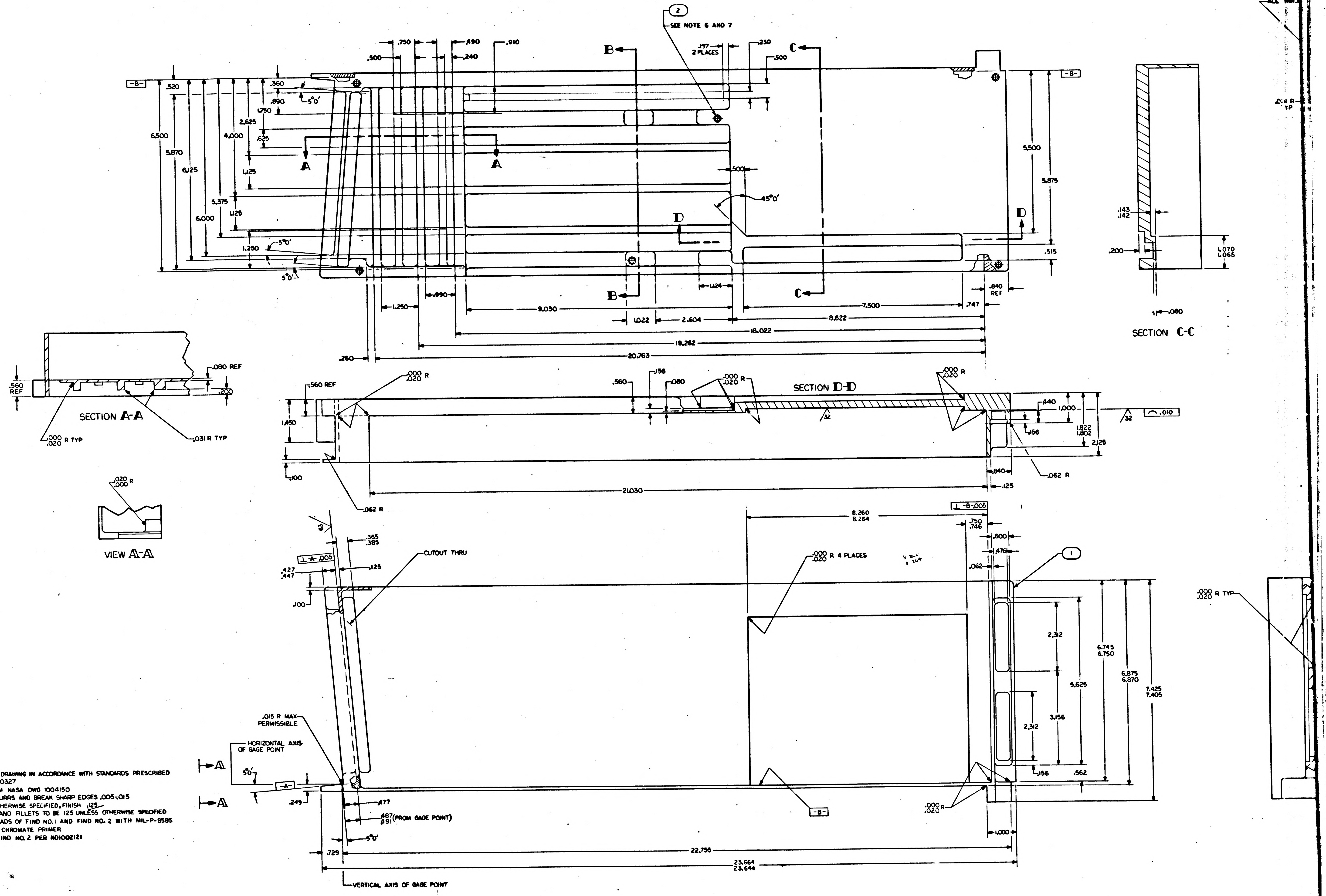

SEE NOTE 6 AND 7
2
.750
.490
.500
.240
.910
.197 2 PLACES
.250
.500
-B-
.520
.360
5°0'
.890
1.750
2.625
.625
4.000
6.500
5.870
6.125
1.125
5.375
1.125
6.000
1.250
5°0'
5°0'
B
C
A
A
D
D
.500
45°0'
5.500
5.875
.515
.124
.840 REF
1.250
.890
9.030
7.500
.747
1.022
2.604
8.622
18.022
19.262
.260
20.763
SECTION C-C
.143
.142
.200
1.070
1.065
.080
SECTION A-A
.080 REF
.560 REF
.200
.000 R TYP
.020
.031 R TYP
VIEW A-A
.020 R
.000
SECTION D-D
.560 REF
.000 R
.020
1.450
.100
.062 R
.560
.156
.080
32
.440
1.000
1.822
1.802
2.125
.156
.840
.125
.062 R
21.030
.010
8.260
8.264
⊥ -B- .005
.750
.746
.600
.476
.062
1
.000 R 4 PLACES
.020
63
.365
.385
CUTOUT THRU
⊥ -A- .005
.427
.447
.125
.100
2.312
6.745
6.750
6.875
6.870
7.425
7.405
5.625
3.156
2.312
.156
.562
.000 R TYP
.020
.015 R MAX PERMISSIBLE
HORIZONTAL AXIS OF GAGE POINT
5°0'
-A-
.249
.477
.487
.491 (FROM GAGE POINT)
5°0'
-B-
.000 R
.020
1.000
.729
22.755
23.664
23.644
VERTICAL AXIS OF GAGE POINT

NOTES-

1. INTERPRET DRAWING IN ACCORDANCE WITH STANDARDS PRESCRIBED BY MIL-D-70327
2. MAKE FROM NASA DWG 1004150
3. REMOVE BURRS AND BREAK SHARP EDGES .005-.015
4. UNLESS OTHERWISE SPECIFIED, FINISH 125
5. ALL RADII AND FILLETS TO BE 125 UNLESS OTHERWISE SPECIFIED
6. COAT THREADS OF FIND NO. 1 AND FIND NO. 2 WITH MIL-P-8585 WET ZINC CHROMATE PRIMER
7. INSTALL FIND NO. 2 PER ND1002121

1004220 C

INCHES
PHOTOGRAPHIC SCALE ONLY

1004220	C

REVISIONS 02545

SYM	DESCRIPTION	DATE	APPROVAL
A	REVISED PER TDRR 03464	5-26-63	JH
B	REVISED PER TDRR 03636	10-8-63	WK
C	REVISED PER TDRR 6416	10-24-63	WK

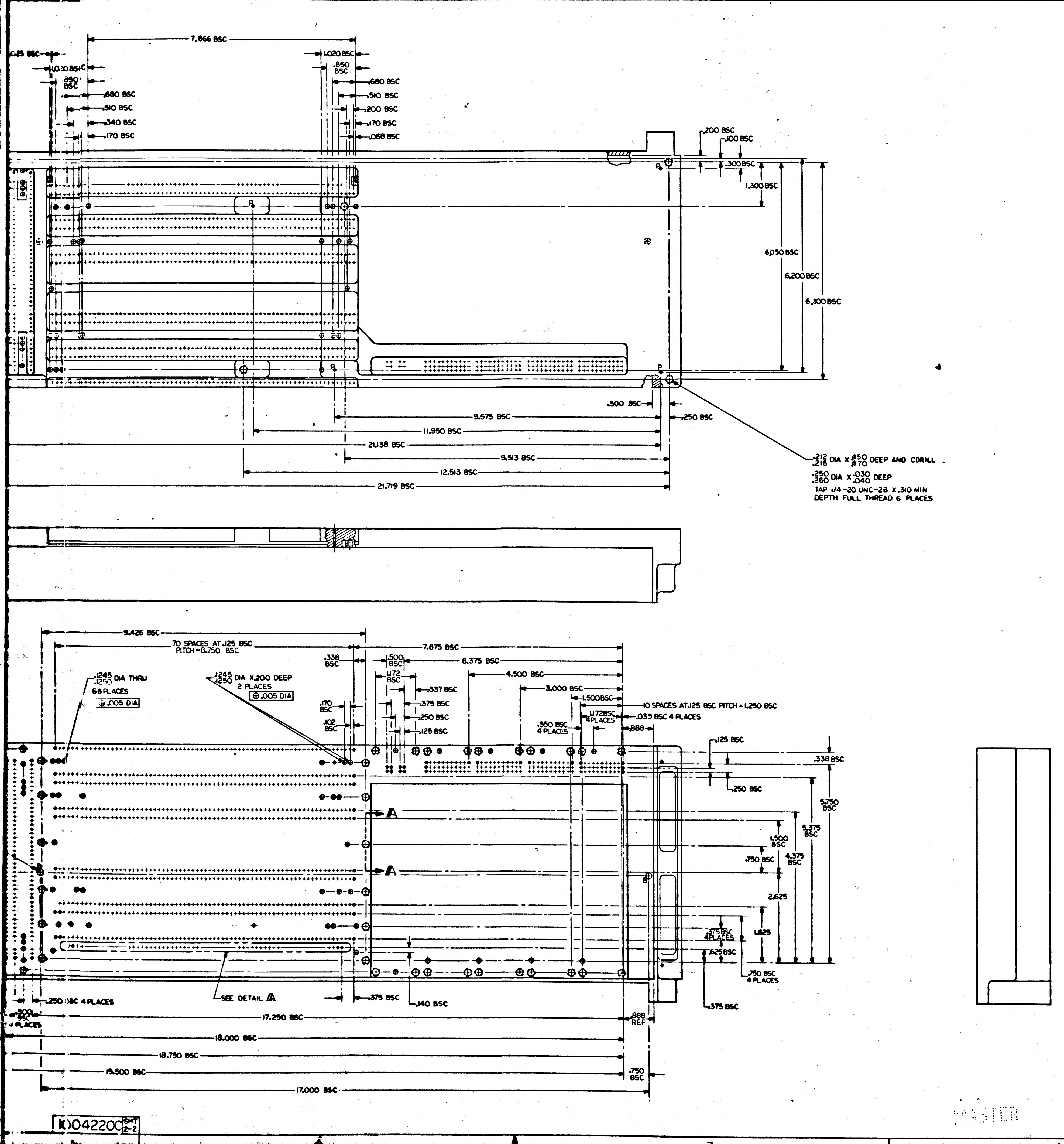

7.866 BSC
1.020 BSC
.850 BSC
.680 BSC
.510 BSC
.340 BSC
.170 BSC
.200 BSC
.068 BSC
.100 BSC
.300 BSC
1.300 BSC
6.050 BSC
6.200 BSC
6.300 BSC
.500 BSC
.250 BSC
9.575 BSC
11.950 BSC
21.138 BSC
9.513 BSC
12.513 BSC
21.719 BSC
.212/.216 DIA X .850/.870 DEEP AND C'DRILL
.250/.260 DIA X .030/.040 DEEP
TAP 1/4-20 UNC-2B X .310 MIN DEPTH FULL THREAD 6 PLACES
9.426 BSC
70 SPACES AT .125 BSC PITCH = 8.750 BSC
7.875 BSC
6.375 BSC
4.500 BSC
3.000 BSC
1.500 BSC
.1245/.1250 DIA THRU 68 PLACES
.005 DIA
.1245/.1250 DIA X .200 DEEP 2 PLACES
.005 DIA
.338 BSC
.500 BSC
.172 BSC
.337 BSC
.375 BSC
.250 BSC
.125 BSC
.170 BSC
.102 BSC
.350 BSC 4 PLACES
1.172 BSC 4 PLACES
10 SPACES AT .125 BSC PITCH = 1.250 BSC
.035 BSC 4 PLACES
.888
.125 BSC
.338 BSC
.250 BSC
5.750 BSC
5.375 BSC
4.375 BSC
1.500 BSC
.750 BSC
2.625
1.625
.375 BSC 4 PLACES
.625 BSC
.750 BSC 4 PLACES
.375 BSC
A
A
SEE DETAIL A
.250 BSC 4 PLACES
.200 BSC 4 PLACES
.375 BSC
.140 BSC
17.250 BSC
.888 REF
18.000 BSC
18.750 BSC
19.500 BSC
.750 BSC
17.000 BSC
4
3
2
D
C
B
A

1004220 C SHT 2-2

MASTER

QTY REQD	PART R IDENTIFYING NO.	NOMENCLATURE OR DESCRIPTION	FIND NO.

LIST OF MATERIALS

1003127	
NEXT ASSY	USED ON
APPLICATION	

UNLESS OTHERWISE SPECIFIED
DIMENSIONS ARE IN INCHES
TOLERANCES ON
FRACTIONS ± — DECIMALS ±.005 ANGLES ±030
DO NOT SCALE THIS DRAWING
MATERIAL —
HEAT TREATMENT —
FINAL FINISH —

MIT
INSTRUMENTATION LAB
CAMBRIDGE, MASS.

DRAWN Mahony DATE 8-10-63
CHECKED
APPROVAL 13 Aug 63
APPROVAL Briggs
NASA APPROVAL
MIT APPROVAL 14 Aug 63

MANNED SPACECRAFT CENTER
HOUSTON, TEXAS

TRAY B
LEFT HAND

CODE IDENT NO. | SIZE | NASA DRAWING NO. 1004220
SCALE 1/1 | WT | SHEET 2 OF 2

INCHES
PHOTOGRAPHIC SCALE ONLY

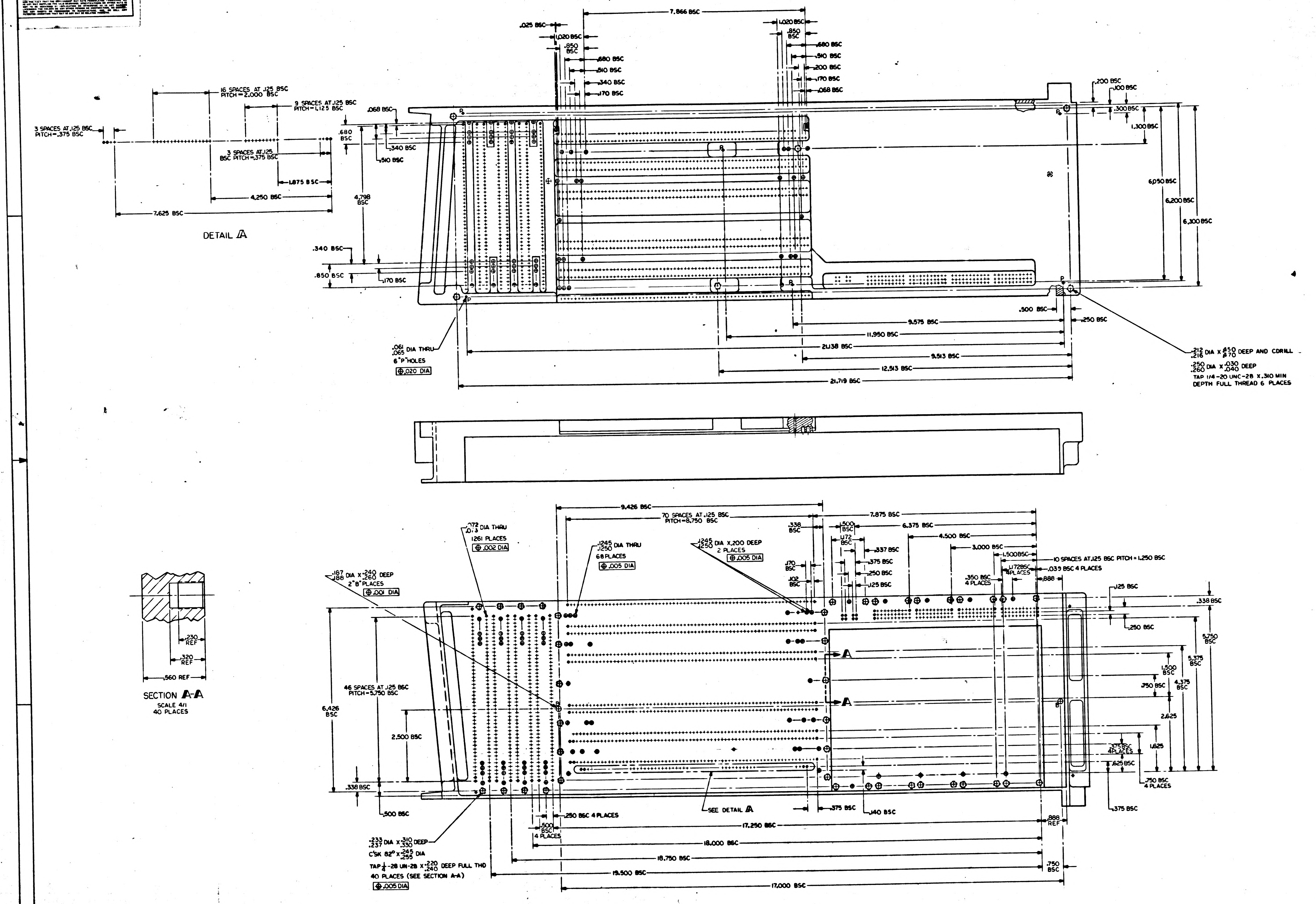
7.866 BSC
.025 BSC
1.020 BSC
.850 BSC
.680 BSC
.510 BSC
.340 BSC
.170 BSC
1.020 BSC
.850 BSC
.680 BSC
.510 BSC
.200 BSC
.170 BSC
.068 BSC
16 SPACES AT .125 BSC PITCH = 2.000 BSC
9 SPACES AT .125 BSC PITCH = 1.125 BSC
3 SPACES AT .125 BSC PITCH = .375 BSC
3 SPACES AT .125 BSC PITCH = .375 BSC
1.875 BSC
4.250 BSC
7.625 BSC
DETAIL A
.068 BSC
.680 BSC
.340 BSC
.510 BSC
4.798 BSC
.340 BSC
.850 BSC
.170 BSC
P
.200 BSC
.100 BSC
.300 BSC
1.300 BSC
6.050 BSC
6.200 BSC
6.300 BSC
.500 BSC
.250 BSC
9.575 BSC
11.950 BSC
21.138 BSC
9.513 BSC
12.513 BSC
21.719 BSC
.061 .065 DIA THRU
6 "P" HOLES
⊕ .020 DIA
.212 .216 DIA X .450 .470 DEEP AND CDRILL
.250 .260 DIA X .030 .040 DEEP
TAP 1/4-20 UNC-2B X .310 MIN DEPTH FULL THREAD 6 PLACES
9.426 BSC
70 SPACES AT .125 BSC PITCH = 8.750 BSC
7.875 BSC
.072 .073 DIA THRU
1261 PLACES
⊕ .002 DIA
.1245 .1250 DIA THRU
68 PLACES
⊕ .005 DIA
.1245 .1250 DIA X .200 DEEP
2 PLACES
⊕ .005 DIA
.338 BSC
.500 BSC
1.172 BSC
6.375 BSC
4.500 BSC
3.000 BSC
1.500 BSC
10 SPACES AT .125 BSC PITCH = 1.250 BSC
.337 BSC
.375 BSC
.250 BSC
.125 BSC
.170 BSC
.102 BSC
.350 BSC 4 PLACES
1.172 BSC 4 PLACES
.039 BSC 4 PLACES
.888
.187 .188 DIA X .240 .260 DEEP
2 "B" PLACES
⊕ .001 DIA
.230 REF
.320 REF
.560 REF
SECTION A-A
SCALE 4/1
40 PLACES
46 SPACES AT .125 BSC PITCH = 5.750 BSC
6.426 BSC
2.500 BSC
.338 BSC
.500 BSC
A
A
B
.125 BSC
.338 BSC
.250 BSC
5.750 BSC
5.375 BSC
1.500 BSC
.750 BSC
4.375 BSC
2.625
1.625
.375 BSC 4 PLACES
.625 BSC
.750 BSC 4 PLACES
.375 BSC
.250 BSC 4 PLACES
.500 BSC 4 PLACES
SEE DETAIL A
.375 BSC
.140 BSC
17.250 BSC
.888 REF
18.000 BSC
18.750 BSC
.750 BSC
19.500 BSC
17.000 BSC
.233 .237 DIA X .310 .330 DEEP
C'SK 82° X .245 .255 DIA
TAP 1/4-28 UN-2B X .220 .240 DEEP FULL THD
40 PLACES (SEE SECTION A-A)
⊕ .005 DIA
6
5
4
3

1004220C SHT 2-2

SYM	DESCRIPTION	DATE	APPROVAL
A	REVISED PER TDRR 03464	9-26-63	WK
B	REVISED PER TDRR 03636	10-3-63	WK
C	REVISED PER TDRR 04161	10-31-63	WK
D	REVISED PER TDRR 04347	[illegible]	WK

REVISIONS 02545

1004220 D

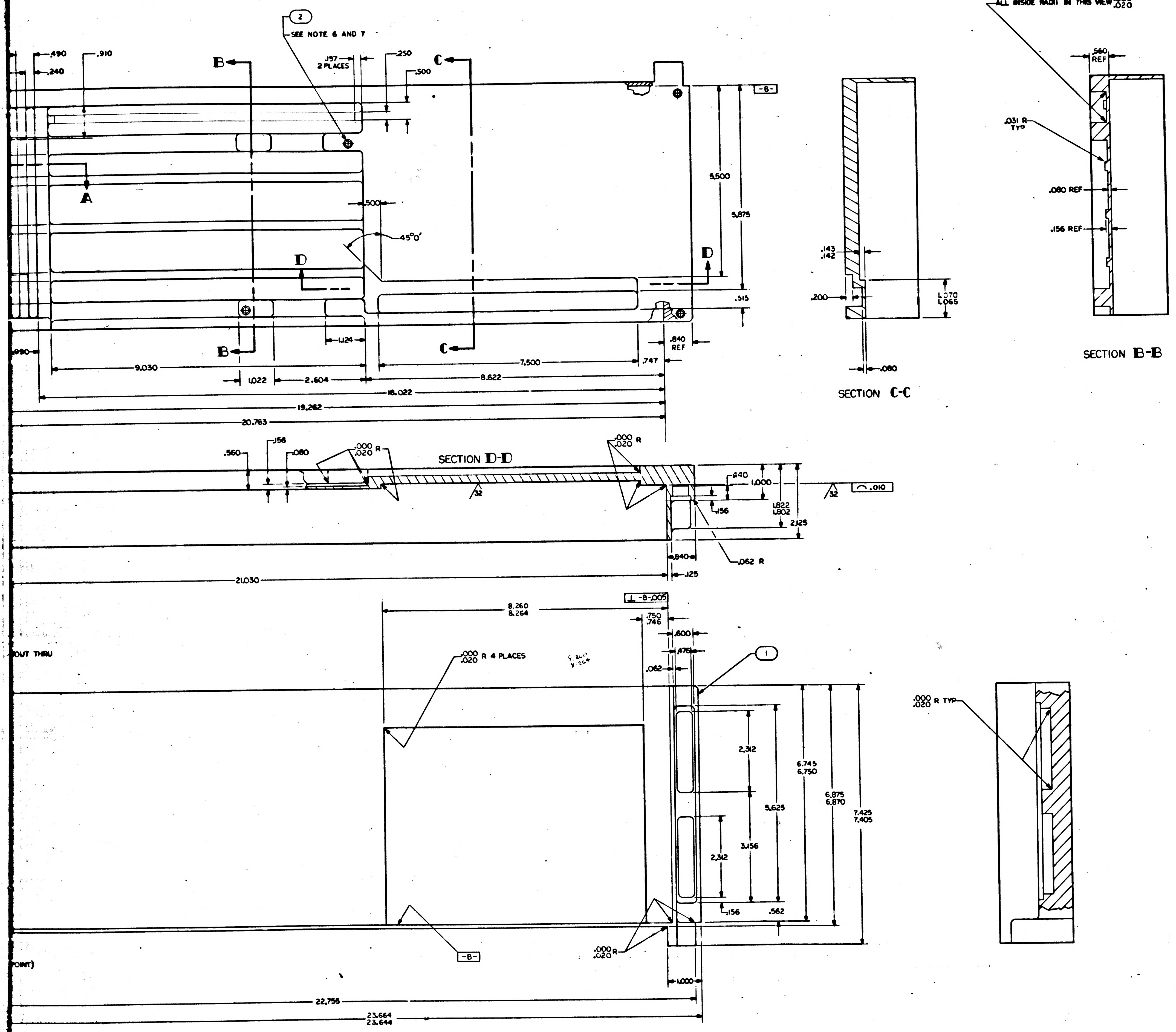

SEE NOTE 6 AND 7
②
ALL INSIDE RADII IN THIS VIEW .000 .020
.490
.910
.240
.157 2 PLACES
.250
.500
B
C
A
D
-B-
5.500
5.875
.500
45°0'
.515
1.124
.840 REF
.747
.980
9.030
7.500
1.022
2.604
8.622
18.022
19.262
20.763
.143 .142
.200
1.070 1.065
.080
SECTION C-C
.560 REF
.031 R TYP
.080 REF
.156 REF
SECTION B-B
.560
.156
.080
.000 .020 R
SECTION D-D
32
.440
1.000
1.822 1.802
2.125
.156
.062 R
.840
.125
21.030
⌒ .010
⊥ -B- .005
8.260 8.264
.750 .746
.600
.476
.062
①
.000 .020 R 4 PLACES
.000 .020 R TYP
2.312
5.625
3.156
2.312
6.745 6.750
6.875 6.870
7.425 7.405
.156
.562
-B-
.000 .020 R
1.000
22.755
23.664 23.644
OUT THRU
POINT)
POINT

MASTER

FIND NO.	QTY REQD	PART OR IDENTIFYING NO.	NOMENCLATURE OR DESCRIPTION
2	6	NAS1394CA-08L	INSERT, THREADED, SELF LOCKING
1	1	1004220-1	TRAY B- LEFT HAND

LIST OF MATERIALS

NEXT ASSY	USED ON
1003127	

APPLICATION

UNLESS OTHERWISE SPECIFIED DIMENSIONS ARE IN INCHES
TOLERANCES ON
FRACTIONS ± DECIMALS ±.005 ANGLES ±0 30
DO NOT SCALE THIS DRAWING
MATERIAL SEE NOTE 3
HEAT TREATMENT —
FINAL FINISH —

MIT INSTRUMENTATION LAB
CAMBRIDGE, MASS.

DRAWN Mahoney DATE 7-30-63
CHECKED
APPROVAL 13 Aug 63
APPROVAL
NASA APPROVAL
MIT APPROVAL 14 Aug 63

MANNED SPACECRAFT CENTER
HOUSTON, TEXAS

TRAY B LEFT HAND

CODE IDENT NO.
SIZE J
NASA DRAWING NO. 1004220
SCALE 1/1
WT
SHEET 1 OF 2

1004220 D

1004220D

F-2

NOTICE -- WHEN GOVERNMENT DRAWINGS, SPECIFICATIONS, OR OTHER DATA ARE USED FOR ANY PURPOSE OTHER THAN IN CONNECTION WITH A DEFINITELY RELATED GOVERNMENT PROCUREMENT OPERATION, THE UNITED STATES GOVERNMENT THEREBY INCURS NO RESPONSIBILITY NOR ANY OBLIGATION WHATSOEVER, AND THE FACT THAT THE GOVERNMENT MAY HAVE FORMULATED, FURNISHED, OR IN ANY WAY SUPPLIED THE SAID DRAWINGS, SPECIFICATIONS OR OTHER DATA IS NOT TO BE REGARDED BY IMPLICATION OR OTHERWISE AS IN ANY MANNER LICENSING THE HOLDER OR ANY OTHER PERSON OR CORPORATION, OR CONVEYING ANY RIGHTS OR PERMISSION TO MANUFACTURE, USE, OR SELL ANY PATENTED INVENTION THAT MAY IN ANY WAY BE RELATED THERETO.

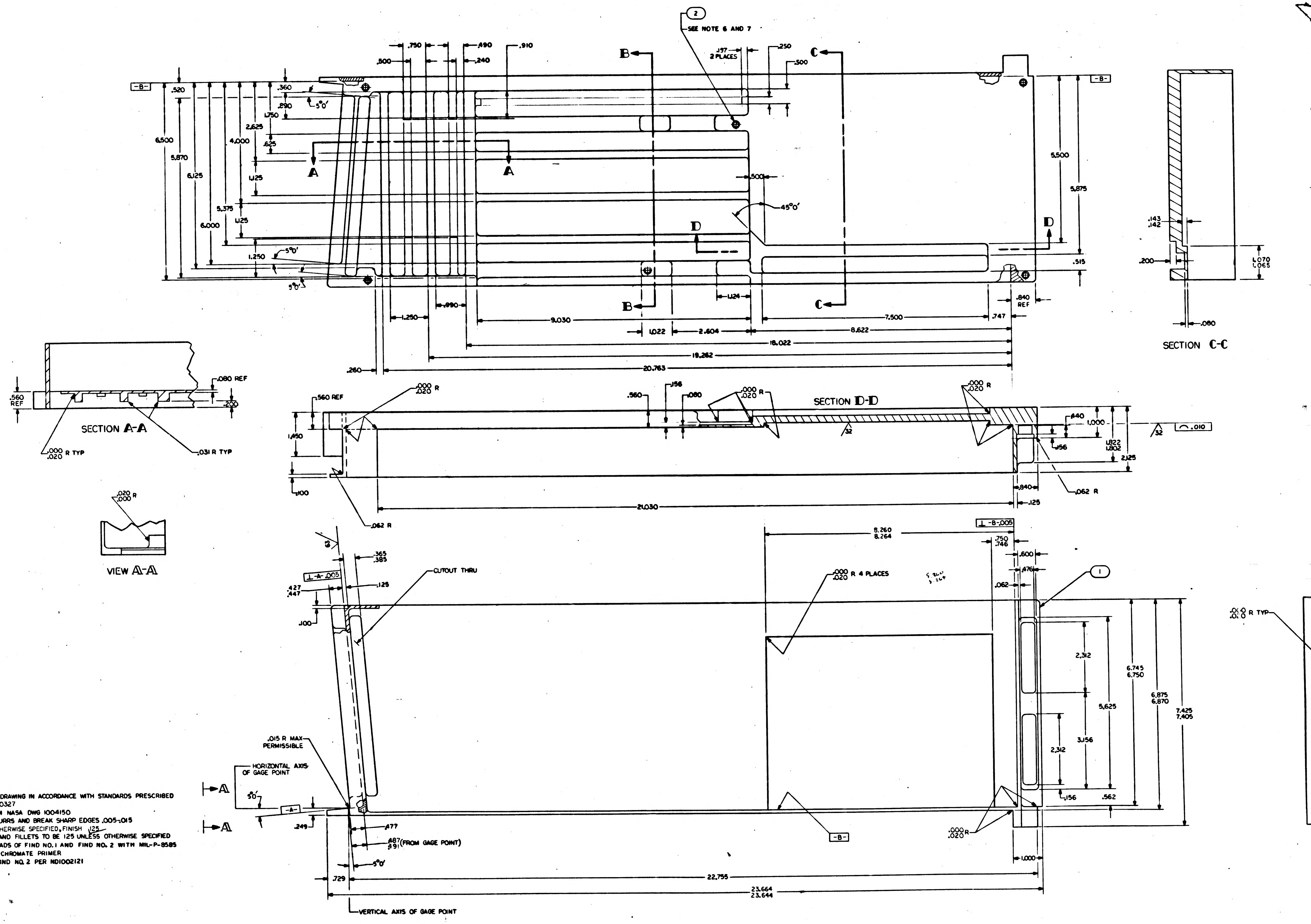
6
5
4
3
D
C
B
A
(2)
SEE NOTE 6 AND 7
-B-
.520
.360
.890
5°0'
1.750
2.625
.625
6.500
5.870
6.125
4.000
1.125
5.375
6.000
1.125
1.250
5°0'
5°0'
.500
.750
.490
.240
.910
A
A
B
B
C
C
D
D
.197
2 PLACES
.250
.500
.500
45°0'
5.500
5.875
.515
.840
REF
1.250
.990
1.124
9.030
7.500
.747
1.022
2.604
8.622
18.022
19.262
.260
20.763
SECTION C-C
.143
.142
.200
1.070
1.065
.080
.080 REF
.560
REF
.200
SECTION A-A
.000
.020 R TYP
.031 R TYP
.020
.000 R
VIEW A-A
.560 REF
.000
.020 R
1.450
.100
.062 R
.560
.156
.080
.000
.020 R
SECTION D-D
32
.000
.020 R
.440
1.000
1.822
1.802
.156
2.125
32
.010
.840
.125
.062 R
21.030
⊥ -B- .005
8.260
8.264
.750
.746
.600
.476
.062
(1)
.000
.020 R 4 PLACES
.365
.385
⊥ -A- .005
.427
.447
.125
.100
CUTOUT THRU
2.312
5.625
3.156
2.312
.156
.562
6.745
6.750
6.875
6.870
7.425
7.405
.000
.020 R TYP
.015 R MAX
PERMISSIBLE
HORIZONTAL AXIS
OF GAGE POINT
5°0'
-A-
.249
.477
.487
.491 (FROM GAGE POINT)
5°0'
-B-
.000
.020 R
1.000
.729
22.755
23.664
23.644
VERTICAL AXIS OF GAGE POINT

NOTES-

1. INTERPRET DRAWING IN ACCORDANCE WITH STANDARDS PRESCRIBED BY MIL-D-70327
2. MAKE FROM NASA DWG 1004150
3. REMOVE BURRS AND BREAK SHARP EDGES .005-.015
4. UNLESS OTHERWISE SPECIFIED, FINISH 125
5. ALL RADII AND FILLETS TO BE 125 UNLESS OTHERWISE SPECIFIED
6. COAT THREADS OF FIND NO. 1 AND FIND NO. 2 WITH MIL-P-8585 WET ZINC CHROMATE PRIMER
7. INSTALL FIND NO. 2 PER ND1002121

1004220 D

SYM	REVISIONS D2545 DESCRIPTION	DATE	APPROVAL
A	REVISED PER TDRR 03464	5-26-63	[illegible]
B	REVISED PER TDRR 03536	[illegible]	[illegible]
C	REVISED PER TDRR 04161	10-24-63	[illegible]
D	REVISED PER TDRP. 04307	10-30-63	[illegible]

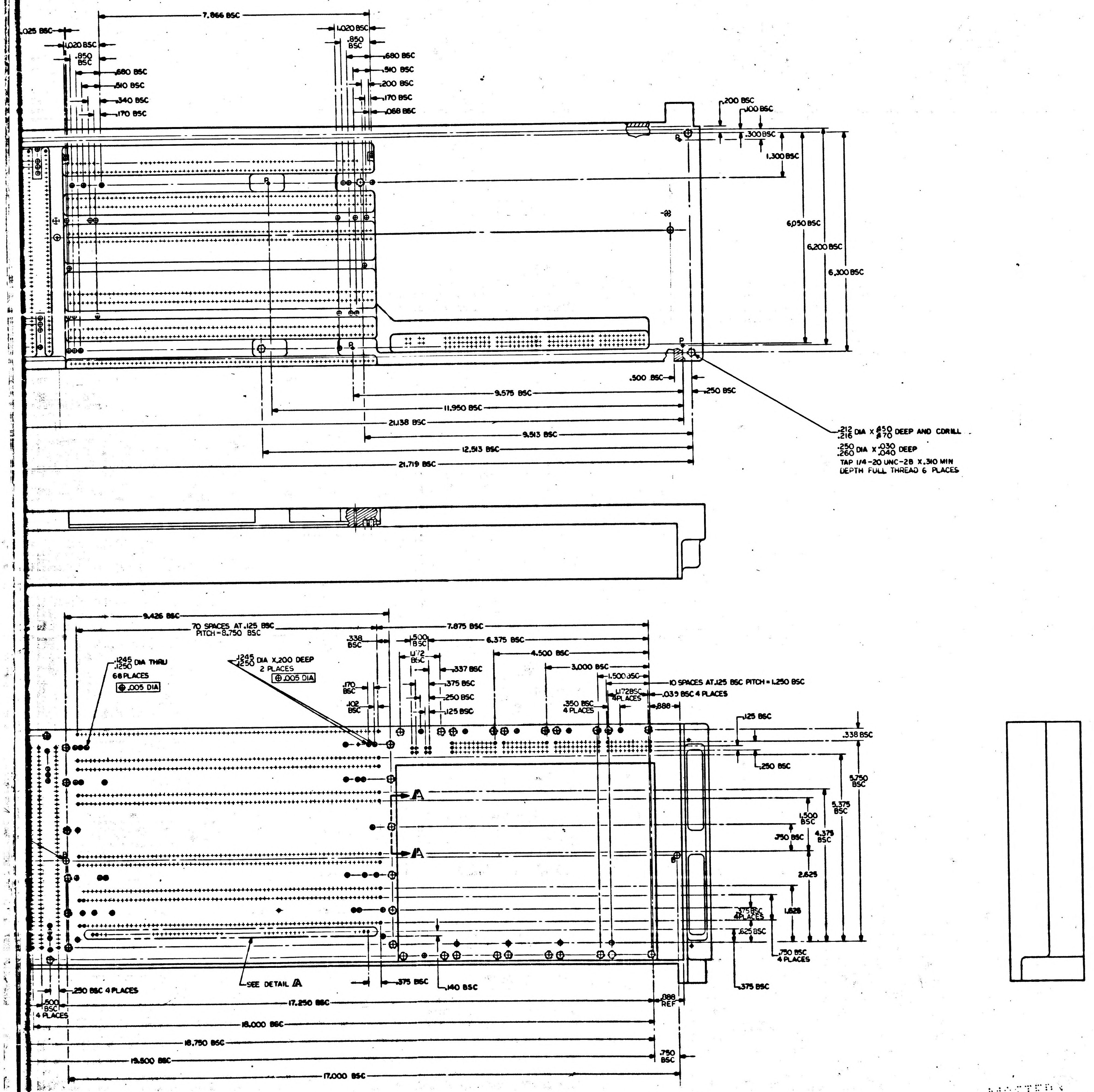
7.866 BSC
.025 BSC
1.020 BSC
.850 BSC
.680 BSC
.510 BSC
.340 BSC
.170 BSC
.200 BSC
.068 BSC
.100 BSC
.300 BSC
1.300 BSC
6.050 BSC
6.200 BSC
6.300 BSC
9.575 BSC
.500 BSC
.250 BSC
11.950 BSC
21.138 BSC
9.513 BSC
12.513 BSC
21.719 BSC
.212/.216 DIA X .450/.470 DEEP AND CDRILL
.250/.260 DIA X .030/.040 DEEP
TAP 1/4-20 UNC-2B X.310 MIN
DEPTH FULL THREAD 6 PLACES
9.426 BSC
70 SPACES AT .125 BSC
PITCH = 8.750 BSC
7.875 BSC
.338 BSC
.500 BSC
6.375 BSC
1.172 BSC
4.500 BSC
.337 BSC
.1245/.1250 DIA THRU
68 PLACES
⊕ .005 DIA
.1245/.1250 DIA X.200 DEEP
2 PLACES
⊕ .005 DIA
3.000 BSC
.170 BSC
.375 BSC
1.500 BSC
10 SPACES AT .125 BSC PITCH = 1.250 BSC
.102 BSC
.250 BSC
.125 BSC
1.172 BSC 4 PLACES
.039 BSC 4 PLACES
.350 BSC 4 PLACES
.888
.125 BSC
.338 BSC
.250 BSC
5.750 BSC
5.375 BSC
1.500 BSC
.750 BSC
4.375 BSC
2.625
1.625
.375 BSC 4 PLACES
.625 BSC
.750 BSC 4 PLACES
.375 BSC
A
A
B
SEE DETAIL A
.375 BSC
.140 BSC
.250 BSC 4 PLACES
.500 BSC 4 PLACES
17.250 BSC
.088 REF
18.000 BSC
18.750 BSC
.750 BSC
19.500 BSC
17.000 BSC

1004220D SHT 2-2

MASTER

QTY REQD	PART & IDENTIFYING NO.	NOMENCLATURE OR DESCRIPTION	FIND NO.

LIST OF MATERIALS

1003127	
NEXT ASSY	USED ON
APPLICATION	

UNLESS OTHERWISE SPECIFIED
DIMENSIONS ARE IN INCHES
TOLERANCES ON
FRACTIONS ± — DECIMALS ±.005 ANGLES ±030
DO NOT SCALE THIS DRAWING
MATERIAL —
HEAT TREATMENT —
FINAL FINISH —

MIT
INSTRUMENTATION LAB
CAMBRIDGE, MASS.
DRAWN Mahoney DATE 5-10-63
CHECKED
APPROVAL [illegible] 13 Aug 63
APPROVAL [illegible]
NASA APPROVAL Jack Barnard
MIT APPROVAL W Kupfer 14 Aug 63

MANNED SPACECRAFT CENTER
HOUSTON, TEXAS

TRAY B
LEFT HAND

CODE IDENT NO. | SIZE | NASA DRAWING NO. 1004220
SCALE 1/1 | WT | SHEET 2 OF 2

1004220 D

F-2

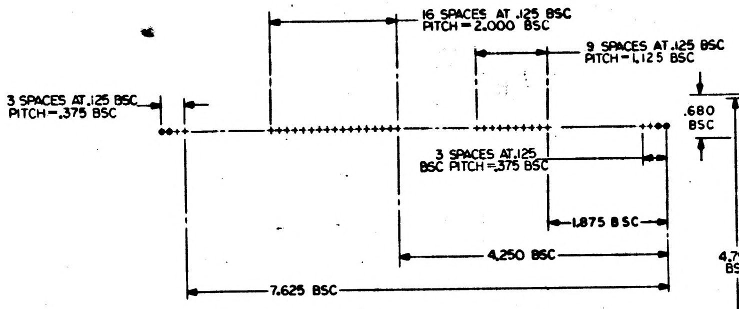
16 SPACES AT .125 BSC PITCH = 2.000 BSC
9 SPACES AT .125 BSC PITCH = 1.125 BSC
3 SPACES AT .125 BSC PITCH = .375 BSC
3 SPACES AT .125 BSC PITCH = .375 BSC
1.875 BSC
4.250 BSC
7.625 BSC

DETAIL A

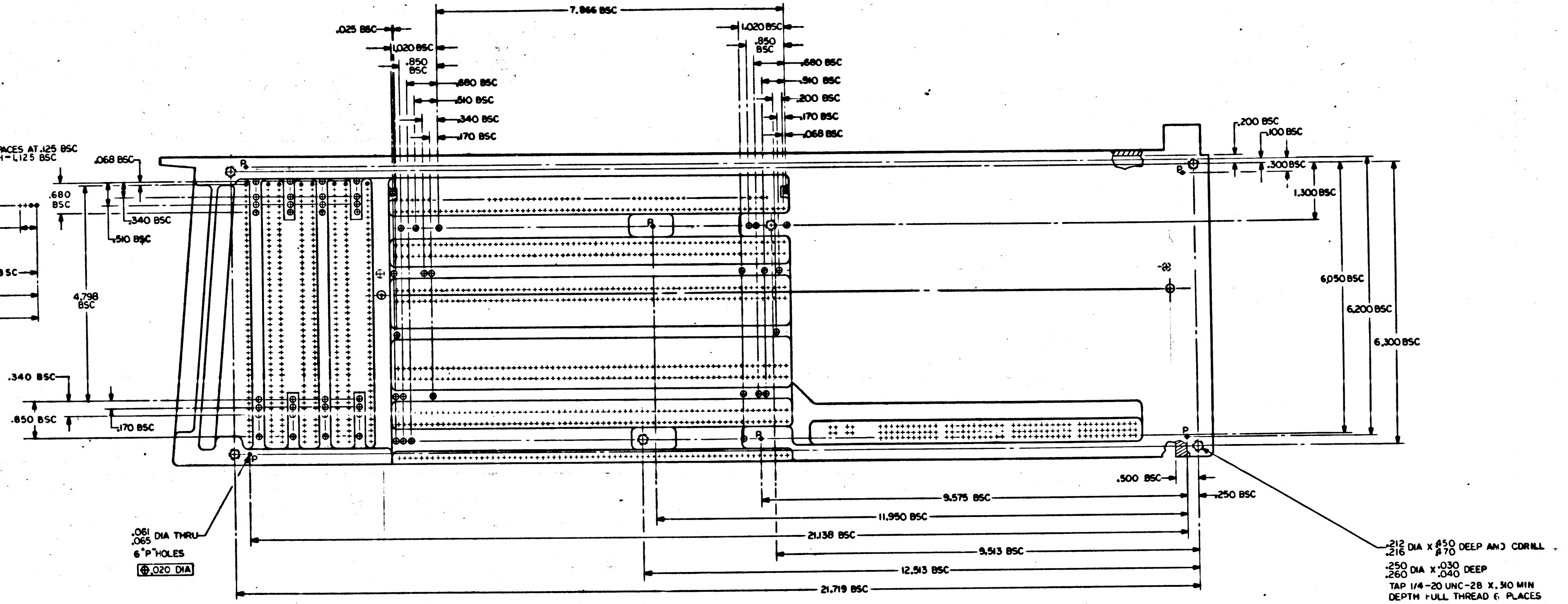
7.866 BSC
.025 BSC
1.020 BSC
.850 BSC
.680 BSC
.510 BSC
.340 BSC
.170 BSC
1.020 BSC
.850 BSC
.680 BSC
.510 BSC
.200 BSC
.170 BSC
.068 BSC
.200 BSC
.100 BSC
.300 BSC
1.300 BSC
.068 BSC
.680 BSC
.340 BSC
.510 BSC
4.798 BSC
.340 BSC
.850 BSC
.170 BSC
6.050 BSC
6.200 BSC
6.300 BSC
.500 BSC
.250 BSC
9.575 BSC
11.950 BSC
21.138 BSC
9.513 BSC
12.513 BSC
21.719 BSC
.061 .065 DIA THRU
6 "P" HOLES
⊕ .020 DIA
.212 .216 DIA X .450 .470 DEEP AND CDRILL
.250 .260 DIA X .030 .040 DEEP
TAP 1/4-20 UNC-2B X .310 MIN DEPTH FULL THREAD 6 PLACES

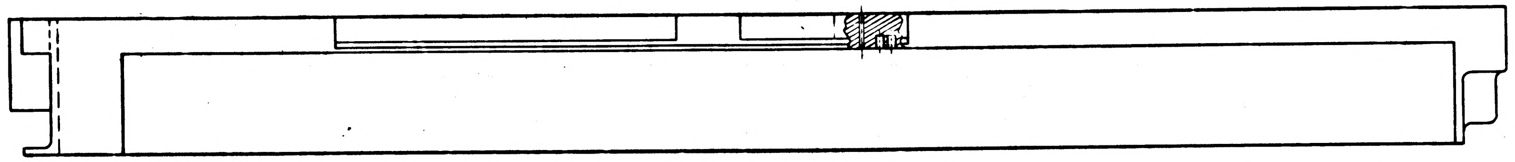

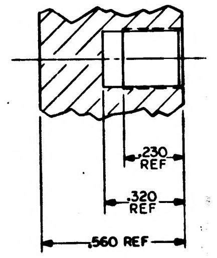
.230 REF
.320 REF
.560 REF

SECTION A-A
SCALE 4/1
40 PLACES

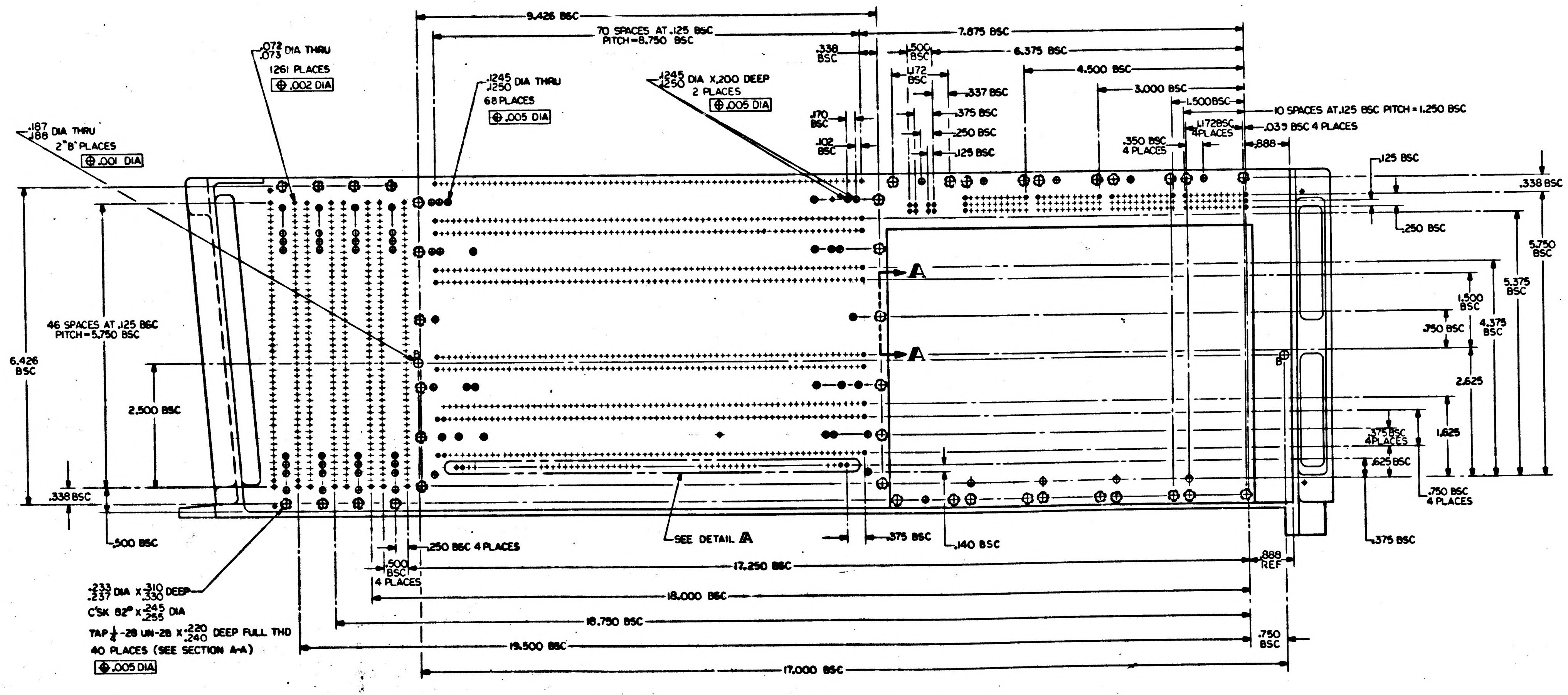
9.426 BSC
70 SPACES AT .125 BSC PITCH = 8.750 BSC
7.875 BSC
.338 BSC
.500 BSC
6.375 BSC
1.172 BSC
4.500 BSC
.337 BSC
3.000 BSC
.375 BSC
1.500 BSC
.250 BSC
.125 BSC
10 SPACES AT .125 BSC PITCH = 1.250 BSC
.039 BSC 4 PLACES
.350 BSC 4 PLACES
1.1728 BSC 4 PLACES
.888
.125 BSC
.338 BSC
.072 .073 DIA THRU
1261 PLACES
⊕ .002 DIA
.1245 .1250 DIA THRU
68 PLACES
⊕ .005 DIA
.1245 .1250 DIA X .200 DEEP
2 PLACES
⊕ .005 DIA
.187 .188 DIA THRU
2 "B" PLACES
⊕ .001 DIA
.170 BSC
.102 BSC
A
A
.250 BSC
5.750 BSC
5.375 BSC
1.500 BSC
.750 BSC
4.375 BSC
2.625
1.625
.375 BSC 4 PLACES
.625 BSC
.750 BSC 4 PLACES
.375 BSC
46 SPACES AT .125 BSC PITCH = 5.750 BSC
6.426 BSC
2.500 BSC
.338 BSC
.500 BSC
.250 BSC 4 PLACES
.500 BSC 4 PLACES
SEE DETAIL A
.375 BSC
.140 BSC
17.250 BSC
.888 REF
18.000 BSC
18.750 BSC
19.500 BSC
.750 BSC
17.000 BSC
.233 .237 DIA X .310 .330 DEEP
C'SK 82° X .245 .255 DIA
TAP 1/4-28 UN-2B X .220 .240 DEEP FULL THD
40 PLACES (SEE SECTION A-A)
⊕ .005 DIA

1004220D SHT 2-2

1004220 E

SYM	DESCRIPTION	DATE	APPROVAL
A	REVISED PER TDRR 03464	7-26-63	WK
B	REVISED PER TDRR 03636	8-7-63	WK
C	REVISED PER TDRR 04161	11-14-63	WK
D	REVISED PER TDRR 04347	[illegible]	WK
E	REVISED PER TDRR 04524	[illegible]	WK

REVISIONS 02545

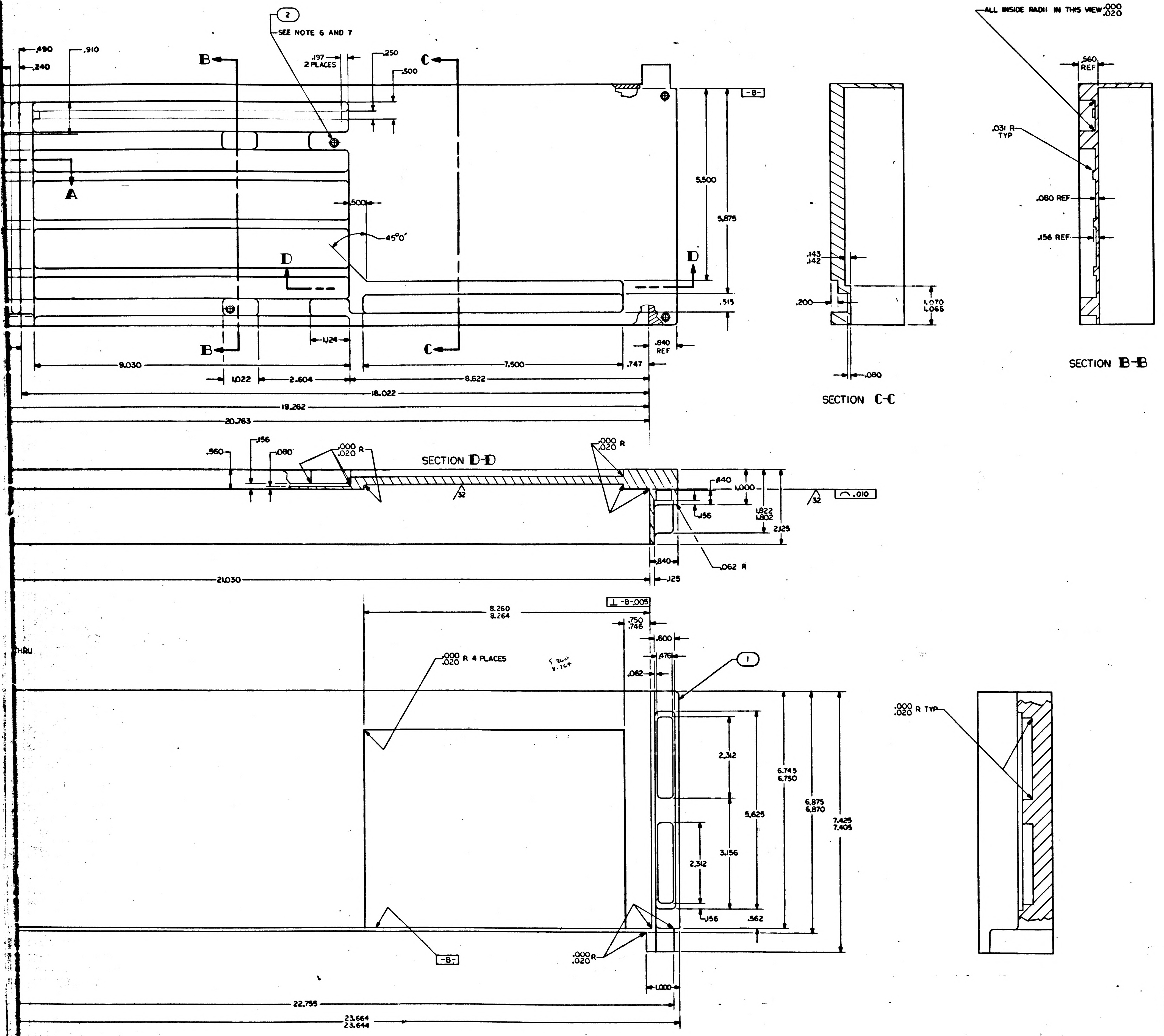

② SEE NOTE 6 AND 7
ALL INSIDE RADII IN THIS VIEW .000 .020
.490
.240
.910
.197 2 PLACES
.250
.500
B
C
A
D
.500
45°0'
5.500
5.875
.515
.840 REF
1.124
9.030
1.022
2.604
8.622
7.500
.747
18.022
19.262
20.763
-B-
.143 .142
.200
1.070 1.065
.080
SECTION C-C
.560 REF
.031 R TYP
.080 REF
.156 REF
SECTION B-B
.560
.156
.080
.000 .020 R
SECTION D-D
32
.840
1.000
1.822 1.802
2.125
.156
.062 R
.125
21.030
⌒ .010
8.260 8.264
⊥ -B- .005
.750 .746
.600
.476
.062
.000 .020 R 4 PLACES
①
2.312
3.156
5.625
6.745 6.750
6.875 6.870
7.425 7.405
.156
.562
.000 .020 R TYP
.000 .020 R
1.000
22.755
23.664 23.644

6	NAS1394CA-08L	INSERT, THREADED, SELF LOCKING	2
1	1004220-1	TRAY B - LEFT HAND	1
QTY REQD	PART OR IDENTIFYING NO.	NOMENCLATURE OR DESCRIPTION	FIND NO.

LIST OF MATERIALS

1003127	
NEXT ASSY	USED ON
APPLICATION	

UNLESS OTHERWISE SPECIFIED DIMENSIONS ARE IN INCHES
TOLERANCES ON
FRACTIONS ± DECIMALS ±.005 ANGLES ±0°30'
DO NOT SCALE THIS DRAWING
MATERIAL SEE NOTE 3
HEAT TREATMENT —
FINAL FINISH —

MIT INSTRUMENTATION LAB
CAMBRIDGE, MASS.
DWG. NO. CONTRACT
DRAWN Mahoney DATE 2-30-63
CHECKED
APPROVAL 13-4-63
APPROVAL Duggan
NASA APPROVAL
MIT APPROVAL

MANNED SPACECRAFT CENTER
HOUSTON, TEXAS

TRAY B
LEFT HAND

CODE IDENT NO. SIZE J NASA DRAWING NO. 1004220
SCALE 1/1 WT SHEET 1 OF 2

1004220 E

1004220E

PHOTOGRAPHIC SCALE ONLY

F2

NOTICE — WHEN GOVERNMENT DRAWINGS, SPECIFICATIONS, OR OTHER DATA ARE USED FOR ANY PURPOSE OTHER THAN IN CONNECTION WITH A DEFINITELY RELATED GOVERNMENT PROCUREMENT OPERATION, THE UNITED STATES GOVERNMENT THEREBY INCURS NO RESPONSIBILITY NOR ANY OBLIGATION WHATSOEVER; AND THE FACT THAT THE GOVERNMENT MAY HAVE FORMULATED, FURNISHED, OR IN ANY WAY SUPPLIED THE SAID DRAWINGS, SPECIFICATIONS, OR OTHER DATA IS NOT TO BE REGARDED BY IMPLICATION OR OTHERWISE AS IN ANY MANNER LICENSING THE HOLDER OR ANY OTHER PERSON OR CORPORATION, OR CONVEYING ANY RIGHTS OR PERMISSION TO MANUFACTURE, USE, OR SELL ANY PATENTED INVENTION THAT MAY IN ANY WAY BE RELATED THERETO.

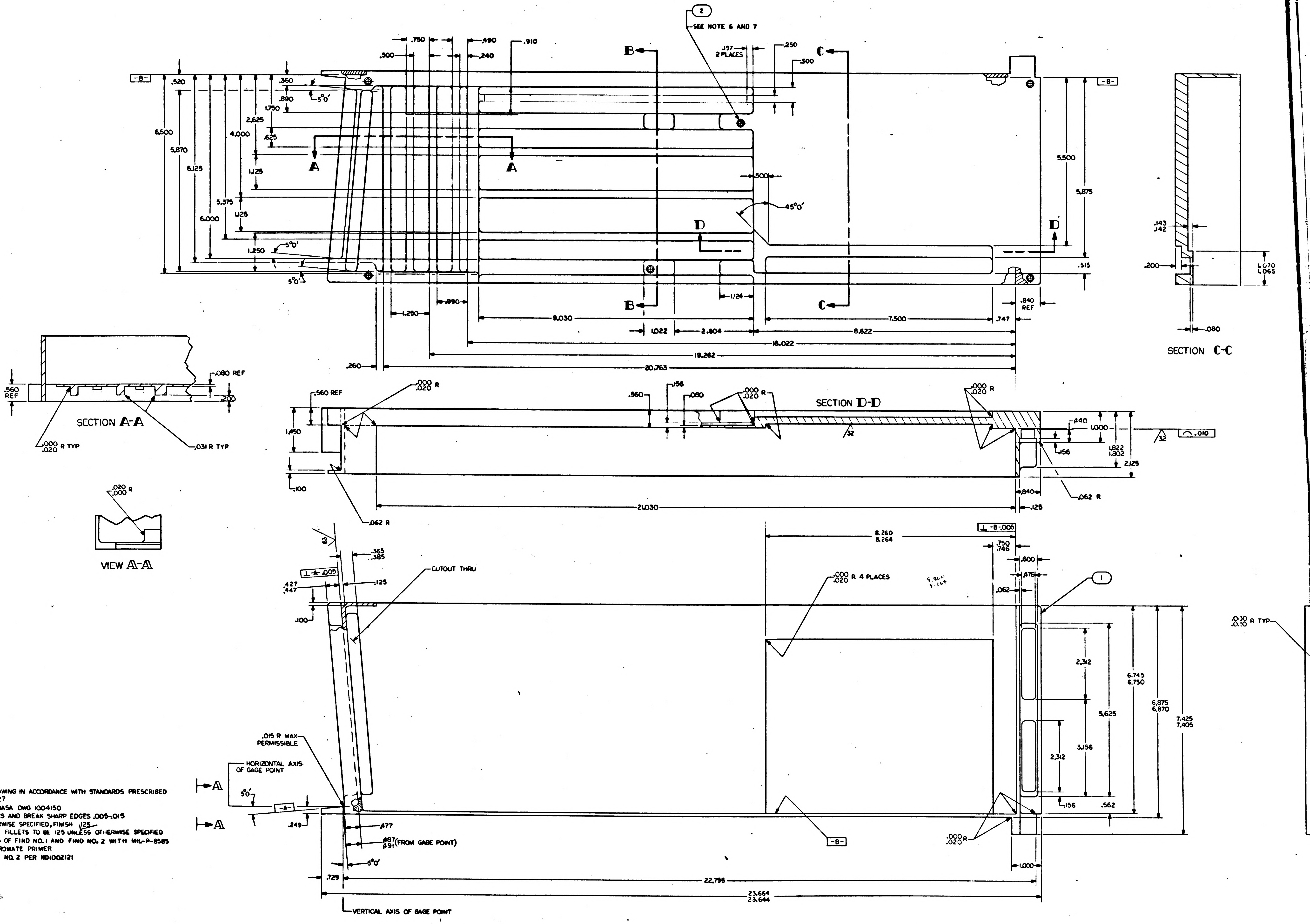

SEE NOTE 6 AND 7
2
1
B
C
A
D
.750
.490
.910
.500
.240
.197
2 PLACES
.250
.500
-B-
.520
.360
.890
5°0'
1.750
2.625
.625
4.000
6.500
5.870
6.125
1.125
5.375
1.125
6.000
1.250
5°0'
.500
45°0'
5.500
5.875
.515
1.124
.840 REF
1.250
.890
9.030
1.022
2.604
7.500
.747
8.622
18.022
19.262
.260
20.763
SECTION C-C
.143
.142
.200
1.070
1.065
.080
SECTION A-A
.080 REF
.560 REF
.200
.000 R TYP
.020
.031 R TYP
VIEW A-A
.020 R
.000
SECTION D-D
.560 REF
1.450
.100
.000 R
.020
.560
.156
.080
32
.440
1.000
1.822
1.802
2.125
.156
.010
.840
.062 R
.125
21.030
.062 R
8.260
8.264
⊥ -B- .005
.750
.746
.600
.476
.062
.365
.385
63
.427
.447
⊥ -A- .005
.125
.100
CUTOUT THRU
.000 R 4 PLACES
.020
2.312
5.625
3.156
2.312
.156
.562
6.745
6.750
6.875
6.870
7.425
7.405
.030 R TYP
.010
.015 R MAX PERMISSIBLE
HORIZONTAL AXIS OF GAGE POINT
5°0'
-A-
.249
.477
.487
.491 (FROM GAGE POINT)
5°0'
.000
.020 R
-B-
1.000
.729
22.755
23.664
23.644
VERTICAL AXIS OF GAGE POINT

NOTES-

1. INTERPRET DRAWING IN ACCORDANCE WITH STANDARDS PRESCRIBED BY MIL-D-70327
2. MAKE FROM NASA DWG 1004150
3. REMOVE BURRS AND BREAK SHARP EDGES .005-.015
4. UNLESS OTHERWISE SPECIFIED, FINISH 125
5. ALL RADII AND FILLETS TO BE 125 UNLESS OTHERWISE SPECIFIED
6. COAT THREADS OF FIND NO. 1 AND FIND NO. 2 WITH MIL-P-8585 WET ZINC CHROMATE PRIMER
7. INSTALL FIND NO. 2 PER ND1002121

1004220E

INCHES 0 1 2
PHOTOGRAPHIC SCALE ONLY

1004220 E

SYM	REVISIONS 02545 DESCRIPTION	DATE	APPROVAL
A	REVISED PER TDRR 03464	8-26-63	JH
B	REVISED PER TDRR 03636	10-3-63	WK
C	REVISED PER TDRR 04161	10-20-63	
D	REVISED PER TDRR 04347	10-30-63	
E	REVISED PER TDRR 04524		

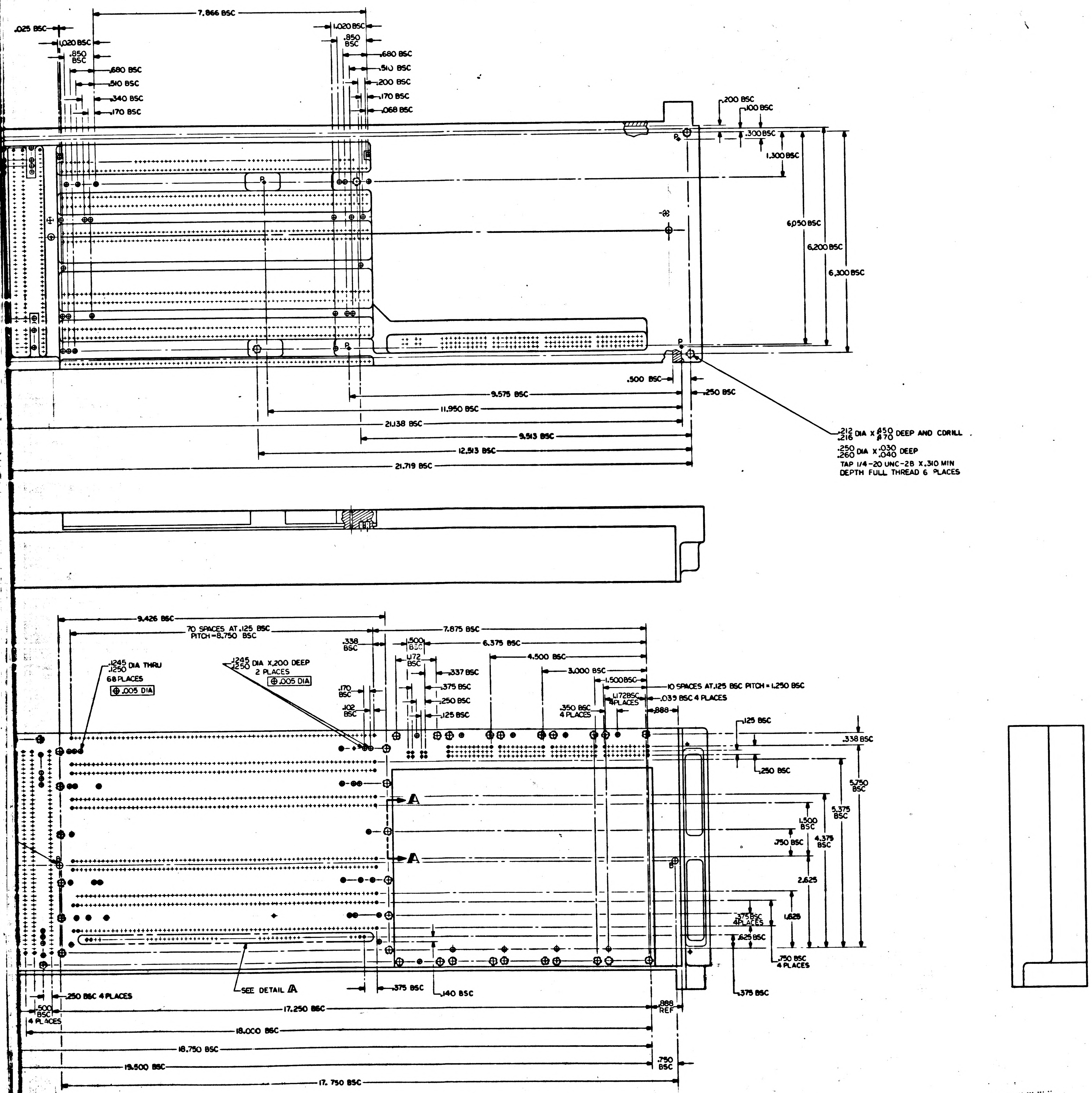

7.866 BSC
.025 BSC
1.020 BSC
.850 BSC
.680 BSC
.510 BSC
.340 BSC
.170 BSC
1.020 BSC
.850 BSC
.680 BSC
.510 BSC
.200 BSC
.170 BSC
.068 BSC
.200 BSC
.100 BSC
.300 BSC
1.300 BSC
6.050 BSC
6.200 BSC
6.300 BSC
P
P
P
.500 BSC
.250 BSC
9.575 BSC
11.950 BSC
21.138 BSC
9.513 BSC
12.513 BSC
21.719 BSC
9.426 BSC
70 SPACES AT .125 BSC PITCH = 8.750 BSC
.1245 .1250 DIA THRU 68 PLACES ⊕ .005 DIA
.1245 .1250 DIA X .200 DEEP 2 PLACES ⊕ .005 DIA
.338 BSC
.170 BSC
.102 BSC
.500 BSC
1.172 BSC
.337 BSC
.375 BSC
.250 BSC
.125 BSC
7.875 BSC
6.375 BSC
4.500 BSC
3.000 BSC
1.500 BSC
10 SPACES AT .125 BSC PITCH = 1.250 BSC
1.172 BSC 4 PLACES
.039 BSC 4 PLACES
.350 BSC 4 PLACES
.888
.125 BSC
.338 BSC
.250 BSC
5.750 BSC
5.375 BSC
1.500 BSC
4.375 BSC
.750 BSC
2.625
1.625
.375 BSC 4 PLACES
.625 BSC
.750 BSC 4 PLACES
.375 BSC
A
A
B
SEE DETAIL A
.375 BSC
.140 BSC
.250 BSC 4 PLACES
.500 BSC 4 PLACES
17.250 BSC
.888 REF
18.000 BSC
18.750 BSC
19.500 BSC
.750 BSC
17.750 BSC

.212 .216 DIA X .450 .470 DEEP AND CDRILL
.250 .260 DIA X .030 .040 DEEP
TAP 1/4-20 UNC-2B X .310 MIN
DEPTH FULL THREAD 6 PLACES

1004220E SHT 2-2

MASTER

QTY REQD	PART OR IDENTIFYING NO.	NOMENCLATURE OR DESCRIPTION	FIND NO

LIST OF MATERIALS

1003127	
NEXT ASSY	USED ON
APPLICATION	

UNLESS OTHERWISE SPECIFIED
DIMENSIONS ARE IN INCHES
TOLERANCES ON
FRACTIONS ± — DECIMALS ±.005 ANGLES ±0°30'
DO NOT SCALE THIS DRAWING
MATERIAL —
HEAT TREATMENT —
FINAL FINISH —

MIT
INSTRUMENTATION LAB
CAMBRIDGE, MASS.
DRAWN Mahoney DATE 8-10-63
CHECKED
APPROVAL 8 Aug 63
APPROVAL
NASA APPROVAL Jack Brennan
MIT APPROVAL 14 Aug 63

MANNED SPACECRAFT CENTER
HOUSTON, TEXAS

TRAY B
LEFT HAND

CODE IDENT NO. | SIZE | NASA DRAWING NO. 1004220
SCALE 1/1 | WT | SHEET 2 OF 2

INCHES
0 1 2
PHOTOGRAPHIC SCALE ONLY

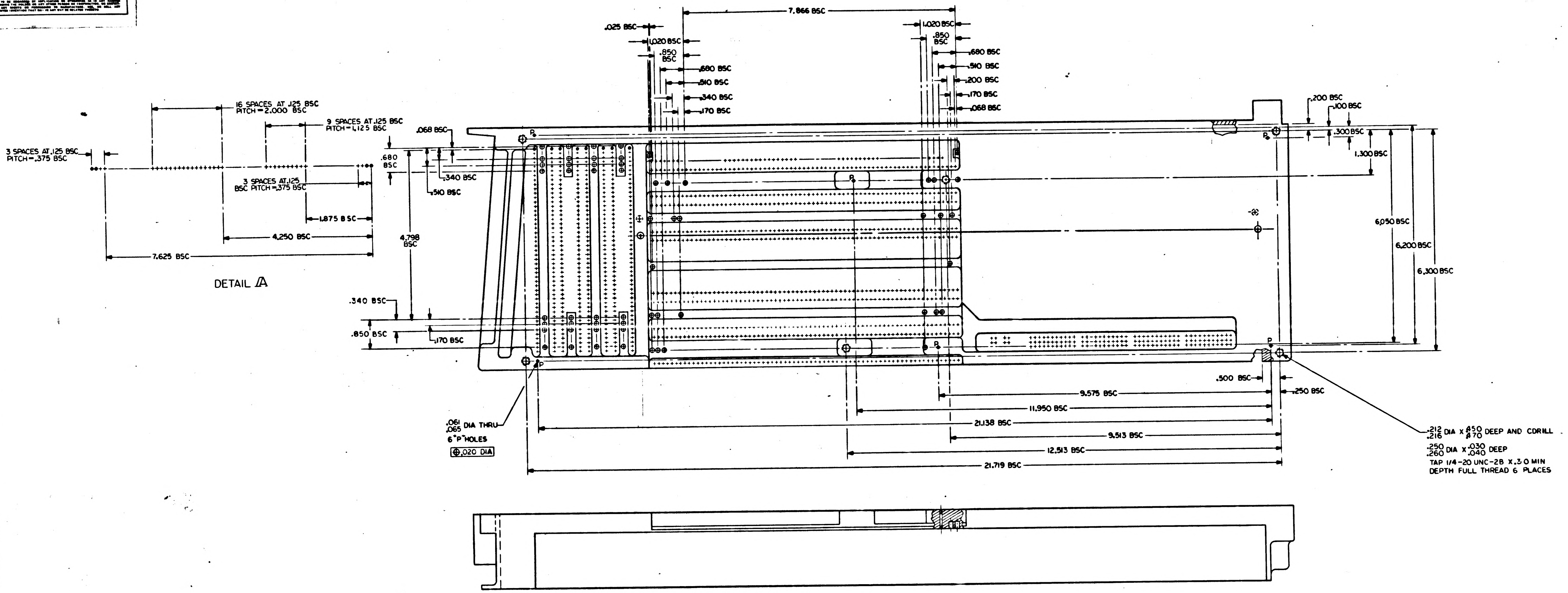
16 SPACES AT .125 BSC PITCH = 2.000 BSC
9 SPACES AT .125 BSC PITCH = 1.125 BSC
3 SPACES AT .125 BSC PITCH = .375 BSC
3 SPACES AT .125 BSC PITCH = .375 BSC
1.875 BSC
4.250 BSC
7.625 BSC
DETAIL A
.068 BSC
.680 BSC
.340 BSC
.510 BSC
4.798 BSC
.340 BSC
.850 BSC
.170 BSC
.025 BSC
1.020 BSC
.850 BSC
.680 BSC
.510 BSC
.340 BSC
.170 BSC
7.866 BSC
1.020 BSC
.850 BSC
.680 BSC
.510 BSC
.200 BSC
.170 BSC
.068 BSC
.200 BSC
.100 BSC
.300 BSC
1.300 BSC
6.050 BSC
6.200 BSC
6.300 BSC
P
.500 BSC
.250 BSC
9.575 BSC
11.950 BSC
21.138 BSC
9.513 BSC
12.513 BSC
21.719 BSC
.061 .065 DIA THRU
6 "P" HOLES
⊕ .020 DIA
.212 .216 DIA X .450 .470 DEEP AND CDRILL
.250 .260 DIA X .030 .040 DEEP
TAP 1/4-20 UNC-2B X .3 O MIN
DEPTH FULL THREAD 6 PLACES

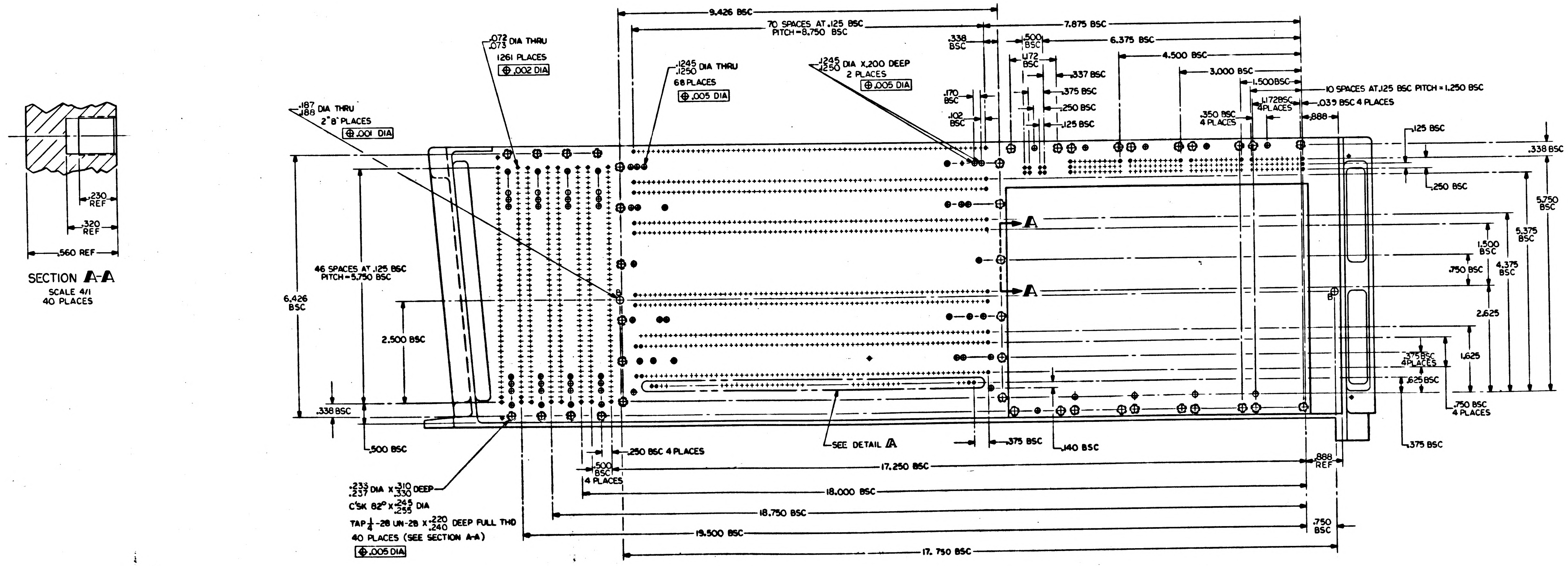
.230 REF
.320 REF
.560 REF
SECTION A-A
SCALE 4/1
40 PLACES
9.426 BSC
70 SPACES AT .125 BSC PITCH = 8.750 BSC
7.875 BSC
.338 BSC
.500 BSC
6.375 BSC
1.172 BSC
4.500 BSC
.337 BSC
3.000 BSC
.375 BSC
1.500 BSC
.250 BSC
.125 BSC
10 SPACES AT .125 BSC PITCH = 1.250 BSC
.170 BSC
.102 BSC
1.172 BSC 4 PLACES
.039 BSC 4 PLACES
.350 BSC 4 PLACES
.888
.125 BSC
.338 BSC
.250 BSC
.072 .073 DIA THRU
1261 PLACES
⊕ .002 DIA
.1245 .1250 DIA THRU
68 PLACES
⊕ .005 DIA
.1245 .1250 DIA X .200 DEEP
2 PLACES
⊕ .005 DIA
.187 .188 DIA THRU
2 "B" PLACES
⊕ .001 DIA
6.426 BSC
46 SPACES AT .125 BSC PITCH = 5.750 BSC
2.500 BSC
.338 BSC
A
A
B
5.750 BSC
5.375 BSC
1.500 BSC
4.375 BSC
.750 BSC
2.625
1.625
.375 BSC 4 PLACES
.625 BSC
.750 BSC 4 PLACES
.375 BSC
.500 BSC
.250 BSC 4 PLACES
.500 BSC 4 PLACES
SEE DETAIL A
.375 BSC
.140 BSC
.888 REF
17.250 BSC
18.000 BSC
18.750 BSC
19.500 BSC
17.750 BSC
.750 BSC
.233 .237 DIA X .310 .330 DEEP
C'SK 82° X .245 .255 DIA
TAP 1/4-28 UN-2B X .220 .240 DEEP FULL THD
40 PLACES (SEE SECTION A-A)
⊕ .005 DIA

1004220E SHT 2-2

INCHES
PHOTOGRAPHIC SCALE ONLY

1004220 F

SYM	REVISIONS DESCRIPTION	DATE	APPROVAL
A	REVISED PER TDRR 03464	9-26-63	WK
B	REVISED PER TDRR 03636	8-3-63	WK
C	REVISED PER TDRR 04161	[illegible]-24-63	WK
D	REVISED PER TDRR 04349	[illegible]	WK
E	REVISED PER TDRR 04534	11-6-63	WK.
F	REVISED PER TDRR 04774	[illegible]-63	CW

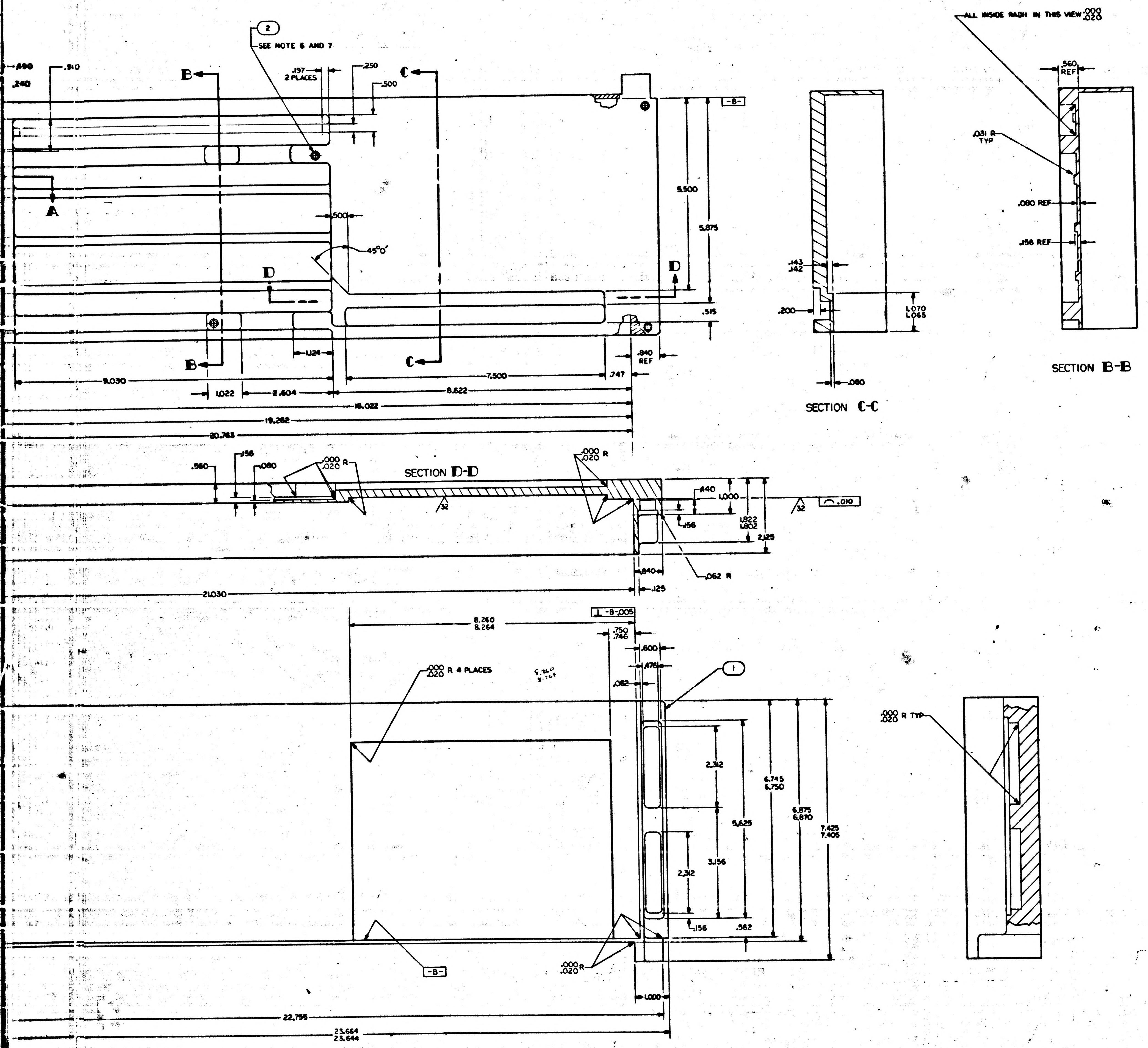

ALL INSIDE RADII IN THIS VIEW .000 .020
SEE NOTE 6 AND 7
2
.197 2 PLACES
.250
.500
.910
.490
.240
B
C
A
D
-B-
5.500
5.875
.500
45°0'
.515
1.24
.840 REF
.747
7.500
9.030
1.022
2.604
8.622
18.022
19.262
20.763
.143 .142
.200
1.070 1.065
.080
SECTION C-C
.560 REF
.031 R TYP
.080 REF
.156 REF
SECTION B-B
.156
.560
.080
.000 .020 R
SECTION D-D
32
.440
1.000
1.822 1.802
2.125
.010
.156
.062 R
.840
.125
21.030
8.260 8.264
-B- .005
.750 .746
.600
.476
.062
1
.000 .020 R 4 PLACES
8.260 8.264
2.312
5.625
6.745 6.750
6.875 6.870
7.425 7.405
3.156
2.312
.156
.562
.000 .020 R TYP
.000 .020 R
1.000
22.795
23.664 23.644

6	NAS1394CA-08L	INSERT, THREADED, SELF LOCKING	2
1	1004220-1	TRAY B-LEFT HAND	1
QTY REQD	PART OR IDENTIFYING NO.	NOMENCLATURE OR DESCRIPTION	FIND NO.

LIST OF MATERIALS

1003127	
NEXT ASSY	USED ON
APPLICATION	

UNLESS OTHERWISE SPECIFIED DIMENSIONS ARE IN INCHES
TOLERANCES ON
FRACTIONS ± DECIMALS ±.005 ANGLES ±0°30'
DO NOT SCALE THIS DRAWING
MATERIAL SEE NOTE 3
HEAT TREATMENT —
FINAL FINISH —

MIT INSTRUMENTATION LAB
CAMBRIDGE, MASS.
DRAWN Mahoney DATE 2-30-63
CHECKED
APPROVAL [illegible] 13-[illegible]-63
APPROVAL Driggs
NASA APPROVAL
MIT APPROVAL [illegible] 14 Aug 63

MANNED SPACECRAFT CENTER
HOUSTON, TEXAS

TRAY B
LEFT HAND

CODE IDENT NO. — SIZE J NASA DRAWING NO. 1004220
SCALE 1/1 WT SHEET OF 2

MASTER

1004220 J F

NOTICE — WHEN GOVERNMENT DRAWINGS, SPECIFICATIONS, OR OTHER DATA ARE USED FOR ANY PURPOSE OTHER THAN IN CONNECTION WITH A DEFINITELY RELATED GOVERNMENT PROCUREMENT OPERATION, THE UNITED STATES GOVERNMENT THEREBY INCURS NO RESPONSIBILITY NOR ANY OBLIGATION WHATSOEVER, AND THE FACT THAT THE GOVERNMENT MAY HAVE FORMULATED, FURNISHED, OR [illegible] SPECIFICATIONS OR OTHER DATA IS NOT TO BE REGARDED BY IMPLICATION OR OTHERWISE AS IN ANY MANNER LICENSING THE HOLDER OR ANY OTHER PERSON OR CORPORATION, OR CONVEYING ANY RIGHTS OR PERMISSION TO MANUFACTURE, USE, OR SELL ANY PATENTED INVENTION THAT MAY IN ANY WAY BE RELATED THERETO.

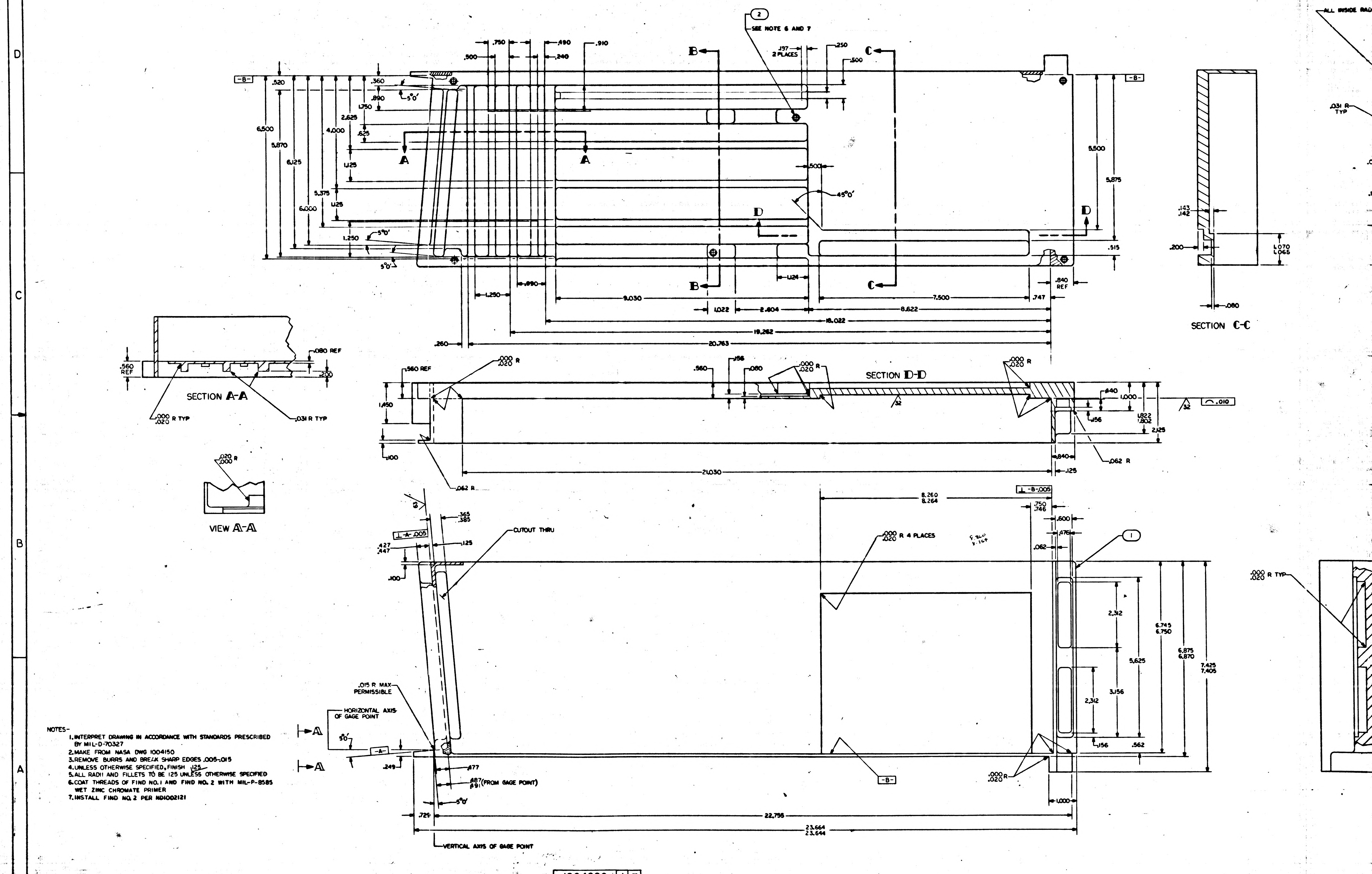

SEE NOTE 6 AND 7
SECTION A-A
VIEW A-A
SECTION C-C
SECTION D-D
CUTOUT THRU
.000/.020 R 4 PLACES
.000/.020 R TYP
.031 R TYP
.080 REF
.560 REF
.062 R
.840 REF
.015 R MAX PERMISSIBLE
HORIZONTAL AXIS OF GAGE POINT
VERTICAL AXIS OF GAGE POINT
.487/.891 (FROM GAGE POINT)
ALL INSIDE RAD
20.763
19.262
18.022
21.030
22.756
23.664/23.644

NOTES-

1. INTERPRET DRAWING IN ACCORDANCE WITH STANDARDS PRESCRIBED BY MIL-D-70327
2. MAKE FROM NASA DWG 1004150
3. REMOVE BURRS AND BREAK SHARP EDGES .005-.015
4. UNLESS OTHERWISE SPECIFIED, FINISH 125
5. ALL RADII AND FILLETS TO BE 125 UNLESS OTHERWISE SPECIFIED
6. COAT THREADS OF FIND NO. 1 AND FIND NO. 2 WITH MIL-P-8585 WET ZINC CHROMATE PRIMER
7. INSTALL FIND NO. 2 PER ND1002121

1004220 J F

1004220 F

SYM	REVISIONS 02545 DESCRIPTION	DATE	APPROVAL
A	REVISED PER TDRR 03464	8-26-63	[illegible]
B	REVISED PER TDRR 03636	10-3-63	[illegible]
C	REVISED PER TDRR 04161	10-21-63	[illegible]
D	REVISED PER TDRR 04347	10-30-63	[illegible]
E	REVISED PER TDRR 04524	11-6-63	[illegible]
F	REVISED PER TDRR 04774	[illegible]	[illegible]

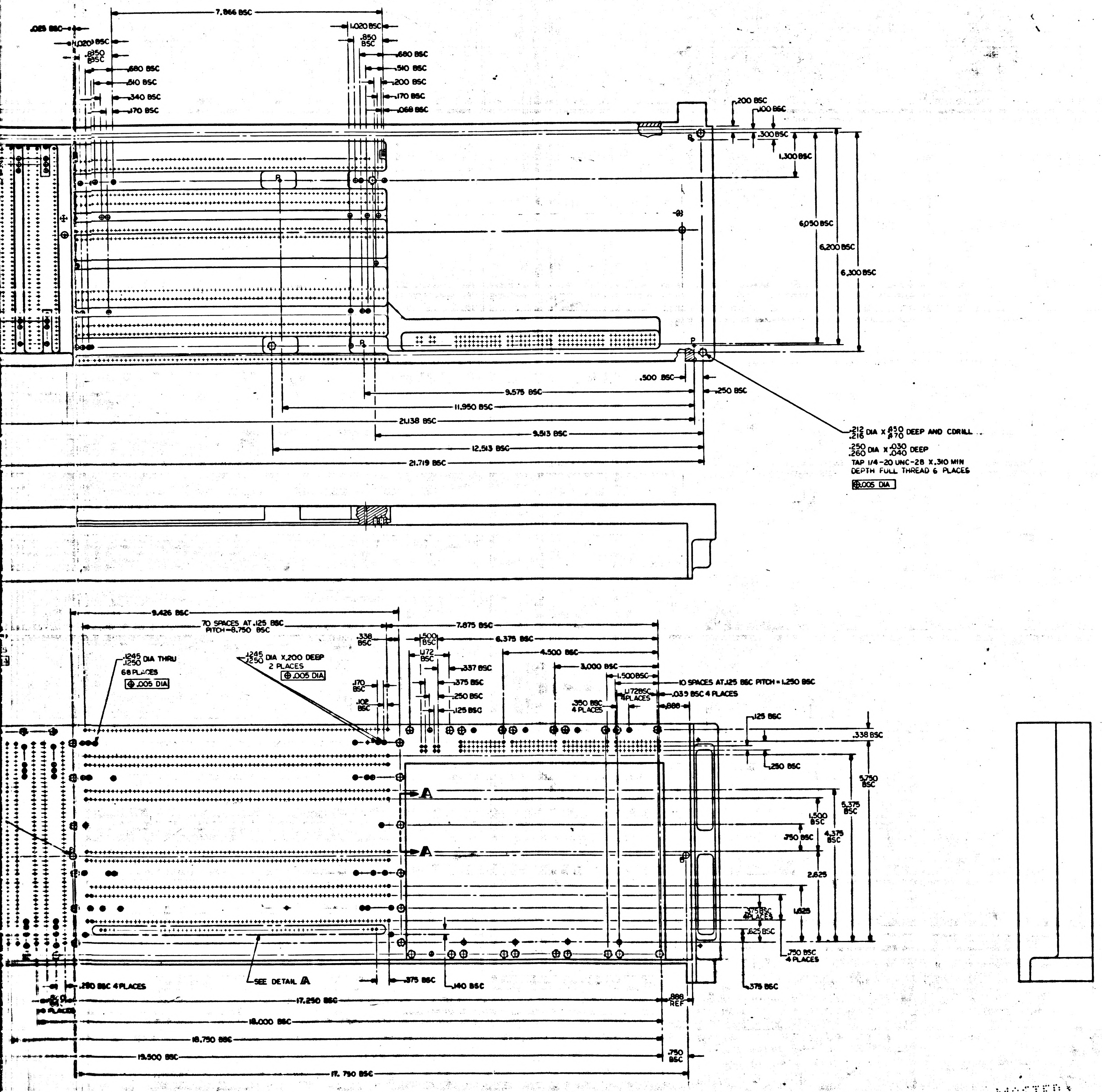
7.866 BSC
.025 BSC
1.020 BSC
.850 BSC
.680 BSC
.510 BSC
.340 BSC
.170 BSC
1.020 BSC
.850 BSC
.680 BSC
.510 BSC
.200 BSC
.170 BSC
.068 BSC
.200 BSC
.100 BSC
.300 BSC
1.300 BSC
6.050 BSC
6.200 BSC
6.300 BSC
.500 BSC
.250 BSC
9.575 BSC
11.950 BSC
21.138 BSC
9.513 BSC
12.513 BSC
21.719 BSC
.212/.216 DIA X .450/.470 DEEP AND CDRILL
.250/.260 DIA X .030/.040 DEEP
TAP 1/4-20 UNC-2B X.310 MIN
DEPTH FULL THREAD 6 PLACES
⊕.005 DIA
9.426 BSC
70 SPACES AT .125 BSC
PITCH—8.750 BSC
.1245/.1250 DIA THRU
68 PLACES
⊕.005 DIA
.1245/.1250 DIA X.200 DEEP
2 PLACES
⊕.005 DIA
.338 BSC
.170 BSC
.102 BSC
.500 BSC
1.172 BSC
.337 BSC
.375 BSC
.250 BSC
.125 BSC
7.875 BSC
6.375 BSC
4.500 BSC
3.000 BSC
1.500 BSC
.350 BSC 4 PLACES
1.728 BSC 4 PLACES
10 SPACES AT .125 BSC PITCH = 1.250 BSC
.039 BSC 4 PLACES
.888
.125 BSC
.338 BSC
.250 BSC
5.750 BSC
5.375 BSC
4.375 BSC
1.500 BSC
.750 BSC
2.625
1.625
.375 BSC 4 PLACES
.625 BSC
.750 BSC 4 PLACES
.375 BSC
A
A
SEE DETAIL A
.375 BSC
.140 BSC
.250 BSC 4 PLACES
17.250 BSC
.888 REF
18.000 BSC
18.750 BSC
19.500 BSC
.750 BSC
17.750 BSC
4
3
2
D
C
B
A

QTY REQD	PART OR IDENTIFYING NO.	NOMENCLATURE OR DESCRIPTION	FIND NO.

LIST OF MATERIALS

1003127	
NEXT ASSY	USED ON
APPLICATION	

UNLESS OTHERWISE SPECIFIED
DIMENSIONS ARE IN INCHES
TOLERANCES ON
FRACTIONS ± — DECIMALS ±.005 ANGLES ±030
DO NOT SCALE THIS DRAWING
MATERIAL —
HEAT TREATMENT —
FINAL FINISH —

MIT
INSTRUMENTATION LAB
Cambridge, Mass.

DRAWN Mahoney DATE 8-20-63
CHECKED
APPROVAL
APPROVAL
NASA APPROVAL
MIT APPROVAL

MANNED SPACECRAFT CENTER
HOUSTON, TEXAS

TRAY B
LEFT HAND

CODE IDENT NO. — SIZE J NASA DRAWING NO. 1004220
SCALE 1/1 WT SHEET 2 of 2

MASTER

1004220F SHT 2-2

1004220 F

OS5400I

24

INCHES
PHOTOGRAPHIC SCALE ONLY

F-2

NOTICE — WHEN GOVERNMENT DRAWINGS, SPECIFICATIONS, OR OTHER DATA ARE USED FOR ANY PURPOSE OTHER THAN IN CONNECTION WITH A DEFINITELY RELATED GOVERNMENT PROCUREMENT OPERATION, THE UNITED STATES GOVERN- MENT THEREBY [illegible] AND THE FACT THAT THE GOVERNMENT MAY HAVE FORMULATED, FURNISHED, OR IN ANY WAY SUPPLIED THE SAID DRAWINGS, SPECIFICATIONS OR OTHER DATA IS NOT TO BE REGARDED BY IMPLICATION OR OTHERWISE AS IN ANY MANNER LICENSING THE HOLDER OR ANY OTHER PERSON OR CORPORATION, OR CONVEYING ANY RIGHTS OR PERMISSION TO MANUFACTURE, USE, OR SELL ANY PATENTED INVENTION THAT MAY IN ANY WAY BE RELATED THERETO.

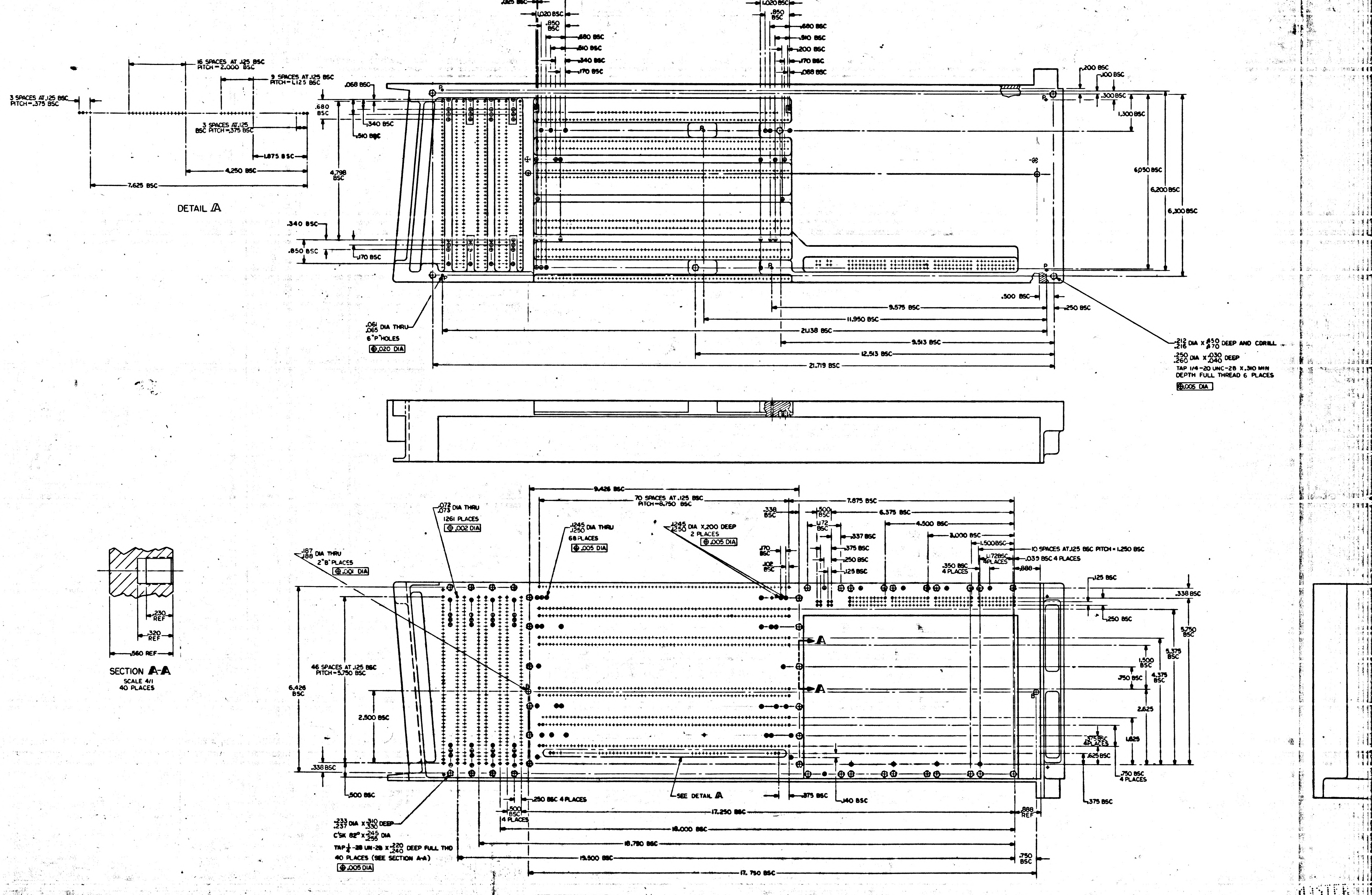
6
5
4
3
16 SPACES AT .125 BSC PITCH = 2.000 BSC
9 SPACES AT .125 BSC PITCH = 1.125 BSC
3 SPACES AT .125 BSC PITCH = .375 BSC
3 SPACES AT .125 BSC PITCH = .375 BSC
1.875 BSC
4.250 BSC
7.625 BSC
DETAIL A
.068 BSC
.680 BSC
.340 BSC
.510 BSC
4.798 BSC
.340 BSC
.850 BSC
.170 BSC
.025 BSC
1.020 BSC
.850 BSC
.680 BSC
.510 BSC
.340 BSC
.170 BSC
7.866 BSC
1.020 BSC
.850 BSC
.680 BSC
.510 BSC
.200 BSC
.170 BSC
.088 BSC
.200 BSC
.100 BSC
.300 BSC
1.300 BSC
6.050 BSC
6.200 BSC
6.300 BSC
P
B
.500 BSC
.250 BSC
9.575 BSC
11.950 BSC
21.138 BSC
9.513 BSC
12.513 BSC
21.719 BSC
.061 .065 DIA THRU
6 "P" HOLES
⊕ .020 DIA
.212 .216 DIA X .450 .470 DEEP AND CDRILL
.250 .260 DIA X .030 .040 DEEP
TAP 1/4-20 UNC-2B X .310 MIN DEPTH FULL THREAD 6 PLACES
⊕ .005 DIA
9.426 BSC
70 SPACES AT .125 BSC PITCH = 8.750 BSC
.072 .073 DIA THRU
1261 PLACES
⊕ .002 DIA
.1245 .1250 DIA THRU
68 PLACES
⊕ .005 DIA
.1245 .1250 DIA X .200 DEEP
2 PLACES
⊕ .005 DIA
.187 .188 DIA THRU
2 "B" PLACES
⊕ .001 DIA
.338 BSC
.170 BSC
.102 BSC
.500 BSC
1.172 BSC
.337 BSC
.375 BSC
.250 BSC
.125 BSC
7.875 BSC
6.375 BSC
4.500 BSC
3.000 BSC
1.500 BSC
10 SPACES AT .125 BSC PITCH = 1.250 BSC
1.172 BSC 4 PLACES
.039 BSC 4 PLACES
.350 BSC 4 PLACES
.888
.125 BSC
.338 BSC
.250 BSC
5.750 BSC
5.375 BSC
4.375 BSC
1.500 BSC
.750 BSC
2.625
1.625
.375 BSC 4 PLACES
.625 BSC
.750 BSC 4 PLACES
.375 BSC
A
A
B
SECTION A-A
SCALE 4/1
40 PLACES
.230 REF
.320 REF
.560 REF
46 SPACES AT .125 BSC PITCH = 5.750 BSC
6.426 BSC
2.500 BSC
.338 BSC
.500 BSC
.233 .237 DIA X .310 .330 DEEP
C'SK 82° X .245 .255 DIA
TAP 1/4-28 UN-2B X .220 .240 DEEP FULL THD
40 PLACES (SEE SECTION A-A)
⊕ .005 DIA
.250 BSC 4 PLACES
.500 BSC 4 PLACES
SEE DETAIL A
.375 BSC
.140 BSC
17.250 BSC
.888 REF
18.000 BSC
18.750 BSC
19.500 BSC
.750 BSC
17.750 BSC

1004220F SHT 2-2

INCHES
PHOTOGRAPHIC SCALE ONLY

SYM	DESCRIPTION	DATE	APPROVAL
A	REVISED PER TDRR 03264	7-2-	
B	REVISED PER TDRR 03636		wk
C	REVISED PER TDRR 04161		WK
D	REVISED PER TDRR 04349		WK
E	REVISED PER TDRR 04524		WK
F	REVISED PER TDRR 04774		
G	REVISED PER TDRR 09344 DR CHK	5/30/64	

1004220 G

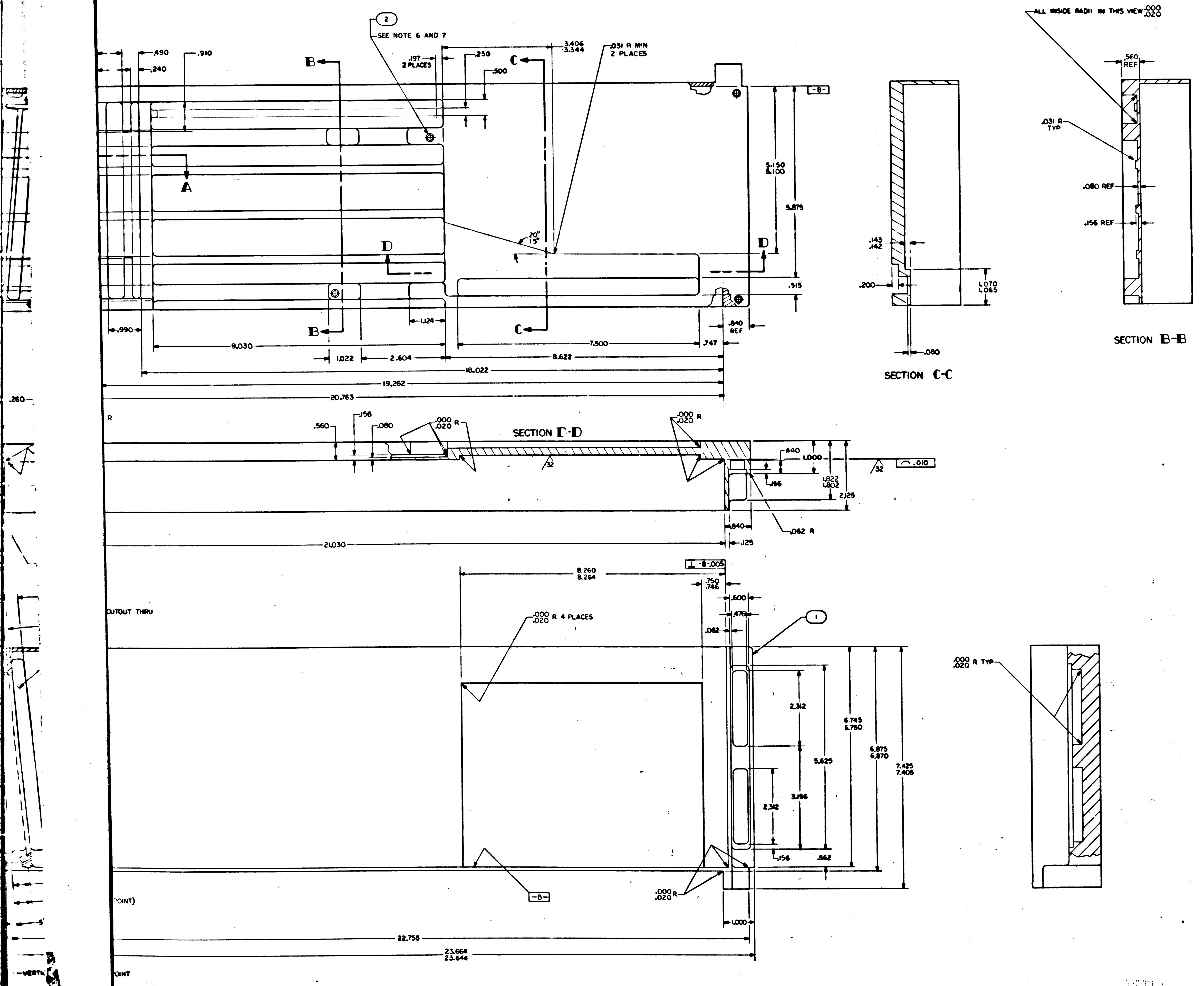

SEE NOTE 6 AND 7
2
.490
.240
.910
.197 2 PLACES
.250
.500
3.406
3.344
.031 R MIN 2 PLACES
B
C
A
D
20°
15°
5.150
5.100
5.875
.515
-B-
.990
9.030
1.124
7.500
.747
.840 REF
1.022
2.604
8.622
18.022
19.262
20.763
.143
.142
.200
1.070
1.065
.080
SECTION C-C
ALL INSIDE RADII IN THIS VIEW .000 .020
.560 REF
.031 R TYP
.080 REF
.156 REF
SECTION B-B
.560
.156
.080
.000 .020 R
SECTION D-D
32
.440
1.000
1.822
1.802
2.125
.156
.010
.840
.062 R
.125
21.030
8.260
8.264
-B- .005
.750
.746
.600
.476
.062
.000 .020 R 4 PLACES
1
CUTOUT THRU
2.312
5.625
3.156
.156
.562
6.745
6.750
6.875
6.870
7.425
7.405
.000 .020 R TYP
.000 .020 R
-B-
1.000
22.755
23.664
23.644
POINT)
POINT
.260

6	NAS1394CA-08L	INSERT, THREADED, SELF LOCKING	2
1	1004220-1	TRAY B - LEFT HAND	1
QTY REQD	PART OR IDENTIFYING NO.	NOMENCLATURE OR DESCRIPTION	FIND NO.

LIST OF MATERIALS

1003127	
NEXT ASSY	USED ON
APPLICATION	

UNLESS OTHERWISE SPECIFIED
DIMENSIONS ARE IN INCHES
TOLERANCES ON
FRACTIONS ± DECIMALS ±.005 ANGLES ±0°30'
DO NOT SCALE THIS DRAWING
MATERIAL
SEE NOTE 3
HEAT TREATMENT
FINAL FINISH

MIT
INSTRUMENTATION LAB
CAMBRIDGE, MASS
DRAWN Mahoney DATE 2-30-63
CHECKED
APPROVAL 13 Aug 63
APPROVAL
NASA APPROVAL
MIT APPROVAL 14 Aug 63

MANNED SPACECRAFT CENTER
HOUSTON, TEXAS

TRAY B
LEFT HAND

CODE IDENT NO. —
SIZE J
NASA DRAWING NO. 1004220
SCALE 1/1
WT
SHEET 2 OF 2

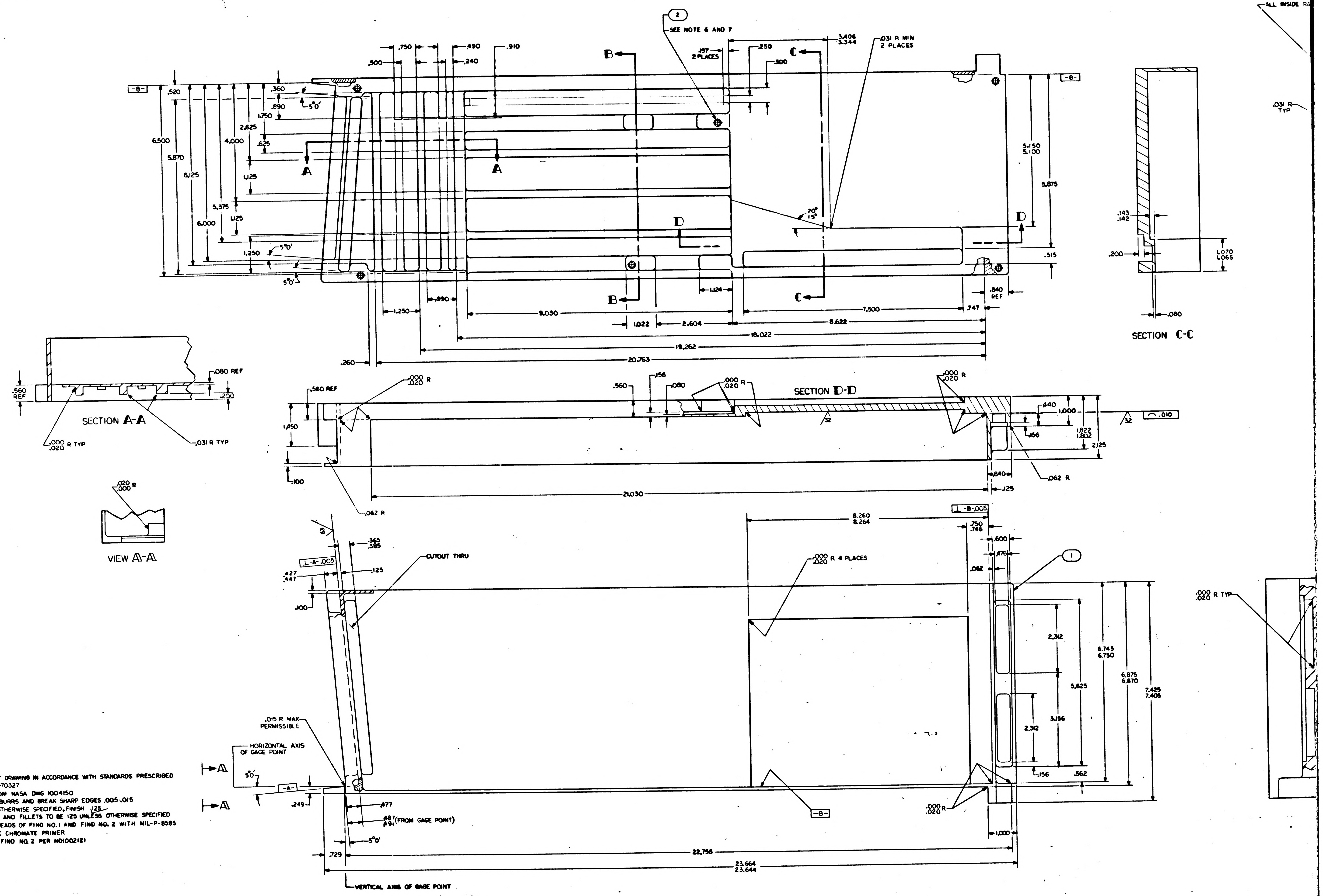

2
SEE NOTE 6 AND 7
.031 R MIN 2 PLACES
-B-
B
C
D
A
.750
.490
.910
.500
.240
.197 2 PLACES
.250
.500
3.406 3.344
.360
.520
.890
1.750
2.625
.625
4.000
6.500
5.870
6.125
1.125
5.375
6.000
1.250
5°0'
5.150 5.100
5.875
.515
20° 15°
.840 REF
1.124
1.250
.990
9.030
1.022
2.604
7.500
.747
8.622
18.022
19.262
20.763
.260
.031 R TYP
.143 .142
.200
1.070 1.065
.080
SECTION C-C
ALL INSIDE RA
.080 REF
.560 REF
.230
SECTION A-A
.000 .020 R TYP
.031 R TYP
.020 .000 R
VIEW A-A
.560 REF
.000 .020 R
.156
.080
.560
SECTION D-D
.000 .020 R
.440
1.000
1.822 1.802
2.125
.156
32
.010
1.450
.100
.840
.125
.062 R
21.030
⊥ -B- .005
8.260 8.264
.750 .746
.600
.476
.062
1
.365 .385
CUTOUT THRU
⊥ -A- .005
.427 .447
.125
.100
.000 .020 R 4 PLACES
.000 .020 R TYP
2.312
6.745 6.750
6.875 6.870
7.425 7.405
5.625
3.156
.015 R MAX PERMISSIBLE
HORIZONTAL AXIS OF GAGE POINT
5°0'
-A-
.249
.477
.487 .491 (FROM GAGE POINT)
.156
.562
.000 .020 R
1.000
.729
22.756
23.664 23.644
VERTICAL AXIS OF GAGE POINT
6
5
4
3
D
C
B
A

NOTES-

1. INTERPRET DRAWING IN ACCORDANCE WITH STANDARDS PRESCRIBED BY MIL-D-70327
2. MAKE FROM NASA DWG 1004150
3. REMOVE BURRS AND BREAK SHARP EDGES .005-.015
4. UNLESS OTHERWISE SPECIFIED, FINISH $\sqrt{125}$
5. ALL RADII AND FILLETS TO BE 125 UNLESS OTHERWISE SPECIFIED
6. COAT THREADS OF FIND NO. 1 AND FIND NO. 2 WITH MIL-P-8585 WET ZINC CHROMATE PRIMER
7. INSTALL FIND NO. 2 PER ND1002121

1004220 | J | G

1004220 G 1/2

SHEET 1

1004220 G

SYM	DESCRIPTION	DATE	APPROVAL
A	REVISED PER TDRR [illegible]	[illegible]	JW
B	REVISED PER TDRR [illegible]	10-8-63	WK
C	REVISED PER TDRR [illegible]	[illegible]	WK
D	REVISED PER TDRR [illegible]	[illegible]	WK
E	REVISED PER TDRR [illegible]	[illegible]	
F	REVISED PER TDRR [illegible]	11-19-63	
G	REVISED PER TDRR 07344 DR CHK	3/30/64	HWC

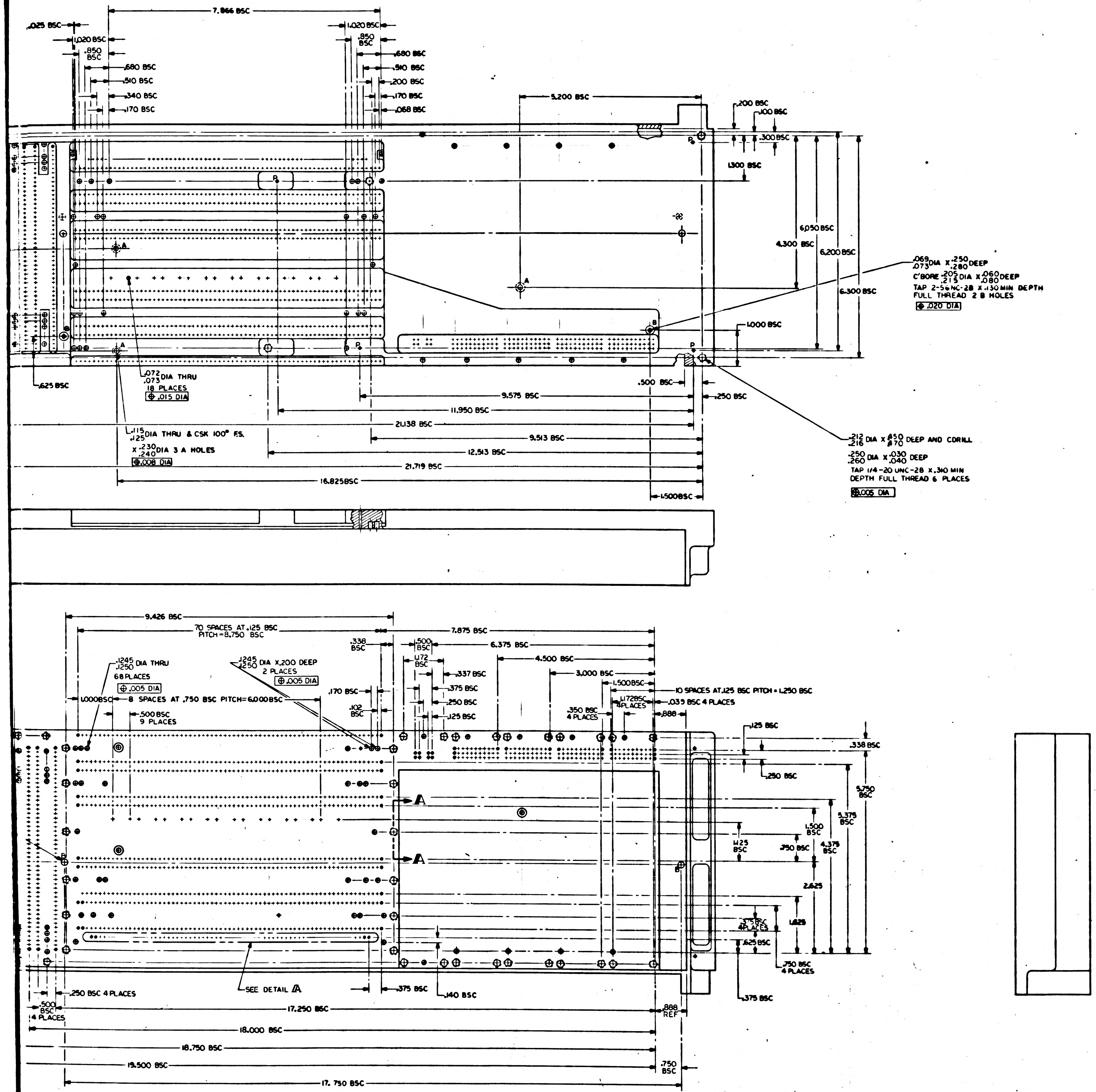

7.866 BSC
.025 BSC
1.020 BSC
.850 BSC
.680 BSC
.510 BSC
.340 BSC
.170 BSC
.200 BSC
.068 BSC
5.200 BSC
.100 BSC
.300 BSC
1.300 BSC
4.300 BSC
6.050 BSC
6.200 BSC
6.300 BSC
1.000 BSC
.069/.073 DIA X .250/.280 DEEP
C'BORE .205/.215 DIA X .060/.080 DEEP
TAP 2-56NC-2B X .130 MIN DEPTH FULL THREAD 2 B HOLES
⊕ .020 DIA
.625 BSC
.072/.073 DIA THRU 18 PLACES
⊕ .015 DIA
.115/.125 DIA THRU & CSK 100° F.S. X .230/.240 DIA 3 A HOLES
⊕ .008 DIA
.500 BSC
.250 BSC
9.575 BSC
11.950 BSC
21.138 BSC
9.513 BSC
12.513 BSC
21.719 BSC
16.825 BSC
1.500 BSC
.212/.216 DIA X .850/.870 DEEP AND C DRILL
.250/.260 DIA X .030/.040 DEEP
TAP 1/4-20 UNC-2B X .340 MIN DEPTH FULL THREAD 6 PLACES
⊕ .005 DIA
A
B
P
9.426 BSC
70 SPACES AT .125 BSC PITCH = 8.750 BSC
7.875 BSC
.338 BSC
.500 BSC
6.375 BSC
1.172 BSC
4.500 BSC
.337 BSC
.375 BSC
.250 BSC
.125 BSC
3.000 BSC
1.500 BSC
.1245/.1250 DIA THRU 68 PLACES
⊕ .005 DIA
.1245/.1250 DIA X .200 DEEP 2 PLACES
⊕ .005 DIA
.170 BSC
.102 BSC
1.000 BSC
8 SPACES AT .750 BSC PITCH = 6.000 BSC
.500 BSC 9 PLACES
10 SPACES AT .125 BSC PITCH = 1.250 BSC
.350 BSC 4 PLACES
1.172 BSC 4 PLACES
.033 BSC 4 PLACES
.888
.125 BSC
.338 BSC
.250 BSC
5.750 BSC
5.375 BSC
1.500 BSC
4.375 BSC
1.125 BSC
.750 BSC
2.625
1.625
.375 BSC 4 PLACES
.625 BSC
.750 BSC 4 PLACES
.375 BSC
.250 BSC 4 PLACES
SEE DETAIL A
.375 BSC
.140 BSC
.500 BSC 4 PLACES
17.250 BSC
.888 REF
18.000 BSC
18.750 BSC
19.500 BSC
.750 BSC
17.750 BSC

QTY REQD	PART OR IDENTIFYING NO.	NOMENCLATURE OR DESCRIPTION	FIND NO

LIST OF MATERIALS

1003127		
NEXT ASSY	USED ON	
APPLICATION		

UNLESS OTHERWISE SPECIFIED DIMENSIONS ARE IN INCHES
TOLERANCES ON
FRACTIONS ± — DECIMALS ±.005 ANGLES ±0°30'
DO NOT SCALE THIS DRAWING
MATERIAL —
HEAT TREATMENT —
FINAL FINISH —

MIT INSTRUMENTATION LAB
CAMBRIDGE MASS.
DRAWN Mahony DATE 8-10-63
CHECKED
APPROVAL 13 AUG 63
APPROVAL
NASA APPROVAL
MIT APPROVAL 14 Oct 63

MANNED SPACECRAFT CENTER
HOUSTON, TEXAS

TRAY B
LEFT HAND

CODE IDENT NO. —
SIZE J
NASA DRAWING NO. 1004220
SCALE 1/1
WT
SHEET 2 OF 2

1004220 G SHT 2-2

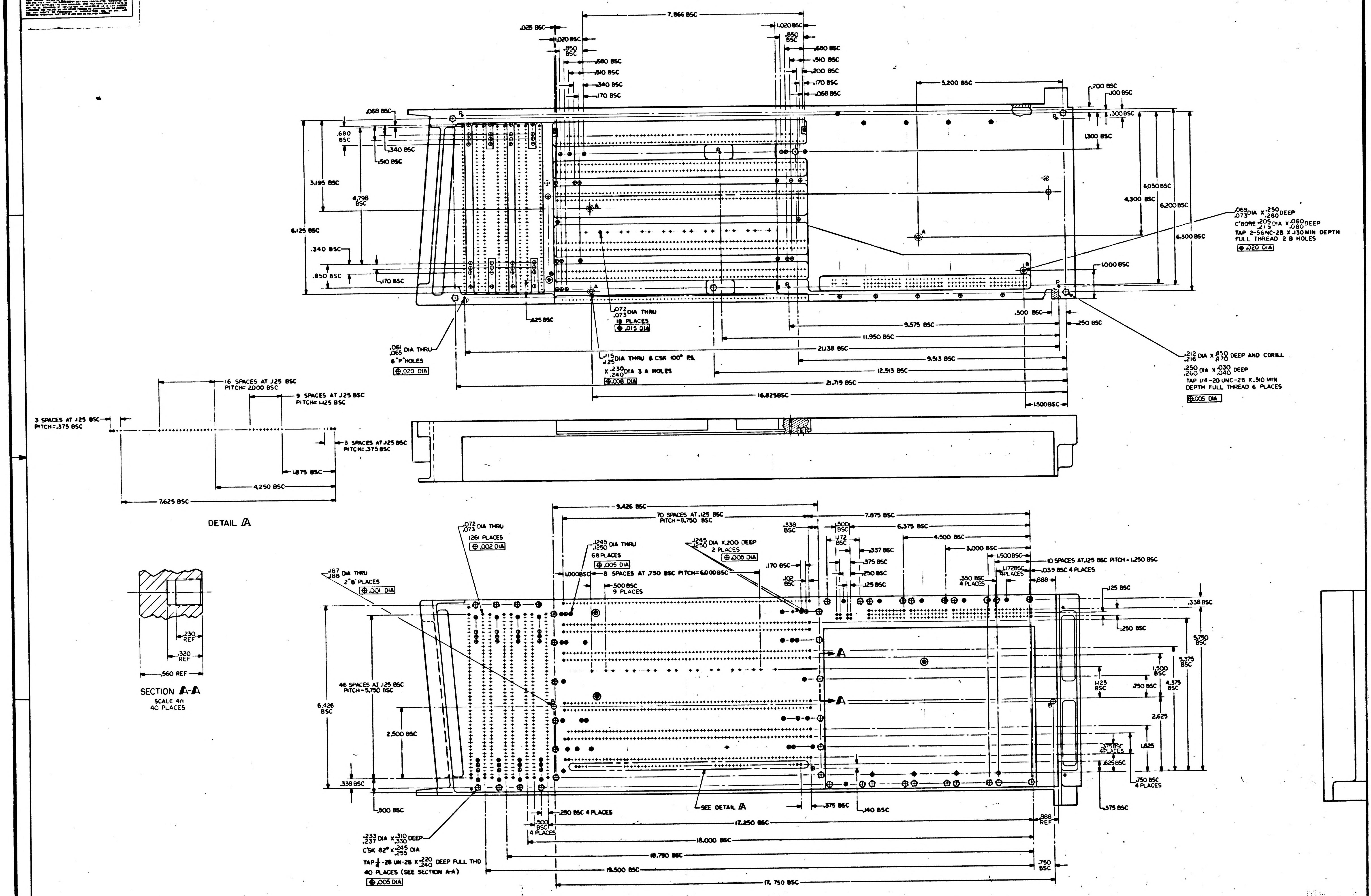
7.866 BSC
.025 BSC
1.020 BSC
.850 BSC
.680 BSC
.510 BSC
.340 BSC
.170 BSC
.200 BSC
.068 BSC
5.200 BSC
.100 BSC
.300 BSC
1.300 BSC
.680 BSC
.340 BSC
.510 BSC
3.195 BSC
4.798 BSC
6.125 BSC
.850 BSC
.170 BSC
6.050 BSC
4.300 BSC
6.200 BSC
6.300 BSC
1.000 BSC
.069/.073 DIA X .250/.280 DEEP
C'BORE .205/.215 DIA X .060/.080 DEEP
TAP 2-56NC-2B X .130 MIN DEPTH
FULL THREAD 2 B HOLES
⌖ .020 DIA
.625 BSC
.072/.073 DIA THRU
18 PLACES
⌖ .015 DIA
.061/.065 DIA THRU
6 "P" HOLES
⌖ .020 DIA
.115/.125 DIA THRU & CSK 100° R.
X .230/.240 DIA 3 A HOLES
⌖ .008 DIA
.500 BSC
.250 BSC
9.575 BSC
11.950 BSC
21.138 BSC
9.513 BSC
12.513 BSC
21.719 BSC
16.825 BSC
1.500 BSC
.212/.216 DIA X .650/.670 DEEP AND C'DRILL
.250/.260 DIA X .030/.040 DEEP
TAP 1/4-20 UNC-2B X .310 MIN
DEPTH FULL THREAD 6 PLACES
⌖ .005 DIA
16 SPACES AT .125 BSC
PITCH = 2.000 BSC
9 SPACES AT .125 BSC
PITCH = 1.125 BSC
3 SPACES AT .125 BSC
PITCH = .375 BSC
3 SPACES AT .125 BSC
PITCH = .375 BSC
.875 BSC
4.250 BSC
7.625 BSC
.230 REF
.320 REF
.560 REF
9.426 BSC
70 SPACES AT .125 BSC
PITCH = 8.750 BSC
7.875 BSC
6.375 BSC
4.500 BSC
3.000 BSC
1.500 BSC
.072/.073 DIA THRU
1261 PLACES
⌖ .002 DIA
.1245/.1250 DIA THRU
68 PLACES
⌖ .005 DIA
.1245/.1250 DIA X .200 DEEP
2 PLACES
⌖ .005 DIA
.338 BSC
1.172 BSC
.337 BSC
.375 BSC
.250 BSC
.125 BSC
.170 BSC
.102 BSC
10 SPACES AT .125 BSC PITCH = 1.250 BSC
1.1728 BSC 4 PLACES
.035 BSC 4 PLACES
.350 BSC 4 PLACES
.888
.187/.188 DIA THRU
2 "B" PLACES
⌖ .001 DIA
1.000 BSC
8 SPACES AT .750 BSC PITCH = 6.000 BSC
.500 BSC
9 PLACES
.125 BSC
.338 BSC
.250 BSC
5.750 BSC
5.375 BSC
1.500 BSC
1.125 BSC
.750 BSC
4.375 BSC
2.625
1.625
.375 BSC 4 PLACES
.625 BSC
.750 BSC
4 PLACES
.375 BSC
46 SPACES AT .125 BSC
PITCH = 5.750 BSC
6.426 BSC
2.500 BSC
.338 BSC
.500 BSC
.250 BSC 4 PLACES
.500 BSC
4 PLACES
SEE DETAIL A
.375 BSC
.140 BSC
17.250 BSC
.888 REF
18.000 BSC
18.750 BSC
19.500 BSC
.750 BSC
17.750 BSC
.233/.237 DIA X .310/.330 DEEP
C'SK 82° X .245/.255 DIA
TAP 1/4-28 UN-2B X .220/.240 DEEP FULL THD
40 PLACES (SEE SECTION A-A)
⌖ .005 DIA
A
B
P

DETAIL A

SECTION A-A
SCALE 4/1
40 PLACES

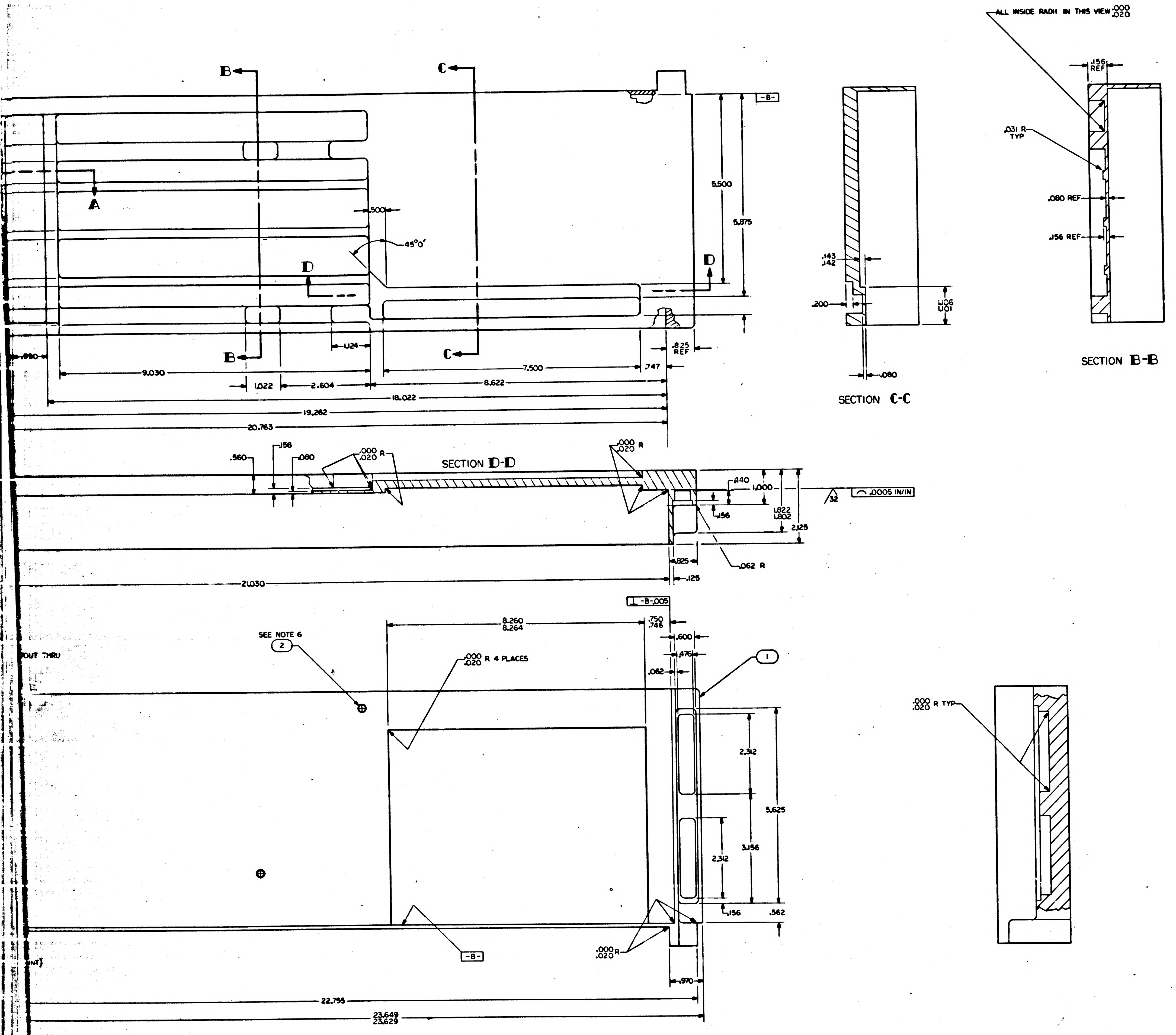
ALL INSIDE RADII IN THIS VIEW .000 .020
B
C
A
D
-B-
5.500
5.875
.500
45°0'
1.124
9.030
1.022
2.604
7.500
.747
8.622
18.022
19.262
20.763
.825 REF
.890
.143 .142
.200
1.106 1.101
.080
SECTION C-C
.156 REF
.031 R TYP
.080 REF
.156 REF
SECTION B-B
.560
.156
.080
.000 .020 R
SECTION D-D
.440
1.000
.156
1.822 1.802
2.125
/32
⌒ .0005 IN/IN
.825
.062 R
.125
21.030
⊥ -B-.005
SEE NOTE 6
2
8.260 8.264
.750 .746
.600
.476
.062
1
.000 .020 R 4 PLACES
OUT THRU
2.312
5.625
3.156
2.312
.156
.562
.000 .020 R TYP
.000 .020 R
.970
22.755
23.649 23.629

QTY REQD	PART OR IDENTIFYING NO.	NOMENCLATURE OR DESCRIPTION	FIND NO.
2	NAS1394CA-08L	INSERT, THREADED, SELF LOCKING	2
1	1004220-1	TRAY B-LEFT HAND	1

LIST OF MATERIALS

NEXT ASSY	USED ON
APPLICATION	

UNLESS OTHERWISE SPECIFIED DIMENSIONS ARE IN INCHES
TOLERANCES ON
FRACTIONS ± DECIMALS ±.005 ANGLES ±1/2°
DO NOT SCALE THIS DRAWING
MATERIAL
SEE NOTE 3
HEAT TREATMENT
FINAL FINISH

MIT
INSTRUMENTATION LAB
CAMBRIDGE, MASS
DRAWN Mahoney DATE 2-30-63
CHECKED
APPROVAL 13 May 63
APPROVAL Duggan
NASA APPROVAL
MIT APPROVAL 14 May 63

MANNED SPACECRAFT CENTER
HOUSTON, TEXAS

TRAY B
LEFT HAND

CODE IDENT NO.
SIZE J
NASA DRAWING NO. 1004220
SCALE 1/1
WT
SHEET 1 OF 2

MASTER

INCHES
PHOTOGRAPHIC SCALE ONLY

F-2

NOTICE — WHEN GOVERNMENT DRAWINGS, SPECIFICATIONS, OR OTHER DATA ARE USED FOR ANY PURPOSE OTHER THAN IN CONNECTION WITH A DEFINITELY RELATED GOVERNMENT PROCUREMENT OPERATION, THE UNITED STATES GOVERNMENT THEREBY INCURS NO RESPONSIBILITY NOR ANY OBLIGATION WHATSOEVER; AND THE FACT THAT THE GOVERNMENT MAY HAVE FORMULATED, FURNISHED, OR IN ANY WAY SUPPLIED THE SAID DRAWINGS, SPECIFICATIONS OR OTHER DATA IS NOT TO BE REGARDED BY IMPLICATION OR OTHERWISE AS IN ANY MANNER LICENSING THE HOLDER OR ANY OTHER PERSON OR CORPORATION, OR CONVEYING ANY RIGHTS OR PERMISSION TO MANUFACTURE, USE, OR SELL ANY PATENTED INVENTION THAT MAY IN ANY WAY BE RELATED THERETO.

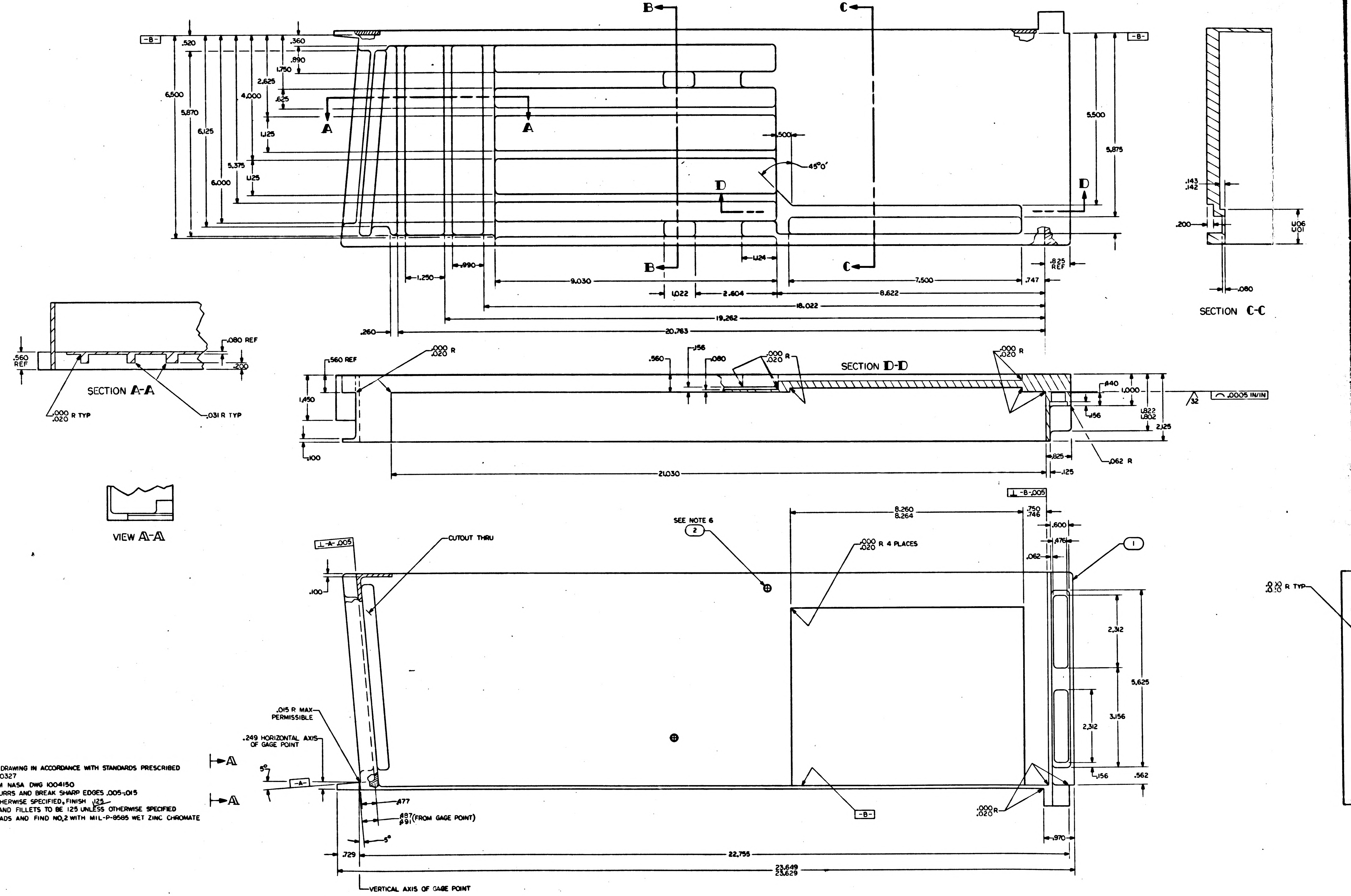

-B-
.520
.360
.890
1.750
2.625
.625
4.000
6.500
5.870
6.125
1.125
5.375
1.125
6.000
A
A
B
B
C
C
D
D
.500
45°0'
5.500
5.875
1.250
.990
9.030
1.022
2.404
1.124
7.500
.747
8.622
18.022
19.262
.260
20.763
.825 REF
SECTION C-C
.143
.142
.200
1.106
1.101
.080
.560 REF
.080 REF
.200
SECTION A-A
.000 R TYP
.020
.031 R TYP
VIEW A-A
SECTION D-D
.560 REF
.000 R
.020
.560
.156
.080
1.450
.100
.840
1.000
1.822
1.802
2.125
.156
.0005 IN/IN
32
.825
.125
.062 R
21.030
⊥ -B- .005
8.260
8.264
.750
.746
.600
.476
.062
SEE NOTE 6
2
1
.000 R 4 PLACES
.020
CUTOUT THRU
⊥ -A- .005
.100
.010 R TYP
.020
2.312
5.625
3.156
2.312
.156
.562
.015 R MAX PERMISSIBLE
.249 HORIZONTAL AXIS OF GAGE POINT
5°
-A-
.477
.487
.491 (FROM GAGE POINT)
5°
-B-
.000 R
.020
.970
.729
22.755
23.649
23.629
VERTICAL AXIS OF GAGE POINT

NOTES-
1. INTERPRET DRAWING IN ACCORDANCE WITH STANDARDS PRESCRIBED BY MIL-D-70327
2. MAKE FROM NASA DWG 1004150
3. REMOVE BURRS AND BREAK SHARP EDGES .005-.015
4. UNLESS OTHERWISE SPECIFIED, FINISH $\sqrt{125}$
5. ALL RADII AND FILLETS TO BE .125 UNLESS OTHERWISE SPECIFIED
6. COAT THREADS AND FIND NO.2 WITH MIL-P-8585 WET ZINC CHROMATE

1004220

INCHES
PHOTOGRAPHIC SCALE ONLY

1004220

REVISIONS 02545

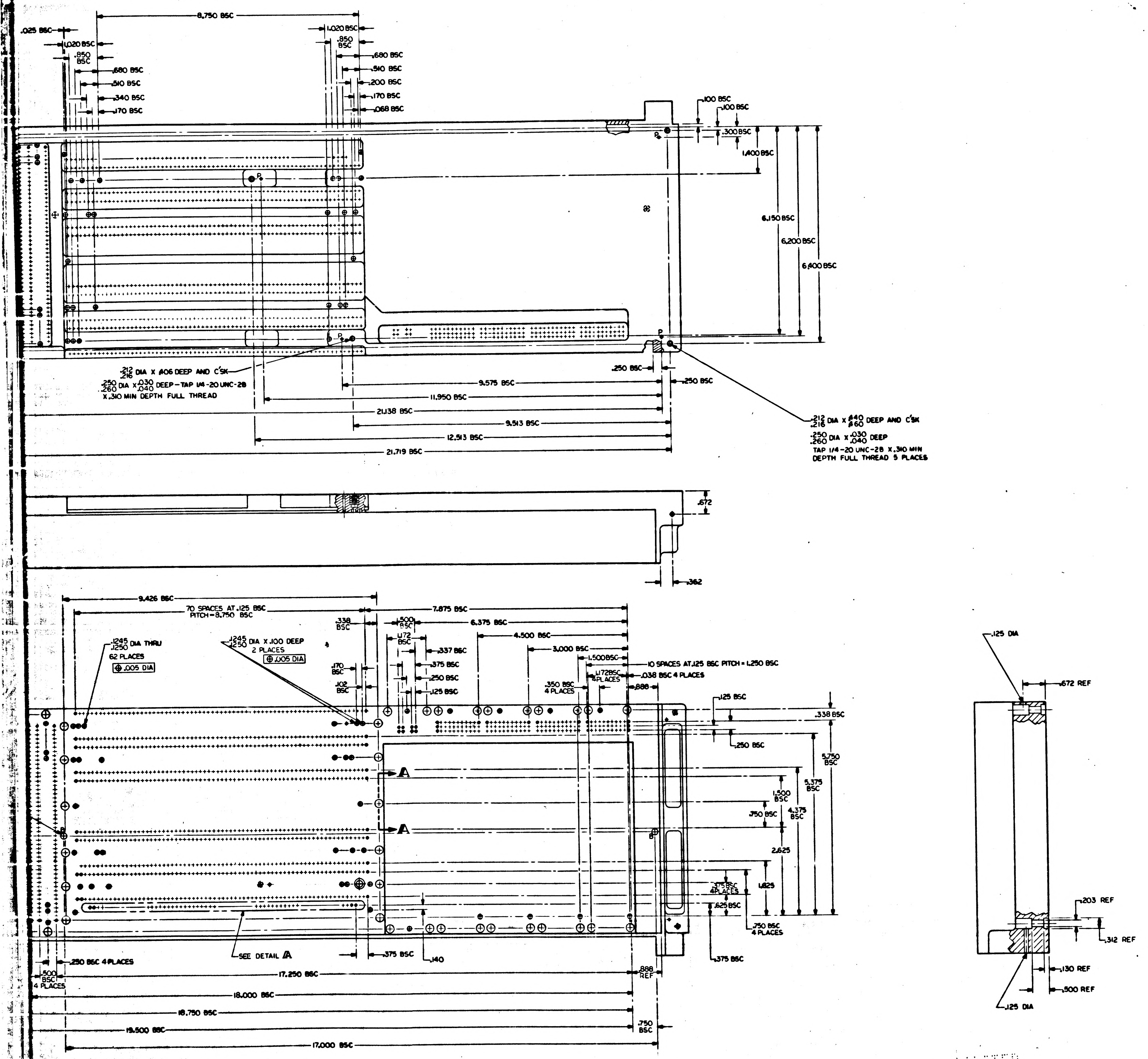
8.750 BSC
.025 BSC
1.020 BSC
.850 BSC
.680 BSC
.510 BSC
.340 BSC
.170 BSC
.200 BSC
.068 BSC
.100 BSC
.300 BSC
1.400 BSC
6.150 BSC
6.200 BSC
6.400 BSC
.212/.216 DIA X .406 DEEP AND C'SK
.250/.260 DIA X .030/.040 DEEP—TAP 1/4-20 UNC-2B X .310 MIN DEPTH FULL THREAD
.250 BSC
9.575 BSC
11.950 BSC
21.138 BSC
9.513 BSC
12.513 BSC
21.719 BSC
.212/.216 DIA X .440/.460 DEEP AND C'SK
.250/.260 DIA X .030/.040 DEEP
TAP 1/4-20 UNC-2B X .310 MIN DEPTH FULL THREAD 5 PLACES
.672
.362
9.426 BSC
70 SPACES AT .125 BSC PITCH=8.750 BSC
7.875 BSC
.338 BSC
.500 BSC
6.375 BSC
1.172 BSC
4.500 BSC
3.000 BSC
1.500 BSC
.337 BSC
.375 BSC
.250 BSC
.125 BSC
.170 BSC
.102 BSC
.1245/.1250 DIA THRU 62 PLACES
⊕ .005 DIA
.1245/.1250 DIA X .100 DEEP 2 PLACES
⊕ .005 DIA
10 SPACES AT .125 BSC PITCH = 1.250 BSC
1.172 BSC 4 PLACES
.038 BSC 4 PLACES
.350 BSC 4 PLACES
.888
.125 BSC
.338 BSC
.250 BSC
5.750 BSC
5.375 BSC
4.375 BSC
1.500 BSC
.750 BSC
2.625
1.625
.375 BSC 4 PLACES
.625 BSC
.750 BSC 4 PLACES
.375 BSC
A
A
SEE DETAIL A
.375 BSC
.140
.250 BSC 4 PLACES
.500 BSC 4 PLACES
17.250 BSC
.888 REF
18.000 BSC
18.750 BSC
19.500 BSC
.750 BSC
17.000 BSC
.125 DIA
.672 REF
.203 REF
.312 REF
.130 REF
.500 REF
.125 DIA

MASTER

QTY REQD	PART OR IDENTIFYING NO.	NOMENCLATURE OR DESCRIPTION	FIND NO.

LIST OF MATERIALS

NEXT ASSY	USED ON

APPLICATION

UNLESS OTHERWISE SPECIFIED
DIMENSIONS ARE IN INCHES
TOLERANCES ON
FRACTIONS ± — DECIMALS ±.005 ANGLES ± —
DO NOT SCALE THIS DRAWING
MATERIAL —
HEAT TREATMENT —
FINAL FINISH —

MIT
INSTRUMENTATION LAB
CAMBRIDGE, MASS.
DRAWN Mahony DATE 8-20-63
CHECKED
APPROVAL
APPROVAL
NASA APPROVAL
MIT APPROVAL

MANNED SPACECRAFT CENTER
HOUSTON, TEXAS

TRAY B
LEFT HAND

CODE IDENT NO.
SIZE
NASA DRAWING NO. 1004220
SCALE 1/1
WT
SHEET 2 OF 2

1004220

INCHES
PHOTOGRAPHIC SCALE ONLY

F-2

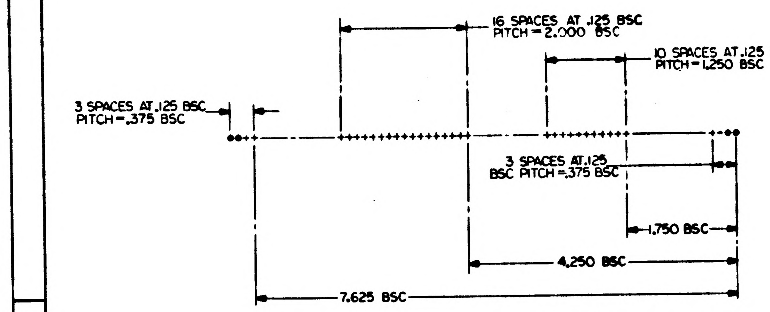
16 SPACES AT .125 BSC PITCH = 2.000 BSC
10 SPACES AT .125 BSC PITCH = 1.250 BSC
3 SPACES AT .125 BSC PITCH = .375 BSC
3 SPACES AT .125 BSC PITCH = .375 BSC
1.750 BSC
4.250 BSC
7.625 BSC

DETAIL A

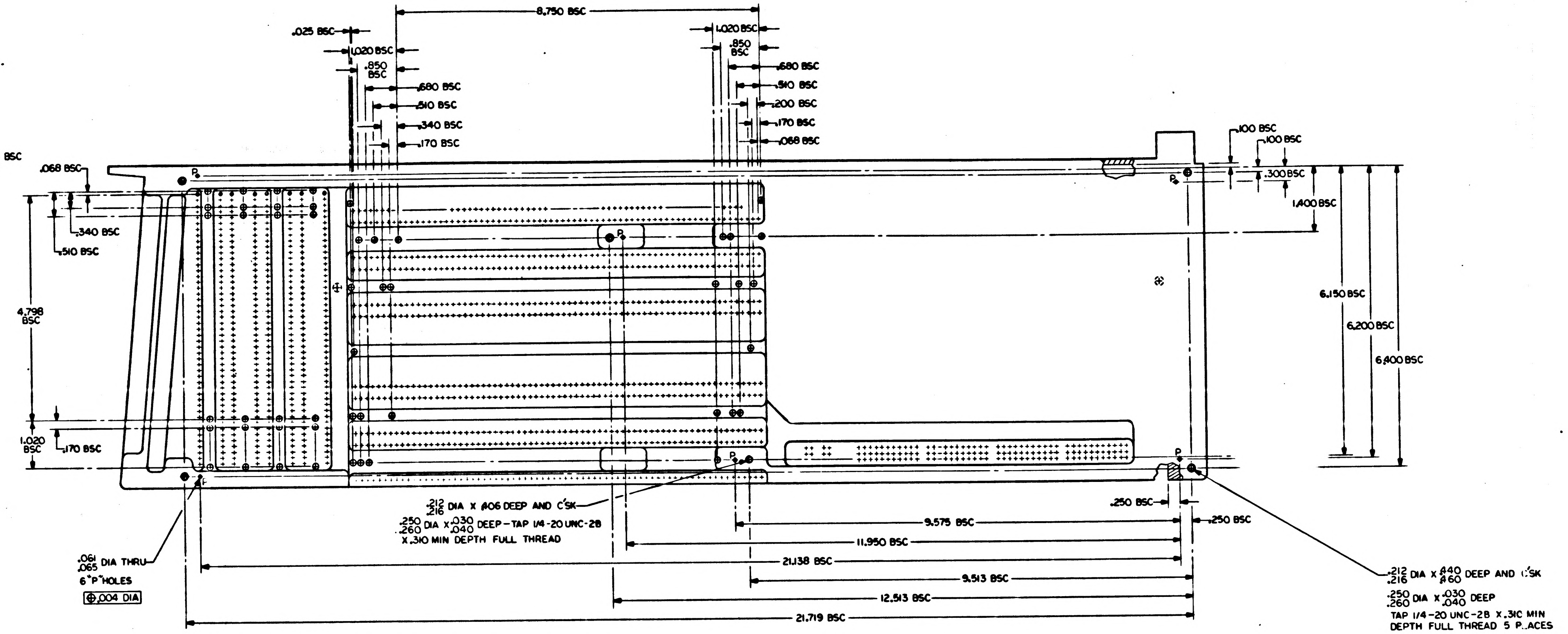
8.750 BSC
.025 BSC
1.020 BSC
.850 BSC
.680 BSC
.510 BSC
.340 BSC
.170 BSC
1.020 BSC
.850 BSC
.680 BSC
.510 BSC
.200 BSC
.170 BSC
.068 BSC
.068 BSC
.340 BSC
.510 BSC
4.798 BSC
1.020 BSC
.170 BSC
.100 BSC
.100 BSC
.300 BSC
1.400 BSC
6.150 BSC
6.200 BSC
6.400 BSC
P
.212/.216 DIA X .406 DEEP AND C'SK
.250/.260 DIA X .030/.040 DEEP—TAP 1/4-20 UNC-2B X .310 MIN DEPTH FULL THREAD
.061/.065 DIA THRU
6 "P" HOLES
⊕ .004 DIA
.250 BSC
.250 BSC
9.575 BSC
11.950 BSC
21.138 BSC
9.513 BSC
12.513 BSC
21.719 BSC
.212/.216 DIA X .440/.460 DEEP AND C'SK
.250/.260 DIA X .030/.040 DEEP
TAP 1/4-20 UNC-2B X .310 MIN DEPTH FULL THREAD 5 PLACES

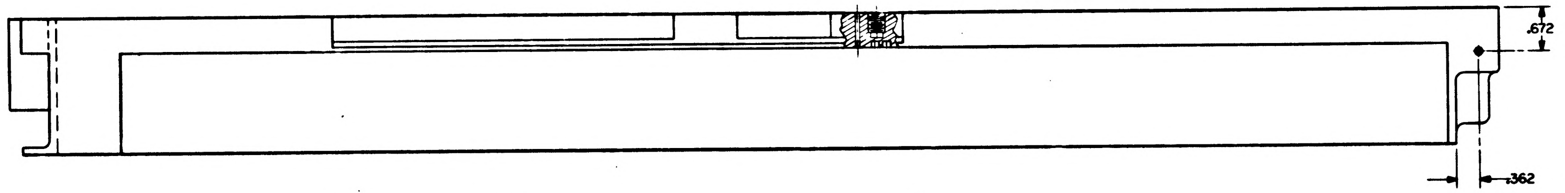

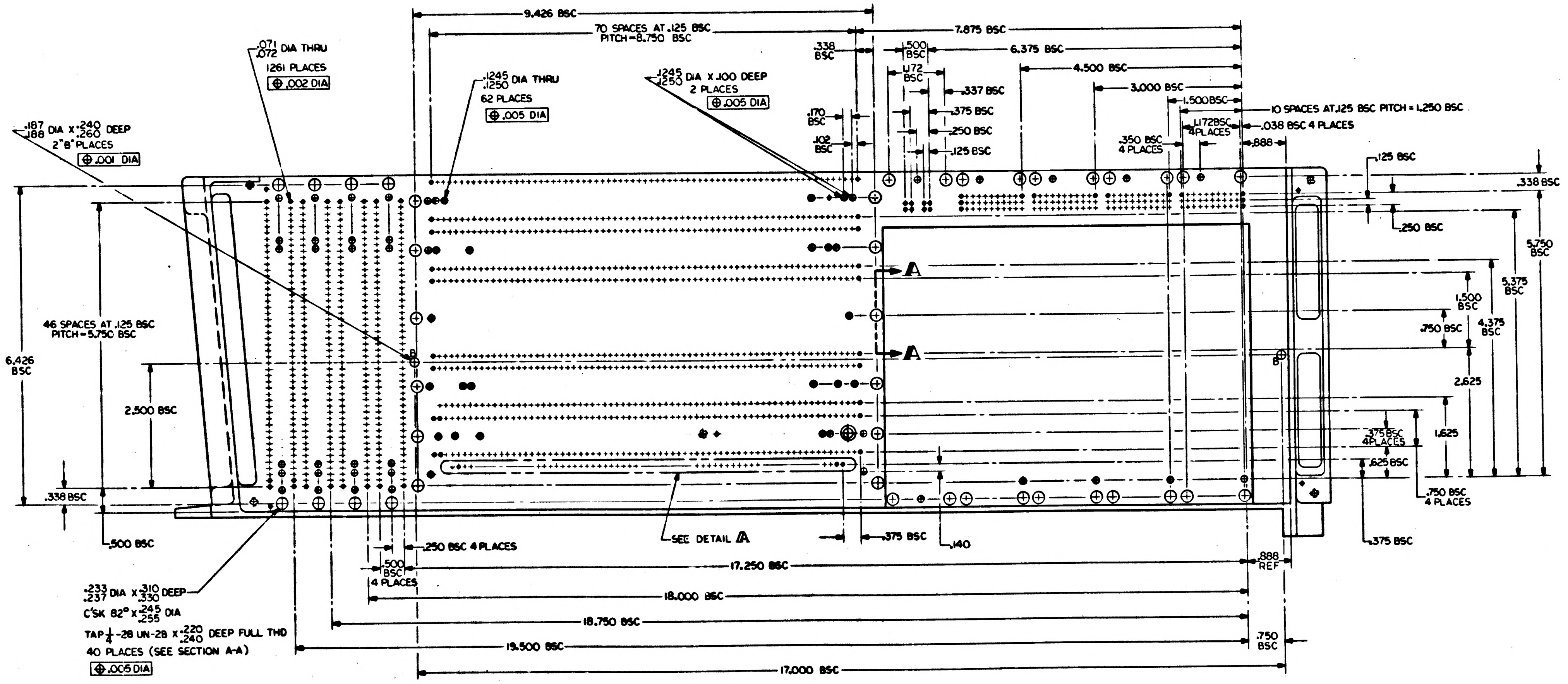
9.426 BSC
70 SPACES AT .125 BSC PITCH = 8.750 BSC
7.875 BSC
.338 BSC
1.500 BSC
6.375 BSC
1.172 BSC
4.500 BSC
.337 BSC
3.000 BSC
.375 BSC
1.500 BSC
10 SPACES AT .125 BSC PITCH = 1.250 BSC
.250 BSC
1.172 BSC 4 PLACES
.038 BSC 4 PLACES
.125 BSC
.350 BSC 4 PLACES
.888
.170 BSC
.102 BSC
.071/.072 DIA THRU
1261 PLACES
⊕ .002 DIA
.1245/.1250 DIA THRU
62 PLACES
⊕ .005 DIA
.1245/.1250 DIA X .100 DEEP
2 PLACES
⊕ .005 DIA
.187/.188 DIA X .240/.260 DEEP
2 "B" PLACES
⊕ .001 DIA
.125 BSC
.338 BSC
.250 BSC
5.750 BSC
5.375 BSC
1.500 BSC
4.375 BSC
.750 BSC
2.625
A
A
B
46 SPACES AT .125 BSC PITCH = 5.750 BSC
6.426 BSC
2.500 BSC
.338 BSC
.375 BSC 4 PLACES
.625 BSC
1.625
.750 BSC 4 PLACES
.375 BSC
.500 BSC
.250 BSC 4 PLACES
SEE DETAIL A
.375 BSC
.140
.500 BSC 4 PLACES
17.250 BSC
.888 REF
18.000 BSC
18.750 BSC
19.500 BSC
.750 BSC
17.000 BSC
.233/.237 DIA X .310/.330 DEEP
C'SK 82° X .245/.255 DIA
TAP 1/4-28 UN-2B X .220/.240 DEEP FULL THD
40 PLACES (SEE SECTION A-A)
⊕ .005 DIA

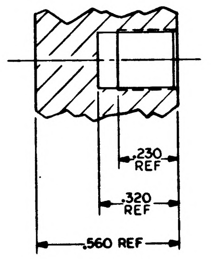
.230 REF
.320 REF
.560 REF

SECTION A-A
SCALE 4/1
40 PLACES

1004220

INCHES
0 1 2
PHOTOGRAPHIC SCALE ONLY

F1

1004221

SYM	DESCRIPTION	DATE	APPROVAL

REVISIONS

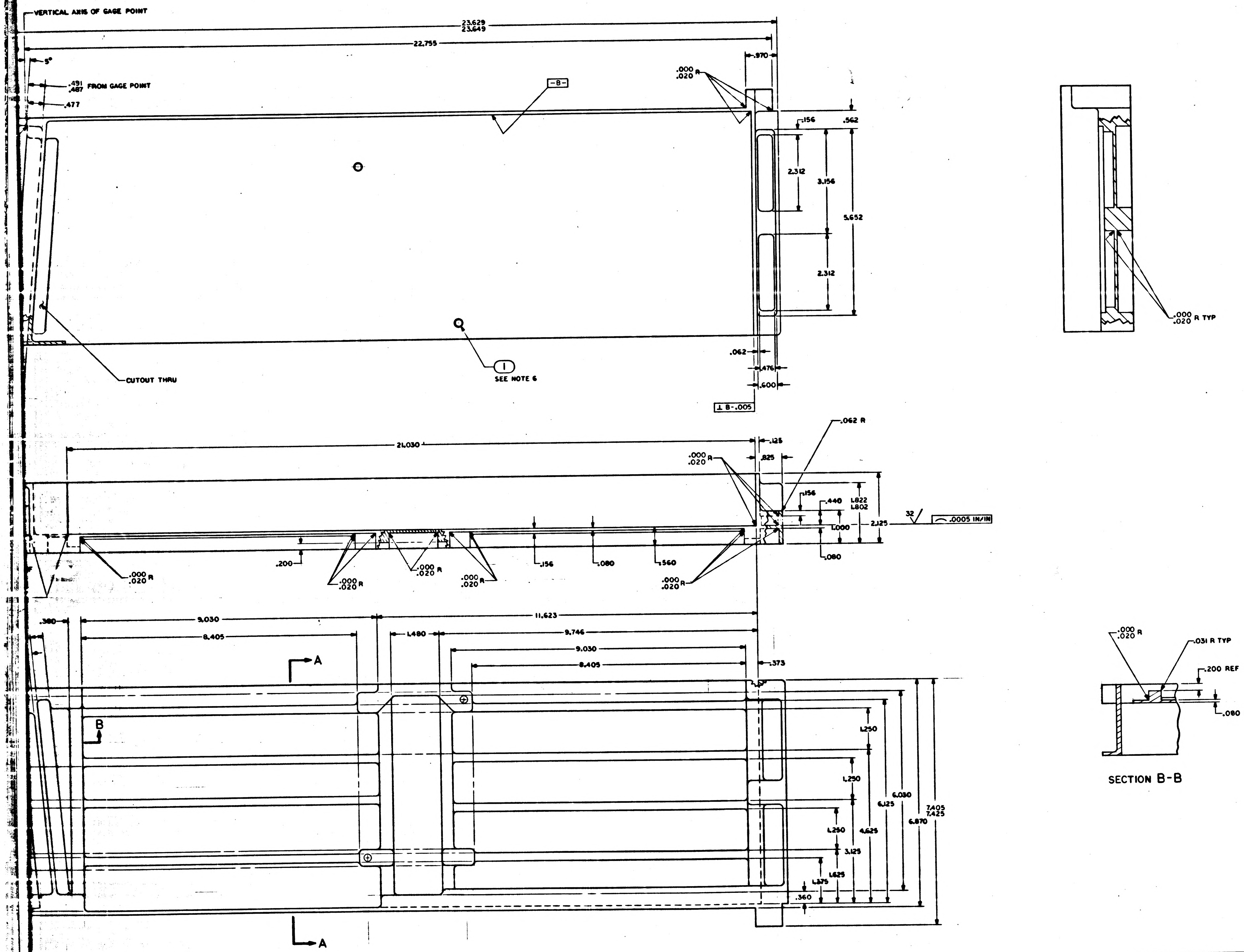

VERTICAL AXIS OF GAGE POINT
23.629
23.649
22.755
5°
.491
.487 FROM GAGE POINT
.477
-B-
.970
.000
.020 R
.156
.562
2.312
3.156
5.652
2.312
CUTOUT THRU
1
SEE NOTE 6
.062
.476
.600
⊥ B-.005
.062 R
21.030
.125
.000
.020 R
.825
.156
.440
1.822
1.802
2.125
1.000
.080
32
⌒ .0005 IN/IN
.200
.000
.020 R
.000
.020 R
.000
.020 R
.000
.020 R
.156
.080
.560
.000
.020 R
.000
.020 R TYP
.380
9.030
8.405
11.623
1.480
9.746
9.030
8.405
.373
A
B
1.250
1.250
6.030
6.125
7.405
7.425
6.870
1.250
4.625
3.125
1.625
1.375
.360
A
.000
.020 R
.031 R TYP
.200 REF
.080 REF
SECTION B-B

MASTER

2	NAS 1394CA-08L	INSERT, THREADED, SELF-LOCKING	1
QTY REQD	PART OR IDENTIFYING NO.	NOMENCLATURE OR DESCRIPTION	FIND NO.

LIST OF MATERIALS

NEXT ASSY	USED ON
APPLICATION	

UNLESS OTHERWISE SPECIFIED
DIMENSIONS ARE IN INCHES
TOLERANCES ON
FRACTIONS ± — DECIMALS ± .005 ANGLES ± 1/2
DO NOT SCALE THIS DRAWING

MATERIAL
SEE NOTE 2

HEAT TREATMENT
—

FINAL FINISH
—

MIT
INSTRUMENTATION LAB
CAMBRIDGE, MASS.

DRAWN D. Folger DATE 26 July 63
CHECKED Hong 8/2/63
APPROVAL W.B. Larson 6 Aug 63
APPROVAL J. Jaggon 8/6/63
NASA APPROVAL
MIT APPROVAL

MANNED SPACECRAFT CENTER
HOUSTON, TEXAS

TRAY B
RIGHT HAND

CODE IDENT NO.
SIZE J
NASA DRAWING NO. 1004221
SCALE 1/1
WT
SHEET 1 OF 2

1004221

INCHES
PHOTOGRAPHIC SCALE ONLY

NOTICE — WHEN GOVERNMENT DRAWINGS, SPECIFICATIONS, OR OTHER DATA ARE USED FOR ANY PURPOSE OTHER THAN IN CONNECTION WITH A DEFINITELY RELATED GOVERNMENT PROCUREMENT OPERATION, THE UNITED STATES GOVERNMENT THEREBY INCURS NO RESPONSIBILITY NOR ANY OBLIGATION WHATSOEVER; AND THE FACT THAT THE GOVERNMENT MAY HAVE FORMULATED, FURNISHED, OR IN ANY WAY SUPPLIED THE SAID DRAWINGS, SPECIFICATIONS, OR OTHER DATA IS NOT TO BE REGARDED BY IMPLICATION OR OTHERWISE AS IN ANY MANNER LICENSING THE HOLDER OR ANY OTHER PERSON OR CORPORATION, OR CONVEYING ANY RIGHTS OR PERMISSION TO MANUFACTURE, USE, OR SELL ANY PATENTED INVENTION THAT MAY IN ANY WAY BE RELATED THERETO.

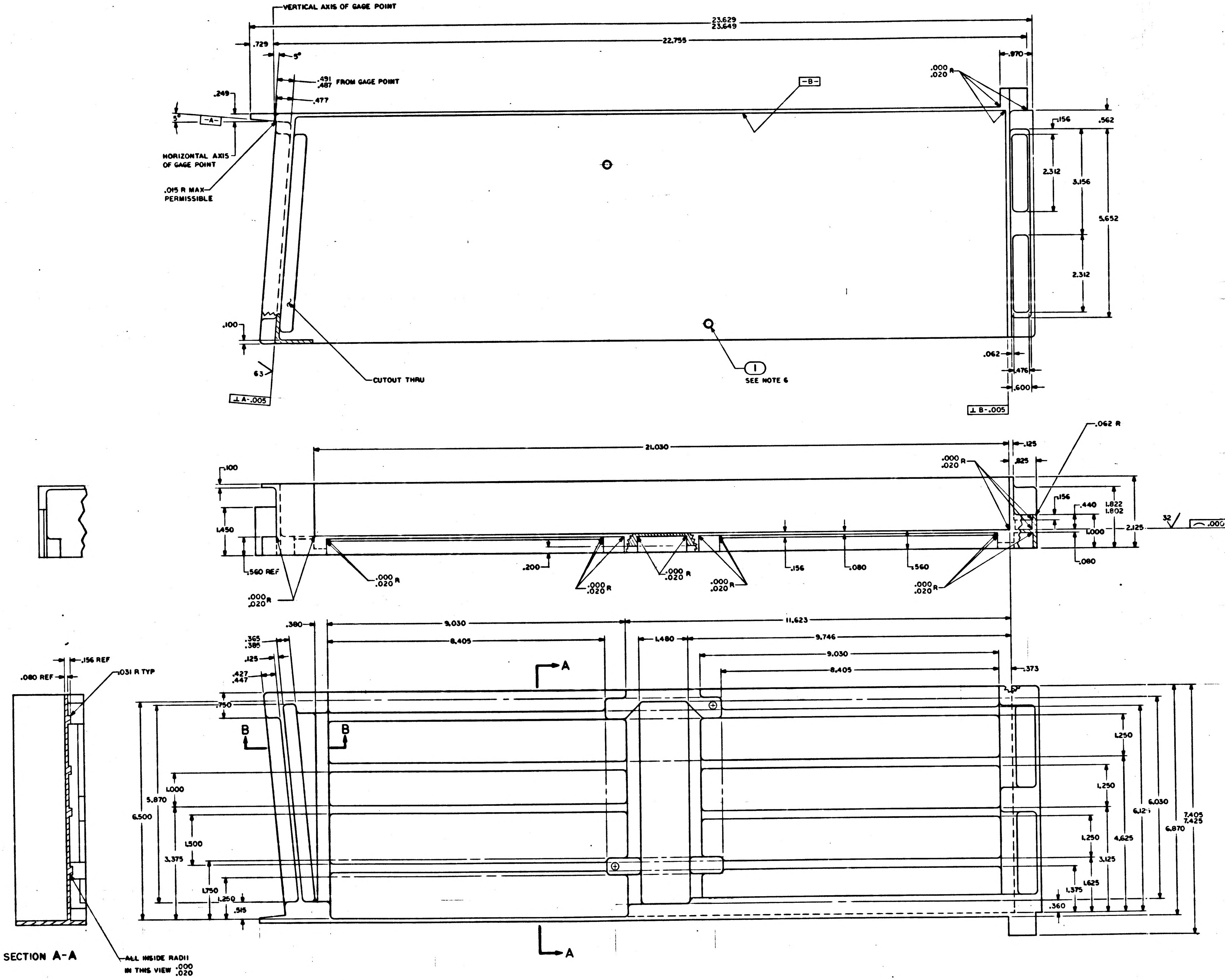
VERTICAL AXIS OF GAGE POINT
23.629
23.649
.729
22.755
5°
.491
.487 FROM GAGE POINT
.477
.249
-A-
-B-
HORIZONTAL AXIS OF GAGE POINT
.015 R MAX PERMISSIBLE
.870
.000
.020 R
.156
.562
2.312
3.156
5.652
2.312
.100
63
CUTOUT THRU
1
SEE NOTE 6
⊥ A-.005
⊥ B-.005
.062
.476
.600
21.030
.125
.825
.062 R
.100
1.450
.560 REF
.200
.000
.020 R
.156
.080
.560
.440
1.822
1.802
1.000
2.125
.080
32
.000
.380
9.030
11.623
.365
.385
8.405
1.480
9.746
.125
9.030
8.405
.427
.447
.373
A
B
B
.750
1.000
5.870
6.500
1.500
3.375
1.750
1.250
.515
1.250
1.250
1.250
3.125
4.625
1.625
1.375
.360
6.030
6.12
6.870
7.405
7.425
A
.156 REF
.080 REF
.031 R TYP
SECTION A-A
ALL INSIDE RADII IN THIS VIEW .000
.020

NOTES

1. INTERPRET DRAWING IN ACCORDANCE WITH STANDARDS PRESCRIBED BY MIL-D-70327
2. MAKE FROM NASA DWG 1004150
3. REMOVE BURRS AND BREAK SHARP EDGES .005-.015
4. UNLESS OTHERWISE SPECIFIED FINISH 125√
5. ALL RADII AND FILLETS TO BE .125 UNLESS OTHERWISE SPECIFIED
6. COAT THREADS AND FIND NO. 1 WITH MIL-P-8585 WET ZINC CHROMATE

1004221

INCHES
PHOTOGRAPHIC SCALE ONLY

	REVISIONS 02394		
SYM	DESCRIPTION	DATE	APPROVAL
A	REVISED PER TDRR 03465	8-26-63	

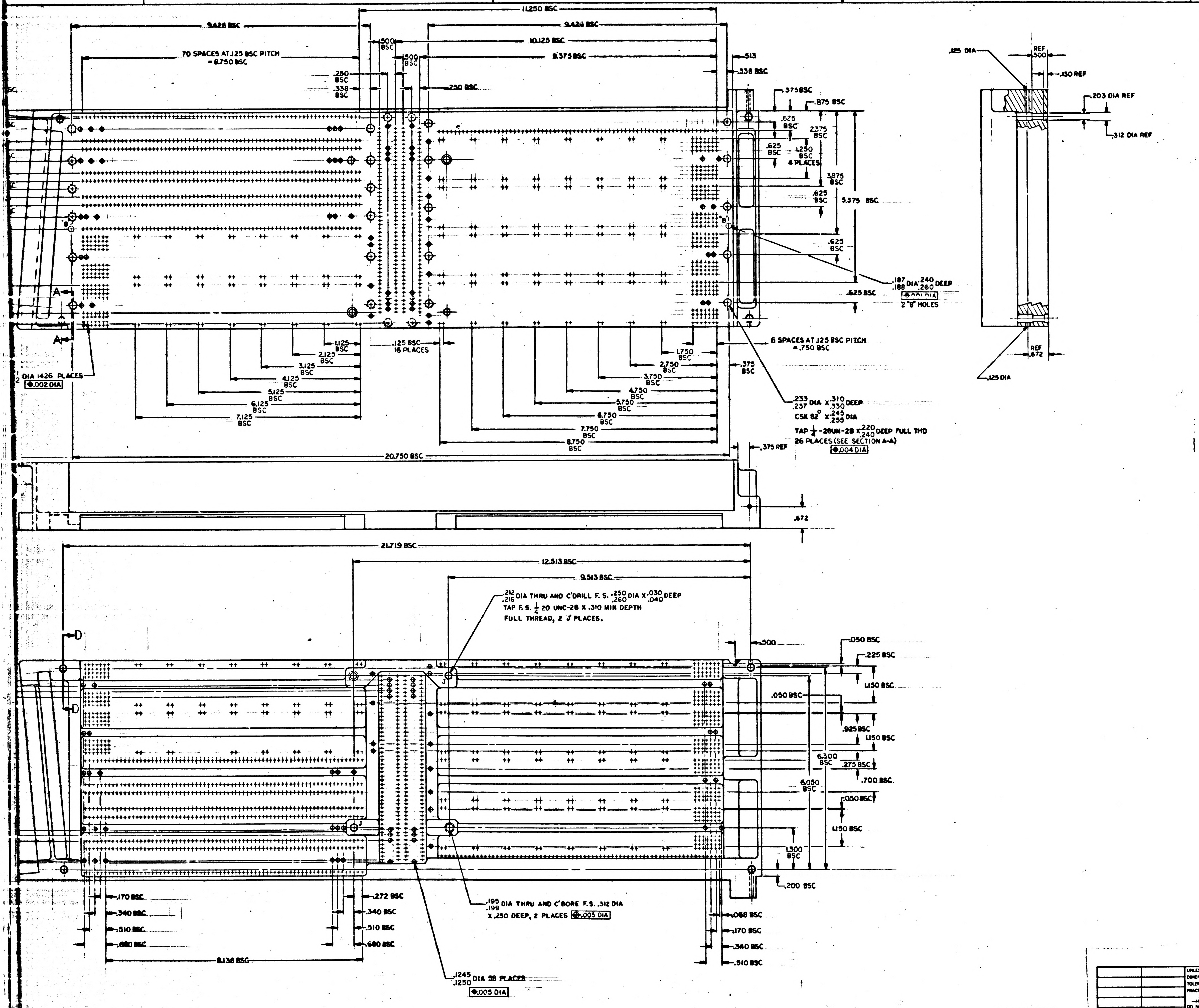

11.250 BSC
9.426 BSC
9.426 BSC
10.125 BSC
9.375 BSC
70 SPACES AT .125 BSC PITCH = 8.750 BSC
.500 BSC
.250 BSC
.338 BSC
.250 BSC
.513
.338 BSC
.375 BSC
.875 BSC
.625 BSC
2.375 BSC
1.250 BSC 4 PLACES
3.875 BSC
5.375 BSC
.187 .188 DIA .240 .260 DEEP
.001 DIA
2 "B" HOLES
.625 BSC
.125 BSC 16 PLACES
6 SPACES AT .125 BSC PITCH = .750 BSC
.375 BSC
DIA 14 26 PLACES
.002 DIA
1.125 BSC
2.125 BSC
3.125 BSC
4.125 BSC
5.125 BSC
6.125 BSC
7.125 BSC
1.750 BSC
2.750 BSC
3.750 BSC
4.750 BSC
5.750 BSC
6.750 BSC
7.750 BSC
8.750 BSC
.233 .237 DIA X .310 .330 DEEP
CSK 82° X .245 .255 DIA
TAP 1/4-28UN-2B X .220 .240 DEEP FULL THD
26 PLACES (SEE SECTION A-A)
.004 DIA
20.750 BSC
.375 REF
.672
A
A
B
.125 DIA
REF .500
.130 REF
.203 DIA REF
.312 DIA REF
REF .672
.125 DIA
21.719 BSC
12.513 BSC
9.513 BSC
.212 .216 DIA THRU AND C'DRILL F.S. .250 .260 DIA X .030 .040 DEEP
TAP F.S. 1/4 20 UNC-2B X .310 MIN DEPTH
FULL THREAD, 2 'J' PLACES.
D
D
J
J
.500
.050 BSC
.225 BSC
1.150 BSC
.050 BSC
.925 BSC
1.150 BSC
6.300 BSC
.275 BSC
.700 BSC
6.050 BSC
.050 BSC
1.150 BSC
1.300 BSC
.200 BSC
.170 BSC
.340 BSC
.510 BSC
.680 BSC
.272 BSC
.340 BSC
.510 BSC
.680 BSC
8.138 BSC
.195 .199 DIA THRU AND C'BORE F.S. .312 DIA
X .250 DEEP, 2 PLACES .005 DIA
.1245 .1250 DIA 58 PLACES
.005 DIA
.068 BSC
.170 BSC
.340 BSC
.510 BSC

MASTER

QTY REQD	PART OR IDENTIFYING NO.	NOMENCLATURE OR DESCRIPTION	FIND NO.

LIST OF MATERIALS

1003127	
NEXT ASSY	USED ON
APPLICATION	

UNLESS OTHERWISE SPECIFIED
DIMENSIONS ARE IN INCHES
TOLERANCES ON
FRACTIONS ± — DECIMALS ± .005 ANGLES ± 0°30'
DO NOT SCALE THIS DRAWING
MATERIAL —
HEAT TREATMENT —
FINAL FINISH —

MIT
INSTRUMENTATION LAB
CAMBRIDGE, MASS
DWG. NO. CONTRACT
DRAWN DATE
CHECKED
APPROVAL
APPROVAL
NASA APPROVAL 8/7/63
MIT APPROVAL

MANNED SPACECRAFT CENTER
HOUSTON, TEXAS

TRAY B
RIGHT HAND

CODE IDENT NO. | SIZE J | NASA DRAWING NO. 1004221
SCALE 1/1 | WT | SHEET 2 OF 2

1004221A SHT 2-2

INCHES
PHOTOGRAPHIC SCALE ONLY

F-2

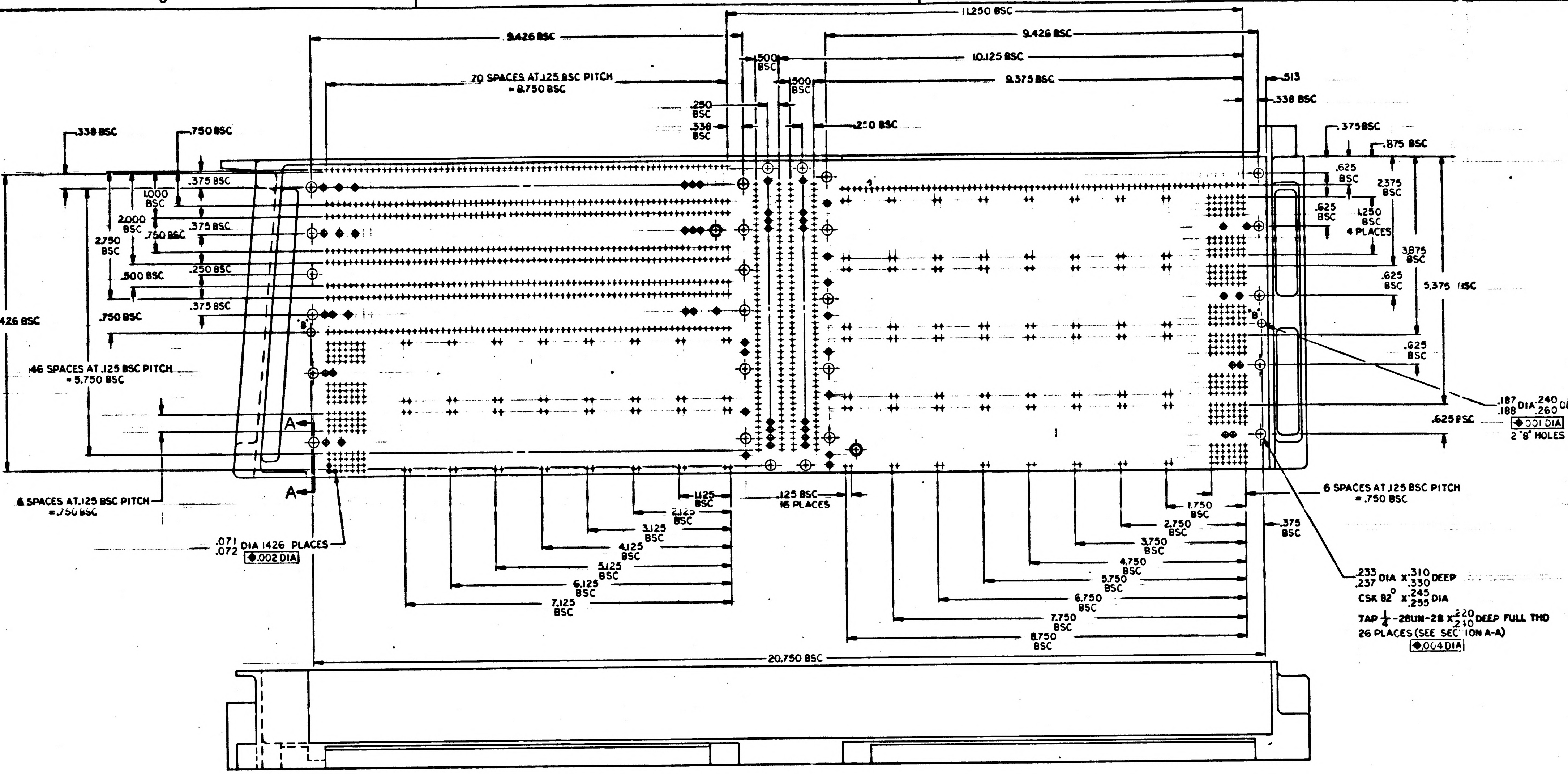
11.250 BSC
9.426 BSC
9.426 BSC
10.125 BSC
9.375 BSC
70 SPACES AT .125 BSC PITCH = 8.750 BSC
.500 BSC
.500 BSC
.250 BSC
.338 BSC
.250 BSC
.513
.338 BSC
.375 BSC
.875 BSC
.338 BSC
.750 BSC
.375 BSC
1.000 BSC
2.000 BSC
2.750 BSC
.750 BSC
.375 BSC
.500 BSC
.250 BSC
.375 BSC
.750 BSC
6.426 BSC
146 SPACES AT .125 BSC PITCH = 5.750 BSC
.625 BSC
2.375 BSC
.625 BSC
1.250 BSC
4 PLACES
3.875 BSC
.625 BSC
5.375 BSC
.625 BSC
"B"
.187 .188 DIA .240 .260 DEEP
⌖ .001 DIA
2 "B" HOLES
.625 BSC
A
A
6 SPACES AT .125 BSC PITCH = .750 BSC
.071 .072 DIA 1426 PLACES
⌖ .002 DIA
1.125 BSC
2.125 BSC
3.125 BSC
4.125 BSC
5.125 BSC
6.125 BSC
7.125 BSC
.125 BSC 16 PLACES
1.750 BSC
2.750 BSC
3.750 BSC
4.750 BSC
5.750 BSC
6.750 BSC
7.750 BSC
8.750 BSC
6 SPACES AT .125 BSC PITCH = .750 BSC
.375 BSC
.233 .237 DIA X .310 .330 DEEP
CSK 82° X .245 .255 DIA
TAP 1/4-28UN-2B X .220 .240 DEEP FULL THD
26 PLACES (SEE SECTION A-A)
⌖ .004 DIA
20.750 BSC

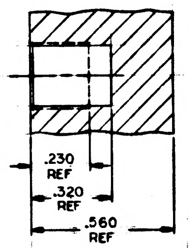
.230 REF
.320 REF
.560 REF

SECTION A-A
SCALE 4/1
26 PLACES

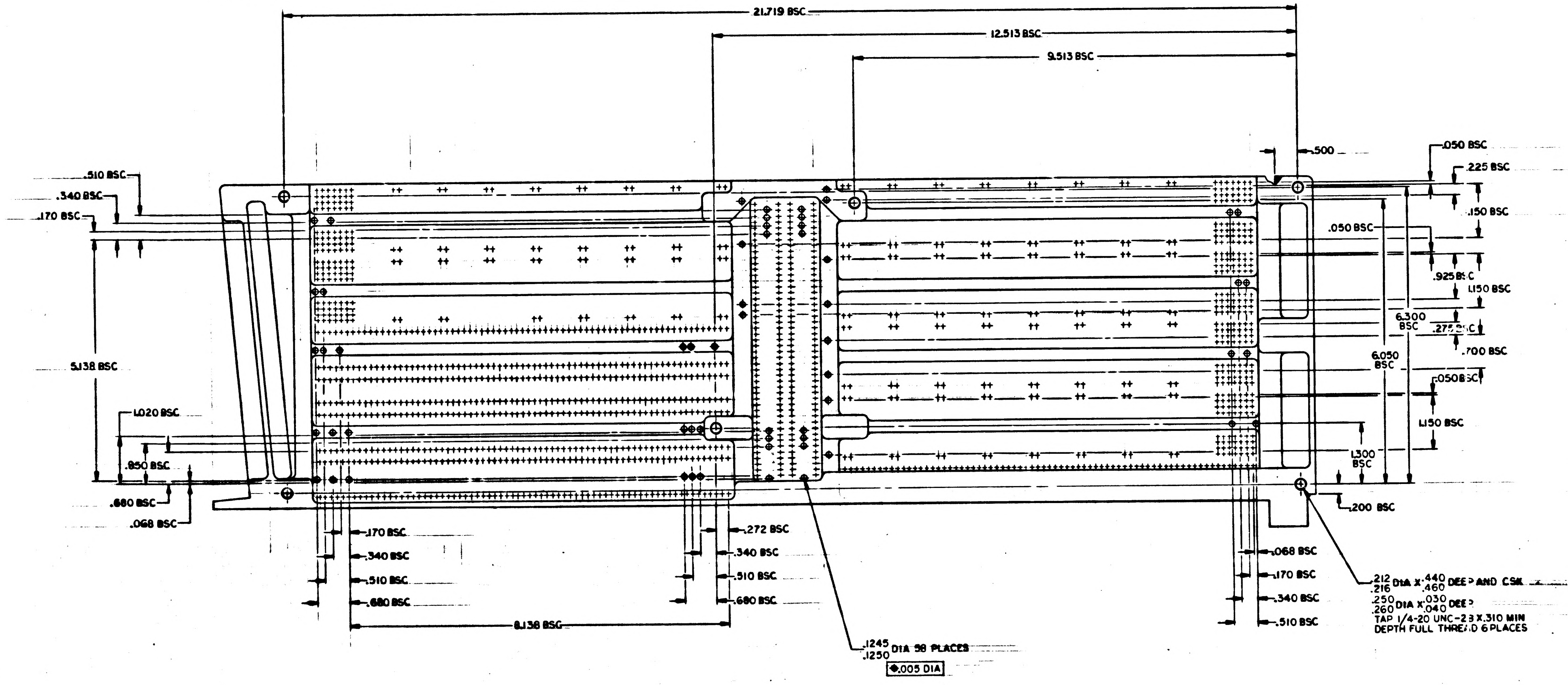
21.719 BSC
12.513 BSC
9.513 BSC
.500
.050 BSC
.225 BSC
.510 BSC
.340 BSC
.170 BSC
.150 BSC
.050 BSC
.925 BSC
1.150 BSC
6.300 BSC
.275 BSC
.700 BSC
6.050 BSC
.050 BSC
1.150 BSC
1.300 BSC
.200 BSC
5.138 BSC
1.020 BSC
.850 BSC
.680 BSC
.068 BSC
.170 BSC
.340 BSC
.510 BSC
.680 BSC
.272 BSC
.340 BSC
.510 BSC
.680 BSC
8.138 BSC
.1245 .1250 DIA 98 PLACES
⌖ .005 DIA
.068 BSC
.170 BSC
.340 BSC
.510 BSC
.212 .216 DIA X .440 .460 DEEP AND CSK
.250 .260 DIA X .030 .040 DEEP
TAP 1/4-20 UNC-2B X .310 MIN
DEPTH FULL THREAD 6 PLACES

INCHES
0 1 2
PHOTOGRAPHIC SCALE ONLY

1004221 B

SYM	DESCRIPTION	DATE	APPROVAL
A	REVISED PER TDRR 03465	9-26-63	
B	REVISED PER TDRR 03842	10-10-63	

REVISIONS D2549

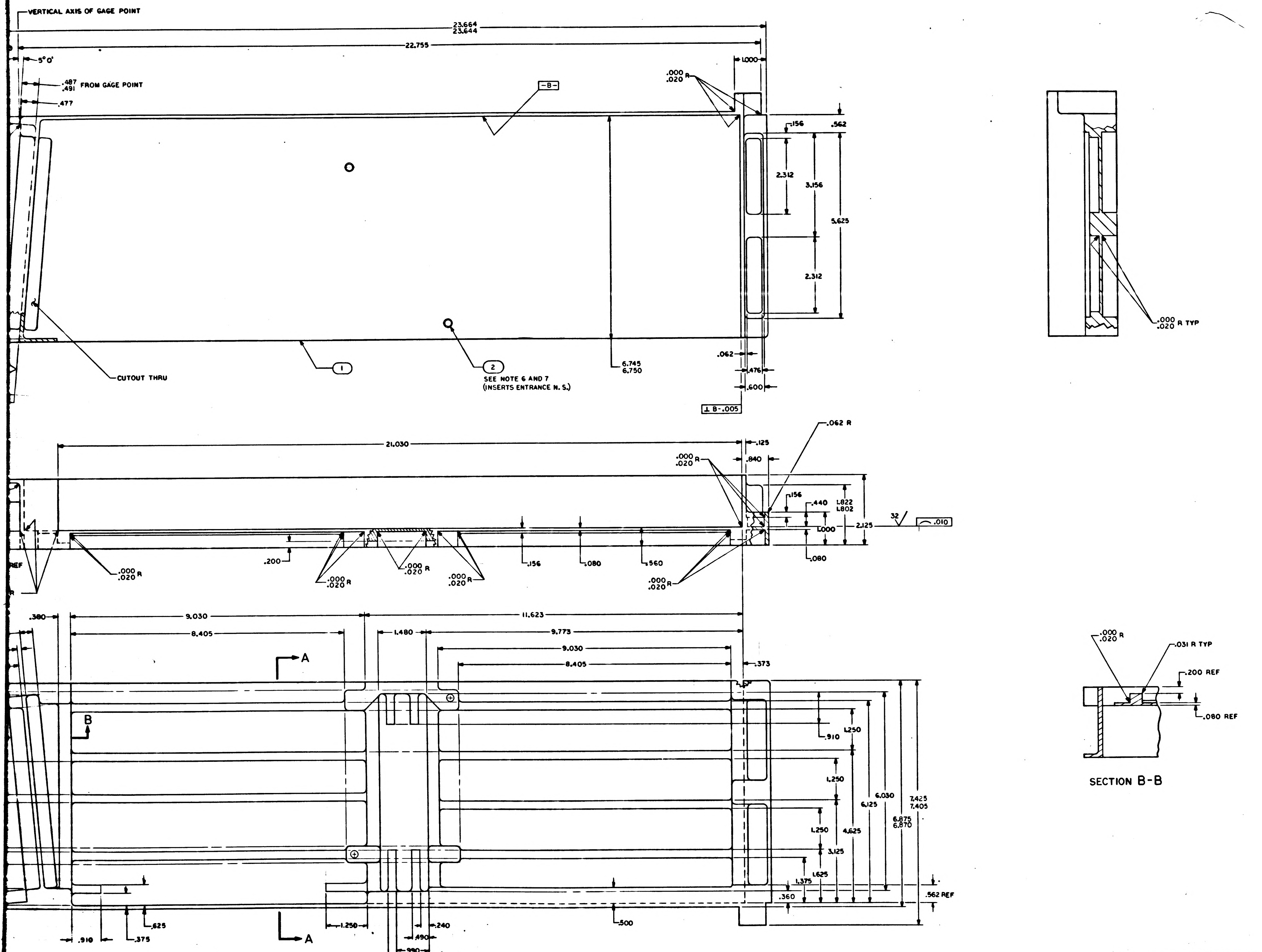

VERTICAL AXIS OF GAGE POINT
23.664
23.644
22.755
5°0'
.487
.491 FROM GAGE POINT
.477
-B-
.000
.020 R
1.000
.156
.562
2.312
3.156
5.625
2.312
CUTOUT THRU
1
2
SEE NOTE 6 AND 7
(INSERTS ENTRANCE N. S.)
6.745
6.750
.062
.476
.600
⊥ B-.005
.000
.020 R TYP
.062 R
21.030
.125
.000
.020 R
.840
.156
.440
1.822
1.802
1.000
2.125
32
.010
.080
.200
.156
.080
.560
.000
.020 R
REF
.380
9.030
8.405
11.623
1.480
9.773
9.030
8.405
.373
A
B
.910
1.250
1.250
1.250
6.030
6.125
4.625
3.125
1.625
1.375
.360
7.425
7.405
6.875
6.870
.562 REF
.500
.625
.910
.375
1.250
.490
.240
.990
1.240
.000
.020 R
.031 R TYP
.200 REF
.080 REF
SECTION B-B

QTY REQD	PART OR IDENTIFYING NO.	NOMENCLATURE OR DESCRIPTION	FIND NO.
2	NAS 1394CA-08	INSERT, THREADED	2
1	1004221-1	TRAY B, RIGHT HAND	1

LIST OF MATERIALS

NEXT ASSY	USED ON
1003127	

APPLICATION

UNLESS OTHERWISE SPECIFIED
DIMENSIONS ARE IN INCHES
TOLERANCES ON
FRACTIONS ± — DECIMALS ± .005 ANGLES ± 0°30'
DO NOT SCALE THIS DRAWING

MATERIAL
SEE NOTE 2

HEAT TREATMENT
—

FINAL FINISH
—

MIT
INSTRUMENTATION LAB
CAMBRIDGE, MASS
DWG. NO. CONTRACT

DRAWN J. Falzone DATE 26 July 63
CHECKED 8/2/63
APPROVAL W.B. Tanner 6 Aug 63
APPROVAL 8/6/63
NASA APPROVAL
MIT APPROVAL

MANNED SPACECRAFT CENTER
HOUSTON, TEXAS

TRAY B
RIGHT HAND

CODE IDENT NO.
SIZE J
NASA DRAWING NO. 1004221
SCALE 1/1
WT
SHEET 1 OF 2

1004221B SHT 1-2

INCHES
PHOTOGRAPHIC SCALE ONLY

F-2

NOTICE -- WHEN GOVERNMENT DRAWINGS, SPECIFICATIONS, OR OTHER DATA ARE USED FOR ANY PURPOSE OTHER THAN IN CONNECTION WITH A DEFINITELY RELATED GOVERNMENT PROCUREMENT OPERATION, THE UNITED STATES GOVERNMENT THEREBY INCURS NO RESPONSIBILITY NOR ANY OBLIGATION WHATSOEVER; AND THE FACT THAT THE GOVERNMENT MAY HAVE FORMULATED, FURNISHED, OR IN ANY WAY SUPPLIED THE SAID DRAWINGS, SPECIFICATIONS, OR OTHER DATA IS NOT TO BE REGARDED BY IMPLICATION OR OTHERWISE AS IN ANY MANNER LICENSING THE HOLDER OR ANY OTHER PERSON OR CORPORATION, OR CONVEYING ANY RIGHTS OR PERMISSION TO MANUFACTURE, USE, OR SELL ANY PATENTED INVENTION THAT MAY IN ANY WAY BE RELATED THERETO.

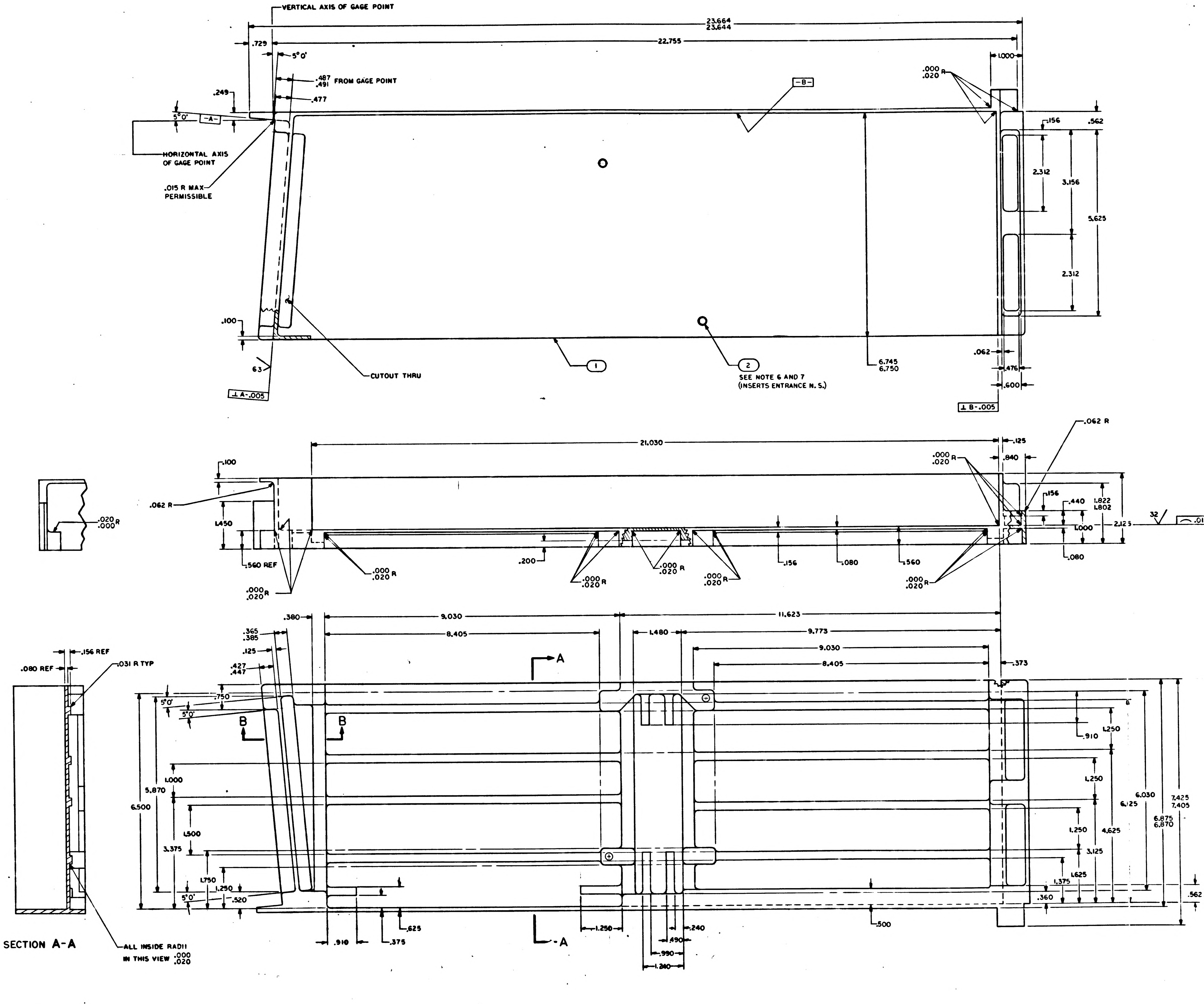
VERTICAL AXIS OF GAGE POINT
23.664
23.644
.729
22.755
5°0'
.487
.491 FROM GAGE POINT
.477
.249
-A-
-B-
1.000
.000
.020 R
HORIZONTAL AXIS OF GAGE POINT
.015 R MAX PERMISSIBLE
.156
.562
2.312
3.156
5.625
2.312
.100
63
CUTOUT THRU
1
2
SEE NOTE 6 AND 7 (INSERTS ENTRANCE N. S.)
6.745
6.750
.062
.476
.600
⊥ A-.005
⊥ B-.005
21.030
.125
.062 R
.840
.100
.062 R
1.450
.560 REF
.020
.000 R
.200
.156
.080
.560
.440
1.822
1.802
1.000
2.125
.080
32
9.030
11.623
.380
.365
.385
.125
.427
.447
8.405
1.480
9.773
9.030
8.405
.373
A
B
B
.750
5.870
6.500
1.000
1.500
3.375
1.750
1.250
.520
.910
1.250
1.250
6.030
6.125
7.425
7.405
6.875
6.870
1.250
4.625
3.125
1.625
1.375
.360
.562
.625
.375
.910
1.250
.240
.490
.990
1.240
.500
A
.080 REF
.156 REF
.031 R TYP
SECTION A-A
ALL INSIDE RADII IN THIS VIEW .000 .020

NOTES
1. INTERPRET DRAWING IN ACCORDANCE WITH STANDARDS PRESCRIBED BY MIL-D-70327
2. MAKE FROM NASA DWG 1004150
3. REMOVE BURRS AND BREAK SHARP EDGES .005-.015
4. UNLESS OTHERWISE SPECIFIED FINISH 125√
5. ALL RADII AND FILLETS TO BE .125 UNLESS OTHERWISE SPECIFIED
6. COAT FIND NO. 1 AND FIND NO. 2 WITH MIL-P-8585 WET ZINC CHROMATE PRIMER
7. INSTALL FIND NO. 2 PER ND1002121

INCHES
PHOTOGRAPHIC SCALE ONLY

REVISIONS 02394			
SYM	DESCRIPTION	DATE	APPROVAL
A	REVISED PER TDRR 03465	9-26-63	
B	REVISED PER TDRR 03842	10-1-63	

1004221 B

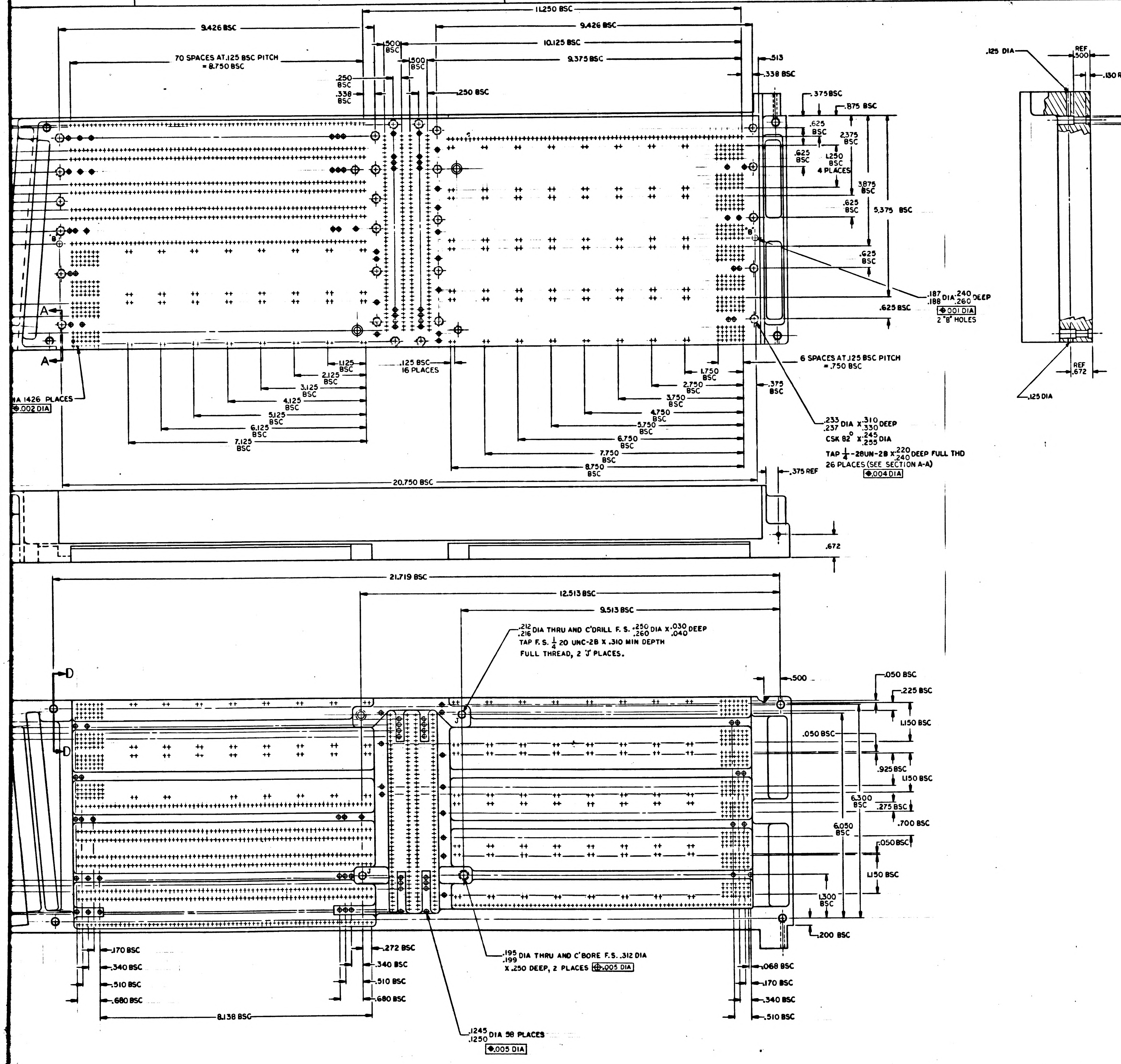

11.250 BSC
9.426 BSC
9.426 BSC
10.125 BSC
70 SPACES AT .125 BSC PITCH = 8.750 BSC
9.375 BSC
.500 BSC
.500 BSC
.250 BSC
.338 BSC
.250 BSC
.513
.338 BSC
.375 BSC
.875 BSC
.625 BSC
2.375 BSC
.625 BSC
1.250 BSC 4 PLACES
3.875 BSC
.625 BSC
5.375 BSC
.625 BSC
.625 BSC
.187/.188 DIA .240/.260 DEEP
⊕ .001 DIA
2 "B" HOLES
B
A
A
DIA 1426 PLACES
⊕ .002 DIA
1.125 BSC
2.125 BSC
3.125 BSC
4.125 BSC
5.125 BSC
6.125 BSC
7.125 BSC
.125 BSC 16 PLACES
1.750 BSC
2.750 BSC
3.750 BSC
4.750 BSC
5.750 BSC
6.750 BSC
7.750 BSC
8.750 BSC
6 SPACES AT .125 BSC PITCH = .750 BSC
.375 BSC
.233/.237 DIA X .310/.330 DEEP
CSK 82° X .245/.255 DIA
TAP 1/4-28UN-2B X .220/.240 DEEP FULL THD
26 PLACES (SEE SECTION A-A)
⊕ .004 DIA
20.750 BSC
.375 REF
.672
.125 DIA
REF .500
.130 REF
.203 DIA REF
.312 DIA REF
REF .672
.125 DIA
21.719 BSC
12.513 BSC
9.513 BSC
.212/.216 DIA THRU AND C'DRILL F.S. .250/.260 DIA X .030/.040 DEEP
TAP F.S. 1/4 20 UNC-2B X .310 MIN DEPTH
FULL THREAD, 2 'J' PLACES.
D
D
J
J
.500
.050 BSC
.225 BSC
1.150 BSC
.050 BSC
.925 BSC
1.150 BSC
6.300 BSC
.275 BSC
6.050 BSC
.700 BSC
.050 BSC
1.150 BSC
1.300 BSC
.200 BSC
.170 BSC
.340 BSC
.510 BSC
.680 BSC
.272 BSC
.340 BSC
.510 BSC
.680 BSC
8.138 BSC
.195/.199 DIA THRU AND C'BORE F.S. .312 DIA
X .250 DEEP, 2 PLACES ⊕ .005 DIA
.1245/.1250 DIA 58 PLACES
⊕ .005 DIA
.068 BSC
.170 BSC
.340 BSC
.510 BSC

QTY REQD	PART OR IDENTIFYING NO.	NOMENCLATURE OR DESCRIPTION	FIND NO.

LIST OF MATERIALS

1003127	
NEXT ASSY	USED ON
APPLICATION	

UNLESS OTHERWISE SPECIFIED DIMENSIONS ARE IN INCHES
TOLERANCES ON
FRACTIONS ± —— DECIMALS ± .005 ANGLES ± 0°30'
DO NOT SCALE THIS DRAWING
MATERIAL —— // ——
HEAT TREATMENT —— // ——
FINAL FINISH —— // ——

MIT
INSTRUMENTATION LAB
CAMBRIDGE, MASS
DWG. NO. CONTRACT
DRAWN Ed Pina DATE 29Aug63
CHECKED 8/6/63
APPROVAL W B Turner 6 Aug 63
APPROVAL 8/4/63
NASA APPROVAL 8/7/63
MIT APPROVAL George J Mufson 8/7/63

MANNED SPACECRAFT CENTER
HOUSTON, TEXAS

TRAY B
RIGHT HAND

CODE IDENT NO.
SIZE J
NASA DRAWING NO. 1004221
SCALE 1/1
WT
SHEET 2 OF 2

1004221 B

INCHES
PHOTOGRAPHIC SCALE ONLY

NOTICE — WHEN GOVERNMENT DRAWINGS, SPECIFICATIONS, OR OTHER DATA ARE USED FOR ANY PURPOSE OTHER THAN IN CONNECTION WITH A DEFINITELY RELATED GOVERNMENT PROCUREMENT OPERATION, THE UNITED STATES GOVERNMENT THEREBY INCURS NO RESPONSIBILITY NOR ANY OBLIGATION WHATSOEVER; AND THE FACT THAT THE GOVERNMENT MAY HAVE FORMULATED, FURNISHED, OR IN ANY WAY SUPPLIED THE SAID DRAWINGS, SPECIFICATIONS OR OTHER DATA IS NOT TO BE REGARDED BY IMPLICATION OR OTHERWISE AS IN ANY MANNER LICENSING THE HOLDER OR ANY OTHER PERSON OR CORPORATION, OR CONVEYING ANY RIGHTS OR PERMISSION TO MANUFACTURE, USE, OR SELL ANY PATENTED INVENTION THAT MAY IN ANY WAY BE RELATED THERETO.

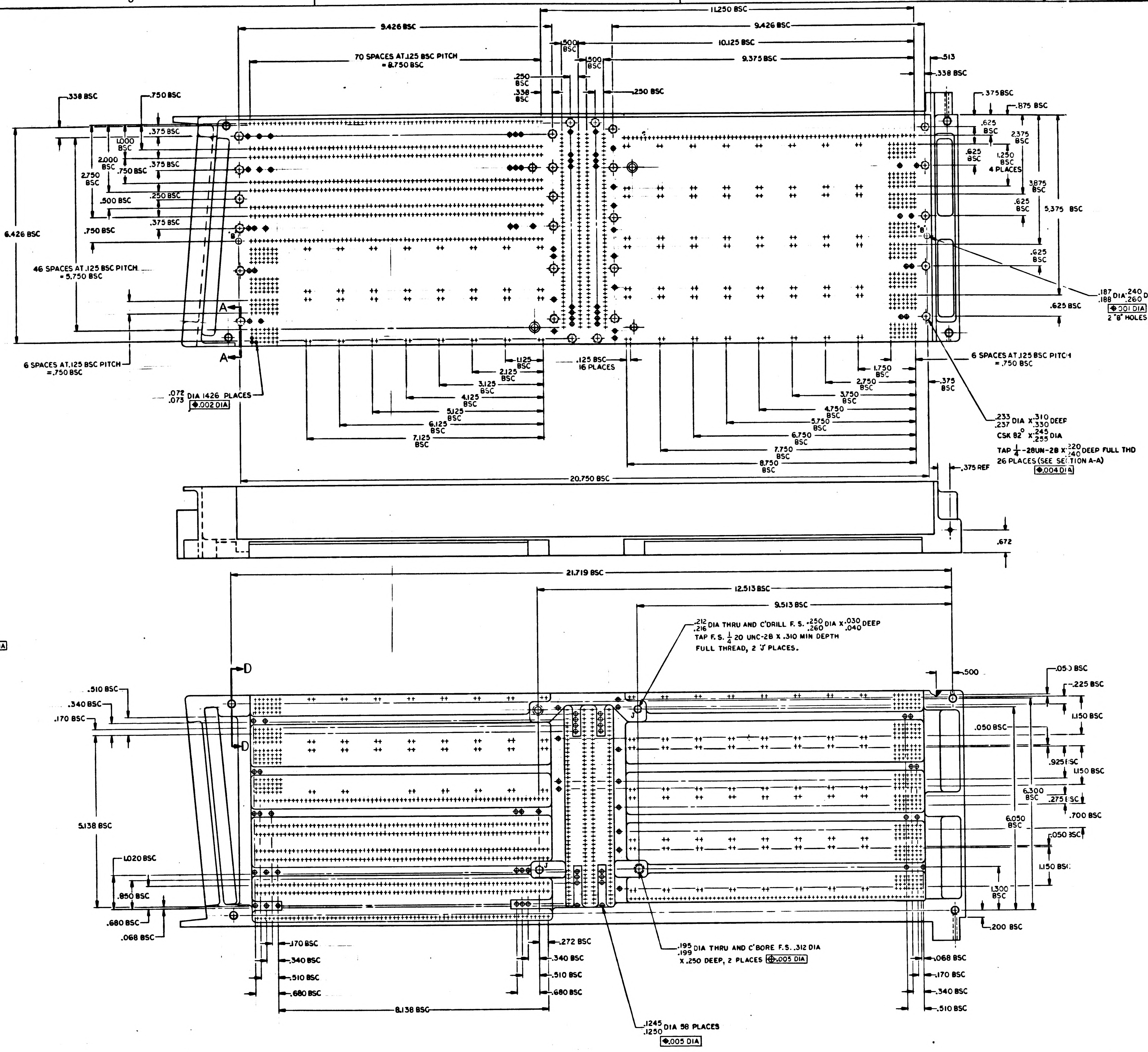
11.250 BSC
9.426 BSC
9.426 BSC
10.125 BSC
9.375 BSC
.500 BSC
.500 BSC
70 SPACES AT .125 BSC PITCH = 8.750 BSC
.250 BSC
.338 BSC
.250 BSC
.513
.338 BSC
.375 BSC
.875 BSC
.338 BSC
.750 BSC
.375 BSC
1.000 BSC
.375 BSC
2.000 BSC
.750 BSC
2.750 BSC
.250 BSC
.500 BSC
.375 BSC
.750 BSC
6.426 BSC
46 SPACES AT .125 BSC PITCH = 5.750 BSC
'B'
A
A
.625 BSC
.625 BSC
2.375 BSC
1.250 BSC 4 PLACES
3.875 BSC
.625 BSC
5.375 BSC
.625 BSC
.625 BSC
'B'
.187/.188 DIA .240/.260 D
⌖ .001 DIA
2 "B" HOLES
6 SPACES AT .125 BSC PITCH = .750 BSC
6 SPACES AT .125 BSC PITCH = .750 BSC
.072/.073 DIA 1426 PLACES
⌖ .002 DIA
1.125 BSC
2.125 BSC
3.125 BSC
4.125 BSC
5.125 BSC
6.125 BSC
7.125 BSC
.125 BSC 16 PLACES
1.750 BSC
2.750 BSC
3.750 BSC
4.750 BSC
5.750 BSC
6.750 BSC
7.750 BSC
8.750 BSC
.375 BSC
.233/.237 DIA X .310/.330 DEEP
CSK 82° X .245/.255 DIA
TAP 1/4-28UN-2B X .220/.240 DEEP FULL THD
26 PLACES (SEE SECTION A-A)
⌖ .004 DIA
20.750 BSC
.375 REF
.672
21.719 BSC
12.513 BSC
9.513 BSC
.212/.216 DIA THRU AND C'DRILL F. S. .250/.260 DIA X .030/.040 DEEP
TAP F. S. 1/4 20 UNC-2B X .310 MIN DEPTH
FULL THREAD, 2 'J' PLACES.
D
D
J
J
.500
.050 BSC
.225 BSC
1.150 BSC
.050 BSC
.925 BSC
1.150 BSC
6.300 BSC
.275 BSC
.700 BSC
6.050 BSC
.050 BSC
1.150 BSC
1.300 BSC
.200 BSC
.510 BSC
.340 BSC
.170 BSC
5.138 BSC
1.020 BSC
.850 BSC
.680 BSC
.068 BSC
.170 BSC
.340 BSC
.510 BSC
.680 BSC
.272 BSC
.340 BSC
.510 BSC
.680 BSC
8.138 BSC
.195/.199 DIA THRU AND C'BORE F.S. .312 DIA
X .250 DEEP, 2 PLACES ⌖ .005 DIA
.1245/.1250 DIA 58 PLACES
⌖ .005 DIA
.068 BSC
.170 BSC
.340 BSC
.510 BSC

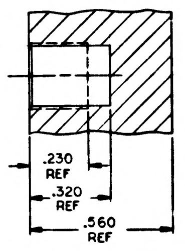
.230 REF
.320 REF
.560 REF

SECTION A-A
SCALE 4/1
26 PLACES

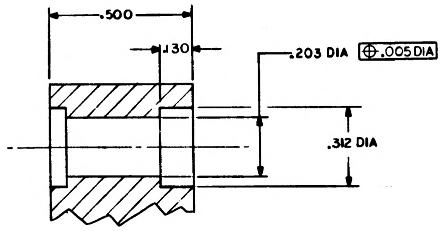
.500
.130
.203 DIA ⌖ .005 DIA
.312 DIA

SECTION D-D
SCALE 4:1
4 PLACES

INCHES
PHOTOGRAPHIC SCALE ONLY

1004221 C

SYM	DESCRIPTION	DATE	APPROVAL
A	REVISED PER TDRR 03V65	[illegible]	[illegible]
B	REVISED PER TDRR 038V2	10-10-63	WR
C	REVISED PER TDRR 04178	[illegible]-63	WR

REVISIONS 02344

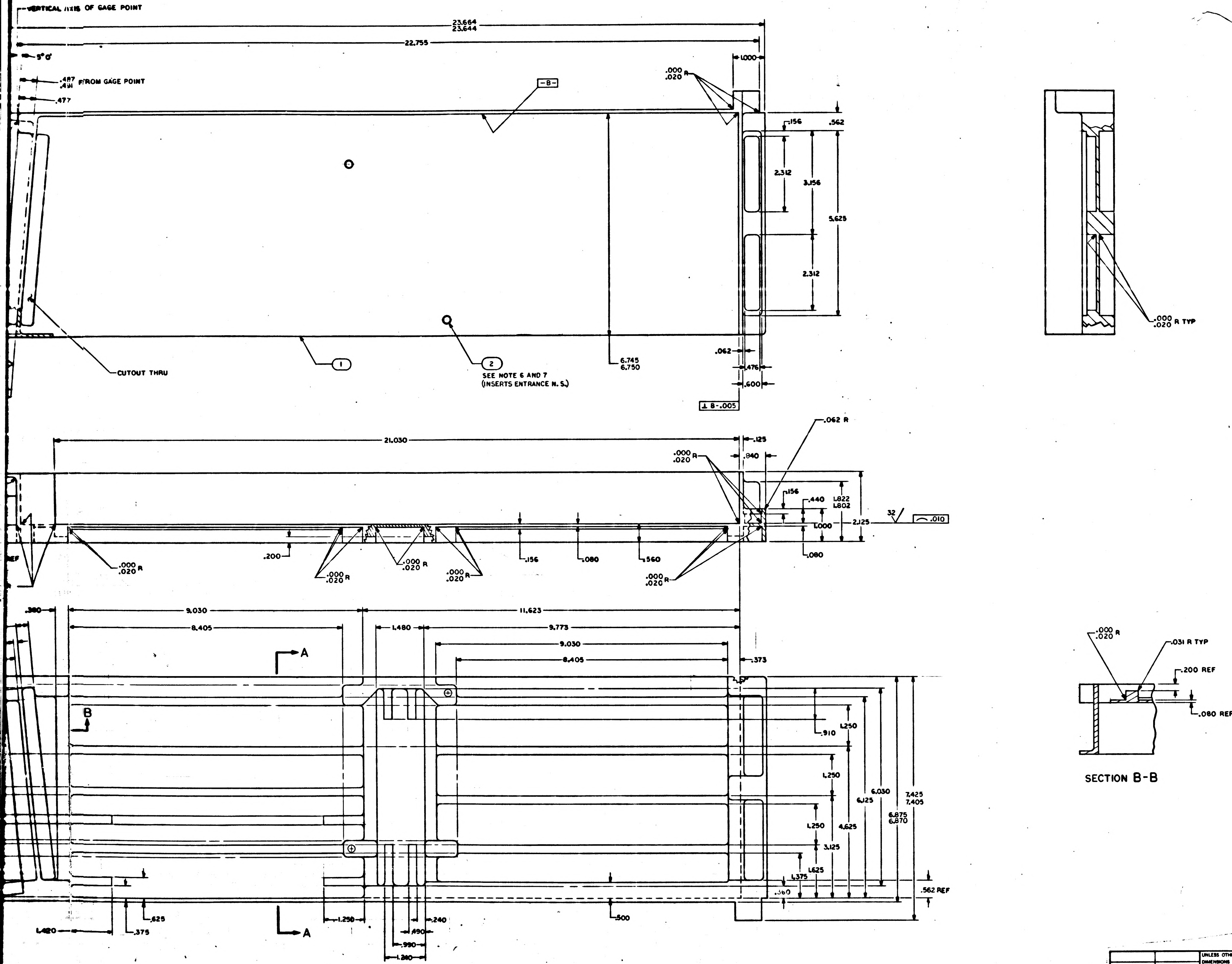

VERTICAL AXIS OF GAGE POINT
23.664
23.644
22.755
5°0'
.487
.481 FROM GAGE POINT
.477
1.000
.000
.020 R
-B-
.156
.562
2.312
3.156
5.625
2.312
CUTOUT THRU
1
2
SEE NOTE 6 AND 7
(INSERTS ENTRANCE N. S.)
6.745
6.750
.062
.476
.600
⊥ B-.005
.000
.020 R TYP
21.030
.125
.062 R
.840
.156
.440
1.822
1.802
1.000
2.125
32
⌒ .010
.080
.200
.156
.080
.560
.000
.020 R
.380
9.030
11.623
8.405
1.480
9.773
9.030
8.405
.373
A
B
.910
1.250
1.250
6.030
6.125
7.425
7.405
6.875
6.870
1.250
4.625
3.125
1.625
1.375
.360
.562 REF
.625
.375
1.420
1.250
.240
.490
.990
1.240
.500
.031 R TYP
.200 REF
.080 REF
SECTION B-B

QTY REQD	PART OR IDENTIFYING NO.	NOMENCLATURE OR DESCRIPTION	FIND NO.
2	NAS 1394CA-08	INSERT, THREADED	2
1	1004221-1	TRAY B, RIGHT HAND	1

LIST OF MATERIALS

1003127	
NEXT ASSY	USED ON
APPLICATION	

UNLESS OTHERWISE SPECIFIED
DIMENSIONS ARE IN INCHES
TOLERANCES ON
FRACTIONS ± -//- DECIMALS ± .005 ANGLES ± 0°30'
DO NOT SCALE THIS DRAWING
MATERIAL
SEE NOTE 2
HEAT TREATMENT -//-
FINAL FINISH -//-

MIT
INSTRUMENTATION LAB
CAMBRIDGE, MASS
DWG NO. CONTRACT
DRAWN DATE 26 July 63
CHECKED
APPROVAL
APPROVAL
NASA APPROVAL
MIT APPROVAL

MANNED SPACECRAFT CENTER
HOUSTON, TEXAS

TRAY B
RIGHT HAND

CODE IDENT NO. | SIZE J | NASA DRAWING NO. 1004221
SCALE 1/1 | WT | SHEET 1 OF 2

MASTER

1004221C SHT 1-2

NOTICE — WHEN GOVERNMENT DRAWINGS, SPECIFICATIONS, OR OTHER DATA ARE USED FOR ANY PURPOSE OTHER THAN IN CONNECTION WITH A DEFINITELY RELATED GOVERNMENT PROCUREMENT OPERATION, THE UNITED STATES GOVERNMENT THEREBY INCURS NO RESPONSIBILITY NOR ANY OBLIGATION WHATSOEVER; AND THE FACT THAT THE GOVERNMENT MAY HAVE FORMULATED, FURNISHED, OR IN ANY WAY SUPPLIED THE SAID DRAWINGS, SPECIFICATIONS, OR OTHER DATA IS NOT TO BE REGARDED BY IMPLICATION OR OTHERWISE AS IN ANY MANNER LICENSING THE HOLDER OR ANY OTHER PERSON OR CORPORATION, OR CONVEYING ANY RIGHTS OR PERMISSION TO MANUFACTURE, USE, OR SELL ANY PATENTED INVENTION THAT MAY IN ANY WAY BE RELATED THERETO.

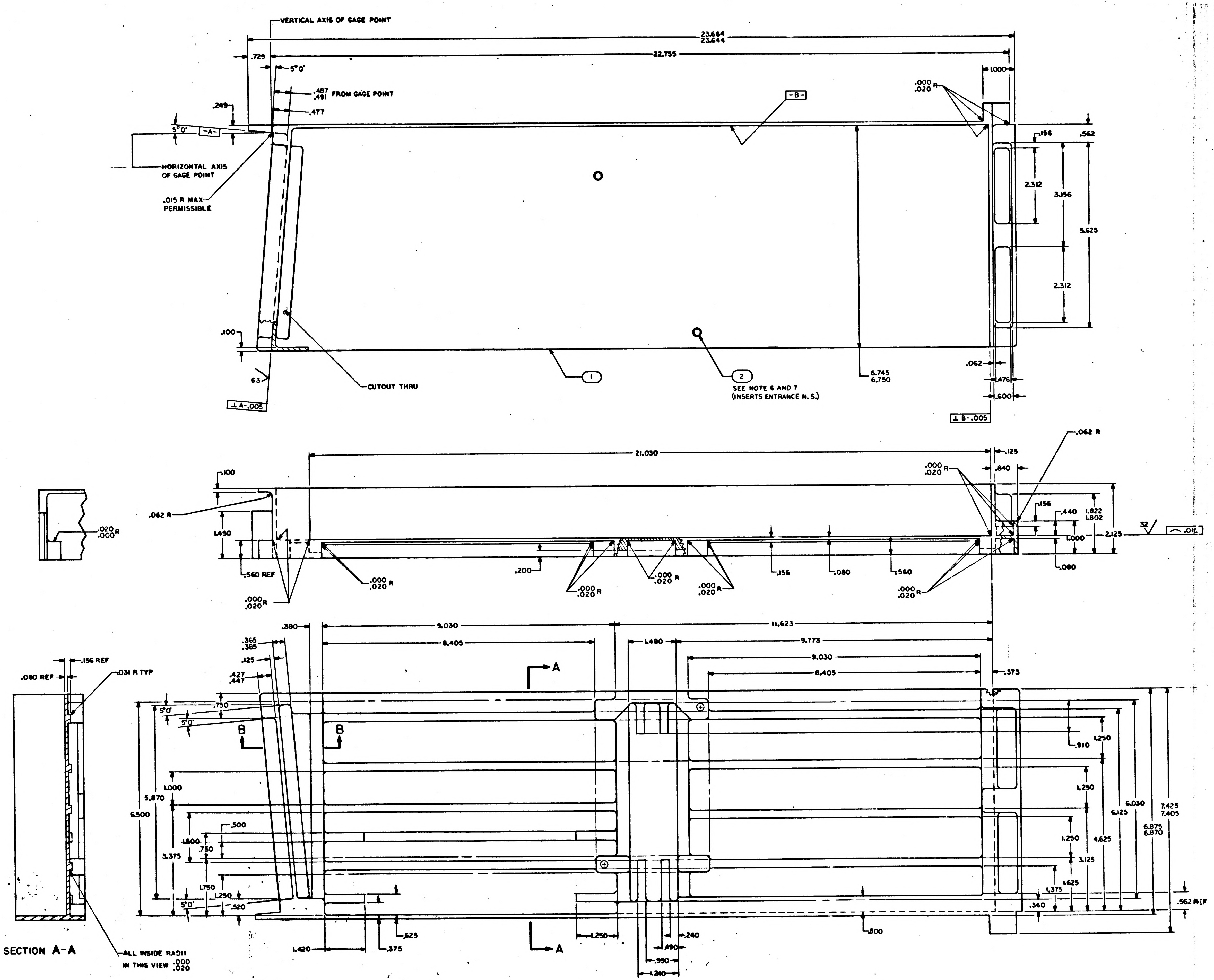
VERTICAL AXIS OF GAGE POINT
23.664
23.644
22.755
.729
5°0'
.487
.491 FROM GAGE POINT
.477
.249
5°0'
-A-
HORIZONTAL AXIS OF GAGE POINT
.015 R MAX PERMISSIBLE
.100
63
⊥ A-.005
CUTOUT THRU
-B-
1
2
SEE NOTE 6 AND 7
(INSERTS ENTRANCE N. S.)
6.745
6.750
1.000
.000
.020 R
.156
.562
2.312
3.156
5.625
2.312
.062
.476
.600
⊥ B-.005
21.030
.125
.062 R
.840
.100
.062 R
1.450
.560 REF
.020
.000 R
.000
.020 R
.200
.156
.080
.560
.440
1.822
1.802
1.000
2.125
.080
32
⌒ .010
.380
9.030
8.405
11.623
1.480
9.773
9.030
8.405
.373
.365
.385
.125
.427
.447
A
A
B
B
.750
5°0'
5°0'
6.500
5.870
1.000
.500
1.500
.750
3.375
1.750
1.250
5°0'
.520
1.420
.625
.375
1.250
.240
.490
.990
1.240
.500
.910
1.250
1.250
1.250
3.125
1.625
1.375
.360
4.625
6.125
6.030
6.875
6.870
7.425
7.405
.562 REF
.156 REF
.080 REF
.031 R TYP
SECTION A-A
ALL INSIDE RADII IN THIS VIEW .000 .020

NOTES

1. INTERPRET DRAWING IN ACCORDANCE WITH STANDARDS PRESCRIBED BY MIL-D-70327
2. MAKE FROM NASA DWG 1004150
3. REMOVE BURRS AND BREAK SHARP EDGES .005-.015
4. UNLESS OTHERWISE SPECIFIED FINISH $\sqrt{125}$
5. ALL RADII AND FILLETS TO BE .125 UNLESS OTHERWISE SPECIFIED
6. COAT FIND NO. 1 AND FIND NO. 2 WITH MIL-P-8585 WET ZINC CHROMATE PRIMER
7. INSTALL FIND NO. 2 PER ND1002121

MASTER

INCHES
0 1 2
PHOTOGRAPHIC SCALE ONLY

C	1004221

REVISIONS 02394

SYM	DESCRIPTION	DATE	APPROVAL
A	REVISED PER TDRR 03665		
B	REVISED PER TDRR 03642		
C	REVISED PER TDRR 04172		

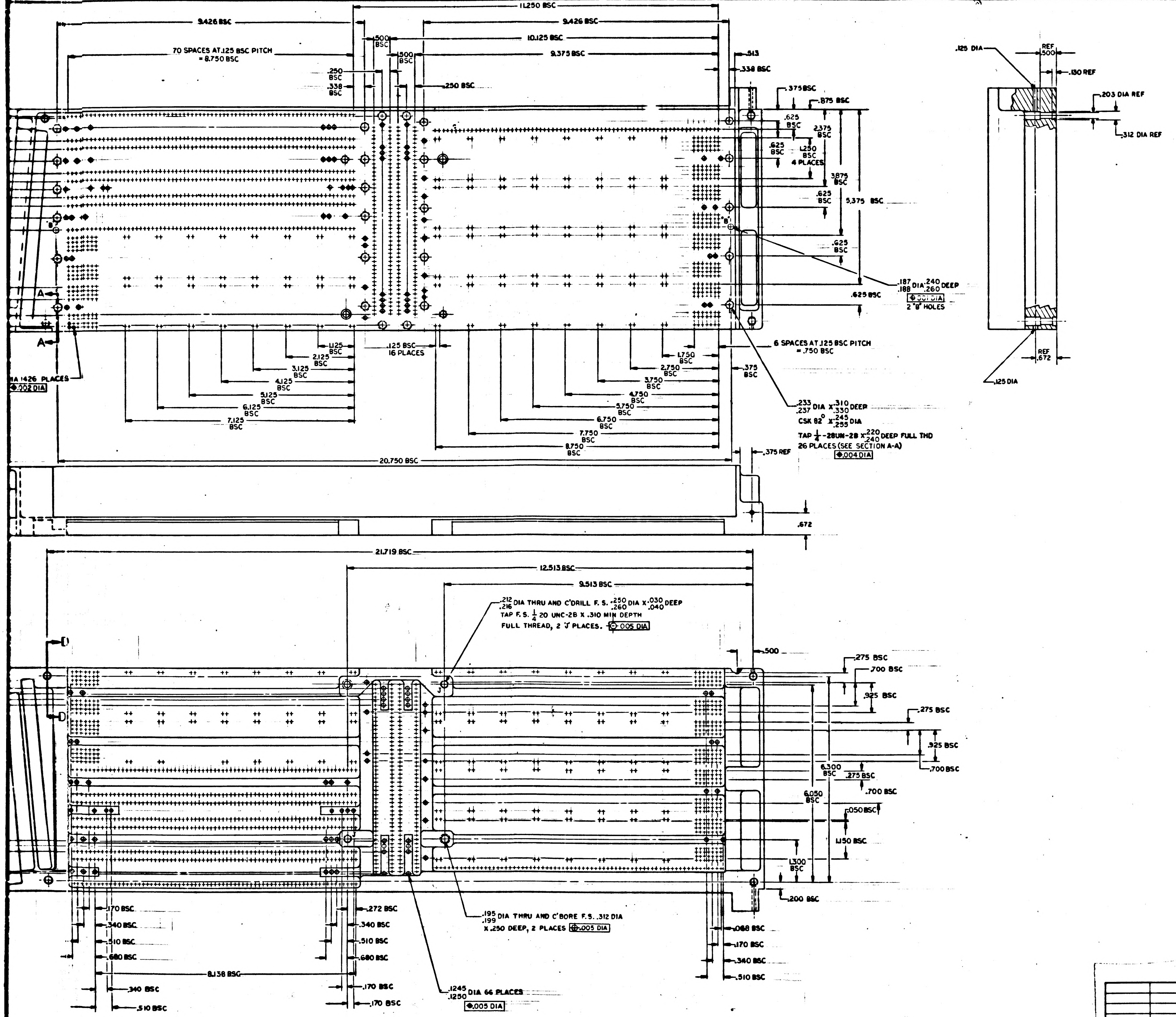

11.250 BSC
9.426 BSC
9.426 BSC
10.125 BSC
9.375 BSC
70 SPACES AT .125 BSC PITCH = 8.750 BSC
.500 BSC
.250 BSC
.338 BSC
.250 BSC
.513
.338 BSC
.375 BSC
.875 BSC
.625 BSC
2.375 BSC
1.250 BSC 4 PLACES
3.875 BSC
5.375 BSC
.625 BSC
.187 .188 DIA .240 .260 DEEP
2 "B" HOLES
.625 BSC
.125 BSC 16 PLACES
6 SPACES AT .125 BSC PITCH = .750 BSC
DIA 1426 PLACES
.002 DIA
.233 .237 DIA x .310 .330 DEEP
CSK 82° x .245 .255 DIA
TAP 1/4 -28UN-2B x .220 .240 DEEP FULL THD 26 PLACES (SEE SECTION A-A)
.004 DIA
20.750 BSC
.375 REF
.672
.125 DIA
REF .500
.130 REF
.203 DIA REF
.312 DIA REF
REF .672
.125 DIA
21.719 BSC
12.513 BSC
9.513 BSC
.212 .216 DIA THRU AND C'DRILL F.S. .250 .260 DIA x .030 .040 DEEP
TAP F.S. 1/4 20 UNC-2B X .310 MIN DEPTH
FULL THREAD, 2 'J' PLACES. .005 DIA
.500
.275 BSC
.700 BSC
.925 BSC
6.300 BSC
6.050 BSC
.050 BSC
1.150 BSC
1.300 BSC
.200 BSC
.195 .199 DIA THRU AND C'BORE F.S. .312 DIA
X .250 DEEP, 2 PLACES .005 DIA
.1245 .1250 DIA 66 PLACES
.005 DIA
8.138 BSC
.170 BSC
.340 BSC
.510 BSC
.680 BSC
.272 BSC
.068 BSC
A
B
D
J

MASTER

1003127	
NEXT ASSY	USED ON
APPLICATION	

UNLESS OTHERWISE SPECIFIED DIMENSIONS ARE IN INCHES
TOLERANCES ON
FRACTIONS ± — DECIMALS ±.005 ANGLES ±0°30'
DO NOT SCALE THIS DRAWING
MATERIAL —
HEAT TREATMENT —
FINAL FINISH —

QTY REQD	PART OR IDENTIFYING NO.	NOMENCLATURE OR DESCRIPTION	FIND NO.

LIST OF MATERIALS

MIT INSTRUMENTATION LAB
CAMBRIDGE, MASS
DRAWN Ed Pavone DATE
CHECKED 8/2/63
APPROVAL
APPROVAL
NASA APPROVAL 8/7/63
MIT APPROVAL

MANNED SPACECRAFT CENTER
HOUSTON, TEXAS

TRAY B
RIGHT HAND

CODE IDENT NO.
SIZE J
NASA DRAWING NO. 1004221
SCALE 1/1
WT
SHEET 2 OF 2

1004221C SHT 2:2

1004221 C

INCHES
PHOTOGRAPHIC SCALE ONLY

NOTICE — WHEN GOVERNMENT DRAWINGS, SPECIFICATIONS, OR OTHER DATA ARE USED FOR ANY PURPOSE OTHER THAN IN CONNECTION WITH A DEFINITELY RELATED GOVERNMENT PROCUREMENT OPERATION, THE UNITED STATES GOVERNMENT THEREBY INCURS NO RESPONSIBILITY NOR ANY OBLIGATION WHATSOEVER; AND THE FACT THAT THE GOVERNMENT MAY HAVE FORMULATED, FURNISHED, OR IN ANY WAY SUPPLIED THE SAID DRAWINGS, SPECIFICATIONS, OR OTHER DATA IS NOT TO BE REGARDED BY IMPLICATION OR OTHERWISE AS IN ANY MANNER LICENSING THE HOLDER OR ANY OTHER PERSON OR CORPORATION, OR CONVEYING ANY RIGHTS OR PERMISSION TO MANUFACTURE, USE, OR SELL ANY PATENTED INVENTION THAT MAY IN ANY WAY BE RELATED THERETO.

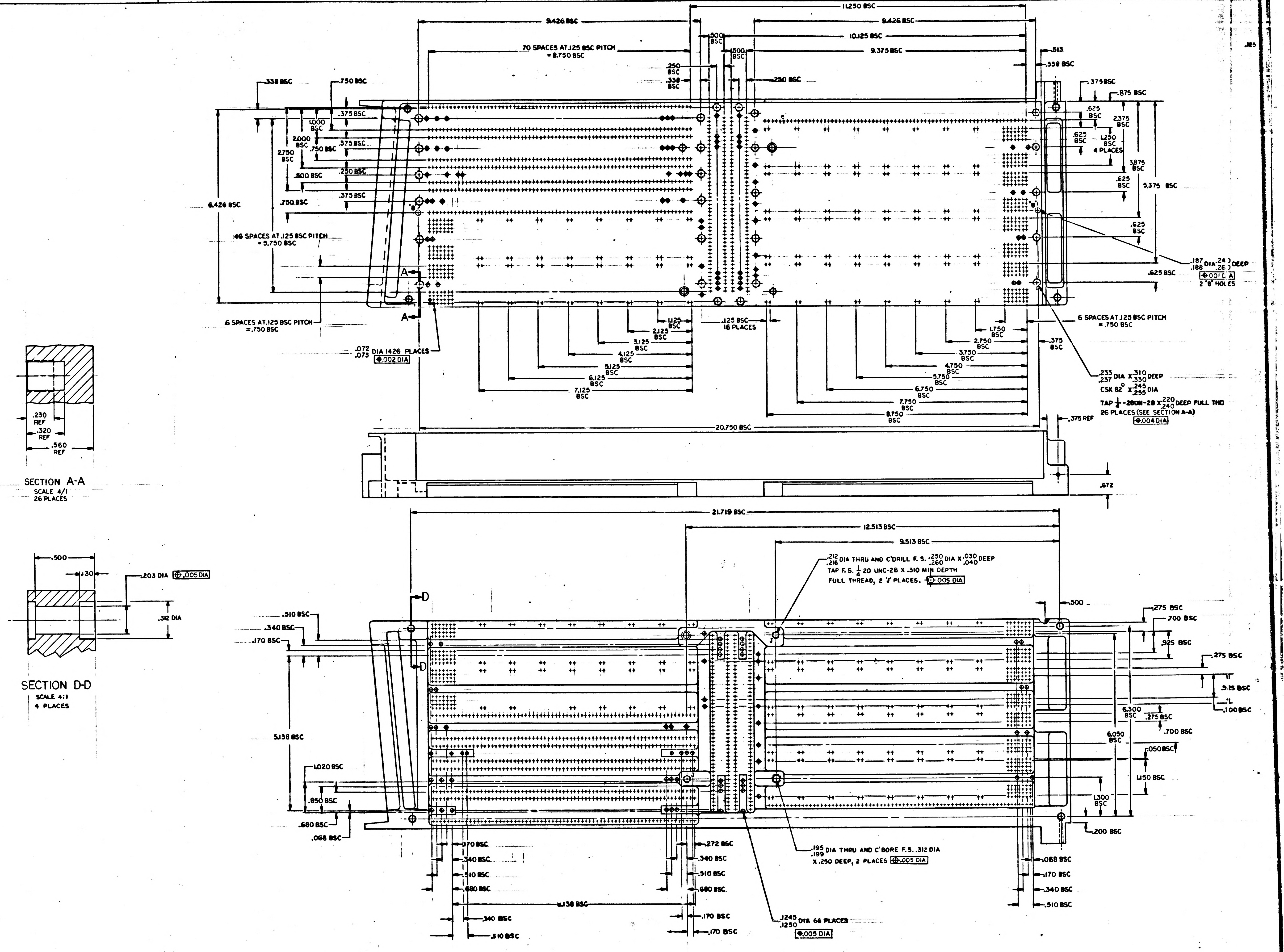
11.250 BSC
9.426 BSC
9.426 BSC
.500 BSC
10.125 BSC
70 SPACES AT .125 BSC PITCH = 8.750 BSC
.500 BSC
9.375 BSC
.513
.338 BSC
.250 BSC
.338 BSC
.250 BSC
.338 BSC
.750 BSC
.375 BSC
.875 BSC
.375 BSC
1.000 BSC
2.000 BSC
.750 BSC
.375 BSC
2.750 BSC
.250 BSC
.500 BSC
.375 BSC
.750 BSC
6.426 BSC
.625 BSC
2.375 BSC
.625 BSC
1.250 BSC 4 PLACES
3.875 BSC
.625 BSC
5.375 BSC
.625 BSC
46 SPACES AT .125 BSC PITCH = 5.750 BSC
A
A
.187 .188 DIA .24 .26 DEEP
⌖ .001 D A
2 "B" HOLES
.625 BSC
6 SPACES AT .125 BSC PITCH = .750 BSC
1.125 BSC
.125 BSC 16 PLACES
6 SPACES AT .125 BSC PITCH = .750 BSC
.072 .073 DIA 1426 PLACES
⌖ .002 DIA
2.125 BSC
3.125 BSC
4.125 BSC
5.125 BSC
6.125 BSC
7.125 BSC
1.750 BSC
2.750 BSC
3.750 BSC
4.750 BSC
5.750 BSC
6.750 BSC
7.750 BSC
8.750 BSC
.375 BSC
.233 .237 DIA X .310 .330 DEEP
CSK 82° X .245 .255 DIA
TAP 1/4-28UN-2B X .220 .240 DEEP FULL THD
26 PLACES (SEE SECTION A-A)
⌖ .004 DIA
20.750 BSC
.375 REF
.672
.230 REF
.320 REF
.560 REF
SECTION A-A
SCALE 4/1
26 PLACES
21.719 BSC
12.513 BSC
9.513 BSC
.212 .216 DIA THRU AND C'DRILL F. S. .250 .260 DIA X .030 .040 DEEP
TAP F. S. 1/4 20 UNC-2B X .310 MIN DEPTH
FULL THREAD, 2 'J' PLACES. ⌖ .005 DIA
J
D
D
.500
.275 BSC
.700 BSC
.925 BSC
.275 BSC
.315 BSC
.100 BSC
6.300 BSC
.275 BSC
.700 BSC
6.050 BSC
.050 BSC
1.150 BSC
1.300 BSC
.200 BSC
.500
.130
.203 DIA ⌖ .005 DIA
.312 DIA
SECTION D-D
SCALE 4:1
4 PLACES
.510 BSC
.340 BSC
.170 BSC
5.138 BSC
1.020 BSC
.850 BSC
.680 BSC
.068 BSC
.170 BSC
.340 BSC
.510 BSC
.680 BSC
.272 BSC
.340 BSC
.510 BSC
.680 BSC
11.138 BSC
.340 BSC
.510 BSC
.170 BSC
.170 BSC
.195 .199 DIA THRU AND C'BORE F.S. .312 DIA
X .250 DEEP, 2 PLACES ⌖ .005 DIA
.1245 .1250 DIA 66 PLACES
⌖ .005 DIA
.068 BSC
.170 BSC
.340 BSC
.510 BSC

1004221C SHT 2-2

INCHES
PHOTOGRAPHIC SCALE ONLY

D	1004221

REVISIONS			
SYM	DESCRIPTION	DATE	APPROVAL
A	REVISED PER TDRR 03465	9-25-63	
B	REVISED PER TDRR 03842	10-10-63	WK
C	REVISED PER TDRR 04178	10-24-63	WR
D	REVISED PER TDRR 04347	10-30-63	W

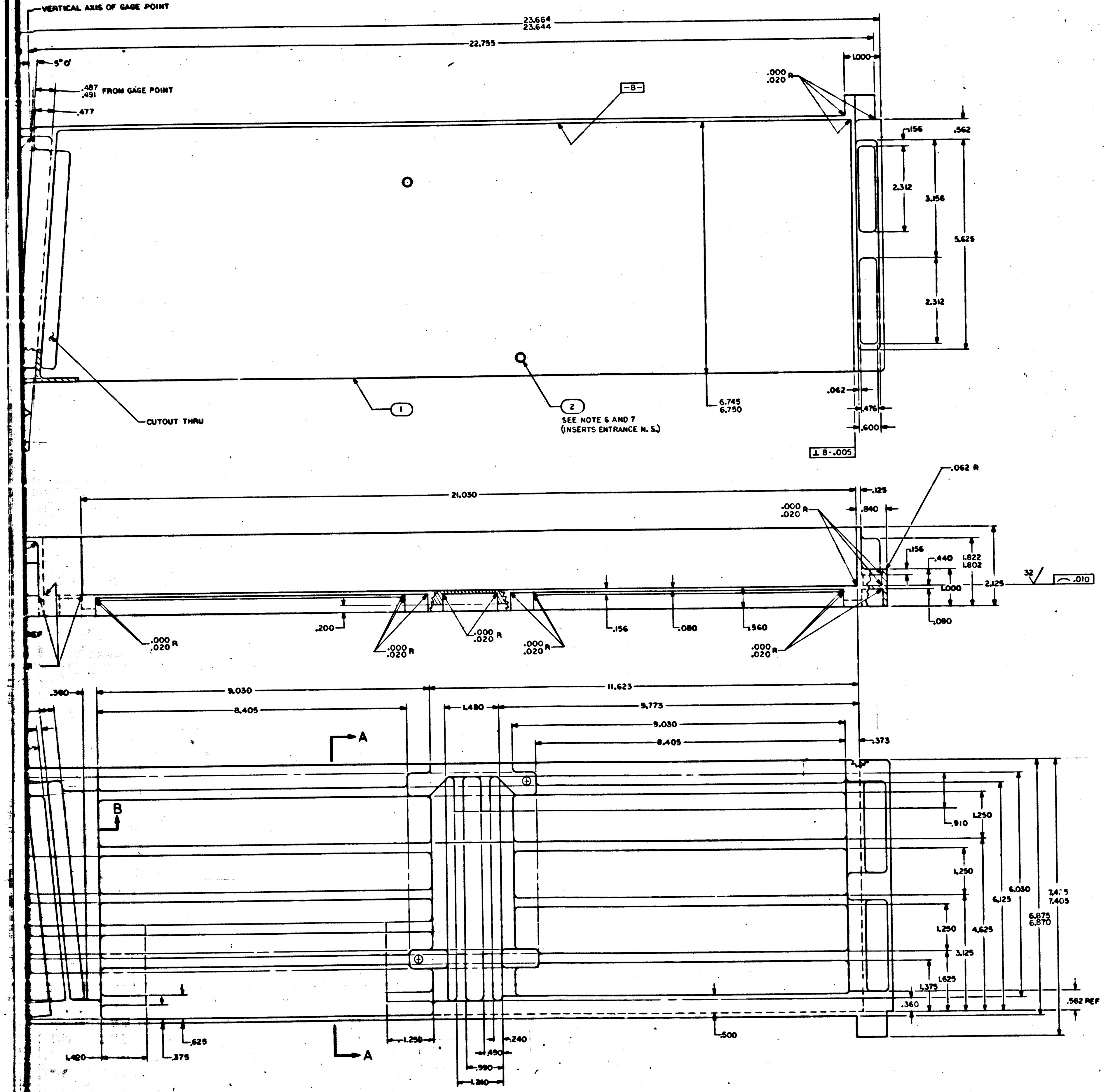

VERTICAL AXIS OF GAGE POINT
23.664
23.644
22.755
5°0'
.487
.491 FROM GAGE POINT
.477
-B-
1.000
.000
.020 R
.156
.562
2.312
3.156
5.625
2.312
CUTOUT THRU
1
2
SEE NOTE 6 AND 7
(INSERTS ENTRANCE N.S.)
6.745
6.750
.062
.476
.600
⊥ B-.005
21.030
.125
.062 R
.840
.000
.020 R
.156
.440
1.822
1.802
1.000
2.125
32
.010
.080
.200
.156
.080
.560
.000
.020 R
9.030
11.623
.380
8.405
1.480
9.773
9.030
8.405
.373
A
B
.910
1.250
1.250
6.125
6.030
7.425
7.405
6.875
6.870
1.250
4.625
3.125
1.625
1.375
.360
.562 REF
.625
.375
1.420
1.250
.240
.490
.990
1.240
.500
A

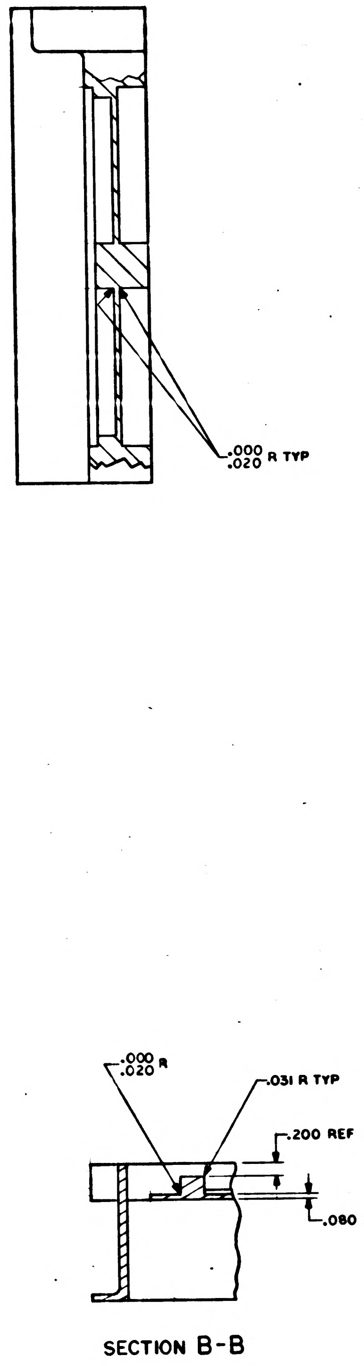

.000
.020 R TYP
.000
.020 R
.031 R TYP
.200 REF
.080 REF

SECTION B-B

QTY REQD	PART OR IDENTIFYING NO.	NOMENCLATURE OR DESCRIPTION	FIND NO.
2	NAS 1394CA-08	INSERT, THREADED	2
1	1004221-1	TRAY B, RIGHT HAND	1

LIST OF MATERIALS

NEXT ASSY	USED ON
1003127	

APPLICATION

UNLESS OTHERWISE SPECIFIED DIMENSIONS ARE IN INCHES TOLERANCES ON
FRACTIONS ± —/— DECIMALS ± .005 ANGLES ± 0°30'
DO NOT SCALE THIS DRAWING

MATERIAL
SEE NOTE 2

HEAT TREATMENT
—/—

FINAL FINISH
—/—

MIT
INSTRUMENTATION LAB
CAMBRIDGE, MASS.

DRAWN DATE 26 July 63
CHECKED 8/1/63
APPROVAL 6 Aug 63
APPROVAL 8/6/63

NASA APPROVAL
MIT APPROVAL

MANNED SPACECRAFT CENTER
HOUSTON, TEXAS

TRAY B
RIGHT HAND

CODE IDENT NO. —
SIZE J
NASA DRAWING NO. 1004221
SCALE 1/1
WT
SHEET 1 OF 2

MASTER

1004221 D SHT 1-2

F2

NOTICE — WHEN GOVERNMENT DRAWINGS, SPECIFICATIONS, OR OTHER DATA ARE USED FOR ANY PURPOSE OTHER THAN IN CONNECTION WITH A DEFINITELY RELATED GOVERNMENT PROCUREMENT OPERATION, THE UNITED STATES GOVERNMENT THEREBY INCURS NO RESPONSIBILITY NOR ANY OBLIGATION WHATSOEVER; AND THE FACT THAT THE GOVERNMENT MAY HAVE FORMULATED, FURNISHED, OR IN ANY WAY SUPPLIED THE SAID DRAWINGS, SPECIFICATIONS, OR OTHER DATA IS NOT TO BE REGARDED BY IMPLICATION OR OTHERWISE AS IN ANY MANNER LICENSING THE HOLDER OR ANY OTHER PERSON OR CORPORATION, OR CONVEYING ANY RIGHTS OR PERMISSION TO MANUFACTURE, USE, OR SELL ANY PATENTED INVENTION THAT MAY IN ANY WAY BE RELATED THERETO.

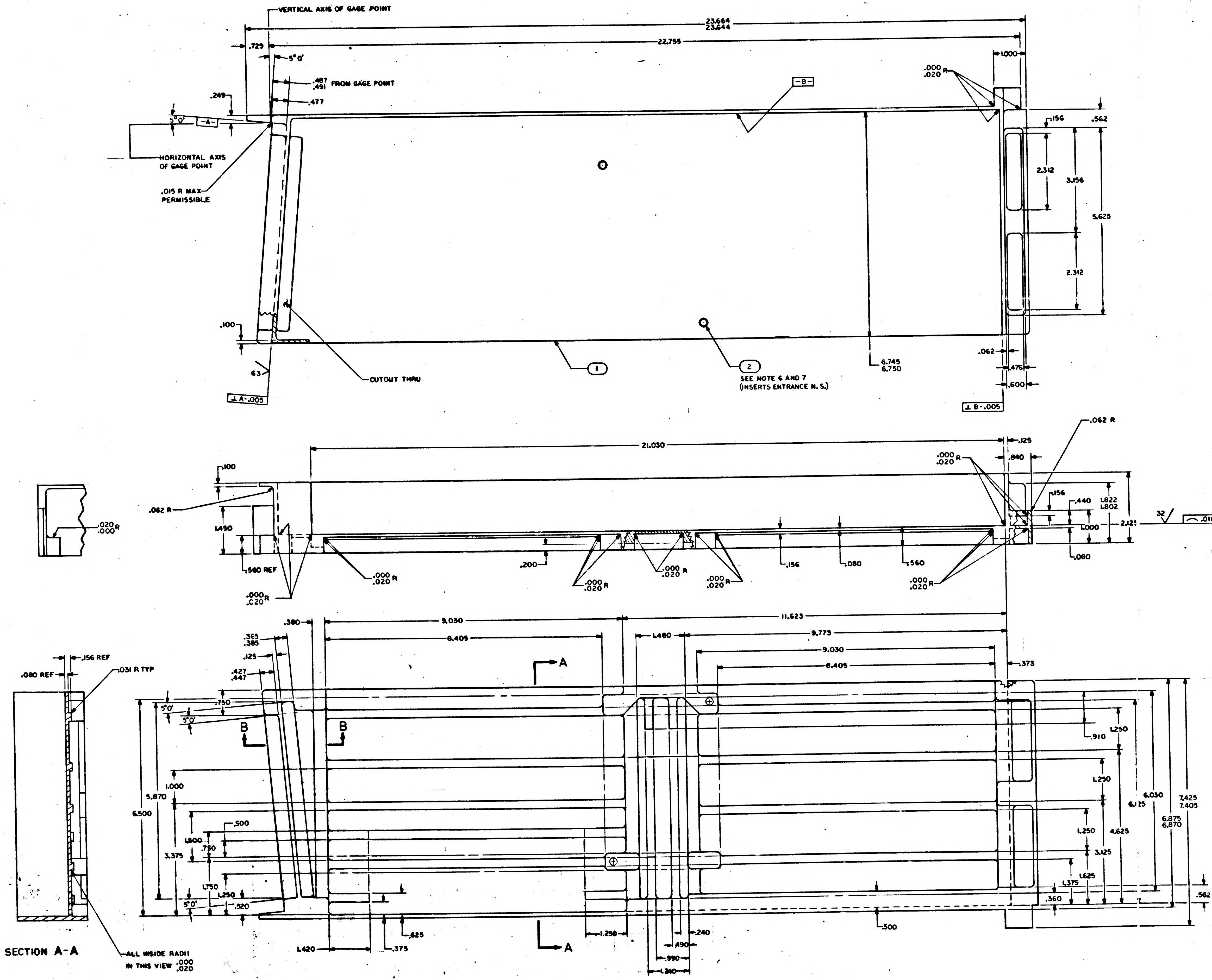

VERTICAL AXIS OF GAGE POINT
23.664
23.644
22.755
.729
5°0'
.487
.491 FROM GAGE POINT
.477
.249
5°0'
-A-
-B-
HORIZONTAL AXIS OF GAGE POINT
.015 R MAX PERMISSIBLE
.100
63
⊥ A-.005
CUTOUT THRU
1
2
SEE NOTE 6 AND 7 (INSERTS ENTRANCE N. S.)
6.745
6.750
1.000
.000
.020 R
.156
.562
2.312
3.156
5.625
2.312
.062
.476
.600
⊥ B-.005
.062 R
21.030
.125
.840
.100
.062 R
1.450
.560 REF
.000
.020 R
.200
.156
.080
.560
.440
1.822
1.802
1.000
2.125
.080
32
.020
.000 R
.380
9.030
11.623
.365
.385
.125
8.405
1.480
9.773
9.030
8.405
.373
.427
.447
A
.750
5°0'
B
B
1.000
5.870
6.500
.500
1.500
.750
3.375
1.750
1.250
.520
.910
1.250
1.250
6.030
6.125
7.425
7.405
6.875
6.870
1.250
4.625
3.125
1.625
1.375
.360
.562
.625
.375
1.420
1.250
.240
.490
.990
1.280
.500
A
.080 REF
.156 REF
.031 R TYP
SECTION A-A
ALL INSIDE RADII IN THIS VIEW .000 .020

NOTES

1. INTERPRET DRAWING IN ACCORDANCE WITH STANDARDS PRESCRIBED BY MIL-D-70327
2. MAKE FROM NASA DWG 1004150
3. REMOVE BURRS AND BREAK SHARP EDGES .005-.015
4. UNLESS OTHERWISE SPECIFIED FINISH 125 √
5. ALL RADII AND FILLETS TO BE .125 UNLESS OTHERWISE SPECIFIED
6. COAT FIND NO. 1 AND FIND NO. 2 WITH MIL-P-8585 WET ZINC CHROMATE PRIMER
7. INSTALL FIND NO. 2 PER ND1002121

	D	1004221	

REVISIONS 02394			
SYM	DESCRIPTION	DATE	APPROVAL
A	REVISED PER TDRR 03465		
B	REVISED PER TDRR 03542		
C	REVISED PER TDRR 04172		
D	REVISED PER TDRR 00349		

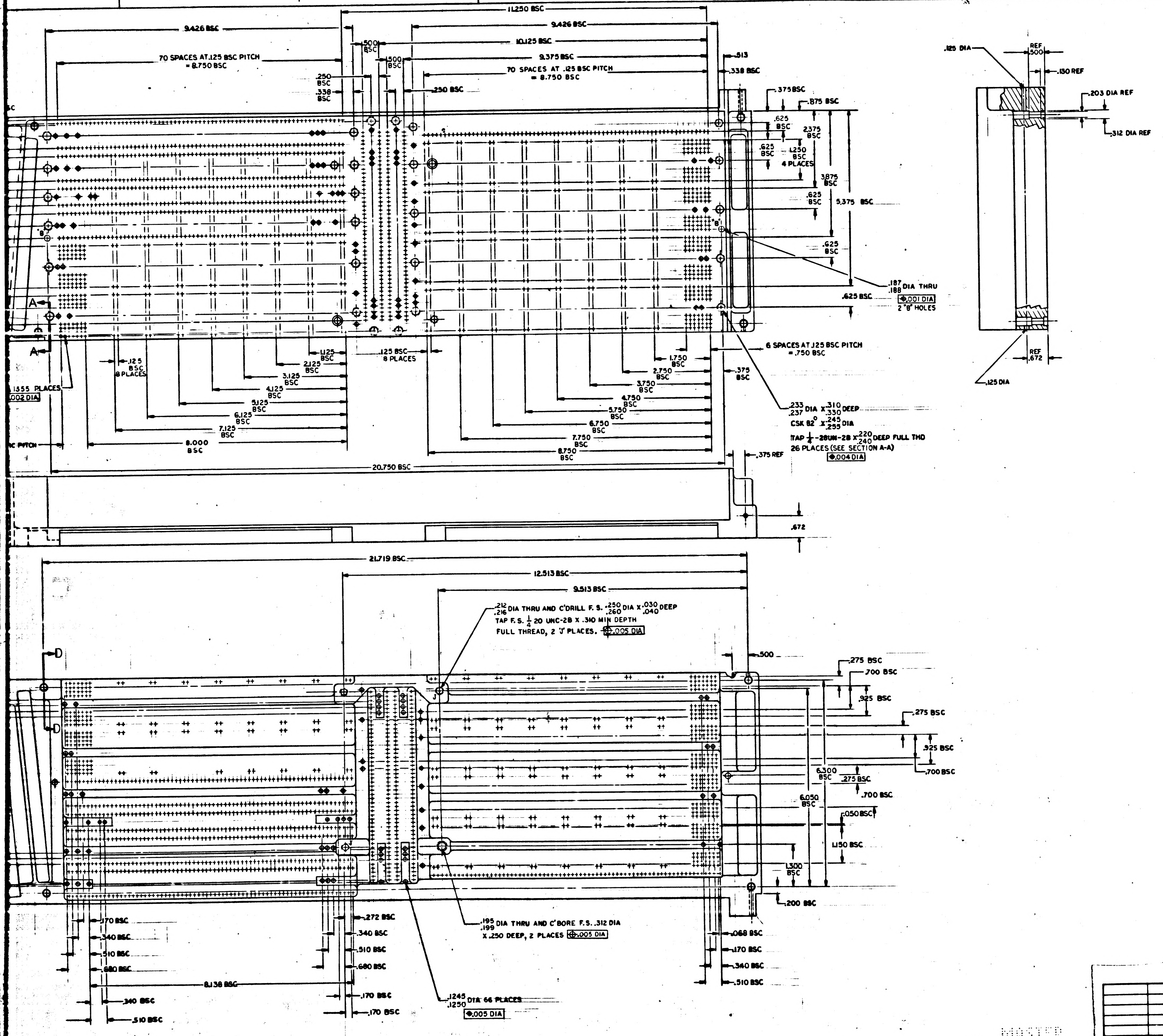

11.250 BSC
9.426 BSC
9.426 BSC
10.125 BSC
9.375 BSC
70 SPACES AT .125 BSC PITCH = 8.750 BSC
70 SPACES AT .125 BSC PITCH = 8.750 BSC
.500 BSC
.500 BSC
.250 BSC
.338 BSC
.250 BSC
.513
.338 BSC
.375 BSC
.875 BSC
.625 BSC
2.375 BSC
.625 BSC
1.250 BSC 4 PLACES
3.875 BSC
.625 BSC
5.375 BSC
.625 BSC
.187 .188 DIA THRU ⊕.001 DIA 2 "B" HOLES
.625 BSC
6 SPACES AT .125 BSC PITCH = .750 BSC
.375 BSC
.233 .237 DIA X .310 .330 DEEP CSK 82° X .245 .255 DIA
TAP 1/4-28UN-2B X .220 .240 DEEP FULL THD 26 PLACES (SEE SECTION A-A) ⊕.004 DIA
.375 REF
1.125 BSC
2.125 BSC
3.125 BSC
4.125 BSC
5.125 BSC
6.125 BSC
7.125 BSC
8.000 BSC
.125 BSC 8 PLACES
.125 BSC 8 PLACES
1.750 BSC
2.750 BSC
3.750 BSC
4.750 BSC
5.750 BSC
6.750 BSC
7.750 BSC
8.750 BSC
20.750 BSC
1355 PLACES
.002 DIA
.672
A
A
B
B
.125 DIA
REF .500
.130 REF
.203 DIA REF
.312 DIA REF
REF .672
.125 DIA
21.719 BSC
12.513 BSC
9.513 BSC
.212 .216 DIA THRU AND C'DRILL F.S. .250 .260 DIA X .030 .040 DEEP TAP F.S. 1/4 20 UNC-2B X .310 MIN DEPTH FULL THREAD, 2 'J' PLACES. ⊕.005 DIA
J
J
D
D
.500
.275 BSC
.700 BSC
.925 BSC
.275 BSC
.925 BSC
.700 BSC
6.300 BSC
.275 BSC
.700 BSC
6.050 BSC
.050 BSC
1.150 BSC
1.300 BSC
.200 BSC
.170 BSC
.340 BSC
.510 BSC
.680 BSC
.272 BSC
.340 BSC
.510 BSC
.680 BSC
.170 BSC
.170 BSC
8.138 BSC
.340 BSC
.510 BSC
.068 BSC
.170 BSC
.340 BSC
.510 BSC
.195 .199 DIA THRU AND C'BORE F.S. .312 DIA X .250 DEEP, 2 PLACES ⊕.005 DIA
.1245 .1250 DIA 66 PLACES ⊕.005 DIA
MASTER

QTY REQD	PART OR IDENTIFYING NO.	NOMENCLATURE OR DESCRIPTION	FIND NO.
LIST OF MATERIALS			

UNLESS OTHERWISE SPECIFIED DIMENSIONS ARE IN INCHES
TOLERANCES ON
FRACTIONS ± —//— DECIMALS ±.005 ANGLES ±0°30'
DO NOT SCALE THIS DRAWING
MATERIAL —//—
HEAT TREATMENT —//—
FINAL FINISH —//—

1003127	
NEXT ASSY	USED ON
APPLICATION	

M I T
INSTRUMENTATION LAB
CAMBRIDGE, MASS.

DRAWN Ed Barnes DATE
CHECKED
APPROVAL
APPROVAL
NASA APPROVAL 9/7/63
MIT APPROVAL

MANNED SPACECRAFT CENTER
HOUSTON, TEXAS

TRAY B
RIGHT HAND

CODE IDENT NO.	SIZE	NASA DRAWING NO.
	J	1004221
SCALE 1/1	WT	SHEET 2 OF 2

1004221D SHT 2-2

F2

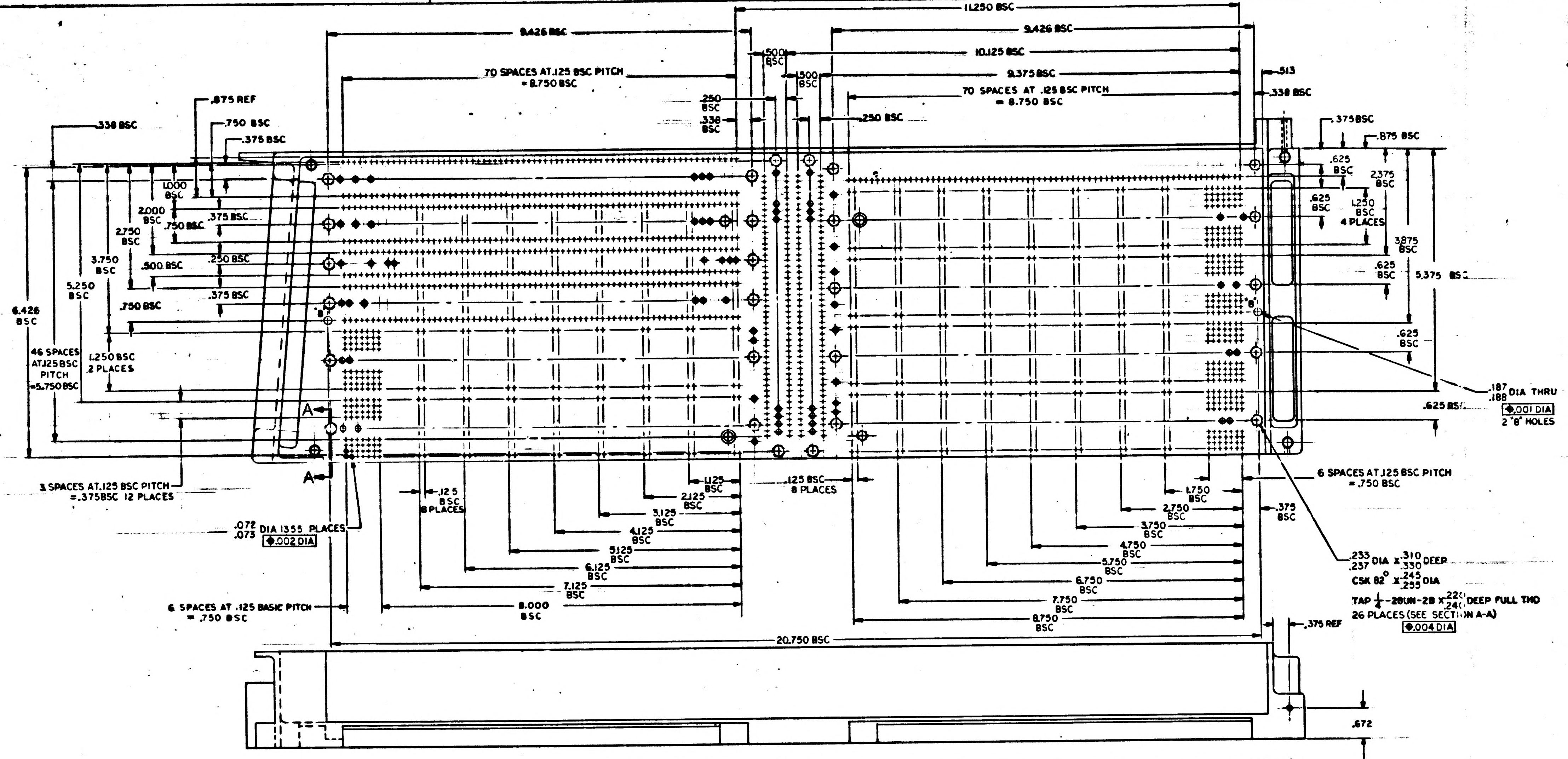
11.250 BSC
9.426 BSC
10.125 BSC
9.375 BSC
70 SPACES AT .125 BSC PITCH = 8.750 BSC
.500 BSC
.250 BSC
.338 BSC
.875 REF
.750 BSC
.375 BSC
1.000 BSC
2.000 BSC
2.750 BSC
3.750 BSC
5.250 BSC
6.426 BSC
46 SPACES AT .125 BSC PITCH = 5.750 BSC
1.250 BSC 2 PLACES
3 SPACES AT .125 BSC PITCH = .375 BSC 12 PLACES
.072 .073 DIA 1355 PLACES
.002 DIA
6 SPACES AT .125 BASIC PITCH = .750 BSC
8.000 BSC
20.750 BSC
.375 REF
.672
.513
.875 BSC
.625 BSC
2.375 BSC
1.250 BSC 4 PLACES
3.875 BSC
5.375 BSC
.187 .188 DIA THRU
.001 DIA
2 "B" HOLES
6 SPACES AT .125 BSC PITCH = .750 BSC
.233 .237 DIA x .310 .330 DEEP
CSK 82° x .245 .255 DIA
TAP 1/4 - 28UN-2B x .220 .240 DEEP FULL THD
26 PLACES (SEE SECTION A-A)
.004 DIA
A
B

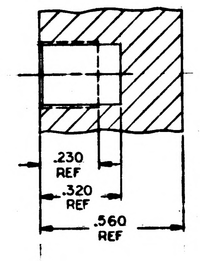
.230 REF
.320 REF
.560 REF

SECTION A-A
SCALE 4/1
26 PLACES

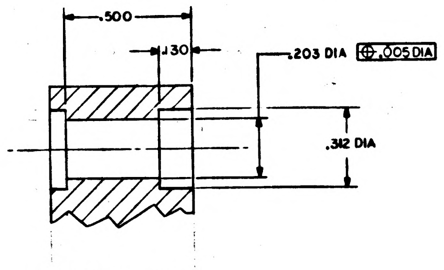
.500
.130
.203 DIA
.005 DIA
.312 DIA

SECTION D-D
SCALE 4:1
4 PLACES

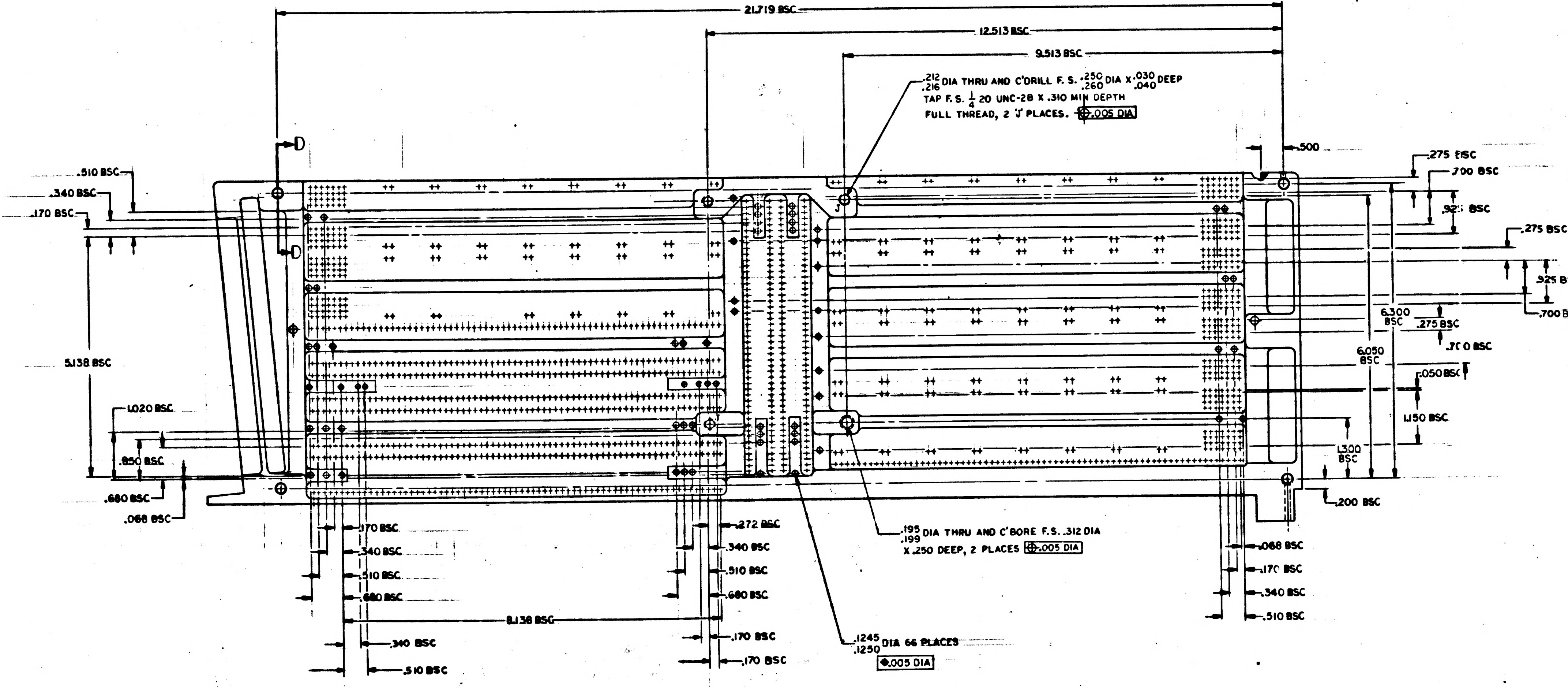
21.719 BSC
12.513 BSC
9.513 BSC
.212 .216 DIA THRU AND C'DRILL F.S. .250 .260 DIA x .030 .040 DEEP
TAP F.S. 1/4 20 UNC-2B x .310 MIN DEPTH
FULL THREAD, 2 "J" PLACES. .005 DIA
D
.510 BSC
.340 BSC
.170 BSC
5.138 BSC
1.020 BSC
.850 BSC
.680 BSC
.068 BSC
8.138 BSC
.272 BSC
.195 .199 DIA THRU AND C'BORE F.S. .312 DIA x .250 DEEP, 2 PLACES .005 DIA
.1245 .1250 DIA 66 PLACES
.005 DIA
.500
.275 BSC
.700 BSC
6.300 BSC
6.050 BSC
.050 BSC
1.150 BSC
1.300 BSC
.200 BSC

1004221 E

SYM	DESCRIPTION	DATE	APPROVAL
A	REVISED PER TDRR 03465	9-26-63	
B	REVISED PER TDRR 03842	10-10-63	WK
C	REVISED PER TDRR 04178	10-4-63	WK
D	REVISED PER TDRR 04347	10-31-63	WK
E	REVISED PER TDRR 07344 DRG CHK	3/30/64	

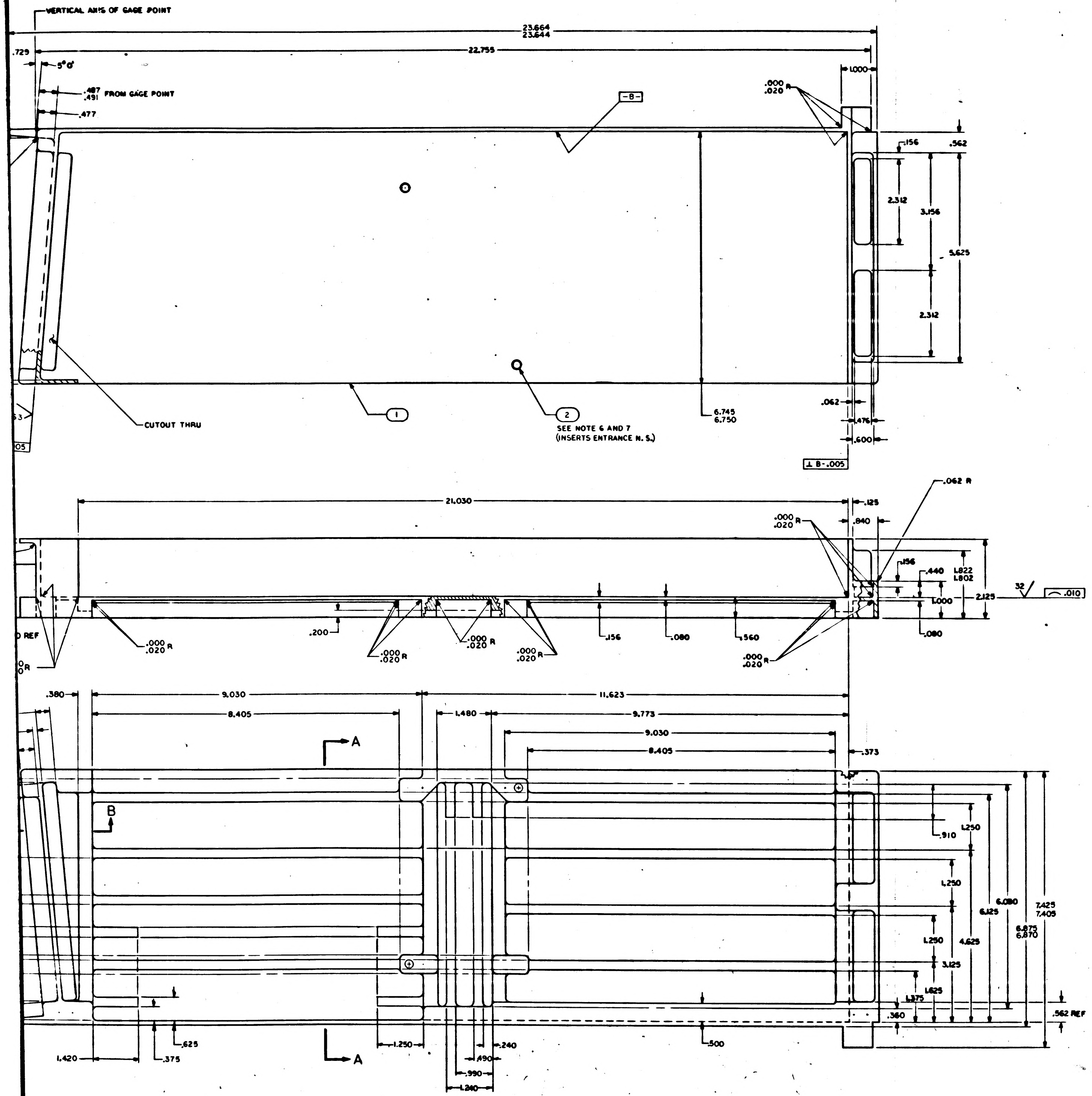

VERTICAL AXIS OF GAGE POINT
23.664
23.644
22.755
.729
5°0'
.487
.491 FROM GAGE POINT
.477
-B-
1.000
.000
.020 R
.156
.562
2.312
3.156
5.625
2.312
CUTOUT THRU
1
2
SEE NOTE 6 AND 7
(INSERTS ENTRANCE N.S.)
6.745
6.750
.062
.476
.600
⊥ B-.005
21.030
.125
.062 R
.840
.000
.020 R
.156
.440
1.822
1.802
2.125
1.000
.080
32
.010
.200
.156
.080
.560
.000
.020 R
REF
.380
9.030
11.623
8.405
1.480
9.773
9.030
8.405
.373
A
B
.910
1.250
1.250
6.080
6.125
7.425
7.405
6.875
6.870
1.250
4.625
3.125
1.625
1.375
.360
.562 REF
.625
1.420
.375
1.250
.240
.490
.990
1.240
.500
A

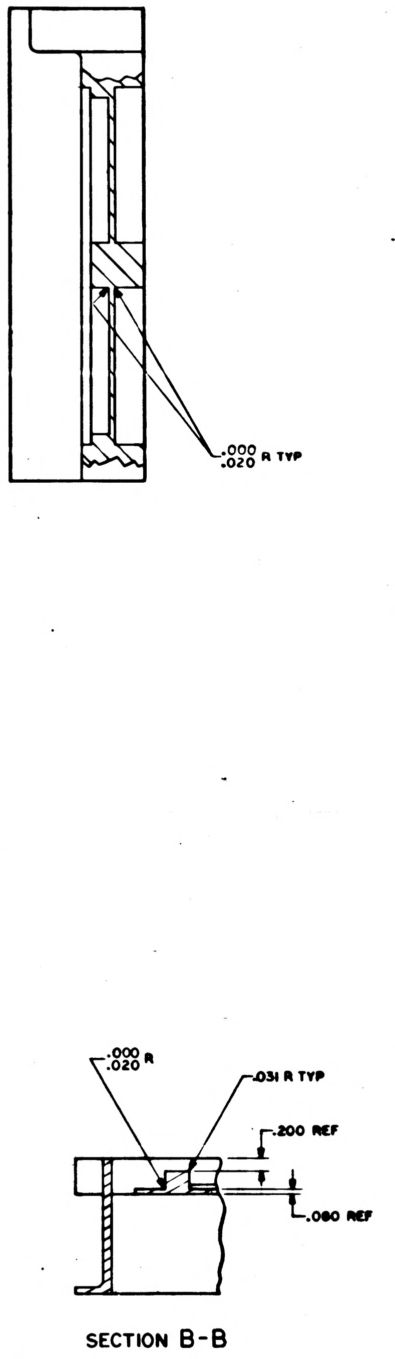

.000
.020 R TYP
.000
.020 R
.031 R TYP
.200 REF
.080 REF

SECTION B-B

2	NAS 1394CA-08	INSERT, THREADED	2
1	1004221-1	TRAY B, RIGHT HAND	1
QTY REQD	PART OR IDENTIFYING NO.	NOMENCLATURE OR DESCRIPTION	FIND NO.

LIST OF MATERIALS

1003127	
NEXT ASSY	USED ON
APPLICATION	

UNLESS OTHERWISE SPECIFIED
DIMENSIONS ARE IN INCHES
TOLERANCES ON
FRACTIONS ± -//- DECIMALS ± .005 ANGLES ± 0°30'
DO NOT SCALE THIS DRAWING
MATERIAL
SEE NOTE 2
HEAT TREATMENT -//-
FINAL FINISH -//-

MIT
INSTRUMENTATION LAB
CAMBRIDGE, MASS.
DRAWN J. Faherty DATE 26 July 63
CHECKED
APPROVAL W.B. Kennedy
APPROVAL
NASA APPROVAL
MIT APPROVAL

MANNED SPACECRAFT CENTER
HOUSTON, TEXAS

TRAY B
RIGHT HAND

CODE IDENT NO. —
SIZE J
NASA DRAWING NO. 1004221
SCALE 1/1
WT
SHEET 1 OF 2

100422I E SHT 1-2

F-27-2

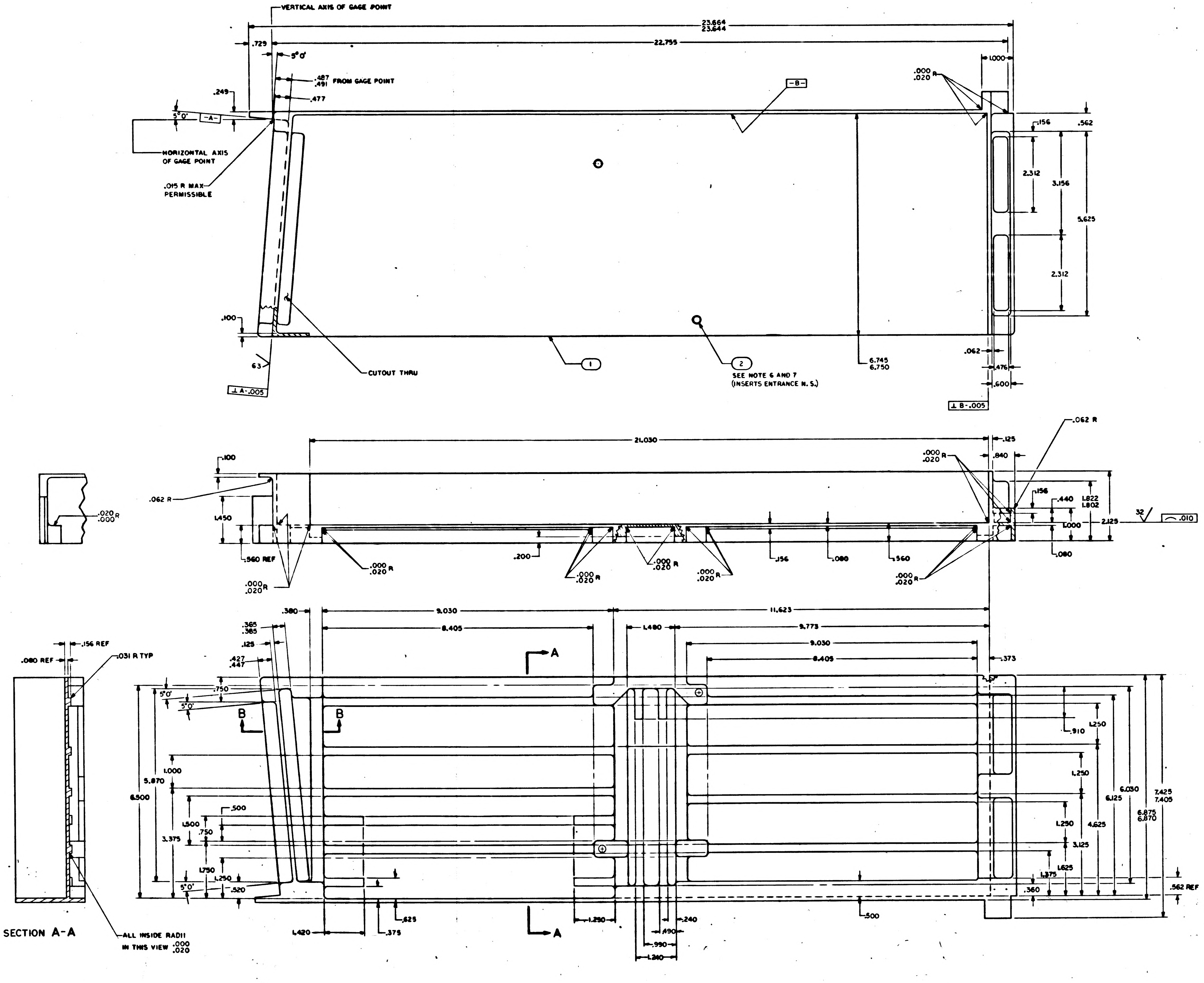
VERTICAL AXIS OF GAGE POINT
23.664
23.644
.729
22.755
5°0'
1.000
.487
.491 FROM GAGE POINT
.477
.249
5°0'
-A-
-B-
.000
.020 R
HORIZONTAL AXIS OF GAGE POINT
.015 R MAX PERMISSIBLE
.156
.562
2.312
3.156
5.625
2.312
.100
63
⊥ A-.005
CUTOUT THRU
1
2
SEE NOTE 6 AND 7 (INSERTS ENTRANCE N. S.)
6.745
6.750
.062
.476
.600
⊥ B-.005
21.030
.125
.062 R
.100
.000
.020 R
.840
.062 R
1.450
.020
.000 R
.156
.440
1.822
1.802
2.125
1.000
32
.010
.080
.560 REF
.200
.156
.080
.560
.000
.020 R
.380
9.030
11.623
.365
.385
8.405
1.480
9.773
.156 REF
.080 REF
.031 R TYP
.125
9.030
.427
.447
8.405
.373
A
A
B
B
.750
5°0'
.910
1.250
1.000
5.870
6.500
1.250
6.030
6.125
7.425
7.405
.500
1.500
.750
3.375
1.250
4.625
6.875
6.870
3.125
1.625
1.750
1.250
1.375
5°0'
.520
.360
.562 REF
.625
.375
1.420
1.290
.240
.490
.990
1.240
.500
SECTION A-A
ALL INSIDE RADII IN THIS VIEW .000
.020

NOTES

1. INTERPRET DRAWING IN ACCORDANCE WITH STANDARDS PRESCRIBED BY MIL-D-70327
2. MAKE FROM NASA DWG 1004150
3. REMOVE BURRS AND BREAK SHARP EDGES .005-.015
4. UNLESS OTHERWISE SPECIFIED FINISH 125√
5. ALL RADII AND FILLETS TO BE .125 UNLESS OTHERWISE SPECIFIED
6. COAT FIND NO.1 AND FIND NO. 2 WITH MIL-P-8585 WET ZINC CHROMATE PRIMER
7. INSTALL FIND NO. 2 PER ND1002121

1004221 E SHT 1-2

1004221 F 1/2

SHEET 1

E	1004221

REVISIONS 02594

SYM	DESCRIPTION	DATE	APPROVAL
A	REVISED PER TDRR 03763		
B	REVISED PER TDRR 03447		
C	REVISED PER TDRR 04172		WK
D	REVISED PER TDRR 06309		WK
E	REVISED PER TDRR 07344 DRG Wheeler CHK	3/30/	HWC

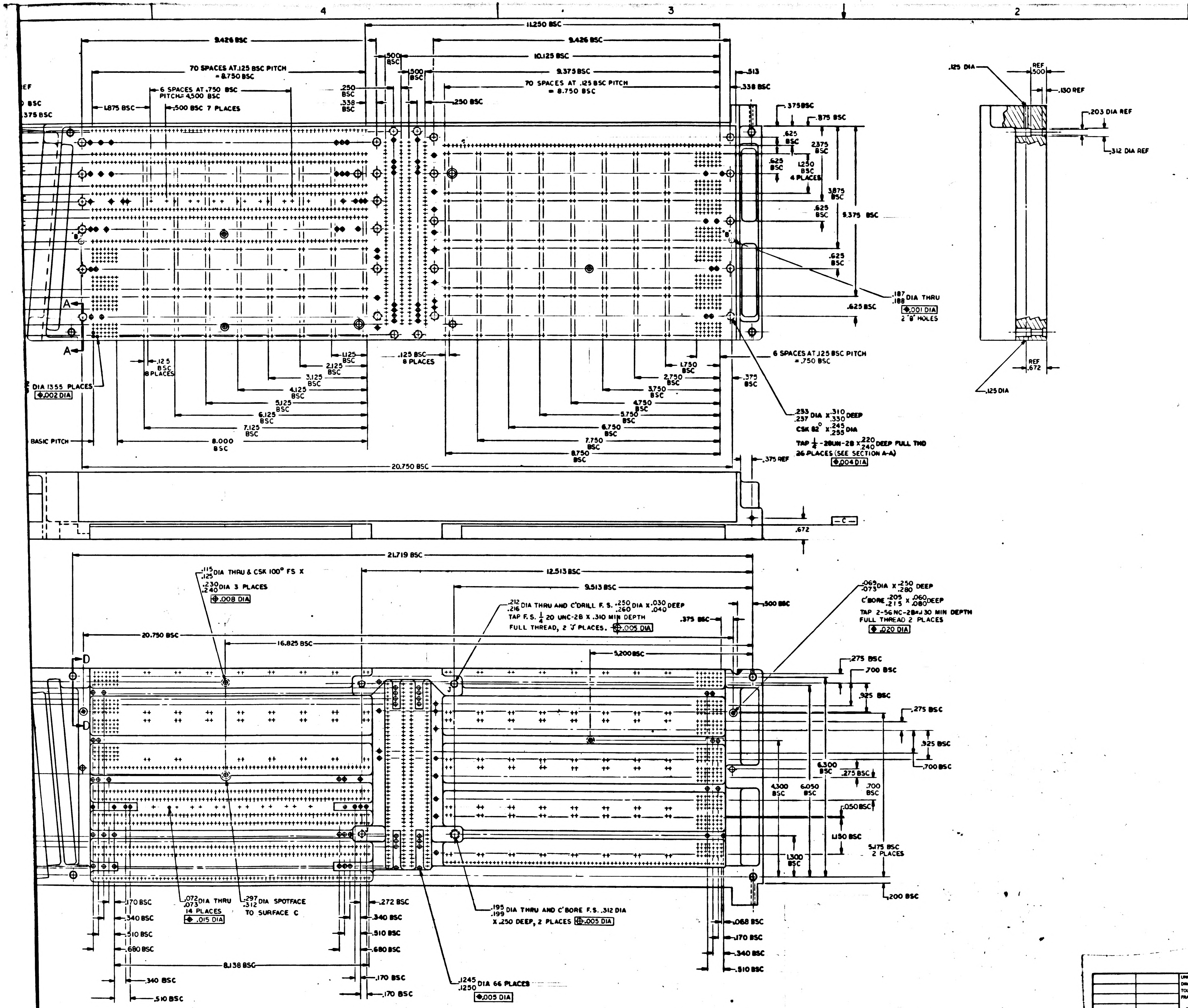
11.250 BSC
9.426 BSC
9.426 BSC
.500 BSC
10.125 BSC
.500 BSC
9.375 BSC
70 SPACES AT .125 BSC PITCH = 8.750 BSC
70 SPACES AT .125 BSC PITCH = 8.750 BSC
.513
.338 BSC
6 SPACES AT .750 BSC PITCH = 4.500 BSC
1.875 BSC
.500 BSC 7 PLACES
.250 BSC
.338 BSC
.250 BSC
.375 BSC
.875 BSC
.625 BSC
2.375 BSC
.625 BSC
1.250 BSC 4 PLACES
3.875 BSC
.625 BSC
9.375 BSC
.625 BSC
.625 BSC
A
A
.187 .188 DIA THRU
.001 DIA
2 'B' HOLES
6 SPACES AT .125 BSC PITCH = .750 BSC
.125 BSC 8 PLACES
1.125 BSC
2.125 BSC
3.125 BSC
4.125 BSC
5.125 BSC
6.125 BSC
7.125 BSC
8.000 BSC
.125 BSC 8 PLACES
1.750 BSC
2.750 BSC
3.750 BSC
4.750 BSC
5.750 BSC
6.750 BSC
7.750 BSC
8.750 BSC
.375 BSC
DIA 1355 PLACES
.002 DIA
BASIC PITCH
20.750 BSC
.233 .237 DIA X .310 .330 DEEP
CSK 82° X .245 .255 DIA
TAP 1/4-28UN-2B X .220 .240 DEEP FULL THD
26 PLACES (SEE SECTION A-A)
.004 DIA
.375 REF
.672
C
.125 DIA
REF .500
.130 REF
.203 DIA REF
.312 DIA REF
REF .672
.125 DIA
21.719 BSC
12.513 BSC
9.513 BSC
.115 .125 DIA THRU & CSK 100° FS X .230 .240 DIA 3 PLACES
.008 DIA
.212 .216 DIA THRU AND C'DRILL F.S. .250 .260 DIA X .030 .040 DEEP
TAP F.S. 1/4 20 UNC-2B X .310 MIN DEPTH FULL THREAD, 2 'J' PLACES.
.005 DIA
.375 BSC
.500 BSC
.069 .073 DIA X .250 .280 DEEP
C'BORE .205 .215 X .060 .080 DEEP
TAP 2-56NC-2B X .130 MIN DEPTH FULL THREAD 2 PLACES
.020 DIA
20.750 BSC
16.825 BSC
5.200 BSC
D
D
J
J
.275 BSC
.700 BSC
.925 BSC
.275 BSC
.925 BSC
.700 BSC
6.300 BSC
.275 BSC
4.300 BSC
6.050 BSC
.700 BSC
.050 BSC
1.150 BSC
5.175 BSC 2 PLACES
1.300 BSC
.200 BSC
.170 BSC
.340 BSC
.510 BSC
.680 BSC
.072 .073 DIA THRU 14 PLACES
.015 DIA
.297 .312 DIA SPOTFACE TO SURFACE C
.272 BSC
.340 BSC
.510 BSC
.680 BSC
.170 BSC
.170 BSC
8.138 BSC
.340 BSC
.510 BSC
.195 .199 DIA THRU AND C'BORE F.S. .312 DIA X .250 DEEP, 2 PLACES
.005 DIA
.068 BSC
.170 BSC
.340 BSC
.510 BSC
.1245 .1250 DIA 66 PLACES
.005 DIA

QTY REQD	PART OR IDENTIFYING NO.	NOMENCLATURE OR DESCRIPTION	FIND NO.

LIST OF MATERIALS

1003127	
NEXT ASSY	USED ON
APPLICATION	

UNLESS OTHERWISE SPECIFIED
DIMENSIONS ARE IN INCHES
TOLERANCES ON
FRACTIONS ± — DECIMALS ± .005 ANGLES ± 0°30'
DO NOT SCALE THIS DRAWING
MATERIAL —
HEAT TREATMENT —
FINAL FINISH —

MIT
INSTRUMENTATION LAB
CAMBRIDGE, MASS
DWG. NO. CONTRACT
DRAWN DATE
CHECKED
APPROVAL WE
APPROVAL
NASA APPROVAL 8/7/63
MIT APPROVAL George J

MANNED SPACECRAFT CENTER
HOUSTON, TEXAS

TRAY B
RIGHT HAND

CODE IDENT NO. — SIZE J NASA DRAWING NO. 1004221
SCALE 1/1 WT SHEET 2 OF 2

1004221	E	SHT 2-2

F 2 / 2

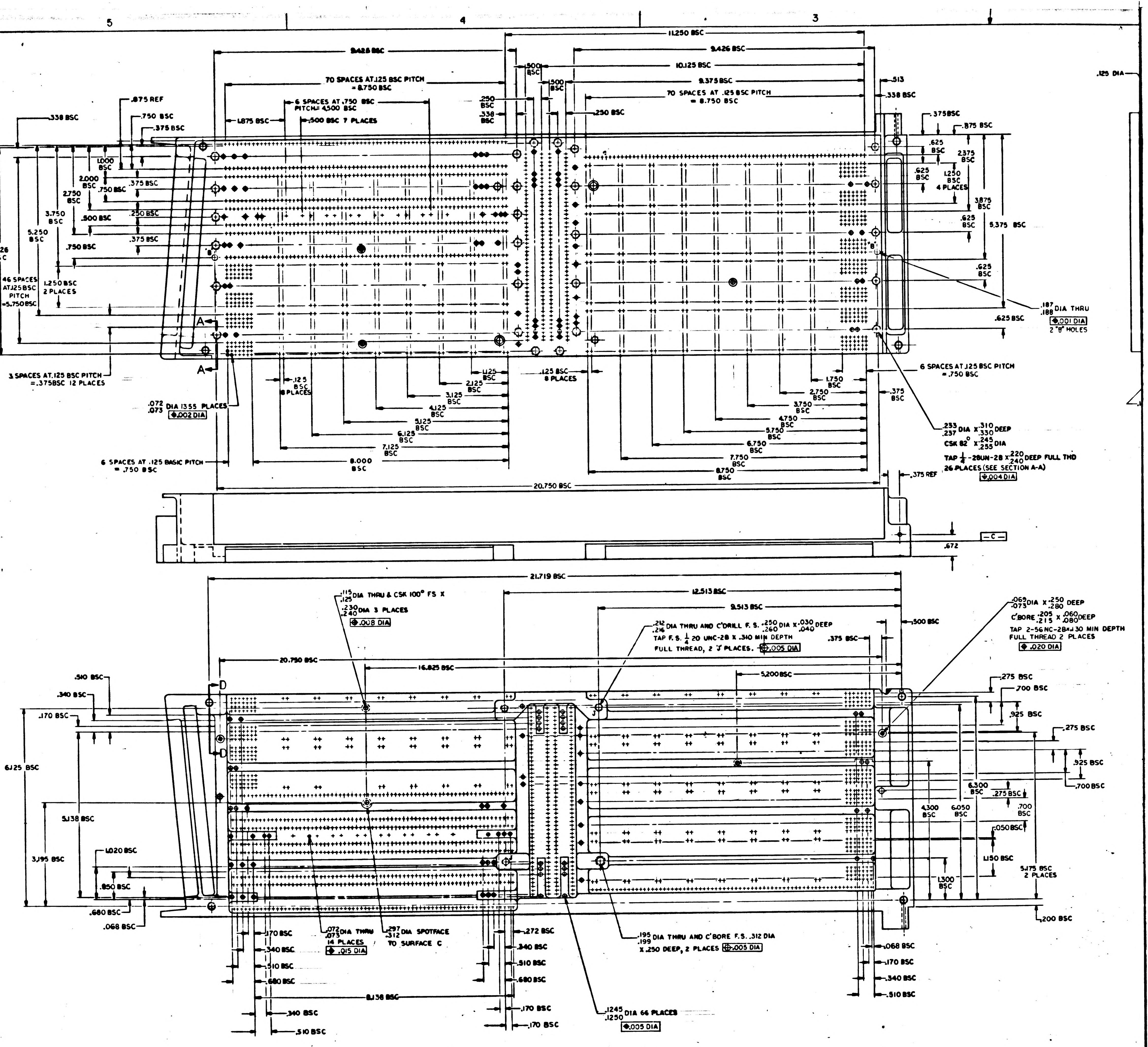
5
4
3
11.250 BSC
9.426 BSC
10.125 BSC
9.375 BSC
70 SPACES AT .125 BSC PITCH = 8.750 BSC
.500 BSC
.250 BSC
.338 BSC
.037
.875 REF
.750 BSC
.375 BSC
1.875 BSC
6 SPACES AT .750 BSC PITCH= 4.500 BSC
.500 BSC 7 PLACES
1.000 BSC
2.000 BSC
2.750 BSC
3.750 BSC
5.250 BSC
6.426 BSC
.500 BSC
.750 BSC
46 SPACES AT .125 BSC PITCH =5.750 BSC
1.250 BSC 2 PLACES
A
B
3 SPACES AT .125 BSC PITCH = .375BSC 12 PLACES
.072 .073 DIA 1355 PLACES
.002 DIA
6 SPACES AT .125 BASIC PITCH = .750 BSC
.125 BSC 8 PLACES
1.125 BSC
2.125 BSC
3.125 BSC
4.125 BSC
5.125 BSC
6.125 BSC
7.125 BSC
8.000 BSC
20.750 BSC
.513
.375BSC
.875 BSC
.625 BSC
2.375 BSC
1.250 BSC 4 PLACES
3.875 BSC
5.375 BSC
.625 BSC
.187 .188 DIA THRU
.001 DIA
2 "B" HOLES
6 SPACES AT .125 BSC PITCH = .750 BSC
1.750 BSC
2.750 BSC
3.750 BSC
4.750 BSC
5.750 BSC
6.750 BSC
7.750 BSC
8.750 BSC
.375 BSC
.233 .237 DIA X .310 .330 DEEP
CSK 82° X .245 .255 DIA
TAP 1/4-28UN-28 X .220 .240 DEEP FULL THD
26 PLACES (SEE SECTION A-A)
.004 DIA
.375 REF
.125 DIA
.672
C
21.719 BSC
12.513 BSC
9.513 BSC
.115 .125 DIA THRU & CSK 100° FS X .230 .240 DIA 3 PLACES
.008 DIA
.212 .216 DIA THRU AND C'DRILL F. S. .250 .260 DIA X .030 .040 DEEP
TAP F. S. 1/4 20 UNC-2B X .310 MIN DEPTH
FULL THREAD, 2 "J" PLACES.
.005 DIA
.375 BSC
.500 BSC
.069 .073 DIA X .250 .280 DEEP
C'BORE .205 .215 X .060 .080 DEEP
TAP 2-56NC-2B X .130 MIN DEPTH
FULL THREAD 2 PLACES
.020 DIA
20.750 BSC
16.825 BSC
5.200 BSC
D
J
.510 BSC
.340 BSC
.170 BSC
6.125 BSC
5.138 BSC
3.195 BSC
1.020 BSC
.850 BSC
.680 BSC
.068 BSC
.275 BSC
.700 BSC
.925 BSC
6.300 BSC
4.300 BSC
6.050 BSC
.050 BSC
1.150 BSC
1.300 BSC
5.175 BSC 2 PLACES
.200 BSC
.072 .073 DIA THRU 14 PLACES
.015 DIA
.297 .312 DIA SPOTFACE TO SURFACE C
.272 BSC
8.138 BSC
.195 .199 DIA THRU AND C'BORE F.S. .312 DIA X .250 DEEP, 2 PLACES
.1245 .1250 DIA 66 PLACES

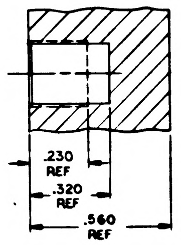
.230 REF
.320 REF
.560 REF

SECTION A-A
SCALE 4/1
26 PLACES

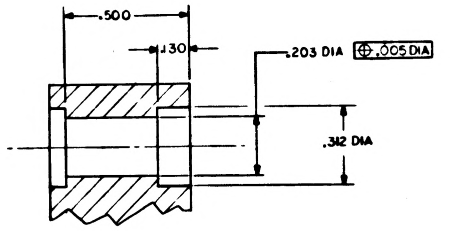
.500
.130
.203 DIA
.005 DIA
.312 DIA

SECTION D-D
SCALE 4:1
4 PLACES

100422 F SHT 2

SHEET 2

1004222	A

REVISIONS 0239			
SYM	DESCRIPTION	DATE	APPROVAL
A	REVISED PER TDRR 02705		

HOLE IDENT	BASIC X DIM	BASIC Y DIM	HOLE DIA	⌖ TOL	QTY
G1	0.333	-0.075	SEE DETAIL 'B' AND SECTION 'C-C'	.005	9
G2	1.333				
G3	3.645				
G4	4.645	-0.075			
G5	2.468	0.106			
G6	1.648	0.197			
G7	2.022	0.326			
G8	2.284	0.326			
G9	1.608	0.459			
H1	0.000	0.000	384 391	.005	4
H2	1.000				
H3	3.312				
H4	4.312	0.000			
J1	-0.333	-0.075	SEE DETAIL 'B' AND SECTION 'B-B'	.005	4
J2	0.667				
J3	2.999				
J4	3.999	-0.075			
K1	0.235	0.472	SEE DETAIL 'A' AND SECTION 'A-A'	.005	4
K2	1.235				
K3	3.547				
K4	4.547	0.472			

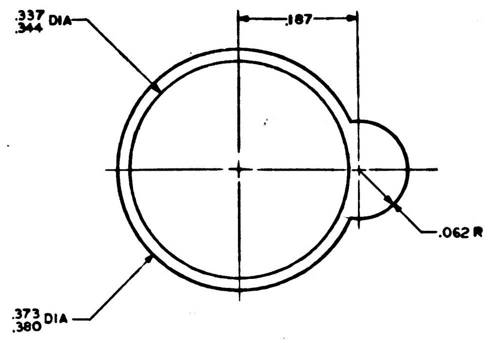

.337
.344 DIA
.187
.062 R
.373
.380 DIA

DETAIL A
SCALE 10/1

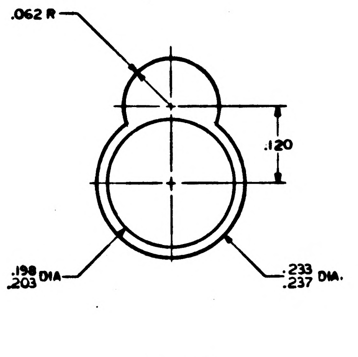

.062 R
.120
.198
.203 DIA
.233
.237 DIA.

DETAIL B
SCALE 10/1

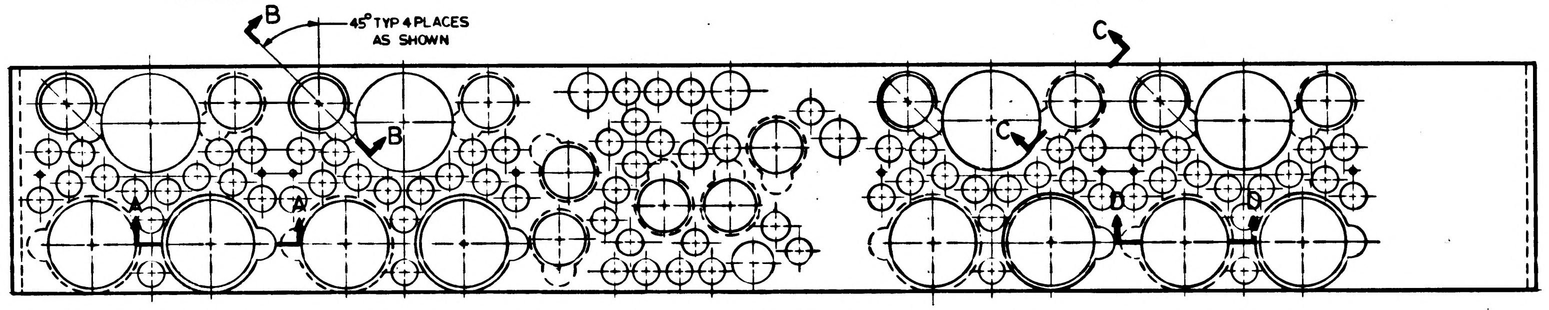

B
45° TYP 4 PLACES
AS SHOWN
B
C
C
A
A
D
D

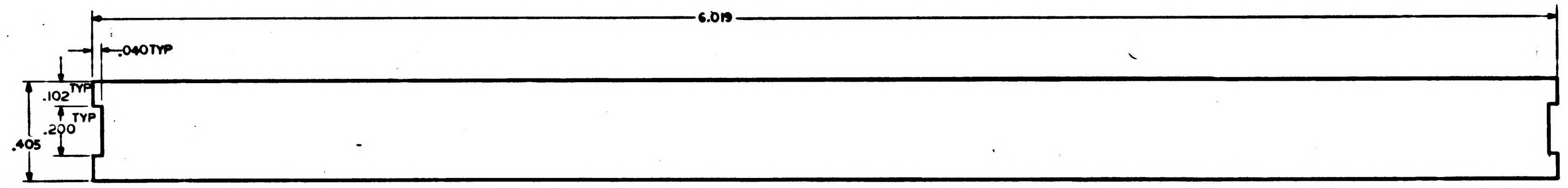

6.019
.040 TYP
.102
TYP
TYP
.200
.405

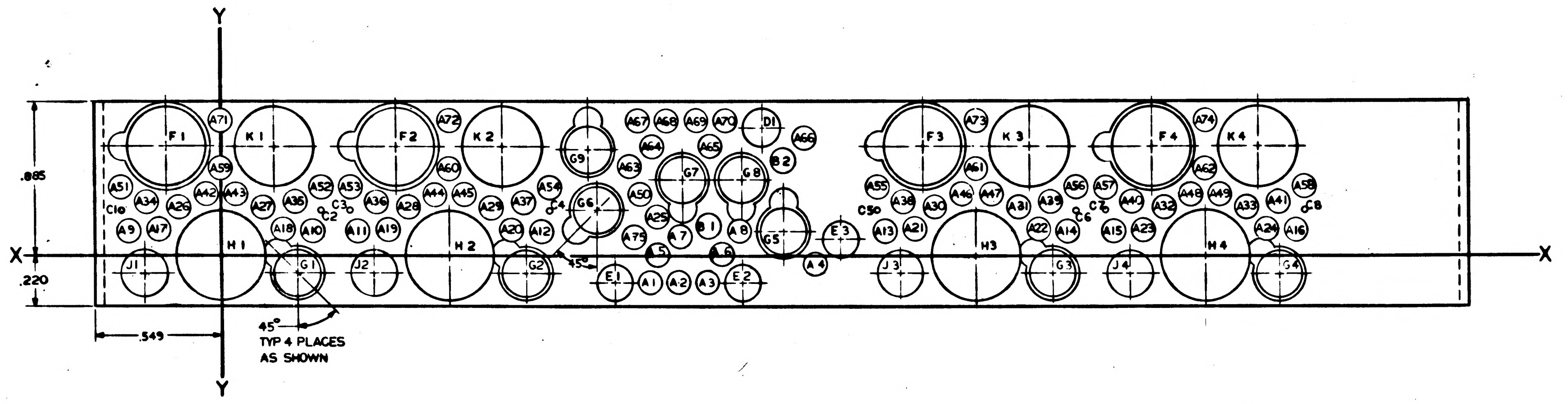

Y
X
X
Y
.885
.220
.549
45°
TYP 4 PLACES
AS SHOWN
45°
F1
K1
F2
K2
F3
K3
F4
K4
H1
H2
H3
H4
J1
J2
J3
J4
G1
G2
G3
G4
G5
G6
G7
G8
G9
E1
E2
E3
D1
B1
B2
C2
C3
C4
C5
C6
C7
C8
C10
A1
A2
A3
A4
A5
A6
A7
A8
A9
A10
A11
A12
A13
A14
A15
A16
A17
A18
A19
A20
A21
A22
A23
A24
A25
A26
A27
A28
A29
A30
A31
A32
A33
A34
A35
A36
A37
A38
A39
A40
A41
A42
A43
A44
A45
A46
A47
A48
A49
A50
A51
A52
A53
A54
A55
A56
A57
A58
A59
A60
A61
A62
A63
A64
A65
A66
A67
A68
A69
A70
A71
A72
A73
A74
A75

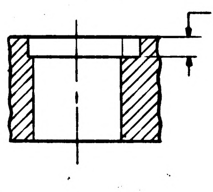

SECTION A-A
SCALE 4/1

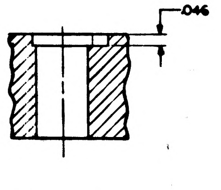

SECTION B-B
ROTATED CCW 45°
SCALE 4/1

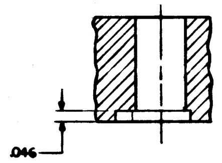

SECTION C-C
ROTATED CW 45°
SCALE 4/1

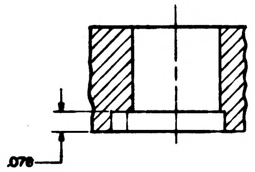

SECTION D-D
SCALE 4/1

MASTER

QTY REQD	PART OR IDENTIFYING NO.	NOMENCLATURE OR DESCRIPTION	FIND NO.

LIST OF MATERIALS

NEXT ASSY	USED ON
APPLICATION	

UNLESS OTHERWISE SPECIFIED
DIMENSIONS ARE IN INCHES
TOLERANCES ON
FRACTIONS ± — DECIMALS ±.005 ANGLES ± 1/2°
DO NOT SCALE THIS DRAWING
MATERIAL
SEE NOTE 2
HEAT TREATMENT
— " —
FINAL FINISH
SEE NOTE 2

MIT
INSTRUMENTATION LAB
CAMBRIDGE, MASS
DWG. NO. CONTRACT
DRAWN Tony Bell DATE 2/26/63
CHECKED
APPROVAL W. J. Turner 6/4/63
APPROVAL
NASA APPROVAL 8/7/63
MIT APPROVAL

MANNED SPACECRAFT CENTER
HOUSTON, TEXAS

HOLDER, COMPONENT
ERASABLE SENSE AMPLIFIER MODULE

CODE IDENT NO. — SIZE J — NASA DRAWING NO. 1004222
SCALE 4/1 — WT — SHEET 1 OF 1

1004222 A

74

STANDARDS
9184 FINISH B

INCHES
0 1 2
PHOTOGRAPHIC SCALE ONLY

NOTICE — WHEN GOVERNMENT DRAWINGS, SPECIFICATIONS, OR OTHER DATA ARE USED FOR ANY PURPOSE OTHER THAN IN CONNECTION WITH A DEFINITELY RELATED GOVERNMENT PROCUREMENT OPERATION, THE UNITED STATES GOVERNMENT THEREBY INCURS NO RESPONSIBILITY NOR ANY OBLIGATION WHATSOEVER; AND THE FACT THAT THE GOVERNMENT MAY HAVE FORMULATED, FURNISHED, OR IN ANY WAY SUPPLIED THE SAID DRAWINGS, SPECIFICATIONS, OR OTHER DATA IS NOT TO BE REGARDED BY IMPLICATION OR OTHERWISE AS IN ANY MANNER LICENSING THE HOLDER OR ANY OTHER PERSON OR CORPORATION, OR CONVEYING ANY RIGHTS OR PERMISSION TO MANUFACTURE, USE, OR SELL ANY PATENTED INVENTION THAT MAY IN ANY WAY BE RELATED THERETO.

HOLE IDENT	BASIC X DIM	BASIC Y DIM	HOLE DIA	⌖ TOL	QTY
A 1	1.877	-0.117	.100 .104	.005	74
A 2	2.004	-0.117			
A 3	2.132	-0.117			
A 4	2.603	-0.038			
A 5	1.913	0.002			
A 6	2.192	0.006			
A 7	2.012	0.082			
A 8	2.273	0.105			
A 9	-0.399	0.107			
A 10	0.399				
A 11	0.601				
A 12	1.399				
A 13	2.913				
A 14	3.711				
A 15	3.913				
A 16	4.711	0.107			
A 17	-0.269	0.115			
A 18	0.269				
A 19	0.731				
A 20	1.269				
A 21	3.043				
A 22	3.561				
A 23	4.043				
A 24	4.581	0.115			
A 25	1.913	0.163			
A 26	-0.182	0.210			
A 27	0.162				
A 28	0.818				
A 29	1.182				
A 30	3.130				
A 31	3.494				
A 32	4.130				
A 33	4.494	0.210			
A 34	-0.323	0.233			
A 35	0.323				
A 36	0.677				
A 37	1.323				
A 38	2.989				
A 39	3.635				
A 40	3.989				
A 41	4.635	0.233			
A 42	-0.064	0.264			
A 43	0.064				
A 44	0.936				
A 45	1.064				
A 46	3.248				
A 47	3.376				
A 48	4.248				
A 49	4.376	0.264			
A 50	1.835	0.267			
A 51	-0.435	0.295			
A 52	0.435				
A 53	0.565				
A 54	1.435				
A 55	2.877				
A 56	3.747				
A 57	3.877				
A 58	4.747	0.295			
A 59	0.000	0.377			
A 60	1.000				
A 61	3.312				
A 62	4.312	0.377			
A 63	1.788	3.386			
A 64	1.889	0.472			
A 65	2.146	0.472			
A 66	2.559	0.505			
A 67	1.824	0.582			
A 66	1.953				
A 69	2.083				
A 70	2.212	0.582			
A 71	0.000	0.584			
A 72	1.000				
A 73	3.312				
A 74	4.312	0.584			
A 75	1.808	0.082			
B 1	2.136	0.129	.110 .114	.005	2
B 2	2.464	0.412			
C 1	0.435	0.198	023 027	005	8
C 2	0.435				
C 3	0.565				
C 4	1.435				
C 5	2.877				
C 6	3.747				
C 7	3.877				
C 8	4.747	0.198			
D 1	2,371	0.550	.165 .169	.005	1
E 1	-1.724	-0.117	.153 .157	005	3
E 2	2.287	-0.117			
E 3	2.715	0.069			
F 1	-0.235	0.472	SEE DETAIL "A" AND SECTION "D-D"	.005	4
F 2	0.765				
F 3	3.077				
F 4	4.077	0.472			

HOLE IDENT	BASIC X DIM	BASIC Y DIM	HOLE DIA	⌖ TOL	QTY
G 1	0.333	-0.075	SEE DETAIL "B" AND SECTION "C-C"	.005	9
G 2	1.333				
G 3	3.645				
G 4	4.645	-0.075			
G 5	2.468	0.106			
G 6	1.648	0.197			
G 7	2.022	0.326			
G 8	2.284	0.326			
G 9	1.608	0.459			
H 1	0.000	0.000	384 391	.005	4
H 2	1.000				
H 3	3.312				
H 4	4.312	0.000			
J 1	-0.333	-0.075	SEE DETAIL "B" AND SECTION "B-B"	.005	4
J 2	0.667				
J 3	2.999				
J 4	3.999	-0.075			
K 1	0.235	0.472	SEE DETAIL "A" AND SECTION "A-A"	.005	4
K 2	1.235				
K 3	3.547				
K 4	4.547	0.472			

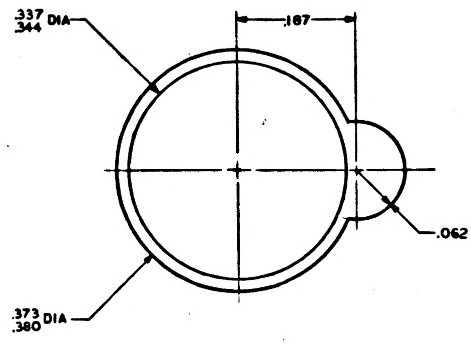

.337
.344 DIA
.187
.062 R
.373
.380 DIA

DETAIL A
SCALE 10/1

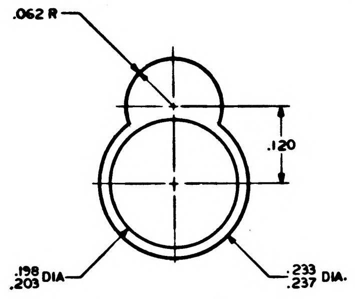

.062 R
.120
.198
.203 DIA
.233
.237 DIA.

DETAIL B
SCALE 10/1

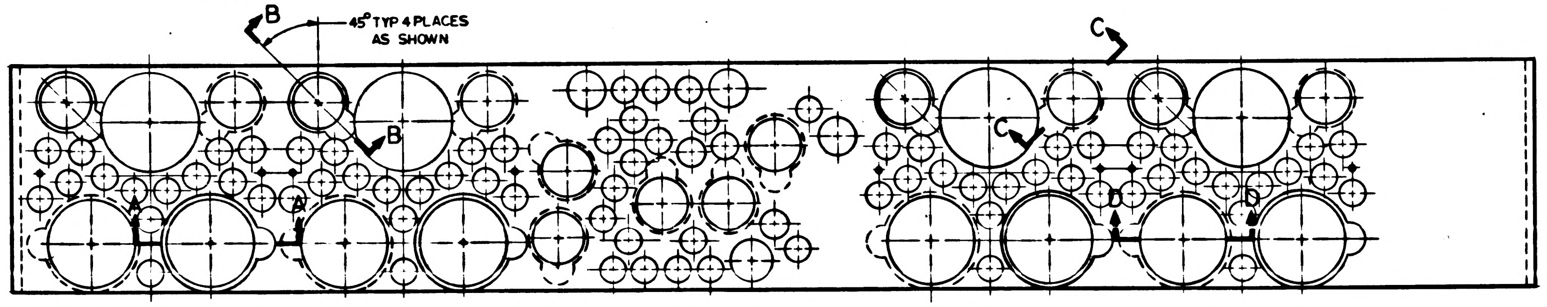

B
45° TYP 4 PLACES
AS SHOWN
B
C
C
A
A
D
D

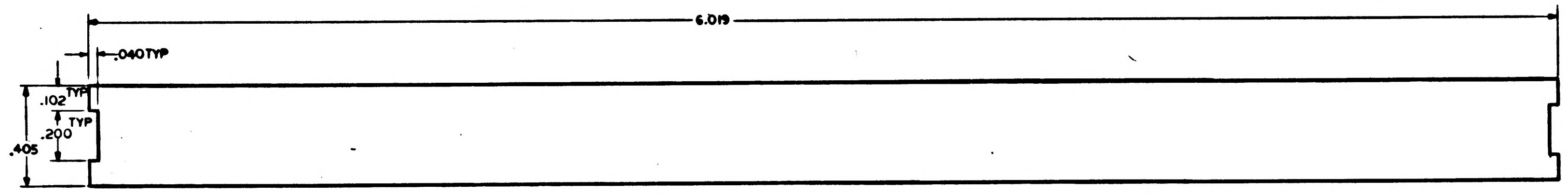

6.019
.040 TYP
.102 TYP
.200 TYP
.405

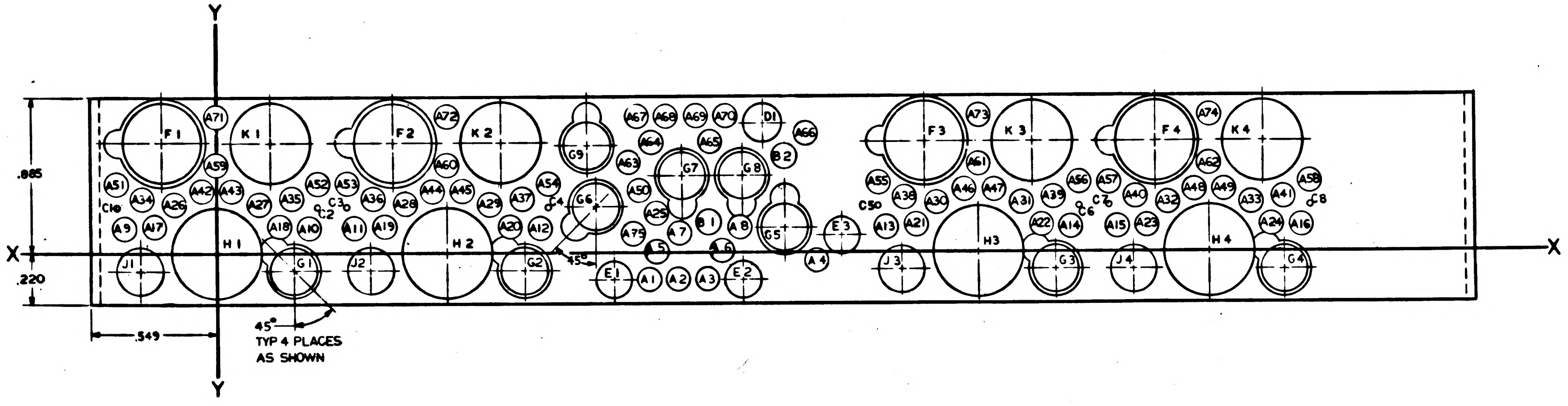

Y
Y
X
X
.885
.220
.549
45° TYP 4 PLACES AS SHOWN
45°
F1
K1
F2
K2
F3
K3
F4
K4
H1
H2
H3
H4
J1
J2
J3
J4
G1
G2
G3
G4
G5
G6
G7
G8
G9
E1
E2
E3
D1
B1
B2
C10
C2
C3
C4
C50
C6
C7
C8
A71
A59
A72
A60
A73
A61
A74
A62
A67
A68
A69
A70
A64
A65
A66
A63
A51
A34
A26
A42
A43
A27
A35
A52
A53
A36
A28
A44
A45
A29
A37
A54
A50
A25
A75
A7
A8
A5
A6
A4
A1
A2
A3
A9
A17
A18
A10
A11
A19
A20
A12
A55
A38
A30
A46
A47
A31
A39
A56
A57
A40
A32
A48
A49
A33
A41
A58
A13
A21
A22
A14
A15
A23
A24
A16

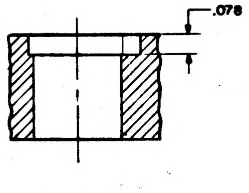

SECTION A-A
SCALE 4/1

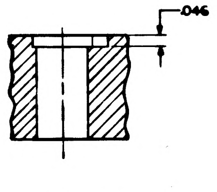

SECTION B-B
ROTATED CCW 45°
SCALE 4/1

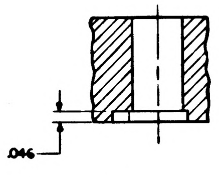

SECTION C-C
ROTATED CW 45°
SCALE 4/1

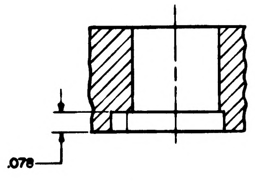

SECTION D-D
SCALE 4/1

NOTES:
1. INTERPRET DRAWING IN ACCORDANCE WITH STANDARDS PRESCRIBED BY MIL -D-70327
2. MATL: PLASTIC CLEAR ACRILIC PER MIL-P-8184 FINISH B
3. TRUE POSITION AS SHOWN IN CHART
4. REMOVE ALL SHARP EDGES

NEXT ASSY	USED ON
APPLICATION	

UNLESS OTHERWISE SPECIFIED
DIMENSIONS ARE IN INCHES
TOLERANCES ON
FRACTIONS DECIMALS ANGLES
± .005
DO NOT SCALE THIS DRAWING
MATERIAL
SEE NOTE 2
HEAT TREATMENT
—〃—
FINAL FINISH
SEE NOTE 2

1004222 A

INCHES
0 1 2
PHOTOGRAPHIC SCALE ONLY

B	1004222

SYM	DESCRIPTION	DATE	APPROVAL
	REVISIONS 02331		
A	REVISED PER TDRR 02704		
B	CHANGE PER TDRR 02905	9-5-63	

HOLE IDENT	BASIC X DIM	BASIC Y DIM	HOLE DIA	⌖ TOL	QTY
G1	0.333	-0.075	SEE DETAIL 'B' AND SECTION 'C-C'	.005	9
G2	1.333	↕			
G3	3.645	↕			
G4	4.645	-0.075			
G5	2.468	0.106			
G6	1.648	0.197			
G7	2.022	0.326			
G8	2.284	0.326			
G9	1.608	0.459			
H1	0.000	0.000	.384 .391	.005	4
H2	1.000	↕			
H3	3.312	↕			
H4	4.312	0.000			
J1	-0.333	-0.075	SEE DETAIL 'B' AND SECTION 'B-B'	.005	4
J2	0.667	↕			
J3	2.973	↕			
J4	3.980	-0.075			
K1	0.235	0.472	SEE DETAIL 'A' AND SECTION 'A-A'	.005	4
K2	1.235	↕			
K3	3.547	↕			
K4	4.547	0.472			

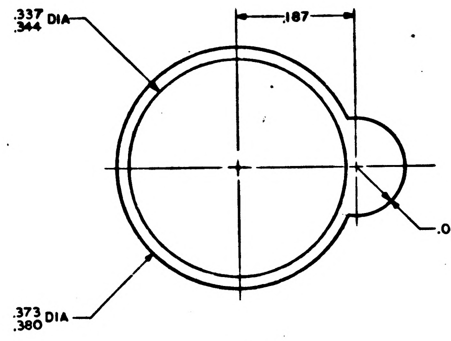
.337 .344 DIA
.187
.062 R
.373 .380 DIA

DETAIL A
SCALE 10/1

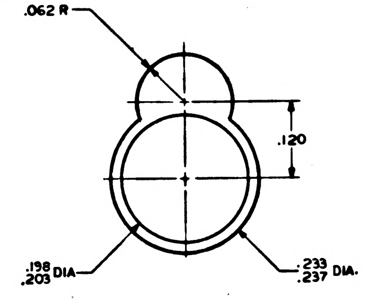
.062 R
.120
.198 .203 DIA
.233 .237 DIA.

DETAIL B
SCALE 10/1

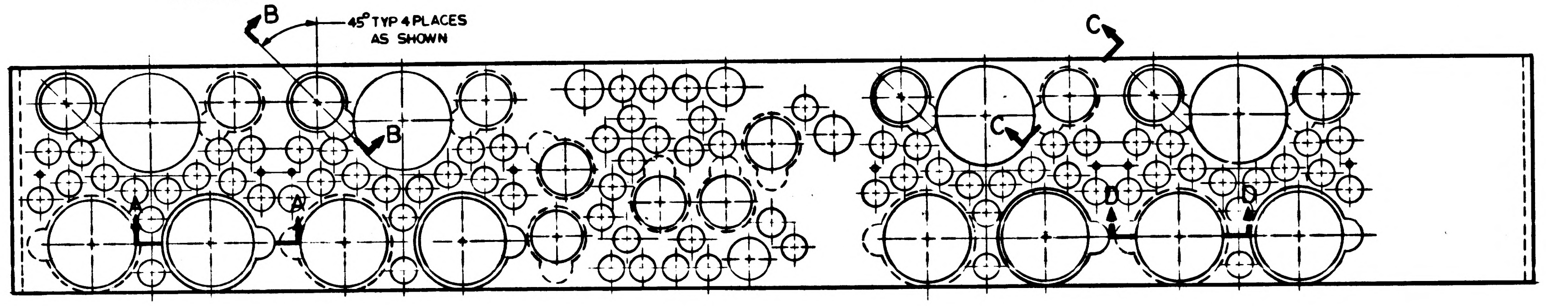
B
45° TYP 4 PLACES AS SHOWN
B
A
A
C
C
D
D

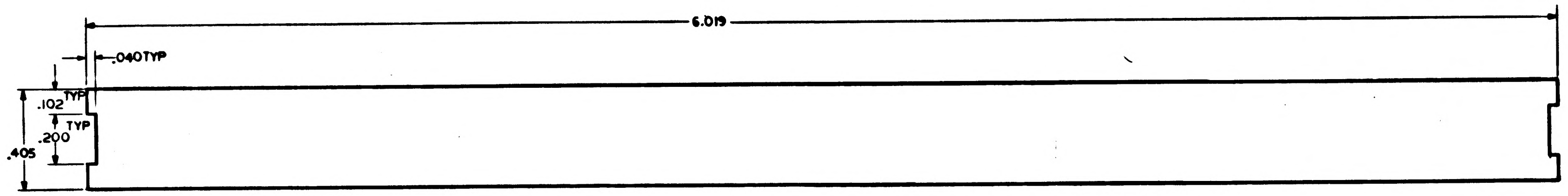
6.019
.040 TYP
.102 TYP
.200 TYP
.405

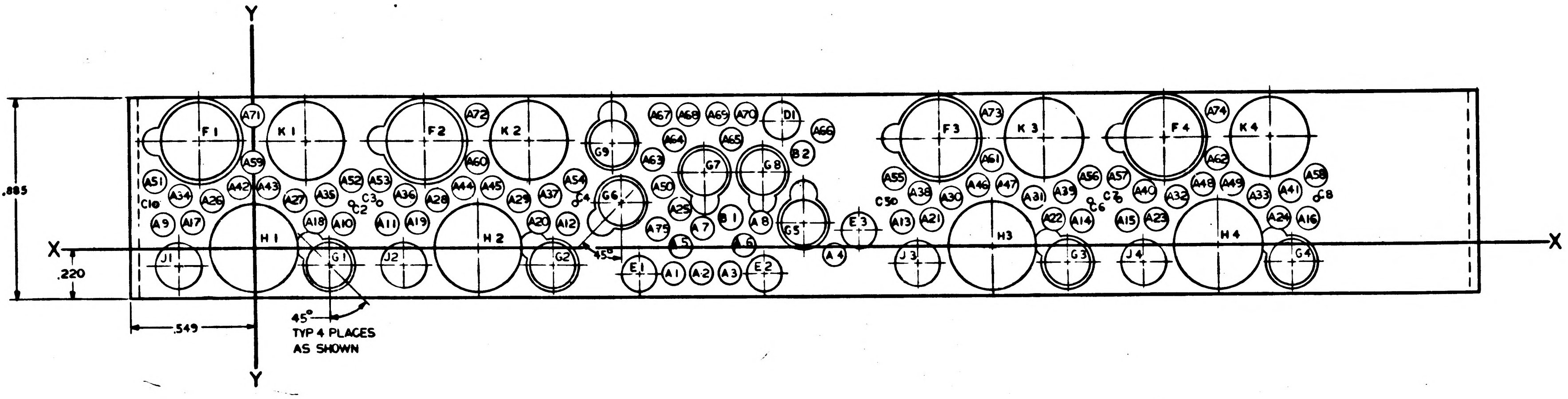
Y
X
X
Y
F1
K1
F2
K2
F3
K3
F4
K4
H1
H2
H3
H4
G1
G2
G3
G4
G5
G6
G7
G8
G9
J1
J2
J3
J4
E1
E2
E3
D1
B1
B2
.885
.220
.549
45°
TYP 4 PLACES
AS SHOWN

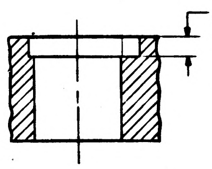

SECTION A-A
SCALE 4/1

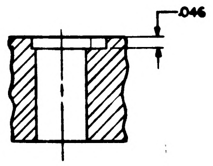

SECTION B-B
ROTATED CCW 45°
SCALE 4/1

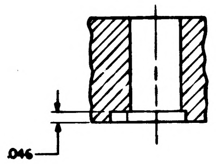

SECTION C-C
ROTATED CW 45°
SCALE 4/1

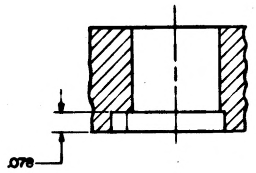

SECTION D-D
SCALE 4/1

DARDS

FINISH B

QTY REQD	PART OR IDENTIFYING NO.	NOMENCLATURE OR DESCRIPTION	FIND NO.
LIST OF MATERIALS			

NEXT ASSY	USED ON
1003140	
APPLICATION	

UNLESS OTHERWISE SPECIFIED DIMENSIONS ARE IN INCHES
TOLERANCES ON
FRACTIONS ± — DECIMALS ±.005 ANGLES ± 1/2°
DO NOT SCALE THIS DRAWING
MATERIAL SEE NOTE 2
HEAT TREATMENT —
FINAL FINISH SEE NOTE 2

MIT INSTRUMENTATION LAB
CAMBRIDGE, MASS.
DRAWN DATE 7/26/63
CHECKED
APPROVAL Turner 8/16/63
APPROVAL
NASA APPROVAL 8/7/63
MIT APPROVAL

MANNED SPACECRAFT CENTER
HOUSTON, TEXAS

HOLDER, COMPONENT ERASABLE SENSE AMPLIFIER MODULE

CODE IDENT NO. —
SIZE J
NASA DRAWING NO. 1004222
SCALE 4/1
WT
SHEET 1 OF 1

004222 B

MASTER

INCHES
PHOTOGRAPHIC SCALE ONLY

F-2

8H

NOTICE — WHEN GOVERNMENT DRAWINGS, SPECIFICATIONS, OR OTHER DATA ARE USED FOR ANY PURPOSE OTHER THAN IN CONNECTION WITH A DEFINITELY RELATED GOVERNMENT PROCUREMENT OPERATION, THE UNITED STATES GOVERNMENT THEREBY INCURS NO RESPONSIBILITY NOR ANY OBLIGATION WHATSOEVER; AND THE FACT THAT THE GOVERNMENT MAY HAVE FORMULATED, FURNISHED, OR IN ANY WAY SUPPLIED THE SAID DRAWINGS, SPECIFICATIONS, OR OTHER DATA IS NOT TO BE REGARDED BY IMPLICATION OR OTHERWISE AS IN ANY MANNER LICENSING THE HOLDER OR ANY OTHER PERSON OR CORPORATION, OR CONVEYING ANY RIGHTS OR PERMISSION TO MANUFACTURE, USE, OR SELL ANY PATENTED INVENTION THAT MAY IN ANY WAY BE RELATED THERETO.

HOLE IDENT	BASIC X DIM	BASIC Y DIM	HOLE DIA	⌖ TOL	QTY
A 1	1.877	-0.117	.100 .104	.005	75
A 2	2.004	-0.117			
A 3	2.132	-0.117			
A 4	2.603	-0.038			
A 5	1.913	0.002			
A 6	2.192	0.006			
A 7	2.012	0.082			
A 8	2.273	0.105			
A 9	-0.399	0.107			
A 10	0.399				
A 11	0.601				
A 12	1.399				
A 13	2.913				
A 14	3.711				
A 15	3.913				
A 16	4.711	0.107			
A 17	-0.269	0.115			
A 18	0.269				
A 19	0.731				
A 20	1.269				
A 21	3.043				
A 22	3.561				
A 23	4.043				
A 24	4.581	0.115			
A 25	1.913	0.163			
A 26	-0.182	0.210			
A 27	0.162				
A 28	0.818				
A 29	1.182				
A 30	3.130				
A 31	3.494				
A 32	4.130				
A 33	4.494	0.210			
A 34	-0.323	0.233			
A 35	0.323				
A 36	0.677				
A 37	1.323				
A 38	2.989				
A 39	3.635				
A 40	3.989				
A 41	4.635	0.233			
A 42	-0.064	0.264			
A 43	0.064				
A 44	0.936				
A 45	1.064				
A 46	3.246				
A 47	3.376				
A 48	4.248				
A 49	4.376	0.264			
A 50	1.835	0.267			
A 51	-0.435	0.295			
A 52	0.435				
A 53	0.565				
A 54	1.435				
A 55	2.877				
A 56	3.747				
A 57	3.877				
A 58	4.747	0.295			
A 59	0.000	0.377			
A 60	1.000				
A 61	3.312				
A 62	4.312	0.377			
A 63	1.788	0.386			
A 64	1.889	0.472			
A 65	2.146	0.472			
A 66	2.559	0.505			
A 67	1.824	0.582			
A 68	1.953				
A 69	2.083				
A 70	2.212	0.582			
A 71	0.000	0.584			
A 72	1.000				
A 73	3.312				
A 74	4.312	0.584			
A 75	1.808	0.082			
B 1	2.136	0.129	.110 .114	.005	2
B 2	2.464	0.412			
C 1	-0.435	0.198	023 027	005	8
C 2	0.435				
C 3	0.565				
C 4	1.435				
C 5	2.877				
C 6	3.747				
C 7	3.877				
C 8	4.747	0.198			
D 1	2.371	0.550	.165 .169	.005	1
E 1	1.724	-0.117	.153 .157	005	3
E 2	2.287	-0.117			
E 3	2.715	0.069			
F 1	-0.235	0.472	SEE DETAIL "A" AND SECTION "D-D"	.005	4
F 2	0.765				
F 3	3.077				
F 4	4.077	0.472			

HOLE IDENT	BASIC X DIM	BASIC Y DIM	HOLE DIA	⌖ TOL	QTY
G 1	0.333	-0.075	SEE DETAIL "B" AND SECTION "C-C"	.005	9
G 2	1.333				
G 3	3.645				
G 4	4.645	-0.075			
G 5	2.468	0.106			
G 6	1.648	0.197			
G 7	2.022	0.326			
G 8	2.284	0.326			
G 9	1.608	0.459			
H 1	0.000	0.000	384 391	.005	4
H 2	1.000				
H 3	3.312				
H 4	4.312	0.000			
J 1	-0.333	-0.075	SEE DETAIL "B" AND SECTION "B-B"	.005	4
J 2	0.667				
J 3	2.973				
J 4	3.980	-0.075			
K 1	0.235	0.472	SEE DETAIL "A" AND SECTION "A-A"	.005	4
K 2	1.235				
K 3	3.547				
K 4	4.547	0.472			

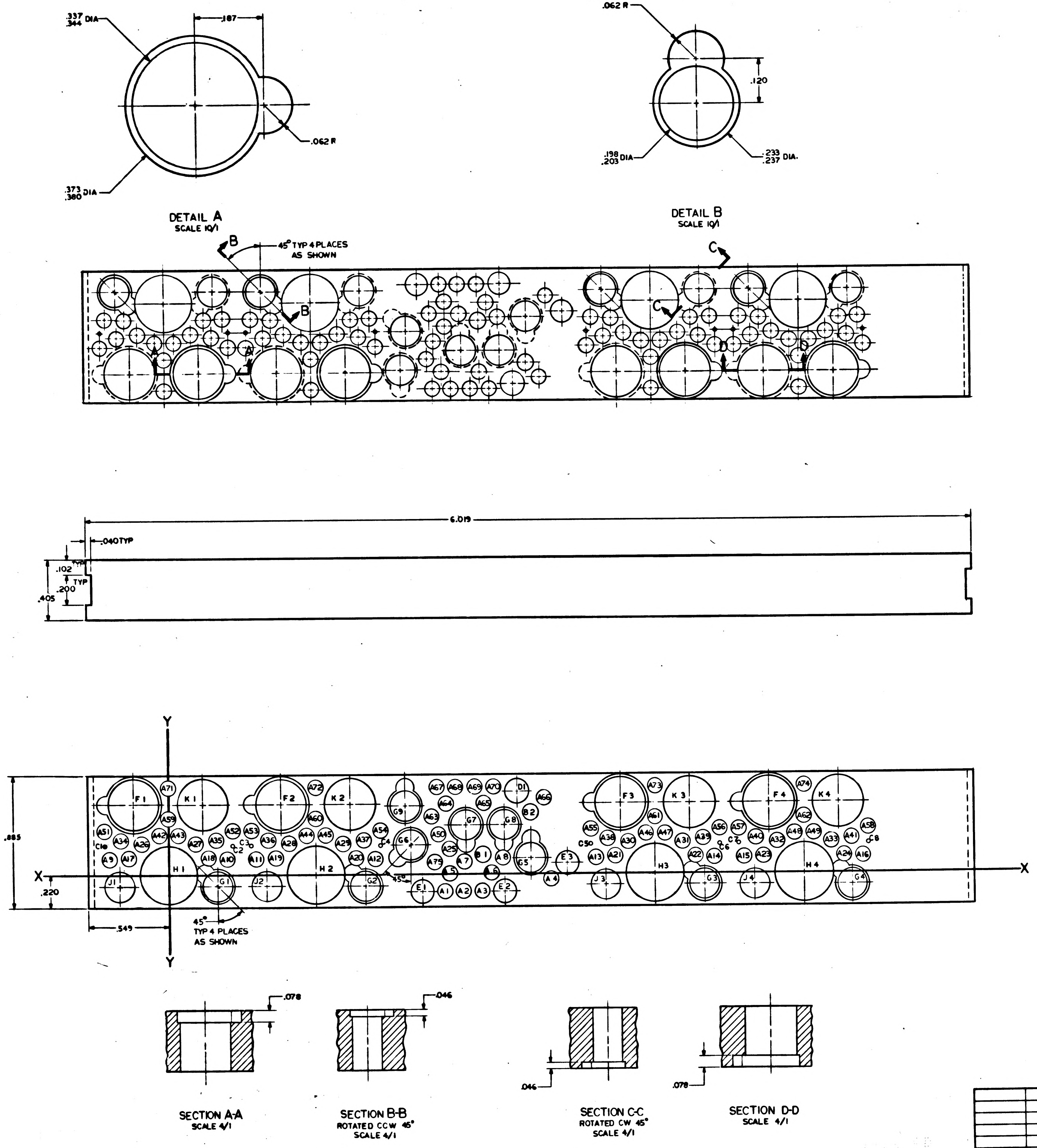
.337 .344 DIA
.187
.062 R
.373 .380 DIA
DETAIL A
SCALE 10/1
.062 R
.120
.198 .203 DIA
.233 .237 DIA.
DETAIL B
SCALE 10/1
45° TYP 4 PLACES AS SHOWN
6.019
.040 TYP
.102
.200
TYP
.405
.885
.220
.549
X
Y
45° TYP 4 PLACES AS SHOWN
.078
.046
SECTION A-A
SCALE 4/1
SECTION B-B
ROTATED CCW 45°
SCALE 4/1
SECTION C-C
ROTATED CW 45°
SCALE 4/1
SECTION D-D
SCALE 4/1

NOTES:
1. INTERPRET DRAWING IN ACCORDANCE WITH STANDARDS PRESCRIBED BY MIL-D-70327
2. MATL: PLASTIC CLEAR ACRILIC PER MIL-P-8184 FINISH B
3. TRUE POSITION AS SHOWN IN CHART
4. REMOVE ALL SHARP EDGES

1003140	
NEXT ASSY	USED ON
APPLICATION	

UNLESS OTHERWISE SPECIFIED
DIMENSIONS ARE IN INCHES
TOLERANCES ON
FRACTIONS DECIMALS ANGLES
± .005 ± ½°
DO NOT SCALE THIS DRAWING
MATERIAL
SEE NOTE 2
HEAT TREATMENT
—
FINAL FINISH
SEE NOTE 2

1004222 B

INCHES
PHOTOGRAPHIC SCALE ONLY

F-1

1004222 C

SYM	DESCRIPTION	DATE	APPROVAL
A	REVISED PER TDRR 02704		
B	CHANGE PER TDRR 02905	9-5-63	
C	REVISED PER TDRR 031	9-16-63	

HOLE IDENT	BASIC X DIM	BASIC Y DIM	HOLE DIA	⌖ TOL	QTY
G1	0.333	-0.075	SEE DETAIL 'B' AND SECTION 'C-C'	.005	9
G2	1.333	↕			
G3	3.645	↕			
G4	4.645	-0.075			
G5	2.468	0.106			
G6	1.648	0.197			
G7	2.022	0.326			
G8	2.284	0.326			
G9	1.608	0.459			
H1	0.000	0.000	.384 .391	.005	4
H2	1.000	↕			
H3	3.312	↕			
H4	4.312	0.000			
J1	-0.333	-0.075	SEE DETAIL 'B' AND SECTION 'B-B'	.005	4
J2	0.667	↕			
J3	2.973	↕			
J4	3.980	-0.075			
K1	0.235	0.472	SEE DETAIL 'A' AND SECTION 'A-A'	.005	4
K2	1.235	↕			
K3	3.547	↕			
K4	4.547	0.472			

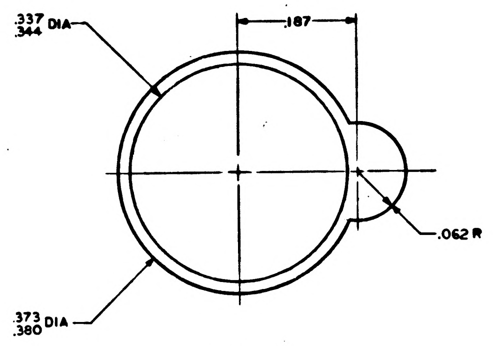

.337
.344 DIA
.187
.062 R
.373
.380 DIA

DETAIL A
SCALE 10/1

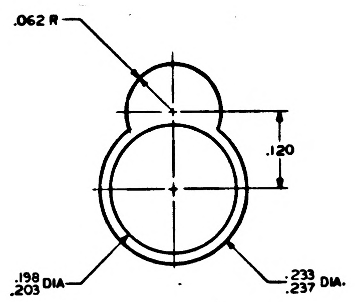

.062 R
.120
.198
.203 DIA
.233
.237 DIA

DETAIL B
SCALE 10/1

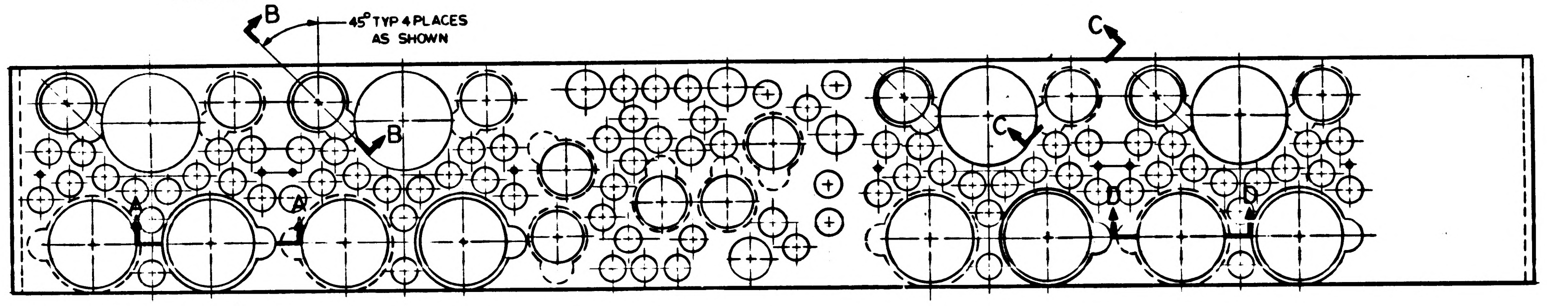

B
45° TYP 4 PLACES AS SHOWN
B
A
A
C
C
D
D

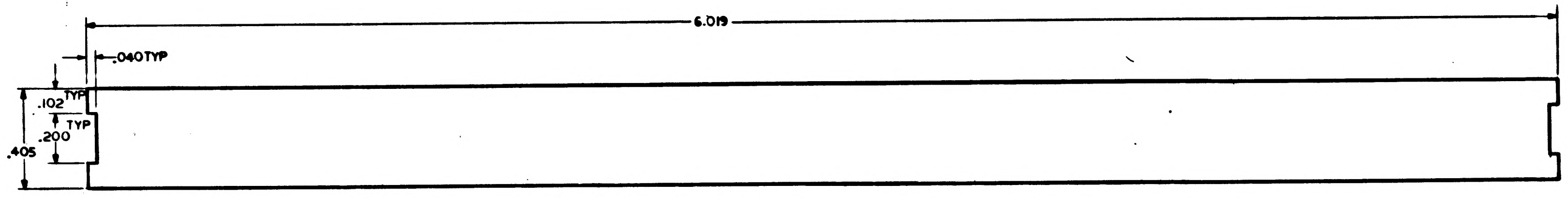

6.019
.040 TYP
.102 TYP
.200 TYP
.405

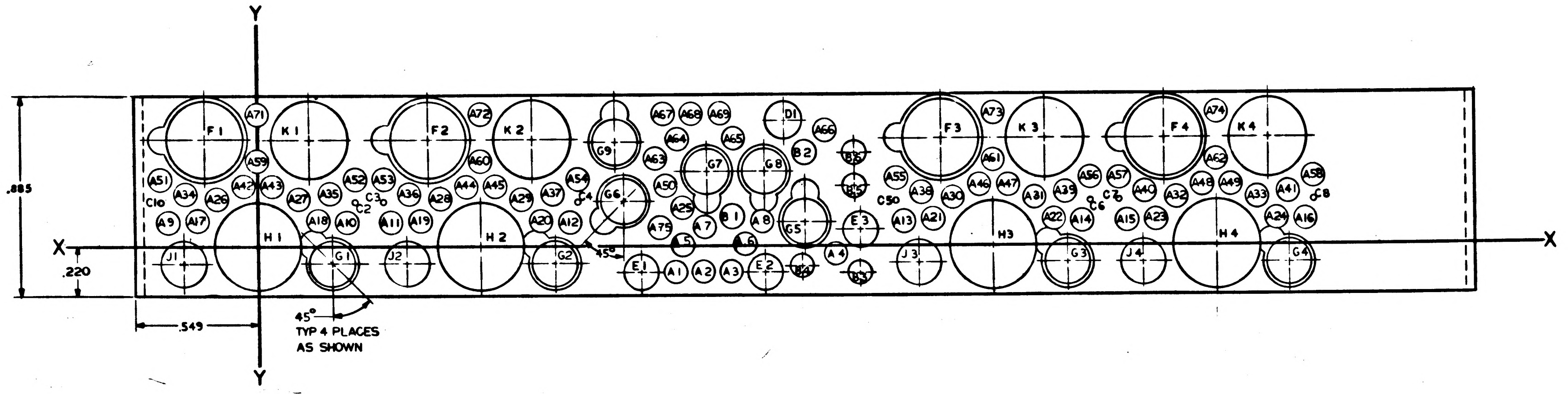

Y
X
X
Y
.885
.220
.549
45° TYP 4 PLACES AS SHOWN
45°
F1
K1
F2
K2
F3
K3
F4
K4
H1
H2
H3
H4
G1
G2
G3
G4
G5
G6
G7
G8
G9
J1
J2
J3
J4
E1
E2
E3
D1
B1
B2
C1
C2
C3
C4
C5
C6
C8
C10
C50
A1
A2
A3
A9
A10
A11
A12
A13
A14
A15
A16
A17
A18
A19
A21
A22
A23
A24
A25
A26
A27
A28
A29
A30
A31
A32
A33
A34
A35
A36
A37
A38
A39
A40
A41
A42
A43
A44
A45
A46
A47
A48
A49
A50
A51
A52
A53
A54
A55
A56
A57
A58
A59
A60
A61
A62
A63
A64
A65
A66
A67
A68
A69
A71
A72
A73
A74
A75

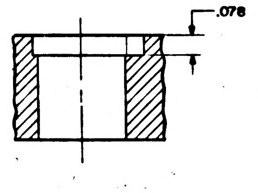

SECTION A-A
SCALE 4/1

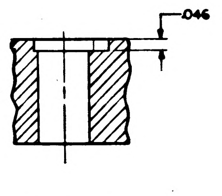

SECTION B-B
ROTATED CCW 45°
SCALE 4/1

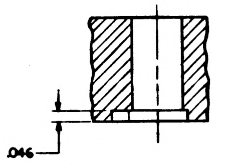

SECTION C-C
ROTATED CW 45°
SCALE 4/1

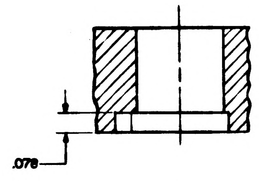

SECTION D-D
SCALE 4/1

TH STANDARDS
-P-6184 FINISH B

MASTER

QTY REQD	PART OR IDENTIFYING NO.	NOMENCLATURE OR DESCRIPTION	FIND NO

LIST OF MATERIALS

NEXT ASSY	USED ON
1003140	

APPLICATION

UNLESS OTHERWISE SPECIFIED DIMENSIONS ARE IN INCHES
TOLERANCES ON
FRACTIONS ± // DECIMALS ±.005 ANGLES ± 1/2°
DO NOT SCALE THIS DRAWING
MATERIAL SEE NOTE 2
HEAT TREATMENT //
FINAL FINISH SEE NOTE 2

MIT INSTRUMENTATION LAB
CAMBRIDGE, MASS
DRAWN Tony Bell DATE 2/26/63
CHECKED
APPROVAL W. Turner 6/6/63
APPROVAL
NASA APPROVAL 8/7/63
MIT APPROVAL

MANNED SPACECRAFT CENTER
HOUSTON, TEXAS

HOLDER, COMPONENT
ERASABLE SENSE
AMPLIFIER MODULE

CODE IDENT NO. —— SIZE J NASA DRAWING NO. 1004222
SCALE 4/1 WT SHEET 1 OF 1

1004222

INCHES
PHOTOGRAPHIC SCALE ONLY

NOTICE — WHEN GOVERNMENT DRAWINGS, SPECIFICATIONS, OR OTHER DATA ARE USED FOR ANY PURPOSE OTHER THAN IN CONNECTION WITH A DEFINITELY RELATED GOVERNMENT PROCUREMENT OPERATION, THE UNITED STATES GOVERNMENT THEREBY INCURS NO RESPONSIBILITY NOR ANY OBLIGATION WHATSOEVER; AND THE FACT THAT THE GOVERNMENT MAY HAVE FORMULATED, FURNISHED, OR IN ANY WAY SUPPLIED THE SAID DRAWINGS, SPECIFICATIONS, OR OTHER DATA IS NOT TO BE REGARDED BY IMPLICATION OR OTHERWISE AS IN ANY MANNER LICENSING THE HOLDER OR ANY OTHER PERSON OR CORPORATION, OR CONVEYING ANY RIGHTS OR PERMISSION TO MANUFACTURE, USE, OR SELL ANY PATENTED INVENTION THAT MAY IN ANY WAY BE RELATED THERETO.

HOLE IDENT	BASIC X DIM	BASIC Y DIM	HOLE DIA	⌖ TOL	QTY
A1	1.877	-0.117	.100 .104	.005	74
A2	2.004	-0.117			
A3	2.132	-0.117			
A4	2.603	-0.038			
A5	1.913	0.002			
A6	2.192	0.006			
A7	2.012	0.082			
A8	2.273	0.105			
A9	-0.399	0.107			
A10	0.399				
A11	0.601				
A12	1.399				
A13	2.913				
A14	3.711				
A15	3.913				
A16	4.711	0.107			
A17	-0.269	0.115			
A18	0.269				
A19	0.731				
A20	1.269				
A21	3.043				
A22	3.561				
A23	4.043				
A24	4.581	0.115			
A25	1.913	0.163			
A26	-0.182	0.210			
A27	0.162				
A28	0.818				
A29	1.182				
A30	3.130				
A31	3.494				
A32	4.130				
A33	4.494	0.210			
A34	-0.323	0.233			
A35	0.323				
A36	0.677				
A37	1.323				
A38	2.989				
A39	3.635				
A40	3.989				
A41	4.635	0.233			
A42	-0.064	0.264			
A43	0.064				
A44	0.936				
A45	1.064				
A46	3.248				
A47	3.376				
A48	4.248				
A49	4.376	0.264			
A50	1.835	0.267			
A51	-0.435	0.295			
A52	0.435				
A53	0.565				
A54	1.435				
A55	2.877				
A56	3.747				
A57	3.877				
A58	4.747	0.295			
A59	0.000	0.377			
A60	1.000				
A61	3.312				
A62	4.312	0.377			
A63	1.788	0.386			
A64	1.889	0.472			
A65	2.146	0.472			
A66	2.559	0.505			
A67	1.824	0.582			
A68	1.953				
A69	2.083				
~~A70~~	[illegible]	[illegible]			
A71	0.000	0.584			
A72	1.000				
A73	3.312				
A74	4.312	0.584			
A75	1.808	0.082			
B1	2.136	0.129	.110 .114	.005	6
B2	2.464	0.412			
B3	2.715	-0.117			
B4	2.445	-0.085			
B5	2.685	0.267			
B6	2.685	0.412			
C1	-0.435	0.198	.023 .027	.005	8
C2	0.435				
C3	0.565				
C4	1.435				
C5	2.877				
C6	3.747				
C7	3.877				
C8	4.747	0.198			
D1	2.371	0.550	.165 .169	.005	1
E1	1.724	-0.117	.153 .157	.005	3
E2	2.287	-0.117			
E3	2.715	0.069			
F1	-0.235	0.472	SEE DETAIL "A" AND SECTION "D-D"	.005	4
F2	0.765				
F3	3.077				
F4	4.077	0.472			

HOLE IDENT	BASIC X DIM	BASIC Y DIM	HOLE DIA	⌖ TOL	QTY
G1	0.333	-0.075	SEE DETAIL "B" AND SECTION "C-C"	.005	9
G2	1.333				
G3	3.645				
G4	4.645	-0.075			
G5	2.468	0.106			
G6	1.648	0.197			
G7	2.022	0.326			
G8	2.284	0.326			
G9	1.608	0.459			
H1	0.000	0.000	.384 .391	.005	4
H2	1.000				
H3	3.312				
H4	4.312	0.000			
J1	-0.333	-0.075	SEE DETAIL "B" AND SECTION "B-B"	.005	4
J2	0.667				
J3	2.973				
J4	3.980	-0.075			
K1	0.235	0.472	SEE DETAIL "A" AND SECTION "A-A"	.005	4
K2	1.235				
K3	3.547				
K4	4.547	0.472			

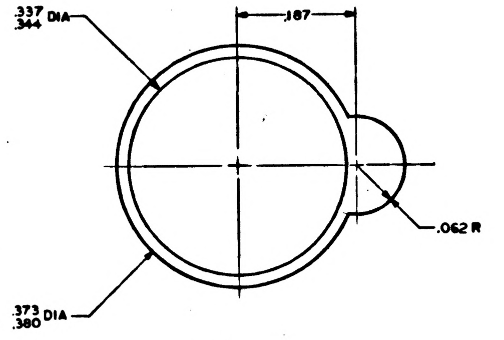

DETAIL A
SCALE 10/1

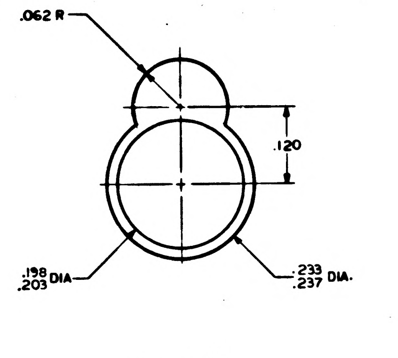

DETAIL B
SCALE 10/1

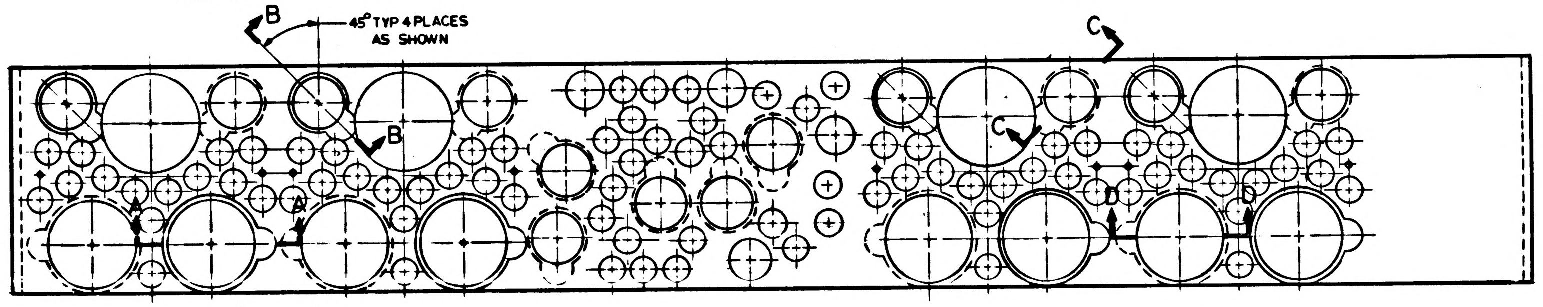

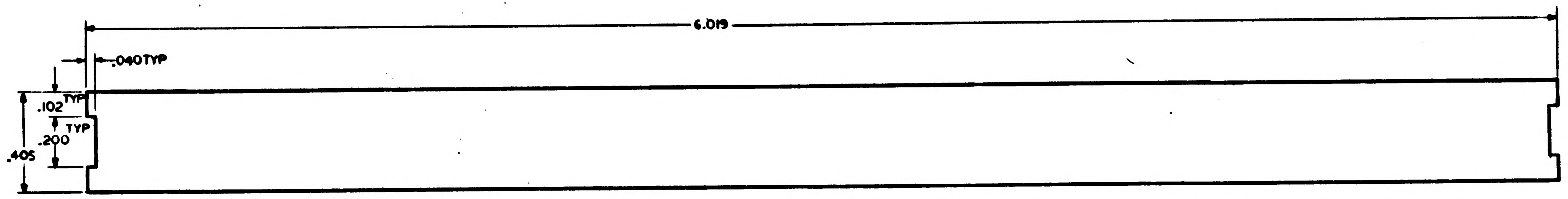

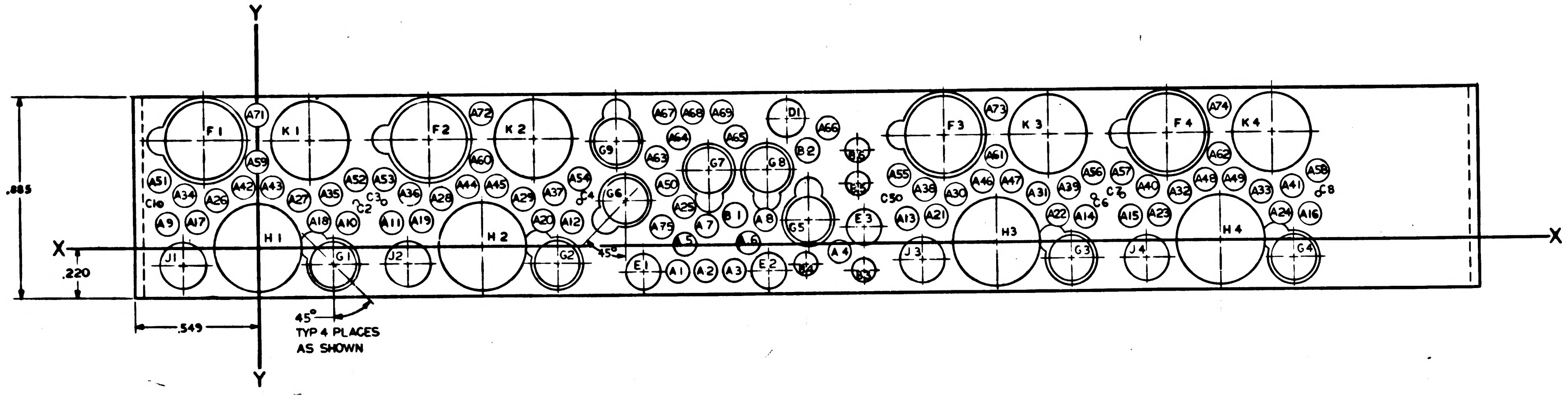

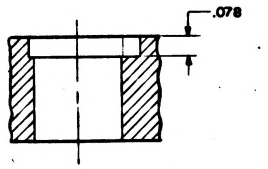

SECTION A-A
SCALE 4/1

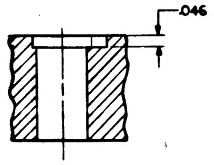

SECTION B-B
ROTATED CCW 45°
SCALE 4/1

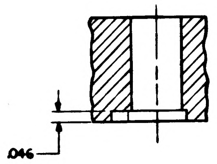

SECTION C-C
ROTATED CW 45°
SCALE 4/1

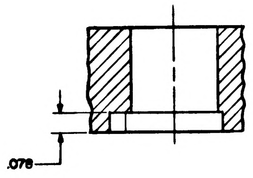

SECTION D-D
SCALE 4/1

NOTES:
1. INTERPRET DRAWING IN ACCORDANCE WITH STANDARDS PRESCRIBED BY MIL-D-70327
2. MATL: PLASTIC CLEAR ACRILIC PER MIL-P-8184 FINISH B
3. TRUE POSITION AS SHOWN IN CHART
4. REMOVE ALL SHARP EDGES

1004222

1003140	
NEXT ASSY	USED ON
APPLICATION	

UNLESS OTHERWISE SPECIFIED
DIMENSIONS ARE IN INCHES
TOLERANCES ON
FRACTIONS ± — DECIMALS ±.005
DO NOT SCALE THIS DRAWING
MATERIAL
SEE NOTE 2
HEAT TREATMENT
—
FINAL FINISH
SEE NOTE 2

INCHES
PHOTOGRAPHIC SCALE ONLY

OLE DENT	BASIC X DIM	BASIC Y DIM	HOLE DIA	⌖ TOL	QTY
1	0.333	-0.075	SEE DETAIL 'B' AND SECTION 'C-C'	.005	9
2	1.333	↕			
3	3.645	↕			
4	4.645	-0.075			
5	2.466	0.106			
6	1.648	0.197			
7	2.022	0.326			
8	2.284	0.326			
9	1.608	0.459			
1	0.000	0.000	.384 .391	.005	4
2	1.000	↕			
3	3.312	↕			
4	4.312	0.000			
1	-0.333	-0.075	SEE DETAIL 'B' AND SECTION 'B-B'	.005	4
2	0.667	↕			
3	2.973	↕			
4	3.980	-0.075			
1	0.235	0.472	SEE DETAIL 'A' AND SECTION 'A-A'	.005	4
2	1.235	↕			
3	3.547	↕			
4	4.547	0.472			

1004222 D

SYM	DESCRIPTION	DATE	APPROVAL
A	REVISED PER TDRR 02704		
B	CHANGE PER TDRR 02905	9-5-67	
C	REVISED PER TDRR 03174	9-16-63	WK
D	REVISED PER TDRR 03450	9-26-63	

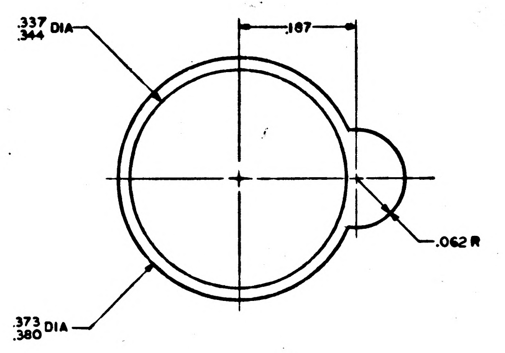

.337
.344 DIA
.187
.062 R
.373
.380 DIA

DETAIL A
SCALE 10/1

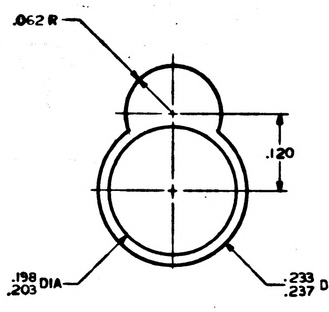

.062 R
.120
.198
.203 DIA
.233
.237 DIA.

DETAIL B
SCALE 10/1

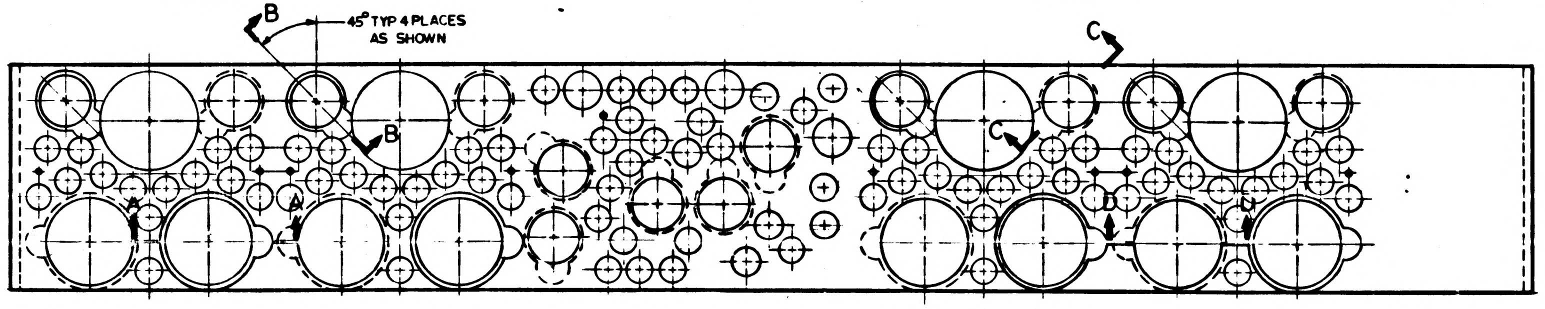

B
45° TYP 4 PLACES AS SHOWN
B
C
C
A
A
D
D

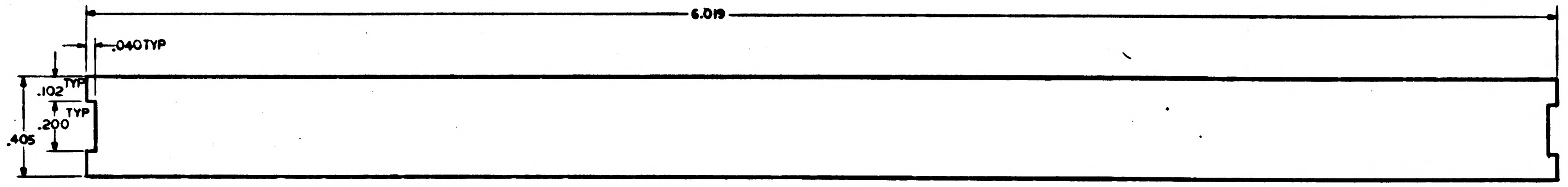

6.019
.040 TYP
.102 TYP
.200 TYP
.405

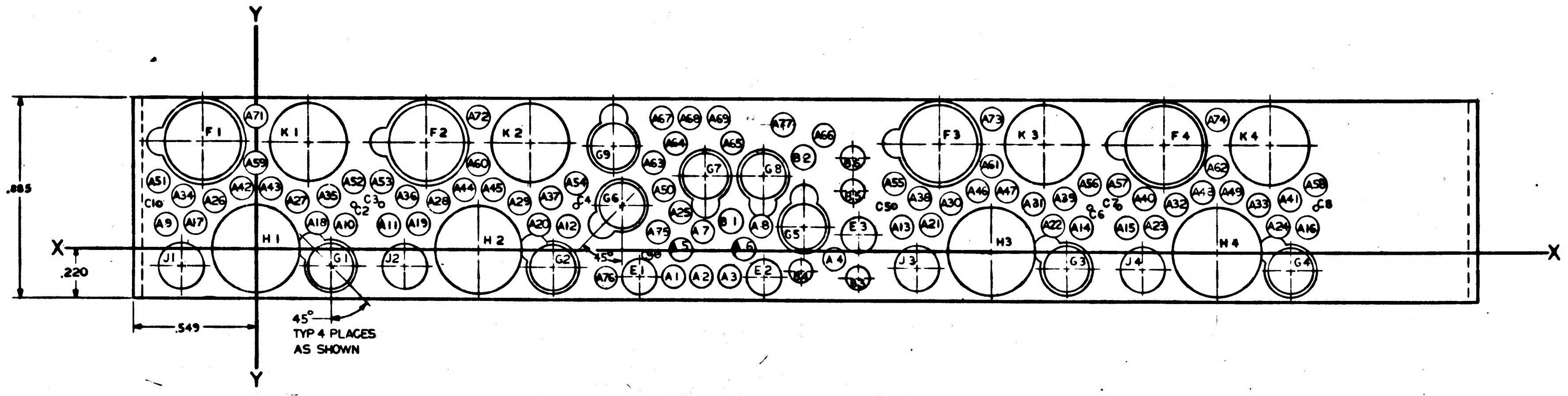

Y
X
X
Y
.885
.220
.549
45° TYP 4 PLACES AS SHOWN
F1
K1
F2
K2
F3
K3
F4
K4
H1
H2
H3
H4
G1
G2
G3
G4
G5
G6
G7
G8
G9
J1
J2
J3
J4
E1
E2
E3
B1
B2

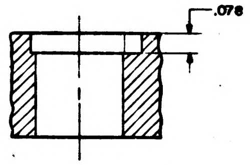

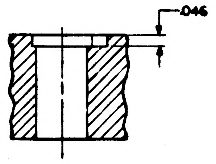

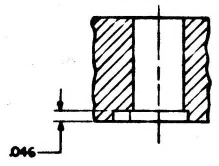

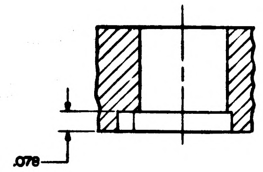

SECTION A-A
SCALE 4/1

SECTION B-B
ROTATED CCW 45°
SCALE 4/1

SECTION C-C
ROTATED CW 45°
SCALE 4/1

SECTION D-D
SCALE 4/1

MASTER

QTY REQD	PART OR IDENTIFYING NO.	NOMENCLATURE OR DESCRIPTION	FIND NO.

LIST OF MATERIALS

1003140	
NEXT ASSY	USED ON
APPLICATION	

UNLESS OTHERWISE SPECIFIED
DIMENSIONS ARE IN INCHES
TOLERANCES ON
FRACTIONS ± — DECIMALS ±.005 — ANGLES ± 1/2°
DO NOT SCALE THIS DRAWING
MATERIAL
SEE NOTE 2
HEAT TREATMENT
"
FINAL FINISH
SEE NOTE 2

MIT
INSTRUMENTATION LAB
CAMBRIDGE, MASS
DRAWN DATE 2/26/63
CHECKED
APPROVAL W Turner
APPROVAL 2/4/63
NASA APPROVAL 8/7/63
MIT APPROVAL

MANNED SPACECRAFT CENTER
HOUSTON, TEXAS

HOLDER, COMPONENT
ERASABLE SENSE
AMPLIFIER MODULE

CODE IDENT NO. — | SIZE J | NASA DRAWING NO. 1004222
SCALE 4/1 | WT | SHEET 1 OF 1

1004222 D

22 D D

INCHES
0 1 2
PHOTOGRAPHIC SCALE ONLY

HOLE IDENT	BASIC X DIM	BASIC Y DIM	HOLE DIA	⌖ TOL	QTY
A 1	1.877	-0.117	.100 .104	.005	76
A 2	2.004	-0.117			
A 3	2.132	-0.117			
A 4	2.603	-0.038			
A 5	1.913	0.002			
A 6	2.192	0.006			
A 7	2.012	0.082			
A 8	2.273	0.105			
A 9	-0.399	0.107			
A 10	0.399				
A 11	0.601				
A 12	1.399				
A 13	2.913				
A 14	3.711				
A 15	3.913				
A 16	4.711	0.107			
A 17	-0.269	0.115			
A 18	0.269				
A 19	0.731				
A 20	1.269				
A 21	3.043				
A 22	3.561				
A 23	4.043				
A 24	4.581	0.115			
A 25	1.913	0.163			
A 26	-0.182	0.210			
A 27	0.162				
A 28	0.818				
A 29	1.182				
A 30	3.130				
A 31	3.494				
A 32	4.130				
A 33	4.494	0.210			
A 34	-0.323	0.233			
A 35	0.323				
A 36	[illegible]				
A 37	1.323				
A 38	2.989				
A 39	3.635				
A 40	3.989				
A 41	4.635	0.233			
A 42	-0.064	0.264			
A 43	0.064				
A 44	0.936				
A 45	1.064				
A 46	3.248				
A 47	3.376				
A 48	4.248				
A 49	4.376	0.264			
A 50	1.835	0.267			
A 51	-0.435	0.295			
A 52	0.435				
A 53	0.565				
A 54	1.435				
A 55	2.877				
A 56	3.747				
A 57	3.877				
A 58	4.747	0.295			
A 59	0.000	0.377			
A 60	1.000				
A 61	3.312				
A 62	4.312	0.377			
A 63	1.788	0.386			
A 64	1.889	0.472			
A 65	2.146	0.472			
A 66	2.559	0.505			
A 67	1.824	0.582			
A 68	1.953				
A 69	2.083				
~~A 70~~	~~[illegible]~~	~~[illegible]~~			
A 71	0.000	0.584			
A 72	1.000				
A 73	3.312				
A 74	4.312	0.584			
A 75	1.808	0.082			
A 76	1.571	-0.117			
A 77	2.371	0.550			
B1	2.136	0.129	.110 .114	.005	6
B2	2.464	0.412			
B3	2.715	-0.117			
B4	2.445	-0.085			
B5	2.685	0.267			
B6	2.685	0.412			
C1	-0.435	0.198	.023 .027	.005	9
C2	0.435				
C3	0.565				
C4	1.435				
C5	2.877				
C6	3.747				
C7	3.877				
C8	4.747	0.198			
C9	1.808	-0.016			
E1	1.724	-0.117	.153 .157	.005	3
E2	2.287	-0.117			
E3	2.715	0.069			
F1	-0.235	0.472	SEE DETAIL "A" AND SECTION "D-D"	.005	4
F2	0.765				
F3	3.077				
F4	4.077	0.472			

HOLE IDENT	BASIC X DIM	BASIC Y DIM	HOLE DIA	⌖ TOL	QTY
G1	0.333	-0.075	SEE DETAIL "B" AND SECTION "C-C"	.005	9
G2	1.333				
G3	3.645				
G4	4.645	-0.075			
G5	2.468	0.106			
G6	1.648	0.197			
G7	2.022	0.326			
G8	2.284	0.326			
G9	1.608	0.459			
H1	0.000	0.000	.384 .391	.005	4
H2	1.000				
H3	3.312				
H4	4.312	0.000			
J1	-0.333	-0.075	SEE DETAIL "B" AND SECTION "B-B"	.005	4
J2	0.667				
J3	2.973				
J4	3.980	-0.075			
K1	0.235	0.472	SEE DETAIL "A" AND SECTION "A-A"	.005	4
K2	1.235				
K3	3.547				
K4	4.547	0.472			

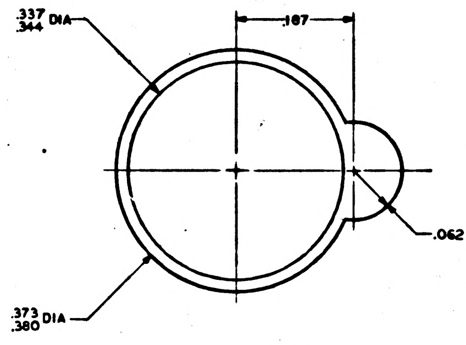

.337
.344 DIA
.187
.062 R
.373
.380 DIA

DETAIL A
SCALE 10/1

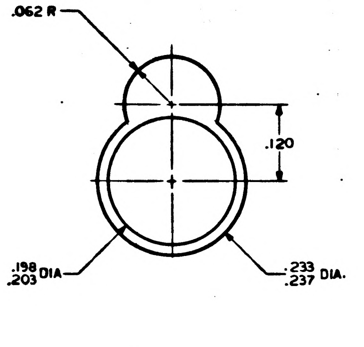

.062 R
.120
.198
.203 DIA
.233
.237 DIA.

DETAIL B
SCALE 10/1

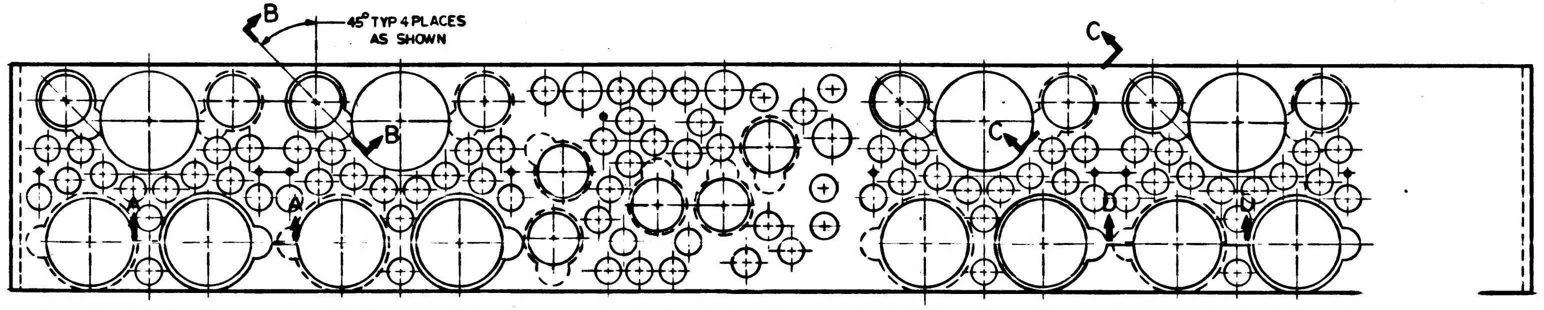

B
45° TYP 4 PLACES
AS SHOWN
B
C
C
A
A
D
D

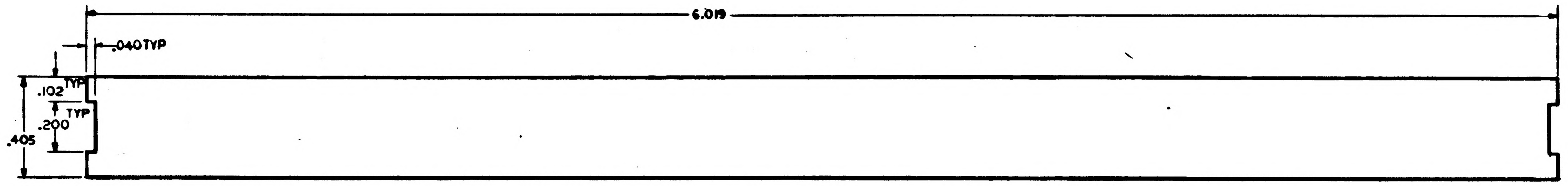

6.019
.040 TYP
.102 TYP
.200 TYP
.405

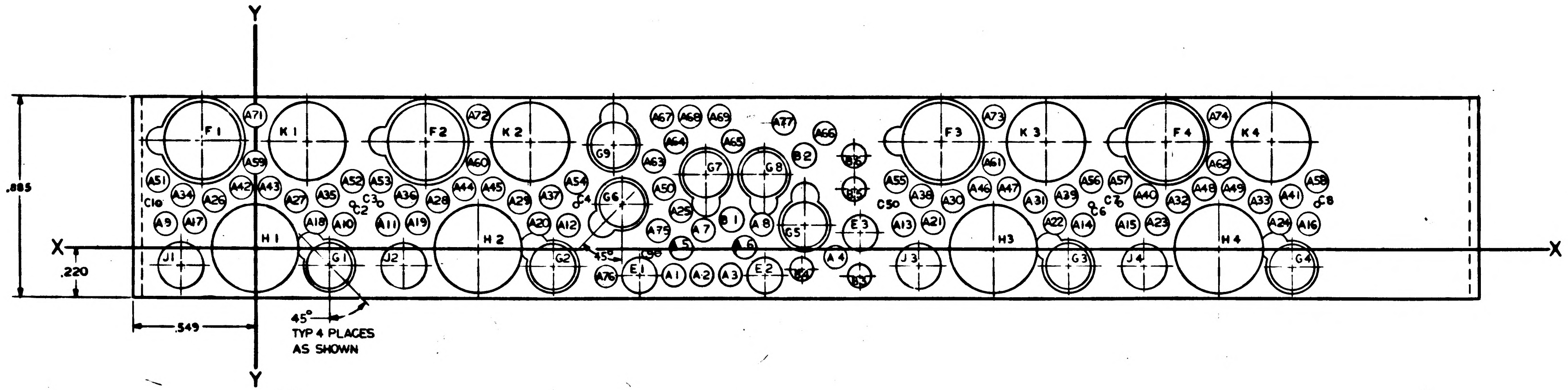

Y
X
X
Y
.885
.220
.549
45°
TYP 4 PLACES
AS SHOWN
F1
K1
F2
K2
F3
K3
F4
K4
H1
H2
H3
H4
J1
J2
J3
J4
G1
G2
G3
G4
G5
G6
G7
G8
G9
B1
B2
E1
E2
E3
C1
C2
C4
C5
C6
C8
C9
C10

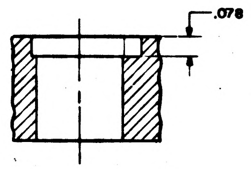

SECTION A-A
SCALE 4/1

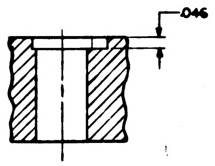

SECTION B-B
ROTATED CCW 45°
SCALE 4/1

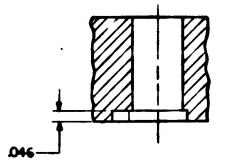

SECTION C-C
ROTATED CW 45°
SCALE 4/1

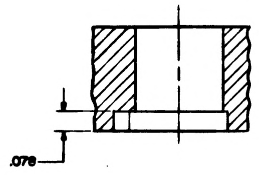

SECTION D-D
SCALE 4/1

NOTES:
1. INTERPRET DRAWING IN ACCORDANCE WITH STANDARDS PRESCRIBED BY MIL-D-70327
2. MATL: PLASTIC CLEAR ACRILIC PER MIL-P-8184 FINISH B
3. TRUE POSITION AS SHOWN IN CHART
4. REMOVE ALL SHARP EDGES

1003140	
NEXT ASSY	USED ON
APPLICATION	

UNLESS OTHERWISE SPECIFIED
DIMENSIONS ARE IN INCHES
TOLERANCES ON
FRACTIONS ± — DECIMALS ±.005 ANGLES ± ½°
DO NOT SCALE THIS DRAWING
MATERIAL
SEE NOTE 2
HEAT TREATMENT
—//—
FINAL FINISH
SEE NOTE 2

1004222 D D

1004222

HOLE IDENT	BASIC X DIM	BASIC Y DIM	HOLE DIA	⌖ TOL	QTY
G1	0.333	-0.075	SEE DETAIL B AND SECTION C-C	.005	9
G2	1.333				
G3	3.645				
G4	4.645	-0.075			
G5	2.468	0.106			
G6	1.648	0.197			
G7	2.022	0.326			
G8	2.284	0.326			
G9	1.608	0.459			
H1	0.000	0.000	384 391	.005	4
H2	1.000				
H3	3.312				
H4	4.312	0.000			
J1	-0.333	-0.075	SEE DETAIL B AND SECTION B-B	.005	4
J2	0.667				
J3	2.999				
J4	3.999	-0.075			
K1	0.235	0.472	SEE DETAIL A AND SECTION A-A	.005	4
K2	1.235				
K3	3.547				
K4	4.547	0.472			

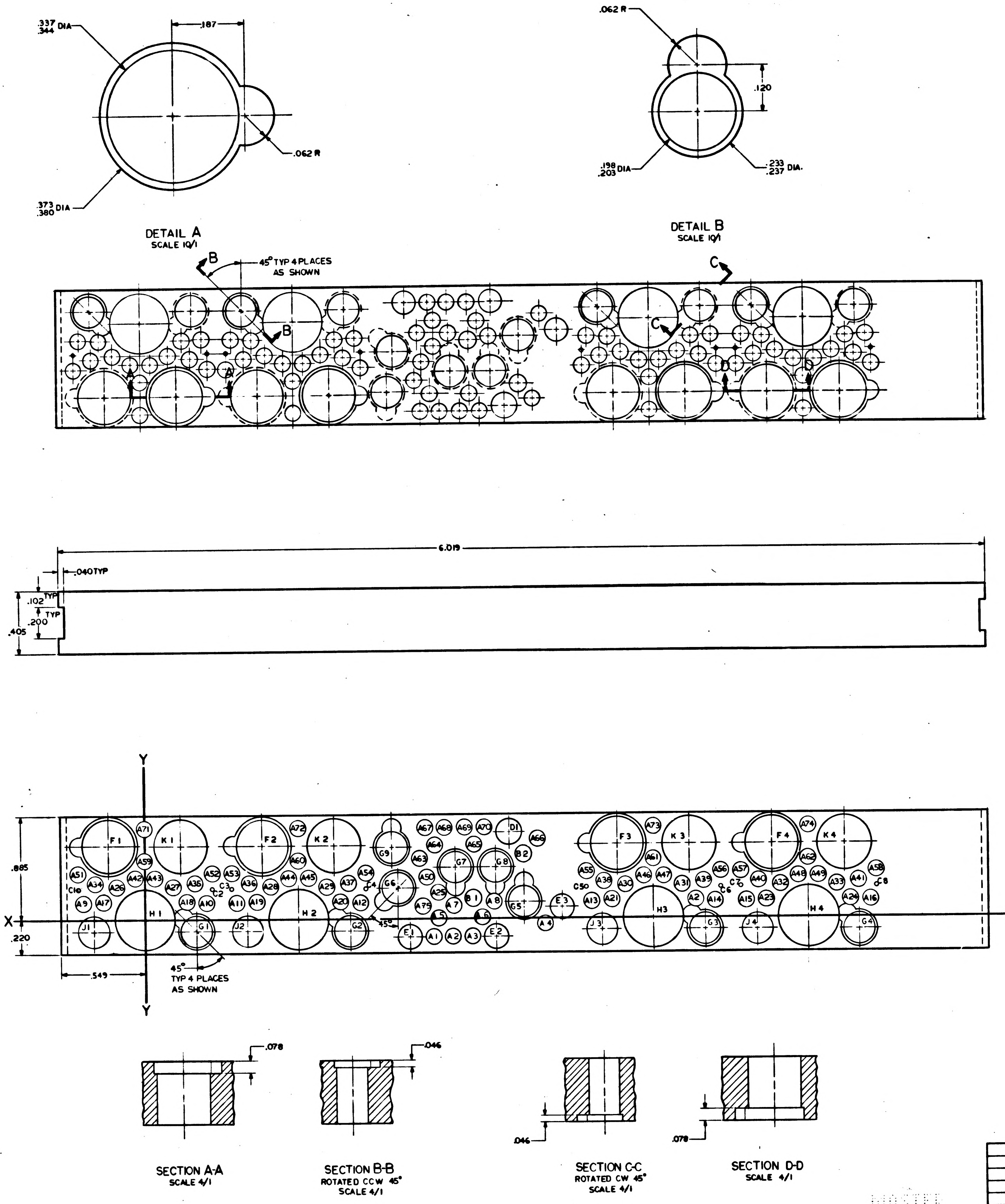

.337
.344 DIA
.187
.062 R
.373
.380 DIA
DETAIL A
SCALE 10/1
.062 R
.120
.198
.203 DIA
.233
.237 DIA
DETAIL B
SCALE 10/1
B
45° TYP 4 PLACES AS SHOWN
C
D
A
6.019
.040 TYP
.102 TYP
.200 TYP
.405
Y
X
.885
.220
.549
45° TYP 4 PLACES AS SHOWN
F1
K1
F2
K2
F3
K3
F4
K4
H1
H2
H3
H4
J1
J2
J3
J4
G1
G2
G3
G4
G5
G6
G7
G8
G9
E1
E2
E3
B1
B2
D1
.078
.046
.046
.078
SECTION A-A
SCALE 4/1
SECTION B-B
ROTATED CCW 45°
SCALE 4/1
SECTION C-C
ROTATED CW 45°
SCALE 4/1
SECTION D-D
SCALE 4/1

DARDS

FINISH B

NEXT ASSY	USED ON
APPLICATION	

UNLESS OTHERWISE SPECIFIED DIMENSIONS ARE IN INCHES
TOLERANCES ON
FRACTIONS ± 〃 DECIMALS ±.005 ANGLES ± 1/2°
DO NOT SCALE THIS DRAWING
MATERIAL SEE NOTE 2
HEAT TREATMENT 〃
FINAL FINISH SEE NOTE 2

QTY REQD	PART OR IDENTIFYING NO.	NOMENCLATURE OR DESCRIPTION	FIND NO

LIST OF MATERIALS

MIT
INSTRUMENTATION LAB
CAMBRIDGE MASS
DRAWN Tony Bell DATE 2/26/63
CHECKED
APPROVAL W E Turner GNG
APPROVAL
NASA APPROVAL 8/7/63
MIT APPROVAL George J Mulge

MANNED SPACECRAFT CENTER
HOUSTON, TEXAS

HOLDER, COMPONENT
ERASABLE SENSE
AMPLIFIER MODULE

CODE IDENT NO. | SIZE J | NASA DRAWING NO. 1004222
SCALE 4/1 | WT | SHEET 1 OF 1

1004222

1004222

PHOTOGRAPHIC SCALE ONLY
INCHES

NOTICE — WHEN GOVERNMENT DRAWINGS, SPECIFICATIONS, OR OTHER DATA ARE USED FOR ANY PURPOSE OTHER THAN IN CONNECTION WITH A DEFINITELY RELATED GOVERNMENT PROCUREMENT OPERATION, THE UNITED STATES GOVERNMENT THEREBY INCURS NO RESPONSIBILITY NOR ANY OBLIGATION WHATSOEVER, AND THE FACT THAT THE GOVERNMENT MAY HAVE FORMULATED, FURNISHED, OR IN ANY WAY SUPPLIED THE SAID DRAWINGS, SPECIFICATIONS OR OTHER DATA IS NOT TO BE REGARDED BY IMPLICATION OR OTHERWISE AS IN ANY MANNER LICENSING THE HOLDER OR ANY OTHER PERSON OR CORPORATION, OR CONVEYING ANY RIGHTS OR PERMISSION TO MANUFACTURE, USE, OR SELL ANY PATENTED INVENTION THAT MAY IN ANY WAY BE RELATED THERETO.

HOLE IDENT	BASIC X DIM	BASIC Y DIM	HOLE DIA	⌖ TOL	QTY
A 1	1.877	-0.117	.100 .104	.005	74
A 2	2.004	-0.117			
A 3	2.132	-0.117			
A 4	2.603	-0.038			
A 5	1.913	0.002			
A 6	2.192	0.006			
A 7	2.012	0.082			
A 8	2.273	0.105			
A 9	-0.399	0.107			
A 10	0.399				
A 11	0.601				
A 12	1.399				
A 13	2.913				
A 14	3.711				
A 15	3.913				
A 16	4.711	0.107			
A 17	-0.269	0.115			
A 18	0.269				
A 19	0.731				
A 20	1.269				
A 21	3.043				
A 22	3.561				
A 23	4.043				
A 24	4.581	0.115			
A 25	1.913	0.163			
A 26	-0.182	0.210			
A 27	0.162				
A 28	0.818				
A 29	1.182				
A 30	3.130				
A 31	3.494				
A 32	4.130				
A 33	4.494	0.210			
A 34	-0.323	0.233			
A 35	0.323				
A 36	0.677				
A 37	1.323				
A 38	2.999				
A 39	3.635				
A 40	3.989				
A 41	4.635	0.233			
A 42	-0.064	0.264			
A 43	0.064				
A 44	0.936				
A 45	1.064				
A 46	3.248				
A 47	3.376				
A 48	4.248				
A 49	4.376	0.264			
A 50	1.835	0.267			
A 51	-0.435	0.295			
A 52	0.435				
A 53	0.565				
A 54	1.435				
A 55	2.877				
A 56	3.747				
A 57	3.877				
A 58	4.747	0.295			
A 59	0.000	0.377			
A 60	1.000				
A 61	3.312				
A 62	4.312	0.377			
A 63	1.788	3.386			
A 64	1.889	0.472			
A 65	2.146	0.472			
A 66	2.559	0.505			
A 67	1.824	0.582			
A 68	1.953				
A 69	2.083				
A 70	2.212	0.582			
A 71	0.000	0.584			
A 72	1.000				
A 73	3.312				
A 74	4.312	0.584			
A 75	1.808	0.082			
B 1	2.136	0.129	.110 .114	.005	2
B 2	2.464	0.412			
C 1	0.435	0.198	023 027	005	8
C 2	0.435				
C 3	0.565				
C 4	1.435				
C 5	2.877				
C 6	3.747				
C 7	3.877				
C 8	4.747	0.198			
D 1	2.371	0.550	.165 .169	.005	1
E 1	-1.724	-0.117	.153 .157	005	3
E 2	2.287	-0.117			
E 3	2.715	0.069			
F 1	-0.235	0.472	SEE DETAIL "A" AND SECTION "D-D"	.005	4
F 2	0.765				
F 3	3.077				
F 4	4.077	0.472			

HOLE IDENT	BASIC X DIM	BASIC Y DIM	HOLE DIA	⌖ TOL	QTY
G 1	0.333	-0.075	SEE DETAIL "B" AND SECTION "C-C"	.005	9
G 2	1.333				
G 3	3.645				
G 4	4.645	-0.075			
G 5	2.468	0.106			
G 6	1.648	0.197			
G 7	2.022	0.326			
G 8	2.284	0.326			
G 9	1.608	0.459			
H 1	0.000	0.000	384 391	.005	4
H 2	1.000				
H 3	3.312				
H 4	4.312	0.000			
J 1	-0.333	-0.075	SEE DETAIL "B" AND SECTION "B-B"	.005	4
J 2	0.667				
J 3	2.999				
J 4	3.999	-0.075			
K 1	0.235	0.472	SEE DETAIL "A" AND SECTION "A-A"	.005	4
K 2	1.235				
K 3	3.547				
K 4	4.547	0.472			

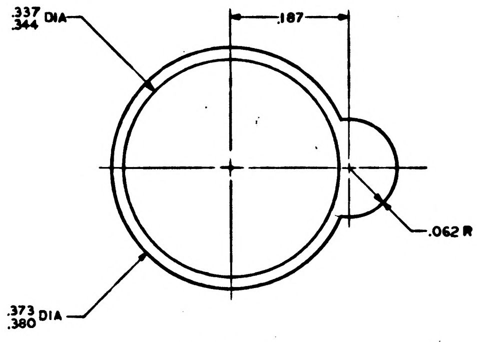

DETAIL A
SCALE 10/1

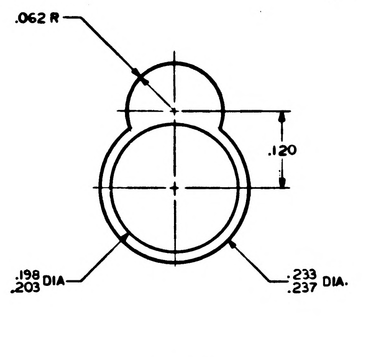

DETAIL B
SCALE 10/1

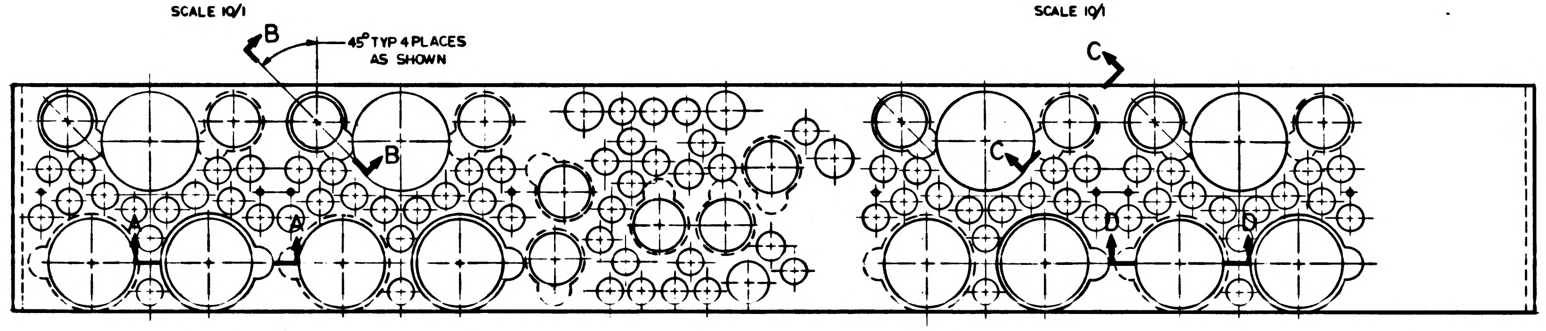

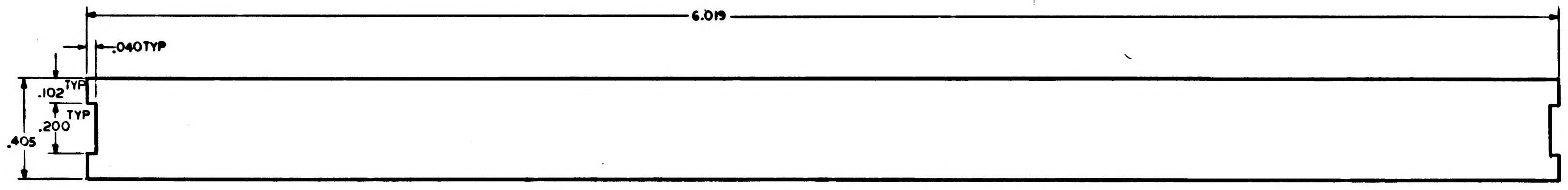

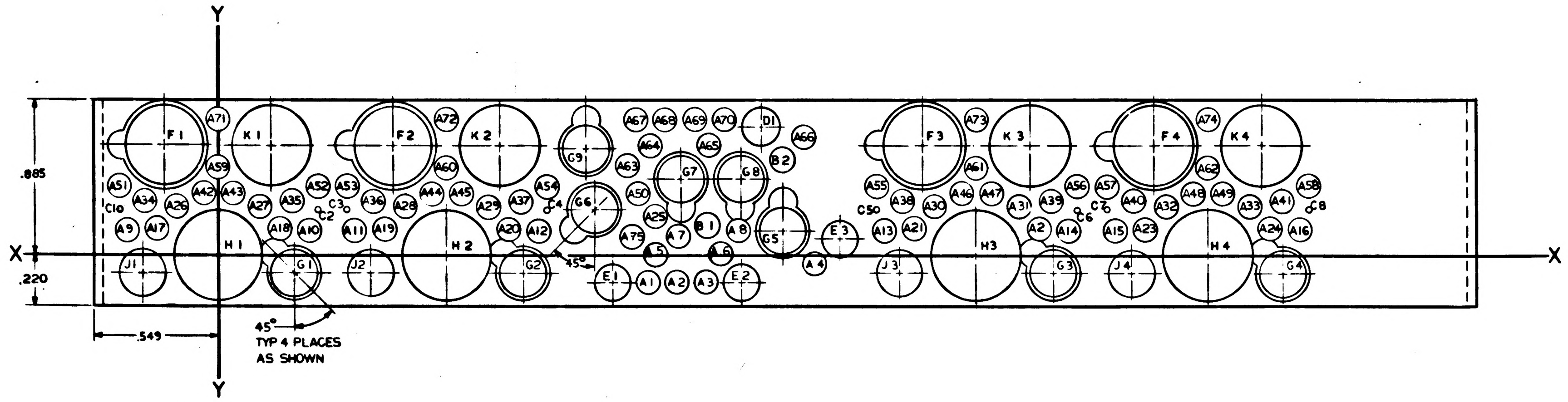

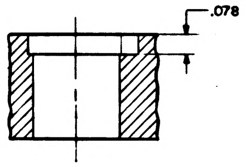

SECTION A-A
SCALE 4/1

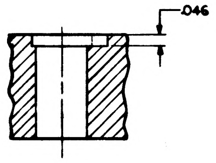

SECTION B-B
ROTATED CCW 45°
SCALE 4/1

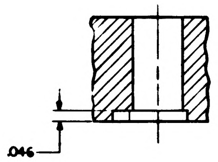

SECTION C-C
ROTATED CW 45°
SCALE 4/1

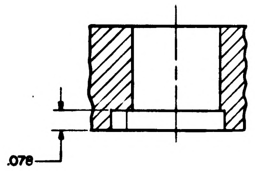

SECTION D-D
SCALE 4/1

NOTES:
1. INTERPRET DRAWING IN ACCORDANCE WITH STANDARDS PRESCRIBED BY MIL-D-70327
2. MATL: PLASTIC CLEAR ACRILIC PER MIL-P-8184 FINISH B
3. TRUE POSITION AS SHOWN IN CHART
4. REMOVE ALL SHARP EDGES

NEXT ASSY	USED ON
APPLICATION	

UNLESS OTHERWISE SPECIFIED
DIMENSIONS ARE IN INCHES
TOLERANCES ON
FRACTIONS ± — DECIMALS ±.005 ANGLES ± —
DO NOT SCALE THIS DRAWING
MATERIAL
SEE NOTE 2
HEAT TREATMENT
—//—
FINAL FINISH
SEE NOTE 2

1004222

INCHES
0 1 2
PHOTOGRAPHIC SCALE ONLY

REV	DESCRIPTION	DATE	APPROVAL
A	REVISED PER TDRR 03173	9-6-63	WR.

REVISIONS #2394

1004223 A

HOLE IDENT	BASIC X DIM.	BASIC Y DIM.	HOLE DIA	⌖ DIA	QTY
E1	2.880	.115	SEE SECT B-B & DETAIL B	.006	5
E2	2.060	.207			
E3	2.434	.336			
E4	2.696	↓			
E5	2.020	.469			
F	.423	.010	.384 .391	.006	4
F2	.423	↓			
F3	3.748				
F4	4.748	↓			
G1	2.136	-.107	.153 .157	.006	3
G2	2.699	↓			
G3	3.127	.079			
H1	2.5[illegible]	.39	.110 .114	.006	6
[illegible]	2.8[illegible]	.122			
H3	3.12[illegible]	-.107			
H4	2.855	-.075			
H5	3.095	.277			
H6	3.095	.422			
J1	2.783	.560	.165/.169	.006	1

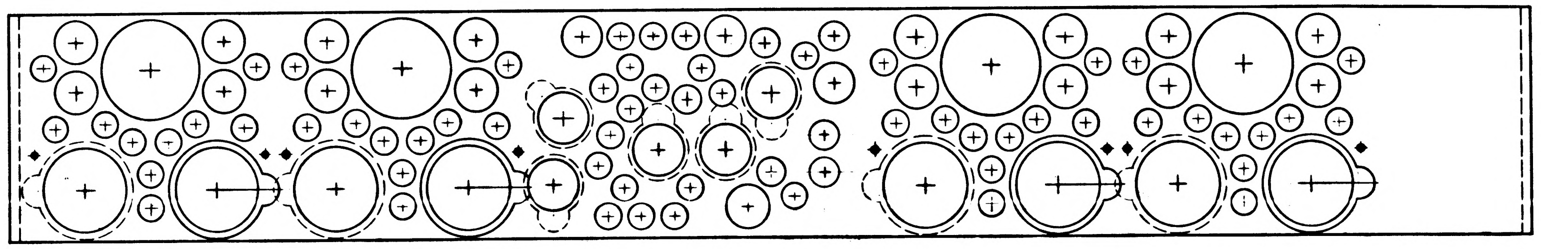

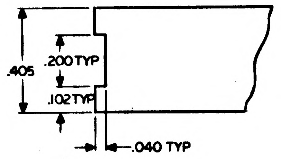

.405
.200 TYP
.102 TYP
.040 TYP

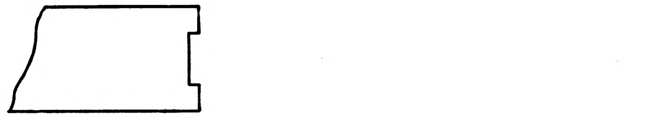

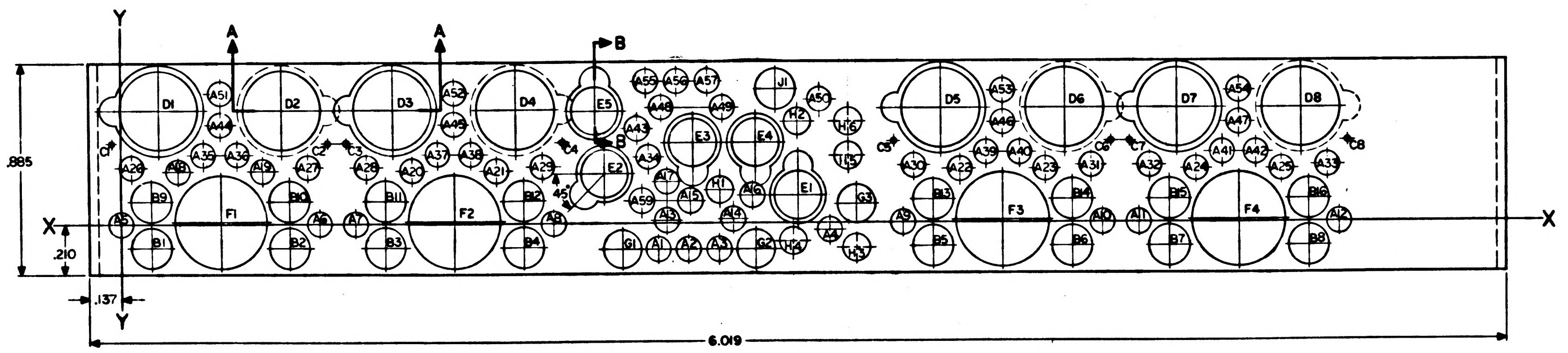

Y
A
A
B
D1
D2
D3
D4
D5
D6
D7
D8
E1
E2
E3
E4
E5
F1
F2
F3
F4
J1
X
X
.885
.210
.137
Y
6.019

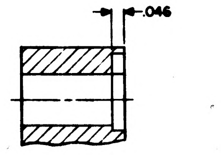

SECTION B-B
5 E HOLES

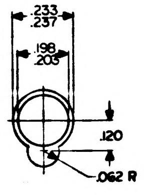

.233
.237
.198
.203
.120
.062 R

DETAIL B
5 E HOLES

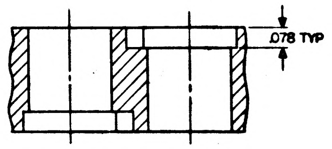

SECTION A-A
8 D HOLES

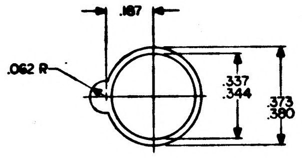

.187
.062 R
.337
.344
.373
.380

DETAIL A
8 D HOLES

MASTER

QTY REQD	PART OR IDENTIFYING NO.	NOMENCLATURE OR DESCRIPTION	FIND NO.

LIST OF MATERIALS

NEXT ASSY	USED ON

APPLICATION

UNLESS OTHERWISE SPECIFIED DIMENSIONS ARE IN INCHES
TOLERANCES ON
FRACTIONS ± — DECIMALS ±.005 ANGLES ±½°
DO NOT SCALE THIS DRAWING
MATERIAL
SEE NOTE 2
HEAT TREATMENT —
FINAL FINISH —

MIT
INSTRUMENTATION LAB
CAMBRIDGE, MASS
DRAWN C A Bute DATE 7-26-63
CHECKED
APPROVAL W B Jones 6 Aug 63
APPROVAL
NASA APPROVAL
MIT APPROVAL George J Nilson

MANNED SPACECRAFT CENTER
HOUSTON, TEXAS

COMPONENT HOLDER
ROPE SENSE AMPLIFIER MODULE

CODE IDENT NO. | SIZE J | NASA DRAWING NO. 1004223
SCALE 4/1 | WT | SHEET 1 OF 1

INCHES
PHOTOGRAPHIC SCALE ONLY

F-2

NOTICE — WHEN GOVERNMENT DRAWINGS, SPECIFICATIONS, OR OTHER DATA ARE USED FOR ANY PURPOSE OTHER THAN IN CONNECTION WITH A DEFINITELY RELATED GOVERNMENT PROCUREMENT OPERATION, THE UNITED STATES GOVERNMENT THEREBY INCURS NO RESPONSIBILITY NOR ANY OBLIGATION WHATSOEVER; AND THE FACT THAT THE GOVERNMENT MAY HAVE FORMULATED, FURNISHED, OR IN ANY WAY SUPPLIED THE SAID DRAWINGS, SPECIFICATIONS, OR OTHER DATA IS NOT TO BE REGARDED BY IMPLICATION OR OTHERWISE AS IN ANY MANNER LICENSING THE HOLDER OR ANY OTHER PERSON OR CORPORATION, OR CONVEYING ANY RIGHTS OR PERMISSION TO MANUFACTURE, USE, OR SELL ANY PATENTED INVENTION THAT MAY IN ANY WAY BE RELATED THERETO.

HOLE IDENT	BASIC X DIM.	BASIC Y DIM.	HOLE DIA	⌖ DIA	QTY
A1	2.289	−.107	.100 .104	.006	58
A2	2.416				
A3	2.544	↓			
A4	3.015	−.028			
A5	0.000	0.000			
A6	.846				
A7	1.000				
A8	1.846				
A9	3.325				
A10	4.171				
A11	4.325				
A12	5.171	↓			
A13	2.325	.012			
A14	2.604	.016			
A15	2.424	.092			
A16	2.685	.115			
A17	2.325	.173			
A18	.243	.223			
A19	.603				
A20	1.243				
A21	1.603				
A22	3.568				
A23	3.928				
A24	4.568				
A25	4.928	↓			
A26	.048	.239			
A27	.798				
A28	1.048				
A29	1.798				
A30	3.373				
A31	4.123				
A32	4.373				
A33	5.123	↓			
A34	2.247	.277			
A35	.352	.292			
A36	.494				
A37	1.352				
A38	1.494				
A39	3.677				
A40	3.819				
A41	4.677				
A42	4.819	↓			
A43	2.200	.396			
A44	.423	.418			
A45	1.423				
A46	3.748				
A47	4.748	↓			
A48	2.301	.482			
A49	2.558	↓			
A50	2.971	.515			
A51	.423	.547			
A52	1.423				
A53	3.748				
A54	4.748	↓			
A55	2.236	.592			
A56	2.365				
A57	2.495				
~~A58~~	~~[illegible]~~	↓			
A59	2.220	.092			
B1	.129	−.098	.168 .172	.006	16
B2	.717				
B3	1.129				
B4	1.717				
B5	3.454				
B6	4.042				
B7	4.454				
B8	5.042	↓			
B9	.129	.098			
B10	.717				
B11	1.129				
B12	1.717				
B13	3.454				
B14	4.042				
B15	4.454				
B16	5.042	↓			
C1	−.037	.340	.023 .027	.006	8
C2	.883				
C3	.963				
C4	1.883				
C5	3.288				
C6	4.208				
C7	4.288				
C8	5.208	↓			
D1	.161	.479	SEE SECT A-A & DETAIL A	.006	8
D2	.685				
D3	1.161				
D4	1.685				
D5	3.486				
D6	4.010				
D7	4.486				
D8	5.010	↓			

HOLE IDENT	BASIC X DIM.	BASIC Y DIM.	HOLE DIA	⌖ DIA	QTY
E1	2.880	.115	SEE SECT B-B & DETAIL B	.006	5
E2	2.060	.207			
E3	2.434	.336			
E4	2.696	↓			
E5	2.020	.469			
F1	.423	.010	.384 .391	.006	4
F2	1.423				
F3	3.748				
F4	4.748	↓			
G1	2.136	−.107	.153 .157	.006	3
G2	2.699	↓			
G3	3.127	.079			
H1	2.548	.139	.110 .114	.006	6
H2	2.876	.422			
H3	3.127	−.107			
H4	2.855	−.075			
H5	3.095	.277			
H6	3.095	.422			
J1	2.783	.560	.165/.169	.006	1

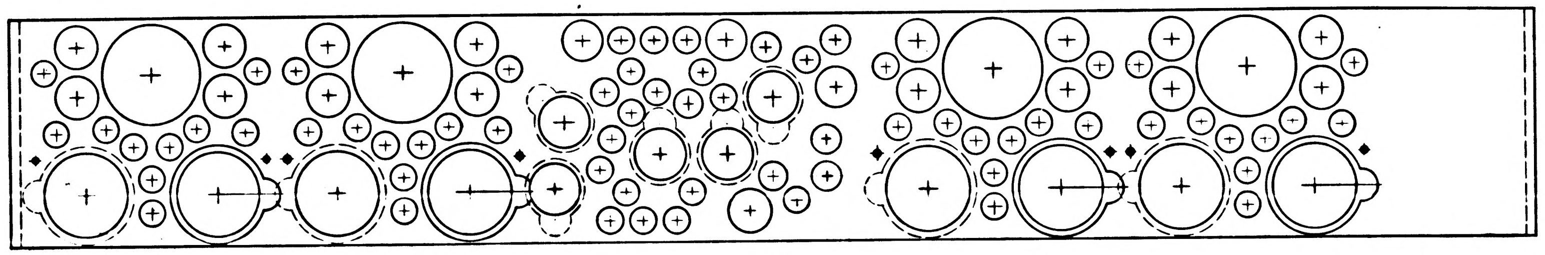

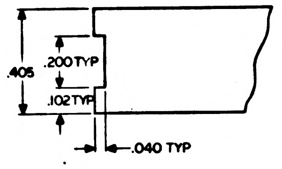

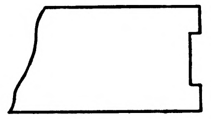

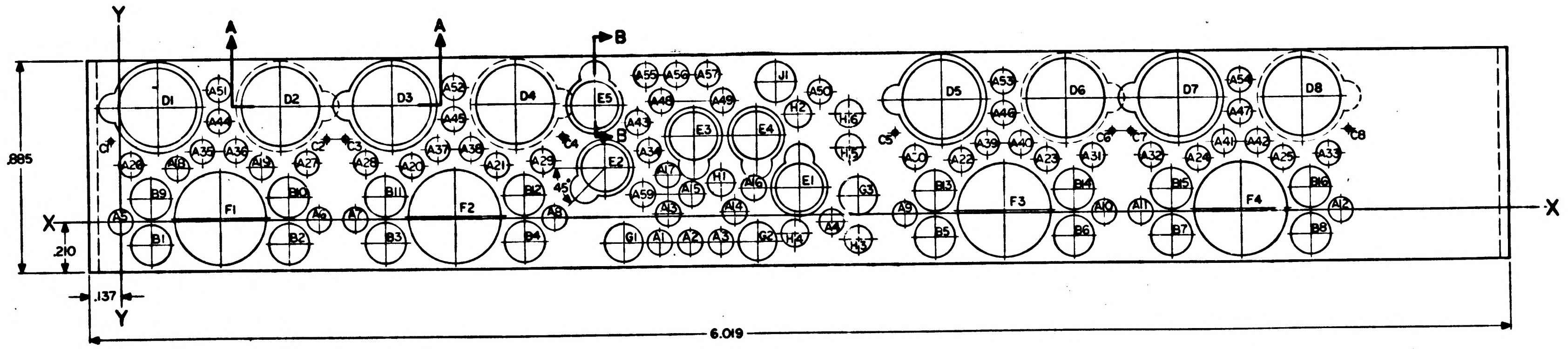

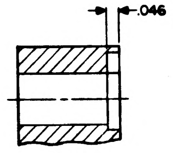

SECTION B-B
5 E HOLES

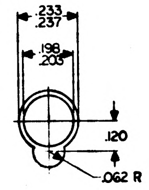

DETAIL B
5 E HOLES

NOTES
1. INTERPRET DRAWING IN ACCORDANCE WITH STANDARDS PRESCRIBED BY MIL-D-70327
2. MATL: PLASTIC, CLEAR ACRYLIC PER MIL-P-8184, FINISH B
3. TRUE POSITION AS SHOWN IN CHART
4. BREAK ALL SHARP EDGES

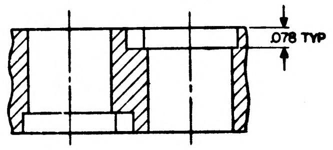

SECTION A-A
8 D HOLES

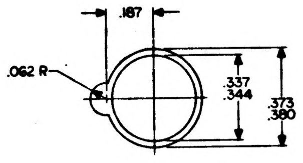

DETAIL A
8 D HOLES

MASTER

NEXT ASSY	USED ON
APPLICATION	

UNLESS OTHERWISE SPECIFIED
DIMENSIONS ARE IN INCHES
TOLERANCES ON
FRACTIONS ± — DECIMALS ±.005
DO NOT SCALE THIS DRAWING
MATERIAL
SEE NOTE 2
HEAT TREATMENT
—
FINAL FINISH
—

1004223

INCHES
PHOTOGRAPHIC SCALE ONLY

1004223 B

REVISIONS #2394			
SYM	DESCRIPTION	DATE	APPROVAL
A	REVISED PER TDRR #3173	9-16-63	WR
B	REVISED PER TDRR #3447	9-26-63	

HOLE IDENT	BASIC X DIM.	BASIC Y DIM.	HOLE DIA	⌖ DIA	QTY
E1	2.880	.115	SEE SECT B-B & DETAIL B	.006	5
E2	2.060	.207			
E3	2.434	.336			
E4	2.696	↓			
E5	2.020	.469			
F1	.423	.010	.384 .391	.006	4
F2	1.423				
F3	3.748				
F4	4.748	↓			
G1	2.136	-.107	.153 .157	.006	3
G2	2.699	↓			
G3	3.127	.079			
H1	2.548	.139	.110 .114	.006	6
H2	2.876	.422			
H3	3.127	-.107			
H4	2.855	-.075			
H5	3.095	.277			
H6	3.095	.422			

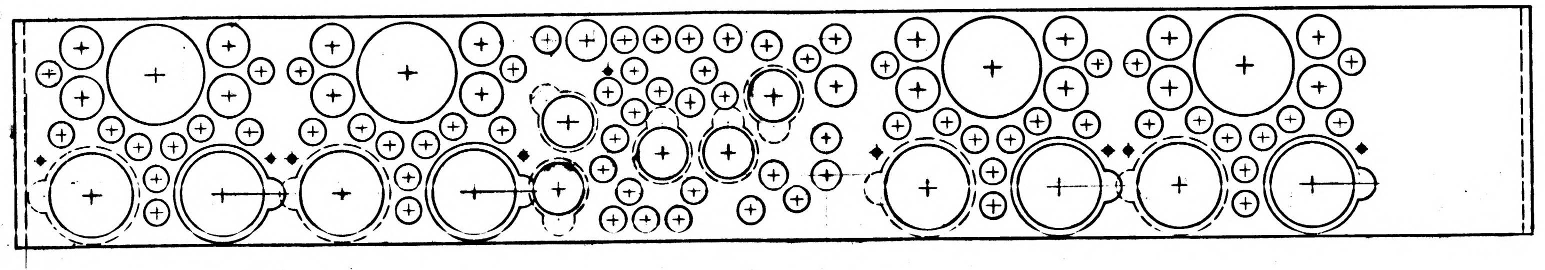

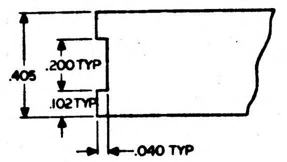
.405
.200 TYP
.102 TYP
.040 TYP

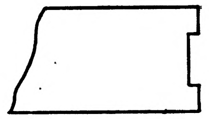

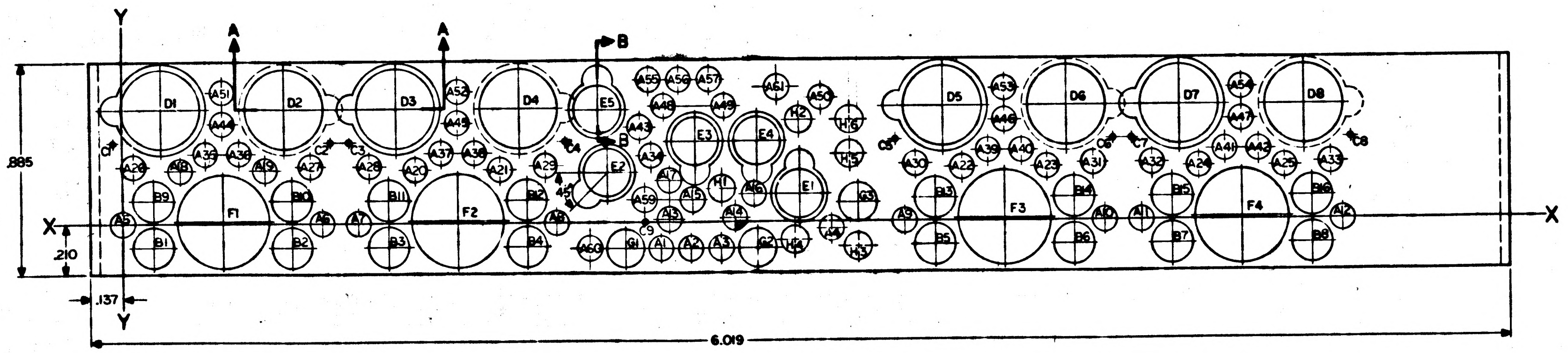
Y
A
A
B
B
D1
D2
D3
D4
E5
D5
D6
D7
D8
A51
A44
A52
A45
A55
A56
A57
A61
A50
A48
A49
A43
H2
H6
H5
E3
E4
E2
E1
A53
A46
A54
A47
C1
C2
C3
C4
C5
C6
C7
C8
C9
A26
A18
A35
A36
A19
A27
A28
A20
A37
A38
A21
A29
A34
A17
A30
A22
A39
A40
A23
A31
A32
A24
A41
A42
A25
A33
B9
B10
B11
B12
B13
B14
B15
B16
F1
F2
F3
F4
A59
A15
H1
A16
G3
A13
A14
45°
A5
A6
A7
A8
A9
A10
A11
A12
X
X
B1
B2
B3
B4
B5
B6
B7
B8
A60
G1
A1
A2
A3
G2
H4
A4
H3
.885
.210
.137
Y
6.019

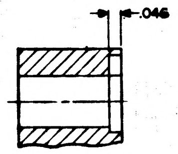

SECTION B-B
5 E HOLES

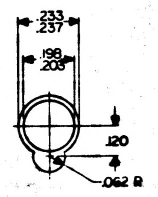
.233
.237
.198
.203
.120
.062 R

DETAIL B
5 E HOLES

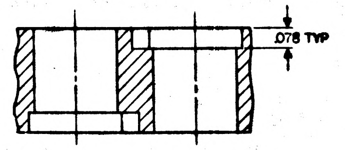

SECTION A-A
8 D HOLES

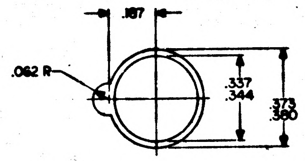
.187
.062 R
.337
.344
.373
.380

DETAIL A
8 D HOLES

MASTER

QTY REQD	PART OR IDENTIFYING NO.	NOMENCLATURE OR DESCRIPTION	FIND NO.
LIST OF MATERIALS			

UNLESS OTHERWISE SPECIFIED DIMENSIONS ARE IN INCHES
TOLERANCES ON
FRACTIONS ± — DECIMALS ±.005 ANGLES ± 1/2°
DO NOT SCALE THIS DRAWING
MATERIAL SEE NOTE 2
HEAT TREATMENT —
FINAL FINISH —

NEXT ASSY | USED ON
APPLICATION

MIT INSTRUMENTATION LAB
CAMBRIDGE, MASS.
DRAWN DATE 7-30-63
CHECKED
APPROVAL 6 Aug 63
APPROVAL
NASA APPROVAL
MIT APPROVAL

MANNED SPACECRAFT CENTER
HOUSTON, TEXAS

COMPONENT HOLDER
ROPE SENSE AMPLIFIER MODULE

CODE IDENT NO. | SIZE J | NASA DRAWING NO. 1004223
SCALE 4/1 | WT | SHEET 1 OF 1

1004223 B

INCHES
PHOTOGRAPHIC SCALE ONLY

F-2

NOTICE — WHEN GOVERNMENT DRAWINGS, SPECIFICATIONS, OR OTHER DATA ARE USED FOR ANY PURPOSE OTHER THAN IN CONNECTION WITH A DEFINITELY RELATED GOVERNMENT PROCUREMENT OPERATION, THE UNITED STATES GOVERNMENT THEREBY INCURS NO RESPONSIBILITY NOR ANY OBLIGATION WHATSOEVER; AND THE FACT THAT THE GOVERNMENT MAY HAVE FORMULATED, FURNISHED, OR IN ANY WAY SUPPLIED THE SAID DRAWINGS, SPECIFICATIONS, OR OTHER DATA IS NOT TO BE REGARDED BY IMPLICATION OR OTHERWISE AS IN ANY MANNER LICENSING THE HOLDER OR ANY OTHER PERSON OR CORPORATION, OR CONVEYING ANY RIGHTS OR PERMISSION TO MANUFACTURE, USE, OR SELL ANY PATENTED INVENTION THAT MAY IN ANY WAY BE RELATED THERETO.

HOLE IDENT	BASIC X DIM.	BASIC Y DIM.	HOLE DIA	⊕ DIA	QTY
A1	2.289	−.107	.100 .104	.006	58
A2	2.416				
A3	2.544				
A4	3.015	−.028			
A5	0.000	0.000			
A6	.846				
A7	1.000				
A8	1.846				
A9	3.325				
A10	4.171				
A11	4.325				
A12	5.171				
A13	2.325	.012			
A14	2.604	.016			
A15	2.424	.092			
A16	2.685	.115			
A17	2.325	.173			
A18	.243	.223			
A19	.603				
A20	1.243				
A21	1.603				
A22	3.568				
A23	3.928				
A24	4.568				
A25	4.928				
A26	.048	.239			
A27	.798				
A28	1.048				
A29	1.798				
A30	3.373				
A31	4.123				
A32	4.373				
A33	5.123				
A34	[illegible]	.277			
A35	.352	.292			
A36	.494				
A37	1.352				
A38	1.494				
A39	3.677				
A40	3.819				
A41	4.677				
A42	4.819				
A43	2.200	.396			
A44	.423	.418			
A45	1.423				
A46	3.748				
A47	4.748				
A48	2.301	.482			
A49	2.558				
A50	2.971	.515			
A51	.423	.547			
A52	1.423				
A53	3.748				
A54	4.748				
A55	2.236	.592			
A56	2.365				
A57	2.495				
~~A58~~	~~2.624~~				
A59	2.220	.092			
A60	1.983	−.107			
A61	2.783	.560			
B1	.129	−.098	.168 .172	.006	16
B2	.717				
B3	1.129				
B4	1.717				
B5	3.454				
B6	4.042				
B7	4.454				
B8	5.042				
B9	.129	.098			
B10	.717				
B11	1.129				
B12	1.717				
B13	3.454				
B14	4.042				
B15	4.454				
B16	5.042				
C1	−.037	.340	.023 .027	.006	8
C2	.883				
C3	.963				
C4	1.883				
C5	3.288				
C6	4.208				
C7	4.288				
C8	5.208				
C9	2.220	0.000			
D1	.161	.479	SEE SECT A-A & DETAIL A	.006	8
D2	.685				
D3	1.161				
D4	1.685				
D5	3.486				
D6	4.010				
D7	4.486				
D8	5.010				

HOLE IDENT	BASIC X DIM.	BASIC Y DIM.	HOLE DIA	⊕ DIA	QTY
E1	2.880	.115	SEE SECT B-B & DETAIL B	.006	5
E2	2.060	.207			
E3	2.434	.336			
E4	2.696				
E5	2.020	.469			
F1	.423	.010	.384 .391	.006	4
F2	1.423				
F3	3.748				
F4	4.748				
G1	2.136	−.107	.153 .157	.006	3
G2	2.699				
G3	3.127	.079			
H1	2.548	.139	.110 .114	.006	6
H2	2.876	.422			
H3	3. 27	−.107			
H4	2.855	−.075			
H5	3.095	.277			
H6	3.095	.422			

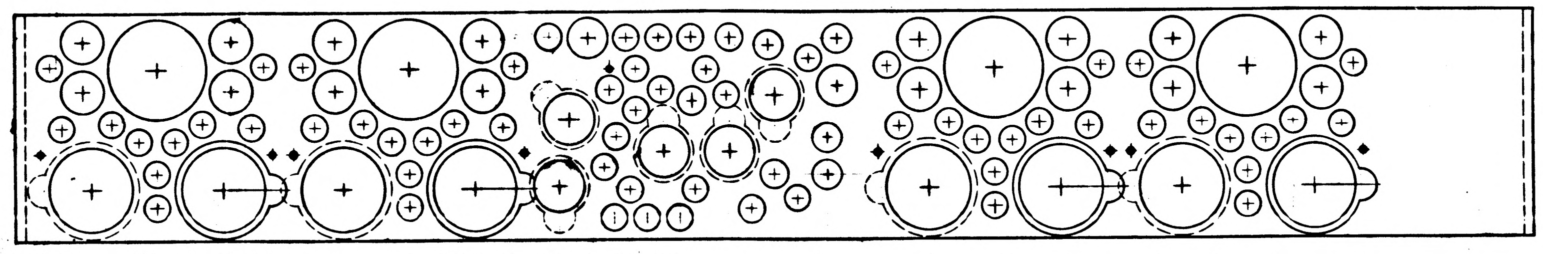

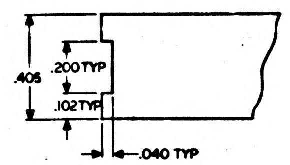

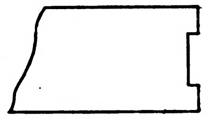

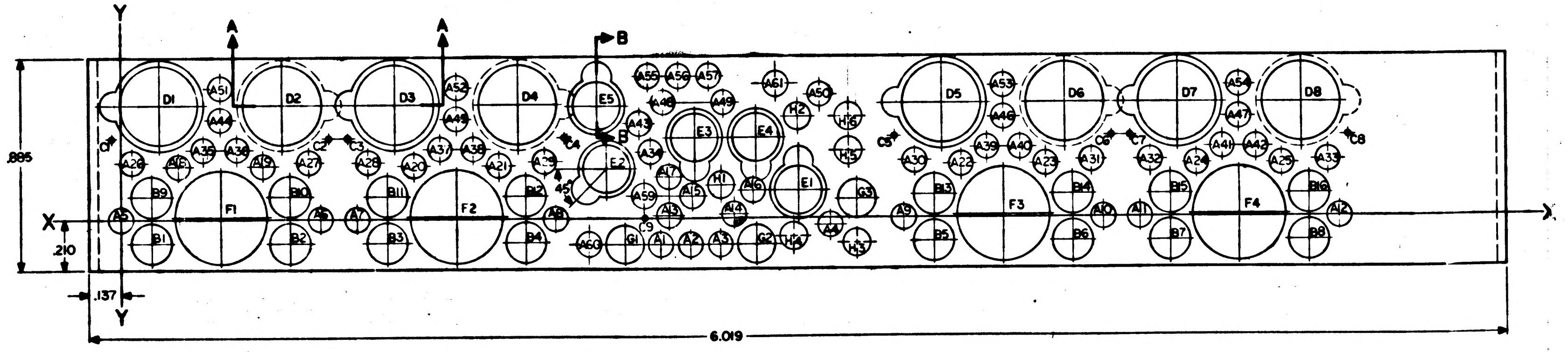

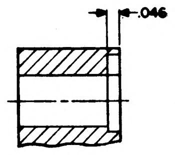

SECTION B-B
5 E HOLES

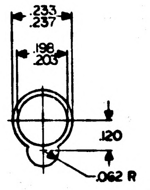

DETAIL B
5 E HOLES

NOTES
1. INTERPRET DRAWING IN ACCORDANCE WITH STANDARDS PRESCRIBED BY MIL-D-70327
2. MATL: PLASTIC, CLEAR ACRYLIC PER MIL-P-8184, FINISH B
3. TRUE POSITION AS SHOWN IN CHART
4. BREAK ALL SHARP EDGES

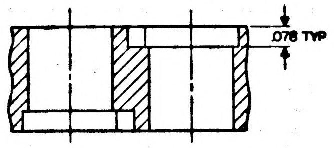

SECTION A-A
8 D HOLES

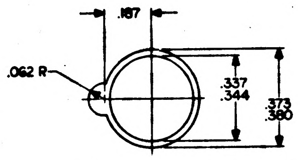

DETAIL A
8 D HOLES

MASTER

NEXT ASSY	USED ON	UNLESS OTHERWISE SPECIFIED DIMENSIONS ARE IN INCHES TOLERANCES ON FRACTIONS ± — DECIMALS ±.005 ANGLES ± $\frac{1}{2}$°
APPLICATION		DO NOT SCALE THIS DRAWING
		MATERIAL SEE NOTE 2
		HEAT TREATMENT —
		FINAL FINISH —

1004223 | B

INCHES
PHOTOGRAPHIC SCALE ONLY

QTY
5
4
3
6

REVISIONS #2394			
SYM	DESCRIPTION	DATE	APPROVAL
A	REVISED PER TDRR #3173	9-16-63	WR
B	REVISED PER TDRR #3447	9-26-63	
C	REVISED PER TDRR 04356	5/6/63	WR

1004223 C

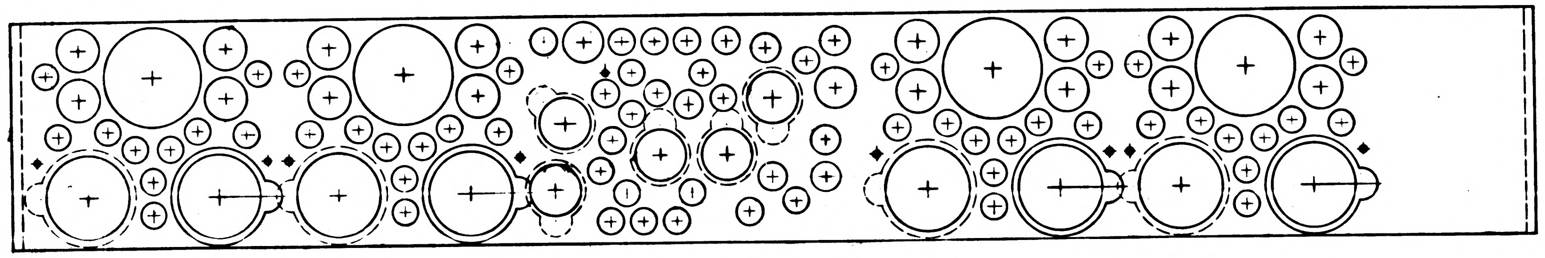

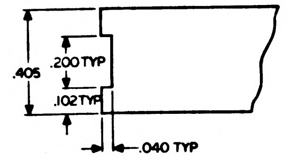
.405
.200 TYP
.102 TYP
.040 TYP

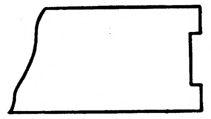

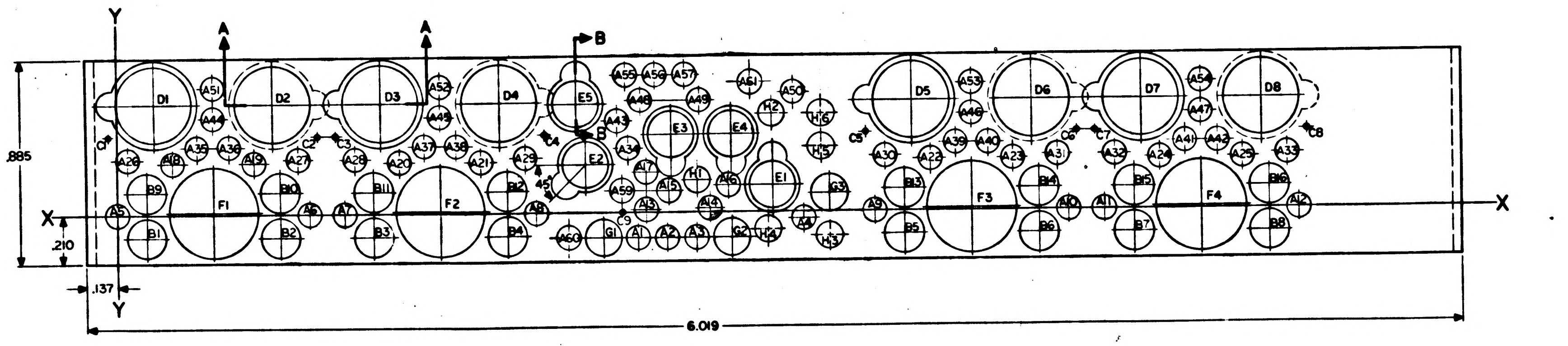
Y
A
A
B
B
X
X
.885
.210
.137
6.019
D1
D2
D3
D4
D5
D6
D7
D8
E1
E2
E3
E4
E5
F1
F2
F3
F4

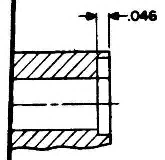

SECTION B-B
5 E HOLES

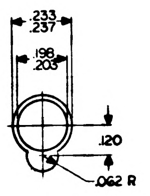
.233
.237
.198
.203
.120
.062 R

DETAIL B
5 E HOLES

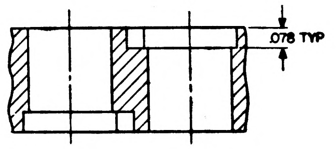

SECTION A-A
8 D HOLES

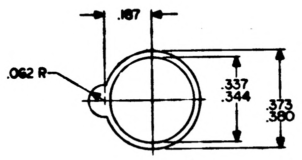
.187
.062 R
.337
.344
.373
.380

DETAIL A
8 D HOLES

MASTER

QTY REQD	PART OR IDENTIFYING NO.	NOMENCLATURE OR DESCRIPTION	FIND NO.

LIST OF MATERIALS

NEXT ASSY	USED ON
APPLICATION	

UNLESS OTHERWISE SPECIFIED DIMENSIONS ARE IN INCHES
TOLERANCES ON
FRACTIONS ± — DECIMALS ±.005 ANGLES ± 1/2°
DO NOT SCALE THIS DRAWING
MATERIAL SEE NOTE 2
HEAT TREATMENT —
FINAL FINISH —

MIT INSTRUMENTATION LAB CAMBRIDGE, MASS
DRAWN DATE 7-26-63
CHECKED
APPROVAL 6 AUG 63
APPROVAL
NASA APPROVAL
MIT APPROVAL George J Nelson

MANNED SPACECRAFT CENTER
HOUSTON, TEXAS

COMPONENT HOLDER
ROPE SENSE AMPLIFIER MODULE

CODE IDENT NO. — SIZE J NASA DRAWING NO. 1004223
SCALE 4/1 WT SHEET 1 OF 1

1004223 C

INCHES 0 1 2
PHOTOGRAPHIC SCALE ONLY

NOTICE — WHEN GOVERNMENT DRAWINGS, SPECIFICATIONS, OR OTHER DATA ARE USED FOR ANY PURPOSE OTHER THAN IN CONNECTION WITH A DEFINITELY RELATED GOVERNMENT PROCUREMENT OPERATION, THE UNITED STATES GOVERNMENT THEREBY INCURS NO RESPONSIBILITY NOR ANY OBLIGATION WHATSOEVER; AND THE FACT THAT THE GOVERNMENT MAY HAVE FORMULATED, FURNISHED, OR IN ANY WAY SUPPLIED THE SAID DRAWINGS, SPECIFICATIONS, OR OTHER DATA IS NOT TO BE REGARDED BY IMPLICATION OR OTHERWISE AS IN ANY MANNER LICENSING THE HOLDER OR ANY OTHER PERSON OR CORPORATION, OR CONVEYING ANY RIGHTS OR PERMISSION TO MANUFACTURE, USE, OR SELL ANY PATENTED INVENTION THAT MAY IN ANY WAY BE RELATED THERETO.

HOLE IDENT	BASIC X DIM.	BASIC Y DIM.	HOLE DIA	⌖ DIA	QTY
A1	2.289	-.107	.100 .104	.006	58
A2	2.416				
A3	2.544	↓			
A4	3.015	-.028			
A5	0.000	0.000			
A6	.846				
A7	1.000				
A8	1.846				
A9	3.325				
A10	4.171				
A11	4.325				
A12	5.171	↓			
A13	2.325	.012			
A14	2.604	.016			
A15	2.424	.092			
A16	2.685	.115			
A17	2.325	.173			
A18	.243	.223			
A19	.603				
A20	1.243				
A21	1.603				
A22	3.568				
A23	3.928				
A24	4.568				
A25	4.928	↓			
A26	.048	.239			
A27	.798				
A28	1.048				
A29	1.798				
A30	3.373				
A31	4.123				
A32	4.373				
A33	5.123	↓			
A34	2.247	.277			
A35	.352	.292			
A36	.494				
A37	1.352				
A38	1.494				
A39	3.677				
A40	3.819				
A41	4.677				
A42	4.819	↓			
A43	2.200	.396			
A44	.423	.418			
A45	1.423				
A46	3.748				
A47	4.748	↓			
A48	2.301	.482			
A49	2.558	↓			
A50	2.971	.515			
A51	.423	.547			
A52	1.423				
A53	3.748				
A54	4.748	↓			
A55	2.236	.592			
A56	2.365				
A57	2.495				
~~A58~~	~~2.624~~	~~↓~~			
A59	2.220	.092			
A60	1.983	-.107			
A61	2.783	.560			
B1	.129	-.098	.168 .172	.006	16
B2	.717				
B3	1.129				
B4	1.717				
B5	3.454				
B6	4.042				
B7	4.454				
B8	5.042	↓			
B9	.129	.098			
B10	.717				
B11	1.129				
B12	1.717				
B13	3.454				
B14	4.042				
B15	4.454				
B16	5.042	↓			
C1	-.037	.340	.023 .027	.006	8
C2	.883				
C3	.963				
C4	1.883				
C5	3.288				
C6	4.208				
C7	4.288				
C8	5.208	↓			
C9	2.220	0.000			
D1	.161	.479	SEE SECT A-A & DETAIL A	.006	8
D2	.685				
D3	1.161				
D4	1.685				
D5	3.486				
D6	4.010				
D7	4.486				
D8	5.010	↓			

HOLE IDENT	BASIC X DIM.	BASIC Y DIM.	HOLE DIA	⌖ DIA	QTY
E1	2.880	.115	SEE SECT B-B & DETAIL B	.006	5
E2	2.060	.207			
E3	2.434	.336			
E4	2.696	↓			
E5	2.020	.469			
F1	.423	.010	.384 .391	.006	4
F2	1.423				
F3	3.748				
F4	4.748	↓			
G1	2.136	-.107	.153 .157	.006	3
G2	2.699	↓			
G3	3.127	.079			
H1	2.548	.139	.110 .114	.006	6
H2	2.876	.422			
H3	3.127	-.107			
H4	2.855	-.075			
H5	3.095	.277			
H6	3.095	.422			

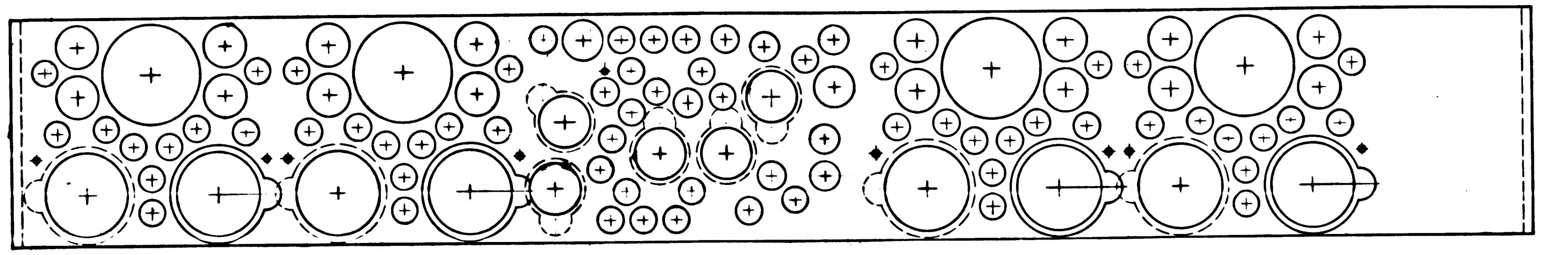

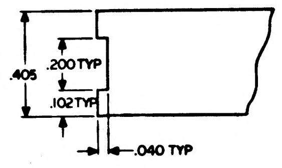

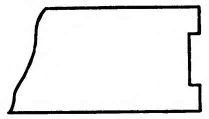

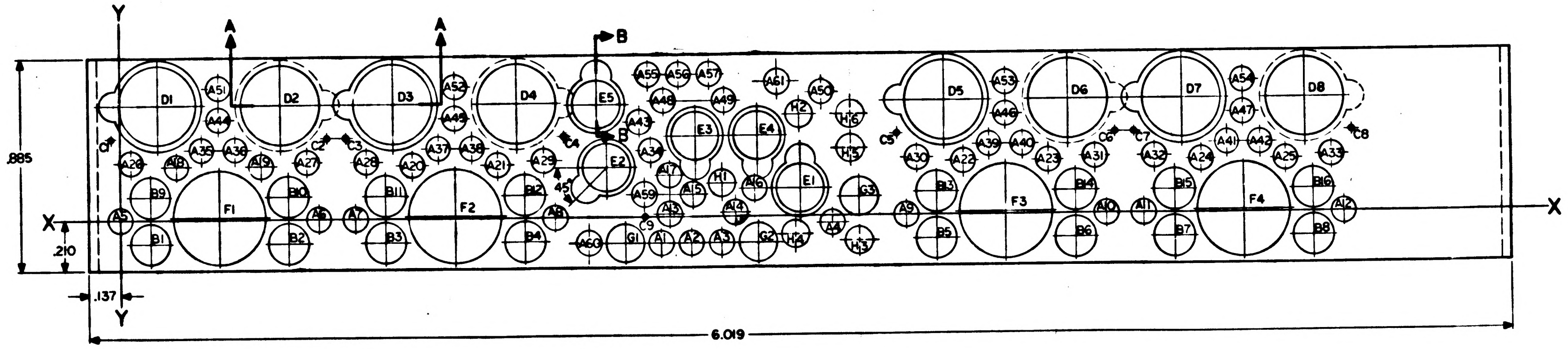

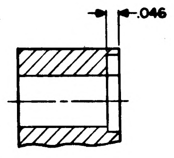

SECTION B-B
5 E HOLES

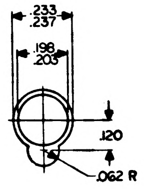

DETAIL B
5 E HOLES

NOTES
1. INTERPRET DRAWING IN ACCORDANCE WITH STANDARDS PRESCRIBED BY MIL-D-70327
2. MATL: PLASTIC, CLEAR ACRYLIC PER MIL-P-8184, FINISH B ALT MIL-P-5425B FINISH B
3. TRUE POSITION AS SHOWN IN CHART
4. BREAK ALL SHARP EDGES

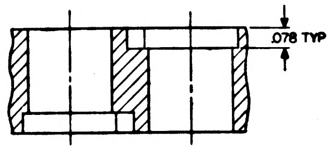

SECTION A-A
8 D HOLES

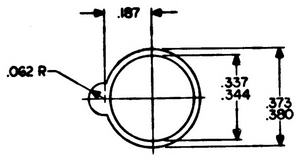

DETAIL A
8 D HOLES

UNLESS OTHERWISE SPECIFIED
DIMENSIONS ARE IN INCHES
TOLERANCES ON
FRACTIONS ± —
DECIMALS ±.005
ANGLES ± 1/2°
DO NOT SCALE THIS DRAWING
MATERIAL
SEE NOTE 2
HEAT TREATMENT
—
FINAL FINISH
—

NEXT ASSY	USED ON
APPLICATION	

QTY REQD

1004223 C

INCHES
0 1 2
PHOTOGRAPHIC SCALE ONLY

1004223	SYM	REVISIONS 02394 DESCRIPTION	DATE	APPROVAL

HOLE IDENT	BASIC X DIM.	BASIC Y DIM.	HOLE DIA	⊕ DIA	QTY
E1	2.880	.115	SEE SECT B-B & DETAIL B	.006	5
E2	2.060	.207			
E3	2.434	.336			
E4	2.696	↓			
E5	2.020	.469			
F	.423	.010	.384 .391	.006	4
F2	1.423	↓			
F3	3.748				
F4	4.748	↓			
G1	2.136	−.107	.153 .157	.006	3
G2	2.699	↓			
G3	3.27	.079			
H1	2.548	.139	.110 .114	.006	2
H2	2.876	.422			
J1	2.783	.560	.165/.169	.006	1

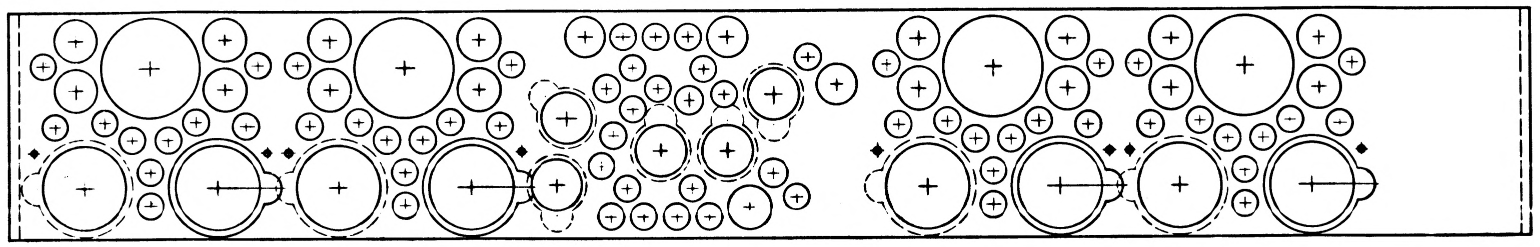

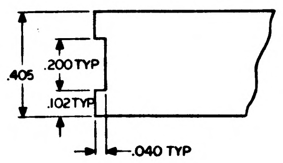
.405
.200 TYP
.102 TYP
.040 TYP

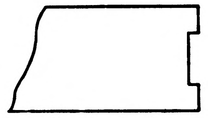

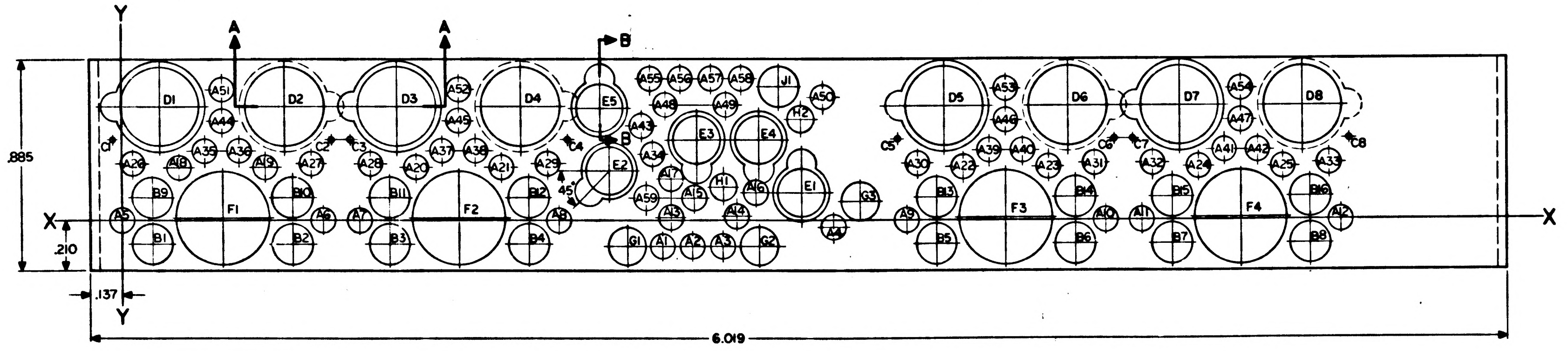
Y
A
A
B
B
X
X
Y
.885
.210
.137
6.019
D1
D2
D3
D4
D5
D6
D7
D8
E1
E2
E3
E4
E5
F1
F2
F3
F4
G1
G2
G3
H1
H2
J1
45°

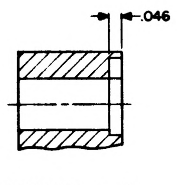

SECTION E 3
5 E HOLES

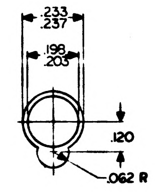
.233
.237
.198
.203
.120
.062 R

DETAIL B
5 E HOLES

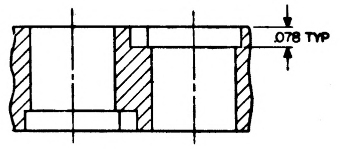

SECTION A-A
8 D HOLES

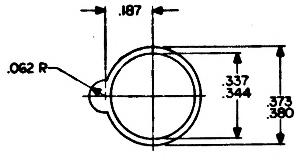
.187
.062 R
.337
.344
.373
.380

DETAIL A
8 D HOLES

MASTER

QTY REQD	PART OR IDENTIFYING NO.	NOMENCLATURE OR DESCRIPTION	FIND NO

LIST OF MATERIALS

NEXT ASSY	USED ON
APPLICATION	

UNLESS OTHERWISE SPECIFIED
DIMENSIONS ARE IN INCHES
TOLERANCES ON
FRACTIONS ± — DECIMALS ±.005 ANGLES ± 1/2°
DO NOT SCALE THIS DRAWING
MATERIAL SEE NOTE 2
HEAT TREATMENT —
FINAL FINISH —

MIT INSTRUMENTATION LAB
CAMBRIDGE, MASS
DRAWN C.A. Baxter DATE 7-26-63
CHECKED
APPROVAL 6 Aug 63
APPROVAL
NASA APPROVAL
MIT APPROVAL George J. Nielson

MANNED SPACECRAFT CENTER
HOUSTON, TEXAS

COMPONENT HOLDER
ROPE SENSE AMPLIFIER MODULE

CODE IDENT NO. | SIZE J | NASA DRAWING NO. 1004223
SCALE 4/1 | WT | SHEET 1 OF 1

1004223

INCHES
0 1 2
PHOTOGRAPHIC SCALE ONLY

NOTICE — WHEN GOVERNMENT DRAWINGS, SPECIFICATIONS, OR OTHER DATA ARE USED FOR ANY PURPOSE OTHER THAN IN CONNECTION WITH A DEFINITELY RELATED GOVERNMENT PROCUREMENT OPERATION, THE UNITED STATES GOVERNMENT THEREBY INCURS NO RESPONSIBILITY NOR ANY OBLIGATION WHATSOEVER; AND THE FACT THAT THE GOVERNMENT MAY HAVE FORMULATED, FURNISHED, OR IN ANY WAY SUPPLIED THE SAID DRAWINGS, SPECIFICATIONS, OR OTHER DATA IS NOT TO BE REGARDED BY IMPLICATION OR OTHERWISE AS IN ANY MANNER LICENSING THE HOLDER OR ANY OTHER PERSON OR CORPORATION, OR CONVEYING ANY RIGHTS OR PERMISSION TO MANUFACTURE, USE, OR SELL ANY PATENTED INVENTION THAT MAY IN ANY WAY BE RELATED THERETO.

HOLE IDENT	BASIC X DIM.	BASIC Y DIM.	HOLE DIA	⌖ DIA	QTY
A1	2.289	-.107	.100 .104	.006	58
A2	2.416				
A3	2.544	↓			
A4	3.015	-.028			
A5	0.000	0.000			
A6	.846				
A7	1.000				
A8	1.846				
A9	3.325				
A10	4.171				
A11	4.325				
A12	5.171	↓			
A13	2.325	.012			
A14	2.604	.016			
A15	2.424	.092			
A16	2.685	.115			
A17	2.325	.173			
A18	.243	.223			
A19	.603				
A20	1.243				
A21	1.603				
A22	3.568				
A23	3.928				
A24	4.568				
A25	4.928	↓			
A26	.048	.239			
A27	.798				
A28	1.049				
A29	1.798				
A30	3.373				
A31	4.123				
A32	4.373				
A33	5.123	↓			
A34	2.247	.277			
A35	.352	.292			
A36	.494				
A37	1.352				
A38	1.494				
A39	3.677				
A40	3.819				
A41	4.677				
A42	4.819	↓			
A43	2.200	.396			
A44	.423	.418			
A45	1.423				
A46	3.748				
A47	4.748	↓			
A48	2.301	.482			
A49	2.558	↓			
A50	2.971	.515			
A51	.423	.547			
A52	1.423				
A53	3.748				
A54	4.748	↓			
A55	2.236	.592			
A56	2.365				
A57	2.495				
A58	2.624	↓			
A59	2.220	.092			
B1	.129	-.098	.168 .172	.006	16
B2	.717				
B3	1.129				
B4	1.717				
B5	3.454				
B6	4.042				
B7	4.454				
B8	5.042	↓			
B9	.129	.098			
B10	.717				
B11	1.129				
B12	1.717				
B13	3.454				
B14	4.042				
B15	4.454				
B16	5.042	↓			
C1	-.037	.340	.023 .027	.006	8
C2	.883				
C3	.963				
C4	1.883				
C5	3.288				
C6	4.208				
C7	4.288				
C8	5.208	↓			
D1	.161	.479	SEE SECT A-A & DETAIL A	.006	8
D2	.685				
D3	1.161				
D4	1.685				
D5	3.486				
D6	4.010				
D7	4.486				
D8	5.010	↓			

HOLE IDENT	BASIC X DIM.	BASIC Y DIM.	HOLE DIA	⌖ DIA	QTY
E1	2.880	.115	SEE SECT B-B & DETAIL B	.006	5
E2	2.060	.207			
E3	2.434	.336			
E4	2.696	↓			
E5	2.020	.469			
F1	.423	.010	.384 .391	.006	4
F2	1.423				
F3	3.748				
F4	4.748	↓			
G1	2.136	-.107	.153 .157	.006	3
G2	2.699	↓			
G3	3.127	.079			
H1	2.548	.139	.110 .114	.006	2
H2	2.876	.422			
J1	2.783	.560	.165/.169	.006	1

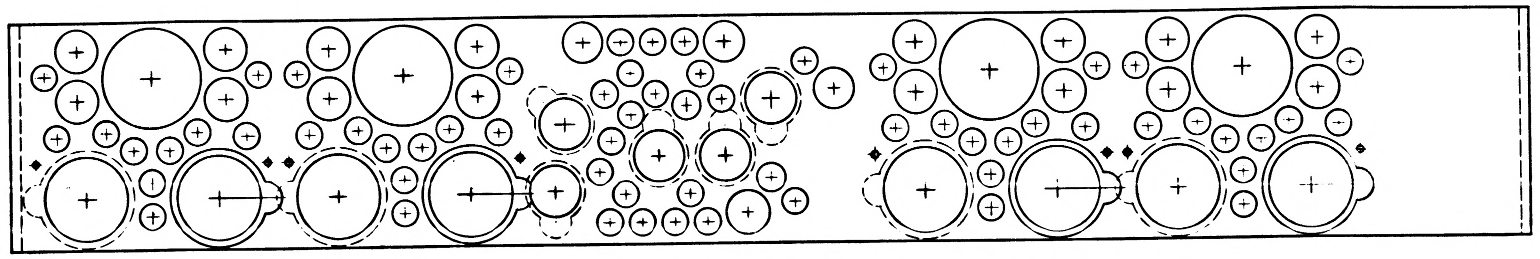

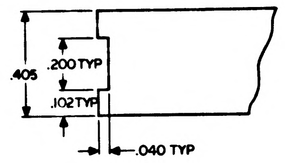

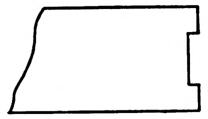

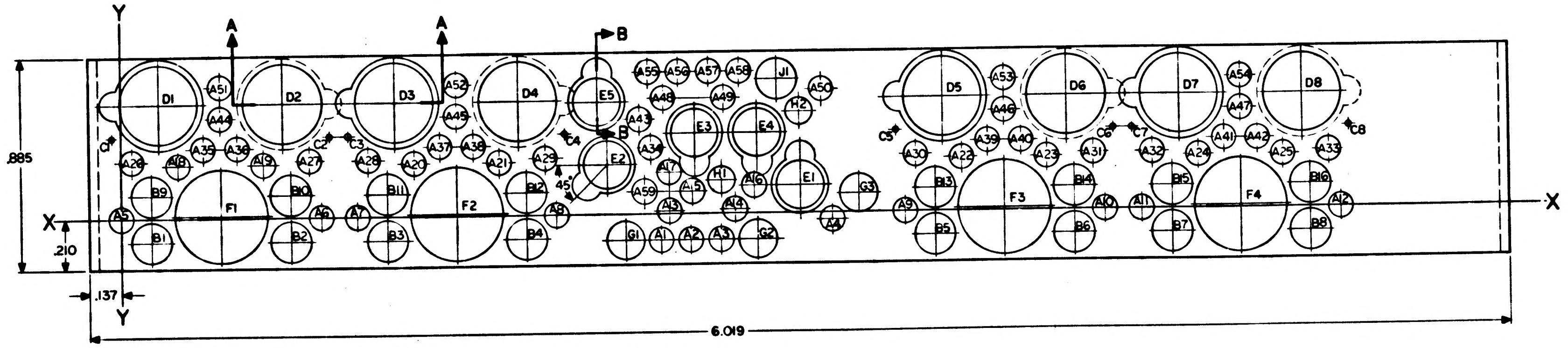

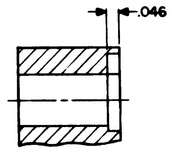

SECTION B-B
5 E HOLES

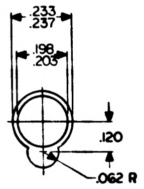

DETAIL B
5 E HOLES

NOTES
1. INTERPRET DRAWING IN ACCORDANCE WITH STANDARDS PRESCRIBED BY MIL-D-70327
2. MATL: PLASTIC, CLEAR ACRYLIC PER MIL-P-8184, FINISH B
3. TRUE POSITION AS SHOWN IN CHART
4. BREAK ALL SHARP EDGES

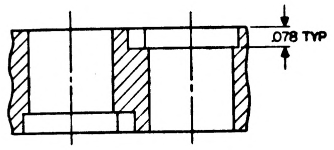

SECTION A-A
8 D HOLES

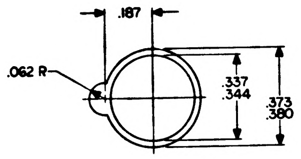

DETAIL A
8 D HOLES

MASTER

NEXT ASSY	USED ON
APPLICATION	

UNLESS OTHERWISE SPECIFIED
DIMENSIONS ARE IN INCHES
TOLERANCES ON
FRACTIONS DECIMALS
± — ±.005
DO NOT SCALE THIS DRAWING
MATERIAL
SEE NOTE 2
HEAT TREATMENT
—
FINAL FINISH
—

1004223

INCHES
0 1 2
PHOTOGRAPHIC SCALE ONLY

NOTICE — WHEN GOVERNMENT DRAWINGS, SPECIFICATIONS, OR OTHER DATA ARE USED FOR ANY PURPOSE OTHER THAN IN CONNECTION WITH A DEFINITELY RELATED GOVERNMENT PROCUREMENT OPERATION, THE UNITED STATES GOVERNMENT THEREBY INCURS NO RESPONSIBILITY NOR ANY OBLIGATION WHATSOEVER, AND THE FACT THAT THE GOVERNMENT MAY HAVE FORMULATED, FURNISHED, OR IN ANY WAY SUPPLIED THE SAID DRAWINGS, SPECIFICATIONS OR OTHER DATA IS NOT TO BE REGARDED BY IMPLICATION OR OTHERWISE AS IN ANY MANNER LICENSING THE HOLDER OR ANY OTHER PERSON OR CORPORATION, OR CONVEYING ANY RIGHTS OR PERMISSION TO MANUFACTURE, USE, OR SELL ANY PATENTED INVENTION THAT MAY IN ANY WAY BE RELATED THERETO

REVISIONS 03139

SYM	DESCRIPTION	DATE	APPROVAL
A	REVISED PER TDRR 03447	9-26-63	

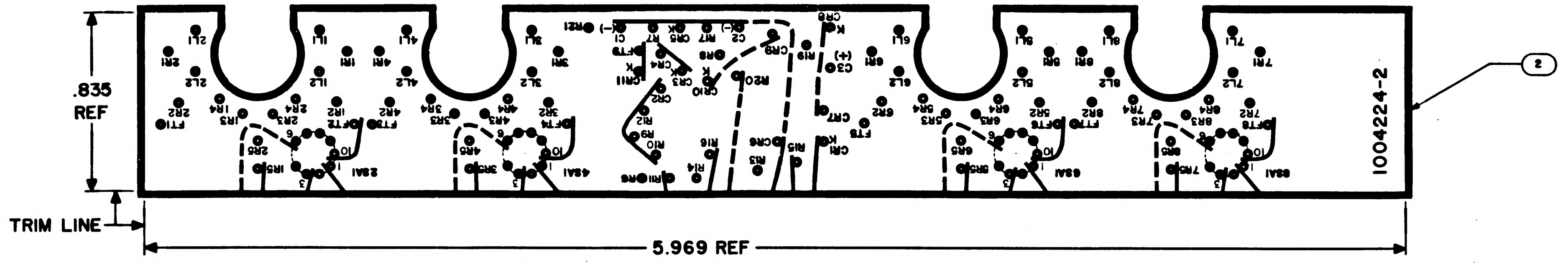
.835 REF
TRIM LINE
5.969 REF
1004224-2
2

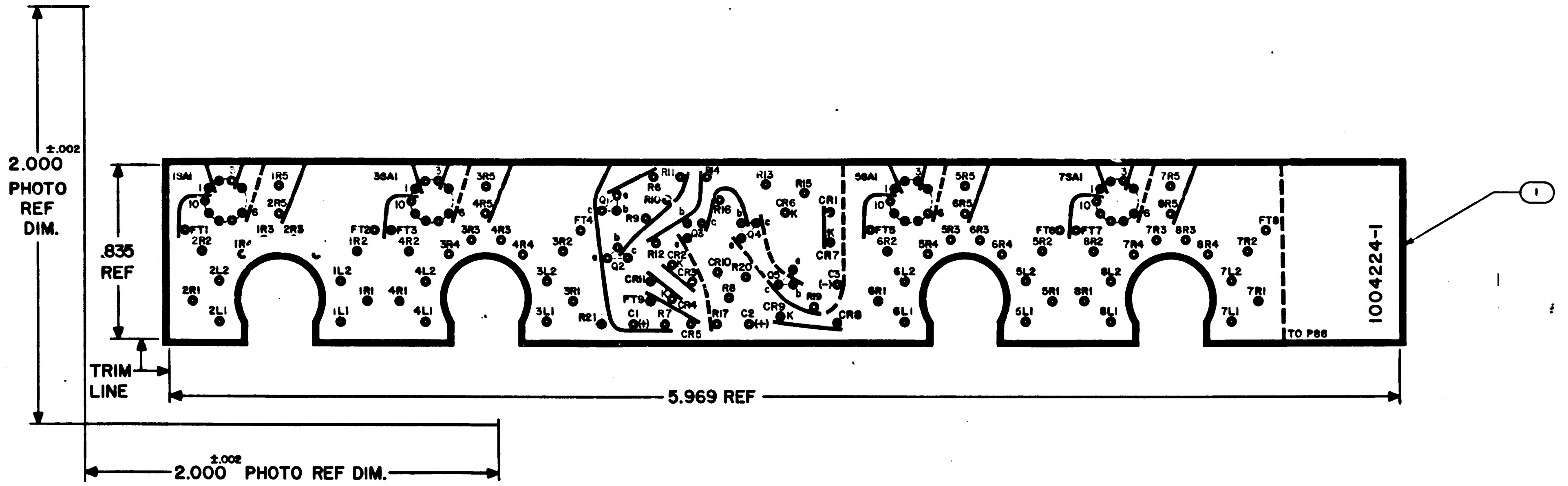
2.000 ±.002 PHOTO REF DIM.
.835 REF
TRIM LINE
5.969 REF
2.000 ±.002 PHOTO REF DIM.
1SA1
1R5
2R5
FT1
2R2
1R3
2R3
1R4
2L2
2R1
2L1
3SA1
3R5
4R5
FT2
FT3
1R2
4R2
3R3
4R3
3R4
4R4
3R2
1L2
4L2
1R1
4R1
1L1
4L1
3L2
3R1
3L1
FT4
Q1
Q2
Q3
Q4
Q5
R6
R7
R8
R9
R10
R11
R12
R13
R14
R15
R16
R17
R19
R20
R21
CR1
CR2
CR3
CR4
CR5
CR6
CR7
CR8
CR9
CR10
CR11
FT9
C1 (+)
C2 (+)
C3 (−)
5SA1
5R5
6R5
FT5
6R2
5R4
5R3
6R3
6R4
6L2
6R1
6L1
FT6
FT7
5R2
8R2
5L2
5R1
8R1
5L1
8L2
8L1
7SA1
7R5
8R5
7R3
8R3
7R4
8R4
7R2
7L2
7R1
7L1
FT8
TO P86
1004224-1
1

NOTES
1. INTERPRET DRAWING IN ACCORDANCE WITH STANDARDS PRESCRIBED BY MIL-D-70327
2. ORIGINAL OF THIS DRAWING OR REPRODUCTION MADE BY PROCESS OR METHOD SHALL INSURE DIMENSIONAL STABILITY. DIMENSIONAL STABILITY SHALL NOT EXCEED .001 INCH PER INCH
3. MATERIAL: FILM .006/.008 THICK PER L-F-340, TYPE IB, CLASS 2, STYLE IA
4. MAKE MASTER PATTERN POSITIVE FILMS TO DIMENSIONS SHOWN
5. CUT WITHIN .010 OF TRIM LINE
6. ● .030/.035 DIA PUNCH ALL HOLES

QTY REQD	PART OR IDENTIFYING NO.	NOMENCLATURE OR DESCRIPTION	FIND NO
1	1004224-2	INSULATOR	2
1	1004224-1	INSULATOR	1

LIST OF MATERIALS

NEXT ASSY	USED ON
1003147	

APPLICATION

UNLESS OTHERWISE SPECIFIED DIMENSIONS ARE IN INCHES
TOLERANCES ON
FRACTIONS ± — DECIMALS ± — ANGLES ± —
DO NOT SCALE THIS DRAWING
MATERIAL SEE NOTE 3
HEAT TREATMENT —
FINAL FINISH —

MIT INSTRUMENTATION LAB
CAMBRIDGE, MASS
DWG NO
CONTRACT
DRAWN C. A. Lucas DATE 7-31-63
CHECKED 15 Sep 63
APPROVAL 12 SEP 63
APPROVAL
NASA APPROVAL 9/1/63
MIT APPROVAL W Kupfer 12 Sep 63

MANNED SPACECRAFT CENTER
HOUSTON, TEXAS

INSULATOR
PHOTOGRAPHIC MASTER
ROPE SENSE AMPLIFIER MODULE

CODE IDENT NO.
SIZE E
NASA DRAWING NO 1004224
SCALE 4/1
WT
SHEET 1 OF 1

1004224 A

MASTER

INCHES
0 1
PHOTOGRAPHIC SCALE ONLY

NOTICE — WHEN GOVERNMENT DRAWINGS, SPECIFICATIONS, OR OTHER DATA ARE USED FOR ANY PURPOSE OTHER THAN IN CONNECTION WITH A DEFINITELY RELATED GOVERNMENT PROCUREMENT OPERATION, THE UNITED STATES GOVERNMENT THEREBY INCURS NO RESPONSIBILITY NOR ANY OBLIGATION WHATSOEVER; AND THE FACT THAT THE GOVERNMENT MAY HAVE FORMULATED, FURNISHED, OR IN ANY WAY SUPPLIED THE SAID DRAWINGS, SPECIFICATIONS, OR OTHER DATA IS NOT TO BE REGARDED BY IMPLICATION OR OTHERWISE AS IN ANY MANNER LICENSING THE HOLDER OR ANY OTHER PERSON OR CORPORATION, OR CONVEYING ANY RIGHTS OR PERMISSION TO MANUFACTURE, USE, OR SELL ANY PATENTED INVENTION THAT MAY IN ANY WAY BE RELATED THERETO.

REVISIONS C31-39

SYM	DESCRIPTION	DATE	APPROVAL

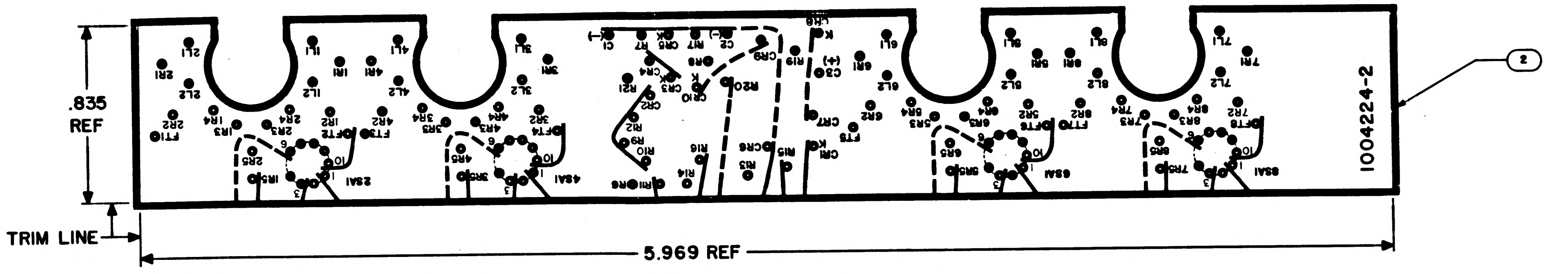

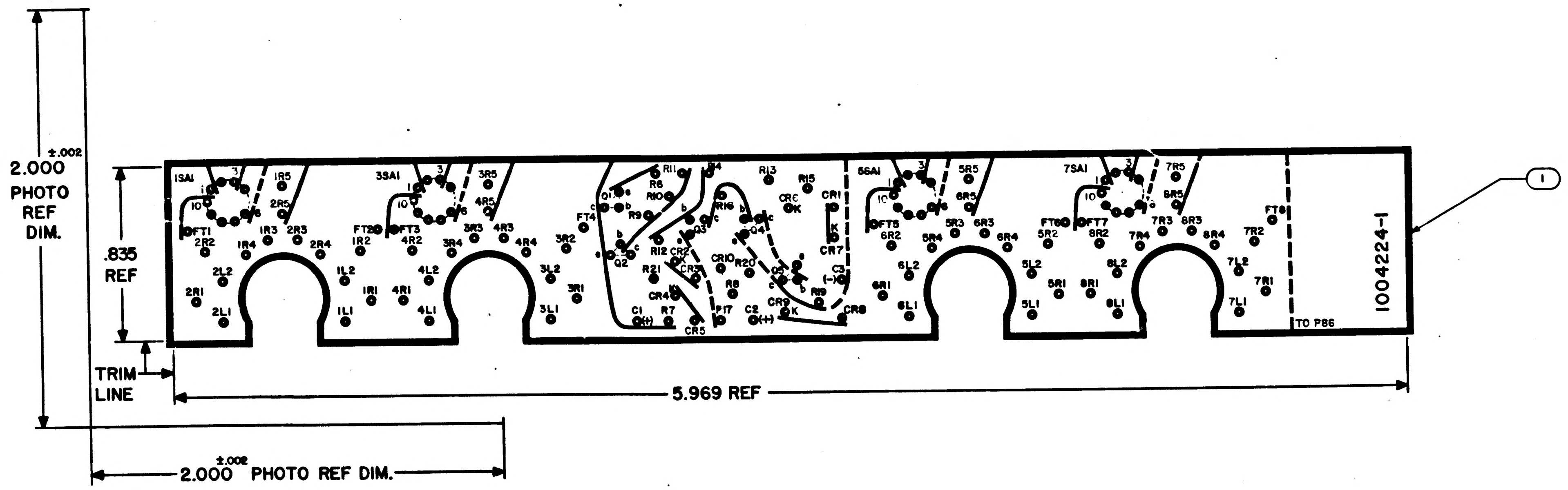

NOTES
1. INTERPRET DRAWING IN ACCORDANCE WITH STANDARDS PRESCRIBED BY MIL-D-70327
2. ORIGINAL OF THIS DRAWING OR REPRODUCTION MADE BY PROCESS OR METHOD SHALL INSURE DIMENSIONAL STABILITY. DIMENSIONAL STABILITY SHALL NOT EXCEED .001 INCH PER INCH
3. MATERIAL: FILM .006/.008 THICK PER L-F-340, TYPE IB, CLASS 2, STYLE IA
4. MAKE MASTER PATTERN POSITIVE FILMS TO DIMENSIONS SHOWN
5. CUT WITHIN .010 OF TRIM LINE
6. ● .030/.035 DIA PUNCH ALL HOLES

QTY REQD	PART OR IDENTIFYING NO.	NOMENCLATURE OR DESCRIPTION	FIND NO
1	1004224-2	INSULATOR	2
1	1004224-1	INSULATOR	1

LIST OF MATERIALS

NEXT ASSY	USED ON
1003147	

APPLICATION

UNLESS OTHERWISE SPECIFIED DIMENSIONS ARE IN INCHES
TOLERANCES ON
FRACTIONS ± — DECIMALS ± — ANGLES ± —
DO NOT SCALE THIS DRAWING
MATERIAL SEE NOTE 3
HEAT TREATMENT —
FINAL FINISH —

MIT INSTRUMENTATION LAB
CAMBRIDGE, MASS
DWG. NO. CONTRACT
DRAWN C.O. Custa DATE 7-31-63
CHECKED [illegible] 15 Oct 63
APPROVAL W. B. [illegible] 12 Sep 63
APPROVAL [illegible]
NASA APPROVAL [illegible] 9/12/63
MIT APPROVAL W Kupfer 12 Sep 63

MANNED SPACECRAFT CENTER
HOUSTON, TEXAS

INSULATOR
PHOTOGRAPHIC MASTER
ROPE SENSE AMPLIFIER MODULE

CODE IDENT NO. SIZE E NASA DRAWING NO. 1004224
SCALE 4/1 WT SHEET 1 OF 1

1004224

MASTER

INCHES
PHOTOGRAPHIC SCALE ONLY

NOTICE — WHEN GOVERNMENT DRAWINGS, SPECIFICATIONS, OR OTHER DATA ARE USED FOR ANY PURPOSE OTHER THAN IN CONNECTION WITH A DEFINITELY RELATED GOVERNMENT PROCUREMENT OPERATION, THE UNITED STATES GOVERNMENT THEREBY INCURS NO RESPONSIBILITY NOR ANY OBLIGATION WHATSOEVER AND THE FACT THAT THE GOVERNMENT MAY HAVE FORMULATED, FURNISHED, OR IN ANY WAY SUPPLIED THE SAID DRAWINGS, SPECIFICATIONS OR OTHER DATA IS NOT TO BE REGARDED BY IMPLICATION OR OTHERWISE AS IN ANY MANNER LICENSING THE HOLDER OR ANY OTHER PERSON OR CORPORATION, OR CONVEYING ANY RIGHTS OR PERMISSION TO MANUFACTURE, USE, OR SELL ANY PATENTED INVENTION THAT MAY IN ANY WAY BE RELATED THERETO.

REVISIONS 02394			
SYM	DESCRIPTION	DATE	APPROVAL
A	REVISED PER TDRR 03633	10-2-63	

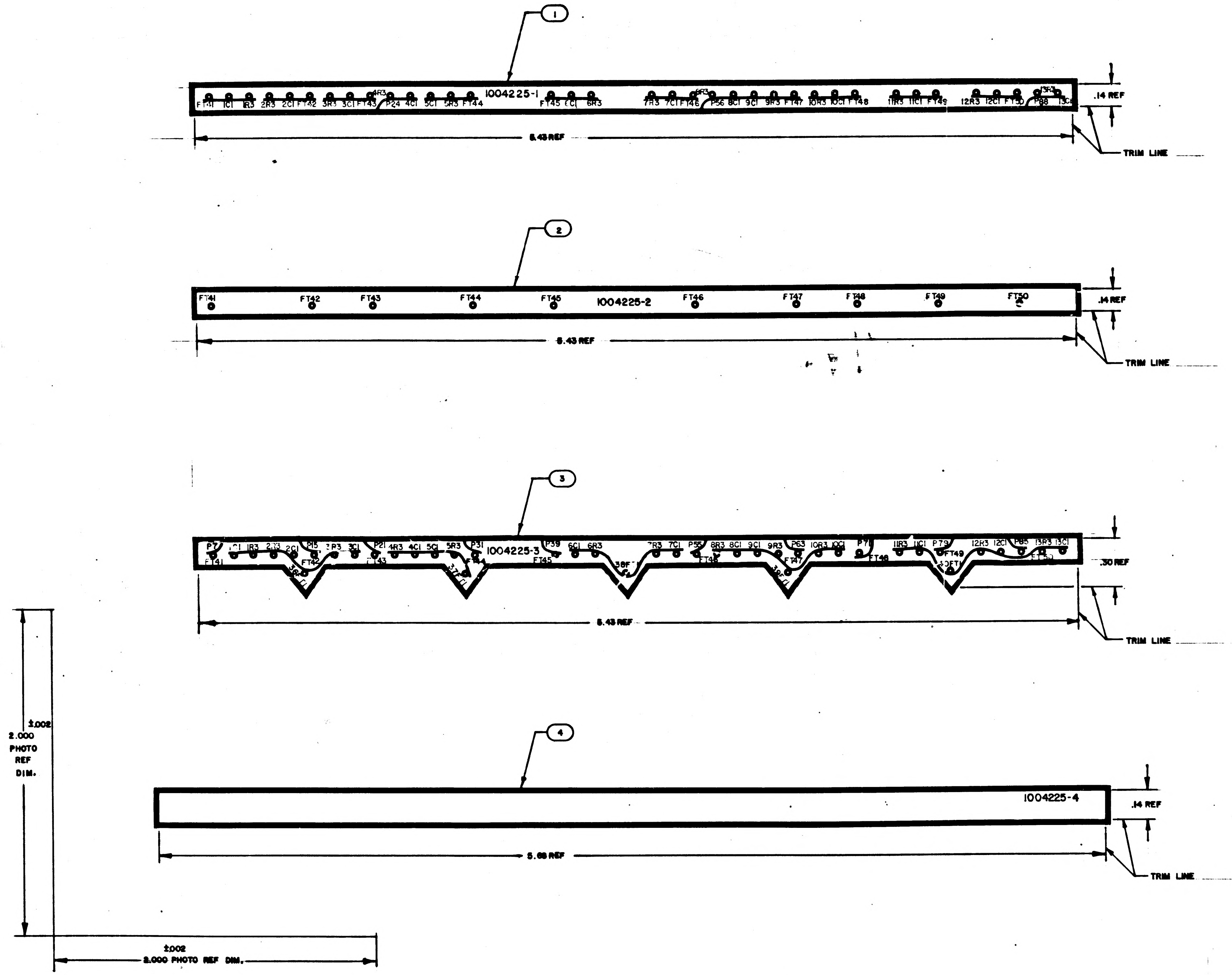

1
1004225-1
FT41 1C1 1R3 2R3 2C1 FT42 3R3 3C1 FT43 4R3 P24 4C1 5C1 5R3 FT44
FT45 6C1 6R3
7R3 7C1 FT46 8R3 P56 8C1 9C1 9R3 FT47 10R3 10C1 FT48
11R3 11C1 FT49 12R3 12C1 FT50 13R3 P88 13C1
.14 REF
5.43 REF
TRIM LINE
2
FT41 FT42 FT43 FT44 FT45 1004225-2 FT46 FT47 FT48 FT49 FT50
.14 REF
5.43 REF
TRIM LINE
3
P7 1C1 1R3 2R3 2C1 P15 3R3 3C1 P21 4R3 4C1 5C1 5R3 P31 1004225-3 P39 6C1 6R3
7R3 7C1 P55 8R3 8C1 9C1 9R3 P63 10R3 10C1 P71 11R3 11C1 P79 12R3 12C1 P85 13R3 13C1
FT41 FT42 FT43 FT44 FT45 FT46 FT47 FT48 FT49 FT50
36FT1 37FT1 38FT1 39FT1 30FT1
.30 REF
5.43 REF
TRIM LINE
±.002
2.000
PHOTO
REF
DIM.
4
1004225-4
.14 REF
5.68 REF
TRIM LINE
±.002
2.000 PHOTO REF DIM.

NOTES
1. INTERPRET DRAWING IN ACCORDANCE WITH STANDARDS PRESCRIBED BY MIL-D-70327
2. ORIGINAL OF THIS DRAWING OR REPRODUCTION MADE BY PROCESS OR METHOD SHALL INSURE DIMENSIONAL STABILITY. DIMENSIONAL STABILITY SHALL NOT EXCEED .001 INCH PER INCH
3. CUT TO WITHIN .010 OF TRIM LINE
4. MAKE MASTER PATTERN POSITIVE FILMS TO DIMENSIONS SHOWN
5. MATERIAL: FILM .006/.008 THK PER L-F-340, TYPE IB, CLASS 2, STYLE IA
6. ● .045/.050 DIA PUNCH ALL HOLES

QTY REQD	PART OR IDENTIFYING NO.	NOMENCLATURE OR DESCRIPTION	FIND NO.
1	1004225-4	INSULATOR	4
1	1004225-3	INSULATOR	3
1	1004225-2	INSULATOR	2
1	1004225-1	INSULATOR	1

LIST OF MATERIALS

NEXT ASSY	USED ON
1003115	

APPLICATION

UNLESS OTHERWISE SPECIFIED
DIMENSIONS ARE IN INCHES
TOLERANCES ON
FRACTIONS ± —‖— DECIMALS ± —‖— ANGLES ± —‖—
DO NOT SCALE THIS DRAWING
MATERIAL
SEE NOTE 5
HEAT TREATMENT —‖—
FINAL FINISH —‖—

MIT
INSTRUMENTATION LAB
CAMBRIDGE, MASS
DRAWN R. Machado DATE 2-20-63
CHECKED
APPROVAL 6-24-63
APPROVAL
NASA APPROVAL 9/17/63
MIT APPROVAL George J. Hufnagel

MANNED SPACECRAFT CENTER
HOUSTON, TEXAS

INSULATOR
PHOTOGRAPHIC MASTER
INTERFACE MODULE 20 OR 40

CODE IDENT NO. | SIZE E | NASA DRAWING NO. 1004225
SCALE 4/1 | WT | SHEET 1 OF 1

MASTER

1004225 A

NOTICE — WHEN GOVERNMENT DRAWINGS, SPECIFICATIONS, OR OTHER DATA ARE USED FOR ANY PURPOSE OTHER THAN IN CONNECTION WITH A DEFINITELY RELATED GOVERNMENT PROCUREMENT OPERATION, THE UNITED STATES GOVERNMENT THEREBY INCURS NO RESPONSIBILITY NOR ANY OBLIGATION WHATSOEVER; AND THE FACT THAT THE GOVERNMENT MAY HAVE FORMULATED, FURNISHED, OR IN ANY WAY SUPPLIED THE SAID DRAWINGS, SPECIFICATIONS, OR OTHER DATA IS NOT TO BE REGARDED BY IMPLICATION OR OTHERWISE AS IN ANY MANNER LICENSING THE HOLDER OR ANY OTHER PERSON OR CORPORATION, OR CONVEYING ANY RIGHTS OR PERMISSION TO MANUFACTURE, USE, OR SELL ANY PATENTED INVENTION THAT MAY IN ANY WAY BE RELATED THERETO.

REVISIONS 02394

SYM	DESCRIPTION	DATE	APPROVAL

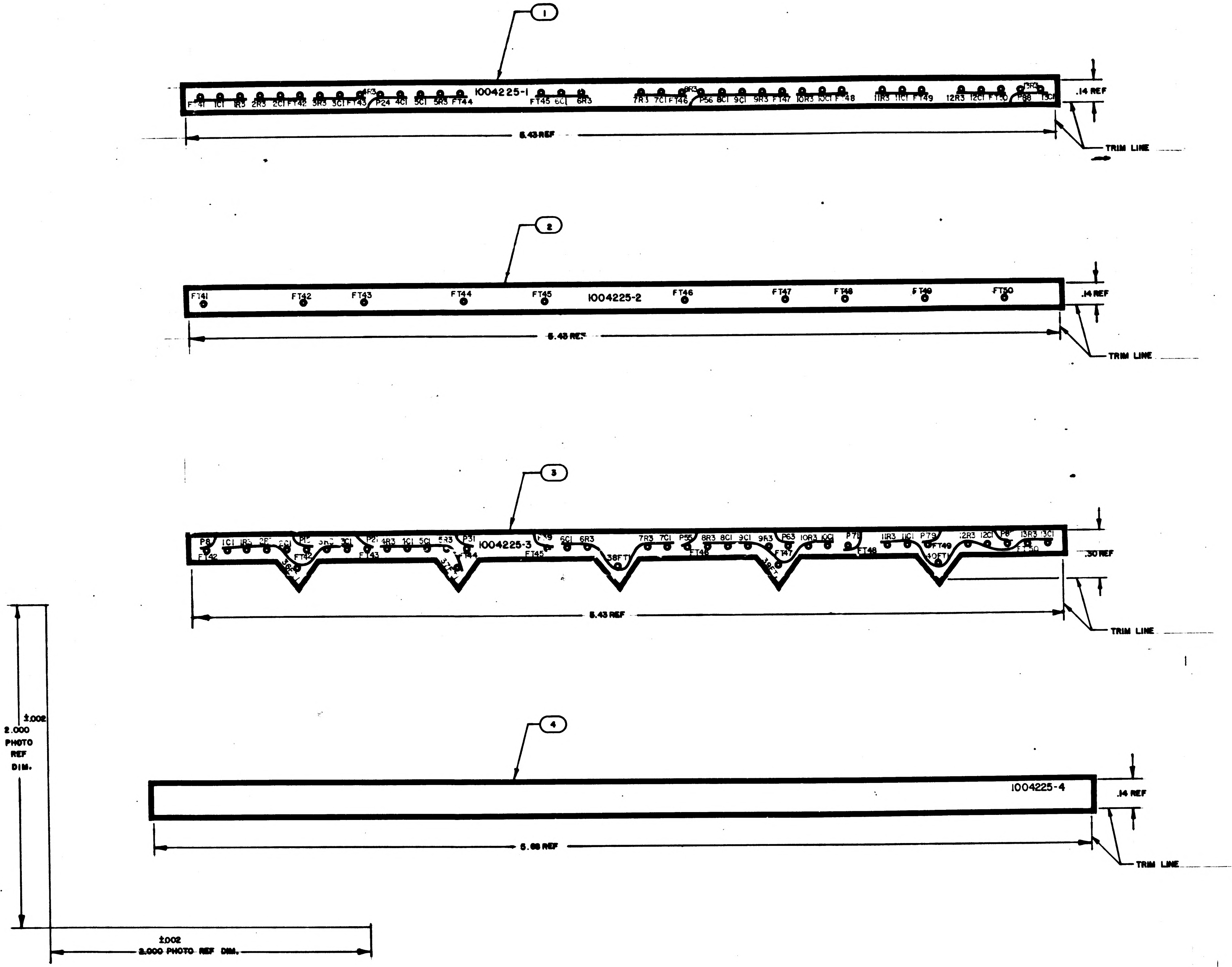
1
1004225-1
FT41 1C1 1R3 2R3 2C1 FT42 3R3 3C1 FT43 4R3 P24 4C1 5C1 5R3 FT44
FT45 6C1 6R3
7R3 7C1 FT46 8R3 P56 8C1 9C1 9R3 FT47 10R3 10C1 FT48
11R3 11C1 FT49 12R3 12C1 FT50 13R3 P88 13C1
.14 REF
5.43 REF
TRIM LINE
2
FT41 FT42 FT43 FT44 FT45 1004225-2 FT46 FT47 FT48 FT49 FT50
.14 REF
5.43 REF
TRIM LINE
3
P8 1C1 1R3 2R3 2C1 P15 3R3 3C1 P21 4R3 4C1 5C1 5R3 P31
FT42 36FT FT42 FT43 37FT FT44
1004225-3
P39 6C1 6R3 FT45 38FT
7R3 7C1 P55 FT46 8R3 8C1 9C1 9R3 FT47 39FT P63 10R3 10C1 P71 FT48
11R3 11C1 P79 FT49 40FT 12R3 12C1 P87 13R3 13C1 FT50
.30 REF
5.43 REF
TRIM LINE
4
1004225-4
.14 REF
5.68 REF
TRIM LINE
±.002
2.000
PHOTO
REF
DIM.
±.002
2.000 PHOTO REF DIM.

NOTES

1. INTERPRET DRAWING IN ACCORDANCE WITH STANDARDS PRESCRIBED BY MIL-D-70327
2. ORIGINAL OF THIS DRAWING OR REPRODUCTION MADE BY PROCESS OR METHOD SHALL INSURE DIMENSIONAL STABILITY. DIMENSIONAL STABILITY SHALL NOT EXCEED .001 INCH PER INCH
3. CUT TO WITHIN .010 OF TRIM LINE
4. MAKE MASTER PATTERN POSITIVE FILMS TO DIMENSIONS SHOWN
5. MATERIAL: FILM .006/.008 THK PER L-F-340, TYPE IB, CLASS 2, STYLE IA
6. ● .045/.050 DIA PUNCH ALL HOLES

QTY REQD	PART OR IDENTIFYING NO.	NOMENCLATURE OR DESCRIPTION	FIND NO.
1	1004225-4	INSULATOR	4
1	1004225-3	INSULATOR	3
1	1004225-2	INSULATOR	2
1	1004225-1	INSULATOR	1

LIST OF MATERIALS

NEXT ASSY	USED ON
1005115	

APPLICATION

UNLESS OTHERWISE SPECIFIED
DIMENSIONS ARE IN INCHES
TOLERANCES ON
FRACTIONS ± — DECIMALS ± — ANGLES ± —
DO NOT SCALE THIS DRAWING
MATERIAL
SEE NOTE 5
HEAT TREATMENT —
FINAL FINISH —

MIT
INSTRUMENTATION LAB
CAMBRIDGE, MASS
DWG. NO. CONTRACT
DRAWN DATE 5-30-63
CHECKED
APPROVAL
APPROVAL
NASA APPROVAL 8/7/63
MIT APPROVAL

MANNED SPACECRAFT CENTER
HOUSTON, TEXAS

INSULATOR PHOTOGRAPHIC MASTER

INTERFACE MODULE 20 OR 40

CODE IDENT NO.
SIZE E
NASA DRAWING NO. 1004225
SCALE 4/1
WT
SHEET 1 OF 1

MASTER

1004225

INCHES
0 1 2
PHOTOGRAPHIC SCALE ONLY

NOTICE — WHEN GOVERNMENT DRAWINGS, SPECIFICATIONS, OR OTHER DATA ARE USED FOR ANY PURPOSE OTHER THAN IN CONNECTION WITH A DEFINITELY RELATED GOVERNMENT PROCUREMENT OPERATION, THE UNITED STATES GOVERNMENT THEREBY INCURS NO RESPONSIBILITY NOR ANY OBLIGATION WHATSOEVER; AND THE FACT THAT THE GOVERNMENT MAY HAVE FORMULATED, FURNISHED, OR IN ANY WAY SUPPLIED THE SAID DRAWINGS, SPECIFICATIONS, OR OTHER DATA IS NOT TO BE REGARDED BY IMPLICATION OR OTHERWISE AS IN ANY MANNER LICENSING THE HOLDER OR ANY OTHER PERSON OR CORPORATION, OR CONVEYING ANY RIGHTS OR PERMISSION TO MANUFACTURE, USE, OR SELL ANY PATENTED INVENTION THAT MAY IN ANY WAY BE RELATED THERETO.

REVISIONS			
SYM	DESCRIPTION	DATE	APPROVAL

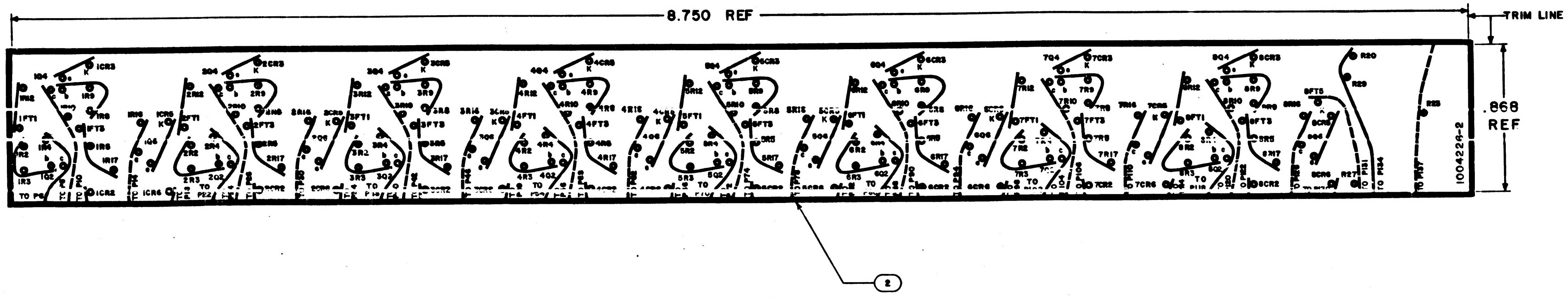

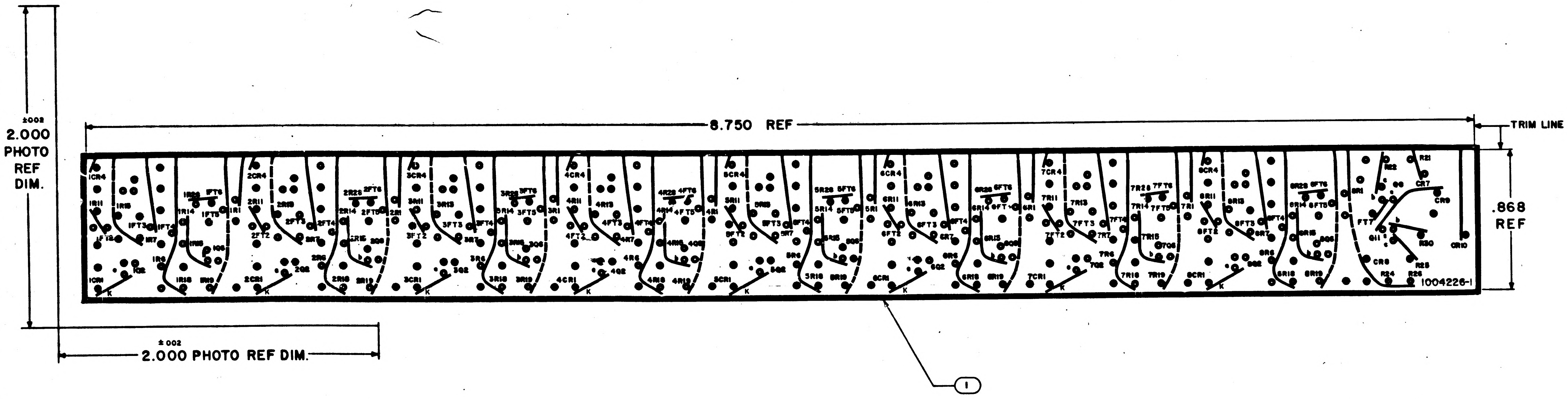

NOTES
1. INTERPRET DRAWING IN ACCORDANCE WITH STANDARDS PRESCRIBED BY MIL-D-70327
2. ORIGINAL OF THIS DRAWING OR REPRODUCTION MADE BY PROCESS OR METHOD SHALL INSURE DIMENSIONAL STABILITY. DIMENSIONAL STABILITY SHALL NOT EXCEED .001 INCH PER INCH
3. CUT TO WITHIN .010 OF TRIMLINE
4. MAKE MASTER PATTERN POSITIVE FILMS TO DIMENSIONS SHOWN
5. MATL: FILM .006/.008 THICK PER L-F-340, TYPE I,
CLASS 2, STYLE IA
6. ● .055/.045 DIA PUNCH ALL HOLES

MASTER

QTY REQD	PART OR IDENTIFYING NO.	NOMENCLATURE OR DESCRIPTION	FIND NO.
1	1004226-2	INSULATOR	2
1	1004226-1	INSULATOR	1

LIST OF MATERIALS

NEXT ASSY	USED ON
1003131	

APPLICATION

UNLESS OTHERWISE SPECIFIED
DIMENSIONS ARE IN INCHES
TOLERANCES ON
FRACTIONS ± DECIMALS ± ANGLES ±
DO NOT SCALE THIS DRAWING
MATERIAL
SEE NOTE 5
HEAT TREATMENT
FINAL FINISH

MIT
INSTRUMENTATION LAB
CAMBRIDGE, MASS
DWG. NO. CONTRACT
DRAWN DATE 6-26-68
CHECKED
APPROVAL
APPROVAL
NASA APPROVAL 8/7/69
MIT APPROVAL

MANNED SPACECRAFT CENTER
HOUSTON, TEXAS

INSULATOR
PHOTOGRAPHIC MASTER
ROPE STRAND SELECT MODULE

CODE IDENT NO.
SIZE E
NASA DRAWING NO. 1004226
SCALE 4/1
WT
SHEET 1 OF 1

1004226

INCHES
PHOTOGRAPHIC SCALE ONLY

NOTICE — WHEN GOVERNMENT DRAWINGS, SPECIFICATIONS, OR OTHER DATA ARE USED FOR ANY PURPOSE OTHER THAN IN CONNECTION WITH A DEFINITELY RELATED GOVERNMENT PROCUREMENT OPERATION, THE UNITED STATES GOVERNMENT THEREBY INCURS NO RESPONSIBILITY NOR ANY OBLIGATION WHATSOEVER AND THE FACT THAT THE GOVERNMENT MAY HAVE FORMULATED, FURNISHED, OR IN ANY WAY SUPPLIED THE SAID DRAWINGS, SPECIFICATIONS OR OTHER DATA IS NOT TO BE REGARDED BY IMPLICATION OR OTHERWISE AS IN ANY MANNER LICENSING THE HOLDER OR ANY OTHER PERSON OR CORPORATION, OR CONVEYING ANY RIGHTS OR PERMISSION TO MANUFACTURE, USE, OR SELL ANY PATENTED INVENTION THAT MAY IN ANY WAY BE RELATED THERETO.

REVISIONS 02344			
SYM	DESCRIPTION	DATE	APPROVAL

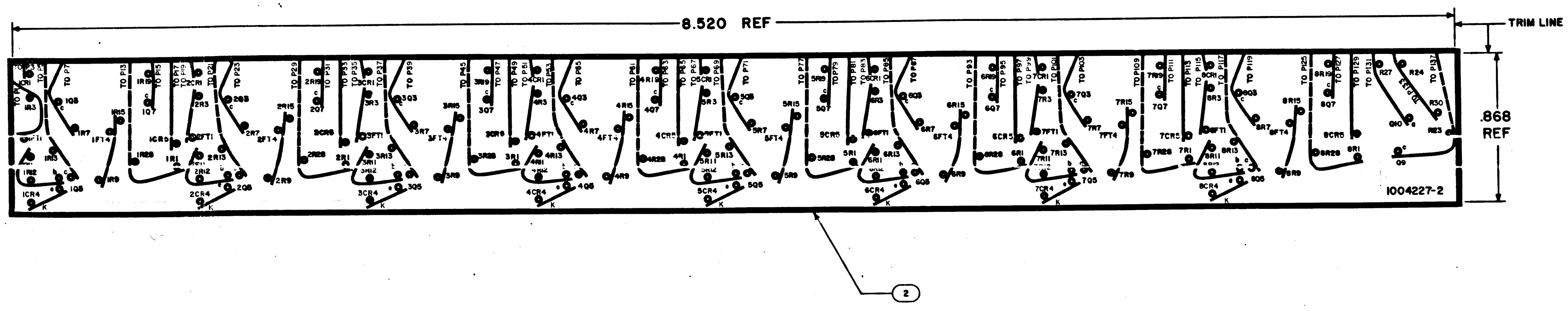

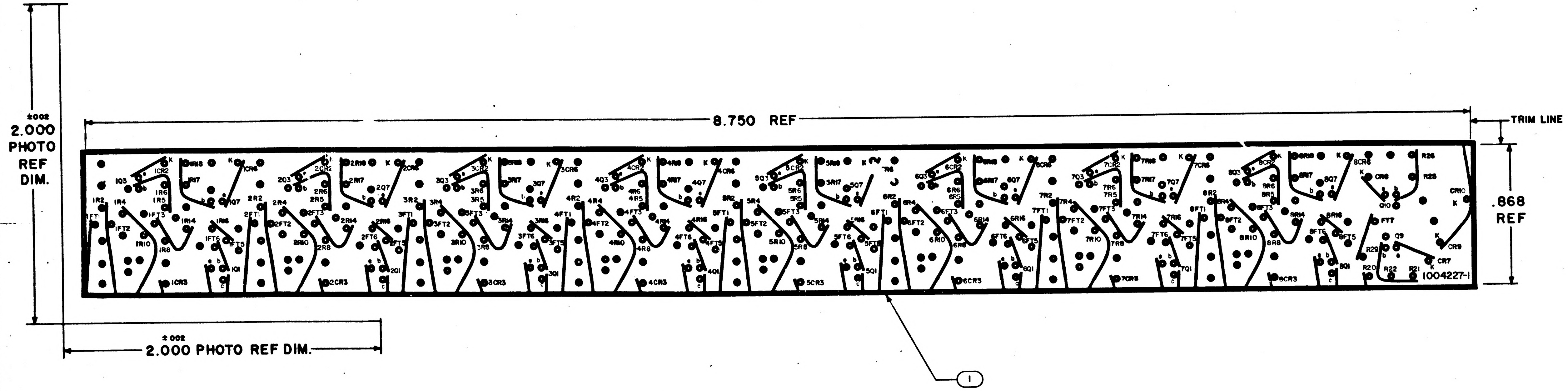

NOTES

1. INTERPRET DRAWING IN ACCORDANCE WITH STANDARDS PRESCRIBED BY MIL-D-70327
2. ORIGINAL OF THIS DRAWING OR REPRODUCTION MADE BY PROCESS OR METHOD SHALL INSURE DIMENSIONAL STABILITY. DIMENSIONAL STABILITY SHALL NOT EXCEED .001 INCH PER INCH
3. CUT TO WITHIN .010 OF TRIMLINE
4. MAKE MASTER PATTERN POSITIVE FILMS TO DIMENSIONS SHOWN
5. MATL: FILM .006/.008 THICK PER L-F-340, TYPE IB, CLASS 2, STYLE IA
6. ● .035/.045 DIA PUNCH ALL HOLES

MASTER

QTY REQD	PART OR IDENTIFYING NO.	NOMENCLATURE OR DESCRIPTION	FIND NO.
1	1004227-2	INSULATOR	2
1	1004227-1	INSULATOR	1

LIST OF MATERIALS

NEXT ASSY	USED ON
1003131	

APPLICATION

UNLESS OTHERWISE SPECIFIED DIMENSIONS ARE IN INCHES
TOLERANCES ON
FRACTIONS ± — DECIMALS ± — ANGLES ± —
DO NOT SCALE THIS DRAWING
MATERIAL SEE NOTE 5
HEAT TREATMENT —
FINAL FINISH —

MIT INSTRUMENTATION LAB
CAMBRIDGE, MASS.
DWG NO CONTRACT
DRAWN DATE
CHECKED 6AUG63
APPROVAL W.B. 6AUG63
APPROVAL
NASA APPROVAL 9/7/63
MIT APPROVAL George J. 9/7/63

MANNED SPACECRAFT CENTER
HOUSTON, TEXAS

INSULATOR
PHOTOGRAPHIC MASTER
ROPE STRAND SELECT MODULE

CODE IDENT NO. | SIZE E | NASA DRAWING NO. 1004227
SCALE 4/1 | WT | SHEET 1 OF 1

1004227

INCHES
PHOTOGRAPHIC SCALE ONLY

NOTICE — WHEN GOVERNMENT DRAWINGS, SPECIFICATIONS, OR OTHER DATA ARE USED FOR ANY PURPOSE OTHER THAN IN CONNECTION WITH A DEFINITELY RELATED GOVERNMENT PROCUREMENT OPERATION, THE UNITED STATES GOVERNMENT THEREBY INCURS NO RESPONSIBILITY NOR ANY OBLIGATION WHATSOEVER; AND THE FACT THAT THE GOVERNMENT MAY HAVE FORMULATED, FURNISHED, OR IN ANY WAY SUPPLIED THE SAID DRAWINGS, SPECIFICATIONS OR OTHER DATA IS NOT TO BE REGARDED BY IMPLICATION OR OTHERWISE AS IN ANY MANNER LICENSING THE HOLDER OR ANY OTHER PERSON OR CORPORATION, OR CONVEYING ANY RIGHTS OR PERMISSION TO MANUFACTURE, USE, OR SELL ANY PATENTED INVENTION THAT MAY IN ANY WAY BE RELATED THERETO.

1004229

REVISIONS 02544

SYM	DESCRIPTION	DATE	APPROVAL

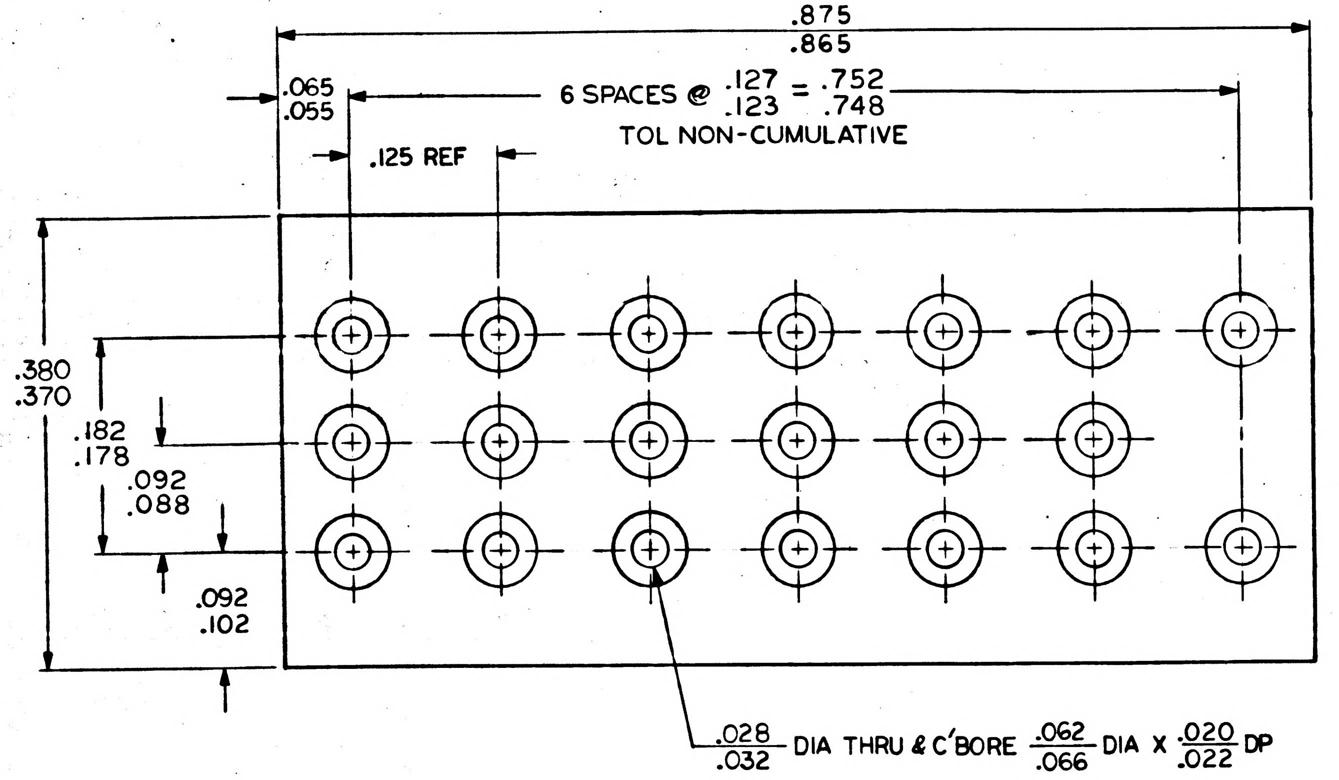

.875
.865
.065
.055
6 SPACES @ .127/.123 = .752/.748
TOL NON-CUMULATIVE
.125 REF
.380
.370
.182
.178
.092
.088
.092
.102
.028/.032 DIA THRU & C'BORE .062/.066 DIA X .020/.022 DP

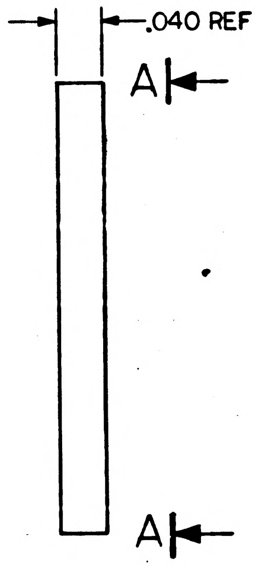

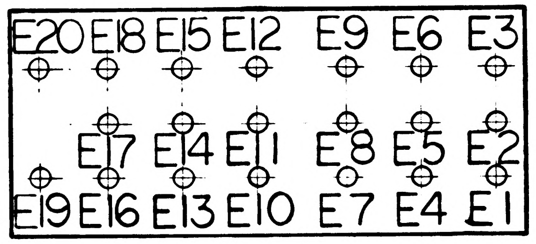

E20 E18 E15 E12 E9 E6 E3
E17 E14 E11 E8 E5 E2
E19 E16 E13 E10 E7 E4 E1

VIEW A-A

FOR MARKING ONLY

SCALE 5/1

NOTES

1. INTERPRET DRAWING IN ACCORDANCE WITH STANDARDS PRESCRIBED BY MIL-D-70327
2. MAT'L: .040 THK G-10 PLASTIC SHEET PER L-F-340, TYPE GEE
3. REMOVE BURRS AND BREAK SHARP EDGES
4. MARK .05 HIGH BLACK PER ND1002019 APPROX WHERE SHOWN

MASTER

QTY REQD	PART OR IDENTIFYING NO.	NOMENCLATURE OR DESCRIPTION	FIND NO.

LIST OF MATERIALS

NEXT ASSY	USED ON
1003134	

APPLICATION

UNLESS OTHERWISE SPECIFIED
DIMENSIONS ARE IN INCHES
TOLERANCES ON
FRACTIONS ± DECIMALS ± ANGLES ±
DO NOT SCALE THIS DRAWING
MATERIAL SEE NOTE 2
HEAT TREATMENT
FINAL FINISH

MIT
INSTRUMENTATION LAB
CAMBRIDGE, MASS.
DWG. NO. CONTRACT

DRAWN Tom Hilton DATE 1AUG63
CHECKED 6 Aug 63
APPROVAL W. Turner 6 AUG63
APPROVAL 8/6/63
NASA APPROVAL Jack Barnard
MIT APPROVAL W Kupfer 14 Aug 63

MANNED SPACECRAFT CENTER
HOUSTON, TEXAS

TERMINAL BOARD
ROPE MEMORY MODULE

CODE IDENT NO.
SIZE C
NASA DRAWING NO. 1004229
SCALE 10/1
WT
SHEET 1 OF 1

1004229

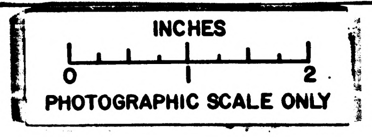

INCHES
0
1
2
PHOTOGRAPHIC SCALE ONLY

1004231	A	REVISIONS 02544		
SYM	DESCRIPTION		DATE	APPROVAL
A	REVISED PER TDRR 0345			

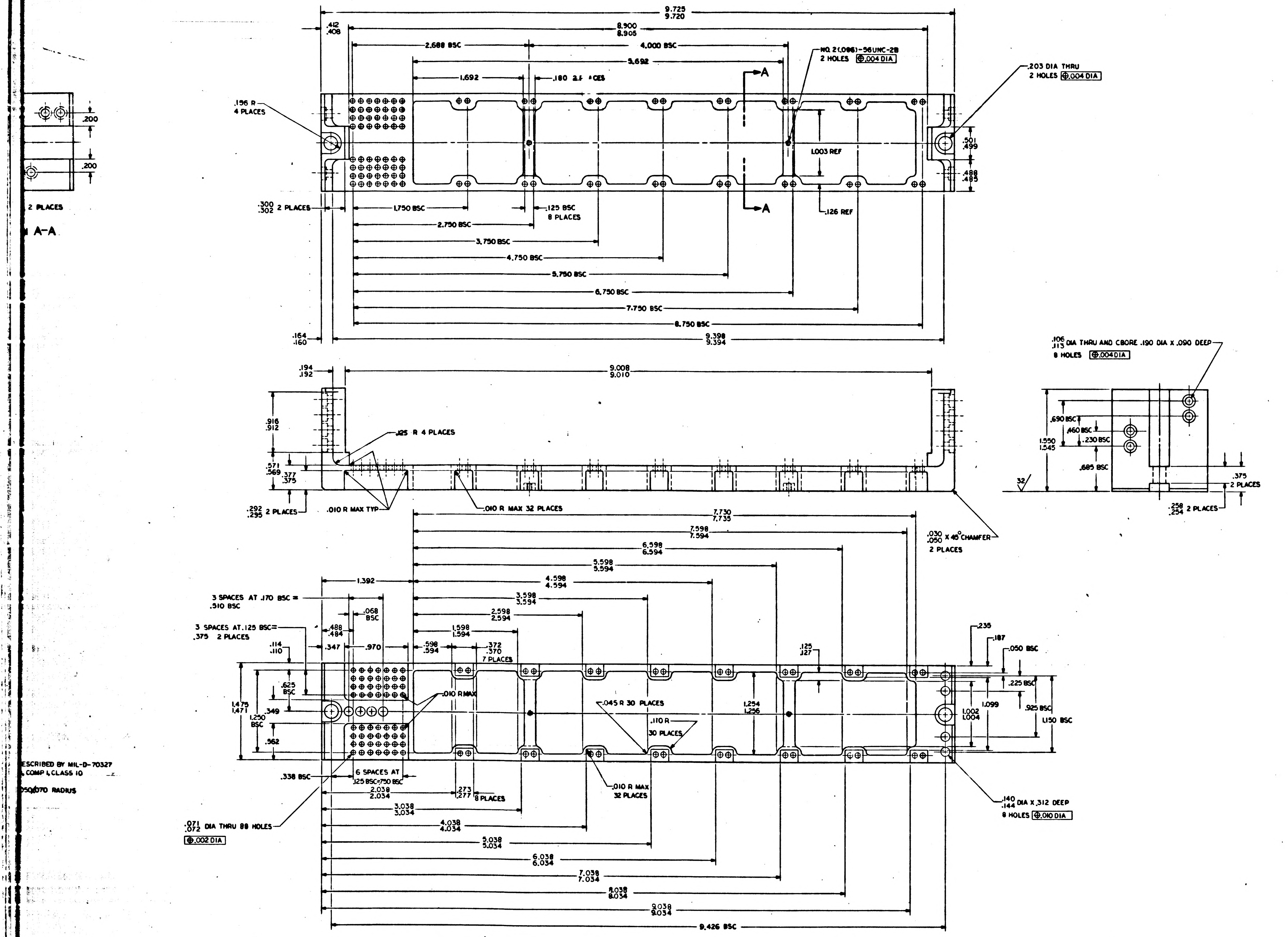

2 PLACES
A-A
.200
.200
9.725
9.720
.412
.408
8.900
8.905
2.688 BSC
4.000 BSC
5.692
1.692
.180 2 PLACES
NO. 2 (.086)-56UNC-2B
2 HOLES ⊕.004 DIA
.203 DIA THRU
2 HOLES ⊕.004 DIA
.156 R
4 PLACES
A
A
1.003 REF
.126 REF
.501
.499
.488
.485
.300
.302 2 PLACES
1.750 BSC
.125 BSC
8 PLACES
2.750 BSC
3.750 BSC
4.750 BSC
5.750 BSC
6.750 BSC
7.750 BSC
8.750 BSC
9.398
9.394
.164
.160
.194
.192
9.008
9.010
.916
.912
.125 R 4 PLACES
.571
.569
.377
.375
.292
.295 2 PLACES
.010 R MAX TYP
.010 R MAX 32 PLACES
.030
.050 X 45° CHAMFER
2 PLACES
.106
.113 DIA THRU AND CBORE .190 DIA X .090 DEEP
8 HOLES ⊕.004 DIA
.690 BSC
.460 BSC
.230 BSC
1.550
1.545
.685 BSC
32
.375
2 PLACES
.258
.254 2 PLACES
7.730
7.735
7.598
7.594
6.598
6.594
5.598
5.594
4.598
4.594
3.598
3.594
2.598
2.594
1.598
1.594
1.392
3 SPACES AT .170 BSC =
.510 BSC
3 SPACES AT .125 BSC =
.375 2 PLACES
.068
BSC
.488
.484
.347
.970
.598
.594
.372
.370
7 PLACES
.114
.110
.625
BSC
1.475
1.471
.349
1.250
BSC
.562
.010 R MAX
.045 R 30 PLACES
.110 R
30 PLACES
1.254
1.256
.125
.127
.235
.187
.050 BSC
.225 BSC
1.099
1.002
1.004
.925 BSC
1.150 BSC
.338 BSC
6 SPACES AT
.125 BSC=.750 BSC
.273
.277 8 PLACES
.010 R MAX
32 PLACES
.140
.144 DIA X .312 DEEP
8 HOLES ⊕.010 DIA
.071
.072 DIA THRU 88 HOLES
⊕.002 DIA
2.038
2.034
3.038
3.034
4.038
4.034
5.038
5.034
6.038
6.034
7.038
7.034
8.038
8.034
9.038
9.034
9.426 BSC

ESCRIBED BY MIL-D-70327
, COMP I, CLASS 10

050/.070 RADIUS

QTY REQD	PART OR IDENTIFYING NO.	NOMENCLATURE OR DESCRIPTION		FIND NO.
LIST OF MATERIALS				

		UNLESS OTHERWISE SPECIFIED DIMENSIONS ARE IN INCHES TOLERANCES ON FRACTIONS ± DECIMALS ±.005 ANGLES ±2° DO NOT SCALE THIS DRAWING
		MATERIAL
1003133		HEAT TREATMENT
NEXT ASSY	USED ON	FINAL FINISH
APPLICATION		

M I T
INSTRUMENTATION LAB
CAMBRIDGE, MASS.

DRAWN G. L. Gallagher DATE 8/9/63
CHECKED R. Cunningham 13 Aug 63
APPROVAL W. E. Turner 13 Aug 63
APPROVAL
NASA APPROVAL Jack Barnes
MIT APPROVAL W. Kupfer 14 Aug 63

MANNED SPACECRAFT CENTER
HOUSTON, TEXAS

HEADER
ROPE MEMORY MODULE

CODE IDENT NO.	SIZE	NASA DRAWING NO.
	J	1004231
SCALE 2/1	WT	SHEET 1 OF 1

1004231 A

2/1

04231

MASTER

INCHES
PHOTOGRAPHIC SCALE ONLY

E-2

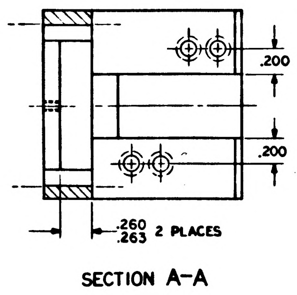
.200
.200
.260
.263 2 PLACES

SECTION A-A

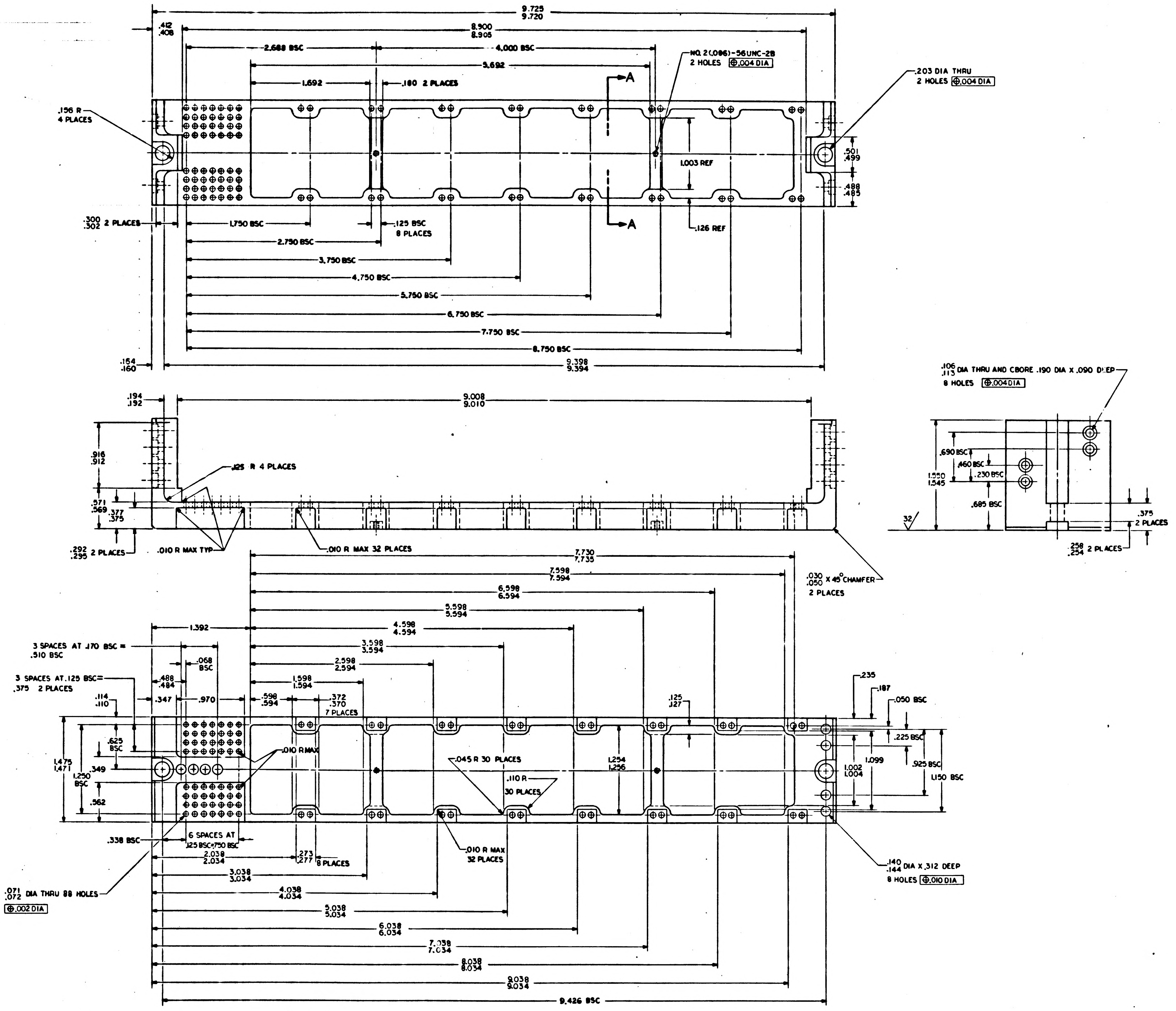
9.725
9.720
8.900
8.905
.412
.408
2.688 BSC
4.000 BSC
3.692
1.692
.180 2 PLACES
NO. 2(.086)-56UNC-2B
2 HOLES ⊕.004 DIA
.203 DIA THRU
2 HOLES ⊕.004 DIA
.156 R
4 PLACES
A
A
1.003 REF
.501
.499
.488
.485
.126 REF
.300
.302 2 PLACES
1.750 BSC
.125 BSC
8 PLACES
2.750 BSC
3.750 BSC
4.750 BSC
5.750 BSC
6.750 BSC
7.750 BSC
8.750 BSC
9.398
9.394
.164
.160
.194
.192
9.008
9.010
.916
.912
.125 R 4 PLACES
.571
.569
.377
.375
.292
.295 2 PLACES
.010 R MAX TYP
.010 R MAX 32 PLACES
.030
.050 X 45° CHAMFER
2 PLACES
.106
.113 DIA THRU AND CBORE .190 DIA X .090 DEEP
8 HOLES ⊕.004 DIA
.690 BSC
.460 BSC
.230 BSC
1.550
1.545
.685 BSC
32
.375
2 PLACES
.258
.254 2 PLACES
7.730
7.735
7.598
7.594
6.598
6.594
5.598
5.594
4.598
4.594
3.598
3.594
2.598
2.594
1.598
1.594
1.392
3 SPACES AT .170 BSC =
.510 BSC
.068
BSC
3 SPACES AT .125 BSC=
.375 2 PLACES
.488
.484
.114
.110
.347
.970
.598
.594
.372
.370
7 PLACES
.125
.127
.235
.187
.050 BSC
.225 BSC
.625
BSC
1.475
1.471
.349
1.250
BSC
.562
.010 R MAX
.045 R 30 PLACES
.110 R
30 PLACES
1.254
1.256
1.002
1.004
1.099
.925 BSC
1.150 BSC
.338 BSC
6 SPACES AT
.125 BSC=.750 BSC
2.038
2.034
.273
.277 8 PLACES
3.038
3.034
.010 R MAX
32 PLACES
.140
.144 DIA X .312 DEEP
8 HOLES ⊕.010 DIA
.071
.072 DIA THRU 88 HOLES
⊕.002 DIA
4.038
4.034
5.038
5.034
6.038
6.034
7.038
7.034
8.038
8.034
9.038
9.034
9.426 BSC

NOTES:
1. INTERPRET DRAWING IN ACCORDANCE WITH STANDARDS PRESCRIBED BY MIL-D-70327
2. MATL: DIE OR INVESTMENT CAST A356 AL PER MIL-C-21180, COMP I, CLASS 10
3. FINISH: BLACK ANODIZE PER MIL-A- 8625, TYPE II
4. UNLESS OTHERWISE SPECIFIED ALL FILLETS AND ROUNDS .050/.070 RADIUS
5. REMOVE ALL BURRS AND BREAK SHARP EDGES .005/.015
6. UNLESS OTHERWISE SPECIFIED 125√ ALL OVER

1004231

1003133	
NEXT ASSY	USED ON
APPLICATION	

UNLESS OTHERWISE SPECIFI
DIMENSIONS ARE IN INCHES
TOLERANCES ON
FRACTIONS DECIMALS
± ±.005
DO NOT SCALE THIS DRAWI
MATERIAL
HEAT TREATMENT
FINAL FINISH

INCHES
0 1 2
PHOTOGRAPHIC SCALE ONLY

1004231 C

SYM	DESCRIPTION	DATE	APPROVAL
A	REVISED PER TDRR 03451	9.3.63	
B	REVISED PER TDRR 04612		
C	REVISED PER TDRR 04613	1-13-63	W.C

REVISIONS 02544

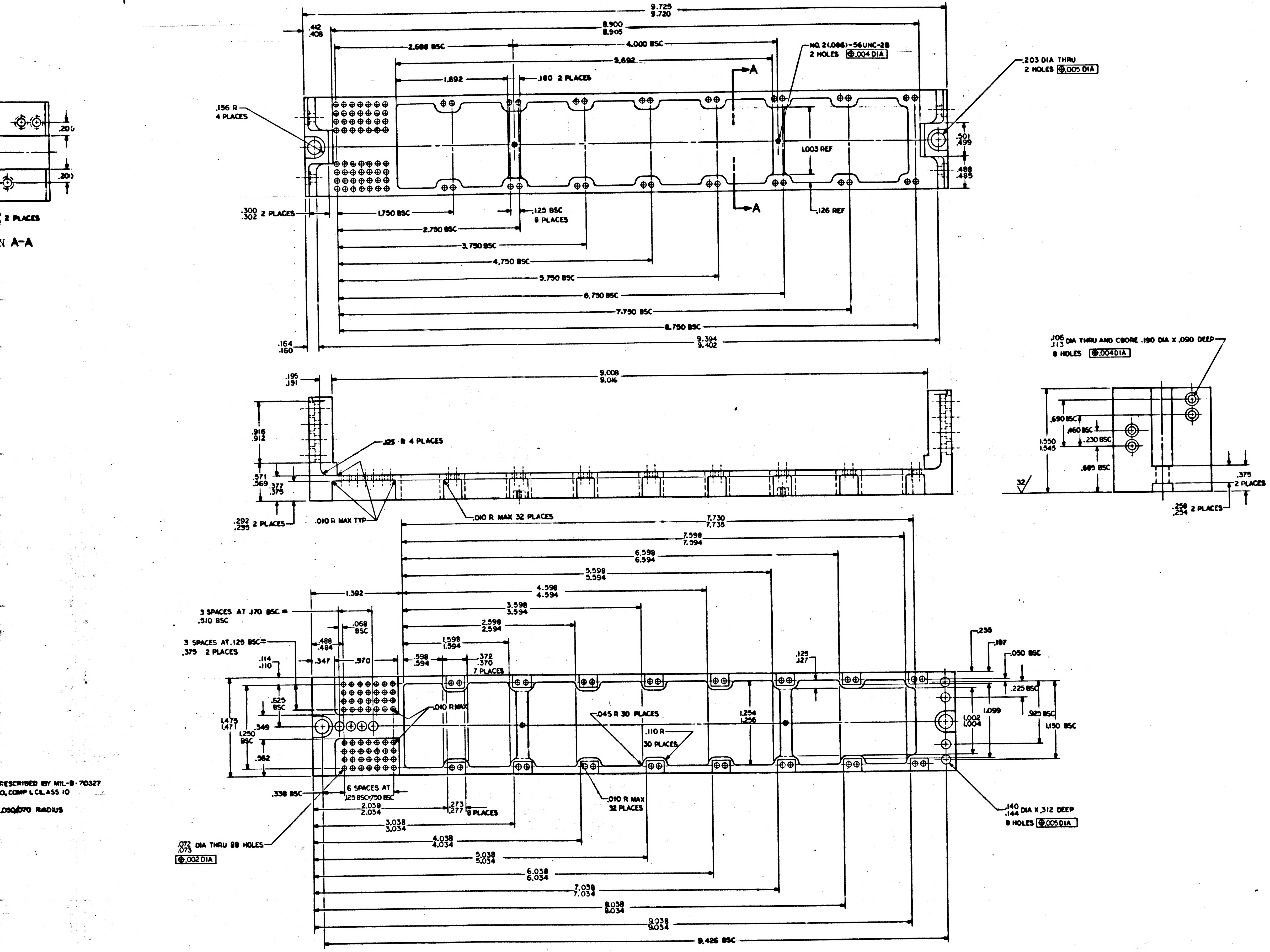

9.725 / 9.720
8.900 / 8.905
.412 / .408
2.688 BSC
4.000 BSC
5.692
1.692
.180 2 PLACES
NO. 2 (.086)-56UNC-2B 2 HOLES ⊕ .004 DIA
.203 DIA THRU 2 HOLES ⊕ .005 DIA
.156 R 4 PLACES
A
A
1.003 REF
.501 / .499
.488 / .485
.300 / .302 2 PLACES
1.750 BSC
.125 BSC 8 PLACES
.126 REF
2.750 BSC
3.750 BSC
4.750 BSC
5.750 BSC
6.750 BSC
7.750 BSC
8.750 BSC
9.394 / 9.402
.164 / .160
.20
2 PLACES
N A-A
.195 / .191
9.008 / 9.016
.916 / .912
.125 R 4 PLACES
.571 / .569
.377 / .375
.292 / .295 2 PLACES
.010 R MAX TYP
.010 R MAX 32 PLACES
.106 / .113 DIA THRU AND CBORE .190 DIA X .090 DEEP 8 HOLES ⊕ .004 DIA
.690 BSC
.460 BSC
.230 BSC
1.550 / 1.545
.685 BSC
.375 2 PLACES
.258 / .254 2 PLACES
32
7.730 / 7.735
7.598 / 7.594
6.598 / 6.594
5.598 / 5.594
4.598 / 4.594
3.598 / 3.594
2.598 / 2.594
1.598 / 1.594
1.392
3 SPACES AT .170 BSC = .510 BSC
3 SPACES AT .125 BSC = .375 2 PLACES
.488 / .484
.068 BSC
.114 / .110
.347
.970
.598 / .594
.372 / .370 7 PLACES
.125 / .127
.235
.187
.050 BSC
.225 BSC
.625 BSC
1.475 / 1.471
1.250 BSC
.349
.562
.010 R MAX
.045 R 30 PLACES
.110 R 30 PLACES
1.254 / 1.256
1.002 / 1.004
1.099
.925 BSC
1.150 BSC
.338 BSC
6 SPACES AT .125 BSC = .750 BSC
2.038 / 2.034
.273 / .277 8 PLACES
.010 R MAX 32 PLACES
3.038 / 3.034
4.038 / 4.034
5.038 / 5.034
6.038 / 6.034
7.038 / 7.034
8.038 / 8.034
9.038 / 9.034
9.426 BSC
.140 / .144 DIA X .312 DEEP 8 HOLES ⊕ .005 DIA
.072 / .073 DIA THRU 88 HOLES ⊕ .002 DIA
RESCRIBED BY MIL-B-70327
D, COMP & CLASS 10
.050/.070 RADIUS

QTY REQD	PART OR IDENTIFYING NO.	NOMENCLATURE OR DESCRIPTION	FIND NO.

LIST OF MATERIALS

UNLESS OTHERWISE SPECIFIED
DIMENSIONS ARE IN INCHES
TOLERANCES ON
FRACTIONS ± DECIMALS ±.005 ANGLES ±2°
DO NOT SCALE THIS DRAWING
MATERIAL
HEAT TREATMENT
FINAL FINISH

NEXT ASSY	USED ON
1003135	

APPLICATION

MIT
INSTRUMENTATION LAB
CAMBRIDGE, MASS.

DRAWN G J Gallman DATE 8/4/63
CHECKED 13 Aug 63
APPROVAL 13 Aug 63
APPROVAL
NASA APPROVAL Jack Barnes
MIT APPROVAL 14 Aug 63

MANNED SPACECRAFT CENTER
HOUSTON, TEXAS

HEADER
ROPE MEMORY MODULE

CODE IDENT NO. —— SIZE J NASA DRAWING NO. 1004231

SCALE 2/1 WT SHEET 1 OF 1

1004231 C

MASTER

INCHES
PHOTOGRAPHIC SCALE ONLY

F-2

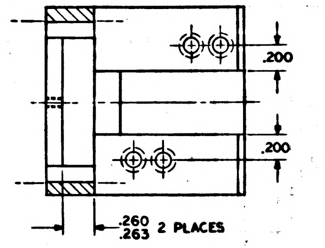

.200
.200
.260
.263 2 PLACES

SECTION A-A

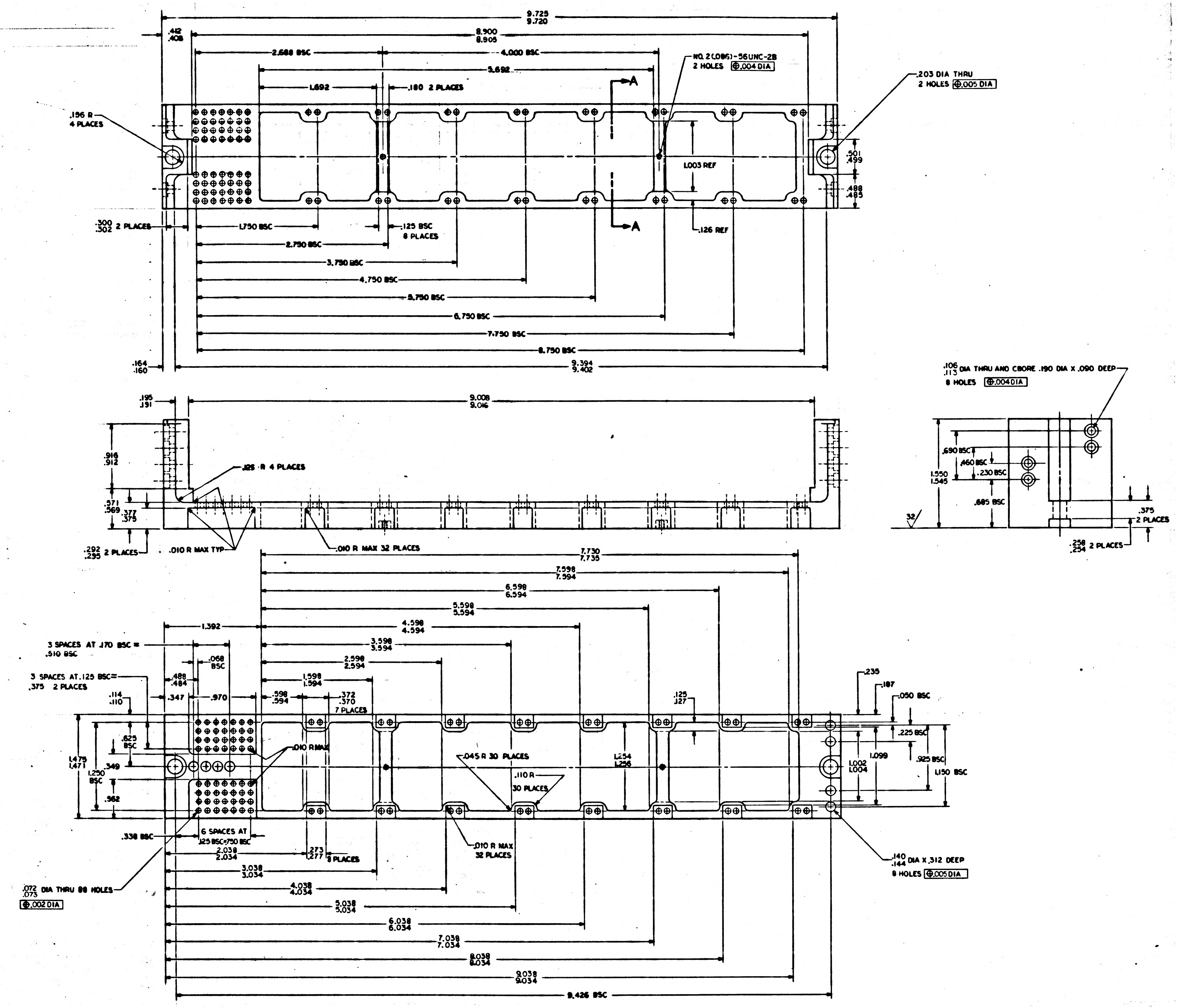

9.725
9.720
.412
.408
8.900
8.905
2.688 BSC
4.000 BSC
NO. 2(.086)-56UNC-2B
2 HOLES ⊕.004 DIA
3.692
1.692
.180 2 PLACES
A
A
.203 DIA THRU
2 HOLES ⊕.005 DIA
.196 R
4 PLACES
1.003 REF
.501
.499
.488
.485
.300
.302 2 PLACES
1.750 BSC
.125 BSC
8 PLACES
.126 REF
2.750 BSC
3.750 BSC
4.750 BSC
5.750 BSC
6.750 BSC
7.750 BSC
8.750 BSC
.164
.160
9.394
9.402
.106
.113 DIA THRU AND CBORE .190 DIA X .090 DEEP
8 HOLES ⊕.004 DIA
.195
.191
9.008
9.016
.916
.912
.125 R 4 PLACES
.571
.569
.377
.375
.292
.295 2 PLACES
.010 R MAX TYP
.010 R MAX 32 PLACES
.690 BSC
.460 BSC
.230 BSC
1.550
1.545
.685 BSC
32
.375
2 PLACES
.258
.254 2 PLACES
7.730
7.735
7.598
7.594
6.598
6.594
5.598
5.594
4.598
4.594
1.392
3.598
3.594
3 SPACES AT .170 BSC =
.510 BSC
.068
BSC
2.598
2.594
3 SPACES AT .125 BSC =
.375 2 PLACES
.488
.484
1.598
1.594
.114
.110
.347
.970
.598
.594
.372
.370
7 PLACES
.125
.127
.235
.187
.050 BSC
.625
BSC
.010 R MAX
.225 BSC
1.475
1.471
.349
1.250
BSC
.045 R 30 PLACES
1.254
1.256
1.099
1.002
1.004
.925 BSC
1.150 BSC
.110 R
30 PLACES
.562
.338 BSC
6 SPACES AT
.125 BSC=.750 BSC
.273
.277 8 PLACES
.010 R MAX
32 PLACES
.140
.144 DIA X .312 DEEP
8 HOLES ⊕.005 DIA
2.038
2.034
3.038
3.034
.072
.075 DIA THRU 88 HOLES
⊕.002 DIA
4.038
4.034
5.038
5.034
6.038
6.034
7.038
7.034
8.038
8.034
9.038
9.034
9.426 BSC

NOTES:
1. INTERPRET DRAWING IN ACCORDANCE WITH STANDARDS PRESCRIBED BY MIL-D-70327
2. MATL: DIE OR INVESTMENT CAST A356 AL PER MIL-C-21180, COMP I, CLASS 10
3. FINISH: BLACK ANODIZE PER MIL-A-8625, TYPE II
4. UNLESS OTHERWISE SPECIFIED ALL FILLETS AND ROUNDS .050/.070 RADIUS
5. REMOVE ALL BURRS AND BREAK SHARP EDGES .005/.015
6. UNLESS OTHERWISE SPECIFIED 125√ ALL OVER

1003135	
NEXT ASSY	USED ON
APPLICATION	

UNLESS OTHERWISE SPECIFIED
DIMENSIONS ARE IN INCHES
TOLERANCES ON
FRACTIONS ± DECIMALS ±.005 ANGLES ±2°
DO NOT SCALE THIS DRAWING
MATERIAL
HEAT TREATMENT
FINAL FINISH

QTY REQD
DRAWN
CHECKED
APPROVAL
APPROVAL

1004231 C

4231 C

INCHES
PHOTOGRAPHIC SCALE ONLY

1004231 D

SYM	REVISIONS DESCRIPTION	DATE	APPROVAL
A	REVISED PER TDRR 03451	9-26-63	
B	REVISED PER TDRR 04012		
C	REVISED PER TDRR 04...		
D	REVISED PER TDRR 08411 DRFW. O. Roy. CHK	5/7/69	

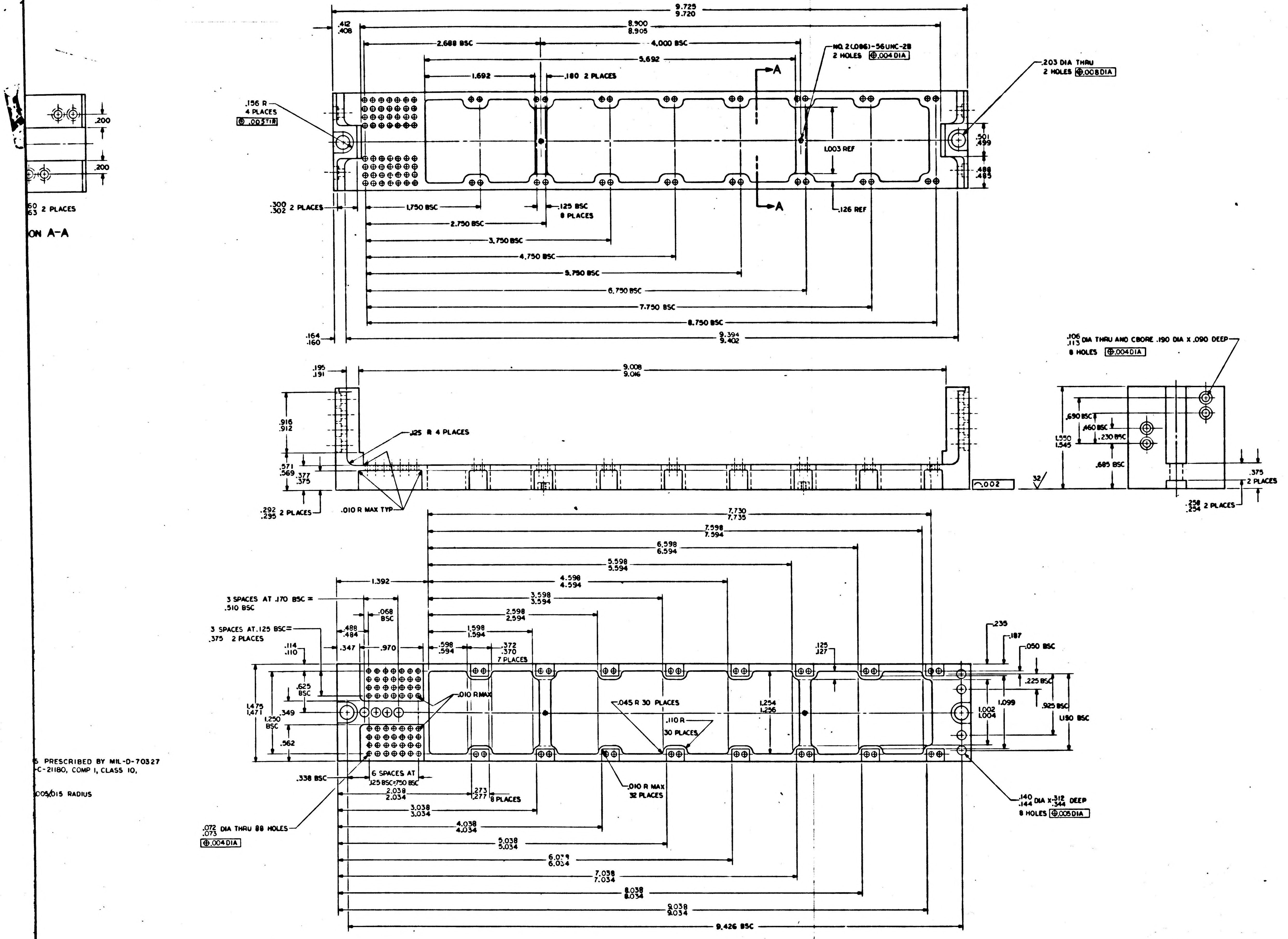

9.725
9.720
.412
.408
8.900
8.905
2.688 BSC
4.000 BSC
5.692
1.692
.180 2 PLACES
NO. 2 (.086)-56UNC-2B
2 HOLES ⊕.004 DIA
.203 DIA THRU
2 HOLES ⊕.008 DIA
A
.156 R
4 PLACES
◎ .005 TIR
.200
.200
.501
.499
1.003 REF
.488
.485
.300
.302 2 PLACES
1.750 BSC
.125 BSC
8 PLACES
.126 REF
2.750 BSC
3.750 BSC
4.750 BSC
5.750 BSC
6.750 BSC
7.750 BSC
8.750 BSC
.164
.160
9.394
9.402
.60
.63 2 PLACES
ON A-A
.195
.191
9.008
9.016
.916
.912
.125 R 4 PLACES
.571
.569
.377
.375
.002
32
.292
.295 2 PLACES
.010 R MAX TYP
.106
.113 DIA THRU AND CBORE .190 DIA X .090 DEEP
8 HOLES ⊕.004 DIA
.690 BSC
.460 BSC
.230 BSC
1.550
1.545
.685 BSC
.375
2 PLACES
.258
.254 2 PLACES
7.730
7.735
7.598
7.594
6.598
6.594
5.598
5.594
4.598
4.594
3.598
3.594
2.598
2.594
1.598
1.594
1.392
3 SPACES AT .170 BSC =
.510 BSC
.068
BSC
3 SPACES AT .125 BSC =
.375 2 PLACES
.488
.484
.347
.970
.598
.594
.372
.370
7 PLACES
.114
.110
.125
.127
.235
.187
.050 BSC
.225 BSC
.625
BSC
.010 R MAX
.045 R 30 PLACES
1.475
1.471
1.250
BSC
.349
.562
.110 R
30 PLACES
1.254
1.256
1.002
1.004
1.099
.925 BSC
1.150 BSC
.338 BSC
6 SPACES AT
.125 BSC = .750 BSC
2.038
2.034
.273
.277 8 PLACES
.010 R MAX
32 PLACES
.140
.144 DIA X .312
.344 DEEP
8 HOLES ⊕.005 DIA
3.038
3.034
4.038
4.034
5.038
5.034
6.079
6.034
7.038
7.034
8.038
8.034
9.038
9.034
9.426 BSC
.072
.073 DIA THRU 88 HOLES
⊕.004 DIA
5 PRESCRIBED BY MIL-D-70327
-C-21180, COMP I, CLASS 10,
.005/.015 RADIUS

QTY REQD	PART OR IDENTIFYING NO.	NOMENCLATURE OR DESCRIPTION	FIND NO.

LIST OF MATERIALS

1003135	
NEXT ASSY	USED ON
APPLICATION	

UNLESS OTHERWISE SPECIFIED
DIMENSIONS ARE IN INCHES
TOLERANCES ON
FRACTIONS ± DECIMALS ±.005 ANGLES ±
DO NOT SCALE THIS DRAWING
MATERIAL
HEAT TREATMENT
FINAL FINISH

MIT
INSTRUMENTATION LAB
CAMBRIDGE MASS
DRAWN D. J. Gilman DATE 8/9/63
CHECKED 13 Aug 63
APPROVAL W. B. 13 Aug 63
APPROVAL
NASA APPROVAL
MIT APPROVAL W. Kupfer 14 Aug 63

MANNED SPACECRAFT CENTER
HOUSTON, TEXAS

HEADER
ROPE MEMORY MODULE

CODE IDENT NO. — SIZE J NASA DRAWING NO. 1004231
SCALE 2/1 WT SHEET 1 OF 1

1004231 D

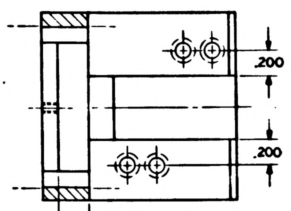

.200
.200
.260
.263 2 PLACES

SECTION A-A

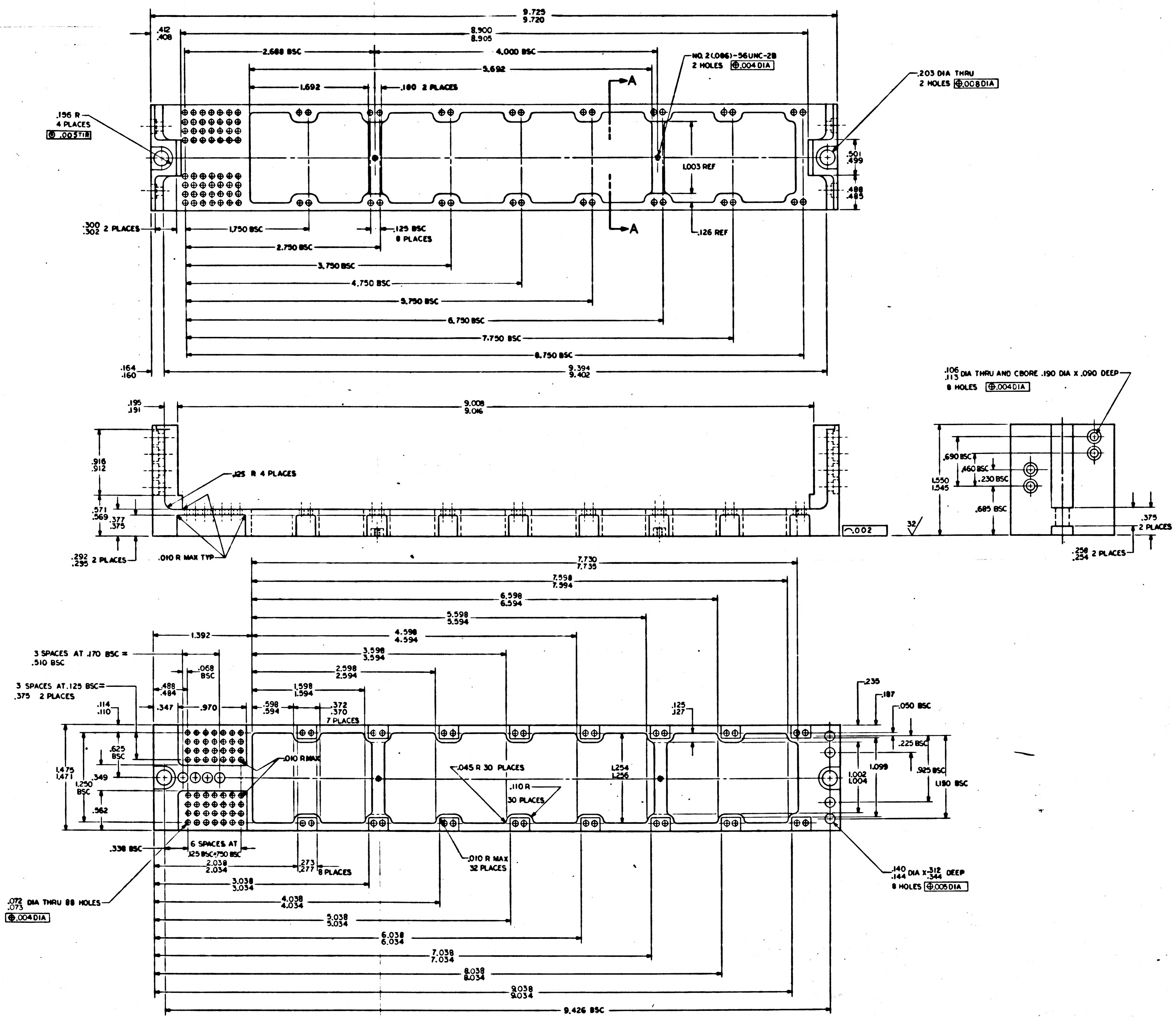

9.725
9.720
8.900
8.905
.412
.408
2.688 BSC
4.000 BSC
5.692
1.692
.180 2 PLACES
NO. 2(.086)-56UNC-2B
2 HOLES ⊕.004 DIA
.203 DIA THRU
2 HOLES ⊕.008 DIA
.156 R
4 PLACES
◎.003 TIR
A
A
1.003 REF
.501
.499
.488
.485
.126 REF
.300
.302 2 PLACES
1.750 BSC
.125 BSC
8 PLACES
2.750 BSC
3.750 BSC
4.750 BSC
5.750 BSC
6.750 BSC
7.750 BSC
8.750 BSC
.164
.160
9.394
9.402
.195
.191
9.008
9.016
.916
.912
.125 R 4 PLACES
.571
.569
.377
.375
.292
.295 2 PLACES
.010 R MAX TYP
⌒.002
32
.106
.113 DIA THRU AND CBORE .190 DIA X .090 DEEP
8 HOLES ⊕.004 DIA
.690 BSC
.460 BSC
.230 BSC
1.550
1.545
.685 BSC
.375
2 PLACES
.256
.254 2 PLACES
7.730
7.735
7.598
7.594
6.598
6.594
5.598
5.594
4.598
4.594
3.598
3.594
2.598
2.594
1.598
1.594
1.392
3 SPACES AT .170 BSC =
.510 BSC
.068
BSC
3 SPACES AT .125 BSC=
.375 2 PLACES
.488
.484
.347
.970
.598
.594
.372
.370
7 PLACES
.114
.110
.625
BSC
.010 R MAX
.045 R 30 PLACES
.110 R
30 PLACES
1.254
1.256
.125
.127
.235
.187
.050 BSC
.225 BSC
1.099
.925 BSC
1.190 BSC
1.002
1.004
1.475
1.471
1.250
BSC
.349
.562
.338 BSC
6 SPACES AT
.125 BSC=.750 BSC
2.038
2.034
.273
.277 8 PLACES
.010 R MAX
32 PLACES
.140
.144 DIA X .312
.344 DEEP
8 HOLES ⊕.005 DIA
.072
.073 DIA THRU 88 HOLES
⊕.004 DIA
3.038
3.034
4.038
4.034
5.038
5.034
6.038
6.034
7.038
7.034
8.038
8.034
9.038
9.034
9.426 BSC

NOTES
1. INTERPRET DRAWING IN ACCORDANCE WITH STANDARDS PRESCRIBED BY MIL-D-70327
2. MATL: DIE OR INVESTMENT CAST A356 AL PER MIL-C-21180, COMP 1, CLASS 10,
ALT MATL: 6061-T6 AL PER QQ-A-327, TEMP T6
3. FINISH: BLACK ANODIZE PER MIL-A-8625, TYPE II
4. UNLESS OTHERWISE SPECIFIED ALL FILLETS AND ROUNDS .005/.015 RADIUS
5. REMOVE ALL BURRS AND BREAK SHARP EDGES .005/.015
6. UNLESS OTHERWISE SPECIFIED 125√ ALL OVER.

1003135	
NEXT ASSY	USED ON
APPLICATION	

UNLESS OTHERWISE SPECIFIED
DIMENSIONS ARE IN INCHES
TOLERANCES ON
FRACTIONS ± DECIMALS ±.005 ANGLES ±
DO NOT SCALE THIS DRAWING

MATERIAL

HEAT TREATMENT

FINAL FINISH

QTY REQD

1004231 D

1004231 E

LTR	DESCRIPTION	DATE	APPROVAL
A	REVISED PER TDRR 03451	[illegible]	[illegible]
B	REVISED PER TDRR 6442	[illegible]	[illegible]
C	REVISED PER TDRR 04x [illegible]	[illegible]	WR
D	REVISED PER TDRR 08411 DR R.W.D. [illegible] CHK [illegible]	5/[illegible]/64	[illegible]
E	REVISED PER TDRR 10123 DR [illegible] CHK P.A.L.	4 Jun 64	[illegible]

REVISIONS 02545

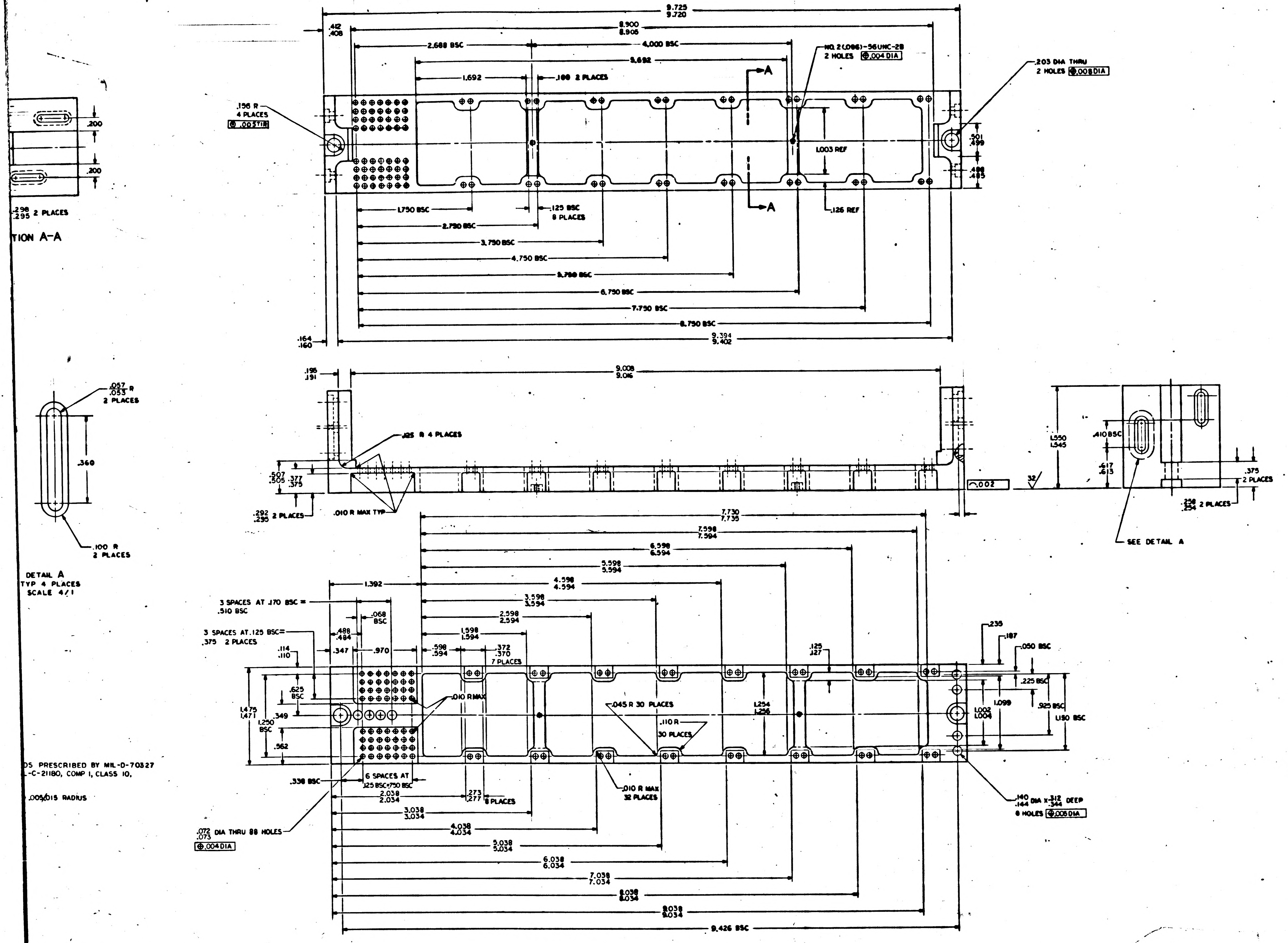

9.725
9.720
8.900
8.905
.412
.408
2.688 BSC
4.000 BSC
5.692
1.692
.188 2 PLACES
NO. 2(.086)-56UNC-2B
2 HOLES ⊕.004 DIA
.203 DIA THRU
2 HOLES ⊕.008 DIA
.156 R
4 PLACES
◎.003 TIR
A
A
1.003 REF
.501
.499
.488
.485
1.750 BSC
.125 BSC
8 PLACES
.126 REF
2.750 BSC
3.750 BSC
4.750 BSC
5.750 BSC
6.750 BSC
7.750 BSC
8.750 BSC
9.394
9.402
.164
.160
.200
.200
.298
.295 2 PLACES
TION A-A
.195
.191
9.008
9.016
.057
.053 R
2 PLACES
.360
.100 R
2 PLACES
DETAIL A
TYP 4 PLACES
SCALE 4/1
.125 R 4 PLACES
.507
.505
.377
.375
.292
.290 2 PLACES
.010 R MAX TYP
.002
32
1.550
1.545
.410 BSC
.617
.613
.375
2 PLACES
.256
.254 2 PLACES
SEE DETAIL A
7.730
7.735
7.598
7.594
6.598
6.594
5.598
5.594
4.598
4.594
3.598
3.594
2.598
2.594
1.598
1.594
1.392
3 SPACES AT .170 BSC =
.510 BSC
.068
BSC
3 SPACES AT .125 BSC=
.375 2 PLACES
.488
.484
.114
.110
.347
.970
.598
.594
.372
.370
7 PLACES
.125
.127
.235
.187
.050 BSC
.225 BSC
.625
BSC
.010 R MAX
1.475
1.471
1.250
BSC
.349
.562
.045 R 30 PLACES
.110 R
30 PLACES
1.254
1.256
1.002
1.004
1.099
.925 BSC
1.150 BSC
.338 BSC
6 SPACES AT
.125 BSC=.750 BSC
2.038
2.034
.273
.277 8 PLACES
.010 R MAX
32 PLACES
3.038
3.034
.140
.144 DIA X .312 .344 DEEP
6 HOLES ⊕.005 DIA
.072
.073 DIA THRU 88 HOLES
⊕.004 DIA
4.038
4.034
5.038
5.034
6.038
6.034
7.038
7.034
8.038
8.034
9.038
9.034
9.426 BSC
4
3
2
D
C
B
A

DS PRESCRIBED BY MIL-D-70327
L-C-21180, COMP I, CLASS 10.

.005/.015 RADIUS

QTY REQD	PART OR IDENTIFYING NO.	NOMENCLATURE OR DESCRIPTION	FIND NO.

LIST OF MATERIALS

NEXT ASSY	USED ON
1003135	

APPLICATION

UNLESS OTHERWISE SPECIFIED
DIMENSIONS ARE IN INCHES
TOLERANCES ON
FRACTIONS ± DECIMALS ±.005 ANGLES ±
DO NOT SCALE THIS DRAWING
MATERIAL
HEAT TREATMENT
FINAL FINISH

MIT
INSTRUMENTATION LAB
CAMBRIDGE, MASS.

DRAWN D.J. [illegible] DATE 8/[illegible]/63
CHECKED [illegible] 13 Aug 63
APPROVAL W.[illegible] 13 Aug 63
APPROVAL [illegible]
NASA APPROVAL [illegible]
[illegible] APPROVAL [illegible] 14 Aug 63

MANNED SPACECRAFT CENTER
HOUSTON, TEXAS

HEADER
ROPE MEMORY MODULE

CODE IDENT NO. —
SIZE J
NASA DRAWING NO. 1004231
SCALE 2/1
WT
SHEET 1 OF 1

1004231 E

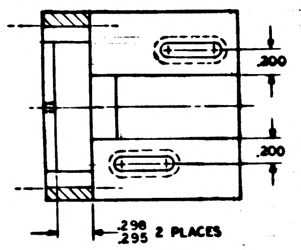

.200
.200
.298
.295 2 PLACES

SECTION A-A

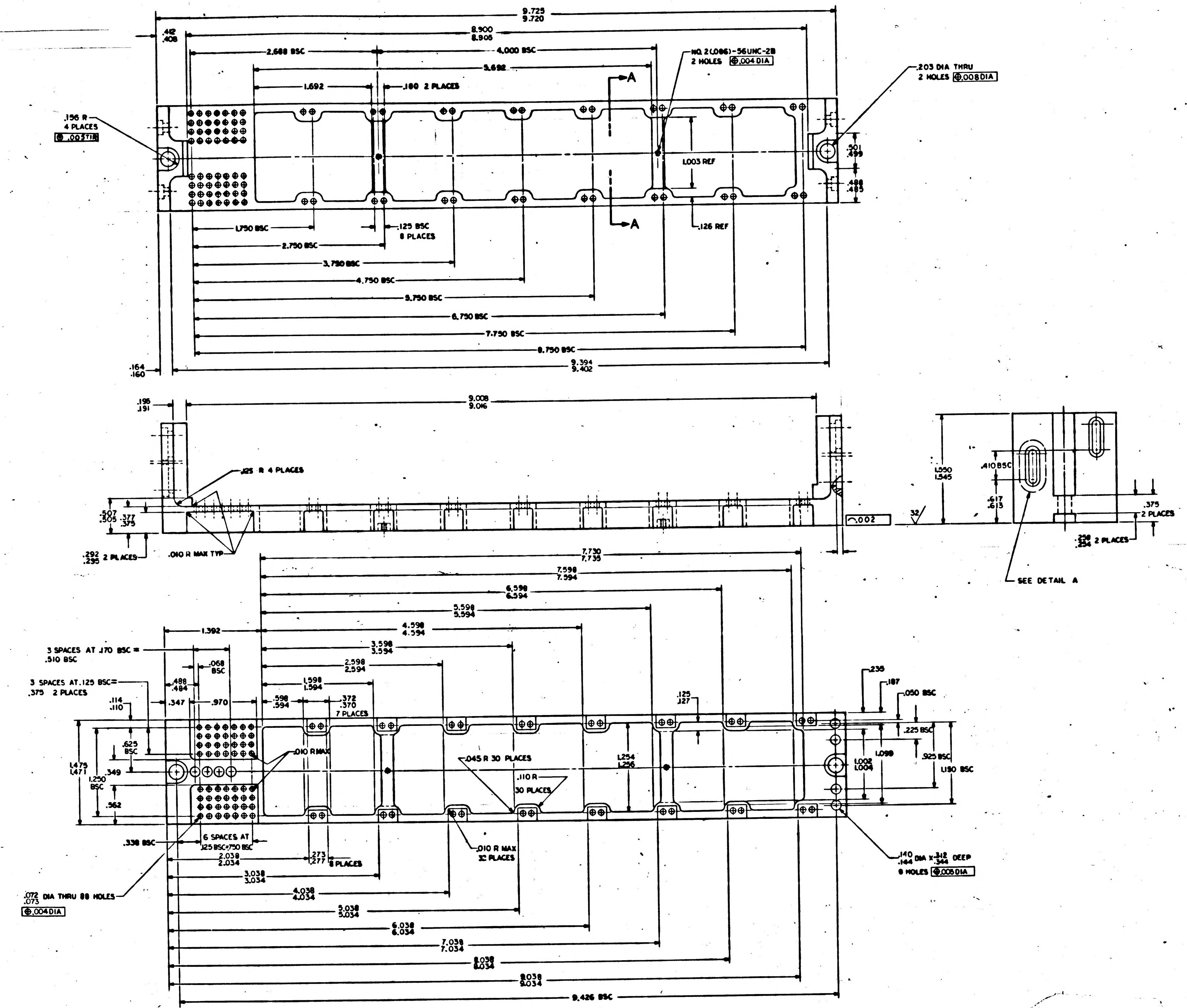

9.725
9.720
.412
.408
8.900
8.905
2.688 BSC
4.000 BSC
5.692
1.692
.180 2 PLACES
NO. 2(.086)-56UNC-2B
2 HOLES ⊕.004 DIA
.203 DIA THRU
2 HOLES ⊕.008 DIA
.156 R
4 PLACES
⊚.003 TIR
A
A
1.003 REF
.501
.499
.488
.485
1.750 BSC
.125 BSC
8 PLACES
.126 REF
2.750 BSC
3.750 BSC
4.750 BSC
5.750 BSC
6.750 BSC
7.750 BSC
8.750 BSC
.164
.160
9.394
9.402
.195
.191
9.008
9.016
.125 R 4 PLACES
.507
.505
.377
.375
.292
.295 2 PLACES
.010 R MAX TYP
.002
32
1.550
1.545
.410 BSC
.617
.613
.375
2 PLACES
.238
.234 2 PLACES
SEE DETAIL A
7.730
7.735
7.598
7.594
6.598
6.594
5.598
5.594
4.598
4.594
3.598
3.594
2.598
2.594
1.598
1.594
1.392
3 SPACES AT .170 BSC =
.510 BSC
.068
BSC
3 SPACES AT .125 BSC=
.375 2 PLACES
.488
.484
.114
.110
.347
.970
.598
.594
.372
.370
7 PLACES
.125
.127
.235
.187
.050 BSC
.225 BSC
.625
BSC
1.475
1.471
.349
1.250
BSC
.562
.010 R MAX
.045 R 30 PLACES
.110 R
30 PLACES
1.254
1.256
1.002
1.004
1.098
.925 BSC
1.150 BSC
.338 BSC
6 SPACES AT
.125 BSC=.750 BSC
2.038
2.034
.273
.277 8 PLACES
.010 R MAX
32 PLACES
3.038
3.034
4.038
4.034
5.038
5.034
6.038
6.034
7.038
7.034
8.038
8.034
9.038
9.034
9.426 BSC
.072
.073 DIA THRU 88 HOLES
⊕.004 DIA
.140
.144 DIA x .312
.344 DEEP
8 HOLES ⊕.005 DIA

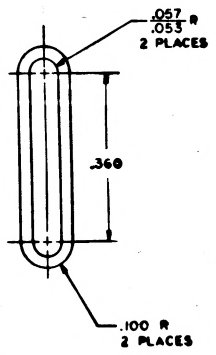

.057 R
.053
2 PLACES
.360
.100 R
2 PLACES

DETAIL A
TYP 4 PLACES
SCALE 4/1

NOTES
1. INTERPRET DRAWING IN ACCORDANCE WITH STANDARDS PRESCRIBED BY MIL-D-70327
2. MATL: DIE OR INVESTMENT CAST A356 AL PER MIL-C-21180, COMP I, CLASS 10,
ALT MATL: 6061-T6 AL PER QQ-A-327, TEMP T6
3. FINISH: BLACK ANODIZE PER MIL-A-8625, TYPE II
4. UNLESS OTHERWISE SPECIFIED ALL FILLETS AND ROUNDS .005/.015 RADIUS
5. REMOVE ALL BURRS AND BREAK SHARP EDGES .005/.015
6. UNLESS OTHERWISE SPECIFIED 125/ ALL OVER.

1003135	
NEXT ASSY	USED ON
APPLICATION	

UNLESS OTHERWISE SPECIFIED
DIMENSIONS ARE IN INCHES
TOLERANCES ON
FRACTIONS ± DECIMALS ±.005 ANGLES ±
DO NOT SCALE THIS DRAWING
MATERIAL
NEXT TREATMENT
FINAL FINISH

QTY REQD

1004231 E

1004231 E SH 1/2

F	1004231

REVISIONS	02544		
SYM	DESCRIPTION	DATE	APPROVAL
A	REVISED PER TDRR 03461	9-14-63	
B	REVISED PER TDRR	11-15-63	
C	REVISED PER TDRR 04613	11-13-63	WK
D	REVISED PER TDRR 08411 DR R.U.D. CHK	5/7/64	
E	REVISED PER TDRR 10123 DR CHK R.A.E.	4 Jun 64	
F	REVISED PER TDRR 11910 DR CHK	9/12/64	

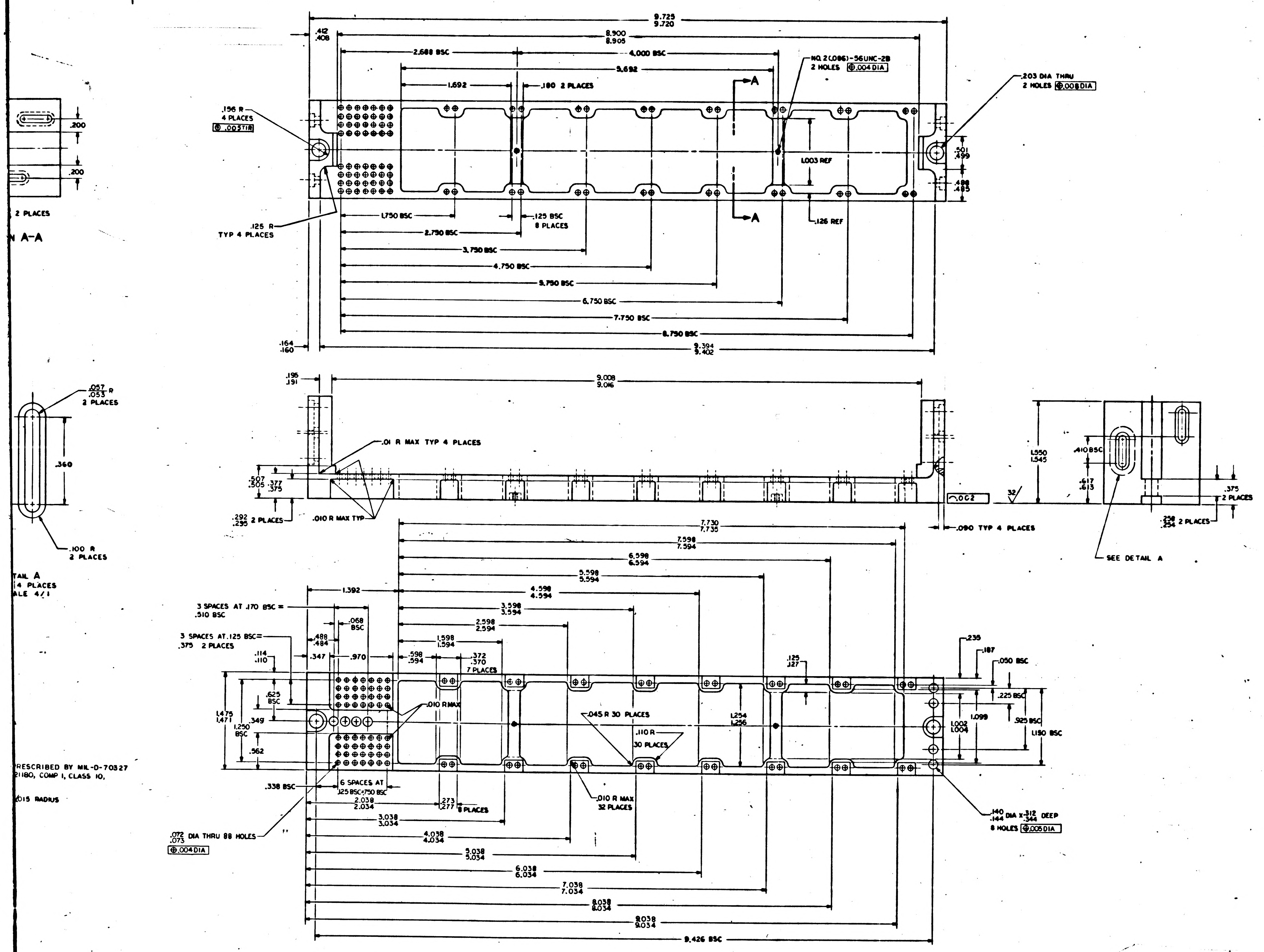

9.725 9.720
.412 .408
8.900 8.905
2.688 BSC
4.000 BSC
5.692
1.692
.180 2 PLACES
NO. 2(.086)-56UNC-2B 2 HOLES ⊕ .004 DIA
.203 DIA THRU 2 HOLES ⊕ .008 DIA
.156 R 4 PLACES ⊕ .005 TIR
A
1.003 REF
.501 .499
.488 .485
.200
.200
2 PLACES
N A-A
.125 R TYP 4 PLACES
1.750 BSC
.125 BSC 8 PLACES
.126 REF
2.750 BSC
3.750 BSC
4.750 BSC
5.750 BSC
6.750 BSC
7.750 BSC
8.750 BSC
.164 .160
9.394 9.402
.195 .191
9.008 9.016
.057 .053 R 2 PLACES
.360
.100 R 2 PLACES
TAIL A
4 PLACES
ALE 4/1
.01 R MAX TYP 4 PLACES
.507 .505
.377 .375
.292 .295 2 PLACES
.010 R MAX TYP
.002
32
.090 TYP 4 PLACES
1.550 1.545
.410 BSC
.617 .613
.375 2 PLACES
.256 .254 2 PLACES
SEE DETAIL A
7.730 7.735
7.598 7.594
6.598 6.594
5.598 5.594
4.598 4.594
3.598 3.594
2.598 2.594
1.598 1.594
1.392
3 SPACES AT .170 BSC = .510 BSC
3 SPACES AT .125 BSC = .375 2 PLACES
.068 BSC
.488 .484
.114 .110
.347
.970
.598 .594
.372 .370 7 PLACES
.125 .127
.235
.187
.050 BSC
.625 BSC
1.475 1.471
.349
1.250 BSC
.562
.010 R MAX
.045 R 30 PLACES
.110 R 30 PLACES
1.254 1.256
1.099
.225 BSC
1.002 1.004
.925 BSC
1.150 BSC
.338 BSC
6 SPACES AT .125 BSC = .750 BSC
2.038 2.034
.273 .277 8 PLACES
.010 R MAX 32 PLACES
.140 .144 DIA X .312 .344 DEEP 8 HOLES ⊕ .005 DIA
3.038 3.034
4.038 4.034
5.038 5.034
6.038 6.034
7.038 7.034
8.038 8.034
9.038 9.034
9.426 BSC
.072 .073 DIA THRU 88 HOLES ⊕ .004 DIA

RESCRIBED BY MIL-D-70327
21180, COMP I, CLASS 10,

015 RADIUS

QTY REQD	PART OR IDENTIFYING NO.	NOMENCLATURE OR DESCRIPTION	FIND NO.

LIST OF MATERIALS

1003135	
NEXT ASSY	USED ON
APPLICATION	

UNLESS OTHERWISE SPECIFIED
DIMENSIONS ARE IN INCHES
TOLERANCES ON
FRACTIONS ± DECIMALS ±.005 ANGLES ±
DO NOT SCALE THIS DRAWING
MATERIAL
HEAT TREATMENT
FINAL FINISH

MIT INSTRUMENTATION LAB
CAMBRIDGE, MASS
DRAWN DATE 8/9/63
CHECKED 13 Aug 63
APPROVAL 13 Aug 63
APPROVAL
NASA APPROVAL
MIT APPROVAL 14 Aug 63

MANNED SPACECRAFT CENTER
HOUSTON, TEXAS

HEADER
ROPE MEMORY MODULE

CODE IDENT NO. —— | SIZE J | NASA DRAWING NO. 1004231
SCALE 2/1 | WT | SHEET 1 OF 1

D C B A

1004231 F

F 2/2

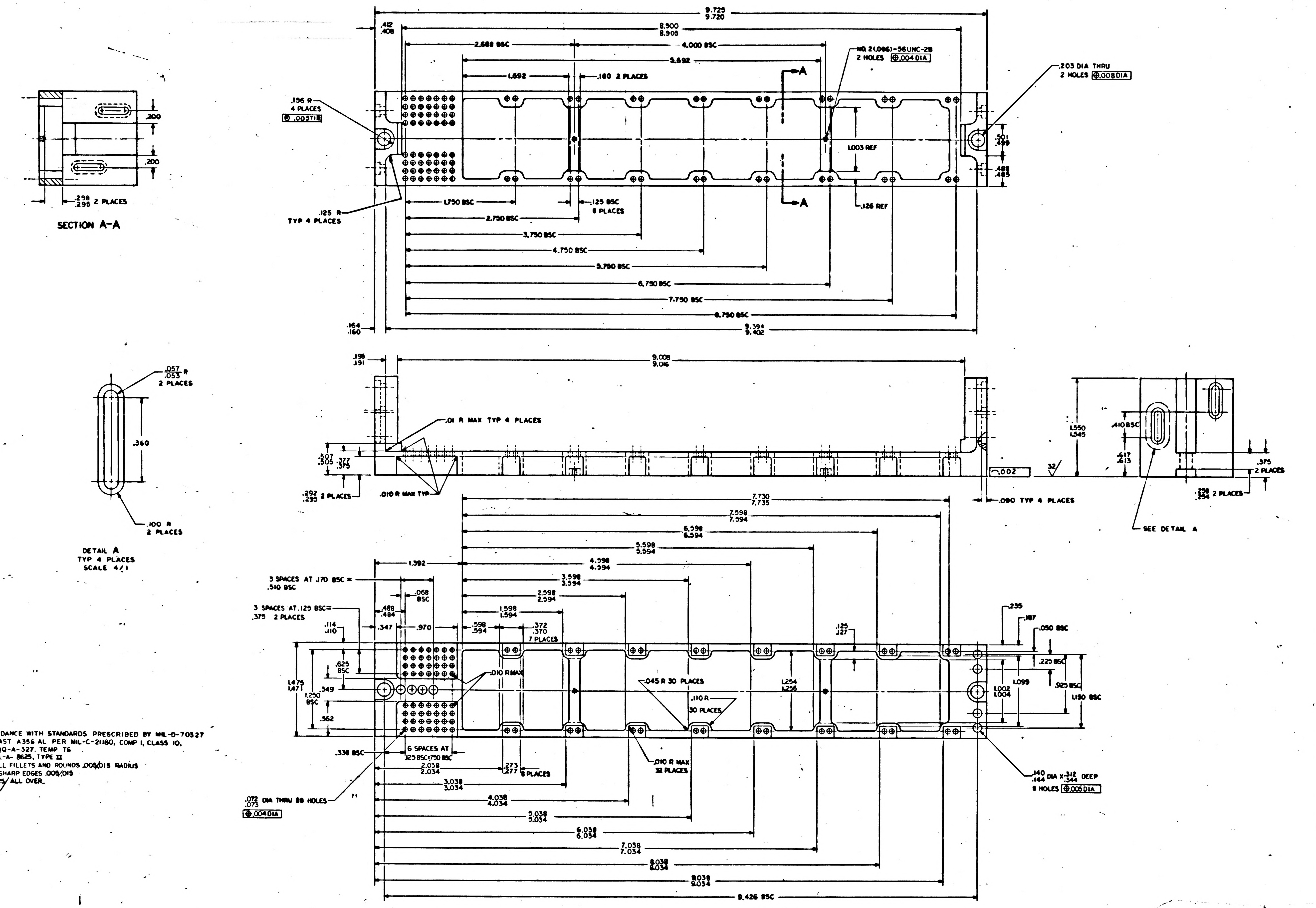

SECTION A-A
DETAIL A
TYP 4 PLACES
SCALE 4/1
9.725
9.720
8.900
8.905
2.688 BSC
4.000 BSC
5.692
1.692
.180 2 PLACES
NO. 2(.086)-56UNC-2B
2 HOLES ⊕ .004 DIA
.203 DIA THRU
2 HOLES ⊕ .008 DIA
.156 R
4 PLACES
.125 R
TYP 4 PLACES
1.003 REF
.126 REF
.125 BSC
8 PLACES
1.750 BSC
2.750 BSC
3.750 BSC
4.750 BSC
5.750 BSC
6.750 BSC
7.750 BSC
8.750 BSC
9.394
9.402
9.008
9.016
.01 R MAX TYP 4 PLACES
.010 R MAX TYP
.090 TYP 4 PLACES
SEE DETAIL A
3 SPACES AT .170 BSC = .510 BSC
3 SPACES AT .125 BSC = .375 2 PLACES
6 SPACES AT .125 BSC = .750 BSC
.045 R 30 PLACES
.110 R
30 PLACES
.010 R MAX
32 PLACES
.140 DIA X .312 DEEP
.144 .344
8 HOLES ⊕ .005 DIA
.072 DIA THRU 88 HOLES
.073
⊕ .004 DIA
9.426 BSC

NOTES

1. INTERPRET DRAWING IN ACCORDANCE WITH STANDARDS PRESCRIBED BY MIL-D-70327
2. MATL: DIE OR INVESTMENT CAST A356 AL PER MIL-C-21180, COMP I, CLASS 10, ALT MATL: 6061-T6 AL PER QQ-A-327, TEMP T6
3. FINISH: BLACK ANODIZE PER MIL-A-8625, TYPE II
4. UNLESS OTHERWISE SPECIFIED ALL FILLETS AND ROUNDS .005/.015 RADIUS
5. REMOVE ALL BURRS AND BREAK SHARP EDGES .005/.015
6. UNLESS OTHERWISE SPECIFIED 125/ ALL OVER.

UNLESS OTHERWISE SPECIFIED
DIMENSIONS ARE IN INCHES
TOLERANCES ON

FRACTIONS	DECIMALS	ANGLES
±	±.005	±

DO NOT SCALE THIS DRAWING

MATERIAL

HEAT TREATMENT

FINAL FINISH

NEXT ASSY	USED ON
1003135	

APPLICATION

1004231 F

MASTER

SYM	DESCRIPTION	DATE	APPROVAL
A	REVISED PER TDRR 03457	9-26-63	
B	REVISED PER TDRR 04612	11-15-63	
C	REVISED PER TDRR 046.3	11-13-63	
D	REVISED PER TDRR 08411 DR R.W. D. CHK	5/2/64	
E	REVISED PER TDRR 10123 DR CHK P.F.E.	4 Jun 64	
F	REVISED PER TDRR 11910 DR A.A. Clement CHK OUM RMM	8/13/64	
G	REVISED PER TDRR 13113 DR CHK OUM RTM	10/9/64	

REVISIONS 02544

1004231 G

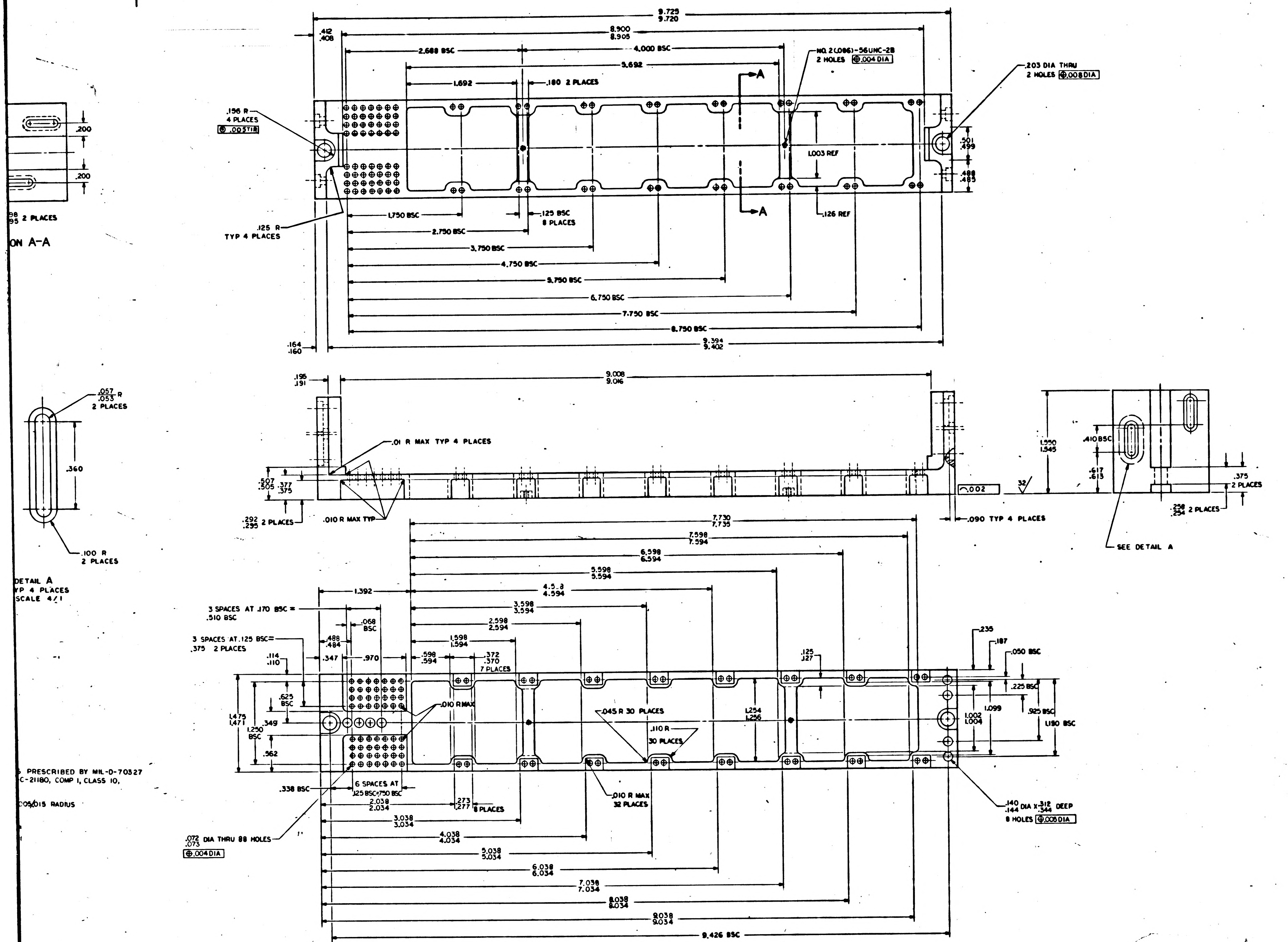

4
3
2
1
D
C
B
A
9.725
9.720
.412
.408
8.900
8.905
4.000 BSC
2.688 BSC
5.692
NO. 2(.086)-56UNC-2B
2 HOLES ⊕ .004 DIA
.203 DIA THRU
2 HOLES ⊕ .008 DIA
1.692
.180 2 PLACES
A
A
.156 R
4 PLACES
◎ .005 TIR
.200
.200
.501
.499
1.003 REF
.488
.485
.198
.195 2 PLACES
SECTION A-A
.125 R
TYP 4 PLACES
1.750 BSC
.125 BSC
8 PLACES
.126 REF
2.750 BSC
3.750 BSC
4.750 BSC
5.750 BSC
6.750 BSC
7.750 BSC
8.750 BSC
9.394
9.402
.164
.160
.195
.191
9.008
9.016
.057
.053 R
2 PLACES
.360
.100 R
2 PLACES
DETAIL A
TYP 4 PLACES
SCALE 4/1
.01 R MAX TYP 4 PLACES
.507
.505
.377
.375
.292
.295 2 PLACES
.010 R MAX TYP
⌒ .002
32
1.550
1.545
.410 BSC
.617
.613
.375
2 PLACES
.258
.254 2 PLACES
.090 TYP 4 PLACES
SEE DETAIL A
7.730
7.735
7.598
7.594
6.598
6.594
5.598
5.594
4.598
4.594
3.598
3.594
2.598
2.594
1.598
1.594
1.392
.598
.594
.372
.370
7 PLACES
3 SPACES AT .170 BSC =
.510 BSC
.068
BSC
3 SPACES AT .125 BSC =
.375 2 PLACES
.488
.484
.114
.110
.347
.970
.125
.127
.235
.187
.050 BSC
.225 BSC
1.099
.925 BSC
1.002
1.004
1.180 BSC
.625
BSC
1.475
1.471
1.250
BSC
.349
.562
.010 R MAX
.045 R 30 PLACES
.110 R
30 PLACES
1.254
1.256
.338 BSC
6 SPACES AT
.125 BSC=.750 BSC
2.038
2.034
.273
.277 8 PLACES
.010 R MAX
32 PLACES
3.038
3.034
4.038
4.034
5.038
5.034
6.038
6.034
7.038
7.034
8.038
8.034
9.038
9.034
9.426 BSC
.140
.144 DIA X .312
.344 DEEP
8 HOLES ⊕ .005 DIA
.072
.073 DIA THRU 88 HOLES
⊕ .004 DIA
CORDANCE
CAST
QQ-A-
1625, TY
ALL FIL
AK SHARP
0 125/ AL
S PRESCRIBED BY MIL-D-70327
C-21180, COMP 1, CLASS 10,
.005/.015 RADIUS

QTY REQD	PART OR IDENTIFYING NO.	NOMENCLATURE OR DESCRIPTION	FIND NO.

LIST OF MATERIALS

1003135	
NEXT ASSY	USED ON
APPLICATION	

UNLESS OTHERWISE SPECIFIED
DIMENSIONS ARE IN INCHES
TOLERANCES ON
FRACTIONS ± DECIMALS ±.005 ANGLES ±
DO NOT SCALE THIS DRAWING
MATERIAL
HEAT TREATMENT
FINAL FINISH

MIT
INSTRUMENTATION LAB
CAMBRIDGE, MASS
CONTRACT
DRAWN DATE 8/8/63
CHECKED 13 Aug 63
APPROVAL W.B. 13 Aug 63
APPROVAL
NASA APPROVAL
MIT APPROVAL 14 Aug 63

MANNED SPACECRAFT CENTER
HOUSTON, TEXAS

HEADER
ROPE MEMORY MODULE

CODE IDENT NO. —
SIZE J
NASA DRAWING NO. 1004231
SCALE 2/1
WT
SHEET 1 OF 1

1004231 G

04231 G

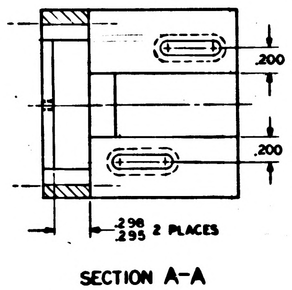

.200
.200
.298
.295 2 PLACES

SECTION A-A

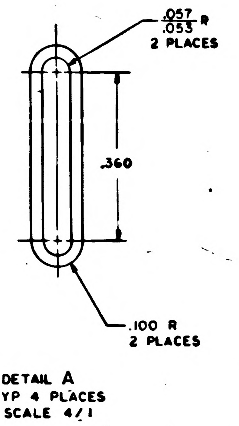

.057
.053 R
2 PLACES
.360
.100 R
2 PLACES

DETAIL A
TYP 4 PLACES
SCALE 4/1

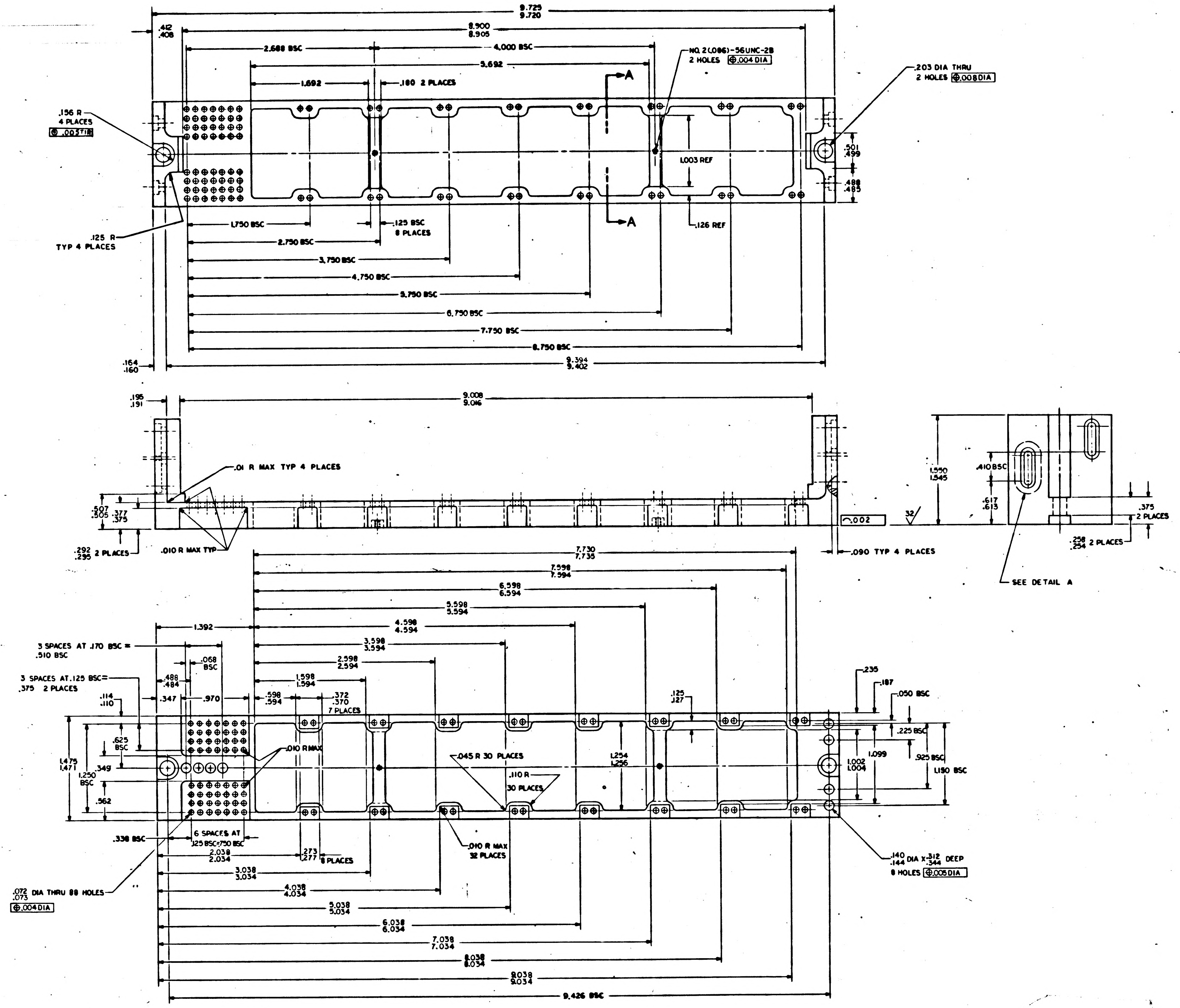

9.725
9.720
.412
.408
8.900
8.905
2.688 BSC
4.000 BSC
5.692
1.692
.180 2 PLACES
NO. 2 (.086) -56UNC-2B
2 HOLES ⊕ .004 DIA
.203 DIA THRU
2 HOLES ⊕ .008 DIA
.156 R
4 PLACES
.003 TIR
A
A
1.003 REF
.501
.499
.488
.485
.125 R
TYP 4 PLACES
1.750 BSC
.125 BSC
8 PLACES
.126 REF
2.750 BSC
3.750 BSC
4.750 BSC
5.750 BSC
6.750 BSC
7.750 BSC
8.750 BSC
.164
.160
9.394
9.402
.195
.191
9.008
9.016
.01 R MAX TYP 4 PLACES
.507
.505
.377
.375
.292
.295 2 PLACES
.010 R MAX TYP
.002
32
.090 TYP 4 PLACES
1.550
1.545
.410 BSC
.617
.613
.375
2 PLACES
.258
.254 2 PLACES
SEE DETAIL A
7.730
7.735
7.598
7.594
6.598
6.594
5.598
5.594
4.598
4.594
3.598
3.594
2.598
2.594
1.598
1.594
.598
.594
1.392
3 SPACES AT .170 BSC =
.510 BSC
.068
BSC
3 SPACES AT .125 BSC =
.375 2 PLACES
.488
.484
.347
.970
.114
.110
.372
.370
7 PLACES
.125
.127
.235
.187
.050 BSC
.225 BSC
.625
BSC
.010 R MAX
1.475
1.471
1.250
BSC
.349
.562
.045 R 30 PLACES
.110 R
30 PLACES
1.254
1.256
1.002
1.004
1.099
.925 BSC
1.150 BSC
.338 BSC
6 SPACES AT
.125 BSC = .750 BSC
2.038
2.034
.273
.277 8 PLACES
.010 R MAX
32 PLACES
.140
.144 DIA X .312
.344 DEEP
8 HOLES ⊕ .005 DIA
.072 DIA THRU 88 HOLES
.073
⊕ .004 DIA
3.038
3.034
4.038
4.034
5.038
5.034
6.038
6.034
7.038
7.034
8.038
8.034
9.038
9.034
9.426 BSC

NOTES
1 INTERPRET DRAWING IN ACCORDANCE WITH STANDARDS PRESCRIBED BY MIL-D-70327
2. MATL: DIE OR INVESTMENT CAST A356 AL PER MIL-C-21180, COMP I, CLASS 10,
ALT MATL: 6061-T6 AL PER QQ-A-327. TEMP T6
3. FINISH: ANODIZE PER MIL-A-8625, TYPE I, DYED BLACK
4. UNLESS OTHERWISE SPECIFIED ALL FILLETS AND ROUNDS .005/.015 RADIUS
5. REMOVE ALL BURRS AND BREAK SHARP EDGES .005/.015
6. UNLESS OTHERWISE SPECIFIED 125/ ALL OVER

1003135	
NEXT ASSY	USED ON
APPLICATION	

UNLESS OTHERWISE SPECIFIED
DIMENSIONS ARE IN INCHES
TOLERANCES ON
FRACTIONS DECIMALS ANGLES
± ±.005 ±
DO NOT SCALE THIS DRAWING
MATERIAL
HEAT TREATMENT
FINAL FINISH

1004231 H

SYM	DESCRIPTION	DATE	APPROVAL
A	REVISED PER TDRR 03457	5-26-63	
B	REVISED PER TDRR		
C	REVISED PER TDRR 05675	11-13-63	
D	REVISED PER TDRR 08411 DR R.W. O... CHK	5/7/64	
E	REVISED PER TDRR 10123 DR ... CHK R.F.E.	4 Jun 64	
F	REVISED PER TDRR 11910 DR D.A. Clement CHK	8/13/64	
G	REVISED PER TDRR 13113 DR ... CHK	10/6/64	
H	REVISED PER TDRR 14264 DR R. Buchanan CHK	12/2/64	

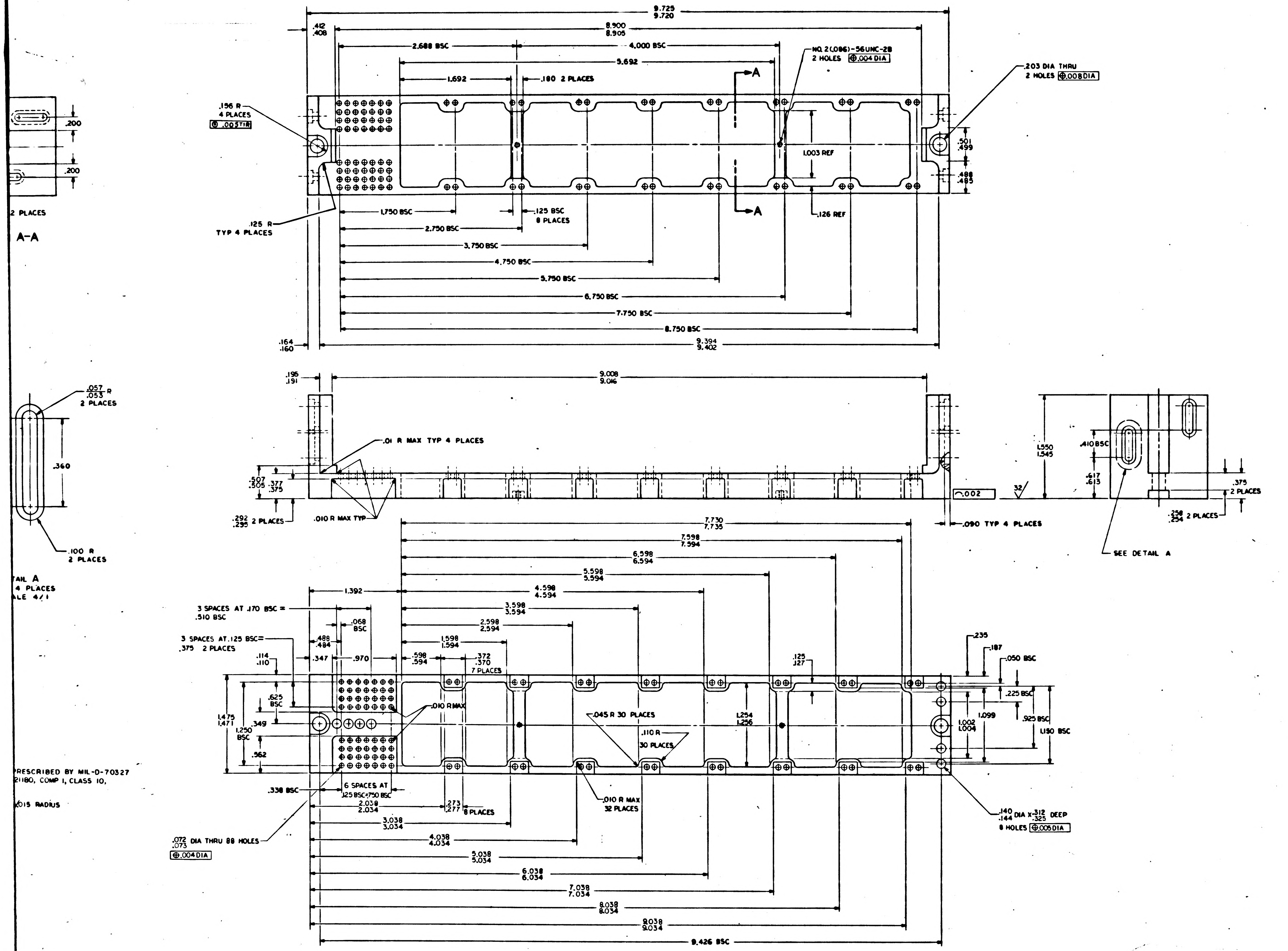

9.725
9.720
8.900
8.905
.412
.408
2.688 BSC
4.000 BSC
5.692
1.692
.180 2 PLACES
NO. 2(.086)-56UNC-2B
2 HOLES ⊕.004 DIA
.203 DIA THRU
2 HOLES ⊕.008 DIA
A
A
.156 R
4 PLACES
⊚ .005 TIR
1.003 REF
.501
.499
.488
.485
.125 R
TYP 4 PLACES
1.750 BSC
.125 BSC
8 PLACES
.126 REF
2.750 BSC
3.750 BSC
4.750 BSC
5.750 BSC
6.750 BSC
7.750 BSC
8.750 BSC
.164
.160
9.394
9.402
.200
.200
2 PLACES
A-A
.195
.191
9.008
9.016
.057
.053 R
2 PLACES
.01 R MAX TYP 4 PLACES
.360
.507
.505
.377
.375
.292
.295 2 PLACES
.010 R MAX TYP
.002
32
.090 TYP 4 PLACES
.100 R
2 PLACES
DETAIL A
4 PLACES
SCALE 4/1
1.550
1.545
.410 BSC
.617
.613
.375
2 PLACES
.258
.254 2 PLACES
SEE DETAIL A
7.730
7.735
7.598
7.594
6.598
6.594
5.598
5.594
4.598
4.594
3.598
3.594
2.598
2.594
1.598
1.594
1.392
3 SPACES AT .170 BSC =
.510 BSC
.068
BSC
3 SPACES AT .125 BSC=
.375 2 PLACES
.488
.484
.114
.110
.347
.970
.598
.594
.372
.370
7 PLACES
.125
.127
.235
.187
.050 BSC
.225 BSC
.925 BSC
1.150 BSC
1.099
1.002
1.004
.625
BSC
1.475
1.471
.349
1.250
BSC
.562
.010 R MAX
.045 R 30 PLACES
.110 R
30 PLACES
1.254
1.256
.338 BSC
6 SPACES AT
.125 BSC=.750 BSC
2.038
2.034
.273
.277 8 PLACES
.010 R MAX
32 PLACES
3.038
3.034
4.038
4.034
5.038
5.034
6.038
6.034
7.038
7.034
8.038
8.034
9.038
9.034
9.426 BSC
.140
.144 DIA X .312
.325 DEEP
8 HOLES ⊕.005 DIA
.072
.073 DIA THRU 88 HOLES
⊕.004 DIA
PRESCRIBED BY MIL-D-70327
21180, COMP I, CLASS 10,
.015 RADIUS
4
3
2
1
D
C
B
A

QTY REQD	PART OR IDENTIFYING NO.	NOMENCLATURE OR DESCRIPTION	FIND NO.

LIST OF MATERIALS

1003135	
NEXT ASSY	USED ON

APPLICATION

UNLESS OTHERWISE SPECIFIED
DIMENSIONS ARE IN INCHES
TOLERANCES ON
FRACTIONS ± DECIMALS ±.005 ANGLES ±
DO NOT SCALE THIS DRAWING
MATERIAL
HEAT TREATMENT
FINAL FINISH

MIT
INSTRUMENTATION LAB
CAMBRIDGE, MASS
DWG. NO. CONTRACT
DRAWN S.L. Gilman DATE 8/9/63
CHECKED 13 Aug 63
APPROVAL 13 Aug 63
APPROVAL
NASA APPROVAL
MIT APPROVAL 14 Aug 63

MANNED SPACECRAFT CENTER
HOUSTON, TEXAS

HEADER
ROPE MEMORY MODULE

CODE IDENT NO. —
SIZE J
NASA DRAWING NO. 1004231
SCALE 2/1
WT
SHEET 1 OF 1

1004231 H

4231 H

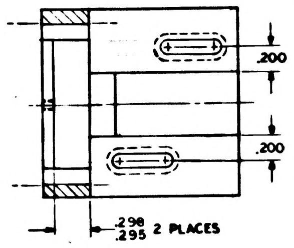

.200
.200
.298
.295 2 PLACES

SECTION A-A

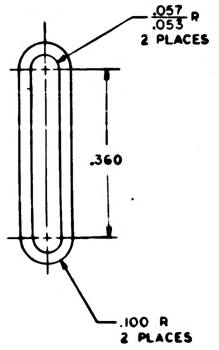

.057
.053 R
2 PLACES
.360
.100 R
2 PLACES

DETAIL A
TYP 4 PLACES
SCALE 4/1

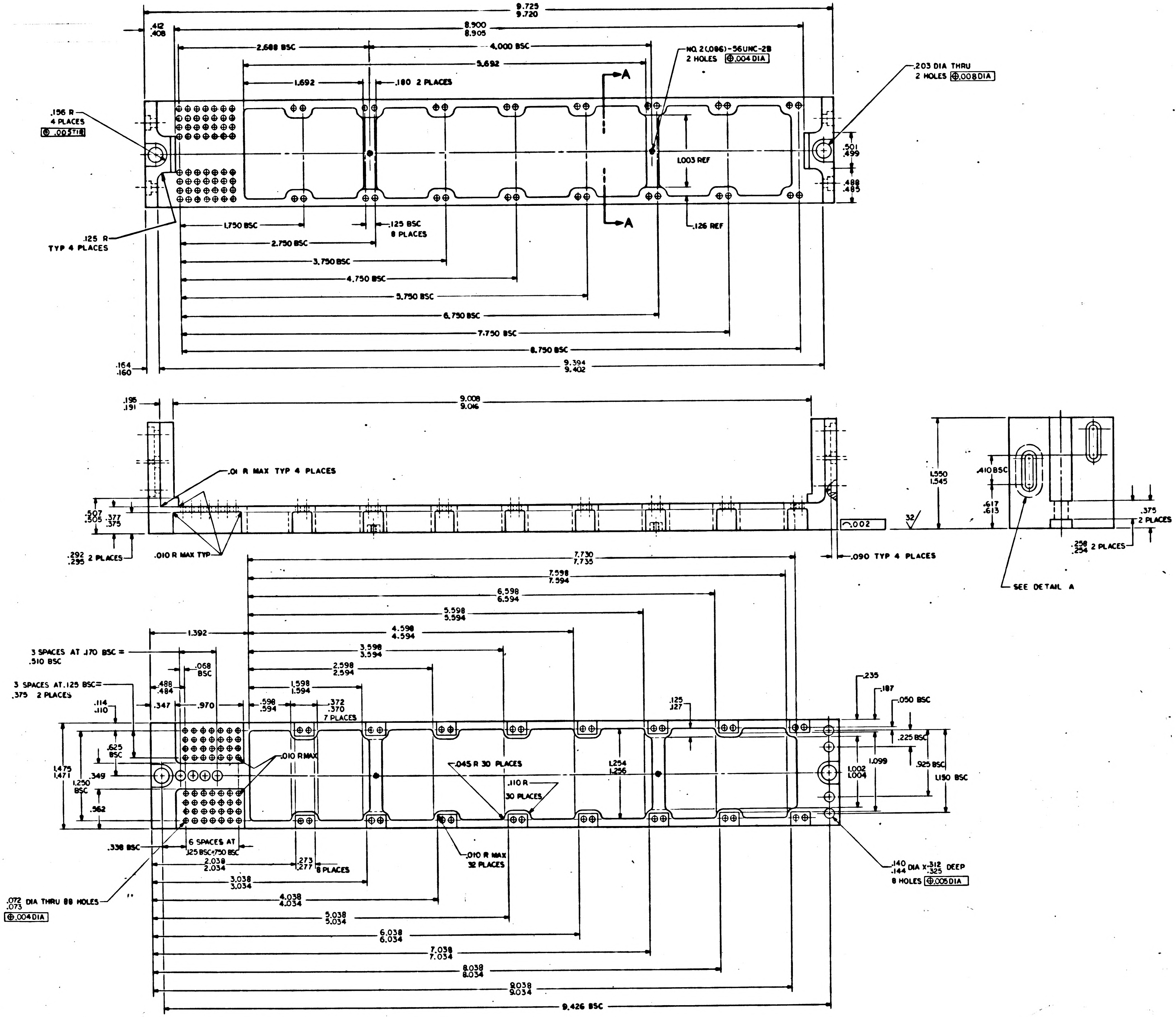

9.725
9.720
8.900
8.905
.412
.408
2.688 BSC
4.000 BSC
5.692
1.692
.180 2 PLACES
NO. 2(.086)-56UNC-2B
2 HOLES ⊕.004 DIA
.203 DIA THRU
2 HOLES ⊕.008 DIA
.156 R
4 PLACES
.005 TIR
A
A
1.003 REF
.501
.499
.488
.485
.126 REF
1.750 BSC
.125 BSC
8 PLACES
.125 R
TYP 4 PLACES
2.750 BSC
3.750 BSC
4.750 BSC
5.750 BSC
6.750 BSC
7.750 BSC
8.750 BSC
.164
.160
9.394
9.402
.195
.191
9.008
9.016
.01 R MAX TYP 4 PLACES
.507
.505
.377
.375
.002
32
.292
.295 2 PLACES
.010 R MAX TYP
.090 TYP 4 PLACES
1.550
1.545
.410 BSC
.617
.613
.375
2 PLACES
.258
.254 2 PLACES
SEE DETAIL A
7.730
7.735
7.598
7.594
6.598
6.594
5.598
5.594
4.598
4.594
3.598
3.594
2.598
2.594
1.598
1.594
1.392
3 SPACES AT .170 BSC = .510 BSC
.068 BSC
3 SPACES AT .125 BSC = .375 2 PLACES
.488
.484
.114
.110
.347
.970
.598
.594
.372
.370
7 PLACES
.125
.127
.235
.187
.050 BSC
.225 BSC
1.099
.925 BSC
1.150 BSC
1.002
1.004
.625 BSC
1.475
1.471
1.250 BSC
.349
.562
.010 R MAX
.045 R 30 PLACES
.110 R
30 PLACES
1.254
1.256
.338 BSC
6 SPACES AT .125 BSC=.750 BSC
2.038
2.034
.273
.277 8 PLACES
.010 R MAX
32 PLACES
.140
.144 DIA X .312
.325 DEEP
8 HOLES ⊕.005 DIA
3.038
3.034
4.038
4.034
5.038
5.034
6.038
6.034
7.038
7.034
8.038
8.034
9.038
9.034
9.426 BSC
.072
.073 DIA THRU 88 HOLES
⊕.004 DIA

NOTES

1. INTERPRET DRAWING IN ACCORDANCE WITH STANDARDS PRESCRIBED BY MIL-D-70327
2. MATL: DIE OR INVESTMENT CAST A356 AL PER MIL-C-21180, COMP I, CLASS 10, ALT MATL: 6061-T6 AL PER QQ-A-327. TEMP T6
3. FINISH: ANODIZE PER MIL-A-8625, TYPE I, DYED BLACK
4. UNLESS OTHERWISE SPECIFIED ALL FILLETS AND ROUNDS .005/.015 RADIUS
5. REMOVE ALL BURRS AND BREAK SHARP EDGES .005/.015
6. UNLESS OTHERWISE SPECIFIED 125/ ALL OVER
7. IDENTIFY PER ND1002019 PARA 3.7.7.1

		UNLESS OTHERWISE SPECIFIED DIMENSIONS ARE IN INCHES TOLERANCES ON FRACTIONS ± DECIMALS ±.005 ANGLES ± DO NOT SCALE THIS DRAWING
		MATERIAL
1003135		HEAT TREATMENT
NEXT ASSY	USED ON	FINAL FINISH
APPLICATION		

QTY REQ

1004231 H

J 1004231

SYM	DESCRIPTION	DATE	APPROVAL
A	REVISED PER TDRR 03461	5-26-63	
B	REVISED PER TDRR 04612	11-13-63	
C	REVISED PER TDRR 04613	11-13-63	
D	REVISED PER TDRR 08411 DR R.V. D. CHK	5/7/64	
E	REVISED PER TDRR 10123 DR CHK	4 Jun 64	
F	REVISED PER TDRR 11910 DR D.A. Clement CHK	8/13/64	
G	REVISED PER TDRR 13113 DR CHK	10/9/64	
H	REVISED PER TDRR 14264 DR P. Buchanan CHK	12/2/64	
J	REVISED PER TDRR 14825 DR CHK	2/4/65	

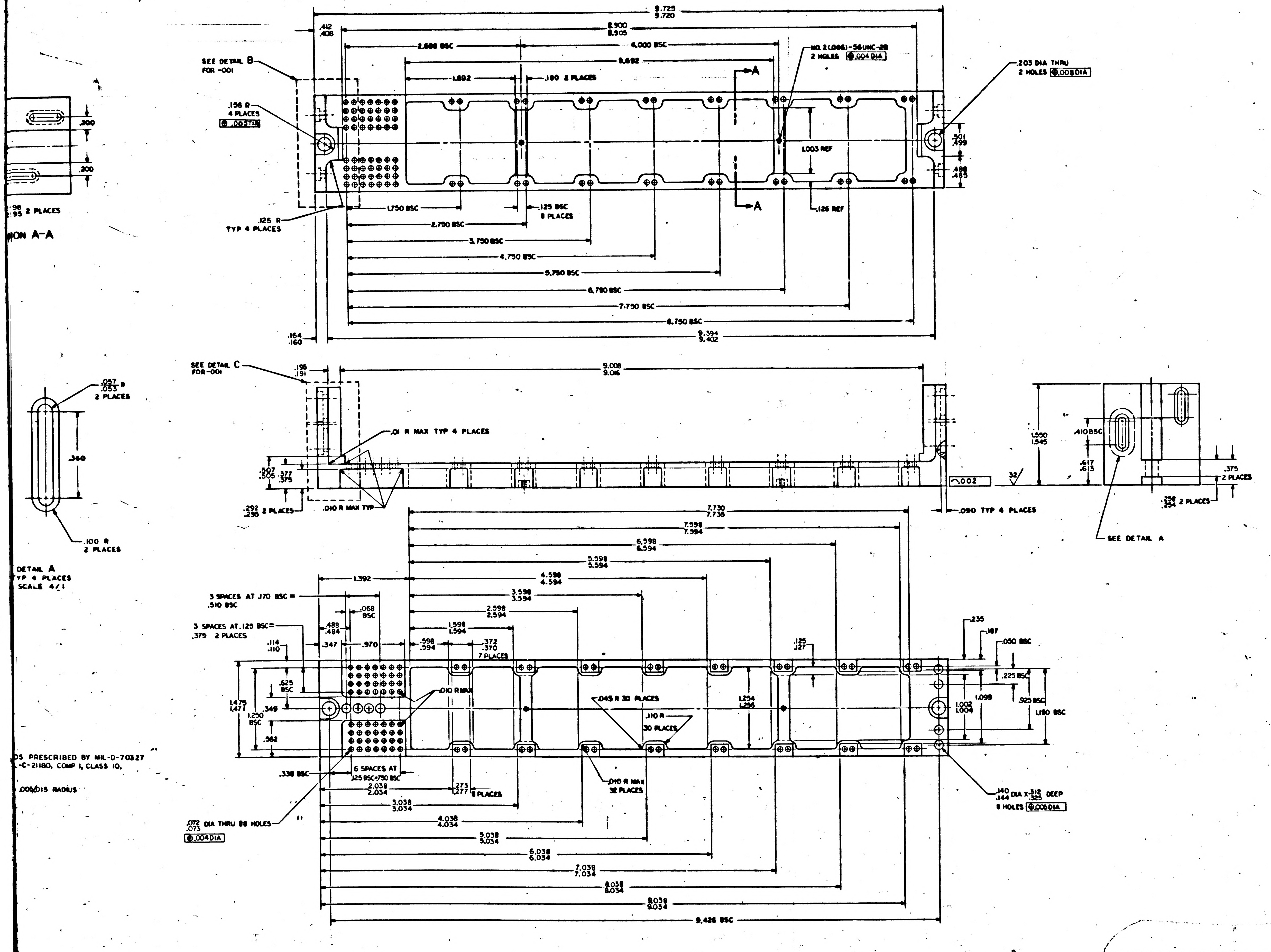

9.725
9.720
8.900
8.905
.412
.408
2.600 BSC
4.000 BSC
5.692
1.692
.180 2 PLACES
NO. 2 (.086)-56UNC-2B
2 HOLES ⊕ .004 DIA
.203 DIA THRU
2 HOLES ⊕ .008 DIA
SEE DETAIL B
FOR -001
.156 R
4 PLACES
⊕ .005 T.I.R.
A
1.003 REF
.501
.499
.488
.485
.125 R
TYP 4 PLACES
1.750 BSC
.125 BSC
8 PLACES
.126 REF
2.750 BSC
3.750 BSC
4.750 BSC
5.750 BSC
6.750 BSC
7.750 BSC
8.750 BSC
9.394
9.402
.164
.160
.200
.200
.198
.195 2 PLACES
SECTION A-A
SEE DETAIL C
FOR -001
.195
.191
9.008
9.016
.01 R MAX TYP 4 PLACES
.507
.505
.377
.375
.292
.295 2 PLACES
.010 R MAX TYP
.002
32
.090 TYP 4 PLACES
1.550
1.545
.410 BSC
.617
.613
.375
2 PLACES
.258
.254 2 PLACES
SEE DETAIL A
.057
.053 R
2 PLACES
.340
.100 R
2 PLACES
DETAIL A
TYP 4 PLACES
SCALE 4/1
7.730
7.735
7.598
7.594
6.598
6.594
5.598
5.594
4.598
4.594
3.598
3.594
2.598
2.594
1.598
1.594
1.392
3 SPACES AT .170 BSC =
.510 BSC
.068
BSC
3 SPACES AT .125 BSC =
.375 2 PLACES
.488
.484
.114
.110
.347
.970
.598
.594
.372
.370
7 PLACES
.125
.127
.235
.187
.050 BSC
.225 BSC
.625
BSC
1.475
1.471
1.250
BSC
.349
.562
.010 R MAX
.045 R 30 PLACES
.110 R
30 PLACES
1.254
1.256
1.002
1.004
1.099
.925 BSC
1.150 BSC
.338 BSC
6 SPACES AT
.125 BSC = .750 BSC
.273
.277 8 PLACES
.010 R MAX
32 PLACES
.140
.144 DIA X .312
.325 DEEP
8 HOLES ⊕ .005 DIA
2.038
2.034
3.038
3.034
4.038
4.034
5.038
5.034
6.038
6.034
7.038
7.034
8.038
8.034
9.038
9.034
9.426 BSC
.072
.073 DIA THRU 88 HOLES
⊕ .004 DIA
DS PRESCRIBED BY MIL-D-70327
-C-21180, COMP I, CLASS 10,
.005/.015 RADIUS

QTY REQD	PART OR IDENTIFYING NO.	NOMENCLATURE OR DESCRIPTION	FIND NO.

LIST OF MATERIALS

1003135	
NEXT ASSY	USED ON
APPLICATION	

UNLESS OTHERWISE SPECIFIED
DIMENSIONS ARE IN INCHES
TOLERANCES ON
FRACTIONS ± DECIMALS ±.005 ANGLES ±
DO NOT SCALE THIS DRAWING
MATERIAL
HEAT TREATMENT
FINAL FINISH

MIT
INSTRUMENTATION LAB
CAMBRIDGE, MASS.
DRAWN DATE
CHECKED 13 Aug 63
APPROVAL 13 Aug 63
APPROVAL
NASA APPROVAL
MIT APPROVAL W. Kuffer 14 Aug 63

MANNED SPACECRAFT CENTER
HOUSTON, TEXAS

HEADER
ROPE MEMORY MODULE

CODE IDENT NO. —
SIZE J
NASA DRAWING NO. 1004231
SCALE 2/1
WT
SHEET 1 OF 1

1004231 J

004231 J

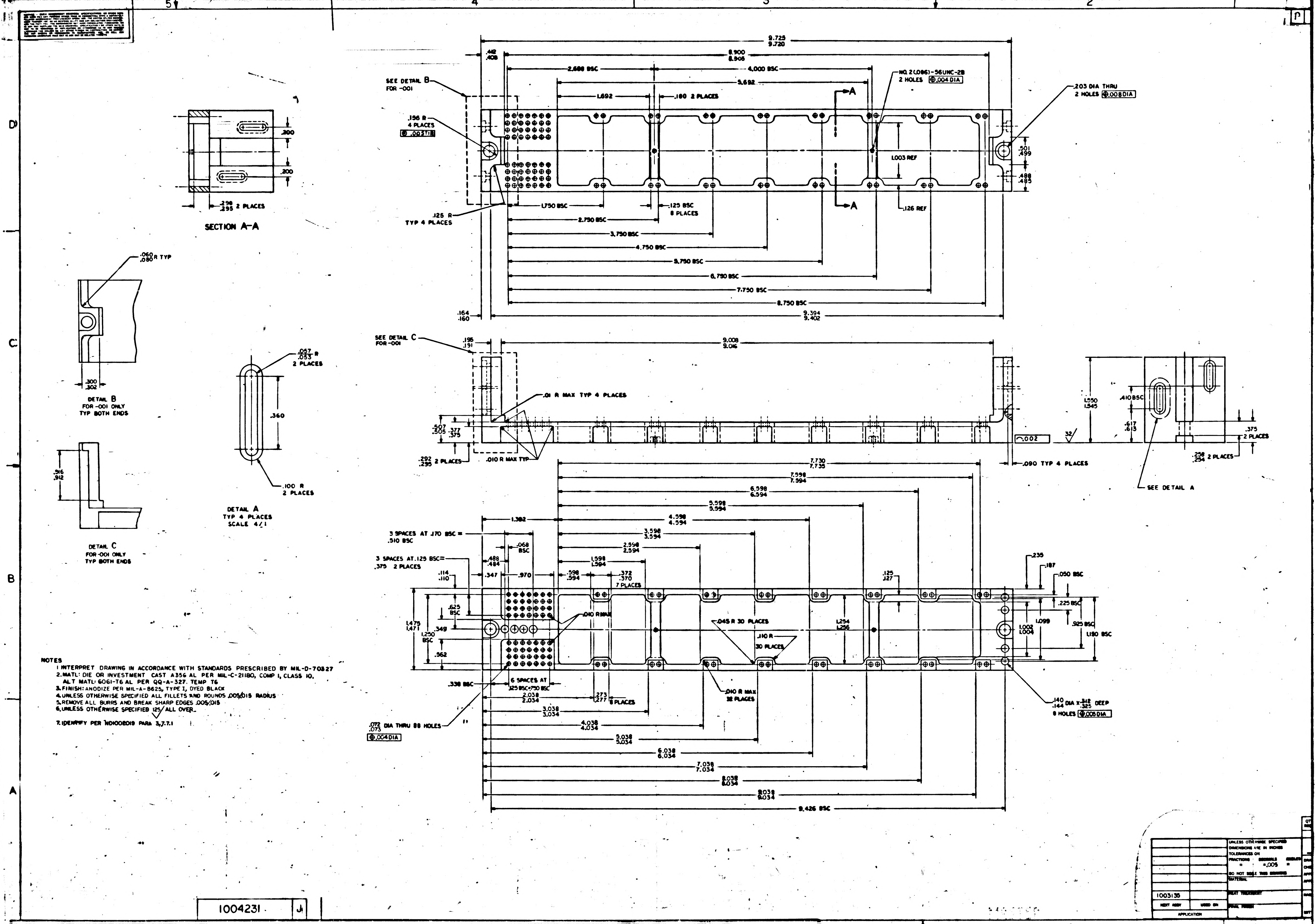
SECTION A-A
.200
.200
.298 .295 2 PLACES
DETAIL B
FOR -001 ONLY
TYP BOTH ENDS
.060 .080 R TYP
.300 .302
DETAIL C
FOR -001 ONLY
TYP BOTH ENDS
.916 .912
DETAIL A
TYP 4 PLACES
SCALE 4/1
.057 .053 R 2 PLACES
.360
.100 R 2 PLACES
SEE DETAIL B FOR -001
SEE DETAIL C FOR -001
SEE DETAIL A
9.725 9.720
8.900 8.905
2.688 BSC
4.000 BSC
5.692
1.692
.180 2 PLACES
NO. 2 (.086)-56UNC-2B 2 HOLES ⊕ .004 DIA
.203 DIA THRU 2 HOLES ⊕ .008 DIA
.156 R 4 PLACES
1.003 REF
.501 .499
.488 .485
.125 R TYP 4 PLACES
1.750 BSC
.125 BSC 8 PLACES
.126 REF
2.750 BSC
3.750 BSC
4.750 BSC
5.750 BSC
6.750 BSC
7.750 BSC
8.750 BSC
9.394 9.402
.164 .160
.412 .408
9.008 9.016
.195 .191
.01 R MAX TYP 4 PLACES
.507 .505
.377 .375
.292 .295 2 PLACES
.010 R MAX TYP
.002
.090 TYP 4 PLACES
1.550 1.545
.410 BSC
.617 .613
.375 2 PLACES
.258 .254 2 PLACES
32
7.730 7.735
7.598 7.594
6.598 6.594
5.598 5.594
4.598 4.594
3.598 3.594
2.598 2.594
1.598 1.594
.598 .594
1.382
3 SPACES AT .170 BSC = .510 BSC
3 SPACES AT .125 BSC = .375 2 PLACES
.068 BSC
.488 .484
.347
.970
.114 .110
.372 .370 7 PLACES
.625 BSC
1.475 1.471
1.250 BSC
.349
.562
.010 R MAX
.045 R 30 PLACES
.110 R 30 PLACES
1.254 1.256
.125 .127
.235
.187
.050 BSC
.225 BSC
1.002 1.004
1.099
.925 BSC
1.180 BSC
.338 BSC
6 SPACES AT .125 BSC = .750 BSC
.273 .277 8 PLACES
.010 R MAX 32 PLACES
2.038 2.034
3.038 3.034
4.038 4.034
5.038 5.034
6.038 6.034
7.038 7.034
8.038 8.034
9.038 9.034
9.426 BSC
.072 .073 DIA THRU 88 HOLES ⊕ .004 DIA
.140 .144 DIA X .312 .325 DEEP 8 HOLES ⊕ .005 DIA
A
A
5
4
3
2
D
C
B
A

NOTES

1. INTERPRET DRAWING IN ACCORDANCE WITH STANDARDS PRESCRIBED BY MIL-D-70327
2. MATL: DIE OR INVESTMENT CAST A356 AL PER MIL-C-21180, COMP I, CLASS 10, ALT MATL: 6061-T6 AL PER QQ-A-327. TEMP T6
3. FINISH: ANODIZE PER MIL-A-8625, TYPE I, DYED BLACK
4. UNLESS OTHERWISE SPECIFIED ALL FILLETS AND ROUNDS .005/.015 RADIUS
5. REMOVE ALL BURRS AND BREAK SHARP EDGES .005/.015
6. UNLESS OTHERWISE SPECIFIED 125/ ALL OVER
7. IDENTIFY PER ND1002019 PARA 3.7.7.1

1003135	
NEXT ASSY	USED ON
APPLICATION	

UNLESS OTHERWISE SPECIFIED
DIMENSIONS ARE IN INCHES
TOLERANCES ON
FRACTIONS ± DECIMALS ±.005 ANGLES ±
DO NOT SCALE THIS DRAWING
MATERIAL
HEAT TREATMENT
FINAL FINISH

1004231	J

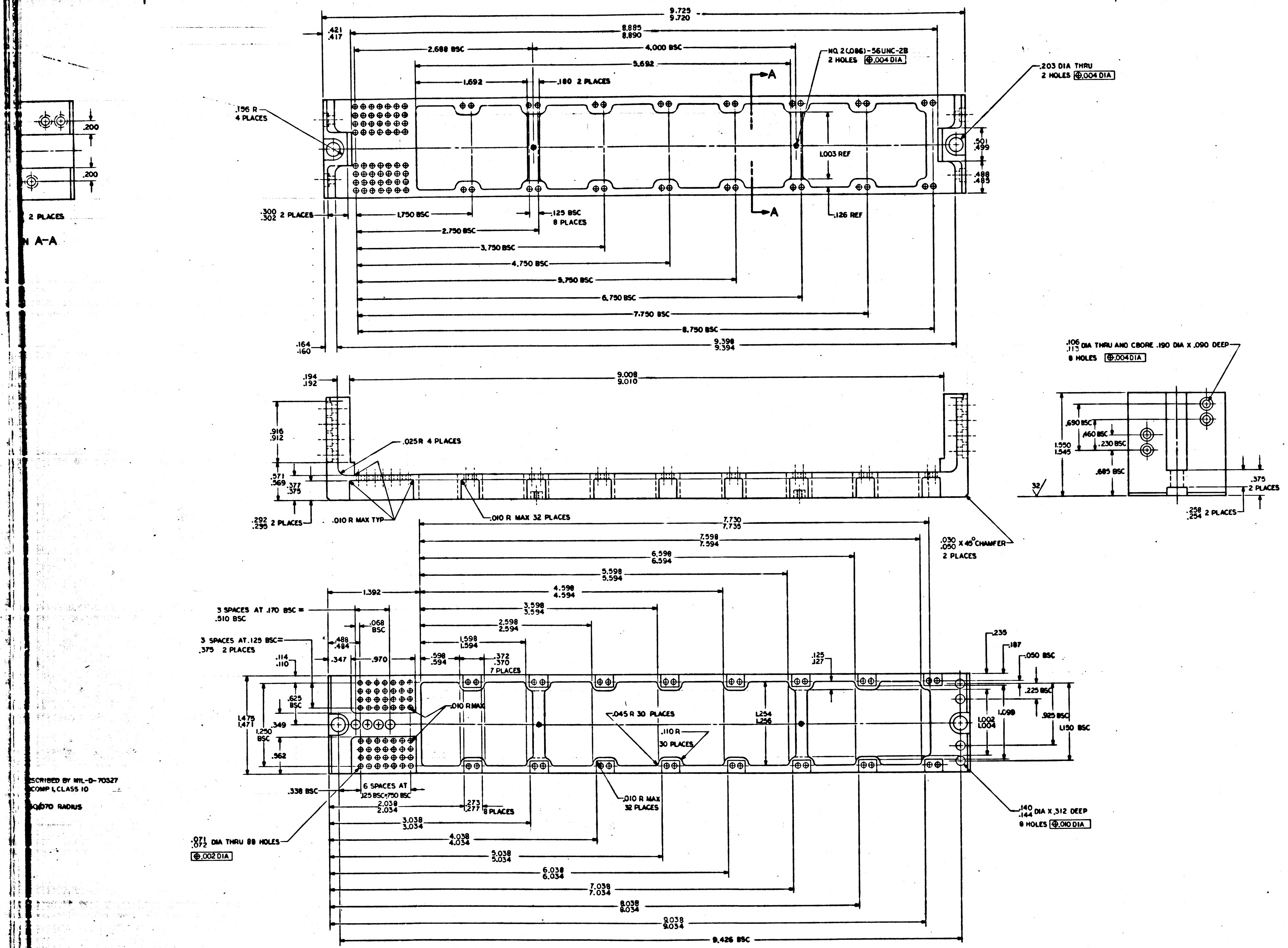
9.725
9.720
8.885
8.890
.421
.417
2.688 BSC
4.000 BSC
5.692
1.692
.180 2 PLACES
NO. 2 (.086)-56UNC-2B
2 HOLES ⊕.004 DIA
.203 DIA THRU
2 HOLES ⊕.004 DIA
A
.156 R
4 PLACES
.200
.200
2 PLACES
N A-A
1.003 REF
.501
.499
.488
.485
.300
.302 2 PLACES
1.750 BSC
.125 BSC
8 PLACES
.126 REF
2.750 BSC
3.750 BSC
4.750 BSC
5.750 BSC
6.750 BSC
7.750 BSC
8.750 BSC
.164
.160
9.398
9.394
.194
.192
9.008
9.010
.916
.912
.025R 4 PLACES
.571
.569
.377
.375
.292
.295 2 PLACES
.010 R MAX TYP
.010 R MAX 32 PLACES
.106
.113 DIA THRU AND CBORE .190 DIA X .090 DEEP
8 HOLES ⊕.004 DIA
.690 BSC
.460 BSC
.230 BSC
1.550
1.545
.685 BSC
32
.375
2 PLACES
.258
.254 2 PLACES
7.730
7.735
7.598
7.594
.030
.050 X 45° CHAMFER
2 PLACES
6.598
6.594
5.598
5.594
4.598
4.594
1.392
3.598
3.594
3 SPACES AT .170 BSC =
.510 BSC
.068
BSC
2.598
2.594
3 SPACES AT .125 BSC=
.375 2 PLACES
.488
.484
1.598
1.594
.372
.370
7 PLACES
.235
.187
.125
.127
.050 BSC
.114
.110
.347
.970
.598
.594
.225 BSC
.625
BSC
.010 R MAX
1.475
1.471
1.250
BSC
.349
.562
.045 R 30 PLACES
.110 R
30 PLACES
1.254
1.256
1.002
1.004
1.098
.925 BSC
1.150 BSC
.338 BSC
6 SPACES AT
.125 BSC=.750 BSC
2.038
2.034
.273
.277 8 PLACES
.010 R MAX
32 PLACES
.140
.144 DIA X .312 DEEP
8 HOLES ⊕.010 DIA
3.038
3.034
4.038
4.034
5.038
5.034
6.038
6.034
7.038
7.034
8.038
8.034
9.038
9.034
9.426 BSC
.071
.072 DIA THRU 88 HOLES
⊕.002 DIA
SCRIBED BY MIL-D-70327
COMP I, CLASS 10
.050/.070 RADIUS

1004231

REVISIONS D=544

QTY REQD	PART OR IDENTIFYING NO.	NOMENCLATURE OR DESCRIPTION	FIND NO.

LIST OF MATERIALS

UNLESS OTHERWISE SPECIFIED
DIMENSIONS ARE IN INCHES
TOLERANCES ON
FRACTIONS ± DECIMALS ±.005 ANGLES ±2°
DO NOT SCALE THIS DRAWING
MATERIAL
HEAT TREATMENT
FINAL FINISH

MIT
INSTRUMENTATION LAB
CAMBRIDGE, MASS
DRAWN G.J. Gallo... DATE 8/1/63
CHECKED E.T. ... Aug 13 Au 63
APPROVAL W... 13 Aug 63
APPROVAL
NASA APPROVAL
MIT APPROVAL W Kaffer 14 Aug 63

MANNED SPACECRAFT CENTER
HOUSTON, TEXAS

HEADER
ROPE MEMORY MODULE

CODE IDENT NO.
SIZE J
NASA DRAWING NO. 1004231
SCALE 2/1
WT
SHEET 1 OF 1

1003133	
NEXT ASSY	USED ON
APPLICATION	

1004231

NOTICE — WHEN GOVERNMENT DRAWINGS, SPECIFICATIONS, OR OTHER DATA ARE USED FOR ANY PURPOSE OTHER THAN IN CONNECTION WITH A DEFINITELY RELATED GOVERNMENT PROCUREMENT OPERATION, THE UNITED STATES GOVERNMENT THEREBY INCURS NO RESPONSIBILITY NOR ANY OBLIGATION WHATSOEVER; AND THE FACT THAT THE GOVERNMENT MAY HAVE FORMULATED, FURNISHED, OR IN ANY WAY SUPPLIED THE SAID DRAWINGS, SPECIFICATIONS, OR OTHER DATA IS NOT TO BE REGARDED BY IMPLICATION OR OTHERWISE AS IN ANY MANNER LICENSING THE HOLDER OR ANY OTHER PERSON OR CORPORATION, OR CONVEYING ANY RIGHTS OR PERMISSION TO MANUFACTURE, USE, OR SELL ANY PATENTED INVENTION THAT MAY IN ANY WAY BE RELATED THERETO.

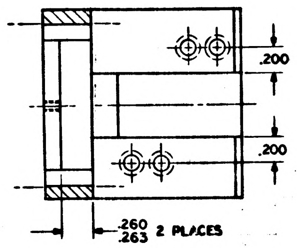

.200
.200
.260
.263 2 PLACES

SECTION A-A

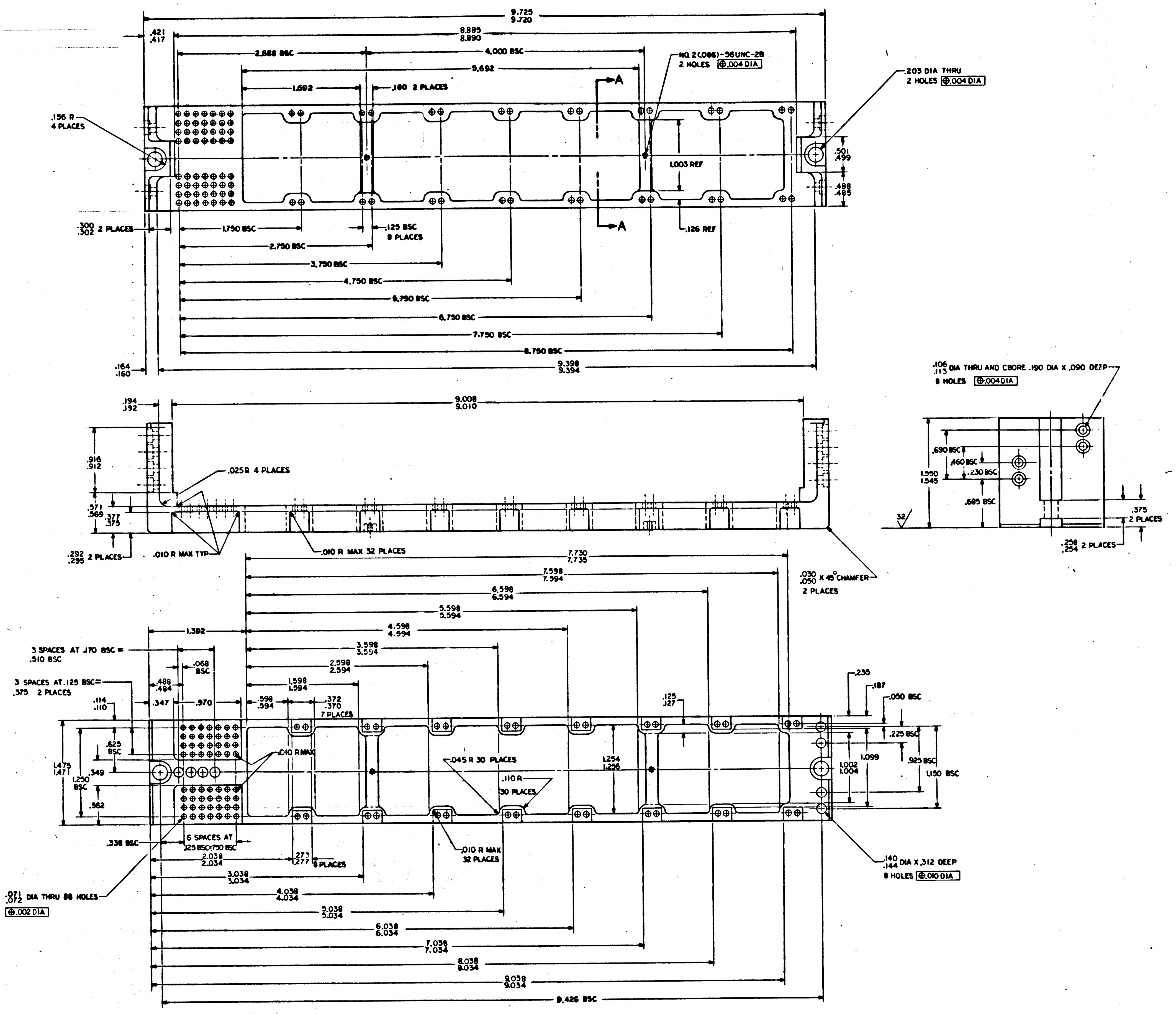

9.725
9.720
8.885
8.890
.421
.417
2.688 BSC
4.000 BSC
9.692
1.692
.180 2 PLACES
NO. 2(.086)-56UNC-2B
2 HOLES ⊕.004 DIA
.203 DIA THRU
2 HOLES ⊕.004 DIA
A
A
.156 R
4 PLACES
1.003 REF
.501
.499
.488
.485
.300
.302 2 PLACES
1.750 BSC
.125 BSC
8 PLACES
.126 REF
2.750 BSC
3.750 BSC
4.750 BSC
5.750 BSC
6.750 BSC
7.750 BSC
8.750 BSC
9.398
9.394
.164
.160
.106
.113 DIA THRU AND CBORE .190 DIA X .090 DEEP
8 HOLES ⊕.004 DIA
.194
.192
9.008
9.010
.916
.912
.025R 4 PLACES
.571
.569
.377
.375
.292
.295 2 PLACES
.010 R MAX TYP
.010 R MAX 32 PLACES
.690 BSC
.460 BSC
.230 BSC
1.550
1.545
.685 BSC
32
.375
2 PLACES
.258
.254 2 PLACES
.030
.050 X 45° CHAMFER
2 PLACES
7.730
7.735
7.598
7.594
6.598
6.594
5.598
5.594
4.598
4.594
3.598
3.594
2.598
2.594
1.598
1.594
1.392
3 SPACES AT .170 BSC =
.510 BSC
.068
BSC
3 SPACES AT .125 BSC=
.375 2 PLACES
.488
.484
.114
.110
.347
.970
.598
.594
.372
.370
7 PLACES
.125
.127
.235
.187
.050 BSC
.625
BSC
1.475
1.471
.349
1.250
BSC
.562
.010 R MAX
.045 R 30 PLACES
.110 R
30 PLACES
1.254
1.256
.225 BSC
1.002
1.004
1.099
.925 BSC
1.150 BSC
.338 BSC
6 SPACES AT
.125 BSC=.750 BSC
.273
.277 8 PLACES
.010 R MAX
32 PLACES
.140
.144 DIA X .312 DEEP
8 HOLES ⊕.010 DIA
.071
.072 DIA THRU 88 HOLES
⊕.002 DIA
2.038
2.034
3.038
3.034
4.038
4.034
5.038
5.034
6.038
6.034
7.038
7.034
8.038
8.034
9.038
9.034
9.426 BSC

NOTES:

1. INTERPRET DRAWING IN ACCORDANCE WITH STANDARDS PRESCRIBED BY MIL-D-70327
2. MATL: DIE OR INVESTMENT CAST A356 AL PER MIL-C-21180, COMP I, CLASS 10
3. FINISH: BLACK ANODIZE PER MIL-A- 8625, TYPE II
4. UNLESS OTHERWISE SPECIFIED ALL FILLETS AND ROUNDS .050/.070 RADIUS
5. REMOVE ALL BURRS AND BREAK SHARP EDGES .005/.015
6. UNLESS OTHERWISE SPECIFIED 125/ ALL OVER

1003133	
NEXT ASSY	USED ON
APPLICATION	

UNLESS OTHERWISE SPECIF
DIMENSIONS ARE IN INCHE
TOLERANCES ON
FRACTIONS DECIMALS
± ±.005
DO NOT SCALE THIS DRAWI
MATERIAL
HEAT TREATMENT
FINAL FINISH

1004231

INCHES
PHOTOGRAPHIC SCALE ONLY

REVISIONS			
SYM	DESCRIPTION	DATE	APPROVAL
A	REVISED PER TDRR 04386		

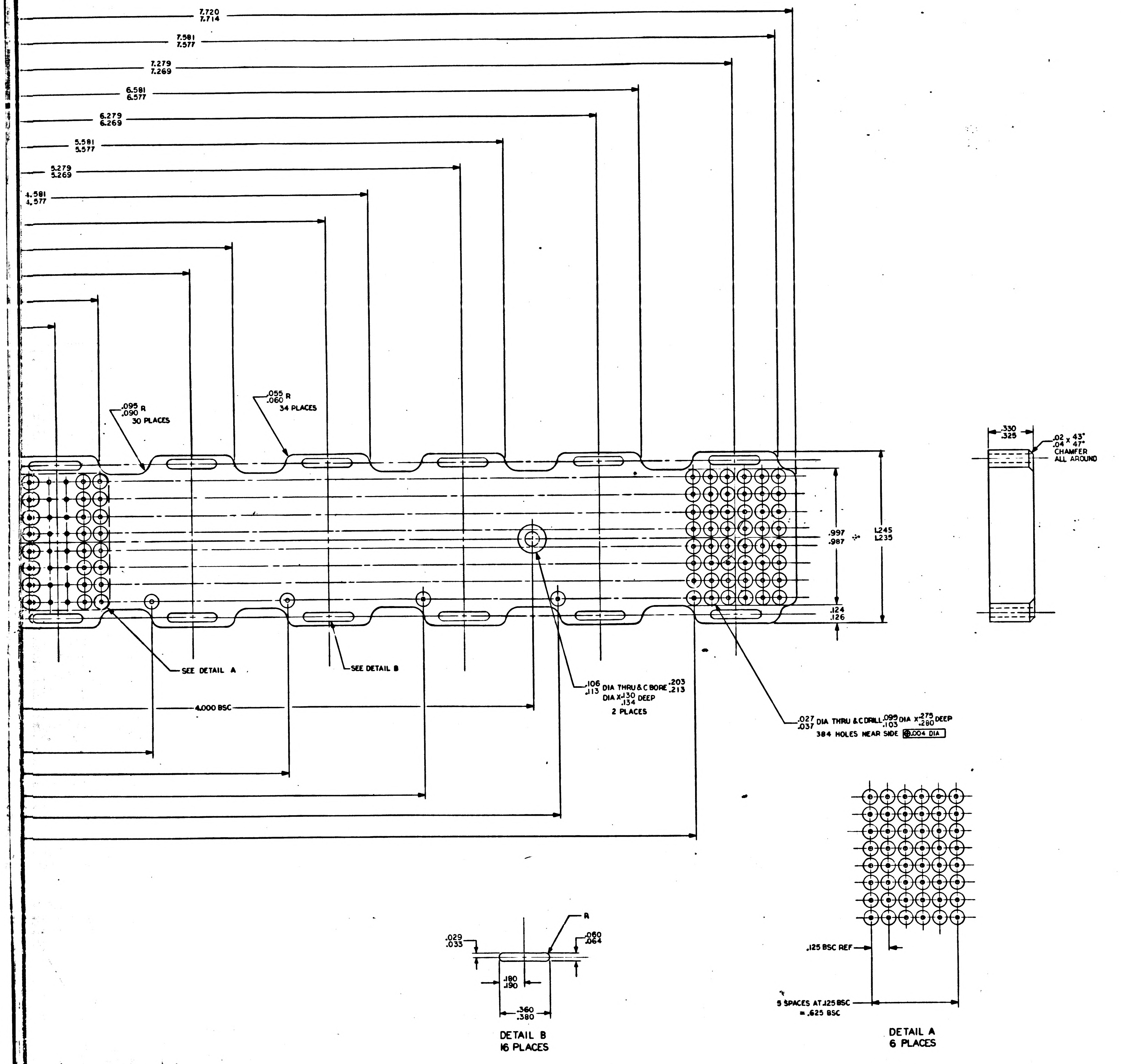

7.720
7.714
7.581
7.577
7.279
7.269
6.581
6.577
6.279
6.269
5.581
5.577
5.279
5.269
4.581
4.577
.095
.090 R
30 PLACES
.055
.060 R
34 PLACES
.330
.325
.02 x 43°
.04 x 47°
CHAMFER
ALL AROUND
.997
.987
1.245
1.235
.124
.126
SEE DETAIL A
SEE DETAIL B
4.000 BSC
.106
.113 DIA THRU & C BORE .203
.213
DIA X .130
.134 DEEP
2 PLACES
.027
.037 DIA THRU & C DRILL .099
.103 DIA X .275
.280 DEEP
384 HOLES NEAR SIDE ⊕.004 DIA
R
.029
.033
.060
.064
.180
.190
.360
.380
DETAIL B
16 PLACES
.125 BSC REF
5 SPACES AT .125 BSC
= .625 BSC
DETAIL A
6 PLACES

MASTER

QTY REQD	PART OR IDENTIFYING NO.	NOMENCLATURE OR DESCRIPTION	FIND NO.

LIST OF MATERIALS

UNLESS OTHERWISE SPECIFIED
DIMENSIONS ARE IN INCHES
TOLERANCES ON
FRACTIONS ± DECIMALS ± ANGLES ±
DO NOT SCALE THIS DRAWING
MATERIAL SEE NOTE 2
HEAT TREATMENT
FINAL FINISH

NEXT ASSY	USED ON
1003135	

APPLICATION

MIT
INSTRUMENTATION LAB
CAMBRIDGE, MASS
DRAWN DATE 2/5/63
CHECKED
APPROVAL 6 AUG 63
APPROVAL
NASA APPROVAL
MIT APPROVAL

MANNED SPACECRAFT CENTER
HOUSTON, TEXAS

HOLDER, COMPONENT
ROPE MEMORY MODULE

CODE IDENT NO. — SIZE J NASA DRAWING NO. 1004232
SCALE 4/1 WT SHEET 1 OF 1

1004232 A

NOTICE — WHEN GOVERNMENT DRAWINGS, SPECIFICATIONS, OR OTHER DATA ARE USED FOR ANY PURPOSE OTHER THAN IN CONNECTION WITH A DEFINITELY RELATED GOVERNMENT PROCUREMENT OPERATION, THE UNITED STATES GOVERNMENT THEREBY INCURS NO RESPONSIBILITY NOR ANY OBLIGATION WHATSOEVER; AND THE FACT THAT THE GOVERNMENT MAY HAVE FORMULATED, FURNISHED, OR IN ANY WAY SUPPLIED THE SAID DRAWINGS, SPECIFICATIONS OR OTHER DATA IS NOT TO BE REGARDED BY IMPLICATION OR OTHERWISE AS IN ANY MANNER LICENSING THE HOLDER OR ANY OTHER PERSON OR CORPORATION, OR CONVEYING ANY RIGHTS OR PERMISSION TO MANUFACTURE, USE, OR SELL ANY PATENTED INVENTION THAT MAY IN ANY WAY BE RELATED THERETO.

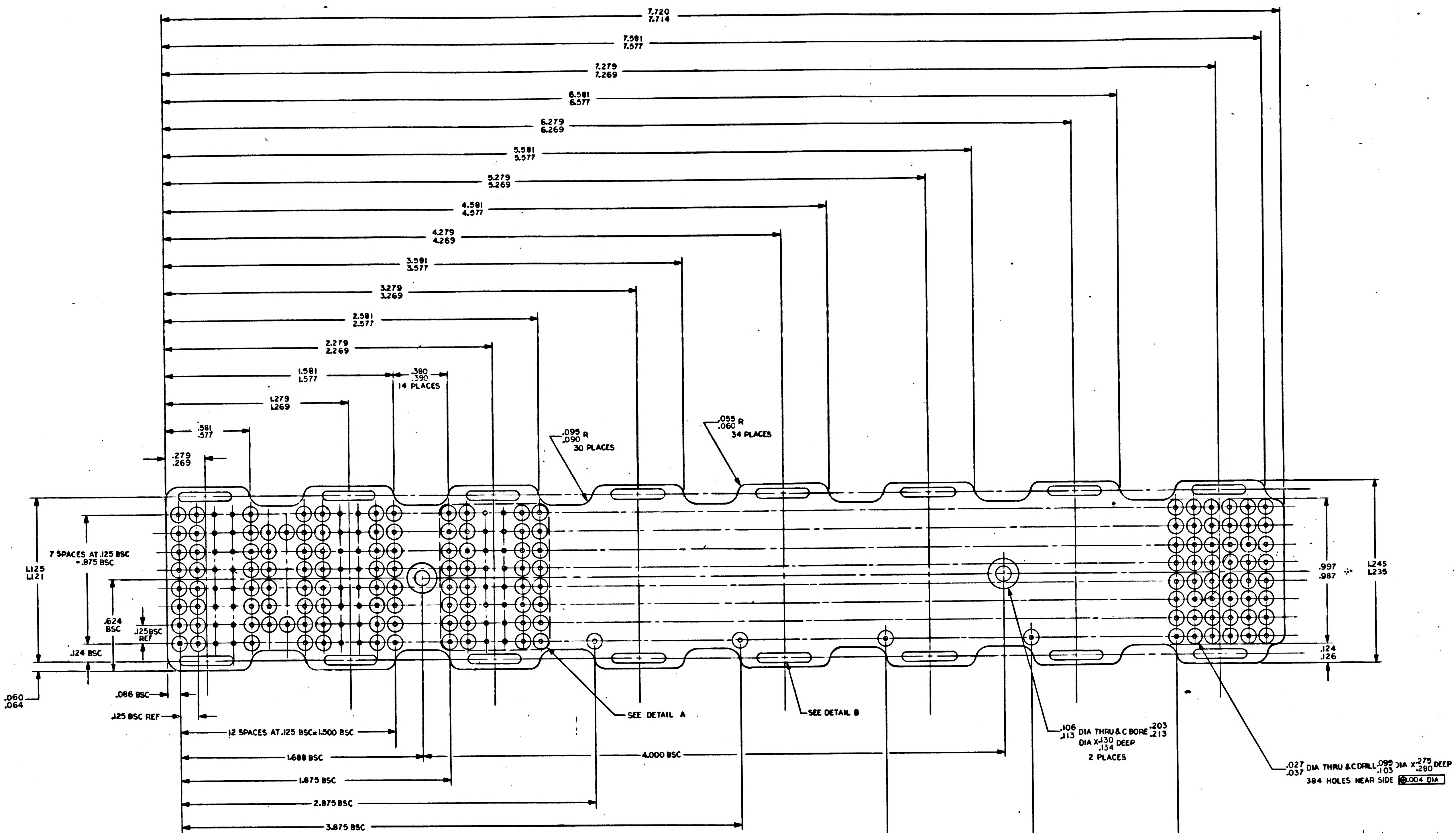
7.720
7.714
7.581
7.577
7.279
7.269
6.581
6.577
6.279
6.269
5.581
5.577
5.279
5.269
4.581
4.577
4.279
4.269
3.581
3.577
3.279
3.269
2.581
2.577
2.279
2.269
1.581
1.577
.380
.390
14 PLACES
1.279
1.269
.581
.577
.279
.269
.095
.090 R
30 PLACES
.055
.060 R
34 PLACES
1.125
1.121
7 SPACES AT .125 BSC
=.875 BSC
.624
BSC
.125 BSC
REF
.124 BSC
.060
.064
.086 BSC
.125 BSC REF
.997
.987
1.245
1.235
.124
.126
SEE DETAIL A
SEE DETAIL B
.106
.113 DIA THRU & C BORE .203
.213
DIA X .130
.134 DEEP
2 PLACES
.027
.037 DIA THRU & C DRILL .099
.103 DIA X .275
.280 DEEP
384 HOLES NEAR SIDE ⊕.004 DIA
12 SPACES AT .125 BSC=1.500 BSC
1.688 BSC
4.000 BSC
1.875 BSC
2.875 BSC
3.875 BSC
4.875 BSC
5.875 BSC
6.875 BSC

NOTES
1. INTERPRET DRAWING IN ACCORDANCE WITH STANDARDS
PRESCRIBED BY MIL-D-70327
2. MATERIAL PLASTIC CLEAR ACRYLIC PER MIL-P-8184 FINISH B, ALT: MIL-P-5425 B FINISH B
3. BREAK SHARP EDGES .015 MAX

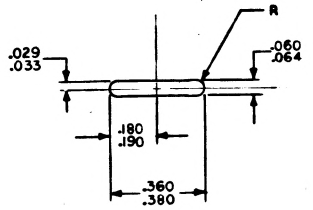
.029
.033
R
.060
.064
.180
.190
.360
.380

DETAIL B
16 PLACES

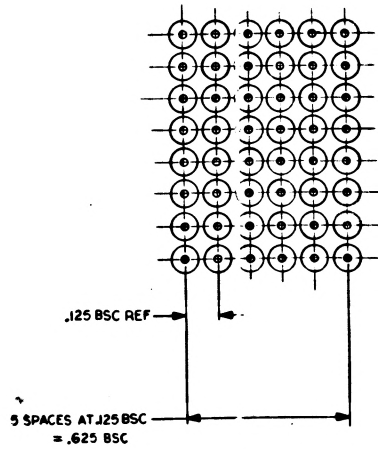
.125 BSC REF
5 SPACES AT .125 BSC
= .625 BSC

DETAIL A
6 PLACES

MASTER

1004232 A

INCHES
PHOTOGRAPHIC SCALE ONLY

1004232 | B

SYM	DESCRIPTION	DATE	APPROVAL
A	REVISED PER TDRR 04376		
B	REVISED PER TDRR 05382		

REVISIONS

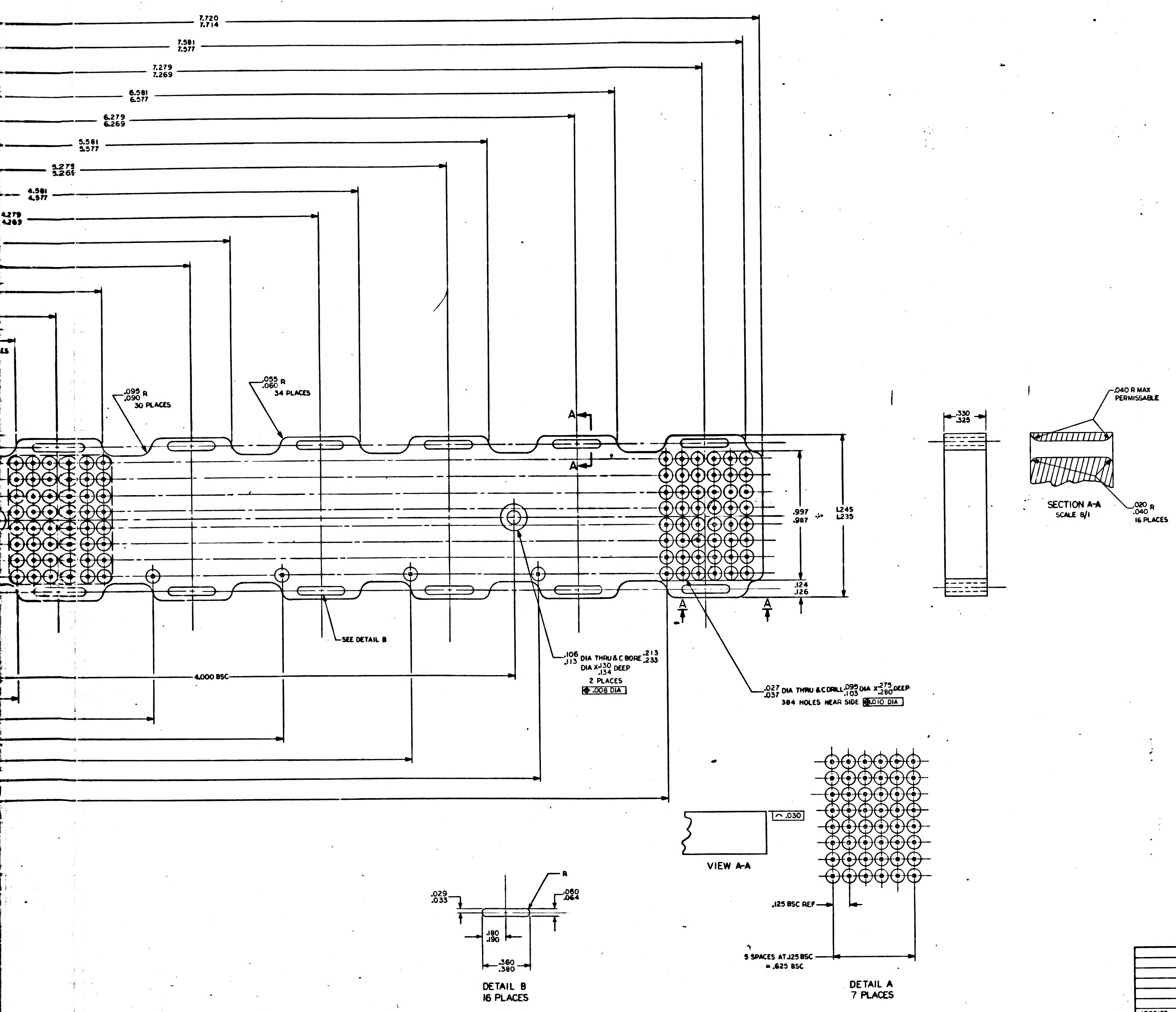

7.720
7.714
7.581
7.577
7.279
7.269
6.581
6.577
6.279
6.269
5.581
5.577
5.279
5.269
4.581
4.577
4.279
4.269
.095
.090 R
30 PLACES
.055
.060 R
34 PLACES
A
A
.997
.987
1.245
1.235
.124
.126
A
A
SEE DETAIL B
4.000 BSC
.106
.113 DIA THRU & C BORE .213
.233 DIA X .130
.134 DEEP
2 PLACES
.008 DIA
.027
.037 DIA THRU & C DRILL .099
.103 DIA X .275
.280 DEEP
384 HOLES NEAR SIDE
.010 DIA
.330
.325
.040 R MAX
PERMISSABLE
SECTION A-A
SCALE 8/1
.020
.040 R
16 PLACES
.030
VIEW A-A
.125 BSC REF
5 SPACES AT .125 BSC
= .625 BSC
DETAIL A
7 PLACES
R
.029
.033
.060
.064
.180
.190
.360
.380
DETAIL B
16 PLACES
4
3
2

QTY REQD	PART OR IDENTIFYING NO.	NOMENCLATURE OR DESCRIPTION	FIND NO.

LIST OF MATERIALS

UNLESS OTHERWISE SPECIFIED
DIMENSIONS ARE IN INCHES
TOLERANCES ON
FRACTIONS ± DECIMALS ± ANGLES ±
DO NOT SCALE THIS DRAWING

MATERIAL
SEE NOTE 2

HEAT TREATMENT

FINAL FINISH

NEXT ASSY	USED ON
1003133	

APPLICATION

MIT
INSTRUMENTATION LAB
CAMBRIDGE, MASS

DRAWN DATE 2/5/63
CHECKED
APPROVAL 6 AUG 63
APPROVAL 8/6/63
NASA APPROVAL
MIT APPROVAL W Kupfer 14 Aug 63

MANNED SPACECRAFT CENTER
HOUSTON, TEXAS

HOLDER, COMPONENT
ROPE MEMORY MODULE

CODE IDENT NO. —
SIZE J
NASA DRAWING NO. 1004232
SCALE 4/1
WT
SHEET 1 OF 1

1004232 | B

MASTER

INCHES
PHOTOGRAPHIC SCALE ONLY

NOTICE — WHEN GOVERNMENT DRAWINGS, SPECIFICATIONS, OR OTHER DATA ARE USED FOR ANY PURPOSE OTHER THAN IN CONNECTION WITH A DEFINITELY RELATED GOVERNMENT PROCUREMENT OPERATION, THE UNITED STATES GOVERNMENT THEREBY INCURS NO RESPONSIBILITY NOR ANY OBLIGATION WHATSOEVER; AND THE FACT THAT THE GOVERNMENT MAY HAVE FORMULATED, FURNISHED, OR IN ANY WAY SUPPLIED THE SAID DRAWINGS, SPECIFICATIONS, OR OTHER DATA IS NOT TO BE REGARDED BY IMPLICATION OR OTHERWISE AS IN ANY MANNER LICENSING THE HOLDER OR ANY OTHER PERSON OR CORPORATION, OR CONVEYING ANY RIGHTS OR PERMISSION TO MANUFACTURE, USE, OR SELL ANY PATENTED INVENTION THAT MAY IN ANY WAY BE RELATED THERETO.

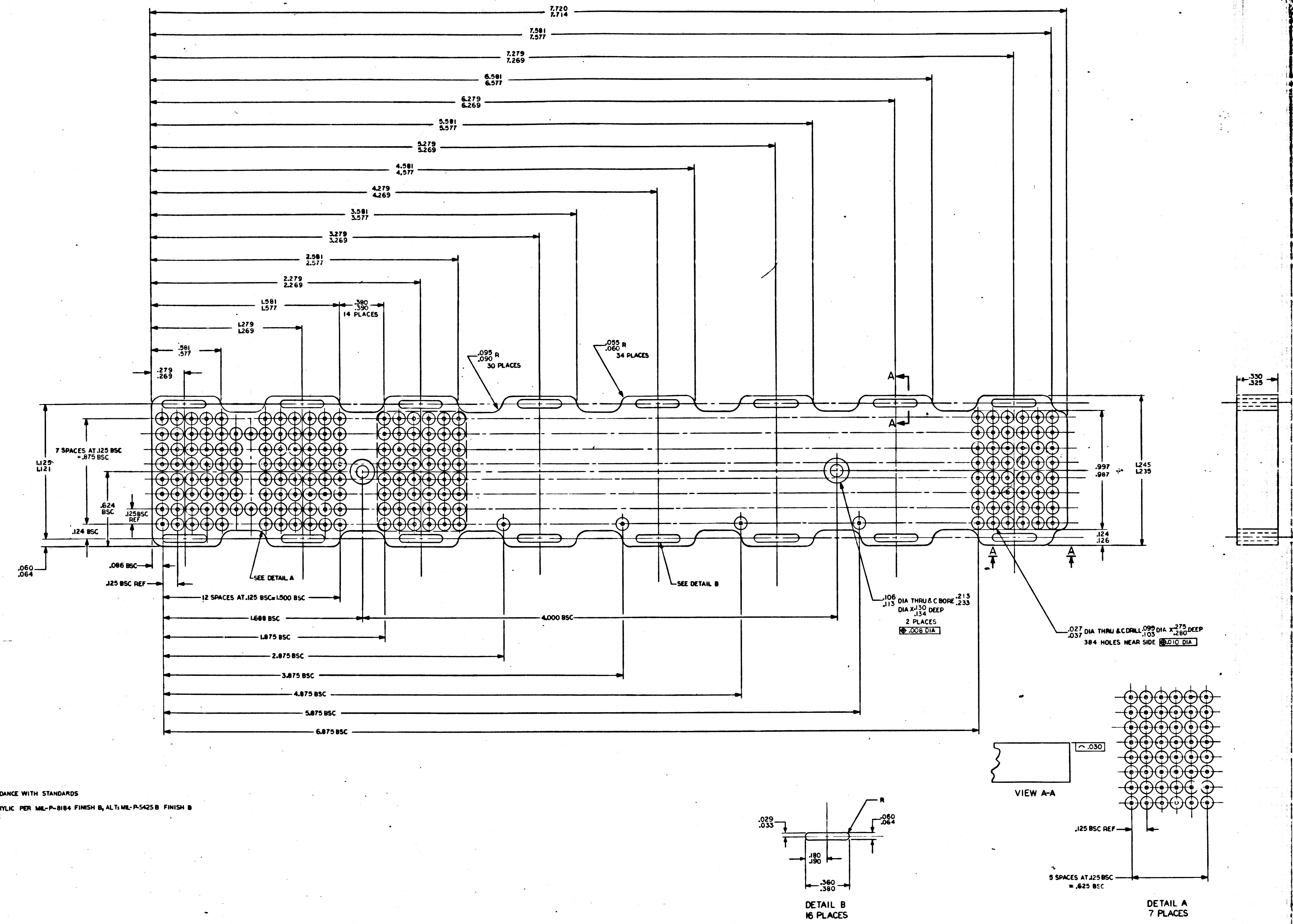
7.720 7.714
7.581 7.577
7.279 7.269
6.581 6.577
6.279 6.269
5.581 5.577
5.279 5.269
4.581 4.577
4.279 4.269
3.581 3.577
3.279 3.269
2.581 2.577
2.279 2.269
1.581 1.577
.380 .390 14 PLACES
1.279 1.269
.581 .577
.279 .269
.095 .090 R 30 PLACES
.055 .060 R 34 PLACES
A
A
.330 .325
7 SPACES AT .125 BSC = .875 BSC
1.125 1.121
.624 BSC
.125 BSC REF
.124 BSC
.060 .064
.086 BSC
.125 BSC REF
SEE DETAIL A
SEE DETAIL B
.997 .987
1.245 1.235
.124 .126
A
A
12 SPACES AT .125 BSC = 1.500 BSC
1.688 BSC
4.000 BSC
1.875 BSC
2.875 BSC
3.875 BSC
4.875 BSC
5.875 BSC
6.875 BSC
.106 .113 DIA THRU & C BORE .213 .233 DIA X .130 .134 DEEP
2 PLACES
⌖ .008 DIA
.027 .037 DIA THRU & C DRILL .099 .103 DIA X .275 .280 DEEP
384 HOLES NEAR SIDE ⌖ .010 DIA
⌒ .030
VIEW A-A
.029 .033
R
.060 .064
.180 .190
.360 .380
DETAIL B
16 PLACES
.125 BSC REF
5 SPACES AT .125 BSC = .625 BSC
DETAIL A
7 PLACES
6
5
4
3
C
B
A

NOTES
1. INTERPRET DRAWING IN ACCORDANCE WITH STANDARDS PRESCRIBED BY MIL-D-70327
2. MATERIAL PLASTIC CLEAR ACRYLIC PER MIL-P-8184 FINISH B, ALT: MIL-P-5425 B FINISH B
3. BREAK SHARP EDGES .015 MAX

SYM	DESCRIPTION	DATE	APPROVAL
A	REVISED PER TDRR 04396	[illegible]	[illegible]
B	REVISED PER TDRR 05382	[illegible]	[illegible]
C	REVISED PER TDRR 07840 DR [illegible] CHK [illegible]	[illegible]	[illegible]

1004232 C

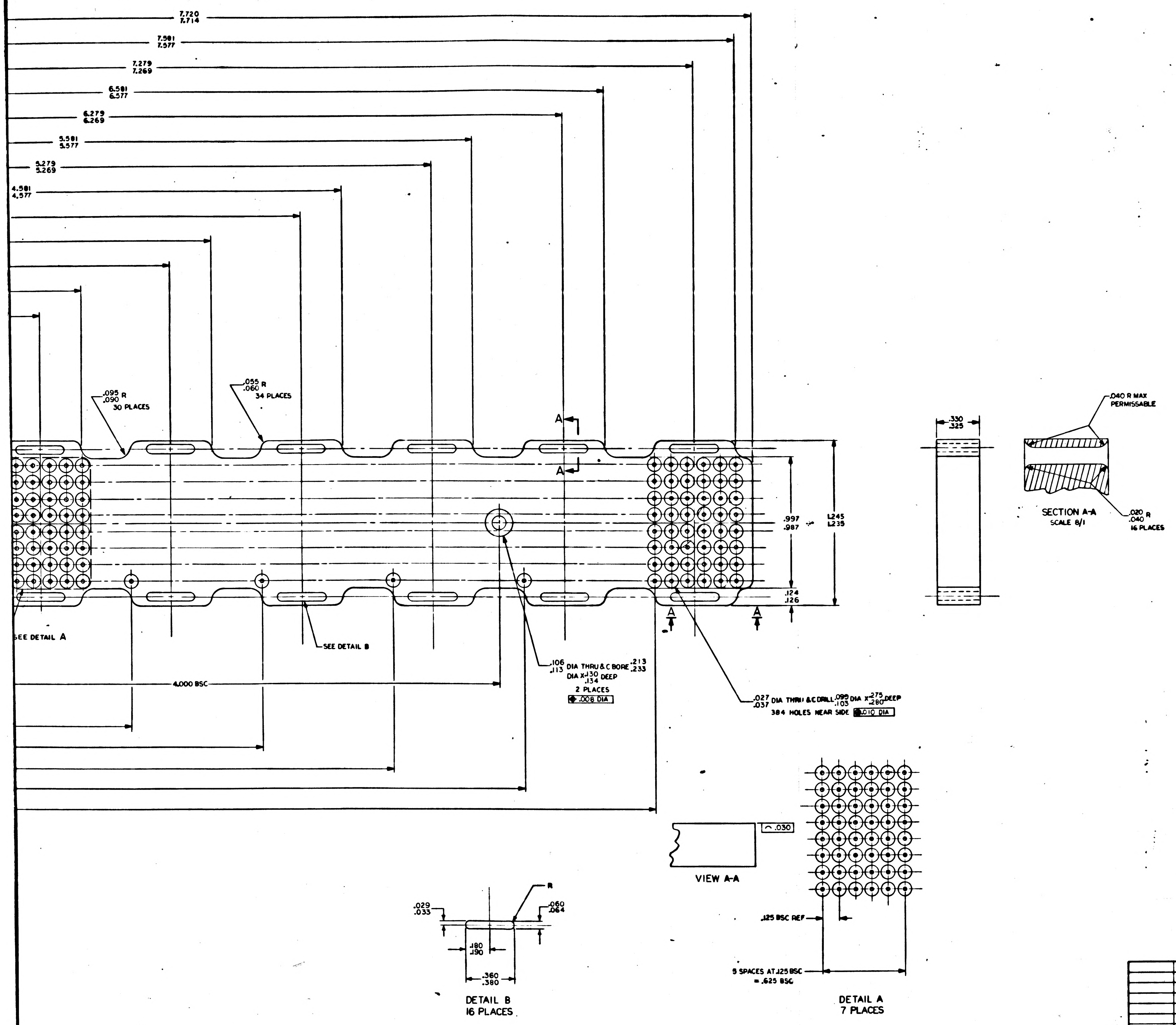

4
3
2
1
7.720
7.714
7.581
7.577
7.279
7.269
6.581
6.577
6.279
6.269
5.581
5.577
5.279
5.269
4.581
4.577
.095
.090 R
30 PLACES
.055
.060 R
34 PLACES
A
A
.997
.987
1.245
1.235
.124
.126
SEE DETAIL A
SEE DETAIL B
.106
.113 DIA THRU & C BORE .213
.233 DIA X .130
.134 DEEP
2 PLACES
.008 DIA
.027
.037 DIA THRU & C DRILL .099
.103 DIA X .275
.280 DEEP
384 HOLES NEAR SIDE .010 DIA
4.000 BSC
.330
.325
.040 R MAX PERMISSABLE
SECTION A-A
SCALE 8/1
.020
.040 R
16 PLACES
.030
VIEW A-A
.125 BSC REF
5 SPACES AT .125 BSC = .625 BSC
DETAIL A
7 PLACES
R
.029
.033
.060
.064
.180
.190
.360
.380
DETAIL B
16 PLACES

QTY REQD	PART OR IDENTIFYING NO.	NOMENCLATURE OR DESCRIPTION	FIND NO.
LIST OF MATERIALS			

1003133	
NEXT ASSY	USED ON
APPLICATION	

UNLESS OTHERWISE SPECIFIED
DIMENSIONS ARE IN INCHES
TOLERANCES ON
FRACTIONS ± DECIMALS ± ANGLES ±
DO NOT SCALE THIS DRAWING
MATERIAL
SEE NOTE 2
HEAT TREATMENT
FINAL FINISH

MIT
INSTRUMENTATION LAB
CAMBRIDGE, MASS
DRAWN [illegible] DATE 2/5/63
CHECKED [illegible]
APPROVAL [illegible] 6 Nov 63
APPROVAL [illegible]
NASA APPROVAL [illegible]
MIT APPROVAL [illegible]

MANNED SPACECRAFT CENTER
HOUSTON, TEXAS

HOLDER, COMPONENT
ROPE MEMORY MODULE

CODE IDENT NO. —
SIZE J
NASA DRAWING NO. 1004232
SCALE 4/1
WT
SHEET 1 OF 2

1004232 C

F 27 2

NOTICE — WHEN GOVERNMENT DRAWINGS, SPECIFICATIONS, OR OTHER DATA ARE USED FOR ANY PURPOSE OTHER THAN IN CONNECTION WITH A DEFINITELY RELATED GOVERNMENT PROCUREMENT OPERATION, THE UNITED STATES GOVERNMENT THEREBY INCURS NO RESPONSIBILITY NOR ANY OBLIGATION WHATSOEVER; AND THE FACT THAT THE GOVERNMENT MAY HAVE FORMULATED, FURNISHED, OR IN ANY WAY SUPPLIED THE SAID DRAWINGS, SPECIFICATIONS, OR OTHER DATA IS NOT TO BE REGARDED BY IMPLICATION OR OTHERWISE AS IN ANY MANNER LICENSING THE HOLDER OR ANY OTHER PERSON OR CORPORATION, OR CONVEYING ANY RIGHTS OR PERMISSION TO MANUFACTURE, USE, OR SELL ANY PATENTED INVENTION THAT MAY IN ANY WAY BE RELATED THERETO

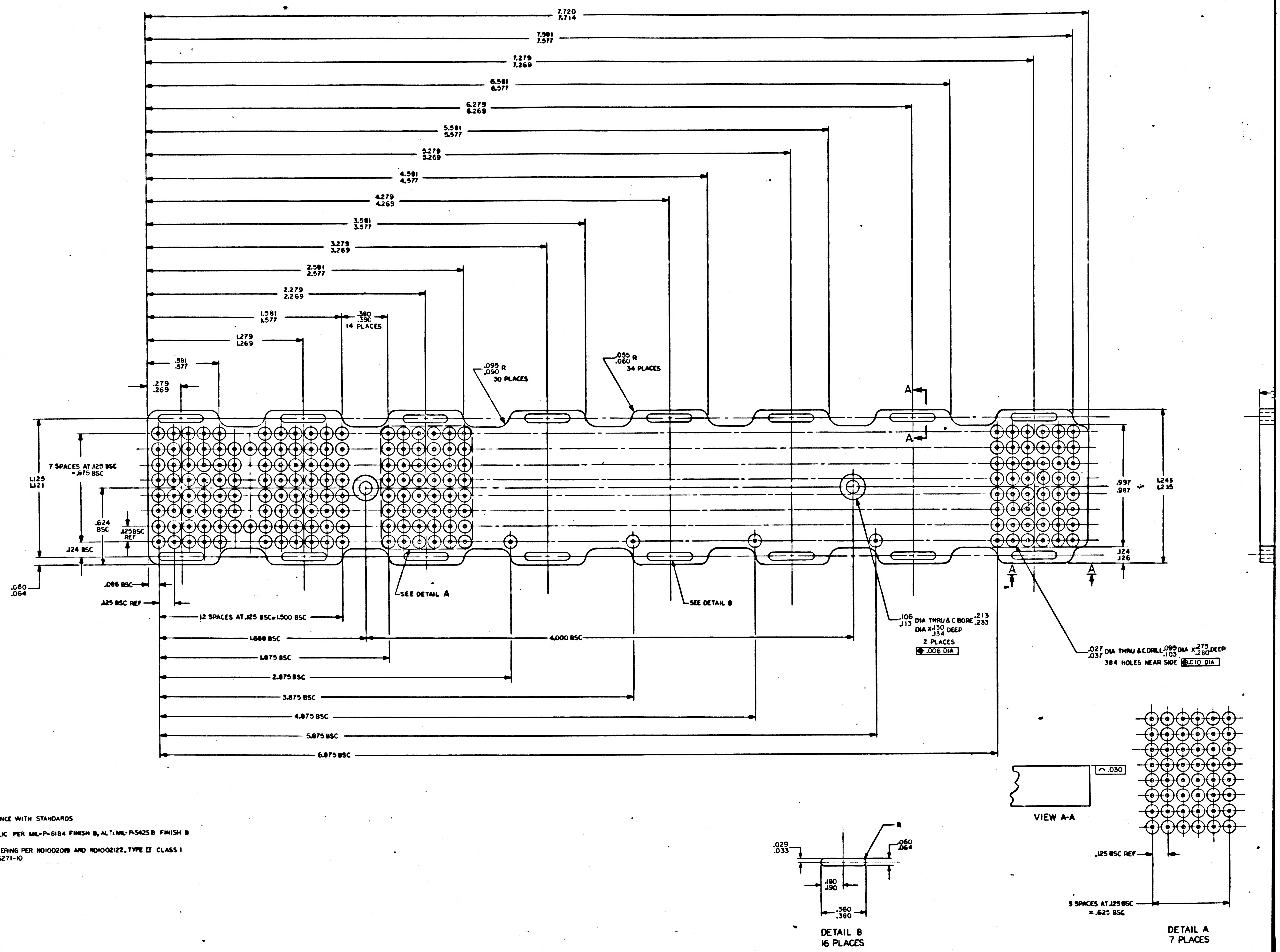
7.720
7.714
7.581
7.577
7.279
7.269
6.581
6.577
6.279
6.269
5.581
5.577
5.279
5.269
4.581
4.577
4.279
4.269
3.581
3.577
3.279
3.269
2.581
2.577
2.279
2.269
1.581
1.577
.380
.390
14 PLACES
1.279
1.269
.581
.577
.279
.269
.095
.090 R
30 PLACES
.055
.060 R
34 PLACES
A
A
7 SPACES AT .125 BSC
=.875 BSC
1.125
1.121
.624
BSC
.125BSC
REF
.124 BSC
.060
.064
.086 BSC
.125 BSC REF
.997
.987
1.245
1.235
.124
.126
A
A
SEE DETAIL A
SEE DETAIL B
12 SPACES AT .125 BSC=1.500 BSC
1.688 BSC
4.000 BSC
1.875 BSC
2.875 BSC
3.875 BSC
4.875 BSC
5.875 BSC
6.875 BSC
.106
.113 DIA THRU & C BORE .213
.233
DIA X .130
.134 DEEP
2 PLACES
.008 DIA
.027
.037 DIA THRU & C DRILL .099
.103 DIA X .275
.280 DEEP
384 HOLES NEAR SIDE .010 DIA
.030
VIEW A-A
.125 BSC REF
5 SPACES AT .125 BSC
=.625 BSC
DETAIL A
7 PLACES
.029
.033
R
.060
.064
.180
.190
.360
.380
DETAIL B
16 PLACES

NOTES
1. INTERPRET DRAWING IN ACCORDANCE WITH STANDARDS PRESCRIBED BY MIL-D-70327
2. MATERIAL PLASTIC CLEAR ACRYLIC PER MIL-P-8184 FINISH B, ALT: MIL-P-5425B FINISH B
3. BREAK SHARP EDGES .015 MAX
4. SILK SCREEN .025/.035 HIGH LETTERING PER ND1002019 AND ND1002122, TYPE II CLASS I USING BLACK INK, MARKING, 1006271-10

1004232 C

1004232 C E 1/2

SHEET 1

1004232 C

SYM	DESCRIPTION	DATE	APPROVAL
C	THIS SHEET ADDED PER TDRR 27840		WK

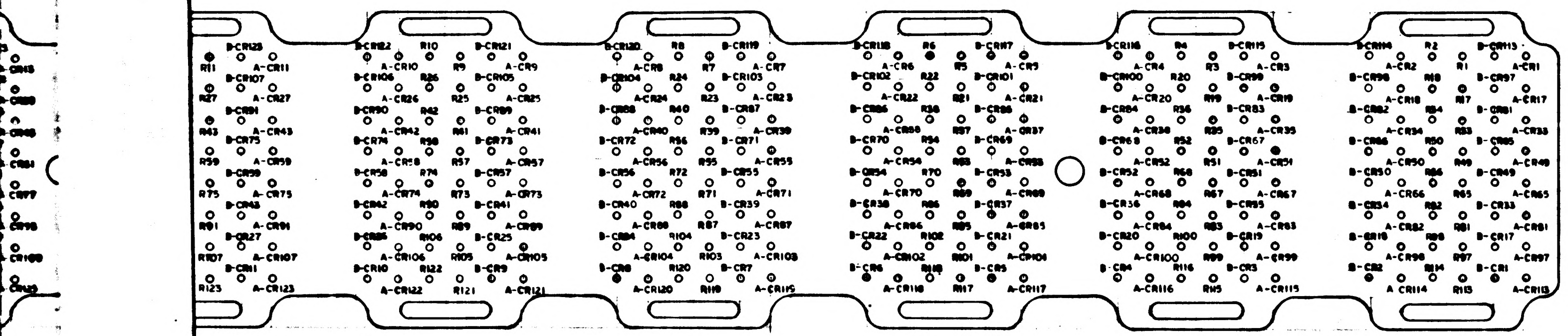

MASTER

QTY REQD	PART OR IDENTIFYING NO.	NOMENCLATURE OR DESCRIPTION	FIND NO.

LIST OF MATERIALS

NEXT ASSY	USED ON
APPLICATION	

UNLESS OTHERWISE SPECIFIED
DIMENSIONS ARE IN INCHES
TOLERANCES ON
FRACTIONS ± DECIMALS ± ANGLES ±
DO NOT SCALE THIS DRAWING
MATERIAL
HEAT TREATMENT
FINAL FINISH

MIT
INSTRUMENTATION LAB
CAMBRIDGE, MASS.
DRAWN H. Carlson DATE 9 APR 64
CHECKED
APPROVAL
APPROVAL Eldon C. Hall 21 apr 64
NASA APPROVAL
MIT APPROVAL
MIT APPROVAL

MANNED SPACECRAFT CENTER
HOUSTON, TEXAS

HOLDER COMPONENT
ROPE MEMORY MODULE

CODE IDENT NO. ——
SIZE J
NASA DRAWING NO. 1004232
SCALE 4/1
WT
SHEET 2 OF 2

1004232 C

E 2/2

NOTICE — WHEN GOVERNMENT DRAWINGS, SPECIFICATIONS, OR OTHER DATA ARE USED FOR ANY PURPOSE OTHER THAN IN CONNECTION WITH A DEFINITELY RELATED GOVERNMENT PROCUREMENT OPERATION, THE UNITED STATES GOVERNMENT THEREBY INCURS NO RESPONSIBILITY NOR ANY OBLIGATION WHATSOEVER; AND THE FACT THAT THE GOVERNMENT MAY HAVE FORMULATED, FURNISHED, OR IN ANY WAY SUPPLIED THE SAID DRAWINGS, SPECIFICATIONS, OR OTHER DATA IS NOT TO BE REGARDED BY IMPLICATION OR OTHERWISE AS IN ANY MANNER LICENSING THE HOLDER OR ANY OTHER PERSON OR CORPORATION, OR CONVEYING ANY RIGHTS OR PERMISSION TO MANUFACTURE, USE, OR SELL ANY PATENTED INVENTION THAT MAY IN ANY WAY BE RELATED THERETO.

C

B

A

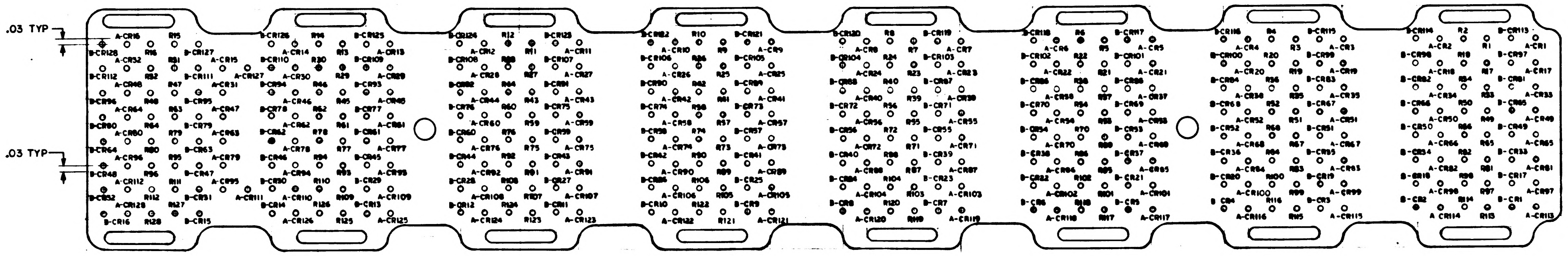

1004232 D

A	REVISED PER TDRR 04396		
B	REVISED PER TDRR 05392		
C	REVISED PER TDRR 07880 DR CHK		
D	REVISED PER TDRR 10123 DR CHK R.G.F.		

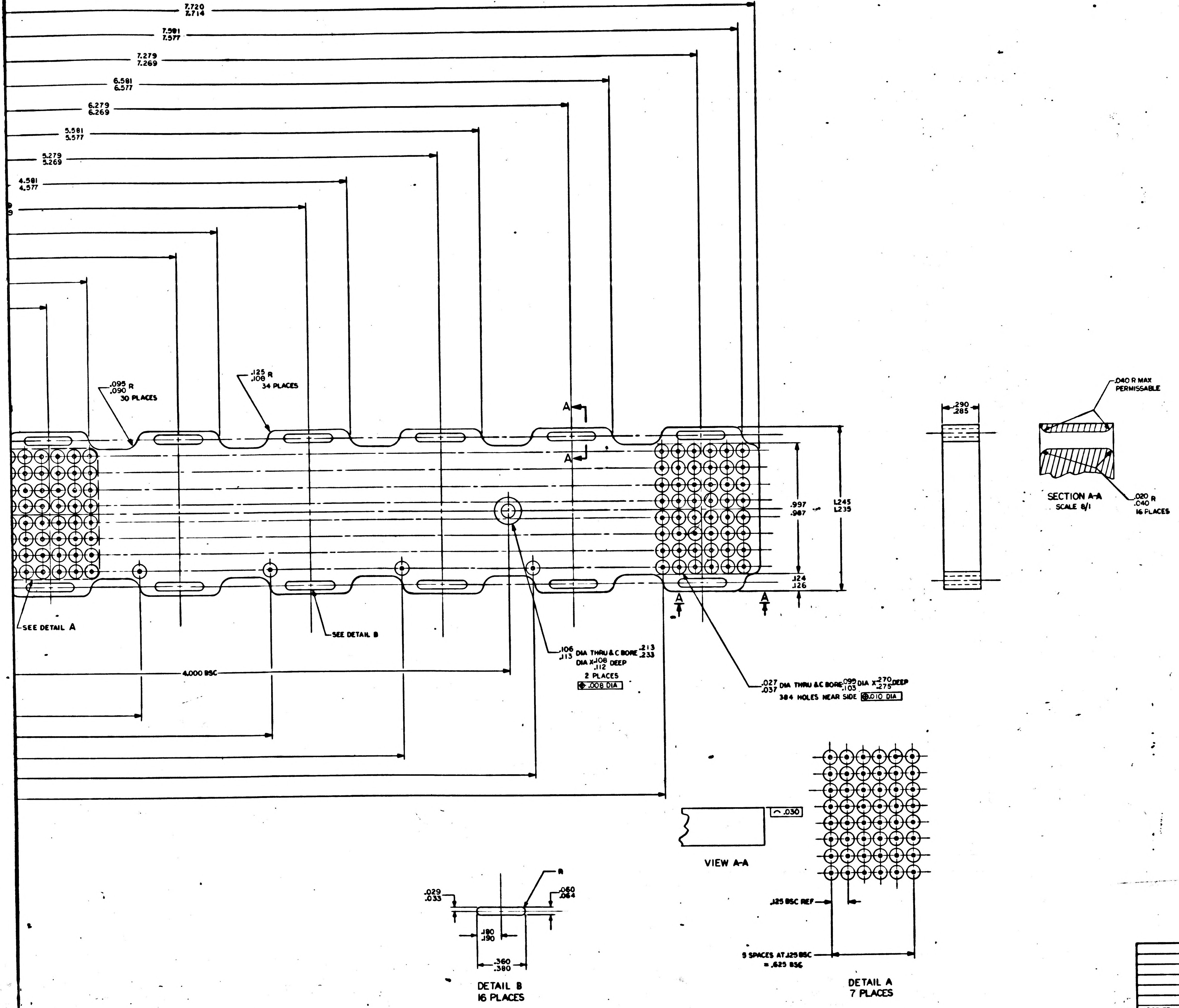

7.720
7.714
7.581
7.577
7.279
7.269
6.581
6.577
6.279
6.269
5.581
5.577
5.279
5.269
4.581
4.577
.095
.090 R
30 PLACES
.125 R
.108
34 PLACES
A
A
.997
.987
1.245
1.235
.124
.126
SEE DETAIL A
SEE DETAIL B
4.000 BSC
.106
.113 DIA THRU & C BORE .213
.233 DIA X .108
.112 DEEP
2 PLACES
⊕ .008 DIA
.027
.037 DIA THRU & C BORE .099
.103 DIA X .270
.275 DEEP
384 HOLES NEAR SIDE ⊕ .010 DIA
.290
.285
.040 R MAX
PERMISSABLE
SECTION A-A
SCALE 8/1
.020
.040 R
16 PLACES
⌒ .030
VIEW A-A
.029
.033
R
.060
.064
.180
.190
.360
.380
DETAIL B
16 PLACES
.125 BSC REF
5 SPACES AT .125 BSC
= .625 BSC
DETAIL A
7 PLACES

QTY REQD	PART OR IDENTIFYING NO.	NOMENCLATURE OR DESCRIPTION	FIND NO.

LIST OF MATERIALS

1003133	
NEXT ASSY	USED ON

APPLICATION

UNLESS OTHERWISE SPECIFIED
DIMENSIONS ARE IN INCHES
TOLERANCES ON
FRACTIONS DECIMALS ANGLES
± ± ±
DO NOT SCALE THIS DRAWING
MATERIAL
SEE NOTE 2
HEAT TREATMENT
FINAL FINISH

MIT
INSTRUMENTATION LAB
CAMBRIDGE, MASS.
DRAWN DATE 2/5/63
CHECKED
APPROVAL 6 Aug 63
APPROVAL
NASA APPROVAL
MIT APPROVAL 63

MANNED SPACECRAFT CENTER
HOUSTON, TEXAS

HOLDER, COMPONENT
ROPE MEMORY MODULE

CODE IDENT NO. —
SIZE J
NASA DRAWING NO. 1004232
SCALE 4/1
WT
SHEET 1 OF 2

1004232 D

F272

[illegible]

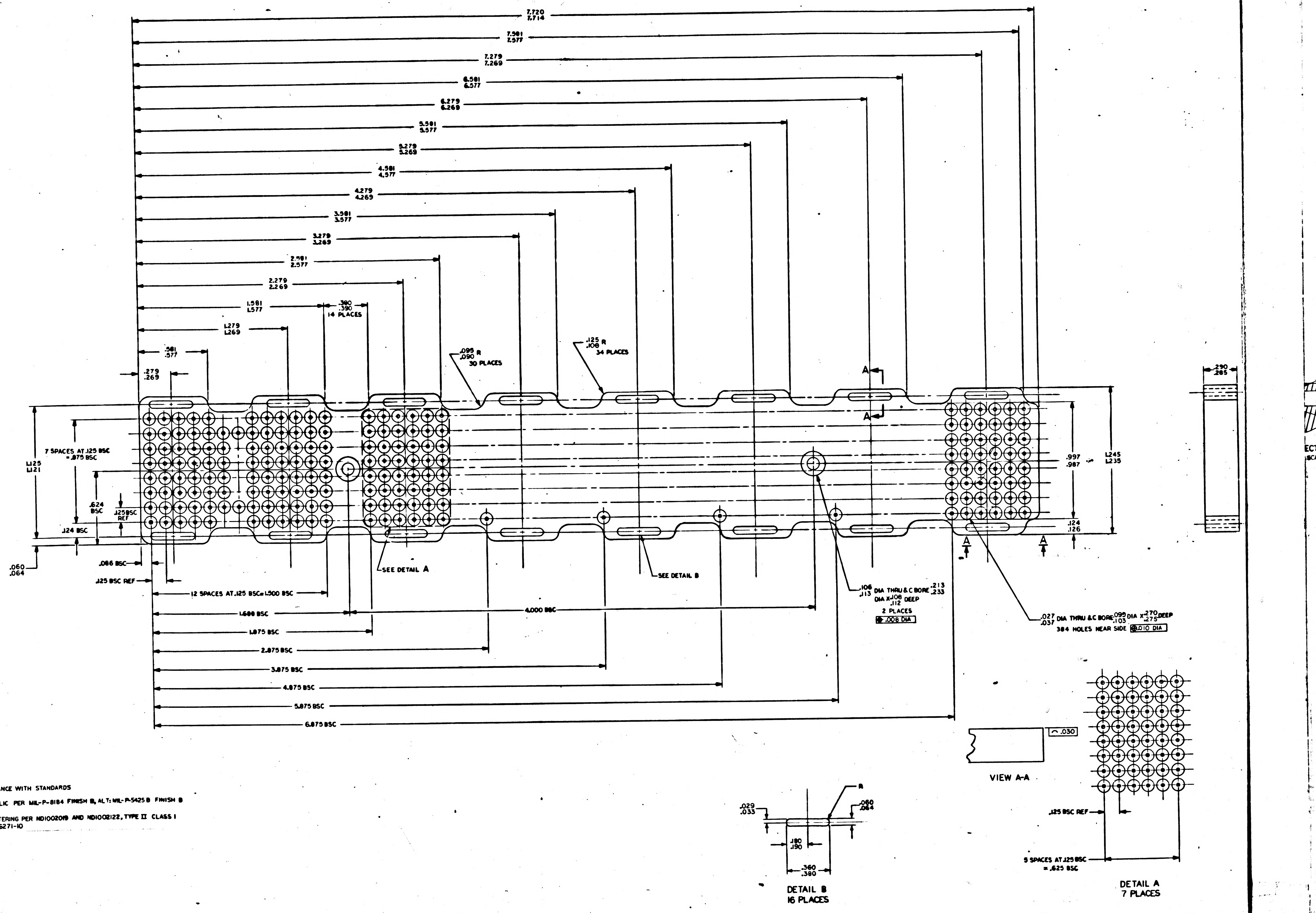
7.720
7.714
7.581
7.577
7.279
7.269
6.581
6.577
6.279
6.269
5.581
5.577
5.279
5.269
4.581
4.577
4.279
4.269
3.581
3.577
3.279
3.269
2.581
2.577
2.279
2.269
1.581
1.577
.380
.390
14 PLACES
1.279
1.269
.581
.577
.279
.269
.095
.090 R
30 PLACES
.125
.108 R
34 PLACES
A
A
.290
.285
7 SPACES AT .125 BSC
= .875 BSC
1.125
1.121
.624
BSC
.125 BSC
REF
.124 BSC
.060
.064
.086 BSC
.125 BSC REF
SEE DETAIL A
SEE DETAIL B
.997
.987
1.245
1.235
.124
.126
A
A
12 SPACES AT .125 BSC=1.500 BSC
1.600 BSC
4.000 BSC
1.875 BSC
2.875 BSC
3.875 BSC
4.875 BSC
5.875 BSC
6.875 BSC
.106
.113 DIA THRU & C BORE .213
.233
DIA X .108
.112 DEEP
2 PLACES
⊕ .008 DIA
.027
.037 DIA THRU & C BORE .099
.103 DIA X .270
.275 DEEP
384 HOLES NEAR SIDE ⊕ .010 DIA
⌒ .030
VIEW A-A
R
.029
.033
.060
.064
.180
.190
.360
.380
DETAIL B
16 PLACES
.125 BSC REF
5 SPACES AT .125 BSC
= .625 BSC
DETAIL A
7 PLACES
C
B
A
6
5
4
3

NOTES

1. INTERPRET DRAWING IN ACCORDANCE WITH STANDARDS PRESCRIBED BY MIL-D-70327
2. MATERIAL PLASTIC CLEAR ACRYLIC PER MIL-P-8184 FINISH B, ALT: MIL-P-5425 B FINISH B
3. BREAK SHARP EDGES .015 MAX
4. SILK SCREEN .025/.035 HIGH LETTERING PER ND1002019 AND ND1002122, TYPE II CLASS I USING BLACK INK, MARKING, 1006271-10

MASTER

1004232 D

1004232 D

C	THIS SHEET ADDED PER TDRR 07840		WK
D	REVISED PER TDRR 10123 DR CHK R.H.E.	9 JUN 69	

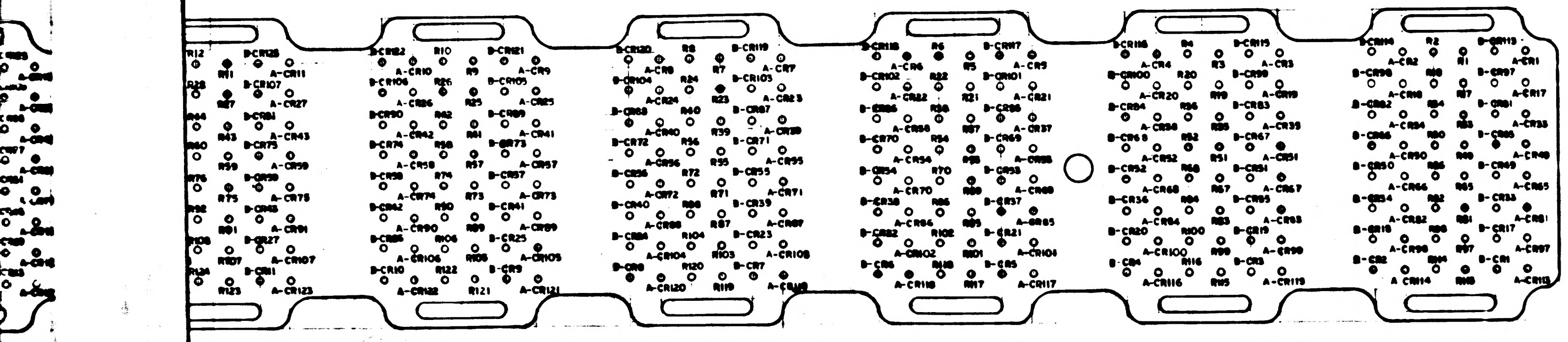

MASTER

UNLESS OTHERWISE SPECIFIED
DIMENSIONS ARE IN INCHES
TOLERANCES ON
FRACTIONS DECIMALS ANGLES
± ± ±
DO NOT SCALE THIS DRAWING
MATERIAL

NEXT ASSY USED ON
APPLICATION

QTY REQD | PART OR IDENTIFYING NO. | NOMENCLATURE OR DESCRIPTION | FIND NO.
LIST OF MATERIALS

MIT
INSTRUMENTATION LAB
CAMBRIDGE, MASS.

MANNED SPACECRAFT CENTER
HOUSTON, TEXAS

HOLDER COMPONENT
ROPE MEMORY MODULE

J
1004232

6 5 4 3

NOTICE — WHEN GOVERNMENT DRAWINGS, SPECIFICATIONS, OR OTHER DATA ARE USED FOR ANY PURPOSE OTHER THAN IN CONNECTION WITH A DEFINITELY RELATED GOVERNMENT PROCUREMENT OPERATION, THE UNITED STATES GOVERNMENT THEREBY INCURS NO RESPONSIBILITY NOR ANY OBLIGATION WHATSOEVER; AND THE FACT THAT THE GOVERNMENT MAY HAVE FORMULATED, FURNISHED, OR IN ANY WAY SUPPLIED THE SAID DRAWINGS, SPECIFICATIONS, OR OTHER DATA IS NOT TO BE REGARDED BY IMPLICATION OR OTHERWISE AS IN ANY MANNER LICENSING THE HOLDER OR ANY OTHER PERSON OR CORPORATION, OR CONVEYING ANY RIGHTS OR PERMISSION TO MANUFACTURE, USE, OR SELL ANY PATENTED INVENTION THAT MAY IN ANY WAY BE RELATED THERETO.

C

B

A

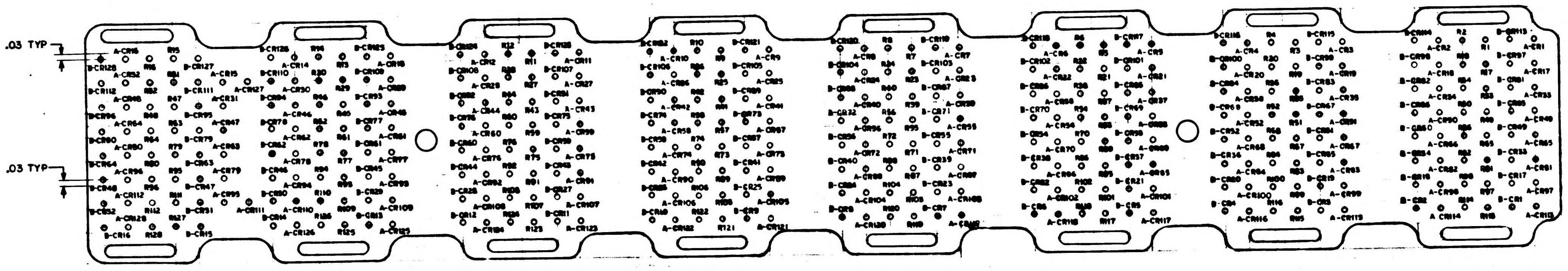

1004232 D

1004232 D

1/2

SHEET 2

1004232 E

SYM	DESCRIPTION	DATE	APPROVAL
A	REVISED PER TDRR 04396		
B	REVISED PER TDRR 05382		
C	REVISED PER TDRR 07880 DR CHK		
D	REVISED PER TDRR 10123 DR CHK R.E.E.		
E	REVISED PER TDRR 10736 DR CHK		RTB

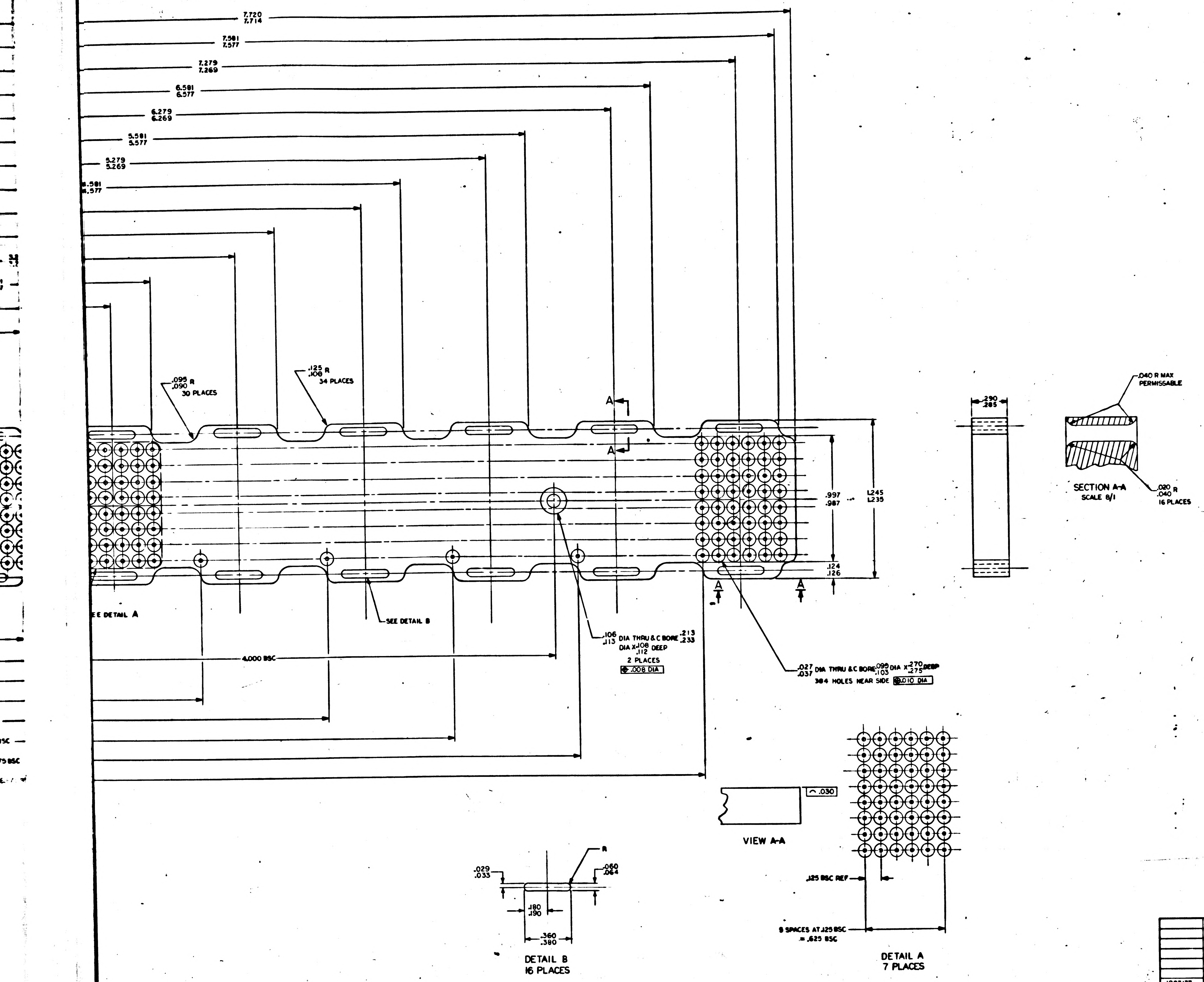
7.720
7.714
7.581
7.577
7.279
7.269
6.581
6.577
6.279
6.269
5.581
5.577
5.279
5.269
4.581
4.577
.095 R
.090 30 PLACES
.125 R
.108 34 PLACES
A
A
SEE DETAIL A
SEE DETAIL B
4.000 BSC
.106 DIA THRU & C BORE .213
.113 .233
DIA X .108 DEEP
.112
2 PLACES
.008 DIA
.027 DIA THRU & C BORE .099 DIA X .270 DEEP
.037 .103 .275
384 HOLES NEAR SIDE .010 DIA
.997
.987
1.245
1.235
.124
.126
.290
.285
.040 R MAX
PERMISSABLE
SECTION A-A
SCALE 8/1
.020 R
.040
16 PLACES
.030
VIEW A-A
.125 BSC REF
9 SPACES AT .125 BSC
= .625 BSC
DETAIL A
7 PLACES
.029
.033
R
.060
.064
.180
.190
.360
.380
DETAIL B
16 PLACES

QTY REQD	PART OR IDENTIFYING NO.	NOMENCLATURE OR DESCRIPTION	FIND NO.

LIST OF MATERIALS

1003133	
NEXT ASSY	USED ON
APPLICATION	

UNLESS OTHERWISE SPECIFIED
DIMENSIONS ARE IN INCHES
TOLERANCES ON
FRACTIONS DECIMALS ANGLES
± ± ±
DO NOT SCALE THIS DRAWING
MATERIAL
SEE NOTE 2
HEAT TREATMENT
FINAL FINISH

MIT
INSTRUMENTATION LAB
CAMBRIDGE, MASS.
DRAWN DATE 2/5/63
CHECKED
APPROVAL 6
APPROVAL
NASA APPROVAL
MIT APPROVAL

MANNED SPACECRAFT CENTER
HOUSTON, TEXAS

HOLDER, COMPONENT
ROPE MEMORY MODULE

CODE IDENT NO. —
SIZE J
NASA DRAWING NO. 1004232
SCALE 4/1 WT SHEET 1 OF 2

1004232 E

E-2/2

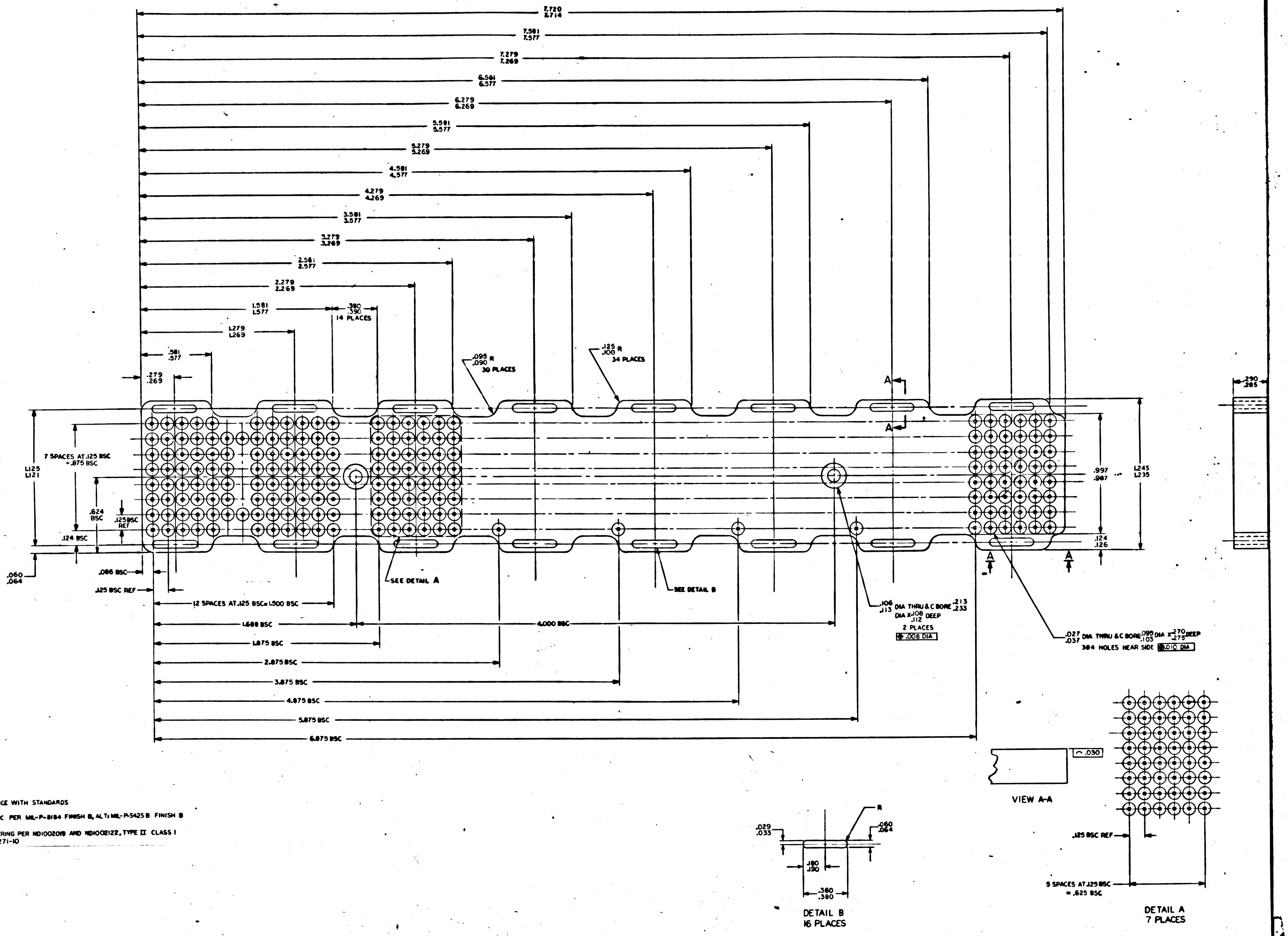
7.720
7.714
7.581
7.577
7.279
7.269
6.581
6.577
6.279
6.269
5.581
5.577
5.279
5.269
4.581
4.577
4.279
4.269
3.581
3.577
3.279
3.269
2.581
2.577
2.279
2.269
1.581
1.577
.380
.390
14 PLACES
1.279
1.269
.581
.577
.279
.269
.095
.090 R
30 PLACES
.125
.100 R
34 PLACES
A
A
7 SPACES AT .125 BSC
= .875 BSC
1.125
1.121
.624
BSC
.125 BSC
REF
.124 BSC
.060
.064
.086 BSC
.125 BSC REF
SEE DETAIL A
SEE DETAIL B
12 SPACES AT .125 BSC=1.500 BSC
1.688 BSC
4.000 BSC
1.875 BSC
2.875 BSC
3.875 BSC
4.875 BSC
5.875 BSC
6.875 BSC
.106
.113 DIA THRU & C BORE .213
.233 DIA X .108
.112 DEEP
2 PLACES
⌖ .008 DIA
.997
.987
1.245
1.235
.124
.126
.027
.037 DIA THRU & C BORE .099
.103 DIA X .270
.275 DEEP
384 HOLES NEAR SIDE ⌖ .010 DIA
.290
.285
SECTI
SCAL
⌒ .030
VIEW A-A
R
.029
.033
.060
.064
.180
.190
.360
.380
DETAIL B
16 PLACES
.125 BSC REF
5 SPACES AT .125 BSC
= .625 BSC
DETAIL A
7 PLACES

NOTES

1. INTERPRET DRAWING IN ACCORDANCE WITH STANDARDS PRESCRIBED BY MIL-D-70327
2. MATERIAL PLASTIC CLEAR ACRYLIC PER MIL-P-8184 FINISH B, ALT: MIL-P-5425 B FINISH B
3. BREAK SHARP EDGES .015 MAX
4. SILK SCREEN .025/.035 HIGH LETTERING PER ND1002019 AND ND1002122, TYPE II CLASS I USING BLACK INK, MARKING, 1006271-10

1004232 E

1004232 E 1/2

SHEET 1

1004232 E

REVISIONS			
SYM	DESCRIPTION	DATE	APPROVAL
C	THIS SHEET ADDED PER TDRR 07840	[illegible]	WR
D	REVISED PER TDRR 10123 DR G.W.Bennett CHK R.B.E.	[illegible] Jun 69	HC
E	REVISED PER TDRR 10736 DR [illegible] CHK [illegible]	[illegible]	RRB

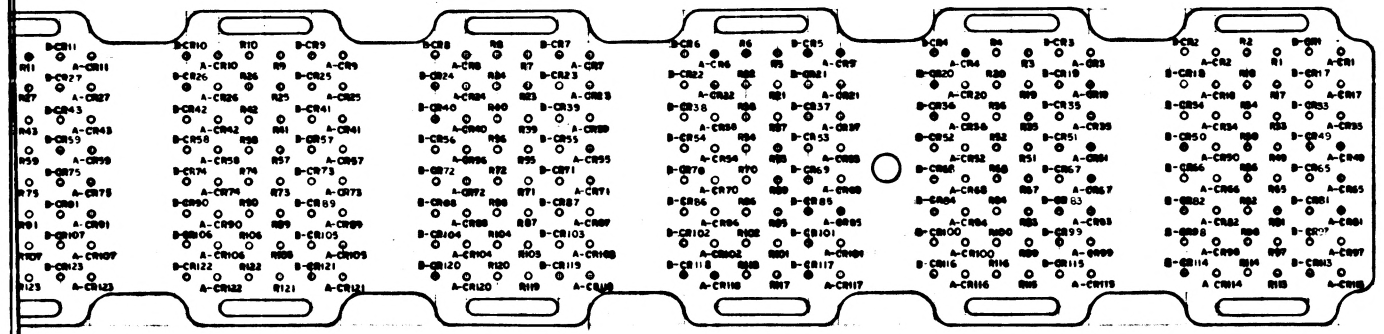

QTY REQD	PART OR IDENTIFYING NO.	NOMENCLATURE OR DESCRIPTION	FIND NO.

LIST OF MATERIALS

UNLESS OTHERWISE SPECIFIED DIMENSIONS ARE IN INCHES
TOLERANCES ON
FRACTIONS ± DECIMALS ± ANGLES ±
DO NOT SCALE THIS DRAWING
MATERIAL
HEAT TREATMENT
FINAL FINISH

NEXT ASSY | USED ON
APPLICATION

MIT
INSTRUMENTATION LAB
CAMBRIDGE, MASS.
DRAWN H. Carlson DATE 9 APR 68
CHECKED [illegible]
APPROVAL
APPROVAL Eldon C. Hall
NASA APPROVAL [illegible]
MIT APPROVAL
MIT APPROVAL W Kupfer

MANNED SPACECRAFT CENTER
HOUSTON, TEXAS

HOLDER COMPONENT
ROPE MEMORY MODULE

CODE IDENT NO. —
SIZE J
NASA DRAWING NO. 1004232
SCALE 4/1
WT
SHEET 2 OF 2

1004232 E

6 5 4 3

C

B

A

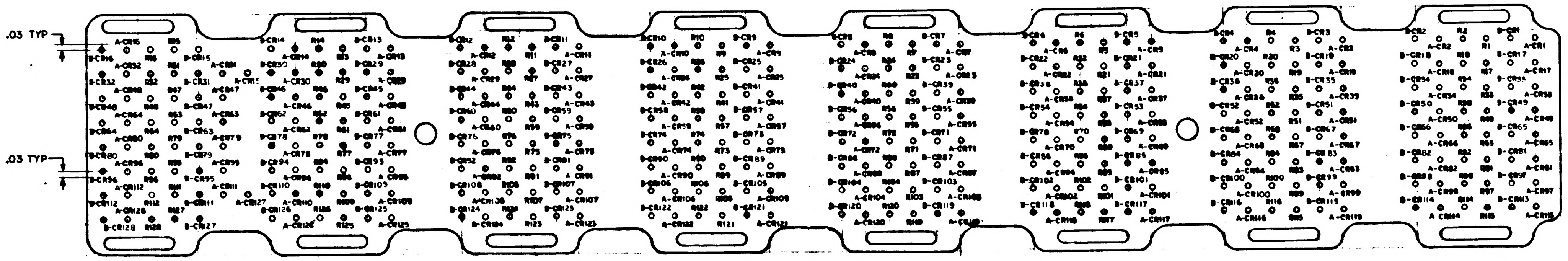
.03 TYP
.03 TYP
A-CR16
R15
B-CR16
R16
B-CR15
A-CR32
R31
A-CR31
B-CR32
R32
B-CR31
A-CR15
A-CR48
R47
A-CR47
B-CR48
R48
B-CR47
A-CR64
R63
A-CR63
B-CR64
R64
B-CR63
A-CR80
R79
A-CR79
B-CR80
R80
B-CR79
A-CR96
R95
A-CR95
B-CR96
R96
B-CR95
A-CR112
R111
A-CR111
B-CR112
R112
B-CR111
A-CR127
A-CR128
R127
B-CR128
R128
B-CR127
B-CR14
R14
B-CR13
A-CR14
R13
A-CR13
B-CR30
R30
B-CR29
A-CR30
R29
B-CR46
R46
B-CR45
A-CR46
R45
B-CR62
R62
B-CR61
A-CR62
R61
A-CR61
B-CR78
R78
B-CR77
A-CR78
R77
A-CR77
B-CR94
R94
B-CR93
A-CR94
B-CR110
R110
B-CR109
A-CR110
R109
A-CR109
B-CR126
R126
B-CR125
A-CR126
R125
A-CR125

REVISIONS			
SYM	DESCRIPTION	DATE	APPROVAL

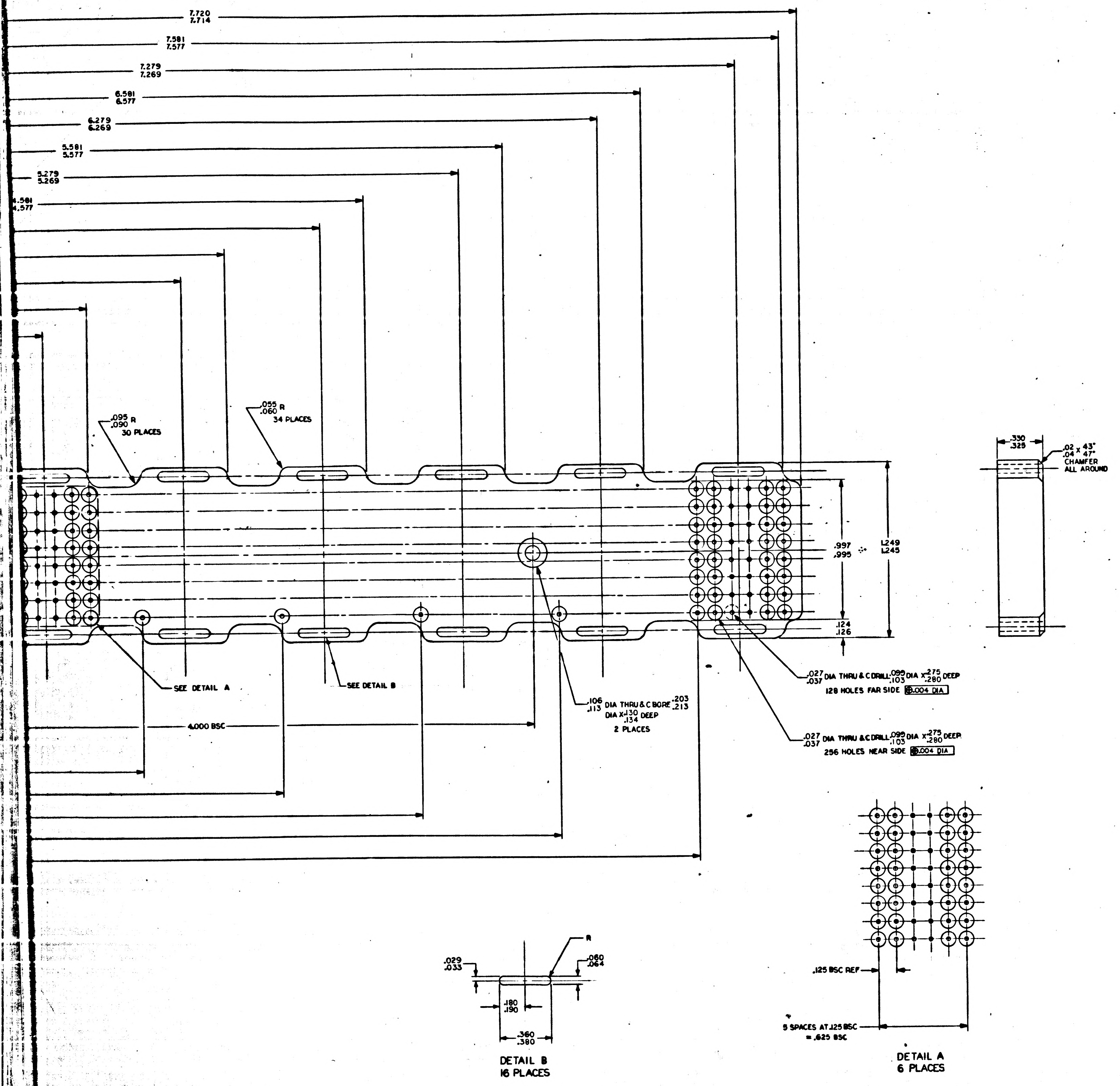

7.720 7.714
7.581 7.577
7.279 7.269
6.581 6.577
6.279 6.269
5.581 5.577
5.279 5.269
4.581 4.577
.095 .090 R 30 PLACES
.055 .060 R 34 PLACES
.330 .325
.02 .04 x 43° 47° CHAMFER ALL AROUND
.997 .995
1.249 1.245
.124 .126
SEE DETAIL A
SEE DETAIL B
4.000 BSC
.106 .113 DIA THRU & C BORE .203 .213 DIA X .130 .134 DEEP 2 PLACES
.027 .037 DIA THRU & C DRILL .099 .103 DIA X .275 .280 DEEP 128 HOLES FAR SIDE ⊕.004 DIA
.027 .037 DIA THRU & C DRILL .099 .103 DIA X .275 .280 DEEP 256 HOLES NEAR SIDE ⊕.004 DIA
.029 .033
R
.060 .064
.180 .190
.360 .380
DETAIL B 16 PLACES
.125 BSC REF
5 SPACES AT .125 BSC = .625 BSC
DETAIL A 6 PLACES

MASTER

QTY REQD	PART OR IDENTIFYING NO.	NOMENCLATURE OR DESCRIPTION	FIND NO.

LIST OF MATERIALS

UNLESS OTHERWISE SPECIFIED DIMENSIONS ARE IN INCHES
TOLERANCES ON
FRACTIONS ± DECIMALS ± ANGLES ±
DO NOT SCALE THIS DRAWING
MATERIAL SEE NOTE 2
HEAT TREATMENT
FINAL FINISH

NEXT ASSY	USED ON
1003133	

APPLICATION

MIT INSTRUMENTATION LAB CAMBRIDGE, MASS
DRAWN DATE 8/5/63
CHECKED
APPROVAL 6/26/63
APPROVAL
NASA APPROVAL
MIT APPROVAL

MANNED SPACECRAFT CENTER HOUSTON, TEXAS

HOLDER, COMPONENT ROPE MEMORY MODULE

CODE IDENT NO.	SIZE	NASA DRAWING NO.
	J	1004232

SCALE 4/1 WT SHEET 1 OF 1

1004232

INCHES PHOTOGRAPHIC SCALE ONLY

F-2

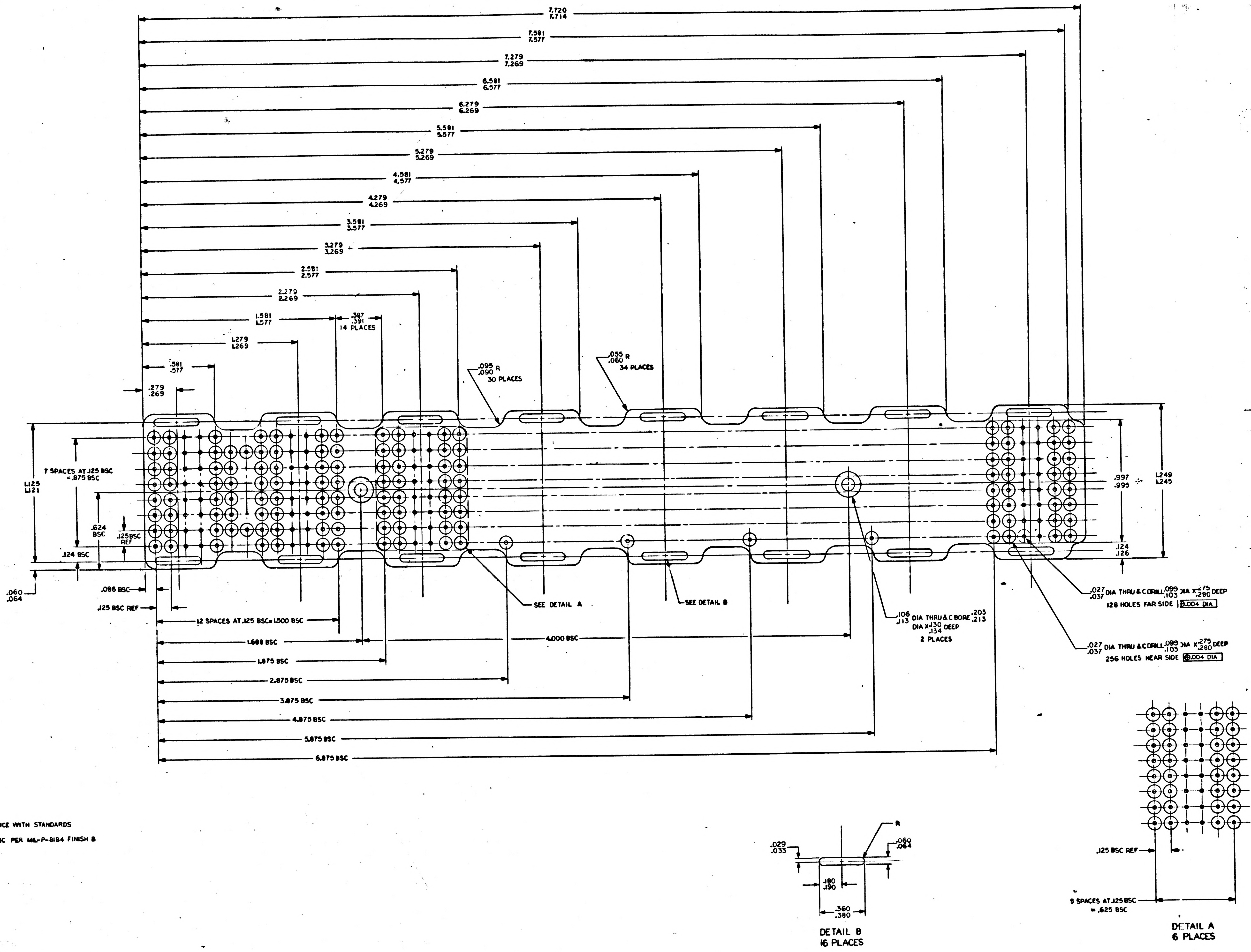
7.720 7.714
7.581 7.577
7.279 7.269
6.581 6.577
6.279 6.269
5.581 5.577
5.279 5.269
4.581 4.577
4.279 4.269
3.581 3.577
3.279 3.269
2.581 2.577
2.279 2.269
1.581 1.577
.387 .391 14 PLACES
1.279 1.269
.581 .577
.279 .269
.095 .090 R 30 PLACES
.055 .060 R 34 PLACES
7 SPACES AT .125 BSC =.875 BSC
1.125 1.121
.624 BSC
.125 BSC REF
.124 BSC
.060 .064
.086 BSC
.125 BSC REF
12 SPACES AT .125 BSC=1.500 BSC
1.688 BSC
4.000 BSC
1.875 BSC
2.875 BSC
3.875 BSC
4.875 BSC
5.875 BSC
6.875 BSC
SEE DETAIL A
SEE DETAIL B
.997 .995
1.249 1.245
.124 .126
.027 .037 DIA THRU & C DRILL .099 .103 DIA X .275 .280 DEEP
128 HOLES FAR SIDE ⊕.004 DIA
.106 .113 DIA THRU & C BORE .203 .213 DIA X .130 .134 DEEP
2 PLACES
.027 .037 DIA THRU & C DRILL .099 .103 DIA X .275 .280 DEEP
256 HOLES NEAR SIDE ⊕.004 DIA
R
.029 .033
.060 .064
.180 .190
.360 .380
DETAIL B
16 PLACES
.125 BSC REF
5 SPACES AT .125 BSC = .625 BSC
DETAIL A
6 PLACES

NOTES

1. INTERPRET DRAWING IN ACCORDANCE WITH STANDARDS PRESCRIBED BY MIL-D-70327
2. MATERIAL PLASTIC CLEAR ACRYLIC PER MIL-P-8184 FINISH B
3. BREAK SHARP EDGES .015 MAX

1004232

MASTER

INCHES
0 1 2
PHOTOGRAPHIC SCALE ONLY

NOTICE — WHEN GOVERNMENT DRAWINGS, SPECIFICATIONS, OR OTHER DATA ARE USED FOR ANY PURPOSE OTHER THAN IN CONNECTION WITH A DEFINITELY RELATED GOVERNMENT PROCUREMENT OPERATION, THE UNITED STATES GOVERNMENT THEREBY INCURS NO RESPONSIBILITY NOR ANY OBLIGATION WHATSOEVER; AND THE FACT THAT THE GOVERNMENT MAY HAVE FORMULATED, FURNISHED, OR IN ANY WAY SUPPLIED THE SAID DRAWINGS, SPECIFICATIONS, OR OTHER DATA IS NOT TO BE REGARDED BY IMPLICATION OR OTHERWISE AS IN ANY MANNER LICENSING THE HOLDER OR ANY OTHER PERSON OR CORPORATION, OR CONVEYING ANY RIGHTS OR PERMISSION TO MANUFACTURE, USE, OR SELL ANY PATENTED INVENTION THAT MAY IN ANY WAY BE RELATED THERETO.

	REVISIONS 02544		
SYM	DESCRIPTION	DATE	APPROVAL
A	REVISED PER TDRR 03451	9-26-63	

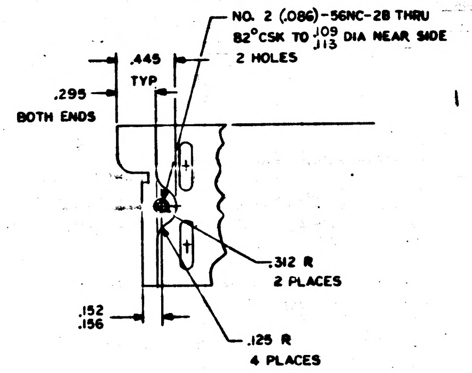
NO. 2 (.086)-56NC-2B THRU
82°CSK TO .109/.113 DIA NEAR SIDE
2 HOLES
.445
TYP
.295
BOTH ENDS
.312 R
2 PLACES
.152
.156
.125 R
4 PLACES

PARTIAL REAR VIEW

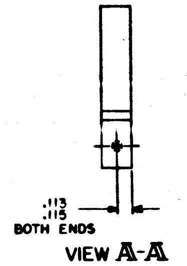
.113
.115
BOTH ENDS

VIEW A-A

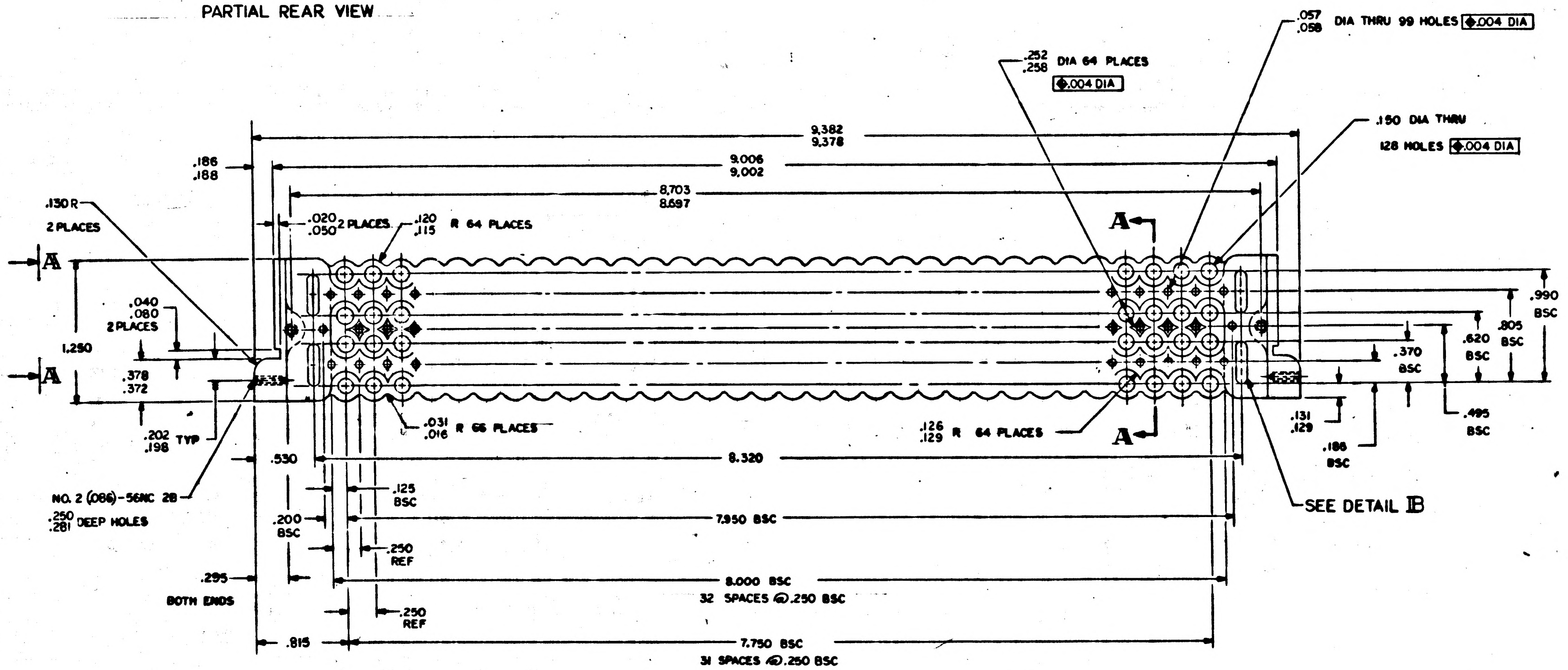
.057
.058 DIA THRU 99 HOLES ◈.004 DIA
.252
.258 DIA 64 PLACES
◈.004 DIA
.150 DIA THRU
128 HOLES ◈.004 DIA
9.382
9.378
9.006
9.002
8.703
8.697
.186
.188
.130 R
2 PLACES
.020
.050 2 PLACES
.120
.115 R 64 PLACES
A
A
.040
.080
2 PLACES
1.250
.378
.372
.202
.198 TYP
.031
.016 R 66 PLACES
.126
.129 R 64 PLACES
.990 BSC
.805 BSC
.620 BSC
.370 BSC
.495 BSC
.131
.129
.188 BSC
SEE DETAIL B
.530
8.320
NO. 2 (.086)-56NC 2B
.250
.281 DEEP HOLES
.125 BSC
.200 BSC
7.950 BSC
.250 REF
.295
BOTH ENDS
8.000 BSC
32 SPACES @.250 BSC
.250 REF
.815
7.750 BSC
31 SPACES @.250 BSC

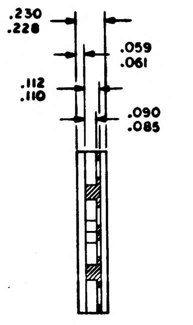
.230
.228
.059
.061
.112
.110
.090
.085

SECTION A-A

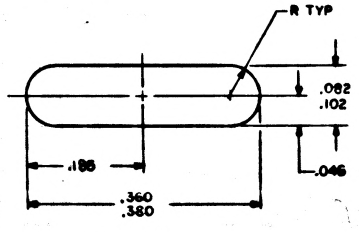
R TYP
.082
.102
.046
.186
.360
.380

DETAIL B
SCALE 10/1
4 PLACES
ROTATED 90°

NOTES
1. MATERIAL: DIE OR INVESTMENT CAST A-356 AL CLASS 10 COMP I PER MIL-C-21180
2. SURFACE QUALITY AS CAST
3. ALL ROUNDS, CORNERS & EDGES TO HAVE .008/.010 R UNLESS OTHERWISE SPECIFIED
4. BLACK ANODIZE PER MIL-A-8625 TYPE II

MASTER

QTY REQD	PART OR IDENTIFYING NO.	NOMENCLATURE OR DESCRIPTION	FIND NO.
	LIST OF MATERIALS		

1003133
NEXT ASSY
USED ON
APPLICATION

UNLESS OTHERWISE SPECIFIED
DIMENSIONS ARE IN INCHES
TOLERANCES ON
FRACTIONS ± DECIMALS ±.005 ANGLES ±
DO NOT SCALE THIS DRAWING
MATERIAL SEE NOTE 1
HEAT TREATMENT
FINAL FINISH SEE NOTE 4

MIT INSTRUMENTATION LAB
CAMBRIDGE, MASS
DWG NO.
CONTRACT
DRAWN DATE 8-5-63
CHECKED 13Aug63
APPROVAL 6AUG63
APPROVAL 8/8/63
NASA APPROVAL
MIT APPROVAL 14Aug63

MANNED SPACECRAFT CENTER
HOUSTON, TEXAS

HOLDER, CORE
ROPE MEMORY MODULE

CODE IDENT NO.
SIZE E
NASA DRAWING NO. 1004233
SCALE 2/1
WT
SHEET 1 OF

1004233 A

INCHES
PHOTOGRAPHIC SCALE ONLY

NOTICE — WHEN GOVERNMENT DRAWINGS, SPECIFICATIONS, OR OTHER DATA ARE USED FOR ANY PURPOSE OTHER THAN IN CONNECTION WITH A DEFINITELY RELATED GOVERNMENT PROCUREMENT OPERATION, THE UNITED STATES GOVERNMENT THEREBY INCURS NO RESPONSIBILITY NOR ANY OBLIGATION WHATSOEVER; AND THE FACT THAT THE GOVERNMENT MAY HAVE FORMULATED, FURNISHED, OR IN ANY WAY SUPPLIED THE SAID DRAWINGS, SPECIFICATIONS OR OTHER DATA IS NOT TO BE REGARDED BY IMPLICATION OR OTHERWISE AS IN ANY MANNER LICENSING THE HOLDER OR ANY OTHER PERSON OR CORPORATION, OR CONVEYING ANY RIGHTS OR PERMISSION TO MANUFACTURE, USE, OR SELL ANY PATENTED INVENTION THAT MAY IN ANY WAY BE RELATED THERETO.

	REVISIONS 02544		
SYM	DESCRIPTION	DATE	APPROVAL
A	REVISED PER TDRR 03481	9-26-63	JJ
B	REVISED PER TDRR 04330	10-30-63	WK

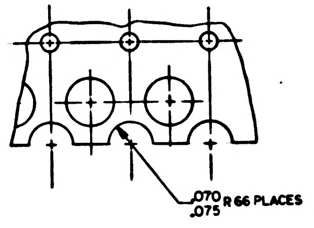
.070
.075 R 66 PLACES

DETAIL A
SCALE 5/1

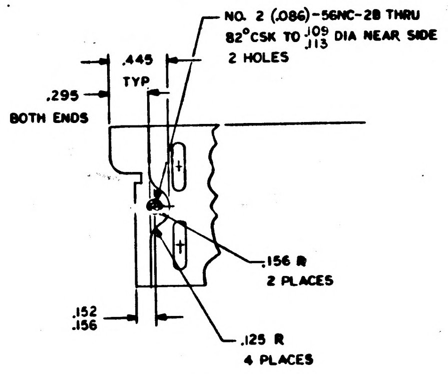
NO. 2 (.086)-56NC-2B THRU
82° CSK TO .109 .113 DIA NEAR SIDE
2 HOLES
.445
TYP
.295
BOTH ENDS
.156 R
2 PLACES
.152
.156
.125 R
4 PLACES

PARTIAL REAR VIEW

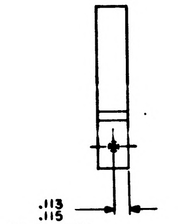
.113
.115
BOTH ENDS

VIEW A-A

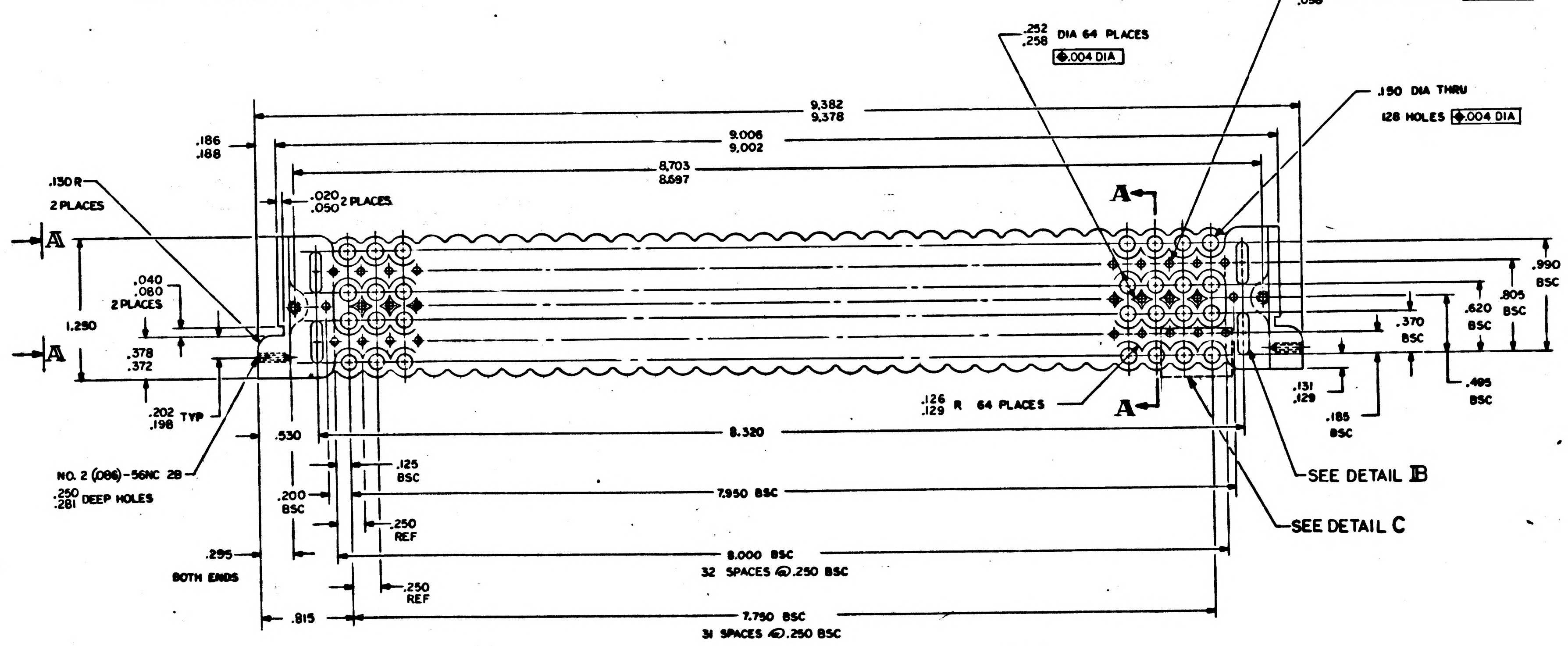
.057
.058 DIA THRU 99 HOLES ⌖.004 DIA
.252
.258 DIA 64 PLACES
⌖.004 DIA
.150 DIA THRU
128 HOLES ⌖.004 DIA
9.382
9.378
9.006
9.002
8.703
8.697
.186
.188
.130 R
2 PLACES
.020
.050 2 PLACES
A
A
A
A
.040
.080
2 PLACES
1.290
.378
.372
.202 TYP
.198
.990
BSC
.805
BSC
.620
BSC
.370
BSC
.495
BSC
.131
.129
.185
BSC
.126
.129 R 64 PLACES
NO. 2 (.086)-56NC 2B
.250
.281 DEEP HOLES
.530
8.320
.125
BSC
.200
BSC
7.950 BSC
.250
REF
SEE DETAIL B
SEE DETAIL C
.295
BOTH ENDS
8.000 BSC
32 SPACES @ .250 BSC
.250
REF
.815
7.750 BSC
31 SPACES @ .250 BSC

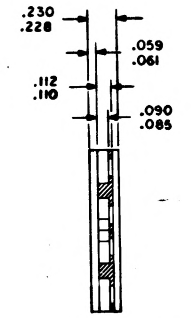
.230
.228
.059
.061
.112
.110
.090
.085

SECTION A-A

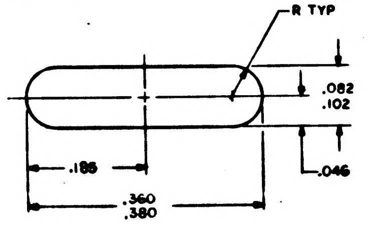
R TYP
.082
.102
.046
.188
.360
.380

DETAIL B
SCALE 10/1
4 PLACES
ROTATED 90°

NOTES
1. MATERIAL: DIE OR INVESTMENT CAST A-356 AL CLASS 10 COMP I PER MIL-C-21180
2. SURFACE QUALITY AS CAST
3. ALL ROUNDS, CORNERS & EDGES TO HAVE .010/.020R UNLESS OTHERWISE SPECIFIED PER BARREL TUMBLING OR EQUIVALENT METHOD
4. BLACK ANODIZE PER MIL-A-8625 TYPE II

MASTER

QTY REQD	PART OR IDENTIFYING NO.	NOMENCLATURE OR DESCRIPTION	FIND NO.

LIST OF MATERIALS

NEXT ASSY	USED ON
1003133	

APPLICATION

UNLESS OTHERWISE SPECIFIED
DIMENSIONS ARE IN INCHES
TOLERANCES ON
FRACTIONS ± DECIMALS ±.005 ANGLES ±
DO NOT SCALE THIS DRAWING
MATERIAL SEE NOTE 1
HEAT TREATMENT
FINAL FINISH SEE NOTE 4

MIT
INSTRUMENTATION LAB
CAMBRIDGE, MASS
DWG. NO. CONTRACT
DRAWN DATE 8-5-63
CHECKED 8-6-63
APPROVAL 8-14-63
APPROVAL 8/3/63
NASA APPROVAL
MIT APPROVAL W Kupfer

MANNED SPACECRAFT CENTER
HOUSTON, TEXAS

HOLDER, CORE
ROPE MEMORY MODULE

CODE IDENT NO. —— SIZE E NASA DRAWING NO. 1004233
SCALE 2/1 WT SHEET 1 OF

1004233 B

NOTICE — WHEN GOVERNMENT DRAWINGS, SPECIFICATIONS, OR OTHER DATA ARE USED FOR ANY PURPOSE OTHER THAN IN CONNECTION WITH A DEFINITELY RELATED GOVERNMENT PROCUREMENT OPERATION, THE UNITED STATES GOVERNMENT THEREBY INCURS NO RESPONSIBILITY NOR ANY OBLIGATION WHATSOEVER; AND THE FACT THAT THE GOVERNMENT MAY HAVE FORMULATED, FURNISHED, OR IN ANY WAY SUPPLIED THE SAID DRAWINGS, SPECIFICATIONS, OR OTHER DATA IS NOT TO BE REGARDED BY IMPLICATION OR OTHERWISE AS IN ANY MANNER LICENSING THE HOLDER OR ANY OTHER PERSON OR CORPORATION, OR CONVEYING ANY RIGHTS OR PERMISSION TO MANUFACTURE, USE, OR SELL ANY PATENTED INVENTION THAT MAY IN ANY WAY BE RELATED THERETO.

REVISIONS 02544			
SYM	DESCRIPTION	DATE	APPROVAL
A	REVISED PER TDRR 03491	9-26-63	
B	REVISED PER TDRR 04330		
C	REVISED PER TDRR 04760		

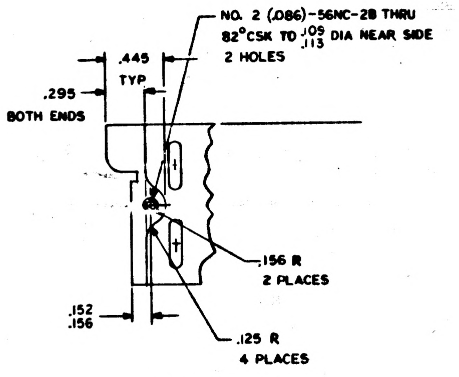
NO. 2 (.086)-56NC-2B THRU
82° CSK TO .109/.113 DIA NEAR SIDE
2 HOLES
.445 TYP
.295 BOTH ENDS
.156 R 2 PLACES
.152/.156
.125 R 4 PLACES

PARTIAL REAR VIEW

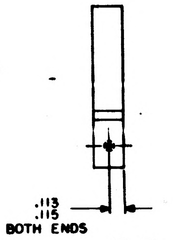
.113/.115 BOTH ENDS

VIEW A-A

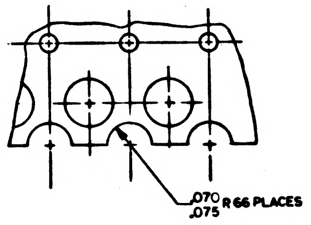
.070/.075 R 66 PLACES

DETAIL A
SCALE 5/1

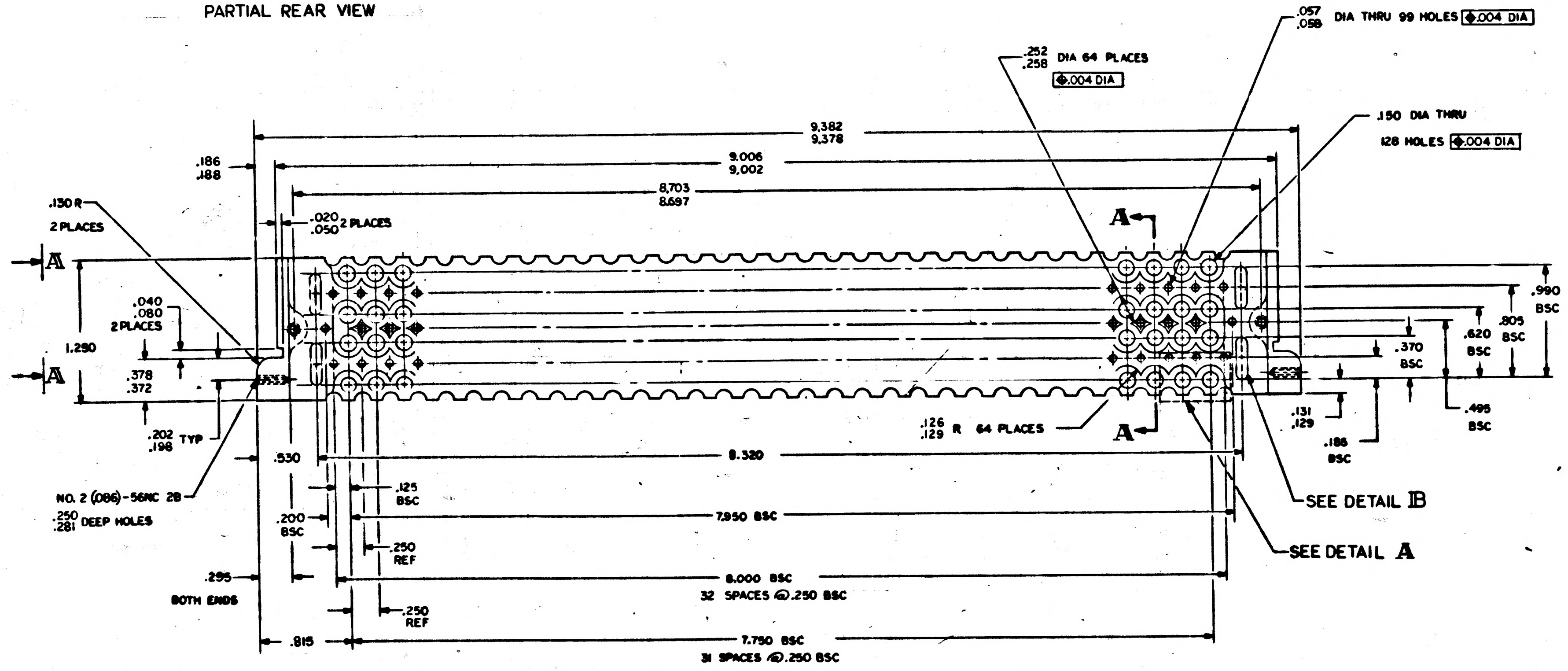
A
A
.130 R 2 PLACES
.186/.188
9.382/9.378
9.006/9.002
8.703/8.697
.020/.050 2 PLACES
.040/.080 2 PLACES
1.250
.378/.372
.202/.198 TYP
NO. 2 (.086)-56NC 2B
.250/.281 DEEP HOLES
.530
8.320
.125 BSC
.200 BSC
7.950 BSC
.250 REF
.295 BOTH ENDS
8.000 BSC
32 SPACES @ .250 BSC
.250 REF
.815
7.750 BSC
31 SPACES @ .250 BSC
.252/.258 DIA 64 PLACES ⌖.004 DIA
.057/.058 DIA THRU 99 HOLES ⌖.004 DIA
.150 DIA THRU
128 HOLES ⌖.004 DIA
A
A
.126/.129 R 64 PLACES
.990 BSC
.805 BSC
.620 BSC
.370 BSC
.495 BSC
.131/.129
.186 BSC
SEE DETAIL B
SEE DETAIL A

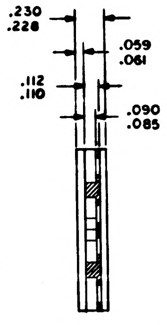
.230/.228
.059/.061
.112/.110
.090/.085

SECTION A-A

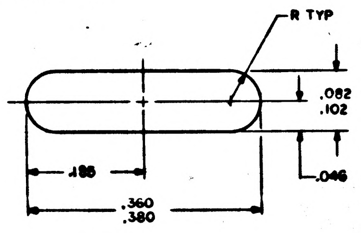
R TYP
.082/.102
.186
.046
.360/.380

DETAIL B
SCALE 10/1
4 PLACES
ROTATED 90°

NOTES
1. MATERIAL: DIE OR INVESTMENT CAST A-356 AL CLASS 10 COMP I PER MIL-C-21180
2. SURFACE QUALITY AS CAST
3. ALL ROUNDS, CORNERS & EDGES TO HAVE .010/.020R UNLESS OTHERWISE SPECIFIED PER BARREL TUMBLING OR EQUIVALENT METHOD
4. BLACK ANODIZE PER MIL-A-8625 TYPE II

MASTER

QTY REQD	PART OR IDENTIFYING NO.	NOMENCLATURE OR DESCRIPTION	FIND NO.

LIST OF MATERIALS

NEXT ASSY	USED ON
1003133	

APPLICATION

UNLESS OTHERWISE SPECIFIED DIMENSIONS ARE IN INCHES
TOLERANCES ON
FRACTIONS ± DECIMALS ±.005 ANGLES ±
DO NOT SCALE THIS DRAWING
MATERIAL SEE NOTE 1
HEAT TREATMENT
FINAL FINISH SEE NOTE 4

M I T
INSTRUMENTATION LAB
CAMBRIDGE, MASS.
DRAWN DATE 8-5-63
CHECKED 12 Aug 63
APPROVAL 6 Aug 63
APPROVAL 8/3/63
NASA APPROVAL
MIT APPROVAL

MANNED SPACECRAFT CENTER
HOUSTON, TEXAS

HOLDER, CORE
ROPE MEMORY MODULE

CODE IDENT NO. ——— SIZE E NASA DRAWING NO. 1004233
SCALE 2/1 WT SHEET 1 OF

1004233 C

INCHES
PHOTOGRAPHIC SCALE ONLY

NOTICE — WHEN GOVERNMENT DRAWINGS, SPECIFICATIONS, OR OTHER DATA ARE USED FOR ANY PURPOSE OTHER THAN IN CONNECTION WITH A DEFINITELY RELATED GOVERNMENT PROCUREMENT OPERATION, THE UNITED STATES GOVERNMENT THEREBY INCURS NO RESPONSIBILITY NOR ANY OBLIGATION WHATSOEVER, AND THE FACT THAT THE GOVERNMENT MAY HAVE FORMULATED, FURNISHED, OR IN ANY WAY SUPPLIED THE SAID DRAWINGS, SPECIFICATIONS OR OTHER DATA IS NOT TO BE REGARDED BY IMPLICATION OR OTHERWISE AS IN ANY MANNER LICENSING THE HOLDER OR ANY OTHER PERSON OR CORPORATION, OR CONVEYING ANY RIGHTS OR PERMISSION TO MANUFACTURE, USE, OR SELL ANY PATENTED INVENTION THAT MAY IN ANY WAY BE RELATED THERETO.

REVISIONS 02544			
SYM	DESCRIPTION	DATE	APPROVAL
A	REVISED PER TDRR 03451	2-26-63	
B	REVISED PER TDRR 04330	10-30-63	ZPK WK
C	REVISED PER TDRR 04760	11-19-63	
D	REVISED PER TDRR 05104	12-10-63	ZPK

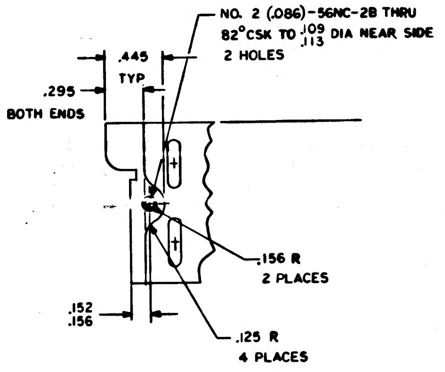
NO. 2 (.086)-56NC-2B THRU
82° CSK TO .109 .113 DIA NEAR SIDE
2 HOLES
.445
TYP
.295
BOTH ENDS
.156 R
2 PLACES
.152
.156
.125 R
4 PLACES

PARTIAL REAR VIEW

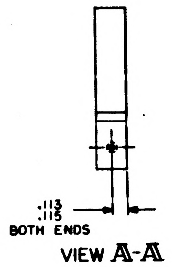
.113
.115
BOTH ENDS

VIEW A-A

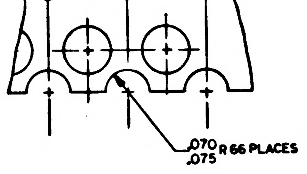
.070 .075 R 66 PLACES

DETAIL A

SCALE 5/1

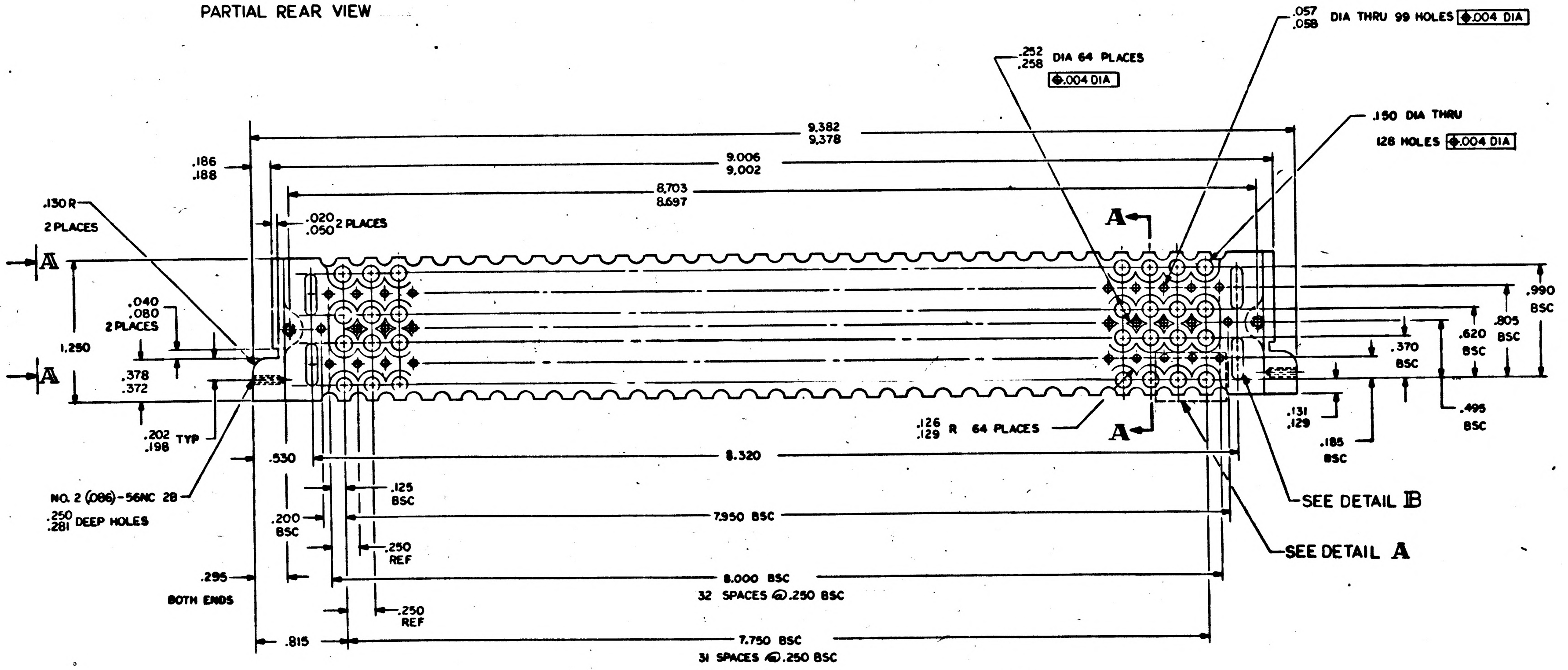
.057 .058 DIA THRU 99 HOLES ⌖.004 DIA
.252 .258 DIA 64 PLACES
⌖.004 DIA
.150 DIA THRU
128 HOLES ⌖.004 DIA
9.382
9.378
9.006
9.002
8.703
8.697
.186
.188
.130 R
2 PLACES
.020 .050 2 PLACES
A
A
.040
.080
2 PLACES
1.250
.378
.372
.202
.198 TYP
NO. 2 (.086)-56NC 2B
.250 .281 DEEP HOLES
.530
8.320
.125
BSC
.200
BSC
7.950 BSC
.250
REF
.295
BOTH ENDS
8.000 BSC
32 SPACES @ .250 BSC
.250
REF
.815
7.750 BSC
31 SPACES @ .250 BSC
.126 .129 R 64 PLACES
.990
BSC
.805
BSC
.620
BSC
.370
BSC
.495
BSC
.131
.129
.185
BSC
SEE DETAIL B
SEE DETAIL A

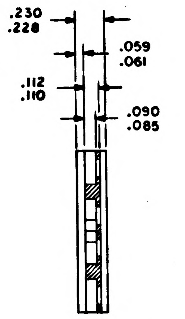
.230
.228
.112
.110
.059
.061
.090
.085

SECTION A-A

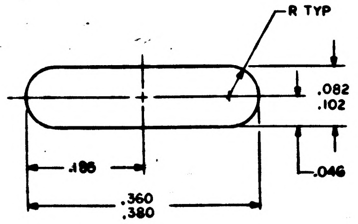
R TYP
.082
.102
.188
.360
.380
.046

DETAIL B

SCALE 10/1

4 PLACES

ROTATED 90°

NOTES

1. MATERIAL: DIE OR INVESTMENT CAST A-356 AL CLASS 10 COMP 1 PER MIL-C-21180, ALT MAT 6061T6 PER QQ-A-327 T6
2. SURFACE QUALITY AS CAST
3. ALL ROUNDS, CORNERS & EDGES TO HAVE .010/.020R UNLESS OTHERWISE SPECIFIED PER BARREL TUMBLING OR EQUIVALENT METHOD
4. HARD COAT ANODIZE PER AMS 2469 .0020/.0015 THICK
5. ALL ABOVE DIMENSIONS APPLY AFTER FINISHING
6. PLUG TAPPED HOLES AND .057/.058 DIA HOLES BEFORE COATING

MASTER

QTY REQD	PART OR IDENTIFYING NO.	NOMENCLATURE OR DESCRIPTION	FIND NO.

LIST OF MATERIALS

1003133	
NEXT ASSY	USED ON
APPLICATION	

UNLESS OTHERWISE SPECIFIED
DIMENSIONS ARE IN INCHES
TOLERANCES ON
FRACTIONS ± DECIMALS ±.005 ANGLES ±
DO NOT SCALE THIS DRAWING
MATERIAL SEE NOTE 1
HEAT TREATMENT
FINAL FINISH SEE NOTE 4

MIT
INSTRUMENTATION LAB
CAMBRIDGE, MASS
DWG. NO. CONTRACT
DRAWN DATE 8-5-63
CHECKED 6Aug63
APPROVAL 6AUG63
APPROVAL 8/7/63
NASA APPROVAL
MIT APPROVAL 14Aug63

MANNED SPACECRAFT CENTER
HOUSTON, TEXAS

HOLDER, CORE
ROPE MEMORY MODULE

CODE IDENT NO. —— SIZE E NASA DRAWING NO. 1004233
SCALE 2/1 WT SHEET 1 OF

1004233 D

NOTICE — WHEN GOVERNMENT DRAWINGS, SPECIFICATIONS, OR OTHER DATA ARE USED FOR ANY PURPOSE OTHER THAN IN CONNECTION WITH A DEFINITELY RELATED GOVERNMENT PROCUREMENT OPERATION, THE UNITED STATES GOVERNMENT THEREBY INCURS NO RESPONSIBILITY NOR ANY OBLIGATION WHATSOEVER, AND THE FACT THAT THE GOVERNMENT MAY HAVE FORMULATED, FURNISHED, OR IN ANY WAY SUPPLIED THE SAID DRAWINGS, SPECIFICATIONS OR OTHER DATA IS NOT TO BE REGARDED BY IMPLICATION OR OTHERWISE AS IN ANY MANNER LICENSING THE HOLDER OR ANY OTHER PERSON OR CORPORATION, OR CONVEYING ANY RIGHTS OR PERMISSION TO MANUFACTURE, USE, OR SELL ANY PATENTED INVENTION THAT MAY IN ANY WAY BE RELATED THERETO

REVISIONS 02534

SYM	DESCRIPTION	DATE	APPROVAL
A	REVISED PER TDRR 03451	9-26-63	
B	REVISED PER TDRR 04330	[illegible]	
C	REVISED PER TDRR 04760	[illegible]-63	
D	REVISED PER TDRR 05104	12-10-63	
E	REVISED PER TDRR 05182	Dec 63	

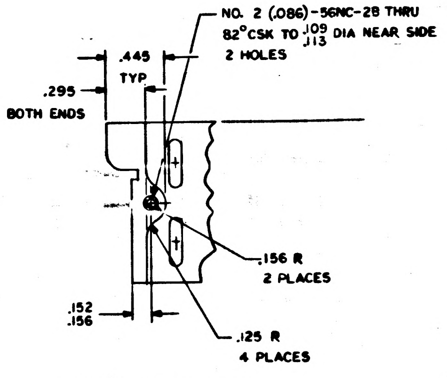
NO. 2 (.086)-56NC-2B THRU
82° CSK TO .109/.113 DIA NEAR SIDE
2 HOLES
.445
TYP
.295
BOTH ENDS
.156 R
2 PLACES
.152
.156
.125 R
4 PLACES

PARTIAL REAR VIEW

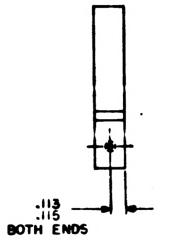
.113
.115
BOTH ENDS

VIEW A-A

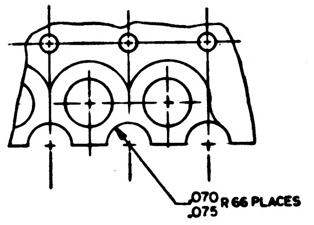
.070
.075 R 66 PLACES

DETAIL A

SCALE 5/1

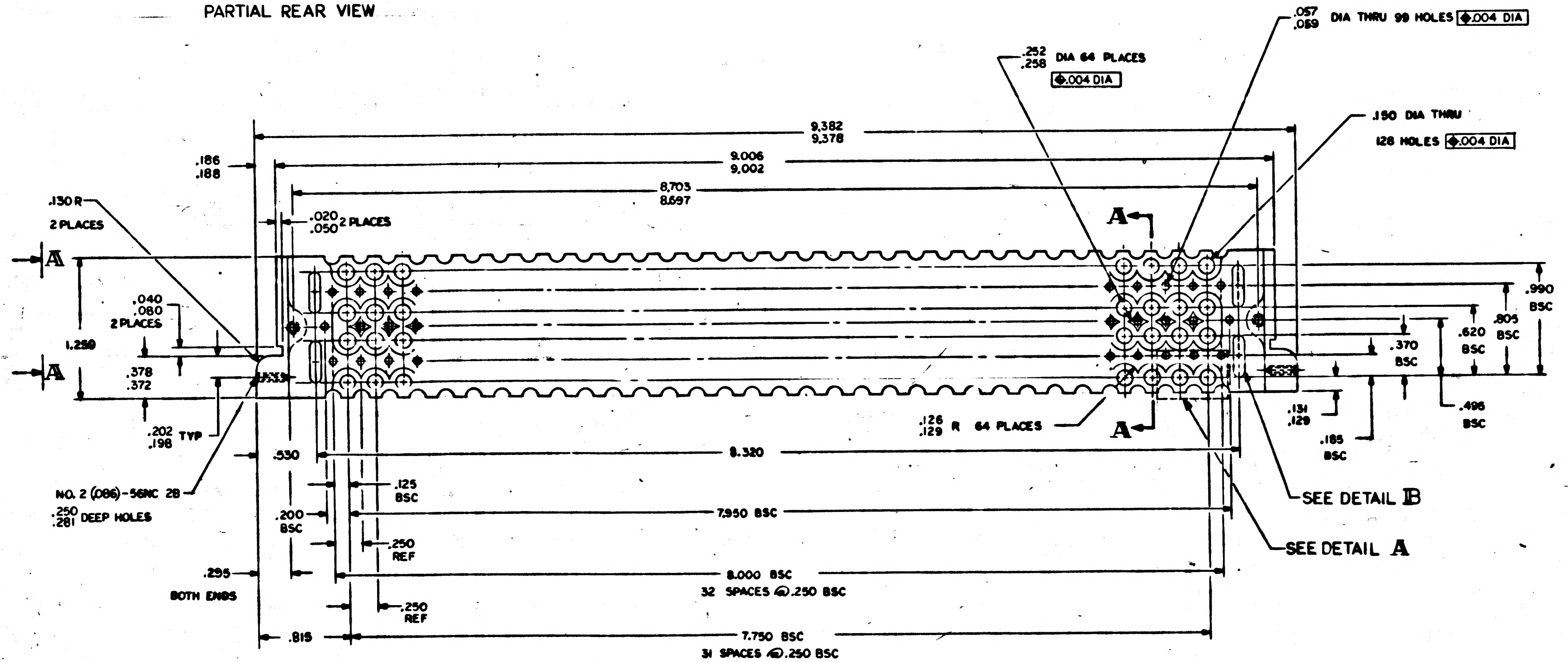
.057
.059 DIA THRU 99 HOLES ⌖.004 DIA
.252
.258 DIA 64 PLACES
⌖.004 DIA
.150 DIA THRU
128 HOLES ⌖.004 DIA
9.382
9.378
9.006
9.002
8.703
8.697
.186
.188
.130 R
2 PLACES
.020
.050 2 PLACES
A
A
1.250
.040
.080
2 PLACES
.378
.372
.202
.198 TYP
NO. 2 (.086)-56NC 2B
.250
.281 DEEP HOLES
.530
8.320
.125
BSC
.200
BSC
7.950 BSC
.250
REF
.295
BOTH ENDS
8.000 BSC
32 SPACES @.250 BSC
.250
REF
.815
7.750 BSC
31 SPACES @.250 BSC
.126
.129 R 64 PLACES
.990
BSC
.805
BSC
.620
BSC
.370
BSC
.496
BSC
.131
.129
.185
BSC
SEE DETAIL B
SEE DETAIL A

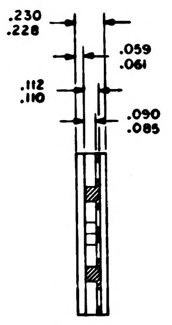
.230
.228
.059
.061
.112
.110
.090
.085

SECTION A-A

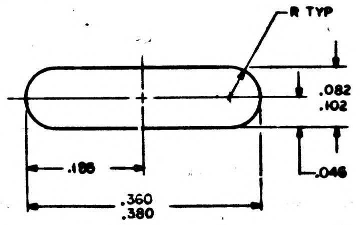
R TYP
.082
.102
.046
.188
.360
.380

DETAIL B

SCALE 10/1

4 PLACES

ROTATED 90°

NOTES

1. MATERIAL: DIE OR INVESTMENT CAST A-356 AL CLASS 10 COMP I PER MIL-C-21180, ALT MAT 6061T6 PER QQ-A-327 T6
2. SURFACE QUALITY AS CAST
3. ALL ROUNDS, CORNERS & EDGES TO HAVE .010/.020R UNLESS OTHERWISE SPECIFIED PER BARREL TUMBLING OR EQUIVALENT METHOD
4. HARD COAT ANODIZE PER AMS 2469 .0020/.0015 THICK
5. ALL ABOVE DIMENSIONS APPLY AFTER FINISHING
6. PLUG TAPPED HOLES BEFORE COATING

MASTER

QTY REQD	PART OR IDENTIFYING NO.	NOMENCLATURE OR DESCRIPTION	FIND NO.

LIST OF MATERIALS

NEXT ASSY	USED ON
1003133	

APPLICATION

UNLESS OTHERWISE SPECIFIED
DIMENSIONS ARE IN INCHES
TOLERANCES ON
FRACTIONS ± DECIMALS ±.005 ANGLES ±
DO NOT SCALE THIS DRAWING
MATERIAL SEE NOTE 1
HEAT TREATMENT
FINAL FINISH SEE NOTE 4

MIT
INSTRUMENTATION LAB
CAMBRIDGE, MASS
DWG. NO. CONTRACT
DRAWN DATE 8-5-63
CHECKED 12 Dec 63
APPROVAL 6 AUG 63
APPROVAL 8/3/63
NASA APPROVAL
MIT APPROVAL W Kupfer ?? Aug 63

MANNED SPACECRAFT CENTER
HOUSTON, TEXAS

HOLDER, CORE
ROPE MEMORY MODULE

CODE IDENT NO. ——
SIZE E
NASA DRAWING NO. 1004233
SCALE 2/1
WT
SHEET 1 OF

1004233 E

NOTICE — WHEN GOVERNMENT DRAWINGS, SPECIFICATIONS, OR OTHER DATA ARE USED FOR ANY PURPOSE OTHER THAN IN CONNECTION WITH A DEFINITELY RELATED GOVERNMENT PROCUREMENT OPERATION, THE UNITED STATES GOVERNMENT THEREBY INCURS NO RESPONSIBILITY NOR ANY OBLIGATION WHATSOEVER, AND THE FACT THAT THE GOVERNMENT MAY HAVE FORMULATED, FURNISHED, OR IN ANY WAY SUPPLIED THE SAID DRAWINGS, SPECIFICATIONS OR OTHER DATA IS NOT TO BE REGARDED BY IMPLICATION OR OTHERWISE AS IN ANY MANNER LICENSING THE HOLDER OR ANY OTHER PERSON OR CORPORATION, OR CONVEYING ANY RIGHTS OR PERMISSION TO MANUFACTURE, USE, OR SELL ANY PATENTED INVENTION THAT MAY IN ANY WAY BE RELATED THERETO.

REVISIONS 02534

SYM	DESCRIPTION	DATE	APPROVAL
A	REVISED PER TDRR 03451	9-26-63	
B	REVISED PER TDRR 04330	10-30-63	WH
C	REVISED PER TDRR 04760	11-19-63	
D	REVISED PER TDRR 05104	12-10-63	
E	REVISED PER TDRR 05182	7 DEC 63	
F	REVISED PER TDRR 06342	3/14/64	WK

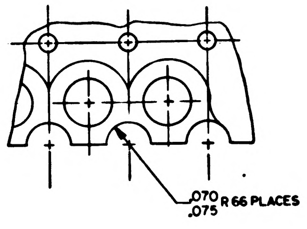
.070
.075 R 66 PLACES

DETAIL A
SCALE 5/1

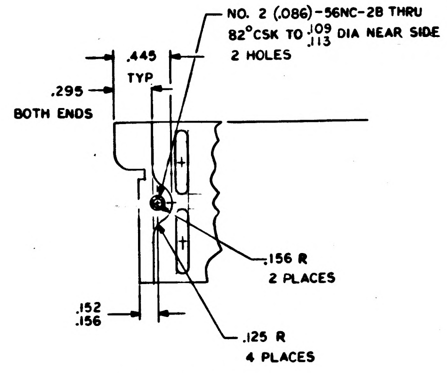
NO. 2 (.086)-56NC-2B THRU
82°CSK TO .109/.113 DIA NEAR SIDE
2 HOLES
.445
TYP
.295
BOTH ENDS
.156 R
2 PLACES
.152
.156
.125 R
4 PLACES

PARTIAL REAR VIEW

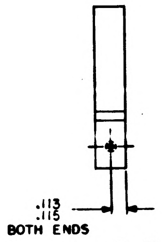
.113
.115
BOTH ENDS

VIEW A-A

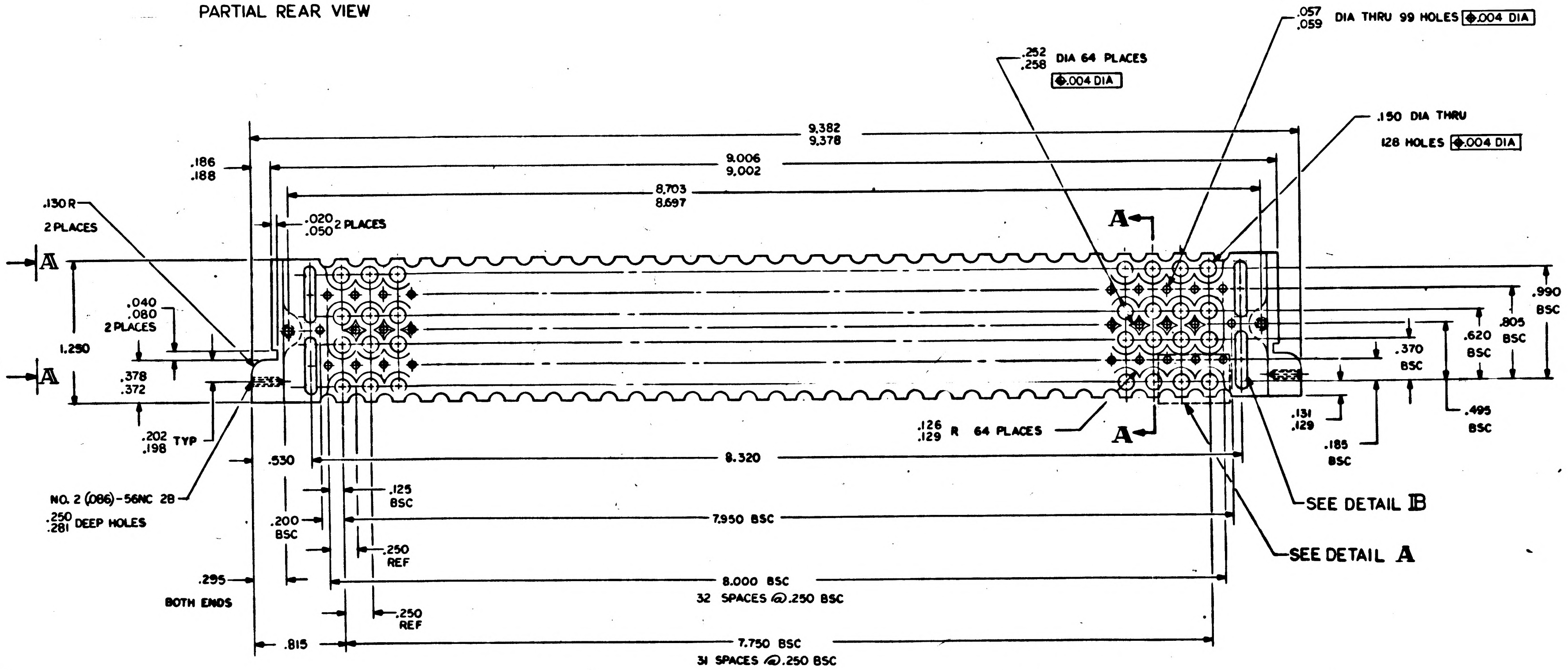
.252
.258 DIA 64 PLACES
⊕.004 DIA
.057
.059 DIA THRU 99 HOLES ⊕.004 DIA
.150 DIA THRU
128 HOLES ⊕.004 DIA
9.382
9.378
9.006
9.002
8.703
8.697
.186
.188
.130R
2 PLACES
.020
.050 2 PLACES
A
A
A
A
.040
.080
2 PLACES
1.290
.378
.372
.202
.198 TYP
.990
BSC
.805
BSC
.620
BSC
.370
BSC
.495
BSC
.131
.129
.185
BSC
.126
.129 R 64 PLACES
NO. 2 (.086)-56NC 2B
.250
.281 DEEP HOLES
.530
8.320
.125
BSC
.200
BSC
7.950 BSC
.250
REF
.295
BOTH ENDS
8.000 BSC
32 SPACES @.250 BSC
.250
REF
.815
7.750 BSC
31 SPACES @.250 BSC
SEE DETAIL B
SEE DETAIL A

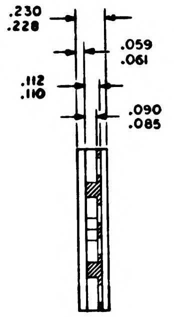
.230
.228
.059
.061
.112
.110
.090
.085

SECTION A-A

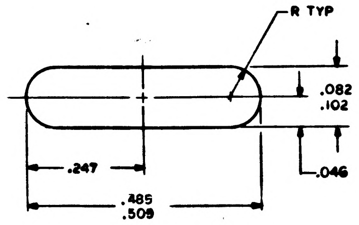
R TYP
.082
.102
.046
.247
.485
.509

DETAIL B
SCALE 10/1
4 PLACES
ROTATED 90°

NOTES
1. MATERIAL: DIE OR INVESTMENT CAST A-356 AL CLASS 10 COMP I PER MIL-C-21180, ALT MAT 6061T6 PER QQ-A-327 T6
2. SURFACE QUALITY AS CAST
3. ALL ROUNDS, CORNERS & EDGES TO HAVE .010/.020R UNLESS OTHERWISE SPECIFIED PER BARREL TUMBLING OR EQUIVALENT METHOD
4. HARD COAT ANODIZE PER AMS 2469 .0020/.0015 THICK
5. ALL ABOVE DIMENSIONS APPLY AFTER FINISHING
6. PLUG TAPPED HOLES BEFORE COATING

MASTER

QTY REQD	PART OR IDENTIFYING NO.	NOMENCLATURE OR DESCRIPTION	FIND NO.

LIST OF MATERIALS

NEXT ASSY	USED ON
1003133	

APPLICATION

UNLESS OTHERWISE SPECIFIED
DIMENSIONS ARE IN INCHES
TOLERANCES ON
FRACTIONS ± DECIMALS ±.005 ANGLES ±
DO NOT SCALE THIS DRAWING
MATERIAL SEE NOTE 1
HEAT TREATMENT
FINAL FINISH SEE NOTE 4

MIT
INSTRUMENTATION LAB
CAMBRIDGE, MASS
DWG NO CONTRACT
DRAWN DATE 8-5-63
CHECKED 6 Aug 63
APPROVAL 6 AUG 63
APPROVAL 8/7/63
NASA APPROVAL
MIT APPROVAL W. Kupfer 14 Aug 63

MANNED SPACECRAFT CENTER
HOUSTON, TEXAS

HOLDER, CORE
ROPE MEMORY MODULE

CODE IDENT NO. —— SIZE E NASA DRAWING NO. 1004233
SCALE 2/1 WT SHEET 1 OF

1004233 E

INCHES
0 1 2
PHOTOGRAPHIC SCALE ONLY

NOTICE — WHEN GOVERNMENT DRAWINGS, SPECIFICATIONS, OR OTHER DATA ARE USED FOR ANY PURPOSE OTHER THAN IN CONNECTION WITH A DEFINITELY RELATED GOVERNMENT PROCUREMENT OPERATION, THE UNITED STATES GOVERNMENT THEREBY INCURS NO RESPONSIBILITY NOR ANY OBLIGATION WHATSOEVER; AND THE FACT THAT THE GOVERNMENT MAY HAVE FORMULATED, FURNISHED, OR IN ANY WAY SUPPLIED THE SAID DRAWINGS, SPECIFICATIONS, OR OTHER DATA IS NOT TO BE REGARDED BY IMPLICATION OR OTHERWISE AS IN ANY MANNER LICENSING THE HOLDER OR ANY OTHER PERSON OR CORPORATION, OR CONVEYING ANY RIGHTS OR PERMISSION TO MANUFACTURE, USE, OR SELL ANY PATENTED INVENTION THAT MAY IN ANY WAY BE RELATED THERETO.

	REVISIONS 02534		
SYM	DESCRIPTION	DATE	APPROVAL
A	REVISED PER TDRR 03451	9-26-63	
B	REVISED PER TDRR 04330	10-30-63	WK
C	REVISED PER TDRR 04760	11-19-63	
D	REVISED PER TDRR 05104	12-10-63	
E	REVISED PER TDRR 05182	63	
F	REVISED PER TDRR 06772	3/14/64	WK
G	REVISED PER TDRR 07340 DR CHK	19 Mar 64	

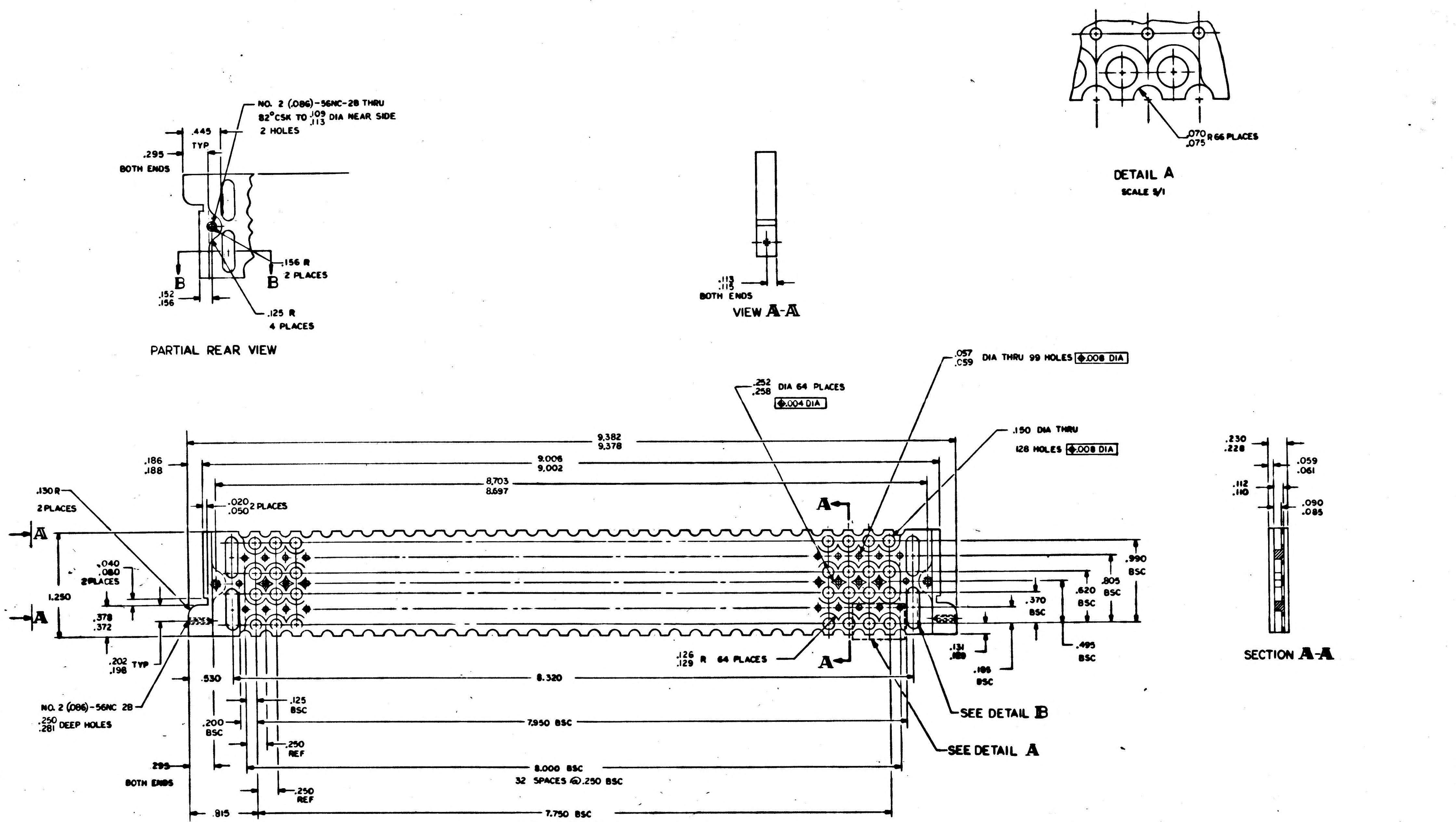

NO. 2 (.086)-56NC-2B THRU
82° CSK TO .109/.113 DIA NEAR SIDE
2 HOLES
.445
TYP
.295
BOTH ENDS
.156 R
2 PLACES
B
B
.152
.156
.125 R
4 PLACES
PARTIAL REAR VIEW
.113
.115
BOTH ENDS
VIEW A-A
.070
.075 R 66 PLACES
DETAIL A
SCALE 5/1
.057
.059 DIA THRU 99 HOLES ⌖.008 DIA
.252
.258 DIA 64 PLACES
⌖.004 DIA
.150 DIA THRU
128 HOLES ⌖.008 DIA
9.382
9.378
9.006
9.002
8.703
8.697
.186
.188
.130 R
2 PLACES
.020
.050 2 PLACES
A
A
A
A
.040
.080
2 PLACES
1.250
.378
.372
.202
.198 TYP
.990
BSC
.805
BSC
.620
BSC
.370
BSC
.495
BSC
.131
.129
.186
BSC
.126
.129 R 64 PLACES
.530
8.320
NO. 2 (.086)-56NC 2B
.250
.281 DEEP HOLES
.125
BSC
.200
BSC
7.950 BSC
.250
REF
.295
BOTH ENDS
8.000 BSC
32 SPACES @ .250 BSC
.250
REF
.815
7.750 BSC
31 SPACES @ .250 BSC
SEE DETAIL B
SEE DETAIL A
.230
.228
.059
.061
.112
.110
.090
.085
SECTION A-A

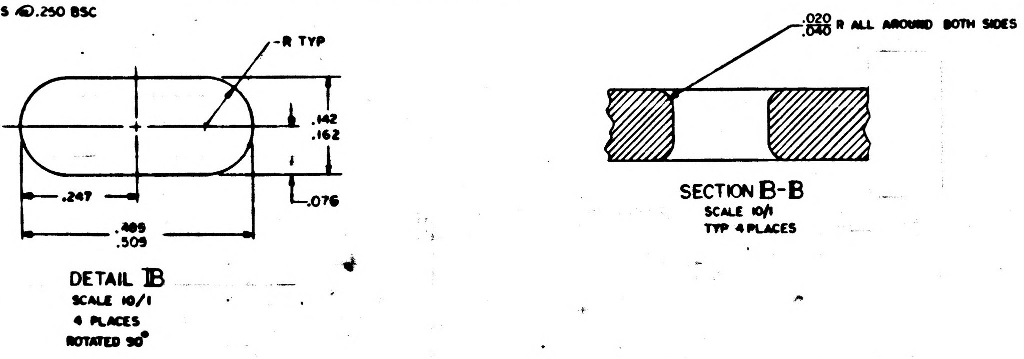

R TYP
.142
.162
.247
.076
.489
.509
DETAIL B
SCALE 10/1
4 PLACES
ROTATED 90°
.020
.040 R ALL AROUND BOTH SIDES
SECTION B-B
SCALE 10/1
TYP 4 PLACES

NOTES
1. MATERIAL: DIE OR INVESTMENT CAST A-356 AL CLASS 10 COMP I PER MIL-C-21180, ALT MAT 6061T6 PER QQ-A-327T6
2. SURFACE QUALITY AS CAST
3. ALL ROUNDS, CORNERS & EDGES TO HAVE .010/.040R UNLESS OTHERWISE SPECIFIED PER BARREL TUMBLING OR EQUIVALENT METHOD
4. HARD COAT ANODIZE PER AMS 2469 .0020/.0015 THICK
5. ALL ABOVE DIMENSIONS APPLY AFTER FINISHING
6. PLUG TAPPED HOLES BEFORE COATING

QTY REQD	PART OR IDENTIFYING NO.	NOMENCLATURE OR DESCRIPTION	FIND NO.
LIST OF MATERIALS			

1003133		UNLESS OTHERWISE SPECIFIED DIMENSIONS ARE IN INCHES TOLERANCES ON FRACTIONS ± DECIMALS ±.005 ANGLES ±	MIT INSTRUMENTATION LAB CAMBRIDGE MASS	MANNED SPACECRAFT CENTER HOUSTON, TEXAS
NEXT ASSY	USED ON	DO NOT SCALE THIS DRAWING	DRAWN DATE 8-5-63 CHECKED 6Aug63 APPROVAL 6AUG63 APPROVAL 8/7/63	HOLDER, CORE ROPE MEMORY MODULE
APPLICATION		MATERIAL SEE NOTE 1	NASA APPROVAL	CODE IDENT NO. — SIZE E NASA DRAWING NO. 1004233
		HEAT TREATMENT FINAL FINISH SEE NOTE 4	MIT APPROVAL	SCALE 2/1 WT SHEET 1 OF

NOTICE — WHEN GOVERNMENT DRAWINGS, SPECIFICATIONS, OR OTHER DATA ARE USED FOR ANY PURPOSE OTHER THAN IN CONNECTION WITH A DEFINITELY RELATED GOVERNMENT PROCUREMENT OPERATION, THE UNITED STATES GOVERNMENT THEREBY INCURS NO RESPONSIBILITY NOR ANY OBLIGATION WHATSOEVER; AND THE FACT THAT THE GOVERNMENT MAY HAVE FORMULATED, FURNISHED, OR IN ANY WAY SUPPLIED THE SAID DRAWINGS, SPECIFICATIONS, OR OTHER DATA IS NOT TO BE REGARDED BY IMPLICATION OR OTHERWISE AS IN ANY MANNER LICENSING THE HOLDER OR ANY OTHER PERSON OR CORPORATION, OR CONVEYING ANY RIGHTS OR PERMISSION TO MANUFACTURE, USE, OR SELL ANY PATENTED INVENTION THAT MAY IN ANY WAY BE RELATED THERETO.

REVISIONS			
SYM	DESCRIPTION	DATE	APPROVAL
A	REVISED PER TDRR 03481	9-26-63	
B	REVISED PER TDRR 04330	10-30-63	WK
C	REVISED PER TDRR 04760	11-19-63	
D	REVISED PER TDRR 05104	12-10-63	
E	REVISED PER TDRR 05182	Dec 63	
F	REVISED PER TDRR 06222	2/14/64	WK
G	REVISED PER TDRR 07348 DR [illegible] CHK [illegible]	19 Mar 64	
H	REVISED PER TDRR 10/26 DR [illegible] CHK R.P.B.	9 Jun 64	

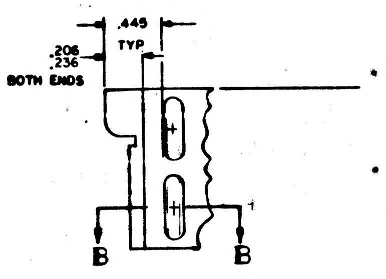

.445
TYP
.206
.236
BOTH ENDS
B
B

PARTIAL REAR VIEW

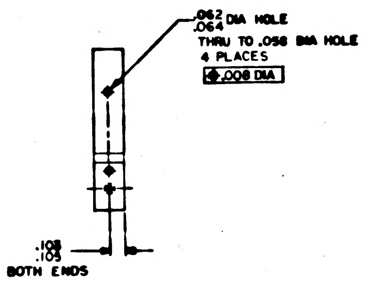

.062
.064 DIA HOLE
THRU TO .056 DIA HOLE
4 PLACES
⌖ .008 DIA
.108
.103
BOTH ENDS

VIEW A-A

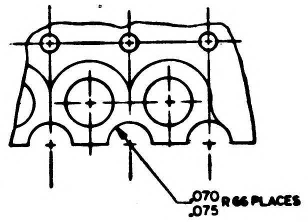

.070
.075 R 66 PLACES

DETAIL A

SCALE 5/1

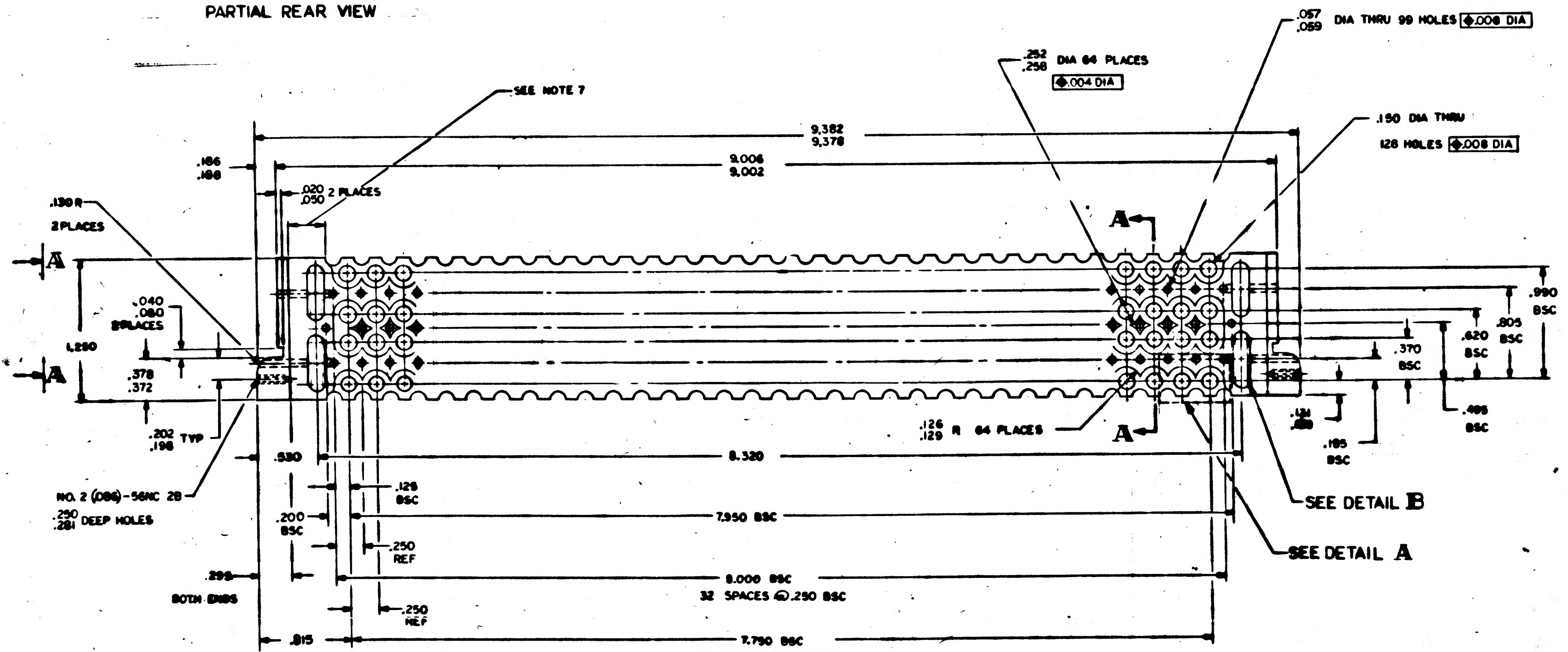

.057
.059 DIA THRU 99 HOLES ⌖ .008 DIA
.252
.256 DIA 64 PLACES
⌖ .004 DIA
.150 DIA THRU
128 HOLES ⌖ .008 DIA
SEE NOTE 7
9.382
9.378
9.006
9.002
.186
.188
.020
.050 2 PLACES
.130 R
2 PLACES
A
A
.040
.080
2 PLACES
1.290
.378
.372
.202
.198 TYP
.990 BSC
.805 BSC
.620 BSC
.370 BSC
.495 BSC
.131
.130
.185 BSC
.126
.129 R 64 PLACES
A
A
SEE DETAIL B
SEE DETAIL A
.530
8.320
NO. 2 (.086)-56NC 2B
.290
.281 DEEP HOLES
.125 BSC
.200 BSC
7.950 BSC
.250 REF
8.000 BSC
32 SPACES @ .250 BSC
.295
BOTH ENDS
.250 REF
.815
7.750 BSC
31 SPACES @ .250 BSC

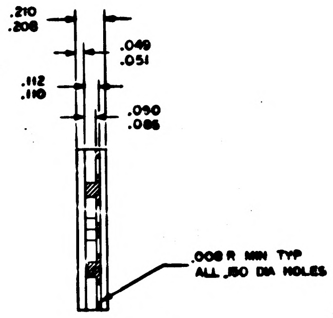

.210
.208
.049
.051
.112
.110
.090
.086
.008 R MIN TYP
ALL .150 DIA HOLES

SECTION A-A

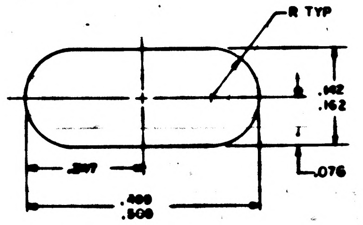

R TYP
.142
.162
.076
.297
.499
.508

DETAIL B

SCALE 10/1

4 PLACES

ROTATED 90°

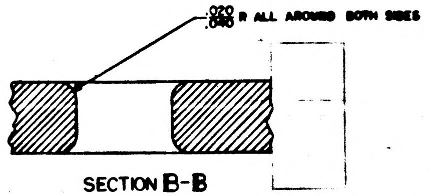

.020
.040 R ALL AROUND BOTH SIDES

SECTION B-B

SCALE 10/1

TYP 4 PLACES

NOTES

1. MATERIAL: DIE OR INVESTMENT CAST A-356 AL CLASS 10 COMP I PER MIL-C-21180, ALT MAT 6061T6 PER QQA-327T6
2. SURFACE QUALITY AS CAST
3. REMOVE ALL BURRS & SHARP EDGES
4. HARD COAT ANODIZE PER AMS 2469 .0020/.0015 THICK
5. ALL ABOVE DIMENSIONS APPLY AFTER FINISHING
6. PLUG TAPPED HOLES BEFORE COATING
7. INDICATED AREA TO HAVE .080R MIN BOTH SIDES, 4 PLACES

QTY REQD	PART OR IDENTIFYING NO.	NOMENCLATURE OR DESCRIPTION	FIND NO.

LIST OF MATERIALS

1003133	
NEXT ASSY	USED ON
APPLICATION	

UNLESS OTHERWISE SPECIFIED
DIMENSIONS ARE IN INCHES
TOLERANCES ON
FRACTIONS ± DECIMALS ±.005 ANGLES ±
DO NOT SCALE THIS DRAWING
MATERIAL
SEE NOTE 1
HEAT TREATMENT
FINAL FINISH
SEE NOTE 4

MIT
INSTRUMENTATION LAB
CAMBRIDGE, MASS
DRAWN DATE 8-5-63
CHECKED
APPROVAL
APPROVAL 8/8/63
NASA APPROVAL
MIT APPROVAL

MANNED SPACECRAFT CENTER
HOUSTON, TEXAS

HOLDER, CORE
ROPE MEMORY MODULE

CODE IDENT NO. —
SIZE E
NASA DRAWING NO. 1004233
SCALE 2/1
WT
SHEET 1 OF

NOTICE — WHEN GOVERNMENT DRAWINGS, SPECIFICATIONS, OR OTHER DATA ARE USED FOR ANY PURPOSE OTHER THAN IN CONNECTION WITH A DEFINITELY RELATED GOVERNMENT PROCUREMENT OPERATION, THE UNITED STATES GOVERNMENT THEREBY INCURS NO RESPONSIBILITY NOR ANY OBLIGATION WHATSOEVER; AND THE FACT THAT THE GOVERNMENT MAY HAVE FORMULATED, FURNISHED, OR IN ANY WAY SUPPLIED THE SAID DRAWINGS, SPECIFICATIONS, OR OTHER DATA IS NOT TO BE REGARDED BY IMPLICATION OR OTHERWISE AS IN ANY MANNER LICENSING THE HOLDER OR ANY OTHER PERSON OR CORPORATION, OR CONVEYING ANY RIGHTS OR PERMISSION TO MANUFACTURE, USE, OR SELL ANY PATENTED INVENTION THAT MAY IN ANY WAY BE RELATED THERETO

REVISIONS 02534

SYM	DESCRIPTION	DATE	APPROVAL
A	REVISED PER TDRR 03451	9-26-63	
B	REVISED PER TDRR 04330	10-30-63	WK
C	REVISED PER TDRR 04760	11-27-63	
D	REVISED PER TDRR 05104	12-10-63	
E	REVISED PER TDRR 05182	Dec 63	
F	REVISED PER TDRR 06772	3/14/64	WK
G	REVISED PER TDRR 09340 DR CHK	9 Nov 64	
H	REVISED PER TDRR 10126 DR CHK A.P.B.	4 Jun 64	
J	REVISED PER TDRR 13993 DR CHK	12/1/64	

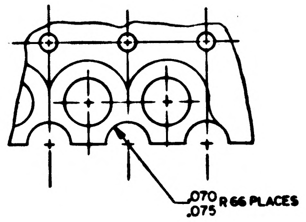
.070
.075 R 66 PLACES

DETAIL A
SCALE 5/1

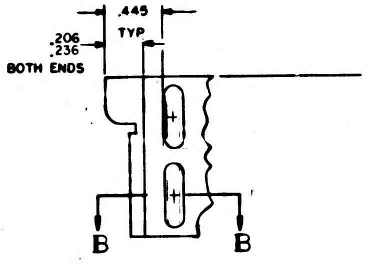
.445
TYP
.206
.236
BOTH ENDS
B
B

PARTIAL REAR VIEW

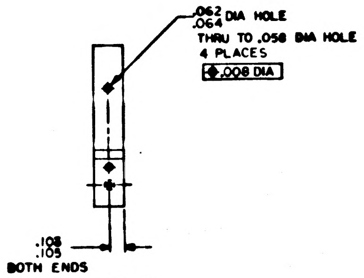
.062
.064 DIA HOLE
THRU TO .058 DIA HOLE
4 PLACES
⌖ .008 DIA
.108
.105
BOTH ENDS

VIEW A-A

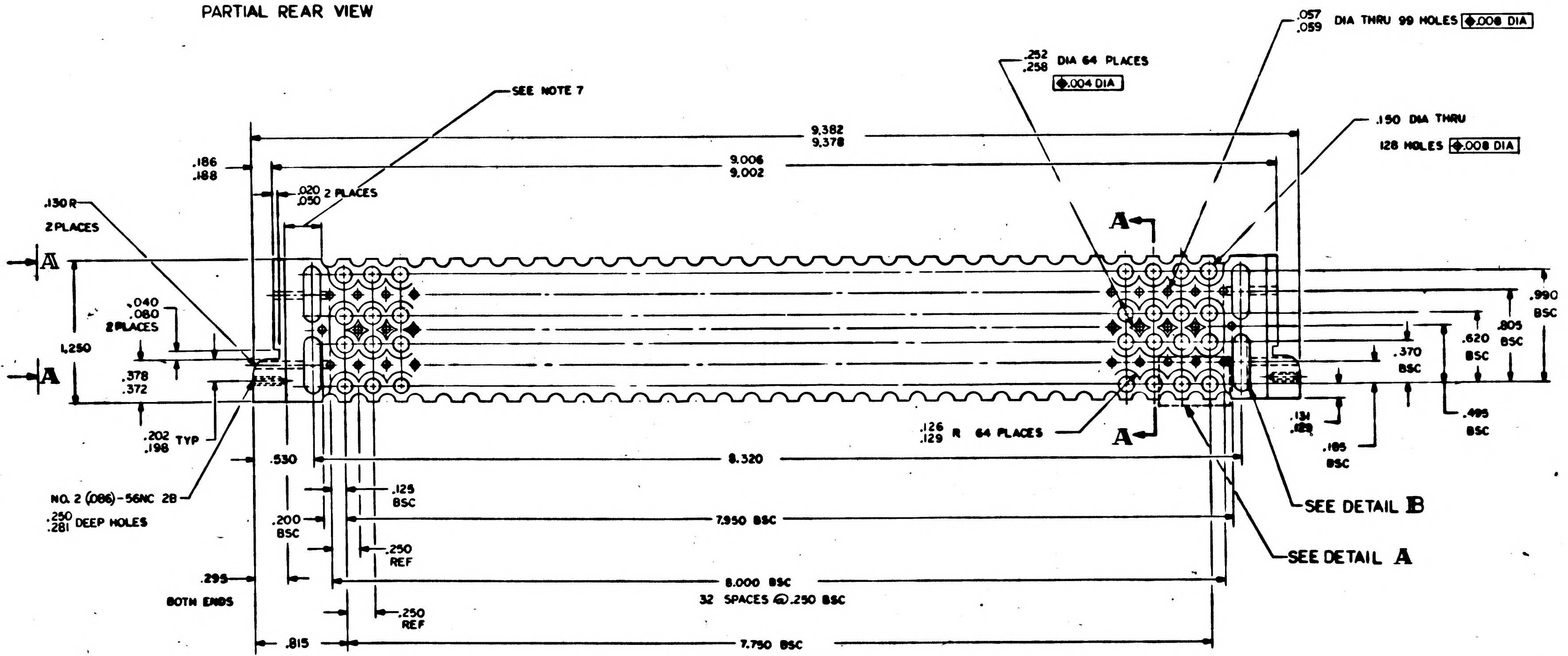
SEE NOTE 7
.252
.258 DIA 64 PLACES
⌖ .004 DIA
.057
.059 DIA THRU 99 HOLES ⌖ .008 DIA
.150 DIA THRU
128 HOLES ⌖ .008 DIA
9.382
9.378
9.006
9.002
.186
.188
.020
.050 2 PLACES
.130R
2 PLACES
A
A
A
A
.040
.080
2 PLACES
1.250
.378
.372
.202
.198 TYP
.990
BSC
.805
BSC
.620
BSC
.370
BSC
.495
BSC
.131
.129
.195
BSC
.126
.129 R 64 PLACES
.530
8.320
NO. 2 (.086)-56NC 2B
.250
.281 DEEP HOLES
.125
BSC
.200
BSC
.250
REF
7.950 BSC
8.000 BSC
32 SPACES @ .250 BSC
.295
BOTH ENDS
.250
REF
.815
7.750 BSC
31 SPACES @ .250 BSC
SEE DETAIL B
SEE DETAIL A

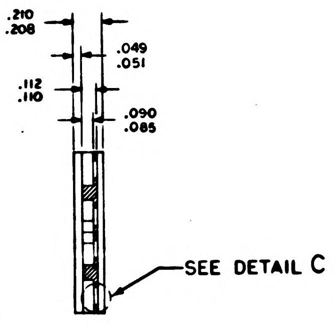
.210
.208
.112
.110
.049
.051
.090
.085
SEE DETAIL C

SECTION A-A

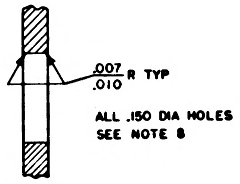
.007
.010 R TYP
ALL .150 DIA HOLES
SEE NOTE 8

DETAIL C
SCALE 10/1

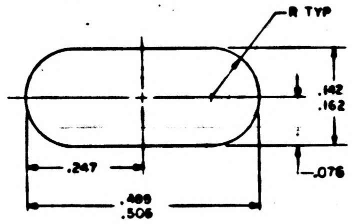
R TYP
.142
.162
.247
.076
.499
.506

DETAIL B
SCALE 10/1
4 PLACES
ROTATED 90°

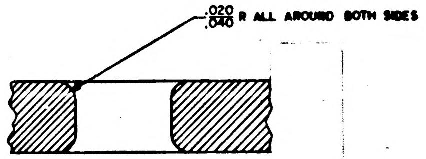
.020
.040 R ALL AROUND BOTH SIDES

SECTION B-B
SCALE 10/1
TYP 4 PLACES

NOTES
1. MATERIAL: DIE OR INVESTMENT CAST A-356 AL CLASS 10 COMP I PER MIL-C-21180, ALT MAT 6061T6 PER QQ-A-327 T6
2. SURFACE QUALITY AS CAST
3. REMOVE ALL BURRS & SHARP EDGES

4. HARD COAT ANODIZE PER AMS 2469 .0020/.0015 THICK
5. ALL ABOVE DIMENSIONS APPLY AFTER FINISHING
6. PLUG TAPPED HOLES BEFORE COATING
7. INDICATED AREA TO HAVE .020R MIN BOTH SIDES, 4 PLACES
8. SURFACE QUALITY OF ALL .150 DIA HOLES AND RADII TO BE 63/ AFTER ANODIZE

QTY REQD	PART OR IDENTIFYING NO.	NOMENCLATURE OR DESCRIPTION	FIND NO.

LIST OF MATERIALS

NEXT ASSY	USED ON
1003133	

APPLICATION

UNLESS OTHERWISE SPECIFIED
DIMENSIONS ARE IN INCHES
TOLERANCES ON
FRACTIONS ± DECIMALS ±.005 ANGLES ±
DO NOT SCALE THIS DRAWING
MATERIAL SEE NOTE 1
HEAT TREATMENT
FINAL FINISH SEE NOTE 4

MIT
INSTRUMENTATION LAB
CAMBRIDGE, MASS
DWG. NO. CONTRACT
DRAWN DATE 8-5-63
CHECKED 8 Aug 63
APPROVAL 6 AUG 63
APPROVAL 8/7/63
NASA APPROVAL
MIT APPROVAL

MANNED SPACECRAFT CENTER
HOUSTON, TEXAS

HOLDER, CORE
ROPE MEMORY MODULE

CODE IDENT NO. —
SIZE E
NASA DRAWING NO. 1004233
SCALE 2/1 WT SHEET 1 OF

NOTICE - WHEN GOVERNMENT DRAWINGS, SPECIFICATIONS, OR OTHER DATA ARE USED FOR ANY PURPOSE OTHER THAN IN CONNECTION WITH A DEFINITELY RELATED GOVERNMENT PROCUREMENT OPERATION, THE UNITED STATES GOVERNMENT THEREBY INCURS NO RESPONSIBILITY NOR ANY OBLIGATION WHATSOEVER; AND THE FACT THAT THE GOVERNMENT MAY HAVE FORMULATED, FURNISHED, OR IN ANY WAY SUPPLIED THE SAID DRAWINGS, SPECIFICATIONS, OR OTHER DATA IS NOT TO BE REGARDED BY IMPLICATION OR OTHERWISE AS IN ANY MANNER LICENSING THE HOLDER OR ANY OTHER PERSON OR CORPORATION, OR CONVEYING ANY RIGHTS OR PERMISSION TO MANUFACTURE, USE, OR SELL ANY PATENTED INVENTION THAT MAY IN ANY WAY BE RELATED THERETO

REVISIONS

SYM	DESCRIPTION	DATE	APPROVAL
A	REVISED PER TDRR 03451	9-26-63	
B	REVISED PER TDRR 04330	10-30-63	WK
C	REVISED PER TDRR 04760	11-19-63	
D	REVISED PER TDRR 05104	12-10-63	
E	REVISED PER TDRR 05182	Dec 63	
F	REVISED PER TDRR 06772		WK
G	REVISED PER TDRR 07340 DR CHK		
H	REVISED PER TDRR 10126 DR CHK R.P.B.	4 June 64	
J	REVISED PER TDRR 13993 DR CHK	12/1/64	
K	REVISED PER TDRR 14668 DR CHK R.W.S.	12/31/64	

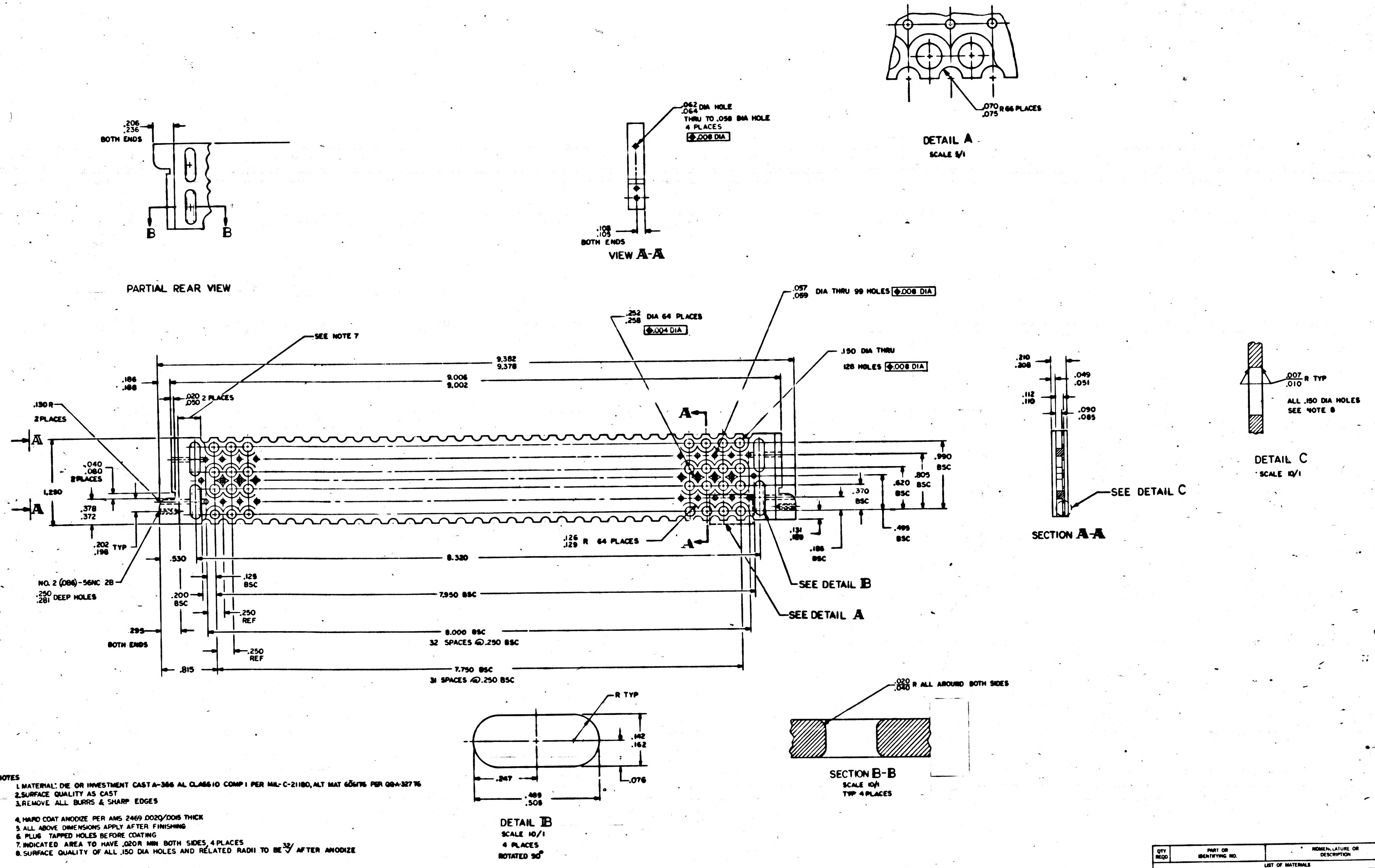

.206
.236
BOTH ENDS
B
B
PARTIAL REAR VIEW
.062
.064 DIA HOLE
THRU TO .058 DIA HOLE
4 PLACES
⊕ .008 DIA
.108
.105
BOTH ENDS
VIEW A-A
.070
.075 R 66 PLACES
DETAIL A
SCALE 5/1
.057
.059 DIA THRU 99 HOLES ⊕ .008 DIA
.252
.258 DIA 64 PLACES
⊕ .004 DIA
SEE NOTE 7
.150 DIA THRU
128 HOLES ⊕ .008 DIA
9.382
9.378
9.006
9.002
.186
.188
.020
.050 2 PLACES
.130 R
2 PLACES
A
A
A
A
.040
.080
2 PLACES
1.290
.378
.372
.202
.198 TYP
.990 BSC
.805 BSC
.620 BSC
.370 BSC
.495 BSC
.131
.189
.186 BSC
.126
.129 R 64 PLACES
.530
8.330
NO. 2 (.086)-56NC 2B
.250
.281 DEEP HOLES
.128 BSC
.200 BSC
7.950 BSC
.250 REF
.295
BOTH ENDS
8.000 BSC
32 SPACES @ .250 BSC
.250 REF
.815
7.750 BSC
31 SPACES @ .250 BSC
SEE DETAIL B
SEE DETAIL A
.210
.208
.112
.110
.049
.051
.090
.085
SEE DETAIL C
SECTION A-A
.007
.010 R TYP
ALL .150 DIA HOLES
SEE NOTE 8
DETAIL C
SCALE 10/1
R TYP
.142
.162
.076
.247
.488
.508
DETAIL B
SCALE 10/1
4 PLACES
ROTATED 90°
.020
.040 R ALL AROUND BOTH SIDES
SECTION B-B
SCALE 10/1
TYP 4 PLACES

NOTES

1. MATERIAL: DIE OR INVESTMENT CAST A-356 AL CLASS 10 COMP I PER MIL-C-21180, ALT MAT 6061T6 PER QQ-A-327 T6
2. SURFACE QUALITY AS CAST
3. REMOVE ALL BURRS & SHARP EDGES

4. HARD COAT ANODIZE PER AMS 2469 .0020/.0015 THICK
5. ALL ABOVE DIMENSIONS APPLY AFTER FINISHING
6. PLUG TAPPED HOLES BEFORE COATING
7. INDICATED AREA TO HAVE .020R MIN BOTH SIDES, 4 PLACES
8. SURFACE QUALITY OF ALL .150 DIA HOLES AND RELATED RADII TO BE $\sqrt{}^{32}$ AFTER ANODIZE

QTY REQD	PART OR IDENTIFYING NO.	NOMENCLATURE OR DESCRIPTION	FIND NO.

LIST OF MATERIALS

1003133	
NEXT ASSY	USED ON

APPLICATION

UNLESS OTHERWISE SPECIFIED
DIMENSIONS ARE IN INCHES
TOLERANCES ON
FRACTIONS ± DECIMALS ±.005 ANGLES ±
DO NOT SCALE THIS DRAWING
MATERIAL SEE NOTE 1
HEAT TREATMENT
FINAL FINISH SEE NOTE 4

MIT
INSTRUMENTATION LAB
CAMBRIDGE, MASS
DWG NO CONTRACT
DRAWN DATE 9-5-63
CHECKED
APPROVAL
APPROVAL 8/3/63
NASA APPROVAL
MIT APPROVAL

MANNED SPACECRAFT CENTER
HOUSTON, TEXAS

HOLDER, CORE
ROPE MEMORY MODULE

CODE IDENT NO. —— SIZE E NASA DRAWING NO. 1004233
SCALE 2/1 WT SHEET 1 OF

NOTICE — WHEN GOVERNMENT DRAWINGS, SPECIFICATIONS, OR OTHER DATA ARE USED FOR ANY PURPOSE OTHER THAN IN CONNECTION WITH A DEFINITELY RELATED GOVERNMENT PROCUREMENT OPERATION, THE UNITED STATES GOVERNMENT THEREBY INCURS NO RESPONSIBILITY NOR ANY OBLIGATION WHATSOEVER; AND THE FACT THAT THE GOVERNMENT MAY HAVE FORMULATED, FURNISHED, OR IN ANY WAY SUPPLIED THE SAID DRAWINGS, SPECIFICATIONS, OR OTHER DATA IS NOT TO BE REGARDED BY IMPLICATION OR OTHERWISE AS IN ANY MANNER LICENSING THE HOLDER OR ANY OTHER PERSON OR CORPORATION, OR CONVEYING ANY RIGHTS OR PERMISSION TO MANUFACTURE, USE, OR SELL ANY PATENTED INVENTION THAT MAY IN ANY WAY BE RELATED THERETO.

REVISIONS

SYM	DESCRIPTION	DATE	APPROVAL
A	REVISED PER TDRR 03451	9-26-63	
B	REVISED PER TDRR 04330	10-30-63	
C	REVISED PER TDRR 04760	11-19-63	
D	REVISED PER TDRR 05104	12-10-63	
E	REVISED PER TDRR 05182	63	
F	REVISED PER TDRR 06232		
G	REVISED PER TDRR 07340 DR CHK	9 Mar 64	
H	REVISED PER TDRR 10126 DR CHK R.P.B.	4 Jun 64	
J	REVISED PER TDRR 13993 DR CHK	12/1/64	
K	REVISED PER TDRR 14668 DR Paul A. White CHK R.W.E.	12/31/64	
L	REVISED PER TDRR 16489 DR A.Q. Clermont CHK	3/12/65	

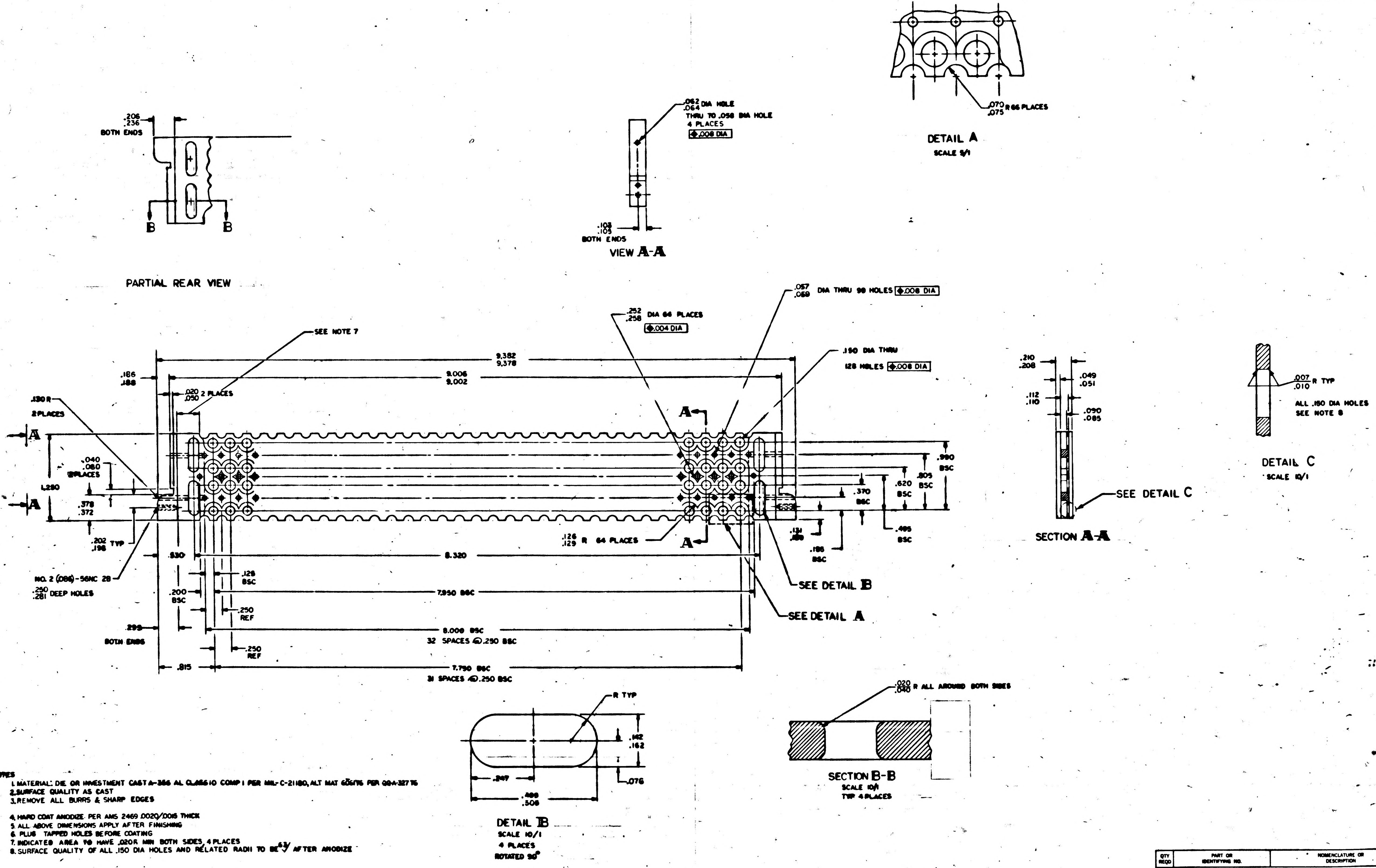

.206
.236
BOTH ENDS
B
B
PARTIAL REAR VIEW
.062
.064 DIA HOLE
THRU TO .058 DIA HOLE
4 PLACES
.008 DIA
.103
.105
BOTH ENDS
VIEW A-A
.070
.075 R 66 PLACES
DETAIL A
SCALE 5/1
SEE NOTE 7
.252
.258 DIA 64 PLACES
.004 DIA
.057
.059 DIA THRU 99 HOLES .008 DIA
.150 DIA THRU
128 HOLES .008 DIA
9.382
9.378
9.006
9.002
.186
.188
.020
.050 2 PLACES
.130 R
2 PLACES
.040
.060
8 PLACES
1.290
.378
.372
.202
.198 TYP
A
A
.990 BSC
.805 BSC
.620 BSC
.370 BSC
.495 BSC
.195 BSC
.126
.129 R 64 PLACES
.530
8.320
NO. 2 (.086)-56NC 2B
.250
.281 DEEP HOLES
.125 BSC
.200 BSC
7.950 BSC
.250 REF
8.000 BSC
32 SPACES @ .250 BSC
.299
BOTH ENDS
.250 REF
.815
7.750 BSC
31 SPACES @ .250 BSC
SEE DETAIL B
SEE DETAIL A
.210
.208
.049
.051
.112
.110
.090
.085
SEE DETAIL C
SECTION A-A
.007
.010 R TYP
ALL .150 DIA HOLES
SEE NOTE 8
DETAIL C
SCALE 10/1
R TYP
.142
.162
.247
.499
.508
.076
DETAIL B
SCALE 10/1
4 PLACES
ROTATED 90°
.020
.040 R ALL AROUND BOTH SIDES
SECTION B-B
SCALE 10/1
TYP 4 PLACES

NOTES

1. MATERIAL: DIE OR INVESTMENT CAST A-356 AL CLASS 10 COMP I PER MIL-C-21180, ALT MAT 6061T6 PER QQ-A-327 T6
2. SURFACE QUALITY AS CAST
3. REMOVE ALL BURRS & SHARP EDGES
4. HARD COAT ANODIZE PER AMS 2469 .0020/.0015 THICK
5. ALL ABOVE DIMENSIONS APPLY AFTER FINISHING
6. PLUG TAPPED HOLES BEFORE COATING
7. INDICATED AREA TO HAVE .020R MIN BOTH SIDES, 4 PLACES
8. SURFACE QUALITY OF ALL .150 DIA HOLES AND RELATED RADII TO BE $\sqrt{63}$ AFTER ANODIZE

QTY REQD	PART OR IDENTIFYING NO.	NOMENCLATURE OR DESCRIPTION	FIND NO.

LIST OF MATERIALS

1003133	
NEXT ASSY	USED ON

APPLICATION

UNLESS OTHERWISE SPECIFIED
DIMENSIONS ARE IN INCHES
TOLERANCES ON
FRACTIONS ± DECIMALS ±.005 ANGLES ±
DO NOT SCALE THIS DRAWING
MATERIAL SEE NOTE 1
HEAT TREATMENT
FINAL FINISH SEE NOTE 4

MIT INSTRUMENTATION LAB
CAMBRIDGE, MASS.
DRAWN DATE 8-5-63
CHECKED
APPROVAL
APPROVAL 8/2/63
NASA APPROVAL
MIT APPROVAL

MANNED SPACECRAFT CENTER
HOUSTON, TEXAS

HOLDER, CORE
ROPE MEMORY MODULE

CODE IDENT NO. —
SIZE E
NASA DRAWING NO 1004233
SCALE 2/1
WT
SHEET 1 OF

NOTICE — WHEN GOVERNMENT DRAWINGS, SPECIFICATIONS, OR OTHER DATA ARE USED FOR ANY PURPOSE OTHER THAN IN CONNECTION WITH A DEFINITELY RELATED GOVERNMENT PROCUREMENT OPERATION, THE UNITED STATES GOVERNMENT THEREBY INCURS NO RESPONSIBILITY NOR ANY OBLIGATION WHATSOEVER; AND THE FACT THAT THE GOVERNMENT MAY HAVE FORMULATED, FURNISHED, OR IN ANY WAY SUPPLIED THE SAID DRAWINGS, SPECIFICATIONS, OR OTHER DATA IS NOT TO BE REGARDED BY IMPLICATION OR OTHERWISE AS IN ANY MANNER LICENSING THE HOLDER OR ANY OTHER PERSON OR CORPORATION, OR CONVEYING ANY RIGHTS OR PERMISSION TO MANUFACTURE, USE, OR SELL ANY PATENTED INVENTION THAT MAY IN ANY WAY BE RELATED THERETO.

SYM	DESCRIPTION	DATE	APPROVAL

REVISIONS 09524

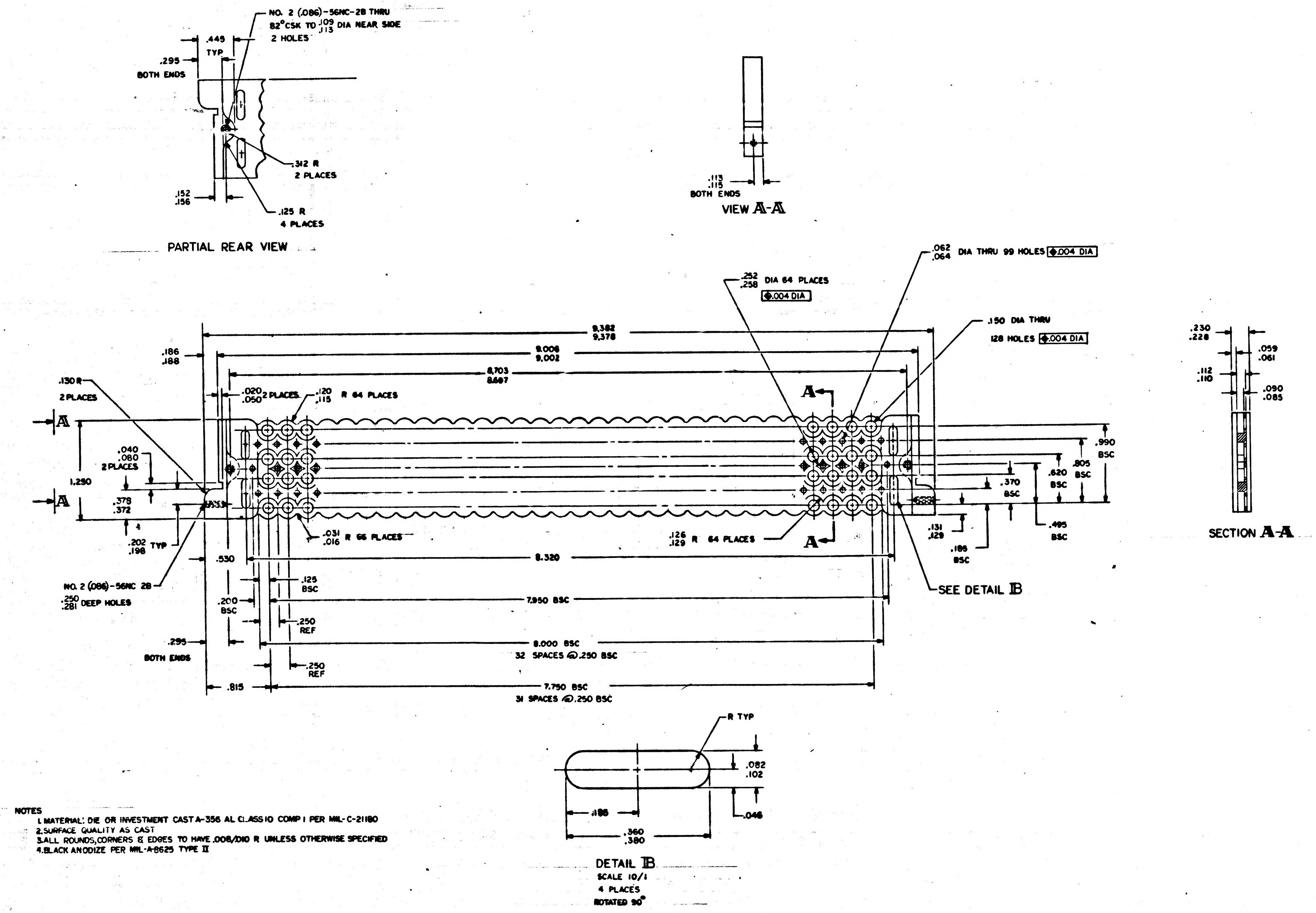

NO. 2 (.086)-56NC-2B THRU
82° CSK TO .109 .113 DIA NEAR SIDE
2 HOLES
.449 TYP
.295 BOTH ENDS
.312 R 2 PLACES
.152 .156
.125 R 4 PLACES
PARTIAL REAR VIEW
.113 .115 BOTH ENDS
VIEW A-A
.062 .064 DIA THRU 99 HOLES ⌖.004 DIA
.252 .258 DIA 64 PLACES ⌖.004 DIA
.150 DIA THRU 128 HOLES ⌖.004 DIA
9.382 9.378
.186 .188
9.006 9.002
8.703 8.697
.130 R 2 PLACES
.020 .050 2 PLACES
.120 .115 R 64 PLACES
A
.040 .080 2 PLACES
1.250
.378 .372
.202 .198 TYP
.031 .016 R 66 PLACES
.126 .129 R 64 PLACES
.990 BSC
.805 BSC
.620 BSC
.370 BSC
.495 BSC
.131 .129
.186 BSC
.530
8.320
NO. 2 (.086)-56NC 2B
.250 .281 DEEP HOLES
.125 BSC
.200 BSC
7.950 BSC
.250 REF
.295 BOTH ENDS
8.000 BSC
32 SPACES @ .250 BSC
.815
7.750 BSC
31 SPACES @ .250 BSC
SEE DETAIL B
.230 .228
.059 .061
.112 .110
.090 .085
SECTION A-A
R TYP
.082 .102
.186
.046
.360 .380
DETAIL B
SCALE 10/1
4 PLACES
ROTATED 90°

NOTES
1. MATERIAL: DIE OR INVESTMENT CAST A-356 AL CLASS 10 COMP 1 PER MIL-C-21180
2. SURFACE QUALITY AS CAST
3. ALL ROUNDS, CORNERS & EDGES TO HAVE .008/.010 R UNLESS OTHERWISE SPECIFIED
4. BLACK ANODIZE PER MIL-A-8625 TYPE II

MASTER

QTY REQD	PART OR IDENTIFYING NO	NOMENCLATURE OR DESCRIPTION	FIND NO.

LIST OF MATERIALS

1003133
NEXT ASSY | USED ON
APPLICATION

UNLESS OTHERWISE SPECIFIED DIMENSIONS ARE IN INCHES
TOLERANCES ON
FRACTIONS ± DECIMALS ±.005 ANGLES ±
DO NOT SCALE THIS DRAWING
MATERIAL SEE NOTE 1
HEAT TREATMENT
FINAL FINISH SEE NOTE 4

M I T
INSTRUMENTATION LAB
CAMBRIDGE, MASS
DWG. NO. CONTRACT
DRAWN DATE 8-5-63
CHECKED 13 Aug 63
APPROVAL 6 AUG 63
APPROVAL 8/8/63
NASA APPROVAL
MIT APPROVAL

MANNED SPACECRAFT CENTER
HOUSTON, TEXAS

HOLDER, CORE
ROPE MEMORY MODULE

CODE IDENT NO. | SIZE E | NASA DRAWING NO. 1004233
SCALE 2/1 | WT | SHEET 1 OF

1004233

INCHES
PHOTOGRAPHIC SCALE ONLY

NOTICE – WHEN GOVERNMENT DRAWINGS, SPECIFICATIONS, OR OTHER DATA ARE USED FOR ANY PURPOSE OTHER THAN IN CONNECTION WITH A DEFINITELY RELATED GOVERNMENT PROCUREMENT OPERATION, THE UNITED STATES GOVERNMENT THEREBY INCURS NO RESPONSIBILITY NOR ANY OBLIGATION WHATSOEVER, AND THE FACT THAT THE GOVERNMENT MAY HAVE FORMULATED, FURNISHED, OR IN ANY WAY SUPPLIED THE SAID DRAWINGS, SPECIFICATIONS OR OTHER DATA IS NOT TO BE REGARDED BY IMPLICATION OR OTHERWISE AS IN ANY MANNER LICENSING THE HOLDER OR ANY OTHER PERSON OR CORPORATION, OR CONVEYING ANY RIGHTS OR PERMISSION TO MANUFACTURE, USE, OR SELL ANY PATENTED INVENTION THAT MAY IN ANY WAY BE RELATED THERETO.

REVISIONS			
SYM	DESCRIPTION	DATE	APPROVAL
B	REPLACES REV A WITH CHANGES PER TDRR 63V52	8-26-63	

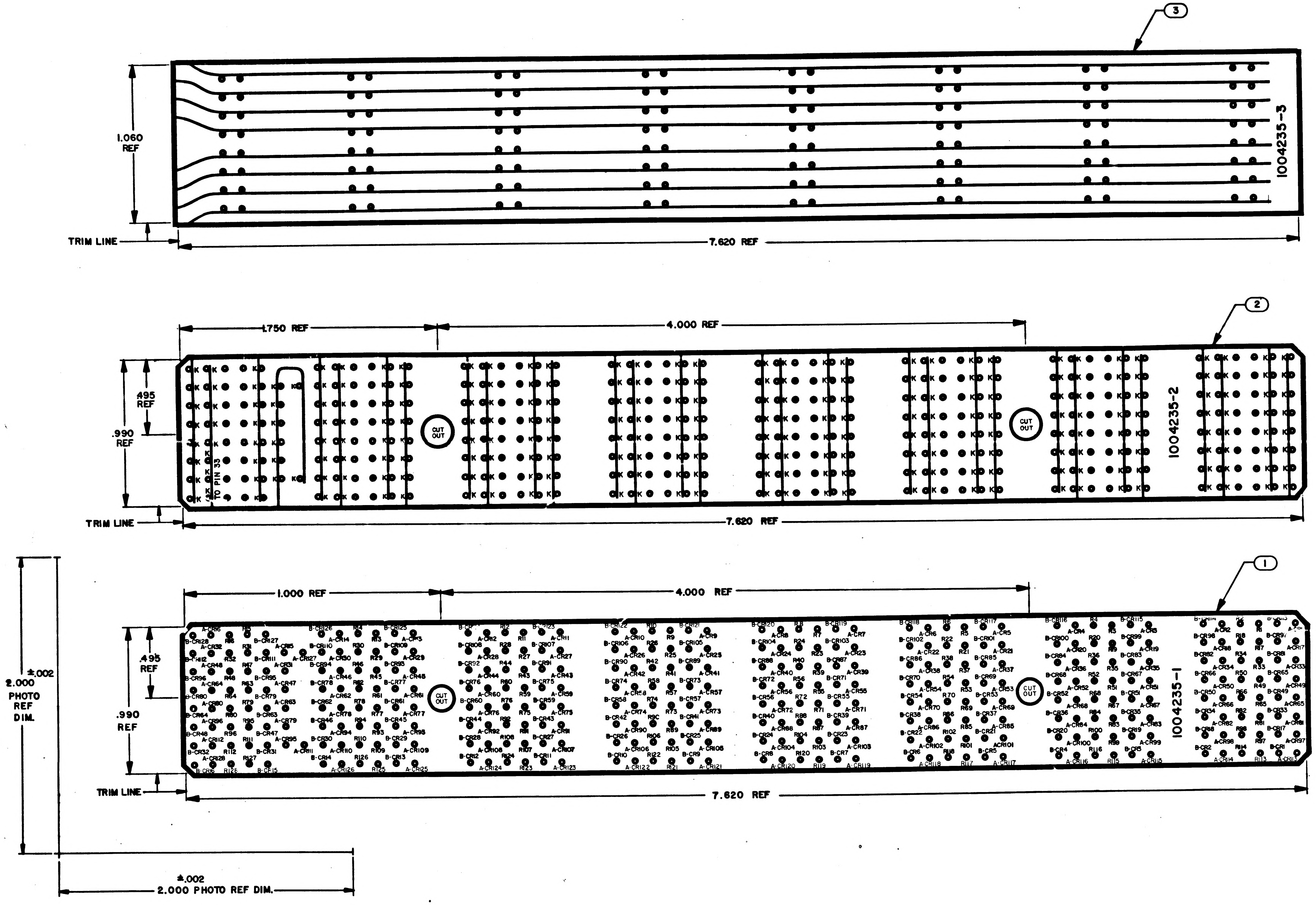

NOTES:

1. INTERPRET DRAWING IN ACCORDANCE WITH STANDARDS PRESCRIBED BY MIL-D-70327
2. ORIGINAL OF THIS DRAWING OR REPRODUCTION MADE BY PROCESS OR METHOD SHALL INSURE DIMENSIONAL STABILITY. DIMENSIONAL STABILITY SHALL NOT EXCEED .001 INCH PER INCH
3. MATERIAL: FILM .006/.008 THICK PER L-F-340, TYPE IB, CLASS 2, STYLE IA
4. MAKE MASTER PATTERN POSITIVE FILMS TO DIMENSIONS SHOWN
5. CUT TO WITHIN .010 OF TRIM LINE
6. ● .046/.050 DIA PUNCH ALL HOLES
7. K DENOTES CATHODE SIDE OF DIODE

Ⓑ REPLACES REV A WITH CHANGES

1	1004235-3	INSULATOR	3
1	1004235-2	INSULATOR	2
1	1004235-1	INSULATOR	1
QTY REQD	PART OR IDENTIFYING NO.	NOMENCLATURE OR DESCRIPTION	FIND NO

LIST OF MATERIALS

1003133	
NEXT ASSY	USED ON

APPLICATION

UNLESS OTHERWISE SPECIFIED DIMENSIONS ARE IN INCHES
TOLERANCES ON
FRACTIONS ± DECIMALS ± ANGLES ±
DO NOT SCALE THIS DRAWING
MATERIAL SEE NOTES
HEAT TREATMENT
FINAL FINISH

MIT INSTRUMENTATION LAB
CAMBRIDGE, MASS
DWG. NO. CONTRACT
DRAWN A. D'Leo DATE 6-8-63
CHECKED
APPROVAL W B Turner 28 Aug 63
APPROVAL Eldon C. Hall 27 Aug 63
NASA APPROVAL
MIT APPROVAL 9/26/63

MANNED SPACECRAFT CENTER
HOUSTON, TEXAS

INSULATOR,
PHOTOGRAPHIC MASTER
ROPE MEMORY MODULE

CODE IDENT NO.
SIZE E
NASA DRAWING NO 1004235
SCALE 4/1
WT
SHEET 1 OF 1

MASTER

1004235 B

INCHES
PHOTOGRAPHIC SCALE ONLY

NOTICE — WHEN GOVERNMENT DRAWINGS, SPECIFICATIONS, OR OTHER DATA ARE USED FOR ANY PURPOSE OTHER THAN IN CONNECTION WITH A DEFINITELY RELATED GOVERNMENT PROCUREMENT OPERATION, THE UNITED STATES GOVERNMENT THEREBY INCURS NO RESPONSIBILITY NOR ANY OBLIGATION WHATSOEVER; AND THE FACT THAT THE GOVERNMENT MAY HAVE FORMULATED, FURNISHED, OR IN ANY WAY SUPPLIED THE SAID DRAWINGS, SPECIFICATIONS, OR OTHER DATA IS NOT TO BE REGARDED BY IMPLICATION OR OTHERWISE AS IN ANY MANNER LICENSING THE HOLDER OR ANY OTHER PERSON OR CORPORATION, OR CONVEYING ANY RIGHTS OR PERMISSION TO MANUFACTURE, USE, OR SELL ANY PATENTED INVENTION THAT MAY IN ANY WAY BE RELATED THERETO

REVISIONS

SYM	DESCRIPTION	DATE	APPROVAL
B	REPLACES REV A WITH CHANGES PER TDRR 63452	8-26-63	
C	CHANGED PER TDRR 64346		

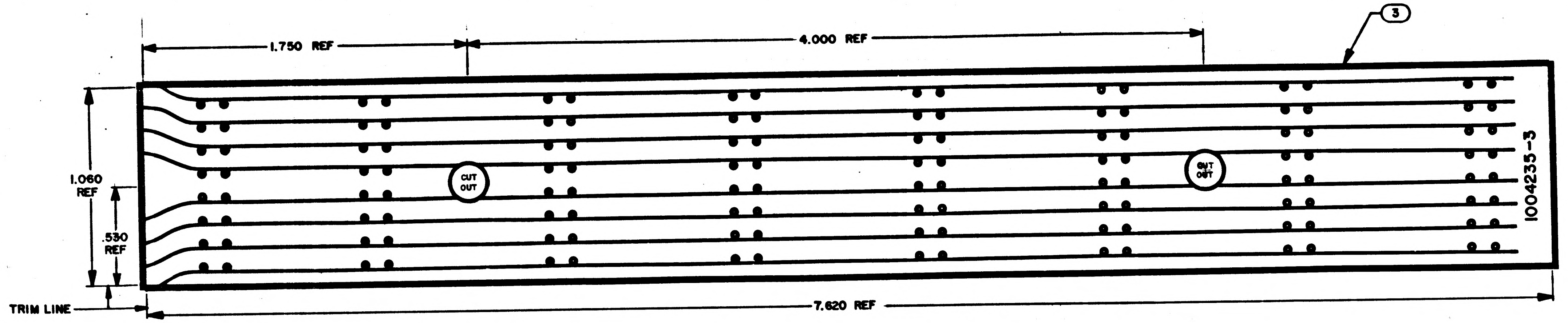

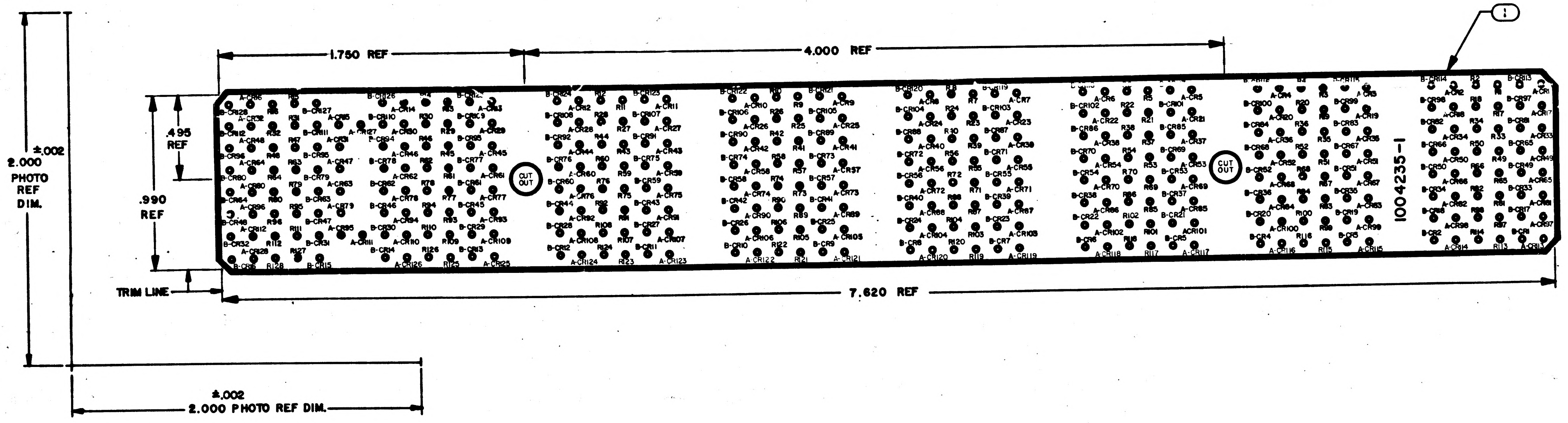

Ⓑ REPLACES REV A WITH CHANGES

NOTES:

1. INTERPRET DRAWING IN ACCORDANCE WITH STANDARDS PRESCRIBED BY MIL-D-70327
2. ORIGINAL OF THIS DRAWING OR REPRODUCTION MADE BY PROCESS OR METHOD SHALL INSURE DIMENSIONAL STABILITY. DIMENSIONAL STABILITY SHALL NOT EXCEED .001 INCH PER INCH
3. MATERIAL: FILM .006/.008 THICK PER L-F-340, TYPE IB, CLASS 2, STYLE IA
4. MAKE MASTER PATTERN POSITIVE FILMS TO DIMENSIONS SHOWN
5. CUT TO WITHIN .010 OF TRIM LINE
6. ● .045/.050 DIA PUNCH ALL HOLES
7. K DENOTES CATHODE SIDE OF DIODE

MASTER

QTY REQD	PART OR IDENTIFYING NO.	NOMENCLATURE OR DESCRIPTION	FIND NO.
1	1004235-3	INSULATOR	3
1	1004235-1	INSULATOR	1

LIST OF MATERIALS

NEXT ASSY	USED ON
1005133	

APPLICATION

UNLESS OTHERWISE SPECIFIED
DIMENSIONS ARE IN INCHES
TOLERANCES ON
FRACTIONS ± DECIMALS ± ANGLES ±
DO NOT SCALE THIS DRAWING
MATERIAL SEE NOTES
HEAT TREATMENT
FINAL FINISH

MIT
INSTRUMENTATION LAB
CAMBRIDGE, MASS
DWG. NO.
CONTRACT
DRAWN A. D'[illegible] DATE 6-8-62
CHECKED
APPROVAL WBT[illegible]
APPROVAL Eldon C Hall 24 Aug 63
NASA APPROVAL
MIT APPROVAL

MANNED SPACECRAFT CENTER
HOUSTON, TEXAS

INSULATOR,
PHOTOGRAPHIC MASTER
ROPE MEMORY MODULE

CODE IDENT NO.
SIZE E
NASA DRAWING NO. 1004235
SCALE 4/1
WT
SHEET 1 OF 1

1004235 C

INCHES
PHOTOGRAPHIC SCALE ONLY

NOTICE — WHEN GOVERNMENT DRAWINGS, SPECIFICATIONS, OR OTHER DATA ARE USED FOR ANY PURPOSE OTHER THAN IN CONNECTION WITH A DEFINITELY RELATED GOVERNMENT PROCUREMENT OPERATION, THE UNITED STATES GOVERNMENT THEREBY INCURS NO RESPONSIBILITY NOR ANY OBLIGATION WHATSOEVER; AND THE FACT THAT THE GOVERNMENT MAY HAVE FORMULATED, FURNISHED, OR IN ANY WAY SUPPLIED THE SAID DRAWINGS, SPECIFICATIONS, OR OTHER DATA IS NOT TO BE REGARDED BY IMPLICATION OR OTHERWISE AS IN ANY MANNER LICENSING THE HOLDER OR ANY OTHER PERSON OR CORPORATION, OR CONVEYING ANY RIGHTS OR PERMISSION TO MANUFACTURE, USE, OR SELL ANY PATENTED INVENTION THAT MAY IN ANY WAY BE RELATED THERETO.

REVISIONS			
SYM	DESCRIPTION	DATE	APPROVAL

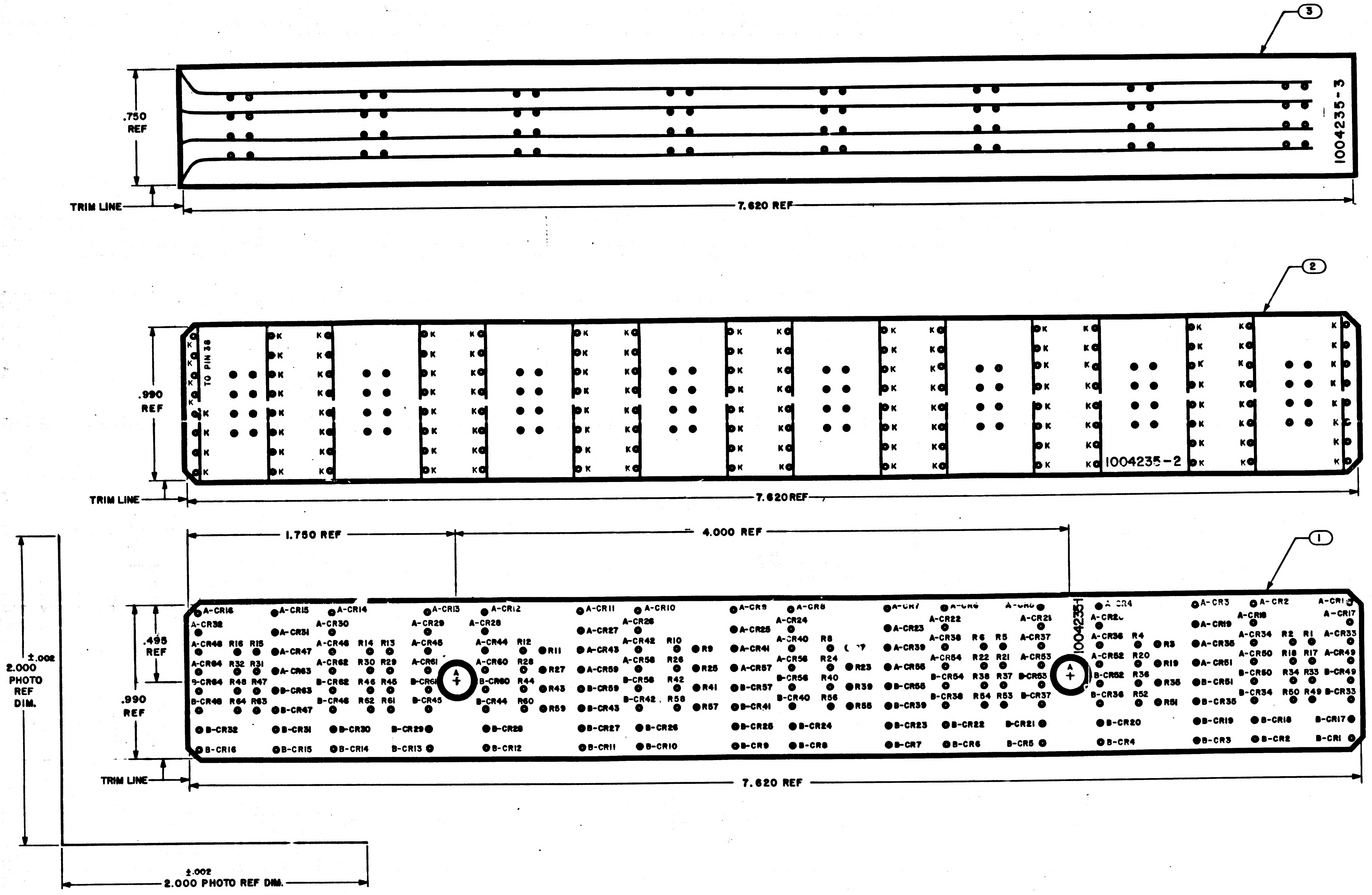

NOTES:

1. INTERPRET DRAWING IN ACCORDANCE WITH STANDARDS PRESCRIBED BY MIL-D-70327
2. ORIGINAL OF THIS DRAWING OR REPRODUCTION MADE BY PROCESS OR METHOD SHALL INSURE DIMENSIONAL STABILITY. DIMENSIONAL STABILITY SHALL NOT EXCEED .001 INCH PER INCH
3. MATERIAL: FILM .006/.008 THICK PER L-F-340, TYPE IB, CLASS 2, STYLE IA
4. MAKE MASTER PATTERN POSITIVE FILMS TO DIMENSIONS SHOWN
5. CUT TO WITHIN .010 OF TRIM LINE
6. ● .030/.035 DIA PUNCH ALL HOLES
7. K DENOTES CATHODE SIDE OF DIODE

QTY REQD	PART OR IDENTIFYING NO.	NOMENCLATURE OR DESCRIPTION	FIND NO.
1	1004235-3	INSULATOR	3
1	1004235-2	INSULATOR	2
1	1004235-1	INSULATOR	1

LIST OF MATERIALS

NEXT ASSY	USED ON
1003133	

APPLICATION

UNLESS OTHERWISE SPECIFIED
DIMENSIONS ARE IN INCHES
TOLERANCES ON
FRACTIONS ± — DECIMALS ± — ANGLES ± —
DO NOT SCALE THIS DRAWING
MATERIAL
SEE NOTE 3
HEAT TREATMENT —
FINAL FINISH —

MIT
INSTRUMENTATION LAB
CAMBRIDGE, MASS
DWG. NO. CONTRACT
DRAWN a. Di Leo DATE 6-8-62
CHECKED
APPROVAL W.B. 13 Nov 63
APPROVAL
NASA APPROVAL
MIT APPROVAL 14 Nov 63

MANNED SPACECRAFT CENTER
HOUSTON, TEXAS

INSULATOR
PHOTOGRAPHIC MASTER
ROPE MEMORY MODULE

CODE IDENT NO. | SIZE E | NASA DRAWING NO. 1004235
SCALE 4/1 | WT | SHEET 1 OF 1

1004235

MASTER

INCHES
0 1 2
PHOTOGRAPHIC SCALE ONLY

NOTICE — WHEN GOVERNMENT DRAWINGS, SPECIFICATIONS, OR OTHER DATA ARE USED FOR ANY PURPOSE OTHER THAN IN CONNECTION WITH A DEFINITELY RELATED GOVERNMENT PROCUREMENT OPERATION, THE UNITED STATES GOVERNMENT THEREBY INCURS NO RESPONSIBILITY NOR ANY OBLIGATION WHATSOEVER; AND THE FACT THAT THE GOVERNMENT MAY HAVE FORMULATED, FURNISHED, OR IN ANY WAY SUPPLIED THE SAID DRAWINGS, SPECIFICATION, OR OTHER DATA IS NOT TO BE REGARDED BY IMPLICATION OR OTHERWISE AS IN ANY MANNER LICENSING THE HOLDER OR ANY OTHER PERSON OR CORPORATION, OR CONVEYING ANY RIGHTS OR PERMISSION TO MANUFACTURE USE OR SELL ANY PATENTED INVENTION THAT MAY IN ANY WAY BE RELATED THERETO.

REVISIONS 02574			
SYM	DESCRIPTION	DATE	APPROVAL

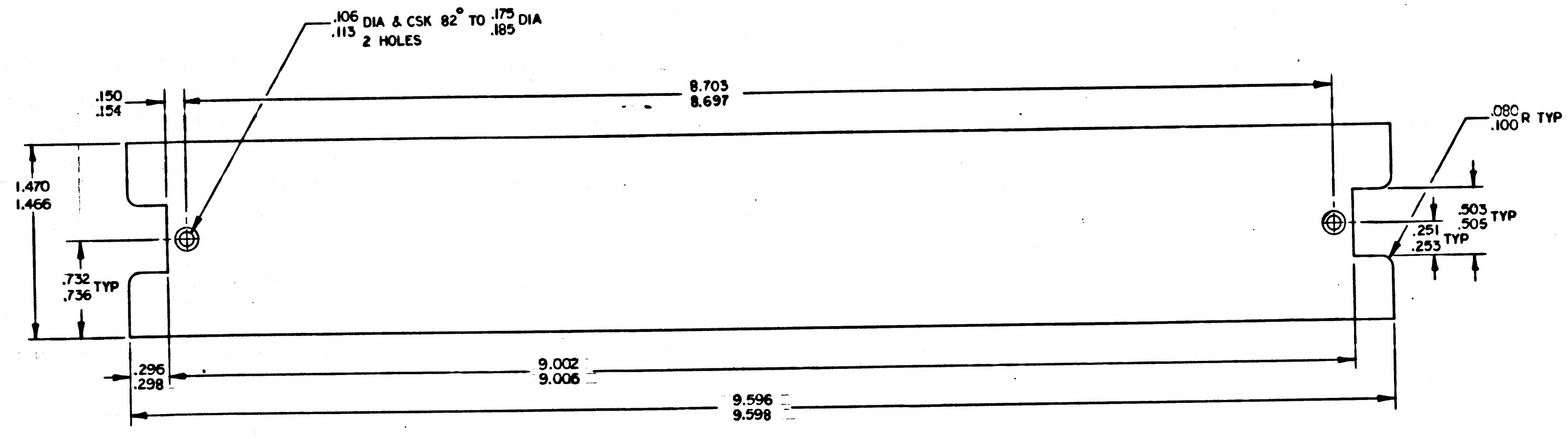

NOTES
1. INTERPRET DRAWING IN ACCORDANCE WITH STANDARDS PRESCRIBED BY MIL-D-70327
2. MATERIAL: .050 THK 5052-H32 ALUM PER QQ-A-318 TEMPER H32
3. FINISH: BLACK ANODIZE PER MIL-A-8625 TYPE II

MASTER

QTY REQD	PART OR IDENTIFYING NO.	NOMENCLATURE OR DESCRIPTION	FIND NO.

LIST OF MATERIALS

NEXT ASSY	USED ON
1003133	

APPLICATION

UNLESS OTHERWISE SPECIFIED DIMENSIONS ARE IN INCHES
TOLERANCES ON
FRACTIONS ± DECIMALS ± ANGLES ± 2°
DO NOT SCALE THIS DRAWING
MATERIAL SEE NOTE 2
HEAT TREATMENT
FINAL FINISH SEE NOTE 3

MIT
INSTRUMENTATION LAB
CAMBRIDGE, MASS.
DWG. NO. CONTRACT
DRAWN R. Machado DATE 8-1-63
CHECKED
APPROVAL 6 Aug 63
APPROVAL
NASA APPROVAL Jack Barnard
MIT APPROVAL

MANNED SPACECRAFT CENTER
HOUSTON, TEXAS

COVER
ROPE MEMORY MODULE

CODE IDENT NO. SIZE D NASA DRAWING NO. 1004236
SCALE 2/1 WT SHEET 1 OF 1

1004236

INCHES
0 1 2
PHOTOGRAPHIC SCALE ONLY

SYM	DESCRIPTION	DATE	APPROVAL
A	REVISED PER TDRR 04326	[illegible]	[illegible]

REVISIONS 02394

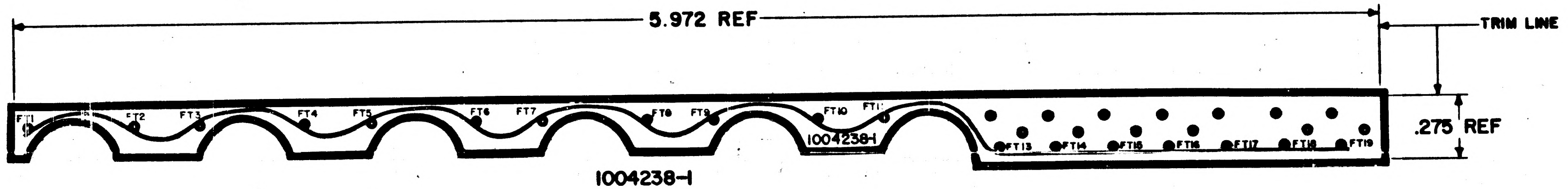
5.972 REF
TRIM LINE
.275 REF
FT1
FT2
FT3
FT4
FT5
FT6
FT7
FT8
FT9
FT10
FT11
1004238-1
FT13
FT14
FT15
FT16
FT17
FT18
FT19

1004238-1

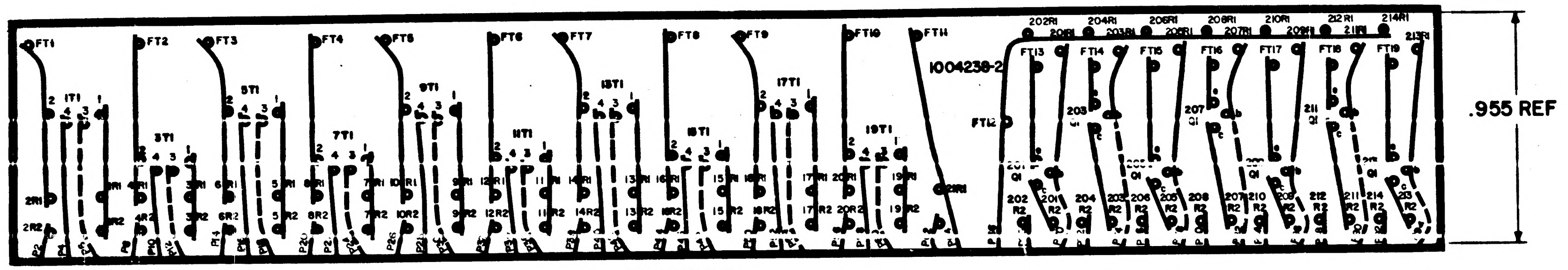
.955 REF
1004238-2
FT1
FT2
FT3
FT4
FT5
FT6
FT7
FT8
FT9
FT10
FT11
FT12
FT13
FT14
FT15
FT16
FT17
FT18
FT19

1004238-2

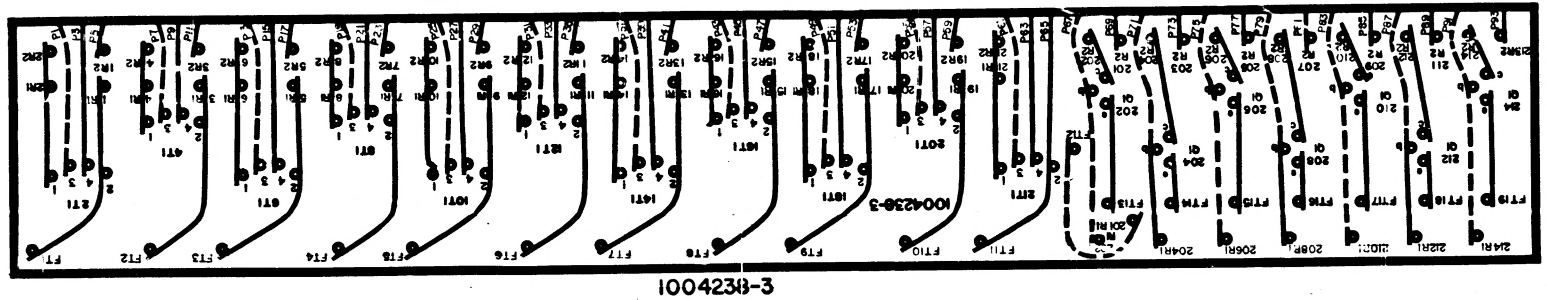

1004238-3

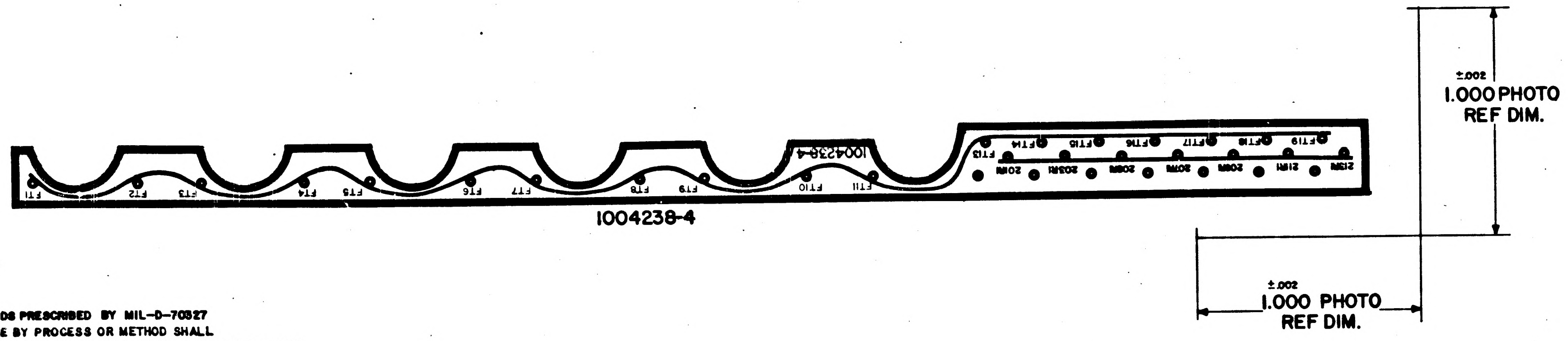
±.002
1.000 PHOTO
REF DIM.
±.002
1.000 PHOTO
REF DIM.

1004238-4

NOTES:
1. INTERPRET DRAWING IN ACCORDANCE WITH STANDARDS PRESCRIBED BY MIL-D-70327
2. ORIGINAL OF THIS DRAWING OR REPRODUCTION MADE BY PROCESS OR METHOD SHALL INSURE DIMENSIONAL STABILITY. DIMENSIONAL STABILITY SHALL NOT EXCEED .001 INCH PER INCH
3. CUT TO WITHIN .010 OF TRIMLINE
4. MAKE MASTER PATTERN POSITIVE FILMS TO DIMENSIONS SHOWN
5. MATL:FILM .006/.008 THICK PER L-F-340, TYPE IB, CLASS 2, STYLE IA
6. ● .045/.050 DIA PUNCH ALL HOLES

MASTER

QTY REQD	PART OR IDENTIFYING NO.	NOMENCLATURE OR DESCRIPTION	FIND NO.

LIST OF MATERIALS

NEXT ASSY	USED ON
1003123	

APPLICATION

UNLESS OTHERWISE SPECIFIED
DIMENSIONS ARE IN INCHES
TOLERANCES ON
FRACTIONS ± — DECIMALS ± — ANGLES ± —
DO NOT SCALE THIS DRAWING
MATERIAL SEE NOTE 5
HEAT TREATMENT —
FINAL FINISH —

MIT
INSTRUMENTATION LAB
CAMBRIDGE, MASS
DWG NO.
CONTRACT
DRAWN D. McKillop DATE 7-15-63
CHECKED [illegible]
APPROVAL [illegible]
APPROVAL [illegible]
NASA APPROVAL [illegible] 8/7/63
MIT APPROVAL [illegible]

MANNED SPACECRAFT CENTER
HOUSTON, TEXAS

INSULATOR
PHOTOGRAPHIC MASTER
INTERFACE MODULE A19 OR A39

CODE IDENT NO.
SIZE E
NASA DRAWING NO. 1004238
SCALE 4:1
WT
SHEET 1 OF 1

INCHES
PHOTOGRAPHIC SCALE ONLY

NOTICE — WHEN GOVERNMENT DRAWINGS, SPECIFICATIONS, OR OTHER DATA ARE USED FOR ANY PURPOSE OTHER THAN IN CONNECTION WITH A DEFINITELY RELATED GOVERNMENT PROCUREMENT OPERATION, THE UNITED STATES GOVERNMENT THEREBY INCURS NO RESPONSIBILITY NOR ANY OBLIGATION WHATSOEVER; AND THE FACT THAT THE GOVERNMENT MAY HAVE FORMULATED, FURNISHED, OR IN ANY WAY SUPPLIED THE SAID DRAWINGS, SPECIFICATIONS, OR OTHER DATA IS NOT TO BE REGARDED BY IMPLICATION OR OTHERWISE AS IN ANY MANNER LICENSING THE HOLDER OR ANY OTHER PERSON OR CORPORATION, OR CONVEYING ANY RIGHTS OR PERMISSION TO MANUFACTURE, USE, OR SELL ANY PATENTED INVENTION THAT MAY IN ANY WAY BE RELATED THERETO.

REVISIONS 22397			
SYM	DESCRIPTION	DATE	APPROVAL

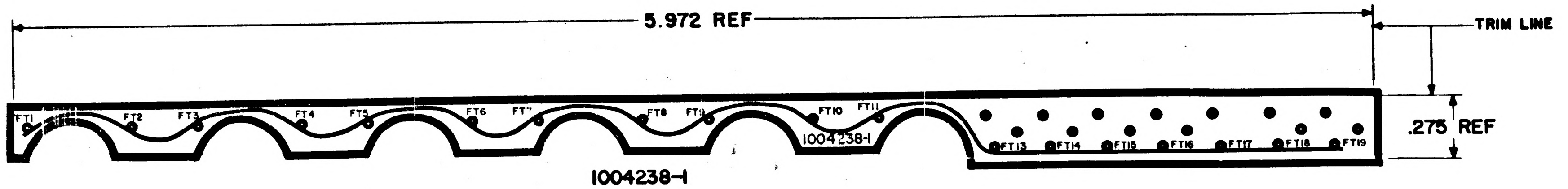
5.972 REF
TRIM LINE
.275 REF
FT1
FT2
FT3
FT4
FT5
FT6
FT7
FT8
FT9
FT10
FT11
FT13
FT14
FT15
FT16
FT17
FT18
FT19
1004238-1

1004238-1

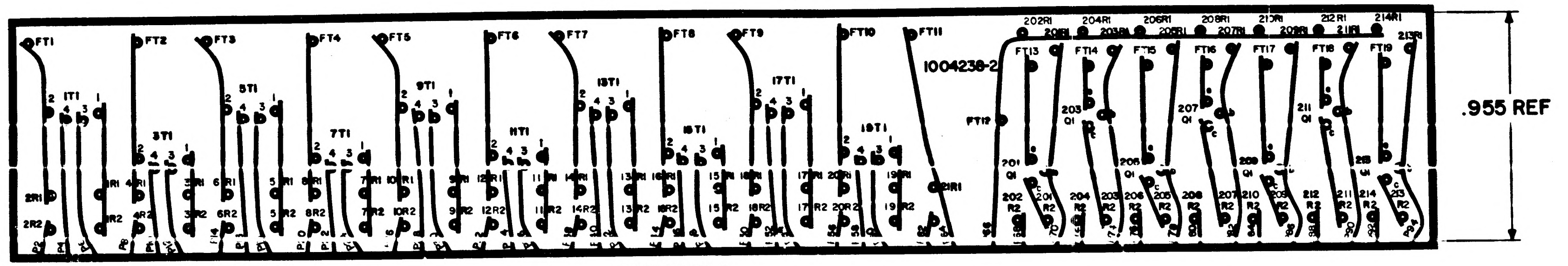
.955 REF
1004238-2
FT1
FT2
FT3
FT4
FT5
FT6
FT7
FT8
FT9
FT10
FT11
FT12
FT13
FT14
FT15
FT16
FT17
FT18
FT19

1004238-2

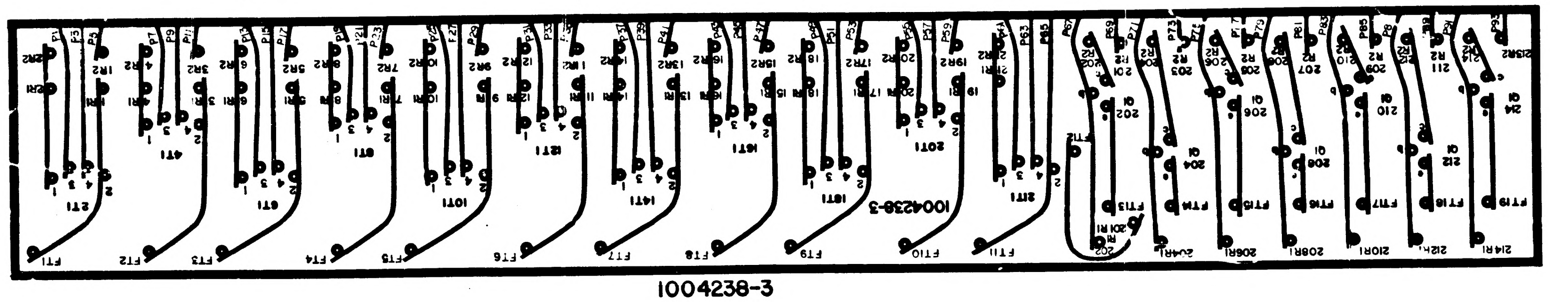
1004238-3
FT1
FT2
FT3
FT4
FT5
FT6
FT7
FT8
FT9
FT10
FT11
FT12
FT13
FT14
FT15
FT16
FT17
FT18
FT19

1004238-3

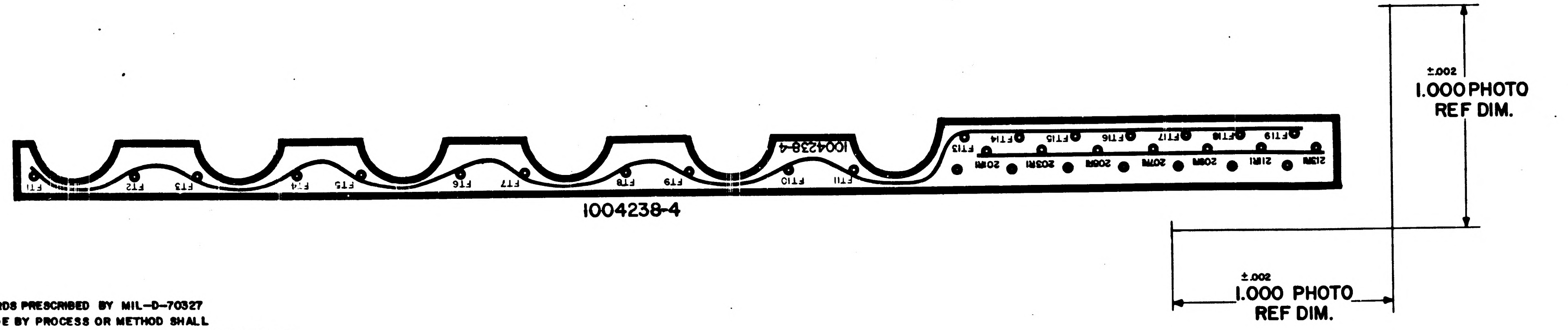
1004238-4
FT1
FT2
FT3
FT5
FT6
FT7
FT8
FT9
FT10
FT11
FT13
FT14
FT15
FT16
FT17
FT18
FT19
±.002
1.000 PHOTO
REF DIM.
±.002
1.000 PHOTO
REF DIM.

1004238-4

NOTES:

1. INTERPRET DRAWING IN ACCORDANCE WITH STANDARDS PRESCRIBED BY MIL-D-70327
2. ORIGINAL OF THIS DRAWING OR REPRODUCTION MADE BY PROCESS OR METHOD SHALL INSURE DIMENSIONAL STABILITY. DIMENSIONAL STABILITY SHALL NOT EXCEED .001 INCH PER INCH
3. CUT TO WITHIN .010 OF TRIMLINE
4. MAKE MASTER PATTERN POSITIVE FILMS TO DIMENSIONS SHOWN
5. MATL:FILM .006/.008 THICK PER L-F-340, TYPE IB, CLASS 2, STYLE IA
6. ● .045/.050 DIA PUNCH ALL HOLES

MASTER

QTY REQD	PART OR IDENTIFYING NO.	NOMENCLATURE OR DESCRIPTION	FIND NO.
LIST OF MATERIALS			

NEXT ASSY	USED ON
1003123	
APPLICATION	

UNLESS OTHERWISE SPECIFIED DIMENSIONS ARE IN INCHES
TOLERANCES ON
FRACTIONS ± — DECIMALS ± — ANGLES ± —
DO NOT SCALE THIS DRAWING
MATERIAL SEE NOTE 5
HEAT TREATMENT —
FINAL FINISH —

MIT INSTRUMENTATION LAB
CAMBRIDGE, MASS

DRAWN B. McWilliams DATE 7-15-63
CHECKED [illegible] 8-2-63
APPROVAL [illegible] 8-2-63
APPROVAL [illegible] 8/6/63
NASA APPROVAL [illegible] 8/7/63
MIT APPROVAL [illegible] 8/7/63

MANNED SPACECRAFT CENTER
HOUSTON, TEXAS

INSULATOR
PHOTOGRAPHIC MASTER
INTERFACE MODULE A19 OR A39

CODE IDENT NO. | SIZE E | NASA DRAWING NO. 1004238
SCALE 4:1 | WT | SHEET 1 OF 1

INCHES
0 1 2
PHOTOGRAPHIC SCALE ONLY

1004238

NOTICE — WHEN GOVERNMENT DRAWINGS, SPECIFICATIONS, OR OTHER DATA ARE USED FOR ANY PURPOSE OTHER THAN IN CONNECTION WITH A DEFINITELY RELATED GOVERNMENT PROCUREMENT OPERATION, THE UNITED STATES GOVERNMENT THEREBY INCURS NO RESPONSIBILITY NOR ANY OBLIGATION WHATSOEVER; AND THE FACT THAT THE GOVERNMENT MAY HAVE FORMULATED, FURNISHED, OR IN ANY WAY SUPPLIED THE SAID DRAWINGS, SPECIFICATIONS, OR OTHER DATA IS NOT TO BE REGARDED BY IMPLICATION OR OTHERWISE AS IN ANY MANNER LICENSING THE HOLDER OR ANY OTHER PERSON OR CORPORATION, OR CONVEYING ANY RIGHTS OR PERMISSION TO MANUFACTURE, USE, OR SELL ANY PATENTED INVENTION THAT MAY IN ANY WAY BE RELATED THERETO.

	REVISIONS 03739		
SYM	DESCRIPTION	DATE	APPROVAL
A	REVISED PER TDRR 03450	2-26-63	

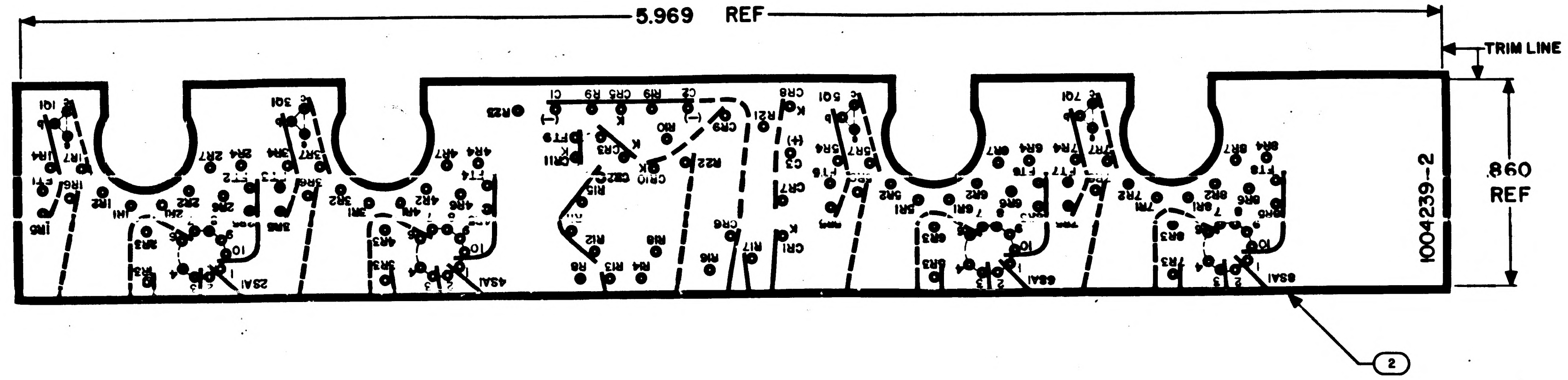

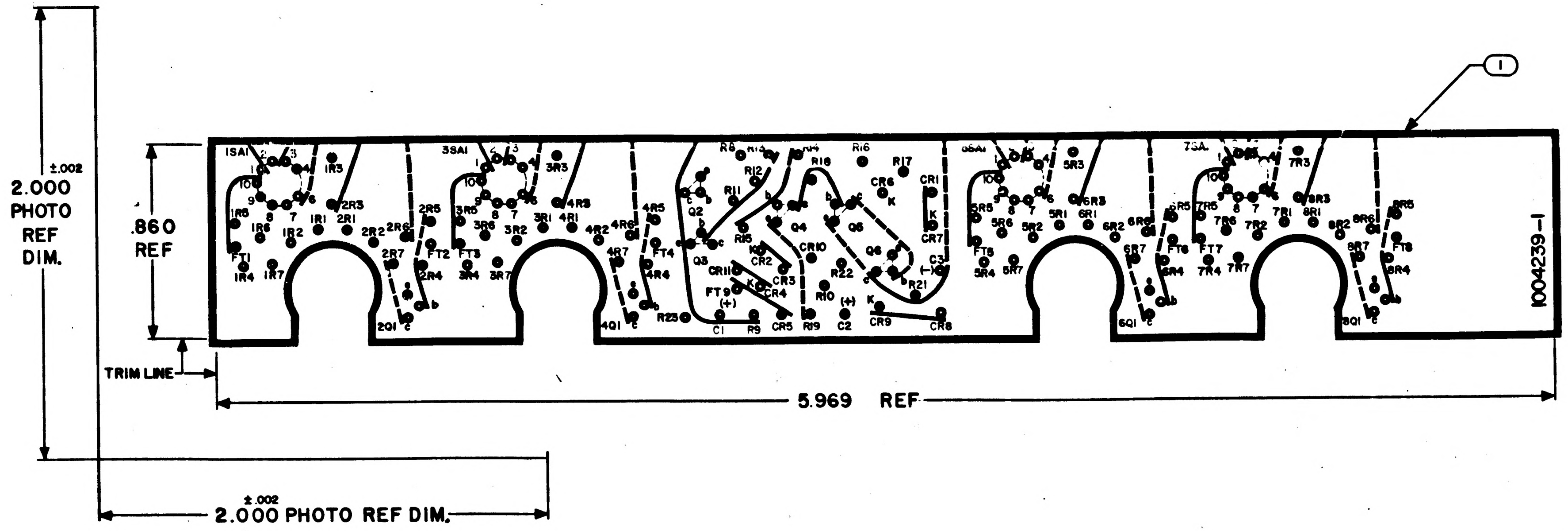

NOTES: -

1. INTERPRET DRAWING IN ACCORDANCE WITH STANDARDS PRESCRIBED BY MIL-D-70327
2. ORIGINAL OF THIS DRAWING OR REPRODUCTION MADE BY PROCESS OR METHOD SHALL INSURE DIMENSIONAL STABILITY. DIMENSIONAL STABILITY SHALL NOT EXCEED .001 INCH PER INCH
3. MATERIAL: FILM .006/.008 THICK PER L-F-340 TYPE IB, CLASS 2, STYLE IA
4. MAKE MASTER PATTERN POSITIVE FILMS TO DIMENSIONS SHOWN
5. CUT TO WITHIN .010 OF TRIMLINE
6. ● .030/.036 DIA PUNCH ALL HOLES

MASTER

QTY REQD	PART OR IDENTIFYING NO.	NOMENCLATURE OR DESCRIPTION	FIND NO
1	1004239-2	INSULATOR	2
1	1004239-1	INSULATOR	1

LIST OF MATERIALS

NEXT ASSY	USED ON
1003140	

APPLICATION

UNLESS OTHERWISE SPECIFIED
DIMENSIONS ARE IN INCHES
TOLERANCES ON
FRACTIONS ± — DECIMALS ± — ANGLES ± —
DO NOT SCALE THIS DRAWING

MATERIAL SEE NOTE 3
HEAT TREATMENT —
FINAL FINISH —

MIT
INSTRUMENTATION LAB
CAMBRIDGE MASS
DWG NO. CONTRACT

DRAWN Tony Bell DATE 8/1/63
CHECKED
APPROVAL 11 SEP 63
APPROVAL
NASA APPROVAL 9/12/63
MIT APPROVAL 12 Sep 63

MANNED SPACECRAFT CENTER
HOUSTON, TEXAS

INSULATOR, PHOTOGRAPHIC MASTER
ERASABLE SENSE AMPLIFIER MODULE

CODE IDENT NO. SIZE E NASA DRAWING NO. 1004239
SCALE 4/1 WT SHEET 1 OF 1

1004239

INCHES
PHOTOGRAPHIC SCALE ONLY

SYM	DESCRIPTION	DATE	APPROVAL
	REVISIONS 03134		
A	REVISED PER TDRR 03450	2-26-63	
B	REVISED PER TDRR 04019	10-17-63	WK.

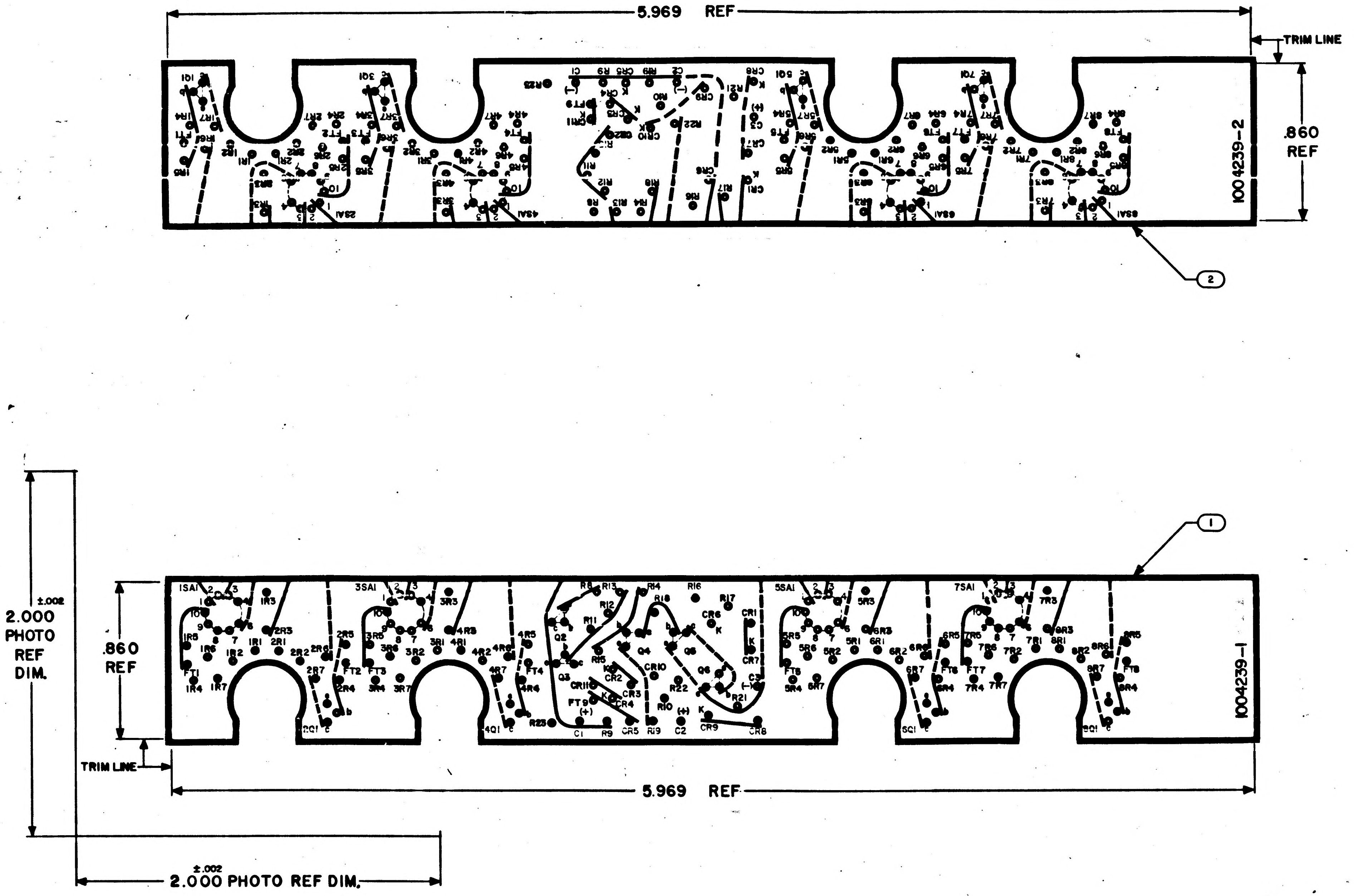

NOTES: -

1. INTERPRET DRAWING IN ACCORDANCE WITH STANDARDS PRESCRIBED BY MIL-D-70327
2. ORIGINAL OF THIS DRAWING OR REPRODUCTION MADE BY PROCESS OR METHOD SHALL INSURE DIMENSIONAL STABILITY. DIMENSIONAL STABILITY SHALL NOT EXCEED .001 INCH PER INCH
3. MATERIAL: FILM .006/.008 THICK PER L-F-340 TYPE IB, CLASS 2, STYLE IA
4. MAKE MASTER PATTERN POSITIVE FILMS TO DIMENSIONS SHOWN -
5. CUT TO WITHIN .010 OF TRIMLINE
6. ● .030/.035 DIA PUNCH ALL HOLES

QTY REQD	PART OR IDENTIFYING NO.	NOMENCLATURE OR DESCRIPTION	FIND NO.
1	1004239-2	INSULATOR	2
1	1004239-1	INSULATOR	1

LIST OF MATERIALS

NEXT ASSY	USED ON
1003140	

APPLICATION

UNLESS OTHERWISE SPECIFIED DIMENSIONS ARE IN INCHES
TOLERANCES ON
FRACTIONS ± — DECIMALS ± — ANGLES ± —
DO NOT SCALE THIS DRAWING
MATERIAL SEE NOTE 3
HEAT TREATMENT —
FINAL FINISH —

MIT INSTRUMENTATION LAB
CAMBRIDGE, MASS
DRAWN Tony Bell DATE 8/1/63
CHECKED
APPROVAL
APPROVAL
NASA APPROVAL 9/12/63
MIT APPROVAL 12/63

MANNED SPACECRAFT CENTER
HOUSTON, TEXAS

INSULATOR,
PHOTOGRAPHIC MASTER
ERASABLE SENSE AMPLIFIER MODULE

CODE IDENT NO.
SIZE E
NASA DRAWING NO. 1004239
SCALE 4/1
WT
SHEET 1 OF 1

MASTER

INCHES
PHOTOGRAPHIC SCALE ONLY

NOTICE: WHEN GOVERNMENT DRAWINGS, SPECIFICATIONS, OR OTHER DATA ARE USED FOR ANY PURPOSE OTHER THAN IN CONNECTION WITH A DEFINITELY RELATED GOVERNMENT PROCUREMENT OPERATION, THE UNITED STATES GOVERNMENT THEREBY INCURS NO RESPONSIBILITY NOR ANY OBLIGATION WHATSOEVER; AND THE FACT THAT THE GOVERNMENT MAY HAVE FORMULATED, FURNISHED, OR IN ANY WAY SUPPLIED THE SAID DRAWINGS, SPECIFICATIONS, OR OTHER DATA IS NOT TO BE REGARDED BY IMPLICATION OR OTHERWISE AS IN ANY MANNER LICENSING THE HOLDER OR ANY OTHER PERSON OR CORPORATION, OR CONVEYING ANY RIGHTS OR PERMISSION TO MANUFACTURE, USE, OR SELL ANY PATENTED INVENTION THAT MAY IN ANY WAY BE RELATED THERETO.

REVISIONS 03739

SYM	DESCRIPTION	DATE	APPROVAL
A	REVISED PER TDRR 03450	8-26-63	
B	REVISED PER TDRR 04019	10-17-63	
C	REVISED PER TDRR 10121 DR B. Jarvis CHK R.A.E.	9 Jan 64	HWC

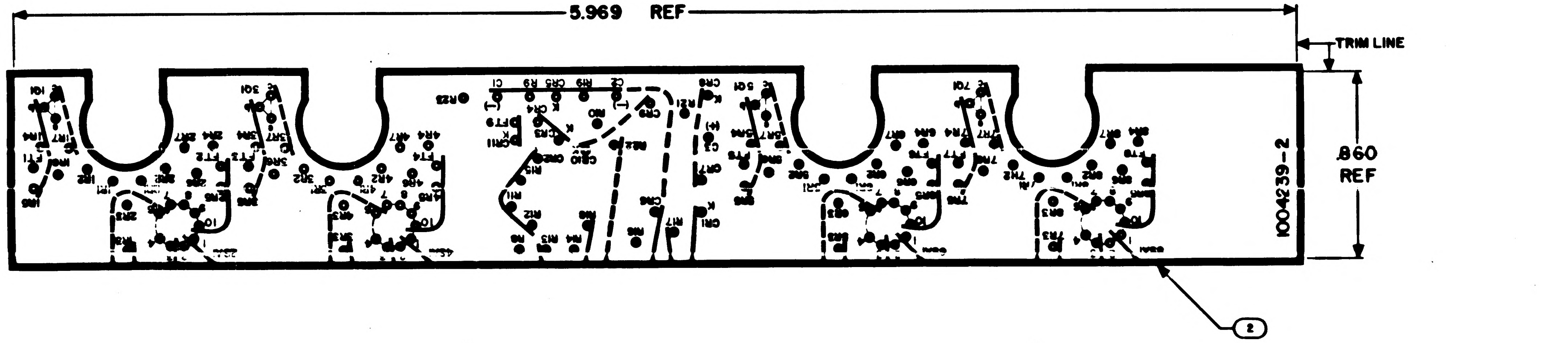

5.969 REF
TRIM LINE
.860
REF
1004239-2
2

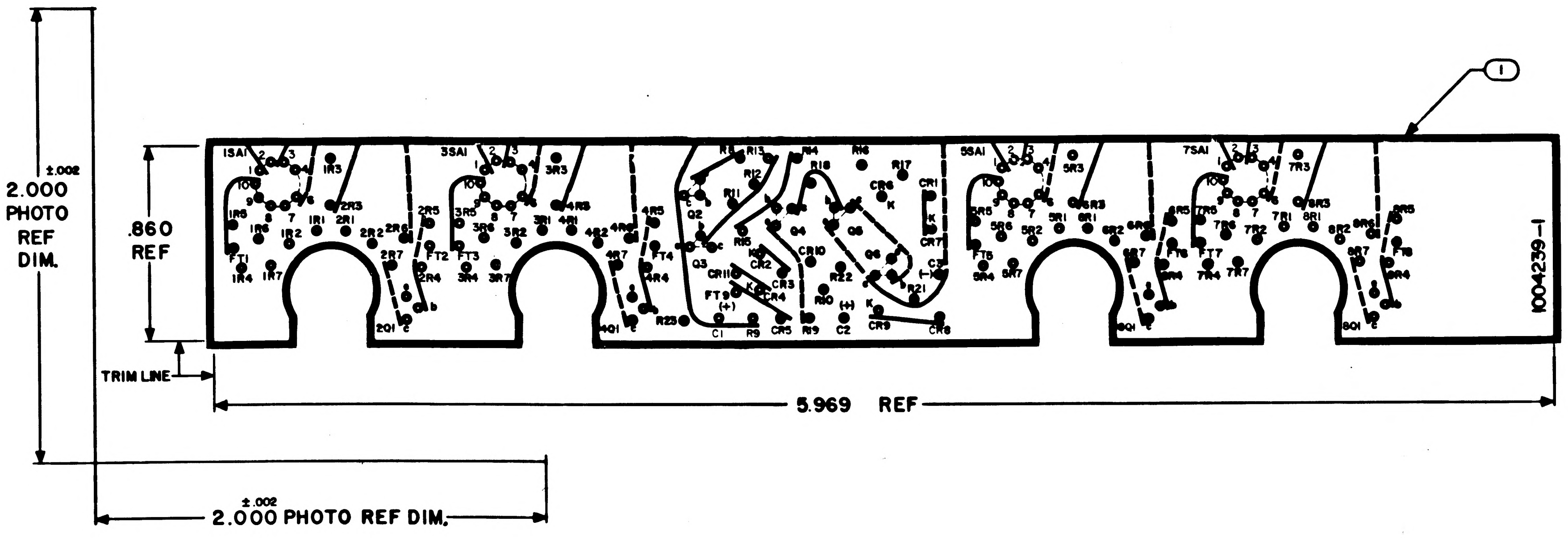

1
1SA1
3SA1
5SA1
7SA1
1R3
2R3
1R5
1R6
1R2
1R1
2R1
2R2
2R6
2R5
2R7
2R4
FT1
1R4
1R7
FT2
FT3
3R5
3R6
3R2
3R1
4R1
4R3
3R3
4R2
4R6
4R5
4R7
FT4
4R4
3R4
3R7
2Q1
4Q1
R23
Q2
Q3
Q4
Q5
Q6
R8
R13
R14
R16
R17
R18
R12
R11
R15
CR6
CR1
CR7
CR10
CR2
CR3
CR11
CR4
FT9
(+)
C1
R9
CR5
R19
R10
R22
R21
C2
CR9
CR8
C3
(−)
K
5R3
5R5
5R6
5R2
5R1
6R1
6R3
6R2
6R6
6R5
6R7
6R4
FT5
5R4
5R7
FT6
FT7
7R3
7R5
7R6
7R2
7R1
8R1
8R3
8R2
8R6
8R5
8R7
8R4
FT8
7R4
7R7
6Q1
8Q1
1004239-1
.860
REF
±.002
2.000
PHOTO
REF
DIM.
TRIM LINE
5.969 REF
±.002
2.000 PHOTO REF DIM.

NOTES:

1. INTERPRET DRAWING IN ACCORDANCE WITH STANDARDS PRESCRIBED BY MIL-D-70327
2. ORIGINAL OF THIS DRAWING OR REPRODUCTION MADE BY PROCESS OR METHOD SHALL INSURE DIMENSIONAL STABILITY. DIMENSIONAL STABILITY SHALL NOT EXCEED .001 INCH PER INCH
3. MATERIAL: FILM .006/.008 THICK PER L-F-340 TYPE IB, CLASS 2, STYLE IA
4. MAKE MASTER PATTERN POSITIVE FILMS TO DIMENSIONS SHOWN
5. CUT TO WITHIN .010 OF TRIMLINE
6. ● .030/.035 DIA PUNCH ALL HOLES

QTY REQD	PART OR IDENTIFYING NO.	NOMENCLATURE OR DESCRIPTION	FIND NO.
1	1004239-2	INSULATOR	2
1	1004239-1	INSULATOR	1

LIST OF MATERIALS

NEXT ASSY	USED ON
1003464	

APPLICATION

UNLESS OTHERWISE SPECIFIED DIMENSIONS ARE IN INCHES
TOLERANCES ON
FRACTIONS ± — DECIMALS ± — ANGLES ± —
DO NOT SCALE THIS DRAWING
MATERIAL
SEE NOTE 3
HEAT TREATMENT —
FINAL FINISH —

MIT
INSTRUMENTATION LAB
CAMBRIDGE, MASS.
DWG NO
CONTRACT
DRAWN Tony Bell DATE 8/6/63
CHECKED
APPROVAL 10 SEP 63
APPROVAL
NASA APPROVAL 9/12/63
MIT APPROVAL 12/63

MANNED SPACECRAFT CENTER
HOUSTON, TEXAS

INSULATOR, PHOTOGRAPHIC MASTER
ERASABLE SENSE AMPLIFIER MODULE

CODE IDENT NO.	SIZE	NASA DRAWING NO.
	E	1004239

SCALE 4/1
WT
SHEET 1 OF 1

NOTICE — WHEN GOVERNMENT DRAWINGS, SPECIFICATIONS, OR OTHER DATA ARE USED FOR ANY PURPOSE OTHER THAN IN CONNECTION WITH A DEFINITELY RELATED GOVERNMENT PROCUREMENT OPERATION, THE UNITED STATES GOVERNMENT THEREBY INCURS NO RESPONSIBILITY NOR ANY OBLIGATION WHATSOEVER; AND THE FACT THAT THE GOVERNMENT MAY HAVE FORMULATED, FURNISHED, OR IN ANY WAY SUPPLIED THE SAID DRAWINGS, SPECIFICATIONS, OR OTHER DATA IS NOT TO BE REGARDED BY IMPLICATION OR OTHERWISE AS IN ANY MANNER LICENSING THE HOLDER OR ANY OTHER PERSON OR CORPORATION, OR CONVEYING ANY RIGHTS OR PERMISSION TO MANUFACTURE, USE, OR SELL ANY PATENTED INVENTION THAT MAY IN ANY WAY BE RELATED THERETO.

REVISIONS			
SYM	DESCRIPTION	DATE	APPROVAL

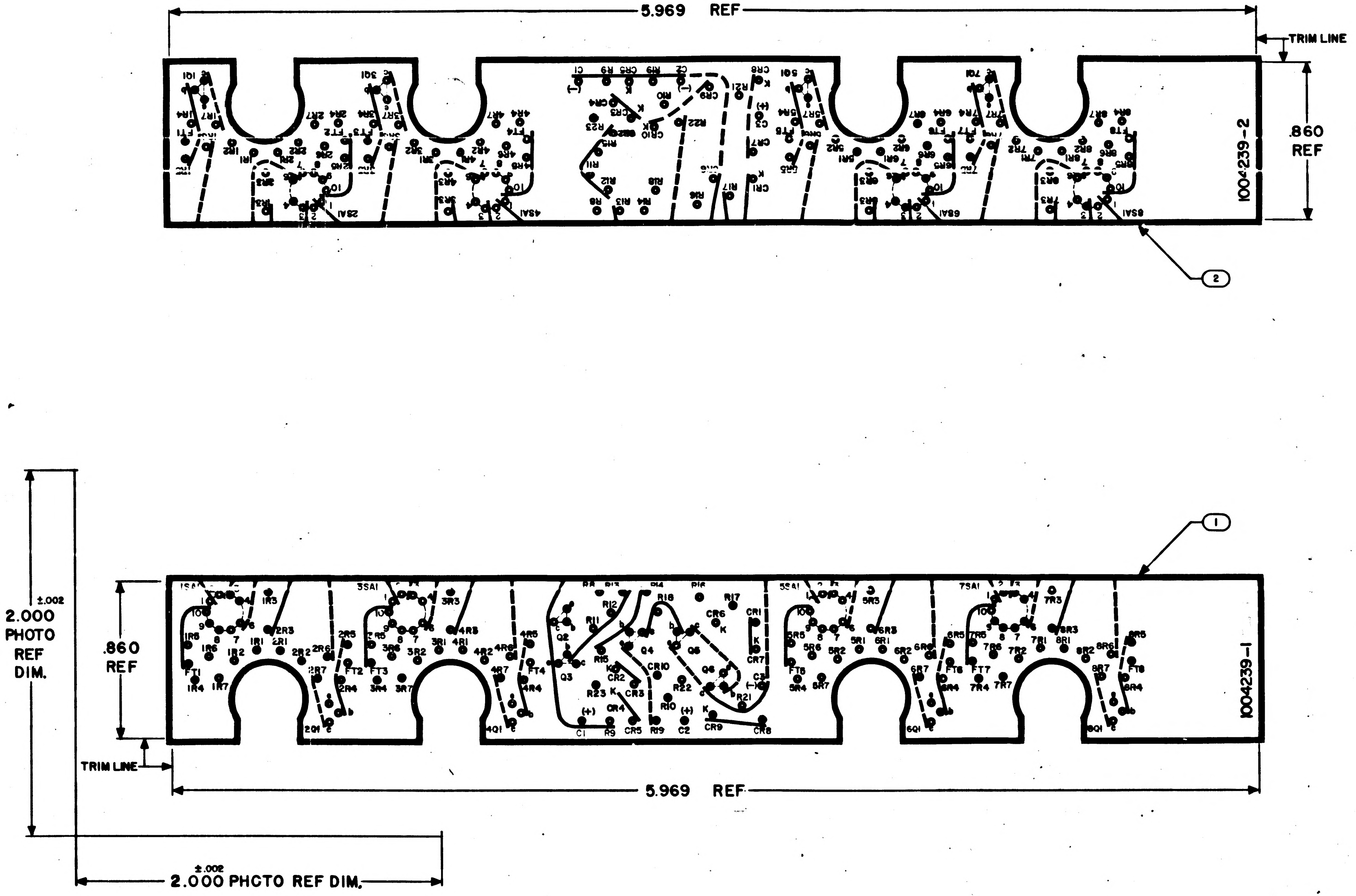

NOTES:

1. INTERPRET DRAWING IN ACCORDANCE WITH STANDARDS PRESCRIBED BY MIL-D-70327
2. ORIGINAL OF THIS DRAWING OR REPRODUCTION MADE BY PROCESS OR METHOD SHALL INSURE DIMENSIONAL STABILITY. DIMENSIONAL STABILITY SHALL NOT EXCEED .001 INCH PER INCH
3. MATERIAL: FILM .006/.008 THICK PER L-F-340 TYPE IB, CLASS 2, STYLE IA
4. MAKE MASTER PATTERN POSITIVE FILMS TO DIMENSIONS SHOWN
5. CUT TO WITHIN .010 OF TRIMLINE
6. ● .030/.035 DIA PUNCH ALL HOLES

QTY REQD	PART OR IDENTIFYING NO.	NOMENCLATURE OR DESCRIPTION	FIND NO.
1	1004239-2	INSULATOR	2
1	1004239-1	INSULATOR	1

LIST OF MATERIALS

MASTER

NEXT ASSY	USED ON
1003140	

APPLICATION

UNLESS OTHERWISE SPECIFIED DIMENSIONS ARE IN INCHES
TOLERANCES ON
FRACTIONS ± — DECIMALS ± — ANGLES ± —
DO NOT SCALE THIS DRAWING
MATERIAL SEE NOTE 3
HEAT TREATMENT —
FINAL FINISH —

MIT
INSTRUMENTATION LAB
CAMBRIDGE, MASS
DWG. NO. CONTRACT
DRAWN Tony Bell DATE 8/1/63
CHECKED
APPROVAL W.B. 10 SEP 63
APPROVAL
NASA APPROVAL 9/12/63
MIT APPROVAL 9/12/63

MANNED SPACECRAFT CENTER
HOUSTON, TEXAS

INSULATOR, PHOTOGRAPHIC MASTER
ERASABLE SENSE AMPLIFIER MODULE

CODE IDENT NO.
SIZE E
NASA DRAWING NO. 1004239
SCALE 4/1
WT
SHEET 1 OF 1

INCHES
PHOTOGRAPHIC SCALE ONLY

1004240

SYM	REVISIONS DESCRIPTION	DATE	APPROVAL

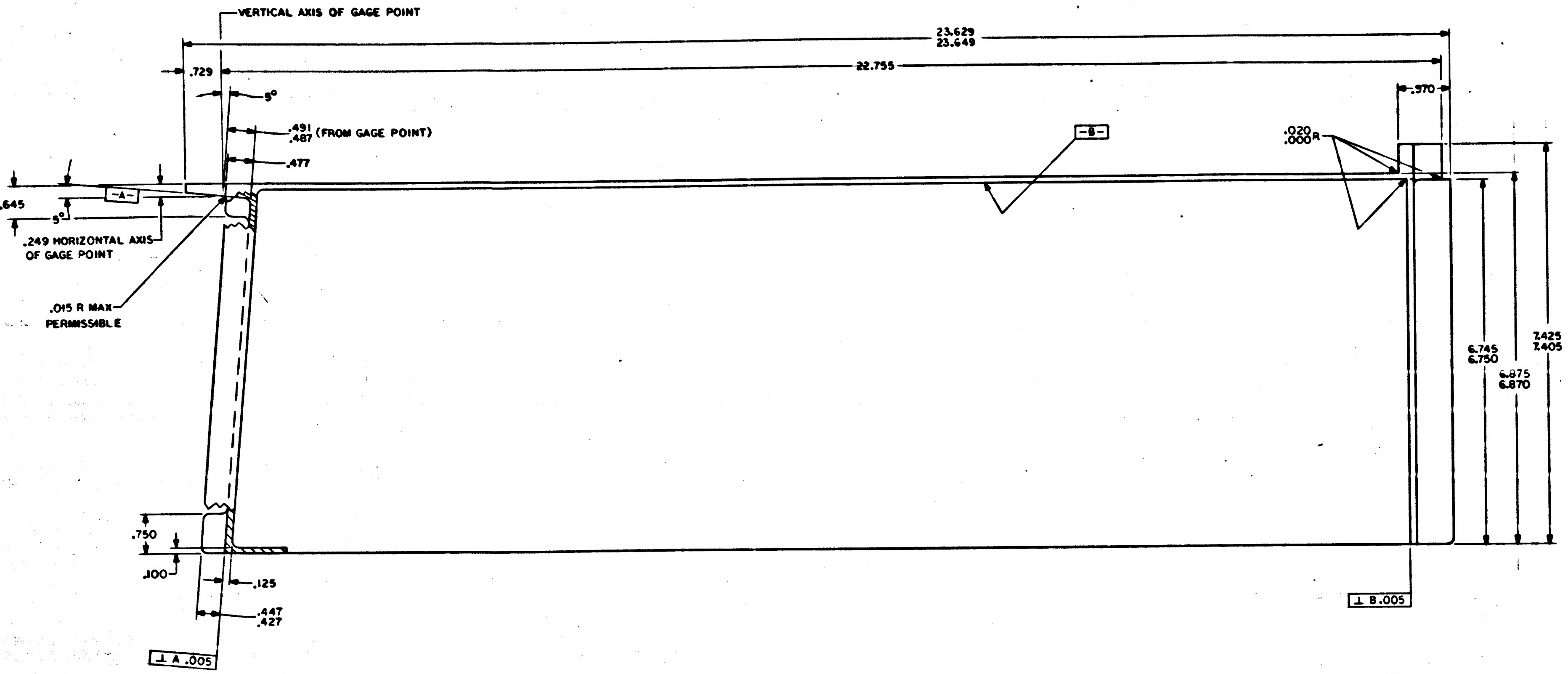
VERTICAL AXIS OF GAGE POINT
23.629
23.649
.729
22.755
5°
.491
.487 (FROM GAGE POINT)
.477
-B-
.020
.000 R
.970
.645
-A-
5°
.249 HORIZONTAL AXIS OF GAGE POINT
.015 R MAX PERMISSIBLE
6.745
6.750
6.875
6.870
7.425
7.405
.750
.100
.125
.447
.427
⊥ A .005
⊥ B .005

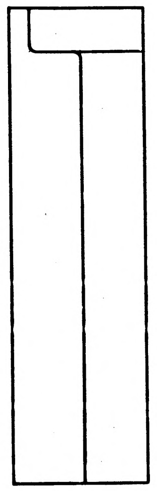

FOR INFORMATION ONLY

CLASS B RELEASE TDR No. 02550 DATE 8/14/63

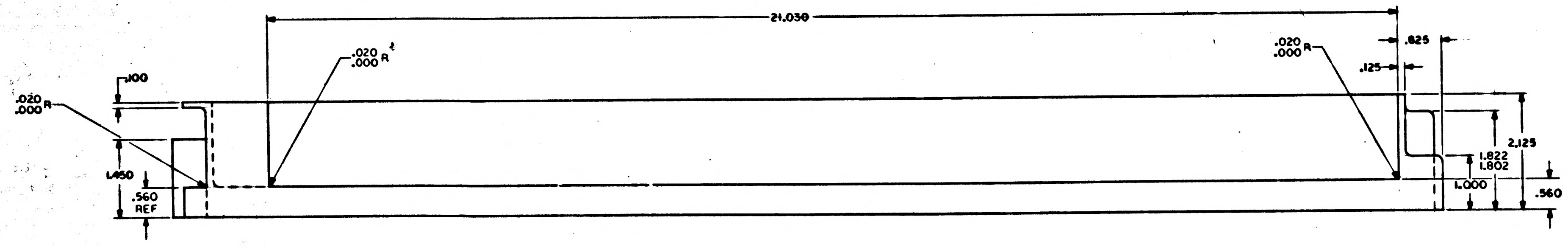
21.030
.020
.000 R
.020
.000 R
.825
.125
.020
.000 R
.100
1.450
.560 REF
1.822
1.802
2.125
1.000
.560

WITH STANDARDS

R 00-A-327
ES .005-.015

LESS OTHERWISE SPECIFIED

MASTER

QTY REQD | PART OR IDENTIFYING NO. | NOMENCLATURE OR DESCRIPTION | FIND NO.
LIST OF MATERIALS

NEXT ASSY | USED ON
APPLICATION

UNLESS OTHERWISE SPECIFIED
DIMENSIONS ARE IN INCHES
TOLERANCES ON
FRACTIONS ± -- DECIMALS ± .005 ANGLES ± 1/2°
DO NOT SCALE THIS DRAWING
MATERIAL
SEE NOTE 2
HEAT TREATMENT --
FINAL FINISH --

MIT
INSTRUMENTATION LAB
CAMBRIDGE, MASS
DRAWN D. Fitzgerald DATE 7 AUG 63
CHECKED
APPROVAL WB 13 AUG 63
APPROVAL
NASA APPROVAL
MIT APPROVAL 14 Aug 63

MANNED SPACECRAFT CENTER
HOUSTON, TEXAS

VIBRATION MOCKUP
TRAY A AND B
RIGHT HAND

CODE IDENT NO. | SIZE J | NASA DRAWING NO. 1004240
SCALE 1/1 | WT | SHEET 1 OF 1

1004240

INCHES
0 1 2
PHOTOGRAPHIC SCALE ONLY

F-2

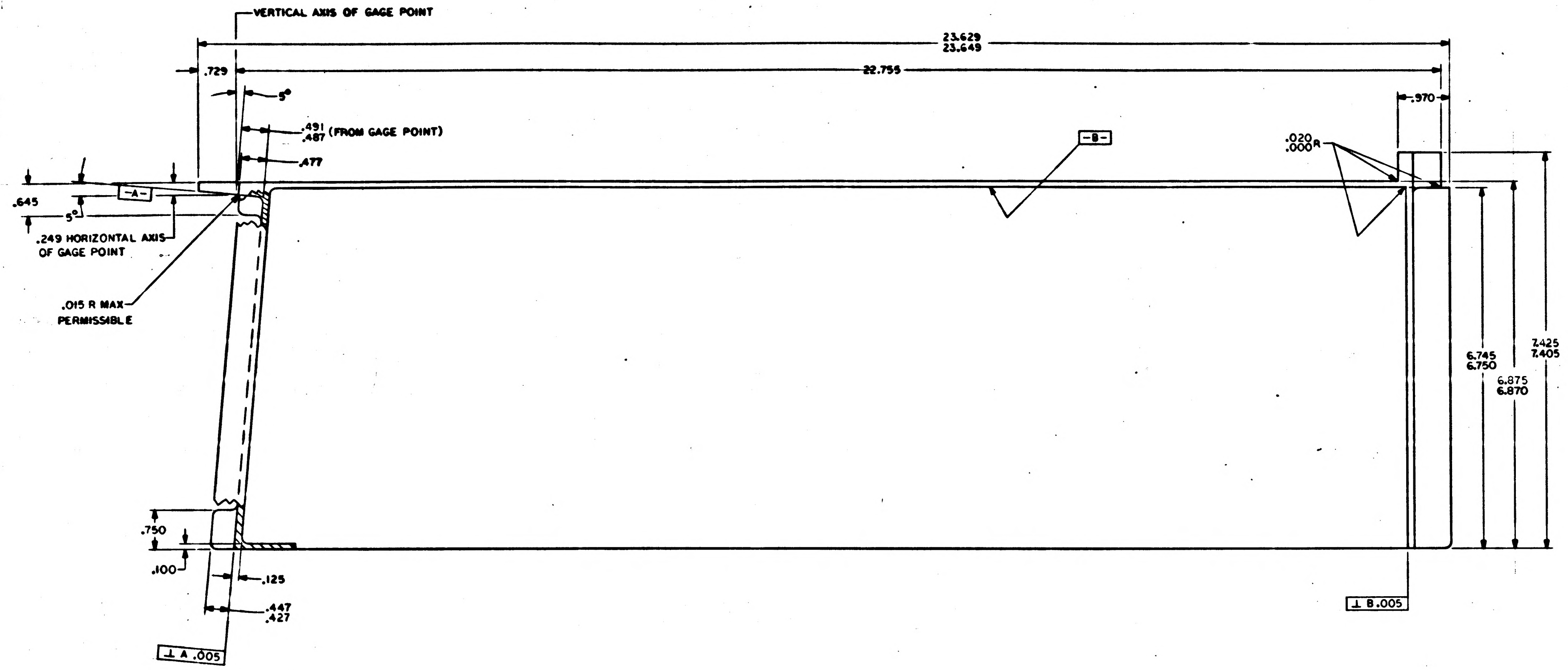
VERTICAL AXIS OF GAGE POINT
23.629
23.649
.729
22.755
5°
.491
.487 (FROM GAGE POINT)
.477
-B-
.020
.000 R
.970
.645
-A-
5°
.249 HORIZONTAL AXIS OF GAGE POINT
.015 R MAX PERMISSIBLE
6.745
6.750
6.875
6.870
7.425
7.405
.750
.100
.125
.447
.427
⊥ A .005
⊥ B .005

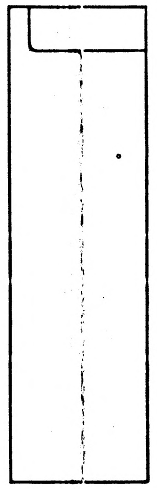

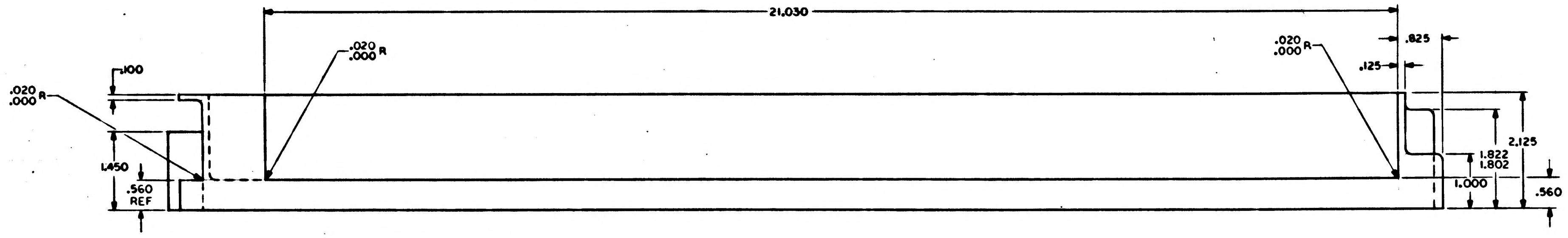
21.030
.020
.000 R
.020
.000 R
.825
.100
.125
.020
.000 R
1.450
.560 REF
2.125
1.822
1.802
1.000
.560

NOTES
1. INTERPRET DRAWING IN ACCORDANCE WITH STANDARDS PRESCRIBED BY MIL-D-70327
2. MATERIAL: ALUMINUM ALLOY 6061-T6 PER QQ-A-327
3. REMOVE BURRS AND BREAK SHARP EDGES .005-.015
4. $\sqrt{125}$ FINISH ALL OVER
5. ALL RADII AND FILLETS TO BE .125 UNLESS OTHERWISE SPECIFIED

1004240

UNLESS OTHERWISE SPECIFIED
DIMENSIONS ARE IN INCHES
TOLERANCES ON
FRACTIONS DECIMALS ANGLES
± — ± .005 ± 1/2°
DO NOT SCALE THIS DRAWING
MATERIAL
SEE NOTE 2
HEAT TREATMENT
—
FINAL PROTECTIVE FINISH
—

NEXT ASSY	USED ON
APPLICATION	

1004241

SYM	DESCRIPTION	DATE	APPROVAL
REVISIONS			

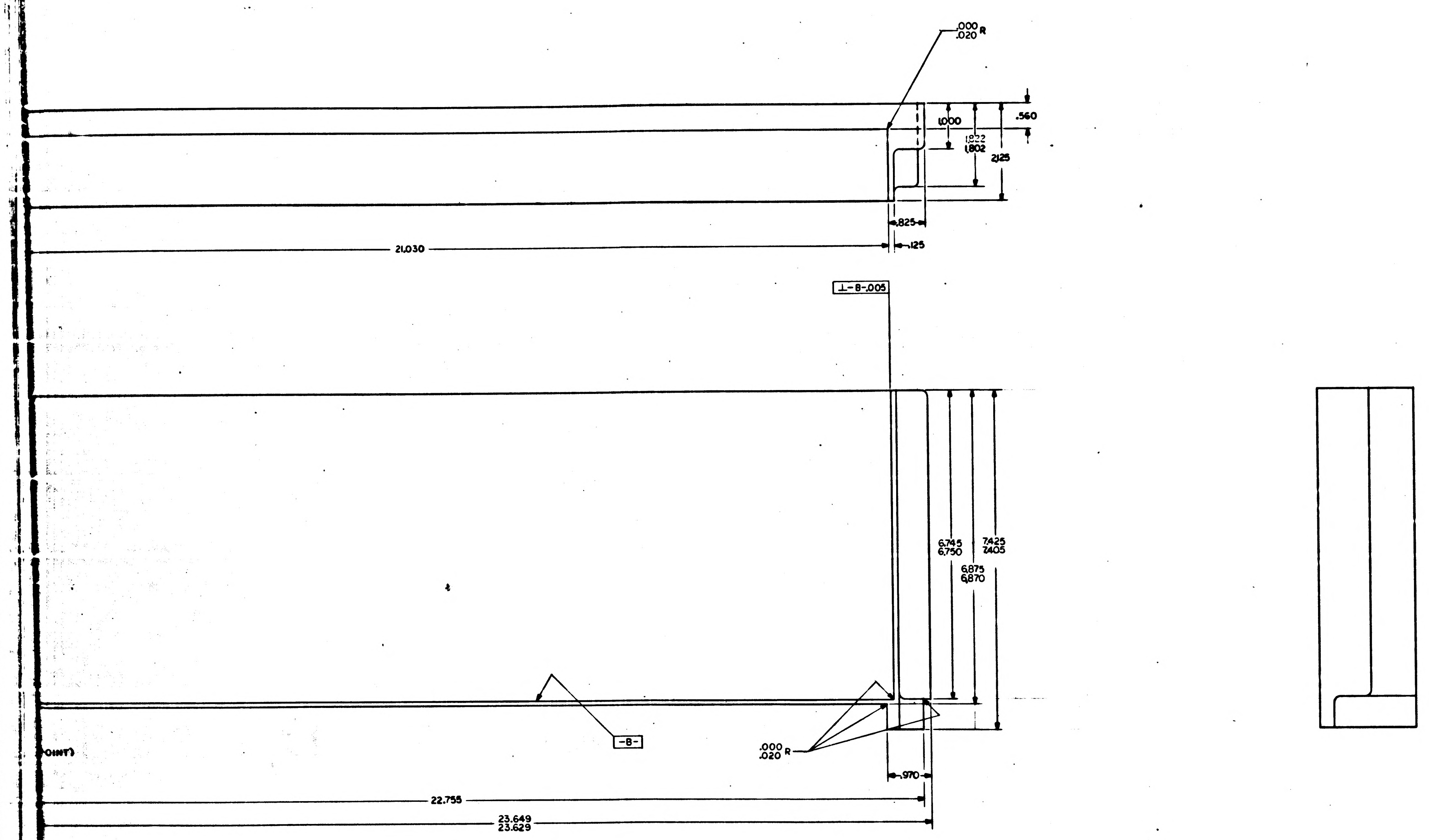
.000
.020 R
1.000
.560
1.822
1.802
2.125
.825
.125
21.030
⊥-B-.005
6.745
6.750
6.875
6.870
7.425
7.405
-B-
POINT)
.000
.020 R
.970
22.755
23.649
23.629
NT

FOR INFORMATION ONLY

CLASS B RELEASE TDR No. 02550 DATE 8/14/63

(2H)

QTY REQD	PART OR IDENTIFYING NO.	NOMENCLATURE OR DESCRIPTION	FIND NO.
LIST OF MATERIALS			

NEXT ASSY	USED ON
APPLICATION	

UNLESS OTHERWISE SPECIFIED
DIMENSIONS ARE IN INCHES
TOLERANCES ON
FRACTIONS ± -/-/- DECIMALS ± .005 ANGLES ± 1/2°
DO NOT SCALE THIS DRAWING

MATERIAL
SEE NOTE 2

HEAT TREATMENT
-/-/-

FINAL FINISH
-/-/-

MIT
INSTRUMENTATION LAB
CAMBRIDGE, MASS
DWG. NO. CONTRACT

DRAWN R. F. Pa... DATE 8 AUG 63
CHECKED
APPROVAL W. B. T... 19 AUG 63
APPROVAL
NASA APPROVAL
MIT APPROVAL 14 Aug 63

MANNED SPACECRAFT CENTER
HOUSTON, TEXAS

VIBRATION MOCKUP
TRAY A AND B
LEFT HAND

CODE IDENT NO. | SIZE J | NASA DRAWING NO. 1004241
SCALE 1/1 | WT | SHEET 1 OF 1

MASTER

1004241

INCHES
0 1 2
PHOTOGRAPHIC SCALE ONLY

F2

1004241

NOTICE — WHEN GOVERNMENT DRAWINGS, SPECIFICATIONS, OR OTHER DATA ARE USED FOR ANY PURPOSE OTHER THAN IN CONNECTION WITH A DEFINITELY RELATED GOVERNMENT PROCUREMENT OPERATION, THE UNITED STATES GOVERNMENT THEREBY INCURS NO RESPONSIBILITY NOR ANY OBLIGATION WHATSOEVER; AND THE FACT THAT THE GOVERNMENT MAY HAVE FORMULATED, FURNISHED, OR IN ANY WAY SUPPLIED THE SAID DRAWINGS, SPECIFICATIONS, OR OTHER DATA IS NOT TO BE REGARDED BY IMPLICATION OR OTHERWISE AS IN ANY MANNER LICENSING THE HOLDER OR ANY OTHER PERSON OR CORPORATION, OR CONVEYING ANY RIGHTS OR PERMISSION TO MANUFACTURE, USE, OR SELL ANY PATENTED INVENTION THAT MAY IN ANY WAY BE RELATED THERETO.

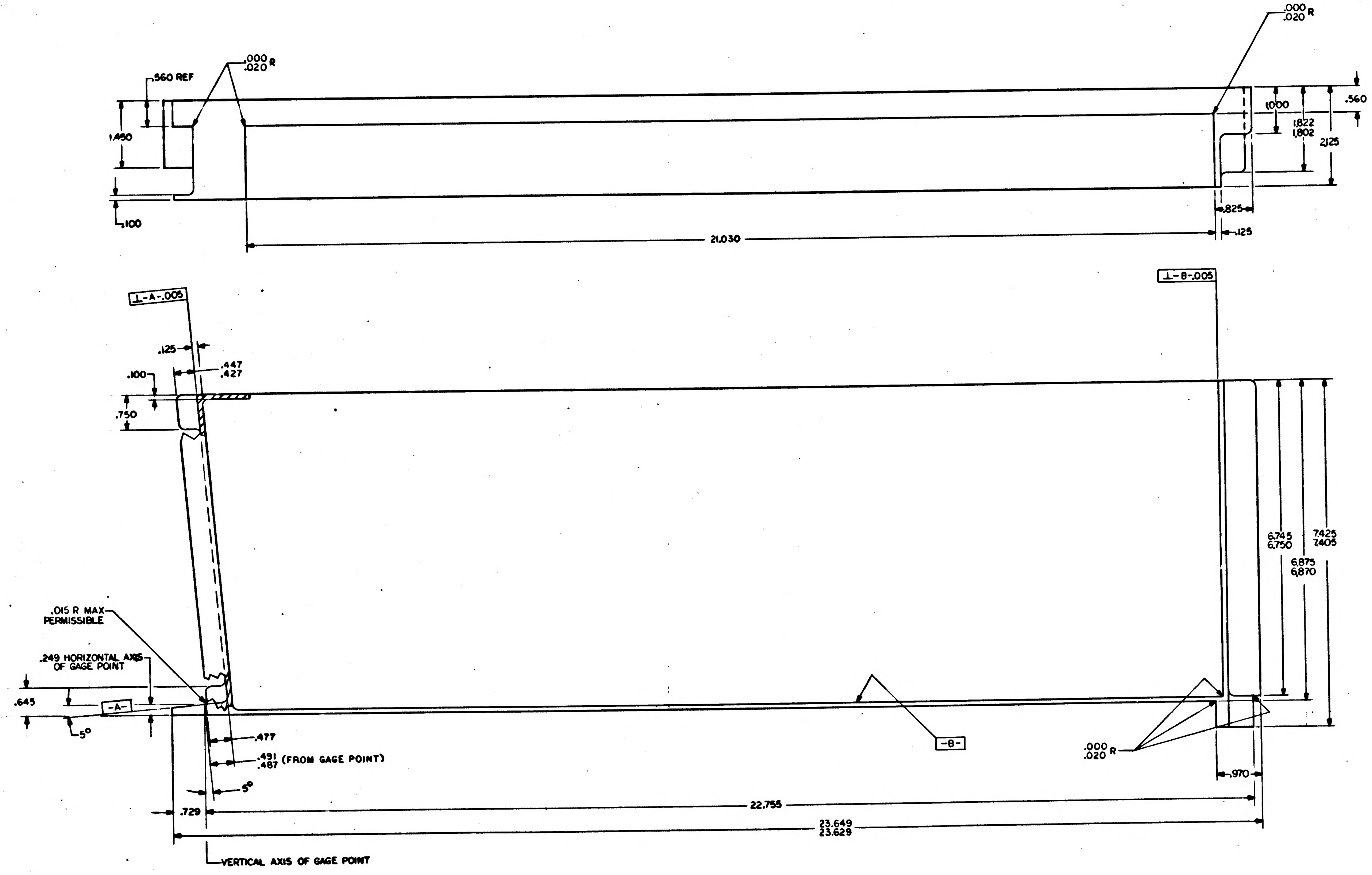
.560 REF
.000
.020 R
1.450
.100
.000
.020 R
1.000
.560
1.822
1.802
2.125
.825
.125
21.030
⊥-A-.005
⊥-B-.005
.125
.447
.427
.100
.750
6.745
6.750
7.425
7.405
6.875
6.870
.015 R MAX
PERMISSIBLE
.249 HORIZONTAL AXIS
OF GAGE POINT
.645
-A-
5°
.477
.491
.487 (FROM GAGE POINT)
5°
-B-
.000
.020 R
.970
.729
22.755
23.649
23.629
VERTICAL AXIS OF GAGE POINT

NOTES-
1. INTERPRET DRAWING IN ACCORDANCE WITH STANDARDS PRESCRIBED BY MIL-D-70327
2. MATERIAL: ALUMINUM ALLOY 6061-T6 PER QQ-A-327 TEMPER T6
3. ALL RADII AND FILLETS TO BE .125 UNLESS OTHERWISE SPECIFIED
4. REMOVE BURRS AND BREAK SHARP EDGES .005/.015
5. UNLESS OTHERWISE SPECIFIED, FINISH $\sqrt{125}$

INCHES
0 1 2
PHOTOGRAPHIC SCALE ONLY

NOTICE — WHEN GOVERNMENT DRAWINGS, SPECIFICATIONS, OR OTHER DATA ARE USED FOR ANY PURPOSE OTHER THAN IN CONNECTION WITH A DEFINITELY RELATED GOVERNMENT PROCUREMENT OPERATION, THE UNITED STATES GOVERNMENT THEREBY INCURS NO RESPONSIBILITY NOR ANY OBLIGATION WHATSOEVER; AND THE FACT THAT THE GOVERNMENT MAY HAVE FORMULATED, FURNISHED, OR IN ANY WAY SUPPLIED THE SAID DRAWINGS, SPECIFICATIONS OR OTHER DATA IS NOT TO BE REGARDED BY IMPLICATION OR OTHERWISE AS IN ANY MANNER LICENSING THE HOLDER OR ANY OTHER PERSON OR CORPORATION, OR CONVEYING ANY RIGHTS OR PERMISSION TO MANUFACTURE, USE, OR SELL ANY PATENTED INVENTION THAT MAY IN ANY WAY BE RELATED THERETO.

REVISIONS 02136			
SYM	DESCRIPTION	DATE	APPROVAL
A	REVISED PER TDRR 03114	9-12-63	WR

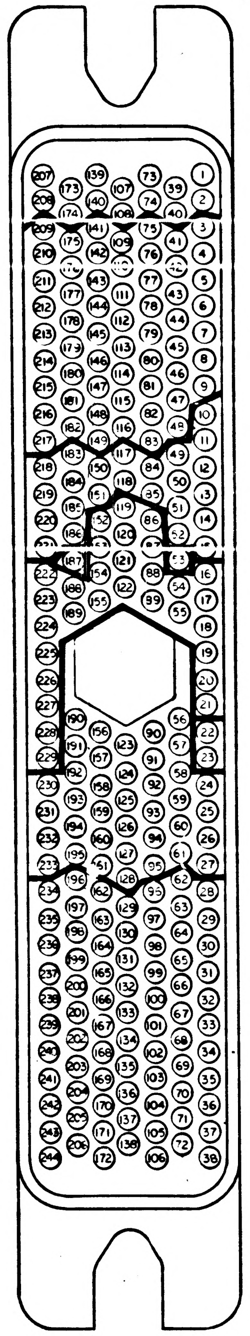

MALE PLUG
CONTACT SIDE

207	168
208	170
209	247
210	214 SIG.
211	214 RET.
212	221 SIG.
213	221 RET.
214	228 SIG.
215	228 RET.
216	235 SIG.
217	235 RET.
218	201 SIG.
219	201 RET.
220	208 SIG.
221	208 RET.
222	161 SIG.
223	161 RET.
224	162 SIG.
225	162 RET.
226	163 SIG.
227	163 RET.
228	164 SIG.
229	164 RET.
230	108 SIG.
231	108 RET.
232	122 SIG.
233	122 RET.
234	166
235	114 SIG.
236	114 RET.
237	128 SIG.
238	128 RET.
239	144 SIG.
240	144 RET.
241	151 SIG.
242	151 RET.
243	
244	NOT AVAILABLE FOR USE

173	239
174	240
175	215 SIG.
176	215 RET.
177	222 SIG.
178	222 RET.
179	229 SIG.
180	229 RET.
181	236 SIG.
182	236 RET.
183	202 SIG.
184	202 RET.
185	210 SIG.
186	210 RET.
187	250
188	160 SIG.
189	160 RET.
190	109 SIG.
191	109 RET.
192	123 SIG.
193	123 RET.
194	134 SIG.
195	134 RET.
196	171
197	115 SIG.
198	115 RET.
199	129 SIG.
200	129 RET.
201	145 SIG.
202	145 RET.
203	152 SIG.
204	152 RET.
205	
206	

139	168
140	170
141	213
142	216 SIG.
143	216 RET.
144	223 SIG.
145	223 RET.
146	230 SIG.
147	230 RET.
148	237 SIG.
149	237 RET.
150	203 SIG.
151	203 RET.
152	158 SIG.
153	158 RET.
154	159 SIG.
155	159 RET.
156	110 SIG.
157	110 RET.
158	124 SIG.
159	124 RET.
160	135 SIG.
161	135 RET.
162	172
163	116 SIG.
164	116 RET.
165	130 SIG.
166	130 RET.
167	146 SIG.
168	146 RET.
169	153 SIG.
170	153 RET.
171	
172	NOT AVAILABLE FOR USE

107	245
108	241
109	217 SIG.
110	217 RET.
111	224 SIG.
112	224 RET.
113	231 SIG.
114	231 RET.
115	238 SIG.
116	238 RET.
117	204 SIG.
118	204 RET.
119	101 SIG.
120	101 RET.
121	165 SIG.
122	165 RET.
123	111 SIG.
124	111 RET.
125	132 SIG.
126	132 RET.
127	136 SIG.
128	136 RET.
129	173
130	117 SIG.
131	117 RET.
132	139 SIG.
133	139 RET.
134	147 SIG.
135	147 RET.
136	154 SIG.
137	154 RET.
138	

73	167
74	169
75	212
76	218 SIG.
77	218 RET.
78	225 SIG.
79	225 RET.
80	232 SIG.
81	232 RET.
82	242 SIG.
83	242 RET.
84	205 SIG.
85	205 RET.
86	102 SIG.
87	102 RET.
88	103 SIG.
89	103 RET.
90	112 SIG.
91	112 RET.
92	133 SIG.
93	133 RET.
94	137 SIG.
95	137 RET.
96	175
97	131 SIG.
98	131 RET.
99	140 SIG.
100	140 RET.
101	148 SIG.
102	148 RET.
103	155 SIG.
104	155 RET.
105	
106	NOT AVAILABLE FOR USE

39	239
40	243
41	219 SIG.
42	219 RET.
43	226 SIG.
44	226 RET.
45	233 SIG.
46	233 RET.
47	244 SIG.
48	244 RET.
49	
50	
51	
52	
53	178
54	104 SIG.
55	104 RET.
56	118 SIG.
57	118 RET.
58	119 SIG.
59	119 RET.
60	138 SIG.
61	138 RET.
62	176
63	177
64	126 SIG.
65	126 RET.
66	142 SIG.
67	142 RET.
68	149 SIG.
69	149 RET.
70	156 SIG.
71	156 RET.
72	

1	167
2	169
3	211
4	220 SIG.
5	220 RET.
6	227 SIG.
7	227 RET.
8	234 SIG.
9	234 RET.
10	248
11	249
12	209 SIG.
13	209 RET.
14	207 SIG.
15	207 RET.
16	105 SIG.
17	105 RET.
18	106 SIG.
19	106 RET.
20	107 SIG.
21	107 RET.
22	179
23	180
24	120 SIG.
25	120 RET.
26	121 SIG.
27	121 RET.
28	141 SIG.
29	141 RET.
30	127 SIG.
31	127 RET.
32	143 SIG.
33	143 RET.
34	150 SIG.
35	150 RET.
36	157 SIG.
37	157 RET.
38	NOT AVAILABLE FOR USE

CABLE GROUP I NOT SHIELDED

CABLE GROUP II SHIELDED

CABLE GROUP III SHIELDED

CABLE GROUP IV SHIELDED

CABLE GROUP V SHIELDED

CABLE GROUP VI NOT SHIELDED

NOTE
1. INTERPRET DRAWING IN ACCORDANCE WITH STANDARDS PRESCRIBED BY MIL-D-70327

QTY REQD	PART OR IDENTIFYING NO.	NOMENCLATURE OR DESCRIPTION	FIND NO.
LIST OF MATERIALS			

NEXT ASSY	USED ON
APPLICATION	

UNLESS OTHERWISE SPECIFIED
DIMENSIONS ARE IN INCHES
TOLERANCES ON
FRACTIONS ± DECIMALS ± ANGLES ±
DO NOT SCALE THIS DRAWING

MATERIAL

HEAT TREATMENT

FINAL FINISH

MIT
INSTRUMENTATION LAB
CAMBRIDGE MASS
DWG. NO. CONTRACT

DRAWN DATE
CHECKED
APPROVAL
APPROVAL

NASA APPROVAL

MIT APPROVAL

MANNED SPACECRAFT CENTER
HOUSTON, TEXAS

SIGNAL PIN ASSIGNMENT
05A3P1 CONNECTOR-(AGC TO PSA)

CODE IDENT NO.	SIZE	NASA DRAWING NO.
	D	1004245

SCALE NONE
WT
SHEET OF

1004245 A

INCHES
0 1 2
PHOTOGRAPHIC SCALE ONLY

NOTICE — WHEN GOVERNMENT DRAWINGS, SPECIFICATIONS, OR OTHER DATA ARE USED FOR ANY PURPOSE OTHER THAN IN CONNECTION WITH A DEFINITELY RELATED GOVERNMENT PROCUREMENT OPERATION, THE UNITED STATES GOVERNMENT THEREBY INCURS NO RESPONSIBILITY NOR ANY OBLIGATION WHATSOEVER; AND THE FACT THAT THE GOVERNMENT MAY HAVE FORMULATED, FURNISHED, OR IN ANY WAY SUPPLIED THE SAID DRAWINGS, SPECIFICATIONS OR OTHER DATA IS NOT TO BE REGARDED BY IMPLICATION OR OTHERWISE AS IN ANY MANNER LICENSING THE HOLDER OR ANY OTHER PERSON OR CORPORATION, OR CONVEYING ANY RIGHTS OR PERMISSION TO MANUFACTURE, USE, OR SELL ANY PATENTED INVENTION THAT MAY IN ANY WAY BE RELATED THERETO.

	REVISIONS 02 & 36		
SYM	DESCRIPTION	DATE	APPROVAL
A	REVISED PER TDRR 03114	9-12-63	WR
B	REVISED PER TDRR 03461	9-26-63	

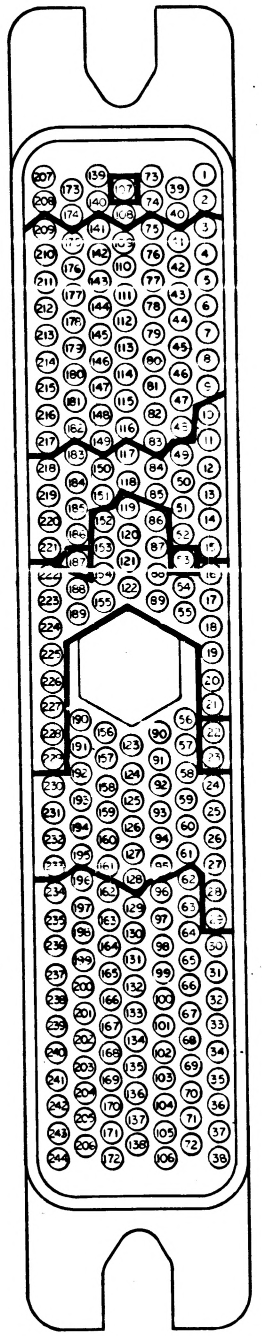

MALE PLUG
CONTACT SIDE

207	168
208	170
209	247
210	214 SIG.
211	214 RET.
212	221 SIG.
213	221 RET.
214	228 SIG.
215	228 RET.
216	235 SIG.
217	235 RET.
218	201 SIG.
219	201 RET.
220	208 SIG.
221	208 RET.
222	161 SIG.
223	161 RET.
224	162 SIG.
225	162 RET.
226	163 SIG.
227	163 RET.
228	164 SIG.
229	164 RET.
230	108 SIG.
231	108 RET.
232	122 SIG.
233	122 RET.
234	166
235	114 SIG.
236	114 RET.
237	128 SIG.
238	128 RET.
239	144 SIG.
240	144 RET.
241	151 SIG.
242	151 RET.
243	
244	NOT AVAILABLE FOR USE

173	239
174	240
175	215 SIG.
176	215 RET.
177	222 SIG.
178	222 RET.
179	229 SIG.
180	229 RET.
181	236 SIG.
182	236 RET.
183	202 SIG.
184	202 RET.
185	210 SIG.
186	210 RET.
187	250
188	160 SIG.
189	160 RET.
190	109 SIG.
191	109 RET.
192	123 SIG.
193	123 RET.
194	134 SIG.
195	134 RET.
196	171
197	115 SIG.
198	115 RET.
199	129 SIG.
200	129 RET.
201	145 SIG.
202	145 RET.
203	152 SIG.
204	152 RET.
205	
206	

139	168
140	170
141	213
142	216 SIG.
143	216 RET.
144	223 SIG.
145	223 RET.
146	230 SIG.
147	230 RET.
148	237 SIG.
149	237 RET.
150	203 SIG.
151	203 RET.
152	158 SIG.
153	158 RET.
154	159 SIG.
155	159 RET.
156	110 SIG.
157	110 RET.
158	124 SIG.
159	124 RET.
160	135 SIG.
161	135 RET.
162	172
163	116 SIG.
164	116 RET.
165	130 SIG.
166	130 RET.
167	146 SIG.
168	146 RET.
169	153 SIG.
170	153 RET.
171	
172	NOT AVAILABLE FOR USE

107	245
108	241
109	217 SIG.
110	217 RET.
111	224 SIG.
112	224 RET.
113	231 SIG.
114	231 RET.
115	238 SIG.
116	238 RET.
117	204 SIG.
118	204 RET.
119	101 SIG.
120	101 RET.
121	165 SIG.
122	165 RET.
123	111 SIG.
124	111 RET.
125	132 SIG.
126	132 RET.
127	136 SIG.
128	136 RET.
129	173
130	117 SIG.
131	117 RET.
132	139 SIG.
133	139 RET.
134	147 SIG.
135	147 RET.
136	154 SIG.
137	154 RET.
138	

73	167
74	169
75	212
76	218 SIG.
77	218 RET.
78	225 SIG.
79	225 RET.
80	232 SIG.
81	232 RET.
82	242 SIG.
83	242 RET.
84	205 SIG.
85	205 RET.
86	102 SIG.
87	102 RET.
88	103 SIG.
89	103 RET.
90	112 SIG.
91	112 RET.
92	133 SIG.
93	133 RET.
94	137 SIG.
95	137 RET.
96	175
97	131 SIG.
98	131 RET.
99	140 SIG.
100	140 RET.
101	148 SIG.
102	148 RET.
103	155 SIG.
104	155 RET.
105	
106	NOT AVAILABLE FOR USE

39	239
40	243
41	219 SIG.
42	219 RET.
43	226 SIG.
44	226 RET.
45	233 SIG.
46	233 RET.
47	244 SIG.
48	244 RET.
49	
50	
51	
52	
53	178
54	104 SIG.
55	104 RET.
56	118 SIG.
57	118 RET.
58	119 SIG.
59	119 RET.
60	138 SIG.
61	138 RET.
62	176
63	177
64	126 SIG.
65	126 RET.
66	142 SIG.
67	142 RET.
68	149 SIG.
69	149 RET.
70	156 SIG.
71	156 RET.
72	

1	167	CABLE GROUP I NOT SHIELDED
2	169	
3	211	
4	220 SIG.	
5	220 RET.	
6	227 SIG.	CABLE GROUP II SHIELDED
7	227 RET.	
8	234 SIG.	
9	234 RET.	
10	248	
11	249	
12	209 SIG.	CABLE GROUP III SHIELDED
13	209 RET.	
14	207 SIG.	
15	207 RET.	
16	105 SIG.	
17	105 RET.	
18	106 SIG.	CABLE GROUP IV SHIELDED
19	106 RET.	
20	107 SIG.	
21	107 RET.	
22	179	
23	180	
24	120 SIG.	
25	120 RET.	
26	121 SIG.	CABLE GROUP V SHIELDED
27	121 RET.	
28	141 SIG.	
29	141 RET.	
30	127 SIG.	
31	127 RET.	
32	143 SIG.	
33	143 RET.	
34	150 SIG.	CABLE GROUP VI NOT SHIELDED
35	150 RET.	
36	157 SIG.	
37	157 RET.	
38	NOT AVAILABLE FOR USE	

NOTE
1. INTERPRET DRAWING IN ACCORDANCE WITH STANDARDS PRESCRIBED BY MIL-D-70327

QTY REQD	PART OR IDENTIFYING NO.	NOMENCLATURE OR DESCRIPTION	FIND NO.

LIST OF MATERIALS

NEXT ASSY	USED ON
APPLICATION	

UNLESS OTHERWISE SPECIFIED
DIMENSIONS ARE IN INCHES
TOLERANCES ON
FRACTIONS · DECIMALS ± ANGLES ±
DO NOT SCALE THIS DRAWING
MATERIAL
HEAT TREATMENT
FINAL FINISH

MIT
INSTRUMENTATION LAB
CAMBRIDGE, MASS
DWG NO CONTRACT
DRAWN DATE
CHECKED
APPROVAL
APPROVAL
NASA APPROVAL Jack Barnard
MIT APPROVAL D Hoag 8/28/63

MANNED SPACECRAFT CENTER
HOUSTON, TEXAS

SIGNAL PIN ASSIGNMENT
05A3P1 CONNECTOR-(AGC TOP SA)

CODE IDENT NO.
SIZE D
NASA DRAWING NO. 1004245
SCALE NONE
WT
SHEET OF

1004245 B

INCHES
0 1 2
PHOTOGRAPHIC SCALE ONLY

NOTICE — WHEN GOVERNMENT DRAWINGS, SPECIFICATIONS, OR OTHER DATA ARE USED FOR ANY PURPOSE OTHER THAN IN CONNECTION WITH A DEFINITELY RELATED GOVERNMENT PROCUREMENT OPERATION, THE UNITED STATES GOVERNMENT THEREBY INCURS NO RESPONSIBILITY NOR ANY OBLIGATION WHATSOEVER; AND THE FACT THAT THE GOVERNMENT MAY HAVE FORMULATED, FURNISHED, OR IN ANY WAY SUPPLIED THE SAID DRAWINGS, SPECIFICATIONS OR OTHER DATA IS NOT TO BE REGARDED BY IMPLICATION OR OTHERWISE AS IN ANY MANNER LICENSING THE HOLDER OR ANY OTHER PERSON OR CORPORATION, OR CONVEYING ANY RIGHTS OR PERMISSION TO MANUFACTURE, USE, OR SELL ANY PATENTED INVENTION THAT MAY IN ANY WAY BE RELATED THERETO.

REVISIONS 02836

SYM	DESCRIPTION	DATE	APPROVAL
A	REVISED PER TDRR 03114	9-12-63	WR
B	REVISED PER TDRR 03461	9-26-63	
C	REVISED PER TDRR 06230	2/11/64	WK

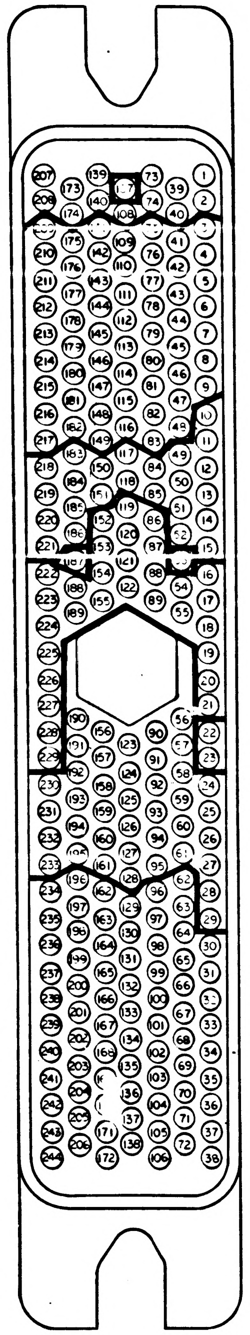

MALE PLUG
CONTACT SIDE

207	168
208	170
209	247
210	214 SIG.
211	214 RET.
212	221 SIG.
213	221 RET.
214	228 SIG.
215	228 RET.
216	235 SIG.
217	235 RET.
218	201 SIG.
219	201 RET.
220	208 SIG.
221	208 RET.
222	161 SIG.
223	161 RET.
224	162 SIG.
225	162 RET.
226	163 SIG.
227	163 RET.
228	164 SIG.
229	164 RET.
230	108 SIG.
231	108 RET.
232	122 SIG.
233	122 RET.
234	166
235	114 SIG.
236	114 RET.
237	128 SIG.
238	128 RET.
239	144 SIG.
240	144 RET.
241	151 SIG.
242	151 RET.
243	
244	NOT AVAILABLE FOR USE

173	239
174	240
175	215 SIG.
176	215 RET.
177	222 SIG.
178	222 RET.
179	229 SIG.
180	229 RET.
181	236 SIG.
182	236 RET.
183	202 SIG.
184	202 RET.
185	210 SIG.
186	210 RET.
187	250
188	160 SIG.
189	160 RET.
190	109 SIG.
191	109 RET.
192	123 SIG.
193	123 RET.
194	134 SIG.
195	134 RET.
196	171
197	115 SIG.
198	115 RET.
199	129 SIG.
200	129 RET.
201	145 SIG.
202	145 RET.
203	152 SIG.
204	152 RET.
205	183 SIG.
206	183 RET.

139	168
140	170
141	213
142	216 SIG.
143	216 RET.
144	223 SIG.
145	223 RET.
146	230 SIG.
147	230 RET.
148	237 SIG.
149	237 RET.
150	203 SIG.
151	203 RET.
152	158 SIG.
153	158 RET.
154	159 SIG.
155	159 RET.
156	110 SIG.
157	110 RET.
158	124 SIG.
159	124 RET.
160	135 SIG.
161	135 RET.
162	172
163	116 SIG.
164	116 RET.
165	130 SIG.
166	130 RET.
167	146 SIG.
168	146 RET.
169	153 SIG.
170	153 RET.
171	
172	NOT AVAILABLE FOR USE

107	245
108	241
109	217 SIG.
110	217 RET.
111	224 SIG.
112	224 RET.
113	231 SIG.
114	231 RET.
115	238 SIG.
116	238 RET.
117	204 SIG.
118	204 RET.
119	101 SIG.
120	101 RET.
121	165 SIG.
122	165 RET.
123	111 SIG.
124	111 RET.
125	132 SIG.
126	132 RET.
127	136 SIG.
128	136 RET.
129	173
130	117 SIG.
131	117 RET.
132	139 SIG.
133	139 RET.
134	147 SIG.
135	147 RET.
136	154 SIG.
137	154 RET.
138	

73	167
74	169
75	212
76	218 SIG.
77	218 RET.
78	225 SIG.
79	225 RET.
80	232 SIG.
81	232 RET.
82	242 SIG.
83	242 RET.
84	205 SIG.
85	205 RET.
86	102 SIG.
87	102 RET.
88	103 SIG.
89	103 RET.
90	112 SIG.
91	112 RET.
92	133 SIG.
93	133 RET.
94	137 SIG.
95	137 RET.
96	175
97	131 SIG.
98	131 RET.
99	140 SIG.
100	140 RET.
101	148 SIG.
102	148 RET.
103	155 SIG.
104	155 RET.
105	
106	NOT AVAILABLE FOR USE

39	239
40	243
41	219 SIG.
42	219 RET.
43	226 SIG.
44	226 RET.
45	233 SIG.
46	233 RET.
47	244 SIG.
48	244 RET.
49	
50	
51	
52	
53	178
54	104 SIG.
55	104 RET.
56	118 SIG.
57	118 RET.
58	119 SIG.
59	119 RET.
60	138 SIG.
61	138 RET.
62	176
63	177
64	126 SIG.
65	126 RET.
66	142 SIG.
67	142 RET.
68	149 SIG.
69	149 RET.
70	156 SIG.
71	156 RET.
72	

1	167	CABLE GROUP I NOT SHIELDED
2	169	
3	211	
4	220 SIG.	
5	220 RET.	
6	227 SIG.	CABLE GROUP II SHIELDED
7	227 RET.	
8	234 SIG.	
9	234 RET.	
10	248	
11	249	
12	209 SIG.	CABLE GROUP III SHIELDED
13	209 RET.	
14	207 SIG.	
15	207 RET.	
16	105 SIG.	
17	105 RET.	
18	106 SIG.	CABLE GROUP IV SHIELDED
19	106 RET.	
20	107 SIG.	
21	107 RET.	
22	179	
23	180	
24	120 SIG.	
25	120 RET.	
26	121 SIG.	CABLE GROUP V SHIELDED
27	121 RET.	
28	141 SIG.	
29	141 RET.	
30	127 SIG.	
31	127 RET.	
32	143 SIG.	
33	143 RET.	
34	150 SIG.	CABLE GROUP VI NOT SHIELDED
35	150 RET.	
36	157 SIG.	
37	157 RET.	
38	NOT AVAILABLE FOR USE	

NOTE
1. INTERPRET DRAWING IN ACCORDANCE WITH STANDARDS PRESCRIBED BY MIL-D-70327

QTY REQD	PART OR IDENTIFYING NO.	NOMENCLATURE OR DESCRIPTION	FIND NO.

LIST OF MATERIALS

NEXT ASSY	USED ON

APPLICATION

UNLESS OTHERWISE SPECIFIED
DIMENSIONS ARE IN INCHES
TOLERANCES ON
FRACTIONS ± DECIMALS ± ANGLES ±
DO NOT SCALE THIS DRAWING
MATERIAL
HEAT TREATMENT
FINAL FINISH

MIT
INSTRUMENTATION LAB
CAMBRIDGE MASS
DWG NO. CONTRACT
DRAWN DATE
CHECKED
APPROVAL
APPROVAL Eldon C Hall
NASA APPROVAL Jack Barnard
MIT APPROVAL D Hoag 2/20/64

MANNED SPACECRAFT CENTER
HOUSTON, TEXAS

SIGNAL PIN ASSIGNMENT
05A3P1 CONNECTOR-(AGC TOPSA)

CODE IDENT NO. SIZE D
NASA DRAWING NO. 1004245
SCALE NONE WT SHEET OF

1004245 C

INCHES
0 1 2
PHOTOGRAPHIC SCALE ONLY

NOTICE — WHEN GOVERNMENT DRAWINGS, SPECIFICATIONS, OR OTHER DATA ARE USED FOR ANY PURPOSE OTHER THAN IN CONNECTION WITH A DEFINITELY RELATED GOVERNMENT PROCUREMENT OPERATION, THE UNITED STATES GOVERNMENT THEREBY INCURS NO RESPONSIBILITY NOR ANY OBLIGATION WHATSOEVER; AND THE FACT THAT THE GOVERNMENT MAY HAVE FORMULATED, FURNISHED, OR IN ANY WAY SUPPLIED THE SAID DRAWINGS, SPECIFICATIONS OR OTHER DATA IS NOT TO BE REGARDED BY IMPLICATION OR OTHERWISE AS IN ANY MANNER LICENSING THE HOLDER OR ANY OTHER PERSON OR CORPORATION, OR CONVEYING ANY RIGHTS OR PERMISSION TO MANUFACTURE, USE, OR SELL ANY PATENTED INVENTION THAT MAY IN ANY WAY BE RELATED THERETO.

REVISIONS 02136			
SYM	DESCRIPTION	DATE	APPROVAL

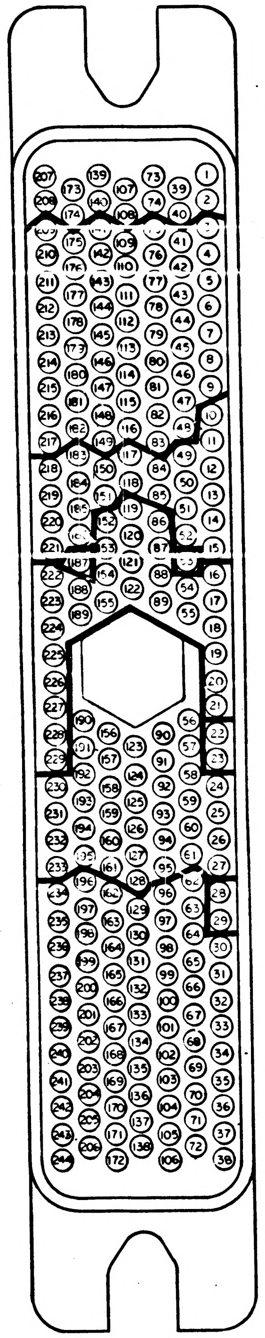

MALE PLUG
CONTACT SIDE

207	168
208	170
209	247
210	214 SIG.
211	214 RET.
212	221 SIG.
213	221 RET.
214	228 SIG.
215	228 RET.
216	235 SIG.
217	235 RET.
218	201 SIG.
219	201 RET.
220	208 SIG.
221	208 RET.
222	161 SIG.
223	161 RET.
224	162 SIG.
225	162 RET.
226	163 SIG.
227	163 RET.
228	164 SIG.
229	164 RET.
230	108 SIG.
231	108 RET.
232	122 SIG.
233	122 RET.
234	166
235	114 SIG.
236	114 RET.
237	128 SIG.
238	128 RET.
239	144 SIG.
240	144 RET.
241	151 SIG.
242	151 RET.
243	
244	NOT AVAILABLE FOR USE

173	239
174	240
175	215 SIG.
176	215 RET.
177	222 SIG.
178	222 RET.
179	229 SIG.
180	229 RET.
181	236 SIG.
182	236 RET.
183	202 SIG.
184	202 RET.
185	210 SIG.
186	210 RET.
187	250
188	160 SIG.
189	160 RET.

139	168
140	170
141	213
142	216 SIG.
143	216 RET.
144	223 SIG.
145	223 RET.
146	230 SIG.
147	230 RET.
148	237 SIG.
149	237 RET.
150	203 SIG.
151	203 RET.
152	158 SIG.
153	158 RET.
154	159 SIG.
155	159 RET.

107	245
108	241
109	217 SIG.
110	217 RET.
111	224 SIG.
112	224 RET.
113	231 SIG.
114	231 RET.
115	238 SIG.
116	238 RET.
117	204 SIG.
118	204 RET.
119	101 SIG.
120	101 RET.
121	165 SIG.
122	165 RET.

73	167
74	169
75	212
76	218 SIG.
77	218 RET.
78	225 SIG.
79	225 RET.
80	232 SIG.
81	232 RET.
82	242 SIG.
83	242 RET.
84	205 SIG.
85	205 RET.
86	102 SIG.
87	102 RET.
88	103 SIG.
89	103 RET.

39	239
40	243
41	219 SIG.
42	219 RET.
43	226 SIG.
44	226 RET.
45	233 SIG.
46	233 RET.
47	244 SIG.
48	244 RET.
49	206 SIG.
50	206 RET.
51	246 SIG.
52	246 RET.
53	178
54	104 SIG.
55	104 RET.

1	167
2	169
3	211
4	220 SIG.
5	220 RET.
6	227 SIG.
7	227 RET.
8	234 SIG.
9	234 RET.
10	248
11	249
12	209 SIG.
13	209 RET.
14	207 SIG.
15	207 RET.
16	105 SIG.
17	105 RET.
18	106 SIG.
19	106 RET.
20	107 SIG.
21	107 RET.
22	179
23	180
24	120 SIG.
25	120 RET.
26	121 SIG.
27	121 RET.
28	141 SIG.
29	141 RET.
30	127 SIG.
31	127 RET.
32	143 SIG.
33	143 RET.
34	150 SIG.
35	150 RET.
36	157 SIG.
37	157 RET.
38	NOT AVAILABLE FOR USE

CABLE GROUP I NOT SHIELDED

CABLE GROUP II SHIELDED

CABLE GROUP III SHIELDED

CABLE GROUP IV SHIELDED

CABLE GROUP V SHIELDED

CABLE GROUP VI NOT SHIELDED

190	109 SIG.
191	109 RET.
192	123 SIG.
193	123 RET.
194	134 SIG.
195	134 RET.
196	171
197	115 SIG.
198	115 RET.
199	129 SIG.
200	129 RET.
201	145 SIG.
202	145 RET.
203	152 SIG.
204	152 RET.
205	
206	

156	110 SIG.
157	110 RET.
158	124 SIG.
159	124 RET.
160	135 SIG.
161	135 RET.
162	172
163	116 SIG.
164	116 RET.
165	130 SIG.
166	130 RET.
167	146 SIG.
168	146 RET.
169	153 SIG.
170	153 RET.
171	
172	NOT AVAILABLE FOR USE

123	111 SIG.
124	111 RET.
125	132 SIG.
126	132 RET.
127	136 SIG.
128	136 RET.
129	173
130	117 SIG.
131	117 RET.
132	139 SIG.
133	139 RET.
134	147 SIG.
135	147 RET.
136	154 SIG.
137	154 RET.
138	

90	112 SIG.
91	112 RET.
92	133 SIG.
93	133 RET.
94	137 SIG.
95	137 RET.
96	175
97	131 SIG.
98	131 RET.
99	140 SIG.
100	140 RET.
101	148 SIG.
102	148 RET.
103	155 SIG.
104	155 RET.
105	
106	NOT AVAILABLE FOR USE

56	118 SIG.
57	118 RET.
58	119 SIG.
59	119 RET.
60	138 SIG.
61	138 RET.
62	176
63	177
64	126 SIG.
65	126 RET.
66	142 SIG.
67	142 RET.
68	149 SIG.
69	149 RET.
70	156 SIG.
71	156 RET.
72	

NOTE
1. INTERPRET DRAWING IN ACCORDANCE WITH STANDARDS PRESCRIBED BY MIL-D-70327

QTY REQD	PART OR IDENTIFYING NO.	NOMENCLATURE OR DESCRIPTION	FIND NO.
LIST OF MATERIALS			

NEXT ASSY	USED ON
APPLICATION	

UNLESS OTHERWISE SPECIFIED DIMENSIONS ARE IN INCHES
TOLERANCES ON
FRACTIONS ± DECIMALS ± ANGLES ±
DO NOT SCALE THIS DRAWING
MATERIAL
HEAT TREATMENT
FINAL FINISH

MIT
INSTRUMENTATION LAB
CAMBRIDGE, MASS
DWG. NO. CONTRACT
DRAWN DATE
CHECKED
APPROVAL
APPROVAL Elden C Hall
NASA APPROVAL Jack Barnard
MIT APPROVAL D Hoag 8/20/65

MANNED SPACECRAFT CENTER
HOUSTON, TEXAS

SIGNAL PIN ASSIGNMENT
05A3P1 CONNECTOR-(AGC TO C/M)

CODE IDENT NO.
SIZE D
NASA DRAWING NO. 1004245
SCALE NONE
WT
SHEET OF

INCHES
0 1 2
PHOTOGRAPHIC SCALE ONLY

NOTICE — WHEN GOVERNMENT DRAWINGS, SPECIFICATIONS, OR OTHER DATA ARE USED FOR ANY PURPOSE OTHER THAN IN CONNECTION WITH A DEFINITELY RELATED GOVERNMENT PROCUREMENT OPERATION, THE UNITED STATES GOVERNMENT THEREBY INCURS NO RESPONSIBILITY NOR ANY OBLIGATION WHATSOEVER; AND THE FACT THAT THE GOVERNMENT MAY HAVE FORMULATED, FURNISHED, OR IN ANY WAY SUPPLIED THE SAID DRAWINGS, SPECIFICATIONS OR OTHER DATA IS NOT TO BE REGARDED BY IMPLICATION OR OTHERWISE AS IN ANY MANNER LICENSING THE HOLDER OR ANY OTHER PERSON OR CORPORATION, OR CONVEYING ANY RIGHTS OR PERMISSION TO MANUFACTURE, USE, OR SELL ANY PATENTED INVENTION THAT MAY IN ANY WAY BE RELATED THERETO.

REVISIONS 02836			
SYM	DESCRIPTION	DATE	APPROVAL
A	REVISED PER TDRR 03106	7-12-63	RDL VK

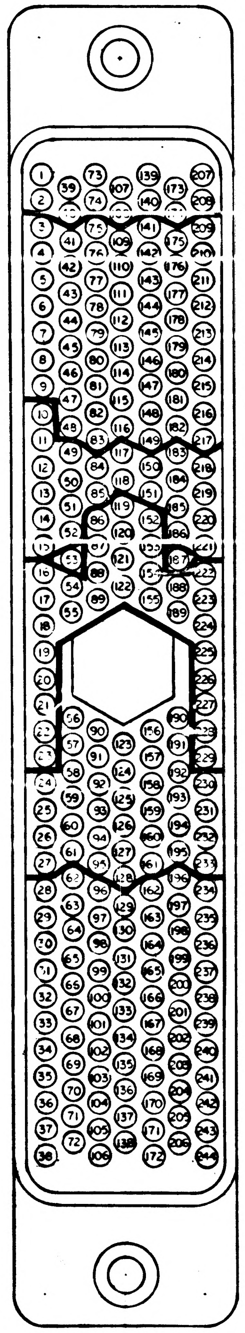

FEMALE RECEPTACLE
CONTACT SIDE

1	NOT AVAILABLE FOR USE
2	NOT AVAILABLE FOR USE
3	211
4	220 SIG.
5	220 RET.
6	227 SIG.
7	227 RET.
8	234 SIG.
9	234 RET.
10	248
11	249
12	
13	
14	
15	
16	54 SIG.
17	
18	54 RET.
19	
20	
21	
22	
23	
24	4 SIG.
25	4 RET.
26	5 SIG.
27	5 RET.
28	8 SIG.
29	8 RET.
30	9 SIG.
31	9 RET.
32	10 SIG.
33	10 RET.
34	11 SIG.
35	11 RET.
36	12 SIG.
37	12 RET.
38	NOT AVAILABLE FOR USE

39	239
40	242
41	219 SIG.
42	219 RET.
43	226 SIG.
44	226 RET.
45	233 SIG.
46	233 RET.
47	244 SIG.
48	244 RET.
49	206 SIG.
50	206 RET.
51	246 SIG.
52	246 RET.
53	
54	
55	
56	
57	
58	6 S'GND
59	4 S'GND
60	7 S'GND
61	5 S'GND
62	8 S'GND
63	13 S'GND
64	9 S'GND
65	17 S'GND
66	10 S'GND
67	26 S'GND
68	11 S'GND
69	56 S'GND
70	12 S'GND
71	NOT AVAILABLE FOR USE
72	57 S'GND

73	NOT AVAILABLE FOR USE
74	
75	212
76	218 SIG.
77	218 RET.
78	225 SIG.
79	225 RET.
80	232 SIG.
81	232 RET.
82	242 SIG.
83	242 RET.
84	205 SIG.
85	205 RET.
86	
87	
88	
89	
90	
91	6 SIG.
92	6 RET.
93	7 SIG.
94	7 RET.
95	
96	13 SIG.
97	13 RET.
98	17 SIG.
99	17 RET.
100	26 SIG.
101	26 RET.
102	56 SIG.
103	56 RET.
104	57 SIG.
105	57 RET.
106	NOT AVAILABLE FOR USE

107	245
108	241
109	217 SIG.
110	217 RET.
111	224 SIG.
112	224 RET.
113	231 SIG.
114	231 RET.
115	238 SIG.
116	238 RET.
117	204 SIG.
118	204 RET.
119	
120	
121	
122	
123	24 SIG.
124	24 RET.
125	25 SIG.
126	25 RET.
127	
128	
129	
130	
131	
132	
133	
134	
135	
136	
137	NOT AVAILABLE FOR USE
138	

139	NOT AVAILABLE FOR USE
140	
141	213
142	216 SIG.
143	216 RET.
144	223 SIG.
145	223 RET.
146	230 SIG.
147	230 RET.
148	237 SIG.
149	237 RET.
150	203 SIG.
151	203 RET.
152	
153	
154	
155	
156	14 S'GND
157	24 S'GND
158	15 S'GND
159	25 S'GND
160	16 S'GND
161	
162	
163	
164	
165	
166	
167	
168	
169	
170	
171	
172	NOT AVAILABLE FOR USE

173	239
174	240
175	215 SIG.
176	215 RET.
177	222 SIG.
178	222 RET.
179	229 SIG.
180	229 RET.
181	236 SIG.
182	236 RET.
183	202 SIG.
184	202 RET.
185	210 SIG.
186	210 RET.
187	250
188	
189	
190	14 SIG.
191	14 RET.
192	15 SIG.
193	15 RET.
194	16 SIG.
195	16 RET.
196	
197	
198	
199	
200	
201	
202	
203	
204	
205	NOT AVAILABLE FOR USE
206	

207	NOT AVAILABLE FOR USE
208	
209	247
210	214 SIG.
211	214 RET.
212	221 SIG.
213	221 RET.
214	228 SIG.
215	228 RET.
216	235 SIG.
217	235 RET.
218	201 SIG.
219	201 RET.
220	208 SIG.
221	208 RET.
222	
223	
224	1 SIG.
225	
226	1 RET.
227	
228	
229	
230	
231	
232	
233	
234	
235	
236	
237	
238	
239	
240	
241	
242	
243	
244	NOT AVAILABLE FOR USE

CABLE GROUP I NOT SHIELDED

CABLE GROUP II SHIELDED

CABLE GROUP III SHIELDED

CABLE GROUP IV NOT SHIELDED

CABLE GROUP V SHIELDED

CABLE GROUP VI NOT SHIELDED

NOTE
1. INTERPRET DRAWING IN ACCORDANCE WITH STANDARDS PRESCRIBED BY MIL-D-70327

QTY REQD	PART OR IDENTIFYING NO.	NOMENCLATURE OR DESCRIPTION	FIND NO.
LIST OF MATERIALS			

NEXT ASSY	USED ON
APPLICATION	

UNLESS OTHERWISE SPECIFIED DIMENSIONS ARE IN INCHES
TOLERANCES ON
FRACTIONS ± DECIMALS ± ANGLES ±
DO NOT SCALE THIS DRAWING
MATERIAL
HEAT TREATMENT
FINAL FINISH

MIT
INSTRUMENTATION LAB
CAMBRIDGE, MASS
DWG. NO.
CONTRACT
DRAWN DATE
CHECKED
APPROVAL
APPROVAL Eldon C. Hall
NASA APPROVAL
MIT APPROVAL

MANNED SPACECRAFT CENTER
HOUSTON, TEXAS

SIGNAL PIN ASSIGNMENT
05A3J1 CONNECTOR-(AGC TO C/M)

CODE IDENT NO.
SIZE D
NASA
1004246
SCALE NONE
WT
SHEET OF

1004246 A

INCHES 0 1 2
PHOTOGRAPHIC SCALE ONLY

NOTICE — WHEN GOVERNMENT DRAWINGS, SPECIFICATIONS, OR OTHER DATA ARE USED FOR ANY PURPOSE OTHER THAN IN CONNECTION WITH A DEFINITELY RELATED GOVERNMENT PROCUREMENT OPERATION, THE UNITED STATES GOVERNMENT THEREBY INCURS NO RESPONSIBILITY NOR ANY OBLIGATION WHATSOEVER; AN[illegible] OR IN ANY WAY SUPPLIED THE SAID DRAWINGS, SPECIFICATIONS OR OTHER DATA IS NOT TO BE REGARDED BY IMPLICATION OR OTHERWISE AS IN ANY MANNER LICENSING THE HOLDER OR ANY OTHER PERSON OR CORPORATION, OR CONVEYING ANY RIGHTS OR PERMISSION TO MANUFACTURE, USE, OR SELL ANY PATENTED INVENTION THAT MAY IN ANY WAY BE RELATED THERETO.

REVISIONS 02836

SYM	DESCRIPTION	DATE	APPROVAL
A	REVISED PER TDRR 03106	9-12-67	
B	REVISED PER TDRR 04326	10-30-67	

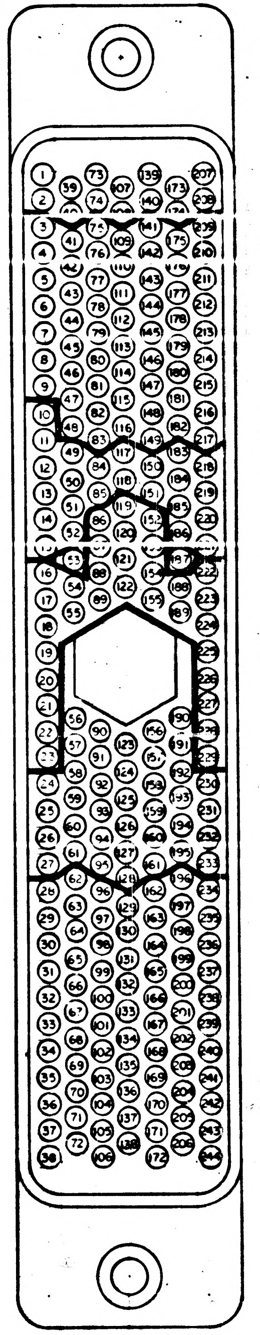

FEMALE RECEPTACLE
CONTACT SIDE

Pin	Assignment
1	NOT AVAILABLE FOR USE
2	NOT AVAILABLE FOR USE
3	211
4	220 SIG.
5	220 RET.
6	227 SIG.
7	227 RET.
8	234 SIG.
9	234 RET.
10	248
11	249
12	
13	
14	
15	
16	54 SIG.
17	
18	54 RET.
19	
20	
21	
22	
23	
24	
25	
26	
27	
28	
29	
30	
31	
32	
33	
34	11 SIG.
35	11 RET.
36	
37	
38	NOT AVAILABLE FOR USE
39	239
40	243
41	219 SIG.
42	219 RET.
43	226 SIG.
44	226 RET.
45	233 SIG.
46	233 RET.
47	244 SIG.
48	244 RET.
49	206 SIG.
50	206 RET.
51	246 SIG.
52	246 RET.
53	
54	
55	
56	
57	
58	
59	
60	
61	
62	
63	
64	
65	17 S'GND
66	
67	26 S'GND
68	11 S'GND
69	
70	
71	NOT AVAILABLE FOR USE
72	
73	NOT AVAILABLE FOR USE
74	
75	212
76	218 SIG.
77	218 RET.
78	225 SIG.
79	225 RET.
80	232 SIG.
81	232 RET.
82	242 SIG.
83	242 RET.
84	205 SIG.
85	205 RET.
86	
87	
88	
89	
90	
91	
92	
93	
94	
95	
96	
97	
98	17 SIG.
99	17 RET.
100	26 SIG.
101	26 RET.
102	
103	
104	
105	
106	NOT AVAILABLE FOR USE
107	245
108	241
109	217 SIG.
110	217 RET.
111	224 SIG.
112	224 RET.
113	231 SIG.
114	231 RET.
115	238 SIG.
116	238 RET.
117	204 SIG.
118	204 RET.
119	
120	
121	
122	
123	24 SIG.
124	24 RET.
125	25 SIG.
126	25 RET.
127	
128	
129	
130	
131	
132	
133	
134	
135	
136	
137	NOT AVAILABLE FOR USE
138	
139	NOT AVAILABLE FOR USE
140	
141	213
142	216 SIG.
143	216 RET.
144	223 SIG.
145	223 RET.
146	230 SIG.
147	230 RET.
148	237 SIG.
149	237 RET.
150	203 SIG.
151	203 RET.
152	
153	
154	
155	
156	14 S'GND
157	24 S'GND
158	15 S'GND
159	25 S'GND
160	16 S'GND
161	
162	
163	
164	
165	
166	
167	
168	
169	
170	
171	
172	NOT AVAILABLE FOR USE
173	239
174	240
175	215 SIG.
176	215 RET.
177	222 SIG.
178	222 RET.
179	229 SIG.
180	229 RET.
181	236 SIG.
182	236 RET.
183	202 SIG.
184	202 RET.
185	210 SIG.
186	210 RET.
187	250
188	
189	
190	14 SIG.
191	14 RET.
192	15 SIG.
193	15 RET.
194	16 SIG.
195	16 RET.
196	
197	
198	
199	
200	
201	
202	
203	
204	
205	NOT AVAILABLE FOR USE
206	
207	NOT AVAILABLE FOR USE
208	
209	247
210	214 SIG.
211	214 RET.
212	221 SIG.
213	221 RET.
214	228 SIG.
215	228 RET.
216	235 SIG.
217	235 RET.
218	201 SIG.
219	201 RET.
220	208 SIG.
221	208 RET.
222	
223	
224	1 SIG.
225	
226	1 RET.
227	
228	
229	
230	
231	
232	
233	
234	
235	
236	
237	
238	
239	
240	
241	
242	
243	
244	NOT AVAILABLE FOR USE

CABLE GROUP I NOT SHIELDED

CABLE GROUP II SHIELDED

CABLE GROUP III SHIELDED

CABLE GROUP IV NOT SHIELDED

CABLE GROUP V SHIELDED

CABLE GROUP VI NOT SHIELDED

NOTE
1. INTERPRET DRAWING IN ACCORDANCE WITH STANDARDS PRESCRIBED BY MIL-D-70327

MASTER

QTY REQD	PART OR IDENTIFYING NO.	NOMENCLATURE OR DESCRIPTION	FIND NO.

LIST OF MATERIALS

NEXT ASSY	USED ON

APPLICATION

UNLESS OTHERWISE SPECIFIED DIMENSIONS ARE IN INCHES
TOLERANCES ON
FRACTIONS ± — DECIMALS ± — ANGLES ± —
DO NOT SCALE THIS DRAWING
MATERIAL —
HEAT TREATMENT —
FINAL FINISH —

MIT
INSTRUMENTATION LAB
CAMBRIDGE, MASS
DWG. NO. CONTRACT

DRAWN
DATE
CHECKED
APPROVAL
APPROVAL
NASA APPROVAL
MIT APPROVAL

MANNED SPACECRAFT CENTER
HOUSTON, TEXAS

SIGNAL PIN ASSIGNMENT
05A3J1 CONNECTOR-(AGC TO C/M)

CODE IDENT NO.
SIZE D
NASA 1004246
SCALE NONE
WT
SHEET OF

1004246 B

INCHES
0 1 2
PHOTOGRAPHIC SCALE ONLY

NOTICE — WHEN GOVERNMENT DRAWINGS, SPECIFICATIONS, OR OTHER DATA ARE USED FOR ANY PURPOSE OTHER THAN IN CONNECTION WITH A DEFINITELY RELATED GOVERNMENT PROCUREMENT OPERATION, THE UNITED STATES GOVERNMENT THEREBY INCURS NO RESPONSIBILITY NOR ANY OBLIGATION WHATSOEVER; AND THE FACT THAT THE GOVERNMENT MAY HAVE FORMULATED, FURNISHED OR IN ANY WAY SUPPLIED THE SAID DRAWINGS, SPECIFICATIONS OR OTHER DATA IS NOT TO BE REGARDED BY IMPLICATION OR OTHERWISE AS IN ANY MANNER LICENSING THE HOLDER OR ANY OTHER PERSON OR CORPORATION, OR CONVEYING ANY RIGHTS OR PERMISSION TO MANUFACTURE, USE, OR SELL ANY PATENTED INVENTION THAT MAY IN ANY WAY BE RELATED THERETO.

REVISIONS 02836			
SYM	DESCRIPTION	DATE	APPROVAL

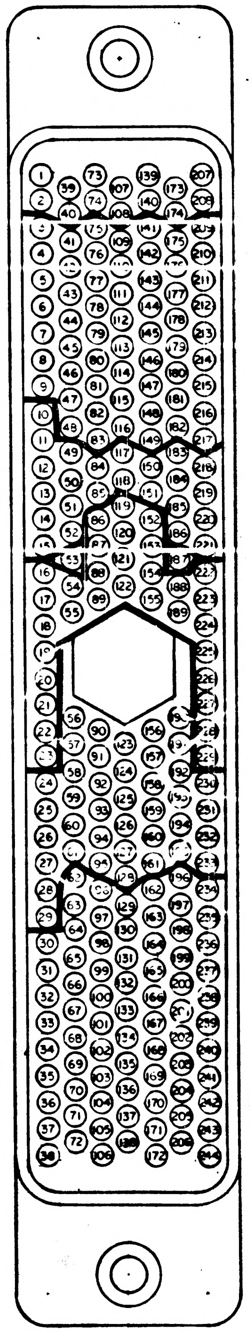

FEMALE RECEPTACLE
CONTACT SIDE

1	NOT AVAILABLE FOR USE
2	NOT AVAILABLE FOR USE
3	211
4	220 SIG.
5	220 RET.
6	227 SIG.
7	227 RET.
8	234 SIG.
9	234 RET.
10	
11	
12	
13	
14	
15	
16	54 SIG.
17	
18	54 RET.
19	
20	
21	
22	
23	
24	4 SIG.
25	4 RET.
26	5 SIG.
27	5 RET.
28	8 SIG.
29	8 RET.
30	9 SIG.
31	9 RET.
32	10 SIG.
33	10 RET.
34	11 SIG.
35	11 RET.
36	12 SIG.
37	12 RET.
38	NOT AVAILABLE FOR USE

39	239
40	243
41	219 SIG.
42	219 RET.
43	226 SIG.
44	226 RET.
45	233 SIG.
46	233 RET.
47	244 SIG.
48	244 RET.
49	206 SIG.
50	206 RET.
51	246 SIG.
52	246 RET.
53	178
54	
55	
56	
57	
58	6 S'GND
59	4 S'GND
60	7 S'GND
61	5 S'GND
62	8 S'GND
63	13 S'GND
64	9 S'GND
65	17 S'GND
66	10 S'GND
67	26 S'GND
68	11 S'GND
69	56 S'GND
70	12 S'GND
71	NOT AVAILABLE FOR USE
72	57 S'GND

73	NOT AVAILABLE FOR USE
74	
75	212
76	218 SIG.
77	218 RET.
78	225 SIG.
79	225 RET.
80	232 SIG.
81	232 RET.
82	242 SIG.
83	242 RET.
84	205 SIG.
85	205 RET.
86	
87	
88	
89	
90	
91	6 SIG.
92	6 RET.
93	7 SIG.
94	7 RET.
95	
96	13 SIG.
97	13 RET.
98	17 SIG.
99	17 RET.
100	26 SIG.
101	26 RET.
102	56 SIG.
103	56 RET.
104	57 SIG.
105	57 RET.
106	NOT AVAILABLE FOR USE

107	245
108	241
109	217 SIG.
110	217 RET.
111	224 SIG.
112	224 RET.
113	231 SIG.
114	231 RET.
115	238 SIG.
116	238 RET.
117	204 SIG.
118	204 RET.
119	
120	
121	
122	
123	24 SIG.
124	24 RET.
125	25 SIG.
126	25 RET.
127	
128	
129	
130	
131	
132	
133	
134	
135	
136	
137	NOT AVAILABLE FOR USE
138	

139	NOT AVAILABLE FOR USE
140	
141	213
142	216 SIG.
143	216 RET.
144	223 SIG.
145	223 RET.
146	230 SIG.
147	230 RET.
148	237 SIG.
149	237 RET.
150	203 SIG.
151	203 RET.
152	
153	
154	
155	
156	14 S'GND
157	24 S'GND
158	15 S'GND
159	25 S'GND
160	16 S'GND
161	
162	
163	
164	
165	
166	
167	
168	
169	
170	
171	
172	NOT AVAILABLE FOR USE

173	239
174	240
175	215 SIG.
176	215 RET.
177	222 SIG.
178	222 RET.
179	229 SIG.
180	229 RET.
181	236 SIG.
182	236 RET.
183	202 SIG.
184	202 RET.
185	210 SIG.
186	210 RET.
187	250
188	
189	
190	14 SIG.
191	14 RET.
192	15 SIG.
193	15 RET.
194	16 SIG.
195	16 RET.
196	
197	
198	
199	
200	
201	
202	
203	
204	
205	NOT AVAILABLE FOR USE
206	

207	NOT AVAILABLE FOR USE
208	
209	247
210	214 SIG.
211	214 RET.
212	221 SIG.
213	221 RET.
214	228 SIG.
215	228 RET.
216	235 SIG.
217	235 RET.
218	201 SIG.
219	201 RET.
220	208 SIG.
221	208 RET.
222	
223	
224	1 SIG.
225	
226	1 RET.
227	
228	
229	
230	
231	
232	
233	
234	
235	
236	
237	
238	
239	
240	
241	
242	
243	
244	NOT AVAILABLE FOR USE

CABLE GROUP I NOT SHIELDED

CABLE GROUP II SHIELDED

CABLE GROUP III SHIELDED

CABLE GROUP IV NOT SHIELDED

CABLE GROUP V SHIELDED

CABLE GROUP VI NOT SHIELDED

NOTE

1. INTERPRET DRAWING IN ACCORDANCE WITH STANDARDS PRESCRIBED BY MIL-D-70327

MASTER

QTY REQD	PART OR IDENTIFYING NO.	NOMENCLATURE OR DESCRIPTION	FIND NO.
LIST OF MATERIALS			

NEXT ASSY	USED ON
APPLICATION	

UNLESS OTHERWISE SPECIFIED
DIMENSIONS ARE IN INCHES
TOLERANCES ON
FRACTIONS ± DECIMALS ± ANGLES ±
DO NOT SCALE THIS DRAWING
MATERIAL
HEAT TREATMENT
FINAL FINISH

MIT
INSTRUMENTATION LAB
CAMBRIDGE, MASS
DWG. NO. CONTRACT
DRAWN DATE
CHECKED
APPROVAL
APPROVAL Eldon C. Hall
NASA APPROVAL
MIT APPROVAL

MANNED SPACECRAFT CENTER
HOUSTON, TEXAS

SIGNAL PIN ASSIGNMENT
05A3J1 CONNECTOR-(AGC TO C/M)

CODE IDENT NO.
SIZE D
NASA DWG. 1004246
SCALE NONE
WT
SHEET OF

INCHES
0 2
PHOTOGRAPHIC SCALE ONLY

NOTICE — WHEN GOVERNMENT DRAWINGS, SPECIFICATIONS, OR OTHER DATA ARE USED FOR ANY PURPOSE OTHER THAN IN CONNECTION WITH A DEFINITELY RELATED GOVERNMENT PROCUREMENT OPERATION, THE UNITED STATES GOVERNMENT THEREBY INCURS NO RESPONSIBILITY NOR ANY OBLIGATION WHATSOEVER; AND THE FACT THAT THE GOVERNMENT MAY HAVE FORMULATED, FURNISHED, OR IN ANY WAY SUPPLIED THE SAID DRAWINGS, SPECIFICATIONS, OR OTHER DATA IS NOT TO BE REGARDED BY IMPLICATION OR OTHERWISE AS IN ANY MANNER LICENSING THE HOLDER OR ANY OTHER PERSON OR CORPORATION, OR CONVEYING ANY RIGHTS OR PERMISSION TO MANUFACTURE, USE, OR SELL ANY PATENTED INVENTION THAT MAY IN ANY WAY BE RELATED THERETO.

REVISIONS 02836

SYM	DESCRIPTION	DATE	APPROVAL
A	REVISED PER TDRR 04341	10/20/69	

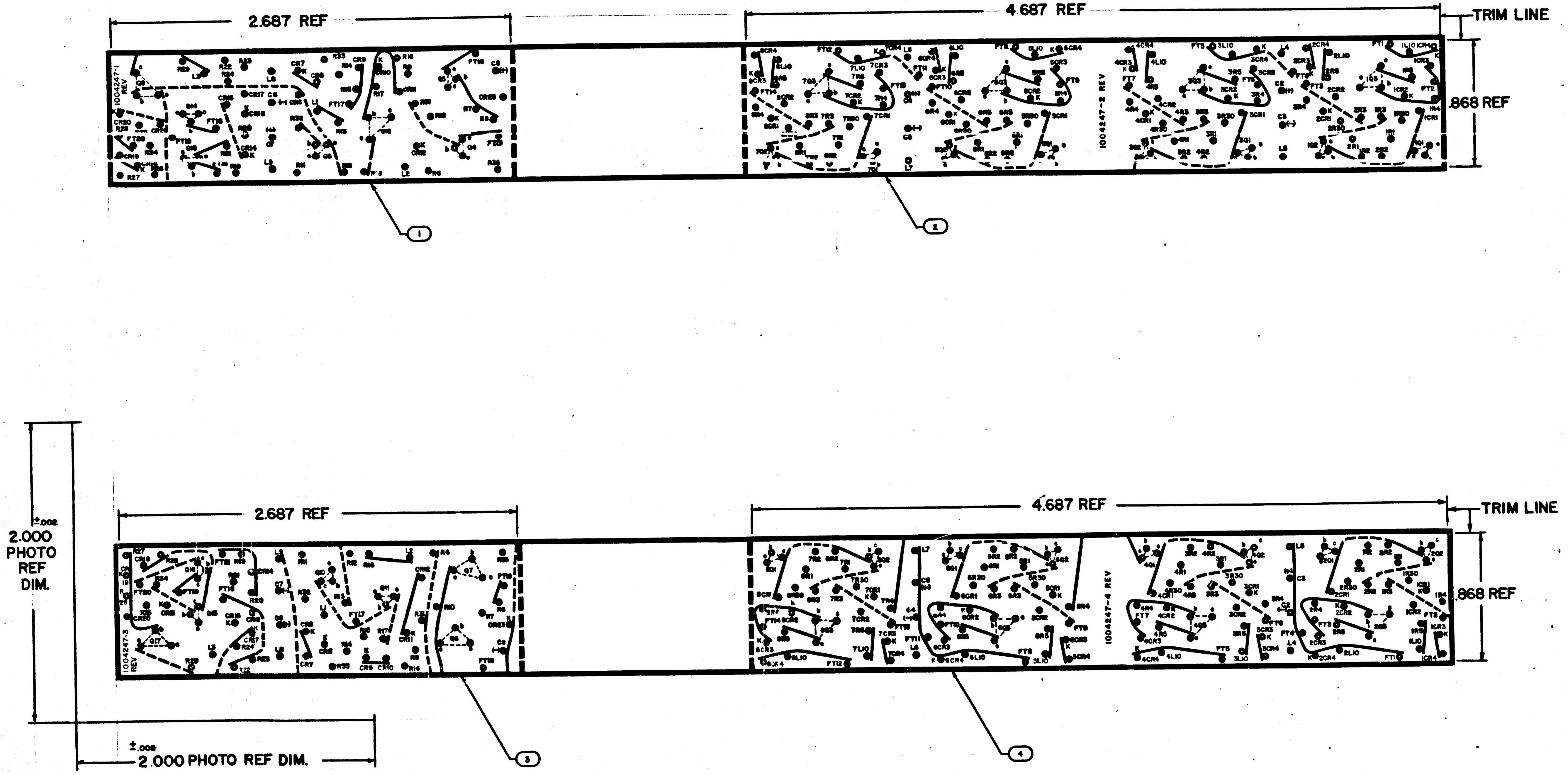

NOTES
1. INTERPRET DRAWING IN ACCORDANCE WITH STANDARDS PRESCRIBED BY MIL-D-70327
2. ORIGINAL OF THIS DRAWING OR REPRODUCTION MADE BY PROCESS OR METHOD SHALL INSURE DIMENSIONAL STABILITY. DIMENSIONAL STABILITY SHALL NOT EXCEED .001 INCH PER INCH
3. CUT TO WITHIN .010 OF TRIMLINE
4. MAKE MASTER PATTERN POSITIVE FILMS TO DIMENSIONS SHOWN
5. MATL: FILM .006/.008 THICK PER L-F-340, TYPE 1B, CLASS 2, STYLE IA
6. ● .036/.046 DIA PUNCH ALL HOLES

MASTER

QTY REQD	PART OR IDENTIFYING NO.	NOMENCLATURE OR DESCRIPTION	FIND NO.
1	1004247-4	INSULATOR	4
1	1004247-3	INSULATOR	3
1	1004247-2	INSULATOR	2
1	1004247-1	INSULATOR	1

LIST OF MATERIALS

NEXT ASSY	USED ON
1003139	

APPLICATION

UNLESS OTHERWISE SPECIFIED DIMENSIONS ARE IN INCHES
TOLERANCES ON
FRACTIONS ± DECIMALS ± ANGLES ±
DO NOT SCALE THIS DRAWING
MATERIAL SEE NOTE 5
HEAT TREATMENT
FINAL FINISH

MIT INSTRUMENTATION LAB
CAMBRIDGE, MASS.
DRAWN R O Sullivan DATE
CHECKED
APPROVAL
APPROVAL
NASA APPROVAL
MIT APPROVAL

MANNED SPACECRAFT CENTER
HOUSTON, TEXAS

INSULATOR PHOTOGRAPHIC MASTER
ERASABLE DRIVERS B10 — B11 MODULE

CODE IDENT NO.
SIZE E
NASA DRAWING NO. 1004247
SCALE 4/1
WT
SHEET 1 OF 1

INCHES
PHOTOGRAPHIC SCALE ONLY

NOTICE — WHEN GOVERNMENT DRAWINGS, SPECIFICATIONS, OR OTHER DATA ARE USED FOR ANY PURPOSE OTHER THAN IN CONNECTION WITH A DEFINITELY RELATED GOVERNMENT PROCUREMENT OPERATION, THE UNITED STATES GOVERNMENT THEREBY INCURS NO RESPONSIBILITY NOR ANY OBLIGATION WHATSOEVER AND THE FACT THAT THE GOVERNMENT MAY HAVE FORMULATED, FURNISHED, OR IN ANY WAY SUPPLIED THE SAID DRAWINGS, SPECIFICATIONS OR OTHER DATA IS NOT TO BE REGARDED BY IMPLICATION OR OTHERWISE AS IN ANY MANNER LICENSING THE HOLDER OR ANY OTHER PERSON OR CORPORATION, OR CONVEYING ANY RIGHTS OR PERMISSION TO MANUFACTURE, USE, OR SELL ANY PATENTED INVENTION THAT MAY IN ANY WAY BE RELATED THERETO.

REVISIONS 03836

SYM	DESCRIPTION	DATE	APPROVAL
A	REVISED PER TDRR 04341	10-30-63	UK
B	REV.SED PER TDRR 04744	11-15-63	UK

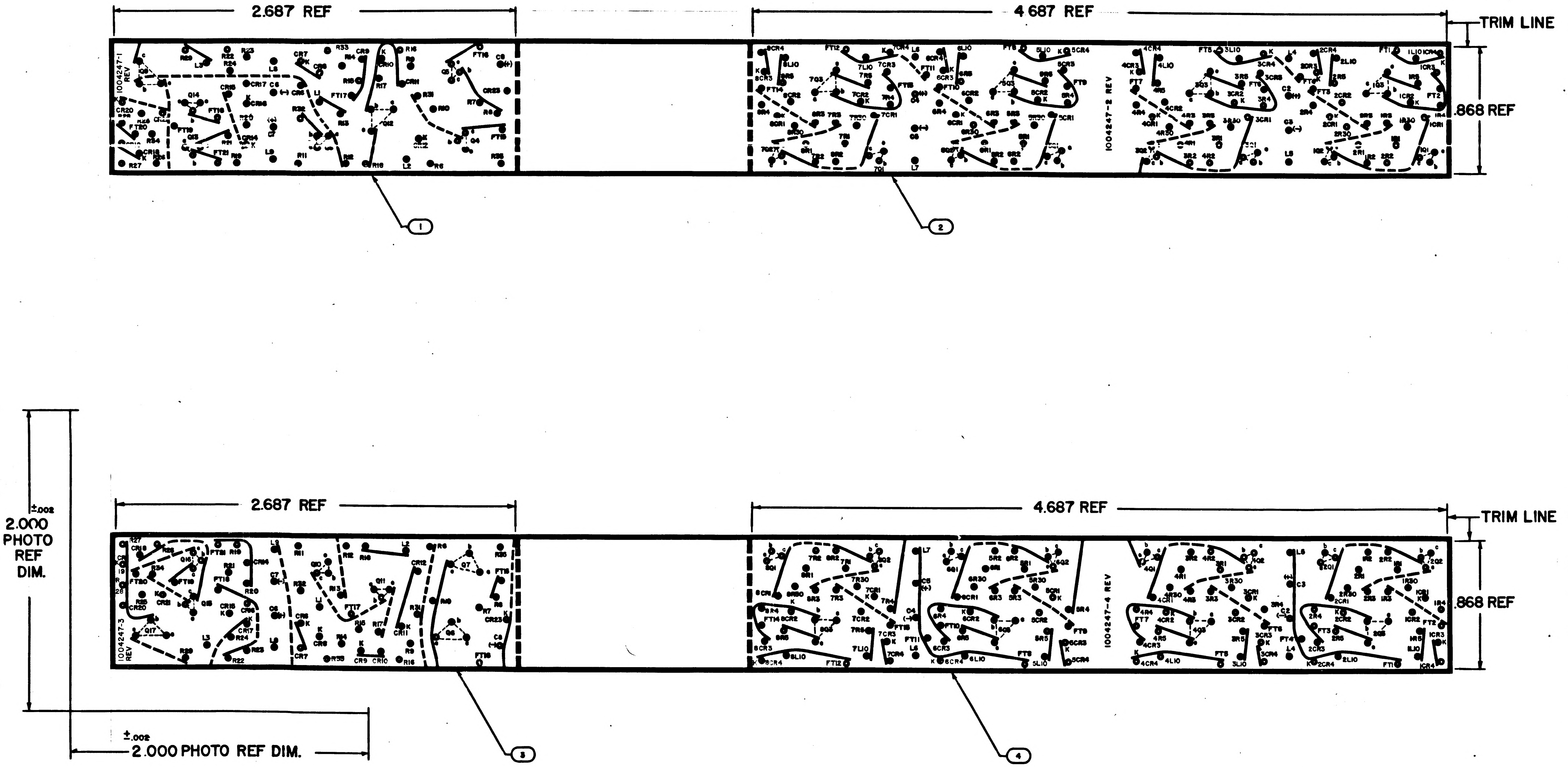

NOTES

1. INTERPRET DRAWING IN ACCORDANCE WITH STANDARDS PRESCRIBED BY MIL-D-70327
2. ORIGINAL OF THIS DRAWING OR REPRODUCTION MADE BY PROCESS OR METHOD SHALL INSURE DIMENSIONAL STABILITY. DIMENSIONAL STABILITY SHALL NOT EXCEED .001 INCH PER INCH
3. CUT TO WITHIN .010 OF TRIMLINE
4. MAKE MASTER PATTERN POSITIVE FILMS TO DIMENSIONS SHOWN
5. MATL: FILM .006/.008 THICK PER L-F-340, TYPE IB, CLASS 2, STYLE IA
6. ● .036/.046 DIA PUNCH ALL HOLES

QTY REQD	PART OR IDENTIFYING NO.	NOMENCLATURE OR DESCRIPTION	FIND NO.
1	1004247-4	INSULATOR	4
1	1004247-3	INSULATOR	3
1	1004247-2	INSULATOR	2
1	1004247-1	INSULATOR	1

LIST OF MATERIALS

NEXT ASSY	USED ON
1003139	

APPLICATION

UNLESS OTHERWISE SPECIFIED DIMENSIONS ARE IN INCHES
TOLERANCES ON
FRACTIONS ± DECIMALS ± ANGLES ±
DO NOT SCALE THIS DRAWING
MATERIAL SEE NOTE 5
HEAT TREATMENT
FINAL FINISH

MIT INSTRUMENTATION LAB
CAMBRIDGE MASS
DWG NO
CONTRACT
DRAWN RO [illegible] DATE Aug 15, 63
CHECKED [illegible] Aug 27, 1963
APPROVAL
APPROVAL
NASA APPROVAL
MIT APPROVAL D Hoag 8/26/63

MANNED SPACECRAFT CENTER
HOUSTON, TEXAS

INSULATOR PHOTOGRAPHIC MASTER
ERASABLE DRIVERS B10 — B11 MODULE

CODE IDENT NO.
SIZE E
NASA DRAWING NO 1004247
SCALE 4/1
WT
SHEET 1 OF 1

1004247 B

MASTER

INCHES
0 1 2
PHOTOGRAPHIC SCALE ONLY

NOTICE — WHEN GOVERNMENT DRAWINGS, SPECIFICATIONS, OR OTHER DATA ARE USED FOR ANY PURPOSE OTHER THAN IN CONNECTION WITH A DEFINITELY RELATED GOVERNMENT PROCUREMENT OPERATION, THE UNITED STATES GOVERNMENT THEREBY INCURS NO RESPONSIBILITY NOR ANY OBLIGATION WHATSOEVER; AND THE FACT THAT THE GOVERNMENT MAY HAVE FORMULATED, FURNISHED, OR IN ANY WAY SUPPLIED THE SAID DRAWINGS, SPECIFICATIONS, OR OTHER DATA IS NOT TO BE REGARDED BY IMPLICATION OR OTHERWISE AS IN ANY MANNER LICENSING THE HOLDER OR ANY OTHER PERSON OR CORPORATION, OR CONVEYING ANY RIGHTS OR PERMISSION TO MANUFACTURE, USE, OR SELL ANY PATENTED INVENTION THAT MAY IN ANY WAY BE RELATED THERETO.

REVISIONS 02896

SYM	DESCRIPTION	DATE	APPROVAL
A	REVISED PER TDRR 04341	10-30-62	
B	REVISED PER TDRR 04744	1-14-63	
C	REVISED PER TDRR 07264 DR RUDNICK CHK OUR APPD	3/24/64	

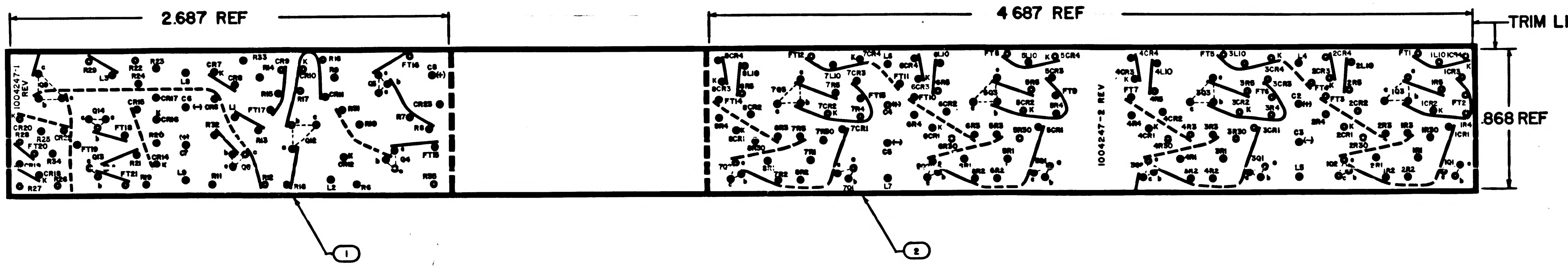

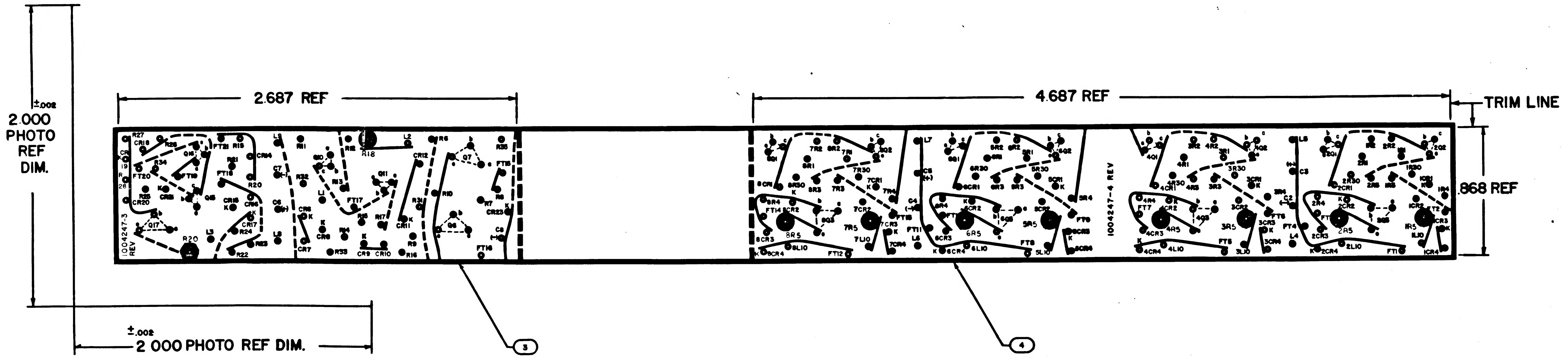

NOTES

1. INTERPRET DRAWING IN ACCORDANCE WITH STANDARDS PRESCRIBED BY MIL-D-70327
2. ORIGINAL OF THIS DRAWING OR REPRODUCTION MADE BY PROCESS OR METHOD SHALL INSURE DIMENSIONAL STABILITY. DIMENSIONAL STABILITY SHALL NOT EXCEED .001 INCH PER INCH
3. CUT TO WITHIN .010 OF TRIMLINE
4. MAKE MASTER PATTERN POSITIVE FILMS TO DIMENSIONS SHOWN
5. MATL: FILM .006/.008 THICK PER L-F-340, TYPE IB, CLASS 2, STYLE IA
6. ● .036/.045 DIA PUNCH
7. ● .111/.121 DIA PUNCH

QTY REQD	PART OR IDENTIFYING NO.	NOMENCLATURE OR DESCRIPTION	FIND NO
1	1004247-4	INSULATOR	4
1	1004247-3	INSULATOR	3
1	1004247-2	INSULATOR	2
1	1004247-1	INSULATOR	1

LIST OF MATERIALS

NEXT ASSY	USED ON
1003139	

APPLICATION

UNLESS OTHERWISE SPECIFIED DIMENSIONS ARE IN INCHES
TOLERANCES ON
FRACTIONS ± DECIMALS ± ANGLES ±
DO NOT SCALE THIS DRAWING
MATERIAL
SEE NOTE 5
HEAT TREATMENT
FINAL FINISH

MIT
INSTRUMENTATION LAB
CAMBRIDGE MASS
DRAWN RD [illegible] DATE
CHECKED [illegible] Nov 27 1962
APPROVAL
APPROVAL
NASA APPROVAL
MIT APPROVAL D Hoag 3/26/63

MANNED SPACECRAFT CENTER
HOUSTON, TEXAS

INSULATOR
PHOTOGRAPHIC MASTER
ERASABLE DRIVERS B10 — B11 MODULE

CODE IDENT NO. —
SIZE E
NASA DRAWING NO 1004247
SCALE 4/1
WT
SHEET 1 OF 1

NOTICE — WHEN GOVERNMENT DRAWINGS, SPECIFICATIONS, OR OTHER DATA ARE USED FOR ANY PURPOSE OTHER THAN IN CONNECTION WITH A DEFINITELY RELATED GOVERNMENT PROCUREMENT OPERATION, THE UNITED STATES GOVERNMENT THEREBY INCURS NO RESPONSIBILITY NOR ANY OBLIGATION WHATSOEVER; AND THE FACT THAT THE GOVERNMENT MAY HAVE FORMULATED, FURNISHED, OR IN ANY WAY SUPPLIED THE SAID DRAWINGS, SPECIFICATIONS, OR OTHER DATA IS NOT TO BE REGARDED BY IMPLICATION OR OTHERWISE AS IN ANY MANNER LICENSING THE HOLDER OR ANY OTHER PERSON OR CORPORATION, OR CONVEYING ANY RIGHTS OR PERMISSION TO MANUFACTURE, USE, OR SELL ANY PATENTED INVENTION THAT MAY IN ANY WAY BE RELATED THERETO

REVISIONS 03836

SYM	DESCRIPTION	DATE	APPROVAL
A	REVISED PER TDRR 04741	[illegible]	[illegible]
B	REVISED PER TDRR 04744	[illegible]	[illegible]
C	REVISED PER TDRR 07264 DR [illegible] CHK [illegible] APPD	3/1	[illegible]
D	REVISED PER TDRR 08333 DR [illegible] CHK K.W.	[illegible]	[illegible]

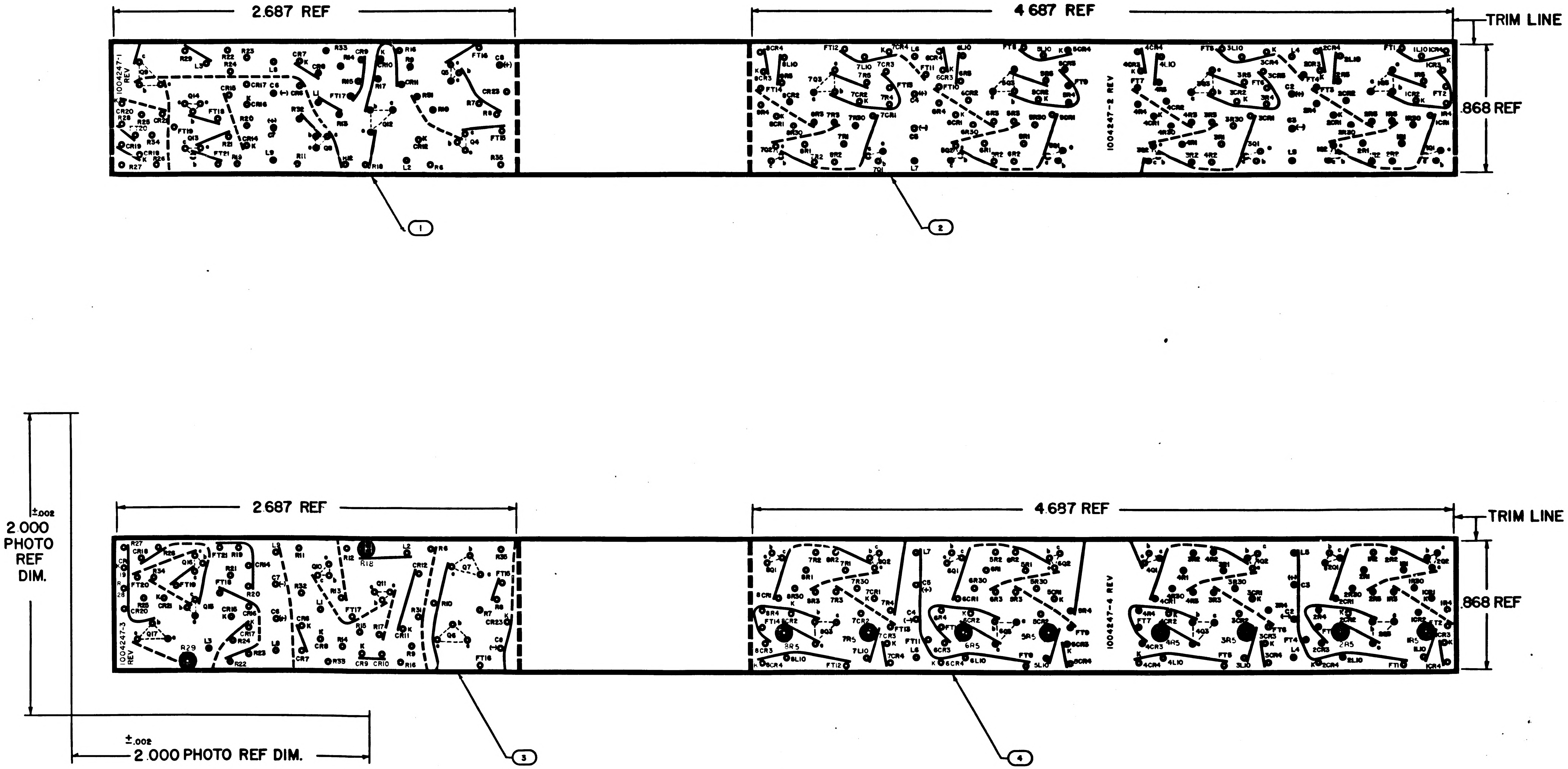

NOTES
1. INTERPRET DRAWING IN ACCORDANCE WITH STANDARDS PRESCRIBED BY MIL-D-70327
2. ORIGINAL OF THIS DRAWING OR REPRODUCTION MADE BY PROCESS OR METHOD SHALL INSURE DIMENSIONAL STABILITY. DIMENSIONAL STABILITY SHALL NOT EXCEED .001 INCH PER INCH
3. CUT TO WITHIN .010 OF TRIMLINE
4. MAKE MASTER PATTERN POSITIVE FILMS TO DIMENSIONS SHOWN
5. MATL: FILM .006/.008 THICK PER L-F-340, TYPE IB, CLASS 2, STYLE IA
6. ● .035/.045 DIA PUNCH
7. ● .111/.121 DIA PUNCH

QTY REQD	PART OR IDENTIFYING NO.	NOMENCLATURE OR DESCRIPTION	FIND NO.
1	1004247-4	INSULATOR	4
1	1004247-3	INSULATOR	3
1	1004247-2	INSULATOR	2
1	1004247-1	INSULATOR	1

LIST OF MATERIALS

NEXT ASSY	USED ON
1003139	1003186

APPLICATION

UNLESS OTHERWISE SPECIFIED
DIMENSIONS ARE IN INCHES
TOLERANCES ON
FRACTIONS ± DECIMALS ± ANGLES ±
DO NOT SCALE THIS DRAWING
MATERIAL
SEE NOTE 5
HEAT TREATMENT
FINAL FINISH

MIT
INSTRUMENTATION LAB
CAMBRIDGE, MASS.
DRAWN R.D. [illegible] DATE [illegible]
CHECKED [illegible]
APPROVAL [illegible]
APPROVAL [illegible]
NASA APPROVAL [illegible]
MIT APPROVAL [illegible]

MANNED SPACECRAFT CENTER
HOUSTON, TEXAS

INSULATOR
PHOTOGRAPHIC MASTER
ERASABLE DRIVERS B10 — B11 MODULE

CODE IDENT NO. —— SIZE E NASA DRAWING NO. 1004247
SCALE 4/1 WT SHEET 1 OF 1

1004247 D

NOTICE — WHEN GOVERNMENT DRAWINGS, SPECIFICATIONS, OR OTHER DATA ARE USED FOR ANY PURPOSE OTHER THAN IN CONNECTION WITH A DEFINITELY RELATED GOVERNMENT PROCUREMENT OPERATION, THE UNITED STATES GOVERNMENT THEREBY INCURS NO RESPONSIBILITY NOR ANY OBLIGATION WHATSOEVER AND THE FACT THAT THE GOVERNMENT MAY HAVE FORMULATED, FURNISHED, OR IN ANY WAY SUPPLIED THE SAID DRAWINGS, SPECIFICATIONS OR OTHER DATA IS NOT TO BE REGARDED BY IMPLICATION OR OTHERWISE AS IN ANY MANNER LICENSING THE HOLDER OR ANY OTHER PERSON OR CORPORATION, OR CONVEYING ANY RIGHTS OR PERMISSION TO MANUFACTURE, USE, OR SELL ANY PATENTED INVENTION THAT MAY IN ANY WAY BE RELATED THERETO.

REVISIONS 02836			
SYM	DESCRIPTION	DATE	APPROVAL

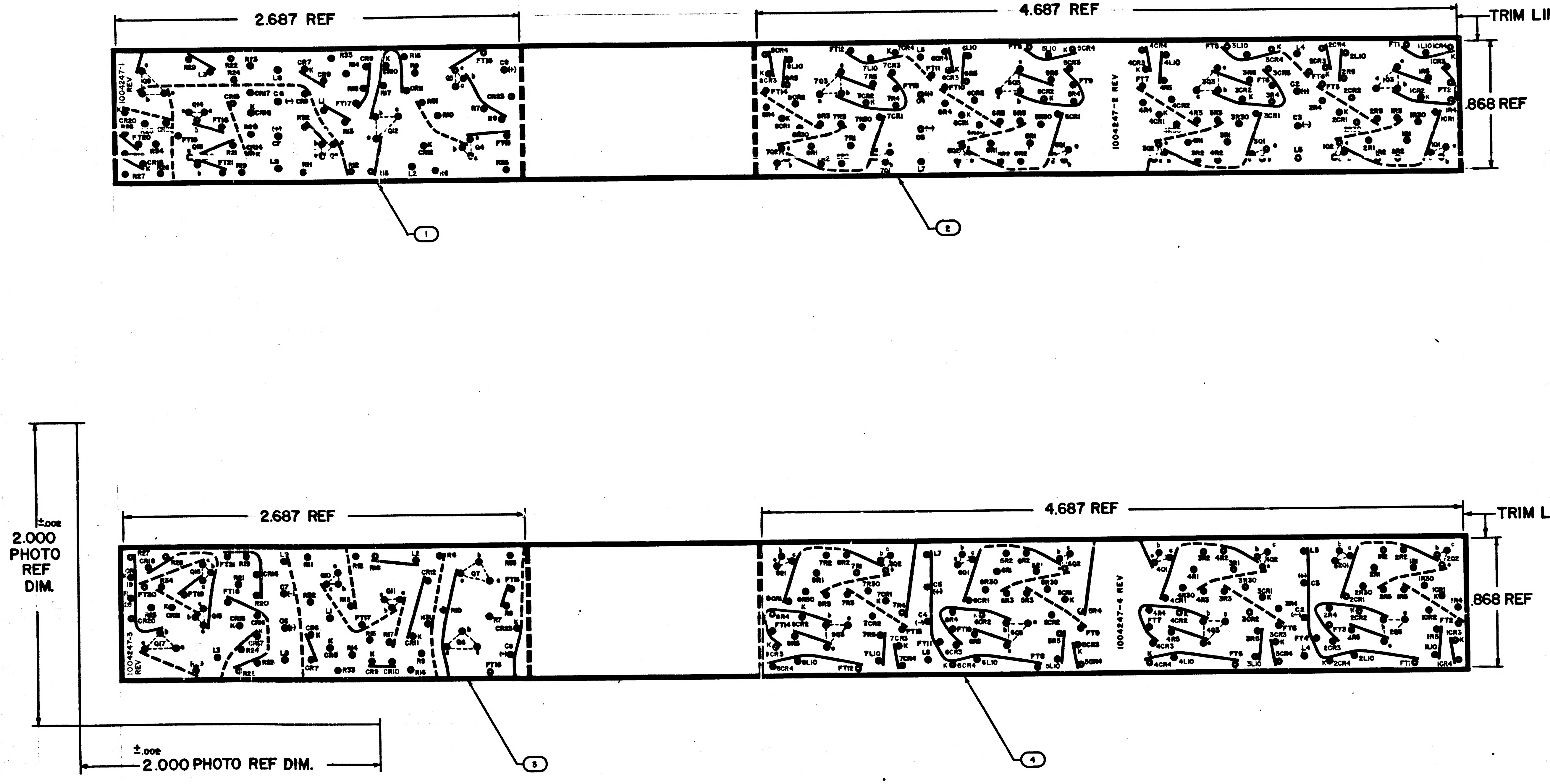

NOTES
1. INTERPRET DRAWING IN ACCORDANCE WITH STANDARDS PRESCRIBED BY MIL-D-70327
2. ORIGINAL OF THIS DRAWING OR REPRODUCTION MADE BY PROCESS OR METHOD SHALL INSURE DIMENSIONAL STABILITY. DIMENSIONAL STABILITY SHALL NOT EXCEED .001 INCH PER INCH
3. CUT TO WITHIN .010 OF TRIMLINE
4. MAKE MASTER PATTERN POSITIVE FILMS TO DIMENSIONS SHOWN
5. MATL: FILM .006/.008 THICK PER L-F-340, TYPE IB, CLASS 2, STYLE IA
6. ● .035/.045 DIA PUNCH ALL HOLES

QTY REQD	PART OR IDENTIFYING NO.	NOMENCLATURE OR DESCRIPTION	FIND NO.
1	1004247-4	INSULATOR	4
1	1004247-3	INSULATOR	3
1	1004247-2	INSULATOR	2
1	1004247-1	INSULATOR	1

LIST OF MATERIALS

NEXT ASSY	USED ON
1003139	

APPLICATION

UNLESS OTHERWISE SPECIFIED DIMENSIONS ARE IN INCHES
TOLERANCES ON
FRACTIONS ± DECIMALS ± ANGLES ±
DO NOT SCALE THIS DRAWING
MATERIAL SEE NOTE 5
HEAT TREATMENT
FINAL FINISH

MIT INSTRUMENTATION LAB
CAMBRIDGE, MASS
DWG. NO. CONTRACT
DRAWN R D Sullivan DATE Aug 17, 63
CHECKED C. L. Rage Aug 27, 1963
APPROVAL
APPROVAL
NASA APPROVAL
MIT APPROVAL D. Hoag 8/26/63

MANNED SPACECRAFT CENTER
HOUSTON, TEXAS

INSULATOR
PHOTOGRAPHIC MASTER
ERASABLE DRIVERS B10 — B11 MODULE

CODE IDENT NO.
SIZE E
NASA DRAWING NO. 1004247
SCALE 4/1
WT
SHEET 1 OF 1

1004247

MASTER

INCHES
PHOTOGRAPHIC SCALE ONLY

NOTICE — WHEN GOVERNMENT DRAWINGS, SPECIFICATIONS, OR OTHER DATA ARE USED FOR ANY PURPOSE OTHER THAN IN CONNECTION WITH A DEFINITELY RELATED GOVERNMENT PROCUREMENT OPERATION, THE UNITED STATES GOVERNMENT THEREBY INCURS NO RESPONSIBILITY NOR ANY OBLIGATION WHATSOEVER; AND THE FACT THAT THE GOVERNMENT MAY HAVE FORMULATED, FURNISHED, OR IN ANY WAY SUPPLIED THE SAID DRAWINGS, SPECIFICATIONS OR OTHER DATA IS NOT TO BE REGARDED BY IMPLICATION OR OTHERWISE AS IN ANY MANNER LICENSING THE HOLDER OR ANY OTHER PERSON OR CORPORATION, OR CONVEYING ANY RIGHTS OR PERMISSION TO MANUFACTURE, USE, OR SELL ANY PATENTED INVENTION THAT MAY IN ANY WAY BE RELATED THERETO.

1004248 A

REVISIONS 03/39

SYM	DESCRIPTION	DATE	APPROVAL
A	REVISED PER TDRR 03640	10-3-63	RAL

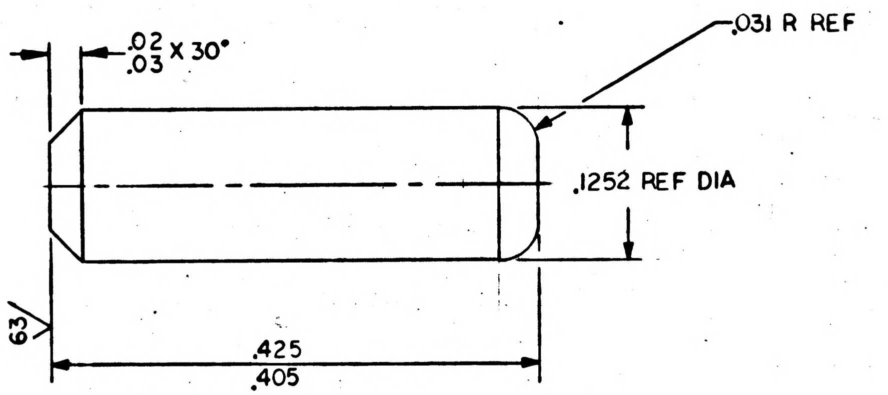

NOTES:-

1. INTERPRET DRAWING IN ACCORDANCE WITH STANDARDS PRESCRIBED BY MIL-D-70327
2. MATERIAL: PIN STRAIGHT HEADLESS (DOWEL) PER MS16555-628
3. FINISH PASSIVATE PER MIL-F-14072 * E300

MASTER

QTY REQD	PART OR IDENTIFYING NO.	NOMENCLATURE OR DESCRIPTION	FIND NO.

LIST OF MATERIALS

NEXT ASSY	USED ON

APPLICATION

UNLESS OTHERWISE SPECIFIED
DIMENSIONS ARE IN INCHES
TOLERANCES ON
FRACTIONS ± DECIMALS ± ANGLES ± 5°
DO NOT SCALE THIS DRAWING

MATERIAL
SEE NOTE 2

HEAT TREATMENT

FINAL FINISH
SEE NOTE 3

MIT
INSTRUMENTATION LAB
CAMBRIDGE, MASS.
DWG. NO. CONTRACT

DRAWN Louis A Lowe DATE 23-9-63
CHECKED 10 Sep 63
APPROVAL W B 10 Sep 63
APPROVAL
NASA APPROVAL 9/12/63
MIT APPROVAL W Kupfer 12 Sep 63

MANNED SPACECRAFT CENTER
HOUSTON, TEXAS

PIN, KEYING

CODE IDENT NO. —
SIZE C
NASA DRAWING NO. 1004248
SCALE 10/1
WT
SHEET OF

NOTICE — WHEN GOVERNMENT DRAWINGS, SPECIFICATIONS, OR OTHER DATA ARE USED FOR ANY PURPOSE OTHER THAN IN CONNECTION WITH A DEFINITELY RELATED GOVERNMENT PROCUREMENT OPERATION, THE UNITED STATES GOVERNMENT THEREBY INCURS NO RESPONSIBILITY NOR ANY OBLIGATION WHATSOEVER; AND THE FACT THAT THE GOVERNMENT MAY HAVE FORMULATED, FURNISHED, OR IN ANY WAY SUPPLIED THE SAID DRAWINGS, SPECIFICATIONS OR OTHER DATA IS NOT TO BE REGARDED BY IMPLICATION OR OTHERWISE AS IN ANY MANNER LICENSING THE HOLDER OR ANY OTHER PERSON OR CORPORATION, OR CONVEYING ANY RIGHTS OR PERMISSION TO MANUFACTURE, USE, OR SELL ANY PATENTED INVENTION THAT MAY IN ANY WAY BE RELATED THERETO.

1004248

REVISIONS 03/39			
SYM	DESCRIPTION	DATE	APPROVAL

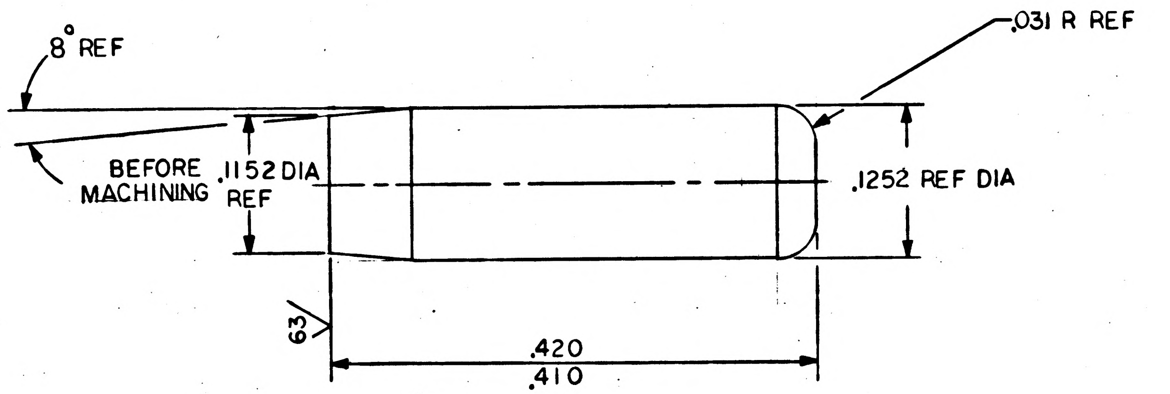

NOTES:-
1. INTERPRET DRAWING IN ACCORDANCE WITH STANDARDS PRESCRIBED BY MIL-D-70327
2. MATERIAL: PIN STRAIGHT HEADLESS (DOWEL) PER MS16555-626
3. FINISH PASSIVATE PER MIL-F-14072 #E300

MASTER

QTY REQD	PART OR IDENTIFYING NO.	NOMENCLATURE OR DESCRIPTION	FIND NO.

LIST OF MATERIALS

NEXT ASSY	USED ON
APPLICATION	

UNLESS OTHERWISE SPECIFIED DIMENSIONS ARE IN INCHES
TOLERANCES ON
FRACTIONS ± DECIMALS ± ANGLES ±
DO NOT SCALE THIS DRAWING
MATERIAL SEE NOTE 2
HEAT TREATMENT
FINAL FINISH SEE NOTE 3

MIT INSTRUMENTATION LAB
CAMBRIDGE, MASS.
DWG. NO. CONTRACT
DRAWN Louis A Lowe DATE 23-9-63
CHECKED R. Kingsbury 10 Sep 63
APPROVAL W B Thomas 10 SEP 63
APPROVAL
NASA APPROVAL 9/12/63
MIT APPROVAL W Kupfer 12 Sep 63

MANNED SPACECRAFT CENTER
HOUSTON, TEXAS

PIN, KEYING

CODE IDENT NO.
SIZE C
NASA DRAWING NO. 1004248
SCALE 10/1
WT
SHEET OF

INCHES
0 1 2
PHOTOGRAPHIC SCALE ONLY

NOTICE — WHEN GOVERNMENT DRAWINGS, SPECIFICATIONS, OR OTHER DATA ARE USED FOR ANY PURPOSE OTHER THAN IN CONNECTION WITH A DEFINITELY RELATED GOVERNMENT PROCUREMENT OPERATION, THE UNITED STATES GOVERNMENT THEREBY INCURS NO RESPONSIBILITY NOR ANY OBLIGATION WHATSOEVER; AND THE FACT THAT THE GOVERNMENT MAY HAVE FORMULATED, FURNISHED, OR IN ANY WAY SUPPLIED THE SAID DRAWINGS, SPECIFICATIONS OR OTHER DATA IS NOT TO BE REGARDED BY IMPLICATION OR OTHERWISE AS IN ANY MANNER LICENSING THE HOLDER OR ANY OTHER PERSON OR CORPORATION, OR CONVEYING ANY RIGHTS OR PERMISSION TO MANUFACTURE, USE, OR SELL ANY PATENTED INVENTION THAT MAY IN ANY WAY BE RELATED THERETO.

1004249 A

REVISIONS 03139

SYM	DESCRIPTION	DATE	APPROVAL
A	REVISED PER TDRR 03628	10-3-63	WK

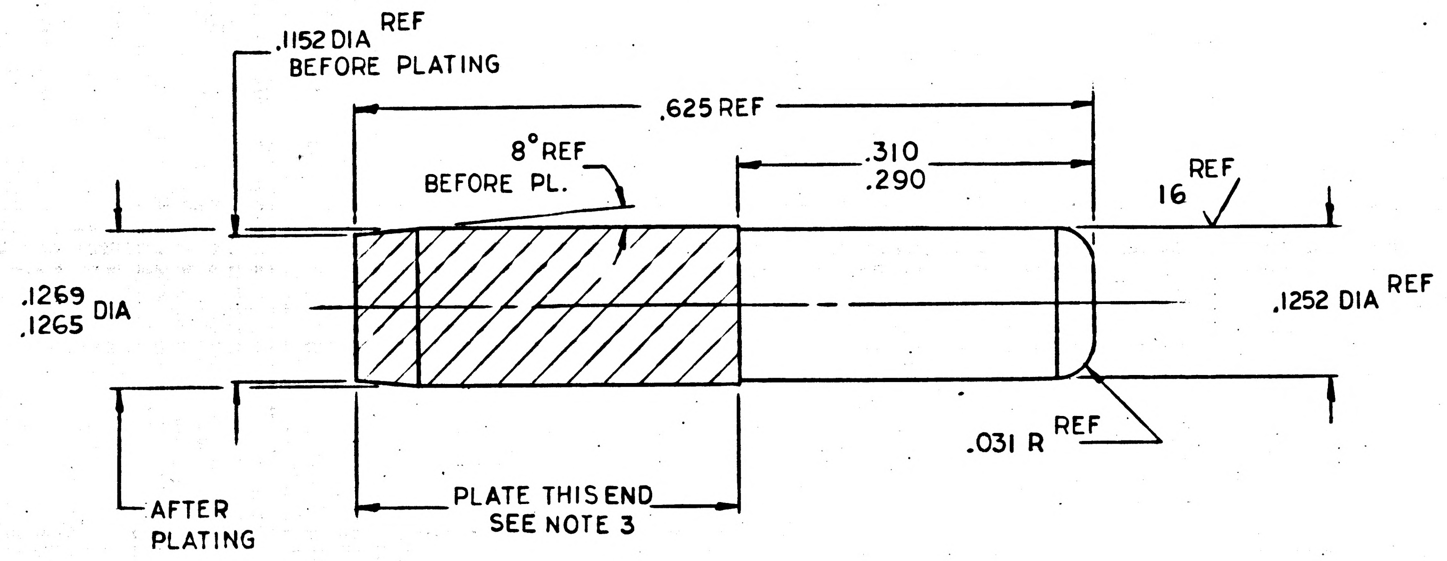

NOTES:

1. INTERPRET DRAWING IN ACCORDANCE WITH STANDARDS PRESCRIBED BY MIL-D-70327.
2. MATL - PIN, STRAIGHT, HEADLESS (DOWELL) PER MS16555-628
3. ELECTROLESS NICKEL PLATE INDICATED SURFACES PER MIL-C-26074A, CLASS I.

MASTER

QTY REQD	PART OR IDENTIFYING NO.	NOMENCLATURE OR DESCRIPTION	FIND NO.

LIST OF MATERIALS

NEXT ASSY	USED ON
APPLICATION	

UNLESS OTHERWISE SPECIFIED
DIMENSIONS ARE IN INCHES
TOLERANCES ON
FRACTIONS ± — DECIMALS ± — ANGLES ± —
DO NOT SCALE THIS DRAWING

MATERIAL
SEE NOTE 2

HEAT TREATMENT
—

FINAL FINISH
SEE NOTE 3

M I T
INSTRUMENTATION LAB
CAMBRIDGE, MASS.
DWG. NO.
CONTRACT

DRAWN R. Hoag DATE 8-23-63
CHECKED R. P. Kuzmanovic 10 Sep 63
APPROVAL W.D. Turner 10 SEP 63
APPROVAL
NASA APPROVAL 9/10/63
MIT APPROVAL 12 Sep 63

MANNED SPACECRAFT CENTER
HOUSTON, TEXAS

PIN, STEP

CODE IDENT NO.
SIZE C
NASA DRAWING NO. 1004249
SCALE 10/1
WT
SHEET 1 OF 1

NOTICE — WHEN GOVERNMENT DRAWINGS, SPECIFICATIONS, OR OTHER DATA ARE USED FOR ANY PURPOSE OTHER THAN IN CONNECTION WITH A DEFINITELY RELATED GOVERNMENT PROCUREMENT OPERATION, THE UNITED STATES GOVERNMENT THEREBY INCURS NO RESPONSIBILITY NOR ANY OBLIGATION WHATSOEVER; AND THE FACT THAT THE GOVERNMENT MAY HAVE FORMULATED, FURNISHED, OR IN ANY WAY SUPPLIED THE SAID DRAWINGS, SPECIFICATIONS OR OTHER DATA IS NOT TO BE REGARDED BY IMPLICATION OR OTHERWISE AS IN ANY MANNER LICENSING THE HOLDER OR ANY OTHER PERSON OR CORPORATION, OR CONVEYING ANY RIGHTS OR PERMISSION TO MANUFACTURE, USE, OR SELL ANY PATENTED INVENTION THAT MAY IN ANY WAY BE RELATED THERETO.

1004249

REVISIONS 03/39			
SYM	DESCRIPTION	DATE	APPROVAL

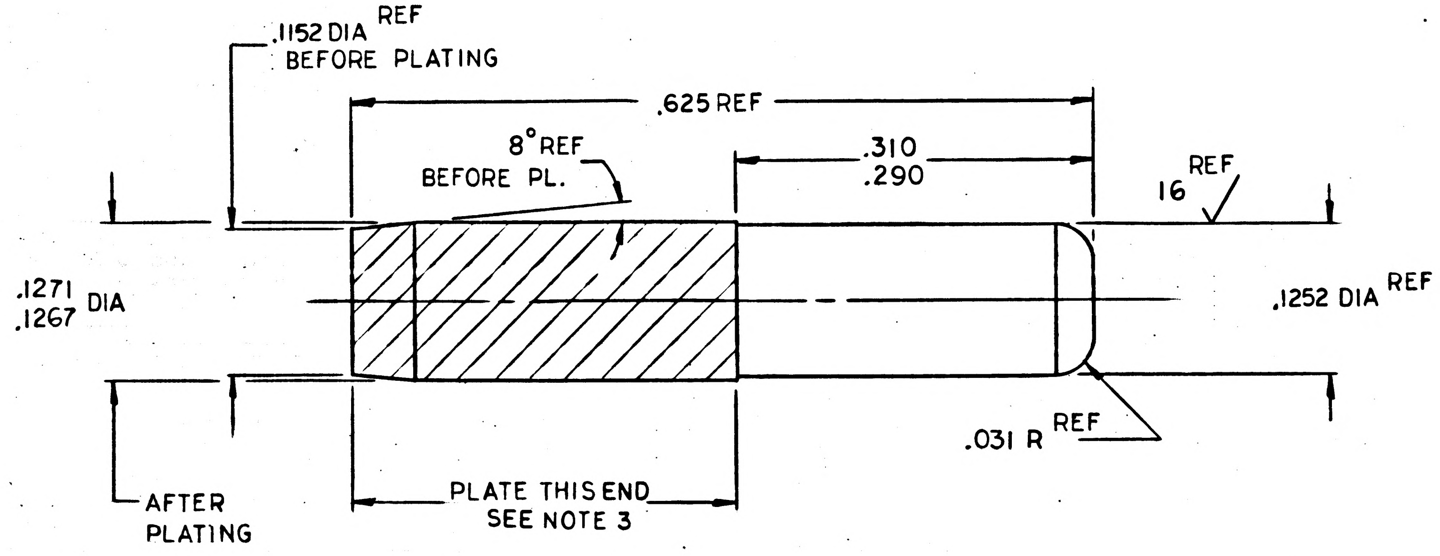

NOTES:
1. INTERPRET DRAWING IN ACCORDANCE WITH STANDARDS PRESCRIBED BY MIL-D-70327.
2. MATL - PIN, STRAIGHT, HEADLESS (DOWELL) PER MS16555-628
3. ELECTROLESS NICKEL PLATE INDICATED SURFACES PER MIL-C-26074A, CLASS I.

MASTER

QTY REQD	PART OR IDENTIFYING NO.	NOMENCLATURE OR DESCRIPTION	FIND NO.

LIST OF MATERIALS

NEXT ASSY	USED ON
APPLICATION	

UNLESS OTHERWISE SPECIFIED
DIMENSIONS ARE IN INCHES
TOLERANCES ON
FRACTIONS ± — DECIMALS ± — ANGLES ± —
DO NOT SCALE THIS DRAWING
MATERIAL SEE NOTE 2
HEAT TREATMENT —
FINAL FINISH SEE NOTE 3

MIT
INSTRUMENTATION LAB
CAMBRIDGE, MASS.
DWG. NO. CONTRACT
DRAWN R. Hongs DATE 8-23-63
CHECKED 10SEP63
APPROVAL 10SEP63
APPROVAL
NASA APPROVAL 9/12/63
MIT APPROVAL 12Sep63

MANNED SPACECRAFT CENTER
HOUSTON, TEXAS

PIN, STEP

CODE IDENT NO.
SIZE C
NASA DRAWING NO. 1004249
SCALE 10/1
WT
SHEET 1 OF 1

INCHES
0 1 2
PHOTOGRAPHIC SCALE ONLY

NOTICE — WHEN GOVERNMENT DRAWINGS, SPECIFICATIONS, OR OTHER DATA ARE USED FOR ANY PURPOSE OTHER THAN IN CONNECTION WITH A DEFINITELY RELATED GOVERNMENT PROCUREMENT OPERATION, THE UNITED STATES GOVERNMENT THEREBY INCURS NO RESPONSIBILITY NOR ANY OBLIGATION WHATSOEVER; AND THE FACT THAT THE GOVERNMENT MAY HAVE FORMULATED, FURNISHED, OR IN ANY WAY SUPPLIED THE SAID DRAWINGS, SPECIFICATIONS OR OTHER DATA IS NOT TO BE REGARDED BY IMPLICATION OR OTHERWISE AS IN ANY MANNER LICENSING THE HOLDER OR ANY OTHER PERSON OR CORPORATION, OR CONVEYING ANY RIGHTS OR PERMISSION TO MANUFACTURE, USE, OR SELL ANY PATENTED INVENTION THAT MAY IN ANY WAY BE RELATED THERETO.

1004250

REVISIONS 03/39			
SYM	DESCRIPTION	DATE	APPROVAL

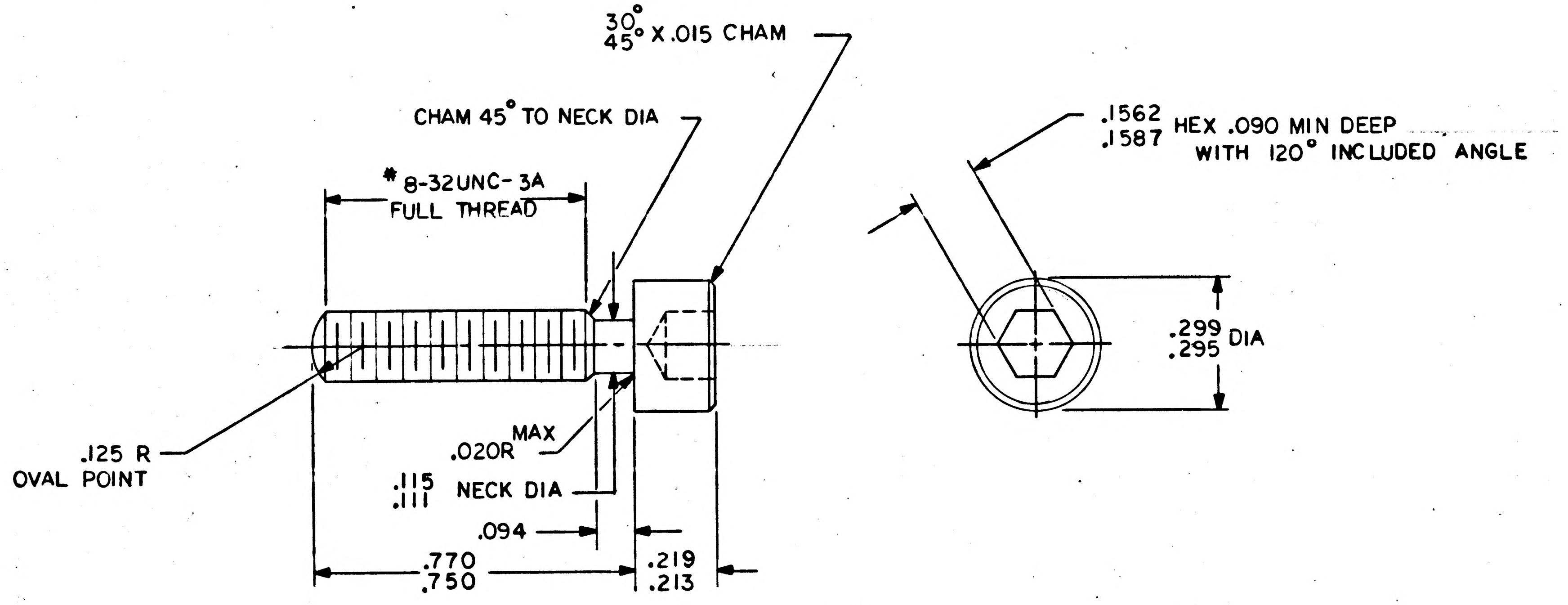
30°
45° X .015 CHAM
CHAM 45° TO NECK DIA
# 8-32UNC-3A
FULL THREAD
.125 R
OVAL POINT
.020R MAX
.115
.111 NECK DIA
.094
.770
.750
.219
.213
.1562
.1587 HEX .090 MIN DEEP
WITH 120° INCLUDED ANGLE
.299
.295 DIA

NOTES:-
1. INTERPRET DRAWING IN ACCORDANCE WITH STANDARDS PRESCRIBED BY MIL-D-70327
2. MATL:-MAKE FROM UNKNURLED HEAD SHOULDER SCREW PER MS-16637-15 OR 416 CRES PER QQ-S-763
3. FINISH:-PASSIVATE PER MIL-F-14072 E300

MASTER

QTY REQD	PART OR IDENTIFYING NO.	NOMENCLATURE OR DESCRIPTION	FIND NO.

LIST OF MATERIALS

NEXT ASSY | USED ON
APPLICATION

UNLESS OTHERWISE SPECIFIED
DIMENSIONS ARE IN INCHES
TOLERANCES ON
FRACTIONS ± DECIMALS ± .005 ANGLES ±
DO NOT SCALE THIS DRAWING
MATERIAL SEE NOTE 2
HEAT TREATMENT R_C 35 TO R_C 40
FINAL FINISH

MIT
INSTRUMENTATION LAB
CAMBRIDGE, MASS.
DWG. NO. CONTRACT
DRAWN Louis S. [illegible] DATE 23-9-63
CHECKED [illegible] 10Sep63
APPROVAL [illegible] 10 SEP63
APPROVAL
NASA APPROVAL 9/13/63
MIT APPROVAL 12 Sep 63

MANNED SPACECRAFT CENTER
HOUSTON, TEXAS

SCREW

CODE IDENT NO. | SIZE C | NASA DRAWING NO. 1004250
SCALE 4/1 | WT | SHEET 1 OF 1

INCHES
0 1 2
PHOTOGRAPHIC SCALE ONLY

NOTICE — WHEN GOVERNMENT DRAWINGS, SPECIFICATIONS, OR OTHER DATA ARE USED FOR ANY PURPOSE OTHER THAN IN CONNECTION WITH A DEFINITELY RELATED GOVERNMENT PROCUREMENT OPERATION, THE UNITED STATES GOVERNMENT THEREBY INCURS NO RESPONSIBILITY NOR ANY OBLIGATION WHATSOEVER; AND THE FACT THAT THE GOVERNMENT MAY HAVE FORMULATED, FURNISHED, OR IN ANY WAY SUPPLIED THE SAID DRAWINGS, SPECIFICATIONS OR OTHER DATA IS NOT TO BE REGARDED BY IMPLICATION OR OTHERWISE AS IN ANY MANNER LICENSING THE HOLDER OR ANY OTHER PERSON OR CORPORATION, OR CONVEYING ANY RIGHTS OR PERMISSION TO MANUFACTURE, USE, OR SELL ANY PATENTED INVENTION THAT MAY IN ANY WAY BE RELATED THERETO.

REVISIONS 04012			
SYM	DESCRIPTION	DATE	APPROVAL
A	REVISED PER TDRR 04505	11-6-63	25 Dec WK

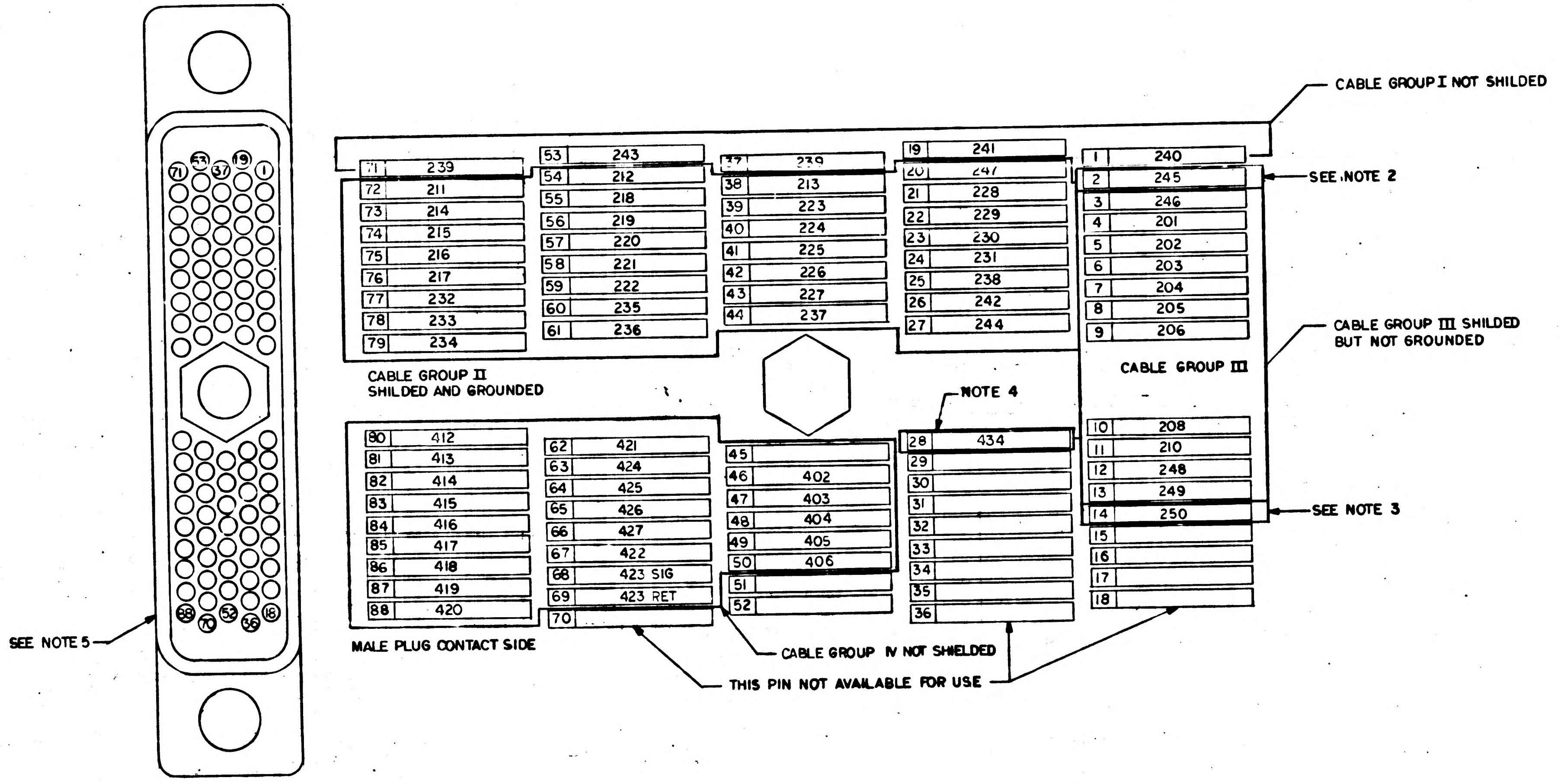
71
53
37
19
1
88
70
52
36
18
SEE NOTE 5
MALE PLUG CONTACT SIDE
CABLE GROUP I NOT SHILDED
SEE NOTE 2
CABLE GROUP II
SHILDED AND GROUNDED
CABLE GROUP III SHILDED
BUT NOT GROUNDED
CABLE GROUP III
NOTE 4
SEE NOTE 3
CABLE GROUP IV NOT SHIELDED
THIS PIN NOT AVAILABLE FOR USE

PIN	WIRE
71	239
72	211
73	214
74	215
75	216
76	217
77	232
78	233
79	234
53	243
54	212
55	218
56	219
57	220
58	221
59	222
60	235
61	236
37	239
38	213
39	223
40	224
41	225
42	226
43	227
44	237
19	241
20	247
21	228
22	229
23	230
24	231
25	238
26	242
27	244
1	240
2	245
3	246
4	201
5	202
6	203
7	204
8	205
9	206
80	412
81	413
82	414
83	415
84	416
85	417
86	418
87	419
88	420
62	421
63	424
64	425
65	426
66	427
67	422
68	423 SIG
69	423 RET
70	
45	
46	402
47	403
48	404
49	405
50	406
51	
52	
28	434
29	
30	
31	
32	
33	
34	
35	
36	
10	208
11	210
12	248
13	249
14	250
15	
16	
17	
18	

NOTES:
1. INTERPRET DRAWING IN ACCORDANCE WITH STANDARDS PRESCRIBED BY MIL- D-70327
2. THE SHIELD FOR CABLE GROUP II IS CONNECTED TO PIN 2
3. THE SHIELD FOR CABLE GROUP III IS CONNECTED TO PIN 14
4. ALL CABLE GROUP II AND III RETURN WIRES WILL BE CONNECTED UP ON THE SPACE CRAFT SIDE OF THE CONNECTOR AND BROUGHT THROUGH ON PIN NO. 28
5. FIGURE DENOTES THE CONTACT SIDE OF THE MALE CONNECTOR ATTACHED TO THE DSKY WITH MALE PINS

MASTER

QTY REQD	PART OR IDENTIFYING NO.	NOMENCLATURE OR DESCRIPTION	FIND NO.

LIST OF MATERIALS

NEXT ASSY	USED ON

APPLICATION

UNLESS OTHERWISE SPECIFIED
DIMENSIONS ARE IN INCHES
TOLERANCES ON
FRACTIONS ± // DECIMALS ± // ANGLES ± //
DO NOT SCALE THIS DRAWING
MATERIAL //
HEAT TREATMENT //
FINAL FINISH //

MIT
INSTRUMENTATION LAB
CAMBRIDGE, MASS.
DWG. NO. CONTRACT
DRAWN J. Crowley DATE 9-27-63
CHECKED
APPROVAL
APPROVAL
NASA APPROVAL 10/1/63
MIT APPROVAL 10/1/63

MANNED SPACECRAFT CENTER
HOUSTON, TEXAS

SIGNAL PIN ASSIGNMENT
88 PIN CONNECTOR
(MAIN PANEL DSKY)

CODE IDENT NO.
SIZE D
NASA DRAWING NO. 100425
SCALE NONE
WT
SHEET 1 OF 1

100425 A

INCHES
0 1 2
PHOTOGRAPHIC SCALE ONLY

NOTICE — WHEN GOVERNMENT DRAWINGS, SPECIFICATIONS, OR OTHER DATA ARE USED FOR ANY PURPOSE OTHER THAN IN CONNECTION WITH A DEFINITELY RELATED GOVERNMENT PROCUREMENT OPERATION, THE UNITED STATES GOVERNMENT THEREBY INCURS NO RESPONSIBILITY NOR ANY OBLIGATION WHATSOEVER; AND THE FACT THAT THE GOVERNMENT MAY HAVE FORMULATED, FURNISHED, OR IN ANY WAY SUPPLIED THE SAID DRAWINGS, SPECIFICATIONS OR OTHER DATA IS NOT TO BE REGARDED BY IMPLICATION OR OTHERWISE AS IN ANY MANNER LICENSING THE HOLDER OR ANY OTHER PERSON OR CORPORATION, OR CONVEYING ANY RIGHTS OR PERMISSION TO MANUFACTURE, USE, OR SELL ANY PATENTED INVENTION THAT MAY IN ANY WAY BE RELATED THERETO.

REVISIONS 04012

SYM	DESCRIPTION	DATE	APPROVAL
A	REVISED PER TDRR 04505	11-6-63	25 Nov 63
B	CHANGED PER TDRR 07070 DR RWD. CHK	12	

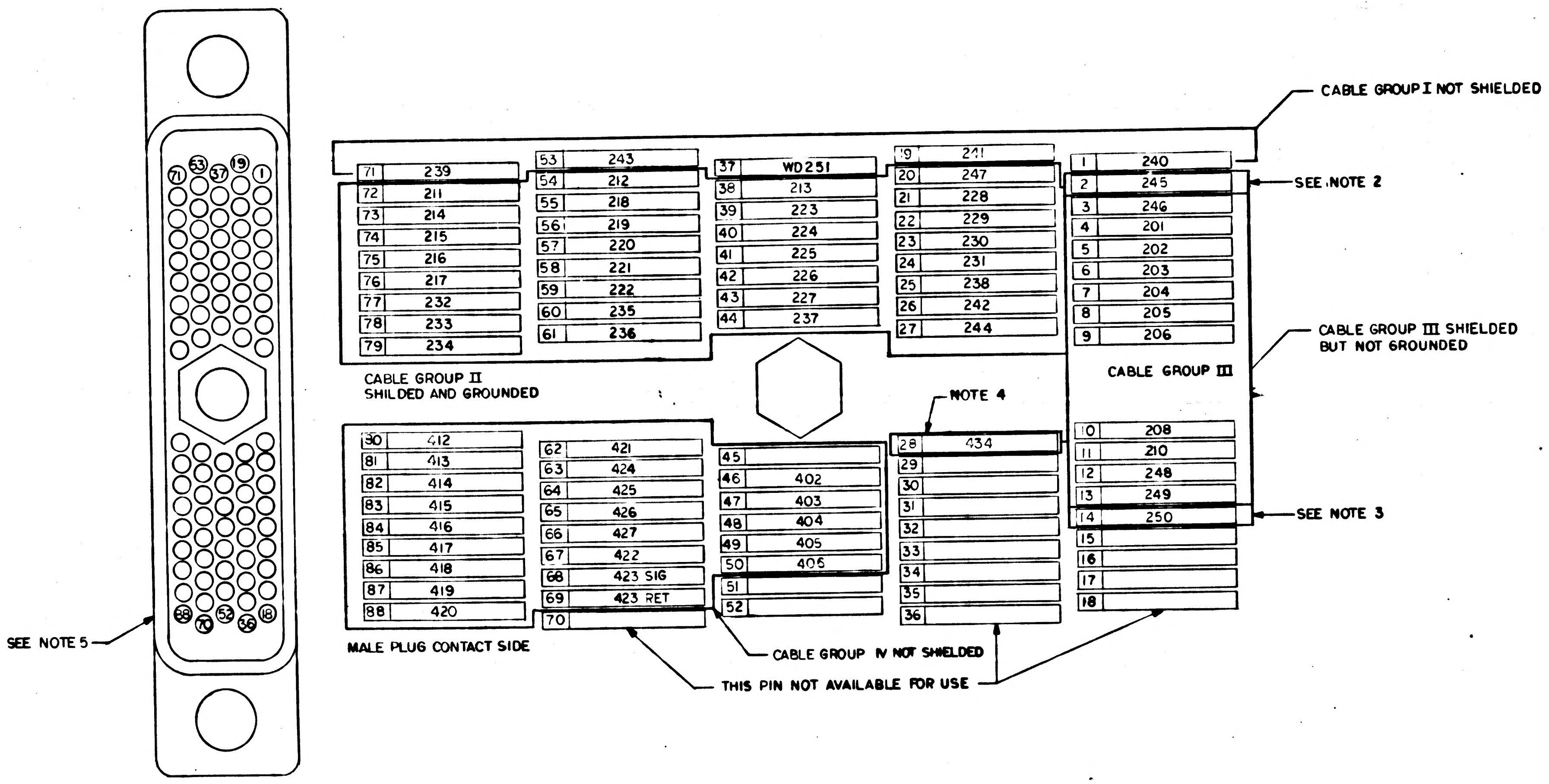
71
53
37
19
1
88
70
52
36
18
SEE NOTE 5
CABLE GROUP I NOT SHIELDED
SEE NOTE 2
CABLE GROUP II
SHILDED AND GROUNDED
CABLE GROUP III SHIELDED
BUT NOT GROUNDED
CABLE GROUP III
NOTE 4
SEE NOTE 3
MALE PLUG CONTACT SIDE
CABLE GROUP IV NOT SHIELDED
THIS PIN NOT AVAILABLE FOR USE

Pin	Wire
71	239
72	211
73	214
74	215
75	216
76	217
77	232
78	233
79	234
53	243
54	212
55	218
56	219
57	220
58	221
59	222
60	235
61	236
37	WD251
38	213
39	223
40	224
41	225
42	226
43	227
44	237
19	241
20	247
21	228
22	229
23	230
24	231
25	238
26	242
27	244
1	240
2	245
3	246
4	201
5	202
6	203
7	204
8	205
9	206
80	412
81	413
82	414
83	415
84	416
85	417
86	418
87	419
88	420
62	421
63	424
64	425
65	426
66	427
67	422
68	423 SIG
69	423 RET
70	
45	
46	402
47	403
48	404
49	405
50	406
51	
52	
28	434
29	
30	
31	
32	
33	
34	
35	
36	
10	208
11	210
12	248
13	249
14	250
15	
16	
17	
18	

NOTES:

1. INTERPRET DRAWING IN ACCORDANCE WITH STANDARDS PRESCRIBED BY MIL- D-70327
2. THE SHIELD FOR CABLE GROUP II IS CONNECTED TO PIN 2
3. THE SHIELD FOR CABLE GROUP III IS CONNECTED TO PIN 14
4. ALL CABLE GROUP II AND III RETURN WIRES WILL BE CONNECTED UP ON THE SPACE CRAFT SIDE OF THE CONNECTOR AND BROUGHT THROUGH ON PIN NO. 28
5. FIGURE DENOTES THE CONTACT SIDE OF THE MALE CONNECTOR ATTACHED TO THE DSKY WITH MALE PINS

QTY REQD	PART OR IDENTIFYING NO.	NOMENCLATURE OR DESCRIPTION	FIND NO.

LIST OF MATERIALS

NEXT ASSY	USED ON

APPLICATION

UNLESS OTHERWISE SPECIFIED
DIMENSIONS ARE IN INCHES
TOLERANCES ON
FRACTIONS ± — DECIMALS ± — ANGLES ± —
DO NOT SCALE THIS DRAWING
MATERIAL —
HEAT TREATMENT —
FINAL FINISH —

MIT
INSTRUMENTATION LAB
CAMBRIDGE, MASS.
DWG. NO. CONTRACT
DRAWN J. Cowley DATE 9-27-63
CHECKED
APPROVAL
APPROVAL Eldon C. Hall
NASA APPROVAL 10/1/63
MIT APPROVAL 17 Oct 63

MANNED SPACECRAFT CENTER
HOUSTON, TEXAS

SIGNAL PIN ASSIGNMENT
88 PIN CONNECTOR
(MAIN PANEL DSKY)

CODE IDENT NO. —
SIZE D
NASA DRAWING NO. 1004251
SCALE NONE
WT
SHEET 1 OF 1

NOTICE — WHEN GOVERNMENT DRAWINGS, SPECIFICATIONS, OR OTHER DATA ARE USED FOR ANY PURPOSE OTHER THAN IN CONNECTION WITH A DEFINITELY RELATED GOVERNMENT PROCUREMENT OPERATION, THE UNITED STATES GOVERNMENT THEREBY INCURS NO RESPONSIBILITY NOR ANY OBLIGATION WHATSOEVER; AND THE FACT THAT THE GOVERNMENT MAY HAVE FORMULATED, FURNISHED, OR IN ANY WAY SUPPLIED THE SAID DRAWINGS, SPECIFICATIONS OR OTHER DATA IS NOT TO BE REGARDED BY IMPLICATION OR OTHERWISE AS IN ANY MANNER LICENSING THE HOLDER OR ANY OTHER PERSON OR CORPORATION, OR CONVEYING ANY RIGHTS OR PERMISSION TO MANUFACTURE, USE, OR SELL ANY PATENTED INVENTION THAT MAY IN ANY WAY BE RELATED THERETO.

REVISIONS 14012

SYM	DESCRIPTION	DATE	APPROVAL
A	REVISED PER TDRR 04505	11-6-63	
B	CHANGED PER TDRR 07070 DR CHK	12/4/64	
C	REPLACED BY REVISION D ~~WITH CHANGE~~ PER TDRR07644 DR CHK	9/30/64	

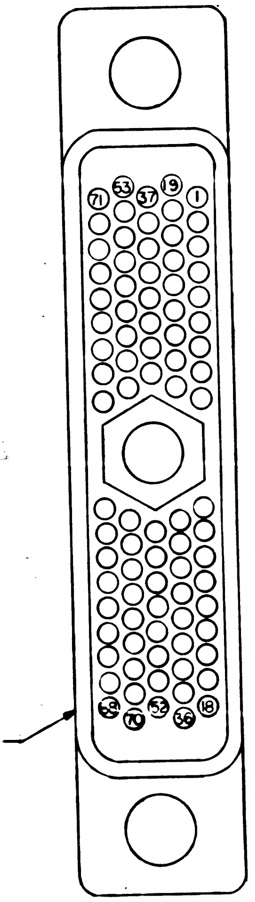

SEE NOTE 5

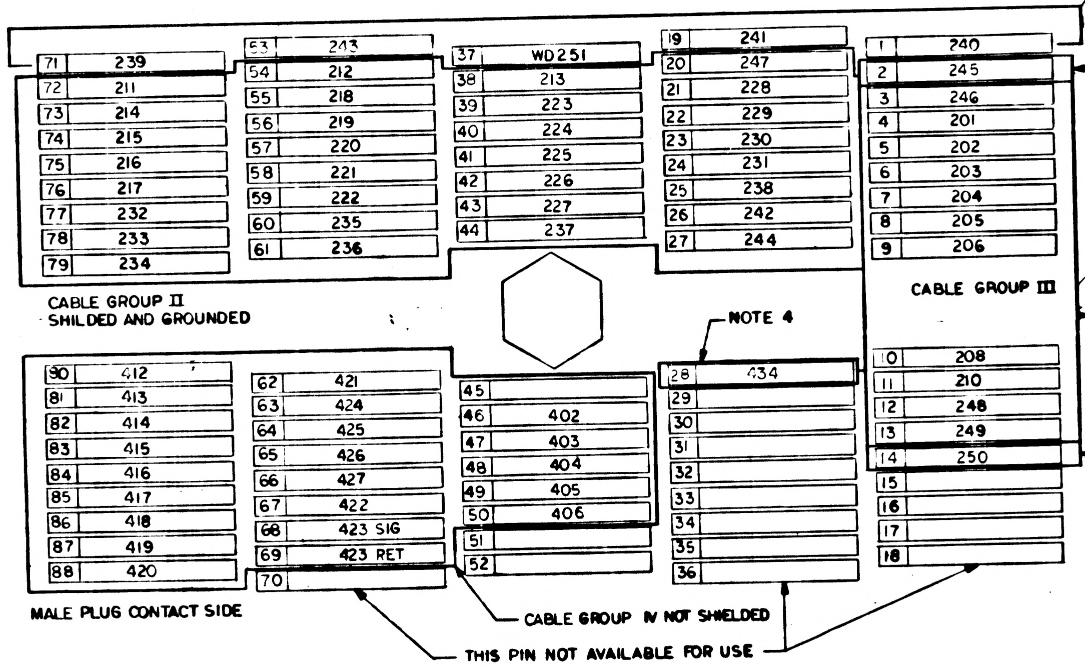

71	239	53	243	37	WD251	19	241	1	240
72	211	54	212	38	213	20	247	2	245
73	214	55	218	39	223	21	228	3	246
74	215	56	219	40	224	22	229	4	201
75	216	57	220	41	225	23	230	5	202
76	217	58	221	42	226	24	231	6	203
77	232	59	222	43	227	25	238	7	204
78	233	60	235	44	237	26	242	8	205
79	234	61	236			27	244	9	206

80	412	62	421	45		28	434	10	208
81	413	63	424	46	402	29		11	210
82	414	64	425	47	403	30		12	248
83	415	65	426	48	404	31		13	249
84	416	66	427	49	405	32		14	250
85	417	67	422	50	406	33		15	
86	418	68	423 SIG	51		34		16	
87	419	69	423 RET	52		35		17	
88	420	70				36		18	

Ⓒ REPLACED BY REV D WITH CHANGE.

NOTES:
1. INTERPRET DRAWING IN ACCORDANCE WITH STANDARDS PRESCRIBED BY MIL- D-70327
2. THE SHIELD FOR CABLE GROUP II IS CONNECTED TO PIN 2
3. THE SHIELD FOR CABLE GROUP III IS CONNECTED TO PIN 14
4. ALL CABLE GROUP II AND III RETURN WIRES WILL BE CONNECTED UP ON THE SPACE CRAFT SIDE OF THE CONNECTOR AND BROUGHT THROUGH ON PIN NO. 28
5. FIGURE DENOTES THE CONTACT SIDE OF THE MALE CONNECTOR ATTACHED TO THE DSKY WITH MALE PINS

MASTER

QTY REQD	PART OR IDENTIFYING NO.	NOMENCLATURE OR DESCRIPTION	FIND NO.

LIST OF MATERIALS

NEXT ASSY | USED ON
APPLICATION

UNLESS OTHERWISE SPECIFIED
DIMENSIONS ARE IN INCHES
TOLERANCES ON
FRACTIONS ± // DECIMALS ± // ANGLES ± //
DO NOT SCALE THIS DRAWING
MATERIAL //
HEAT TREATMENT //
FINAL FINISH //

MIT
INSTRUMENTATION LAB
CAMBRIDGE, MASS
DWG. NO. CONTRACT
DRAWN J. Cowley DATE 2-22-63
CHECKED
APPROVAL
APPROVAL
NASA APPROVAL
MIT APPROVAL

MANNED SPACECRAFT CENTER
HOUSTON, TEXAS

SIGNAL PIN ASSIGNMENT
88 PIN CONNECTOR
(MAIN PANEL DSKY)

CODE IDENT NO. —— | SIZE D | NASA DRAWING NO. 1004251
SCALE NONE | WT | SHEET 1 OF 1

REVISIONS 040/2			
SYM	DESCRIPTION	DATE	APPROVAL

NOTICE — WHEN GOVERNMENT DRAWINGS, SPECIFICATIONS, OR OTHER DATA ARE USED FOR ANY PURPOSE OTHER THAN IN CONNECTION WITH A DEFINITELY RELATED GOVERNMENT PROCUREMENT OPERATION, THE UNITED STATES GOVERNMENT THEREBY INCURS NO RESPONSIBILITY NOR ANY OBLIGATION WHATSOEVER; AND THE FACT THAT THE GOVERNMENT MAY HAVE FORMULATED, FURNISHED, OR IN ANY WAY SUPPLIED THE SAID DRAWINGS, SPECIFICATIONS OR OTHER DATA IS NOT TO BE REGARDED BY IMPLICATION OR OTHERWISE AS IN ANY MANNER LICENSING THE HOLDER OR ANY OTHER PERSON OR CORPORATION, OR CONVEYING ANY RIGHTS OR PERMISSION TO MANUFACTURE, USE, OR SELL ANY PATENTED INVENTION THAT MAY IN ANY WAY BE RELATED THERETO.

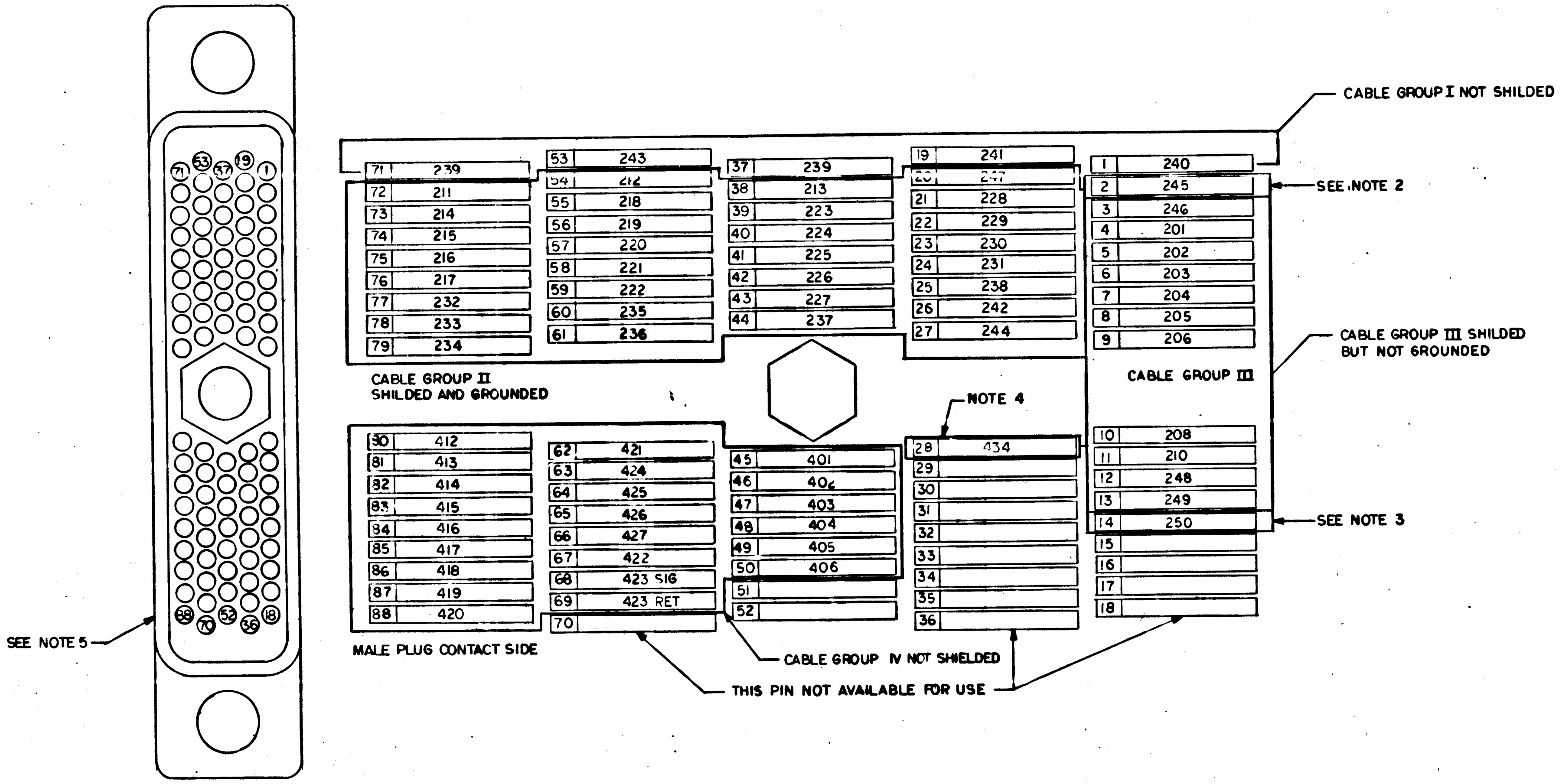
71
53
37
19
1
88
70
52
36
18
SEE NOTE 5
CABLE GROUP I NOT SHILDED
SEE NOTE 2
CABLE GROUP II
SHILDED AND GROUNDED
CABLE GROUP III SHILDED
BUT NOT GROUNDED
CABLE GROUP III
NOTE 4
SEE NOTE 3
MALE PLUG CONTACT SIDE
CABLE GROUP IV NOT SHIELDED
THIS PIN NOT AVAILABLE FOR USE

Pin	Signal
71	239
72	211
73	214
74	215
75	216
76	217
77	232
78	233
79	234
53	243
54	212
55	218
56	219
57	220
58	221
59	222
60	235
61	236
37	239
38	213
39	223
40	224
41	225
42	226
43	227
44	237
19	241
20	247
21	228
22	229
23	230
24	231
25	238
26	242
27	244
1	240
2	245
3	246
4	201
5	202
6	203
7	204
8	205
9	206
80	412
81	413
82	414
83	415
84	416
85	417
86	418
87	419
88	420
62	421
63	424
64	425
65	426
66	427
67	422
68	423 SIG
69	423 RET
70	
45	401
46	402
47	403
48	404
49	405
50	406
51	
52	
28	434
29	
30	
31	
32	
33	
34	
35	
36	
10	208
11	210
12	248
13	249
14	250
15	
16	
17	
18	

NOTES:
1. INTERPRET DRAWING IN ACCORDANCE WITH STANDARDS PRESCRIBED BY MIL- D-70327
2. THE SHIELD FOR CABLE GROUP II IS CONNECTED TO PIN 2
3. THE SHIELD FOR CABLE GROUP III IS CONNECTED TO PIN 14
4. ALL CABLE GROUP II AND III RETURN WIRES WILL BE CONNECTED UP ON THE SPACE CRAFT SIDE OF THE CONNECTOR AND BROUGHT THROUGH ON PIN NO. 28
5. FIGURE DENOTES THE CONTACT SIDE OF THE MALE CONNECTOR ATTACHED TO THE DSKY WITH MALE PINS.

MASTER

QTY REQD	PART OR IDENTIFYING NO.	NOMENCLATURE OR DESCRIPTION	FIND NO.

LIST OF MATERIALS

NEXT ASSY	USED ON
APPLICATION	

UNLESS OTHERWISE SPECIFIED
DIMENSIONS ARE IN INCHES
TOLERANCES ON
FRACTIONS ± — DECIMALS ± — ANGLES ± —
DO NOT SCALE THIS DRAWING
MATERIAL —
HEAT TREATMENT —
FINAL FINISH —

MIT
INSTRUMENTATION LAB
CAMBRIDGE, MASS.
DWG. NO.
CONTRACT
DRAWN J. Cowley DATE 9-27-63
CHECKED
APPROVAL
APPROVAL Eldon C. Hall 16 Oct 63
NASA APPROVAL 10/17/63
MIT APPROVAL 17 Oct 63

MANNED SPACECRAFT CENTER
HOUSTON, TEXAS

SIGNAL PIN ASSIGNMENT
88 PIN CONNECTOR
(MAIN PANEL DSKY)

CODE IDENT NO.
SIZE D
NASA DRAWING NO. 1004251
SCALE NONE
WT
SHEET 1 OF 1

INCHES
0 1 2
PHOTOGRAPHIC SCALE ONLY

NOTICE — WHEN GOVERNMENT DRAWINGS, SPECIFICATIONS, OR OTHER DATA ARE USED FOR ANY PURPOSE OTHER THAN IN CONNECTION WITH A DEFINITELY RELATED GOVERNMENT PROCUREMENT OPERATION, THE UNITED STATES GOVERNMENT THEREBY INCURS NO RESPONSIBILITY NOR ANY OBLIGATION WHATSOEVER; AND THE FACT THAT THE GOVERNMENT MAY HAVE FORMULATED, FURNISHED, OR IN ANY WAY SUPPLIED THE SAID DRAWINGS, SPECIFICATIONS OR OTHER DATA IS NOT TO BE REGARDED BY IMPLICATION OR OTHERWISE AS IN ANY MANNER LICENSING THE HOLDER OR ANY OTHER PERSON OR CORPORATION, OR CONVEYING ANY RIGHTS OR PERMISSION TO MANUFACTURE, USE, OR SELL ANY PATENTED INVENTION THAT MAY IN ANY WAY BE RELATED THERETO.

(M)

REVISIONS 03453			
SYM	DESCRIPTION	DATE	APPROVAL
A	REVISED PER TDRR 07347 DR B Jenson CHK Ow	6 Nov 64	Hue

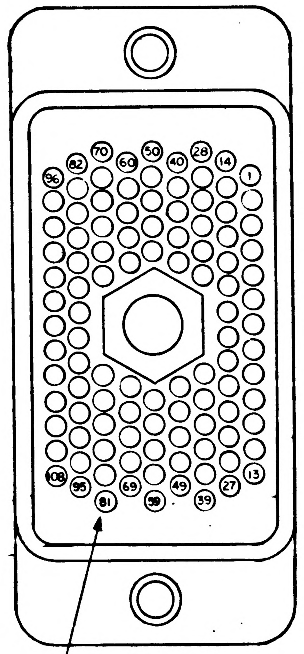

SEE NOTE 5

SEE NOTE 2

96	
97	
98	
99	
100	
101	
102	
103	
104	
105	
106	
107	
108	

82	330
83	
84	
85	
86	
87	
88	
89	
90	
91	
92	
93	
94	
95	

CABLE GROUP II SHIELDED

70	211
71	212
72	213
73	214
74	215
75	247

60	216
61	221
62	222
63	223
64	238

50	NOT AV.
51	237
52	NOT AV.
53	236
54	NOT AV.

40	229
41	230
42	244
43	235
44	234

28	217
29	218
30	219
31	220
32	232
33	233

14	224
15	225
16	226
17	227
18	228
19	231
20	242

76	
77	
78	
79	
80	
81	

65	316
66	317
67	331
68	
69	

CABLE GROUP I NOT SHIELDED

55	240
56	239
57	241
58	251
59	243

CABLE GROUP III SHIELDED BUT NOT GROUNDED

45	248
46	249
47	210
48	208
49	209

34	201
35	202
36	203
37	204
38	205
39	207

SEE NOTE 4

21	307
22	308
23	309
24	310
25	311
26	312
27	250

SEE NOTE 3

CABLE GROUP IV NOT SHIELDED

1	245
2	328
3	301
4	302
5	303
6	304
7	305
8	306
9	326
10	327
11	313
12	314
13	315

NOTES

1. INTERPRET DRAWING IN ACCORDANCE WITH STANDARDS PRESCRIBED BY MIL-D-70327
2. ALL CABLE GROUP II AND III SIGNAL RETURN WIRES WILL BE COMMONED ON J BOX HARNESS AND BROUGHT THRU ON PIN 82
3. THE SHIELD FOR CABLE GROUP II IS CONNECTED TO PIN NO. 1
4. THE SHIELD FOR CABLE GROUP III IS TIED TO PIN 27
5. FIGURE DENOTES THE CONTACT SIDE OF THE MALE CONNECTOR ATTACHED TO THE DSK WITH MALE PINS

QTY REQD	PART OR IDENTIFYING NO.	NOMENCLATURE OR DESCRIPTION	FIND NO.
LIST OF MATERIALS			

NEXT ASSY	USED ON
APPLICATION	

UNLESS OTHERWISE SPECIFIED
DIMENSIONS ARE IN INCHES
TOLERANCES ON
FRACTIONS ± DECIMALS ± ANGLES ±
DO NOT SCALE THIS DRAWING
MATERIAL
HEAT TREATMENT
FINAL FINISH

MIT
INSTRUMENTATION LAB
CAMBRIDGE, MASS
DWG NO. CONTRACT

DRAWN W. Horgan DATE 9-23-63
CHECKED
APPROVAL W. E. Tyson 9/24/63
APPROVAL E. J. Duggan 9/26/63
NASA APPROVAL
MIT APPROVAL 9/30/63

MANNED SPACECRAFT CENTER
HOUSTON, TEXAS

SIGNAL PIN ASSIGNMENT
05A6P1 CONNECTOR
NAV PANEL DSKY

CODE IDENT NO. | SIZE D | NASA DRAWING NO. 1004252
SCALE NONE | WT | SHEET 1 OF 1

NOTICE — WHEN GOVERNMENT DRAWINGS, SPECIFICATIONS, OR OTHER DATA ARE USED FOR ANY PURPOSE OTHER THAN IN CONNECTION WITH A DEFINITELY RELATED GOVERNMENT PROCUREMENT OPERATION, THE UNITED STATES GOVERNMENT THEREBY INCURS NO RESPONSIBILITY NOR ANY OBLIGATION WHATSOEVER; AND THE FACT THAT THE GOVERNMENT MAY HAVE FORMULATED, FURNISHED, OR IN ANY WAY SUPPLIED THE SAID DRAWINGS, SPECIFICATIONS OR OTHER DATA IS NOT TO BE REGARDED BY IMPLICATION OR OTHERWISE AS IN ANY MANNER LICENSING THE HOLDER OR ANY OTHER PERSON OR CORPORATION, OR CONVEYING ANY RIGHTS OR PERMISSION TO MANUFACTURE, USE, OR SELL ANY PATENTED INVENTION THAT MAY IN ANY WAY BE RELATED THERETO.

REVISIONS 03453			
SYM	DESCRIPTION	DATE	APPROVAL

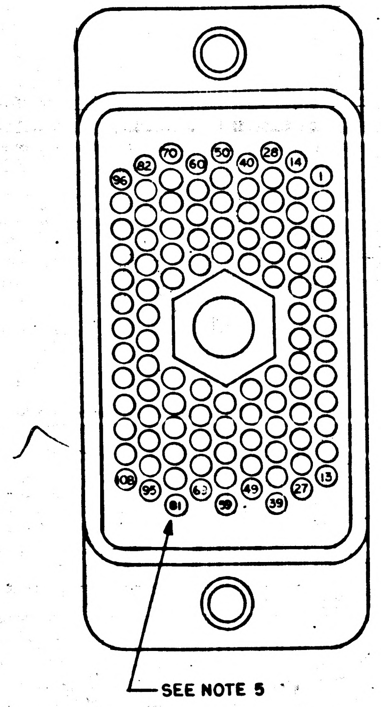

SEE NOTE 5

SEE NOTE 2

96	
97	
98	
99	
100	
101	
102	
103	
104	
105	
106	
107	
108	

82	330
83	
84	
85	
86	
87	
88	
89	
90	
91	
92	
93	
94	
95	

CABLE GROUP II SHIELDED

70	211
71	212
72	213
73	214
74	215
75	247

60	216
61	221
62	222
63	223
64	238

50	NOT AV.
51	237
52	NOT AV.
53	236
54	NOT AV.

40	229
41	230
42	244
43	235
44	234

28	217
29	218
30	219
31	220
32	232
33	233

14	224
15	225
16	226
17	227
18	228
19	231
20	242
21	307
22	308
23	309
24	310
25	311
26	312
27	250

SEE NOTE 3

1	245
2	328
3	301
4	302
5	303
6	304
7	305
8	306
9	326
10	327
11	313
12	314
13	315

76	
77	
78	
79	
80	
81	

65	
66	
67	
68	
69	

55	240
56	239
57	241
58	239
59	243

CABLE GROUP I
NOT SHIELDED

45	248
46	249
47	210
48	208
49	209

34	201
35	202
36	203
37	204
38	205
39	207

CABLE GROUP III
SHIELDED BUT
NOT GROUNDED

SEE NOTE 4

CABLE GROUP IV
NOT SHIELDED

NOTES

1. INTERPRET DRAWING IN ACCORDANCE WITH STANDARDS PRESCRIBED BY MIL-D-70327
2. ALL CABLE GROUP II AND III SIGNAL RETURN WIRES WILL BE COMMONED ON J BOX HARNESS AND, BROUGHT THRU ON PIN 82
3. THE SHIELD FOR CABLE GROUP II IS CONNECTED TO PIN NO. 1
4. THE SHIELD FOR CABLE GROUP III IS TIED TO PIN 27
5. FIGURE DENOTES THE CONTACT SIDE OF THE MALE CONNECTOR ATTACHED TO THE DSK WITH MALE PINS

QTY REQD	PART OR IDENTIFYING NO.	NOMENCLATURE OR DESCRIPTION	FIND NO.

LIST OF MATERIALS

MASTER

NEXT ASSY	USED ON
APPLICATION	

UNLESS OTHERWISE SPECIFIED
DIMENSIONS ARE IN INCHES
TOLERANCES ON
FRACTIONS ± — DECIMALS ± — ANGLES ± —
DO NOT SCALE THIS DRAWING
MATERIAL —
HEAT TREATMENT —
FINAL FINISH —

MIT
INSTRUMENTATION LAB
CAMBRIDGE, MASS.
DWG. NO. CONTRACT
DRAWN W. Horgan DATE 9-23-63
CHECKED
APPROVAL W E Tyrrell 9/24/63
APPROVAL E J Duggan 9/24/63
NASA APPROVAL 9/4/63
MIT APPROVAL R Nobel 9/24/63

MANNED SPACECRAFT CENTER
HOUSTON, TEXAS

SIGNAL PIN ASSIGNMENT
05A6P1 CONNECTOR
NAV PANEL DSKY

CODE IDENT NO. | SIZE D | NASA DRAWING NO. 1004252
SCALE NONE | WT — | SHEET 1 OF 1

INCHES
0 1 2
PHOTOGRAPHIC SCALE ONLY

NOTICE — WHEN GOVERNMENT DRAWINGS, SPECIFICATIONS, OR OTHER DATA ARE USED FOR ANY PURPOSE OTHER THAN IN CONNECTION WITH A DEFINITELY RELATED GOVERNMENT PROCUREMENT OPERATION, THE UNITED STATES GOVERNMENT THEREBY INCURS NO RESPONSIBILITY NOR ANY OBLIGATION WHATSOEVER; AND THE FACT THAT THE GOVERNMENT MAY HAVE FORMULATED, FURNISHED, OR IN ANY WAY SUPPLIED THE SAID DRAWINGS, SPECIFICATIONS OR OTHER DATA IS NOT TO BE REGARDED BY IMPLICATION OR OTHERWISE AS IN ANY MANNER LICENSING THE HOLDER OR ANY OTHER PERSON OR CORPORATION, OR CONVEYING ANY RIGHTS OR PERMISSION TO MANUFACTURE, USE, OR SELL ANY PATENTED INVENTION THAT MAY IN ANY WAY BE RELATED THERETO.

A 1004254

REVISIONS 03/37

SYM	DESCRIPTION	DATE	APPROVAL
A	REVISED PER TDRR 05639	1/2/64	TB BK

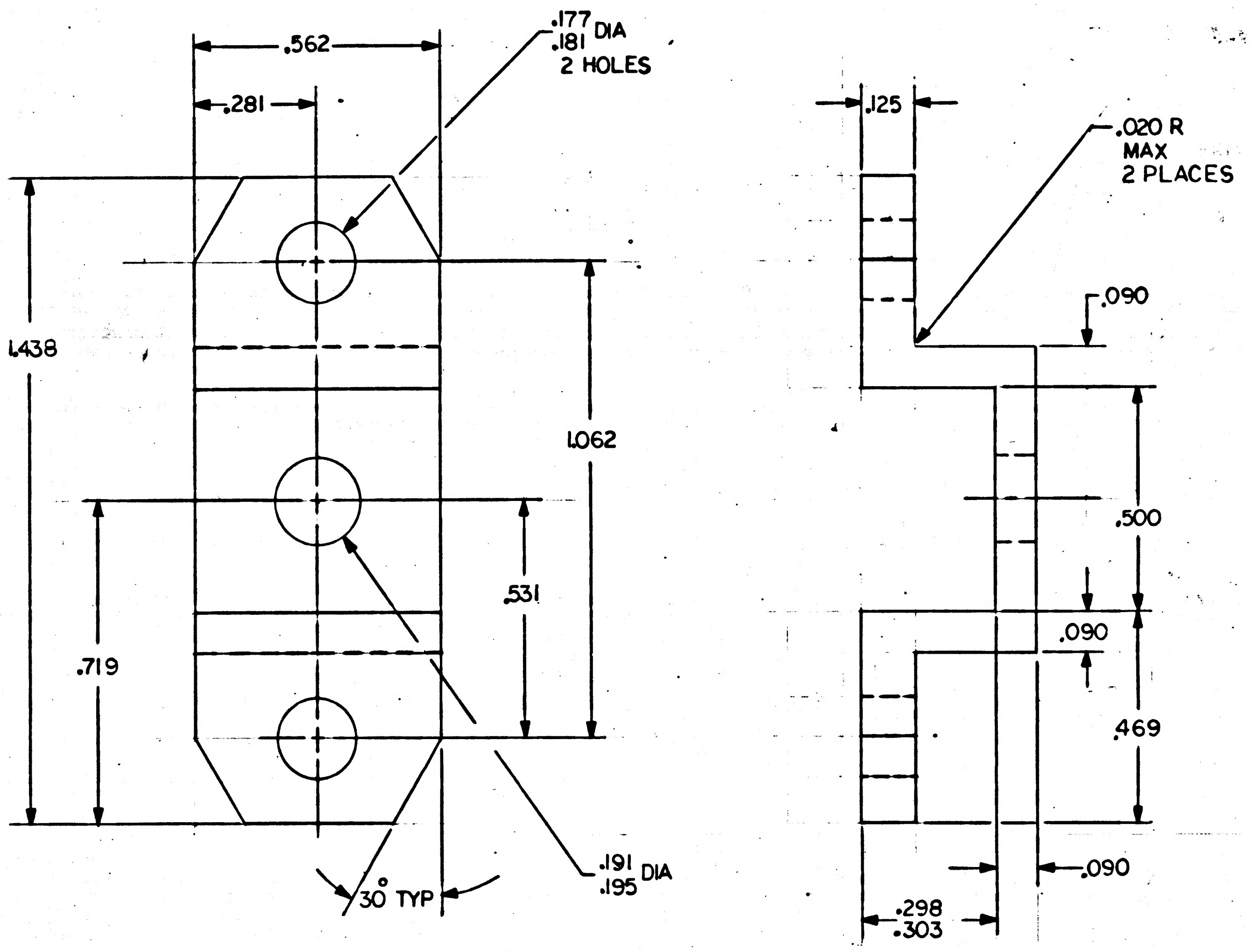

NOTES:—

1. INTERPRET DRAWING IN ACCORDANCE WITH STANDARDS PRESCRIBED BY MIL-D-70327
2. MATERIAL 416 CRES PER QQ-S-763 CLASS 416 COND A
3. PASSIVATE PER MIL-F-14072, E300
4. 125√ FINISH ALL OVER
5. REMOVE BURRS AND BREAK SHARP EDGES .005 .015

MASTER

QTY REQD	PART OR IDENTIFYING NO.	NOMENCLATURE OR DESCRIPTION	FIND NO.

LIST OF MATERIALS

NEXT ASSY | USED ON

APPLICATION

UNLESS OTHERWISE SPECIFIED
DIMENSIONS ARE IN INCHES
TOLERANCES ON
FRACTIONS ± DECIMALS ± .005 ANGLES ± 2°
DO NOT SCALE THIS DRAWING

MATERIAL
SEE NOTE 2

HEAT TREATMENT
R_C37 TO R_C40

FINAL FINISH
SEE NOTE 3

MIT
INSTRUMENTATION LAB
CAMBRIDGE, MASS.
DWG. NO. CONTRACT

DRAWN Louis Alowe DATE 26-9-63
CHECKED C. Kingsbury
APPROVAL W B Turner 10 SEP 63
APPROVAL D Dugan
NASA APPROVAL 9/12/63
MIT APPROVAL W Kupfer 12 Sep 63

MANNED SPACECRAFT CENTER
HOUSTON, TEXAS

RETAINER, JACK SCREW

CODE IDENT NO. | SIZE C | NASA DRAWING NO. 1004254

SCALE 4/1 | WT | SHEET 1 OF 1

NOTICE — WHEN GOVERNMENT DRAWINGS, SPECIFICATIONS, OR OTHER DATA ARE USED FOR ANY PURPOSE OTHER THAN IN CONNECTION WITH A DEFINITELY RELATED GOVERNMENT PROCUREMENT OPERATION, THE UNITED STATES GOVERNMENT THEREBY INCURS NO RESPONSIBILITY NOR ANY OBLIGATION WHATSOEVER; AND THE FACT THAT THE GOVERNMENT MAY HAVE FORMULATED, FURNISHED, OR IN ANY WAY SUPPLIED THE SAID DRAWINGS, SPECIFICATIONS OR OTHER DATA IS NOT TO BE REGARDED BY IMPLICATION OR OTHERWISE AS IN ANY MANNER LICENSING THE HOLDER OR ANY OTHER PERSON OR CORPORATION, OR CONVEYING ANY RIGHTS OR PERMISSION TO MANUFACTURE, USE, OR SELL ANY PATENTED INVENTION THAT MAY IN ANY WAY BE RELATED THERETO.

B 1004254

REVISIONS 03/37

SYM	DESCRIPTION	DATE	APPROVAL
A	REVISED PER TDRR 05639	1/7/64	
B	REVISED PER TDRR 05795	22 Jan 69	JWC

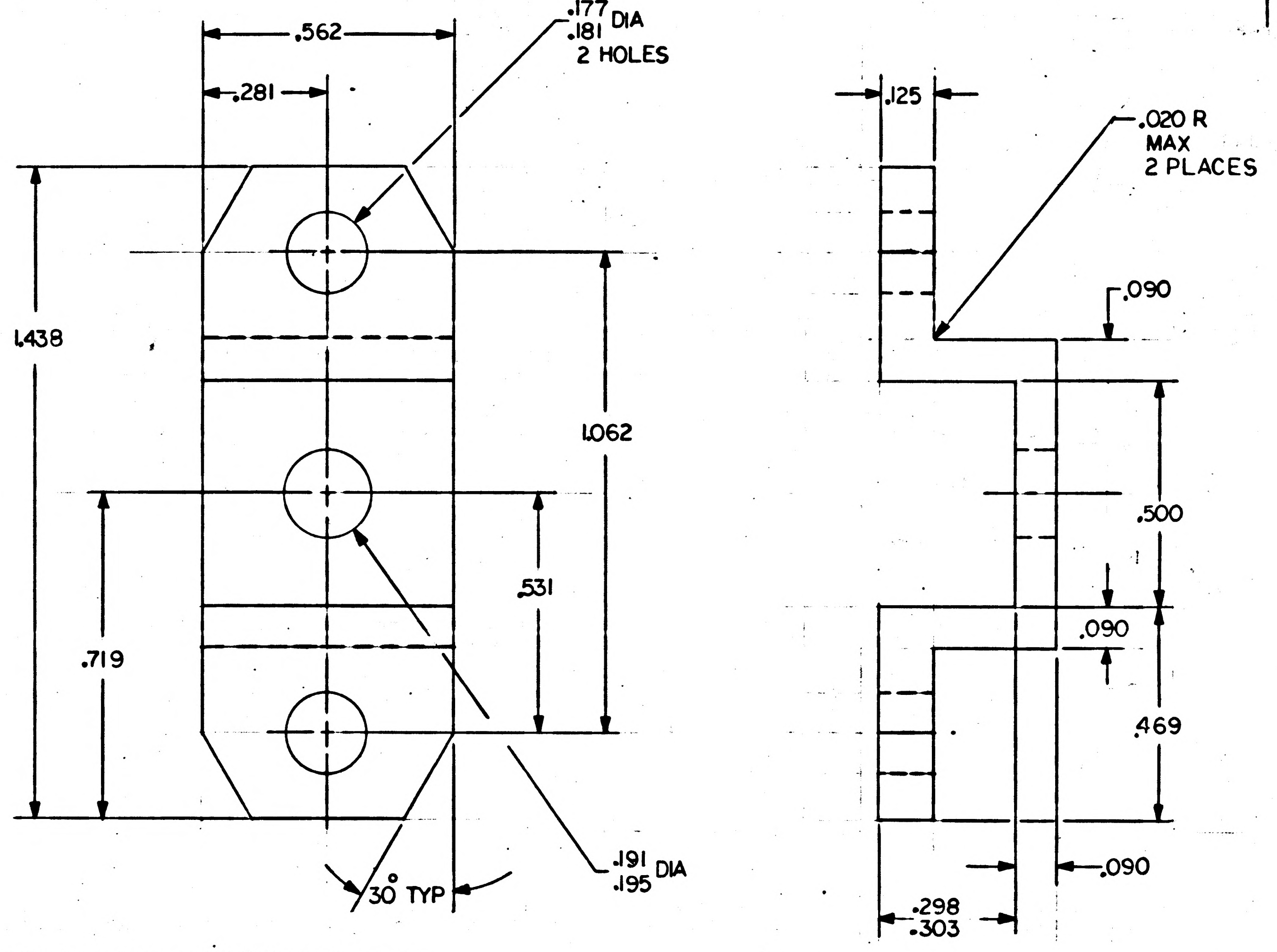

NOTES:—

1. INTERPRET DRAWING IN ACCORDANCE WITH STANDARDS PRESCRIBED BY MIL-D-70327
2. MATERIAL 416 CRES PER QQ-S-763 CLASS 416 COND A
3. FINISH: PAINT WITH 1010729-2 LIGHT GREY EPOXY RESIN ENAMEL PER ND
4. .125√ FINISH ALL OVER
5. REMOVE BURRS AND BREAK SHARP EDGES $^{.005}_{.015}$

QTY REQD	PART OR IDENTIFYING NO.	NOMENCLATURE OR DESCRIPTION	FIND NO.

LIST OF MATERIALS

NEXT ASSY	USED ON

APPLICATION

UNLESS OTHERWISE SPECIFIED
DIMENSIONS ARE IN INCHES
TOLERANCES ON
FRACTIONS ± DECIMALS ± .005 ANGLES ± 2°
DO NOT SCALE THIS DRAWING

MATERIAL
SEE NOTE 2

HEAT TREATMENT
R_C37 TO R_C40

FINAL FINISH
SEE NOTE 3

MIT
INSTRUMENTATION LAB
CAMBRIDGE, MASS.
DWG. NO. CONTRACT

DRAWN Louis Alowk DATE 26-9-63
CHECKED
APPROVAL W B Turner 10 SEP 63
APPROVAL
NASA APPROVAL 9/12/63
MIT APPROVAL W Kupfer 17 Sep 63

MANNED SPACECRAFT CENTER
HOUSTON, TEXAS

RETAINER, JACK SCREW

CODE IDENT NO.
SIZE C
NASA DRAWING NO. 1004254
SCALE 4/1
WT
SHEET 1 OF 1

MASTER

NOTICE — WHEN GOVERNMENT DRAWINGS, SPECIFICATIONS, OR OTHER DATA ARE USED FOR ANY PURPOSE OTHER THAN IN CONNECTION WITH A DEFINITELY RELATED GOVERNMENT PROCUREMENT OPERATION, THE UNITED STATES GOVERNMENT THEREBY INCURS NO RESPONSIBILITY NOR ANY OBLIGATION WHATSOEVER; AND THE FACT THAT THE GOVERNMENT MAY HAVE FORMULATED, FURNISHED, OR IN ANY WAY SUPPLIED THE SAID DRAWINGS, SPECIFICATIONS OR OTHER DATA IS NOT TO BE REGARDED BY IMPLICATION OR OTHERWISE AS IN ANY MANNER LICENSING THE HOLDER OR ANY OTHER PERSON OR CORPORATION, OR CONVEYING ANY RIGHTS OR PERMISSION TO MANUFACTURE, USE, OR SELL ANY PATENTED INVENTION THAT MAY IN ANY WAY BE RELATED THERETO.

1004254

REVISIONS 03/37			
SYM	DESCRIPTION	DATE	APPROVAL

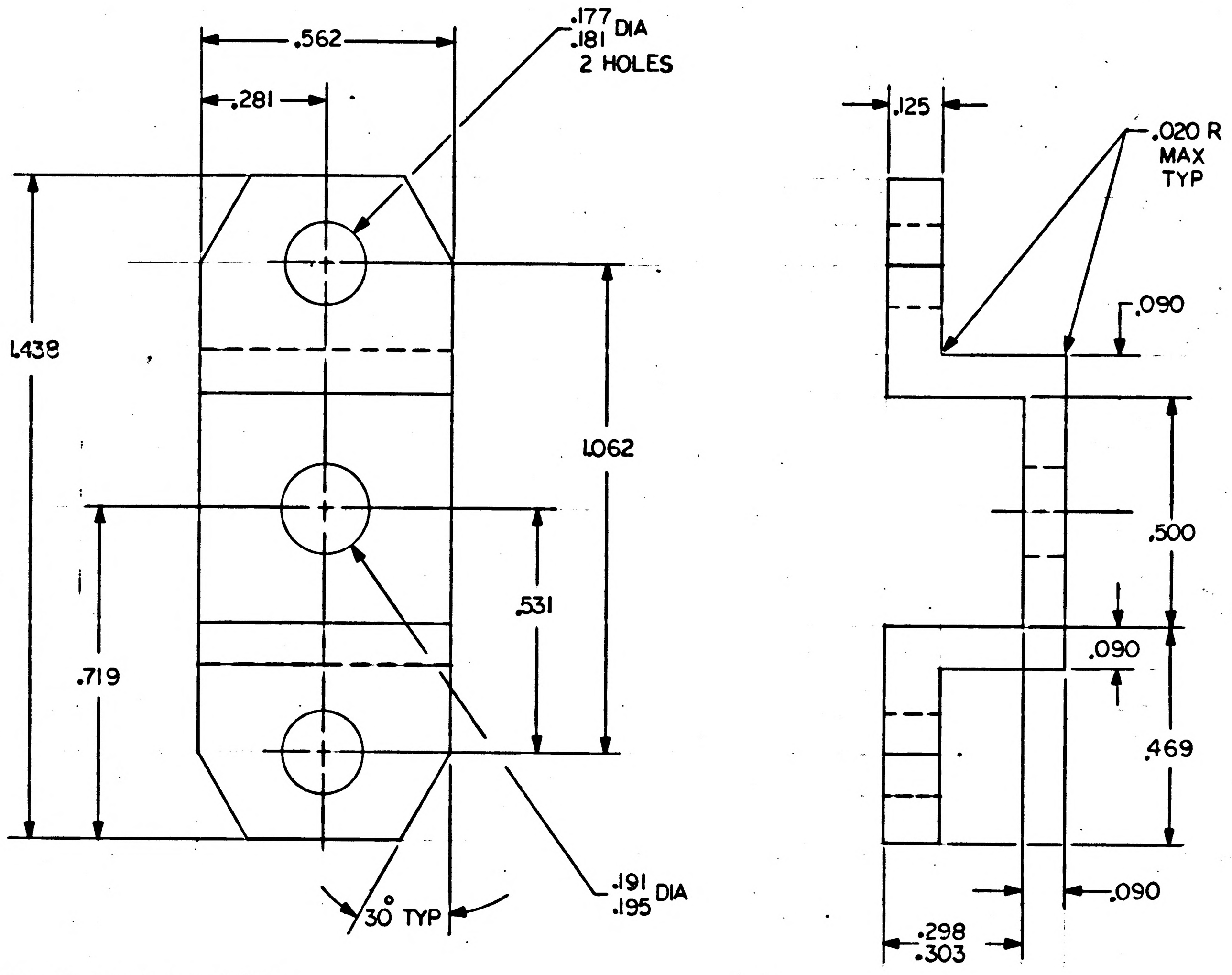

NOTES:—
1. INTERPRET DRAWING IN ACCORDANCE WITH STANDARDS PRESCRIBED BY MIL-D-70327
2. MATERIAL 416 CRES PER QQ-S-763
3. PASSIVATE PER MIL-F-14072, E300

MASTER

QTY REQD	PART OR IDENTIFYING NO.	NOMENCLATURE OR DESCRIPTION	FIND NO.

LIST OF MATERIALS

NEXT ASSY	USED ON
APPLICATION	

UNLESS OTHERWISE SPECIFIED
DIMENSIONS ARE IN INCHES
TOLERANCES ON
FRACTIONS ± DECIMALS ± .005 ANGLES ±
DO NOT SCALE THIS DRAWING
MATERIAL
SEE NOTE 2
HEAT TREATMENT
R_C37 TO R_C40
FINAL FINISH

MIT
INSTRUMENTATION LAB
CAMBRIDGE, MASS.
DWG. NO.
CONTRACT
DRAWN DATE 26-9-63
CHECKED
APPROVAL 10 SEP 63
APPROVAL
NASA APPROVAL 9/12/63
MIT APPROVAL 12 Sep 63

MANNED SPACECRAFT CENTER
HOUSTON, TEXAS

RETAINER, JACK SCREW

CODE IDENT NO.
SIZE C
NASA DRAWING NO. 1004254
SCALE 4/1
WT
SHEET 1 OF 1

INCHES
0 1 2
PHOTOGRAPHIC SCALE ONLY

NOTICE — WHEN GOVERNMENT DRAWINGS, SPECIFICATIONS, OR OTHER DATA ARE USED FOR ANY PURPOSE OTHER THAN IN CONNECTION WITH A DEFINITELY RELATED GOVERNMENT PROCUREMENT OPERATION, THE UNITED STATES GOVERNMENT THEREBY INCURS NO RESPONSIBILITY NOR ANY OBLIGATION WHATSOEVER; AND THE FACT THAT THE GOVERNMENT MAY HAVE FORMULATED, FURNISHED, OR IN ANY WAY SUPPLIED THE SAID DRAWINGS, SPECIFICATIONS OR OTHER DATA IS NOT TO BE REGARDED BY IMPLICATION OR OTHERWISE AS IN ANY MANNER LICENSING THE HOLDER OR ANY OTHER PERSON OR CORPORATION, OR CONVEYING ANY RIGHTS OR PERMISSION TO MANUFACTURE, USE, OR SELL ANY PATENTED INVENTION THAT MAY IN ANY WAY BE RELATED THERETO.

REVISIONS 04147			
SYM	DESCRIPTION	DATE	APPROVAL

HOLE IDENT	BASIC X DIM.	BASIC Y DIM.	HOLE DIA	⌖ DIA	QTY
A1	.000	.000	.202 .206	.006	5
A2	.530	.000			
A3	.040	.420			
A4	.265	.420			
A5	.495	.420			
B1	.265	.155	.168 .172	.006	5
B2	.080	.215			
B3	.450	.215			
B4	.640	.265			
B5	-.105	.265			
C1	-.105	.125	.058 .062	.006	3
C2	.640	.125			
C3	.265	.000			

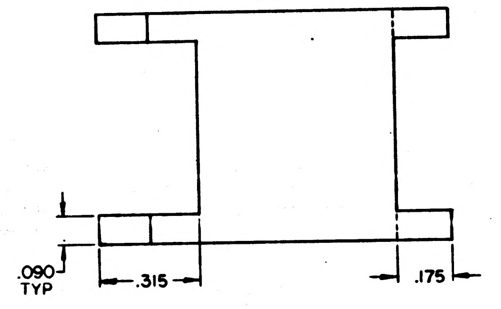

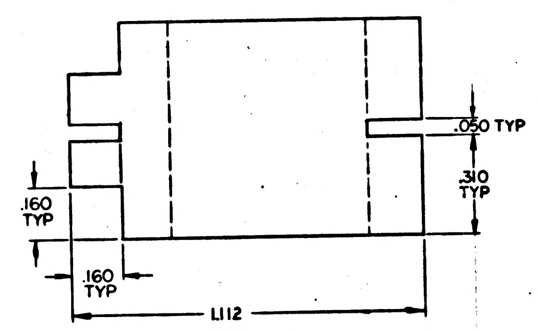

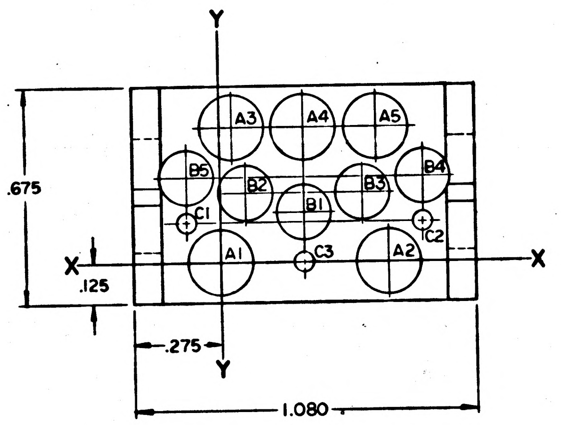

NOTES

1. INTERPRET DRAWING IN ACCORDANCE WITH STANDARDS PRESCRIBED BY MIL-D-70327
2. MATL: MAGNESIUM ALLOY, ZK-60A-T5 PER QQ-M-31
3. TRUE POSITION AS SHOWN IN CHART
4. REMOVE ALL BURRS AND BREAK SHARP EDGES .005/.015
5. FINISH: ANODIZE PER MIL-M-3171 TYPE IV
6. .125√ ALL OVER
7. ALL FILLETS AND RADII .005/.020

MASTER

QTY REQD	PART OR IDENTIFYING NO.	NOMENCLATURE OR DESCRIPTION	FIND NO.

LIST OF MATERIALS

1003162	
1003171	
NEXT ASSY	USED ON
APPLICATION	

UNLESS OTHERWISE SPECIFIED
DIMENSIONS ARE IN INCHES
TOLERANCES ON
FRACTIONS ± DECIMALS ±.005 ANGLES ±
DO NOT SCALE THIS DRAWING
MATERIAL SEE NOTE 2
HEAT TREATMENT
FINAL FINISH SEE NOTE 5

MIT
INSTRUMENTATION LAB
CAMBRIDGE, MASS.
DWG. NO. CONTRACT
DRAWN C.A. Buster DATE 8-27-63
CHECKED 22 oct 63
APPROVAL W.B. 23 oct 63
APPROVAL
NASA APPROVAL 10/21/63
MIT APPROVAL 24 Oct 63

MANNED SPACECRAFT CENTER
HOUSTON, TEXAS

HOLDER, COMPONENT
STRAND GATE MODULE

CODE IDENT NO.
SIZE D
NASA DRAWING NO. 1004255
SCALE 4/1
WT
SHEET 1 OF 1

INCHES
0 1 2
PHOTOGRAPHIC SCALE ONLY

1004255

1004256

SYM	REVISIONS 03/39 DESCRIPTION	DATE	APPROVAL

NOTICE — WHEN GOVERNMENT DRAWINGS, SPECIFICATIONS, OR OTHER DATA ARE USED FOR ANY PURPOSE OTHER THAN IN CONNECTION WITH A DEFINITELY RELATED GOVERNMENT PROCUREMENT OPERATION, THE UNITED STATES GOVERNMENT THEREBY INCURS NO RESPONSIBILITY NOR ANY OBLIGATION WHATSOEVER; AND THE FACT THAT THE GOVERNMENT MAY HAVE FORMULATED, FURNISHED, OR IN ANY WAY SUPPLIED THE SAID DRAWINGS, SPECIFICATIONS OR OTHER DATA IS NOT TO BE REGARDED BY IMPLICATION OR OTHERWISE AS IN ANY MANNER LICENSING THE HOLDER OR ANY OTHER PERSON OR CORPORATION, OR CONVEYING ANY RIGHTS OR PERMISSION TO MANUFACTURE, USE, OR SELL ANY PATENTED INVENTION THAT MAY IN ANY WAY BE RELATED THERETO.

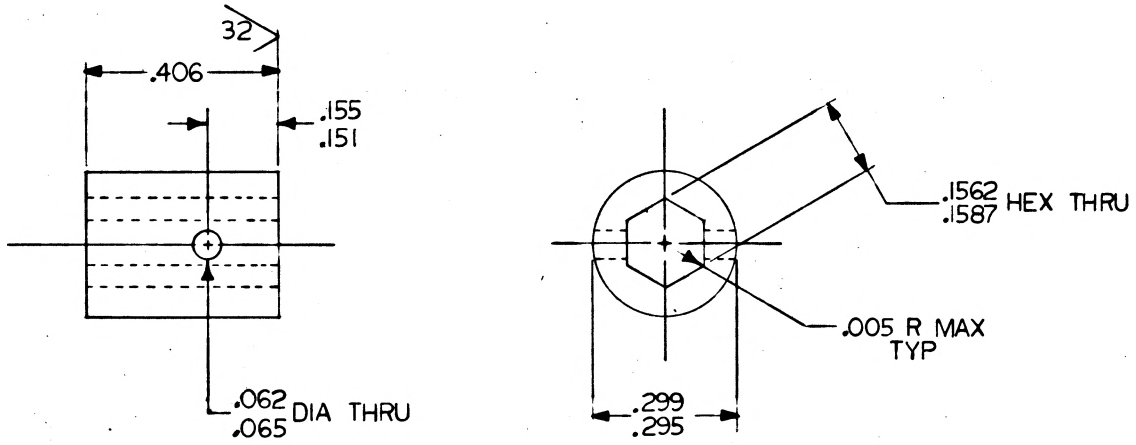

NOTES:
1. INTERPRET DRAWING IN ACCORDANCE WITH STANDARDS PRESCRIBED BY MIL-D-70327
2. MATERIAL: 416 CRES PER QQ-S-763 CONDITION A
3. HEAT TREAT TO ROCKWELL C35-C40
4. SURFACE QUALITY: .125√ UNLESS OTHERWISE SPECIFIED
5. REMOVE ALL BURRS AND SHARP EDGES .005/.015
6. FINISH: PASSIVATE PER MIL-F-14072 E300

QTY REQD	PART OR IDENTIFYING NO.	NOMENCLATURE OR DESCRIPTION	FIND NO.

LIST OF MATERIALS

MASTER

NEXT ASSY	USED ON
APPLICATION	

UNLESS OTHERWISE SPECIFIED
DIMENSIONS ARE IN INCHES
TOLERANCES ON
FRACTIONS ± DECIMALS ±.005 ANGLES ±
DO NOT SCALE THIS DRAWING
MATERIAL SEE NOTE 2
HEAT TREATMENT SEE NOTE 3
FINAL FINISH SEE NOTE 6

MIT
INSTRUMENTATION LAB
CAMBRIDGE, MASS.
DWG. NO. CONTRACT
DRAWN M. Hester DATE 8-22-63
CHECKED 10 Sep 63
APPROVAL W E Turner 10 SEP63
APPROVAL
NASA APPROVAL 9/12/63
MIT APPROVAL W Kupfer 12 Sep 63

MANNED SPACECRAFT CENTER
HOUSTON, TEXAS

DRIVE CYLINDER,
EJECTION SCREW

CODE IDENT NO. | SIZE C | NASA DRAWING NO. 1004256
SCALE 4/1 | WT | SHEET 1 OF 1

INCHES
0 1 2
PHOTOGRAPHIC SCALE ONLY

NOTICE — WHEN GOVERNMENT DRAWINGS, SPECIFICATIONS, OR OTHER DATA ARE USED FOR ANY PURPOSE OTHER THAN IN CONNECTION WITH A DEFINITELY RELATED GOVERNMENT PROCUREMENT OPERATION, THE UNITED STATES GOVERNMENT THEREBY INCURS NO RESPONSIBILITY NOR ANY OBLIGATION WHATSOEVER; AND THE FACT THAT THE GOVERNMENT MAY HAVE FORMULATED, FURNISHED, OR IN ANY WAY SUPPLIED THE SAID DRAWINGS, SPECIFICATIONS OR OTHER DATA IS NOT TO BE REGARDED BY IMPLICATION OR OTHERWISE AS IN ANY MANNER LICENSING THE HOLDER OR ANY OTHER PERSON OR CORPORATION, OR CONVEYING ANY RIGHTS OR PERMISSION TO MANUFACTURE, USE, OR SELL ANY PATENTED INVENTION THAT MAY IN ANY WAY BE RELATED THERETO.

1004257

REVISIONS 03/39			
SYM	DESCRIPTION	DATE	APPROVAL

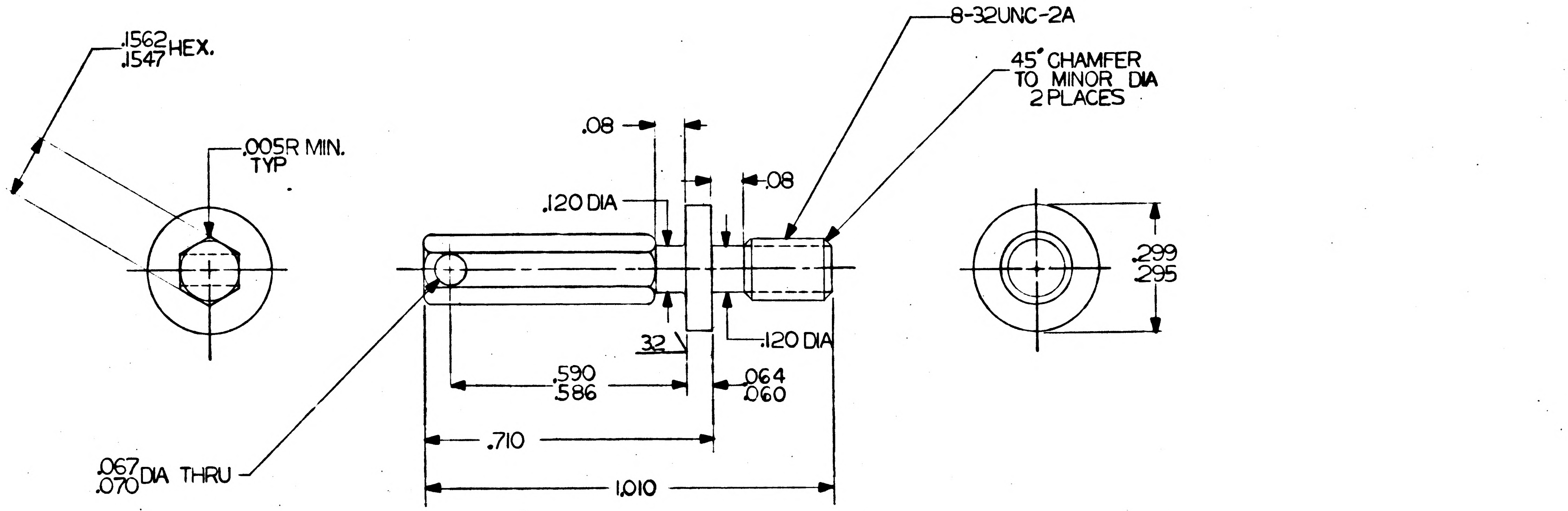

NOTES:

1. INTERPRET DRAWING IN ACCORDANCE WITH STANDARDS PRESCRIBED BY MIL-D-70327
2. MATERIAL: 416CRES PER QQ-S-763 CONDITION A
3. HEAT TREAT TO ROCKWELL C35-C40
4. SURFACE QUALITY 125√ EXCEPT WHERE OTHERWISE SPECIFIED
5. REMOVE ALL BURRS AND BREAK SHARP EDGES .005/.015
6. FINISH: PASSIVATE PER MIL-F-14072 E300
7. UNLESS OTHERWISE SPECIFIED ALL FILLETS AND RADII TO BE .010R MAX

MASTER

QTY REQD	PART OR IDENTIFYING NO.	NOMENCLATURE OR DESCRIPTION	FIND NO.

LIST OF MATERIALS

NEXT ASSY	USED ON
APPLICATION	

UNLESS OTHERWISE SPECIFIED
DIMENSIONS ARE IN INCHES
TOLERANCES ON
FRACTIONS ± DECIMALS XXX±.005 XX±.02 ANGLES ±5°
DO NOT SCALE THIS DRAWING
MATERIAL SEE NOTE 2
HEAT TREATMENT SEE NOTE 3
FINAL FINISH SEE NOTE 6

MIT
INSTRUMENTATION LAB
CAMBRIDGE, MASS.
DWG. NO. CONTRACT
DRAWN D. Black DATE 8/27/63
CHECKED R. P. Kingsbury 10 Sep 63
APPROVAL W. S. Turner 10 SEP 63
APPROVAL
NASA APPROVAL W. L. Smith 9/12/63
MIT APPROVAL

MANNED SPACECRAFT CENTER
HOUSTON, TEXAS

SCREW, EJECTION

CODE IDENT NO. SIZE C NASA DRAWING NO. 1004257
SCALE 4/1 WT SHEET 1 OF 1

INCHES 0 1 2
PHOTOGRAPHIC SCALE ONLY

1004259 A

REVISIONS 03335

SYM	DESCRIPTION	DATE	APPROVAL
A	REVISED PER TDRR 04481	11-5-63	

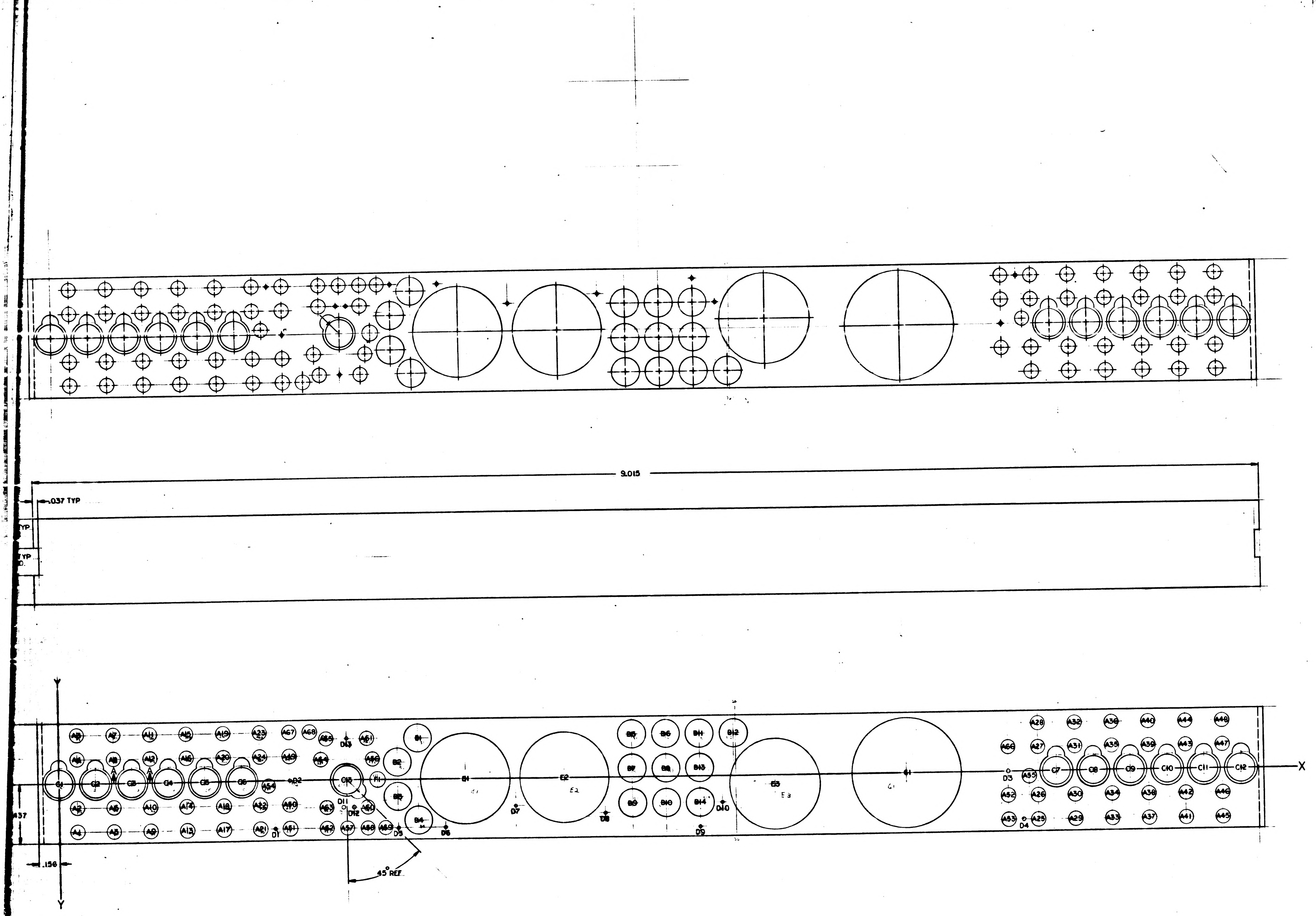
9.015
.037 TYP
TYP
TYP
.437
.156
45° REF
X
Y
C1
C2
C3
C4
C5
C6
C7
C8
C9
C10
C11
C12
C13
B1
B2
B3
B4
B5
B6
B7
B8
B9
B10
B11
B12
B13
B14
E1
E2
E3
G1
F1
D1
D2
D3
D4
D5
D6
D7
D8
D9
D10
D11
D12
D13
A1
A2
A3
A5
A6
A7
A9
A10
A11
A13
A14
A15
A17
A18
A19
A20
A21
A22
A23
A24
A25
A26
A27
A28
A29
A30
A31
A32
A33
A34
A35
A36
A37
A38
A39
A40
A41
A42
A43
A44
A45
A46
A47
A48
A49
A50
A51
A52
A53
A54
A55
A56
A57
A58
A59
A60
A61
A62
A63
A64
A65
A66
A67
A68

QTY REQD	PART OR IDENTIFYING NO.	NOMENCLATURE OR DESCRIPTION	FIND NO.

LIST OF MATERIALS

NEXT ASSY	USED ON
1003173	

APPLICATION

UNLESS OTHERWISE SPECIFIED DIMENSIONS ARE IN INCHES
TOLERANCES ON
FRACTIONS ± DECIMALS ±.005 ANGLES ± 2°
DO NOT SCALE THIS DRAWING
MATERIAL SEE NOTE 2
HEAT TREATMENT
FINAL FINISH

MIT INSTRUMENTATION LAB
CAMBRIDGE, MASS
DRAWN Ed Powers DATE 28Aug63
CHECKED
APPROVAL 19SEP63
APPROVAL
NASA APPROVAL W. J. Robins
MIT APPROVAL

MANNED SPACECRAFT CENTER
HOUSTON, TEXAS

HOLDER, COMPONENT
DRIVER SERVICE MODULE

CODE IDENT NO.
SIZE J
NASA DRAWING NO. 1004259
SCALE 4/1
WT
SHEET 1 OF 1

MASTER

1004259 A

INCHES
PHOTOGRAPHIC SCALE ONLY

1-2

NOTICE — WHEN GOVERNMENT DRAWINGS, SPECIFICATIONS, OR OTHER DATA ARE USED FOR ANY PURPOSE OTHER THAN IN CONNECTION WITH A DEFINITELY RELATED GOVERNMENT PROCUREMENT OPERATION, THE UNITED STATES GOVERNMENT THEREBY INCURS NO RESPONSIBILITY NOR ANY OBLIGATION WHATSOEVER; AND THE FACT THAT THE GOVERNMENT MAY HAVE FORMULATED, FURNISHED, OR IN ANY WAY SUPPLIED THE SAID DRAWINGS, SPECIFICATIONS OR OTHER DATA IS NOT TO BE REGARDED BY IMPLICATION OR OTHERWISE AS IN ANY MANNER LICENSING THE HOLDER OR ANY OTHER PERSON OR CORPORATION, OR CONVEYING ANY RIGHTS OR PERMISSION TO MANUFACTURE, USE, OR SELL ANY PATENTED INVENTION THAT MAY IN ANY WAY BE RELATED THERETO.

HOLE IDENT	BASIC X DIM.	BASIC Y DIM.	HOLE DIA	⌖ DIA	QTY
A1	.135	-.350	.100 .104	.005	68
A2	.135	-.175			
A3	.135	.350			
A4	.135	.175			
A5	.405	-.350			
A6	.405	-.175			
A7	.405	.350			
A8	.405	.175			
A9	.675	-.350			
A10	.675	-.175			
A11	.675	.350			
A12	.675	.175			
A13	.945	-.350			
A14	.945	-.175			
A15	.945	.350			
A16	.945	.175			
A17	1.215	-.350			
A18	1.215	-.175			
A19	1.215	.350			
A20	1.215	.175			
A21	1.485	-.350			
A22	1.485	-.175			
A23	1.485	.350			
A24	1.485	.175			
A25	7.215	-.350			
A26	7.215	-.175			
A27	7.215	.175			
A28	7.215	.350			
A29	7.485	-.350			
A30	7.485	-.175			
A31	7.485	.175			
A32	7.485	.350			
A33	7.755	-.350			
A34	7.755	-.175			
A35	7.755	.175			
A36	7.755	.350			
A37	8.025	-.350			
A38	8.025	-.175			
A39	8.025	.175			
A40	8.025	.350			
A41	8.295	-.350			
A42	8.295	-.175			
A43	8.295	.175			
A44	8.295	.350			
A45	8.565	-.350			
A46	8.565	-.175			
A47	8.565	.175			
A48	8.565	.350			
A49	1.705	.175			
A50	1.705	-.175			
A51	1.705	-.350			
A52	6.995	-.175			
A53	6.995	-.350			
A54	1.550	-.035			
A55	7.150	-.035			
A56	2.315	.150			
A57	2.125	-.350			
A58	2.275	-.350			
A59	2.405	-.350			
A60	2.275	-.200			
A61	2.275	.300			
A62	1.975	-.350			
A63	1.975	-.200			
A64	1.935	.150			
A65	1.975	.300			
A66	6.995	.175			
A67	1.705	.350			
A68	1.855	.350			
B1	2.650	.300	.202 .206	.005	14
B2	2.500	.125			
B3	2.500	-.125			
B4	2.650	-.300			
B5	4.235	.310			
B6	4.485	.310			
B7	4.235	.060			
B8	4.485	.060			
B9	4.235	-.190			
B10	4.485	-.190			
B11	4.735	.310			
B12	4.985	.310			
B13	4.735	.060			
B14	4.735	-.190			
C1	.000	.000	SEE DETAIL A	.005	13
C2	.270	.000			
C3	.540	.000			
C4	.810	.000			
C5	1.080	.000			
C6	1.350	.000			
C7	7.350	.000			
C8	7.620	.000			
C9	7.890	.000			
C10	8.160	.000			
C11	8.430	.000			
C12	8.700	.000			
C13	2.125	.000			

HOLE IDENT	BASIC X DIM.	BASIC Y DIM.	HOLE DIA	⌖ DIA	QTY
D1	1.595	-.350	.023 .027	.005	13
D2	1.705	.000			
D3	6.995	.000			
D4	7.105	-.350			
D5	2.500	-.350			
D6	2.850	-.350			
D7	3.370	-.200			
D8	4.035	-.260			
D9	4.735	-.365			
D10	4.900	-.190			
D11	2.100	-.200			
D12	2.175	-.200			
D13	2.125	.300			
E1	3.000	.000	.654 .651	.005	3
E2	3.735	.000			
E3	5.285	-.065			
F1	2.350	.000	.112 / .116	.005	1
G1	6.250	.000	.794/.801	.005	1

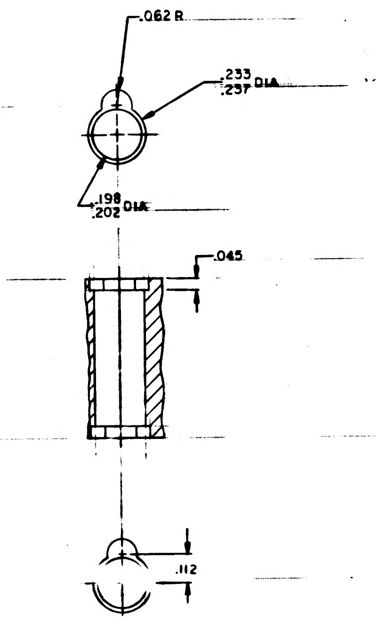
.062 R
.233
.237 DIA
.198
.202 DIA
.045
.112

PARTIAL SECTION A-A
ROTATE 135° CLOCKWISE FOR HOLE C13

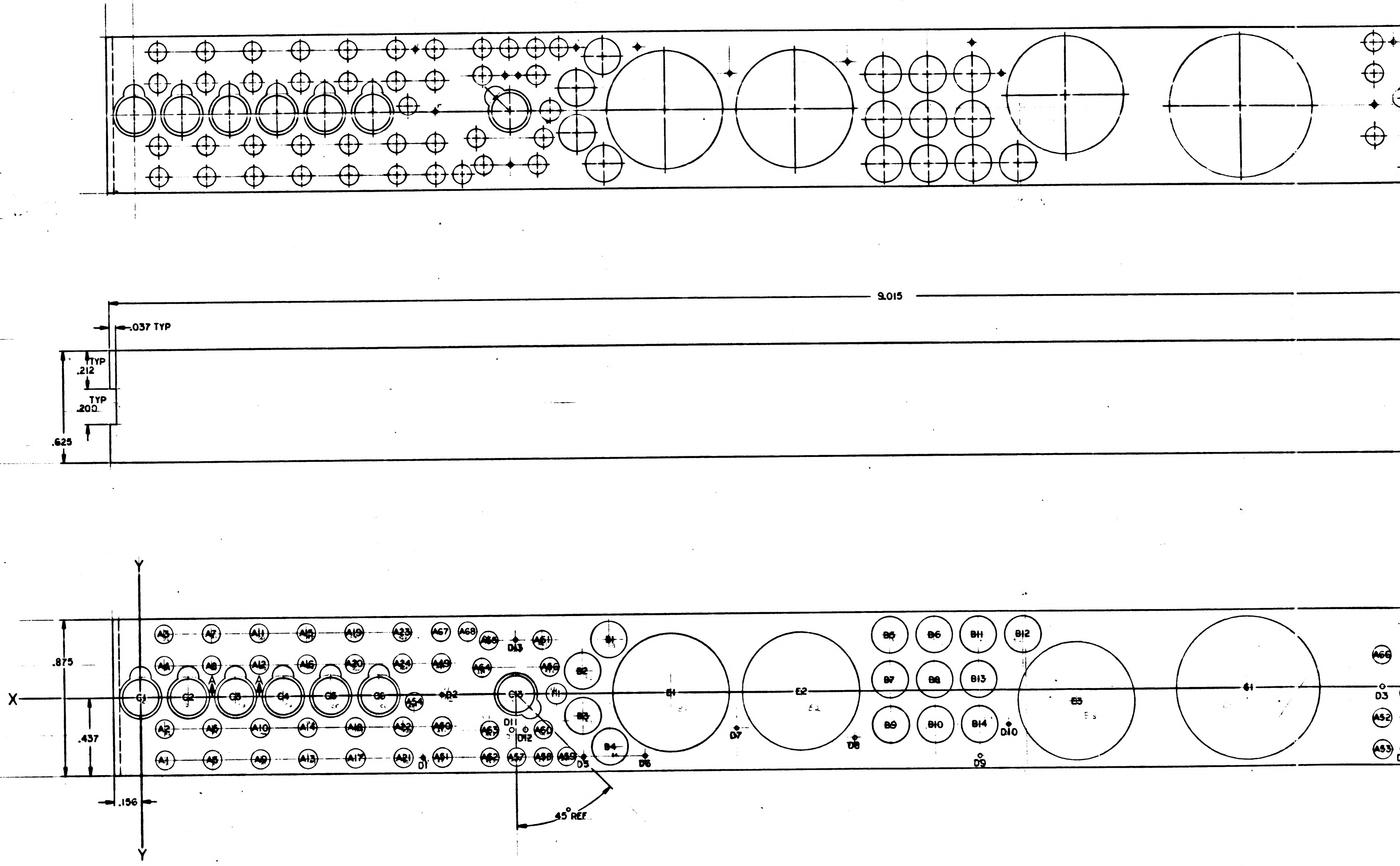
9.015
.037 TYP
.212
TYP
.200
TYP
.625
.875
.437
.156
X
Y
45° REF
A1
A2
A3
A4
A5
A6
A7
A8
A9
A10
A11
A12
A13
A14
A15
A16
A17
A18
A19
A20
A21
A22
A23
A24
A52
A53
A54
A56
A57
A58
A59
A60
A61
A62
A63
A64
A65
A66
A67
A68
B1
B2
B3
B4
B5
B6
B7
B8
B9
B10
B11
B12
B13
B14
C1
C2
C3
C4
C5
C6
C13
D1
D2
D3
D5
D6
D7
D8
D9
D10
D11
D12
D13
E1
E2
E3
F1
G1

NOTES
1. INTERPRET DRAWING IN ACCORDANCE WITH STANDARDS PRESCRIBED BY MIL-D-70327
2. MATL:PLASTIC CLEAR ACRYLIC PER MIL-P-8184 FINISH B, ALT: MIL-P-5425 FINISH B
3. TRUE POSITION AS SHOWN IN CHART
4. REMOVE ALL SHARP EDGES

1004259 A

INCHES
0 1 2
PHOTOGRAPHIC SCALE ONLY

SYM	REVISIONS DESCRIPTION	DATE	APPROVAL

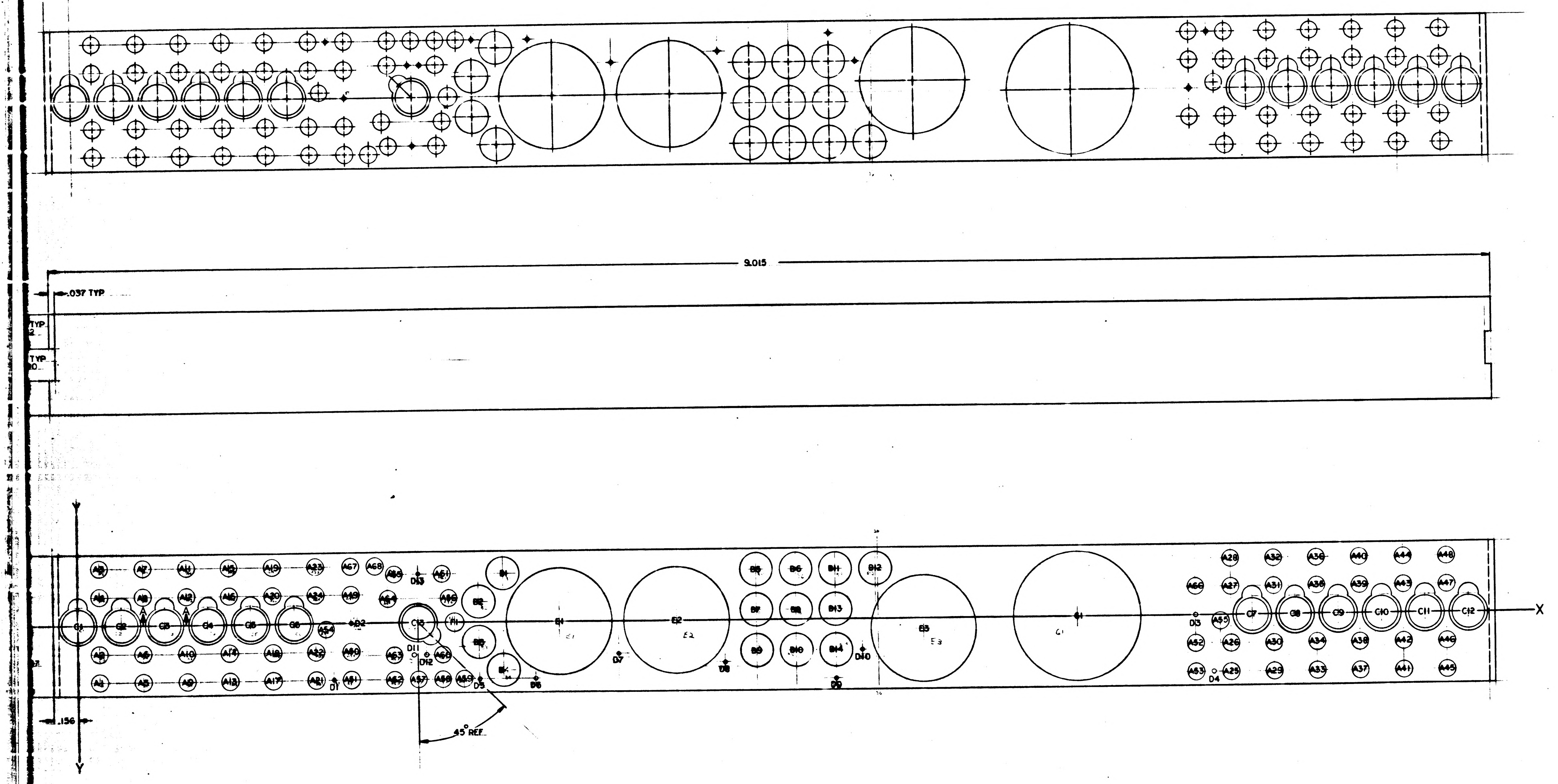

9.015
.037 TYP
TYP
TYP
.156
45° REF
X
Y
C1
C2
C3
C4
C5
C6
C7
C8
C9
C10
C11
C12
C13
E1
E2
E3
B1
B2
B3
B4
B5
B6
B7
B8
B9
B10
B11
B12
B13
B14
D1
D2
D3
D4
D5
D6
D7
D8
D9
D10
D11
D12
D13

QTY REQD	PART OR IDENTIFYING NO.	NOMENCLATURE OR DESCRIPTION	FIND NO.

LIST OF MATERIALS

NEXT ASSY	USED ON
1003173	

APPLICATION

UNLESS OTHERWISE SPECIFIED
DIMENSIONS ARE IN INCHES
TOLERANCES ON
FRACTIONS ± DECIMALS ±.005 ANGLES ±1°
DO NOT SCALE THIS DRAWING

MATERIAL
SEE NOTE 2

HEAT TREATMENT

FINAL FINISH

MIT
INSTRUMENTATION LAB
CAMBRIDGE, MASS

DRAWN Ed Powers DATE 28 Aug 63
CHECKED 10 Sep 63
APPROVAL 19 Sep 63
APPROVAL
NASA APPROVAL W G Roberts 27 Sep 63
MIT APPROVAL 19 Sep 63

MANNED SPACECRAFT CENTER
HOUSTON, TEXAS

HOLDER, COMPONENT DRIVER SERVICE MODULE

CODE IDENT NO.
SIZE J
NASA DRAWING NO. 1004259
SCALE 4/1
WT
SHEET 1 OF 1

MASTER

1004259

F-2

INCHES
PHOTOGRAPHIC SCALE ONLY

NOTICE — WHEN GOVERNMENT DRAWINGS, SPECIFICATIONS, OR OTHER DATA ARE USED FOR ANY PURPOSE OTHER THAN IN CONNECTION WITH A DEFINITELY RELATED GOVERNMENT PROCUREMENT OPERATION, THE UNITED STATES GOVERNMENT THEREBY INCURS NO RESPONSIBILITY NOR ANY OBLIGATION WHATSOEVER; AND THE FACT THAT THE GOVERNMENT MAY HAVE FORMULATED, FURNISHED, OR IN ANY WAY SUPPLIED THE SAID DRAWINGS, SPECIFICATIONS, OR OTHER DATA IS NOT TO BE REGARDED BY IMPLICATION OR OTHERWISE AS IN ANY MANNER LICENSING THE HOLDER OR ANY OTHER PERSON OR CORPORATION, OR CONVEYING ANY RIGHTS OR PERMISSION TO MANUFACTURE, USE, OR SELL ANY PATENTED INVENTION THAT MAY IN ANY WAY BE RELATED THERETO.

HOLE IDENT	BASIC X DIM.	BASIC Y DIM.	HOLE DIA	⌖ DIA	QTY
A1	.135	-.350	.100 .104	.005	68
A2	.135	-.175			
A3	.135	.350			
A4	.135	.175			
A5	.405	-.350			
A6	.405	-.175			
A7	.405	.350			
A8	.405	.175			
A9	.675	-.350			
A10	.675	-.175			
A11	.675	.350			
A12	.675	.175			
A13	.945	-.350			
A14	.945	-.175			
A15	.945	.350			
A16	.945	.175			
A17	1.215	-.350			
A18	1.215	-.175			
A19	1.215	.350			
A20	1.215	.175			
A21	1.485	-.350			
A22	1.485	-.175			
A23	1.485	.350			
A24	1.485	.175			
A25	7.215	-.350			
A26	7.215	-.175			
A27	7.215	.175			
A28	7.215	.350			
A29	7.485	-.350			
A30	7.485	-.175			
A31	7.485	.175			
A32	7.485	.350			
A33	7.755	-.350			
A34	7.755	-.175			
A35	7.755	.175			
A36	7.755	.350			
A37	8.025	-.350			
A38	8.025	-.175			
A39	8.025	.175			
A40	8.025	.350			
A41	8.295	-.350			
A42	8.295	-.175			
A43	8.295	.175			
A44	8.295	.350			
A45	8.565	-.350			
A46	8.565	-.175			
A47	8.565	.175			
A48	8.565	.350			
A49	1.705	.175			
A50	1.705	-.175			
A51	1.705	-.350			
A52	6.995	-.175			
A53	6.995	-.350			
A54	1.550	-.035			
A55	7.150	-.035			
A56	2.315	.150			
A57	2.125	-.350			
A58	2.275	-.350			
A59	2.405	-.350			
A60	2.275	-.200			
A61	2.275	.300			
A62	1.975	-.350			
A63	1.975	-.200			
A64	1.935	.150			
A65	1.975	.300			
A66	6.995	.175			
A67	1.705	.350			
A68	1.855	.350			
B1	2.650	.300	.202 .206	.005	14
B2	2.500	.125			
B3	2.500	-.125			
B4	2.650	-.300			
B5	4.235	.310			
B6	4.485	.310			
B7	4.235	.060			
B8	4.485	.060			
B9	4.235	-.190			
B10	4.485	-.190			
B11	4.735	.310			
B12	4.985	.310			
B13	4.735	.060			
B14	4.735	-.190			
C1	.000	.000	SEE DETAIL A	.005	13
C2	.270	.000			
C3	.540	.000			
C4	.810	.000			
C5	1.080	.000			
C6	1.350	.000			
C7	7.350	.000			
C8	7.620	.000			
C9	7.890	.000			
C10	8.160	.000			
C11	8.430	.000			
C12	8.700	.000			
C13	2.125	.000			

HOLE IDENT	BASIC X DIM.	BASIC Y DIM.	HOLE DIA	⌖ DIA	QTY
D1	1.395	-.350	.023 .027	.005	13
D2	1.705	.000			
D3	6.995	.000			
D4	7.105	-.350			
D5	2.500	-.350			
D6	2.650	-.350			
D7	3.370	-.200			
D8	4.035	-.260			
D9	4.735	-.365			
D10	4.900	-.190			
D11	2.100	-.200			
D12	2.175	-.200			
D13	2.125	.300			
E1	3.000	.000	.654 .651	.005	3
E2	3.735	.000			
E3	5.285	-.065			
F1	2.350	.000	.112 / .116	.005	1
G1	6.250	.000	.794/.801	.005	1

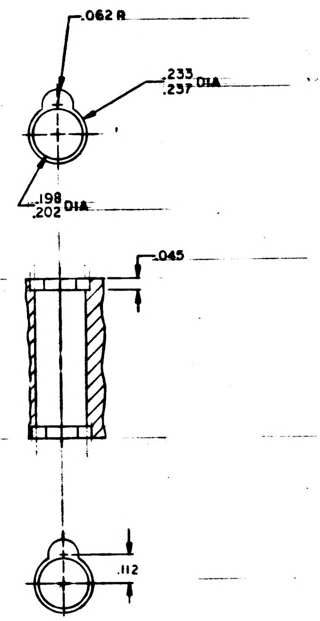

PARTIAL SECTION A-A
ROTATE 135° CLOCKWISE FOR HOLE C13

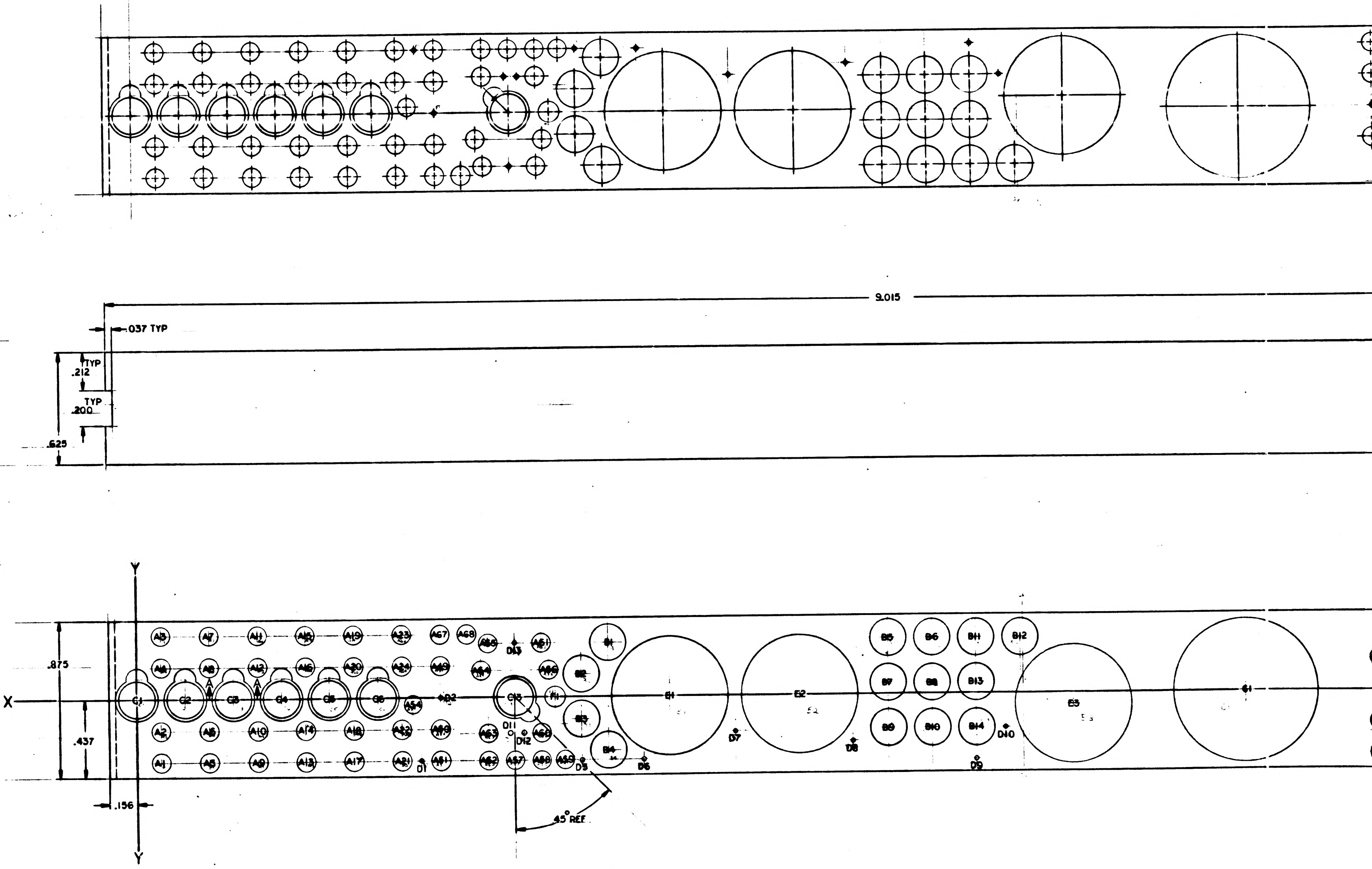

NOTES:
1. INTERPRET DRAWING IN ACCORDANCE WITH STANDARDS PRESCRIBED BY MIL-D-70327
2. MATL:PLASTIC CLEAR ACRYLIC PER MIL-P-8184 FINISH B
3. TRUE POSITION AS SHOWN IN CHART
4. REMOVE ALL SHARP EDGES

NOTICE - WHEN GOVERNMENT DRAWINGS, SPECIFICATIONS, OR OTHER DATA ARE USED FOR ANY PURPOSE OTHER THAN IN CONNECTION WITH A DEFINITELY RELATED GOVERNMENT PROCUREMENT OPERATION, THE UNITED STATES GOVERNMENT THEREBY INCURS NO RESPONSIBILITY NOR ANY OBLIGATION WHATSOEVER; AND THE FACT THAT THE GOVERNMENT MAY HAVE FORMULATED, FURNISHED, OR IN ANY WAY SUPPLIED THE SAID DRAWINGS, SPECIFICATIONS, OR OTHER DATA IS NOT TO BE REGARDED BY IMPLICATION OR OTHERWISE AS IN ANY MANNER LICENSING THE HOLDER OR ANY OTHER PERSON OR CORPORATION, OR CONVEYING ANY RIGHTS OR PERMISSION TO MANUFACTURE, USE, OR SELL ANY PATENTED INVENTION THAT MAY IN ANY WAY BE RELATED THERETO.

NOTES:

1. INTERPRET DRAWING IN ACCORDANCE WITH STANDARDS PRESCRIBED IN MIL-D-70327.
2. DIMENSIONS ON EACH VIEW APPLY TO ALL VIEWS. (WITH THE EXCEPTION OF MOUNTING HOLES).
3. FORMATS ILLUSTATED WILL BE APPLICABLE TO ALL ITEMS REQUIRING NAMEPLATES BELOW END ITEM DESIGNATION (SYSTEMS, ASSEMBLIES, ETC.)
4. PLATE BACKGROUND TO BE LUSTERLESS BLACK PER FED-STD-595, COLOR 37038. BORDER, MARKING AND LETTERING TO BE NATURAL METAL,(ANODIZED ALUMINUM).
5. MARKING METHOD TO BE DIE STAMPING, ETCHING OR ENGRAVING IN ACCORDANCE WITH MIL P 19834.
6. LETTERING STYLE TO BE GOTHIC,(SANS SERIFS), AND NUMBERS TO BE ARABIC.
7. WHERE LOCATING DIMENSIONS ARE NOT SHOWN, CHARACTERS SHALL BE SYMMETRICALLY POSITIONED.
8. IDENTIFY WITH DRAWING NUMBER PER ND1002019.
9. WHEN "AUTO MARK" METAL MARKING TYPEWRITER IS USED TO ADD DATA TO BLANK SPACES, TYPE SIZE IS TO BE SELECTED FROM DIMENSIONS U, AC AND AM.
10. NASA SYMBOL IS TO BE PROPORTIONAL TO NAMEPLATE IN RATIO OF 1 TO 5 WITH DIMENSION A VALUE AND IS TO HAVE NATURAL BACKGROUND. NASA SYMBOL LETTERS LETTERING AND FEATHER TO BE BLACK,(OR WHITE FOR SILK SCREENING). WHERE BLACK FEATHER PROTRUDES INTO BLACK BACKGROUND, A MINIMUM OUTLINE OF NATURAL BACKGROUND SHALL EXIST.
11. NAMEPLATES WILL BE APPLIED BY METHODS LISTED BELOW, SHOWN IN ORDER OF PREFERENCE, (I.E., FOR RELIABILITY AND WEIGHT).
    A - STENCIL OR SILK SCREEN DIRECTLY ON EQUIPMENT USING INK PER SCD 1010920,(WHITE OR BLACK).
    B - ALUMINUM FOIL,(STYLE A OR B, TYPE I):
    FOIL SHALL BE .0030 ± .0005 THICK PER MIL-A-148.
    FOIL SHALL HAVE NO ADHESIVE BACKING.
    FOIL SHALL BE BONDED PER ND 1002219,(METHOD II).
    FOIL SHALL BE CLEAR ANODIZED PER MIL-A-8625, TYPE II.
    C - PLATE, (STYLE A OR B, TYPE II):
    MATERIAL: QQ-A-250, TEMPER O OR H14, TYPE 1100, ALUMINUM ALLOY, .032 THICK.
    ANODIZE PER MIL-A-8625, TYPE II.
    ALUMINUM PLATE MUST BE FREE FROM BURRS AND SHARP CORNERS, MOUNTED WITH APPLICABLE SIZE FASTENERS.
12. NAMEPLATES SHALL BE CAPABLE OF MEETING APPLICABLE REQUIREMENTS OF MIL-M-13231.
13. ON DIMENSION TABLES SHOWN ON PAGES 2, 3, 4 AND 5, NA MEANS, "NOT APPLICABLE".

REVISIONS 02768

	SYM	ZONE	DESCRIPTION	DR	CHK	DATE	APPROVED
	G		REPLACES REV F WITH CHANGE PER TDRR 20854			7/22/65	WR
★	H		REVISED PER TDRR 20892			[illegible]	WR
	J		REVISED PER TDRR 20904			[illegible]	WR
	K		REVISED PER TDRR 21379			8/16/65	WR
	L		REVISED PER TDRR 21410			8/23/65	WR
★	M		REVISED PER TDRR 21993			10/	
★	N		REVISED PER TDRR 22621			/11/	
★	P		REVISED PER TDRR 22671				
★	R		REVISED PER TDRR 22672				
★	S		REVISED PER TDRR 22750			65	WR
	T		REVISED PER TDRR 22823				
★	U		REVISED PER TDRR 23072			10-22-65	[illegible]
	V		REVISED PER TDRR 23521			10-27-65	WC
★	W		REVISED PER TDRR 23824	RAJ		11-9-65	WR
★	Y		REVISED PER TDRR 24018	RAJ		11-16-65	WR
★	Z		REVISED PER TDRR 24040	RAJ		11-19-65	WR
	AA		REVISED PER TDRR 24060	RAJ		11-19-65	WR

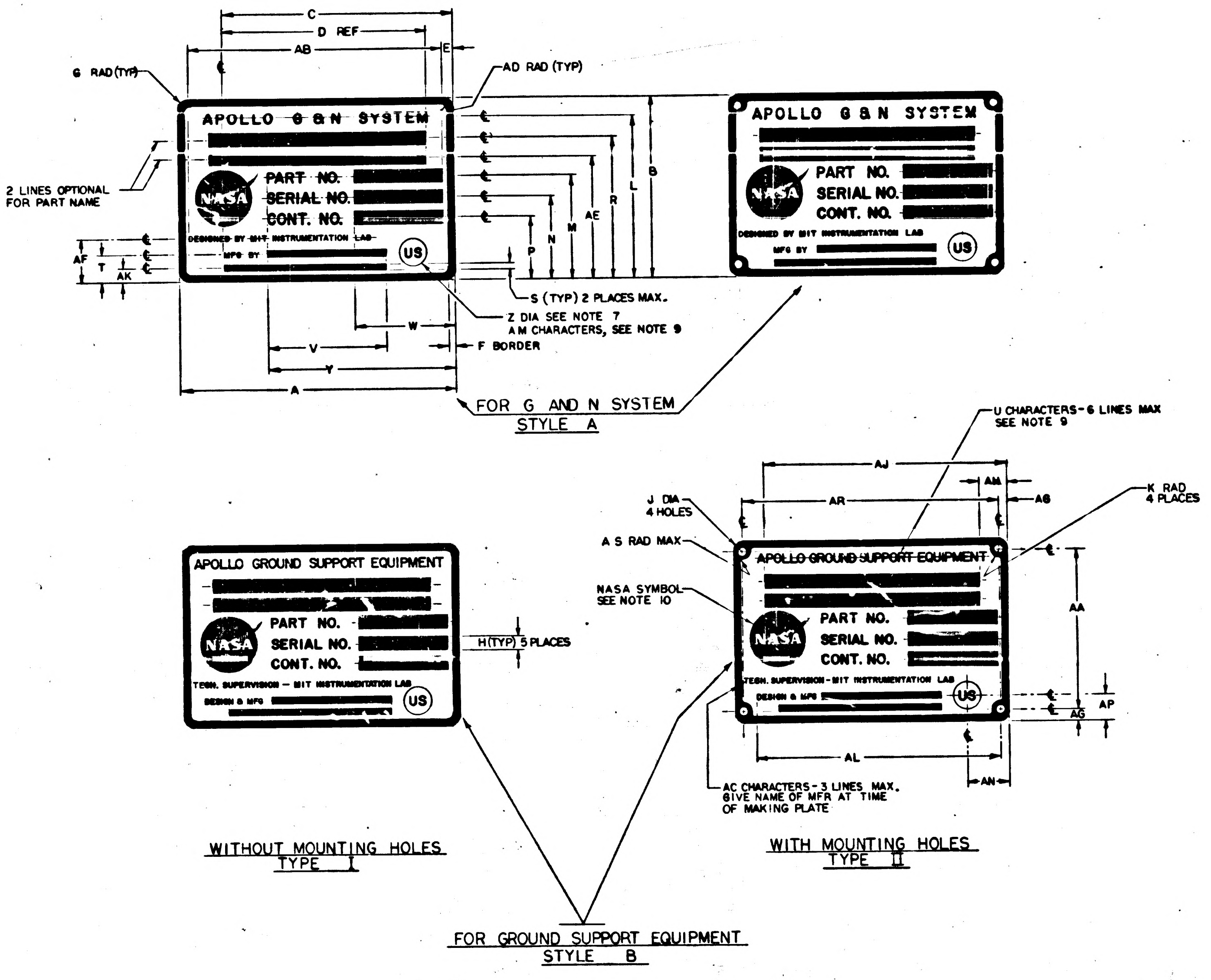
C
D REF
AB
E
G RAD (TYP)
AD RAD (TYP)
APOLLO G & N SYSTEM
PART NO.
SERIAL NO.
CONT. NO.
NASA
DESIGNED BY MIT INSTRUMENTATION LAB
MFG BY
US
2 LINES OPTIONAL FOR PART NAME
AF
T
AK
B
L
R
AE
M
N
P
S (TYP) 2 PLACES MAX.
Z DIA SEE NOTE 7
AM CHARACTERS, SEE NOTE 9
W
V
Y
A
F BORDER
FOR G AND N SYSTEM
STYLE A
APOLLO GROUND SUPPORT EQUIPMENT
TECH. SUPERVISION – MIT INSTRUMENTATION LAB
DESIGN & MFG
H(TYP) 5 PLACES
WITHOUT MOUNTING HOLES
TYPE I
U CHARACTERS-6 LINES MAX
SEE NOTE 9
AJ
AM
AR
AG
J DIA
4 HOLES
K RAD
4 PLACES
A S RAD MAX
NASA SYMBOL
SEE NOTE 10
AA
AP
AG
AL
AN
AC CHARACTERS-3 LINES MAX.
GIVE NAME OF MFR AT TIME
OF MAKING PLATE
WITH MOUNTING HOLES
TYPE II
FOR GROUND SUPPORT EQUIPMENT
STYLE B

SUGGESTED PROPORTIONS FOR NAMEPLATE DIMENSIONS.

1. SELECT NAMEPLATE LENGTH, DIMENSION "A", TO FIT DESIGN NEEDS.
2. DIMENSIONS B THRU AS ON LINE 1 BELOW ARE PROPORTIONAL TO "A" BY MULTIPLIERS SHOWN IN LINE 2 BELOW.

	A	B	C	D	E	F	G	H	J	K	L	M	N	P	R	S	T	U
2.	1.000 A	.6563A	.8438A	.6875A	.0391A	.0240A	.0391 A	.0469A	.0547A	.0469 A	.5938 A	.3750 A	.2969A	.2187A	.5079A	.0313 A	.0938A	.0391 A

	V	W	Y	Z	AA	AB	AC	AD	AE	AF	AG	AH	AJ	AK	AL	AM	AN	AP	AR	AS
2.	.4375 A	.3594A	.6875 A	.1094A	.5781 A	.9219A	.0240A	.0156 A	.4375A	.1525 A	.0391 A	.1563A	.8438A	.0548A	.8659 A	.0391A	.1563A	.0938A	.9219A	.0151A

Ⓖ REPLACES REV F WITH CHANGE

QTY REQD	PART OR IDENTIFYING NO.	MATERIAL OR NOTES	NOMENCLATURE OR DESCRIPTION	FIND NO.

LIST OF MATERIALS

NEXT ASSY	USED ON
AS APPLICABLE	

APPLICATION

UNLESS OTHERWISE SPECIFIED
DIMENSIONS ARE IN INCHES
CAPACITOR VALUES ARE IN μf
RESISTOR VALUES ARE IN OHMS
TOLERANCES ON
FRACTIONS ± — DECIMALS ±.005 ANGLES ± —
DO NOT SCALE THIS DRAWING

MATERIAL
SEE NOTE H

MIT
INSTRUMENTATION LAB
CAMBRIDGE, MASS.

DRAWN R A Jones 7/16/65
CHECKED E. J. [illegible] 7-22-65
APPROVED
APPROVED W [illegible] 7/22/65
APPROVED MIT W [illegible] 7/22/65
APPROVED MSC [illegible] 7/22/65
DATE

MANNED SPACECRAFT CENTER
HOUSTON, TEXAS

NAMEPLATES,
APOLLO G&N—GSE
(STANDARDS)

CODE IDENT NO. 80230
SIZE E
DRAWING NO. 1004260
SCALE NONE
SHEET 1 OF 5

MASTER

NOTICE – WHEN GOVERNMENT DRAWINGS, SPECIFICATIONS, OR OTHER DATA ARE USED FOR ANY PURPOSE OTHER THAN IN CONNECTION WITH A DEFINITELY RELATED GOVERNMENT PROCUREMENT OPERATION, THE UNITED STATES GOVERNMENT THEREBY INCURS NO RESPONSIBILITY NOR ANY OBLIGATION WHATSOEVER; AND THE FACT THAT THE GOVERNMENT MAY HAVE FORMULATED, FURNISHED, OR IN ANY WAY SUPPLIED THE SAID DRAWINGS, SPECIFICATIONS OR OTHER DATA IS NOT TO BE REGARDED BY IMPLICATION OR OTHERWISE AS IN ANY MANNER LICENSING THE HOLDER OR ANY OTHER PERSON OR CORPORATION, OR CONVEYING ANY RIGHTS OR PERMISSION TO MANUFACTURE, USE, OR SELL ANY PATENTED INVENTION THAT MAY IN ANY WAY BE RELATED THERETO.

REVISIONS 02768

SYM	ZONE	DESCRIPTION	DR	CHK	DATE	APPROVED
G		REPLACES REV F WITH CHANGE PER TDRR 20854.			7/12/65	WK
H		REVISED PER TDRR 20892			8/3/65	WK
J		REVISED PER TDRR 20904			8/3/65	WK
K		REVISED PER TDRR 21379			8/16/65	WK
L		REVISED PER TDRR 21410			8/23/65	WK
M		REVISED PER TDRR 21993				
N		REVISED PER TDRR 22621				
P		REVISED PER TDRR 22671				
R		REVISED PER TDRR 22672				
S		REVISED PER TDRR 22750				
T		REVISED PER TDRR 22823			/65	WK
U		REVISED PER TDRR 23072			10-12-65	
V		REVISED PER TDRR 23521			10-27-65	WK
W		REVISED PER TDRR 23824	RAJ		11-5-65	WK
Y		REVISED PER TDRR 240.8	RAJ		11-6-65	WK
Z		REVISED PER TDRR 24040	RAJ		11-9-65	WK
AA		REVISED PER TDRR 24060	RAJ		11-19-65	WK

DASH NO.	P/C	PART NAME	REMARKS	PART NO.	SER. NO.	CONT. NO.	STYLE	TYPE	MATERIAL	A	B	C	D	E	F	G	H	J	K	L	M	N	P	R	S	T	U	V	W	Y	Z	AA	AB	AC	AD	AE	AF	AG	AH	AJ	AK	AL	AM	AN	AP	AR
399	K																																													
398	K																																													
350	K	ALIGNMENT OPTICAL TELESCOPE (LEM)		NA	NA	NA	A	I	NOTE 11B	4.000	2.625	3.375	2.750	.156	.093	.156	.187	NA	NA	2.312	1.468	1.187	.906	2.031	NA	.375	.156	NA	1.437	2.750	.437	NA	3.688	.062	.062	1.750	.593	NA	.625	3.375	.187	NA	.156	.531	.453	NA
309	K																																													
308	K																																													
307	K						B	I	NOTE 11 B	4.000	2.625	3.375	2.750	.156	.093	.156	.187	NA	NA	2.328	1.468	1.187	.906	2.031	.062	.375	.156	NA	1.437	2.750	.437	NA	3.687	.062	.062	1.750	.593	NA	NA	NA	NA	NA	NA	NA	NA	NA
306	K						B	II	NOTE 11 C	4.000	2.625	3.375	2.750	.156	.093	.156	.187	.125	.156	2.328	1.468	1.187	.906	2.031	.062	.375	.156	↕	1.437	2.750	.437	2.312	3.687	.062	NA	1.750	.593	↕	↕	↕	↕	↕	↕	↕	↕	↕
305	K						B	I	NOTE 11 B	2.000	1.312	1.687	1.375	.078	.048	.078	.093	NA	NA	1.164	.734	.593	.453	1.015	.048	.171	.078	↕	.718	1.375	.187	NA	NA	.048	.031	.875	.320	↕	↕	↕	↕	↕	↕	↕	↕	↕
304	K						B	II	NOTE 11 C	2.000	1.312	1.687	1.375	.078	.048	.078	.093	.070	.078	1.164	.734	.593	.453	1.015	.048	.171	.078	NA	.718	1.375	.187	.156	1.843	.048	NA	.875	.320	NA	NA	NA	NA	NA	NA	NA	NA	NA
303	K																																													
302	K																																													
301	K																																													
300	K	OPTICAL UNIT		NA	NA	NA	A	I	NOTE 11 B	2.000	1.312	1.675	NA	NA	.048	.078	NA	NA	NA	1.090	.812	.675	.540	.940	NA	.265	NA	NA	NA	1.375	.218	NA	NA	NA	NA	NA	.375	NA	NA	NA	.180	NA	.078	NA	NA	NA
9	K	2 IN AUTOCOLLIMATOR		1001702			B	II	NOTE 11 C	4.000	2.625	3.812	2.750	.156	.093	.156	.187	.125	.156	2.250	1.500	1.187	.906	2.031	.093	.375	.156	1.750	1.437	2.750	.437	2.312	3.687	.062	NA	1.750	.593	.156	1.062	3.812	.156	NA	.156	1.062	.375	3.687
8	K	5 IN AUTOCOLLIMATOR		1017410			B	II	NOTE 11 C	4.000	2.625	3.812	2.750	.156	.093	.156	.187	.125	.156	2.250	1.500	1.187	.906	2.031	.093	.375	.156	1.750	1.437	2.750	.437	2.312	3.687	.062	NA	1.750	.593	.156	1.062	3.812	.156	NA	.156	1.062	.375	3.687
7	K	2½ IN AUTOCOLLIMATOR (SCT)		1017435			B	II	NOTE 11 C	4.000	2.625	3.812	2.750	.156	.093	.156	.187	.125	.156	2.250	1.500	1.187	.906	2.031	.093	.375	.156	1.750	1.437	2.750	.437	2.312	3.687	.062	NA	1.750	.593	.156	1.062	3.812	.156	NA	.156	1.062	.375	3.687
6	K	2½ IN AUTOCOLLIMATOR (SXT)		1017448			B	II	NOTE 11 C	4.000	2.625	3.812	2.750	.156	.093	.156	.187	.125	.156	2.250	1.500	1.187	.906	2.031	.093	.375	.156	1.750	1.437	2.750	.437	2.312	3.687	.062	NA	1.750	.593	.156	1.062	3.812	.156	NA	.156	1.062	.375	3.687
5	K	RETROREFLECTING PRISM ASSEMBLY		1019840			B	I	NOTE 11 B	4.000	2.625	3.812	2.750	.156	.093	.156	.187	NA	NA	2.250	1.500	1.187	.906	2.031	.093	.375	.156	1.750	1.437	2.750	.437	NA	NA	.062	.062	1.750	.593	.156	1.062	3.812	.156	NA	.156	1.062	.375	NA
4	K	S/H SIMULATOR ASSEMBLY		1019896			B	I	NOTE 11 B	4.000	2.625	3.812	2.750	.156	.093	.156	.187	NA	NA	2.250	1.500	1.187	.906	2.031	.093	.375	.156	1.750	1.437	2.750	.437	NA	NA	.062	.062	1.750	.593	.156	1.062	3.812	.156	NA	.156	1.062	.375	NA
3	K	REFERENCE MIRROR		1001767			B	I	NOTE 11 B	2.000	1.312	1.906	1.375	.078	.048	.078	.093	NA	NA	1.125	.750	.593	.453	1.015	.062	.187	.078	.875	.718	1.375	.218	NA	NA	.048	.031	.875	.305	.078	.531	1.906	.078	NA	.078	.531	.187	NA
2	K	2 IN PLANE READING AUTOCOLLIMATOR		1017413			B	I	NOTE 11 B	2.000	1.312	1.906	1.375	.078	.048	.078	.093	NA	NA	1.125	.750	.593	.453	1.015	.062	.187	.078	.875	.718	1.375	.218	NA	NA	.048	.031	.875	.305	.078	.531	1.906	.078	NA	.078	.531	.187	NA
1	K	2 IN AUTOCOLLIMATOR		1001702			B	I	NOTE 11 B	2.000	1.312	1.906	1.375	.078	.048	.078	.093	NA	NA	1.125	.750	.593	.453	1.015	.062	.187	.078	.875	.718	1.375	.218	NA	NA	.048	.031	.875	.305	.078	.531	1.906	.078	NA	.078	.531	.187	NA

Ⓖ REPLACES REV F WITH CHANGE

KOLLSMAN DASH NUMBERS

NOTES FOR TABLE

STYLE A IS FOR G&N SYSTEM.
STYLE B IS FOR GROUND SUPPORT EQUIPMENT.
TYPE I IS WITHOUT MOUNTING HOLES.
TYPE II IS WITH MOUNTING HOLES.

MASTER

QTY REQD	PART OR IDENTIFYING NO.	MATERIAL OR NOTES	NOMENCLATURE OR DESCRIPTION	FIND NO.

LIST OF MATERIALS

AS APPLICABLE
NEXT ASSY | USED ON
APPLICATION

UNLESS OTHERWISE SPECIFIED
DIMENSIONS ARE IN INCHES
CAPACITOR VALUES ARE IN µf
RESISTOR VALUES ARE IN OHMS
TOLERANCES ON
FRACTIONS ± — DECIMALS ±.005 ANGLES ± —
DO NOT SCALE THIS DRAWING

MATERIAL
SEE NOTE 11

MIT
INSTRUMENTATION LAB
CAMBRIDGE, MASS.

DRAWN R.G. Jones 7-16-65
CHECKED 7-22-65
APPROVED
APPROVED W Kupfer
APPROVED MIT W Kupfer
APPROVED MSC
DATE

MANNED SPACECRAFT CENTER
HOUSTON, TEXAS

NAMEPLATES,
APOLLO G&N-GSE
(STANDANDS)

CODE IDENT NO. 80230
SIZE E
DRAWING NO. 1004260
SCALE NONE
SHEET 2 OF 5

NOTICE – WHEN GOVERNMENT DRAWINGS, SPECIFICATIONS, OR OTHER DATA ARE USED FOR ANY PURPOSE OTHER THAN IN CONNECTION WITH A DEFINITELY RELATED GOVERNMENT PROCUREMENT OPERATION, THE UNITED STATES GOVERNMENT THEREBY INCURS NO RESPONSIBILITY NOR ANY OBLIGATION WHATSOEVER; AND THE FACT THAT THE GOVERNMENT MAY HAVE FORMULATED, FURNISHED, OR IN ANY WAY SUPPLIED THE SAID DRAWINGS, SPECIFICATIONS, OR OTHER DATA IS NOT TO BE REGARDED BY IMPLICATION OR OTHERWISE AS IN ANY MANNER LICENSING THE HOLDER OR ANY OTHER PERSON OR CORPORATION, OR CONVEYING ANY RIGHTS OR PERMISSION TO MANUFACTURE, USE, OR SELL ANY PATENTED INVENTION THAT MAY IN ANY WAY BE RELATED THERETO.

REVISIONS 02768

SYM	ZONE	DESCRIPTION	DR	CHK	DATE	APPROVED
G		REPLACES REV F WITH CHANGE PER TDRR 20854			[illegible]	
H		REVISED PER TDRR 20892			[illegible]	
J		REVISED PER TDRR 20904			[illegible]	
K		REVISED PER TDRR 21379			[illegible]	
L		REVISED PER TDRR 21410			[illegible]	
M		REVISED PER TDRR 21993				
N		REVISED PER TDRR 22621				
P		REVISED PER TDRR 22671				
R		REVISED PER TDRR 22672				
S		REVISED PER TDRR 22750				
T		REVISED PER TDRR 22823			[illegible]	
U		REVISED PER TDRR 23072			[illegible]-65	
V		REVISED PER TDRR 23521			10-26-65	
W		REVISED PER TDRR 23824	RAJ		[illegible]-65	
Y		REVISED PER TDRR 24018	RAJ		[illegible]-65	
Z		REVISED PER TDRR 24040	RAJ		[illegible]-65	
AA		REVISED PER TDRR 24060	RAJ		11-9-65	

DASH NO.	P/C	PART NAME	REMARKS	PART NO.	SER. NO.	CONT. NO.	STYLE	TYPE	MATERIAL	
299	R									
298	R									
254	R	DRAWER ASSY COMP. SIMULATOR		2014048-011	NA	NAS-9-497	B	II	NOTE 11 C	FOR DIMENSIONS, SEE DASH 18 VALUES BELOW
253		SHIPPING KIT ASSY, NAV DSKY		2016312-011						
252		SHIPPING KIT ASSY, UNIVERSAL DSKY		2016316-011						
251		SHIPPING KIT ASSY, MAIN DSKY		2016313-011				II	NOTE 11 C	
250		AMPLIFIER, REWORK		2014386				I	NOTE 11 B	FOR DIMENSIONS, SEE DASH 15 VALUES BELOW
249		TEMP MONITOR ASSY		2014313-011					NOTE 11 C	FOR DIMENSIONS, SEE DASH 17 VALUES BELOW
248		AGC JUNCTION ASSY		2014341-011					NOTE 11 B	FOR DIMENSIONS, SEE DASH 15 VALUES BELOW
247		AC INPUT PANEL ASSY		2014302-011						
246		SELF TEST ASSY		2014392 011						
245	R	TAPE PUNCH ASSEMBLY		2014039-011	NA		B	I	NOTE 11 B	FOR DIMENSIONS, SEE DASH 15 VALUES BELOW
244	R	TAPE READER ASSEMBLY		2014038-011	NA	NAS-9-497	B	I	NOTE 11 B	
243										
242										
241	R	APOLLO GUIDANCE COMPUTER GROUP		6003000-011	NA	NAS-9-497	A	I	NOTE 11 B	FOR DIMENSIONS, SEE DASH 19 VALUES BELOW
240	R	SELF TEST ASSEMBLY		2014366-011	NA		B	I	NOTE 11 B	FOR DIMENSIONS, SEE DASH 15 VALUES BELOW
239		POWER SUPPLY ASSY-115V., 400 CYCLE		2014207-011						FOR DIMENSIONS, SEE DASH 17 VALUES BELOW
238		AC INPUT PANEL ASSY		2014043-011						
237		POWER CONTROL ASSY		2014079-011						FOR DIMENSIONS, SEE DASH 15 VALUES BELOW
236		DRAWER ASSY-XY INTERFACE		2014040-011						
235		DRAWER ASSY RDC INTERFACE		2014045-011						
234		BUFFER CIRCUIT ASSY		2014254-011						
233		CONTROL & INTERFACE ASSY		2014204-011						
232		POWER CONTROL ASSY		2014044-011						FOR DIMENSIONS, SEE DASH 17 VALUES BELOW
231		DRAWER ASSY, PROGRAMMER & MONITOR		2014041-011						
230		CONNECTOR INTERFACE ASSY		2014272-011						FOR DIMENSIONS, SEE DASH 15 VALUES BELOW
229		CONNECTOR INTERFACE ASSY		2014047-011						
228		ANTENNA, TUNING CAPACITOR ASSY		2014209-011						
227		MOUNTING FIXTURE ASSY		2014006-011						FOR DIMENSIONS, SEE DASH 17 VALUES BELOW
226		POWER SUPPLY ASSY 3 VDC		2014234-011						FOR DIMENSIONS, SEE DASH 15 VALUES BELOW
225		PANEL ASSY — SIGNAL INTERFACE		2014010-011						
224		OSCILLOSCOPE ASSY		2014232-011						
223		AUXILIARY OUTLET ASSY		2014274-011						
222		FREQUENCY COUNTER		2014233-011						
221		POWER SUPPLY ASSY 10, 13, 28 VDC		2014235-011						
220		LOGIC DRAWER ASSY NO. 2		2014037-011						FOR DIMENSIONS, SEE DASH 17 VALUES BELOW
219		LOGIC DRAWER ASSY NO. 1		2014036-011						
218		COUNTER, ELECTRICAL ASSY		2014288-011						FOR DIMENSIONS, SEE DASH 15 VALUES BELOW
217		POWER SUPPLY ASSY		2014279-011						
216		TEST MOUNT ASSY		2014257-011						
215		UNIVERSAL DSKY PEDESTAL MOUNT		2014014-011						FOR DIMENSIONS, SEE DASH 17 VALUES BELOW
214		MAIN DSKY PEDESTAL MOUNT		2014343				I	NOTE 11 B	
213		SHIPPING CONTAINER, MAIN DSKY		1006229				II	NOTE 11 C	FOR DIMENSIONS, SEE DASH 18 VALUES BELOW
212		NAV DSKY		1006231						
211		AGC		1006230						
210		UNIVERSAL DSKY		1006422						
209		SHIPPING CONTAINER, AGC		1006421				II	NOTE 11 C	
208		UNIVERSAL DSKY HANDLING FIXTURE		2014013-011				I	NOTE 11 B	FOR DIMENSIONS, SEE DASH 15 VALUES BELOW
207		NAV DSKY HANDLING FIXTURE		1014377						FOR DIMENSIONS, SEE DASH 17 VALUES BELOW
206		MAIN DSKY HANDLING FIXTURE		1014334						
205		AGC HANDLING FIXTURE		2014282-011				I	NOTE 11 B	
204		OPERATION CONSOLE		2014024-011				II	NOTE 11 C	FOR DIMENSIONS, SEE DASH 18 VALUES BELOW
203		COMPUTER TEST SET		2014042-011		NAS-9-497				
202		DRAWER ASSY, COMPUTER SIMULATOR		2014048-011		FNP-12775				
201		AUXILIARY CALIBRATION CONSOLE		2014059-011		NAS-9-497				
200	R	AGC CALIBRATION CONSOLE		2014049-011	NA		B	II	NOTE 11 C	
21	R									
20	R	NA		NA	NA	NA	A	II	NOTE 11 C	
19	R	NA		NA	NA	NA	A	I	NOTE 11 B	
18	R	NA		NA	NA	NA	B	II	NOTE 11 C	
17	R	NA		NA	NA	NA	B	I	NOTE 11 B	
16	R	NA		NA	NA	NA	B	II	NOTE 11 C	
15	R	NA		NA	NA	NA	B	I	NOTE 11 B	

DASH NO.	A	B	C	D	E	F	G	H	J	K	L	M	N	P	R	S	T	U	V	W	Y	Z	AA	AB	AC	AD	AE	AF	AG	AH	AJ	AK	AL	AM	AN	AP	AR
21																																					
20	2.000	1.312	1.687	1.375	.078	.031	.078	.093	.106 .113	.093	1.187	.750	.593	.453	1.015	.062	.187	.078	.875	.718	1.375	.218	1.156	1.843	.048	NA	.875	.305	.078	.312	1.687	.078	NA	.078	.312	.187	1.843
19	2.000	1.312	1.687	1.375	.078	.031	.078	.093	NA	NA	1.187	.750	.593	.453	1.015	.062	.187	.078	.875	.718	1.375	.218	NA	NA	.048	.031	.875	.305	.078	.312	1.687	.078	NA	.078	.312	.187	NA
18	4.187	1.875	3.469	2.750	.156	.093	.156	.125	.106 .113	.125	1.625	1.032	.844	.656	1.406	.093	.344	.156	1.781	1.531	2.844	.312	1.562	3.875	.062	NA	1.219	.500	.156	.719	3.469	.156	NA	.156	.719	.344	3.875
17	4.187	1.875	3.469	2.750	.156	.093	.156	.125	NA	NA	1.625	1.032	.844	.656	1.406	.093	.344	.156	1.781	1.531	2.844	.312	NA	NA	.062	[illegible]	1.219	.500	.156	.719	3.469	.156	NA	.156	.719	.344	NA
16	2.000	1.312	1.687	1.375	.078	.031	.078	.093	.106 .113	.093	1.187	.750	.593	.453	1.015	.062	.187	.078	.875	.718	1.375	.218	1.156	1.843	.048	NA	.875	.305	.078	.312	1.687	.078	NA	.078	.312	.187	1.843
15	2.000	1.312	1.687	1.375	.078	.031	.078	.093	NA	NA	1.187	.750	.593	.453	1.015	.062	.187	.078	.875	.718	1.375	.218	NA	NA	.048	.031	.875	.305	.078	.312	1.687	.078	NA	.078	.312	.187	NA

THIS SHEET ADDED

Ⓖ REPLACES REV F WITH CHANGE

RAYTHEON DASH NUMBERS

NOTES FOR TABLE
STYLE A IS FOR G & N SYSTEM
STYLE B IS FOR GROUND SUPPORT EQUIPMENT
TYPE I IS WITHOUT MOUNTING HOLES
TYPE II IS WITH MOUNTING HOLES

QTY REQD	PART OR IDENTIFYING NO.	MATERIAL OR NOTES	NOMENCLATURE OR DESCRIPTION	FIND NO.

LIST OF MATERIALS

UNLESS OTHERWISE SPECIFIED
DIMENSIONS ARE IN INCHES
CAPACITOR VALUES ARE IN μf
RESISTOR VALUES ARE IN OHMS
TOLERANCES ON
FRACTIONS ± — DECIMALS ±.005 ANGLES ± —
DO NOT SCALE THIS DRAWING

MATERIAL
SEE NOTE 11

AS APPLICABLE
NEXT ASSY | USED ON
APPLICATION

MIT
INSTRUMENTATION LAB
CAMBRIDGE, MASS.

DRAWN R. A. Jones 7-16-65
CHECKED
APPROVED
APPROVED
APPROVED MIT
APPROVED MSC
DATE

MANNED SPACECRAFT CENTER
HOUSTON, TEXAS

NAMEPLATES,
APOLLO GEN-GSE
(STANDARDS)

CODE IDENT NO. 80230
SIZE E
DRAWING NO. 1004260
SCALE NONE
SHEET 3 OF 5

MASTER

REVISIONS 02768

SYM	ZONE	DESCRIPTION	DR	CHK	DATE	APPROVED
G		REPLACES REV F WITH CHANGE PER TDRR 20854.			7/22/65	WK
H		REVISED PER TDRR 20892			8/5/65	WK
J		REVISED PER TDRR 20904			8/3/65	WK
K		REVISED PER TDRR 21379			8/5/65	WK
L		REVISED PER TDRR 21410			8/23/65	WK
M		REVISED PER TDRR 21993				
N		REVISED PER TDRR 22621				
P		REVISED PER TDRR 22671				
R		REVISED PER TDRR 22672				
S		REVISED PER TDRR 22750			65	WK
T		REVISED PER TDRR 22823				
U		REVISED PER TDRR 23072			[illegible]	[illegible]
V		REVISED PER TDRR 23521			10-26-65	WK
W		REVISED PER TDRR 23824	RAJ		[illegible]-9-65	WK
Y		REVISED PER TDRR 24018	RAJ		[illegible]-65	WK
Z		REVISED PER TDRR 24040	RAJ		[illegible]-19-65	WK
AA		REVISED PER TDRR 24060	RAJ.		[illegible]-19-65	WK

DASH NO.	P/C	PART NAME	REMARKS	PART NO.	SER. NO.	CONT. NO.	STYLE	TYPE	MATERIAL	A	B	C	D	E	F	G	H	J	K	L	M	N	P	R	S	T	U	V	W	Y	Z	AA	AB	AC	AD	AE	AF	AG	AH	AJ	AK	AL	AM	AN	AP	AR
199	AC																																													
198	AC																																													
160	AC	FIX., HAND., G AND N HARNESS		1901846-031		NAS-9-497	B	II	NOTE 11C	FOR DIMENSIONS, SEE DASH 144 VALUES BELOW																																				
159	AC	BATTERY POWER PACK		1900011-031			B	II	NOTE 11C																																					
158	AC	COUPLING DATA UNIT ASSEMBLY C/M		2007222-011			A	I	NOTE 11B	FOR DIMENSIONS, SEE DASH 100 VALUES BELOW																																				
157	AC	COUPLING DATA UNIT ASSEMBLY - LEM		2007222-021																																										
156	AC	POWER & SERVO ASSEMBLY C/M		2007200-011																																										
155	AC	PIPA ELECTRONICS ASSEMBLY		2007201-011																																										
154	AC	PULSE TORQUE ASSEMBLY - LEM		6007000-011																																										
153	AC	POWER & SERVO ASSEMBLY - LEM		6007200-011			A	I	NOTE 11B																																					
152	AC	CONT PNL, RSVR CKT TESTER		2900770-011		NAS-9-497	B	II	NOTE 11C	FOR DIMENSIONS, SEE DASH 141 VALUES BELOW																																				
151	AC	TESTER, RESOLVER CIRCUIT		2900708-011																																										
150	AC	JUNCTION BOX, P.S.A./G.S.E.		1901933-021						FOR DIMENSIONS, SEE DASH 144 VALUES BELOW																																				
149	AC	BATTERY PACK, LIFTING		2900812-011						FOR DIMENSIONS, SEE DASH 141 VALUES BELOW																																				
148	AC	MOUNTING PLATE, COMPONENT		6900007-011						FOR DIMENSIONS, SEE DASH 144 VALUES BELOW																																				
147	AC	MOUNTING PLATE, COMPONENT		2900677-011			B	II	NOTE 11C																																					
145	AC	CONTAINER, SHIPPING, IMU		1900010-021		NAS-9-497	B	II	NOTE 11C	FOR DIMENSIONS, SEE DASH 144 VALUES BELOW																																				
144	AC	FIX., MOUNTING, G AND N		1902204-021			B	II	NOTE 11C	4.125	1.812	3.250	NA	.125	.062	.12	.156	.100 .104	.125	1.625	1.140	.890	.640	1.390	.125	.171	.125	1.875	1.687	2.625	.250	1.562	3.843	.093	NA	NA	.359	.125	.437	3.688	NA	3.687	.093	.40	.25	3.875
143	AC	CSL, COOL. AND PWR, G AND N		1902134-021						4.125	1.812	3.250		.125	.062	.12	.156		.125	1.625	1.140	.890	.640	1.390	.125	.171	.125	1.875	1.687	2.625	.250	1.562	3.843	.093			.359	.125	.437	3.688		3.687	.093	.40	.25	3.875
142	AC	ANALYZER, OPTICS-INERTIAL		2900023-011						4.125	1.812	3.250		.125	.062	.12	.156		.125	1.625	1.140	.890	.640	1.390	.125	.171	.125	1.875	1.687	2.625	.250	1.562	3.843	.093			.359	.125	.437	3.688		3.687	.093	.40	.25	3.875
141	AC	CONT, TEMP, PORTABLE		2900060-011						2.125	.968	1.718		.093	.031	.06	.093		.093	.858	.608	.484	.358	.733	.077	.116	.062	.937	.875	1.343	.125	.781	1.892	.046			.209	.093	.250	1.875		1.840	.046	.23	.16	1.938
140	AC	TESTER, CKT, IMU/CDU RSVR		2900286-011						4.125	1.812	3.250		.125	.062	.12	.156		.125	1.625	1.140	.890	.640	1.390	.125	.171	.125	1.875	1.687	2.625	.250	1.562	3.843	.093			.359	.125	.437	3.688		3.687	.093	.40	.25	3.875
139	AC	SIMULATOR, LD/SIG, CDU		2900285-011																																										
138	AC	SIMULATOR, LD/SIG, OPTICS		1902023-021																																										
137	AC	FIX., MOUNTING, IMU/NAV BASE		6900003-011																																										
136	AC	FIXTURE, OPTICS/NAV BASE		2900072-011																																										
135	AC	FIX., MOUNTING, SUB SYSTEM		2900070-011																																										
134	AC	FIX., HAND., G AND N HARNESS		2900069-011																																										
133	AC	CNTR, SHIPPING, NAV BASE		2900068-011																																										
132	AC	FIX., MOUNTING, G AND N		2900067-011																																										
131	AC	SIMULATOR, LD/SIG, IMU/CDU		2900032-011																																										
130	AC	TESTER, GYRO WHEEL		2900061-011																																										
129	AC	COOLANT SUPPLY		1902133-021																																										
128	AC	TABLE, ROTARY		1900926-021						4.125	1.812	3.250		.125	.062	.12	.156		.125	1.625	1.140	.890	.640	1.390	.125	.171	.125	1.875	1.687	2.625	.250	1.562	3.843	.093			.359	.125	.437	3.688		3.687	.093	.40	.25	3.875
127	AC	FIX., HAND., OPTICS		2900074-011						2.125	.968	1.718		.093	.031	.06	.093		.093	.858	.608	.484	.358	.733	.077	.116	.062	.937	.875	1.343	.125	.781	1.892	.046			.209	.093	.250	1.875		1.840	.046	.23	.16	1.938
126	AC	FIXTURE, MTG, PTA/PEA.		2900066-011																																										
125	AC	CONT, TEMP, IMU LIFTING		2900063-011																																										
124	AC	FIXTURE, HANDLING, IMU		2900064-011																																										
123	AC	CONT, OPTICS, REMOTE		1902046-021																																										
122	AC	TEST CONTROL		1902009-021																																										
121	AC	ADPT MODULE, P.S.A.		1902431-021																																										
120	AC	BRIDGE, DECADE ERROR		2900128-011																																										
119	AC	PWR SUP, ELECTRONICS		2900012-011																																										
118	AC	PWR SUP, RELAY AND LAMP		1900049-031																																										
117	AC	CONSOLE, OSCILLOGRAPH		1900000-021																																										
116	AC	ADPT MODULE, P.S.A.		1902431-011																																										
115	AC	ADPT, TEST POINT, PTA/PEA.		2900145-011																																										
114	AC	ADPT, TEST POINT, P.S.A.		2900037-011																																										
113	AC	CONTROL, GIMBAL POSITION		2900036-011																																										
112	AC	SELECTOR, SIGNAL, PRIMARY		2900035-011																																										
111	AC	SEL, SIG, OSCILLOGRAPH		2900034-011																																										
110	AC	PANEL, PWR SUP AND LOAD		2900033-011																																										
109	AC	PANEL, MONITOR		2900031-011																																										
108	AC	PANEL, AUXILIARY INPUT		2900030-011																																										
107	AC	CAGING ELECTRONICS, GYRO		2900029-011																																										
106	AC	TEST SELECTOR		2900028-011																																										
105	AC	TEST CONTROL		2900027-011																																										
104	AC	MONITOR AND CONTROL, TEMP		2900026-011																																										
103	AC	DISTRIBUTION BOX, GSE		2900024-011																																										
102	AC	VOLTMETER, DIGITAL		2900007-011			B	II	NOTE 11C	2.125	.968	1.718	NA	.093	.031	.06	.093	.100 .104	.093	.858	.608	.484	.358	.733	.077	.116	.062	.937	.875	1.343	.125	.781	1.892	.046	NA	NA	.209	.093	.250	1.875	NA	1.840	.046	.23	.16	1.938
101	AC	NAVIGATION BASE ASSEMBLY - LEM		6899950		NAS-9-497	A	I	NOTE 11B	2.000	1.312	1.906	1.375	.078	.048	.078	.093	NA	NA	1.125	.750	.593	.453	1.015	.062	.187	.078	.875	.718	1.375	.218	NA	NA	.048	.031	.875	.305	.078	.531	1.906	.078	NA	.078	.531	.187	NA
100	AC	NAVIGATION BASE ASSEMBLY		2899982		NAS-9-497	A	I	NOTE 11B	2.000	1.312	1.906	1.375	.078	.048	.078	.093	NA	NA	1.125	.750	.593	.453	1.015	.062	.187	.078	.875	.718	1.375	.218	NA	NA	.048	.031	.875	.305	.078	.531	1.906	.078	NA	.078	.531	.187	NA

AC ELECTRONICS DASH NUMBERS

THIS SHEET ADDED

Ⓖ REPLACES REV F WITH CHANGE

NOTES FOR TABLE

STYLE A IS FOR G&N SYSTEM
STYLE B IS FOR GROUND SUPPORT EQUIPMENT
TYPE I IS WITHOUT MOUNTING HOLES
TYPE II IS WITH MOUNTING HOLES

QTY REQD	PART OR IDENTIFYING NO.	MATERIAL OR NOTES	NOMENCLATURE OR DESCRIPTION	FIND NO.

LIST OF MATERIALS

NEXT ASSY	USED ON
AS APPLICABLE	

APPLICATION

UNLESS OTHERWISE SPECIFIED
DIMENSIONS ARE IN INCHES
CAPACITOR VALUES ARE IN μf
RESISTOR VALUES ARE IN OHMS
TOLERANCES ON
FRACTIONS ± — DECIMALS ±.005 ANGLES ± —
DO NOT SCALE THIS DRAWING

MATERIAL
SEE NOTE H

MIT
INSTRUMENTATION LAB
CAMBRIDGE, MASS.

DRAWN R. O. Jones 7-16-65
CHECKED 7-22-65
APPROVED
APPROVED W Kupfer
APPROVED MIT W Kupfer
APPROVED MSC
DATE

MANNED SPACECRAFT CENTER
HOUSTON, TEXAS

NAMEPLATES,
APOLLO G&N-GSE
(STANDARDS)

111

CODE IDENT NO. 80230
SIZE E
DRAWING NO. 1004260
SCALE NONE
SHEET 4 OF 5

MASTER

NOTICE – WHEN GOVERNMENT DRAWINGS, SPECIFICATIONS, OR OTHER DATA ARE USED FOR ANY PURPOSE OTHER THAN IN CONNECTION WITH A DEFINITELY RELATED GOVERNMENT PROCUREMENT OPERATION, THE UNITED STATES GOVERNMENT THEREBY INCURS NO RESPONSIBILITY NOR ANY OBLIGATION WHATSOEVER; AND THE FACT THAT THE GOVERNMENT MAY HAVE FORMULATED, FURNISHED, OR IN ANY WAY SUPPLIED THE SAID DRAWINGS, SPECIFICATIONS OR OTHER DATA IS NOT TO BE REGARDED BY IMPLICATION OR OTHERWISE AS IN ANY MANNER LICENSING THE HOLDER OR ANY OTHER PERSON OR CORPORATION, OR CONVEYING ANY RIGHTS OR PERMISSION TO MANUFACTURE, USE, OR SELL ANY PATENTED INVENTION THAT MAY IN ANY WAY BE RELATED THERETO.

REVISIONS 02768

SYM	ZONE	DESCRIPTION	DR	CHK	DATE	APPROVED
G		REPLACES REV F WITH CHANGE PER TDRR 20854			7/22/65	WK
H		REVISED PER TDRR 20892			9/3/65	WK
J		REVISED PER TDRR 20904			9/3/65	WK
K		REVISED PER TDRR 21379				WK
L		REVISED PER TDRR 21410				WK
M		REVISED PER TDRR 21993				
N		REVISED PER TDRR 22621				
P		REVISED PER TDRR 22671				
R		REVISED PER TDRR 22672				
S		REVISED PER TDRR 22750				WK
T		REVISED PER TDRR 22823				WK
U		REVISED PER TDRR 23072				
V		REVISED PER TDRR 23521			10-26-65	WK
W		REVISED PER TDRR 23824	RAJ		11-9-65	WK
Y		REVISED PER TDRR 24018	RAJ		11-16-65	
Z		REVISED PER TDRR 24040	RAJ		11-19-65	
AA		REVISED PER TDRR 24060	RAJ		11-19-65	WK

CASH NO.	P/C	PART NAME	REMARKS	PART NO.	SER. NO.	CONT. NO.	STYLE	TYPE	MATERIAL	A	B	C	D	E	F	G	H	J	K	L	M	N	P	R	S	T	U	V	W	Y	Z	AA	AB	AC	AD	AE	AF	AG	AH	AJ	AK	AL	AM	AN	AP	AR
499	MIT																																													
498																																														
401	MIT	COMPUTER ASSY		2003100-00		NAS-9-497	A	I	NOTE 11 B	2.000	1.312	1.906	1.375	.078	.048	.078	.093	NA	NA	1.125	.750	.593	.453	1.015	.062	.187	.078	.875	.718	1.375	.218	NA	NA	.048	.031	.875	.305	.078	.531	1.906	.078	NA	.078	.531	.187	NA
400	MIT	LIFTING SLING-G&N INST. QUAL. FIX. & AZM. REF. FIX.		1021640		NAS-9-4065	B	II	NOTE 11 C	2.000	1.312	1.687	1.375	.078	.048	.078	.093	[illegible]	.093	1.187	.750	.593	.453	1.015	.062	.187	.078	.875	.718	1.375	.218	1.156	1.843	.048	NA	.875	.305	.078	.312	1.687	.110	1.830	.070	.275	.180	1.844

MIT DASH NUMBERS

THIS SHEET ADDED

Ⓖ REPLACES REV F WITH CHANGE

NOTES FOR TABLE

STYLE A IS FOR G&N SYSTEM

STYLE B IS FOR GROUND SUPPORT EQUIPMENT

TYPE I IS WITHOUT MOUNTING HOLES

TYPE II IS WITH MOUNTING HOLES

MASTER

QTY REQD	PART OR IDENTIFYING NO.	MATERIAL OR NOTES	NOMENCLATURE OR DESCRIPTION	FIND NO.

LIST OF MATERIALS

NEXT ASSY	USED ON
AS APPLICABLE	

APPLICATION

UNLESS OTHERWISE SPECIFIED
DIMENSIONS ARE IN INCHES
CAPACITOR VALUES ARE IN µf
RESISTOR VALUES ARE IN OHMS
TOLERANCES ON
FRACTIONS ± — DECIMALS ±.005 ANGLES ± —
DO NOT SCALE THIS DRAWING

MATERIAL
SEE NOTE 11

MIT
INSTRUMENTATION LAB
CAMBRIDGE, MASS.

MANNED SPACECRAFT CENTER
HOUSTON, TEXAS

DRAWN R A Jones 7-16-65
CHECKED
APPROVED
APPROVED W Kupfer
APPROVED MIT W Kupfer
APPROVED MSC
DATE

NAMEPLATES, APOLLO G&N-GSE (STANDARDS)

CODE IDENT NO. 80230
SIZE E
DRAWING NO. 1004260
SCALE NONE
SHEET 5 OF 5

NOTICE – WHEN GOVERNMENT DRAWINGS, SPECIFICATIONS, OR OTHER DATA ARE USED FOR ANY PURPOSE OTHER THAN IN CONNECTION WITH A DEFINITELY RELATED GOVERNMENT PROCUREMENT OPERATION, THE UNITED STATES GOVERNMENT THEREBY INCURS NO RESPONSIBILITY NOR ANY OBLIGATION WHATSOEVER; AND THE FACT THAT THE GOVERNMENT MAY HAVE FORMULATED, FURNISHED, OR IN ANY WAY SUPPLIED THE SAID DRAWINGS, SPECIFICATIONS, OR OTHER DATA IS NOT TO BE REGARDED BY IMPLICATION OR OTHERWISE AS IN ANY MANNER LICENSING THE HOLDER OR ANY OTHER PERSON OR CORPORATION, OR CONVEYING ANY RIGHTS OR PERMISSION TO MANUFACTURE, USE, OR SELL ANY PATENTED INVENTION THAT MAY IN ANY WAY BE RELATED THERETO.

REVISIONS						02768
SYM	ZONE	DESCRIPTION	DR	CHK	DATE	APPROVED
G		REPLACES REV F WITH CHANGE PER TDRR 20854			7/22/65	WK
★ H		REVISED PER TDRR 20892			[illegible]	WK
J		REVISED PER TDRR 20904			[illegible]	WK
K		REVISED PER TDRR 21379			[illegible]	WK
L		REVISED PER TDRR 21410			8/23/65	WK
★ M		REVISED PER TDRR 21993				
★ N		REVISED PER TDRR 22621			10/	
★ P		REVISED PER TDRR 22671			11/	
★ R		REVISED PER TDRR 22672				
★ S		REVISED PER TDRR 22750			65	WK
T		REVISED PER TDRR 22823				
★ U		REVISED PER TDRR 23072			10-23-65	WK
V		REVISED PER TDRR 23521			10-27-65	WK
★ W		REVISED PER TDRR 23824	RAJ		11-9-65	WK
★ Y		REVISED PER TDRR 24018	RAJ		11-6-65	WK
★ Z		REVISED PER TDRR 24040	RAJ		11-19-65	WK
Ⓜ AA		REVISED PER TDRR 24060	RAJ		11-19-65	WK
AB		REVISED PER TDRR 24868	RAJ		12-22-65	WK

NOTES:

1. INTERPRET DRAWING IN ACCORDANCE WITH STANDARDS PRESCRIBED IN MIL-D-70327.
2. DIMENSIONS ON EACH VIEW APPLY TO ALL VIEWS. (WITH THE EXCEPTION OF MOUNTING HOLES).
3. FORMATS ILLUSTATED WILL BE APPLICABLE TO ALL ITEMS REQUIRING NAMEPLATES BELOW END ITEM DESIGNATION (SYSTEMS, ASSEMBLIES, ETC.)
4. PLATE BACKGROUND TO BE LUSTERLESS BLACK PER FED-STD-595, COLOR 37038. BORDER, MARKING AND LETTERING TO BE NATURAL METAL,(ANODIZED ALUMINUM).
5. MARKING METHOD TO BE DIE STAMPING, ETCHING OR ENGRAVING IN ACCORDANCE WITH MIL P 19834.
6. LETTERING STYLE TO BE GOTHIC,(SANS SERIFS), AND NUMBERS TO BE ARABIC.
7. WHERE LOCATING DIMENSIONS ARE NOT SHOWN, CHARACTERS SHALL BE SYMMETRICALLY POSITIONED.
8. IDENTIFY WITH DRAWING NUMBER PER ND1002019.
9. WHEN "AUTO MARK" METAL MARKING TYPEWRITER IS USED TO ADD DATA TO BLANK SPACES, TYPE SIZE IS TO BE SELECTED FROM DIMENSIONS U, AC AND AM.
10. NASA SYMBOL IS TO BE PROPORTIONAL TO NAMEPLATE IN RATIO OF 1 TO 5 WITH DIMENSION A VALUE AND IS TO HAVE NATURAL BACKGROUND. NASA SYMBOL LETTERS LETTERING AND FEATHER TO BE BLACK,(OR WHITE FOR SILK SCREENING). WHERE BLACK FEATHER PROTRUDES INTO BLACK BACKGROUND, A MINIMUM OUTLINE OF NATURAL BACKGROUND SHALL EXIST.
11. NAMEPLATES WILL BE APPLIED BY METHODS LISTED BELOW, SHOWN IN ORDER OF PREFERENCE, (I.E., FOR RELIABILITY AND WEIGHT).
    A - STENCIL OR SILK SCREEN DIRECTLY ON EQUIPMENT USING INK PER SCD 1010920,(WHITE OR BLACK).
    B - ALUMINUM FOIL,(STYLE A OR B, TYPE I):
    FOIL SHALL BE .0030 ± .0005 THICK PER MIL-A-148.
    FOIL SHALL HAVE NO ADHESIVE BACKING.
    FOIL SHALL BE BONDED PER ND 1002219,(METHOD II).
    FOIL SHALL BE CLEAR ANODIZED PER MIL-A-8625, TYPE II.
    C - PLATE, (STYLE A OR B, TYPE II):
    MATERIAL: QQ-A-250, TEMPER O OR H14, TYPE 1100, ALUMINUM ALLOY, .032 THICK.
    ANODIZE PER MIL-A-8625, TYPE II.
    ALUMINUM PLATE MUST BE FREE FROM BURRS AND SHARP CORNERS, MOUNTED WITH APPLICABLE SIZE FASTENERS.
12. NAMEPLATES SHALL BE CAPABLE OF MEETING APPLICABLE REQUIREMENTS OF MIL-M-13231.
13. ON DIMENSION TABLES SHOWN ON PAGES 2, 3, 4 AND 5, NA MEANS, "NOT APPLICABLE".

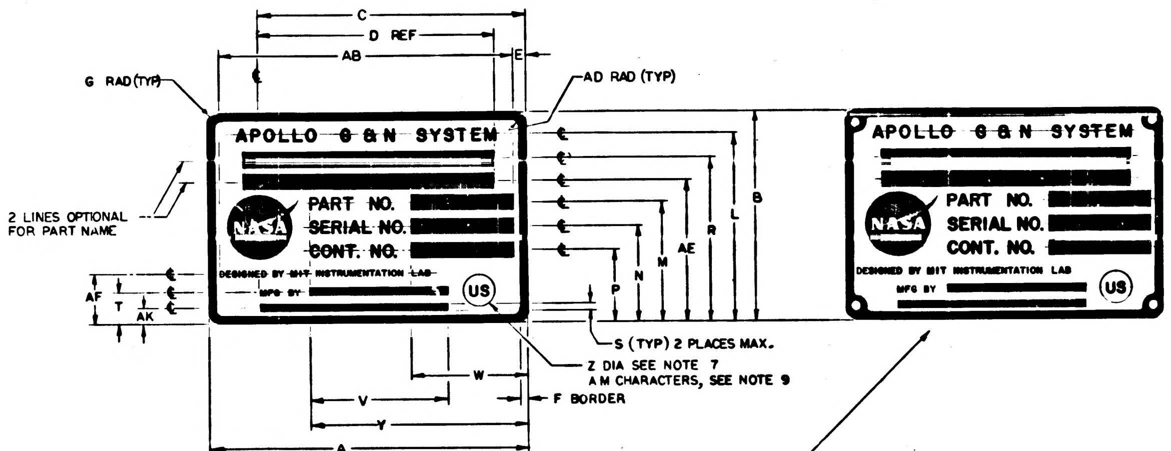
C
D REF
AB
E
G RAD (TYP)
AD RAD (TYP)
APOLLO G & N SYSTEM
NASA
PART NO.
SERIAL NO.
CONT. NO.
DESIGNED BY MIT INSTRUMENTATION LAB
MFG BY
US
2 LINES OPTIONAL FOR PART NAME
AF
T
AK
P
N
M
AE
R
L
B
S (TYP) 2 PLACES MAX.
Z DIA SEE NOTE 7
A M CHARACTERS, SEE NOTE 9
F BORDER
W
V
Y
A

FOR G AND N SYSTEM
STYLE A

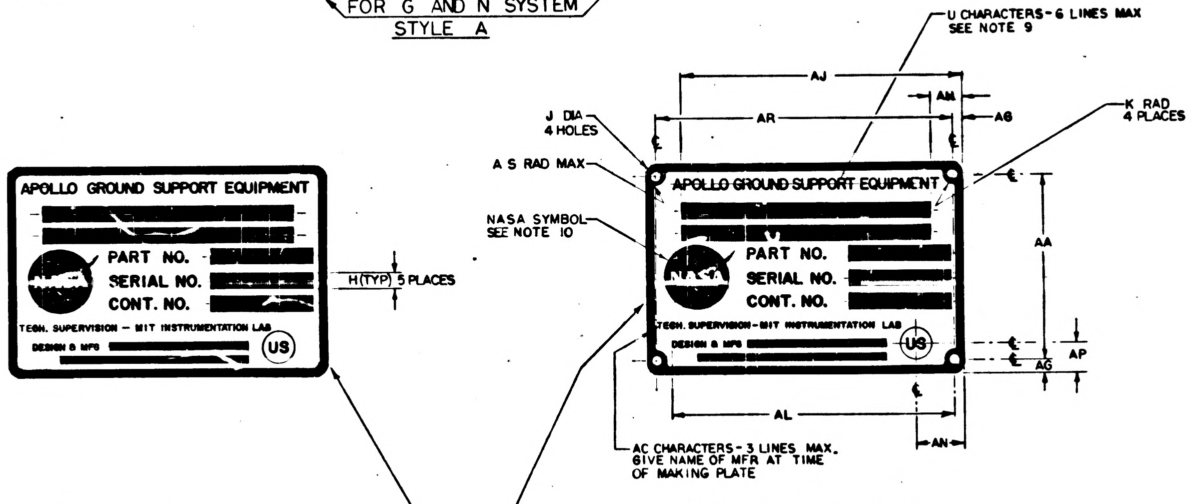
APOLLO GROUND SUPPORT EQUIPMENT
NASA
PART NO.
SERIAL NO.
CONT. NO.
TECH. SUPERVISION – MIT INSTRUMENTATION LAB
DESIGN & MFG
US
H (TYP) 5 PLACES
U CHARACTERS – 6 LINES MAX
SEE NOTE 9
AJ
AM
AR
AG
J DIA
4 HOLES
K RAD
4 PLACES
A S RAD MAX
NASA SYMBOL
SEE NOTE 10
AA
AP
AG
AL
AN
AC CHARACTERS – 3 LINES MAX.
GIVE NAME OF MFR AT TIME
OF MAKING PLATE

WITHOUT MOUNTING HOLES
TYPE I

WITH MOUNTING HOLES
TYPE II

FOR GROUND SUPPORT EQUIPMENT
STYLE B

SUGGESTED PROPORTIONS FOR NAMEPLATE DIMENSIONS.
1. SELECT NAMEPLATE LENGTH, DIMENSION "A", TO FIT DESIGN NEEDS.
2. DIMENSIONS B THRU AS ON LINE 1 BELOW ARE PROPORTIONAL TO "A" BY MULTIPLIERS SHOWN IN LINE 2 BELOW.

	A	B	C	D	E	F	G	H	J	K	L	M	N	P	R	S	T	U
2.	1.000 A	.6563 A	.8438 A	.6875 A	.0391 A	.0240 A	.0391 A	.0469 A	.0547 A	.0469 A	.5938 A	.3750 A	.2969 A	.2187 A	.5079 A	.0313 A	.0938 A	.0391 A

	V	W	Y	Z	AA	AB	AC	AD	AE	AF	AG	AH	AJ	AK	AL	AM	AN	AP	AR	AS
2.	.4375 A	.3594 A	.6875 A	.1094 A	.5781 A	.9219 A	.0240 A	.0156 A	.4375 A	.1525 A	.0391 A	.1563 A	.8438 A	.0548 A	.8659 A	.0391 A	.1563 A	.0938 A	.9219 A	.0151 A

Ⓖ REPLACES REV F WITH CHANGE

QTY REQD	PART OR IDENTIFYING NO.	MATERIAL OR NOTES	NOMENCLATURE OR DESCRIPTION	FIND NO.

LIST OF MATERIALS

AS APPLICABLE	
NEXT ASSY	USED ON
APPLICATION	

UNLESS OTHERWISE SPECIFIED
DIMENSIONS ARE IN INCHES
CAPACITOR VALUES ARE IN μf
RESISTOR VALUES ARE IN OHMS
TOLERANCES ON
FRACTIONS ± — DECIMALS ±.005 ANGLES ± —
DO NOT SCALE THIS DRAWING

MATERIAL
SEE NOTE 11

MIT
INSTRUMENTATION LAB
CAMBRIDGE, MASS.

		DATE
DRAWN	R A Jones	7/16/65
CHECKED	A. J. [illegible]	7-22-65
APPROVED		
APPROVED	W [illegible]	7/22/65
APPROVED MIT	W [illegible]	7/22/65
APPROVED MSC	[illegible]	7/22/65

MANNED SPACECRAFT CENTER
HOUSTON, TEXAS

NAMEPLATES,
APOLLO G&N—GSE
(STANDARDS)

CODE IDENT NO.	SIZE	DRAWING NO.
80230	E	1004260

SCALE NONE
SHEET 1 OF 5

1004260 AB

MASTER

NOTICE – WHEN GOVERNMENT DRAWINGS, SPECIFICATIONS, OR OTHER DATA ARE USED FOR ANY PURPOSE OTHER THAN IN CONNECTION WITH A DEFINITELY RELATED GOVERNMENT PROCUREMENT OPERATION, THE UNITED STATES GOVERNMENT THEREBY INCURS NO RESPONSIBILITY NOR ANY OBLIGATION WHATSOEVER; AND THE FACT THAT THE GOVERNMENT MAY HAVE FORMULATED, FURNISHED, OR IN ANY WAY SUPPLIED THE SAID DRAWINGS, SPECIFICATIONS OR OTHER DATA IS NOT TO BE REGARDED BY IMPLICATION OR OTHERWISE AS IN ANY MANNER LICENSING THE HOLDER OR ANY OTHER PERSON OR CORPORATION, OR CONVEYING ANY RIGHTS OR PERMISSION TO MANUFACTURE, USE, OR SELL ANY PATENTED INVENTION THAT MAY IN ANY WAY BE RELATED THERETO.

REVISIONS 02768

SYM	ZONE	DESCRIPTION	DR	CHK	DATE	APPROVED
G		REPLACES REV F WITH CHANGE PER TDRR 20854.			7/22/65	WK
H		REVISED PER TDRR 20892			8/3/65	WK
J		REVISED PER TDRR 20904			8/3/65	WK
K		REVISED PER TDRR 21379			8/9/65	WK
L		REVISED PER TDRR 21410			8/23/65	WK.
M		REVISED PER TDRR 21993				
N		REVISED PER TDRR 22621			10/	
P		REVISED PER TDRR 22671			1	
R		REVISED PER TDRR 22672				
S		REVISED PER TDRR 22750			/65	WK
T		REVISED PER TDRR 22823				
U		REVISED PER TDRR 23072			10-13-65	
V		REVISED PER TDRR 23521			10-27-65	WC
W		REVISED PER TDRR 23824	RAJ		11-9-65	WC
Y		REVISED PER TDRR 24018	RAJ		11-6-65	WK
Z		REVISED PER TDRR 24040	RAJ		11-9-65	WK
AA		REVISED PER TDRR 24060	RAJ		11-19-65	WC
AB		REVISED PER TDRR 24868	RAJ		12-22-65	WK

DASH NO.	P/C	PART NAME	REMARKS	PART NO.	SER. NO.	CONT. NO.	STYLE	TYPE	MATERIAL	A	B	C	D	E	F	G	H	J	K	L	M	N	P	R	S	T	U	V	W	Y	Z	AA	AB	AC	AD	AE	AF	AG	AH	AJ	AK	AL	AM	AN	AP	AR
399	K																																													
398	K																																													
350	K	ALIGNMENT OPTICAL TELESCOPE (LEM)		NA	NA	NA	A	I	NOTE 11B	4.000	2.625	3.375	2.750	.156	.093	.156	.187	NA	NA	2.312	1.468	1.187	.906	2.031	NA	.375	.156	NA	1.437	2.750	.437	NA	3.688	.062	.062	1.750	.593	NA	.625	3.375	.187	NA	.156	.531	.453	NA
309	K																																													
308	K																																													
307	K						B	I	NOTE 11 B	4.000	2.625	3.375	2.750	.156	.093	.156	.187	NA	NA	2.328	1.468	1.187	.906	2.031	.062	.375	.156	NA	1.437	2.750	.437	NA	3.687	.062	.062	1.750	.593	NA	NA	NA	NA	NA	NA	NA	NA	NA
306	K						B	II	NOTE 11 C	4.000	2.625	3.375	2.750	.156	.093	.156	.187	.125	.156	2.328	1.468	1.187	.906	2.031	.062	.375	.156		1.437	2.750	.437	2.312	3.687	.062	NA	1.750	.593									
305	K						B	I	NOTE 11 B	2.000	1.312	1.687	1.375	.078	.048	.078	.093	NA	NA	1.164	.734	.593	.453	1.015	.048	.171	.078		.718	1.375	.187	NA	NA	.048	.031	.875	.320									
304	K						B	II	NOTE 11 C	2.000	1.312	1.687	1.375	.078	.048	.078	.093	.070	.078	1.164	.734	.593	.453	1.015	.048	.171	.078	NA	.718	1.375	.187	.156	1.843	.048	NA	.875	.320	NA	NA	NA	NA	NA	NA	NA	NA	NA
303	K																																													
302	K																																													
301	K																																													
300	K	OPTICAL UNIT		NA	NA	NA	A	I	NOTE 11 B	2.000	1.312	1.675	NA	NA	.048	.078	NA	NA	NA	1.090	.812	.675	.540	.940	NA	.265	NA	NA	NA	1.375	.218	NA	NA	NA	NA	NA	.375	NA	NA	NA	.180	NA	.078	NA	NA	NA
9	K	2 IN AUTOCOLLIMATOR		1001702			B	II	NOTE 11 C	4.000	2.625	3.812	2.750	.156	.093	.156	.187	.125	.156	2.250	1.500	1.187	.906	2.031	.093	.375	.156	1.750	1.437	2.750	.437	2.312	3.687	.062	NA	1.750	.593	.156	1.062	3.812	.156	NA	.156	1.062	.375	3.687
8	K	5 IN AUTOCOLLIMATOR		1017410			B	II	NOTE 11 C	4.000	2.625	3.812	2.750	.156	.093	.156	.187	.125	.156	2.250	1.500	1.187	.906	2.031	.093	.375	.156	1.750	1.437	2.750	.437	2.312	3.687	.062	NA	1.750	.593	.156	1.062	3.812	.156	NA	.156	1.062	.375	3.687
7	K	2½ IN AUTOCOLLIMATOR (SCT)		1017435			B	II	NOTE 11 C	4.000	2.625	3.812	2.750	.156	.093	.156	.187	.125	.156	2.250	1.500	1.187	.906	2.031	.093	.375	.156	1.750	1.437	2.750	.437	2.312	3.687	.062	NA	1.750	.593	.156	1.062	3.812	.156	NA	.156	1.062	.375	3.687
6	K	2½ IN AUTOCOLLIMATOR (SXT)		1017448			B	II	NOTE 11 C	4.000	2.625	3.812	2.750	.156	.093	.156	.187	.125	.156	2.250	1.500	1.187	.906	2.031	.093	.375	.156	1.750	1.437	2.750	.437	2.312	3.687	.062	NA	1.750	.593	.156	1.062	3.812	.156	NA	.156	1.062	.375	3.687
5	K	RETROREFLECTING PRISM ASSEMBLY		1019840			B	I	NOTE 11 B	4.000	2.625	3.812	2.750	.156	.093	.156	.187	NA	NA	2.250	1.500	1.187	.906	2.031	.093	.375	.156	1.750	1.437	2.750	.437	NA	NA	.062	.062	1.750	.593	.156	1.062	3.812	.156	NA	.156	1.062	.375	NA
4	K	S/H SIMULATOR ASSEMBLY		1019896			B	I	NOTE 11 B	4.000	2.625	3.812	2.750	.156	.093	.156	.187	NA	NA	2.250	1.500	1.187	.906	2.031	.093	.375	.156	1.750	1.437	2.750	.437	NA	NA	.062	.062	1.750	.593	.156	1.062	3.812	.156	NA	.156	1.062	.375	NA
3	K	REFERENCE MIRROR		1001767			B	I	NOTE 11 B	2.000	1.312	1.906	1.375	.078	.048	.078	.093	NA	NA	1.125	.750	.593	.453	1.015	.062	.187	.078	.875	.718	1.375	.218	NA	NA	.048	.031	.875	.305	.078	.531	1.906	.078	NA	.078	.531	.187	NA
2	K	2 IN PLANE READING AUTOCOLLIMATOR		1017413			B	I	NOTE 11 B	2.000	1.312	1.906	1.375	.078	.048	.078	.093	NA	NA	1.125	.750	.593	.453	1.015	.062	.187	.078	.875	.718	1.375	.218	NA	NA	.048	.031	.875	.305	.078	.531	1.906	.078	NA	.078	.531	.187	NA
1	K	2 IN AUTOCOLLIMATOR		1001702			B	I	NOTE 11 B	2.000	1.312	1.906	1.375	.078	.048	.078	.093	NA	NA	1.125	.750	.593	.453	1.015	.062	.187	.078	.875	.718	1.375	.218	NA	NA	.048	.031	.875	.305	.078	.531	1.906	.078	NA	.078	.531	.187	NA

Ⓖ REPLACES REV F WITH CHANGE

KOLLSMAN DASH NUMBERS

NOTES FOR TABLE

STYLE A IS FOR G&N SYSTEM.
STYLE B IS FOR GROUND SUPPORT EQUIPMENT.
TYPE I IS WITHOUT MOUNTING HOLES.
TYPE II IS WITH MOUNTING HOLES.

MASTER

QTY REQD	PART OR IDENTIFYING NO.	MATERIAL OR NOTES	NOMENCLATURE OR DESCRIPTION	FIND NO.

LIST OF MATERIALS

NEXT ASSY	USED ON
AS APPLICABLE	

APPLICATION

UNLESS OTHERWISE SPECIFIED
DIMENSIONS ARE IN INCHES
CAPACITOR VALUES ARE IN µf
RESISTOR VALUES ARE IN OHMS
TOLERANCES ON
FRACTIONS ± — DECIMALS ±.005 ANGLES ± —
DO NOT SCALE THIS DRAWING

MATERIAL
SEE NOTE 11

MIT
INSTRUMENTATION LAB
CAMBRIDGE, MASS.

MANNED SPACECRAFT CENTER
HOUSTON, TEXAS

DRAWN R. Q. Jones 7-16-65
CHECKED 7-22-65
APPROVED
APPROVED W. Ryan 7-22-65
APPROVED MIT W. Ryan
APPROVED MSC
DATE

NAMEPLATES,
APOLLO G&N-GSE
(STANDANDS)

CODE IDENT NO. 80230
SIZE E
DRAWING NO. 1004260
SCALE NONE
SHEET 2 OF 5

NOTICE — WHEN GOVERNMENT DRAWINGS, SPECIFICATIONS, OR OTHER DATA ARE USED FOR ANY PURPOSE OTHER THAN IN CONNECTION WITH A DEFINITELY RELATED GOVERNMENT PROCUREMENT OPERATION, THE UNITED STATES GOVERNMENT THEREBY INCURS NO RESPONSIBILITY NOR ANY OBLIGATION WHATSOEVER; AND THE FACT THAT THE GOVERNMENT MAY HAVE FORMULATED, FURNISHED, OR IN ANY WAY SUPPLIED THE SAID DRAWINGS, SPECIFICATIONS OR OTHER DATA IS NOT TO BE REGARDED BY IMPLICATION OR OTHERWISE AS IN ANY MANNER LICENSING THE HOLDER OR ANY OTHER PERSON OR CORPORATION, OR CONVEYING ANY RIGHTS OR PERMISSION TO MANUFACTURE, USE, OR SELL ANY PATENTED INVENTION THAT MAY IN ANY WAY BE RELATED THERETO.

02768

REVISIONS						
SYM	ZONE	DESCRIPTION	DR	CHK	DATE	APPROVED
G		REPLACES REV F WITH CHANGE PER TDRR 20854			7/22/65	WK
H		REVISED PER TDRR 20892			8/3/65	WK
J		REVISED PER TDRR 20904			[illegible]	WK
K		REVISED PER TDRR 21379			[illegible]	WK
L		REVISED PER TDRR 21410			[illegible]	WK
M		REVISED PER TDRR 21993				
N		REVISED PER TDRR 22621			[illegible]	
P		REVISED PER TDRR 22671				
R		REVISED PER TDRR 22672			[illegible]	
S		REVISED PER TDRR 22750				
T		REVISED PER TDRR 22823			[illegible]65	WK
U		REVISED PER TDRR 23072			[illegible]65	[illegible]
V		REVISED PER TDRR 23521			[illegible]65	WK
W		REVISED PER TDRR 23824	RAJ		[illegible]65	WK
Y		REVISED PER TDRR 24018	RAJ		[illegible]65	WK
Z		REVISED PER TDRR 24040	RAJ		[illegible]65	WK
AA		REVISED PER TDRR 24060	RAJ		11-[illegible]-65	WK
AB		REVISED PER TDRR 24868	RAJ		2-22-65	WK

DASH NO.	P/C	PART NAME	REMARKS	PART NO.	SER. NO.	CONT. NO.	STYLE	TYPE	MATERIAL	A
299	R									
298	R									
254	R	DRAWER ASSY COMP. SIMULATOR		2014048-011	NA	NAS-9-497	B	II	NOTE 11 C	FOR DIMENSIONS, SEE DASH 18 VALUES BELOW
253		SHIPPING KIT ASSY, NAV DSKY		2016312-011						
252		SHIPPING KIT ASSY, UNIVERSAL DSKY		2016316-011						
251		SHIPPING KIT ASSY, MAIN DSKY		2016313-011				II	NOTE 11 C	
250		AMPLIFIER, REWORK		2014386				I	NOTE 11 B	FOR DIMENSIONS, SEE DASH 15 VALUES BELOW
249		TEMP MONITOR ASSY		2014313-011					NOTE 11 C	FOR DIMENSIONS, SEE DASH 17 VALUES BELOW
248		AGC JUNCTION ASSY		2014341-011					NOTE 11 B	FOR DIMENSIONS, SEE DASH 15 VALUES BELOW
247		AC INPUT PANEL ASSY		2014302-011						
246		SELF TEST ASSY		2014392 011						
245	R	TAPE PUNCH ASSEMBLY		2014039-011	NA		B	I	NOTE 11 B	FOR DIMENSIONS,SEE DASH 15 VALUES BELOW
244	R	TAPE READER ASSEMBLY		2014038-011	NA	NAS-9-497	B	I	NOTE 11 B	
243										
242										
241	R	APOLLO GUIDANCE COMPUTER GROUP		6003000-011	NA	NAS-9-497	A	I	NOTE 11 B	FOR DIMENSIONS, SEE DASH 19 VALUES BELOW
240	R	SELF TEST ASSEMBLY		2014366-011	NA		B	I	NOTE 11 B	FOR DIMENSIONS, SEE DASH 15 VALUES BELOW
239		POWER SUPPLY ASSY-115 V., 400 CYCLE		2014207-011						FOR DIMENSIONS, SEE DASH 17 VALUES BELOW
238		AC INPUT PANEL ASSY		2014043-011						
237		POWER CONTROL ASSY		2014079-011						FOR DIMENSIONS, SEE DASH 15 VALUES BELOW
236		DRAWER ASSY - X Y INTERFACE		2014040-011						
235		DRAWER ASSY RDC INTERFACE		2014045-011						
234		BUFFER CIRCUIT ASSY		2014254-011						
233		CONTROL & INTERFACE ASSY		2014204-011						
232		POWER CONTROL ASSY		2014044-011						FOR DIMENSIONS, SEE-DASH 17 VALUES BELOW
231		DRAWER ASSY, PROGRAMMER & MONITOR		2014041-011						
230		CONNECTOR INTERFACE ASSY		2014272-011						FOR DIMENSIONS, SEE DASH 15 VALUES BELOW
229		CONNECTOR INTERFACE ASSY		2014047-011						
228		ANTENNA, TUNING CAPACITOR ASSY		2014209-011						
227		MOUNTING FIXTURE ASSY		2014006-011						FOR DIMENSIONS, SEE DASH 17 VALUES BELOW
226		POWER SUPPLY ASSY 3 VDC		2014234-011						FOR DIMENSIONS, SEE DASH 15 VALUES BELOW
225		PANEL ASSY — SIGNAL INTERFACE		2014010-011						
224		OSCILLOSCOPE ASSY		2014232-011						
223		AUXILIARY OUTLET ASSY		2014274-011						
222		FREQUENCY COUNTER		2014233-011						
221		POWER SUPPLY ASSY 10, 13, 28 VDC		2014235-011						
220		LOGIC DRAWER ASSY NO. 2		2014037-011						FOR DIMENSIONS, SEE DASH 17 VALUES BELOW
219		LOGIC DRAWER ASSY NO. 1		2014036-011						
218		COUNTER, ELECTRICAL ASSY		2014288-011						FOR DIMENSIONS, SEE DASH 15 VALUES BELOW
217		POWER SUPPLY ASSY		2014279-011						
216		TEST MOUNT ASSY		2014257-011						
215		UNIVERSAL DSKY PEDESTAL MOUNT		2014014-011						FOR DIMENSIONS, SEE DASH 17 VALUES BELOW
214		MAIN DSKY PEDESTAL MOUNT		2014343				I	NOTE 11 B	
213		SHIPPING CONTAINER, MAIN DSKY		1006229				II	NOTE 11 C	FOR DIMENSIONS, SEE DASH 18 VALUES BELOW
212		NAV DSKY		1006231						
211		AGC		1006230						
210		UNIVERSAL DSKY		1006422						
209		SHIPPING CONTAINER, AGC		1006421				II	NOTE 11 C	
208		UNIVERSAL DSKY HANDLING FIXTURE		2014013-011				I	NOTE 11 B	FOR DIMENSIONS, SEE DASH 15 VALUES BELOW
207		NAV DSKY HANDLING FIXTURE		1014377						FOR DIMENSIONS, SEE DASH 17 VALUES BELOW
206		MAIN DSKY HANDLING FIXTURE		1014334						
205		AGC HANDLING FIXTURE		2014282-011				I	NOTE 11 B	
204		OPERATION CONSOLE		2014024-011				II	NOTE 11 C	FOR DIMENSIONS, SEE DASH 18 VALUES BELOW
203		COMPUTER TEST SET		2014042-011		NAS-9-497				
202		DRAWER ASSY, COMPUTER SIMULATOR		2014048-011		FNP-12775				
201		AUXILIARY CALIBRATION CONSOLE		2014059-011		NAS-9-497				
200	R	AGC CALIBRATION CONSOLE		2014049-011	NA		B	II	NOTE 11 C	
21	P									
20	P	NA		NA	NA	NA	A	II	NOTE 11 C	2.000
19	R	NA		NA	NA	NA	A	I	NOTE 11 B	2.000
18	R	NA		NA	NA	NA	B	II	NOTE 11 C	4.187
17	R	NA		NA	NA	NA	B	I	NOTE 11 B	4.187
16	R	NA		NA	NA	NA	B	II	NOTE 11 C	2.000
15	R	NA		NA	NA	NA	B	I	NOTE 11 B	2.000

DASH NO.	B	C	D	E	F	G	H	J	K	L	M	N	P	R	S	T	U	V
21																		
20	1.312	1.687	1.375	.078	.031	.078	.093	.106 .113	.093	1.187	.750	.593	.453	1.015	.062	.187	.078	.875
19	1.312	1.687	1.375	.078	.031	.078	.093	NA	NA	1.187	.750	.593	.453	1.015	.062	.187	.078	.875
18	1.875	3.469	2.750	.156	.093	.156	.125	.106 .113	.125	1.625	1.032	.844	.656	1.406	.093	.344	.156	1.781
17	1.875	3.469	2.750	.156	.093	.156	.125	NA	NA	1.625	1.032	.844	.656	1.406	.093	.344	.156	1.781
16	1.312	1.687	1.375	.078	.031	.078	.093	.106 .113	.093	1.187	.750	.593	.453	1.015	.062	.187	.078	.875
15	1.312	1.687	1.375	.078	.031	.078	.093	NA	NA	1.187	.750	.593	.453	1.015	.062	.187	.078	.875

DASH NO.	W	Y	Z	AA	AB	AC	AD	AE	AF	AG	AH	AJ	AK	AL	AM	AN	AP	AR
21																		
20	.718	1.375	.218	1.156	1.843	.048	NA	.875	.305	.078	.312	1.687	.078	NA	.078	.312	.187	1.843
19	.718	1.375	.218	NA	NA	.048	.031	.875	.305	.078	.312	1.687	.078	NA	.078	.312	.187	NA
18	1.531	2.844	.312	1.562	3.875	.062	NA	1.219	.500	.156	.719	3.469	.156	NA	.156	.719	.344	3.875
17	1.531	2.844	.312	NA	NA	.062	.062	1.219	.500	.156	.719	3.469	.156	NA	.156	.719	.344	NA
16	.718	1.375	.218	1.156	1.843	.048	NA	.875	.305	.078	.312	1.687	.078	NA	.078	.312	.187	1.843
15	.718	1.375	.218	NA	NA	.048	.031	.875	.305	.078	.312	1.687	.078	NA	.078	.312	.187	NA

THIS SHEET ADDED

Ⓖ REPLACES REV F WITH CHANGE

RAYTHEON DASH NUMBERS

NOTES FOR TABLE
STYLE A IS FOR G & N SYSTEM
STYLE B IS FOR GROUND SUPPORT EQUIPMENT
TYPE I IS WITHOUT MOUNTING HOLES
TYPE II IS WITH MOUNTING HOLES

MASTER

QTY REQD	PART OR IDENTIFYING NO.	MATERIAL OR NOTES	NOMENCLATURE OR DESCRIPTION	FIND NO.

LIST OF MATERIALS

NEXT ASSY	USED ON
AS APPLICABLE	

APPLICATION

UNLESS OTHERWISE SPECIFIED
DIMENSIONS ARE IN INCHES
CAPACITOR VALUES ARE IN μf
RESISTOR VALUES ARE IN OHMS
TOLERANCES ON
FRACTIONS ± — DECIMALS ±.005 ANGLES ± —
DO NOT SCALE THIS DRAWING

MATERIAL
SEE NOTE 11

MIT
INSTRUMENTATION LAB
CAMBRIDGE, MASS.

		DATE
DRAWN	R. A. Jones	7-16-65
CHECKED	A. J. [illegible]	7-22-65
APPROVED		
APPROVED	[illegible]	[illegible]
APPROVED MIT	[illegible]	[illegible]
APPROVED MSC	[illegible]	[illegible]

MANNED SPACECRAFT CENTER
HOUSTON, TEXAS

NAMEPLATES,
APOLLO GEN-GSE
(STANDARDS)

CODE IDENT NO. 80230
SIZE E
DRAWING NO. 1004260
SCALE NONE
SHEET 3 OF 5

NOTICE - WHEN GOVERNMENT DRAWINGS, SPECIFICATIONS, OR OTHER DATA ARE USED FOR ANY PURPOSE OTHER THAN IN CONNECTION WITH A DEFINITELY RELATED GOVERNMENT PROCUREMENT OPERATION, THE UNITED STATES GOVERNMENT THEREBY INCURS NO RESPONSIBILITY NOR ANY OBLIGATION WHATSOEVER; AND THE FACT THAT THE GOVERNMENT MAY HAVE FORMULATED, FURNISHED, OR IN ANY WAY SUPPLIED THE SAID DRAWINGS, SPECIFICATIONS, OR OTHER DATA IS NOT TO BE REGARDED BY IMPLICATION OR OTHERWISE AS IN ANY MANNER LICENSING THE HOLDER OR ANY OTHER PERSON OR CORPORATION, OR CONVEYING ANY RIGHTS OR PERMISSION TO MANUFACTURE, USE, OR SELL ANY PATENTED INVENTION THAT MAY IN ANY WAY BE RELATED THERETO.

REVISIONS 02768

SYM	ZONE	DESCRIPTION	DR	CHK	DATE	APPROVED
G		REPLACES REV F WITH CHANGE PER TDRR 20854.			7/22/65	WK
H		REVISED PER TDRR 20892			8/5/65	WK
J		REVISED PER TDRR 20904			8/3/65	WK
K		REVISED PER TDRR 21379			8/5/65	WK
L		REVISED PER TDRR 21410			8/23/65	WK
M		REVISED PER TDRR 21993				
N		REVISED PER TDRR 22621			10/	
P		REVISED PER TDRR 22671				
R		REVISED PER TDRR 22672				
S		REVISED PER TDRR 22750			/65	WK
T		REVISED PER TDRR 22823				
U		REVISED PER TDRR 23072				
V		REVISED PER TDRR 23521			10-26-65	WK
W		REVISED PER TDRR 23824	RAJ		11-9-65	WK
Y		REVISED PER TDRR 24018	RAJ		11-16-65	WK
Z		REVISED PER TDRR 24040	RAJ		11-19-65	WK
AA		REVISED PER TDRR 24060	RAJ.		11-9-65	WK
AB		REVISED PER TDRR 24868	RAJ		2-22-66	

DASH NO.	P/C	PART NAME	REMARKS	PART NO.	SER. NO.	CONT. NO.	STYLE	TYPE	MATERIAL	A	B	C	D	E	F	G	H	J	K	L	M	N	P	R	S	T	U	V	W	Y	Z	AA	AB	AC	AD	AE	AF	AG	AH	AJ	AK	AL	AM	AN	AP	AR
199	AC																																													
198	AC																																													
165	AC	TERM. BOARD STORAGE DRAWER		2900927-011		NAS-9-497	B	II	NOTE 11 C	FOR DIMENSIONS, SEE DASH 141 VALUES BELOW																																				
164	AC	INPUT OUTPUT PANEL		2900926-011		↑	↑	↑	↑																																					
163	AC	CONTROL PANEL		2900896-011		↓	↓	↓	↓																																					
162	AC	CSL. CAL AND TEST, SCM/PSAAM		2900895-011		NAS-9-497	B	II	NOTE 11 C	FOR DIMENSIONS, SEE DASH 144 VALUES BELOW																																				
160	AC	FIX., HAND., G AND N HARNESS		1901846-031		NAS-9-497	B	II	NOTE 11 C	FOR DIMENSIONS, SEE DASH 144 VALUES BELOW																																				
159	AC	BATTERY POWER PACK		1900011-031			B	II	NOTE 11 C																																					
158	AC	COUPLING DATA UNIT ASSEMBLY C/M		2007222-011			A	I	NOTE 11 B	FOR DIMENSIONS, SEE DASH 100 VALUES BELOW																																				
157	AC	COUPLING DATA UNIT ASSEMBLY - LEM		2007222-021			↑	↑	↑																																					
156	AC	POWER & SERVO ASSEMBLY C/M		2007200-011																																										
155	AC	PIPA ELECTRONICS ASSEMBLY		2007201-011																																										
154	AC	PULSE TORQUE ASSEMBLY - LEM		6007000-011			↓	↓	↓																																					
153	AC	POWER & SERVO ASSEMBLY - LEM		6007200-011			A	I	NOTE 11 B																																					
152	AC	CONT PNL, RSVR CKT TESTER		2900770-011		NAS-9-497	B	II	NOTE 11 C	FOR DIMENSIONS, SEE DASH 141 VALUES BELOW																																				
151	AC	TESTER, RESOLVER CIRCUIT		2900708-011			↑	↑	↑																																					
150	AC	JUNCTION BOX, P.S.A./G.S.E.		1901933-021						FOR DIMENSIONS, SEE DASH 144 VALUES BELOW																																				
149	AC	BATTERY PACK, LIFTING		2900812-011						FOR DIMENSIONS, SEE DASH 141 VALUES BELOW																																				
148	AC	MOUNTING PLATE, COMPONENT		6900007-011			↓	↓	↓	FOR DIMENSIONS, SEE DASH 144 VALUES BELOW																																				
147	AC	MOUNTING PLATE, COMPONENT		2900677-011			B	II	NOTE 11 C																																					
145	AC	CONTAINER, SHIPPING, IMU		1900010-021		NAS-9-497	B	II	NOTE 11 C	FOR DIMENSIONS, SEE DASH 144 VALUES BELOW																																				
144	AC	FIX., MOUNTING, G AND N		1902204-021			B	II	NOTE 11 C	4.125	1.812	3.250	NA	.125	.062	.12	.156	.100 .104	.125	1.625	1.140	.890	.640	1.390	.125	.171	.125	1.875	1.687	2.625	.250	1.562	3.843	.093	NA	NA	.359	.125	.437	3.688	NA	3.687	.093	.40	.25	3.875
143	AC	CSL, COOL. AND PWR, G AND N		1902134-021			↑	↑	↑	4.125	1.812	3.250	↑	.125	.062	.12	.156	↑	.125	1.625	1.140	.890	.640	390	.125	.171	.125	1.875	1.687	2.625	.250	1.562	3.843	.093	↑	↑	.359	.125	.437	3.688	↑	3.687	.093	.40	.25	3.875
142	AC	ANALYZER, OPTICS-INERTIAL		2900023-011						4.125	1.812	3.250		.125	.062	.12	.156		.125	1.625	1.140	.890		390	.125	.171	.125	1.875	1.687	2.625	.250	1.562	3.843	.093			.359	.125	.437	3.688		3.687	.093	.40	.25	3.875
141	AC	CONT, TEMP, PORTABLE		2900060-011						2.125	.968	1.718		.093	.031	.06	.093		.093	.858	.608	.484	.358	.733	.077	.116	.062	.937	.875	1.343	.125	.781	1.892	.046			.209	.093	.250	1.875		1.840	.046	.23	.16	1.938
140	AC	TESTER, CKT, IMU/CDU RSVR		2900286-011						4.125	1.812	3.250		.125	.062	.12	.156		.125	1.625	1.140	.890	.640	1.390	.125	.171	.125	1.875	1.687	2.625	.250	1.562	3.843	.093			.359	.125	.437	3.688		3.687	.093	.40	.25	3.875
139	AC	SIMULATOR, LD/SIG, CDU		2900285-011						↑	↑	↑		↑	↑	↑	↑		↑	↑	↑	↑	↑	↑	↑	↑	↑	↑	↑	↑	↑	↑	↑	↑			↑	↑	↑	↑		↑	↑	↑	↑	↑
138	AC	SIMULATOR, LD/SIG, OPTICS		1902023-021																																										
137	AC	FIX., MOUNTING, IMU/NAV BASE		6900003-011																																										
136	AC	FIXTURE, OPTICS/NAV BASE		2900072-011																																										
135	AC	FIX., MOUNTING, SUB SYSTEM		2900070-011																																										
134	AC	FIX., HAND., G AND N HARNESS		2900069-011																																										
133	AC	CNTR, SHIPPING, NAV BASE		2900068-011																																										
132	AC	FIX., MOUNTING, G AND N		2900067-011																																										
131	AC	SIMULATOR, LD/SIG, IMU/CDU		2900062-011																																										
130	AC	TESTER, GYRO WHEEL		2900061-011																																										
129	AC	COOLANT SUPPLY		1902133-021						↓	↓	↓		↓	↓	↓	↓		↓	↓	↓	↓	↓	↓	↓	↓	↓	↓	↓	↓	↓	↓	↓	↓			↓	↓	↓	↓		↓	↓	↓	↓	↓
128	AC	TABLE, ROTARY		1900926-021						4.125	1.812	3.250	↑	.125	.062	.12	.156	↑	.125	1.625	1.140	.890	.640	1.390	.125	.171	.125	1.875	1.687	2.625	.250	1.562	3.843	.093	↑	↑	.359	.125	.437	3.688	↑	3.687	.093	.40	.25	3.875
127	AC	FIX., HAND., OPTICS		2900074-011						2.125	.968	1.718		.093	.031	.06	.093		.093	.858	.608	.484	.358	.733	.077	.116	.062	.937	.875	1.343	.125	.781	1.892	.046			.209	.093	.250	1.875		1.840	.046	.23	.16	1.938
126	AC	FIXTURE, MTG, PTA/PEA.		2900066-011						↑	↑	↑		↑	↑	↑	↑		↑	↑	↑	↑	↑	↑	↑	↑	↑	↑	↑	↑	↑	↑	↑	↑			↑	↑	↑	↑		↑	↑	↑	↑	↑
125	AC	CONT, TEMP, IMU LIFTING		2900063-011																																										
124	AC	FIXTURE, HANDLING, IMU		2900064-011																																										
123	AC	CONT, OPTICS, REMOTE		1902046-021																																										
122	AC	TEST CONTROL		1902009-021																																										
121	AC	ADPT MODULE, P.S.A.		1902431-021																																										
120	AC	BRIDGE, DECADE ERROR		2900128-011																																										
119	AC	PWR SUP, ELECTRONICS		2900012-011																																										
118	AC	PWR SUP, RELAY AND LAMP		1900049-031																																										
117	AC	CONSOLE, OSCILLOGRAPH		1900000-021																																										
116	AC	ADPT MODULE, P.S.A.		1902431-011																																										
115	AC	ADPT, TEST POINT, PTA/PEA.		2900145-011																																										
114	AC	ADPT, TEST POINT, P.S.A.		2900037-011																																										
113	AC	CONTROL, GIMBAL POSITION		2900036-011																																										
112	AC	SELECTOR, SIGNAL, PRIMARY		2900035-011																																										
111	AC	SEL, SIG, OSCILLOGRAPH		2900034-011																																										
110	AC	PANEL, PWR SUP AND LOAD		2900033-011																																										
109	AC	PANEL, MONITOR		2900031-011																																										
108	AC	PANEL, AUXILIARY INPUT		2900030-011																																										
107	AC	CAGING ELECTRONICS, GYRO		2900029-011																																										
106	AC	TEST SELECTOR		2900028-011																																										
105	AC	TEST CONTROL		2900027-011																																										
104	AC	MONITOR AND CONTROL, TEMP		2900026-011			↓	↓	↓	↓	↓	↓	↓	↓	↓	↓	↓	↓	↓	↓	↓	↓	↓	↓	↓	↓	↓	↓	↓	↓	↓	↓	↓	↓	↓	↓	↓	↓	↓	↓	↓	↓	↓	↓	↓	↓
103	AC	DISTRIBUTION BOX, GSE		2900024-011																																										
102	AC	VOLTMETER, DIGITAL		2900007 011			B	II	NOTE 11 C	2.125	.968	1.718	NA	.093	.031	.06	.093	.100 .104	.093	.858	.608	.484	.358	.733	.077	.116	.062	.937	.875	1.343	.125	.781	1.892	.046	NA	NA	.209	.093	.250	1.875	NA	1.840	.046	.23	.16	1.938
101	AC	NAVIGATION BASE ASSEMBLY - LEM		6899950		NAS-9-497	A	I	NOTE 11 B	2.000	1.312	1.906	1.375	.078	.048	.078	.093	NA	NA	1.125	.750	.593	.453	1.015	.062	.187	.078	.875	.718	1.375	.218	NA	NA	.048	.031	.875	.305	.078	.531	1.906	.078	NA	.078	.531	.187	NA
100	AC	NAVIGATION BASE ASSEMBLY		2899982		NAS-9-497	A	I	NOTE 11 B	2.000	1.312	1.906	1.375	.078	.048	.078	.093	NA	NA	1.125	.750	.593	.453	1.015	.062	.187	.078	.875	.718	1.375	.218	NA	NA	.048	.031	.875	.305	.078	.531	1.906	.078	NA	.078	.531	.187	NA

THIS SHEET ADDED

Ⓖ REPLACES REV F WITH CHANGE

AC ELECTRONICS DASH NUMBERS

NOTES FOR TABLE

STYLE A IS FOR G&N SYSTEM
STYLE B IS FOR GROUND SUPPORT EQUIPMENT
TYPE I IS WITHOUT MOUNTING HOLES
TYPE II IS WITH MOUNTING HOLES

QTY REQD	PART OR IDENTIFYING NO.	MATERIAL OR NOTES	NOMENCLATURE OR DESCRIPTION	FIND NO.

LIST OF MATERIALS

AS APPLICABLE
NEXT ASSY | USED ON
APPLICATION

UNLESS OTHERWISE SPECIFIED
DIMENSIONS ARE IN INCHES
CAPACITOR VALUES ARE IN µf
RESISTOR VALUES ARE IN OHMS
TOLERANCES ON
FRACTIONS ± — DECIMALS ±.005 ANGLES ± —
DO NOT SCALE THIS DRAWING

MATERIAL
SEE NOTE 11

MIT
INSTRUMENTATION LAB
CAMBRIDGE, MASS.

DRAWN 7-16-65
CHECKED 7-22-65
APPROVED
APPROVED
APPROVED MIT
APPROVED MSC
DATE

MANNED SPACECRAFT CENTER
HOUSTON, TEXAS

NAMEPLATES,
APOLLO G&N-GSE
(STANDARDS)

CODE IDENT NO. 80230
SIZE E
DRAWING NO. 1004260
SCALE NONE
SHEET 4 OF 5

MASTER

NOTICE – WHEN GOVERNMENT DRAWINGS, SPECIFICATIONS, OR OTHER DATA ARE USED FOR ANY PURPOSE OTHER THAN IN CONNECTION WITH A DEFINITELY RELATED GOVERNMENT PROCUREMENT OPERATION, THE UNITED STATES GOVERNMENT THEREBY INCURS NO RESPONSIBILITY NOR ANY OBLIGATION WHATSOEVER; AND THE FACT THAT THE GOVERNMENT MAY HAVE FORMULATED, FURNISHED, OR IN ANY WAY SUPPLIED THE SAID DRAWINGS, SPECIFICATIONS OR OTHER DATA IS NOT TO BE REGARDED BY IMPLICATION OR OTHERWISE AS IN ANY MANNER LICENSING THE HOLDER OR ANY OTHER PERSON OR CORPORATION, OR CONVEYING ANY RIGHTS OR PERMISSION TO MANUFACTURE, USE, OR SELL ANY PATENTED INVENTION THAT MAY IN ANY WAY BE RELATED THERETO.

REVISIONS 02768

SYM	ZONE	DESCRIPTION	DR	CHK	DATE	APPROVED
G		REPLACES REV F WITH CHANGE PER TDRR 20854			7/22/65	WK
H		REVISED PER TDRR 20892			8/3/65	WK
J		REVISED PER TDRR 20904			8/3/65	WK
K		REVISED PER TDRR 21379			8/6/65	WK
L		REVISED PER TDRR 21410			8/13/65	WK
M		REVISED PER TDRR 21993			10/1/65	WK
N		REVISED PER TDRR 22621				
P		REVISED PER TDRR 22671				
R		REVISED PER TDRR 22672				
S		REVISED PER TDRR 22750				
T		REVISED PER TDRR 22823				
U		REVISED PER TDRR 23072			10-21-65	[illegible]
V		REVISED PER TDRR 23521			10-26-65	WK
W		REVISED PER TDRR 23824	RAJ		11-9-65	WK
Y		REVISED PER TDRR 24018	RAJ		11-16-65	WK
Z		REVISED PER TDRR 24040	RAJ		11-19-65	WK
Ⓜ AA		REVISED PER TDRR 24060	RAJ		11-19-65	WK
AB		REVISED PER TDRR 24868	RAJ		12-22-65	WK

459	M.T.	
498		

CASH NO.	P/C	PART NAME	REMARKS	PART NO.	SER. NO.	CONT. NO.	STYLE	TYPE	MATERIAL	A	B	C	D	E	F	G	H	J	K
401	MIT	COMPUTER ASSY		2003100-001		NAS-9-497	A	I	NOTE 11 B	2.000	1.312	1.906	1.375	.078	.048	.078	.093	NA	NA
400	MIT	LIFTING SLING-G&N INST. QUAL. FIX. & AZM. REF. FIX.		1021640		NAS-9-4065	B	II	NOTE 11 C	2.000	1.312	1.687	1.375	.078	.048	.078	.093	2086/2081	.093

CASH NO.	L	M	N	P	R	S	T	U	V	W	Y	Z	AA	AB	AC	AD	AE	AF	AG	AH	AJ	AK	AL	AM	AN	AP	AR
401	1.125	.750	.593	.453	1.015	.062	.187	.078	.875	.718	1.375	.218	NA	NA	.048	.031	.875	.305	.078	.531	1.906	.078	NA	.078	.531	.187	NA
400	1.187	.750	.593	.453	1.015	.062	.187	.078	.875	.718	1.375	.218	1.156	1.843	.048	NA	.875	.305	.078	.312	1.687	.110	1.830	.070	.275	.180	1.844

MIT DASH NUMBERS

THIS SHEET ADDED

Ⓖ REPLACES REV F WITH CHANGE

NOTES FOR TABLE

STYLE A IS FOR G & N SYSTEM
STYLE B IS FOR GROUND SUPPORT EQUIPMENT
TYPE I IS WITHOUT MOUNTING HOLES
TYPE II IS WITH MOUNTING HOLES

MASTER

QTY REQD	PART OR IDENTIFYING NO.	MATERIAL OR NOTES	NOMENCLATURE OR DESCRIPTION	FIND NO.

LIST OF MATERIALS

NEXT ASSY	USED ON
AS APPLICABLE	

APPLICATION

UNLESS OTHERWISE SPECIFIED
DIMENSIONS ARE IN INCHES
CAPACITOR VALUES ARE IN µf
RESISTOR VALUES ARE IN OHMS
TOLERANCES ON
FRACTIONS ± — DECIMALS ±.005 ANGLES ± —
DO NOT SCALE THIS DRAWING

MATERIAL
SEE NOTE 11

MIT
INSTRUMENTATION LAB
CAMBRIDGE, MASS.

		DATE
DRAWN	R. A. Jones	7-16-65
CHECKED	A. J. [illegible]	7-23-65
APPROVED		
APPROVED	W. Kupfer	7/22/65
APPROVED MIT	W. Kupfer	7/22/65
APPROVED MSC	[illegible]	7/26/65

MANNED SPACECRAFT CENTER
HOUSTON, TEXAS

NAMEPLATES,
APOLLO G & N - GSE
(STANDARDS)

CODE IDENT NO.	SIZE	DRAWING NO.
80230	E	1004260

SCALE NONE
SHEET 5 OF 5

1004260

NOTICE – WHEN GOVERNMENT DRAWINGS, SPECIFICATIONS, OR OTHER DATA ARE USED FOR ANY PURPOSE OTHER THAN IN CONNECTION WITH A DEFINITELY RELATED GOVERNMENT PROCUREMENT OPERATION, THE UNITED STATES GOVERNMENT THEREBY INCURS NO RESPONSIBILITY NOR ANY OBLIGATION WHATSOEVER; AND THE FACT THAT THE GOVERNMENT MAY HAVE FORMULATED, FURNISHED, OR IN ANY WAY SUPPLIED THE SAID DRAWINGS, SPECIFICATIONS OR OTHER DATA IS NOT TO BE REGARDED BY IMPLICATION OR OTHERWISE AS IN ANY MANNER LICENSING THE HOLDER OR ANY OTHER PERSON OR CORPORATION, OR CONVEYING ANY RIGHTS OR PERMISSION TO MANUFACTURE, USE, OR SELL ANY PATENTED INVENTION THAT MAY IN ANY WAY BE RELATED THERETO.

NOTES:

1. INTERPRET DRAWING IN ACCORDANCE WITH STANDARDS PRESCRIBED IN MIL-D-70327.
2. DIMENSIONS ON EACH VIEW APPLY TO ALL VIEWS. (WITH THE EXCEPTION OF MOUNTING HOLES).
3. FORMATS ILLUSTATED WILL BE APPLICABLE TO ALL ITEMS REQUIRING NAMEPLATES BELOW END ITEM DESIGNATION (SYSTEMS, ASSEMBLIES, ETC.)
4. PLATE BACKGROUND TO BE LUSTERLESS BLACK PER FED-STD-595, COLOR 37038. BORDER, MARKING AND LETTERING TO BE NATURAL METAL,(ANODIZED ALUMINUM).
5. MARKING METHOD TO BE DIE STAMPING, ETCHING OR ENGRAVING IN ACCORDANCE WITH MIL P 19834.
6. LETTERING STYLE TO BE GOTHIC,(SANS SERIFS), AND NUMBERS TO BE ARABIC.
7. WHERE LOCATING DIMENSIONS ARE NOT SHOWN,CHARACTERS SHALL BE SYMMETRICALLY POSITIONED.
8. IDENTIFY WITH DRAWING NUMBER PER ND 1002019.
9. WHEN "AUTO MARK" METAL MARKING TYPEWRITER IS USED TO ADD DATA TO BLANK SPACES, TYPE SIZE IS TO BE SELECTED FROM DIMENSIONS U, AC AND AM.
10. NASA SYMBOL IS TO BE PROPORTIONAL TO NAMEPLATE IN RATIO OF 1 TO 5 WITH DIMENSION A VALUE AND IS TO HAVE NATURAL BACKGROUND. NASA SYMBOL LETTERS LETTERING AND FEATHER TO BE BLACK,(OR WHITE FOR SILK SCREENING). WHERE BLACK FEATHER PROTRUDES INTO BLACK BACKGROUND, A MINIMUM OUTLINE OF NATURAL BACKGROUND SHALL EXIST.
11. NAMEPLATES WILL BE APPLIED BY METHODS LISTED BELOW, SHOWN IN ORDER OF PREFERENCE, (I.E., FOR RELIABILITY AND WEIGHT).
    A - STENCIL OR SILK SCREEN DIRECTLY ON EQUIPMENT USING INK PER SCD 1010920,(WHITE OR BLACK).
    B - ALUMINUM FOIL,(STYLE A OR B, TYPE I):
    FOIL SHALL BE .0030 ±.0005 THICK PER MIL-A-148.
    FOIL SHALL HAVE NO ADHESIVE BACKING.
    FOIL SHALL BE BONDED PER ND 1002219,(METHOD II).
    FOIL SHALL BE CLEAR ANODIZED PER MIL-A-8625, TYPE II.
    C - PLATE, (STYLE A OR B, TYPE II):
    MATERIAL: QQ-A-250, TEMPER O OR H14, TYPE 1100,ALUMINUM ALLOY, .032 THICK.
    ANODIZE PER MIL-A-8625, TYPE II.
    ALUMINUM PLATE MUST BE FREE FROM BURRS AND SHARP CORNERS, MOUNTED WITH APPLICABLE SIZE FASTENERS.
12. NAMEPLATES SHALL BE CAPABLE OF MEETING APPLICABLE REQUIREMENTS OF MIL-M-13231.
13. ON DIMENSION TABLES SHOWN ON PAGES 2,3,4 AND 5, NA MEANS, "NOT APPLICABLE".

REVISIONS 02768

	SYM	ZONE	DESCRIPTION	DR	CHK	DATE	APPROVED
	G		REPLACES REV F WITH CHANGE PER TDRR 20854			7/22/65	WK
★	H		REVISED PER TDRR 20892			8/ /65	WK
	J		REVISED PER TDRR 20904			8/ /65	WK
	K		REVISED PER TDRR 21379			9/ /65	WK
	L		REVISED PER TDRR 21410			9/23/65	WK
★	M		REVISED PER TDRR 21993				
★	N		REVISED PER TDRR 22621			10/	
★	P		REVISED PER TDRR 22671			11/	
★	R		REVISED PER TDRR 22672				
★	S		REVISED PER TDRR 22750			65	WK
	T		REVISED PER TDRR 22823				
★	U		REVISED PER TDRR 23072			10-22-65	[illegible]
	V		REVISED PER TDRR 23521			10-27-65	WK
★	W		REVISED PER TDRR 23824	RAJ		11-9-65	WK
★	Y		REVISED PER TDRR 24018	RAJ		11-6-65	WK
★	Z		REVISED PER TDRR 24040	RAJ		11-19-65	WK
ⓦ	AA		REVISED PER TDRR 24060	RAJ		11-19-65	WK
ⓢ	AB		REVISED PER TDRR 24868	RAJ		12-22-65	WK
	AC		REVISED PER TDRR 24973	RAJ		1-4-66	WK

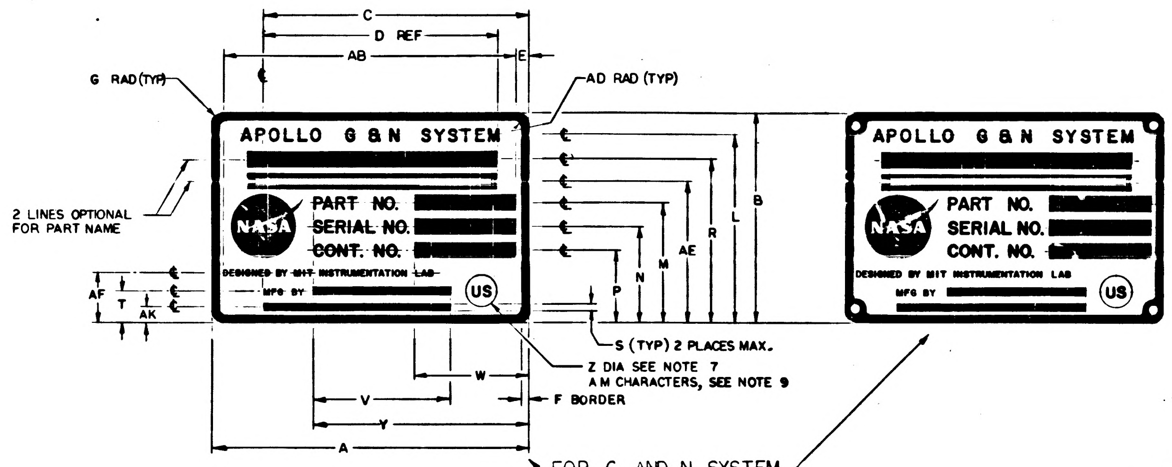
C
D REF
AB
E
G RAD (TYP)
AD RAD (TYP)
APOLLO G & N SYSTEM
PART NO.
SERIAL NO.
CONT. NO.
DESIGNED BY MIT INSTRUMENTATION LAB
MFG BY
US
NASA
2 LINES OPTIONAL FOR PART NAME
AF
T
AK
B
L
R
AE
M
N
P
S (TYP) 2 PLACES MAX.
Z DIA SEE NOTE 7
AM CHARACTERS, SEE NOTE 9
F BORDER
W
V
Y
A

FOR G AND N SYSTEM
STYLE A

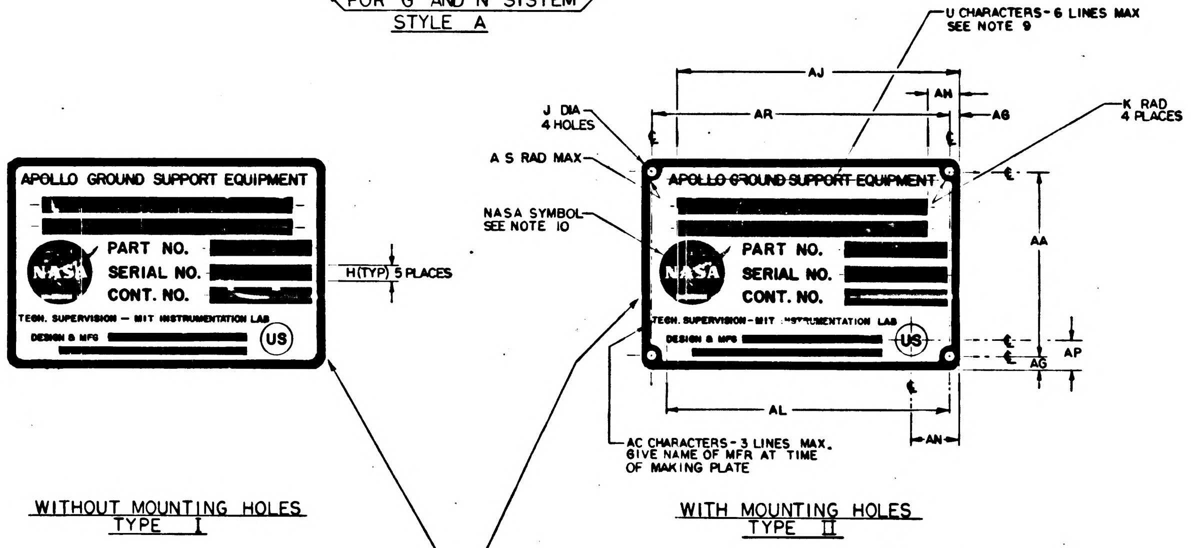
APOLLO GROUND SUPPORT EQUIPMENT
PART NO.
SERIAL NO.
CONT. NO.
TECH. SUPERVISION – MIT INSTRUMENTATION LAB
DESIGN & MFG
US
NASA
H(TYP) 5 PLACES
U CHARACTERS-6 LINES MAX
SEE NOTE 9
AJ
AH
AR
AG
K RAD
4 PLACES
J DIA
4 HOLES
A S RAD MAX
NASA SYMBOL
SEE NOTE 10
AA
AP
AG
AL
AN
AC CHARACTERS-3 LINES MAX.
GIVE NAME OF MFR AT TIME
OF MAKING PLATE

WITHOUT MOUNTING HOLES
TYPE I

WITH MOUNTING HOLES
TYPE II

FOR GROUND SUPPORT EQUIPMENT
STYLE B

SUGGESTED PROPORTIONS FOR NAMEPLATE DIMENSIONS.
1. SELECT NAMEPLATE LENGTH, DIMENSION "A", TO FIT DESIGN NEEDS.
2. DIMENSIONS B THRU AS ON LINE 1 BELOW ARE PROPORTIONAL TO "A" BY MULTIPLIERS SHOWN IN LINE 2 BELOW.

1.	A	B	C	D	E	F	G	H	J	K	L	M	N	P	R	S	T	U	V
2.	1.000 A	.6563 A	.8438 A	.6875 A	.0391 A	.0240 A	.0391 A	.0469 A	.0547 A	.0469 A	.5938 A	.3750 A	.2969 A	.2187 A	.5079 A	.0313 A	.0938 A	.0391 A	.4375 A

1.	W	Y	Z	AA	AB	AC	AD	AE	AF	AG	AH	AJ	AK	AL	AM	AN	AP	AR	AS
2.	.3594 A	.6875 A	.1094 A	.5781 A	.9219 A	.0240 A	.0156 A	.4375 A	.1525 A	.0391 A	.1563 A	.8438 A	.0548 A	.8659 A	.0391 A	.1563 A	.0938 A	.9219 A	.0151 A

Ⓖ REPLACES REV F WITH CHANGE

QTY REQD	PART OR IDENTIFYING NO.	MATERIAL OR NOTES	NOMENCLATURE OR DESCRIPTION	FIND NO.

LIST OF MATERIALS

NEXT ASSY	USED ON
AS APPLICABLE	

APPLICATION

UNLESS OTHERWISE SPECIFIED
DIMENSIONS ARE IN INCHES
CAPACITOR VALUES ARE IN µf
RESISTOR VALUES ARE IN OHMS
TOLERANCES ON
FRACTIONS ± — DECIMALS ±.005 ANGLES ± —
DO NOT SCALE THIS DRAWING

MATERIAL
SEE NOTE 11

MIT
INSTRUMENTATION LAB
CAMBRIDGE, MASS.

DRAWN R. A. Jones 7/16/65
CHECKED A. J. [illegible] 7-22-65
APPROVED
APPROVED [illegible] 7/22/65
APPROVED MIT [illegible] 7/22/65
APPROVED MSC [illegible] 7/22/65
DATE

MANNED SPACECRAFT CENTER
HOUSTON, TEXAS

NAMEPLATES,
APOLLO G&N-GSE
(STANDARDS)

CODE IDENT NO. 80230
SIZE E
DRAWING NO. 1004260
SCALE NONE
SHEET 1 OF 5

MASTER

1004260

NOTICE – WHEN GOVERNMENT DRAWINGS, SPECIFICATIONS, OR OTHER DATA ARE USED FOR ANY PURPOSE OTHER THAN IN CONNECTION WITH A DEFINITELY RELATED GOVERNMENT PROCUREMENT OPERATION, THE UNITED STATES GOVERNMENT THEREBY INCURS NO RESPONSIBILITY NOR ANY OBLIGATION WHATSOEVER; AND THE FACT THAT THE GOVERNMENT MAY HAVE FORMULATED, FURNISHED, OR IN ANY WAY SUPPLIED THE SAID DRAWINGS, SPECIFICATIONS OR OTHER DATA IS NOT TO BE REGARDED BY IMPLICATION OR OTHERWISE AS IN ANY MANNER LICENSING THE HOLDER OR ANY OTHER PERSON OR CORPORATION, OR CONVEYING ANY RIGHTS OR PERMISSION TO MANUFACTURE, USE, OR SELL ANY PATENTED INVENTION THAT MAY IN ANY WAY BE RELATED THERETO.

REVISIONS 02768

SYM	ZONE	DESCRIPTION	DR	CHK	DATE	APPROVED
G		REPLACES REV F WITH CHANGE PER TDRR 20854.			7/22/65	WK
H		REVISED PER TDRR 20892			8/3/65	WK
J		REVISED PER TDRR 20904			8/5/65	WK
K		REVISED PER TDRR 21379			8/9/65	WK
L		REVISED PER TDRR 21410			8/23/65	WK
M		REVISED PER TDRR 21993				
N		REVISED PER TDRR 22621				
P		REVISED PER TDRR 22671				
R		REVISED PER TDRR 22672				
S		REVISED PER TDRR 22750				
T		REVISED PER TDRR 22823			/65	WK
U		REVISED PER TDRR 23072			10-5-65	
V		REVISED PER TDRR 23521			10-27-65	WK
W		REVISED PER TDRR 23824	RAJ			
Y		REVISED PER TDRR 24018	RAJ			
Z		REVISED PER TDRR 24040	RAJ		11-9-65	WK
Ⓜ AA		REVISED PER TDRR 24060	RAJ		11-19-65	WK
Ⓖ AB		REVISED PER TDRR 24868	RAJ		2-22-65	WK
AC		REVISED PER TDRR 24973	RAJ		3-4-66	

DASH NO.	P/C	PART NAME	REMARKS	PART NO.	SER. NO.	CONT. NO.	STYLE	TYPE	MATERIAL	A	B	C	D	E	F	G	H	J	K	L	M	N	P	R	S	T	U	V	W	Y	Z	AA	AB	AC	AD	AE	AF	AG	AH	AJ	AK	AL	AM	AN	AP	AR
399	K																																													
398	K																																													
350	K	ALIGNMENT OPTICAL TELESCOPE (LEM)		NA	NA	NA	A	I	NOTE 11 B	4.000	2.625	3.375	2.750	.156	.093	.156	.187	NA	NA	2.312	1.468	1.187	.906	2.031	NA	.375	.156	NA	1.437	2.750	.437	NA	3.688	.062	.062	1.750	.593	NA	.625	3.375	.187	NA	.156	.531	.453	NA
309	K																																													
308	K																																													
307	K						B	I	NOTE 11 B	4.000	2.625	3.375	2.750	.156	.093	.156	.187	NA	NA	2.328	1.468	1.187	.906	2.031	.062	.375	.156	NA	1.437	2.750	.437	NA	3.687	.062	.062	1.750	.593	NA	NA	NA	NA	NA	NA	NA	NA	NA
306	K						B	II	NOTE 11 C	4.000	2.625	3.375	2.750	.156	.093	.156	.187	.125	.156	2.328	1.468	1.187	.906	2.031	.062	.375	.156	↕	1.437	2.750	.437	2.312	3.687	.062	NA	1.750	.593	↕	↕	↕	↕	↕	↕	↕	↕	↕
305	K						B	I	NOTE 11 B	2.000	1.312	1.687	1.375	.078	.048	.078	.093	NA	NA	1.164	.734	.593	.453	1.015	.048	.171	.078	↕	.718	1.375	.187	NA	NA	.048	.031	.875	.320	↕	↕	↕	↕	↕	↕	↕	↕	↕
304	K						B	II	NOTE 11 C	2.000	1.312	1.687	1.375	.078	.048	.078	.093	.070	.078	1.164	.734	.593	.453	1.015	.048	.171	.078	NA	.718	1.375	.187	.156	1.843	.048	NA	.875	.320	NA	NA	NA	NA	NA	NA	NA	NA	NA
303	K																																													
302	K																																													
301	K																																													
300	K	OPTICAL UNIT		NA	NA	NA	A	I	NOTE 11 B	2.000	1.312	1.675	NA	NA	.048	.078	NA	NA	NA	1.090	.812	.675	.540	.940	NA	.265	NA	NA	NA	1.375	.218	NA	NA	NA	NA	NA	.375	NA	NA	NA	.180	NA	.078	NA	NA	NA
9	K	2 IN AUTOCOLLIMATOR		1001702			B	II	NOTE 11 C	4.000	2.625	3.812	2.750	.156	.093	.156	.187	.125	.156	2.250	1.500	1.187	.906	2.031	.093	.375	.156	1.750	1.437	2.750	.437	2.312	3.687	.062	NA	1.750	.593	.156	1.062	3.812	.156	NA	.156	1.062	.375	3.687
8	K	5 IN AUTOCOLLIMATOR		1017410			B	II	NOTE 11 C	4.000	2.625	3.812	2.750	.156	.093	.156	.187	.125	.156	2.250	1.500	1.187	.906	2.031	.093	.375	.156	1.750	1.437	2.750	.437	2.312	3.687	.062	NA	1.750	.593	.156	1.062	3.812	.156	NA	.156	1.062	.375	3.687
7	K	2½ IN AUTOCOLLIMATOR (SCT)		1017435			B	II	NOTE 11 C	4.000	2.625	3.812	2.750	.156	.093	.156	.187	.125	.156	2.250	1.500	1.187	.906	2.031	.093	.375	.156	1.750	1.437	2.750	.437	2.312	3.687	.062	NA	1.750	.593	.156	1.062	3.812	.156	NA	.156	1.062	.375	3.687
6	K	2½ IN AUTOCOLLIMATOR (SXT)		1017448			B	II	NOTE 11 C	4.000	2.625	3.812	2.750	.156	.093	.156	.187	.125	.156	2.250	1.500	1.187	.906	2.031	.093	.375	.156	1.750	1.437	2.750	.437	2.312	3.687	.062	NA	1.750	.593	.156	1.062	3.812	.156	NA	.156	1.062	.375	3.687
5	K	RETROREFLECTING PRISM ASSEMBLY		1019840			B	I	NOTE 11 B	4.000	2.625	3.812	2.750	.156	.093	.156	.187	NA	NA	2.250	1.500	1.187	.906	2.031	.093	.375	.156	1.750	1.437	2.750	.437	NA	NA	.062	.062	1.750	.593	.156	1.062	3.812	.156	NA	.156	1.062	.375	NA
4	K	S/H SIMULATOR ASSEMBLY		1019896			B	I	NOTE 11 B	4.000	2.625	3.812	2.750	.156	.093	.156	.187	NA	NA	2.250	1.500	1.187	.906	2.031	.093	.375	.156	1.750	1.437	2.750	.437	NA	NA	.062	.062	1.750	.593	.156	1.062	3.812	.156	NA	.156	1.062	.375	NA
3	K	REFERENCE MIRROR		1001767			B	I	NOTE 11 B	2.000	1.312	1.906	1.375	.078	.048	.078	.093	NA	NA	1.125	.750	.593	.453	1.015	.062	.187	.078	.875	.718	1.375	.218	NA	NA	.048	.031	.875	.305	.078	.531	1.906	.078	NA	.078	.531	.187	NA
2	K	2 IN PLANE READING AUTOCOLLIMATOR		1017413			B	I	NOTE 11 B	2.000	1.312	1.906	1.375	.078	.048	.078	.093	NA	NA	1.125	.750	.593	.453	1.015	.062	.187	.078	.875	.718	1.375	.218	NA	NA	.048	.031	.875	.305	.078	.531	1.906	.078	NA	.078	.531	.187	NA
1	K	2 IN AUTOCOLLIMATOR		1001702			B	I	NOTE 11 B	2.000	1.312	1.906	1.375	.078	.048	.078	.093	NA	NA	1.125	.750	.593	.453	1.015	.062	.187	.078	.875	.718	1.375	.218	NA	NA	.048	.031	.875	.305	.078	.531	1.906	.078	NA	.078	.531	.187	NA

NOTES FOR TABLE
STYLE A IS FOR G&N SYSTEM.
STYLE B IS FOR GROUND SUPPORT EQUIPMENT.
TYPE I IS WITHOUT MOUNTING HOLES.
TYPE II IS WITH MOUNTING HOLES.

Ⓖ REPLACES REV F WITH CHANGE

KOLLSMAN DASH NUMBERS

QTY REQD	PART OR IDENTIFYING NO.	MATERIAL OR NOTES	NOMENCLATURE OR DESCRIPTION	FIND NO.

LIST OF MATERIALS

NEXT ASSY	USED ON
AS APPLICABLE	

APPLICATION

UNLESS OTHERWISE SPECIFIED
DIMENSIONS ARE IN INCHES
CAPACITOR VALUES ARE IN µf
RESISTOR VALUES ARE IN OHMS
TOLERANCES ON
FRACTIONS ± —   DECIMALS ±.005   ANGLES ± —
DO NOT SCALE THIS DRAWING

MATERIAL
SEE NOTE 11

MIT
INSTRUMENTATION LAB
CAMBRIDGE, MASS.

MANNED SPACECRAFT CENTER
HOUSTON, TEXAS

DRAWN E. A. Jones 7-16-65
CHECKED A. J. 7-22-65
APPROVED
APPROVED W. 7/22/65
APPROVED MIT W. 7/22/65
APPROVED MSC
DATE

NAMEPLATES,
APOLLO G&N-GSE
(STANDANDS)

CODE IDENT NO. 8C230
SIZE E
DRAWING NO. 1004260
SCALE NONE
SHEET 2 OF 5

MASTER

NOTICE – WHEN GOVERNMENT DRAWINGS, SPECIFICATIONS, OR OTHER DATA ARE USED FOR ANY PURPOSE OTHER THAN IN CONNECTION WITH A DEFINITELY RELATED GOVERNMENT PROCUREMENT OPERATION, THE UNITED STATES GOVERNMENT THEREBY INCURS NO RESPONSIBILITY NOR ANY OBLIGATION WHATSOEVER; AND THE FACT THAT THE GOVERNMENT MAY HAVE FORMULATED, FURNISHED, OR IN ANY WAY SUPPLIED THE SAID DRAWINGS, SPECIFICATIONS OR OTHER DATA IS NOT TO BE REGARDED BY IMPLICATION OR OTHERWISE AS IN ANY MANNER LICENSING THE HOLDER OR ANY OTHER PERSON OR CORPORATION, OR CONVEYING ANY RIGHTS OR PERMISSION TO MANUFACTURE, USE, OR SELL ANY PATENTED INVENTION THAT MAY IN ANY WAY BE RELATED THERETO.

REVISIONS 02768

SYM	ZONE	DESCRIPTION	DR	CHK	DATE	APPROVED
G		REPLACES REV F WITH CHANGE PER TDRR 20854			7/22/65	WK
H		REVISED PER TDRR 20892			8/3/65	WK
J		REVISED PER TDRR 20904			8/3/65	WK
K		REVISED PER TDRR 21379			8/6/65	WK
L		REVISED PER TDRR 21410			8/	WK
M		REVISED PER TDRR 21993				
N		REVISED PER TDRR 22621			10/	
P		REVISED PER TDRR 22671				
R		REVISED PER TDRR 22672			/11/	
S		REVISED PER TDRR 22750				
T		REVISED PER TDRR 22823			/65	WK
U		REVISED PER TDRR 23072			10-22-65	RGM
V		REVISED PER TDRR 23521			10-26-65	WK
W		REVISED PER TDRR 23824	RAJ		-9-65	WK
Y		REVISED PER TDRR 24018	RAJ		-3-65	WK
Z		REVISED PER TDRR 24040	RAJ		-9-65	WK
AA		REVISED PER TDRR 24060	RAJ		-9-65	WK
AB		REVISED PER TDRR 24868	RAJ		2-22-65	WK
AC		REVISED PER TDRR 24973	RAJ		-4-66	WK

DASH NO.	P/C	PART NAME	REMARKS	PART NO.	SER. NO.	CONT. NO.	STYLE	TYPE	MATERIAL	
299	R									
298	R									
254	R	DRAWER ASSY COMP. SIMULATOR		2014048-011	NA	NAS-9-497	B	II	NOTE 11 C	FOR DIMENSIONS, SEE DASH 18 VALUES BELOW
253		SHIPPING KIT ASSY, NAV DSKY		2016312-011						
252		SHIPPING KIT ASSY, UNIVERSAL DSKY		2016316-011						
251		SHIPPING KIT ASSY, MAIN DSKY		2016313-011				II	NOTE 11 C	
250		AMPLIFIER, REWORK		2014386				I	NOTE 11 B	FOR DIMENSIONS, SEE DASH 15 VALUES BELOW
249		TEMP MONITOR ASSY		2014313-011					NOTE 11 C	FOR DIMENSIONS, SEE DASH 17 VALUES BELOW
248		AGC JUNCTION ASSY		2014341-011					NOTE 11 B	FOR DIMENSIONS, SEE DASH 15 VALUES BELOW
247		AC INPUT PANEL ASSY		2014302-011						
246		SELF TEST ASSY		2014392 011						
245	R	TAPE PUNCH ASSEMBLY		2014039-011	NA		B	I	NOTE 11 B	FOR DIMENSIONS, SEE DASH 15 VALUES BELOW
244	R	TAPE READER ASSEMBLY		2014038-011	NA	NAS-9-497	B	I	NOTE 11 B	
243										
242										
241	R	APOLLO GUIDANCE COMPUTER GROUP		6003001	NA	NAS-9-497	A	I	NOTE 11 B	FOR DIMENSIONS, SEE DASH 19 VALUES BELOW
240	R	SELF TEST ASSEMBLY		2014366-011	NA		B	I	NOTE 11 B	FOR DIMENSIONS, SEE DASH 15 VALUES BELOW
239		POWER SUPPLY ASSY-115 V., 400 CYCLE		2014207-011						FOR DIMENSIONS, SEE DASH 17 VALUES BELOW
238		AC INPUT PANEL ASSY		2014043-011						
237		POWER CONTROL ASSY		2014079-011						FOR DIMENSIONS, SEE DASH 15 VALUES BELOW
236		DRAWER ASSY - X Y INTERFACE		2014040-011						
235		DRAWER ASSY RDC INTERFACE		2014045-011						
234		BUFFER CIRCUIT ASSY		2014254-011						
233		CONTROL & INTERFACE ASSY		2014204-011						
232		POWER CONTROL ASSY		2014044-011						FOR DIMENSIONS, SEE DASH 17 VALUES BELOW
231		DRAWER ASSY, PROGRAMMER & MONITOR		2014041-011						
230		CONNECTOR INTERFACE ASSY		2014272-011						FOR DIMENSIONS, SEE DASH 15 VALUES BELOW
229		CONNECTOR INTERFACE ASSY		2014047-011						
228		ANTENNA, TUNING CAPACITOR ASSY		2014209-011						
227		MOUNTING FIXTURE ASSY		2014006-011						FOR DIMENSIONS, SEE DASH 17 VALUES BELOW
226		POWER SUPPLY ASSY 3 VDC		2014234-011						FOR DIMENSIONS, SEE DASH 15 VALUES BELOW
225		PANEL ASSY — SIGNAL INTERFACE		2014010-011						
224		OSCILLOSCOPE ASSY		2014232-011						
223		AUXILIARY OUTLET ASSY		2014274-011						
222		FREQUENCY COUNTER		2014233-011						
221		POWER SUPPLY ASSY 10, 13, 28 VDC		2014235-011						
220		LOGIC DRAWER ASSY NO. 2		2014037-011						FOR DIMENSIONS, SEE DASH 17 VALUES BELOW
219		LOGIC DRAWER ASSY NO. 1		2014036-011						
218		COUNTER, ELECTRICAL ASSY		2014288-011						FOR DIMENSIONS, SEE DASH 15 VALUES BELOW
217		POWER SUPPLY ASSY		2014279-011						
216		TEST MOUNT ASSY		2014257-011						
215		UNIVERSAL DSKY PEDESTAL MOUNT		2014014-011						FOR DIMENSIONS, SEE DASH 17 VALUES BELOW
214		MAIN DSKY PEDESTAL MOUNT		2014343				I	NOTE 11 B	
213		SHIPPING CONTAINER, MAIN DSKY		1006229				II	NOTE 11 C	FOR DIMENSIONS, SEE DASH 18 VALUES BELOW
212		NAV DSKY		1006231						
211		AGC		1006230						
210		UNIVERSAL DSKY		1006422						
209		SHIPPING CONTAINER, AGC		1006421				II	NOTE 11 C	
208		UNIVERSAL DSKY HANDLING FIXTURE		2014013-011				I	NOTE 11 B	FOR DIMENSIONS, SEE DASH 15 VALUES BELOW
207		NAV DSKY HANDLING FIXTURE		1014377						FOR DIMENSIONS, SEE DASH 17 VALUES BELOW
206		MAIN DSKY HANDLING FIXTURE		1014334						
205		AGC HANDLING FIXTURE		2014282-011				I	NOTE 11 B	
204		OPERATION CONSOLE		2014024-011				II	NOTE 11 C	FOR DIMENSIONS, SEE DASH 18 VALUES BELOW
203		COMPUTER TEST SET		2014042-011		NAS-9-497				
202		DRAWER ASSY, COMPUTER SIMULATOR		2014048-011		FNP-12775				
201		AUXILIARY CALIBRATION CONSOLE		2014059-011						
200	R	AGC CALIBRATION CONSOLE		2014049-011	NA	NAS-9-497	B	II	NOTE 11 C	
21	R									
20	P	NA		NA	NA	NA	A	II	NOTE 11 C	
19	R	NA		NA	NA	NA	A	I	NOTE 11 B	
18	R	NA		NA	NA	NA	B	II	NOTE 11 C	
17	R	NA		NA	NA	NA	B	I	NOTE 11 B	
16	R	NA		NA	NA	NA	B	II	NOTE 11 C	
15	R	NA		NA	NA	NA	B	I	NOTE 11 B	

DASH NO.	A	B	C	D	E	F	G	H	J	K	L	M	N	P	R	S	T	U	V	W	Y	Z	AA	AB	AC	AD	AE	AF	AG	AH	AJ	AK	AL	AM	AN	AP	AR
21																																					
20	2.000	1.312	1.687	1.375	.078	.031	.078	.093	.106 .113	.093	1.187	.750	.593	.453	1.015	.062	.187	.078	.875	.718	1.375	.218	1.156	1.843	.048	NA	.875	.305	.078	.312	1.687	.078	NA	.078	.312	.187	1.843
19	2.000	1.312	1.687	1.375	.078	.031	.078	.093	NA	NA	1.187	.750	.593	.453	1.015	.062	.187	.078	.875	.718	1.375	.218	NA	NA	.048	.031	.875	.305	.078	.312	1.687	.078	NA	.078	.312	.187	NA
18	4.187	1.875	3.469	2.750	.156	.093	.156	.125	.106 .113	.125	1.625	1.032	.844	.656	1.406	.093	.344	.156	1.781	1.531	2.844	.312	1.562	3.875	.062	NA	1.219	.500	.156	.719	3.469	.156	NA	.156	.719	.344	3.875
17	4.187	1.875	3.469	2.750	.156	.093	.156	.125	NA	NA	1.625	1.032	.844	.656	1.406	.093	.344	.156	1.781	1.531	2.844	.312	NA	NA	.062	.062	1.219	.500	.156	.719	3.469	.156	NA	.156	.719	.344	NA
16	2.000	1.312	1.687	1.375	.078	.031	.078	.093	.106 .113	.093	1.187	.750	.593	.453	1.015	.062	.187	.078	.875	.718	1.375	.218	1.156	1.843	.048	NA	.875	.305	.078	.312	1.687	.078	NA	.078	.312	.187	1.843
15	2.000	1.312	1.687	1.375	.078	.031	.078	.093	NA	NA	1.187	.750	.593	.453	1.015	.062	.187	.078	.875	.718	1.375	.218	NA	NA	.048	.031	.875	.305	.078	.312	1.687	.078	NA	.078	.312	.187	NA

THIS SHEET ADDED

Ⓖ REPLACES REV F WITH CHANGE

RAYTHEON DASH NUMBERS

NOTES FOR TABLE

STYLE A IS FOR G & N SYSTEM
STYLE B IS FOR GROUND SUPPORT EQUIPMENT
TYPE I IS WITHOUT MOUNTING HOLES
TYPE II IS WITH MOUNTING HOLES

MASTER

QTY REQD	PART OR IDENTIFYING NO.	MATERIAL OR NOTES	NOMENCLATURE OR DESCRIPTION	FIND NO.

LIST OF MATERIALS

NEXT ASSY	USED ON
AS APPLICABLE	

APPLICATION

UNLESS OTHERWISE SPECIFIED
DIMENSIONS ARE IN INCHES
CAPACITOR VALUES ARE IN µf
RESISTOR VALUES ARE IN OHMS
TOLERANCES ON
FRACTIONS ± — DECIMALS ±.005 ANGLES ± —
DO NOT SCALE THIS DRAWING

MATERIAL
SEE NOTE 11

MIT
INSTRUMENTATION LAB
CAMBRIDGE, MASS.

MANNED SPACECRAFT CENTER
HOUSTON, TEXAS

		DATE
DRAWN	R. A. Jones	7-16-65
CHECKED	A. J.	7-22-65
APPROVED		
APPROVED	W. Kupfer	2/4/65
APPROVED MIT	W. Kupfer	2/4/65
APPROVED MSC		

NAMEPLATES,
APOLLO GEN-GSE
(STANDARDS)

CODE IDENT NO. 80230
SIZE E
DRAWING NO. 1004260
SCALE NONE
SHEET 3 OF 5

NOTICE – WHEN GOVERNMENT DRAWINGS, SPECIFICATIONS, OR OTHER DATA ARE USED FOR ANY PURPOSE OTHER THAN IN CONNECTION WITH A DEFINITELY RELATED GOVERNMENT PROCUREMENT OPERATION, THE UNITED STATES GOVERNMENT THEREBY INCURS NO RESPONSIBILITY NOR ANY OBLIGATION WHATSOEVER; AND THE FACT THAT THE GOVERNMENT MAY HAVE FORMULATED, FURNISHED, OR IN ANY WAY SUPPLIED THE SAID DRAWINGS, SPECIFICATIONS, OR OTHER DATA IS NOT TO BE REGARDED BY IMPLICATION OR OTHERWISE AS IN ANY MANNER LICENSING THE HOLDER OR ANY OTHER PERSON OR CORPORATION, OR CONVEYING ANY RIGHTS OR PERMISSION TO MANUFACTURE, USE, OR SELL ANY PATENTED INVENTION THAT MAY IN ANY WAY BE RELATED THERETO.

REVISIONS 02768

SYM	ZONE	DESCRIPTION	DR	CHK	DATE	APPROVED
G		REPLACES REV F WITH CHANGE PER TDRR 20854.			7/22/65	WK
H		REVISED PER TDRR 20892			8/3/65	WK
J		REVISED PER TDRR 20904			8/3/65	WK
K		REVISED PER TDRR 21379			[illegible]	WK
L		REVISED PER TDRR 21410			[illegible]	WK
M		REVISED PER TDRR 21993			[illegible]	
N		REVISED PER TDRR 22621			[illegible]	
P		REVISED PER TDRR 22671			[illegible]	
R		REVISED PER TDRR 22672			[illegible]	
S		REVISED PER TDRR 22750			[illegible]	
T		REVISED PER TDRR 22823			[illegible]	
U		REVISED PER TDRR 23072			[illegible]	
V		REVISED PER TDRR 23521			[illegible]	
W		REVISED PER TDRR 23824	RAJ		[illegible]	
Y		REVISED PER TDRR 24018	RAJ		[illegible]	
Z		REVISED PER TDRR 24040	RAJ		[illegible]	
AA		REVISED PER TDRR 24060	RAJ		[illegible]	
AB		REVISED PER TDRR 24868	RAJ		2-22-[illegible]	
AC		REVISED PER TDRR 24973	RAJ		[illegible]	

DASH NO.	P/C	PART NAME	REMARKS	PART NO.	SER. NO.	CONT. NO.	STYLE	TYPE	MATERIAL	A	B	C	D	E	F	G	H	J	K	L	M	N	P	R	S	T	U	V	W	Y	Z	AA	AB	AC	AD	AE	AF	AG	AH	AJ	AK	AL	AM	AN	AP	AR
199	AC																																													
198	AC																																													
165	AC	TERM. BOARD STORAGE DRAWER		2900927-011		NAS-9-497	B	II	NOTE 11 C	FOR DIMENSIONS, SEE DASH 141 VALUES BELOW																																				
164	AC	INPUT/OUTPUT PANEL		2900926-011																																										
163	AC	CONTROL PANEL		2900896-011																																										
162	AC	CSL. CAL AND TEST, SCM/PSAAM		2900895-011		NAS-9-497	B	II	NOTE 11 C	FOR DIMENSIONS, SEE DASH 144 VALUES BELOW																																				
160	AC	FIX., HAND., G AND N HARNESS		1901846-031		NAS-9-497	B	II	NOTE 11 C	FOR DIMENSIONS, SEE DASH 144 VALUES BELOW																																				
159	AC	BATTERY POWER PACK		1900011-031			B	II	NOTE 11 C																																					
158	AC	COUPLING DATA UNIT ASSEMBLY C/M		2007222			A	I	NOTE 11B	FOR DIMENSIONS, SEE DASH 100 VALUES BELOW																																				
157	AC	COUPLING DATA UNIT ASSEMBLY - LEM		2007222																																										
156	AC	POWER & SERVO ASSEMBLY C/M		2007200																																										
155	AC	PIPA ELECTRONICS ASSEMBLY		2007201																																										
154	AC	PULSE TORQUE ASSEMBLY - LEM		6007000																																										
153	AC	POWER & SERVO ASSEMBLY - LEM		6007200			A	I	NOTE 11B																																					
152	AC	CONT PNL, RSVR CKT TESTER		2900770-011		NAS-9-497	B	II	NOTE 11C	FOR DIMENSIONS, SEE DASH 141 VALUES BELOW																																				
151	AC	TESTER, RESOLVER CIRCUIT		2900708-011																																										
150	AC	JUNCTION BOX, P.S.A./G.S.E.		1901933-021						FOR DIMENSIONS, SEE DASH 144 VALUES BELOW																																				
149	AC	BATTERY PACK, LIFTING		2900812-011						FOR DIMENSIONS, SEE DASH 141 VALUES BELOW																																				
148	AC	MOUNTING PLATE, COMPONENT		6900007-011						FOR DIMENSIONS, SEE DASH 144 VALUES BELOW																																				
147	AC	MOUNTING PLATE, COMPONENT		2900677-011			B	II	NOTE 11C																																					
145	AC	CONTAINER, SHIPPING, IMU		1900010-021		NAS-9-497	B	II	NOTE 11C	FOR DIMENSIONS, SEE DASH 144 VALUES BELOW																																				
144	AC	FIX., MOUNTING, G AND N		1902204-021			B	II	NOTE 11 C	4.125	1.812	3.250	NA	.125	.062	.12	.156	.100 .104	.125	1.625	1.140	.890	.640	1.390	.125	.171	.125	1.875	1.687	2.625	.250	1.562	3.843	.093	NA	NA	.359	.125	.437	3.688	NA	3.687	.093	.40	.25	3.875
143	AC	CSL, COOL. AND PWR, G AND N		1902134-021						4.125	1.812	3.250		.125	.062	.12	.156		.125	1.625	1.140	.890	.640	1.390	.125	.171	.125	1.875	1.687	2.625	.250	1.562	3.843	.093			.359	.125	.437	3.688		3.687	.093	.40	.25	3.875
142	AC	ANALYZER, OPTICS-INERTIAL		2900023-011						4.125	1.812	3.250		.125	.062	.12	.156		.125	1.625	1.140	.890	.640	1.390	.125	.171	.125	1.875	1.687	2.625	.250	1.562	3.843	.093			.359	.125	.437	3.688		3.687	.093	.40	.25	3.875
141	AC	CONT, TEMP, PORTABLE		2900060-011						2.125	.968	1.718		.093	.031	.06	.093		.093	.858	.608	.484	.358	.733	.077	.116	.062	.937	.875	1.343	.125	.781	1.892	.046			.209	.093	.250	1.875		1.840	.046	.23	.16	1.938
140	AC	TESTER, CKT, IMU/CDU RSVR		2900286-011						4.125	1.812	3.250		.125	.062	.12	.156		.125	1.625	1.140	.890	.640	1.390	.125	.171	.125	1.875	1.687	2.625	.250	1.562	3.843	.093			.359	.125	.437	3.688		3.687	.093	.40	.25	3.875
139	AC	SIMULATOR, LD/SIG, CDU		2900285-011																																										
138	AC	SIMULATOR, LD/SIG, OPTICS		1902023-021																																										
137	AC	FIX., MOUNTING, IMU/NAV BASE		6900003-011																																										
136	AC	FIXTURE, OPTICS/NAV BASE		2900072-011																																										
135	AC	FIX., MOUNTING, SUB SYSTEM		2900070-011																																										
134	AC	FIX., HAND., G AND N HARNESS		2900069-011																																										
133	AC	CNTR, SHIPPING, NAV BASE		2900068-011																																										
132	AC	FIX., MOUNTING, G AND N		2900067-011																																										
131	AC	SIMULATOR, LD/SIG, IMU/CDU		2900062-011																																										
130	AC	TESTER, GYRO WHEEL		2900061-011																																										
129	AC	COOLANT SUPPLY		1902133-021																																										
128	AC	TABLE, ROTARY		1900926-021						4.125	1.812	3.250		.125	.062	.12	.156		.125	1.625	1.140	.890	.640	1.390	.125	.171	.125	1.875	1.687	2.625	.250	1.562	3.843	.093			.359	.125	.437	3.688		3.687	.093	.40	.25	3.875
127	AC	FIX., HAND., OPTICS		2900074-011						2.125	.968	1.718		.093	.031	.06	.093		.093	.858	.608	.484	.358	.733	.077	.116	.062	.937	.875	1.343	.125	.781	1.892	.046			.209	.093	.250	1.875		1.840	.046	.23	.16	1.938
126	AC	FIXTURE, MTG, PTA/PEA.		2900066-011																																										
125	AC	CONT, TEMP, IMU LIFTING		2900063-011																																										
124	AC	FIXTURE, HANDLING, IMU		2900064-011																																										
123	AC	CONT, OPTICS, REMOTE		1902046-021																																										
122	AC	TEST CONTROL		1902009-021																																										
121	AC	ADPT MODULE, P.S.A.		1902431-021																																										
120	AC	BRIDGE, DECADE ERROR		2900128-011																																										
119	AC	PWR SUP, ELECTRONICS		2900012-011																																										
118	AC	PWR SUP, RELAY AND LAMP		1900049-031																																										
117	AC	CONSOLE, OSCILLOGRAPH		1900000-021																																										
116	AC	ADPT MODULE, P.S.A.		1902431-011																																										
115	AC	ADPT, TEST POINT, PTA/PEA.		2900145-011																																										
114	AC	ADPT, TEST POINT, P.S.A.		2900037-011																																										
113	AC	CONTROL, GIMBAL POSITION		2900036-011																																										
112	AC	SELECTOR, SIGNAL, PRIMARY		2900035-011																																										
111	AC	SEL, SIG, OSCILLOGRAPH		2900034-011																																										
110	AC	PANEL, PWR SUP AND LOAD		2900033-011																																										
109	AC	PANEL, MONITOR		2900031-011																																										
108	AC	PANEL, AUXILIARY INPUT		2900030-011																																										
107	AC	CAGING ELECTRONICS, GYRO		2900029-011																																										
106	AC	TEST SELECTOR		2900028-011																																										
105	AC	TEST CONTROL		2900027-011																																										
104	AC	MONITOR AND CONTROL, TEMP		2900026-011																																										
103	AC	DISTRIBUTION BOX, GSE		2900024-011																																										
102	AC	VOLTMETER, DIGITAL		2900007 011			B	II	NOTE 11 C	2.125	.968	1.718	NA	.093	.031	.06	.093	.100 .104	.093	.858	.608	.484	.358	.733	.077	.116	.062	.937	.875	1.343	.125	.781	1.892	.046	NA	NA	.209	.093	.250	1.875	NA	1.840	.046	.23	.16	1.938
101	AC	NAVIGATION BASE ASSEMBLY - LEM		6899950		NAS-9-497	A	I	NOTE 11 B	2.000	1.312	1.906	1.375	.078	.048	.078	.093	NA	NA	1.125	.750	.593	.453	1.015	.062	.187	.078	.875	.718	1.375	.218	NA	NA	.048	.031	.875	.305	.078	.531	1.906	.078	NA	.078	.531	.187	NA
100	AC	NAVIGATION BASE ASSEMBLY		2899982		NAS-9-497	A	I	NOTE 11 B	2.000	1.312	1.906	1.375	.078	.048	.078	.093	NA	NA	1.125	.750	.593	.453	1.015	.062	.187	.078	.875	.718	1.375	.218	NA	NA	.048	.031	.875	.305	.078	.531	1.906	.078	NA	.078	.531	.187	NA

THIS SHEET ADDED

Ⓖ REPLACES REV F WITH CHANGE

AC ELECTRONICS DASH NUMBERS

NOTES FOR TABLE

STYLE A IS FOR G&N SYSTEM
STYLE B IS FOR GROUND SUPPORT EQUIPMENT
TYPE I IS WITHOUT MOUNTING HOLES
TYPE II IS WITH MOUNTING HOLES

QTY REQD	PART OR IDENTIFYING NO.	MATERIAL OR NOTES	NOMENCLATURE OR DESCRIPTION	FIND NO.

LIST OF MATERIALS

AS APPLICABLE
NEXT ASSY | USED ON
APPLICATION

UNLESS OTHERWISE SPECIFIED
DIMENSIONS ARE IN INCHES
CAPACITOR VALUES ARE IN µf
RESISTOR VALUES ARE IN OHMS
TOLERANCES ON
FRACTIONS ± — DECIMALS ±.005 ANGLES ± —
DO NOT SCALE THIS DRAWING

MATERIAL
SEE NOTE 11

MIT
INSTRUMENTATION LAB
CAMBRIDGE MASS.

DRAWN R. A. Jones 7-16-65
CHECKED [illegible] 7-22-65
APPROVED
APPROVED W. Kupfer [illegible]
APPROVED MIT W. Kupfer [illegible]
APPROVED MSC [illegible] 7/24/65
DATE

MANNED SPACECRAFT CENTER
HOUSTON, TEXAS

NAMEPLATES,
APOLLO G&N-GSE
(STANDARDS)

CODE IDENT NO. 80230
SIZE E
DRAWING NO. 1004260
SCALE NONE
SHEET 4 OF 5

MASTER

NOTICE - WHEN GOVERNMENT DRAWINGS, SPECIFICATIONS, OR OTHER DATA ARE USED FOR ANY PURPOSE OTHER THAN IN CONNECTION WITH A DEFINITELY RELATED GOVERNMENT PROCUREMENT OPERATION, THE UNITED STATES GOVERNMENT THEREBY INCURS NO RESPONSIBILITY NOR ANY OBLIGATION WHATSOEVER, AND THE FACT THAT THE GOVERNMENT MAY HAVE FORMULATED, FURNISHED, OR IN ANY WAY SUPPLIED THE SAID DRAWINGS, SPECIFICATIONS OR OTHER DATA IS NOT TO BE REGARDED BY IMPLICATION OR OTHERWISE AS IN ANY MANNER LICENSING THE HOLDER OR ANY OTHER PERSON OR CORPORATION, OR CONVEYING ANY RIGHTS OR PERMISSION TO MANUFACTURE, USE, OR SELL ANY PATENTED INVENTION THAT MAY IN ANY WAY BE RELATED THERETO.

REVISIONS 02768

SYM	ZONE	DESCRIPTION	DR	CHK	DATE	APPROVED
G		REPLACES REV F WITH CHANGE PER TDRR 20854			7/22/65	WK
H		REVISED PER TDRR 20892			8/3/65	WK
J		REVISED PER TDRR 20904			8/3/65	WK
K		REVISED PER TDRR 21379			8/16/65	WK
L		REVISED PER TDRR 21410			8/23/65	WK
M		REVISED PER TDRR 21993				
N		REVISED PER TDRR 22621			10/	
P		REVISED PER TDRR 22671			11/	
R		REVISED PER TDRR 22672				
S		REVISED PER TDRR 22750			65	WK
T		REVISED PER TDRR 22823				
U		REVISED PER TDRR 23072			10-11-65	[illegible]
V		REVISED PER TDRR 23521			10-26-65	WK
W		REVISED PER TDRR 23824	RAJ		11-9-65	WK
Y		REVISED PER TDRR 24018	RAJ		11-16-65	WK
Z		REVISED PER TDRR 24040	RAJ		11-19-65	WK
AA		REVISED PER TDRR 24060	RAJ		11-19-65	WK
AB		REVISED PER TDRR 24868	RAJ		12-22-65	WK
AC		REVISED PER TDRR 24973	RAJ		1-4-66	WK

DASH NO.	P/C	PART NAME	REMARKS	PART NO.	SER. NO.	CONT. NO.	STYLE	TYPE	MATERIAL
499	MIT								
498									
401	MIT	COMPUTER ASSY		2003100		NAS-9-497	A	I	NOTE 11 B
400	MIT	LIFTING SLING-G&N INST. QUAL. FIX. & AZM. REF. FIX.		1021640		NAS-9-4065	B	II	NOTE 11 C

DASH NO.	A	B	C	D	E	F	G	H	J	K	L	M	N	P	R	S	T	U	V
401	2.000	1.312	1.906	1.375	.078	.048	.078	.093	NA	NA	1.125	.750	.593	.453	1.015	.062	.187	.078	.875
400	2.000	1.312	1.687	1.375	.078	.048	.078	.093	.086/.081	.093	1.187	.750	.593	.453	1.015	.062	.187	.078	.875

DASH NO.	W	Y	Z	AA	AB	AC	AD	AE	AF	AG	AH	AJ	AK	AL	AM	AN	AP	AR
401	.718	1.375	.218	NA	NA	.048	.031	.875	.305	.078	.531	1.906	.078	NA	.078	.531	.187	NA
400	.718	1.375	.218	1.156	1.843	.048	NA	.875	.305	.078	.312	1.687	.110	1.830	.070	.275	.180	1.844

MIT DASH NUMBERS

THIS SHEET ADDED

Ⓖ REPLACES REV F WITH CHANGE

NOTES FOR TABLE

STYLE A IS FOR G&N SYSTEM
STYLE B IS FOR GROUND SUPPORT EQUIPMENT
TYPE I IS WITHOUT MOUNTING HOLES
TYPE II IS WITH MOUNTING HOLES

MASTER

QTY REQD	PART OR IDENTIFYING NO.	MATERIAL OR NOTES	NOMENCLATURE OR DESCRIPTION	FIND NO.

LIST OF MATERIALS

NEXT ASSY	USED ON
AS APPLICABLE	

APPLICATION

UNLESS OTHERWISE SPECIFIED
DIMENSIONS ARE IN INCHES
CAPACITOR VALUES ARE IN μf
RESISTOR VALUES ARE IN OHMS
TOLERANCES ON
FRACTIONS ± — DECIMALS ±.005 ANGLES ± —
DO NOT SCALE THIS DRAWING

MATERIAL
SEE NOTE 11

MIT
INSTRUMENTATION LAB
CAMBRIDGE, MASS.

		DATE
DRAWN	R A Jones	7-16-65
CHECKED		7-28-65
APPROVED		
APPROVED	W Kupfer	7/22/65
APPROVED MIT	W Kupfer	7/22/65
APPROVED MSC		7/22/65

MANNED SPACECRAFT CENTER
HOUSTON, TEXAS

NAMEPLATES,
APOLLO G&N-GSE
(STANDARDS)

CODE IDENT NO. 80230
SIZE E
DRAWING NO. 1004260
SCALE NONE
SHEET 5 OF 5

NOTICE – WHEN GOVERNMENT DRAWINGS, SPECIFICATIONS, OR OTHER DATA ARE USED FOR ANY PURPOSE OTHER THAN IN CONNECTION WITH A DEFINITELY RELATED GOVERNMENT PROCUREMENT OPERATION, THE UNITED STATES GOVERNMENT THEREBY INCURS NO RESPONSIBILITY NOR ANY OBLIGATION WHATSOEVER; AND THE FACT THAT THE GOVERNMENT MAY HAVE FORMULATED, FURNISHED, OR IN ANY WAY SUPPLIED THE SAID DRAWINGS, SPECIFICATIONS, OR OTHER DATA IS NOT TO BE REGARDED BY IMPLICATION OR OTHERWISE AS IN ANY MANNER LICENSING THE HOLDER OR ANY OTHER PERSON OR CORPORATION, OR CONVEYING ANY RIGHTS OR PERMISSION TO MANUFACTURE, USE, OR SELL ANY PATENTED INVENTION THAT MAY IN ANY WAY BE RELATED THERETO.

NOTES:

1. INTERPRET DRAWING IN ACCORDANCE WITH STANDARDS PRESCRIBED IN MIL-D-70327.
2. DIMENSIONS ON EACH VIEW APPLY TO ALL VIEWS. (WITH THE EXCEPTION OF MOUNTING HOLES).
3. FORMATS ILLUSTATED WILL BE APPLICABLE TO ALL ITEMS REQUIRING NAMEPLATES BELOW END ITEM DESIGNATION (SYSTEMS, ASSEMBLIES, ETC.)
4. PLATE BACKGROUND TO BE LUSTERLESS BLACK PER FED-STD-595, COLOR 37038. BORDER, MARKING AND LETTERING TO BE NATURAL METAL,(ANODIZED ALUMINUM).
5. MARKING METHOD TO BE DIE STAMPING, ETCHING OR ENGRAVING IN ACCORDANCE WITH MIL P 19834.
6. LETTERING STYLE TO BE GOTHIC,(SANS SERIFS), AND NUMBERS TO BE ARABIC.
7. WHERE LOCATING DIMENSIONS ARE NOT SHOWN, CHARACTERS SHALL BE SYMMETRICALLY POSITIONED.
8. IDENTIFY WITH DRAWING NUMBER PER ND1002019.
9. WHEN "AUTO MARK" METAL MARKING TYPEWRITER IS USED TO ADD DATA TO BLANK SPACES, TYPE SIZE IS TO BE SELECTED FROM DIMENSIONS U, AC AND AM.
10. NASA SYMBOL IS TO BE PROPORTIONAL TO NAMEPLATE IN RATIO OF 1 TO 5 WITH DIMENSION A VALUE AND IS TO HAVE NATURAL BACKGROUND. NASA SYMBOL LETTERS LETTERING AND FEATHER TO BE BLACK,(OR WHITE FOR SILK SCREENING). WHERE BLACK FEATHER PROTRUDES INTO BLACK BACKGROUND, A MINIMUM OUTLINE OF NATURAL BACKGROUND SHALL EXIST.
11. NAMEPLATES WILL BE APPLIED BY METHODS LISTED BELOW, SHOWN IN ORDER OF PREFERENCE, (I.E., FOR RELIABILITY AND WEIGHT).
    - A - STENCIL OR SILK SCREEN DIRECTLY ON EQUIPMENT USING INK PER SCD 1010920,(WHITE OR BLACK).
    - B - ALUMINUM FOIL,(STYLE A OR B, TYPE I):
      FOIL SHALL BE .0030 ±.0005 THICK PER MIL-A-148.
      FOIL SHALL HAVE NO ADHESIVE BACKING.
      FOIL SHALL BE BONDED PER ND 1002219,(METHOD II).
      FOIL SHALL BE CLEAR ANODIZED PER MIL-A-8625, TYPE II.
    - C - PLATE, (STYLE A OR B, TYPE II):
      MATERIAL: QQ-A-250, TEMPER O OR H14, TYPE 1100, ALUMINUM ALLOY, .032 THICK.
      ANODIZE PER MIL-A-8625. TYPE II.
      ALUMINUM PLATE MUST BE FREE FROM BURRS AND SHARP CORNERS, MOUNTED WITH APPLICABLE SIZE FASTENERS.
12. NAMEPLATES SHALL BE CAPABLE OF MEETING APPLICABLE REQUIREMENTS OF MIL-M-13231.
13. ON DIMENSION TABLES SHOWN ON PAGES 2, 3, 4 AND 5, NA MEANS, "NOT APPLICABLE".

REVISIONS 02768

SYM	ZONE	DESCRIPTION	DR	CHK	DATE	APPROVED
G		REPLACES REV F WITH CHANGE PER TDRR 20854			7/22/65	WK
★ H		REVISED PER TDRR 20892			8/5/65	WK
J		REVISED PER TDRR 20904			8/13/65	WK
K		REVISED PER TDRR 21379			8/16/65	WK
L		REVISED PER TDRR 21410			8/23/65	WK
★ M		REVISED PER TDRR 21993			10/	
★ N		REVISED PER TDRR 22621			11/	
★ P		REVISED PER TDRR 22671				
★ R		REVISED PER TDRR 22672				
★ S		REVISED PER TDRR 22750			6	WK
T		REVISED PER TDRR 22823				WK
★ U		REVISED PER TDRR 23072			11-23-65	WK
V		REVISED PER TDRR 23521			10-27-65	WK
★ W		REVISED PER TDRR 23824	RAJ		[illegible]-9-65	WK
★ Y		REVISED PER TDRR 24018	RAJ		[illegible]-6-65	WK
★ Z		REVISED PER TDRR 24040	RAJ		[illegible]-9-65	WK
AA		REVISED PER TDRR 24060	RAJ		[illegible]-9-65	WK
AB		REVISED PER TDRR 24868	RAJ		12-22-65	WK
AC		REVISED PER TDRR 24973	RAJ		1-4-66	WK
AD		REVISED PER TDRR 25065	RAJ		[illegible]-8-66	WK

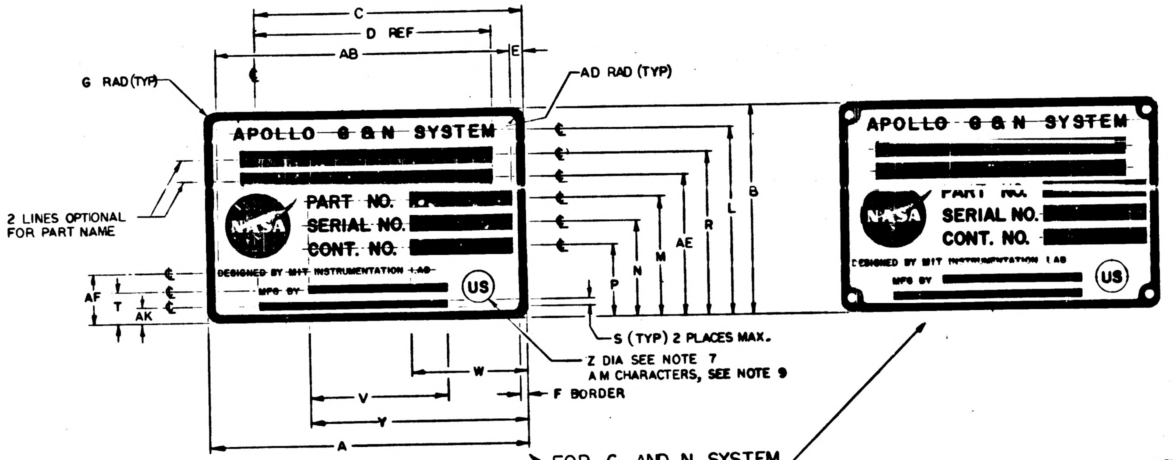
C
D REF
AB
E
G RAD (TYP)
AD RAD (TYP)
APOLLO G & N SYSTEM
PART NO.
SERIAL NO.
CONT. NO.
DESIGNED BY MIT INSTRUMENTATION LAB
MFG BY
US
NASA
2 LINES OPTIONAL FOR PART NAME
AF
T
AK
P
N
M
AE
R
L
B
S (TYP) 2 PLACES MAX.
Z DIA SEE NOTE 7
AM CHARACTERS, SEE NOTE 9
W
V
F BORDER
Y
A

FOR G AND N SYSTEM
STYLE A

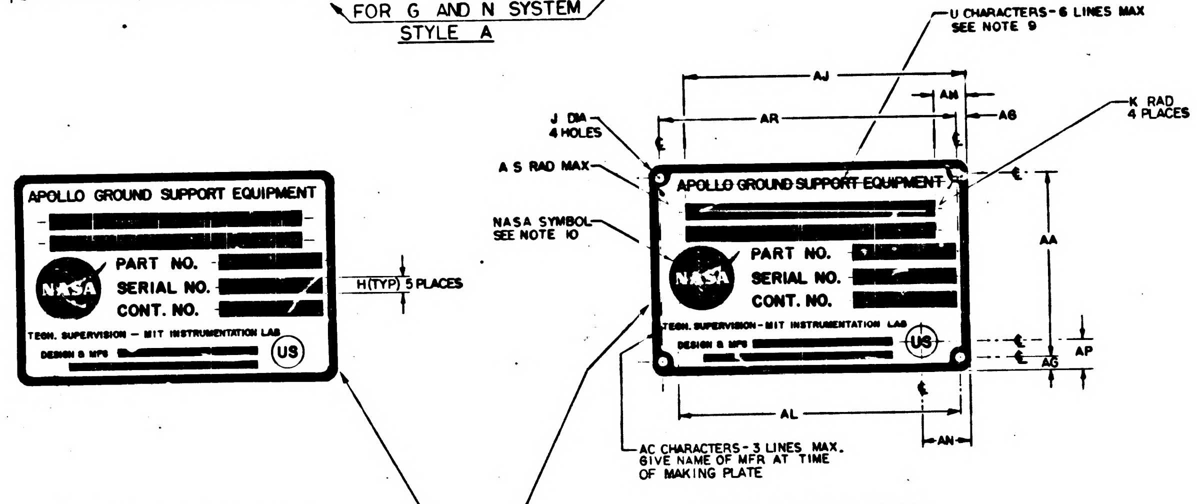
APOLLO GROUND SUPPORT EQUIPMENT
PART NO.
SERIAL NO.
CONT. NO.
TECH. SUPERVISION – MIT INSTRUMENTATION LAB
DESIGN & MFG
US
NASA
H(TYP) 5 PLACES
U CHARACTERS – 6 LINES MAX
SEE NOTE 9
AJ
AM
AR
AG
J DIA
4 HOLES
K RAD
4 PLACES
A S RAD MAX
NASA SYMBOL
SEE NOTE 10
AA
AP
AG
AL
AN
AC CHARACTERS – 3 LINES MAX.
GIVE NAME OF MFR AT TIME
OF MAKING PLATE

WITHOUT MOUNTING HOLES
TYPE I

WITH MOUNTING HOLES
TYPE II

FOR GROUND SUPPORT EQUIPMENT
STYLE B

SUGGESTED PROPORTIONS FOR NAMEPLATE DIMENSIONS.
1. SELECT NAMEPLATE LENGTH, DIMENSION "A", TO FIT DESIGN NEEDS.
2. DIMENSIONS B THRU AS ON LINE 1 BELOW ARE PROPORTIONAL TO "A" BY MULTIPLIERS SHOWN IN LINE 2 BELOW.

	A	B	C	D	E	F	G	H	J	K	L	M	N	P	R	S	T
1.																	
2.	1.000 A	.6563 A	.8438 A	.6875 A	.0391 A	.0240 A	.0391 A	.0469 A	.0547 A	.0469 A	.5938 A	.3750 A	.2969 A	.2187 A	.5079 A	.0313 A	.0938 A

	U	V	W	Y	Z	AA	AB	AC	AD	AE	AF	AG	AH	AJ	AK	AL	AM	AN	AP	AR	AS
1.																					
2.	.0391 A	.4375 A	.3594 A	.6875 A	.1094 A	.5781 A	.9219 A	.0240 A	.0156 A	.4375 A	.1525 A	.0391 A	.1563 A	.8438 A	.0548 A	.8659 A	.0391 A	.1563 A	.0938 A	.9219 A	.0151 A

Ⓖ REPLACES REV F WITH CHANGE

QTY REQD	PART OR IDENTIFYING NO.	MATERIAL OR NOTES	NOMENCLATURE OR DESCRIPTION	FIND NO.

LIST OF MATERIALS

AS APPLICABLE	
NEXT ASSY	USED ON

APPLICATION

UNLESS OTHERWISE SPECIFIED
DIMENSIONS ARE IN INCHES
CAPACITOR VALUES ARE IN µf
RESISTOR VALUES ARE IN OHMS
TOLERANCES ON
FRACTIONS ± — DECIMALS ±.005 ANGLES ± —
DO NOT SCALE THIS DRAWING

MATERIAL
SEE NOTE 11

MIT
INSTRUMENTATION LAB
CAMBRIDGE, MASS.

DRAWN R A Jones 7/16/65
CHECKED A. J. [illegible] 7-22-65
APPROVED
APPROVED W. [illegible] 7/22/65
APPROVED MIT W. [illegible] 7/22/65
APPROVED MSC [illegible] 7/22/65
DATE

MANNED SPACECRAFT CENTER
HOUSTON, TEXAS

NAMEPLATES,
APOLLO G&N–GSE
(STANDARDS)

CODE IDENT NO. 80230
SIZE E
DRAWING NO. 1004260
SCALE NONE
SHEET 1 OF 5

MASTER

NOTICE - WHEN GOVERNMENT DRAWINGS, SPECIFICATIONS, OR OTHER DATA ARE USED FOR ANY PURPOSE OTHER THAN IN CONNECTION WITH A DEFINITELY RELATED GOVERNMENT PROCUREMENT OPERATION, THE UNITED STATES GOVERNMENT THEREBY INCURS NO RESPONSIBILITY NOR ANY OBLIGATION WHATSOEVER; AND THE FACT THAT THE GOVERNMENT MAY HAVE FORMULATED, FURNISHED, OR IN ANY WAY SUPPLIED THE SAID DRAWINGS, SPECIFICATIONS OR OTHER DATA IS NOT TO BE REGARDED BY IMPLICATION OR OTHERWISE AS IN ANY MANNER LICENSING THE HOLDER OR ANY OTHER PERSON OR CORPORATION, OR CONVEYING ANY RIGHTS OR PERMISSION TO MANUFACTURE, USE, OR SELL ANY PATENTED INVENTION THAT MAY IN ANY WAY BE RELATED THERETO.

REVISIONS C2768

SYM	ZONE	DESCRIPTION	DR	CHK	DATE	APPROVED
G		REPLACES REV F WITH CHANGE PER TDRR 20854				
H		REVISED PER TDRR 20892				
J		REVISED PER TDRR 20904				
K		REVISED PER TDRR 21379				
L		REVISED PER TDRR 21410				
M		REVISED PER TDRR 21993				
N		REVISED PER TDRR 22621				
P		REVISED PER TDRR 22671				
R		REVISED PER TDRR 22672				
S		REVISED PER TDRR 22750				
T		REVISED PER TDRR 22823				
U		REVISED PER TDRR 23072				
V		REVISED PER TDRR 23521				
W		REVISED PER TDRR 23824	RAJ			
Y		REVISED PER TDRR 24018	RAJ			
Z		REVISED PER TDRR 24040	RAJ			
AA		REVISED PER TDRR 24060	RAJ			
AB		REVISED PER TDRR 24868	RAJ			
AC		REVISED PER TDRR 24973	RAJ			
AD		REVISED PER TDRR 25065	RAJ			

DASH NO.	P/C	PART NAME	REMARKS	PART NO.	SER. NO.	CONT. NO.	STYLE	TYPE	MATERIAL	A
299	R									
298	R									
254	R	DRAWER ASSY COMP. SIMULATOR		2014048-011	NA	NAS-9-497	B	II	NOTE 11 C	FOR DIMENSIONS, SEE DASH 18 VALUES BELOW
253		SHIPPING KIT ASSY, NAV DSKY		2016312-011						
252		SHIPPING KIT ASSY, UNIVERSAL DSKY		2016316-011						
251		SHIPPING KIT ASSY, MAIN DSKY		2016313-011				II	NOTE 11 C	
250		AMPLIFIER, REWORK		2014386				I	NOTE 11 B	FOR DIMENSIONS, SEE DASH 15 VALUES BELOW
249		TEMP MONITOR ASSY		2014313-011					NOTE 11 C	FOR DIMENSIONS, SEE DASH 17 VALUES BELOW
248		AGC JUNCTION ASSY		2014341-011					NOTE 11 B	FOR DIMENSIONS, SEE DASH 15 VALUES BELOW
247		AC INPUT PANEL ASSY		2014302-011						
246		SELF TEST ASSY		2014392 011						
245	R	TAPE PUNCH ASSEMBLY		2014039-011	NA		B	I	NOTE 11 B	FOR DIMENSIONS, SEE DASH 15 VALUES BELOW
244	R	TAPE READER ASSEMBLY		2014038-011	NA	NAS-9-497	B	I	NOTE 11 B	
243										
242										
241	R	APOLLO GUIDANCE COMPUTER GROUP		6003001	NA	NAS-9-497	A	I	NOTE 11 B	FOR DIMENSIONS, SEE DASH 19 VALUES BELOW
240	R	SELF TEST ASSEMBLY		2014366-011	NA		B	I	NOTE 11 B	FOR DIMENSIONS, SEE DASH 15 VALUES BELOW
239		POWER SUPPLY ASSY-115V., 400 CYCLE		2014207-011						FOR DIMENSIONS, SEE DASH 17 VALUES BELOW
238		AC INPUT PANEL ASSY		2014043-011						
237		POWER CONTROL ASSY		2014079-011						FOR DIMENSIONS, SEE DASH 15 VALUES BELOW
236		DRAWER ASSY-XY INTERFACE		2014040-011						
235		DRAWER ASSY RDC INTERFACE		2014045-011						
234		BUFFER CIRCUIT ASSY		2014254-011						
233		CONTROL & INTERFACE ASSY		2014204-011						
232		POWER CONTROL ASSY		2014044-011						
231		DRAWER ASSY, PROGRAMMER & MONITOR		2014041-011						FOR DIMENSIONS, SEE-DASH 17 VALUES BELOW
230		CONNECTOR INTERFACE ASSY		2014272-011						
229		CONNECTOR INTERFACE ASSY		2014047-011						FOR DIMENSIONS, SEE DASH 15 VALUES BELOW
228		ANTENNA TUNING CAPACITOR ASSY		2014209-011						
227		MOUNTING FIXTURE ASSY		2014006-011						FOR DIMENSIONS, SEE DASH 17 VALUES BELOW
226		POWER SUPPLY ASSY 3 VDC		2014234-011						FOR DIMENSIONS, SEE DASH 15 VALUES BELOW
225		PANEL ASSY — SIGNAL INTERFACE		2014010-011						
224		OSCILLOSCOPE ASSY		2014232-011						
223		AUXILIARY OUTLET ASSY		2014274-011						
222		FREQUENCY COUNTER		2014233-011						
221		POWER SUPPLY ASSY 10, 13, 28 VDC		2014235-011						
220		LOGIC DRAWER ASSY NO. 2		2014037-011						FOR DIMENSIONS, SEE DASH 17 VALUES BELOW
219		LOGIC DRAWER ASSY NO. 1		2014036-011						
218		COUNTER, ELECTRICAL ASSY		2014288-011						FOR DIMENSIONS, SEE DASH 15 VALUES BELOW
217		POWER SUPPLY ASSY		2014279-011						
216		TEST MOUNT ASSY		2014257-011						
215		UNIVERSAL DSKY PEDESTAL MOUNT		2014014-011						FOR DIMENSIONS, SEE DASH 17 VALUES BELOW
214		MAIN DSKY PEDESTAL MOUNT		2014343				I	NOTE 11B	
213		SHIPPING CONTAINER, MAIN DSKY		1006229				II	NOTE 11C	FOR DIMENSIONS, SEE DASH 18 VALUES BELOW
212		NAV DSKY		1006231						
211		AGC		1006230						
210		UNIVERSAL DSKY		1006422						
209		SHIPPING CONTAINER, AGC		1006421				II	NOTE 11C	
208		UNIVERSAL DSKY HANDLING FIXTURE		2014013-011				I	NOTE 11B	FOR DIMENSIONS, SEE DASH 15 VALUES BELOW
207		NAV DSKY HANDLING FIXTURE		1014377						FOR DIMENSIONS, SEE DASH 17 VALUES BELOW
206		MAIN DSKY HANDLING FIXTURE		1014334						
205		AGC HANDLING FIXTURE		2014282-011				I	NOTE 11B	
204		OPERATION CONSOLE		2014024-011				II	NOTE 11C	FOR DIMENSIONS, SEE DASH 18 VALUES BELOW
203		COMPUTER TEST SET		2014042-011		NAS-9-497				
202		DRAWER ASSY, COMPUTER SIMULATOR		2014048-011		FNP-12775				
201		AUXILIARY CALIBRATION CONSOLE		2014059-011						
200	R	AGC CALIBRATION CONSOLE		2014049-011	NA	NAS-9-497	B	II	NOTE 11C	
21	R									
20	P	NA		NA	NA	NA	A	II	NOTE 11 C	2.000
19	R	NA		NA	NA	NA	A	I	NOTE 11 B	2.000
18	R	NA		NA	NA	NA	B	II	NOTE 11 C	4.187
17	R	NA		NA	NA	NA	B	I	NOTE 11 B	4.187
16	R	NA		NA	NA	NA	B	II	NOTE 11 C	2.000
15	R	NA		NA	NA	NA	B	I	NOTE 11 B	2.000

DASH NO.	B	C	D	E	F	G	H	J	K	L	M	N	P	R	S	T	U	V	W	Y	Z	AA	AB	AC	AD	AE	AF	AG	AH	AJ	AK	AL	AM	AN	AP	AR
21																																				
20	1.312	1.687	1.375	.078	.031	.078	.093	.106 .113	.093	1.187	.750	.593	.453	1.015	.062	.187	.078	.875	.718	1.375	.218	1.156	1.843	.048	NA	.875	.305	.078	.312	1.687	.078	NA	.078	.312	.187	1.843
19	1.312	1.687	1.375	.078	.031	.078	.093	NA	NA	1.187	.750	.593	.453	1.015	.062	.187	.078	.875	.718	1.375	.218	NA	NA	.048	.031	.875	.305	.078	.312	1.687	.078	NA	.078	.312	.187	NA
18	1.875	3.469	2.750	.156	.093	.156	.125	.106 .113	.125	1.625	1.032	.844	.656	1.406	.093	.344	.156	1.781	1.531	2.844	.312	1.562	3.875	.062	NA	1.219	.500	.156	.719	3.469	.156	NA	.156	.719	.344	3.875
17	1.875	3.469	2.750	.156	.093	.156	.125	NA	NA	1.625	1.032	.844	.656	1.406	.093	.344	.156	1.781	1.531	2.844	.312	NA	NA	.062	.062	1.219	.500	.156	.719	3.469	.156	NA	.156	.719	.344	NA
16	1.312	1.687	1.375	.078	.031	.078	.093	.106 .113	.093	1.187	.750	.593	.453	1.015	.062	.187	.078	.875	.718	1.375	.218	1.156	1.843	.048	NA	.875	.305	.078	.312	1.687	.078	NA	.078	.312	.187	1.843
15	1.312	1.687	1.375	.078	.031	.078	.093	NA	NA	1.187	.750	.593	.453	1.015	.062	.187	.078	.875	.718	1.375	.218	NA	NA	.048	.031	.875	.305	.078	.312	1.687	.078	NA	.078	.312	.187	NA

NOTES FOR TABLE
STYLE A IS FOR G & N SYSTEM
STYLE B IS FOR GROUND SUPPORT EQUIPMENT
TYPE I IS WITHOUT MOUNTING HOLES
TYPE II IS WITH MOUNTING HOLES

THIS SHEET ADDED

Ⓖ REPLACES REV F WITH CHANGE

RAYTHEON DASH NUMBERS

QTY REQD	PART OR IDENTIFYING NO.	MATERIAL OR NOTES	NOMENCLATURE OR DESCRIPTION	FIND NO.

LIST OF MATERIALS

NEXT ASSY	USED ON
AS APPLICABLE	

APPLICATION

UNLESS OTHERWISE SPECIFIED
DIMENSIONS ARE IN INCHES
CAPACITOR VALUES ARE IN μf
RESISTOR VALUES ARE IN OHMS
TOLERANCES ON
FRACTIONS ± — DECIMALS ±.005 ANGLES ± —
DO NOT SCALE THIS DRAWING

MATERIAL
SEE NOTE 11

MIT
INSTRUMENTATION LAB
CAMBRIDGE, MASS.

DRAWN R. A. Jones 7-16-65
CHECKED 7-22-65
APPROVED
APPROVED
APPROVED MIT
APPROVED MSC
DATE

MANNED SPACECRAFT CENTER
HOUSTON, TEXAS

NAMEPLATES,
APOLLO GEN-GSE
(STANDARDS)

CODE IDENT NO 80230 SIZE E DRAWING NO. 1004260
SCALE NONE SHEET 3 OF 5

MASTER

1004260

REVISIONS					
SYM	ZONE	DESCRIPTION	DR	CHK	DATE / APPROVED
G		REPLACES REV F WITH CHANGE PER TDRR 20854.			7/22/65 WK
H		REVISED PER TDRR 20892			8/3/65 WK
J		REVISED PER TDRR 20904			8/3/65 WK
K		REVISED PER TDRR 21379			8/6/65 WK
L		REVISED PER TDRR 21410			8/23/65 WK
M		REVISED PER TDRR 21993			
N		REVISED PER TDRR 22621			10/
P		REVISED PER TDRR 22671			
R		REVISED PER TDRR 22672			
S		REVISED PER TDRR 22750			/65 WK
T		REVISED PER TDRR 22823			
U		REVISED PER TDRR 23072			10-20-65 MGM
V		REVISED PER TDRR 23521			10-26-65
W		REVISED PER TDRR 23824	RAJ		11-9-65
Y		REVISED PER TDRR 24018	RAJ		11-16-65 WK
Z		REVISED PER TDRR 24040	RAJ		11-19-65 WK
AA		REVISED PER TDRR 24060	RAJ.		11-19-65 WK
AB		REVISED PER TDRR 24868	RAJ		2-22-66
AC		REVISED PER TDRR 24973	RAJ		1-4-66 WK
AD		REVISED PER TDRR 25065	RAJ		1-.066

02768

DASH NO.	P/C	PART NAME	REMARKS	PART NO.	SER. NO.	CONT. NO.	STYLE	TYPE	MATERIAL	A	B	C	D	E	F	G	H	J	K	L	M	N	P	R	S	T	U	V	W	Y	Z	AA	AB	AC	AD	AE	AF	AG	AH	AJ	AK	AL	AM	AN	AP	AR
196	AC																																													
195	AC																																													
174	AC	FIX., HAND., C/M AND LEM CDU		2900999-011		NAS-9-497	B	II	NOTE 11C	FOR DIMENSIONS, SEE DASH 141 VALUES BELOW																																				
173	AC	FIX., HANDLING, C/M PSA		2900998-011		↕	↕	↕	↕																																					
172	AC	CAGING ELECTRONICS, GYRO		2900029-021		↕	↕	↕	↕																																					
171	AC	DISTRIBUTION BOX, GSE		2900024-021		↕	↕	↕	↕																																					
170	AC	ANALYZER, OPTICS-INERTIAL		2900023-021		↕	↕	↕	↕																																					
169	AC	ADPT, TEST POINT, P.S.A.		2900037-021		↕	↕	↕	↕																																					
168	AC	TEST SELECTOR		2900028-021		↕	↕	↕	↕																																					
167	AC	TEST CONTROL		2900027-021		↕	↕	↕	↕																																					
166	AC	PANEL, MONITOR		2900031-021		↕	↕	↕	↕																																					
165	AC	TERM. BOARD STORAGE DRAWER		2900927-011		↕	↕	↕	↕																																					
164	AC	INPUT/OUTPUT PANEL		2900926-011		↕	↕	↕	↕																																					
163	AC	CONTROL PANEL		2900896-011		↕	↕	↕	↕																																					
162	AC	CSL. CAL AND TEST, SCM/PSAAM		2900895-011		NAS-9-497	B	II	NOTE 11 C	FOR DIMENSIONS, SEE DASH 144 VALUES BELOW																																				
160	AC	FIX., HAND., G AND N HARNESS		1901846-031		NAS-9-497	B	II	NOTE 11 C	FOR DIMENSIONS, SEE DASH 144 VALUES BELOW																																				
159	AC	BATTERY POWER PACK		1900011-031		↕	B	II	NOTE 11 C																																					
158	AC	COUPLING DATA UNIT ASSEMBLY C/M		2007222		↕	A	I	NOTE 11B	FOR DIMENSIONS, SEE DASH 100 VALUES BELOW																																				
157	AC	COUPLING DATA UNIT ASSEMBLY - LEM		2007222		↕	↕	↕	↕																																					
156	AC	POWER & SERVO ASSEMBLY C/M		2007200		↕	↕	↕	↕																																					
155	AC	PIPA ELECTRONICS ASSEMBLY		2007201		↕	↕	↕	↕																																					
154	AC	PULSE TORQUE ASSEMBLY - LEM		6007000		↕	↕	↕	↕																																					
153	AC	POWER & SERVO ASSEMBLY - LEM		6007200		↕	A	I	NOTE 11B																																					
152	AC	CONT PNL, RSVR CKT TESTER		2900770-011		↕	B	II	NOTE 11C	FOR DIMENSIONS, SEE DASH 141 VALUES BELOW																																				
151	AC	TESTER, RESOLVER CIRCUIT		2900708-011		↕	↕	↕	↕	FOR DIMENSIONS, SEE DASH 144 VALUES BELOW																																				
150	AC	JUNCTION BOX, P.S.A./G.S.E.		1901933-021		↕	↕	↕	↕	FOR DIMENSIONS, SEE DASH 141 VALUES BELOW																																				
149	AC	BATTERY PACK, LIFTING		2900812-011		↕	↕	↕	↕	FOR DIMENSIONS, SEE DASH 144 VALUES BELOW																																				
148	AC	MOUNTING PLATE, COMPONENT		6900007-011		↕	↕	↕	↕																																					
147	AC	MOUNTING PLATE, COMPONENT		2900677-011		↕	↕	↕	↕																																					
146	AC	CART, TRANS, G AND N		1900009-041		↕	↕	↕	↕																																					
145	AC	CONTAINER, SHIPPING, IMU		1900010-021		NAS-9-497	B	II	NOTE 11C																																					
144	AC	FIX., MOUNTING, G AND N		1902204-021			B	II	NOTE 11 C	4.125	1.812	3.250	NA	.125	.062	.12	.156	.188 .194	.125	1.625	1.140	.890	.640	1.390	.125	.171	.125	1.875	1.687	2.625	.250	1.562	3.843	.093	NA	NA	.359	.125	.437	3.698	NA	3.687	.093	.40	.25	3.875
143	AC	CSL, COOL. AND PWR, G AND N		1902134-021			↕	↕	↕	4.125	1.812	3.250		.125	.062	.12	.156		.125	1.625	1.140	.890	.640	1.390	.125	.171	.125	1.875	1.687	2.625	.250	1.562	3.843	.093			.359	.125	.437	3.688		3.687	.093	.40	.25	3.875
142	AC	ANALYZER, OPTICS INERTIAL		2900023-011			↕	↕	↕	4.125	1.812	3.250		.125	.062	.12	.156		.125	1.625	1.140	.890	.640	1.390	.125	.171	.125	1.875	1.687	2.625	.250	1.562	3.843	.093			.359	.125	.437	3.688		3.687	.093	.40	.25	3.875
141	AC	CONT, TEMP, PORTABLE		2900060-011			↕	↕	↕	2.125	.968	1.718		.093	.031	.06	.093		.093	.858	.608	.484	.358	.733	.077	.116	.062	.937	.875	1.343	.125	.781	1.892	.046			.209	.093	.250	1.875		1.840	.046	.23	.16	1.938
140	AC	TESTER, CKT, IMU/CDU RSVR		2900286-011			↕	↕	↕	4.125	1.812	3.250		.125	.062	.12	.156		.125	1.625	1.140	.890	.640	1.390	.125	.171	.125	1.875	1.687	2.625	.250	1.562	3.843	.093			.359	.125	.437	3.688		3.687	.093	.40	.25	3.875
139	AC	SIMULATOR, LD/SIG, CDU		2900285-011			↕	↕	↕																																					
138	AC	SIMULATOR, LD/SIG, OPTICS		1902023-021			↕	↕	↕																																					
137	AC	FIX., MOUNTING, IMU/NAV BASE		6900003-011			↕	↕	↕																																					
136	AC	FIXTURE, OPTICS/NAV BASE		2900072-011			↕	↕	↕																																					
135	AC	FIX., MOUNTING, SUB SYSTEM		2900070-011			↕	↕	↕																																					
134	AC	FIX., HAND., G AND N HARNESS		2900069-011			↕	↕	↕																																					
133	AC	CNTR, SHIPPING, NAV BASE		2900068-011			↕	↕	↕																																					
132	AC	FIX., MOUNTING, G AND N		2900067-011			↕	↕	↕																																					
131	AC	SIMULATOR, LD/SIG, IMU/CDU		2900062-011			↕	↕	↕																																					
130	AC	TESTER, GYRO WHEEL		2900061-011			↕	↕	↕																																					
129	AC	COOLANT SUPPLY		1902133-021			↕	↕	↕	4.125	1.812	3.250		.125	.062	.12	.156		.125	1.625	1.140	.890	.640	1.390	.125	.171	.125	1.875	1.687	2.625	.250	1.562	3.843	.093			.359	.125	.437	3.688		3.687	.093	.40	.25	3.875
128	AC	TABLE, ROTARY		1900926-021			↕	↕	↕	2.125	.968	1.718		.093	.031	.06	.093		.093	.858	.608	.484	.358	.733	.077	.116	.062	.937	.875	1.343	.125	.781	1.892	.046			.209	.093	.250	1.875		1.840	.046	.23	.16	1.938
127	AC	FIX., HAND., OPTICS		2900074-011			↕	↕	↕																																					
126	AC	FIXTURE, MTG, PTA/PEA.		2900066-011			↕	↕	↕																																					
125	AC	CONT, TEMP, IMU LIFTING		2900063-011			↕	↕	↕																																					
124	AC	FIXTURE, HANDLING, IMU		2900064-011			↕	↕	↕																																					
123	AC	CONT, OPTICS, REMOTE		1902046-021			↕	↕	↕																																					
122	AC	TEST CONTROL		1902009-021			↕	↕	↕																																					
121	AC	ADPT MODULE, P.S.A.		1902431-021			↕	↕	↕																																					
120	AC	BRIDGE, DECADE ERROR		2900128-011			↕	↕	↕																																					
119	AC	PWR SUP, ELECTRONICS		2900012-011			↕	↕	↕																																					
118	AC	PWR SUP, RELAY AND LAMP		1900049-031			↕	↕	↕																																					
117	AC	CONSOLE, OSCILLOGRAPH		1900000-021			↕	↕	↕																																					
116	AC	ADPT MODULE, P.S.A.		1902431-011			↕	↕	↕																																					
115	AC	ADPT, TEST POINT, PTA/PEA.		2900145-011			↕	↕	↕																																					
114	AC	ADPT, TEST POINT, P.S.A.		2900037-011			↕	↕	↕																																					
113	AC	CONTROL, GIMBAL POSITION		2900036-011			↕	↕	↕																																					
112	AC	SELECTOR, SIGNAL, PRIMARY		2900035-011			↕	↕	↕																																					
111	AC	SEL, SIG, OSCILLOGRAPH		2900034-011			↕	↕	↕																																					
110	AC	PANEL, PWR SUP AND LOAD		2900033-011			↕	↕	↕																																					
109	AC	PANEL, MONITOR		2900031-011			↕	↕	↕																																					
108	AC	PANEL, AUXILIARY INPUT		2900030-011			↕	↕	↕																																					
107	AC	CAGING ELECTRONICS, GYRO		2900029-011			↕	↕	↕																																					
106	AC	TEST SELECTOR		2900028-011			↕	↕	↕																																					
105	AC	TEST CONTROL		2900027-011			↕	↕	↕																																					
104	AC	MONITOR AND CONTROL, TEMP		2900026-011			↕	↕	↕																																					
103	AC	DISTRIBUTION BOX, GSE		2900024-011			↕	↕	↕																																					
102	AC	VOLTMETER, DIGITAL		2900007-011			B	II	NOTE 11 C	2.125	.968	1.718	NA	.093	.031	.06	.093	.188 .194	.093	.858	.608	.484	.358	.733	.077	.116	.062	.937	.875	1.343	.125	.781	1.892	.046	NA	NA	.209	.093	.250	1.875	NA	1.840	.046	.23	.16	1.938
101	AC	NAVIGATION BASE ASSEMBLY - LEM		6899950		NAS-9-497	A	I	NOTE 11 B	2.000	1.312	1.906	1.375	.078	.048	.078	.093	NA	NA	1.125	.750	.593	.453	1.015	.062	.187	.078	.875	.718	1.375	.218	NA	NA	.048	.031	.875	.305	.078	.531	1.906	.078	NA	.078	.531	.187	NA
100	AC	NAVIGATION BASE ASSEMBLY		2899982		NAS-9-497	A	I	NOTE 11 B	2.000	1.312	1.906	1.375	.078	.048	.078	.093	NA	NA	1.125	.750	.593	.453	1.015	.062	.187	.078	.875	.718	1.375	.218	NA	NA	.048	.031	.875	.305	.078	.531	1.906	.078	NA	.078	.531	.187	NA

THIS SHEET ADDED

Ⓖ REPLACES REV F WITH CHANGE

AC ELECTRONICS DASH NUMBERS

NOTES FOR TABLE

STYLE A IS FOR G&N SYSTEM
STYLE B IS FOR GROUND SUPPORT EQUIPMENT
TYPE I IS WITHOUT MOUNTING HOLES
TYPE II IS WITH MOUNTING HOLES

MASTER

QTY REQD	PART OR IDENTIFYING NO.	MATERIAL OR NOTES	NOMENCLATURE OR DESCRIPTION	FIND NO.
LIST OF MATERIALS				

NEXT ASSY	USED ON
AS APPLICABLE	
APPLICATION	

UNLESS OTHERWISE SPECIFIED
DIMENSIONS ARE IN INCHES
CAPACITOR VALUES ARE IN µf
RESISTOR VALUES ARE IN OHMS
TOLERANCES ON
FRACTIONS ± — DECIMALS ±.005 ANGLES ± —
DO NOT SCALE THIS DRAWING

MATERIAL
SEE NOTE 11

MIT
INSTRUMENTATION LAB
CAMBRIDGE, MASS.

DRAWN R O Jones 7-16-65
CHECKED 7-22-65
APPROVED
APPROVED
APPROVED MIT
APPROVED MSC
DATE

MANNED SPACECRAFT CENTER
HOUSTON, TEXAS

NAMEPLATES,
APOLLO G&N-GSE
(STANDARDS)

CODE IDENT NO. 80230
SIZE E
DRAWING NO. 1004260
SCALE NONE
SHEET 4 OF 5

NOTICE – WHEN GOVERNMENT DRAWINGS, SPECIFICATIONS, OR OTHER DATA ARE USED FOR ANY PURPOSE OTHER THAN IN CONNECTION WITH A DEFINITELY RELATED GOVERNMENT PROCUREMENT OPERATION, THE UNITED STATES GOVERNMENT THEREBY INCURS NO RESPONSIBILITY NOR ANY OBLIGATION WHATSOEVER; AND THE FACT THAT THE GOVERNMENT MAY HAVE FORMULATED, FURNISHED, OR IN ANY WAY SUPPLIED THE SAID DRAWINGS, SPECIFICATIONS OR OTHER DATA IS NOT TO BE REGARDED BY IMPLICATION OR OTHERWISE AS IN ANY MANNER LICENSING THE HOLDER OR ANY OTHER PERSON OR CORPORATION, OR CONVEYING ANY RIGHTS OR PERMISSION TO MANUFACTURE, USE, OR SELL ANY PATENTED INVENTION THAT MAY IN ANY WAY BE RELATED THERETO.

REVISIONS 02768

SYM	ZONE	DESCRIPTION	DR	CHK	DATE	APPROVED
G		REPLACES REV F WITH CHANGE PER TDRR 20854			7/20/65	WK
H		REVISED PER TDRR 20892			8/3/65	WK
J		REVISED PER TDRR 20904			8/3/65	WK
K		REVISED PER TDRR 21379			8/6/65	WK
L		REVISED PER TDRR 21410			8/23/65	WK
M		REVISED PER TDRR 21993			10/1/65	
N		REVISED PER TDRR 22621				
P		REVISED PER TDRR 22671				
R		REVISED PER TDRR 22672				
S		REVISED PER TDRR 22750				WK
T		REVISED PER TDRR 22823				
U		REVISED PER TDRR 23072			10-21-65	
V		REVISED PER TDRR 23521			10-26-65	WK
W		REVISED PER TDRR 23624	RAJ		11-5-65	
Y		REVISED PER TDRR 24018	RAJ		11-16-65	
Z		REVISED PER TDRR 24040	RAJ		11-19-65	
AA		REVISED PER TDRR 24060	RAJ		11-19-65	
AB		REVISED PER TDRR 24868	RAJ		12-22-65	
AC		REVISED PER TDRR 24973	RAJ		1-4-66	
AD		REVISED PER TDPR 25065	RAJ		1-8-66	

DASH NO.	P/C	PART NAME	REMARKS	PART NO.	SER. NO.	CONT. NO.	STYLE	TYPE	MATERIAL	A	B	C	D	E	F	G	H	J	K	L	M	N	P	R	S	T	U	V	W	Y	Z	AA	AB	AC	AD	AE	AF	AG	AH	AJ	AK	AL	AM	AN	AP	AR
499	MIT																																													
498																																														
40	MIT	COMPUTER ASSY		2003100		NAS-9-497	A	I	NOTE 11 B	2.000	1.312	1.906	1.375	.078	.048	.078	.093	NA	NA	1.125	.750	.593	.453	1.015	.062	.187	.078	.875	.718	1.375	.218	NA	NA	.048	.031	.875	.305	.078	.531	1.906	.078	NA	.078	.531	.187	NA
400	MIT	LIFTING SLING-G&N INST. QUAL. FIX. & AZM. REF. FIX.		1021640		NAS-9-4066	B	II	NOTE 11 C	2.000	1.312	1.687	1.375	.078	.048	.078	.093	.086/.081	.093	1.187	.750	.593	.453	1.015	.062	.187	.078	.875	.718	1.375	.218	1.156	1.843	.048	NA	.875	.305	.078	.312	1.687	.110	1.830	.070	.275	.180	1.844

MIT DASH NUMBERS

THIS SHEET ADDED

Ⓖ REPLACES REV F WITH CHANGE

NOTES FOR TABLE

STYLE A IS FOR G&N SYSTEM
STYLE B IS FOR GROUND SUPPORT EQUIPMENT
TYPE I IS WITHOUT MOUNTING HOLES
TYPE II IS WITH MOUNTING HOLES

MASTER

QTY REQD	PART OR IDENTIFYING NO.	MATERIAL OR NOTES	NOMENCLATURE OR DESCRIPTION	FIND NO.

LIST OF MATERIALS

NEXT ASSY	USED ON
AS APPLICABLE	

APPLICATION

UNLESS OTHERWISE SPECIFIED
DIMENSIONS ARE IN INCHES
CAPACITOR VALUES ARE IN µf
RESISTOR VALUES ARE IN OHMS
TOLERANCES ON
FRACTIONS ± — DECIMALS ±.005 ANGLES ± —
DO NOT SCALE THIS DRAWING

MATERIAL
SEE NOTE 11

MIT
INSTRUMENTATION LAB
CAMBRIDGE, MASS.

MANNED SPACECRAFT CENTER
HOUSTON, TEXAS

		DATE
DRAWN	R A Jones	7-16-65
CHECKED		7-28-65
APPROVED		
APPROVED	W Kupfer	7/28/65
APPROVED MIT	W Kupfer	7/28/65
APPROVED MSC		7/28/65

NAMEPLATES,
APOLLO G&N-GSE
(STANDARDS)

CODE IDENT NO. 80230
SIZE E
DRAWING NO. 1004260
SCALE NONE
SHEET 5 OF 5

1004260 AD

NOTICE – WHEN GOVERNMENT DRAWINGS, SPECIFICATIONS, OR OTHER DATA ARE USED FOR ANY PURPOSE OTHER THAN IN CONNECTION WITH A DEFINITELY RELATED GOVERNMENT PROCUREMENT OPERATION, THE UNITED STATES GOVERNMENT THEREBY INCURS NO RESPONSIBILITY NOR ANY OBLIGATION WHATSOEVER; AND THE FACT THAT THE GOVERNMENT MAY HAVE FORMULATED, FURNISHED, OR IN ANY WAY SUPPLIED THE SAID DRAWINGS, SPECIFICATIONS, OR OTHER DATA IS NOT TO BE REGARDED BY IMPLICATION OR OTHERWISE AS IN ANY MANNER LICENSING THE HOLDER OR ANY OTHER PERSON OR CORPORATION, OR CONVEYING ANY RIGHTS OR PERMISSION TO MANUFACTURE, USE, OR SELL ANY PATENTED INVENTION THAT MAY IN ANY WAY BE RELATED THERETO.

NOTES:

1. INTERPRET DRAWING IN ACCORDANCE WITH STANDARDS PRESCRIBED IN MIL-D-70327.
2. DIMENSIONS ON EACH VIEW APPLY TO ALL VIEWS. (WITH THE EXCEPTION OF MOUNTING HOLES).
3. FORMATS ILLUSTATED WILL BE APPLICABLE TO ALL ITEMS REQUIRING NAMEPLATES BELOW END ITEM DESIGNATION (SYSTEMS, ASSEMBLIES, ETC.)
4. PLATE BACKGROUND TO BE LUSTERLESS BLACK PER FED-STD-595, COLOR 37038. BORDER, MARKING AND LETTERING TO BE NATURAL METAL, (ANODIZED ALUMINUM).
5. MARKING METHOD TO BE DIE STAMPING, ETCHING OR ENGRAVING IN ACCORDANCE WITH MIL P 19834.
6. LETTERING STYLE TO BE GOTHIC, (SANS SERIFS), AND NUMBERS TO BE ARABIC.
7. WHERE LOCATING DIMENSIONS ARE NOT SHOWN, CHARACTERS SHALL BE SYMMETRICALLY POSITIONED.
8. IDENTIFY WITH DRAWING NUMBER PER ND 1002019.
9. WHEN "AUTO MARK" METAL MARKING TYPEWRITER IS USED TO ADD DATA TO BLANK SPACES, TYPE SIZE IS TO BE SELECTED FROM DIMENSIONS U, AC AND AM.
10. NASA SYMBOL IS TO BE PROPORTIONAL TO NAMEPLATE IN RATIO OF 1 TO 5 WITH DIMENSION A VALUE AND IS TO HAVE NATURAL BACKGROUND. NASA SYMBOL LETTERS LETTERING AND FEATHER TO BE BLACK, (OR WHITE FOR SILK SCREENING). WHERE BLACK FEATHER PROTRUDES INTO BLACK BACKGROUND, A MINIMUM OUTLINE OF NATURAL BACKGROUND SHALL EXIST.
11. NAMEPLATES WILL BE APPLIED BY METHODS LISTED BELOW, SHOWN IN ORDER OF PREFERENCE, (I.E., FOR RELIABILITY AND WEIGHT).
    - A - STENCIL OR SILK SCREEN DIRECTLY ON EQUIPMENT USING INK PER SCD 1010920, (WHITE OR BLACK).
    - B - ALUMINUM FOIL, (STYLE A OR B, TYPE I):
      FOIL SHALL BE .0030 ± .0005 THICK PER MIL-A-148.
      FOIL SHALL HAVE NO ADHESIVE BACKING.
      FOIL SHALL BE BONDED PER ND 1002219, (METHOD II).
      FOIL SHALL BE CLEAR ANODIZED PER MIL-A-8625, TYPE II.
    - C - PLATE, (STYLE A OR B, TYPE II):
      MATERIAL: QQ-A-250, TEMPER O OR H14, TYPE 1100, ALUMINUM ALLOY, .032 THICK.
      ANODIZE PER MIL-A-8625, TYPE II.
      ALUMINUM PLATE MUST BE FREE FROM BURRS AND SHARP CORNERS, MOUNTED WITH APPLICABLE SIZE FASTENERS.
12. NAMEPLATES SHALL BE CAPABLE OF MEETING APPLICABLE REQUIREMENTS OF MIL-M-13231.
13. ON DIMENSION TABLES SHOWN ON PAGES 2, 3, 4 AND 5, NA MEANS, "NOT APPLICABLE".

REVISIONS 02768

	SYM	ZONE	DESCRIPTION	DR	CHK	DATE	APPROVED
	G		REPLACES REV F WITH CHANGE PER TDRR 20854			7/22/65	WR
★	H		REVISED PER TDRR 20892			[illegible]	WR
	J		REVISED PER TDRR 20904			[illegible]	WR
	K		REVISED PER TDRR 21379			[illegible]	WR
	L		REVISED PER TDRR 21410			8/23/65	WR
★	M		REVISED PER TDRR 21993			10/	
★	N		REVISED PER TDRR 22621			1/1	
★	P		REVISED PER TDRR 22671				
★	R		REVISED PER TDRR 22672				
★	S		REVISED PER TDRR 22750			65	WR
	T		REVISED PER TDRR 22823				
★	U		REVISED PER TDRR 23072			10-[illegible]-65	WR
	V		REVISED PER TDRR 23521			10-27-65	WR
★	W		REVISED PER TDRR 23824	RAJ		11-9-65	WR
★	Y		REVISED PER TDRR 24018	RAJ		[illegible]-16-65	WR
★	Z		REVISED PER TDRR 24040	RAJ		11-19-65	WR
[illegible]	AA		REVISED PER TDRR 24060	RAJ		11-19-65	WR
[illegible]	AB		REVISED PER TDRR 24868	RA		2-22-65	WR
(M)	AC		REVISED PER TDRR 24973	RAJ		1-4-66	WR
(M)	AD		REVISED PER TDRR 25065	RAJ		[illegible]-18-66	WR
★	AE		REVISED PER TDRR 25672	RAJ		2-4-66	WR
	AF		REVISED PER TDRR 25671	RAJ		2-4-66	WR

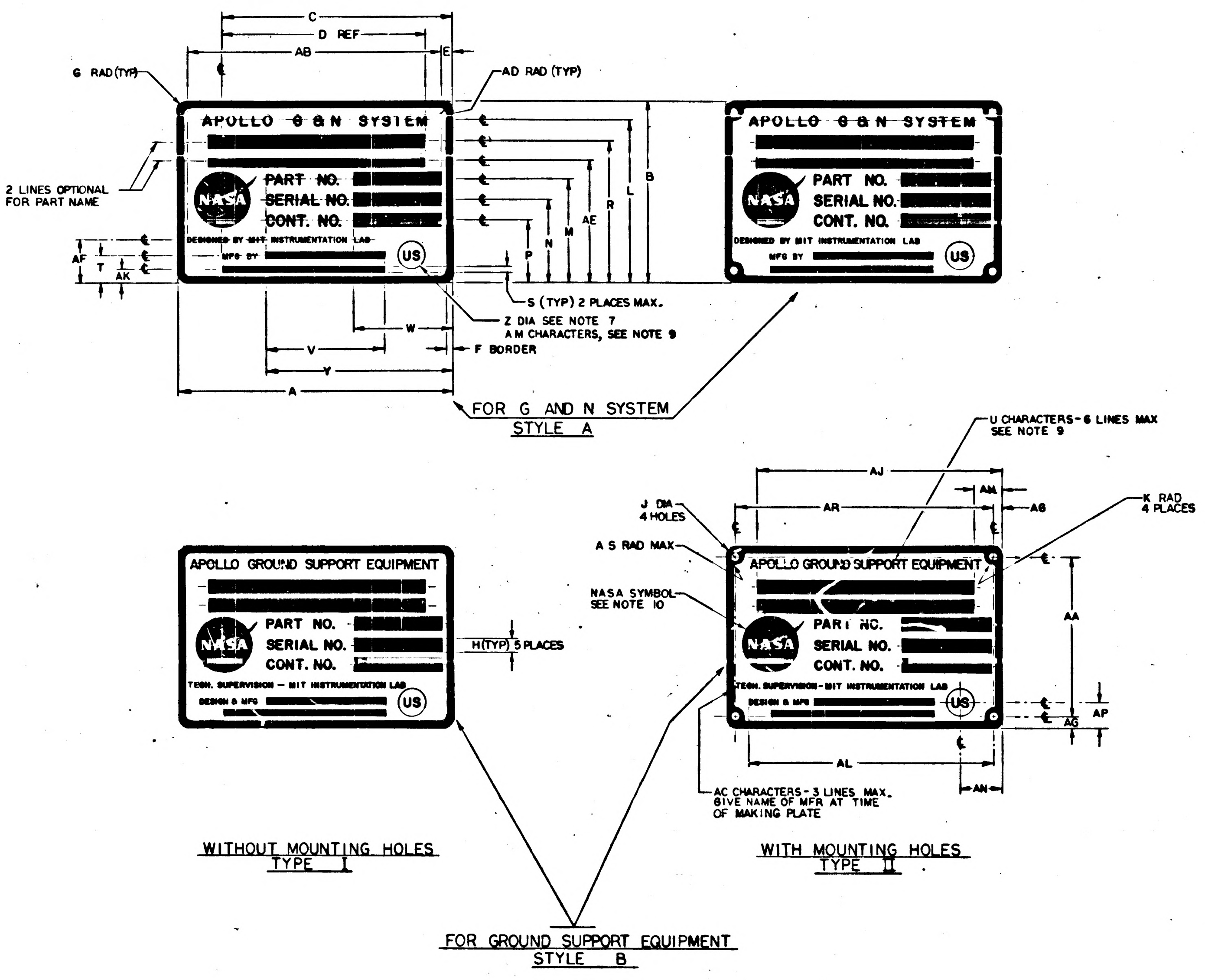
C
D REF
AB
E
G RAD (TYP)
AD RAD (TYP)
APOLLO G & N SYSTEM
PART NO.
SERIAL NO.
CONT. NO.
DESIGNED BY MIT INSTRUMENTATION LAB
MFG BY
US
2 LINES OPTIONAL FOR PART NAME
AF
T
AK
B
L
R
AE
M
N
P
S (TYP) 2 PLACES MAX.
Z DIA SEE NOTE 7
AM CHARACTERS, SEE NOTE 9
W
V
Y
A
F BORDER
FOR G AND N SYSTEM
STYLE A
U CHARACTERS-6 LINES MAX
SEE NOTE 9
AJ
AM
AR
AG
J DIA
4 HOLES
K RAD
4 PLACES
A S RAD MAX
NASA SYMBOL
SEE NOTE 10
APOLLO GROUND SUPPORT EQUIPMENT
NASA
TECH. SUPERVISION – MIT INSTRUMENTATION LAB
DESIGN & MFG
H (TYP) 5 PLACES
AA
AP
AG
AL
AN
AC CHARACTERS-3 LINES MAX.
GIVE NAME OF MFR AT TIME
OF MAKING PLATE
WITHOUT MOUNTING HOLES
TYPE I
WITH MOUNTING HOLES
TYPE II
FOR GROUND SUPPORT EQUIPMENT
STYLE B

SUGGESTED PROPORTIONS FOR NAMEPLATE DIMENSIONS.
1. SELECT NAMEPLATE LENGTH, DIMENSION "A", TO FIT DESIGN NEEDS.
2. DIMENSIONS B THRU AS ON LINE 1 BELOW ARE PROPORTIONAL TO "A" BY MULTIPLIERS SHOWN IN LINE 2 BELOW.

1.	A	B	C	D	E	F	G	H	J	K	L	M	N	P	R	S	T	U	V	W
2.	1.000 A	.6563 A	.8438 A	.6875 A	.0391 A	.0240 A	.0391 A	.0469 A	.0547 A	.0469 A	.5938 A	.3750 A	.2969 A	.2187 A	.5079 A	.0313 A	.0938 A	.0391 A	.4375 A	.3594 A

1.	Y	Z	AA	AB	AC	AD	AE	AF	AG	AH	AJ	AK	AL	AM	AN	AP	AR	AS
2.	.6875 A	.1094 A	.5781 A	.9219 A	.0240 A	.0156 A	.4375 A	.1525 A	.0391 A	.1563 A	.8438 A	.0548 A	.8659 A	.0391 A	.1563 A	.0938 A	.9219 A	.0151 A

Ⓖ REPLACES REV F WITH CHANGE

QTY REQD	PART OR IDENTIFYING NO.	MATERIAL OR NOTES	NOMENCLATURE OR DESCRIPTION	FIND NO.

LIST OF MATERIALS

NEXT ASSY	USED ON
AS APPLICABLE	

APPLICATION

UNLESS OTHERWISE SPECIFIED
DIMENSIONS ARE IN INCHES
CAPACITOR VALUES ARE IN µf
RESISTOR VALUES ARE IN OHMS
TOLERANCES ON
FRACTIONS ± — DECIMALS ± .005 ANGLES ± —
DO NOT SCALE THIS DRAWING

MATERIAL
SEE NOTE 11

MIT
INSTRUMENTATION LAB
CAMBRIDGE, MASS.

DRAWN R A Jones 7/16/65
CHECKED A. J. [illegible] 7-22-65
APPROVED
APPROVED [illegible]
APPROVED MIT [illegible]
APPROVED MSC [illegible]
DATE

MANNED SPACECRAFT CENTER
HOUSTON, TEXAS

NAMEPLATES,
APOLLO G&N-GSE
(STANDARDS)

CODE IDENT NO. 80230
SIZE E
DRAWING NO. 1004260
SCALE NONE
SHEET 1 OF 5

1004260 AF

MASTER

NOTICE – WHEN GOVERNMENT DRAWINGS, SPECIFICATIONS, OR OTHER DATA ARE USED FOR ANY PURPOSE OTHER THAN IN CONNECTION WITH A DEFINITELY RELATED GOVERNMENT PROCUREMENT OPERATION, THE UNITED STATES GOVERNMENT THEREBY INCURS NO RESPONSIBILITY NOR ANY OBLIGATION WHATSOEVER; AND THE FACT THAT THE GOVERNMENT MAY HAVE FORMULATED, FURNISHED, OR IN ANY WAY SUPPLIED THE SAID DRAWINGS, SPECIFICATIONS OR OTHER DATA IS NOT TO BE REGARDED BY IMPLICATION OR OTHERWISE AS IN ANY MANNER LICENSING THE HOLDER OR ANY OTHER PERSON OR CORPORATION, OR CONVEYING ANY RIGHTS OR PERMISSION TO MANUFACTURE, USE, OR SELL ANY PATENTED INVENTION THAT MAY IN ANY WAY BE RELATED THERETO.

REVISIONS 02768

SYM	ZONE	DESCRIPTION	DR	CHK	DATE	APPROVED
G		REPLACES REV F WITH CHANGE PER TDRR 20854.			7/22/65	WK
H		REVISED PER TDRR 20892			8/3/65	WK
J		REVISED PER TDRR 20904			8/3/65	WK
K		REVISED PER TDRR 21379			8/16/65	WK
L		REVISED PER TDRR 21410			8/23/65	WK
M		REVISED PER TDRR 21993				
N		REVISED PER TDRR 22621				
P		REVISED PER TDRR 22671				
R		REVISED PER TDRR 22672				
S		REVISED PER TDRR 22750				
T		REVISED PER TDRR 22823				WK
U		REVISED PER TDRR 23072			10-12-65	
V		REVISED PER TDRR 23521			10-27-65	WK
W		REVISED PER TDRR 23824	RAJ		11-9-65	WK
Y		REVISED PER TDRR 24018	RAJ		11-16-65	WK
Z		REVISED PER TDRR 24040	RAJ		11-19-65	WK
AA		REVISED PER TDRR 24060	RAJ		11-19-65	WK
AB		REVISED PER TDRR 24868	RAJ		12-22-65	WK
AC		REVISED PER TDRR 24973	RAJ		1-4-66	WK
AD		REVISED PER TDRR 25065	RAJ		1-18-66	
AE		REVISED PER TDRR 25672	RAJ		2-4-66	WK
AF		REVISED PER TDRR 25671	RAJ		2-4-66	WK

DASH NO.	P/C	PART NAME	REMARKS	PART NO.	SER. NO.	CONT. NO.	STYLE	TYPE	MATERIAL	A	B	C	D	E	F	G	H	J	K	L	M	N	P	R	S	T	U	V	W	Y	Z	AA	AB	AC	AD	AE	AF	AG	AH	AJ	AK	AL	AM	AN	AP	AR
339	K																																													
338	K																																													
350	K	ALIGNMENT OPTICAL TELESCOPE (LEM)		NA	NA	NA	A	I	NOTE 11B	4.000	2.625	3.375	2.750	.156	.093	.156	.187	NA	NA	2.312	1.468	1.187	.906	2.031	NA	.375	.156	NA	1.437	2.750	.437	NA	3.688	.062	.062	1.750	.593	NA	.625	3.375	.187	NA	.156	.531	.453	NA
309	K																																													
308	K																																													
307	K						B	I	NOTE 11 B	4.000	2.625	3.375	2.750	.156	.093	.156	.187	NA	NA	2.328	1.468	1.187	.906	2.031	.062	.375	.156	NA	1.437	2.750	.437	NA	3.687	.062	.062	1.750	.593	NA	NA	NA	NA	NA	NA	NA	NA	NA
306	K						B	II	NOTE 11 C	4.000	2.625	3.375	2.750	.156	.093	.156	.187	.125	.156	2.328	1.468	1.187	.906	2.031	.062	.375	.156	↕	1.437	2.750	.437	2.312	3.687	.062	NA	1.750	.593	↕	↕	↕	↕	↕	↕	↕	↕	↕
305	K						B	I	NOTE 11 B	2.000	1.312	1.687	1.375	.078	.048	.078	.093	NA	NA	1.164	.734	.593	.453	1.015	.048	.171	.078	↕	.718	1.375	.187	NA	NA	.048	.031	.875	.320	↕	↕	↕	↕	↕	↕	↕	↕	↕
304	K						B	II	NOTE 11 C	2.000	1.312	1.687	1.375	.078	.048	.078	.093	.070	.078	1.164	.734	.593	.453	1.015	.048	.171	.078	NA	.718	1.375	.187	.156	1.843	.048	NA	.875	.320	NA	NA	NA	NA	NA	NA	NA	NA	NA
303	K																																													
302	K																																													
301	K																																													
300	K	OPTICAL UNIT		NA	NA	NA	A	I	NOTE 11 B	2.000	1.312	1.675	NA	NA	.048	.078	NA	NA	NA	1.090	.812	.675	.540	.940	NA	.265	NA	NA	NA	1.375	.218	NA	NA	NA	NA	NA	.375	NA	NA	NA	.180	NA	.078	NA	NA	NA
9	K	2 IN AUTOCOLLIMATOR		1001702			B	II	NOTE 11 C	4.000	2.625	3.812	2.750	.156	.093	.156	.187	.125	.156	2.250	1.500	1.187	.906	2.031	.093	.375	.156	1.750	1.437	2.750	.437	2.312	3.687	.062	NA	1.750	.593	.156	1.062	3.812	.156	NA	.156	1.062	.375	3.687
8	K	5 IN AUTOCOLLIMATOR		1017410			B	II	NOTE 11 C	4.000	2.625	3.812	2.750	.156	.093	.156	.187	.125	.156	2.250	1.500	1.187	.906	2.031	.093	.375	.156	1.750	1.437	2.750	.437	2.312	3.687	.062	NA	1.750	.593	.156	1.062	3.812	.156	NA	.156	1.062	.375	3.687
7	K	2½ IN AUTOCOLLIMATOR (SCT)		1017435			B	II	NOTE 11 C	4.000	2.625	3.812	2.750	.156	.093	.156	.187	.125	.156	2.250	1.500	1.187	.906	2.031	.093	.375	.156	1.750	1.437	2.750	.437	2.312	3.687	.062	NA	1.750	.593	.156	1.062	3.812	.156	NA	.156	1.062	.375	3.687
6	K	2½ IN AUTOCOLLIMATOR (SXT)		1017448			B	II	NOTE 11 C	4.000	2.625	3.812	2.750	.156	.093	.156	.187	.125	.156	2.250	1.500	1.187	.906	2.031	.093	.375	.156	1.750	1.437	2.750	.437	2.312	3.687	.062	NA	1.750	.593	.156	1.062	3.812	.156	NA	.156	1.062	.375	3.687
5	K	RETROREFLECTING PRISM ASSEMBLY		1019840			B	I	NOTE 11 B	4.000	2.625	3.812	2.750	.156	.093	.156	.187	NA	NA	2.250	1.500	1.187	.906	2.031	.093	.375	.156	1.750	1.437	2.750	.437	NA	NA	.062	.062	1.750	.593	.156	1.062	3.812	.156	NA	.156	1.062	.375	NA
4	K	S/H SIMULATOR ASSEMBLY		1019896			B	I	NOTE 11 B	4.000	2.625	3.812	2.750	.156	.093	.156	.187	NA	NA	2.250	1.500	1.187	.906	2.031	.093	.375	.156	1.750	1.437	2.750	.437	NA	NA	.062	.062	1.750	.593	.156	1.062	3.812	.156	NA	.156	1.062	.375	NA
3	K	REFERENCE MIRROR		1001767			B	I	NOTE 11 B	2.000	1.312	1.906	1.375	.078	.048	.078	.093	NA	NA	1.125	.750	.593	.453	1.015	.062	.187	.078	.875	.718	1.375	.218	NA	NA	.048	.031	.875	.305	.078	.531	1.906	.078	NA	.078	.531	.187	NA
2	K	2 IN PLANE READING AUTOCOLLIMATOR		1017413			B	I	NOTE 11 B	2.000	1.312	1.906	1.375	.078	.048	.078	.093	NA	NA	1.125	.750	.593	.453	1.015	.062	.187	.078	.875	.718	1.375	.218	NA	NA	.048	.031	.875	.305	.078	.531	1.906	.078	NA	.078	.531	.187	NA
1	K	2 IN AUTOCOLLIMATOR		1001702			B	I	NOTE 11 B	2.000	1.312	1.906	1.375	.078	.048	.078	.093	NA	NA	1.125	.750	.593	.453	1.015	.062	.187	.078	.875	.718	1.375	.218	NA	NA	.048	.031	.875	.305	.078	.531	1.906	.078	NA	.078	.531	.187	NA

NOTES FOR TABLE

STYLE A IS FOR G & N SYSTEM.
STYLE B IS FOR GROUND SUPPORT EQUIPMENT.
TYPE I IS WITHOUT MOUNTING HOLES.
TYPE II IS WITH MOUNTING HOLES.

Ⓖ REPLACES REV F WITH CHANGE

KOLLSMAN DASH NUMBERS

QTY REQD	PART OR IDENTIFYING NO.	MATERIAL OR NOTES	NOMENCLATURE OR DESCRIPTION	FIND NO.

LIST OF MATERIALS

MASTER

AS APPLICABLE

NEXT ASSY	USED ON

APPLICATION

UNLESS OTHERWISE SPECIFIED
DIMENSIONS ARE IN INCHES
CAPACITOR VALUES ARE IN μf
RESISTOR VALUES ARE IN OHMS
TOLERANCES ON
FRACTIONS ± — DECIMALS ±.005 ANGLES ± —
DO NOT SCALE THIS DRAWING

MATERIAL
SEE NOTE 11

MIT
INSTRUMENTATION LAB
CAMBRIDGE, MASS.

DRAWN R. A. Jones 7-16-65
CHECKED 7-22-65
APPROVED
APPROVED
APPROVED MIT
APPROVED MSC
DATE

MANNED SPACECRAFT CENTER
HOUSTON, TEXAS

NAMEPLATES,
APOLLO G&N-GSE
(STANDANDS)

CODE IDENT NO. 80230
SIZE E
DRAWING NO. 1004260
SCALE NONE
SHEET 2 OF 3

1004260 AF

REVISIONS 02768						
SYM	ZONE	DESCRIPTION	DR	CHK	DATE	APPROVED
G		REPLACES REV F WITH CHANGE PER TDRR 20854			7/24/65	WK
H		REVISED PER TDRR 20892			8/3/65	WK
J		REVISED PER TDRR 20904			8/3/65	WK
K		REVISED PER TDRR 21 379			[illegible]	WK
L		REVISED PER TDRR 21410			[illegible]	WK
M		REVISED PER TDRR 21993				
N		REVISED PER TDRR 22621				
P		REVISED PER TDRR 22671				
R		REVISED PER TDRR 22672				
S		REVISED PER TDRR 22750				WK
T		REVISED PER TDRR 22823				
U		REVISED PER TDRR 23072			[illegible]-65	
V		REVISED PER TDRR 23521			[illegible]	WK
W		REVISED PER TDRR 23824	RAJ		[illegible]-65	WK
Y		REVISED PER TDRR 24018	RAJ		[illegible]-65	WK
Z		REVISED PER TDRR 24040	RAJ		[illegible]-65	WK
AA		REVISED PER TDRR 24060	RAJ		[illegible]-65	WK
AB		REVISED PER TDRR 24868	RAJ		[illegible]-65	WK
AC		REVISED PER TDRR 24973	RAJ		[illegible]	WK
AD		REVISED PER TDRR 25065	RAJ		[illegible]-66	WK
AE		REVISED PER TDRR 25672	RAJ		2-4-66	WK
AF		REVISED PER TDRR 25671	RAJ		2-4-66	WK

DASH NO.	P/C	PART NAME	REMARKS	PART NO.	SER. NO.	CONT. NO.	STYLE	TYPE	MATERIAL	A – AR
299	R									
298	R									
254	R	DRAWER ASSY COMP. SIMULATOR		2014048-011	NA	NAS-9-497	B	II	NOTE 11 C	FOR DIMENSIONS, SEE DASH 18 VALUES BELOW
253		SHIPPING KIT ASSY, NAV DSKY		2016312-011						
252		SHIPPING KIT ASSY, UNIVERSAL DSKY		2016316-011						
251		SHIPPING KIT ASSY, MAIN DSKY		2016313-011				II	NOTE 11 C	
250		AMPLIFIER, REWORK		2014386				I	NOTE 11 B	FOR DIMENSIONS, SEE DASH 15 VALUES BELOW
249		TEMP MONITOR ASSY		2014313-011					NOTE 11 C	FOR DIMENSIONS, SEE DASH 17 VALUES BELOW
248		AGC JUNCTION ASSY		2014341-011					NOTE 11 B	FOR DIMENSIONS, SEE DASH 15 VALUES BELOW
247		AC INPUT PANEL ASSY		2014302-011						
246		SELF TEST ASSY		2014392 011						
245	R	TAPE PUNCH ASSEMBLY		2014039-011	NA		B	I	NOTE 11 B	FOR DIMENSIONS, SEE DASH 15 VALUES BELOW
244	R	TAPE READER ASSEMBLY		2014038-011	NA	NAS-9-497	B	I	NOTE 11 B	
243										
242										
241	R	APOLLO GUIDANCE COMPUTER GROUP		6003001	NA	NAS-9-497	A	I	NOTE 11 B	FOR DIMENSIONS, SEE DASH 19 VALUES BELOW
240	R	SELF TEST ASSEMBLY		2014366-011	NA		B	I	NOTE 11 B	FOR DIMENSIONS, SEE DASH 15 VALUES BELOW
239		POWER SUPPLY ASSY-115V., 400 CYCLE		2014207-011						FOR DIMENSIONS, SEE DASH 17 VALUES BELOW
238		AC INPUT PANEL ASSY		2014043-011						
237		POWER CONTROL ASSY		2014079-011						FOR DIMENSIONS, SEE DASH 15 VALUES BELOW
236		DRAWER ASSY-XY INTERFACE		2014040-011						
235		DRAWER ASSY RDC INTERFACE		2014045-011						
234		BUFFER CIRCUIT ASSY		2014254-011						
233		CONTROL & INTERFACE ASSY		2014204-011						
232		POWER CONTROL ASSY		2014044-011						FOR DIMENSIONS, SEE DASH 17 VALUES BELOW
231		DRAWER ASSY, PROGRAMMER & MONITOR		2014041-011						
230		CONNECTOR INTERFACE ASSY		2014272-011						FOR DIMENSIONS, SEE DASH 15 VALUES BELOW
229		CONNECTOR INTERFACE ASSY		2014047-011						
228		ANTENNA, TUNING CAPACITOR ASSY		2014209-011						
227		MOUNTING FIXTURE ASSY		2014006-011						FOR DIMENSIONS, SEE DASH 17 VALUES BELOW
226		POWER SUPPLY ASSY 3 VDC		2014234-011						FOR DIMENSIONS, SEE DASH 15 VALUES BELOW
225		PANEL ASSY — SIGNAL INTERFACE		2014010-011						
224		OSCILLOSCOPE ASSY		2014232-011						
223		AUXILIARY OUTLET ASSY		2014274-011						
222		FREQUENCY COUNTER		2014233-011						
221		POWER SUPPLY ASSY 10, 13, 28 VDC		2014235-011						
220		LOGIC DRAWER ASSY NO. 2		2014037-011						FOR DIMENSIONS, SEE DASH 17 VALUES BELOW
219		LOGIC DRAWER ASSY NO. 1		2014036-011						
218		COUNTER, ELECTRICAL ASSY		2014288-011						FOR DIMENSIONS, SEE DASH 15 VALUES BELOW
217		POWER SUPPLY ASSY		2014279-011						
216		TEST MOUNT ASSY		2014257-011						
215		UNIVERSAL DSKY PEDESTAL MOUNT		2014014-011						FOR DIMENSIONS, SEE DASH 17 VALUES BELOW
214		MAIN DSKY PEDESTAL MOUNT		2014343				I	NOTE 11B	
213		SHIPPING CONTAINER, MAIN DSKY		1006229				II	NOTE 11C	FOR DIMENSIONS, SEE DASH 18 VALUES BELOW
212		NAV DSKY		1006231						
211		AGC		1006230						
210		UNIVERSAL DSKY		1006422						
209		SHIPPING CONTAINER, AGC		1006421				II	NOTE 11C	
208		UNIVERSAL DSKY HANDLING FIXTURE		2014013-011				I	NOTE 11B	FOR DIMENSIONS, SEE DASH 15 VALUES BELOW
207		NAV DSKY HANDLING FIXTURE		1014377						FOR DIMENSIONS, SEE DASH 17 VALUES BELOW
206		MAIN DSKY HANDLING FIXTURE		1014334						
205		AGC HANDLING FIXTURE		2014282-011				I	NOTE 11B	
204		OPERATION CONSOLE		2014024-011				II	NOTE 11C	FOR DIMENSIONS, SEE DASH 18 VALUES BELOW
203		COMPUTER TEST SET		2014042-011		NAS-9-497				
202		DRAWER ASSY, COMPUTER SIMULATOR		2014048-011		FNP-12775				
201		AUXILIARY CALIBRATION CONSOLE		2014059-011		NAS-9-497				
200	R	AGC CALIBRATION CONSOLE		2014049-011	NA		B	II	NOTE 11C	
21	R									
20	R	NA		NA	NA	NA	A	II	NOTE 11 C	
19	R	NA		NA	NA	NA	A	I	NOTE 11 B	
18	R	NA		NA	NA	NA	B	II	NOTE 11 C	
17	R	NA		NA	NA	NA	B	I	NOTE 11 B	
16	R	NA		NA	NA	NA	B	II	NOTE 11 C	
15	R	NA		NA	NA	NA	B	I	NOTE 11 B	

DASH NO.	A	B	C	D	E	F	G	H	J	K	L	M	N	P	R	S	T	U	V	W	Y	Z	AA	AB	AC	AD	AE	AF	AG	AH	AJ	AK	AL	AM	AN	AP	AR
21																																					
20	2.000	1.312	1.687	1.375	.078	.031	.078	.093	.188 .113	.093	1.187	.750	.593	.453	1.015	.062	.187	.078	.875	.718	1.375	.218	1.156	1.843	.048	NA	.875	.305	.078	.312	1.687	.078	NA	.078	.312	.187	1.843
19	2.000	1.312	1.687	1.375	.078	.031	.078	.093	NA	NA	1.187	.750	.593	.453	1.015	.062	.187	.078	.875	.718	1.375	.218	NA	NA	.048	.031	.875	.305	.078	.312	1.687	.078	NA	.078	.312	.187	NA
18	4.187	1.875	3.469	2.750	.156	.093	.156	.125	.188 .113	.125	1.625	1.032	.844	.656	1.406	.093	.344	.156	1.781	1.531	2.844	.312	1.562	3.875	.062	NA	1.219	.500	.156	.719	3.469	.156	NA	.156	.719	.344	3.875
17	4.187	1.875	3.469	2.750	.156	.093	.156	.125	NA	NA	1.625	1.032	.844	.656	1.406	.093	.344	.156	1.781	1.531	2.844	.312	NA	NA	.062	.062	1.219	.500	.156	.719	3.469	.156	NA	.156	.719	.344	NA
16	2.000	1.312	1.687	1.375	.078	.031	.078	.093	.188 .113	.093	1.187	.750	.593	.453	1.015	.062	.187	.078	.875	.718	1.375	.218	1.156	1.843	.048	NA	.875	.305	.078	.312	1.687	.078	NA	.078	.312	.187	1.843
15	2.000	1.312	1.687	1.375	.078	.031	.078	.093	NA	NA	1.187	.750	.593	.453	1.015	.062	.187	.078	.875	.718	1.375	.218	NA	NA	.048	.031	.875	.305	.078	.312	1.687	.078	NA	.078	.312	.187	NA

RAYTHEON DASH NUMBERS

THIS SHEET ADDED

Ⓖ REPLACES REV F WITH CHANGE

NOTES FOR TABLE
STYLE A IS FOR G & N SYSTEM
STYLE B IS FOR GROUND SUPPORT EQUIPMENT
TYPE I IS WITHOUT MOUNTING HOLES
TYPE II IS WITH MOUNTING HOLES

MASTER

QTY REQD	PART OR IDENTIFYING NO.	MATERIAL OR NOTES	NOMENCLATURE OR DESCRIPTION	FIND NO.

LIST OF MATERIALS

NEXT ASSY	USED ON
AS APPLICABLE	

APPLICATION

UNLESS OTHERWISE SPECIFIED
DIMENSIONS ARE IN INCHES
CAPACITOR VALUES ARE IN μf
RESISTOR VALUES ARE IN OHMS
TOLERANCES ON
FRACTIONS ± — DECIMALS ±.005 ANGLES ± —
DO NOT SCALE THIS DRAWING

MATERIAL
SEE NOTE 11

MIT
INSTRUMENTATION LAB
CAMBRIDGE, MASS.

DRAWN R. Q. Jones 7-16-65
CHECKED 7-22-65
APPROVED
APPROVED
APPROVED MIT
APPROVED MSC
DATE

MANNED SPACECRAFT CENTER
HOUSTON, TEXAS

NAMEPLATES,
APOLLO GEN-GSE
(STANDARDS)

CODE IDENT NO. 80230
SIZE E
DRAWING NO. 1004260
SCALE NONE
SHEET 3 OF 5

[illegible]

REVISIONS						02767
SYM	ZONE	DESCRIPTION	DR	CHK	DATE	APPROVED
G		REPLACES REV F WITH CHANGE PER TDRR 20854.			7/24/65	WK
H		REVISED PER TDRR 20892			8/3/65	WK
J		REVISED PER TDRR 20904			8/3/65	WK
K		REVISED PER TDRR 21379			8/16/65	WK
L		REVISED PER TDRR 21410			8/23/65	WK
M		REVISED PER TDRR 21993				
N		REVISED PER TDRR 22621			[illegible]	
P		REVISED PER TDRR 22671				
R		REVISED PER TDRR 22672			[illegible]	
S		REVISED PER TDRR 22750				
T		REVISED PER TDRR 22823			/65	WK
U		REVISED PER TDRR 23072			[illegible]	[illegible]
V		REVISED PER TDRR 23521			10-26-65	WK
W		REVISED PER TDRR 23824	RAJ		11-9-65	WK
Y		REVISED PER TDRR 24018	RAJ		11-16-65	WK
Z		REVISED PER TDRR 24040	RAJ		11-19-65	WK
AA		REVISED PER TDRR 24060	RAJ		11-19-65	WK
AB		REVISED PER TDRR 24868	RAJ		2-22-65	WK
AC		REVISED PER TDRR 24973	RAJ		4-66	WK
AD		REVISED PER TDRR 25065	RAJ		.066	[illegible]
AE		REVISED PER TDRR 25672	RAJ		2-4-66	WK
AF		REVISED PER TDRR 25671	RAJ		2-4-66	WK

DASH NO.	P/C	PART NAME	REMARKS	PART NO.	SER. NO.	CONT. NO.	STYLE	TYPE	MATERIAL	A	B	C	D	E	F	G	H	J	K	L	M	N	P	R	S	T	U	V	W	Y	Z	AA	AB	AC	AD	AE	AF	AG	AH	AJ	AK	AL	AM	AN	AP	AR
199	AC																																													
198	AC																																													
182	AC	ADPT MODULE, P.S.A.		6900088-011		NAS9-497	B	II	NOTE 11C	FOR DIMENSIONS, SEE DASH 141 VALUES BELOW																																				
181																																														
180	AC	ADPT MODULE, P.S.A.		1902431-031		NAS-9-497	B	II		FOR DIMENSIONS, SEE DASH 121 VALUES BELOW																																				
179	AC	MOUNTING PLATE, IMU/PTA		6900083-011																																										
178	AC	MOUNTING PLATE, COMPONENT		6900007-021																																										
177	AC	FIX., MOUNTING, SUBSYSTEM		2900070-021						FOR DIMENSIONS SEE DASH 144 VALUES BELOW																																				
176	AC	FIX., MOUNTING, G AND N		2900067-021																																										
175	AC	CSL. COOL. AND PWR. G AND N		1902134-031																																										
174	AC	FIX., HAND., C/M AND LEM CDU		2900999-011					NOTE 11C																																					
173	AC	FIX., HANDLING, C/M PSA		2900998-011																																										
172	AC	CAGING ELECTRONICS, GYRO		2900029-021																																										
171	AC	DISTRIBUTION BOX, GSE		2900024-021																																										
170	AC	ANALYZER, OPTICS-INERTIAL		2900023-021																																										
169	AC	ADPT, TEST POINT, P.S.A.		2900037-021																																										
168	AC	TEST SELECTOR		2900028-021																																										
167	AC	TEST CONTROL		2900027-021																																										
166	AC	PANEL, MONITOR		2900031-021																																										
165	AC	TERM. BOARD STORAGE DRAWER		2900927-011																																										
164	AC	INPUT/OUTPUT PANEL		2900926-011						FOR DIMENSIONS, SEE DASH 141 VALUES BELOW																																				
163	AC	CONTROL PANEL		2900896-011																																										
162	AC	CSL. CAL AND TEST, SCM/PSAAM		2900895-011						FOR DIMENSIONS, SEE DASH 144 VALUES BELOW																																				
161	AC	FIX., LIFT AND HAND., IMU		1015462-011						FOR DIMENSIONS, SEE DASH 141 VALUES BELOW																																				
160	AC	FIX., HAND., G AND N HARNESS		1901846-031						FOR DIMENSIONS, SEE DASH 144 VALUES BELOW																																				
159	AC	BATTERY POWER PACK		1900011-031			B	II	NOTE 11C																																					
158	AC	COUPLING DATA UNIT ASSEMBLY C/M		2007222			A	I	NOTE 11B																																					
157	AC	COUPLING DATA UNIT ASSEMBLY - LEM		2007222																																										
156	AC	POWER & SERVO ASSEMBLY C/M		2007200																																										
155	AC	PIPA ELECTRONICS ASSEMBLY		2007201						FOR DIMENSIONS, SEE DASH 100 VALUES BELOW																																				
154	AC	PULSE TORQUE ASSEMBLY - LEM		6007000																																										
153	AC	POWER & SERVO ASSEMBLY - LEM		6007200			A	I	NOTE 11B																																					
152	AC	CONT PNL, RSVR CKT TESTER		2900770-011			B	II	NOTE 11C	FOR DIMENSIONS, SEE DASH 141 VALUES BELOW																																				
151	AC	TESTER, RESOLVER CIRCUIT		2900708-011																																										
150	AC	JUNCTION BOX, P.S.A./G.S.E.		1901933-021						FOR DIMENSIONS, SEE DASH 144 VALUES BELOW																																				
149	AC	BATTERY PACK, LIFTING		2900812-011						FOR DIMENSIONS, SEE DASH 141 VALUES BELOW																																				
148	AC	MOUNTING PLATE, COMPONENT		6900007-011																																										
147	AC	MOUNTING PLATE, COMPONENT		2900677-011						FOR DIMENSIONS, SEE DASH 144 VALUES BELOW																																				
146	AC	CART, TRANS, G AND N		1900009-041																																										
145	AC	CONTAINER, SHIPPING, IMU		1900010-021		NAS-9-497	B	II	NOTE 11C																																					
144	AC	FIX., MOUNTING, G AND N		1902204-021			B	II	NOTE 11C	4.125	1.812	3.250	NA	.125	.062	.12	.156	.188 .194	.125	1.625	1.140	.890	.640	1.390	.125	.171	.125	1.875	1.687	2.625	.250	1.562	3.843	.093	NA	NA	.359	.125	.437	3.688	NA	3.687	.093	.40	.25	3.875
143	AC	CSL, COOL. AND PWR, G AND N		1902134-021						4.125	1.812	3.250		.125	.062	.12	.156		.125	1.625	1.140	.890	.640	1.390	.125	.171	.125	1.875	1.687	2.625	.250	1.562	3.843	.093			.359	.125	.437	3.688		3.687	.093	.40	.25	3.875
142	AC	ANALYZER, OPTICS-INERTIAL		2900023-011						4.125	1.812	3.250		.125	.062	.12	.156		.125	1.625	1.140	.890	.640	1.390	.125	.171	.125	1.875	1.687	2.625	.250	1.562	3.843	.093			.359	.125	.437	3.688		3.687	.093	.40	.25	3.875
141	AC	CONT, TEMP, PORTABLE		2900060-011						2.125	.968	1.718		.093	.031	.06	.093		.093	.858	.608	.484	.358	.733	.077	.116	.062	.937	.875	1.343	.125	.781	1.892	.046			.209	.093	.250	1.875		1.840	.046	.23	.16	1.938
140	AC	TESTER, CKT, IMU/CDU RSVR		2900286-011						4.125	1.812	3.250		.125	.062	.12	.156		.125	1.625	1.140	.890	.640	1.390	.125	.171	.125	1.875	1.687	2.625	.250	1.562	3.843	.093			.359	.125	.437	3.688		3.687	.093	.40	.25	3.875
139	AC	SIMULATOR, LD/SIG, CDU		2900285-011																																										
138	AC	SIMULATOR, LD/SIG, OPTICS		1902023-021																																										
137	AC	FIX., MOUNTING, IMU/NAV BASE		6900003-011																																										
136	AC	FIXTURE, OPTICS/NAV BASE		2900072-011																																										
135	AC	FIX., MOUNTING, SUB SYSTEM		2900070-011																																										
134	AC	FIX., HAND., G AND N HARNESS		2900069-011																																										
133	AC	CNTR, SHIPPING, NAV BASE		2900068-011																																										
132	AC	FIX., MOUNTING, G AND N		2900067-011																																										
131	AC	SIMULATOR, LD/SIG, IMU/CDU		2900062-011																																										
130	AC	TESTER, GYRO WHEEL		2900061-011																																										
129	AC	COOLANT SUPPLY		1902133-021																																										
128	AC	TABLE, ROTARY		1900926-021						4.125	1.812	3.250		.125	.062	.12	.156		.125	1.625	1.140	.890	.640	1.390	.125	.171	.125	1.875	1.687	2.625	.250	1.562	3.843	.093			.359	.125	.437	3.688		3.687	.093	.40	.25	3.875
127	AC	FIX., HAND., OPTICS		2900074-011						2.125	.968	1.718		.093	.031	.06	.093		.093	.858	.608	.484	.358	.733	.077	.116	.062	.937	.875	1.343	.125	.781	1.892	.046			.209	.093	.250	1.875		1.840	.046	.23	.16	1.938
126	AC	FIXTURE, MTG, PTA/PEA.		2900066-011																																										
125	AC	CONT, TEMP, IMU LIFTING		2900063-011																																										
124	AC	FIXTURE, HANDLING, IMU		2900064-011																																										
123	AC	CONT, OPTICS, REMOTE		1902046-021																																										
122	AC	TEST CONTROL		1902009-021																																										
121	AC	ADPT MODULE, P.S.A.		1902431-021																																										
120	AC	BRIDGE, DECADE ERROR		2900128-011																																										
119	AC	PWR SUP, ELECTRONICS		2900012-011																																										
118	AC	PWR SUP, RELAY AND LAMP		1900049-031																																										
117	AC	CONSOLE, OSCILLOGRAPH		1900000-021																																										
116	AC	ADPT MODULE, P.S.A.		1902431-011																																										
115	AC	ADPT, TEST POINT, PTA/PEA.		2900145-011																																										
114	AC	ADPT, TEST POINT, P.S.A.		2900037-011																																										
113	AC	CONTROL, GIMBAL POSITION		2900036-011																																										
112	AC	SELECTOR, SIGNAL, PRIMARY		2900035-011																																										
111	AC	SEL, SIG, OSCILLOGRAPH		2900034-011																																										
110	AC	PANEL, PWR SUP AND LOAD		2900033-011																																										
109	AC	PANEL, MONITOR		2900031-011																																										
108	AC	PANEL, AUXILIARY INPUT		2900030-011																																										
107	AC	CAGING ELECTRONICS, GYRO		2900029-011																																										
106	AC	TEST SELECTOR		2900028-011																																										
105	AC	TEST CONTROL		2900027-011																																										
104	AC	MONITOR AND CONTROL, TEMP		2900026-011																																										
103	AC	DISTRIBUTION BOX, GSE		2900024-011																																										
102	AC	VOLTMETER, DIGITAL		2900007-011			B	II	NOTE 11C	2.125	.968	1.718	NA	.093	.031	.06	.093	.188 .194	.093	.858	.608	.484	.358	.733	.077	.116	.062	.937	.875	1.343	.125	.781	1.892	.046	NA	NA	.209	.093	.250	1.875	NA	1.840	.046	.23	.16	1.938
101	AC	NAVIGATION BASE ASSEMBLY - LEM		6899950		NAS-9-497	A	I	NOTE 11B	2.000	1.312	1.906	1.375	.078	.048	.078	.093	NA	NA	1.125	.750	.593	.453	1.015	.062	.187	.078	.875	.718	1.375	.218	NA	NA	.048	.031	.875	.305	.078	.531	1.906	.078	NA	.078	.531	.187	NA
100	AC	NAVIGATION BASE ASSEMBLY		2899982		NAS-9-497	A	I	NOTE 11B	2.000	1.312	1.906	1.375	.078	.048	.078	.093	NA	NA	1.125	.750	.593	.453	1.015	.062	.187	.078	.875	.718	1.375	.218	NA	NA	.048	.031	.875	.305	.078	.531	1.906	.078	NA	.078	.531	.187	NA

THIS SHEET ADDED

Ⓖ REPLACES REV F WITH CHANGE

AC ELECTRONICS DASH NUMBERS

NOTES FOR TABLE
STYLE A IS FOR G&N SYSTEM
STYLE B IS FOR GROUND SUPPORT EQUIPMENT
TYPE I IS WITHOUT MOUNTING HOLES
TYPE II IS WITH MOUNTING HOLES

QTY REQD	PART OR IDENTIFYING NO.	MATERIAL OR NOTES	NOMENCLATURE OR DESCRIPTION	FIND NO.

LIST OF MATERIALS

NEXT ASSY	USED ON
AS APPLICABLE	

APPLICATION

UNLESS OTHERWISE SPECIFIED
DIMENSIONS ARE IN INCHES
CAPACITOR VALUES ARE IN µf
RESISTOR VALUES ARE IN OHMS
TOLERANCES ON
FRACTIONS ± — DECIMALS ±.005 ANGLES ± —
DO NOT SCALE THIS DRAWING

MATERIAL
SEE NOTE 11

MIT
INSTRUMENTATION LAB
CAMBRIDGE, MASS.

MANNED SPACECRAFT CENTER
HOUSTON, TEXAS

		DATE
DRAWN	R. O. Jones	7-16-65
CHECKED	[illegible]	7-22-65
APPROVED		
APPROVED	[illegible]	[illegible]
APPROVED MIT	[illegible]	[illegible]
APPROVED MSC	[illegible]	[illegible]

NAMEPLATES,
APOLLO G&N-GSE
(STANDARDS)

CODE IDENT NO. 80230
SIZE E
DRAWING NO. 1004260
SCALE NONE
SHEET 4 OF 5

MASTER

1004260AF

NOTICE - WHEN GOVERNMENT DRAWINGS, SPECIFICATIONS, OR OTHER DATA ARE USED FOR ANY PURPOSE OTHER THAN IN CONNECTION WITH A DEFINITELY RELATED GOVERNMENT PROCUREMENT OPERATION, THE UNITED STATES GOVERNMENT THEREBY INCURS NO RESPONSIBILITY NOR ANY OBLIGATION WHATSOEVER; AND THE FACT THAT THE GOVERNMENT MAY HAVE FORMULATED, FURNISHED, OR IN ANY WAY SUPPLIED THE SAID DRAWINGS, SPECIFICATIONS OR OTHER DATA IS NOT TO BE REGARDED BY IMPLICATION OR OTHERWISE AS IN ANY MANNER LICENSING THE HOLDER OR ANY OTHER PERSON OR CORPORATION, OR CONVEYING ANY RIGHTS OR PERMISSION TO MANUFACTURE, USE, OR SELL ANY PATENTED INVENTION THAT MAY IN ANY WAY BE RELATED THERETO.

REVISIONS 02768

SYM	ZONE	DESCRIPTION	DR	CHK	DATE	APPROVED
G		REPLACES REV F WITH CHANGE PER TDRR 20854			7/24/65	WK
H		REVISED PER TDRR 20892			8/3/65	WK
J		REVISED PER TDRR 20904			8/3/65	WK
K		REVISED PER TDRR 21379			8/6/65	WK
L		REVISED PER TDRR 21410			8/13/65	WK
M		REVISED PER TDRR 21993				
N		REVISED PER TDRR 22621			10/	
P		REVISED PER TDRR 22671			1/	
R		REVISED PER TDRR 22672				
S		REVISED PER TDRR 22750			65	WK
T		REVISED PER TDRR 22823				
U		REVISED PER TDRR 23072			10-21-65	WK
V		REVISED PER TDRR 23521			10-26-65	WK
W		REVISED PER TDRR 23824	RAJ		11-9-65	WK
Y		REVISED PER TDRR 24018	RAJ		11-16-65	WK
Z		REVISED PER TDRR 24040	RAJ		11-[illegible]-65	WK
AA		REVISED PER TDRR 24060	RAJ		11-19-65	WK
AB		REVISED PER TDRR 24868	RAJ		12-22-65	WK
AC		REVISED PER TDRR 24973	RAJ		1-4-66	WK
AD		REVISED PER TDRR 25065	RAJ		1-8-66	WK
AE		REVISED PER TDRR 25672	RAJ		2-4-66	WK
AF		REVISED PER TDRR 25671	RAJ		2-4-66	WK

DASH NO.	P/C	PART NAME	REMARKS	PART NO.	SER. NO.	CONT. NO.	STYLE	TYPE	MATERIAL	A	B	C	D	E	F	G	H	J	K	L	M	N
499	MIT																					
498																						
401	MIT	COMPUTER ASSY		2003100		NAS-9-497	A	I	NOTE 11 B	2.000	1.312	1.906	1.375	.078	.048	.078	.093	NA	NA	1.125	.750	.593
400	MIT	LIFTING SLING-G&N INST. QUAL. FIX. & AZM. REF. FIX.		102640		NAS-9-4065	B	II	NOTE 11 C	2.000	1.312	1.687	1.375	.078	.048	.078	.093	.086/.081	.093	1.187	.750	.593

DASH NO.	P	R	S	T	U	V	W	Y	Z	AA	AB	AC	AD	AE	AF	AG	AH	AJ	AK	AL	AM	AN	AP	AR
499																								
498																								
401	.453	1.015	.062	.187	.078	.875	.718	1.375	.218	NA	NA	.048	.031	.875	.305	.078	.531	1.906	.078	NA	.078	.531	.187	NA
400	.453	1.015	.062	.187	.078	.875	.718	1.375	.218	1.156	1.843	.048	NA	.875	.305	.078	.312	1.687	.110	1.830	.070	.275	.180	1.844

MIT DASH NUMBERS

THIS SHEET ADDED

Ⓖ REPLACES REV F WITH CHANGE

NOTES FOR TABLE

STYLE A IS FOR G&N SYSTEM

STYLE B IS FOR GROUND SUPPORT EQUIPMENT

TYPE I IS WITHOUT MOUNTING HOLES

TYPE II IS WITH MOUNTING HOLES

MASTER

QTY REQD	PART OR IDENTIFYING NO.	MATERIAL OR NOTES	NOMENCLATURE OR DESCRIPTION	FIND NO.

LIST OF MATERIALS

NEXT ASSY	USED ON
AS APPLICABLE	

APPLICATION

UNLESS OTHERWISE SPECIFIED
DIMENSIONS ARE IN INCHES
CAPACITOR VALUES ARE IN µf
RESISTOR VALUES ARE IN OHMS
TOLERANCES ON
FRACTIONS ± — DECIMALS ±.005 ANGLES ± —
DO NOT SCALE THIS DRAWING

MATERIAL
SEE NOTE 11

MIT
INSTRUMENTATION LAB
CAMBRIDGE, MASS.

MANNED SPACECRAFT CENTER
HOUSTON, TEXAS

		DATE
DRAWN	R A Jones	7-16-65
CHECKED		
APPROVED		
APPROVED		
APPROVED MIT		
APPROVED MSC		

NAMEPLATES,
APOLLO G&N-GSE
(STANDARDS)

CODE IDENT NO. 80230
SIZE E
DRAWING NO. 1004260
SCALE NONE
SHEET 5 OF 5

1004260 LF

NOTICE – WHEN GOVERNMENT DRAWINGS, SPECIFICATIONS, OR OTHER DATA ARE USED FOR ANY PURPOSE OTHER THAN IN CONNECTION WITH A DEFINITELY RELATED GOVERNMENT PROCUREMENT OPERATION, THE UNITED STATES GOVERNMENT THEREBY INCURS NO RESPONSIBILITY NOR ANY OBLIGATION WHATSOEVER; AND THE FACT THAT THE GOVERNMENT MAY HAVE FORMULATED, FURNISHED, OR IN ANY WAY SUPPLIED THE SAID DRAWINGS, SPECIFICATIONS, OR OTHER DATA IS NOT TO BE REGARDED BY IMPLICATION OR OTHERWISE AS IN ANY MANNER LICENSING THE HOLDER OR ANY OTHER PERSON OR CORPORATION, OR CONVEYING ANY RIGHTS OR PERMISSION TO MANUFACTURE, USE, OR SELL ANY PATENTED INVENTION THAT MAY IN ANY WAY BE RELATED THERETO.

NOTES:

1. INTERPRET DRAWING IN ACCORDANCE WITH STANDARDS PRESCRIBED IN MIL-D-70327.
2. DIMENSIONS ON EACH VIEW APPLY TO ALL VIEWS. (WITH THE EXCEPTION OF MOUNTING HOLES).
3. FORMATS ILLUSTATED WILL BE APPLICABLE TO ALL ITEMS REQUIRING NAMEPLATES BELOW END ITEM DESIGNATION (SYSTEMS, ASSEMBLIES, ETC.)
4. PLATE BACKGROUND TO BE LUSTERLESS BLACK PER FED-STD-595, COLOR 37038. BORDER, MARKING AND LETTERING TO BE NATURAL METAL,(ANODIZED ALUMINUM).
5. MARKING METHOD TO BE DIE STAMPING, ETCHING OR ENGRAVING IN ACCORDANCE WITH MIL P 19834.
6. LETTERING STYLE TO BE GOTHIC,(SANS SERIFS), AND NUMBERS TO BE ARABIC.
7. WHERE LOCATING DIMENSIONS ARE NOT SHOWN,CHARACTERS SHALL BE SYMMETRICALLY POSITIONED.
8. IDENTIFY WITH DRAWING NUMBER PER ND1002019.
9. WHEN "AUTO MARK" METAL MARKING TYPEWRITER IS USED TO ADD DATA TO BLANK SPACES, TYPE SIZE IS TO BE SELECTED FROM DIMENSIONS U, AC AND AM.
10. NASA SYMBOL IS TO BE PROPORTIONAL TO NAMEPLATE IN RATIO OF 1 TO 5 WITH DIMENSION A VALUE AND IS TO HAVE NATURAL BACKGROUND. NASA SYMBOL LETTERS LETTERING AND FEATHER TO BE BLACK,(OR WHITE FOR SILK SCREENING). WHERE BLACK FEATHER PROTRUDES INTO BLACK BACKGROUND, A MINIMUM OUTLINE OF NATURAL BACKGROUND SHALL EXIST.
11. NAMEPLATES WILL BE APPLIED BY METHODS LISTED BELOW, SHOWN IN ORDER OF PREFERENCE, (I.E., FOR RELIABILITY AND WEIGHT).
    - A - STENCIL OR SILK SCREEN DIRECTLY ON EQUIPMENT USING INK PER SCD 1010920,(WHITE OR BLACK).
    - B - ALUMINUM FOIL,(STYLE A OR B, TYPE I):
      FOIL SHALL BE .0030 ± .0005 THICK PER MIL-A-148.
      FOIL SHALL HAVE NO ADHESIVE BACKING.
      FOIL SHALL BE BONDED PER ND 1002219,(METHOD II).
      FOIL SHALL BE CLEAR ANODIZED PER MIL-A-8625, TYPE II.
    - C - PLATE, (STYLE A OR B, TYPE II):
      MATERIAL: QQ-A-250, TEMPER O OR H14, TYPE 1100,ALUMINUM ALLOY, .032 THICK.
      ANODIZE PER MIL-A-8625, TYPE II.
      ALUMINUM PLATE MUST BE FREE FROM BURRS AND SHARP CORNERS, MOUNTED WITH APPLICABLE SIZE FASTENERS.
12. NAMEPLATES SHALL BE CAPABLE OF MEETING APPLICABLE REQUIREMENTS OF MIL-M-13231.
13. ON DIMENSION TABLES SHOWN ON PAGES 2, 3, 4 AND 5, NA MEANS, "NOT APPLICABLE".

REVISIONS 02768

	SYM	ZONE	DESCRIPTION	DR	CHK	DATE	APPROVED
	G		REPLACES REV F WITH CHANGE PER TDRR 20854			[illegible]	WK
★	H		REVISED PER TDRR 20892			[illegible]	WK
	J		REVISED PER TDRR 20904			[illegible]	WK
	K		REVISED PER TDRR 21379			[illegible]	WK
	L		REVISED PER TDRR 21410			[illegible]	WK
★	M		REVISED PER TDRR 21993				
★	N		REVISED PER TDRR 22621				
★	P		REVISED PER TDRR 22671				
★	R		REVISED PER TDRR 22672				
★	S		REVISED PER TDRR 22750				WK
	T		REVISED PER TDRR 22823				
★	U		REVISED PER TDRR 23072			10-23-65	WK
	V		REVISED PER TDRR 23521			10-27-65	WK
★	W		REVISED PER TDRR 23824	RAJ		11-9-65	WK
★	Y		REVISED PER TDRR 24018	RAJ		11-16-65	WK
★	Z		REVISED PER TDRR 24040	RAJ		11-19-65	WK
	AA		REVISED PER TDRR 24060	RAJ		11-19-65	WK
	AB		REVISED PER TDRR 24868	RAJ		12-22-65	WK
	AC		REVISED PER TDRR 24973	RAJ		1-4-66	WK
	AD		REVISED PER TDRR 25065	RAJ		1-18-66	WK
★	AE		REVISED PER TDRR 25672	RAJ		2-4-66	WK
	AF		REVISED PER TDRR 25671	RAJ		2-4-66	WK
	AG		REVISED PER TDNR 26110	RAJ		2-5-66	WK

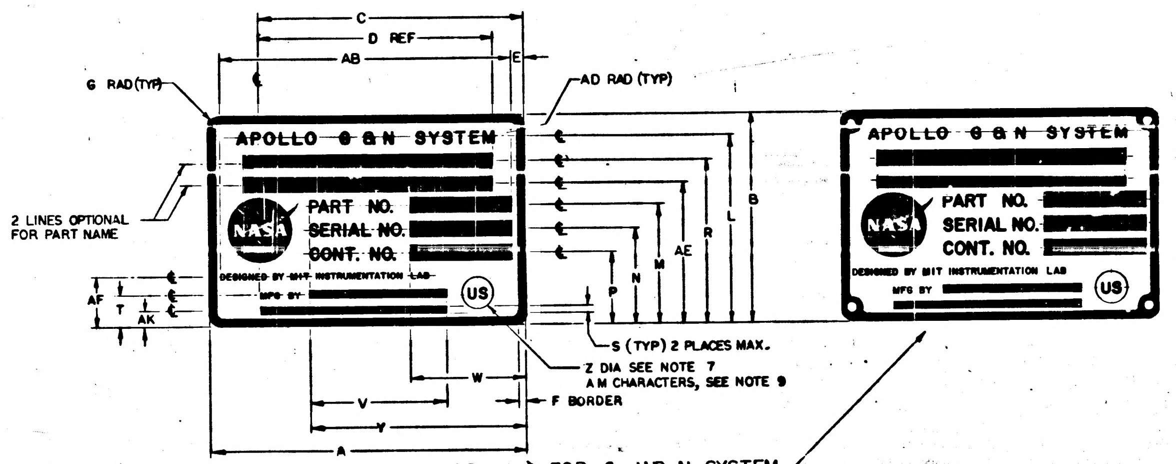
C
D REF
AB
E
G RAD(TYP)
AD RAD (TYP)
APOLLO G & N SYSTEM
PART NO.
SERIAL NO.
CONT. NO.
NASA
DESIGNED BY MIT INSTRUMENTATION LAB
MFG BY
US
2 LINES OPTIONAL FOR PART NAME
AF
T
AK
P
N
M
AE
R
L
B
S (TYP) 2 PLACES MAX.
Z DIA SEE NOTE 7
AM CHARACTERS, SEE NOTE 9
W
V
Y
F BORDER
A

FOR G AND N SYSTEM
STYLE A

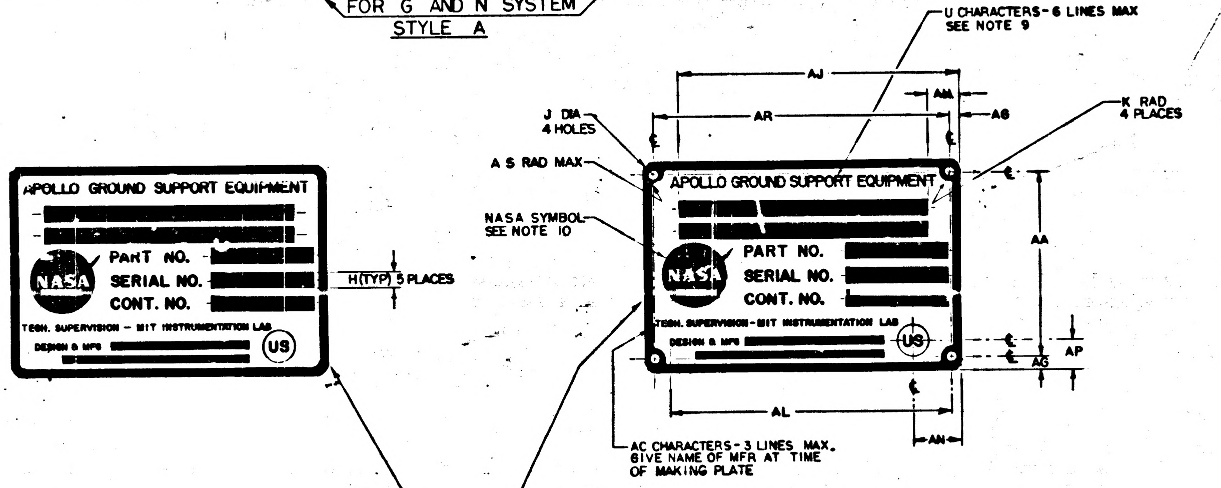
U CHARACTERS-6 LINES MAX
SEE NOTE 9
AJ
AM
AR
AS
J DIA
4 HOLES
K RAD
4 PLACES
A S RAD MAX
NASA SYMBOL
SEE NOTE 10
APOLLO GROUND SUPPORT EQUIPMENT
PART NO.
SERIAL NO.
CONT. NO.
NASA
TECH. SUPERVISION – MIT INSTRUMENTATION LAB
DESIGN & MFG
US
H(TYP) 5 PLACES
AA
AP
AG
AL
AN
AC CHARACTERS-3 LINES MAX.
GIVE NAME OF MFR AT TIME
OF MAKING PLATE

WITHOUT MOUNTING HOLES
TYPE I

WITH MOUNTING HOLES
TYPE II

FOR GROUND SUPPORT EQUIPMENT
STYLE B

SUGGESTED PROPORTIONS FOR NAMEPLATE DIMENSIONS.

1. SELECT NAMEPLATE LENGTH, DIMENSION "A", TO FIT DESIGN NEEDS.
2. DIMENSIONS B THRU AS ON LINE 1 BELOW ARE PROPORTIONAL TO "A" BY MULTIPLIERS SHOWN IN LINE 2 BELOW.

1.	A	B	C	D	E	F	G	H	J	K	L	M	N	P	R	S	T	U
2.	1.000 A	.6563 A	.8438 A	.6875 A	.0391 A	.0240 A	.0391 A	.0469 A	.0547 A	.0469 A	.5938 A	.3750 A	.2969 A	.2187 A	.5079 A	.0313 A	.0938 A	.0391 A

1.	V	W	Y	Z	AA	AB	AC	AD	AE	AF	AG	AH	AJ	AK	AL	AM	AN	AP	AR	AS
2.	.4375 A	.3594 A	.6875 A	.1094 A	.5781 A	.9219 A	.0240 A	.0156 A	.4375 A	.1525 A	.0391 A	.1563 A	.8438 A	.0548 A	.8659 A	.0391 A	.1563 A	.0938 A	.9219 A	.0151 A

Ⓖ REPLACES REV F WITH CHANGE

QTY REQD	PART OR IDENTIFYING NO.	MATERIAL OR NOTES	NOMENCLATURE OR DESCRIPTION	FIND NO.

LIST OF MATERIALS

AS APPLICABLE	
NEXT ASSY	USED ON
APPLICATION	

UNLESS OTHERWISE SPECIFIED
DIMENSIONS ARE IN INCHES
CAPACITOR VALUES ARE IN μf
RESISTOR VALUES ARE IN OHMS
TOLERANCES ON
FRACTIONS ± — DECIMALS ±.005 ANGLES ± —
DO NOT SCALE THIS DRAWING

MATERIAL
SEE NOTE 11

MIT
INSTRUMENTATION LAB
CAMBRIDGE, MASS.

DRAWN R A Jones 7/16/65
CHECKED A. J. [illegible] 7-22-65
APPROVED
APPROVED W Kupfer 7/?/65
APPROVED MIT W Kupfer 7/?/65
APPROVED MSC [illegible] 7/?/65
DATE

MANNED SPACECRAFT CENTER
HOUSTON, TEXAS

NAMEPLATES,
APOLLO G&N–GSE
(STANDARDS)

CODE IDENT NO. 80230
SIZE E
DRAWING NO. 1004260
SCALE NONE
SHEET 1 OF 6

MASTER

NOTICE - WHEN GOVERNMENT DRAWINGS, SPECIFICATIONS, OR OTHER DATA ARE USED FOR ANY PURPOSE OTHER THAN IN CONNECTION WITH A DEFINITELY RELATED GOVERNMENT PROCUREMENT OPERATION, THE UNITED STATES GOVERNMENT THEREBY INCURS NO RESPONSIBILITY NOR ANY OBLIGATION WHATSOEVER; AND THE FACT THAT THE GOVERNMENT MAY HAVE FORMULATED, FURNISHED, OR IN ANY WAY SUPPLIED THE SAID DRAWINGS, SPECIFICATIONS OR OTHER DATA IS NOT TO BE REGARDED BY IMPLICATION OR OTHERWISE AS IN ANY MANNER LICENSING THE HOLDER OR ANY OTHER PERSON OR CORPORATION, OR CONVEYING ANY RIGHTS OR PERMISSION TO MANUFACTURE, USE, OR SELL ANY PATENTED INVENTION THAT MAY IN ANY WAY BE RELATED THERETO.

REVISIONS 02768

SYM	ZONE	DESCRIPTION	DR	CHK	DATE	APPROVED
G		REPLACES REV F WITH CHANGE PER TDRR 20854.			7/22/65	WK
H		REVISED PER TDRR 20892			8/3/65	WK
J		REVISED PER TDRR 20904			8/3/65	WK
K		REVISED PER TDRR 21379			8/16/65	WK
L		REVISED PER TDRR 21410			8/24/65	WK
M		REVISED PER TDRR 21993				
N		REVISED PER TDRR 22621			10/1/65	
P		REVISED PER TDRR 22671				
R		REVISED PER TDRR 22672				
S		REVISED PER TDRR 22750				
T		REVISED PER TDRR 22823				WK
U		REVISED PER TDRR 23072			10-13-65	WK
V		REVISED PER TDRR 23521			10-27-65	WK
W		REVISED PER TDRR 23824	RAJ		11-3-65	WK
Y		REVISED PER TDRR 24018	RAJ		11-8-65	WK
Z		REVISED PER TDRR 24040	RAJ		11-9-65	WK
AA		REVISED PER TDRR 24060	RAJ		11-19-65	WK
AB		REVISED PER TDRR 24868	RAJ		12-22-65	WK
AC		REVISED PER TDRR 24973	RAJ		1-4-66	WK
AD		REVISED PER TDRR 25065	RAJ		1-18-66	WK
AE		REVISED PER TDRR 25672	RAJ		2-4-66	WK
AF		REVISED PER TDRR 25671	RAJ		2-4-66	WK
AG		REVISED PER TDRR 26110	RAJ		2-15-66	WK

DASH NO.	P/C	PART NAME	REMARKS	PART NO.	SER. NO.	CONT. NO.	STYLE	TYPE	MATERIAL	A	B	C	D	E	F	G	H	J	K	L	M	N	P	R	S	T	U	V	W	Y	Z	AA	AB	AC	AD	AE	AF	AG	AH	AJ	AK	AL	AM	AN	AP	AR
399	K																																													
398	K																																													
350	K	ALIGNMENT OPTICAL TELESCOPE (LEM)		NA	NA	NA	A	I	NOTE 11B	4.000	2.625	3.375	2.750	.156	.093	.156	.187	NA	NA	2.312	1.468	1.187	.906	2.031	NA	.375	.156	NA	1.437	2.750	.437	NA	3.688	.062	.062	1.750	.593	NA	.625	3.375	.187	NA	.156	.531	.453	NA
309	K																																													
308	K																																													
307	K						B	I	NOTE 11 B	4.000	2.625	3.375	2.750	.156	.093	.156	.187	NA	NA	2.328	1.468	1.187	.906	2.031	.062	.375	.156	NA	1.437	2.750	.437	NA	3.687	.062	.062	1.750	.593	NA	NA	NA	NA	NA	NA	NA	NA	NA
306	K						B	II	NOTE 11 C	4.000	2.625	3.375	2.750	.156	.093	.156	.187	.125	.156	2.328	1.468	1.187	.906	2.031	.062	.375	.156	↕	1.437	2.750	.437	2.312	3.687	.062	NA	1.750	.593	↕	↕	↕	↕	↕	↕	↕	↕	↕
305	K						B	I	NOTE 11 B	2.000	1.312	1.687	1.375	.078	.048	.078	.093	NA	NA	1.164	.734	.593	.453	1.015	.048	.171	.078	↕	.718	1.375	.187	NA	NA	.048	.031	.875	.320	↕	↕	↕	↕	↕	↕	↕	↕	↕
304	K						B	II	NOTE 11 C	2.000	1.312	1.687	1.375	.078	.048	.078	.093	.070	.078	1.164	.734	.593	.453	1.015	.048	.171	.078	NA	.718	1.375	.187	.156	1.843	.048	NA	.875	.320	NA	NA	NA	NA	NA	NA	NA	NA	NA
303	K																																													
302	K																																													
301	K																																													
300	K	OPTICAL UNIT		NA	NA	NA	A	I	NOTE 11 B	2.000	1.312	1.675	NA	NA	.048	.078	NA	NA	NA	1.090	.812	.675	.540	.940	NA	.265	NA	NA	NA	1.375	.218	NA	NA	NA	NA	NA	.375	NA	NA	NA	.180	NA	.078	NA	NA	NA
9	K	2 IN AUTOCOLLIMATOR		1001702			B	II	NOTE 11 C	4.000	2.625	3.812	2.750	.156	.093	.156	.187	.125	.156	2.250	1.500	1.187	.906	2.031	.093	.375	.156	1.750	1.437	2.750	.437	2.312	3.687	.062	NA	1.750	.593	.156	1.062	3.812	.156	NA	.156	1.062	.375	3.687
8	K	5 IN AUTOCOLLIMATOR		1017410			B	II	NOTE 11 C	4.000	2.625	3.812	2.750	.156	.093	.156	.187	.125	.156	2.250	1.500	1.187	.906	2.031	.093	.375	.156	1.750	1.437	2.750	.437	2.312	3.687	.062	NA	1.750	.593	.156	1.062	3.812	.156	NA	.156	1.062	.375	3.687
7	K	2½ IN AUTOCOLLIMATOR (SCT)		1017435			B	II	NOTE 11 C	4.000	2.625	3.812	2.750	.156	.093	.156	.187	.125	.156	2.250	1.500	1.187	.906	2.031	.093	.375	.156	1.750	1.437	2.750	.437	2.312	3.687	.062	NA	1.750	.593	.156	1.062	3.812	.156	NA	.156	1.062	.375	3.687
6	K	2½ IN AUTOCOLLIMATOR (SXT)		1017448			B	II	NOTE 11 C	4.000	2.625	3.812	2.750	.156	.093	.156	.187	.125	.156	2.250	1.500	1.187	.906	2.031	.093	.375	.156	1.750	1.437	2.750	.437	2.312	3.687	.062	NA	1.750	.593	.156	1.062	3.812	.156	NA	.156	1.062	.375	3.687
5	K	RETROREFLECTING PRISM ASSEMBLY		1019840			B	I	NOTE 11 B	4.000	2.625	3.812	2.750	.156	.093	.156	.187	NA	NA	2.250	1.500	1.187	.906	2.031	.093	.375	.156	1.750	1.437	2.750	.437	NA	NA	.062	.062	1.750	.593	.156	1.062	3.812	.156	NA	.156	1.062	.375	NA
4	K	S/H SIMULATOR ASSEMBLY		1019896			B	I	NOTE 11 B	4.000	2.625	3.812	2.750	.156	.093	.156	.187	NA	NA	2.250	1.500	1.187	.906	2.031	.093	.375	.156	1.750	1.437	2.750	.437	NA	NA	.062	.062	1.750	.593	.156	1.062	3.812	.156	NA	.156	1.062	.375	NA
3	K	REFERENCE MIRROR		1001767			B	I	NOTE 11 B	2.000	1.312	1.906	1.375	.078	.048	.078	.093	NA	NA	1.125	.750	.593	.453	1.015	.062	.187	.078	.875	.718	1.375	.218	NA	NA	.048	.031	.875	.305	.078	.531	1.906	.078	NA	.078	.531	.187	NA
2	K	2 IN PLANE READING AUTOCOLLIMATOR		1017413			B	I	NOTE 11 B	2.000	1.312	1.906	1.375	.078	.048	.078	.093	NA	NA	1.125	.750	.593	.453	1.015	.062	.187	.078	.875	.718	1.375	.218	NA	NA	.048	.031	.875	.305	.078	.531	1.906	.078	NA	.078	.531	.187	NA
1	K	2 IN AUTOCOLLIMATOR		1001702			B	I	NOTE 11 B	2.000	1.312	1.906	1.375	.078	.048	.078	.093	NA	NA	1.125	.750	.593	.453	1.015	.062	.187	.078	.875	.718	1.375	.218	NA	NA	.048	.031	.875	.305	.078	.531	1.906	.078	NA	.078	.531	.187	NA

Ⓖ REPLACES REV F WITH CHANGE

KOLLSMAN DASH NUMBERS

NOTES FOR TABLE

STYLE A IS FOR G&N SYSTEM.
STYLE B IS FOR GROUND SUPPORT EQUIPMENT.
TYPE I IS WITHOUT MOUNTING HOLES.
TYPE II IS WITH MOUNTING HOLES.

MASTER

QTY REQD	PART OR IDENTIFYING NO.	MATERIAL OR NOTES	NOMENCLATURE OR DESCRIPTION	FIND NO.

LIST OF MATERIALS

NEXT ASSY	USED ON
AS APPLICABLE	

APPLICATION

UNLESS OTHERWISE SPECIFIED
DIMENSIONS ARE IN INCHES
CAPACITOR VALUES ARE IN µf
RESISTOR VALUES ARE IN OHMS
TOLERANCES ON
FRACTIONS ± — DECIMALS ±.005 ANGLES ± —
DO NOT SCALE THIS DRAWING

MATERIAL
SEE NOTE 11

MIT
INSTRUMENTATION LAB
CAMBRIDGE, MASS.

MANNED SPACECRAFT CENTER
HOUSTON, TEXAS

DRAWN E. A. Jones 7-16-65
CHECKED 7-22-65
APPROVED
APPROVED W. Kupfer
APPROVED MIT W. Kupfer
APPROVED MSC
DATE

NAMEPLATES,
APOLLO G&N-GSE
(STANDANDS)

CODE IDENT NO. 80230
SIZE E
DRAWING NO. 1004260
SCALE NONE
SHEET 2 OF 5

NOTICE – WHEN GOVERNMENT DRAWINGS, SPECIFICATIONS, OR OTHER DATA ARE USED FOR ANY PURPOSE OTHER THAN IN CONNECTION WITH A DEFINITELY RELATED GOVERNMENT PROCUREMENT OPERATION, THE UNITED STATES GOVERNMENT THEREBY INCURS NO RESPONSIBILITY NOR ANY OBLIGATION WHATSOEVER; AND THE FACT THAT THE GOVERNMENT MAY HAVE FORMULATED, FURNISHED, OR IN ANY WAY SUPPLIED THE SAID DRAWINGS, SPECIFICATIONS OR OTHER DATA IS NOT TO BE REGARDED BY IMPLICATION OR OTHERWISE AS IN ANY MANNER LICENSING THE HOLDER OR ANY OTHER PERSON OR CORPORATION, OR CONVEYING ANY RIGHTS OR PERMISSION TO MANUFACTURE, USE, OR SELL ANY PATENTED INVENTION THAT MAY IN ANY WAY BE RELATED THERETO.

REVISIONS 02768

SYM	ZONE	DESCRIPTION	DR	CHK	DATE	APPROVED
G		REPLACES REV F WITH CHANGE PER TDRR 20854			7/24/65	WK
H		REVISED PER TDRR 20892			8/3/65	WK
J		REVISED PER TDRR 20904			8/3/65	WK
K		REVISED PER TDRR 21379			9/9/65	WK
L		REVISED PER TDRR 21410			[illegible]	WK
M		REVISED PER TDRR 21993				
N		REVISED PER TDRR 22621			10/	
P		REVISED PER TDRR 22671				
R		REVISED PER TDRR 22672			/11/	
S		REVISED PER TDRR 22750				
T		REVISED PER TDRR 22823			/65	WK
U		REVISED PER TDRR 23072			10-21-65	WK
V		REVISED PER TDRR 23521			10-26-65	WK
W		REVISED PER TDRR 23824	RAJ		11-9-65	WK
Y		REVISED PER TDRR 24018	RAJ		11-6-65	WK
Z		REVISED PER TDRR 24040	RAJ		11-19-65	WK
AA		REVISED PER TDRR 24060	RAJ		11-19-65	WK
AB		REVISED PER TDRR 24868	RAJ		12-22-65	WK
AC		REVISED PER TDRR 24973	RAJ		1-4-66	WK
AD		REVISED PER TDRR 25065	RAJ		1-19-66	WK
AE		REVISED PER TDRR 25672	RAJ		2-4-66	WK
AF		REVISED PER TDRR 25671	RAJ		2-4-66	WK
AG		REVISED PER TDRR 26110	RAJ		2-15-66	WK

DASH NO.	P/C	PART NAME	REMARKS	PART NO.	SER. NO.	CONT. NO.	STYLE	TYPE	MATERIAL	A
259	R									
298	R									
254	R	DRAWER ASSY COMP. SIMULATOR		2014048-011	NA	NAS-9-497	B	II	NOTE 11 C	FOR DIMENSIONS, SEE DASH 18 VALUES BELOW
253		SHIPPING KIT ASSY, NAV DSKY		2016312-011						
252		SHIPPING KIT ASSY, UNIVERSAL DSKY		2016316-011						
251		SHIPPING KIT ASSY, MAIN DSKY		2016313-011				II	NOTE 11 C	
250		AMPLIFIER, REWORK		2014386				I	NOTE 11 B	FOR DIMENSIONS, SEE DASH 15 VALUES BELOW
249		TEMP MONITOR ASSY		2014313-011					NOTE 11 C	FOR DIMENSIONS, SEE DASH 17 VALUES BELOW
248		AGC JUNCTION ASSY		2014341-011					NOTE 11 B	FOR DIMENSIONS, SEE DASH 15 VALUES BELOW
247		AC INPUT PANEL ASSY		2014302-011						
246		SELF TEST ASSY		2014392-011						
245	R	TAPE PUNCH ASSEMBLY		2014039-011	NA		B	I	NOTE 11 B	FOR DIMENSIONS, SEE DASH 15 VALUES BELOW
244	R	TAPE READER ASSEMBLY		2014038-011	NA	NAS-9-497	B	I	NOTE 11 B	
243										
242										
241	R	APOLLO GUIDANCE COMPUTER GROUP		6003001	NA	NAS-9-497	A	I	NOTE 11 B	FOR DIMENSIONS, SEE DASH 19 VALUES BELOW
240	R	SELF TEST ASSEMBLY		2014366-011	NA		B	I	NOTE 11 B	FOR DIMENSIONS, SEE DASH 15 VALUES BELOW
239		POWER SUPPLY ASSY-115 V., 400 CYCLE		2014207-011						FOR DIMENSIONS, SEE DASH 17 VALUES BELOW
238		AC INPUT PANEL ASSY		2014043-011						
237		POWER CONTROL ASSY		2014079-011						FOR DIMENSIONS, SEE DASH 15 VALUES BELOW
236		DRAWER ASSY-X Y INTERFACE		2014040-011						
235		DRAWER ASSY RDC INTERFACE		2014045-011						
234		BUFFER CIRCUIT ASSY		2014254-011						
233		CONTROL & INTERFACE ASSY		2014204-011						
232		POWER CONTROL ASSY		2014044-011						FOR DIMENSIONS, SEE DASH 17 VALUES BELOW
231		DRAWER ASSY, PROGRAMMER & MONITOR		2014041-011						
230		CONNECTOR INTERFACE ASSY		2014272-011						FOR DIMENSIONS, SEE DASH 15 VALUES BELOW
229		CONNECTOR INTERFACE ASSY		2014047-011						
228		ANTENNA, TUNING CAPACITOR ASSY		2014209-011						
227		MOUNTING FIXTURE ASSY		2014006-011						FOR DIMENSIONS, SEE DASH 17 VALUES BELOW
226		POWER SUPPLY ASSY 3 VDC		2014234-011						FOR DIMENSIONS, SEE DASH 15 VALUES BELOW
225		PANEL ASSY — SIGNAL INTERFACE		2014010-011						
224		OSCILLOSCOPE ASSY		2014232-011						
223		AUXILIARY OUTLET ASSY		2014274-011						
222		FREQUENCY COUNTER		2014233-011						
221		POWER SUPPLY ASSY 10, 13, 28 VDC		2014235-011						
220		LOGIC DRAWER ASSY NO. 2		2014037-011						FOR DIMENSIONS, SEE DASH 17 VALUES BELOW
219		LOGIC DRAWER ASSY NO. 1		2014036-011						
218		COUNTER, ELECTRICAL ASSY		2014288-011						FOR DIMENSIONS, SEE DASH 15 VALUES BELOW
217		POWER SUPPLY ASSY		2014279-011						
216		TEST MOUNT ASSY		2014257-011						
215		UNIVERSAL DSKY PEDESTAL MOUNT		2014014-011						FOR DIMENSIONS, SEE DASH 17 VALUES BELOW
214		MAIN DSKY PEDESTAL MOUNT		2014343				I	NOTE 11 B	
213		SHIPPING CONTAINER, MAIN DSKY		1006229				II	NOTE 11 C	FOR DIMENSIONS, SEE DASH 18 VALUES BELOW
212		NAV DSKY		1006231						
211		AGC		1006230						
210		UNIVERSAL DSKY		1006422						
209		SHIPPING CONTAINER, AGC		1006421				II	NOTE 11 C	
208		UNIVERSAL DSKY HANDLING FIXTURE		2014013-011				I	NOTE 11 B	FOR DIMENSIONS, SEE DASH 15 VALUES BELOW
207		NAV DSKY HANDLING FIXTURE		1014377						FOR DIMENSIONS, SEE DASH 17 VALUES BELOW
206		MAIN DSKY HANDLING FIXTURE		1014334						
205		AGC HANDLING FIXTURE		2014282-011				I	NOTE 11 B	
204		OPERATION CONSOLE		2014024-011				II	NOTE 11 C	FOR DIMENSIONS, SEE DASH 18 VALUES BELOW
203		COMPUTER TEST SET		2014042-011		NAS-9-497				
202		DRAWER ASSY, COMPUTER SIMULATOR		2014048-011		FNP-12775				
201		AUXILIARY CALIBRATION CONSOLE		2014059-011		NAS-9-497				
200	R	AGC CALIBRATION CONSOLE		2014049-011	NA		B	II	NOTE 11 C	
21	R									
20	R	NA		NA	NA	NA	A	II	NOTE 11 C	2.000
19	R	NA		NA	NA	NA	A	I	NOTE 11 B	2.000
18	R	NA		NA	NA	NA	B	II	NOTE 11 C	4.187
17	P	NA		NA	NA	NA	B	I	NOTE 11 B	4.187
16	R	NA		NA	NA	NA	B	II	NOTE 11 C	2.000
13	R	NA		NA	NA	NA	B	I	NOTE 11 B	2.000

DASH NO.	B	C	D	E	F	G	H	J	K	L	M	N	P	R	S	T	U	V	W	Y	Z
20	1.312	1.687	1.375	.078	.031	.078	.093	.106 .113	.093	1.187	.750	.593	.453	1.015	.062	.187	.078	.875	.718	1.375	.218
19	1.312	1.687	1.375	.078	.031	.078	.093	NA	NA	1.187	.750	.593	.453	1.015	.062	.187	.078	.875	.718	1.375	.218
18	1.875	3.469	2.750	.156	.093	.156	.125	.106 .113	.125	1.625	1.032	.844	.656	1.406	.093	.344	.156	1.781	1.531	2.844	.312
17	1.875	3.469	2.750	.156	.093	.156	.125	NA	NA	1.625	1.032	.844	.656	1.406	.093	.344	.156	1.781	1.531	2.844	.312
16	1.312	1.687	1.375	.078	.031	.078	.093	.106 .113	.093	1.187	.750	.593	.453	1.015	.062	.187	.078	.875	.718	1.375	.218
13	1.312	1.687	1.375	.078	.031	.078	.093	NA	NA	1.187	.750	.593	.453	1.015	.062	.187	.078	.875	.718	1.375	.218

DASH NO.	AA	AB	AC	AD	AE	AF	AG	AH	AJ	AK	AL	AM	AN	AP	AR
20	1.156	1.843	.048	NA	.875	.305	.078	.312	1.687	.078	NA	.078	.312	.187	1.843
19	NA	NA	.048	.031	.875	.305	.078	.312	1.687	.078	NA	.078	.312	.187	NA
18	1.562	3.875	.062	NA	1.219	.500	.156	.719	3.469	.156	NA	.156	.719	.344	3.875
17	NA	NA	.062	.062	1.219	.500	.156	.719	3.469	.156	NA	.156	.719	.344	NA
16	1.156	1.843	.048	NA	.875	.305	.078	.312	1.687	.078	NA	.078	.312	.187	1.843
13	NA	NA	.048	.031	.875	.305	.078	.312	1.687	.078	NA	.078	.312	.187	NA

THIS SHEET ADDED

⑥ REPLACES REV F WITH CHANGE

RAYTHEON DASH NUMBERS

NOTES FOR TABLE

STYLE A IS FOR G & N SYSTEM
STYLE B IS FOR GROUND SUPPORT EQUIPMENT
TYPE I IS WITHOUT MOUNTING HOLES
TYPE II IS WITH MOUNTING HOLES

MASTER

QTY REQD	PART OR IDENTIFYING NO.	MATERIAL OR NOTES	NOMENCLATURE OR DESCRIPTION	FIND NO.

LIST OF MATERIALS

AS APPLICABLE
NEXT ASSY | USED ON
APPLICATION

UNLESS OTHERWISE SPECIFIED
DIMENSIONS ARE IN INCHES
CAPACITOR VALUES ARE IN µf
RESISTOR VALUES ARE IN OHMS
TOLERANCES ON
FRACTIONS ± — DECIMALS ±.005 ANGLES ± —
DO NOT SCALE THIS DRAWING

MATERIAL
SEE NOTE M

MIT
INSTRUMENTATION LAB
CAMBRIDGE, MASS.

DRAWN R. A. Jonas 7-16-65
CHECKED 7-22-65
APPROVED
APPROVED
APPROVED MIT
APPROVED MSC
DATE

MANNED SPACECRAFT CENTER
HOUSTON, TEXAS

NAMEPLATES,
APOLLO GEN-GSE
(STANDARDS)

CODE IDENT NO. 80230
SIZE E
DRAWING NO. 1004260
SCALE NONE
SHEET 3 OF 6

NOTICE – WHEN GOVERNMENT DRAWINGS, SPECIFICATIONS, OR OTHER DATA ARE USED FOR ANY PURPOSE OTHER THAN IN CONNECTION WITH A DEFINITELY RELATED GOVERNMENT PROCUREMENT OPERATION, THE UNITED STATES GOVERNMENT THEREBY INCURS NO RESPONSIBILITY NOR ANY OBLIGATION WHATSOEVER; AND THE FACT THAT THE GOVERNMENT MAY HAVE FORMULATED, FURNISHED, OR IN ANY WAY SUPPLIED THE SAID DRAWINGS, SPECIFICATIONS OR OTHER DATA IS NOT TO BE REGARDED BY IMPLICATION OR OTHERWISE AS IN ANY MANNER LICENSING THE HOLDER OR ANY OTHER PERSON OR CORPORATION, OR CONVEYING ANY RIGHTS OR PERMISSION TO MANUFACTURE, USE, OR SELL ANY PATENTED INVENTION THAT MAY IN ANY WAY BE RELATED THERETO.

REVISIONS 02767

SYM	ZONE	DESCRIPTION	DR	CHK	DATE	APPROVED
G		REPLACES REV F WITH CHANGE PER TDRR 20854.			7/22/65	WK
H		REVISED PER TDRR 20892			8/3/65	WK
J		REVISED PER TDRR 20904			8/3/65	WK
K		REVISED PER TDRR 21379			8/16/65	WK
L		REVISED PER TDRR 21410			8/23/65	WK
M		REVISED PER TDRR 21993				
N		REVISED PER TDRR 22621			10/1/65	
P		REVISED PER TDRR 22671				
R		REVISED PER TDRR 22672				
S		REVISED PER TDRR 22750				WK
T		REVISED PER TDRR 22823				
U		REVISED PER TDRR 23072			11-3-65	[illegible]
V		REVISED PER TDRR 23521			10-26-65	WK
W		REVISED PER TDRR 23824	RAJ		11-9-65	WK
Y		REVISED PER TDRR 24018	RAJ		11-16-65	WK
Z		REVISED PER TDRR 24040	RAJ		11-19-65	WK
AA		REVISED PER TDRR 24060	RAJ.		11-19-65	WK
AB		REVISED PER TDRR 24868	RAJ		12-22-65	WK
AC		REVISED PER TDRR 24973	RAJ		1-4-66	WK
AD		REVISED PER TDRR 25065	RAJ		1-18-66	[illegible]
AE		REVISED PER TDRR 25672	RAJ		2-4-66	WK
AF		REVISED PER TDRR 25671	RAJ		2-4-66	WK
AG		REVISED PER TDRR 26110	RAJ		2-15-66	[illegible]

DASH NO.	P/C	PART NAME	REMARKS	PART NO.	SER. NO.	CONT. NO.	STYLE	TYPE	MATERIAL	A
199	AC									
198	AC									
183	AC	INSTALLING TOOL, ELEC. CONN		1902586-011		NAS9-497	B	II	NOTE 11C	FOR DIMENSIONS, SEE DASH 102 VALUE BELOW
182	AC	ADPT MODULE, P.S.A.		6900088-011		NAS9-497	B	II	NOTE 11C	FOR DIMENSIONS, SEE DASH 141 VALUES BELOW
181										
180	AC	ADPT MODULE, P.S.A.		1902431-031		NAS-9-497	B	II		FOR DIMENSIONS, SEE DASH 121 VALUES BELOW
179	AC	MOUNTING PLATE, IMU/PTA		6900083-011						FOR DIMENSIONS SEE DASH 144 VALUES BELOW
178	AC	MOUNTING PLATE, COMPONENT		6900007-021						
177	AC	FIX., MOUNTING, SUBSYSTEM		2900070-021						
176	AC	FIX., MOUNTING, G AND N		2900067-021						
175	AC	CSL, COOL. AND PWR, G AND N		1902134-031						
174	AC	FIX., HAND., C/M AND LEM CDU		2900999-011					NOTE 11C	FOR DIMENSIONS, SEE DASH 141 VALUES BELOW
173	AC	FIX., HANDLING, C/M PSA		2900998-011						
172	AC	CAGING ELECTRONICS, GYRO		2900029-021						
171	AC	DISTRIBUTION BOX, GSE		2900024-021						
170	AC	ANALYZER, OPTICS-INERTIAL		2900023-021						
169	AC	ADPT, TEST POINT, P.S.A.		2900037-021						
168	AC	TEST SELECTOR		2900028-021						
167	AC	TEST CONTROL		2900027-021						
166	AC	PANEL, MONITOR		2900031-021						
165	AC	TERM. BOARD STORAGE DRAWER		2900927-011						
164	AC	INPUT/OUTPUT PANEL		2900926-011						
163	AC	CONTROL PANEL		2900896-011						
162	AC	CSL. CAL AND TEST, SCM/PSAAM		2900895-011						FOR DIMENSIONS, SEE DASH 144 VALUES BELOW
161	AC	FIX., LIFT AND HAND., IMU		1015462-011						FOR DIMENSIONS, SEE DASH 141 VALUES BELOW
160	AC	FIX., HAND., G AND N HARNESS		1901846-031						FOR DIMENSIONS, SEE DASH 144 VALUES BELOW
159	AC	BATTERY POWER PACK		1900011-031			B	II	NOTE 11C	
158	AC	COUPLING DATA UNIT ASSEMBLY C/M		2007222			A	I	NOTE 11B	FOR DIMENSIONS, SEE DASH 100 VALUES BELOW
157	AC	COUPLING DATA UNIT ASSEMBLY - LEM		2007222						
156	AC	POWER & SERVO ASSEMBLY C/M		2007200						
155	AC	PIPA ELECTRONICS ASSEMBLY		2007201						
154	AC	PULSE TORQUE ASSEMBLY - LEM		6007000						
153	AC	POWER & SERVO ASSEMBLY - LEM		6007200			A	I	NOTE 11B	
152	AC	CONT PNL, RSVR CKT TESTER		2900770-011			B	II	NOTE 11C	FOR DIMENSIONS, SEE DASH 141 VALUES BELOW
151	AC	TESTER, RESOLVER CIRCUIT		2900708-011						
150	AC	JUNCTION BOX, P.S.A./G.S.E.		1901933-021						FOR DIMENSIONS, SEE DASH 144 VALUES BELOW
149	AC	BATTERY PACK, LIFTING		2900812-011						FOR DIMENSIONS, SEE DASH 141 VALUES BELOW
148	AC	MOUNTING PLATE, COMPONENT		6900007-011						FOR DIMENSIONS, SEE DASH 144 VALUES BELOW
147	AC	MOUNTING PLATE, COMPONENT		2900677-011						
146	AC	CART, TRANS, G AND N		1900009-041						
145	AC	CONTAINER, SHIPPING, IMU		1900010-021		NAS9-497	B	II	NOTE 11C	
144	AC	FIX., MOUNTING, G AND N		1902204-021			B	II	NOTE 11C	4.25
143	AC	CSL, COOL. AND PWR, G AND N		1902134-021						4.25
142	AC	ANALYZER, OPTICS-INERTIAL		2900023-011						4.25
141	AC	CONT, TEMP, PORTABLE		2900060-011						2.125
140	AC	TESTER, CKT, IMU/CDU RSVR		2900286-011						4.25
139	AC	SIMULATOR, LD/SIG, CDU		2900285-011						
138	AC	SIMULATOR, LD/SIG, OPTICS		1902023-021						
137	AC	FIX., MOUNTING, IMU/NAV BASE		6900003-011						
136	AC	FIXTURE, OPTICS/NAV BASE		2900072-011						
135	AC	FIX., MOUNTING, SUB SYSTEM		2900070-011						
134	AC	FIX., HAND., G AND N HARNESS		2900069-011						
133	AC	CNTR, SHIPPING, NAV BASE		2900068-011						
132	AC	FIX., MOUNTING, G AND N		2900067-011						
131	AC	SIMULATOR, LD/SIG, IMU/CDU		2900062-011						
130	AC	TESTER, GYRO WHEEL		2900061-011						
129	AC	COOLANT SUPPLY		1902133-021						
128	AC	TABLE, ROTARY		1900926-021						4.125
127	AC	FIX., HAND., OPTICS		2900074-011						2.125
126	AC	FIXTURE, MTG, PTA/PEA.		2900066-011						
125	AC	CONT, TEMP, IMU LIFTING		2900063-011						
124	AC	FIXTURE, HANDLING, IMU		2900064-011						
123	AC	CONT, OPTICS, REMOTE		1902046-021						
122	AC	TEST CONTROL		1902009-021						
121	AC	ADPT MODULE, P.S.A.		1902431-021						
120	AC	BRIDGE, DECADE ERROR		2900128-011						
119	AC	PWR SUP, ELECTRONICS		2900012-011						
118	AC	PWR SUP, RELAY AND LAMP		1900049-031						
117	AC	CONSOLE, OSCILLOGRAPH		1900000-021						
116	AC	ADPT MODULE, P.S.A.		1902431-011						
115	AC	ADPT, TEST POINT, PTA/PEA.		2900145-011						
114	AC	ADPT, TEST POINT, P.S.A.		2900037-011						
113	AC	CONTROL, GIMBAL POSITION		2900036-011						
112	AC	SELECTOR, SIGNAL, PRIMARY		2900035-011						
111	AC	SEL, SIG, OSCILLOGRAPH		2900034-011						
110	AC	PANEL, PWR SUP AND LOAD		2900033-011						
109	AC	PANEL, MONITOR		2900031-011						
108	AC	PANEL, AUXILIARY INPUT		2900030-011						
107	AC	CAGING ELECTRONICS, GYRO		2900029-011						
106	AC	TEST SELECTOR		2900028-011						
105	AC	TEST CONTROL		2900027-011						
104	AC	MONITOR AND CONTROL, TEMP		2900026-011						
103	AC	DISTRIBUTION BOX, GSE		2900024-011						
102	AC	VOLTMETER, DIGITAL		2900007-011			B	II	NOTE 11C	2.125
101	AC	NAVIGATION BASE ASSEMBLY - LEM		6899950		NAS-9-497	A	I	NOTE 11B	2.000
100	AC	NAVIGATION BASE ASSEMBLY		2899982		NAS-9-497	A	I	NOTE 11B	2.000

DASH NO.	A	B	C	D	E	F	G	H	J	K	L	M	N	P	R	S	T	U	V	W	Y	Z	AA	AB	AC	AD	AE	AF	AG	AH	AJ	AK	AL	AM	AN	AP	AR
144	4.25	1.812	3.250	NA	.125	.062	.12	.156	.188 .194	.125	1.625	1.140	.890	.640	1.390	.125	.171	.125	1.875	1.687	2.625	.250	1.562	3.843	.093	NA	NA	.359	.125	.437	3.688	NA	3.687	.093	.40	.25	3.875
143	4.25	1.812	3.250		.125	.062	.12	.156		.125	1.625	1.140	.890	.640	1.390	.125	.171	.125	1.875	1.687	2.625	.250	1.562	3.843	.093			.359	.125	.437	3.688		3.687	.093	.40	.25	3.875
142	4.25	1.812	3.250		.125	.062	.12	.156		.125	1.625	1.140	.890	.640	1.390	.125	.171	.125	1.875	1.687	2.625	.250	1.562	3.843	.093			.359	.125	.437	3.688		3.687	.093	.40	.25	3.875
141	2.125	.968	1.718		.093	.031	.06	.093		.093	.858	.608	.484	.358	.733	.077	.116	.062	.937	.875	1.343	.125	.781	1.892	.046			.209	.093	.250	1.875		1.840	.046	.23	.16	1.938
140	4.25	1.812	3.250		.125	.062	.12	.156		.125	1.625	1.140	.890	.640	1.390	.125	.171	.125	1.875	1.687	2.625	.250	1.562	3.843	.093			.359	.125	.437	3.688		3.687	.093	.40	.25	3.875
128	4.125	1.812	3.250		.125	.062	.12	.156		.125	1.625	1.140	.890	.640	1.390	.125	.171	.125	1.875	1.687	2.625	.250	1.562	3.843	.093			.359	.125	.437	3.688		3.687	.093	.40	.25	3.875
127	2.125	.968	1.718		.093	.031	.06	.093		.093	.858	.608	.484	.358	.733	.077	.116	.062	.937	.875	1.343	.125	.781	1.892	.046			.209	.093	.250	1.875		1.840	.046	.23	.16	1.938
102	2.125	.968	1.718	NA	.093	.031	.06	.093	.188 .194	.093	.858	.608	.484	.358	.733	.077	.116	.062	.937	.875	1.343	.125	.781	1.892	.046	NA	NA	.209	.093	.250	1.875	NA	1.840	.046	.23	.16	1.938
101	2.000	1.312	1.906	1.375	.078	.048	.078	.093	NA	NA	1.125	.750	.593	.453	1.015	.062	.187	.078	.875	.718	1.375	.218	NA	NA	.048	.031	.875	.305	.078	.531	1.906	.078	NA	.078	.531	.187	NA
100	2.000	1.312	1.906	1.375	.078	.048	.078	.093	NA	NA	1.125	.750	.593	.453	1.015	.062	.187	.078	.875	.718	1.375	.218	NA	NA	.048	.031	.875	.305	.078	.531	1.906	.078	NA	.078	.531	.187	NA

THIS SHEET ADDED

Ⓖ REPLACES REV F WITH CHANGE

A C ELECTRONICS DASH NUMBERS

NOTES FOR TABLE

STYLE A IS FOR G&N SYSTEM
STYLE B IS FOR GROUND SUPPORT EQUIPMENT
TYPE I IS WITHOUT MOUNTING HOLES
TYPE II IS WITH MOUNTING HOLES

QTY REQD	PART OR IDENTIFYING NO.	MATERIAL OR NOTES	NOMENCLATURE OR DESCRIPTION	FIND NO.

LIST OF MATERIALS

NEXT ASSY	USED ON
AS APPLICABLE	

APPLICATION

UNLESS OTHERWISE SPECIFIED
DIMENSIONS ARE IN INCHES
CAPACITOR VALUES ARE IN μf
RESISTOR VALUES ARE IN OHMS
TOLERANCES ON
FRACTIONS ± — DECIMALS ±.005 ANGLES ± —
DO NOT SCALE THIS DRAWING

MATERIAL
SEE NOTE 11

MIT
INSTRUMENTATION LAB
CAMBRIDGE, MASS.

DRAWN R A Jonge 7-16-65
CHECKED A J Lunge 7-22-65
APPROVED
APPROVED W Kupfer [illegible]
APPROVED MIT W Kupfer [illegible]
APPROVED MSC [illegible]
DATE

MANNED SPACECRAFT CENTER
HOUSTON, TEXAS

NAMEPLATES,
APOLLO G&N-GSE
(STANDARDS)

CODE IDENT NO. 80230
SIZE E
DRAWING NO. 1004260
SCALE NONE
SHEET 4 OF 6

1004260 AG

MASTER

NOTICE - WHEN GOVERNMENT DRAWINGS, SPECIFICATIONS, OR OTHER DATA ARE USED FOR ANY PURPOSE OTHER THAN IN CONNECTION WITH A DEFINITELY RELATED GOVERNMENT PROCUREMENT OPERATION, THE UNITED STATES GOVERNMENT THEREBY INCURS NO RESPONSIBILITY NOR ANY OBLIGATION WHATSOEVER; AND THE FACT THAT THE GOVERNMENT MAY HAVE FORMULATED, FURNISHED, OR IN ANY WAY SUPPLIED THE SAID DRAWINGS, SPECIFICATIONS OR OTHER DATA IS NOT TO BE REGARDED BY IMPLICATION OR OTHERWISE AS IN ANY MANNER LICENSING THE HOLDER OR ANY OTHER PERSON OR CORPORATION, OR CONVEYING ANY RIGHTS OR PERMISSION TO MANUFACTURE, USE, OR SELL ANY PATENTED INVENTION THAT MAY IN ANY WAY BE RELATED THERETO.

5

REVISIONS 02768

SYM	ZONE	DESCRIPTION	DR	CHK	DATE	APPROVED
G		REPLACES REV F WITH CHANGE PER TDRR 20854			7/24/65	WK
H		REVISED PER TDRR 20892			8/3/65	WK
J		REVISED PER TDRR 20904			9/3/65	WK
K		REVISED PER TDRR 21379			[illegible]	WK
L		REVISED PER TDRR 21410			[illegible]	WK
M		REVISED PER TDRR 21993				
N		REVISED PER TDRR 22621			10/	
P		REVISED PER TDRR 22671			1/1/	
R		REVISED PER TDRR 22672				
S		REVISED PER TDRR 22750			/65	WK
T		REVISED PER TDRR 22823				
U		REVISED PER TDRR 23072			10-22-65	[illegible]
V		REVISED PER TDRR 23521			10-26-65	WK
W		REVISED PER TDRR 23824	RAJ		11-9-65	WK
Y		REVISED PER TDRR 24018	RAJ		11-16-65	WK
Z		REVISED PER TDRR 24040	RAJ		11-19-65	WK
AA		REVISED PER TDRR 24060	RAJ		11-19-65	WK
AB		REVISED PER TDRR 24868	RAJ		12-22-65	WK
AC		REVISED PER TDRR 24973	RAJ		1-4-66	WK
AD		REVISED PER TDRR 25065	RAJ		1-8-66	[illegible]
AE		REVISED PER TDRR 25672	RAJ		2-4-66	WK
AF		REVISED PER TDRR 25671	RAJ		2-4-66	WK
AG		REVISED PER TDRR 26110	RAJ		2-15-66	WK

499	MIT	
498		

CASH NO.	P/C	PART NAME	REMARKS	PART NO.	SER. NO.	CONT. NO.	STYLE	TYPE	MATERIAL	A	B	C	D	E	F	G	H	J
401	MIT	COMPUTER ASSY		2003100		NAS-9-497	A	I	NOTE 11 B	2.000	1.312	1.906	1.375	.078	.048	.078	.093	NA
400	MIT	LIFTING SLING-G&N INST. QUAL. FIX. & AZM. REF. FIX.		1021640		NAS-9-4065	B	II	NOTE 11 C	2.000	1.312	1.687	1.375	.078	.048	.078	.093	[illegible]

CASH NO.	K	L	M	N	P	R	S	T	U	V	W	Y	Z	AA	AB	AC	AD	AE	AF	AG	AH	AJ	AK	AL	AM	AN	AP	AR
401	NA	1.125	.750	.593	.453	1.015	.062	.187	.078	.875	.718	1.375	.218	NA	NA	.048	.031	.875	.305	.078	.531	1.906	.078	NA	.078	.531	.187	NA
400	.093	1.187	.750	.593	.453	1.015	.062	.187	.078	.875	.718	1.375	.218	1.156	1.843	.048	NA	.875	.305	.078	.312	1.687	.110	1.830	.070	.275	.180	1.844

MIT DASH NUMBERS

THIS SHEET ADDED

Ⓖ REPLACES REV F WITH CHANGE

NOTES FOR TABLE

STYLE A IS FOR G&N SYSTEM
STYLE B IS FOR GROUND SUPPORT EQUIPMENT
TYPE I IS WITHOUT MOUNTING HOLES
TYPE II IS WITH MOUNTING HOLES

MASTER

QTY REQD	PART OR IDENTIFYING NO.	MATERIAL OR NOTES	NOMENCLATURE OR DESCRIPTION	FIND NO.

LIST OF MATERIALS

NEXT ASSY	USED ON
AS APPLICABLE	

APPLICATION

UNLESS OTHERWISE SPECIFIED
DIMENSIONS ARE IN INCHES
CAPACITOR VALUES ARE IN µf
RESISTOR VALUES ARE IN OHMS
TOLERANCES ON
FRACTIONS ± — DECIMALS ±.005 ANGLES ± —
DO NOT SCALE THIS DRAWING

MATERIAL
SEE NOTE 11

MIT
INSTRUMENTATION LAB
CAMBRIDGE, MASS.

MANNED SPACECRAFT CENTER
HOUSTON, TEXAS

DRAWN R A Jurcas 7-16-65
CHECKED
APPROVED
APPROVED
APPROVED MIT
APPROVED MSC
DATE

NAMEPLATES, APOLLO G&N-GSE (STANDARDS)

CODE IDENT NO. 80230
SIZE E
DRAWING NO. 1004260
SCALE NONE
SHEET 5 OF 6

NOTICE – WHEN GOVERNMENT DRAWINGS, SPECIFICATIONS, OR OTHER DATA ARE USED FOR ANY PURPOSE OTHER THAN IN CONNECTION WITH A DEFINITELY RELATED GOVERNMENT PROCUREMENT OPERATION, THE UNITED STATES GOVERNMENT THEREBY INCURS NO RESPONSIBILITY NOR ANY OBLIGATION WHATSOEVER; AND THE FACT THAT THE GOVERNMENT MAY HAVE FORMULATED, FURNISHED, OR IN ANY WAY SUPPLIED THE SAID DRAWINGS, SPECIFICATIONS OR OTHER DATA IS NOT TO BE REGARDED BY IMPLICATION OR OTHERWISE AS IN ANY MANNER LICENSING THE HOLDER OR ANY OTHER PERSON OR CORPORATION, OR CONVEYING ANY RIGHTS OR PERMISSION TO MANUFACTURE, USE, OR SELL ANY PATENTED INVENTION THAT MAY IN ANY WAY BE RELATED THERETO.

REVISIONS 02768

SYM	ZONE	DESCRIPTION	DR	CHK	DATE	APPROVED
AG		CHANGED NUMBER OF SHEETS FROM 5 TO 6 PER TDRR 26110.	RAJ		2-15-66	

DASH NO.	P/C	PART NAME	REMARKS	PART NO.	SER NO.	CONT NO.	STYLE	TYPE	MATERIAL	A	B	C	D	E	F	G	H	J	K	L	M	N	P	R	S	T	U	V	W	Y	Z	AA	AB	AC	AD	AE	AF	AG	AH	AJ	AK	AL	AM	AN	AP	AR
599	AC																																													
598	AC																																													
501	AC																																													
500	AC																																													

A C ELECTRONICS DASH NUMBERS

(AG) THIS SHEET ADDED

NOTES FOR TABLE

STYLE A IS FOR G&N SYSTEM
STYLE B IS FOR GROUND SUPPORT EQUIPMENT
TYPE I IS WITHOUT MOUNTING HOLES
TYPE II IS WITH MOUNTING HOLES

QTY REQD	PART OR IDENTIFYING NO.	MATERIAL OR NOTES	NOMENCLATURE OR DESCRIPTION	FIND NO.

LIST OF MATERIALS

AS APPLICABLE
NEXT ASSY | USED ON
APPLICATION

UNLESS OTHERWISE SPECIFIED
DIMENSIONS ARE IN INCHES
CAPACITOR VALUES ARE IN µf
RESISTOR VALUES ARE IN OHMS
TOLERANCES ON
FRACTIONS ± — DECIMALS ±.005 ANGLES ± —
DO NOT SCALE THIS DRAWING

MATERIAL
SEE NOTE II

MIT
INSTRUMENTATION LAB
CAMBRIDGE, MASS.

DRAWN R. A. Jones 2-15-66
CHECKED 2-15-66
APPROVED
APPROVED
APPROVED MIT
APPROVED MSC
DATE

MANNED SPACECRAFT CENTER
HOUSTON, TEXAS

NAMEPLATES,
APOLLO G&N-GSE
(STANDARDS)

CODE IDENT NO. 80230
SIZE E
DRAWING NO. 1004260
SCALE NONE
SHEET 6 OF 6

1004260 AG

NOTICE - WHEN GOVERNMENT DRAWINGS, SPECIFICATIONS, OR OTHER DATA ARE USED FOR ANY PURPOSE OTHER THAN IN CONNECTION WITH A DEFINITELY RELATED GOVERNMENT PROCUREMENT OPERATION, THE UNITED STATES GOVERNMENT THEREBY INCURS NO RESPONSIBILITY NOR ANY OBLIGATION WHATSOEVER; AND THE FACT THAT THE GOVERNMENT MAY HAVE FORMULATED, FURNISHED, OR IN ANY WAY SUPPLIED THE SAID DRAWINGS, SPECIFICATIONS, OR OTHER DATA IS NOT TO BE REGARDED BY IMPLICATION OR OTHERWISE AS IN ANY MANNER LICENSING THE HOLDER OR ANY OTHER PERSON OR CORPORATION, OR CONVEYING ANY RIGHTS OR PERMISSION TO MANUFACTURE, USE, OR SELL ANY PATENTED INVENTION THAT MAY IN ANY WAY BE RELATED THERETO.

NOTES:

1. INTERPRET DRAWING IN ACCORDANCE WITH STANDARDS PRESCRIBED IN MIL-D-70327.
2. DIMENSIONS ON EACH VIEW APPLY TO ALL VIEWS. (WITH THE EXCEPTION OF MOUNTING HOLES).
3. FORMATS ILLUSTATED WILL BE APPLICABLE TO ALL ITEMS REQUIRING NAMEPLATES BELOW END ITEM DESIGNATION (SYSTEMS, ASSEMBLIES, ETC.)
4. PLATE BACKGROUND TO BE LUSTERLESS BLACK PER FED-STD-595, COLOR 37038. BORDER, MARKING AND LETTERING TO BE NATURAL METAL,(ANODIZED ALUMINUM).
5. MARKING METHOD TO BE DIE STAMPING, ETCHING OR ENGRAVING IN ACCORDANCE WITH MIL P 19834.
6. LETTERING STYLE TO BE GOTHIC,(SANS SERIFS), AND NUMBERS TO BE ARABIC.
7. WHERE LOCATING DIMENSIONS ARE NOT SHOWN, CHARACTERS SHALL BE SYMMETRICALLY POSITIONED.
8. IDENTIFY WITH DRAWING NUMBER PER ND1002019.
9. WHEN "AUTO MARK" METAL MARKING TYPEWRITER IS USED TO ADD DATA TO BLANK SPACES, TYPE SIZE IS TO BE SELECTED FROM DIMENSIONS U, AC AND AM.
10. NASA SYMBOL IS TO BE PROPORTIONAL TO NAMEPLATE IN RATIO OF 1 TO 5 WITH DIMENSION A VALUE AND IS TO HAVE NATURAL BACKGROUND. NASA SYMBOL LETTERS LETTERING AND FEATHER TO BE BLACK,(OR WHITE FOR SILK SCREENING). WHERE BLACK FEATHER PROTRUDES INTO BLACK BACKGROUND, A MINIMUM OUTLINE OF NATURAL BACKGROUND SHALL EXIST.
11. NAMEPLATES WILL BE APPLIED BY METHODS LISTED BELOW, SHOWN IN ORDER OF PREFERENCE, (I.E., FOR RELIABILITY AND WEIGHT).
    - A - STENCIL OR SILK SCREEN DIRECTLY ON EQUIPMENT USING INK PER SCD 1010920,(WHITE OR BLACK).
    - B - ALUMINUM FOIL,(STYLE A OR B, TYPE I): FOIL SHALL BE .0030 ±.0005 THICK PER MIL-A-148. FOIL SHALL HAVE NO ADHESIVE BACKING. FOIL SHALL BE BONDED PER ND 1002219,(METHOD II). FOIL SHALL BE CLEAR ANODIZED PER MIL-A-8625, TYPE II.
    - C - PLATE, (STYLE A OR B, TYPE II): MATERIAL: QQ-A-250, TEMPER O OR H14, TYPE 1100, ALUMINUM ALLOY, .032 THICK. ANODIZE PER MIL-A-8625, TYPE II. ALUMINUM PLATE MUST BE FREE FROM BURRS AND SHARP CORNERS, MOUNTED WITH APPLICABLE SIZE FASTENERS.
12. NAMEPLATES SHALL BE CAPABLE OF MEETING APPLICABLE REQUIREMENTS OF MIL-M-13231.
13. ON DIMENSION TABLES SHOWN ON PAGES 2,3,4 AND 5, NA MEANS, "NOT APPLICABLE".

REVISIONS 02768

	SYM	ZONE	DESCRIPTION	DR	CHK	DATE	APPROVED
	G		REPLACES REV F WITH CHANGE PER TDRR 20854			7/23/65	WK
★	H		REVISED PER TDRR 20892			[illegible]	WK
	J		REVISED PER TDRR 20904			[illegible]	WK
	K		REVISED PER TDRR 21379			[illegible]	WK
	L		REVISED PER TDRR 21410			[illegible]	WK
★	M		REVISED PER TDRR 21993				
★	N		REVISED PER TDRR 22621			[illegible]	
★	P		REVISED PER TDRR 22671			[illegible]	
★	R		REVISED PER TDRR 22672				
★	S		REVISED PER TDRR 22750			[illegible] 65	WK
	T		REVISED PER TDRR 22823				
★	U		REVISED PER TDRR 23072			10-28-65	[illegible]
	V		REVISED PER TDRR 23521			10-27-65	WK
★	W		REVISED PER TDRR 23824	RAJ		11-9-65	WK
★	Y		REVISED PER TDRR 240 8	RAJ		11-16-65	WK
★	Z		REVISED PER TDRR 24040	RAJ		11-19-65	WK
Ⓜ	AA		REVISED PER TDRR 24060	RAJ		11-19-65	WK
Ⓜ	AB		REVISED PER TDRR 24868	RAJ		12-22-65	WK
Ⓜ	AC		REVISED PER TDRR 24973	RAJ		1-4-66	WK
Ⓜ	AD		REVISED PER TDRR 25065.	RAJ		-18-66	[illegible]
★	AE		REVISED PER TDRR 25672	RAJ		2-4-66	WK
Ⓐ	AF		REVISED PER TDRR 25671	RAJ		2-4-66	WK
	AG		REVISED PER TDRR 26110	RAJ		2-15-66	WK
★	AH		REVISED PER TDRR 26372	"		3-16-66	[illegible]
★	AJ		REVISED PER TDRR 26425	"		3-16-66	[illegible]
★	AK		REVISED PER TDRR 26743	"		3-16-66	[illegible]
	AL		REVISED PER TDRR 26798	"		3-16-66	[illegible]

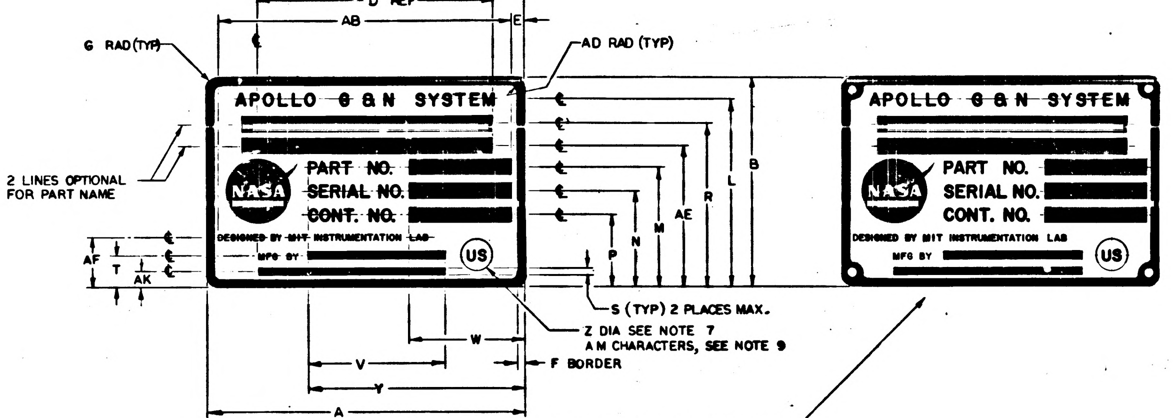
C
D REF
AB
E
G RAD (TYP)
AD RAD (TYP)
APOLLO G & N SYSTEM
PART NO.
SERIAL NO.
CONT. NO.
DESIGNED BY MIT INSTRUMENTATION LAB
MFG BY
US
NASA
2 LINES OPTIONAL FOR PART NAME
AF
T
AK
B
L
R
AE
M
N
P
S (TYP) 2 PLACES MAX.
Z DIA SEE NOTE 7
AM CHARACTERS, SEE NOTE 9
W
V
Y
A
F BORDER

FOR G AND N SYSTEM
STYLE A

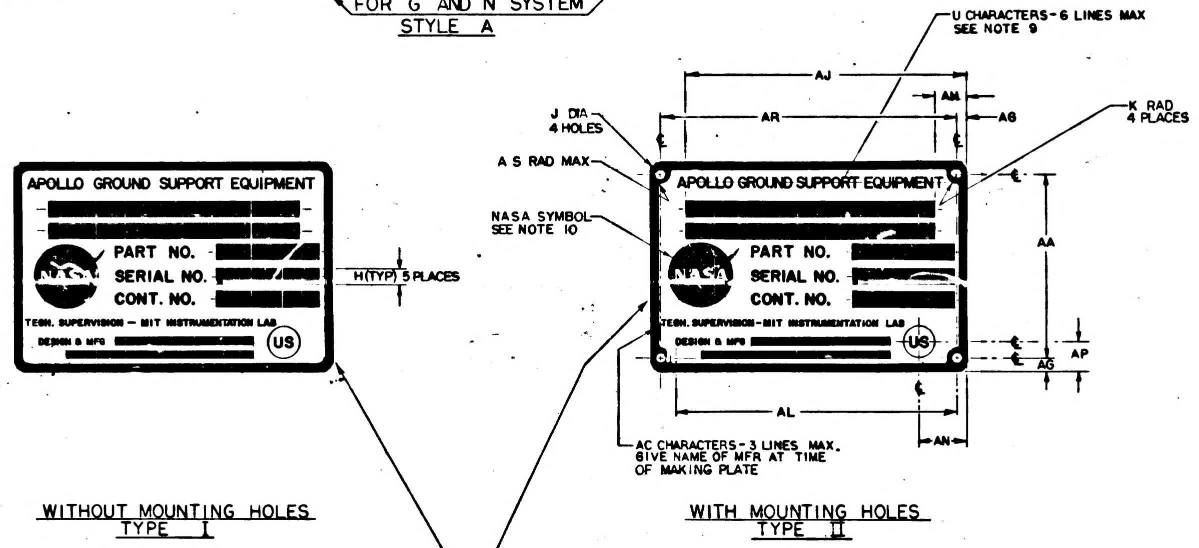
U CHARACTERS - 6 LINES MAX
SEE NOTE 9
AJ
AM
AR
AG
J DIA 4 HOLES
K RAD 4 PLACES
A S RAD MAX
NASA SYMBOL SEE NOTE 10
APOLLO GROUND SUPPORT EQUIPMENT
PART NO.
SERIAL NO.
CONT. NO.
TECH. SUPERVISION - MIT INSTRUMENTATION LAB
DESIGN & MFG
US
NASA
H (TYP) 5 PLACES
AA
AP
AG
AL
AN
AC CHARACTERS - 3 LINES MAX.
GIVE NAME OF MFR AT TIME OF MAKING PLATE

WITHOUT MOUNTING HOLES
TYPE I

WITH MOUNTING HOLES
TYPE II

FOR GROUND SUPPORT EQUIPMENT
STYLE B

SUGGESTED PROPORTIONS FOR NAMEPLATE DIMENSIONS.
1. SELECT NAMEPLATE LENGTH, DIMENSION "A", TO FIT DESIGN NEEDS.
2. DIMENSIONS B THRU AS ON LINE 1 BELOW ARE PROPORTIONAL TO "A" BY MULTIPLIERS SHOWN IN LINE 2 BELOW.

1.	A	B	C	D	E	F	G	H	J	K	L	M	N	P	R	S	T
2.	1.000 A	.6563 A	.8438 A	.6875 A	.0391 A	.0240 A	.0391 A	.0469 A	.0547 A	.0469 A	.5938 A	.3750 A	.2969 A	.2187 A	.5079 A	.0313 A	.0938 A

1.	U	V	W	Y	Z	AA	AB	AC	AD	AE	AF	AG	AH	AJ	AK	AL	AM	AN	AP	AR	AS
2.	.0391 A	.4375 A	.3594 A	.6875 A	.1094 A	.5781 A	.9219 A	.0240 A	.0156 A	.4375 A	.1525 A	.0391 A	.1563 A	.8438 A	.0548 A	.8659 A	.0391 A	.1563 A	.0938 A	.9219 A	.0151 A

Ⓖ REPLACES REV F WITH CHANGE

QTY REQD	PART OR IDENTIFYING NO.	MATERIAL OR NOTES	NOMENCLATURE OR DESCRIPTION	FIND NO.

LIST OF MATERIALS

AS APPLICABLE	
NEXT ASSY	USED ON
APPLICATION	

UNLESS OTHERWISE SPECIFIED
DIMENSIONS ARE IN INCHES
CAPACITOR VALUES ARE IN μf
RESISTOR VALUES ARE IN OHMS
TOLERANCES ON
FRACTIONS ± — DECIMALS ±.005 ANGLES ± —
DO NOT SCALE THIS DRAWING

MATERIAL
SEE NOTE 11

MIT
INSTRUMENTATION LAB
CAMBRIDGE, MASS.

DRAWN R A Jones 7/16/65
CHECKED A. J. [illegible] 9-22-65
APPROVED
APPROVED W[illegible] 9/21/65
APPROVED MIT W[illegible] 9/21/65
APPROVED MSC [illegible] 9/22/65
DATE

MANNED SPACECRAFT CENTER
HOUSTON, TEXAS

NAMEPLATES,
APOLLO G&N-GSE
(STANDARDS)

CODE IDENT NO. 80230
SIZE E
DRAWING NO. 1004260
SCALE NONE
SHEET 1 OF 6

1004260

MASTER

NOTICE – WHEN GOVERNMENT DRAWINGS, SPECIFICATIONS, OR OTHER DATA ARE USED FOR ANY PURPOSE OTHER THAN IN CONNECTION WITH A DEFINITELY RELATED GOVERNMENT PROCUREMENT OPERATION, THE UNITED STATES GOVERNMENT THEREBY INCURS NO RESPONSIBILITY NOR ANY OBLIGATION WHATSOEVER; AND THE FACT THAT THE GOVERNMENT MAY HAVE FORMULATED, FURNISHED, OR IN ANY WAY SUPPLIED THE SAID DRAWINGS, SPECIFICATIONS OR OTHER DATA IS NOT TO BE REGARDED BY IMPLICATION OR OTHERWISE AS IN ANY MANNER LICENSING THE HOLDER OR ANY OTHER PERSON OR CORPORATION, OR CONVEYING ANY RIGHTS OR PERMISSION TO MANUFACTURE, USE, OR SELL ANY PATENTED INVENTION THAT MAY IN ANY WAY BE RELATED THERETO.

REVISIONS 02768

SYM	ZONE	DESCRIPTION	DR	CHK	DATE	APPROVED
G		REPLACES REV F WITH CHANGE PER TDRR 20854.			7/22/65	WK
H		REVISED PER TDRR 20892			8/3/65	WK
J		REVISED PER TDRR 20904			8/5/65	WK
K		REVISED PER TDRR 21379			8/9/65	WK
L		REVISED PER TDRR 21410			8/23/65	WK
M		REVISED PER TDRR 21993				
N		REVISED PER TDRR 22621			10/	
P		REVISED PER TDRR 22671				
R		REVISED PER TDRR 22672				
S		REVISED PER TDRR 22750				
T		REVISED PER TDRR 22823			/65	WK
U		REVISED PER TDRR 23072			10-12-65	[illegible]
V		REVISED PER TDRR 23521			10-27-65	WK
W		REVISED PER TDRR 23824	RAJ		11-3-65	WK
Y		REVISED PER TDRR 24018	RAJ		11-6-65	WK
Z		REVISED PER TDRR 24040	RAJ		11-15-65	WK
AA		REVISED PER TDRR 24060	RAJ		11-19-65	WK
AB		REVISED PER TDRR 24868	RAJ		12-22-65	WK
AC		REVISED PER TDRR 24973	RAJ		1-4-66	WK
AD		REVISED PER TDRR 25065	RAJ		1-8-66	[illegible]
AE		REVISED PER TDRR 25672	RAJ		2-4-66	WK
AF		REVISED PER TDRR 25671	RAJ		2-4-66	WK
AG		REVISED PER TDRR 26110	RAJ		2-15-66	WK
AH		REVISED PER TDRR 26372	"		3-6-66	[illegible]
AJ		REVISED PER TDRR 26425	"		3-6-66	[illegible]
AK		REVISED PER TDRR 26743	"		3-16-66	[illegible]
AL		REVISED PER TDRR 26798	"		3-16-66	[illegible]

DASH NO.	P/C	PART NAME	REMARKS	PART NO.	SER. NO.	CONT. NO.	STYLE	TYPE	MATERIAL	A	B	C	D	E	F	G	H	J	K	L	M	N	P	R	S	T	U	V	W	Y	Z	AA	AB	AC	AD	AE	AF	AG	AH	AJ	AK	AL	AM	AN	AP	AR
399	K																																													
398	K																																													
350	K	ALIGNMENT OPTICAL TELESCOPE (LEM)		NA	NA	NA	A	I	NOTE 11B	4.000	2.625	3.375	2.750	.156	.093	.156	.187	NA	NA	2.312	1.468	1.187	.906	2.031	NA	.375	.156	NA	1.437	2.750	.437	NA	3.688	.062	.062	1.750	.593	NA	.625	3.375	.187	NA	.156	.531	.453	NA
309	K																																													
308	K																																													
307	K						B	I	NOTE 11 B	4.000	2.625	3.375	2.750	.156	.093	.156	.187	NA	NA	2.328	1.468	1.187	.906	2.031	.062	.375	.156	NA	1.437	2.750	.437	NA	3.687	.062	.062	1.750	.593	NA	NA	NA	NA	NA	NA	NA	NA	NA
306	K						B	II	NOTE 11 C	4.000	2.625	3.375	2.750	.156	.093	.156	.187	.125	.156	2.328	1.468	1.187	.906	2.031	.062	.375	.156	↕	1.437	2.750	.437	2.312	3.687	.062	NA	1.750	.593	↕	↕	↕	↕	↕	↕	↕	↕	↕
305	K						B	I	NOTE 11 B	2.000	1.312	1.687	1.375	.078	.048	.078	.093	NA	NA	1.164	.734	.593	.453	1.015	.048	.171	.078	↕	.718	1.375	.187	NA	NA	.048	.031	.875	.320	↕	↕	↕	↕	↕	↕	↕	↕	↕
304	K						B	II	NOTE 11 C	2.000	1.312	1.687	1.375	.078	.048	.078	.093	.070	.078	1.164	.734	.593	.453	1.015	.048	.171	.078	NA	.718	1.375	.187	.156	1.843	.048	NA	.875	.320	NA	NA	NA	NA	NA	NA	NA	NA	NA
303	K																																													
302	K																																													
301	K																																													
300	K	OPTICAL UNIT		NA	NA	NA	A	I	NOTE 11 B	2.000	1.312	1.675	NA	NA	.048	.078	NA	NA	NA	1.090	.812	.675	.540	.940	NA	.265	NA	NA	NA	1.375	.218	NA	NA	NA	NA	NA	.375	NA	NA	NA	.180	NA	.078	NA	NA	NA
9	K	2 IN AUTOCOLLIMATOR		1001702			B	II	NOTE 11 C	4.000	2.625	3.812	2.750	.156	.093	.156	.187	.125	.156	2.250	1.500	1.187	.906	2.031	.093	.375	.156	1.750	1.437	2.750	.437	2.312	3.687	.062	NA	1.750	.593	.156	1.062	3.812	.156	NA	.156	1.062	.375	3.687
8	K	5 IN AUTOCOLLIMATOR		1017410			B	II	NOTE 11 C	4.000	2.625	3.812	2.750	.156	.093	.156	.187	.125	.156	2.250	1.500	1.187	.906	2.031	.093	.375	.156	1.750	1.437	2.750	.437	2.312	3.687	.062	NA	1.750	.593	.156	1.062	3.812	.156	NA	.156	1.062	.375	3.687
7	K	2½ IN AUTOCOLLIMATOR (SCT)		1017435			B	II	NOTE 11 C	4.000	2.625	3.812	2.750	.156	.093	.156	.187	.125	.156	2.250	1.500	1.187	.906	2.031	.093	.375	.156	1.750	1.437	2.750	.437	2.312	3.687	.062	NA	1.750	.593	.156	1.062	3.812	.156	NA	.156	1.062	.375	3.687
6	K	2½ IN AUTOCOLLIMATOR (SXT)		1017448			B	II	NOTE 11 C	4.000	2.625	3.812	2.750	.156	.093	.156	.187	.125	.156	2.250	1.500	1.187	.906	2.031	.093	.375	.156	1.750	1.437	2.750	.437	2.312	3.687	.062	NA	1.750	.593	.156	1.062	3.812	.156	NA	.156	1.062	.375	3.687
5	K	RETROREFLECTING PRISM ASSEMBLY		1019840			B	I	NOTE 11 B	4.000	2.625	3.812	2.750	.156	.093	.156	.187	NA	NA	2.250	1.500	1.187	.906	2.031	.093	.375	.156	1.750	1.437	2.750	.437	NA	NA	.062	.062	1.750	.593	.156	1.062	3.812	.156	NA	.156	1.062	.375	NA
4	K	S/H SIMULATOR ASSEMBLY		1019896			B	I	NOTE 11 B	4.000	2.625	3.812	2.750	.156	.093	.156	.187	NA	NA	2.250	1.500	1.187	.906	2.031	.093	.375	.156	1.750	1.437	2.750	.437	NA	NA	.062	.062	1.750	.593	.156	1.062	3.812	.156	NA	.156	1.062	.375	NA
3	K	REFERENCE MIRROR		1001767			B	I	NOTE 11 B	2.000	1.312	1.906	1.375	.078	.048	.078	.093	NA	NA	1.125	.750	.593	.453	1.015	.062	.187	.078	.875	.718	1.375	.218	NA	NA	.048	.031	.875	.305	.078	.531	1.906	.078	NA	.078	.531	.187	NA
2	K	2 IN PLANE READING AUTOCOLLIMATOR		1017413			B	I	NOTE 11 B	2.000	1.312	1.906	1.375	.078	.048	.078	.093	NA	NA	1.125	.750	.593	.453	1.015	.062	.187	.078	.875	.718	1.375	.218	NA	NA	.048	.031	.875	.305	.078	.531	1.906	.078	NA	.078	.531	.187	NA
1	K	2 IN AUTOCOLLIMATOR		1001702			B	I	NOTE 11 B	2.000	1.312	1.906	1.375	.078	.048	.078	.093	NA	NA	1.125	.750	.593	.453	1.015	.062	.187	.078	.875	.718	1.375	.218	NA	NA	.048	.031	.875	.305	.078	.531	1.906	.078	NA	.078	.531	.187	NA

⑥ REPLACES REV F WITH CHANGE

KOLLSMAN DASH NUMBERS

NOTES FOR TABLE
STYLE A IS FOR G&N SYSTEM.
STYLE B IS FOR GROUND SUPPORT EQUIPMENT.
TYPE I IS WITHOUT MOUNTING HOLES.
TYPE II IS WITH MOUNTING HOLES.

MASTER

QTY REQD	PART OR IDENTIFYING NO.	MATERIAL OR NOTES	NOMENCLATURE OR DESCRIPTION	FIND NO.

LIST OF MATERIALS

NEXT ASSY	USED ON
AS APPLICABLE	

APPLICATION

UNLESS OTHERWISE SPECIFIED
DIMENSIONS ARE IN INCHES
CAPACITOR VALUES ARE IN µf
RESISTOR VALUES ARE IN OHMS
TOLERANCES ON
FRACTIONS ± — DECIMALS ±.005 ANGLES ± —
DO NOT SCALE THIS DRAWING

MATERIAL
SEE NOTE 11

MIT
INSTRUMENTATION LAB
CAMBRIDGE, MASS.

		DATE
DRAWN	R. A. Jones	7-16-65
CHECKED	[illegible]	7-22-65
APPROVED		
APPROVED	W Kupfer	7/22/65
APPROVED MIT	W Kupfer	7/22/65
APPROVED MSC	[illegible]	[illegible]

MANNED SPACECRAFT CENTER
HOUSTON, TEXAS

NAMEPLATES,
APOLLO G&N-GSE
(STANDANDS)

CODE IDENT NO. 80230
SIZE E
DRAWING NO. 1004260
SCALE NONE
SHEET 2 OF 6

NOTICE - WHEN GOVERNMENT DRAWINGS, SPECIFICATIONS, OR OTHER DATA ARE USED FOR ANY PURPOSE OTHER THAN IN CONNECTION WITH A DEFINITELY RELATED GOVERNMENT PROCUREMENT OPERATION, THE UNITED STATES GOVERNMENT THEREBY INCURS NO RESPONSIBILITY NOR ANY OBLIGATION WHATSOEVER, AND THE FACT THAT THE GOVERNMENT MAY HAVE FORMULATED, FURNISHED, OR IN ANY WAY SUPPLIED THE SAID DRAWINGS, SPECIFICATIONS OR OTHER DATA IS NOT TO BE REGARDED BY IMPLICATION OR OTHERWISE AS IN ANY MANNER LICENSING THE HOLDER OR ANY OTHER PERSON OR CORPORATION, OR CONVEYING ANY RIGHTS OR PERMISSION TO MANUFACTURE, USE, OR SELL ANY PATENTED INVENTION THAT MAY IN ANY WAY BE RELATED THERETO.

REVISIONS 02768

SYM	ZONE	DESCRIPTION	DR	CHK	DATE	APPROVED
G		REPLACES REV F WITH CHANGE PER TDRR 20854			7/22/65	WR
H		REVISED PER TDRR 20892				WR
J		REVISED PER TDRR 20904				WR
K		REVISED PER TDRR 21379				WR
L		REVISED PER TDRR 21410				WR
M		REVISED PER TDRR 21993				
N		REVISED PER TDRR 22621			10/11/65	
P		REVISED PER TDRR 22671				
R		REVISED PER TDRR 22672				
S		REVISED PER TDRR 22750				WR
T		REVISED PER TDRR 22823				
U		REVISED PER TDRR 23072			10-21-65	
V		REVISED PER TDRR 23521			10-26-65	WR
W		REVISED PER TDRR 23824	RAJ		11-9-65	WR
Y		REVISED PER TDRR 24018	RAJ		11-16-65	WR
Z		REVISED PER TDRR 24040	RAJ		11-19-65	WR
AA		REVISED PER TDRR 24060	RAJ		11-19-65	WR
AB		REVISED PER TDRR 24868	RAJ		12-22-65	WR
AC		REVISED PER TDRR 24973	RAJ		1-4-66	WR
AD		REVISED PER TDRR 25065	RAJ		1-18-66	
AE		REVISED PER TDRR 25672	RAJ		2-4-66	WR
AF		REVISED PER TDRR 25671	RAJ		2-4-66	WR
AG		REVISED PER TDRR 26110	RAJ		2-15-66	WR
AH		REVISED PER TDRR 26372			3 16 66	
AJ		REVISED PER TDRR 26425	"		3-16-66	
AK		REVISED PER. TDRR 26743	"		3-16-66	
AL		REVISED PER TDRR 26798	"		3-16-66	

DASH NO.	P/C	PART NAME	REMARKS	PART NO.	SER. NO.	CONT. NO.	STYLE	TYPE	MATERIAL	
299	R									
298	R									
254	R	DRAWER ASSY COMP. SIMULATOR		2014048-011	NA	NAS9-497	B	II	NOTE 11 C	FOR DIMENSIONS, SEE DASH 18 VALUES BELOW
253		SHIPPING KIT ASSY, NAV DSKY		2016312-011						
252		SHIPPING KIT ASSY, UNIVERSAL DSKY		2016316-011						
251		SHIPPING KIT ASSY, MAIN DSKY		2016313-011				II	NOTE 11 C	
250		AMPLIFIER, REWORK		2014386				I	NOTE 11 B	FOR DIMENSIONS, SEE DASH 15 VALUES BELOW
249		TEMP MONITOR ASSY		2014313-011					NOTE 11 C	FOR DIMENSIONS, SEE DASH 17 VALUES BELOW
248		AGC JUNCTION ASSY		2014341-011					NOTE 11 B	FOR DIMENSIONS, SEE DASH 15 VALUES BELOW
247		AC INPUT PANEL ASSY		2014302-011						
246		SELF TEST ASSY		2014392 011						
245	R	TAPE PUNCH ASSEMBLY		2014039-011	NA		B	I	NOTE 11 B	FOR DIMENSIONS, SEE DASH 15 VALUES BELOW
244	R	TAPE READER ASSEMBLY		2014038-011	NA	NAS-9-497	B	I	NOTE 11 B	
243										
242										
241	R	APOLLO GUIDANCE COMPUTER GROUP		6003001	NA	NAS-9-497	A	I	NOTE 11 B	FOR DIMENSIONS, SEE DASH 19 VALUES BELOW
240	R	SELF TEST ASSEMBLY		2014366-011	NA		B	I	NOTE 11 B	FOR DIMENSIONS, SEE DASH 15 VALUES BELOW
239		POWER SUPPLY ASSY-115V., 400 CYCLE		2014207-011						FOR DIMENSIONS, SEE DASH 17 VALUES BELOW
238		AC INPUT PANEL ASSY		2014043-011						
237		POWER CONTROL ASSY		2014079-011						FOR DIMENSIONS, SEE DASH 15 VALUES BELOW
236		DRAWER ASSY-XY INTERFACE		2014040-011						
235		DRAWER ASSY RDC INTERFACE		2014045-011						
234		BUFFER CIRCUIT ASSY		2014254-011						
233		CONTROL & INTERFACE ASSY		2014204-011						
232		POWER CONTROL ASSY		2014044-011						FOR DIMENSIONS, SEE DASH 17 VALUES BELOW
231		DRAWER ASSY, PROGRAMMER & MONITOR		2014041-011						
230		CONNECTOR INTERFACE ASSY		2014272-011						FOR DIMENSIONS, SEE DASH 15 VALUES BELOW
229		CONNECTOR INTERFACE ASSY		2014047-011						
228		ANTENNA, TUNING CAPACITOR ASSY		2014209-011						
227		MOUNTING FIXTURE ASSY		2014006-011						FOR DIMENSIONS, SEE DASH 17 VALUES BELOW
226		POWER SUPPLY ASSY 3 VDC		2014234-011						FOR DIMENSIONS, SEE DASH 15 VALUES BELOW
225		PANEL ASSY — SIGNAL INTERFACE		2014010-011						
224		OSCILLOSCOPE ASSY		2014232-011						
223		AUXILIARY OUTLET ASSY		2014274-011						
222		FREQUENCY COUNTER		2014233-011						
221		POWER SUPPLY ASSY 10, 13, 28 VDC		2014235-011						
220		LOGIC DRAWER ASSY NO. 2		2014037-011						FOR DIMENSIONS, SEE DASH 17 VALUES BELOW
219		LOGIC DRAWER ASSY NO. 1		2014036-011						
218		COUNTER, ELECTRICAL ASSY		2014288-011						FOR DIMENSIONS, SEE DASH 15 VALUES BELOW
217		POWER SUPPLY ASSY		2014279-011						
216		TEST MOUNT ASSY		2014257-011						
215		UNIVERSAL DSKY PEDESTAL MOUNT		2014014-011						FOR DIMENSIONS, SEE DASH 17 VALUES BELOW
214		MAIN DSKY PEDESTAL MOUNT		2014343				I	NOTE 11 B	
213		SHIPPING CONTAINER, MAIN DSKY		1006229				II	NOTE 11 C	FOR DIMENSIONS, SEE DASH 18 VALUES BELOW
212		NAV DSKY		1006231						
211		AGC		1006230						
210		UNIVERSAL DSKY		1006422						
209		SHIPPING CONTAINER, AGC		1006421				II	NOTE 11 C	
208		UNIVERSAL DSKY HANDLING FIXTURE		2014013-011				I	NOTE 11 B	FOR DIMENSIONS, SEE DASH 15 VALUES BELOW
207		NAV DSKY HANDLING FIXTURE		1014377						FOR DIMENSIONS, SEE DASH 17 VALUES BELOW
206		MAIN DSKY HANDLING FIXTURE		1014334						
205		AGC HANDLING FIXTURE		2014282-011				I	NOTE 11 B	
204		OPERATION CONSOLE		2014024-011				II	NOTE 11 C	FOR DIMENSIONS, SEE DASH 18 VALUES BELOW
203		COMPUTER TEST SET		2014042-011		NAS-9-497				
202		DRAWER ASSY, COMPUTER SIMULATOR		2014048-011		FNP-12775				
201		AUXILIARY CALIBRATION CONSOLE		2014059-011		NAS-9-497				
200	R	AGC CALIBRATION CONSOLE		2014049-011	NA		B	II	NOTE 11 C	
21	R									
20	P	NA		NA	NA	NA	A	II	NOTE 11 C	
19	R	NA		NA	NA	NA	A	I	NOTE 11 B	
18	R	NA		NA	NA	NA	B	II	NOTE 11 C	
17	P	NA		NA	NA	NA	B	I	NOTE 11 B	
16	R	NA		NA	NA	NA	B	II	NOTE 11 C	
15	R	NA		NA	NA	NA	B	I	NOTE 11 B	

DASH NO.	A	B	C	D	E	F	G	H	J	K	L	M	N	P	R	S	T	U	V	W	Y	Z	AA	AB	AC	AD	AE	AF	AG	AH	AJ	AK	AL	AM	AN	AP	AR
20	2.000	1.312	1.687	1.375	.078	.031	.078	.093	.106 .113	.093	1.187	.750	.593	.453	1.015	.062	.187	.078	.875	.718	1.375	.218	1.156	1.843	.048	NA	.875	.305	.078	.312	1.687	.078	NA	.078	.312	.187	1.843
19	2.000	1.312	1.687	1.375	.078	.031	.078	.093	NA	NA	1.187	.750	.593	.453	1.015	.062	.187	.078	.875	.718	1.375	.218	NA	NA	.048	.031	.875	.305	.078	.312	1.687	.078	NA	.078	.312	.187	NA
18	4.187	1.875	3.469	2.750	.156	.093	.156	.125	.106 .113	.125	1.625	1.032	.844	.656	1.406	.093	.344	.156	1.781	1.531	2.844	.312	1.562	3.875	.062	NA	1.219	.500	.156	.719	3.469	.156	NA	.156	.719	.344	3.875
17	4.187	1.875	3.469	2.750	.156	.093	.156	.125	NA	NA	1.625	1.032	.844	.656	1.406	.093	.344	.156	1.781	1.531	2.844	.312	NA	NA	.062	.062	1.219	.500	.156	.719	3.469	.156	NA	.156	.719	.344	NA
16	2.000	1.312	1.687	1.375	.078	.031	.078	.093	.106 .113	.093	1.187	.750	.593	.453	1.015	.062	.187	.078	.875	.718	1.375	.218	1.156	1.843	.048	NA	.875	.305	.078	.312	1.687	.078	NA	.078	.312	.187	1.843
15	2.000	1.312	1.687	1.375	.078	.031	.078	.093	NA	NA	1.187	.750	.593	.453	1.015	.062	.187	.078	.875	.718	1.375	.218	NA	NA	.048	.031	.875	.305	.078	.312	1.687	.078	NA	.078	.312	.187	NA

NOTES FOR TABLE

STYLE A IS FOR G & N SYSTEM
STYLE B IS FOR GROUND SUPPORT EQUIPMENT
TYPE I IS WITHOUT MOUNTING HOLES
TYPE II IS WITH MOUNTING HOLES

THIS SHEET ADDED

Ⓖ REPLACES REV F WITH CHANGE

RAYTHEON DASH NUMBERS

MASTER

QTY REQD	PART OR IDENTIFYING NO.	MATERIAL OR NOTES	NOMENCLATURE OR DESCRIPTION	FIND NO

LIST OF MATERIALS

UNLESS OTHERWISE SPECIFIED
DIMENSIONS ARE IN INCHES
CAPACITOR VALUES ARE IN µf
RESISTOR VALUES ARE IN OHMS
TOLERANCES ON
FRACTIONS ± — DECIMALS ±.005 ANGLES ± —
DO NOT SCALE THIS DRAWING

MATERIAL
SEE NOTE 11

AS APPLICABLE
NEXT ASSY | USED ON
APPLICATION

MIT
INSTRUMENTATION LAB
CAMBRIDGE, MASS.

DRAWN R. Q. Jones 7-16-65
CHECKED 7-22-65
APPROVED
APPROVED
APPROVED MIT
APPROVED MSC
DATE

MANNED SPACECRAFT CENTER
HOUSTON, TEXAS

NAMEPLATES,
APOLLO GEN-GSE
(STANDARDS)

CODE IDENT NO. 80230 SIZE E DRAWING NO. 1004260
SCALE NONE SHEET 3 OF 6

NOTICE – [illegible]

REVISIONS					02767	
SYM	ZONE	DESCRIPTION	DR	CHK	DATE	APPROVED
G		REPLACES REV F WITH CHANGE PER TDRR 20854.			7/22/65	WK
H		REVISED PER TDRR 20892			8/5/65	WK
J		REVISED PER TDRR 20904			8/3/65	WK
K		REVISED PER TDRR 21379			8/6/65	WK
L		REVISED PER TDRR 21410			8/23/65	WK
M		REVISED PER TDRR 21993				
N		REVISED PER TDRR 22621			10/	
P		REVISED PER TDRR 22671				
R		REVISED PER TDRR 22672				
S		REVISED PER TDRR 22750				
T		REVISED PER TDRR 22823			/65	WK
U		REVISED PER TDRR 23072			10-20-65	[illegible]
V		REVISED PER TDRR 23521			10-26-65	WK
W		REVISED PER TDRR 23824	RAJ		11-9-65	WK
Y		REVISED PER TDRR 24018	RAJ		11-16-65	WK
Z		REVISED PER TDRR 24040	RAJ		11-19-65	WK
AA		REVISED PER TDRR 24060	RAJ		11-19-65	WK
AB		REVISED PER TDRR 24868	RAJ		12-22-65	WK
AC		REVISED PER TDRR 24973	RAJ		1-4-66	WK
AD		REVISED PER TDRR 25065	RAJ		1-18-66	WK
AE		REVISED PER TDRR 25672	RAJ		2-4-66	WK
AF		REVISED PER TDRR 25671	RAJ		2-4-66	WK
AG		REVISED PER TDRR 26110	RAJ		2-15-66	WK
AH		REVISED PER TDRR 26372	"		3-6-66	[illegible]
AJ		REVISED PER TDRR 26425	"		3-16-66	[illegible]
AK		REVISED PER TDRR 26743	"		3-16-66	[illegible]
AL		REVISED PER TDRR 26798	"		3-16-66	[illegible]

A C ELECTRONICS DASH NUMBERS

DASH NO.	P/C	PART NAME	REMARKS	PART NO.	SER. NO.	CONT. NO.	STYLE	TYPE	MATERIAL	A	B	C	D	E	F	G	H	J	K	L	M	N	P	R	S	T	U	V	W	Y	Z	AA	AB	AC	AD	AE	AF	AG	AH	AJ	AK	AL	AM	AN	AP	AR
199	AC	EYE-PIECE STOWAGE UNIT		2021255-0			A	I		FOR DIMENSIONS, SEE DASH 100 VALUES BELOW																																				
198	AC	SIGNAL CONDITIONER ASSY C/M		2007234		NAS-9-497			NOTE IIB																																					
197	AC	SIGNAL CONDITIONER ASSY C/M		2007235																																										
196	AC	SIGNAL CONDITIONER ASSY LEM		6007010																																										
195	AC	PSA & SIGNAL CONDITIONER ASSY		6007009		NAS-9-497	A	I	NOTE IIB																																					
194	AC																																													
193	AC																																													
192	AC																																													
191	AC																																													
190	AC																																													
189	AC																																													
188	AC																																													
187	AC																																													
186	AC	ANN PNL & EYEPIECE STOW. ASSY		1021255-021			A	I		FOR DIMENSIONS, SEE DASH 100 VALUES BELOW																																				
185	AC	ANN PNL & EYEPIECE STOW. ASSY		1021255-011			A	I																																						
184	AC	FIX., HAND., G AND N HARNESS		1901846-041		NAS-9-497	B	II	NOTE IIC	FOR DIMENSIONS, SEE DASH 144 VALUES BELOW																																				
183	AC	INSTALLING TOOL, ELEC. CONN		1902586-011			B	II	NOTE IIC	FOR DIMENSIONS, SEE DASH 102 VALUES BELOW																																				
182	AC	ADPT MODULE, P.S.A.		6900088-011			B	II	NOTE IIC	FOR DIMENSIONS, SEE DASH 141 VALUES BELOW																																				
181	AC	G & N INDICATOR CONTROL PANEL ASSY		2014578-011			A	I	NOTE IIB	3.000	1.938	2.437	NA	.125	.062	.188	.156	NA	NA	1.750	1.125	.906	.688	1.500	NA	.281	.125	NA	1.094	2.062	.312	NA	2.500	.062	.125	1.312	.469	NA	NA	NA	.156	NA	.125	.469	.344	NA
180	AC	ADPT MODULE, P.S.A.		1902431-031			B	II		FOR DIMENSIONS, SEE DASH 121 VALUES BELOW																																				
179	AC	MOUNTING PLATE, IMU/PTA		6900083-011						FOR DIMENSIONS, SEE DASH 144 VALUES BELOW																																				
178	AC	MOUNTING PLATE, COMPONENT		6900007-021																																										
177	AC	FIX., MOUNTING, SUBSYSTEM		2900070-021																																										
176	AC	FIX., MOUNTING, G AND N		2900067-021																																										
175	AC	CSL, COOL. AND PWR, G AND N		1902134-031																																										
174	AC	FIX., HAND., C/M AND LEM CDU		2900999-011					NOTE IIC	FOR DIMENSIONS, SEE DASH 141 VALUES BELOW																																				
173	AC	FIX., HANDLING, C/M PSA		2900998-011																																										
172	AC	CAGING ELECTRONICS, GYRO		2900029-021																																										
171	AC	DISTRIBUTION BOX, GSE		2900024-021																																										
170	AC	ANALYZER, OPTICS-INERTIAL		2900023-021																																										
169	AC	ADPT, TEST POINT, P.S.A.		2900037-021																																										
168	AC	TEST SELECTOR		2900028-021																																										
167	AC	TEST CONTROL		2900027-021																																										
166	AC	PANEL, MONITOR		2900031-021																																										
165	AC	TERM. BOARD STORAGE DRAWER		2900927-011																																										
164	AC	INPUT/OUTPUT PANEL		2900926-011																																										
163	AC	CONTROL PANEL		2900896-011																																										
162	AC	CSL. CAL AND TEST, SCM/PSAAM		2900895-011						FOR DIMENSIONS, SEE DASH 144 VALUES BELOW																																				
161	AC	FIX., LIFT AND HAND., IMU		1015462-011						FOR DIMENSIONS, SEE DASH 141 VALUES BELOW																																				
160	AC	FIX., HAND., G AND N HARNESS		1901846-031						FOR DIMENSIONS, SEE DASH 144 VALUES BELOW																																				
159	AC	BATTERY POWER PACK		1900011-031			B	II	NOTE IIC																																					
158	AC	COUPLING DATA UNIT ASSEMBLY C/M		2007222			A	I	NOTE IIB	FOR DIMENSIONS, SEE DASH 100 VALUES BELOW																																				
157	AC	COUPLING DATA UNIT ASSEMBLY - LEM		2007222																																										
156	AC	POWER & SERVO ASSEMBLY C/M		2007200																																										
155	AC	PIPA ELECTRONICS ASSEMBLY		2007201																																										
154	AC	PULSE TORQUE ASSEMBLY - LEM		6007000																																										
153	AC	POWER & SERVO ASSEMBLY - LEM		6007200			A	I	NOTE IIB																																					
152	AC	CONT PNL, RSVR CKT TESTER		2900770-011			B	II	NOTE IIC	FOR DIMENSIONS, SEE DASH 141 VALUES BELOW																																				
151	AC	TESTER, RESOLVER CIRCUIT		2900708-011																																										
150	AC	JUNCTION BOX, P.S.A./G.S.E.		1901933-021						FOR DIMENSIONS, SEE DASH 144 VALUES BELOW																																				
149	AC	BATTERY PACK, LIFTING		2900812-011						FOR DIMENSIONS, SEE DASH 141 VALUES BELOW																																				
148	AC	MOUNTING PLATE, COMPONENT		6900007-011						FOR DIMENSIONS, SEE DASH 144 VALUES BELOW																																				
147	AC	MOUNTING PLATE, COMPONENT		2900677-011																																										
146	AC	CART, TRANS, G AND N		1900009-041																																										
145	AC	CONTAINER, SHIPPING, IMU		1900010-021		NAS-9-497	B	II	NOTE IIC																																					
144	AC	FIX., MOUNTING, G AND N		1902204-021			B	II	NOTE IIC	4.125	1.812	3.250	NA	.125	.062	.12	.156	.188 .104	.125	1.625	1.140	.890	.640	1.390	.125	.171	.125	1.875	1.687	2.625	.250	1.562	3.843	.093	NA	NA	.359	.125	.437	3.688	NA	3.687	.093	.40	.25	3.875
143	AC	CSL, COOL. AND PWR, G AND N		1902134-021						4.125	1.812	3.250		.125	.062	.12	.156		.125	1.625	1.140	.890	.640	1.390	.125	.171	.125	1.875	1.687	2.625	.250	1.562	3.843	.093			.359	.125	.437	3.688		3.687	.093	.40	.25	3.875
142	AC	ANALYZER, OPTICS-INERTIAL		2900023-011						4.125	1.812	3.250		.125	.062	.12	.156		.125	1.625	1.140	.890	.640	1.390	.125	.171	.125	1.875	1.687	2.625	.250	1.562	3.843	.093			.359	.125	.437	3.688		3.687	.093	.40	.25	3.875
141	AC	CONT, TEMP, PORTABLE		2900060-011						2.125	.968	1.718		.093	.031	.06	.093		.093	.858	.608	.484	.358	.733	.077	.116	.062	.937	.875	1.343	.125	.781	1.892	.046			.209	.093	.250	1.875		1.840	.046	.23	.16	1.938
140	AC	TESTER, CKT, IMU/CDU RSVR		2900286-011						4.125	1.812	3.250		.125	.062	.12	.156		.125	1.625	1.140	.890	.640	1.390	.125	.171	.125	1.875	1.687	2.625	.250	1.562	3.843	.093			.359	.125	.437	3.688		3.687	.093	.40	.25	3.875
139	AC	SIMULATOR, LD/SIG, CDU		2900285-011																																										
138	AC	SIMULATOR, LD/SIG, OPTICS		1902023-021																																										
137	AC	FIX., MOUNTING, IMU/NAV BASE		6900003-011																																										
136	AC	FIXTURE, OPTICS/NAV BASE		2900072-011																																										
135	AC	FIX., MOUNTING, SUB SYSTEM		2900070-011																																										
134	AC	FIX., HAND., G AND N HARNESS		2900069-011																																										
133	AC	CNTR, SHIPPING, NAV BASE		2900068-011																																										
132	AC	FIX., MOUNTING, G AND N		2900067-011																																										
131	AC	SIMULATOR, LD/SIG, IMU/CDU		2900062-011																																										
130	AC	TESTER, GYRO WHEEL		2900061-011																																										
129	AC	COOLANT SUPPLY		1902133-021																																										
128	AC	TABLE, ROTARY		1900926-021						4.125	1.812	3.250		.125	.062	.12	.156		.125	1.625	1.140	.890	.640	1.390	.125	.171	.125	1.875	1.687	2.625	.250	1.562	3.843	.093			.359	.125	.437	3.688		3.687	.093	.40	.25	3.875
127	AC	FIX., HAND., OPTICS		2900074-011						2.125	.968	1.718		.093	.031	.06	.093		.093	.858	.608	.484	.358	.733	.077	.116	.062	.937	.875	1.343	.125	.781	1.892	.046			.209	.093	.250	1.875		1.840	.046	.23	.16	1.938
126	AC	FIXTURE, MTG, PTA/PEA.		2900066-011																																										
125	AC	CONT, TEMP, IMU LIFTING		2900063-011																																										
124	AC	FIXTURE, HANDLING, IMU		2900064-011																																										
123	AC	CONT, OPTICS, REMOTE		1902046-021																																										
122	AC	TEST CONTROL		1902009-021																																										
121	AC	ADPT MODULE, P.S.A.		1902431-021																																										
120	AC	BRIDGE, DECADE ERROR		2900128-011																																										
119	AC	PWR SUP, ELECTRONICS		2900012-011																																										
118	AC	PWR SUP, RELAY AND LAMP		1900049-031																																										
117	AC	CONSOLE, OSCILLOGRAPH		1900000-021																																										
116	AC	ADPT MODULE, P.S.A.		1902431-011																																										
115	AC	ADPT, TEST POINT, PTA/PEA.		2900145-011																																										
114	AC	ADPT, TEST POINT, P.S.A.		2900037-011																																										
113	AC	CONTROL, GIMBAL POSITION		2900036-011																																										
112	AC	SELECTOR, SIGNAL, PRIMARY		2900035-011																																										
111	AC	SEL, SIG, OSCILLOGRAPH		2900034-011																																										
110	AC	PANEL, PWR SUP AND LOAD		2900033-011																																										
109	AC	PANEL, MONITOR		2900031-011																																										
108	AC	PANEL, AUXILIARY INPUT		2900030-011																																										
107	AC	CAGING ELECTRONICS, GYRO		2900029-011																																										
106	AC	TEST SELECTOR		2900028-011																																										
105	AC	TEST CONTROL		2900027-011																																										
104	AC	MONITOR AND CONTROL, TEMP		2900026-011																																										
103	AC	DISTRIBUTION BOX, GSE		2900024-011																																										
102	AC	VOLTMETER, DIGITAL		2900007 011			B	II	NOTE IIC	2.125	.968	1.718	NA	.093	.031	.06	.093	.188 .104	.093	.858	.608	.484	.358	.733	.077	.116	.062	.937	.875	1.343	.125	.781	1.892	.046	NA	NA	.209	.093	.250	1.875	NA	1.840	.046	.23	.16	1.938
101	AC	NAVIGATION BASE ASSEMBLY - LEM		6899950		NAS-9-497	A	I	NOTE IIB	2.000	1.312	1.906	1.375	.078	.048	.078	.093	NA	NA	1.125	.750	.593	.453	1.015	.062	.187	.078	.875	.718	1.375	.218	NA	NA	.048	.031	.875	.305	.078	.531	1.906	.078	NA	.078	.531	.187	NA
100	AC	NAVIGATION BASE ASSEMBLY		2899982		NAS-9-497	A	I	NOTE IIB	2.000	1.312	1.906	1.375	.078	.048	.078	.093	NA	NA	1.125	.750	.593	.453	1.015	.062	.187	.078	.875	.718	1.375	.218	NA	NA	.048	.031	.875	.305	.078	.531	1.906	.078	NA	.078	.531	.187	NA

NOTES FOR TABLE

STYLE A IS FOR G & N SYSTEM
STYLE B IS FOR GROUND SUPPORT EQUIPMENT
TYPE I IS WITHOUT MOUNTING HOLES
TYPE II IS WITH MOUNTING HOLES

THIS SHEET ADDED
Ⓖ REPLACES REV F WITH CHANGE

QTY REQD	PART OR IDENTIFYING NO.	MATERIAL OR NOTES	NOMENCLATURE OR DESCRIPTION	FIND NO.

LIST OF MATERIALS

NEXT ASSY	USED ON
AS APPLICABLE	

APPLICATION

UNLESS OTHERWISE SPECIFIED
DIMENSIONS ARE IN INCHES
CAPACITOR VALUES ARE IN μf
RESISTOR VALUES ARE IN OHMS
TOLERANCES ON
FRACTIONS ± — DECIMALS ±.005 ANGLES ± —
DO NOT SCALE THIS DRAWING

MATERIAL
SEE NOTE 11

MIT
INSTRUMENTATION LAB
CAMBRIDGE, MASS.

DRAWN R O Jones 7-16-65
CHECKED A. J. [illegible] 7-22-65
APPROVED
APPROVED W Kupfer 7-22-65
APPROVED MIT W Kupfer [illegible]
APPROVED MSC [illegible] [illegible]
DATE

MANNED SPACECRAFT CENTER
HOUSTON, TEXAS

NAMEPLATES,
APOLLO G&N-GSE
(STANDARDS)

CODE IDENT NO. 80230
SIZE E
DRAWING NO. 1004260
SCALE NONE
SHEET 4 OF 6

MASTER

NOTICE – WHEN GOVERNMENT DRAWINGS, SPECIFICATIONS, OR OTHER DATA ARE USED FOR ANY PURPOSE OTHER THAN IN CONNECTION WITH A DEFINITELY RELATED GOVERNMENT PROCUREMENT OPERATION, THE UNITED STATES GOVERNMENT THEREBY INCURS NO RESPONSIBILITY NOR ANY OBLIGATION WHATSOEVER; AND THE FACT THAT THE GOVERNMENT MAY HAVE FORMULATED, FURNISHED, OR IN ANY WAY SUPPLIED THE SAID DRAWINGS, SPECIFICATIONS OR OTHER DATA IS NOT TO BE REGARDED BY IMPLICATION OR OTHERWISE AS IN ANY MANNER LICENSING THE HOLDER OR ANY OTHER PERSON OR CORPORATION, OR CONVEYING ANY RIGHTS OR PERMISSION TO MANUFACTURE, USE, OR SELL ANY PATENTED INVENTION THAT MAY IN ANY WAY BE RELATED THERETO.

REVISIONS 02768

SYM	ZONE	DESCRIPTION	DR	CHK	DATE	APPROVED
G		REPLACES REV F WITH CHANGE PER TDRR 20854			7/26/65	WK
H		REVISED PER TDRR 20892			8/3/65	WK
J		REVISED PER TDRR 20904			8/3/65	WK
K		REVISED PER TDRR 21379			8/26/65	WK
L		REVISED PER TDRR 21410			8/26/65	WK
M		REVISED PER TDRR 21993				
N		REVISED PER TDRR 22621			10/	
P		REVISED PER TDRR 22671			1/1/	
R		REVISED PER TDRR 22672				
S		REVISED PER TDRR 22750			165	WK
T		REVISED PER TDRR 22823				
U		REVISED PER TDRR 23072			[illegible]	[illegible]
V		REVISED PER TDRR 23521			10-26-65	WK
W		REVISED PER TDRR 23824	RAJ		11-9-65	WK
Y		REVISED PER TDRR 24018	RAJ		11-16-65	WK
Z		REVISED PER TDRR 24040	RAJ		11-19-65	WK
AA		REVISED PER TDRR 24060	RAJ		11-19-65	WK
AB		REVISED PER TDRR 24868	RAJ		12-22-65	WK
AC		REVISED PER TDRR 24973	RAJ		1-4-66	WK
AD		REVISED PER TDRR 25065	RAJ		1-18-66	[illegible]
AE		REVISED PER TDRR 25672	RAJ		2-4-66	WK
AF		REVISED PER TDRR 25671	RAJ		2-4-66	WK
AG		REVISED PER TDRR 26110	RAJ		2-15-66	WK
AH		REVISED PER TDRR 26372	"		3-16-66	[illegible]
AJ		REVISED PER TDRR 26425	"		3-16-66	[illegible]
AK		REVISED PER TDRR 26743	"		3-16-66	[illegible]
AL		REVISED PER TDRR 26798	"		3-16-66	[illegible]

DASH NO.	P/C	PART NAME	REMARKS	PART NO.	SER. NO.	CONT. NO.	STYLE	TYPE	MATERIAL	A	B	C	D	E	F	G	H	J	K	L	M	N	P	R	S	T	U	V	W	Y	Z	AA	AB	AC	AD	AE	AF	AG	AH	AJ	AK	AL	AM	AN	AP	AR
499	MIT																																													
498																																														
401	MIT	COMPUTER ASSY		2003100		NAS 9-497	A	I	NOTE 11 B	2.000	1.312	1.906	1.375	.078	.048	.078	.093	NA	NA	1.125	.750	.593	.453	1.015	.062	.187	.078	.875	.718	1.375	.218	NA	NA	.048	.031	.875	.305	.078	.531	1.906	.078	NA	.078	.531	.187	NA
400	MIT	LIFTING SLING-G&N INST. QUAL. FIX. & AZM. REF. FIX.		1021640		NAS-9-4065	B	II	NOTE 11 C	2.000	1.312	1.687	1.375	.078	.048	.078	.093	.086/.081	.093	1.187	.750	.593	.453	1.015	.062	.187	.078	.875	.718	1.375	.218	1.156	1.843	.048	NA	.875	.305	.078	.312	1.687	.110	1.830	.070	.275	.180	1.844

MIT DASH NUMBERS

THIS SHEET ADDED

Ⓖ REPLACES REV F WITH CHANGE

NOTES FOR TABLE

STYLE A IS FOR G&N SYSTEM
STYLE B IS FOR GROUND SUPPORT EQUIPMENT
TYPE I IS WITHOUT MOUNTING HOLES
TYPE II IS WITH MOUNTING HOLES

QTY REQD	PART OR IDENTIFYING NO.	MATERIAL OR NOTES	NOMENCLATURE OR DESCRIPTION	FIND NO.

LIST OF MATERIALS

NEXT ASSY	USED ON
AS APPLICABLE	

APPLICATION

UNLESS OTHERWISE SPECIFIED
DIMENSIONS ARE IN INCHES
CAPACITOR VALUES ARE IN μf
RESISTOR VALUES ARE IN OHMS
TOLERANCES ON
FRACTIONS ± — DECIMALS ±.005 ANGLES ± —
DO NOT SCALE THIS DRAWING

MATERIAL
SEE NOTE 11

MIT
INSTRUMENTATION LAB
CAMBRIDGE, MASS.

DRAWN R. H. Jonas 7-16-65
CHECKED
APPROVED
APPROVED
APPROVED MIT W Kupfer
APPROVED MSC
DATE

MANNED SPACECRAFT CENTER
HOUSTON, TEXAS

NAMEPLATES,
APOLLO G&N-GSE
(STANDARDS)

CODE IDENT NO. 80230
SIZE E
DRAWING NO. 1004260
SCALE NONE
SHEET 5 OF 6

MASTER

NOTICE - WHEN GOVERNMENT DRAWINGS, SPECIFICATIONS, OR OTHER DATA ARE USED FOR ANY PURPOSE OTHER THAN IN CONNECTION WITH A DEFINITELY RELATED GOVERNMENT PROCUREMENT OPERATION, THE UNITED STATES GOVERNMENT THEREBY INCURS NO RESPONSIBILITY NOR ANY OBLIGATION WHATSOEVER, AND THE FACT THAT THE GOVERNMENT MAY HAVE FORMULATED, FURNISHED, OR IN ANY WAY SUPPLIED THE SAID DRAWINGS, SPECIFICATIONS OR OTHER DATA IS NOT TO BE REGARDED BY IMPLICATION OR OTHERWISE AS IN ANY MANNER LICENSING THE HOLDER OR ANY OTHER PERSON OR CORPORATION, OR CONVEYING ANY RIGHTS OR PERMISSION TO MANUFACTURE, USE, OR SELL ANY PATENTED INVENTION THAT MAY IN ANY WAY BE RELATED THERETO.

REVISIONS 02768

SYM	ZONE	DESCRIPTION	DR	CHK	DATE	APPROVED
AG		CHANGED NUMBER OF SHEETS FROM 5 TO 6 PER TDRR 26110.	RAJ		2-15-66	WR
AH		REVISED PER TDRR 26272	"		3-16-66	
AJ		REVISED PER TDRR 26425	"		3-16-66	
AK		REVISED PER TDRR 26743	"		3-16-66	
AL		REVISED PER TDRR 26798	"		3-16-66	

DASH NO.	[illegible]	PART NAME	REMARKS	PART NO.	SER NO.	CONT NO.	STYLE	TYPE	MATERIAL	A	B	C	D	E	F	G	H	J	K	L	M	N	P	R	S	T	U	V	W	Y	Z	AA	AB	AC	AD	AE	AF	AG	AH	AJ	AK	AL	AM	AN	AP	AR
599	AC																																													
598	AC																																													
[illegible]	AC																																													
[illegible]	A[illegible]																																													

Ⓐⓖ THIS SHEET ADDED

AC ELECTRONICS DASH NUMBERS

NOTES FOR TABLE

STYLE A IS FOR G&N SYSTEM
STYLE B IS FOR GROUND SUPPORT EQUIPMENT
TYPE I IS WITHOUT MOUNTING HOLES
TYPE II IS WITH MOUNTING HOLES

QTY REQD	PART OR IDENTIFYING NO.	MATERIAL OR NOTES	NOMENCLATURE OR DESCRIPTION	FIND NO.
LIST OF MATERIALS				

AS APPLICABLE	
NEXT ASSY	USED ON
APPLICATION	

UNLESS OTHERWISE SPECIFIED
DIMENSIONS ARE IN INCHES
CAPACITOR VALUES ARE IN μf
RESISTOR VALUES ARE IN OHMS
TOLERANCES ON
FRACTIONS ± — DECIMALS ±.005 ANGLES ± —
DO NOT SCALE THIS DRAWING

MATERIAL
SEE NOTE H

MIT
INSTRUMENTATION LAB
CAMBRIDGE, MASS.

DRAWN R. A. Jones 2-15-66
CHECKED 2-15-66
APPROVED
APPROVED
APPROVED MIT
APPROVED MSC
DATE

MANNED SPACECRAFT CENTER
HOUSTON, TEXAS

NAMEPLATES,
APOLLO G&N-GSE
(STANDARDS)

CODE IDENT NO. 80230
SIZE E
DRAWING NO. 1004260
SCALE NONE
SHEET 6 OF 6

NOTICE – WHEN GOVERNMENT DRAWINGS, SPECIFICATIONS, OR OTHER DATA ARE USED FOR ANY PURPOSE OTHER THAN IN CONNECTION WITH A DEFINITELY RELATED GOVERNMENT PROCUREMENT OPERATION, THE UNITED STATES GOVERNMENT THEREBY INCURS NO RESPONSIBILITY NOR ANY OBLIGATION WHATSOEVER; AND THE FACT THAT THE GOVERNMENT MAY HAVE FORMULATED, FURNISHED, OR IN ANY WAY SUPPLIED THE SAID DRAWINGS, SPECIFICATIONS, OR OTHER DATA IS NOT TO BE REGARDED BY IMPLICATION OR OTHERWISE AS IN ANY MANNER LICENSING THE HOLDER OR ANY OTHER PERSON OR CORPORATION, OR CONVEYING ANY RIGHTS OR PERMISSION TO MANUFACTURE, USE, OR SELL ANY PATENTED INVENTION THAT MAY IN ANY WAY BE RELATED THERETO.

NOTES:

1. INTERPRET DRAWING IN ACCORDANCE WITH STANDARDS PRESCRIBED IN MIL-D-70327.
2. DIMENSIONS ON EACH VIEW APPLY TO ALL VIEWS. (WITH THE EXCEPTION OF MOUNTING HOLES).
3. FORMATS ILLUSTATED WILL BE APPLICABLE TO ALL ITEMS REQUIRING NAMEPLATES BELOW END ITEM DESIGNATION (SYSTEMS, ASSEMBLIES, ETC.)
4. PLATE BACKGROUND TO BE LUSTERLESS BLACK PER FED-STD-595, COLOR 37038. BORDER, MARKING AND LETTERING TO BE NATURAL METAL,(ANODIZED ALUMINUM).
5. MARKING METHOD TO BE DIE STAMPING, ETCHING OR ENGRAVING IN ACCORDANCE WITH MIL P 19834.
6. LETTERING STYLE TO BE GOTHIC,(SANS SERIFS), AND NUMBERS TO BE ARABIC.
7. WHERE LOCATING DIMENSIONS ARE NOT SHOWN,CHARACTERS SHALL BE SYMMETRICALLY POSITIONED.
8. IDENTIFY WITH DRAWING NUMBER PER ND1002019.
9. WHEN "AUTO MARK" METAL MARKING TYPEWRITER IS USED TO ADD DATA TO BLANK SPACES, TYPE SIZE IS TO BE SELECTED FROM DIMENSIONS U, AC AND AM.
10. NASA SYMBOL IS TO BE PROPORTIONAL TO NAMEPLATE IN RATIO OF 1 TO 5 WITH DIMENSION A VALUE AND IS TO HAVE NATURAL BACKGROUND. NASA SYMBOL LETTERS LETTERING AND FEATHER TO BE BLACK,(OR WHITE FOR SILK SCREENING). WHERE BLACK FEATHER PROTRUDES INTO BLACK BACKGROUND, A MINIMUM OUTLINE OF NATURAL BACKGROUND SHALL EXIST.
11. NAMEPLATES WILL BE APPLIED BY METHODS LISTED BELOW, SHOWN IN ORDER OF PREFERENCE, (I.E., FOR RELIABILITY AND WEIGHT).
    - A - STENCIL OR SILK SCREEN DIRECTLY ON EQUIPMENT USING INK PER SCD 1010920,(WHITE OR BLACK).
    - B - ALUMINUM FOIL,(STYLE A OR B, TYPE I):
      FOIL SHALL BE .0030 ±.0005 THICK PER MIL-A-148.
      FOIL SHALL HAVE NO ADHESIVE BACKING.
      FOIL SHALL BE BONDED PER ND 1002219,(METHOD II).
      FOIL SHALL BE CLEAR ANODIZED PER MIL-A-8625, TYPE II.
    - C - PLATE, (STYLE A OR B, TYPE II):
      MATERIAL: QQ-A-250, TEMPER O OR H14, TYPE 1100,ALUMINUM ALLOY, .032 THICK.
      ANODIZE PER MIL-A-8625. TYPE II.
      ALUMINUM PLATE MUST BE FREE FROM BURRS AND SHARP CORNERS, MOUNTED WITH APPLICABLE SIZE FASTENERS.
12. NAMEPLATES SHALL BE CAPABLE OF MEETING APPLICABLE REQUIREMENTS OF MIL-M-13231.
13. ON DIMENSION TABLES SHOWN ON PAGES 2,3,4 AND 5, NA MEANS, "NOT APPLICABLE".

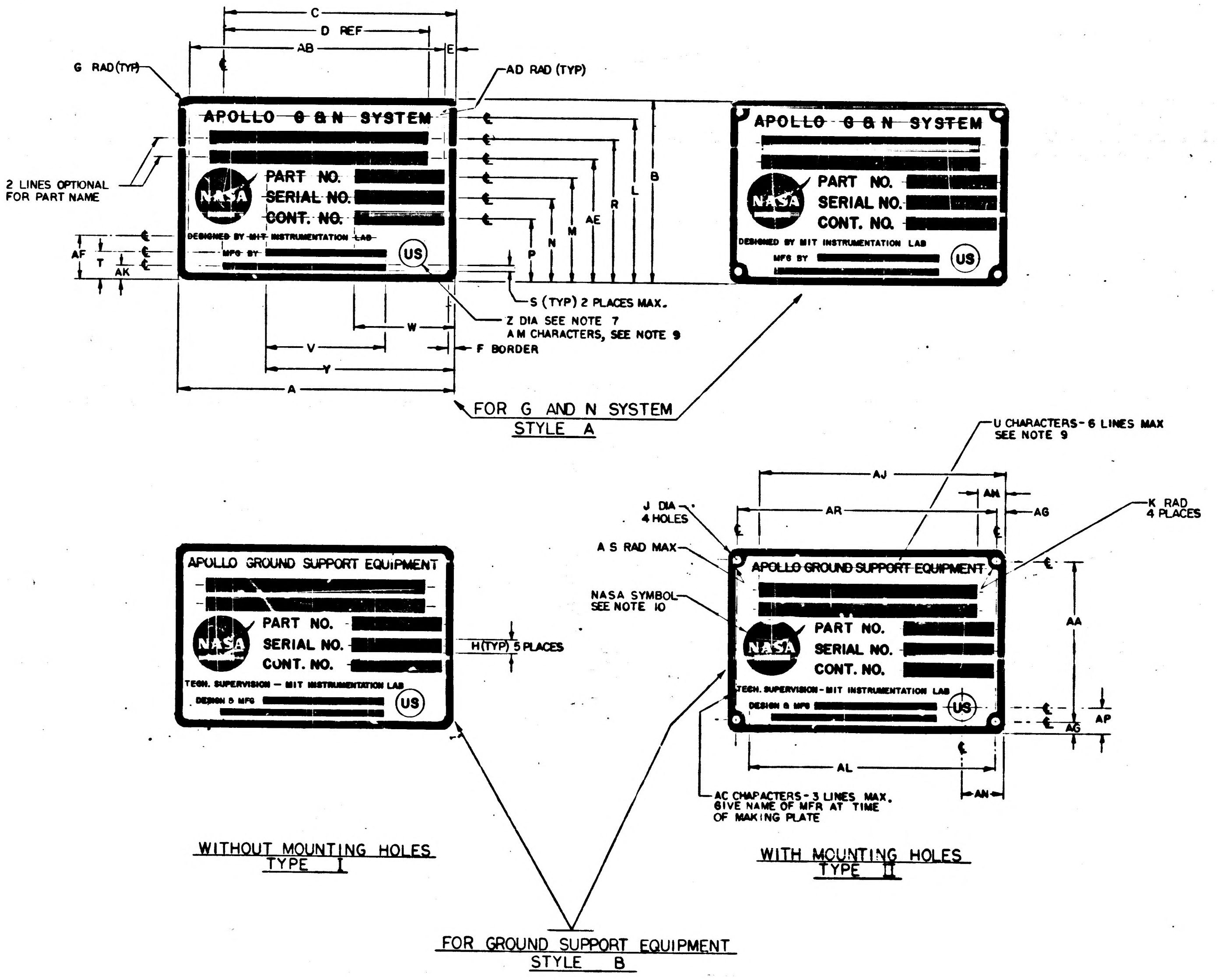
C
D REF
AB
E
G RAD(TYP)
AD RAD (TYP)
APOLLO G & N SYSTEM
PART NO.
SERIAL NO.
CONT. NO.
DESIGNED BY MIT INSTRUMENTATION LAB
MFG BY
US
2 LINES OPTIONAL FOR PART NAME
AF
T
AK
P
N
M
AE
R
L
B
S (TYP) 2 PLACES MAX.
Z DIA SEE NOTE 7
AM CHARACTERS, SEE NOTE 9
F BORDER
W
V
Y
A
FOR G AND N SYSTEM
STYLE A
APOLLO GROUND SUPPORT EQUIPMENT
TECH. SUPERVISION — MIT INSTRUMENTATION LAB
DESIGN & MFG
H(TYP) 5 PLACES
U CHARACTERS - 6 LINES MAX
SEE NOTE 9
AJ
AN
AR
AG
J DIA
4 HOLES
K RAD
4 PLACES
A S RAD MAX
NASA SYMBOL
SEE NOTE 10
AA
AP
AL
AC CHARACTERS - 3 LINES MAX.
GIVE NAME OF MFR AT TIME
OF MAKING PLATE
WITHOUT MOUNTING HOLES
TYPE I
WITH MOUNTING HOLES
TYPE II
FOR GROUND SUPPORT EQUIPMENT
STYLE B

REVISIONS 0 768

	SYM	ZONE	DESCRIPTION	DR	CHK	DATE	APPROVED
	G		REPLACES REV F WITH CHANGE PER TDRR 20854			7/26/65	WK
★	H		REVISED PER TDRR 20892			8/5/65	WK
	J		REVISED PER TDRR 20904			8/5/65	WK
	K		REVISED PER TDRR 21379			8/6/65	WK
	L		REVISED PER TDRR 21410			8/23/65	WK
★	M		REVISED PER TDRR 21993			10/	
★	N		REVISED PER TDRR 22621			11/	
★	P		REVISED PER TDRR 22671				
★	R		REVISED PER TDRR 22672				
★	S		REVISED PER TDRR 22750			65	WK
	T		REVISED PER TDRR 22823				
★	U		REVISED PER TDRR 23072			10-22-65	[illegible]
	V		REVISED PER TDRR 23521			10-27-65	WK
★	W		REVISED PER TDRR 23824	RAJ		11-9-65	WK
★	Y		REVISED PER TDRR 24018	RAJ		11-16-65	WK
★	Z		REVISED PER TDRR 24040	RAJ		11-19-65	WK
Ⓜ	AA		REVISED PER TDRR 24060	RAJ		11-19-65	WK
Ⓜ	AB		REVISED PER TDRR 24868	RAJ		12-22-65	WK
Ⓜ	AC		REVISED PER TDRR 24973	RAJ		1-4-66	WK
Ⓜ	AD		REVISED PER TDRR 25065	RAJ		1-18-66	[illegible]
★	AE		REVISED PER TDRR 25672	RAJ		2-4-66	WK
Ⓜ	AF		REVISED PER TDRR 25671	RAJ		2-4-66	WK
	AG		REVISED PER TDRR 26110	RAJ		2-5-66	WK
★	AH		REVISED PER TDRR 26372	"		3-16-66	[illegible]
★	AJ		REVISED PER TDRR 26425	"		3-16-66	[illegible]
★	AK		REVISED PER TDRR 26743	"		3-16-66	[illegible]
Ⓜ	AL		REVISED PER TDRR 26798	"		3-16-66	[illegible]
★	AM		REVISED PER TDRR 2768	"		4-7-66	[illegible]
★	AN		REVISED PER TDRR 27235	"		4-7-66	[illegible]
★	AP		REVISED PER TDRR 27345	"		4-7-66	[illegible]
★	AR		REVISED PER TDRR 27417	"		4-7-66	[illegible]
	AS		REVISED PER TDRR 27442	"		4-7-66	[illegible]

SUGGESTED PROPORTIONS FOR NAMEPLATE DIMENSIONS.
1. SELECT NAMEPLATE LENGTH, DIMENSION "A", TO FIT DESIGN NEEDS.
2. DIMENSIONS B THRU AS ON LINE 1 BELOW ARE PROPORTIONAL TO "A" BY MULTIPLIERS SHOWN IN LINE 2 BELOW.

1.	A	B	C	D	E	F	G	H	J	K	L	M	N	P	R	S	T	U	V
2.	1.000 A	.6563 A	.8438A	.6875A	.0391A	.0240A	.0391 A	.0469A	.0547A	.0469 A	.5938 A	.3750 A	.2969A	.2187 A	.5079A	.0313 A	.0938A	.0391 A	.4375 A

1.	W	Y	Z	AA	AB	AC	AD	AE	AF	AG	AH	AJ	AK	AL	AM	AN	AP	AR	AS
2.	.3594 A	.6875 A	.1094 A	.5781 A	.9219 A	.0240A	.0156 A	.4375A	.1525 A	.0391 A	.1563 A	.8438 A	.0548A	.8659 A	.0391 A	.1563 A	.0938A	.9219 A	.0151 A

⑥ REPLACES REV F WITH CHANGE

QTY REQD	PART OR IDENTIFYING NO.	MATERIAL OR NOTES	NOMENCLATURE OR DESCRIPTION	FIND NO.

LIST OF MATERIALS

NEXT ASSY	USED ON
AS APPLICABLE	

APPLICATION

UNLESS OTHERWISE SPECIFIED
DIMENSIONS ARE IN INCHES
CAPACITOR VALUES ARE IN μf
RESISTOR VALUES ARE IN OHMS
TOLERANCES ON
FRACTIONS ± — DECIMALS ±.005 ANGLES ± —
DO NOT SCALE THIS DRAWING

MATERIAL
SEE NOTE 11

MIT
INSTRUMENTATION LAB
CAMBRIDGE, MASS.

DRAWN R. A. Jones 7/16/65
CHECKED A. J. Lawrence 7-22-65
APPROVED
APPROVED W. Kupfer 7/22/65
APPROVED MIT W. Kupfer 7/22/65
APPROVED MSC 7/26/65
DATE

MANNED SPACECRAFT CENTER
HOUSTON, TEXAS

NAMEPLATES,
APOLLO G&N—GSE
(STANDARDS)

CODE IDENT NO. 80230
SIZE E
DRAWING NO. 1004260
SCALE NONE
SHEET 1 OF 6

MASTER

1004260

NOTICE – WHEN GOVERNMENT DRAWINGS, SPECIFICATIONS, OR OTHER DATA ARE USED FOR ANY PURPOSE OTHER THAN IN CONNECTION WITH A DEFINITELY RELATED GOVERNMENT PROCUREMENT OPERATION, THE UNITED STATES GOVERNMENT THEREBY INCURS NO RESPONSIBILITY NOR ANY OBLIGATION WHATSOEVER; AND THE FACT THAT THE GOVERNMENT MAY HAVE FORMULATED, FURNISHED, OR IN ANY WAY SUPPLIED THE SAID DRAWINGS, SPECIFICATIONS OR OTHER DATA IS NOT TO BE REGARDED BY IMPLICATION OR OTHERWISE AS IN ANY MANNER LICENSING THE HOLDER OR ANY OTHER PERSON OR CORPORATION, OR CONVEYING ANY RIGHTS OR PERMISSION TO MANUFACTURE, USE, OR SELL ANY PATENTED INVENTION THAT MAY IN ANY WAY BE RELATED THERETO.

REVISIONS 02768

SYM	ZONE	DESCRIPTION	DR	CHK	DATE	APPROVED
G		REPLACES REV F WITH CHANGE PER TDRR 20854.	rj		7/22/65	WR
H		REVISED PER TDRR 20892	rj		8/3/65	WR
J		REVISED PER TDRR 20904	rj		8/3/65	WR
K		REVISED PER TDRR 21379	rj		8/16/65	WR
L		REVISED PER TDRR 21410	rj		8/24/65	WR
M		REVISED PER TDRR 21993	"			
N		REVISED PER TDRR 22621	"		10/	
P		REVISED PER TDRR 22671	"		1	
R		REVISED PER TDRR 22672	"			
S		REVISED PER TDRR 22750	"			
T		REVISED PER TDRR 22823	"		65	WR
U		REVISED PER TDRR 23072	"		[illegible]	[illegible]
V		REVISED PER TDRR 23521			10-27-65	WR
W		REVISED PER TDRR 23824	RAJ		11-9-65	WR
Y		REVISED PER TDRR 24018	RAJ		11-8-65	WR
Z		REVISED PER TDRR 24040	RAJ		11-9-65	WR
Ⓜ AA		REVISED PER TDRR 24060	RAJ		11-19-65	WR
Ⓜ AB		REVISED PER TDRR 24868	RAJ		12-22-65	WR
Ⓜ AC		REVISED PER TDRR 24973	RAJ		1-4-66	WR
Ⓜ AD		REVISED PER TDRR 25065	RAJ		1-18-66	[illegible]
AE		REVISED PER TDRR 25672	RAJ		2-4-66	WR
Ⓜ AF		REVISED PER TDRR 25671	RAJ		2-4-66	WR
AG		REVISED PER TDRR 26110	RAJ		2-15-66	WR
AH		REVISED PER TDRR 26372	"		3-16-66	[illegible]
AJ		REVISED PER TDRR 26425	"		3-16-66	[illegible]
AK		REVISED PER TDRR 26743	"		3-16-66	[illegible]
Ⓜ AL		REVISED PER TDRR 26798	"		3-16-66	[illegible]
AM		REVISED PER TDRR 27168	"		4-8-66	[illegible]
AN		REVISED PER TDRR 27235	"		4-8-66	[illegible]
AP		REVISED PER TDRR 27345	"		4-8-66	[illegible]
AR		REVISED PER TDRR 27417	"		4-8-66	[illegible]
AS		REVISED PER TDRR 27442	"		4-8-66	[illegible]

DASH NO.	P/C	PART NAME	REMARKS	PART NO.	SER. NO.	CONT. NO.	STYLE	TYPE	MATERIAL	A	B	C	D	E	F	G	H	J	K	L	M	N	P	R	S	T	U	V	W	Y	Z	AA	AB	AC	AD	AE	AF	AG	AH	AJ	AK	AL	AM	AN	AP	AR
399	K																																													
398	K																																													
350	K	ALIGNMENT OPTICAL TELESCOPE (LEM)		NA	NA	NA	A	I	NOTE 11B	4.000	2.625	3.375	2.750	.156	.093	.156	.187	NA	NA	2.312	1.468	1.187	.906	2.031	NA	.375	.156	NA	1.437	2.750	.437	NA	3.688	.062	.062	1.750	.593	NA	.625	3.375	.187	NA	.156	.531	.453	NA
309	K																																													
308	K																																													
307	K						B	I	NOTE 11 B	4.000	2.625	3.375	2.750	.156	.093	.156	.187	NA	NA	2.328	1.468	1.187	.906	2.031	.062	.375	.156	NA	1.437	2.750	.437	NA	3.687	.062	.062	1.750	.593	NA	NA	NA	NA	NA	NA	NA	NA	NA
306	K						B	II	NOTE 11 C	4.000	2.625	3.375	2.750	.156	.093	.156	.187	.125	.156	2.328	1.468	1.187	.906	2.031	.062	.375	.156		1.437	2.750	.437	2.312	3.687	.062	NA	1.750	.593									
305	K						B	I	NOTE 11 B	2.000	1.312	1.687	1.375	.078	.048	.078	.093	NA	NA	1.164	.734	.593	.453	1.015	.048	.171	.078		.718	1.375	.187	NA	NA	.048	.031	.875	.320									
304	K						B	II	NOTE 11 C	2.000	1.312	1.687	1.375	.078	.048	.078	.093	.070	.078	1.164	.734	.593	.453	1.015	.048	.171	.078	NA	.718	1.375	.187	.156	1.843	.048	NA	.875	.320	NA	NA	NA	NA	NA	NA	NA	NA	NA
303	K																																													
302	K																																													
301	K																																													
300	K	OPTICAL UNIT		NA	NA	NA	A	I	NOTE 11 B	2.000	1.312	.675	NA	NA	.048	.078	NA	NA	NA	1.090	.812	.675	.540	.940	NA	.265	NA	NA	NA	1.375	.218	NA	NA	NA	NA	NA	.375	NA	NA	NA	.180	NA	.078	NA	NA	NA
9	K	2 IN AUTOCOLLIMATOR		1001702			B	II	NOTE 11 C	4.000	2.625	3.812	2.750	.156	.093	.156	.187	.125	.156	2.250	1.500	1.187	.906	2.031	.093	.375	.156	1.750	1.437	2.750	.437	2.312	3.687	.062	NA	1.750	.593	.156	1.062	3.812	.156	NA	.156	1.062	.375	3.687
8	K	5 IN AUTOCOLLIMATOR		1017410			B	II	NOTE 11 C	4.000	2.625	3.812	2.750	.156	.093	.156	.187	.125	.156	2.250	1.500	1.187	.906	2.031	.093	.375	.156	1.750	1.437	2.750	.437	2.312	3.687	.062	NA	1.750	.593	.156	1.062	3.812	.156	NA	.156	1.062	.375	3.687
7	K	2½ IN AUTOCOLLIMATOR (SCT)		1017435			B	II	NOTE 11 C	4.000	2.625	3.812	2.750	.156	.093	.156	.187	.125	.156	2.250	1.500	1.187	.906	2.031	.093	.375	.156	1.750	1.437	2.750	.437	2.312	3.687	.062	NA	1.750	.593	.156	1.062	3.812	.156	NA	.156	1.062	.375	3.687
6	K	2½ IN AUTOCOLLIMATOR (SXT)		1017448			B	II	NOTE 11 C	4.000	2.625	3.812	2.750	.156	.093	.156	.187	.125	.156	2.250	1.500	1.187	.906	2.031	.093	.375	.156	1.750	1.437	2.750	.437	2.312	3.687	.062	NA	1.750	.593	.156	1.062	3.812	.156	NA	.156	1.062	.375	3.687
5	K	RETROREFLECTING PRISM ASSEMBLY		1019840			B	I	NOTE 11 B	4.000	2.625	3.812	2.750	.156	.093	.156	.187	NA	NA	2.250	1.500	1.187	.906	2.031	.093	.375	.156	1.750	1.437	2.750	.437	NA	NA	.062	.062	1.750	.593	.156	1.062	3.812	.156	NA	.156	1.062	.375	NA
4	K	S/H SIMULATOR ASSEMBLY		1019896			B	I	NOTE 11 B	4.000	2.625	3.812	2.750	.156	.093	.156	.187	NA	NA	2.250	1.500	1.187	.906	2.031	.093	.375	.156	1.750	1.437	2.750	.437	NA	NA	.062	.062	1.750	.593	.156	1.062	3.812	.156	NA	.156	1.062	.375	NA
3	K	REFERENCE MIRROR		1001767			B	I	NOTE 11 B	2.000	1.312	1.906	1.375	.078	.048	.078	.093	NA	NA	1.125	.750	.593	.453	1.015	.062	.187	.078	.875	.718	1.375	.218	NA	NA	.048	.031	.875	.305	.078	.531	1.906	.078	NA	.078	.531	.187	NA
2	K	2 IN PLANE READING AUTOCOLLIMATOR		1017413			B	I	NOTE 11 B	2.000	1.312	1.906	1.375	.078	.048	.078	.093	NA	NA	1.125	.750	.593	.453	1.015	.062	.187	.078	.875	.718	1.375	.218	NA	NA	.048	.031	.875	.305	.078	.531	1.906	.078	NA	.078	.531	.187	NA
1	K	2 IN AUTOCOLLIMATOR		1001702			B	I	NOTE 11 B	2.000	1.312	1.906	1.375	.078	.048	.078	.093	NA	NA	1.125	.750	.593	.453	1.015	.062	.187	.078	.875	.718	1.375	.218	NA	NA	.048	.031	.875	.305	.078	.531	1.906	.078	NA	.078	.531	.187	NA

NOTES FOR TABLE

STYLE A IS FOR G&N SYSTEM.
STYLE B IS FOR GROUND SUPPORT EQUIPMENT.
TYPE I IS WITHOUT MOUNTING HOLES.
TYPE II IS WITH MOUNTING HOLES.

Ⓖ REPLACES REV F WITH CHANGE

KOLLSMAN DASH NUMBERS

QTY REQD	PART OR IDENTIFYING NO.	MATERIAL OR NOTES	NOMENCLATURE OR DESCRIPTION	FIND NO.

LIST OF MATERIALS

MASTER

AS APPLICABLE	
NEXT ASSY	USED ON
APPLICATION	

UNLESS OTHERWISE SPECIFIED
DIMENSIONS ARE IN INCHES
CAPACITOR VALUES ARE IN μf
RESISTOR VALUES ARE IN OHMS
TOLERANCES ON
FRACTIONS ± — DECIMALS ±.005 ANGLES ± —
DO NOT SCALE THIS DRAWING

MATERIAL
SEE NOTE 11

MIT
INSTRUMENTATION LAB
CAMBRIDGE, MASS.

MANNED SPACECRAFT CENTER
HOUSTON, TEXAS

DRAWN E.A. Jones 7-16-65
CHECKED E.J. [illegible] 7-22-65
APPROVED
APPROVED W. Ryffer [illegible]
APPROVED MIT W. Ryffer [illegible]
APPROVED MSC [illegible] [illegible]
DATE

NAMEPLATES,
APOLLO G&N-GSE
(STANDANDS)

CODE IDENT NO. 80230
SIZE E
DRAWING NO. 1004260
SCALE NONE
SHEET 2 OF 6

NOTICE - WHEN GOVERNMENT DRAWINGS, SPECIFICATIONS, OR OTHER DATA ARE USED FOR ANY PURPOSE OTHER THAN IN CONNECTION WITH A DEFINITELY RELATED GOVERNMENT PROCUREMENT OPERATION, THE UNITED STATES GOVERNMENT THEREBY INCURS NO RESPONSIBILITY NOR ANY OBLIGATION WHATSOEVER; AND THE FACT THAT THE GOVERNMENT MAY HAVE FORMULATED, FURNISHED, OR IN ANY WAY SUPPLIED THE SAID DRAWINGS, SPECIFICATIONS OR OTHER DATA IS NOT TO BE REGARDED BY IMPLICATION OR OTHERWISE AS IN ANY MANNER LICENSING THE HOLDER OR ANY OTHER PERSON OR CORPORATION, OR CONVEYING ANY RIGHTS OR PERMISSION TO MANUFACTURE, USE, OR SELL ANY PATENTED INVENTION THAT MAY IN ANY WAY BE RELATED THERETO.

REVISIONS 02768

SYM	ZONE	DESCRIPTION	DR	CHK	DATE	APPROVED
G		REPLACES REV F WITH CHANGE PER TDRR 20854			7/26/65	[illegible]
H		REVISED PER TDRR 20892			9/3/65	WK
J		REVISED PER TDRR 20904			9/13/65	WK
K		REVISED PER TDRR 21379			[illegible]	WK
L		REVISED PER TDRR 21410			[illegible]	WK
M		REVISED PER TDRR 21993				
N		REVISED PER TDRR 22621			10/1/65	
P		REVISED PER TDRR 22671				
R		REVISED PER TDRR 22672				
S		REVISED PER TDRR 22750				
T		REVISED PER TDRR 22823				WK
U		REVISED PER TDRR 23072			[illegible]	[illegible]
V		REVISED PER TDRR 23521			10-26-65	WK
W		REVISED PER TDRR 23824	RAJ		11-9-65	WK
Y		REVISED PER TDRR 24018	RAJ		11-6-65	WK
Z		REVISED PER TDRR 24040	RAJ		11-15-65	WK
AA		REVISED PER TDRR 24060	RAJ		11-15-65	WK
AB		REVISED PER TDRR 24868	RAJ		12-22-65	WK
AC		REVISED PER TDRR 24973	RAJ		1-4-66	WK
AD		REVISED PER TDRR 25065	RAJ		1-19-66	[illegible]
AE		REVISED PER TDRR 25672	RAJ		2-4-66	WK
AF		REVISED PER TDRR 25671	RAJ		2-4-66	WK
AG		REVISED PER TDRR 26110	RAJ		2-15-66	WK
AH		REVISED PER TDRR 26372	"		3-16-66	[illegible]
AJ		REVISED PER TDRR 26425	"		3-16-66	[illegible]
AK		REVISED PER. TDRR 26743	"		3-16-66	[illegible]
AL		REVISED PER TDRR 26798	"		3-16-66	[illegible]
AM		REVISED PER TDRR 27168	"		4-8-66	[illegible]
AN		REVISED PER TDRR 27235	"		4-8-66	[illegible]
AP		REVISED PER TDRR 27345	"		4-8-66	[illegible]
AR		REVISED PER TDRR 27417	"		4-8-66	[illegible]
AS		REVISED PER TDRR 27442	"		4-8-66	[illegible]

DASH NO.	P/C	PART NAME	REMARKS	PART NO.	SER. NO.	CONT. NO.	STYLE	TYPE	MATERIAL	A
257	R	AUXILIARY CALIBRATION CONSOLE		2014059-021	NA	NAS-9-497	B	II	NOTE 11C	FOR DIMENSIONS, SEE DASH 18 VALUES BELOW
256		AGC CALIBRATION CONSOLE		2014049-021						
255		AGC HANDLING FIXTURE		2014282-021				I	NOTE 11B	FOR DIMENSIONS, SEE DASH 17 VALUES BELOW
254		DRAWER ASSY COMP. SIMULATOR		2014048-011				II	NOTE 11C	FOR DIMENSIONS, SEE DASH 18 VALUES BELOW
253		SHIPPING KIT ASSY, NAV DSKY		2016312-011						
252		SHIPPING KIT ASSY, UNIVERSAL DSKY		2016316-011						
251		SHIPPING KIT ASSY, MAIN DSKY		2016313-011				II	NOTE 11C	
250		AMPLIFIER, REWORK		2014386				I	NOTE 11B	FOR DIMENSIONS, SEE DASH 15 VALUES BELOW
249		TEMP MONITOR ASSY		2014313-011					NOTE 11C	FOR DIMENSIONS, SEE DASH 17 VALUES BELOW
248		AGC JUNCTION ASSY		2014341-011					NOTE 11B	FOR DIMENSIONS, SEE DASH 15 VALUES BELOW
247		AC INPUT PANEL ASSY		2014302-011						
246		SELF TEST ASSY		2014392 011						
245	R	TAPE PUNCH ASSEMBLY		2014039-011	NA		B	I	NOTE 11B	FOR DIMENSIONS, SEE DASH 15 VALUES BELOW
244	R	TAPE READER ASSEMBLY		2014038-011	NA	NAS-9-497	B	I	NOTE 11B	
243										
242										
241	R	APOLLO GUIDANCE COMPUTER GROUP		6003001	NA	NAS-9-497	A	I	NOTE 11B	FOR DIMENSIONS, SEE DASH 19 VALUES BELOW
240	R	SELF TEST ASSEMBLY		2014366-011	NA		B	I	NOTE 11B	FOR DIMENSIONS, SEE DASH 15 VALUES BELOW
239		POWER SUPPLY ASSY-115 V., 400 CYCLE		2014207-011						FOR DIMENSIONS, SEE DASH 17 VALUES BELOW
238		AC INPUT PANEL ASSY		2014043-011						
237		POWER CONTROL ASSY		2014079-011						FOR DIMENSIONS, SEE DASH 15 VALUES BELOW
236		DRAWER ASSY - X Y INTERFACE		2014040-011						
235		DRAWER ASSY R D C INTERFACE		2014045-011						
234		BUFFER CIRCUIT ASSY		2014254-011						
233		CONTROL & INTERFACE ASSY		2014204-011						
232		POWER CONTROL ASSY		2014044-011						
231		DRAWER ASSY, PROGRAMMER & MONITOR		2014041-011						FOR DIMENSIONS, SEE DASH 17 VALUES BELOW
230		CONNECTOR INTERFACE ASSY		2014272-011						FOR DIMENSIONS, SEE DASH 15 VALUES BELOW
229		CONNECTOR INTERFACE ASSY		2014047-011						
228		ANTENNA, TUNING CAPACITOR ASSY		2014209-011						
227		MOUNTING FIXTURE ASSY		2014006-011						FOR DIMENSIONS, SEE DASH 17 VALUES BELOW
226		POWER SUPPLY ASSY 3 VDC		2014234-011						FOR DIMENSIONS, SEE DASH 15 VALUES BELOW
225		PANEL ASSY — SIGNAL INTERFACE		2014010-011						
224		OSCILLOSCOPE ASSY		2014232-011						
223		AUXILIARY OUTLET ASSY		2014274-011						
222		FREQUENCY COUNTER		2014233-011						
221		POWER SUPPLY ASSY 10, 13, 28 VDC		2014235-011						
220		LOGIC DRAWER ASSY NO. 2		2014037-011						
219		LOGIC DRAWER ASSY NO. 1		2014036-011						FOR DIMENSIONS, SEE DASH 17 VALUES BELOW
218		COUNTER, ELECTRICAL ASSY		2014288-011						
217		POWER SUPPLY ASSY		2014279-011						FOR DIMENSIONS, SEE DASH 15 VALUES BELOW
216		TEST MOUNT ASSY		2014257-011						
215		UNIVERSAL DSKY PEDESTAL MOUNT		2014014-011						FOR DIMENSIONS, SEE DASH 17 VALUES BELOW
214		MAIN DSKY PEDESTAL MOUNT		2014343				I	NOTE 11B	
213		SHIPPING CONTAINER, MAIN DSKY		1006229				II	NOTE 11C	FOR DIMENSIONS, SEE DASH 18 VALUES BELOW
212		NAV DSKY		1006231						
211		AGC		1006230						
210		UNIVERSAL DSKY		1006422						
209		SHIPPING CONTAINER, AGC		1006421				II	NOTE 11C	
208		UNIVERSAL DSKY HANDLING FIXTURE		2014013-011				I	NOTE 11B	FOR DIMENSIONS, SEE DASH 15 VALUES BELOW
207		NAV DSKY HANDLING FIXTURE		1014377						FOR DIMENSIONS, SEE DASH 17 VALUES BELOW
206		MAIN DSKY HANDLING FIXTURE		1014334						
205		AGC HANDLING FIXTURE		2014282-011				I	NOTE 11B	
204		OPERATION CONSOLE		2014024-011				II	NOTE 11C	FOR DIMENSIONS, SEE DASH 18 VALUES BELOW
203		COMPUTER TEST SET		2014042-011		NAS-9-497				
202		DRAWER ASSY, COMPUTER SIMULATOR		2014048-011		FNP-12775				
201		AUXILIARY CALIBRATION CONSOLE		2014059-011		NAS-9-497				
200	R	AGC CALIBRATION CONSOLE		2014049-011	NA		B	II	NOTE 11C	
21	R									
20	R	NA		NA	NA	NA	A	II	NOTE 11C	2.000
19	R	NA		NA	NA	NA	A	I	NOTE 11B	2.000
18	R	NA		NA	NA	NA	B	II	NOTE 11C	4.187
17	P	NA		NA	NA	NA	B	I	NOTE 11B	4.187
16	R	NA		NA	NA	NA	B	II	NOTE 11C	2.000
15	R	NA		NA	NA	NA	B	I	NOTE 11B	2.000

DASH NO.	B	C	D	E	F	G	H	J	K	L	M	N	P	R	S	T	U	V	W	Y	Z	AA	AB	AC	AD	AE	AF	AG	AH	AJ	AK	AL	AM	AN	AP	AR
21																																				
20	1.312	1.687	1.375	.078	.031	.078	.093	.106 .113	.093	1.187	.750	.593	.453	1.015	.062	.187	.078	.875	.718	1.375	.218	1.156	1.843	.048	NA	.875	.305	.078	.312	1.687	.078	NA	.078	.312	.187	1.843
19	1.312	1.687	1.375	.078	.031	.078	.093	NA	NA	1.187	.750	.593	.453	1.015	.062	.187	.078	.875	.718	1.375	.218	NA	NA	.048	.031	.875	.305	.078	.312	1.687	.078	NA	.078	.312	.187	NA
18	1.875	3.469	2.750	.156	.093	.156	.125	.106 .113	.125	1.625	1.032	.844	.656	1.406	.093	.344	.156	1.781	1.531	2.844	.312	1.562	3.875	.062	NA	1.219	.500	.156	.719	3.469	.156	NA	.156	.719	.344	3.875
17	1.875	3.469	2.750	.156	.093	.156	.125	NA	NA	1.625	1.032	.844	.656	1.406	.093	.344	.156	1.781	1.531	2.844	.312	NA	NA	.062	.062	1.219	.500	.156	.719	3.469	.156	NA	.156	.719	.344	NA
16	1.312	1.687	1.375	.078	.031	.078	.093	.106 .113	.093	1.187	.750	.593	.453	1.015	.062	.187	.078	.875	.718	1.375	.218	1.156	1.843	.048	NA	.875	.305	.078	.312	1.687	.078	NA	.078	.312	.187	1.843
15	1.312	1.687	1.375	.078	.031	.078	.093	NA	NA	1.187	.750	.593	.453	1.015	.062	.187	.078	.875	.718	1.375	.218	NA	NA	.048	.031	.875	.305	.078	.312	1.687	.078	NA	.078	.312	.187	NA

THIS SHEET ADDED

Ⓖ REPLACES REV F WITH CHANGE

RAYTHEON DASH NUMBERS

NOTES FOR TABLE

STYLE A IS FOR G & N SYSTEM
STYLE B IS FOR GROUND SUPPORT EQUIPMENT
TYPE I IS WITHOUT MOUNTING HOLES
TYPE II IS WITH MOUNTING HOLES

QTY REQD	PART OR IDENTIFYING NO.	MATERIAL OR NOTES	NOMENCLATURE OR DESCRIPTION	FIND NO.

LIST OF MATERIALS

NEXT ASSY	USED ON
AS APPLICABLE	

APPLICATION

UNLESS OTHERWISE SPECIFIED
DIMENSIONS ARE IN INCHES
CAPACITOR VALUES ARE IN µf
RESISTOR VALUES ARE IN OHMS
TOLERANCES ON
FRACTIONS ± — DECIMALS ±.005 ANGLES ± —
DO NOT SCALE THIS DRAWING

MATERIAL
SEE NOTE 11

MIT
INSTRUMENTATION LAB
CAMBRIDGE, MASS.

MANNED SPACECRAFT CENTER
HOUSTON, TEXAS

DRAWN R. A. Jones 7-16-65
CHECKED A. J. [illegible] 7-22-65
APPROVED
APPROVED [illegible] 7/27/65
APPROVED MIT [illegible] 7/27/65
APPROVED MSC [illegible]
DATE

NAMEPLATES,
APOLLO GEN-GSE
(STANDARDS)

CODE IDENT NO. 80230
SIZE E
DRAWING NO. 1004260
SCALE NONE
SHEET 3 OF 6

MASTER

1004260

SYM	ZONE	DESCRIPTION	DR	CHK	DATE	APPROVED
G		REPLACES REV F WITH CHANGE PER TDRR 20854.			7/22/65	WK
H		REVISED PER TDRR 20892			[illegible]	WK
J		REVISED PER TDRR 20904			[illegible]	WK
K		REVISED PER TDRR 21379			[illegible]	WK
L		REVISED PER TDRR 21410			[illegible]	WK
M		REVISED PER TDRR 21993				
N		REVISED PER TDRR 22621				
P		REVISED PER TDRR 22671				
R		REVISED PER TDRR 22672				
S		REVISED PER TDRR 22750				
T		REVISED PER TDRR 22823			/65	WK
U		REVISED PER TDRR 23072			[illegible]	
V		REVISED PER TDRR 23521			10-26-65	WK
W		REVISED PER TDRR 23824	RAJ		11-9-65	WK
Y		REVISED PER TDRR 24018	RAJ		11-16-65	WK
Z		REVISED PER TDRR 24040	RAJ		11-19-65	WK
AA		REVISED PER TDRR 24060	RAJ		11-19-65	WK
AB		REVISED PER TDRR 24868	RAJ		12-22-65	
AC		REVISED PER TDRR 24973	RAJ		1-4-66	WK
AD		REVISED PER TDRR 25065	RAJ		1-18-66	
AE		REVISED PER TDRR 25672	RAJ		2-4-66	WK
AF		REVISED PER TDRR 25671	RAJ		2-4-66	WK
AG		REVISED PER TDRR 26110	RAJ		2-15-66	WK
AH		REVISED PER TDRR 26372	"		3-9-66	
AJ		REVISED PER TDRR 26425	"		3-16-66	
AK		REVISED PER TDRR 26743	"		3-16-66	
AL		REVISED PER TDRR 26798	"		3-16-66	
AM		REVISED PER TDRR 27168	"		4-8-66	
AN		REVISED PER TDRR 27235	"		4-8-66	
AP		REVISED PER TDRR 27345	"		4-8-66	
AR		REVISED PER TDRR 27417	"		4-8-66	
AS		REVISED PER TDRR 27442	"		4-8-66	

AC ELECTRONICS DASH NUMBERS

DASH NO.	P/C	PART NAME	REMARKS	PART NO.	SER. NO.	CONT. NO.	STYLE	TYPE	MATERIAL
199	AC	EYE-PIECE STOWAGE UNIT		2021255-011			A	I	
198	AC	SIGNAL CONDITIONER ASSY C/M		2007234		NAS-9-497			NOTE 11B
197	AC	SIGNAL CONDITIONER ASSY C/M		2007235					
196	AC	SIGNAL CONDITIONER ASSY LEM		6007010					
195	AC	PSA & SIGNAL CONDITIONER ASSY		6007009		NAS-9-497	A	I	NOTE 11B
194	AC								
193	AC								
192	AC								
191	AC								
190	AC								
189	AC								
188	AC								
187	AC								
186	AC	ANN PNL & EYEPIECE STOW. ASSY		1021255-021			A	I	
185	AC	ANN PNL & EYEPIECE STOW. ASSY		1021255-011			A	I	
184	AC	FIX., HAND., G AND N HARNESS		1901846-041		NAS-9-497	B	II	NOTE 11C
183	AC	INSTALLING TOOL, ELEC. CONN		1902586-011			B	II	NOTE 11C
182	AC	ADPT MODULE, P.S.A.		6900088-011			B	II	NOTE 11C
181	AC	G & N INDICATOR CONTROL PANEL ASSY		2014578-011			A	I	NOTE 11B
180	AC	ADPT MODULE, P.S.A.		1902431-031			B	II	
179	AC	MOUNTING PLATE, IMU/PTA		6900083-011					
178	AC	MOUNTING PLATE, COMPONENT		6900007-021					
177	AC	FIX., MOUNTING, SUBSYSTEM		2900070-021					
176	AC	FIX., MOUNTING, G AND N		2900067-021					
175	AC	CSL, COOL. AND PWR, G AND N		1902134-031					
174	AC	FIX., HAND., C/M AND LEM CDU		2900999-011					NOTE 11C
173	AC	FIX., HANDLING, C/M PSA		2900998-011					
172	AC	CAGING ELECTRONICS, GYRO		2900029-021					
171	AC	DISTRIBUTION BOX, GSE		2900024-021					
170	AC	ANALYZER, OPTICS-INERTIAL		2900023-021					
169	AC	ADPT, TEST POINT, P.S.A.		2900037-021					
168	AC	TEST SELECTOR		2900028-021					
167	AC	TEST CONTROL		2900027-021					
166	AC	PANEL, MONITOR		2900031-021					
165	AC	TERM. BOARD STORAGE DRAWER		2900927-011					
164	AC	INPUT/OUTPUT PANEL		2900926-011					
163	AC	CONTROL PANEL		2900896-011					
162	AC	CSL. CAL AND TEST, SCM/PSAAM		2900895-011					
161	AC	FIX., LIFT AND HAND., IMU		1015462-011					
160	AC	FIX., HAND., G AND N HARNESS		1901846-031					
159	AC	BATTERY POWER PACK		1900011-031			B	II	NOTE 11C
158	AC	COUPLING DATA UNIT ASSEMBLY C/M		2007222			A	I	NOTE 11B
157	AC	COUPLING DATA UNIT ASSEMBLY - LEM		2007222					
156	AC	POWER & SERVO ASSEMBLY C/M		2007200					
155	AC	PIPA ELECTRONICS ASSEMBLY		2007201					
154	AC	PULSE TORQUE ASSEMBLY - LEM		6007000					
153	AC	POWER & SERVO ASSEMBLY - LEM		6007200			A	I	NOTE 11B
152	AC	CONT PNL, RSVR CKT TESTER		2900770-011			B	II	NOTE 11C
151	AC	TESTER, RESOLVER CIRCUIT		2900708-011					
150	AC	JUNCTION BOX, P.S.A./G.S.E.		1901933-021					
149	AC	BATTERY PACK, LIFTING		2900812-011					
148	AC	MOUNTING PLATE, COMPONENT		6900007-011					
147	AC	MOUNTING PLATE, COMPONENT		2900677-011					
146	AC	CART, TRANS, G AND N		1900009-041					
145	AC	CONTAINER, SHIPPING, IMU		1900010-021		NAS-9-497	B	II	NOTE 11C
144	AC	FIX., MOUNTING, G AND N		1902204-021			B	II	NOTE 11C
143	AC	CSL, COOL. AND PWR, G AND N		1902134-021					
142	AC	ANALYZER, OPTICS-INERTIAL		2900023-011					
141	AC	CONT, TEMP, PORTABLE		2900060-011					
140	AC	TESTER, CKT, IMU/CDU RSVR		2900286-011					
139	AC	SIMULATOR, LD/SIG, CDU		2900285-011					
138	AC	SIMULATOR, LD/SIG, OPTICS		1902023-021					
137	AC	FIX., MOUNTING, IMU/NAV BASE		6900003-011					
136	AC	FIXTURE, OPTICS/NAV BASE		2900072-011					
135	AC	FIX., MOUNTING, SUB SYSTEM		2900070-011					
134	AC	FIX., HAND., G AND N HARNESS		2900069-011					
133	AC	CNTR, SHIPPING, NAV BASE		2900068-011					
132	AC	FIX., MOUNTING, G AND N		2900067-011					
131	AC	SIMULATOR, LD/SIG, IMU/CDU		2900062-011					
130	AC	TESTER, GYRO WHEEL		2900061-011					
129	AC	COOLANT SUPPLY		1902133-021					
128	AC	TABLE, ROTARY		1900926-021					
127	AC	FIX., HAND., OPTICS		2900074-011					
126	AC	FIXTURE, MTG, PTA/PEA.		2900066-011					
125	AC	CONT, TEMP, IMU LIFTING		2900063-011					
124	AC	FIXTURE, HANDLING, IMU		2900064-011					
123	AC	CONT, OPTICS, REMOTE		1902046-021					
122	AC	TEST CONTROL		1902009-021					
121	AC	ADPT MODULE, P.S.A.		1902431-021					
120	AC	BRIDGE, DECADE ERROR		2900128-011					
119	AC	PWR SUP, ELECTRONICS		2900012-011					
118	AC	PWR SUP, RELAY AND LAMP		1900049-031					
117	AC	CONSOLE, OSCILLOGRAPH		1900000-021					
116	AC	ADPT MODULE, P.S.A.		1902431-011					
115	AC	ADPT, TEST POINT, PTA/PEA.		2900145-011					
114	AC	ADPT, TEST POINT, P.S.A.		2900037-011					
113	AC	CONTROL, GIMBAL POSITION		2900036-011					
112	AC	SELECTOR, SIGNAL, PRIMARY		2900035-011					
111	AC	SEL, SIG. OSCILLOGRAPH		2900034-011					
110	AC	PANEL, PWR SUP AND LOAD		2900033-011					
109	AC	PANEL, MONITOR		2900031-011					
108	AC	PANEL, AUXILIARY INPUT		2900030-011					
107	AC	CAGING ELECTRONICS, GYRO		2900029-011					
106	AC	TEST SELECTOR		2900028-011					
105	AC	TEST CONTROL		2900027-011					
104	AC	MONITOR AND CONTROL, TEMP		2900026-011					
103	AC	DISTRIBUTION BOX, GSE		2900024-011					
102	AC	VOLTMETER, DIGITAL		2900007-011			B	II	NOTE 11C
101	AC	NAVIGATION BASE ASSEMBLY - LEM		6899950		NAS-9-497	A	I	NOTE 11B
100	AC	NAVIGATION BASE ASSEMBLY		2899982		NAS-9-497	A	I	NOTE 11B

DASH NO.	A	B	C	D	E	F	G	H	J	K	L	M	N	P	R	S	T	U	V	W	Y	Z	AA	AB	AC	AD	AE	AF	AG	AH	AJ	AK	AL	AM	AN	AP	AR
199																																					
198	FOR DIMENSIONS, SEE DASH 100 VALUES BELOW																																				
197																																					
196																																					
195																																					
194																																					
193																																					
192																																					
191																																					
190																																					
189																																					
188																																					
187																																					
186	FOR DIMENSIONS, SEE DASH 100 VALUES BELOW																																				
185																																					
184	FOR DIMENSIONS, SEE DASH 144 VALUES BELOW																																				
183	FOR DIMENSIONS, SEE DASH 102 VALUES BELOW																																				
182	FOR DIMENSIONS, SEE DASH 141 VALUES BELOW																																				
181	3.000	1.938	2.437	NA	.125	.062	.188	.156	NA	NA	1.750	1.125	.906	.688	1.500	NA	.281	.125	NA	1.094	2.062	.312	NA	2.500	.062	.125	1.312	.469	NA	NA	NA	.156	NA	.125	.469	.344	NA
180	FOR DIMENSIONS, SEE DASH 121 VALUES BELOW																																				
179	FOR DIMENSIONS, SEE DASH 144 VALUES BELOW																																				
178																																					
177																																					
176																																					
175																																					
174	FOR DIMENSIONS, SEE DASH 141 VALUES BELOW																																				
173																																					
172																																					
171																																					
170																																					
169																																					
168																																					
167																																					
166																																					
165																																					
164																																					
163																																					
162	FOR DIMENSIONS, SEE DASH 144 VALUES BELOW																																				
161	FOR DIMENSIONS, SEE DASH 141 VALUES BELOW																																				
160	FOR DIMENSIONS, SEE DASH 144 VALUES BELOW																																				
159																																					
158	FOR DIMENSIONS, SEE DASH 100 VALUES BELOW																																				
157																																					
156																																					
155																																					
154																																					
153																																					
152	FOR DIMENSIONS, SEE DASH 141 VALUES BELOW																																				
151																																					
150	FOR DIMENSIONS, SEE DASH 144 VALUES BELOW																																				
149	FOR DIMENSIONS, SEE DASH 141 VALUES BELOW																																				
148	FOR DIMENSIONS, SEE DASH 144 VALUES BELOW																																				
147																																					
146																																					
145																																					
144	4.125	1.812	3.250	NA	.125	.062	.12	.156	.188 .104	.125	1.625	1.140	.890	.640	1.390	.125	.171	.125	1.875	1.687	2.625	.250	1.562	3.843	.093	NA	NA	.359	.125	.437	3.688	NA	3.687	.093	.40	.25	3.875
143	4.125	1.812	3.250	↑	.125	.062	.12	.156	↑	.125	1.625	1.140	.890	.640	1.390	.125	.171	.125	1.875	1.687	2.625	.250	1.562	3.843	.093	↑	↑	.359	.125	.437	3.688	↑	3.687	.093	.40	.25	3.875
142	4.125	1.812	3.250	↑	.125	.062	.12	.156	↑	.125	1.625	1.140	.890	.640	1.390	.125	.171	.125	1.875	1.687	2.625	.250	1.562	3.843	.093	↑	↑	.359	.125	.437	3.688	↑	3.687	.093	.40	.25	3.875
141	2.125	.968	1.718	↑	.093	.031	.06	.093	↑	.093	.858	.608	.484	.358	.733	.077	.116	.062	.937	.875	1.343	.125	.781	1.892	.046	↑	↑	.209	.093	.250	1.875	↑	1.840	.046	.23	.16	1.938
140	4.125	1.812	3.250	↑	.125	.062	.12	.156	↑	.125	1.625	1.140	.890	.640	1.390	.125	.171	.125	1.875	1.687	2.625	.250	1.562	3.843	.093	↑	↑	.359	.125	.437	3.688	↑	3.687	.093	.40	.25	3.875
139																																					
138																																					
137																																					
136																																					
135																																					
134																																					
133																																					
132																																					
131																																					
130																																					
129																																					
128	4.125	1.812	3.250	↑	.125	.062	.12	.156	↑	.125	1.625	1.140	.890	.640	1.390	.125	.171	.125	1.875	1.687	2.625	.250	1.562	3.843	.093	↑	↑	.359	.125	.437	3.688	↑	3.687	.093	.40	.25	3.875
127	2.125	.968	1.718	↑	.093	.031	.06	.093	↑	.093	.858	.608	.484	.358	.733	.077	.116	.062	.937	.875	1.343	.125	.781	1.892	.046	↑	↑	.209	.093	.250	1.875	↑	1.840	.046	.23	.16	1.938
126																																					
125																																					
124																																					
123																																					
122																																					
121																																					
120																																					
119																																					
118																																					
117																																					
116																																					
115																																					
114																																					
113																																					
112																																					
111																																					
110																																					
109																																					
108																																					
107																																					
106																																					
105																																					
104																																					
103																																					
102	2.125	.968	1.718	NA	.093	.031	.06	.093	.188 .104	.093	.858	.608	.484	.358	.733	.077	.116	.062	.937	.875	1.343	.125	.781	1.892	.046	NA	NA	.209	.093	.250	1.875	NA	1.840	.046	.23	.16	1.938
101	2.000	1.312	1.906	1.375	.078	.048	.078	.093	NA	NA	1.125	.750	.593	.453	1.015	.062	.187	.078	.875	.718	1.375	.218	NA	NA	.048	.031	.875	.305	.078	.531	1.906	.078	NA	.078	.531	.187	NA
100	2.000	1.312	1.906	1.375	.078	.048	.078	.093	NA	NA	1.125	.750	.593	.453	1.015	.062	.187	.078	.875	.718	1.375	.218	NA	NA	.048	.031	.875	.305	.078	.531	1.906	.078	NA	.078	.531	.187	NA

THIS SHEET ADDED

Ⓖ REPLACES REV F WITH CHANGE

NOTES FOR TABLE

STYLE A IS FOR G&N SYSTEM
STYLE B IS FOR GROUND SUPPORT EQUIPMENT
TYPE I IS WITHOUT MOUNTING HOLES
TYPE II IS WITH MOUNTING HOLES

NOTE: AC DASH NO's. CONT. ON SH.6

QTY REQD	PART OR IDENTIFYING NO.	MATERIAL OR NOTES	NOMENCLATURE OR DESCRIPTION	FIND NO.

LIST OF MATERIALS

NEXT ASSY	USED ON
AS APPLICABLE	

APPLICATION

UNLESS OTHERWISE SPECIFIED
DIMENSIONS ARE IN INCHES
CAPACITOR VALUES ARE IN μf
RESISTOR VALUES ARE IN OHMS
TOLERANCES ON
FRACTIONS ± — DECIMALS ±.005 ANGLES ± —
DO NOT SCALE THIS DRAWING

MATERIAL
SEE NOTE 11

MIT
INSTRUMENTATION LAB
CAMBRIDGE, MASS.

MANNED SPACECRAFT CENTER
HOUSTON, TEXAS

DRAWN R A Jones 7-16-65
CHECKED 7-22-65
APPROVED
APPROVED W Kupfer
APPROVED MIT W Kupfer
APPROVED MSC
DATE

NAMEPLATES,
APOLLO G&N-GSE
(STANDARDS)

CODE IDENT NO. 80230
SIZE E
DRAWING NO. 1004260
SCALE NONE
SHEET 4 OF 6

MASTER

NOTICE – WHEN GOVERNMENT DRAWINGS, SPECIFICATIONS, OR OTHER DATA ARE USED FOR ANY PURPOSE OTHER THAN IN CONNECTION WITH A DEFINITELY RELATED GOVERNMENT PROCUREMENT OPERATION, THE UNITED STATES GOVERNMENT THEREBY INCURS NO RESPONSIBILITY NOR ANY OBLIGATION WHATSOEVER, AND THE FACT THAT THE GOVERNMENT MAY HAVE FORMULATED, FURNISHED, OR IN ANY WAY SUPPLIED THE SAID DRAWINGS, SPECIFICATIONS OR OTHER DATA IS NOT TO BE REGARDED BY IMPLICATION OR OTHERWISE AS IN ANY MANNER LICENSING THE HOLDER OR ANY OTHER PERSON OR CORPORATION, OR CONVEYING ANY RIGHTS OR PERMISSION TO MANUFACTURE, USE, OR SELL ANY PATENTED INVENTION THAT MAY IN ANY WAY BE RELATED THERETO.

5

REVISIONS 02768

SYM	ZONE	DESCRIPTION	DR	CHK	DATE	APPROVED
G		REPLACES REV F WITH CHANGE PER TDRR 20854	rj		7/20/65	WK
H		REVISED PER TDRR 20892	rj		8/3/65	WK
J		REVISED PER TDRR 20904	rj		8/3/65	WK
K		REVISED PER TDRR 21379	rj		8/6/65	WK
L		REVISED PER TDRR 21410	rj		8/26/65	WK
M		REVISED PER TDRR 21993	rj		10/1/65	
N		REVISED PER TDRR 22621	rj			
P		REVISED PER TDRR 22671	rj			
R		REVISED PER TDRR 22672	rj			
S		REVISED PER TDRR 22750	rj			
T		REVISED PER TDRR 22823	rj			WK
U		REVISED PER TDRR 23072	rj		10-22-65	[illegible]
V		REVISED PER TDRR 23521	rj		10-25-65	[illegible]
W		REVISED PER TDRR 23824	RAJ		11-9-65	[illegible]
Y		REVISED PER TDRR 24018	RAJ		11-16-65	[illegible]
Z		REVISED PER TDRR 24040	RAJ		11-19-65	WK
AA		REVISED PER TDRR 24060	RAJ		11-19-65	WK
AB		REVISED PER TDRR 24868	RAJ		12-22-65	WK
AC		REVISED PER TDRR 24973	RAJ		1-4-66	[illegible]
AD		REVISED PER TDRR 25065	RAJ		1-18-66	[illegible]
AE		REVISED PER TDRR 25672	RAJ		2-4-66	WK
AF		REVISED PER TDRR 25671	RAJ		2-4-66	WK
AG		REVISED PER TDRR 26110	RAJ		2-15-66	WK
AH		REVISED PER TDRR 26372	"		3-16-66	[illegible]
AJ		REVISED PER TDRR 26425	"		3-16-66	[illegible]
AK		REVISED PER TDRR 26743	"		3-16-66	[illegible]
AL		REVISED PER TDRR 26798	"		3-16-66	[illegible]
AM		REVISED PER TDRR 27168	"		4-7-66	[illegible]
AN		REVISED PER TDRR 27235	"		4-7-66	[illegible]
AP		REVISED PER TDRR 27345	"		4-7-66	[illegible]
AR		REVISED PER TDRR 27417	"		4-7-66	[illegible]
AS		REVISED PER TDRR 27442	"		4-7-66	[illegible]

DASH NO.	P/C	PART NAME	REMARKS	PART NO.	SER. NO.	CONT. NO.	STYLE	TYPE	MATERIAL	A	B	C	D	E	F	G	H	J	K	L	M	N	P	R	S	T	U	V	W	Y	Z	AA	AB	AC	AD	AE	AF	AG	AH	AJ	AK	AL	AM	AN	AP	AR
499	MIT																																													
498																																														
401	MIT	COMPUTER ASSY		2003100		NAS-9-497	A	I	NOTE 11 B	2.000	1.312	1.906	1.375	.078	.048	.078	.093	NA	NA	1.125	.750	.593	.453	1.015	.062	.187	.078	.875	.718	1.375	.218	NA	NA	.048	.031	.875	.305	.078	.531	1.906	.078	NA	.078	.531	.187	NA
-00	MIT	LIFTING SLING-G&N INST. QUAL. FIX. & AZM. REF. FIX.		1021640		NAS-9-4065	B	II	NOTE 11 C	2.000	1.312	1.687	1.375	.078	.048	.078	.093	[illegible]	.093	1.187	.750	.593	.453	1.015	.062	.187	.078	.875	.718	1.375	.218	1.156	1.843	.048	NA	.875	.305	.078	.312	1.687	.110	1.830	.070	.275	.180	1.844

MIT DASH NUMBERS

THIS SHEET ADDED

Ⓖ REPLACES REV F WITH CHANGE

NOTES FOR TABLE

STYLE A IS FOR G&N SYSTEM
STYLE B IS FOR GROUND SUPPORT EQUIPMENT
TYPE I IS WITHOUT MOUNTING HOLES
TYPE II IS WITH MOUNTING HOLES

MASTER

QTY REQD	PART OR IDENTIFYING NO.	MATERIAL OR NOTES	NOMENCLATURE OR DESCRIPTION	FIND NO.

LIST OF MATERIALS

NEXT ASSY	USED ON
AS APPLICABLE	

APPLICATION

UNLESS OTHERWISE SPECIFIED
DIMENSIONS ARE IN INCHES
CAPACITOR VALUES ARE IN µf
RESISTOR VALUES ARE IN OHMS
TOLERANCES ON
FRACTIONS ± — DECIMALS ±.005 ANGLES ± —
DO NOT SCALE THIS DRAWING

MATERIAL
SEE NOTE 11

MIT
INSTRUMENTATION LAB
CAMBRIDGE, MASS.

		DATE
DRAWN	R A Jones	7-16-65
CHECKED	[illegible]	7-23-65
APPROVED		
APPROVED	W Kupfer	7/28/65
APPROVED MIT	W Kupfer	7/22/65
APPROVED MSC	[illegible]	7/26/65

MANNED SPACECRAFT CENTER
HOUSTON, TEXAS

NAMEPLATES,
APOLLO G&N-GSE
(STANDARDS)

CODE IDENT NO. 80230
SIZE E
DRAWING NO. 1004260
SCALE NONE
SHEET 5 OF 6

NOTICE – WHEN GOVERNMENT DRAWINGS, SPECIFICATIONS, OR OTHER DATA ARE USED FOR ANY PURPOSE OTHER THAN IN CONNECTION WITH A DEFINITELY RELATED GOVERNMENT PROCUREMENT OPERATION, THE UNITED STATES GOVERNMENT THEREBY INCURS NO RESPONSIBILITY NOR ANY OBLIGATION WHATSOEVER; AND THE FACT THAT THE GOVERNMENT MAY HAVE FORMULATED, FURNISHED, OR IN ANY WAY SUPPLIED THE SAID DRAWINGS, SPECIFICATIONS, OR OTHER DATA IS NOT TO BE REGARDED BY IMPLICATION OR OTHERWISE AS IN ANY MANNER LICENSING THE HOLDER OR ANY OTHER PERSON OR CORPORATION, OR CONVEYING ANY RIGHTS OR PERMISSION TO MANUFACTURE, USE, OR SELL ANY PATENTED INVENTION THAT MAY IN ANY WAY BE RELATED THERETO.

REVISIONS 02768

SYM	ZONE	DESCRIPTION	DR	CHK	DATE	APPROVED
AG		CHANGED NUMBER OF SHEETS FROM 5 TO 6 PER TDRR 26110.	RAJ		2-15-66	
AH		REVISED PER TDRR 26372	"		3-16-66	
AJ		REVISED PER TDRR 26425	"		3-16-66	
AK		REVISED PER TDRR 26743	"		3-16-66	
AL		REVISED PER TDRR 26798	"		3-16-66	
AM		REVISED PER TDRR 27168	"		4-7-66	
AN		REVISED PER TDRR 27235	"		4-7-66	
AP		REVISED PER TDRR 27345	"		4-7-66	
AR		REVISED PER TDRR 27417	"		4-7-66	
AS		REVISED PER TDRR 27442	"		4-7-66	

DASH NO.	P/C	PART NAME	REMARKS	PART NO.	SER NO.	CONT NO.	STYLE	TYPE	MATERIAL
599	AC								
598	AC								
512	AC	COUPLING DATA UNIT ASSEMBLY C/M		2007322-011			A	I	NOTE 11B
511	AC	COUPLING DATA UNIT ASSEMBLY - LEM		2007322-021					
510									
509									
508	AC	NAVIGATION BASE ASSEMBLY - LEM		6899980		NAS-9-497	A	I	NOTE 11B
507									
506									
505									
504									
503									
502									
501	AC	MOUNTING PLATE, COMPONENT		6900007-031		NAS-9-497	B	II	NOTE 11C
500	AC	MOUNTING PLATE, COMPONENT		2900677-021					

DASH NO.	A	B	C	D	E	F	G	H	J	K	L	M	N	P	R	S
512	FOR DIMENSIONS, SEE DASH 508 VALUES BELOW															
511																
508	2.000	1.312	1.906	1.375	.078	.048	.078	.093	NA	NA	1.125	.750	.593	.453	1.015	.062
501	FOR DIMENSIONS, SEE DASH 500 VALUES BELOW															
500	4.125	1.812	3.250	NA	.125	.062	.12	.156	.109 .104	.125	1.625	1.140	.890	.640	1.390	.125

DASH NO.	T	U	V	W	Y	Z	AA	AB	AC	AD	AE	AF	AG	AH	AJ	AK	AL	AM	AN	AP	AR
508	.187	.078	.875	.718	1.375	.218	NA	NA	.048	.031	.875	.305	.078	.531	1.906	.078	NA	.078	.531	.187	NA
500	.171	.125	1.875	1.687	2.625	.250	1.562	3.843	.093	NA	NA	.359	.125	.437	3.688	NA	3.687	.093	.40	.25	3.875

AC ELECTRONICS DASH NUMBERS

(AG) THIS SHEET ADDED

NOTES FOR TABLE
STYLE A IS FOR G&N SYSTEM
STYLE B IS FOR GROUND SUPPORT EQUIPMENT
TYPE I IS WITHOUT MOUNTING HOLES
TYPE II IS WITH MOUNTING HOLES

MASTER

QTY REQD	PART OR IDENTIFYING NO.	MATERIAL OR NOTES	NOMENCLATURE OR DESCRIPTION	FIND NO.

LIST OF MATERIALS

AS APPLICABLE
NEXT ASSY | USED ON
APPLICATION

UNLESS OTHERWISE SPECIFIED
DIMENSIONS ARE IN INCHES
CAPACITOR VALUES ARE IN μf
RESISTOR VALUES ARE IN OHMS
TOLERANCES ON
FRACTIONS ± — DECIMALS ±.005 ANGLES ± —
DO NOT SCALE THIS DRAWING

MATERIAL
SEE NOTE 11

MIT
INSTRUMENTATION LAB
CAMBRIDGE, MASS.

DRAWN R. A. Jones 2-15-66
CHECKED R. Chandler 2-15-66
APPROVED
APPROVED
APPROVED MIT
APPROVED MSC
DATE

MANNED SPACECRAFT CENTER
HOUSTON, TEXAS

NAMEPLATES,
APOLLO G&N-GSE
(STANDARDS)

CODE IDENT NO. 80230
SIZE E
DRAWING NO. 1004260
SCALE NONE
SHEET 6 OF 6

NOTICE – WHEN GOVERNMENT DRAWINGS, SPECIFICATIONS, OR OTHER DATA ARE USED FOR ANY PURPOSE OTHER THAN IN CONNECTION WITH A DEFINITELY RELATED GOVERNMENT PROCUREMENT OPERATION, THE UNITED STATES GOVERNMENT THEREBY INCURS NO RESPONSIBILITY NOR ANY OBLIGATION WHATSOEVER; AND THE FACT THAT THE GOVERNMENT MAY HAVE FORMULATED, FURNISHED, OR IN ANY WAY SUPPLIED THE SAID DRAWINGS, SPECIFICATIONS, OR OTHER DATA IS NOT TO BE REGARDED BY IMPLICATION OR OTHERWISE AS IN ANY MANNER LICENSING THE HOLDER OR ANY OTHER PERSON OR CORPORATION, OR CONVEYING ANY RIGHTS OR PERMISSION TO MANUFACTURE, USE, OR SELL ANY PATENTED INVENTION THAT MAY IN ANY WAY BE RELATED THERETO.

NOTES:

1. INTERPRET DRAWING IN ACCORDANCE WITH STANDARDS PRESCRIBED IN MIL-D-70327.
2. DIMENSIONS ON EACH VIEW APPLY TO ALL VIEWS. (WITH THE EXCEPTION OF MOUNTING HOLES).
3. FORMATS ILLUSTATED WILL BE APPLICABLE TO ALL ITEMS REQUIRING NAMEPLATES BELOW END ITEM DESIGNATION (SYSTEMS, ASSEMBLIES, ETC.)
4. PLATE BACKGROUND TO BE LUSTERLESS BLACK PER FED-STD-595, COLOR 37038. BORDER, MARKING AND LETTERING TO BE NATURAL METAL,(ANODIZED ALUMINUM).
5. MARKING METHOD TO BE DIE STAMPING, ETCHING OR ENGRAVING IN ACCORDANCE WITH MIL-P-19834.
6. LETTERING STYLE TO BE GOTHIC,(SANS SERIFS), AND NUMBERS TO BE ARABIC.
7. WHERE LOCATING DIMENSIONS ARE NOT SHOWN, CHARACTERS SHALL BE SYMMETRICALLY POSITIONED.
8. IDENTIFY WITH DRAWING NUMBER PER ND 1002019.
9. WHEN "AUTO MARK" METAL MARKING TYPEWRITER IS USED TO ADD DATA TO BLANK SPACES, TYPE SIZE IS TO BE SELECTED FROM DIMENSIONS U, AC AND AM.
10. NASA SYMBOL IS TO BE PROPORTIONAL TO NAMEPLATE IN RATIO OF 1 TO 5 WITH DIMENSION A VALUE AND IS TO HAVE NATURAL BACKGROUND SYMBOL LETTERS LETTERING AND FEATHER TO BE BLACK,(OR WHITE FOR SILK SCREENING). WHERE BLACK FEATHER PROTRUDES INTO BLACK BACKGROUND, A MINIMUM OUTLINE OF NATURAL BACKGROUND SHALL EXIST.
11. NAMEPLATES WILL BE APPLIED BY METHODS LISTED BELOW, SHOWN IN ORDER OF PREFERENCE, (I.E., FOR RELIABILITY AND WEIGHT).
    - A - STENCIL OR SILK SCREEN DIRECTLY ON EQUIPMENT USING INK PER SCD 1010920,(WHITE OR BLACK).
    - B - ALUMINUM FOIL,(STYLE A OR B, TYPE I):
      FOIL SHALL BE .0030 ±.0005 THICK PER MIL-A-148.
      FOIL SHALL HAVE NO ADHESIVE BACKING.
      FOIL SHALL BE BONDED PER ND 1002219,(METHOD II).
      FOIL SHALL BE CLEAR ANODIZED PER MIL-A-8625, TYPE II.
    - C - PLATE, (STYLE A OR B, TYPE II):
      MATERIAL: QQ-A-250, TEMPER O OR H14, TYPE 1100, ALUMINUM ALLOY, .032 THICK.
      ANODIZE PER MIL-A-8625, TYPE II.
      ALUMINUM PLATE MUST BE FREE FROM BURRS AND SHARP CORNERS, MOUNTED WITH APPLICABLE SIZE FASTENERS.
12. NAMEPLATES SHALL BE CAPABLE OF MEETING APPLICABLE REQUIREMENTS OF MIL-M-13231.
13. ON DIMENSION TABLES SHOWN ON PAGES 2, 3, 4 AND 5, NA MEANS, "NOT APPLICABLE".

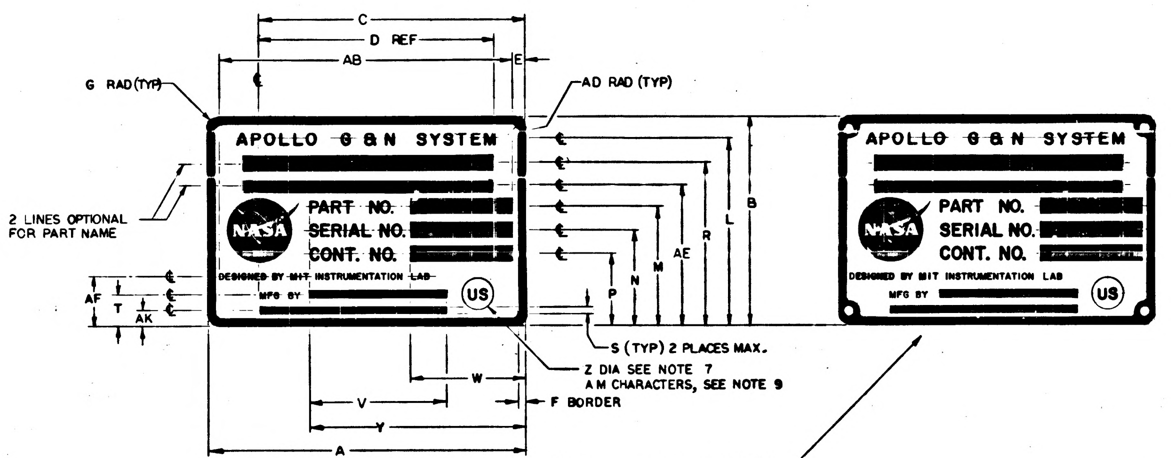

FOR G AND N SYSTEM
STYLE A

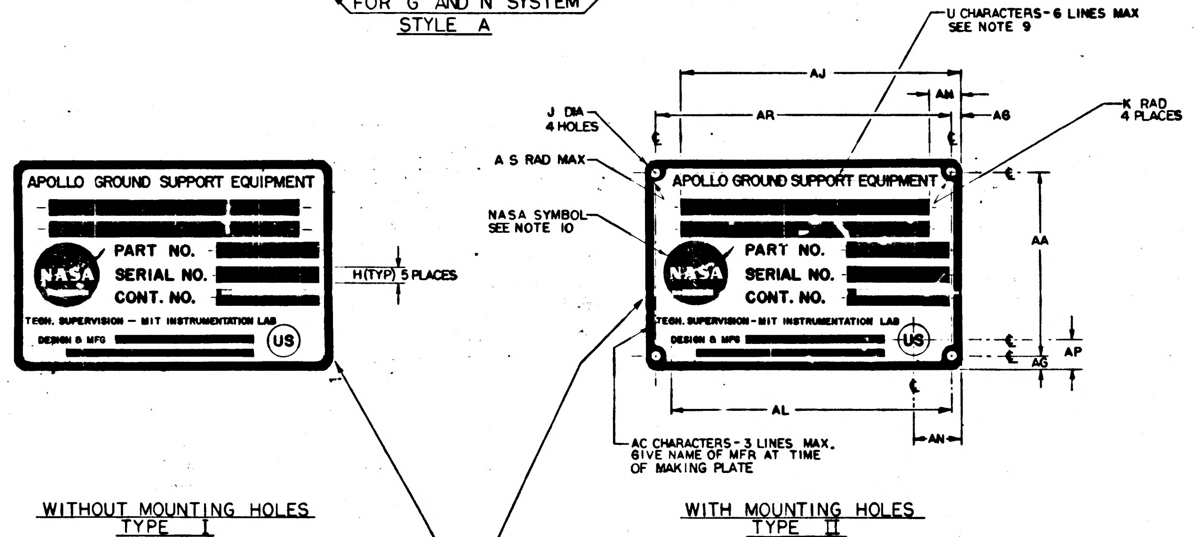

WITHOUT MOUNTING HOLES
TYPE I

WITH MOUNTING HOLES
TYPE II

FOR GROUND SUPPORT EQUIPMENT
STYLE B

REVISIONS 02768

	SYM	ZONE	DESCRIPTION	DR	CHK	DATE	APPROVED
	G		REPLACES REV F WITH CHANGE PER TDRR 20854			7/22/65	WK
★	H		REVISED PER TDRR 20892			8/5/65	WK
	J		REVISED PER TDRR 20904			8/5/65	WK
	K		REVISED PER TDRR 21379			8/16/65	WK
	L		REVISED PER TDRR 21410			8/23/65	WK
★	M		REVISED PER TDRR 21993				
★	N		REVISED PER TDRR 22621			10/	
★	P		REVISED PER TDRR 22671			11/	
★	R		REVISED PER TDRR 22672				
★	S		REVISED PER TDRR 22750			65	WK
	T		REVISED PER TDRR 22823				
★	U		REVISED PER TDRR 23072			10-22-65	WK
	V		REVISED PER TDRR 23521			10-27-65	WK
★	W		REVISED PER TDRR 23824	RAJ		11-9-65	WK
★	Y		REVISED PER TDRR 24018	RAJ		11-16-65	WK
★	Z		REVISED PER TDRR 24040	RAJ		11-19-65	WK
Ⓜ	AA		REVISED PER TDRR 24060	RAJ		11-19-65	WK
Ⓜ	AB		REVISED PER TDRR 24868	RAJ		12-22-65	WK
Ⓜ	AC		REVISED PER TDRR 24973	RAJ		1-4-66	WK
Ⓜ	AD		REVISED PER TDRR 25065	RAJ		1-18-66	WK
★	AE		REVISED PER TDRR 25672	RAJ		2-4-66	WK
Ⓜ	AF		REVISED PER TDRR 25671	RAJ		2-4-66	WK
	AG		REVISED PER TDRR 26110	RAJ		2-15-66	WK
★	AH		REVISED PER TDRR 26372	"		3-16-66	WGW
★	AJ		REVISED PER TDRR 26425	"		3-16-66	WGW
★	AK		REVISED PER TDRR 26743	"		3-16-66	WGW
Ⓜ	AL		REVISED PER TDRR 26798	"		3-16-66	WGW
★	AM		REVISED PER TDRR 27168	"		4-7-66	WGW
★	AN		REVISED PER TDRR 27236	"		4-7-66	WGW
★	AP		REVISED PER TDRR 27345	"		4-7-66	WGW
★	AR		REVISED PER TDRR 27417	"		4-7-66	WGW
Ⓜ	AS		REVISED PER TDRR 27442	"		4-7-66	WGW
	AT		REVISED PER TDRR 27719	"		4-20-66	WK
	AU		REVISED PER TDRR 27880	"		4-20-66	WK
	AV		REVISED PER TDRR 27896	"		4-20-66	WK

SUGGESTED PROPORTIONS FOR NAMEPLATE DIMENSIONS.
1. SELECT NAMEPLATE LENGTH, DIMENSION "A", TO FIT DESIGN NEEDS.
2. DIMENSIONS B THRU AS ON LINE 1 BELOW ARE PROPORTIONAL TO "A" BY MULTIPLIERS SHOWN IN LINE 2 BELOW.

1.	A	B	C	D	E	F	G	H	J	K	L	M	N	P	R	S	T	U	V	W	Y	Z
2.	1.000 A	.6563 A	.8438 A	.6875 A	.0391 A	.0240 A	.0391 A	.0469 A	.0547 A	.0469 A	.5938 A	.3750 A	.2969 A	.2187 A	.5079 A	.0313 A	.0938 A	.0391 A	.4375 A	.3594 A	.6875 A	.1094 A

1.	AA	AB	AC	AD	AE	AF	AG	AH	AJ	AK	AL	AM	AN	AP	AR	AS
2.	.5781 A	.9219 A	.0240 A	.0156 A	.4375 A	.1525 A	.0391 A	.1563 A	.8438 A	.0548 A	.8659 A	.0391 A	.1563 A	.0938 A	.9219 A	.0151 A

⑥ REPLACES REV F WITH CHANGE

QTY REQD	PART OR IDENTIFYING NO.	MATERIAL OR NOTES	NOMENCLATURE OR DESCRIPTION	FIND NO.

LIST OF MATERIALS

AS APPLICABLE

NEXT ASSY	USED ON

APPLICATION

UNLESS OTHERWISE SPECIFIED
DIMENSIONS ARE IN INCHES
CAPACITOR VALUES ARE IN μf
RESISTOR VALUES ARE IN OHMS
TOLERANCES ON
FRACTIONS ± — DECIMALS ±.005 ANGLES ± —
DO NOT SCALE THIS DRAWING

MATERIAL
SEE NOTE 11

MIT
INSTRUMENTATION LAB
CAMBRIDGE, MASS.

DRAWN R. A. Jones 7/16/65
CHECKED A. J. 7-22-65
APPROVED
APPROVED W Kupfer 7/22/65
APPROVED MIT W Kupfer 7/22/65
APPROVED MSC 7/22/65
DATE

MANNED SPACECRAFT CENTER
HOUSTON, TEXAS

NAMEPLATES,
APOLLO G&N–GSE
(STANDARDS)

CODE IDENT NO. 80230
SIZE E
DRAWING NO. 1004260
SCALE NONE
SHEET 1 OF 6

MASTER

1004260

NOTICE – WHEN GOVERNMENT DRAWINGS, SPECIFICATIONS, OR OTHER DATA ARE USED FOR ANY PURPOSE OTHER THAN IN CONNECTION WITH A DEFINITELY RELATED GOVERNMENT PROCUREMENT OPERATION, THE UNITED STATES GOVERNMENT THEREBY INCURS NO RESPONSIBILITY NOR ANY OBLIGATION WHATSOEVER; AND THE FACT THAT THE GOVERNMENT MAY HAVE FORMULATED, FURNISHED, OR IN ANY WAY SUPPLIED THE SAID DRAWINGS, SPECIFICATIONS OR OTHER DATA IS NOT TO BE REGARDED BY IMPLICATION OR OTHERWISE AS IN ANY MANNER LICENSING THE HOLDER OR ANY OTHER PERSON OR CORPORATION, OR CONVEYING ANY RIGHTS OR PERMISSION TO MANUFACTURE, USE, OR SELL ANY PATENTED INVENTION THAT MAY IN ANY WAY BE RELATED THERETO.

REVISIONS 02768

SYM	ZONE	DESCRIPTION	DR	CHK	DATE	APPROVED
G		REPLACES REV F WITH CHANGE PER TDRR 20854.			7/22/65	WK
H		REVISED PER TDRR 20892			8/3/65	WK
J		REVISED PER TDRR 20904			8/3/65	WK
K		REVISED PER TDRR 21379			8/9/65	WK
L		REVISED PER TDRR 21410			8/23/65	WK
M		REVISED PER TDRR 21993				
N		REVISED PER TDRR 22621			10/	
P		REVISED PER TDRR 22671				
R		REVISED PER TDRR 22[illegible]2				
S		REVISED PER TDRR 22750				
T		REVISED PER TDRR 22823			/65	WK
U		REVISED PER TDRR 23072			10-22-65	
V		REVISED PER TDRR 23521			10-27-65	WK
W		REVISED PER TDRR 23824	RAJ		11-9-65	WK
Y		REVISED PER TDRR 24018	RAJ		11-6-65	WK
Z		REVISED PER TDRR 24040	RAJ		11-19-65	WK
AA		REVISED PER TDRR 24060	RAJ		11-19-65	WK
AB		REVISED PER TDRR 24868	RAJ		12-22-65	WK
AC		REVISED PER TDRR 24973	RAJ		1-4-66	WK
AD		REVISED PER TDRR 25065	RAJ		1-18-66	
AE		REVISED PER TDRR 25672	RAJ		2-4-66	WK
AF		REVISED PER TDRR 25671	RAJ		2-4-66	WK
AG		REVISED PER TDRR 26110	RAJ		2-15-66	WK
AH		REVISED PER TDRR 26372			3-6-66	
AJ		REVISED PER TDRR 26425			3-16-66	
AK		REVISED PER TDRR 26743			3-16-66	
AL		REVISED PER TDRR 26798			3-16-66	
AM		REVISED PER TDRR 27168			4-8-66	
AN		REVISED PER TDRR 27235			4-8-66	
AP		REVISED PER TDRR 27345			4-8-66	
AR		REVISED PER TDRR 27417			4-8-66	
AS		REVISED PER TDRR 27442			4-8-66	
AT		REVISED PER TDRR 27719			4-21-66	WK
AU		REVISED PER TDRR 27880			4-21-66	WK
AV		REVISED PER TDRR 27896			4-21-66	WK

DASH NO.	P/C	PART NAME	REMARKS	PART NO.	SER. NO.	CONT. NO.	STYLE	TYPE	MATERIAL	A	B	C	D	E	F	G	H	J	K	L	M	N	P	R	S	T	U	V	W	Y	Z	AA	AB	AC	AD	AE	AF	AG	AH	AJ	AK	AL	AM	AN	AP	AR
399	K																																													
398	K																																													
350	K	ALIGNMENT OPTICAL TELESCOPE (LEM)		NA	NA	NA	A	I	NOTE 11B	4.000	2.625	3.375	2.750	.156	.093	.156	.187	NA	NA	2.312	1.468	1.187	.906	2.031	NA	.375	.156	NA	1.437	2.750	.437	NA	3.688	.062	.062	1.750	.593	NA	.625	3.375	.187	NA	.156	.531	.453	NA
309	K																																													
308	K																																													
307	K						B	I	NOTE 11 B	4.000	2.625	3.375	2.750	.156	.093	.156	.187	NA	NA	2.328	1.468	1.187	.906	2.031	.062	.375	.156	NA	1.437	2.750	.437	NA	3.687	.062	.062	1.750	.593	NA	NA	NA	NA	NA	NA	NA	NA	NA
306	K						B	II	NOTE 11 C	4.000	2.625	3.375	2.750	.156	.093	.156	.187	.125	.156	2.328	1.468	1.187	.906	2.031	.062	.375	.156	↕	1.437	2.750	.437	2.312	3.687	.062	NA	1.750	.593	↕	↕	↕	↕	↕	↕	↕	↕	↕
305	K						B	I	NOTE 11 B	2.000	1.312	1.687	1.375	.078	.048	.078	.093	NA	NA	1.164	.734	.593	.453	1.015	.048	.171	.078	↕	.718	1.375	.187	NA	NA	.048	.031	.875	.320	↕	↕	↕	↕	↕	↕	↕	↕	↕
304	K						B	II	NOTE 11 C	2.000	1.312	1.687	1.375	.078	.048	.078	.093	.070	.078	1.164	.734	.593	.453	1.015	.048	.171	.078	NA	.718	1.375	.187	.156	1.843	.048	NA	.875	.320	NA	NA	NA	NA	NA	NA	NA	NA	NA
303	K																																													
302	K																																													
301	K																																													
300	K	OPTICAL UNIT		NA	NA	NA	A	I	NOTE 11 B	2.000	1.312	1.675	NA	NA	.048	.078	NA	NA	NA	1.090	.812	.675	.540	.940	NA	.265	NA	NA	NA	1.375	.218	NA	NA	NA	NA	NA	.375	NA	NA	NA	.180	NA	.078	NA	NA	NA
9	K	2 IN AUTOCOLLIMATOR		1001702			B	II	NOTE 11 C	4.000	2.625	3.812	2.750	.156	.093	.156	.187	.125	.156	2.250	1.500	1.187	.906	2.031	.093	.375	.156	1.750	1.437	2.750	.437	2.312	3.687	.062	NA	1.750	.593	.156	1.062	3.812	.156	NA	.156	1.062	.375	3.687
8	K	5 IN AUTOCOLLIMATOR		1017410			B	II	NOTE 11 C	4.000	2.625	3.812	2.750	.156	.093	.156	.187	.125	.156	2.250	1.500	1.187	.906	2.031	.093	.375	.156	1.750	1.437	2.750	.437	2.312	3.687	.062	NA	1.750	.593	.156	1.062	3.812	.156	NA	.156	1.062	.375	3.687
7	K	2½ IN AUTOCOLLIMATOR (SCT)		1017435			B	II	NOTE 11 C	4.000	2.625	3.812	2.750	.156	.093	.156	.187	.125	.156	2.250	1.500	1.187	.906	2.031	.093	.375	.156	1.750	1.437	2.750	.437	2.312	3.687	.062	NA	1.750	.593	.156	1.062	3.812	.156	NA	.156	1.062	.375	3.687
6	K	2½ IN AUTOCOLLIMATOR (SXT)		1017448			B	II	NOTE 11 C	4.000	2.625	3.812	2.750	.156	.093	.156	.187	.125	.156	2.250	1.500	1.187	.906	2.031	.093	.375	.156	1.750	1.437	2.750	.437	2.312	3.687	.062	NA	1.750	.593	.156	1.062	3.812	.156	NA	.156	1.062	.375	3.687
5	K	RETROREFLECTING PRISM ASSEMBLY		1019840			B	I	NOTE 11 B	4.000	2.625	3.812	2.750	.156	.093	.156	.187	NA	NA	2.250	1.500	1.187	.906	2.031	.093	.375	.156	1.750	1.437	2.750	.437	NA	NA	.062	.062	1.750	.593	.156	1.062	3.812	.156	NA	.156	1.062	.375	NA
4	K	S/H SIMULATOR ASSEMBLY		1019896			B	I	NOTE 11 B	4.000	2.625	3.812	2.750	.156	.093	.156	.187	NA	NA	2.250	1.500	1.187	.906	2.031	.093	.375	.156	1.750	1.437	2.750	.437	NA	NA	.062	.062	1.750	.593	.156	1.062	3.812	.156	NA	.156	1.062	.375	NA
3	K	REFERENCE MIRROR		1001767			B	I	NOTE 11 B	2.000	1.312	1.906	1.375	.078	.048	.078	.093	NA	NA	1.125	.750	.593	.453	1.015	.062	.187	.078	.875	.718	1.375	.218	NA	NA	.048	.031	.875	.305	.078	.531	1.906	.078	NA	.078	.531	.187	NA
2	K	2 IN PLANE READING AUTOCOLLIMATOR		1017413			B	I	NOTE 11 B	2.000	1.312	1.906	1.375	.078	.048	.078	.093	NA	NA	1.125	.750	.593	.453	1.015	.062	.187	.078	.875	.718	1.375	.218	NA	NA	.048	.031	.875	.305	.078	.531	1.906	.078	NA	.078	.531	.187	NA
1	K	2 IN AUTOCOLLIMATOR		1001702			B	I	NOTE 11 B	2.000	1.312	1.906	1.375	.078	.048	.078	.093	NA	NA	1.125	.750	.593	.453	1.015	.062	.187	.078	.875	.718	1.375	.218	NA	NA	.048	.031	.875	.305	.078	.531	1.906	.078	NA	.078	.531	.187	NA

Ⓖ REPLACES REV F WITH CHANGE

KOLLSMAN DASH NUMBERS

NOTES FOR TABLE

STYLE A IS FOR G & N SYSTEM.
STYLE B IS FOR GROUND SUPPORT EQUIPMENT.
TYPE I IS WITHOUT MOUNTING HOLES.
TYPE II IS WITH MOUNTING HOLES.

MASTER

QTY REQD	PART OR IDENTIFYING NO.	MATERIAL OR NOTES	NOMENCLATURE OR DESCRIPTION	FIND NO.

LIST OF MATERIALS

NEXT ASSY	USED ON
AS APPLICABLE	

APPLICATION

UNLESS OTHERWISE SPECIFIED
DIMENSIONS ARE IN INCHES
CAPACITOR VALUES ARE IN μf
RESISTOR VALUES ARE IN OHMS
TOLERANCES ON
FRACTIONS ± — DECIMALS ±.005 ANGLES ± —
DO NOT SCALE THIS DRAWING

MATERIAL
SEE NOTE 11

MIT
INSTRUMENTATION LAB
CAMBRIDGE, MASS.

DRAWN R. A. Jones 7-16-65
CHECKED 7-22-65
APPROVED
APPROVED W. Kupfer
APPROVED MIT W. Kupfer
APPROVED MSC
DATE

MANNED SPACECRAFT CENTER
HOUSTON, TEXAS

NAMEPLATES,
APOLLO G&N-GSE
(STANDANDS)

CODE IDENT NO. 80230
SIZE E
DRAWING NO. 1004260
SCALE NONE
SHEET 2 OF 6

1004260 AV

NOTICE – WHEN GOVERNMENT DRAWINGS, SPECIFICATIONS, OR OTHER DATA ARE USED FOR ANY PURPOSE OTHER THAN IN CONNECTION WITH A DEFINITELY RELATED GOVERNMENT PROCUREMENT OPERATION, THE UNITED STATES GOVERNMENT THEREBY INCURS NO RESPONSIBILITY NOR ANY OBLIGATION WHATSOEVER; AND THE FACT THAT THE GOVERNMENT MAY HAVE FORMULATED, FURNISHED, OR IN ANY WAY SUPPLIED THE SAID DRAWINGS, SPECIFICATIONS OR OTHER DATA IS NOT TO BE REGARDED BY IMPLICATION OR OTHERWISE AS IN ANY MANNER LICENSING THE HOLDER OR ANY OTHER PERSON OR CORPORATION, OR CONVEYING ANY RIGHTS OR PERMISSION TO MANUFACTURE, USE, OR SELL ANY PATENTED INVENTION THAT MAY IN ANY WAY BE RELATED THERETO.

REVISIONS 02768

SYM	ZONE	DESCRIPTION	DR	CHK	DATE	APPROVED
G		REPLACES REV F WITH CHANGE PER TDRR 20854			7/22/65	WK
H		REVISED PER TDRR 20892			[illegible]	WK
J		REVISED PER TDRR 20904			[illegible]	WK
K		REVISED PER TDRR 21379			[illegible]	WK
L		REVISED PER TDRR 21410			[illegible]	WK
M		REVISED PER TDRR 21993			10/	
N		REVISED PER TDRR 22621				
P		REVISED PER TDRR 22671				
R		REVISED PER TDRR 22672			1	
S		REVISED PER TDRR 22750			/65	WK
T		REVISED PER TDRR 22823				
U		REVISED PER TDRR 23072			[illegible]	[illegible]
V		REVISED PER TDRR 23521			10-26-65	WK
W		REVISED PER TDRR 23824	RAJ		11-9-65	WK
Y		REVISED PER TDRR 24018	RAJ		11-6-65	WK
Z		REVISED PER TDRR 24040	RAJ		11-19-65	WK
AA		REVISED PER TDRR 24060	RAJ		11-19-65	WK
AB		REVISED PER TDRR 24868	RAJ		12-22-65	WK
AC		REVISED PER TDRR 24973	RAJ		1-4-66	WK
AD		REVISED PER TDRR 25065	RAJ		1-18-66	[illegible]
AE		REVISED PER TDRR 25672	RAJ		2-4-66	WK
AF		REVISED PER TDRR 25671	RAJ		2-4-66	WK
AG		REVISED PER TDRR 26110	RAJ		2-15-66	WK
AH		REVISED PER TDRR 26372	"		3-16-66	[illegible]
AJ		REVISED PER TDRR 26425	"		3-16-66	[illegible]
AK		REVISED PER TDRR 26743	"		3-16-66	[illegible]
AL		REVISED PER TDRR 26798	"		3-16-66	[illegible]
AM		REVISED PER TDRR 27168	"		4-8-66	[illegible]
AN		REVISED PER TDRR 27235	"		4-8-66	[illegible]
AP		REVISED PER TDRR 27345	"		4-8-66	[illegible]
AR		REVISED PER TDRR 27417	"		4-8-66	[illegible]
AS		REVISED PER TDRR 27442	"		4-8-66	[illegible]
AT		REVISED PER TDRR 27719	"		4-20-66	WK
AU		REVISED PER TDRR 27880	"		4-20-66	WK
AV		REVISED PER TDRR 27896	"		4-20-66	WK

DASH NO.	P/C	PART NAME	REMARKS	PART NO.	SER. NO.	CONT. NO.	STYLE	TYPE	MATERIAL	A	B	C	D	E	F	G	H	J	K	L	M	N	P	R	S	T	U	V	W	Y	Z	AA	AB	AC	AD	AE	AF	AG	AH	AJ	AK	AL	AM	AN	AP	AR
299	P																																													
298																																														
268	R	SELF TEST ASSY		2014366-021	NA	NAS-9-497	B	I	NOTE 11 B	FOR DIMENSIONS, SEE DASH 15 VALUES BELOW																																				
267		AGC JUNCTION ASSY		2014341-021																																										
266		POWER CONTROL ASSY		2014079-021																																										
265		BUFFER CIRCUIT ASSY		2014254-021																																										
264		DRAWER ASSY X Y INTERFACE		2014040-021																																										
263		DRAWER ASSY R D C INTERFACE		2014045-021																																										
262		DRAWER ASSY PROGRAMMER & MONITOR		2014041-021						FOR DIMENSIONS, SEE DASH 17 VALUES BELOW																																				
261		LOGIC DRAWER ASSY NO. 2		2014037-021																																										
260		LOGIC DRAWER ASSY NO. 1		2014036-021				I	NOTE 11 B																																					
259		OPERATION CONSOLE		2014024-021				II	NOTE 11 C	FOR DIMENSIONS, SEE DASH 18 VALUES BELOW																																				
258		COMPUTER TEST SET		2014042-021																																										
257		AUXILIARY CALIBRATION CONSOLE		2014059-021																																										
256		AGC CALIBRATION CONSOLE		2014049-021				II	NOTE 11 C																																					
255		AGC HANDLING FIXTURE		2014282-021				I	NOTE 11 B	FOR DIMENSIONS, SEE DASH 17 VALUES BELOW																																				
254		DRAWER ASSY COMP. SIMULATOR		2014048-011				II	NOTE 11 C	FOR DIMENSIONS, SEE DASH 18 VALUES BELOW																																				
253		SHIPPING KIT ASSY, NAV DSKY		2016312-011																																										
252		SHIPPING KIT ASSY, UNIVERSAL DSKY		2016316-011																																										
251		SHIPPING KIT ASSY, MAIN DSKY		2016313-011				II	NOTE 11 C																																					
250		AMPLIFIER, REWORK		2014386				I	NOTE 11 B	FOR DIMENSIONS, SEE DASH 15 VALUES BELOW																																				
249		TEMP MONITOR ASSY		2014313-011					NOTE 11 C	FOR DIMENSIONS, SEE DASH 17 VALUES BELOW																																				
248		AGC JUNCTION ASSY		2014341-011					NOTE 11 B	FOR DIMENSIONS, SEE DASH 15 VALUES BELOW																																				
247		AC INPUT PANEL ASSY		2014302-011																																										
246		SELF TEST ASSY		2014392-011																																										
245		TAPE PUNCH ASSEMBLY		2014039-011						FOR DIMENSIONS, SEE DASH 15 VALUES BELOW																																				
244	R	TAPE READER ASSEMBLY		2014038-011	NA	NAS-9-497	B	I	NOTE 11 B																																					
243																																														
242																																														
241	R	APOLLO GUIDANCE COMPUTER GROUP		6003001	NA	NAS-9-497	A	I	NOTE 11 B	FOR DIMENSIONS, SEE DASH 19 VALUES BELOW																																				
240		SELF TEST ASSEMBLY		2014366-011	NA		B	I		FOR DIMENSIONS, SEE DASH 15 VALUES BELOW																																				
239		POWER SUPPLY ASSY-115 V., 400 CYCLE		2014207-011						FOR DIMENSIONS, SEE DASH 17 VALUES BELOW																																				
238		AC INPUT PANEL ASSY		2014043-011																																										
237		POWER CONTROL ASSY		2014079-011						FOR DIMENSIONS, SEE DASH 15 VALUES BELOW																																				
236		DRAWER ASSY-X Y INTERFACE		2014040-011																																										
235		DRAWER ASSY R D C INTERFACE		2014045-011																																										
234		BUFFER CIRCUIT ASSY		2014254-011																																										
233		CONTROL & INTERFACE ASSY		2014204-011																																										
232		POWER CONTROL ASSY		2014044-011						FOR DIMENSIONS, SEE-DASH 17 VALUES BELOW																																				
231		DRAWER ASSY, PROGRAMMER & MONITOR		2014041-011																																										
230		CONNECTOR INTERFACE ASSY		2014272-011						FOR DIMENSIONS, SEE DASH 15 VALUES BELOW																																				
229		CONNECTOR INTERFACE ASSY		2014047-011																																										
228		ANTENNA TUNING CAPACITOR ASSY		2014209-011																																										
227		MOUNTING FIXTURE ASSY		2014006-011						FOR DIMENSIONS, SEE DASH 17 VALUES BELOW																																				
226		POWER SUPPLY ASSY 3 VDC		2014234-011						FOR DIMENSIONS, SEE DASH 15 VALUES BELOW																																				
225		PANEL ASSY — SIGNAL INTERFACE		2014010-011																																										
224		OSCILLOSCOPE ASSY		2014232-011																																										
223		AUXILIARY OUTLET ASSY		2014274-011																																										
222		FREQUENCY COUNTER		2014233-011																																										
221		POWER SUPPLY ASSY 10, 13, 28 VDC		2014235-011																																										
220		LOGIC DRAWER ASSY NO. 2		2014037-011						FOR DIMENSIONS, SEE DASH 17 VALUES BELOW																																				
219		LOGIC DRAWER ASSY NO. 1		2014036-011																																										
218		COUNTER, ELECTRICAL ASSY		2014288-011						FOR DIMENSIONS, SEE DASH 15 VALUES BELOW																																				
217		POWER SUPPLY ASSY		2014279-011																																										
216		TEST MOUNT ASSY		2014257-011																																										
215		UNIVERSAL DSKY PEDESTAL MOUNT		2014014-011						FOR DIMENSIONS, SEE DASH 17 VALUES BELOW																																				
214		MAIN DSKY PEDESTAL MOUNT		2014343				I	NOTE 11 B																																					
213		SHIPPING CONTAINER, MAIN DSKY		1006229				II	NOTE 11 C	FOR DIMENSIONS, SEE DASH 18 VALUES BELOW																																				
212		NAV DSKY		1006231																																										
211		AGC		1006230																																										
210		UNIVERSAL DSKY		1006422																																										
209		SHIPPING CONTAINER, AGC		1006421				II	NOTE 11 C																																					
208		UNIVERSAL DSKY HANDLING FIXTURE		2014013-011				I	NOTE 11 B	FOR DIMENSIONS, SEE DASH 15 VALUES BELOW																																				
207		NAV DSKY HANDLING FIXTURE		1014377						FOR DIMENSIONS, SEE DASH 17 VALUES BELOW																																				
206		MAIN DSKY HANDLING FIXTURE		1014334																																										
205		AGC HANDLING FIXTURE		2014282-011				I	NOTE 11 B																																					
204		OPERATION CONSOLE		2014024-011				II	NOTE 11 C	FOR DIMENSIONS, SEE DASH 18 VALUES BELOW																																				
203		COMPUTER TEST SET		2014042-011		NAS-9-497																																								
202		DRAWER ASSY, COMPUTER SIMULATOR		2014048-011		FNP-12775																																								
201		AUXILIARY CALIBRATION CONSOLE		2014059-011		NAS-9-497																																								
200		AGC CALIBRATION CONSOLE		2014049-011	NA		B	II	NOTE 11 C																																					
21																																														
20		NA		NA	NA	NA	A	II	NOTE 11 C	2.000	1.312	1.687	1.375	.078	.031	.078	.093	.106 .113	.093	1.187	.750	.593	.453	1.015	.062	.187	.078	.875	.718	1.375	.218	1.156	1.843	.048	NA	.875	.305	.078	.312	1.687	.078	NA	.078	.312	.187	1.843
19		NA		NA	NA	NA	A	I	NOTE 11 B	2.000	1.312	1.687	1.375	.078	.031	.078	.093	NA	NA	1.187	.750	.593	.453	1.015	.062	.187	.078	.875	.718	1.375	.218	NA	NA	.048	.031	.875	.305	.078	.312	1.687	.078	NA	.078	.312	.187	NA
18		NA		NA	NA	NA	B	II	NOTE 11 C	4.187	1.875	3.469	2.750	.156	.093	.156	.125	.106 .113	.125	1.625	1.032	.844	.656	1.406	.093	.344	.156	1.781	1.531	2.844	.312	1.562	3.875	.062	NA	1.219	.500	.156	.719	3.469	.156	NA	.156	.719	.344	3.875
17		NA		NA	NA	NA	B	I	NOTE 11 B	4.187	1.875	3.469	2.750	.156	.093	.156	.125	NA	NA	1.625	1.032	.844	.656	1.406	.093	.344	.156	1.781	1.531	2.844	.312	NA	NA	.062	.062	1.219	.500	.156	.719	3.469	.156	NA	.156	.719	.344	NA
16		NA		NA	NA	NA	B	II	NOTE 11 C	2.000	1.312	1.687	1.375	.078	.031	.078	.093	.106 .113	.093	1.187	.750	.593	.453	1.015	.062	.187	.078	.875	.718	1.375	.218	1.156	1.843	.048	NA	.875	.305	.078	.312	1.687	.078	NA	.078	.312	.187	1.843
15	R	NA		NA	NA	NA	B	I	NOTE 11 B	2.000	1.312	1.687	1.375	.078	.031	.078	.093	NA	NA	1.187	.750	.593	.453	1.015	.062	.187	.078	.875	.718	1.375	.218	NA	NA	.048	.031	.875	.305	.078	.312	1.687	.078	NA	.078	.312	.187	NA

THIS SHEET ADDED

Ⓖ REPLACES REV F WITH CHANGE

RAYTHEON DASH NUMBERS

NOTES FOR TABLE
STYLE A IS FOR G & N SYSTEM
STYLE B IS FOR GROUND SUPPORT EQUIPMENT
TYPE I IS WITHOUT MOUNTING HOLES
TYPE II IS WITH MOUNTING HOLES

MASTER

QTY REQD	PART OR IDENTIFYING NO.	MATERIAL OR NOTES	NOMENCLATURE OR DESCRIPTION	FIND NO.

LIST OF MATERIALS

AS APPLICABLE
NEXT ASSY | USED ON
APPLICATION

UNLESS OTHERWISE SPECIFIED
DIMENSIONS ARE IN INCHES
CAPACITOR VALUES ARE IN μf
RESISTOR VALUES ARE IN OHMS
TOLERANCES ON
FRACTIONS ± — DECIMALS ±.005 ANGLES ± —
DO NOT SCALE THIS DRAWING

MATERIAL
SEE NOTE 11

MIT
INSTRUMENTATION LAB
CAMBRIDGE, MASS.

DRAWN R. Q. Jones 7-16-65
CHECKED A. J. [illegible] 7-22-65
APPROVED
APPROVED W. Kupfer 7/22/65
APPROVED MIT W. Kupfer 7/22/65
APPROVED MSC [illegible] DATE [illegible]

MANNED SPACECRAFT CENTER
HOUSTON, TEXAS

NAMEPLATES,
APOLLO GEN-GSE
(STANDARDS)

CODE IDENT NO. 80230 | SIZE E | DRAWING NO. 1004260
SCALE NONE | SHEET 3 OF 6

NOTICE — [illegible]

SYM	ZONE	DESCRIPTION	DR	CHK	DATE	APPROVED
G		REPLACES REV F WITH CHANGE PER TDRR 20854.			7/22/65	WK
H		REVISED PER TDRR 20892			8/5/65	WK
J		REVISED PER TDRR 20904			8/3/65	WK
K		REVISED PER TDRR 21379			8/6/65	WK
L		REVISED PER TDRR 21410			8/23/65	WK
M		REVISED PER TDRR 21993				
N		REVISED PER TDRR 22621				
P		REVISED PER TDRR 22671				
R		REVISED PER TDRR 22672				
S		REVISED PER TDRR 22750			/65	WK
T		REVISED PER TDRR 22823				
U		REVISED PER TDRR 23072			10-?-65	
V		REVISED PER TDRR 23521			10-26-65	WK
W		REVISED PER TDRR 23824	RAJ		11-9-65	WK
Y		REVISED PER TDRR 24018	RAJ		11-16-65	WK
Z		REVISED PER TDRR 24040	RAJ		11-19-65	WK
AA		REVISED PER TDRR 24060	RAJ		11-19-65	WK
AB		REVISED PER TDRR 24868	RAJ		12-22-65	WK
AC		REVISED PER TDRR 24973	RAJ		1-4-66	WK
AD		REVISED PER TDRR 25065	RAJ		1-18-66	
AE		REVISED PER TDRR 25672	RAJ		2-4-66	WK
AF		REVISED PER TDRR 25671	RAJ		2-4-66	WK
AG		REVISED PER TDRR 26110	RAJ		2-15-66	WK
AH		REVISED PER TDRR 26372	"		3-5-66	
AJ		REVISED PER TDRR 26425	"		3-15-66	
AK		REVISED PER TDRR 26743	"		3-6-66	
AL		REVISED PER TDRR 26798	"		3-16-66	
AM		REVISED PER TDRR 27168	"		4-8-66	
AN		REVISED PER TDRR 27235	"		4-8-66	
AP		REVISED PER TDRR 27345	"		4-8-66	
AR		REVISED PER TDRR 27417	"		4-8-66	
AS		REVISED PER TDRR 27442	"		4-8-66	
AT		REVISED PER TDRR 27719	"		4-21-66	WK
AU		REVISED PER TDRR 27880	"		4-21-66	WK
AV		REVISED PER TDRR 27896	"		4-21-66	WK

REVISIONS 02768

DASH NO.	P/C	PART NAME	REMARKS	PART NO.	SER. NO.	CONT. NO.	STYLE	TYPE	MATERIAL	A	B	C	D	E	F	G	H	J	K	L	M	N	P	R	S	T	U	V	W	Y	Z	AA	AB	AC	AD	AE	AF	AG	AH	AJ	AK	AL	AM	AN	AP	AR
199	AC	EYEPIECE STOWAGE UNIT		2021255-011			A	I		FOR DIMENSIONS, SEE DASH 100 VALUES BELOW																																				
198	AC	SIGNAL CONDITIONER ASSY C/M		2007234		NAS-9-497			NOTE 11B																																					
197	AC	SIGNAL CONDITIONER ASSY C/M		2007235																																										
196	AC	SIGNAL CONDITIONER ASSY LEM		6007010																																										
195	AC	PSA & SIGNAL CONDITIONER ASSY		6007009		NAS-9-497	A	I	NOTE 11B																																					
194	AC																																													
193	AC																																													
192	AC																																													
191	AC																																													
190	AC																																													
189	AC																																													
188	AC																																													
187	AC																																													
186	AC	[illegible] PNL & EYEPIECE STOW. ASSY		1021255-021			A	I		FOR DIMENSIONS, SEE DASH 100 VALUES BELOW																																				
185	AC	MAIN PNL & EYEPIECE STOW. ASSY		1021255-011			A	I																																						
184	AC	FIX., HAND., G AND N HARNESS		1901846-041		NAS-9-497	B	II	NOTE 11C	FOR DIMENSIONS, SEE DASH 144 VALUES BELOW																																				
183	AC	INSTALLING TOOL, ELEC. CONN		1902586-011			B	II	NOTE 11C	FOR DIMENSIONS, SEE DASH 102 VALUES BELOW																																				
182	AC	ADPT MODULE, P.S.A.		6900088-011			B	II	NOTE 11C	FOR DIMENSIONS, SEE DASH 141 VALUES BELOW																																				
181	AC	G&N INDICATOR CONTROL PANEL ASSY		2014578-011			A	I	NOTE 11B	3.000	1.938	2.437	NA	.125	.062	.188	.156	NA	NA	1.750	1.125	.906	.688	1.500	NA	.281	.125	NA	1.094	2.062	.312	NA	2.500	.062	.125	1.312	.469	NA	NA	NA	.156	NA	.125	.469	.344	NA
180	AC	ADPT MODULE, P.S.A.		1902431-031			B	II		FOR DIMENSIONS, SEE DASH 121 VALUES BELOW																																				
179	AC	MOUNTING PLATE, IMU/PTA		6900083-011						FOR DIMENSIONS, SEE DASH 144 VALUES BELOW																																				
178	AC	MOUNTING PLATE, COMPONENT		6900007-021																																										
177	AC	FIX., MOUNTING, SUBSYSTEM		2900070-021																																										
176	AC	FIX., MOUNTING, G AND N		2900067-021																																										
175	AC	CSL, COOL. AND PWR, G AND N		1902134-031																																										
174	AC	FIX., HAND., C/M AND LEM CDU		2900999-011					NOTE 11C	FOR DIMENSIONS, SEE DASH 141 VALUES BELOW																																				
173	AC	FIX., HANDLING, C/M PSA		2900998-011																																										
172	AC	CAGING ELECTRONICS, GYRO		2900029-021																																										
171	AC	DISTRIBUTION BOX, GSE		2900024-021																																										
170	AC	ANALYZER, OPTICS-INERTIAL		2900023-021						FOR DIMENSIONS, SEE DASH 144 VALUES BELOW																																				
169	AC	ADPT, TEST POINT, P.S.A.		2900037-021						FOR DIMENSIONS, SEE DASH 141 VALUES BELOW																																				
168	AC	TEST SELECTOR		2900028-021																																										
167	AC	TEST CONTROL		2900027-021																																										
166	AC	PANEL, MONITOR		2900031-021																																										
165	AC	TERM. BOARD STORAGE DRAWER		2900927-011																																										
164	AC	INPUT/OUTPUT PANEL		2900926-011																																										
163	AC	CONTROL PANEL		2900896-011																																										
162	AC	CSL. CAL AND TEST, SCM/PSAAM		2900895-011						FOR DIMENSIONS, SEE DASH 144 VALUES BELOW																																				
161	AC	FIX., LIFT AND HAND., IMU		1015462-011						FOR DIMENSIONS, SEE DASH 141 VALUES BELOW																																				
160	AC	FIX., HAND., G AND N HARNESS		1901846-031						FOR DIMENSIONS, SEE DASH 144 VALUES BELOW																																				
159	AC	BATTERY POWER PACK		1900011-031			B	II	NOTE 11C																																					
158	AC	COUPLING DATA UNIT ASSEMBLY C/M		2007222			A	I	NOTE 11B	FOR DIMENSIONS, SEE DASH 100 VALUES BELOW																																				
157	AC	COUPLING DATA UNIT ASSEMBLY - LEM		2007222																																										
156	AC	POWER & SERVO ASSEMBLY C/M		2007200																																										
155	AC	PIPA ELECTRONICS ASSEMBLY		2007201																																										
154	AC	PULSE TORQUE ASSEMBLY - LEM		6007000																																										
153	AC	POWER & SERVO ASSEMBLY - LEM		6007200			A	I	NOTE 11B																																					
152	AC	CONT PNL, RSVR CKT TESTER		2900770-011			B	II	NOTE 11C	FOR DIMENSIONS, SEE DASH 141 VALUES BELOW																																				
151	AC	TESTER, RESOLVER CIRCUIT		2900708-011																																										
150	AC	JUNCTION BOX, P.S.A./G.S.E.		1901933-021						FOR DIMENSIONS, SEE DASH 144 VALUES BELOW																																				
149	AC	BATTERY PACK, LIFTING		2900612-011						FOR DIMENSIONS, SEE DASH 141 VALUES BELOW																																				
148	AC	MOUNTING PLATE, COMPONENT		6900007-011						FOR DIMENSIONS, SEE DASH 144 VALUES BELOW																																				
147	AC	MOUNTING PLATE, COMPONENT		2900677-011																																										
146	AC	CART, TRANS, G AND N		1900009-041																																										
145	AC	CONTAINER, SHIPPING, IMU		1900010-021		NAS-9-497	B	II	NOTE 11C																																					
144	AC	FIX., MOUNTING, G AND N		1902204-021			B	II	NOTE 11C	4.125	1.812	3.250	NA	.125	.062	.12	.156	.109 .104	.125	1.625	1.140	.890	.640	1.390	.125	.171	.125	1.875	1.687	2.625	.250	1.562	3.843	.093	NA	NA	.359	.125	.437	3.688	NA	3.687	.093	.40	.25	3.875
143	AC	CSL, COOL. AND PWR, G AND N		1902134-021						4.125	1.812	3.250		.125	.062	.12	.156		.125	1.625	1.140	.890	.640	1.390	.125	.171	.125	1.875	1.687	2.625	.250	1.562	3.843	.093			.359	.125	.437	3.688		3.687	.093	.40	.25	3.875
142	AC	ANALYZER, OPTICS-INERTIAL		2900023-011						4.125	1.812	3.250		.125	.062	.12	.156		.125	1.625	1.140	.890	.640	1.390	.125	.171	.125	1.875	1.687	2.625	.250	1.562	3.843	.093			.359	.125	.437	3.688		3.687	.093	.40	.25	3.875
141	AC	CONT, TEMP, PORTABLE		2900060-011						2.125	.968	1.718		.093	.031	.06	.093		.093	.858	.608	.484	.358	.733	.077	.116	.062	.937	.875	1.343	.125	.781	1.892	.046			.209	.093	.250	1.875		1.840	.046	.23	.16	1.938
140	AC	TESTER, CKT, IMU/CDU RSVR		2900286-011						4.125	1.812	3.250		.125	.062	.12	.156		.125	1.625	1.140	.890	.640	1.390	.125	.171	.125	1.875	1.687	2.625	.250	1.562	3.843	.093			.359	.125	.437	3.688		3.687	.093	.40	.25	3.875
139	AC	SIMULATOR, LD/SIG, CDU		2900285-011																																										
138	AC	SIMULATOR, LD/SIG, OPTICS		1902023-021																																										
137	AC	FIX., MOUNTING, IMU/NAV BASE		6900003-011																																										
136	AC	FIXTURE, OPTICS/NAV BASE		2900072-011																																										
135	AC	FIX., MOUNTING, SUB SYSTEM		2900070-011																																										
134	AC	FIX., HAND., G AND N HARNESS		2900069-011																																										
133	AC	CNTR, SHIPPING, NAV BASE		2900068-011																																										
132	AC	FIX., MOUNTING, G AND N		2900067-011																																										
131	AC	SIMULATOR, LD/SIG, IMU/CDU		2900062-011																																										
130	AC	TESTER, GYRO WHEEL		2900061-011																																										
129	AC	COOLANT SUPPLY		1902133-021																																										
128	AC	TABLE, ROTARY		1900926-021						4.125	1.812	3.250		.125	.062	.12	.156		.125	1.625	1.140	.890	.640	1.390	.125	.171	.125	1.875	1.687	2.625	.250	1.562	3.843	.093			.359	.125	.437	3.688		3.687	.093	.40	.25	3.875
127	AC	FIX., HAND., OPTICS		2900074-011						2.125	.968	1.718		.093	.031	.06	.093		.093	.858	.608	.484	.358	.733	.077	.116	.062	.937	.875	1.343	.125	.781	1.892	.046			.209	.093	.250	1.875		1.840	.046	.23	.16	1.938
126	AC	FIXTURE, MTG, PTA/PEA.		2900066-011																																										
125	AC	CONT, TEMP, IMU LIFTING		2900063-011																																										
124	AC	FIXTURE, HANDLING, IMU		2900064-011																																										
123	AC	CONT, OPTICS, REMOTE		1902046-021																																										
122	AC	TEST CONTROL		1902009-021																																										
121	AC	ADPT MODULE, P.S.A.		1902431-021																																										
120	AC	BRIDGE, DECADE ERROR		2900128-011																																										
119	AC	PWR SUP, ELECTRONICS		2900012-011																																										
118	AC	PWR SUP, RELAY AND LAMP		1900049-031																																										
117	AC	CONSOLE, OSCILLOGRAPH		1900000-021																																										
116	AC	ADPT MODULE, P.S.A.		1902431-011																																										
115	AC	ADPT, TEST POINT, PTA/PEA.		2900145-011																																										
114	AC	ADPT, TEST POINT, P.S.A.		2900037-011																																										
113	AC	CONTROL, GIMBAL POSITION		2900036-011																																										
112	AC	SELECTOR, SIGNAL, PRIMARY		2900035-011																																										
111	AC	SEL, SIG, OSCILLOGRAPH		2900034-011																																										
110	AC	PANEL, PWR SUP AND LOAD		2900033-011																																										
109	AC	PANEL, MONITOR		2900031-011																																										
108	AC	PANEL, AUXILIARY INPUT		2900030-011																																										
107	AC	CAGING ELECTRONICS, GYRO		2900029-011																																										
106	AC	TEST SELECTOR		2900028-011																																										
105	AC	TEST CONTROL		2900027-011																																										
104	AC	MONITOR AND CONTROL, TEMP		2900026-011																																										
103	AC	DISTRIBUTION BOX, GSE		2900024-011																																										
102	AC	VOLTMETER, DIGITAL		2900007-011			B	II	NOTE 11C	2.125	.968	1.718	NA	.093	.031	.06	.093	.109 .104	.093	.858	.608	.484	.358	.733	.077	.116	.062	.937	.875	1.343	.125	.781	1.892	.046	NA	NA	.209	.093	.250	1.875	NA	1.840	.046	.23	.16	1.938
101	AC	NAVIGATION BASE ASSEMBLY - LEM		6899950		NAS-9-497	A	I	NOTE 11B	2.000	1.312	1.906	1.375	.078	.048	.078	.093	NA	NA	1.125	.750	.593	.453	1.015	.062	.187	.078	.875	.718	1.375	.218	NA	NA	.048	.031	.875	.305	.078	.531	1.906	.078	NA	.078	.531	.187	NA
100	AC	NAVIGATION BASE ASSEMBLY		2899982		NAS-9-497	A	I	NOTE 11B	2.000	1.312	1.906	1.375	.078	.048	.078	.093	NA	NA	1.125	.750	.593	.453	1.015	.062	.187	.078	.875	.718	1.375	.218	NA	NA	.048	.031	.875	.305	.078	.531	1.906	.078	NA	.078	.531	.187	NA

AC ELECTRONICS DASH NUMBERS

THIS SHEET ADDED

Ⓖ REPLACES REV F WITH CHANGE

NOTES FOR TABLE

STYLE A IS FOR G&N SYSTEM
STYLE B IS FOR GROUND SUPPORT EQUIPMENT
TYPE I IS WITHOUT MOUNTING HOLES
TYPE II IS WITH MOUNTING HOLES

NOTE: AC DASH NO's. CONT. ON SH.6

QTY REQD	PART OR IDENTIFYING NO.	MATERIAL OR NOTES	NOMENCLATURE OR DESCRIPTION	FIND NO.

LIST OF MATERIALS

NEXT ASSY	USED ON
AS APPLICABLE	

APPLICATION

UNLESS OTHERWISE SPECIFIED
DIMENSIONS ARE IN INCHES
CAPACITOR VALUES ARE IN µf
RESISTOR VALUES ARE IN OHMS
TOLERANCES ON
FRACTIONS ± — DECIMALS ±.005 ANGLES ± —
DO NOT SCALE THIS DRAWING

MATERIAL
SEE NOTE 11

MIT
INSTRUMENTATION LAB
CAMBRIDGE, MASS.

DRAWN R A Jones 7-16-65
CHECKED A. J. [illegible] 7-22-65
APPROVED
APPROVED W Kupfer 22 Jul 65
APPROVED MIT W Kupfer 22 Jul 65
APPROVED MSC [illegible] 7/26/65
DATE

MANNED SPACECRAFT CENTER
HOUSTON, TEXAS

NAMEPLATES,
APOLLO G&N-GSE
(STANDARDS)

CODE IDENT NO. 80230
SIZE E
DRAWING NO. 1004260
SCALE NONE
SHEET 4 OF 6

1004260 AV

MASTER

NOTICE – WHEN GOVERNMENT DRAWINGS, SPECIFICATIONS, OR OTHER DATA ARE USED FOR ANY PURPOSE OTHER THAN IN CONNECTION WITH A DEFINITELY RELATED GOVERNMENT PROCUREMENT OPERATION, THE UNITED STATES GOVERNMENT THEREBY INCURS NO RESPONSIBILITY NOR ANY OBLIGATION WHATSOEVER; AND THE FACT THAT THE GOVERNMENT MAY HAVE FORMULATED, FURNISHED, OR IN ANY WAY SUPPLIED THE SAID DRAWINGS, SPECIFICATIONS OR OTHER DATA IS NOT TO BE REGARDED BY IMPLICATION OR OTHERWISE AS IN ANY MANNER LICENSING THE HOLDER OR ANY OTHER PERSON OR CORPORATION, OR CONVEYING ANY RIGHTS OR PERMISSION TO MANUFACTURE, USE, OR SELL ANY PATENTED INVENTION THAT MAY IN ANY WAY BE RELATED THERETO.

REVISIONS 02768

SYM	ZONE	DESCRIPTION	DR	CHK	DATE	APPROVED
G		REPLACES REV F WITH CHANGE PER TDRR 20854	rj		7/22/65	WK
H		REVISED PER TDRR 20892	rj		8/3/65	WK
J		REVISED PER TDRR 20904	rj		8/3/65	WK
K		REVISED PER TDRR 21379	rj		8/6/65	WK
L		REVISED PER TDRR 21410	rj		8/12/65	WK
M		REVISED PER TDRR 21993	rj			
N		REVISED PER TDRR 22621	rj		10/	
P		REVISED PER TDRR 22671	rj		11/	
R		REVISED PER TDRR 22672	rj			
S		REVISED PER TDRR 22750	rj		65	WK
T		REVISED PER TDRR 22823	rj			
U		REVISED PER TDRR 23072	rj		10-11-65	[illegible]
V		REVISED PER TDRR 23521	rj		10-26-65	WK
W		REVISED PER TDRR 23824	RAJ		11-9-65	WK
Y		REVISED PER TDRR 24018	RAJ		11-16-65	WK
Z		REVISED PER TDRR 24040	RAJ		11-19-65	WK
AA		REVISED PER TDRR 24060	RAJ		11-19-65	WK
AB		REVISED PER TDRR 24868	RAJ		12-22-65	WK
AC		REVISED PER TDRR 24973	RAJ		1-4-66	WK
AD		REVISED PER TDRR 25065	RAJ		1-18-66	[illegible]
AE		REVISED PER TDRR 25672	RAJ		2-4-66	WK
AF		REVISED PER TDRR 25671	RAJ		2-4-66	WK
AG		REVISED PER TDRR 26110	RAJ		2-15-66	WK
AH		REVISED PER TDRR 26372	"		3-16-66	[illegible]
AJ		REVISED PER TDRR 26425	"		3-16-66	[illegible]
AK		REVISED PER TDRR 26743	"		3-16-66	[illegible]
AL		REVISED PER TDRR 26798	"		3-16-66	[illegible]
AM		REVISED PER TDRR 27168	"		4-7-66	[illegible]
AN		REVISED PER TDRR 27235	"		4-7-66	[illegible]
AP		REVISED PER TDRR 27345	"		4-7-66	[illegible]
AR		REVISED PER TDRR 27417	"		4-7-66	[illegible]
AS		REVISED PER TDRR 27442	"		4-7-66	[illegible]
AT		REVISED PER TDRR 27719	"		4-20-66	WK
AU		REVISED PER TDRR 27880	"		4-20-66	WK
AV		REVISED PER TDRR 27896	"		4-20-66	WK

1004260 AV

DASH NO.	P/C	PART NAME	REMARKS	PART NO.	SER. NO.	CONT. NO.	STYLE	TYPE	MATERIAL
499	M T								
498									
401	MIT	COMPUTER ASSY		2003100		NAS-9-497	A	I	NOTE 11 B
400	MIT	LIFTING SLING-G&N INST. QUAL. FIX. & AZM. REF. FIX.		1021640		NAS-9-4065	B	II	NOTE 11 C

DASH NO.	A	B	C	D	E	F	G	H	J	K	L	M	N	P	R	S	T	U
401	2.000	1.312	1.906	1.375	.078	.048	.078	.093	NA	NA	1.125	.750	.593	.453	1.015	.062	.187	.078
400	2.000	1.312	1.687	1.375	.078	.048	.078	.093	2086/2081	.093	1.187	.750	.593	.453	1.015	.062	.187	.078

DASH NO.	V	W	Y	Z	AA	AB	AC	AD	AE	AF	AG	AH	AJ	AK	AL	AM	AN	AP	AR
401	.875	.718	1.375	.218	NA	NA	.048	.031	.875	.305	.078	.531	1.906	.078	NA	.078	.531	.187	NA
400	.875	.718	1.375	.218	1.156	1.843	.048	NA	.875	.305	.078	.312	1.687	.110	1.830	.070	.275	.180	1.844

MIT DASH NUMBERS

NOTES FOR TABLE
STYLE A IS FOR G&N SYSTEM
STYLE B IS FOR GROUND SUPPORT EQUIPMENT
TYPE I IS WITHOUT MOUNTING HOLES
TYPE II IS WITH MOUNTING HOLES

THIS SHEET ADDED
Ⓖ REPLACES REV F WITH CHANGE

MASTER

QTY REQD	PART OR IDENTIFYING NO.	MATERIAL OR NOTES	NOMENCLATURE OR DESCRIPTION	FIND NO.

LIST OF MATERIALS

NEXT ASSY	USED ON
AS APPLICABLE	

APPLICATION

UNLESS OTHERWISE SPECIFIED
DIMENSIONS ARE IN INCHES
CAPACITOR VALUES ARE IN μf
RESISTOR VALUES ARE IN OHMS
TOLERANCES ON
FRACTIONS ± — DECIMALS ±.005 ANGLES ± —
DO NOT SCALE THIS DRAWING

MATERIAL
SEE NOTE 11

MIT
INSTRUMENTATION LAB
CAMBRIDGE, MASS.

DRAWN R A Jones 7-16-65
CHECKED 7-23-65
APPROVED
APPROVED 7/22/65
APPROVED MIT 7/22/65
APPROVED MSC 7/22/65

MANNED SPACECRAFT CENTER
HOUSTON, TEXAS

NAMEPLATES,
APOLLO G&N-GSE
(STANDARDS)

CODE IDENT NO. 80230
SIZE E
DRAWING NO. 1004260
SCALE NONE
SHEET 5 OF 6

NOTICE – WHEN GOVERNMENT DRAWINGS, SPECIFICATIONS, OR OTHER DATA ARE USED FOR ANY PURPOSE OTHER THAN IN CONNECTION WITH A DEFINITELY RELATED GOVERNMENT PROCUREMENT OPERATION, THE UNITED STATES GOVERNMENT THEREBY INCURS NO RESPONSIBILITY NOR ANY OBLIGATION WHATSOEVER; AND THE FACT THAT THE GOVERNMENT MAY HAVE FORMULATED, FURNISHED, OR IN ANY WAY SUPPLIED THE SAID DRAWINGS, SPECIFICATIONS OR OTHER DATA IS NOT TO BE REGARDED BY IMPLICATION OR OTHERWISE AS IN ANY MANNER LICENSING THE HOLDER OR ANY OTHER PERSON OR CORPORATION, OR CONVEYING ANY RIGHTS OR PERMISSION TO MANUFACTURE, USE, OR SELL ANY PATENTED INVENTION THAT MAY IN ANY WAY BE RELATED THERETO.

REVISIONS 02768

SYM	ZONE	DESCRIPTION	DR	CHK	DATE	APPROVED
AG		CHANGED NUMBER OF SHEETS FROM 5 TO 6 PER TDRR 26110.	RA.		2-1-66	
AH		REVISED PER TDRR 26372	〃		[illegible]	
AJ		REVISED PER TDRR 26425	〃		[illegible]	
AK		REVISED PER TDRR 26743			[illegible]	
AL		REVISED PER TDRR 26798			[illegible]	
AM		REVISED PER TDRR 27168			[illegible]	
AN		REVISED PER TDRR 27235			[illegible]	
AP		REVISED PER TDRR 27345			[illegible]	
AR		REVISED PER TDRR 27417			[illegible]	
AS		REVISED PER TDRR 27442			[illegible]	
AT		REVISED PER TDRR 27719			[illegible]	
AU		REVISED PER TDRR 27880			[illegible]	
AV		REVISED PER TDRR 27896			[illegible]	

DASH NO.	P/C	PART NAME	REMARKS	PART NO.	SER NO.	CONT NO.	STYLE	TYPE	MATERIAL	A	B	C	D	E	F	G	H	J	K
599	C																		
598	AC																		
513	AC	JUMPER, BY-PASS		1021616 - 011		NAS-9-497	B	II	NOTE 11C	2.125	.968	1.718	NA	.093	.031	.06	.093	.100 .104	.093
512		COUPLING DATA UNIT ASSEMBLY C/M		2007322 - 011			A	I	NOTE 11B	FOR DIMENSIONS, SEE DASH 508 VALUES BELOW									
511	AC	COUPLING DATA UNIT ASSEMBLY - LEM		2007322 - 021															
510																			
509																			
508	AC	NAVIGATION BASE ASSEMBLY - LEM		6899980		NAS-9-497	A	I	NOTE 11B	2.000	1.312	1.906	1.375	.078	.048	.078	.093	NA	NA
507																			
506																			
505																			
504																			
503																			
502																			
501	AC	MOUNTING PLATE, COMPONENT		6900007-031		NAS-9-497	B	II	NOTE 11C	FOR DIMENSIONS, SEE DASH 500 VALUES BELOW									
500	AC	MOUNTING PLATE, COMPONENT		2900677-021						4.125	1.812	3.250	NA	.125	.062	.12	.156	.100 .104	.125

DASH NO.	L	M	N	P	R	S	T	U	V	W	Y	Z	AA	AB	AC	AD	AE	AF	AG	AH	AJ	AK	AL	AM	AN	AP	AR
513	.858	.608	.484	.358	.733	.077	.116	.062	.937	.875	1.343	.125	.781	1.892	.046	NA	NA	.209	.093	.250	1.875	NA	1.840	.046	.23	.16	1.938
508	1.125	.750	.593	.453	1.015	.062	.187	.078	.875	.718	1.375	.218	NA	NA	.048	.031	.875	.305	.078	.531	1.906	.078	NA	.078	.531	.187	NA
500	1.625	1.140	.890	.640	1.390	.125	.171	.125	1.875	1.687	2.625	.250	1.562	3.843	.093	NA	NA	.359	.125	.437	3.688	NA	3.687	.093	.40	.25	3.875

AC ELECTRONICS DASH NUMBERS

(AG) THIS SHEET ADDED

NOTES FOR TABLE

STYLE A IS FOR G&N SYSTEM
STYLE B IS FOR GROUND SUPPORT EQUIPMENT
TYPE I IS WITHOUT MOUNTING HOLES
TYPE II IS WITH MOUNTING HOLES

MASTER

QTY REQD	PART OR IDENTIFYING NO.	MATERIAL OR NOTES	NOMENCLATURE OR DESCRIPTION	FIND NO.

LIST OF MATERIALS

NEXT ASSY	USED ON
AS APPLICABLE	

APPLICATION

UNLESS OTHERWISE SPECIFIED
DIMENSIONS ARE IN INCHES
CAPACITOR VALUES ARE IN μf
RESISTOR VALUES ARE IN OHMS
TOLERANCES ON
FRACTIONS ± — DECIMALS ±.005 ANGLES ± —
DO NOT SCALE THIS DRAWING

MATERIAL
SEE NOTE 11

MIT
INSTRUMENTATION LAB
CAMBRIDGE, MASS.

DRAWN R. A. Jones 2-15-66
CHECKED 2-15-66
APPROVED
APPROVED
APPROVED MIT
APPROVED MSC
DATE

MANNED SPACECRAFT CENTER
HOUSTON, TEXAS

NAMEPLATES,
APOLLO G&N-GSE
(STANDARDS)

CODE IDENT NO. 80230
SIZE E
DRAWING NO. 1004260
SCALE NONE
SHEET 6 OF 6

1004260 AV

NOTICE - WHEN GOVERNMENT DRAWINGS, SPECIFICATIONS, OR OTHER DATA ARE USED FOR ANY PURPOSE OTHER THAN IN CONNECTION WITH A DEFINITELY RELATED GOVERNMENT PROCUREMENT OPERATION, THE UNITED STATES GOVERNMENT THEREBY INCURS NO RESPONSIBILITY NOR ANY OBLIGATION WHATSOEVER; AND THE FACT THAT THE GOVERNMENT MAY HAVE FORMULATED, FURNISHED, OR IN ANY WAY SUPPLIED THE SAID DRAWINGS, SPECIFICATIONS, OR OTHER DATA IS NOT TO BE REGARDED BY IMPLICATION OR OTHERWISE AS IN ANY MANNER LICENSING THE HOLDER OR ANY OTHER PERSON OR CORPORATION, OR CONVEYING ANY RIGHTS OR PERMISSION TO MANUFACTURE, USE, OR SELL ANY PATENTED INVENTION THAT MAY IN ANY WAY BE RELATED THERETO.

NOTES:

1. INTERPRET DRAWING IN ACCORDANCE WITH STANDARDS PRESCRIBED IN MIL-D-70327.
2. DIMENSIONS ON EACH VIEW APPLY TO ALL VIEWS. (WITH THE EXCEPTION OF MOUNTING HOLES).
3. FORMATS ILLUSTATED WILL BE APPLICABLE TO ALL ITEMS REQUIRING NAMEPLATES BELOW END ITEM DESIGNATION (SYSTEMS, ASSEMBLIES, ETC.)
4. PLATE BACKGROUND TO BE LUSTERLESS BLACK PER FED-STD-595, COLOR 37038. BORDER, MARKING AND LETTERING TO BE NATURAL METAL,(ANODIZED ALUMINUM).
5. MARKING METHOD TO BE DIE STAMPING, ETCHING OR ENGRAVING IN ACCORDANCE WITH MIL P 19834.
6. LETTERING STYLE TO BE GOTHIC,(SANS SERIFS), AND NUMBERS TO BE ARABIC.
7. WHERE LOCATING DIMENSIONS ARE NOT SHOWN, CHARACTERS SHALL BE SYMMETRICALLY POSITIONED.
8. IDENTIFY WITH DRAWING NUMBER PER ND1002019.
9. WHEN "AUTO MARK" METAL MARKING TYPEWRITER IS USED TO ADD DATA TO BLANK SPACES, TYPE SIZE IS TO BE SELECTED FROM DIMENSIONS U, AC AND AM.
10. NASA SYMBOL IS TO BE PROPORTIONAL TO NAMEPLATE IN RATIO OF 1 TO 5 WITH DIMENSION A VALUE AND IS TO HAVE NATURAL BACKGROUND. NASA SYMBOL LETTERS LETTERING AND FEATHER TO BE BLACK,(OR WHITE FOR SILK SCREENING). WHERE BLACK FEATHER PROTRUDES INTO BLACK BACKGROUND, A MINIMUM OUTLINE OF NATURAL BACKGROUND SHALL EXIST.
11. NAMEPLATES WILL BE APPLIED BY METHODS LISTED BELOW, SHOWN IN ORDER OF PREFERENCE, (I.E., FOR RELIABILITY AND WEIGHT).
    - A - STENCIL OR SILK SCREEN DIRECTLY ON EQUIPMENT USING INK PER SCD 1010920,(WHITE OR BLACK).
    - B - ALUMINUM FOIL,(STYLE A OR B, TYPE I):
      FOIL SHALL BE .0030 ± .0005 THICK PER MIL-A-148.
      FOIL SHALL HAVE NO ADHESIVE BACKING.
      FOIL SHALL BE BONDED PER ND 1002219,(METHOD II).
      FOIL SHALL BE CLEAR ANODIZED PER MIL-A-8625, TYPE II.
    - C - PLATE, (STYLE A OR B, TYPE II):
      MATERIAL: QQ-A-250, TEMPER O OR H14, TYPE 1100, ALUMINUM ALLOY, .032 THICK.
      ANODIZE PER MIL-A-8625, TYPE II.
      ALUMINUM PLATE MUST BE FREE FROM BURRS AND SHARP CORNERS, MOUNTED WITH APPLICABLE SIZE FASTENERS.
12. NAMEPLATES SHALL BE CAPABLE OF MEETING APPLICABLE REQUIREMENTS OF MIL-M-13231.
13. ON DIMENSION TABLES SHOWN ON PAGES 2, 3, 4 AND 5, NA MEANS, "NOT APPLICABLE".

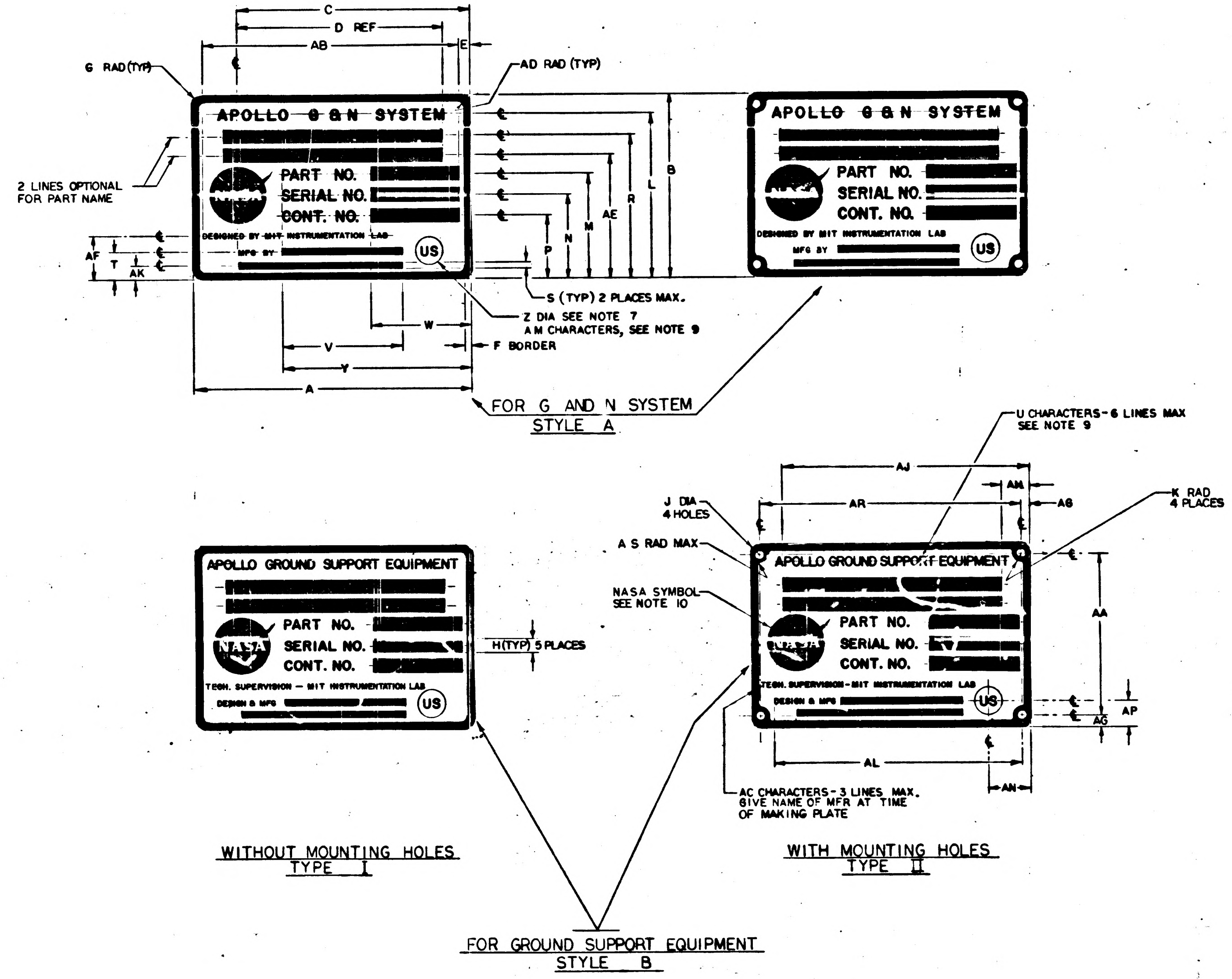

G RAD (TYP)
C
D REF
AB
E
AD RAD (TYP)
APOLLO G & N SYSTEM
PART NO.
SERIAL NO.
CONT. NO.
DESIGNED BY MIT INSTRUMENTATION LAB
MFG BY
US
2 LINES OPTIONAL FOR PART NAME
AF
T
AK
B
L
R
AE
M
N
P
S (TYP) 2 PLACES MAX.
Z DIA SEE NOTE 7
AM CHARACTERS, SEE NOTE 9
W
V
Y
A
F BORDER
FOR G AND N SYSTEM
STYLE A
U CHARACTERS - 6 LINES MAX
SEE NOTE 9
AJ
AM
AR
AG
J DIA 4 HOLES
K RAD 4 PLACES
A S RAD MAX
NASA SYMBOL SEE NOTE 10
APOLLO GROUND SUPPORT EQUIPMENT
TECH. SUPERVISION — MIT INSTRUMENTATION LAB
DESIGN & MFG
NASA
H (TYP) 5 PLACES
AA
AP
AL
AN
AC CHARACTERS - 3 LINES MAX. GIVE NAME OF MFR AT TIME OF MAKING PLATE
WITHOUT MOUNTING HOLES
TYPE I
WITH MOUNTING HOLES
TYPE II
FOR GROUND SUPPORT EQUIPMENT
STYLE B

REVISIONS 02768

	SYM	ZONE	DESCRIPTION	DR	CHK	DATE	APPROVED
	G		REPLACES REV F WITH CHANGE PER TDRR 20854			7/22/65	WK
*	H		REVISED PER TDRR 20892			8/4/65	WK
	J		REVISED PER TDRR 20904			[illegible]	WK
	K		REVISED PER TDRR 21379			[illegible]	WK
	L		REVISED PER TDRR 21410			8/23/65	WK
*	M		REVISED PER TDRR 21993			10/	
*	N		REVISED PER TDRR 22621				
*	P		REVISED PER TDRR 22671			1/1	
*	R		REVISED PER TDRR 22672				
*	S		REVISED PER TDRR 22750			65	WK
	T		REVISED PER TDRR 22823				
*	U		REVISED PER TDRR 23072			11-18-65	MGM
	V		REVISED PER TDRR 23521			10-27-65	WK
*	W		REVISED PER TDRR 23824	RAJ		11-9-65	WK
*	Y		REVISED PER TDRR 24018	RAJ		11-16-65	WK
*	Z		REVISED PER TDRR 24040	RAJ		11-19-65	WK
	AA		REVISED PER TDRR 24060	RAJ		11-19-65	WK
	AB		REVISED PER TDRR 24868	RAJ		12-22-65	WK
	AC		REVISED PER TDRR 24973	RAJ		1-4-66	WK
	AD		REVISED PER TDRR 25065	RAJ		1-18-66	MGM
*	AE		REVISED PER TDRR 25672	RAJ		2-4-66	WK
	AF		REVISED PER TDRR 25671	RAJ		2-4-66	WK
	AG		REVISED PER TDRR 26110	RAJ		2-15-66	WK
*	AH		REVISED PER TDRR 26372	"		3-16-66	MGM
*	AJ		REVISED PER TDRR 26425	"		3-16-66	MGM
*	AK		REVISED PER TDRR 26743	"		3-16-66	MGM
	AL		REVISED PER TDRR 26798	"		3-16-66	MGM
*	AM		REVISED PER TDRR 27168	"		4-7-66	MGM
*	AN		REVISED PER TDRR 27236	"		4-7-66	MGM
*	AP		REVISED PER TDRR 27345	"		4-7-66	MGM
*	AR		REVISED PER TDRR 27417	"		4-7-66	MGM
	AS		REVISED PER TDRR 27442	"		4-7-66	MGM
	AT		REVISED PER TDRR 27719	"		4-20-66	WK
	AU		REVISED PER TDRR 27880	"		4-20-66	WK
	AV		REVISED PER TDRR 27896	"		4-20-66	WK
	AW		28110	"		5-16-66	MGM
	AY		28173	"			MGM
	AZ		28131	"			MGM
	BA		28124	"			MGM
	BB		REVISED PER TDRR 28511	"		5-16-66	MGM

SUGGESTED PROPORTIONS FOR NAMEPLATE DIMENSIONS.
1. SELECT NAMEPLATE LENGTH, DIMENSION "A", TO FIT DESIGN NEEDS.
2. DIMENSIONS B THRU AS ON LINE 1 BELOW ARE PROPORTIONAL TO "A" BY MULTIPLIERS SHOWN IN LINE 2 BELOW.

1.	A	B	C	D	E	F	G	H	J	K	L	M	N	P	R	S	T	U	V	W	Y	Z	AA	AB	AC	AD	AE	AF	AG	AH	AJ	AK	AL	AM	AN	AP	AR	AS
2	1.000 A	.6563A	.8438A	.6875A	.0391A	.0240A	.0391A	.0469A	.0547A	.0469A	.5938A	.3750A	.2969A	.2187A	.5079A	.0313A	.0938A	.0391A	.4375A	.3594A	.6875A	.1094A	.5781A	.9219A	.0240A	.0156A	.4375A	.1525A	.0391A	.1563A	.8438A	.0548A	.8659A	.0391A	.1563A	.0938A	.9219A	.0151A

Ⓖ REPLACES REV F WITH CHANGE

QTY REQD	PART OR IDENTIFYING NO.	MATERIAL OR NOTES	NOMENCLATURE OR DESCRIPTION	FIND NO.

LIST OF MATERIALS

AS APPLICABLE	
NEXT ASSY	USED ON
APPLICATION	

UNLESS OTHERWISE SPECIFIED
DIMENSIONS ARE IN INCHES
CAPACITOR VALUES ARE IN μf
RESISTOR VALUES ARE IN OHMS
TOLERANCES ON
FRACTIONS ± — DECIMALS ±.005 ANGLES ± —
DO NOT SCALE THIS DRAWING

MATERIAL
SEE NOTE 11

MIT
INSTRUMENTATION LAB
CAMBRIDGE, MASS.

DRAWN R. A. Jones 7/16/65
CHECKED A. J. [illegible] 7-22-65
APPROVED
APPROVED 7/22/65
APPROVED MIT 7/22/65
APPROVED MSC 7/22/65
DATE

MANNED SPACECRAFT CENTER
HOUSTON, TEXAS

NAMEPLATES,
APOLLO G&N-GSE
(STANDARDS)

CODE IDENT NO. 80230
SIZE E
DRAWING NO. 1004260
SCALE NONE
SHEET 1 OF -

1004260 E

MASTER

NOTICE – WHEN GOVERNMENT DRAWINGS, SPECIFICATIONS, OR OTHER DATA ARE USED FOR ANY PURPOSE OTHER THAN IN CONNECTION WITH A DEFINITELY RELATED GOVERNMENT PROCUREMENT OPERATION, THE UNITED STATES GOVERNMENT THEREBY INCURS NO RESPONSIBILITY NOR ANY OBLIGATION WHATSOEVER; AND THE FACT THAT THE GOVERNMENT MAY HAVE FORMULATED, FURNISHED, OR IN ANY WAY SUPPLIED THE SAID DRAWINGS, SPECIFICATIONS OR OTHER DATA IS NOT TO BE REGARDED BY IMPLICATION OR OTHERWISE AS IN ANY MANNER LICENSING THE HOLDER OR ANY OTHER PERSON OR CORPORATION, OR CONVEYING ANY RIGHTS OR PERMISSION TO MANUFACTURE, USE, OR SELL ANY PATENTED INVENTION THAT MAY IN ANY WAY BE RELATED THERETO.

REVISIONS

02768

SYM	ZONE	DESCRIPTION	DR	CHK	DATE	APPROVED
G		REPLACES REV F WITH CHANGE PER TDRR 20854.	rj		7/22/65	WK
H		REVISED PER TDRR 20892	rj		8/3/65	WK
J		REVISED PER TDRR 20904	rj		8/3/65	WK
K		REVISED PER TDRR 21379	rj		9/9/65	WK
L		REVISED PER TDRR 21410	rj		9/23/65	WK
M		REVISED PER TDRR 21993	"			
N		REVISED PER TDRR 22621	"		10/	
P		REVISED PER TDRR 22671	"			
R		REVISED PER TDRR 22672	"		11/	
S		REVISED PER TDRR 22750	"			
T		REVISED PER TDRR 22823	"		65	WK
U		REVISED PER TDRR 23072	"		10-22-65	
V		REVISED PER TDRR 23521			10-27-65	WK
W		REVISED PER TDRR 23824	RAJ		11-9-65	WK
Y		REVISED PER TDRR 24018	RAJ		11-16-65	WK
Z		REVISED PER TDRR 24040	RAJ		11-19-65	WK
AA		REVISED PER TDRR 24060	RAJ		11-19-65	WK
AB		REVISED PER TDRR 24868	RAJ		12-22-65	WK
AC		REVISED PER TDRR 24973	RAJ		1-4-66	WK
AD		REVISED PER TDRR 25065	RAJ		1-18-66	
AE		REVISED PER TDRR 25672	RAJ		2-4-66	WK
AF		REVISED PER TDRR 25671	RAJ		2-4-66	WK
AG		REVISED PER TDRR 26110	RAJ		2-15-66	WK
AH		REVISED PER TDRR 26372	"		3-16-66	
AJ		REVISED PER TDRR 26425	"		3-16-66	
AK		REVISED PER TDRR 26743	"		3-16-66	
AL		REVISED PER TDRR 26798	"		3-16-66	
AM		REVISED PER TDRR 27168	"		4-8-66	
AN		REVISED PER TDRR 27235	"		4-8-66	
AP		REVISED PER TDRR 27345	"		4-8-66	
AR		REVISED PER TDRR 27417	"		4-6-66	
AS		REVISED PER TDRR 27442	"		4-8-66	
AT		REVISED PER TDRR 27719	"		4-21-66	WK
AU		REVISED PER TDRR 27880	"		4-21-66	WK
AV		REVISED PER TDRR 27896	"		4-21-66	WK
AW		↕ 28110	"		5-16-66	
AY		↕ 28173	"		↕	
AZ		↕ 28131	"		↕	
BA		↕ 28124	"		↕	
BB		REVISED PER TDRR 28511	"		5-16-66	

DASH NO.	P/C	PART NAME	REMARKS	PART NO.	SER. NO.	CONT. NO.	STYLE	TYPE	MATERIAL	A	B	C	D	E	F	G	H	J	K	L	M	N	P	R	S	T	U	V	W	Y	Z	AA	AB	AC	AD	AE	AF	AG	AH	AJ	AK	AL	AM	AN	AP	AR
399	K																																													
398	K																																													
330	K	ALIGNMENT OPTICAL TELESCOPE (LEM)		NA	NA	NA	A	I	NOTE 11B	4.000	2.625	3.375	2.750	.156	.093	.156	.187	NA	NA	2.312	1.468	1.187	.906	2.031	NA	.375	.156	NA	1.437	2.750	.437	NA	3.688	.062	.062	1.750	.593	NA	.625	3.375	.187	NA	.156	.531	.453	NA
309	K																																													
308	K																																													
307	K						B	I	NOTE 11 B	4.000	2.625	3.375	2.750	.156	.093	.156	.187	NA	NA	2.328	1.468	1.187	.906	2.031	.062	.375	.156	NA	1.437	2.750	.437	NA	3.687	.062	.062	1.750	.593	NA	NA	NA	NA	NA	NA	NA	NA	NA
306	K						B	II	NOTE 11 C	4.000	2.625	3.375	2.750	.156	.093	.156	.187	.125	.156	2.328	1.468	1.187	.906	2.031	.062	.375	.156	↕	1.437	2.750	.437	2.312	3.687	.062	NA	1.750	.593	↕	↕	↕	↕	↕	↕	↕	↕	↕
305	K						B	I	NOTE 11 B	2.000	1.312	1.687	1.375	.078	.048	.078	.093	NA	NA	1.164	.734	.593	.453	1.015	.048	.171	.078	↕	.718	1.375	.187	NA	NA	.048	.031	.875	.320	↕	↕	↕	↕	↕	↕	↕	↕	↕
304	K						B	II	NOTE 11 C	2.000	1.312	1.687	1.375	.078	.048	.078	.093	.070	.078	1.164	.734	.593	.453	1.015	.048	.171	.078	NA	.718	1.375	.187	.156	1.843	.048	NA	.875	.320	NA	NA	NA	NA	NA	NA	NA	NA	NA
303	K																																													
302	K																																													
301	K																																													
300	K	OPTICAL UNIT		NA	NA	NA	A	I	NOTE 11 B	2.000	1.312	1.675	NA	NA	.048	.078	NA	NA	NA	1.090	.812	.675	.540	.940	NA	.265	NA	NA	NA	1.375	.218	NA	NA	NA	NA	NA	.375	NA	NA	NA	.180	NA	.078	NA	NA	NA
9	K	2 IN AUTOCOLLIMATOR		1001702			B	II	NOTE 11 C	4.000	2.625	3.812	2.750	.156	.093	.156	.187	.125	.156	2.250	1.500	1.187	.906	2.031	.093	.375	.156	1.750	1.437	2.750	.437	2.312	3.687	.062	NA	1.750	.593	.156	1.062	3.812	.156	NA	.156	1.062	.375	3.687
8	K	5 IN AUTOCOLLIMATOR		1017410			B	II	NOTE 11 C	4.000	2.625	3.812	2.750	.156	.093	.156	.187	.125	.156	2.250	1.500	1.187	.906	2.031	.093	.375	.156	1.750	1.437	2.750	.437	2.312	3.687	.062	NA	1.750	.593	.156	1.062	3.812	.156	NA	.156	1.062	.375	3.687
7	K	2½ IN AUTOCOLLIMATOR (SCT)		1017435			B	II	NOTE 11 C	4.000	2.625	3.812	2.750	.156	.093	.156	.187	.125	.156	2.250	1.500	1.187	.906	2.031	.093	.375	.156	1.750	1.437	2.750	.437	2.312	3.687	.062	NA	1.750	.593	.156	1.062	3.812	.156	NA	.156	1.062	.375	3.687
6	K	2½ IN AUTOCOLLIMATOR (SXT)		1017448			B	II	NOTE 11 C	4.000	2.625	3.812	2.750	.156	.093	.156	.187	.125	.156	2.250	1.500	1.187	.906	2.031	.093	.375	.156	1.750	1.437	2.750	.437	2.312	3.687	.062	NA	1.750	.593	.156	1.062	3.812	.156	NA	.156	1.062	.375	3.687
5	K	RETROREFLECTING PRISM ASSEMBLY		1019840			B	I	NOTE 11 B	4.000	2.625	3.812	2.750	.156	.093	.156	.187	NA	NA	2.250	1.500	1.187	.906	2.031	.093	.375	.156	1.750	1.437	2.750	.437	NA	NA	.062	.062	1.750	.593	.156	1.062	3.812	.156	NA	.156	1.062	.375	NA
4	K	S/H SIMULATOR ASSEMBLY		1019896			B	I	NOTE 11 B	4.000	2.625	3.812	2.750	.156	.093	.156	.187	NA	NA	2.250	1.500	1.187	.906	2.031	.093	.375	.156	1.750	1.437	2.750	.437	NA	NA	.062	.062	1.750	.593	.156	1.062	3.812	.156	NA	.156	1.062	.375	NA
3	K	REFERENCE MIRROR		1001767			B	I	NOTE 11 B	2.000	1.312	1.906	1.375	.078	.048	.078	.093	NA	NA	1.125	.750	.593	.453	1.015	.062	.187	.078	.875	.718	1.375	.218	NA	NA	.048	.031	.875	.305	.078	.531	1.906	.078	NA	.078	.531	.187	NA
2	K	2 IN PLANE READING AUTOCOLLIMATOR		1017413			B	I	NOTE 11 B	2.000	1.312	1.906	1.375	.078	.048	.078	.093	NA	NA	1.125	.750	.593	.453	1.015	.062	.187	.078	.875	.718	1.375	.218	NA	NA	.048	.031	.875	.305	.078	.531	1.906	.078	NA	.078	.531	.187	NA
1	K	2 IN AUTOCOLLIMATOR		1001702			B	I	NOTE 11 B	2.000	1.312	1.906	1.375	.078	.048	.078	.093	NA	NA	1.125	.750	.593	.453	1.015	.062	.187	.078	.875	.718	1.375	.218	NA	NA	.048	.031	.875	.305	.078	.531	1.906	.078	NA	.078	.531	.187	NA

NOTES FOR TABLE

STYLE A IS FOR G&N SYSTEM.
STYLE B IS FOR GROUND SUPPORT EQUIPMENT.
TYPE I IS WITHOUT MOUNTING HOLES.
TYPE II IS WITH MOUNTING HOLES.

Ⓖ REPLACES REV F WITH CHANGE

KOLLSMAN DASH NUMBERS

MASTER

QTY REQD	PART OR IDENTIFYING NO.	MATERIAL OR NOTES	NOMENCLATURE OR DESCRIPTION	FIND NO.

LIST OF MATERIALS

NEXT ASSY	USED ON
AS APPLICABLE	

APPLICATION

UNLESS OTHERWISE SPECIFIED
DIMENSIONS ARE IN INCHES
CAPACITOR VALUES ARE IN µf
RESISTOR VALUES ARE IN OHMS
TOLERANCES ON
FRACTIONS ± — DECIMALS ±.005 ANGLES ± —
DO NOT SCALE THIS DRAWING

MATERIAL
SEE NOTE 11

MIT
INSTRUMENTATION LAB
CAMBRIDGE, MASS.

DRAWN R. A. Jones 7-16-65
CHECKED 7-22-65
APPROVED
APPROVED
APPROVED MIT
APPROVED MSC
DATE

MANNED SPACECRAFT CENTER
HOUSTON, TEXAS

NAMEPLATES,
APOLLO G&N-GSE
(STANDANDS)

CODE IDENT NO. 80230
SIZE E
DRAWING NO. 1004260
SCALE NONE
SHEET 2 OF 6

NOTICE — WHEN GOVERNMENT DRAWINGS, SPECIFICATIONS, OR OTHER DATA ARE USED FOR ANY PURPOSE OTHER THAN IN CONNECTION WITH A DEFINITELY RELATED GOVERNMENT PROCUREMENT OPERATION, THE UNITED STATES GOVERNMENT THEREBY INCURS NO RESPONSIBILITY NOR ANY OBLIGATION WHATSOEVER; AND THE FACT THAT THE GOVERNMENT MAY HAVE FORMULATED, FURNISHED, OR IN ANY WAY SUPPLIED THE SAID DRAWINGS, SPECIFICATIONS, OR OTHER DATA IS NOT TO BE REGARDED BY IMPLICATION OR OTHERWISE AS IN ANY MANNER LICENSING THE HOLDER OR ANY OTHER PERSON OR CORPORATION, OR CONVEYING ANY RIGHTS OR PERMISSION TO MANUFACTURE, USE, OR SELL ANY PATENTED INVENTION THAT MAY IN ANY WAY BE RELATED THERETO.

REVISIONS 02768

SYM	ZONE	DESCRIPTION	DR	CHK	DATE	APPROVED
G		REPLACES REV F WITH CHANGE PER TDRR 20854			7/22/65	WK
H		REVISED PER TDRR 20892			[illegible]	WK
J		REVISED PER TDRR 20904			[illegible]	WK
K		REVISED PER TDRR 21379			[illegible]	WK
L		REVISED PER TDRR 21410			[illegible]	WK
M		REVISED PER TDRR 21993			10/11/65	
N		REVISED PER TDRR 22621				
P		REVISED PER TDRR 22671				
R		REVISED PER TDRR 22672				
S		REVISED PER TDRR 22750				
T		REVISED PER TDRR 22823				WK
U		REVISED PER TDRR 23072			10-11-65	
V		REVISED PER TDRR 23521			10-26-65	WK
W		REVISED PER TDRR 23824	RAJ		11-9-65	WK
Y		REVISED PER TDRR 24018	RAJ		11-16-65	WK
Z		REVISED PER TDRR 24040	RAJ		11-19-65	WK
AA		REVISED PER TDRR 24060	RAJ		11-19-65	WK
AB		REVISED PER TDRR 24868	RAJ		12-22-65	WK
AC		REVISED PER TDRR 24973	RAJ		1-4-66	WK
AD		REVISED PER TDRR 25065	RAJ		1-18-66	
AE		REVISED PER TDRR 25672	RAJ		2-4-66	WK
AF		REVISED PER TDRR 25671	RAJ		2-4-66	WK
AG		REVISED PER TDRR 26110	RAJ		2-15-65	WK
AH		REVISED PER TDRR 26372	"		3-16-66	
AJ		REVISED PER TDRR 26425	"		3-16-66	
AK		REVISED PER TDRR 26743	"		3-16-66	
AL		REVISED PER TDRR 26798	"		3-16-66	
AM		REVISED PER TDRR 27168	"		4-8-66	
AN		REVISED PER TDRR 27235	"		4-8-66	
AP		REVISED PER TDRR 27345	"		4-8-66	
AR		REVISED PER TDRR 27417	"		4-8-66	
AS		REVISED PER TDRR 27442	"		4-8-66	
AT		REVISED PER TDRR 27719	"		4-20-66	WK
AU		REVISED PER TDRR 27880	"		4-20-66	WK
AV		REVISED PER TDRR 27896	"		4-20-66	WK
AW		28110	"		5-16-66	
AY		28173	"		5-16-66	
AZ		28131	"		5-16-66	
BA		28124	"		5-16-66	
BB		REVISED PER TDRR 28511	"		5-16-66	

DASH NO.	P/C	PART NAME	REMARKS	PART NO.	SER. NO.	CONT. NO.	STYLE	TYPE	MATERIAL	A	B	C	D	E	F	G	H	J	K	L	M	N	P	R	S	T	U	V	W	Y	Z	AA	AB	AC	AD	AE	AF	AG	AH	AJ	AK	AL	AM	AN	AP	AR
299	P																																													
298	R																																													
269	R	POWER CONTROL ASSY		2014044-021	NA	NAS9-497	B	I	NOTE 11 B	FOR DIMENSIONS, SEE DASH 17 VALUES BELOW																																				
268		SELF TEST ASSY		2014366-021						FOR DIMENSIONS, SEE DASH 15 VALUES BELOW																																				
267		AGC JUNCTION ASSY		2014341-021																																										
266		POWER CONTROL ASSY		2014079-021																																										
265		BUFFER CIRCUIT ASSY		2014254-021																																										
264		DRAWER ASSY X Y INTERFACE		2014040-021																																										
263		DRAWER ASSY R D C INTERFACE		2014045-021						FOR DIMENSIONS, SEE DASH 17 VALUES BELOW																																				
262		DRAWER ASSY PROGRAMMER & MONITOR		2014041-021																																										
261		LOGIC DRAWER ASSY NO. 2		2014037-021																																										
260		LOGIC DRAWER ASSY NO. 1		2014036-021				I	NOTE 11 B																																					
259		OPERATION CONSOLE		2014024-021				II	NOTE 11 C	FOR DIMENSIONS, SEE DASH 18 VALUES BELOW																																				
258		COMPUTER TEST SET		2014042-021																																										
257		AUXILIARY CALIBRATION CONSOLE		2014059-021				II	NOTE 11 C																																					
256		AGC CALIBRATION CONSOLE		2014049-021																																										
255		AGC HANDLING FIXTURE		2014282-021				I	NOTE 11 B	FOR DIMENSIONS, SEE DASH 17 VALUES BELOW																																				
254		DRAWER ASSY COMP. SIMULATOR		2014048-011				II	NOTE 11 C	FOR DIMENSIONS, SEE DASH 18 VALUES BELOW																																				
253		SHIPPING KIT ASSY, NAV DSKY		2016312-011																																										
252		SHIPPING KIT ASSY, UNIVERSAL DSKY		2016316-011																																										
251		SHIPPING KIT ASSY, MAIN DSKY		2016313-011				II	NOTE 11 C																																					
250		AMPLIFIER, REWORK		2014386				I	NOTE 11 B	FOR DIMENSIONS, SEE DASH 15 VALUES BELOW																																				
249		TEMP MONITOR ASSY		2014313-011					NOTE 11 C	FOR DIMENSIONS, SEE DASH 17 VALUES BELOW																																				
248		AGC JUNCTION ASSY		2014341-011					NOTE 11 B	FOR DIMENSIONS, SEE DASH 15 VALUES BELOW																																				
247		AC NPUT PANEL ASSY		2014302-011																																										
246		SELF TEST ASSY		2014392 011																																										
245		TAPE PUNCH ASSEMBLY		2014039-011						FOR DIMENSIONS, SEE DASH 15 VALUES BELOW																																				
244	R	TAPE READER ASSEMBLY		2014038-011	NA	NAS-9-497	B	I	NOTE 11 B																																					
243																																														
242																																														
241	R	APOLLO GUIDANCE COMPUTER GROUP		6003001	NA	NAS-9-497	A	I	NOTE 11 B	FOR DIMENSIONS, SEE DASH 19 VALUES BELOW																																				
240		SELF TEST ASSEMBLY		2014366-011	NA		B	I		FOR DIMENSIONS, SEE DASH 15 VALUES BELOW																																				
239		POWER SUPPLY ASSY-115V., 400 CYCLE		2014207-011						FOR DIMENSIONS, SEE DASH 17 VALUES BELOW																																				
238		AC INPUT PANEL ASSY		2014043-011																																										
237		POWER CONTROL ASSY		2014079-011						FOR DIMENSIONS, SEE DASH 15 VALUES BELOW																																				
236		DRAWER ASSY-X Y INTERFACE		2014040-011																																										
235		DRAWER ASSY RDC INTERFACE		2014045-011																																										
234		BUFFER CIRCUIT ASSY		2014254-011																																										
233		CONTROL & INTERFACE ASSY		2014204-011																																										
232		POWER CONTROL ASSY		2014044-011						FOR DIMENSIONS, SEE-DASH 17 VALUES BELOW																																				
231		DRAWER ASSY, PROGRAMMER & MONITOR		2014041-011																																										
230		CONNECTOR INTERFACE ASSY		2014272-011						FOR DIMENSIONS, SEE DASH 15 VALUES BELOW																																				
229		CONNECTOR INTERFACE ASSY		2014047-011																																										
228		ANTENNA, TUNING CAPACITOR ASSY		2014209-011																																										
227		MOUNTING FIXTURE ASSY		2014006-011						FOR DIMENSIONS, SEE DASH 17 VALUES BELOW																																				
226		POWER SUPPLY ASSY 3 VDC		2014234-011						FOR DIMENSIONS, SEE DASH 15 VALUES BELOW																																				
225		PANEL ASSY — SIGNAL INTERFACE		2014010-011																																										
224		OSCILLOSCOPE ASSY		2014232-011																																										
223		AUXILIARY OUTLET ASSY		2014274-011																																										
222		FREQUENCY COUNTER		2014233-011																																										
221		POWER SUPPLY ASSY 10, 13, 28 VDC		2014235-011																																										
220		LOGIC DRAWER ASSY NO. 2		2014037-011						FOR DIMENSIONS, SEE DASH 17 VALUES BELOW																																				
219		LOGIC DRAWER ASSY NO. 1		2014036-011																																										
218		COUNTER, ELECTRICAL ASSY		2014288-011						FOR DIMENSIONS, SEE DASH 15 VALUES BELOW																																				
217		POWER SUPPLY ASSY		2014279-011																																										
216		TEST MOUNT ASSY		2014257-011																																										
215		UNIVERSAL DSKY PEDESTAL MOUNT		2014014-011						FOR DIMENSIONS, SEE DASH 17 VALUES BELOW																																				
214		MAIN DSKY PEDESTAL MOUNT		2014343				I	NOTE 11B																																					
213		SHIPPING CONTAINER, MAIN DSKY		1006229				II	NOTE 11C	FOR DIMENSIONS, SEE DASH 18 VALUES BELOW																																				
212		NAV DSKY		1006231																																										
211		AGC		1006230																																										
210		UNIVERSAL DSKY		1006422																																										
209		SHIPPING CONTAINER, AGC		1006421				II	NOTE 11C																																					
208		UNIVERSAL DSKY HANDLING FIXTURE		2014013-011				I	NOTE 11B	FOR DIMENSIONS, SEE DASH 15 VALUES BELOW																																				
207		NAV DSKY HANDLING FIXTURE		1014377						FOR DIMENSIONS, SEE DASH 17 VALUES BELOW																																				
206		MAIN DSKY HANDLING FIXTURE		1014334																																										
205		AGC HANDLING FIXTURE		2014282-011				I	NOTE 11B																																					
204		OPERATION CONSOLE		2014024-011				II	NOTE 11C	FOR DIMENSIONS, SEE DASH 18 VALUES BELOW																																				
203		COMPUTER TEST SET		2014042-011		NAS-9-497																																								
202		DRAWER ASSY, COMPUTER SIMULATOR		2014048-011		FNP-12775																																								
201		AUXILIARY CALIBRATION CONSOLE		2014059-011		NAS-9-497																																								
200		AGC CALIBRATION CONSOLE		2014049-011	NA		B	II	NOTE 11C																																					
21																																														
20		NA		NA	NA	NA	A	II	NOTE 11 C	2.000	1.312	1.687	1.375	.078	.031	.078	.093	.106 .113	.093	1.187	.750	.593	.453	1.015	.062	.187	.078	.875	.718	1.375	.218	1.156	1.843	.048	NA	.875	.305	.078	.312	1.687	.078	NA	.078	.312	.187	1.843
19		NA		NA	NA	NA	A	I	NOTE 11 B	2.000	1.312	1.687	1.375	.078	.031	.078	.093	NA	NA	1.187	.750	.593	.453	1.015	.062	.187	.078	.875	.718	1.375	.218	NA	NA	.048	.031	.875	.305	.078	.312	1.687	.078	NA	.078	.312	.187	NA
18		NA		NA	NA	NA	B	II	NOTE 11 C	4.187	1.875	3.469	2.750	.156	.093	.156	.125	.106 .113	.125	1.625	1.032	.844	.656	1.406	.093	.344	.156	1.781	1.531	2.844	.312	1.562	3.875	.062	NA	1.219	.500	.156	.719	3.469	.156	NA	.156	.719	.344	3.875
17		NA		NA	NA	NA	B	I	NOTE 11 B	4.187	1.875	3.469	2.750	.156	.093	.156	.125	NA	NA	1.625	1.032	.844	.656	1.406	.093	.344	.156	1.781	1.531	2.844	.312	NA	NA	.062	.062	1.219	.500	.156	.719	3.469	.156	NA	.156	.719	.344	NA
16		NA		NA	NA	NA	B	II	NOTE 11 C	2.000	1.312	1.687	1.375	.078	.031	.078	.093	.106 .113	.093	1.187	.750	.593	.453	1.015	.062	.187	.078	.875	.718	1.375	.218	1.156	1.843	.048	NA	.875	.305	.078	.312	1.687	.078	NA	.078	.312	.187	1.843
15	R	NA		NA	NA	NA	B	I	NOTE 11 B	2.000	1.312	1.687	1.375	.078	.031	.078	.093	NA	NA	1.187	.750	.593	.453	1.015	.062	.187	.078	.875	.718	1.375	.218	NA	NA	.048	.031	.875	.305	.078	.312	1.687	.078	NA	.078	.312	.187	NA

THIS SHEET ADDED

Ⓖ REPLACES REV F WITH CHANGE

RAYTHEON DASH NUMBERS

NOTES FOR TABLE
STYLE A IS FOR G & N SYSTEM
STYLE B IS FOR GROUND SUPPORT EQUIPMENT
TYPE I IS WITHOUT MOUNTING HOLES
TYPE II IS WITH MOUNTING HOLES

QTY REQD	PART OR IDENTIFYING NO.	MATERIAL OR NOTES	NOMENCLATURE OR DESCRIPTION	FIND NO.

LIST OF MATERIALS

NEXT ASSY	USED ON
AS APPLICABLE	

APPLICATION

UNLESS OTHERWISE SPECIFIED
DIMENSIONS ARE IN INCHES
CAPACITOR VALUES ARE IN µf
RESISTOR VALUES ARE IN OHMS
TOLERANCES ON
FRACTIONS ± — DECIMALS ±.005 ANGLES ± —
DO NOT SCALE THIS DRAWING

MATERIAL
SEE NOTE 11

MIT
INSTRUMENTATION LAB
CAMBRIDGE, MASS.

DRAWN R. A. Jones 7-16-65
CHECKED A. J. [illegible] 7-22-65
APPROVED
APPROVED [illegible]
APPROVED MIT [illegible]
APPROVED MSC [illegible]
DATE

MANNED SPACECRAFT CENTER
HOUSTON, TEXAS

NAMEPLATES,
APOLLO GEN-GSE
(STANDARDS)

CODE IDENT NO. 80230
SIZE E
DRAWING NO. 1004260
SCALE NONE
SHEET 3 OF 5

MASTER

1004260 BB

[illegible]

SYM	ZONE	DESCRIPTION	DR	CHK	DATE	APPROVED
		REVISIONS 02768				
G		REPLACES REV F WITH CHANGE PER TDRR 20854			7/22/65	WK
H		REVISED PER TDRR 20892			[illegible]	WK
J		REVISED PER TDRR 20904			[illegible]	WK
K		REVISED PER TDRR 21379			[illegible]	WK
L		REVISED PER TDRR 21410			8/23/65	WK
M		REVISED PER TDRR 21993				
N		REVISED PER TDRR 22621				
P		REVISED PER TDRR 22671				
R		REVISED PER TDRR 22672				
S		REVISED PER TDRR 22750				WK
T		REVISED PER TDRR 22823			65	
U		REVISED PER TDRR 23072			[illegible]	[illegible]
V		REVISED PER TDRR 23521			10-26-65	WK
W		REVISED PER TDRR 23824	RAJ		11-9-65	WK
Y		REVISED PER TDRR 24018	RAJ		11-16-65	WK
Z		REVISED PER TDRR 24040	RAJ		11-19-65	WK
AA		REVISED PER TDRR 24060	RAJ		11-19-65	WK
AB		REVISED PER TDRR 24368	RAJ		2-22-65	WK
AC		REVISED PER TDRR 24973	RAJ		1-4-66	WK
AD		REVISED PER TDRR 25065	RAJ		1-18-66	[illegible]
AE		REVISED PER TDRR 25672	RAJ		2-4-66	WK
AF		REVISED PER TDRR 25571	RAJ		2-4-66	WK
AG		REVISED PER TDRR 26110	RAJ		2-15-66	WK
AH		REVISED PER TDRR 26372	"		3-6-66	[illegible]
AJ		REVISED PER TDRR 26425	"		3-16-66	[illegible]
AK		REVISED PER TDRR 26743	"		3-16-66	[illegible]
AL		REVISED PER TDRR 26798	"		3-16-66	[illegible]
AM		REVISED PER TDRR 27168	"		4-8-66	[illegible]
AN		REVISED PER TDRR 27235	"		4-8-66	[illegible]
AP		REVISED PER TDRR 27345	"		4-8-66	[illegible]
AR		REVISED PER TDRR 27417	"		4-8-66	[illegible]
AS		REVISED PER TDRR 27442	"		4-8-66	[illegible]
AT		REVISED PER TDRR 27719	"		4-21-66	WK
AU		REVISED PER TDRR 27880	"		4-21-66	WK
AV		REVISED PER TDRR 27896	"		4-21-66	WK
AW		28110	"		5-16-66	[illegible]
AY		28173	"			[illegible]
AZ		28131	"			[illegible]
BA		28124	"			[illegible]
BB		REVISED PER TDRR 28511	"		5-16-66	[illegible]

DASH NO.	P/C	PART NAME	REMARKS	PART NO.	SER. NO.	CONT. NO.	STYLE	TYPE	MATERIAL	A	B	C	D	E	F	G	H	J	K	L	M	N	P	R	S	T	U	V	W	Y	Z	AA	AB	AC	AD	AE	AF	AG	AH	AJ	AK	AL	AM	AN	AP	AR
199	AC	[illegible] CE STOWAGE UNIT		2021255-011			A	I		FOR DIMENSIONS, SEE DASH 100 VALUES BELOW																																			
198	AC	[illegible] CONDITIONER ASSY C/M		2007234		NAS 9-497			NOTE 11B																																				
197	AC	[illegible] CONDITIONER ASSY C/M		2007235																																									
196	AC	[illegible] CONDITIONER ASSY LEM		6007010																																									
195	AC	[illegible] & SIGNAL CONDITIONER ASSY		6007009			A	I	NOTE 11B																																				
194	AC	PANEL, MONITOR		2900031-031			B	II	NOTE 11C	FOR DIMENSIONS, SEE DASH 141 VALUES BELOW																																			
193	AC	DISTRIBUTION BOX, GSE		2900024-031																																									
192	AC	ANALYZER, OPTICS-INERTIAL		2900023-031						FOR DIMENSIONS, SEE DASH 144 VALUES BELOW																																			
191	AC	TEST CONTROL		2900027-031						FOR DIMENSIONS, SEE DASH 141 VALUES BELOW																																			
190	AC	PANEL, PWR SUP AND LOAD		2900033-021																																									
189	AC	ADPT MODULE, P.S.A.		6900088-011																																									
188	AC	ADPT MODULE, P.S.A.		2901143-011																																									
187	AC	FIXTURE, MTG, PTA/PEA		2900066-021		NAS 9-497	B	II	NOTE 11C																																				
186	AC	[illegible] PNL & EYEPIECE STOW. ASSY		1021255-021			A	I		FOR DIMENSIONS, SEE DASH 100 VALUES BELOW																																			
185	AC	ANN PNL & EYEPIECE STOW. ASSY		1021255-011			A	I																																					
184	AC	FIX., HAND., G AND N HARNESS		1901846-041		NAS-9-497	B	II	NOTE 11C	FOR DIMENSIONS, SEE DASH 144 VALUES BELOW																																			
183	AC	INSTALLING TOOL, ELEC. CONN		1902586-011			B	II	NOTE 11C	FOR DIMENSIONS, SEE DASH 102 VALUES BELOW																																			
182	AC	ADPT MODULE, P.S.A.		6900088-011			B	II	NOTE 11C	FOR DIMENSIONS, SEE DASH 141 VALUES BELOW																																			
181	AC	G & N INDICATOR CONTROL PANEL ASSY		2014578-011			A	I	NOTE 11B	3.000	1.938	2.437	NA	.125	.062	.188	.156	NA	NA	1.750	1.125	.906	.688	1.500	NA	.281	.125	NA	1.094	2.062	.312	NA	2.500	.062	.125	1.312	.469	NA	NA	NA	.156	NA	.125	.469	.344	NA
180	AC	ADPT MODULE, P.S.A.		1902431-031			B	II		FOR DIMENSIONS, SEE DASH 121 VALUES BELOW																																			
179	AC	MOUNTING PLATE, IMU/PTA		6900083-011						FOR DIMENSIONS, SEE DASH 144 VALUES BELOW																																			
178	AC	MOUNTING PLATE, COMPONENT		6900007-021																																									
177	AC	FIX., MOUNTING, SUBSYSTEM		2900070-021																																									
176	AC	FIX., MOUNTING, G AND N		2900067-021																																									
175	AC	CSL., COOL. AND PWR, G AND N		1902134-031																																									
174	AC	FIX., HAND., C/M AND LEM CDU		2900999-011					NOTE 11C	FOR DIMENSIONS, SEE DASH 141 VALUES BELOW																																			
173	AC	FIX., HANDLING, C/M PSA		2900998-011																																									
172	AC	CAGING ELECTRONICS, GYRO		2900029-021																																									
171	AC	DISTRIBUTION BOX, GSE		2900024-021						FOR DIMENSIONS, SEE DASH 144 VALUES BELOW																																			
170	AC	ANALYZER, OPTICS-INERTIAL		2900023-021																																									
169	AC	ADPT, TEST POINT, P.S.A.		2900037-021						FOR DIMENSIONS, SEE DASH 141 VALUES BELOW																																			
168	AC	TEST SELECTOR		2900028-021																																									
167	AC	TEST CONTROL		2900027-021																																									
166	AC	PANEL, MONITOR		2900031-021																																									
165	AC	TERM. BOARD STORAGE DRAWER		2900927-011																																									
164	AC	INPUT/OUTPUT PANEL		2900926-011																																									
163	AC	CONTROL PANEL		2900896-011																																									
162	AC	CSL. CAL AND TEST, SCM/PSAAM		2900895-011						FOR DIMENSIONS, SEE DASH 144 VALUES BELOW																																			
161	AC	FIX., LIFT AND HAND., IMU		1015452-011						FOR DIMENSIONS, SEE DASH 141 VALUES BELOW																																			
160	AC	FIX., HAND., G AND N HARNESS		1901846-031						FOR DIMENSIONS, SEE DASH 144 VALUES BELOW																																			
159	AC	BATTERY POWER PACK		1900011-031			B	II	NOTE 11C																																				
158	AC	COUPLING DATA UNIT ASSEMBLY C/M		2007222			A	I	NOTE 11B	FOR DIMENSIONS, SEE DASH 100 VALUES BELOW																																			
157	AC	COUPLING DATA UNIT ASSEMBLY - LEM		2007222																																									
156	AC	POWER & SERVO ASSEMBLY C/M		2007200																																									
155	AC	PIPA ELECTRONICS ASSEMBLY		2007201																																									
154	AC	PULSE TORQUE ASSEMBLY - LEM		6007000																																									
153	AC	POWER & SERVO ASSEMBLY - LEM		6007200			A	I	NOTE 11B																																				
152	AC	CONT PNL, RSVR CKT TESTER		2900770-011			B	II	NOTE 11C	FOR DIMENSIONS, SEE DASH 141 VALUES BELOW																																			
151	AC	TESTER, RESOLVER CIRCUIT		2900708-011																																									
150	AC	JUNCTION BOX, P.S.A./G.S.E.		1901933-021						FOR DIMENSIONS, SEE DASH 144 VALUES BELOW																																			
149	AC	BATTERY PACK, LIFTING		2900812-011						FOR DIMENSIONS, SEE DASH 141 VALUES BELOW																																			
148	AC	MOUNTING PLATE, COMPONENT		6900007-011						FOR DIMENSIONS, SEE DASH 144 VALUES BELOW																																			
147	AC	MOUNTING PLATE, COMPONENT		2900677-011																																									
146	AC	CART, TRANS, G AND N		1900009-041																																									
145	AC	CONTAINER, SHIPPING, IMU		1900010-021		NAS-9-497	B	II	NOTE 11C																																				
144	AC	FIX., MOUNTING, G AND N		1902204-021			B	II	NOTE 11C	4.125	1.812	3.250	NA	.125	.062	.12	.156	.188 .104	.125	1.625	1.140	.890	.640	1.390	.125	.171	.125	1.875	1.687	2.625	.250	1.562	3.843	.093	NA	NA	.359	.125	.437	3.688	NA	3.687	.093	.40	.25	3.875
143	AC	CSL, COOL. AND PWR, G AND N		1902134-021						4.125	1.812	3.250		.125	.062	.12	.156		.125	1.625	1.140	.890	.640	1.390	.125	.171	.125	1.875	1.687	2.625	.250	1.562	3.843	.093			.359	.125	.437	3.688		3.687	.093	.40	.25	3.875
142	AC	ANALYZER, OPTICS-INERTIAL		2900023-011						4.125	1.812	3.250		.125	.062	.12	.156		.125	1.625	1.140	.890	.640	1.390	.125	.171	.125	1.875	1.687	2.625	.250	1.562	3.843	.093			.359	.125	.437	3.688		3.687	.093	.40	.25	3.875
141	AC	CONT, TEMP, PORTABLE		2900060-011						2.125	.968	1.718		.093	.031	.06	.093		.093	.858	.608	.484	.358	.733	.077	.116	.062	.937	.875	1.343	.125	.781	1.892	.046			.209	.093	.250	1.875		1.840	.046	.23	.16	1.938
140	AC	TESTER, CKT, IMU/CDU RSVR		2900286-011						4.125	1.812	3.250		.125	.062	.12	.156		.125	1.625	1.140	.890	.640	1.390	.125	.171	.125	1.875	1.687	2.625	.250	1.562	3.843	.093			.359	.125	.437	3.688		3.687	.093	.40	.25	3.875
139	AC	SIMULATOR, LD/SIG, CDU		2900285-011																																									
138	AC	SIMULATOR, LD/SIG, OPTICS		1902023-021																																									
137	AC	FIX., MOUNTING, IMU/NAV BASE		6900003-011																																									
136	AC	FIXTURE, OPTICS/NAV BASE		2900072-011																																									
135	AC	FIX., MOUNTING, SUB SYSTEM		2900070-011																																									
134	AC	FIX., HAND., G AND N HARNESS		2900069-011																																									
133	AC	CNTR, SHIPPING, NAV BASE		2900068-011																																									
132	AC	FIX., MOUNTING, G AND N		2900067-011																																									
131	AC	SIMULATOR, LD/SIG, IMU/CDU		2900062-011																																									
130	AC	TESTER, GYRO WHEEL		2900061-011																																									
129	AC	COOLANT SUPPLY		1902133-021																																									
128	AC	TABLE, ROTARY		1900926-021						4.125	1.812	3.250		.125	.062	.12	.156		.125	1.625	1.140	.890	.640	1.390	.125	.171	.125	1.875	1.687	2.625	.250	1.562	3.843	.093			.359	.125	.437	3.688		3.687	.093	.40	.25	3.875
127	AC	FIX., HAND., OPTICS		2900074-011						2.125	.968	1.718		.093	.031	.06	.093		.093	.858	.608	.484	.358	.733	.077	.116	.062	.937	.875	1.343	.125	.781	1.892	.046			.209	.093	.250	1.875		1.840	.046	.23	.16	1.938
126	AC	FIXTURE, MTG, PTA/PEA.		2900066-011																																									
125	AC	CONT, TEMP, IMU LIFTING		2900063-011																																									
124	AC	FIXTURE, HANDLING, IMU		2900064-011																																									
123	AC	CONT, OPTICS, REMOTE		1902046-021																																									
122	AC	TEST CONTROL		1902009-021																																									
121	AC	ADPT MODULE, P.S.A.		1902431-021																																									
120	AC	BRIDGE, DECADE ERROR		2900128-011																																									
119	AC	PWR SUP, ELECTRONICS		2900012-011																																									
118	AC	PWR SUP, RELAY AND LAMP		1900049-031																																									
117	AC	CONSOLE, OSCILLOGRAPH		1900000-021																																									
116	AC	ADPT MODULE, P.S.A.		1902431-011																																									
115	AC	ADPT, TEST POINT, PTA/PEA.		2900145-011																																									
114	AC	ADPT, TEST POINT, P.S.A.		2900037-011																																									
113	AC	CONTROL, GIMBAL POSITION		2900036-011																																									
112	AC	SELECTOR, SIGNAL, PRIMARY		2900035-011																																									
111	AC	SEL, SIG, OSCILLOGRAPH		2900034-011																																									
110	AC	PANEL, PWR SUP AND LOAD		2900033-011																																									
109	AC	PANEL, MONITOR		2900031-011																																									
108	AC	PANEL, AUXILIARY INPUT		2900030-011																																									
107	AC	CAGING ELECTRONICS, GYRO		2900029-011																																									
106	AC	TEST SELECTOR		2900028-011																																									
105	AC	TEST CONTROL		2900027-011																																									
104	AC	MONITOR AND CONTROL, TEMP		2900026-011																																									
103	AC	DISTRIBUTION BOX, GSE		2900024-011																																									
102	AC	VOLTMETER, DIGITAL		2900007-011			B	II	NOTE 11C	2.125	.968	1.718	NA	.093	.031	.06	.093	[illegible]	.093	.858	.608	.484	.358	.733	.077	.116	.062	.937	.875	1.343	.125	.781	1.892	.046	NA	NA	.209	.093	.250	1.875	NA	1.840	.046	.23	.16	1.938
101	AC	NAVIGATION BASE ASSEMBLY - LEM		6899950		NAS-9-497	A	I	NOTE 11B	2.000	1.312	1.906	1.375	.078	.048	.078	.093	NA	NA	1.125	.750	.593	.453	1.015	.062	.187	.078	.875	.718	1.375	.218	NA	NA	.048	.031	.875	.305	.078	.531	1.906	.078	NA	.078	.531	.187	NA
100	AC	NAVIGATION BASE ASSEMBLY		2899982		NAS-9-497	A	I	NOTE 11B	2.000	1.312	1.906	1.375	.078	.048	.078	.093	NA	NA	1.125	.750	.593	.453	1.015	.062	.187	.078	.875	.718	1.375	.218	NA	NA	.048	.031	.875	.305	.078	.531	1.906	.078	NA	.078	.531	.187	NA

A C ELECTRONICS DASH NUMBERS

NOTES FOR TABLE

STYLE A IS FOR G&N SYSTEM
STYLE B IS FOR GROUND SUPPORT EQUIPMENT
TYPE I IS WITHOUT MOUNTING HOLES
TYPE II IS WITH MOUNTING HOLES

NOTE: AC DASH NO's. CONT. ON SH.6

THIS SHEET ADDED
ⓖ REPLACES REV F WITH CHANGE

QTY REQD	PART OR IDENTIFYING NO.	MATERIAL OR NOTES	NOMENCLATURE OR DESCRIPTION	FIND NO.

LIST OF MATERIALS

NEXT ASSY	USED ON
AS APPLICABLE	

APPLICATION

UNLESS OTHERWISE SPECIFIED
DIMENSIONS ARE IN INCHES
CAPACITOR VALUES ARE IN μf
RESISTOR VALUES ARE IN OHMS
TOLERANCES ON
FRACTIONS ± — DECIMALS ±.005 ANGLES ± —
DO NOT SCALE THIS DRAWING
MATERIAL SEE NOTE 11

MIT
INSTRUMENTATION LAB
CAMBRIDGE, MASS.

DRAWN R. O. Jones 7-16-65
CHECKED [illegible] 7-22-65
APPROVED
APPROVED [illegible]
APPROVED MIT [illegible]
APPROVED MSC [illegible]

MANNED SPACECRAFT CENTER
HOUSTON, TEXAS

NAMEPLATES,
APOLLO G&N-GSE
(STANDARDS)

CODE IDENT NO. 80230
SIZE E
DRAWING NO. 1004260
SCALE NONE
SHEET 4 OF 6

MASTER

1004260 BB

NOTICE – WHEN GOVERNMENT DRAWINGS, SPECIFICATIONS, OR OTHER DATA ARE USED FOR ANY PURPOSE OTHER THAN IN CONNECTION WITH A DEFINITELY RELATED GOVERNMENT PROCUREMENT OPERATION, THE UNITED STATES GOVERNMENT THEREBY INCURS NO RESPONSIBILITY NOR ANY OBLIGATION WHATSOEVER; AND THE FACT THAT THE GOVERNMENT MAY HAVE FORMULATED, FURNISHED, OR IN ANY WAY SUPPLIED THE SAID DRAWINGS, SPECIFICATIONS OR OTHER DATA IS NOT TO BE REGARDED BY IMPLICATION OR OTHERWISE AS IN ANY MANNER LICENSING THE HOLDER OR ANY OTHER PERSON OR CORPORATION, OR CONVEYING ANY RIGHTS OR PERMISSION TO MANUFACTURE, USE, OR SELL ANY PATENTED INVENTION THAT MAY IN ANY WAY BE RELATED THERETO.

5

REVISIONS 02768

SYM	ZONE	DESCRIPTION	DR	CHK	DATE	APPROVED
G		REPLACES REV F WITH CHANGE PER TDRR 20854	rj		7/22/65	WK
H		REVISED PER TDRR 20892	rj		8/3/65	WK
J		REVISED PER TDRR 20904	rj		9/3/65	WK
K		REVISED PER TDRR 21379	rj		[illegible]	WK
L		REVISED PER TDRR 21410	rj		[illegible]	WK
M		REVISED PER TDRR 21993	rj			
N		REVISED PER TDRR 22621	rj		10/	
P		REVISED PER TDRR 22671	rj		1/1/	
R		REVISED PER TDRR 22672	rj			
S		REVISED PER TDRR 22750	rj		/65	WK
T		REVISED PER TDRR 22823	rj			
U		REVISED PER TDRR 23072	rj		10-11-65	[illegible]
V		REVISED PER TDRR 23521	rj		10-26-65	WK
W		REVISED PER TDRR 23824	RAJ		11-9-65	WK
Y		REVISED PER TDRR 24018	RAJ		11-16-65	WK
Z		REVISED PER TDRR 24040	RAJ		11-1?-65	WK
AA		REVISED PER TDRR 24060	RAJ		11-19-65	WK
AB		REVISED PER TDRR 24868	RAJ		12-22-65	WK
AC		REVISED PER TDRR 24973	RAJ		1-4-66	WK
AD		REVISED PER TDRR 25065	RAJ		1-18-66	[illegible]
AE		REVISED PER TDRR 25672	RAJ		2-4-66	WK
AF		REVISED PER TDRR 25671	RAJ		2-4-66	WK
AG		REVISED PER TDRR 26110	RAJ		2-15-66	WK
AH		REVISED PER TDRR 26372	"		3-16-66	WGM
AJ		REVISED PER TDRR 26425	"		3-16-66	WGM
AK		REVISED PER TDRR 26743	"		3-16-66	WGM
AL		REVISED PER TDRR 26798	"		3-16-66	WGM
AM		REVISED PER TDRR 27168	"		4-7-66	WGM
AN		REVISED PER TDRR 27235	"		4-7-66	WGM
AP		REVISED PER TDRR 27345	"		4-7-66	WGM
AR		REVISED PER TDRR 27417	"		4-7-66	WGM
AS		REVISED PER TDRR 27442	"		4-7-66	WGM
AT		REVISED PER TDRR 27719	"		4-20-66	WK
AU		REVISED PER TDRR 27880	"		4-20-66	WK
AV		REVISED PER TDRR 27896	"		4-20-66	WK
AW		28110	"		5-16-66	WGM
AY		28173	"			WGM
AZ		28131	"			WGM
BA		28124	"			WGM
BB		REVISED PER TDRR 28511	"		5-16-66	WGM

499	MIT
498	

THIS SHEET ADDED

Ⓖ REPLACES REV F WITH CHANGE

MIT DASH NUMBERS

DASH NO.	P/C	PART NAME	REMARKS	PART NO.	SER. NO.	CONT. NO.	STYLE	TYPE	MATERIAL	A	B	C	D	E	F	G	H	J	K	L	M	N	P	R	S	T	U	V	W	Y	Z	AA	AB	AC	AD	AE	AF	AG	AH	AJ	AK	AL	AM	AN	AP	AR
401	MIT	COMPUTER ASSY		2003100		NAS-9-497	A	I	NOTE 11 B	2.000	1.312	1.906	1.375	.078	.048	.078	.093	NA	NA	1.125	.750	.593	.453	1.015	.062	.187	.078	.875	.718	1.375	.218	NA	NA	.048	.031	.875	.305	.078	.531	1.906	.078	NA	.078	.531	.187	NA
400	MIT	LIFTING SLING-G&N INST. QUAL. FIX. & AZM. REF. FIX.		1021640		NAS-9-4065	B	II	NOTE 11 C	2.000	1.312	1.687	1.375	.078	.048	.078	.093	[illegible]	.093	1.187	.750	.593	.453	1.015	.062	.187	.078	.875	.718	1.375	.218	1.156	1.843	.048	NA	.875	.305	.078	.312	1.687	.110	1.830	.070	.275	.180	1.844

NOTES FOR TABLE
STYLE A IS FOR G&N SYSTEM
STYLE B IS FOR GROUND SUPPORT EQUIPMENT
TYPE I IS WITHOUT MOUNTING HOLES
TYPE II IS WITH MOUNTING HOLES

MASTER

QTY REQD	PART OR IDENTIFYING NO.	MATERIAL OR NOTES	NOMENCLATURE OR DESCRIPTION	FIND NO.

LIST OF MATERIALS

NEXT ASSY	USED ON
AS APPLICABLE	

APPLICATION

UNLESS OTHERWISE SPECIFIED
DIMENSIONS ARE IN INCHES
CAPACITOR VALUES ARE IN μf
RESISTOR VALUES ARE IN OHMS
TOLERANCES ON
FRACTIONS ± — DECIMALS ±.005 ANGLES ± —
DO NOT SCALE THIS DRAWING

MATERIAL
SEE NOTE 11

MIT
INSTRUMENTATION LAB
CAMBRIDGE, MASS.

		DATE
DRAWN	R A Jones	7-16-65
CHECKED	[illegible]	7-23-65
APPROVED		
APPROVED	W Kupfer	7/29/65
APPROVED MIT	W Kupfer	7/29/65
APPROVED MSC	[illegible]	7/30/65

MANNED SPACECRAFT CENTER
HOUSTON, TEXAS

NAMEPLATES,
APOLLO G&N-GSE
(STANDARDS)

CODE IDENT NO. 80230
SIZE E
DRAWING NO. 1004260
SCALE NONE
SHEET 5 OF 5

1004260

NOTICE – WHEN GOVERNMENT DRAWINGS, SPECIFICATIONS, OR OTHER DATA ARE USED FOR ANY PURPOSE OTHER THAN IN CONNECTION WITH A DEFINITELY RELATED GOVERNMENT PROCUREMENT OPERATION, THE UNITED STATES GOVERNMENT THEREBY INCURS NO RESPONSIBILITY NOR ANY OBLIGATION WHATSOEVER; AND THE FACT THAT THE GOVERNMENT MAY HAVE FORMULATED, FURNISHED, OR IN ANY WAY SUPPLIED THE SAID DRAWINGS, SPECIFICATIONS OR OTHER DATA IS NOT TO BE REGARDED BY IMPLICATION OR OTHERWISE AS IN ANY MANNER LICENSING THE HOLDER OR ANY OTHER PERSON OR CORPORATION, OR CONVEYING ANY RIGHTS OR PERMISSION TO MANUFACTURE, USE, OR SELL ANY PATENTED INVENTION THAT MAY IN ANY WAY BE RELATED THERETO.

REVISIONS 02768

SYM	ZONE	DESCRIPTION	DR	CHK	DATE	APPROVED
AG		CHANGED NUMBER OF SHEETS FROM 5 TO 6 PER TDRR 26110.	RAJ		2-15-66	
AH		REVISED PER TDRR 26372	"		3-16-66	
AJ		REVISED PER TDRR 26425	"		3-16-66	
AK		REVISED PER TDRR 26743	"		3-16-66	
AL		REVISED PER TDRR 26798	"		3-16-66	
AM		REVISED PER TDRR 27168	"		4-7-66	
AN		REVISED PER TDRR 27235	"		4-7-66	
AP		REVISED PER TDRR 27345	"		4-7-66	
AR		REVISED PER TDRR 27417	"		4-7-66	
AS		REVISED PER TDRR 27442	"		4-7-66	
AT		REVISED PER TDRR 27719	"		4-20-66	
AU		REVISED PER TDRR 27880	"		4-20-66	
AV		REVISED PER TDRR 27896	"		4-20-66	
AW		28110	"		5-16-66	
AY		28173	"		5-16-66	
AZ		28131	"		5-16-66	
BA		28124	"		5-16-66	
BB		REVISED PER TDRR 2851I	"		5-16-66	

DASH NO.	P/C	PART NAME	REMARKS	PART NO.	SER NO.	CONT NO.	STYLE	TYPE	MATERIAL
599	AC								
598	AC								
519	AC	FIXTURE, HANDLING, LEM-PSA	(-141)	6900129-011		NAS-9-497	B	II	NOTE 11C
518	AC	JUNCTION BOX, GSE-PSA	(-144)	1901933-031		NAS-9-497	B	II	NOTE 11C
514	AC	SIGNAL COND. ASSY LEM OPER.	(-100)	6007013		NAS-9-497	A	I	NOTE 11B
513		JUMPER, BY-PASS	(-141)	1021616-011			B	II	NOTE 11C
512		COUPLING DATA UNIT ASSEMBLY C/M	(-100)	2007322-011			A	I	NOTE 11B
511		COUPLING DATA UNIT ASSEMBLY-LEM	(-100)	2007322-021					
510		BATTERY POWER PACK	(-144)	1900011-041			B	II	NOTE 11C
509		JUNCTION BOX, P.S.A./G.S.E.	(-144)	1902195-021			B	II	NOTE 11C
508		NAVIGATION BASE ASSEMBLY - LEM	✓ (-101)	6899980			A	I	NOTE 11B
507		CSL, COOL. AND PWR, G AND N	(-144)	1902134-041			B	II	NOTE 11C
506		BREAKOUT BOX, CABLE ADAPTER	(-141)	2901011-011					
505		MONITOR AND CONTROL, TEMP	(-141)	2900026-021					
504		P.R. SUP, GUIDANCE SYSTEM	✓ (-141)	1900033-021					
503		CONTROL, GIMBAL POSITION	(-141)	2900036-021					
502		ADPT, TEST POINT, PTA/PEA,	(-141)	2900145-021					
501		MOUNTING PLATE, COMPONENT	(-144)	6900007-031		NAS-9-497	B	II	NOTE 11C
500	AC	MOUNTING PLATE, COMPONENT	✓ (-144)	2900677-021					

DASH NO.	A	B	C	D	E	F	G	H	J	K	L	M	N	P	R	S	T	U	V	W
519	FOR DIMENSIONS, SEE DASH 504 VALUES BELOW																			
518	FOR DIMENSIONS, SEE DASH 500 VALUES BELOW																			
514	FOR DIMENSIONS, SEE DASH 508 VALUES BELOW																			
513	2.125	.968	1.718	NA	.093	.031	.06	.093	.100 .104	.093	.858	.608	.484	.358	.733	.077	.116	.062	.937	.875
512	FOR DIMENSIONS, SEE DASH 508 VALUES BELOW																			
511																				
510	FOR DIMENSIONS, SEE DASH 500 VALUES BELOW																			
509																				
508	2.000	1.312	1.906	1.375	.078	.048	.078	.093	NA	NA	1.125	.750	.593	.453	1.015	.062	.187	.078	.875	.718
507	FOR DIMENSIONS, SEE DASH 500 VALUES BELOW																			
506	2.125	.968	1.718	NA	.093	.031	.06	.093	.100 .104	.093	.858	.608	.484	.358	.733	.077	.116	.062	.937	.875
505																				
504																				
503																				
502																				
501	FOR DIMENSIONS, SEE DASH 500 VALUES BELOW																			
500	4.125	1.812	3.250	NA	.125	.062	.12	.156	.100 .104	.125	1.625	1.140	.890	.640	1.390	.125	.171	.125	1.875	1.687

DASH NO.	Y	Z	AA	AB	AC	AD	AE	AF	AG	AH	AJ	AK	AL	AM	AN	AP	AR
513	1.343	.125	.781	1.892	.046	NA	NA	.209	.093	.250	1.875	NA	1.840	.046	.23	.16	1.938
508	1.375	.218	NA	NA	.048	.031	.875	.305	.078	.531	1.906	.078	NA	.078	.531	.187	NA
506	1.343	.125	.781	1.892	.046	NA	NA	.209	.093	.250	1.875	NA	1.840	.046	.23	.16	1.938
500	2.625	.250	1.562	3.843	.093	NA	NA	.359	.125	.437	3.688	NA	3.687	.093	.40	.25	3.875

AC ELECTRONICS DASH NUMBERS

Ⓐⓖ THIS SHEET ADDED

NOTES FOR TABLE
STYLE A IS FOR G&N SYSTEM
STYLE B IS FOR GROUND SUPPORT EQUIPMENT
TYPE I IS WITHOUT MOUNTING HOLES
TYPE II IS WITH MOUNTING HOLES

MASTER

MASTER

QTY REQD	PART OR IDENTIFYING NO.	MATERIAL OR NOTES	NOMENCLATURE OR DESCRIPTION	FIND NO.

LIST OF MATERIALS

AS APPLICABLE
NEXT ASSY | USED ON
APPLICATION

UNLESS OTHERWISE SPECIFIED
DIMENSIONS ARE IN INCHES
CAPACITOR VALUES ARE IN μf
RESISTOR VALUES ARE IN OHMS
TOLERANCES ON
FRACTIONS ± — DECIMALS ±.005 ANGLES ± —
DO NOT SCALE THIS DRAWING
MATERIAL
SEE NOTE 11

MIT
INSTRUMENTATION LAB
CAMBRIDGE, MASS.

DRAWN R. A. Jones 2-15-66
CHECKED 2-15-66
APPROVED
APPROVED
APPROVED MIT C. METZGER 5-18-66
APPROVED MSC
DATE

MANNED SPACECRAFT CENTER
HOUSTON, TEXAS

NAMEPLATES,
APOLLO G&N-GSE
(STANDARDS)

CODE IDENT NO. 80230
SIZE E
DRAWING NO. 1004260
SCALE NONE
SHEET 6 OF 6

1004260 BB

NOTICE - WHEN GOVERNMENT DRAWINGS, SPECIFICATIONS, OR OTHER DATA ARE USED FOR ANY PURPOSE OTHER THAN IN CONNECTION WITH A DEFINITELY RELATED GOVERNMENT PROCUREMENT OPERATION, THE UNITED STATES GOVERNMENT THEREBY INCURS NO RESPONSIBILITY NOR ANY OBLIGATION WHATSOEVER, AND THE FACT THAT THE GOVERNMENT MAY HAVE FORMULATED, FURNISHED, OR IN ANY WAY SUPPLIED THE SAID DRAWINGS, SPECIFICATIONS, OR OTHER DATA IS NOT TO BE REGARDED BY IMPLICATION OR OTHERWISE AS IN ANY MANNER LICENSING THE HOLDER OR ANY OTHER PERSON OR CORPORATION, OR CONVEYING ANY RIGHTS OR PERMISSION TO MANUFACTURE, USE, OR SELL ANY PATENTED INVENTION THAT MAY IN ANY WAY BE RELATED THERETO.

NOTES:

1. INTERPRET DRAWING IN ACCORDANCE WITH STANDARDS PRESCRIBED IN MIL-D-70327.
2. DIMENSIONS ON EACH VIEW APPLY TO ALL VIEWS. (WITH THE EXCEPTION OF MOUNTING HOLES).
3. FORMATS ILLUSTATED WILL BE APPLICABLE TO ALL ITEMS REQUIRING NAMEPLATES BELOW END ITEM DESIGNATION (SYSTEMS, ASSEMBLIES, ETC.)
4. PLATE BACKGROUND TO BE LUSTERLESS BLACK PER FED-STD-595, COLOR 37038. BORDER, MARKING AND LETTERING TO BE NATURAL METAL,(ANODIZED ALUMINUM).
5. MARKING METHOD TO BE DIE STAMPING, ETCHING OR ENGRAVING IN ACCORDANCE WITH MIL P 19834.
6. LETTERING STYLE TO BE GOTHIC,(SANS SERIFS), AND NUMBERS TO BE ARABIC.
7. WHERE LOCATING DIMENSIONS ARE NOT SHOWN, CHARACTERS SHALL BE SYMMETRICALLY POSITIONED.
8. IDENTIFY WITH DRAWING NUMBER PER ND1002019.
9. WHEN "AUTO MARK" METAL MARKING TYPEWRITER IS USED TO ADD DATA TO BLANK SPACES, TYPE SIZE IS TO BE SELECTED FROM DIMENSIONS U, AC AND AM.
10. NASA SYMBOL IS TO BE PROPORTIONAL TO NAMEPLATE IN RATIO OF 1 TO 5 WITH DIMENSION A VALUE AND IS TO HAVE NATURAL BACKGROUND. NASA SYMBOL LETTERS LETTERING AND FEATHER TO BE BLACK,(OR WHITE FOR SILK SCREENING). WHERE BLACK FEATHER PROTRUDES INTO BLACK BACKGROUND, A MINIMUM OUTLINE OF NATURAL BACKGROUND SHALL EXIST.
11. NAMEPLATES WILL BE APPLIED BY METHODS LISTED BELOW, SHOWN IN ORDER OF PREFERENCE, (I.E., FOR RELIABILITY AND WEIGHT).
    - A - STENCIL OR SILK SCREEN DIRECTLY ON EQUIPMENT USING INK PER SCD 1010920,(WHITE OR BLACK).
    - B - ALUMINUM FOIL,(STYLE A OR B, TYPE I):
      FOIL SHALL BE .0030 ± .0005 THICK PER MIL-A-148.
      FOIL SHALL HAVE NO ADHESIVE BACKING.
      FOIL SHALL BE BONDED PER ND 1002219,(METHOD II).
      FOIL SHALL BE CLEAR ANODIZED PER MIL-A-8625, TYPE II.
    - C - PLATE, (STYLE A OR B, TYPE II):
      MATERIAL: QQ-A-250, TEMPER O OR H14, TYPE 1100, ALUMINUM ALLOY, .032 THICK.
      ANODIZE PER MIL-A-8625, TYPE II.
      ALUMINUM PLATE MUST BE FREE FROM BURRS AND SHARP CORNERS, MOUNTED WITH APPLICABLE SIZE FASTENERS.
12. NAMEPLATES SHALL BE CAPABLE OF MEETING APPLICABLE REQUIREMENTS OF MIL-M-13231.
13. ON DIMENSION TABLES SHOWN ON PAGES 2, 3, 4 AND 5, NA MEANS, "NOT APPLICABLE".

REVISIONS 02768

SYM	ZONE	DESCRIPTION	DR	CHK	DATE	APPROVED
G		REPLACES REV F WITH CHANGE PER TDRR 20854			[illegible]	WK
★ H		REVISED PER TDRR 20892			[illegible]	WK
J		REVISED PER TDRR 20904			[illegible]	WK
K		REVISED PER TDRR 21379			[illegible]	WK
L		REVISED PER TDRR 21410			8/23/65	WK
★ M		REVISED PER TDRR 21993				
★ N		REVISED PER TDRR 22621				
★ P		REVISED PER TDRR 22671				
★ R		REVISED PER TDRR 22672				
★ S		REVISED PER TDRR 22750			[illegible] 65	WK
T		REVISED PER TDRR 22823				
★ U		REVISED PER TDRR 23072			[illegible]	WK
V		REVISED PER TDRR 23521			10-27-65	WK
★ W		REVISED PER TDRR 23824	RAJ		11-9-65	WK
★ Y		REVISED PER TDRR 24018	RAJ		11-16-65	WK
★ Z		REVISED PER TDRR 24040	RAJ		11-19-65	WK
AA		REVISED PER TDRR 24060	RAJ		11-19-65	WK
AB		REVISED PER TDRR 24868	RAJ		12-22-65	WK
AC		REVISED PER TDRR 24973	RAJ		1-4-66	WK
AD		REVISED PER TDRR 25065	RAJ		1-18-66	WK
★ AE		REVISED PER TDRR 25672	RAJ		2-4-66	WK
AF		REVISED PER TDRR 25671	RAJ		2-4-66	WK
AG		REVISED PER TDRR 26110	RAJ		2-15-66	WK
★ AH		REVISED PER TDRR 26372	"		3-16-66	WK
★ AJ		REVISED PER TDRR 26425	"		3-16-66	WK
★ AK		REVISED PER TDRR 26743	"		3-16-66	WK
AL		REVISED PER TDRR 26798	"		3-16-66	WK
★ AM		REVISED PER TDRR 27168	"		4-7-66	WK
★ AN		REVISED PER TDRR 27236	"		4-7-66	WK
★ AP		REVISED PER TDRR 27345	"		4-7-66	WK
★ AR		REVISED PER TDRR 27417	"		4-7-66	WK
AS		REVISED PER TDRR 27442	"		4-7-66	WK
AT		REVISED PER TDRR 27719	"		4-20-66	WK
AU		REVISED PER TDRR 27880	"		4-20-66	WK
AV		REVISED PER TDRR 27896	"		4-20-66	WK
AW		28110	"		5-16-66	WK
AY		28173	"			WK
AZ		28131	"			
BA		28124	"			WK
BB		REVISED PER TDRR 28511	"		5-16-66	WK
BC		" " " 28949	"		5-24-66	WK

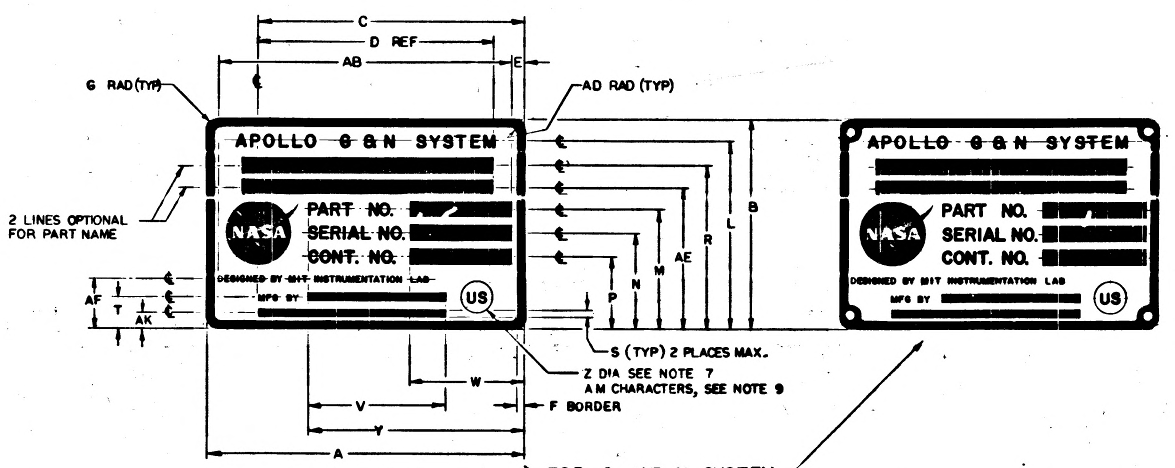

FOR G AND N SYSTEM
STYLE A

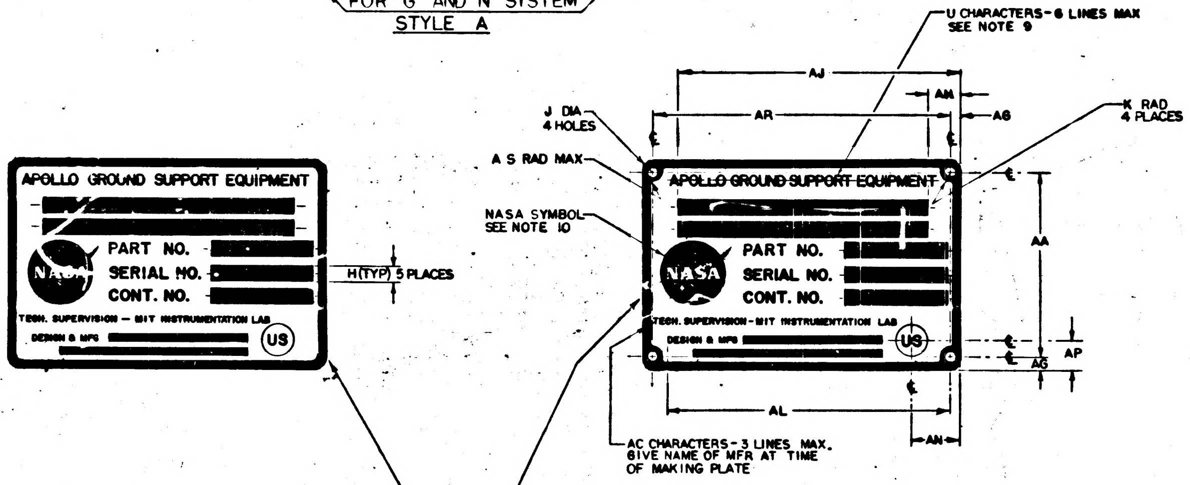

WITHOUT MOUNTING HOLES
TYPE I

WITH MOUNTING HOLES
TYPE II

FOR GROUND SUPPORT EQUIPMENT
STYLE B

SUGGESTED PROPORTIONS FOR NAMEPLATE DIMENSIONS.
1. SELECT NAMEPLATE LENGTH, DIMENSION "A", TO FIT DESIGN NEEDS.
2. DIMENSIONS B THRU AS ON LINE 1 BELOW ARE PROPORTIONAL TO "A" BY MULTIPLIERS SHOWN IN LINE 2 BELOW.

1.	A	B	C	D	E	F	G	H	J	K	L	M	N	P	R	S	T	U	V	W	Y	Z	AA	AB	AC	AD	AE	AF	AG	AH	AJ	AK	AL	AM	AN	AP	AR	AS
2.	1.000 A	.6563 A	.8438 A	.6875 A	.0391 A	.0240 A	.0391 A	.0469 A	.0547 A	.0469 A	.5938 A	.3750 A	.2969 A	.2187 A	.5079 A	.0313 A	.0938 A	.0391 A	.4375 A	.3594 A	.6875 A	.1094 A	.5781 A	.9219 A	.0240 A	.0156 A	.4375 A	.1525 A	.0391 A	.1563 A	.8438 A	.0548 A	.8659 A	.0391 A	.1563 A	.0938 A	.9219 A	.0151 A

Ⓖ REPLACES REV F WITH CHANGE

QTY REQD	PART OR IDENTIFYING NO.	MATERIAL OR NOTES	NOMENCLATURE OR DESCRIPTION	FIND NO.

LIST OF MATERIALS

NEXT ASSY	USED ON
AS APPLICABLE	

APPLICATION

UNLESS OTHERWISE SPECIFIED
DIMENSIONS ARE IN INCHES
CAPACITOR VALUES ARE IN μf
RESISTOR VALUES ARE IN OHMS
TOLERANCES ON
FRACTIONS ± — DECIMALS ±.005 ANGLES ± —
DO NOT SCALE THIS DRAWING

MATERIAL
SEE NOTE 11

MIT
INSTRUMENTATION LAB
CAMBRIDGE, MASS.

DRAWN R. A. Jones 7/16/65
CHECKED A. J. [illegible] [illegible]
APPROVED
APPROVED [illegible]
APPROVED MIT [illegible]
APPROVED MSC [illegible]
DATE

MANNED SPACECRAFT CENTER
HOUSTON, TEXAS

NAMEPLATES,
APPOLLO G&N-GSE
(STANDARDS)

CODE IDENT NO. 80230
SIZE E
DRAWING NO. 1004260
SCALE NONE
SHEET 1 OF 6

MASTER

NOTICE – WHEN GOVERNMENT DRAWINGS, SPECIFICATIONS, OR OTHER DATA ARE USED FOR ANY PURPOSE OTHER THAN IN CONNECTION WITH A DEFINITELY RELATED GOVERNMENT PROCUREMENT OPERATION, THE UNITED STATES GOVERNMENT THEREBY INCURS NO RESPONSIBILITY NOR ANY OBLIGATION WHATSOEVER; AND THE FACT THAT THE GOVERNMENT MAY HAVE FORMULATED, FURNISHED, OR IN ANY WAY SUPPLIED THE SAID DRAWINGS, SPECIFICATIONS OR OTHER DATA IS NOT TO BE REGARDED BY IMPLICATION OR OTHERWISE AS IN ANY MANNER LICENSING THE HOLDER OR ANY OTHER PERSON OR CORPORATION, OR CONVEYING ANY RIGHTS OR PERMISSION TO MANUFACTURE, USE, OR SELL ANY PATENTED INVENTION THAT MAY IN ANY WAY BE RELATED THERETO.

REVISIONS 02758

SYM	ZONE	DESCRIPTION	DR	CHK	DATE	APPROVED
G		REPLACES REV F WITH CHANGE PER TDRR 20854.	rj		7/22/65	WK
H		REVISED PER TDRR 20892	rj		8/3/65	WK
J		REVISED PER TDRR 20904	rj		8/3/65	WK
K		REVISED PER TDRR 21379	rj		8/9/65	WK
L		REVISED PER TDRR 21410	rj		8/23/65	WK
M		REVISED PER TDRR 21993	"			
N		REVISED PER TDRR 22621	"		[illegible]	
P		REVISED PER TDRR 22671	"		[illegible]	
R		REVISED PER TDRR 22672	"			
S		REVISED PER TDRR 22750	"			
T		REVISED PER TDRR 22823	"		[illegible]/65	WK
U		REVISED PER TDRR 23072	"		10-22-65	
V		REVISED PER TDRR 23521	"		10-27-65	WK
W		REVISED PER TDRR 23824	RAJ		11-9-65	WK
Y		REVISED PER TDRR 24018	RAJ		11-16-65	WK
Z		REVISED PER TDRR 24040	RAJ		11-19-65	WK
AA		REVISED PER TDRR 24060	RAJ		11-19-65	WK
AB		REVISED PER TDRR 24868	RAJ		12-22-65	WK
AC		REVISED PER TDRR 24973	RAJ		1-4-66	WK
AD		REVISED PER TDRR 25065	RAJ		1-18-66	
AE		REVISED PER TDRR 25672	RAJ		2-4-66	WK
AF		REVISED PER TDRR 25671	RAJ		2-4-66	WK
AG		REVISED PER TDRR 26110	RAJ		2-15-66	WK
AH		REVISED PER TDRR 26372	"		3-16-66	
AJ		REVISED PER TDRR 26425	"		3-16-66	
AK		REVISED PER TDRR 26743	"		3-16-66	
AL		REVISED PER TDRR 26798	"		3-16-66	
AM		REVISED PER TDRR 27168	"		4-8-66	
AN		REVISED PER TDRR 27235	"		4-8-66	
AP		REVISED PER TDRR 27345	"		4-8-66	
AR		REVISED PER TDRR 27417	"		4-8-66	
AS		REVISED PER TDRR 27442	"		4-8-66	
AT		REVISED PER TDRR 27719	"		4-21-66	WK
AU		REVISED PER TDRR 27880	"		4-21-66	WK
AV		REVISED PER TDRR 27896	"		4-21-66	WK
AW		↕ 28110	"		5-16-66	
AY		↕ 28173	"		↕	
AZ		↕ 28131	"		↕	
BA		↕ 28124	"		↕	
BB		REVISED PER TDRR 28511	"		5-16-66	
BC		" " " 28949	"		5-24-66	

DASH NO.	P/C	PART NAME	REMARKS	PART NO.	SER. NO.	CONT. NO.	STYLE	TYPE	MATERIAL	A	B	C	D	E	F	G	H	J	K	L	M	N	P	R	S	T	U	V	W	Y	Z	AA	AB	AC	AD	AE	AF	AG	AH	AJ	AK	AL	AM	AN	AP	AR
399	K																																													
398	K																																													
350	K	ALIGNMENT OPTICAL TELESCOPE (LEM)		NA	NA	NA	A	I	NOTE 11B	4.000	2.625	3.375	2.750	.156	.093	.156	.187	NA	NA	2.312	1.468	1.187	.906	2.031	NA	.375	.156	NA	1.437	2.750	.437	NA	3.688	.062	.062	1.750	.593	NA	.625	3.375	.187	NA	.156	.531	.453	NA
309	K																																													
308	K																																													
307	K						B	I	NOTE 11 B	4.000	2.625	3.375	2.750	.156	.093	.156	.187	NA	NA	2.328	1.468	1.187	.906	2.031	.062	.375	.156	NA	1.437	2.750	.437	NA	3.687	.062	.062	1.750	.593	NA	NA	NA	NA	NA	NA	NA	NA	NA
306	K						B	II	NOTE 11 C	4.000	2.625	3.375	2.750	.156	.093	.156	.187	.125	.156	2.328	1.468	1.187	.906	2.031	.062	.375	.156	↕	1.437	2.750	.437	2.312	3.687	.062	NA	1.750	.593	↕	↕	↕	↕	↕	↕	↕	↕	↕
305	K						B	I	NOTE 11 B	2.000	1.312	1.687	1.375	.078	.048	.078	.093	NA	NA	1.164	.734	.593	.453	1.015	.048	.171	.078	↕	.718	1.375	.187	NA	NA	.048	.031	.875	.320	↕	↕	↕	↕	↕	↕	↕	↕	↕
304	K						B	II	NOTE 11 C	2.000	1.312	1.687	1.375	.078	.048	.078	.093	.070	.078	1.164	.734	.593	.453	1.015	.048	.171	.078	NA	.718	1.375	.187	.156	1.843	.048	NA	.875	.320	NA	NA	NA	NA	NA	NA	NA	NA	NA
303	K																																													
302	K																																													
301	K																																													
300	K	OPTICAL UNIT		NA	NA	NA	A	I	NOTE 11 B	2.000	1.312	1.675	NA	NA	.048	.078	NA	NA	NA	1.090	.812	.675	.540	.940	NA	.265	NA	NA	NA	1.375	.218	NA	NA	NA	NA	NA	.375	NA	NA	NA	.180	NA	.078	NA	NA	NA
9	K	2 IN AUTOCOLLIMATOR		1001702			B	II	NOTE 11 C	4.000	2.625	3.812	2.750	.156	.093	.156	.187	.125	.156	2.250	1.500	1.187	.906	2.031	.093	.375	.156	1.750	1.437	2.750	.437	2.312	3.687	.062	NA	1.750	.593	.156	1.062	3.812	.156	NA	.156	1.062	.375	3.687
8	K	5 IN AUTOCOLLIMATOR		1017410			B	II	NOTE 11 C	4.000	2.625	3.812	2.750	.156	.093	.156	.187	.125	.156	2.250	1.500	1.187	.906	2.031	.093	.375	.156	1.750	1.437	2.750	.437	2.312	3.687	.062	NA	1.750	.593	.156	1.062	3.812	.156	NA	.156	1.062	.375	3.687
7	K	2½ IN AUTOCOLLIMATOR (SCT)		1017435			B	II	NOTE 11 C	4.000	2.625	3.812	2.750	.156	.093	.156	.187	.125	.156	2.250	1.500	1.187	.906	2.031	.093	.375	.156	1.750	1.437	2.750	.437	2.312	3.687	.062	NA	1.750	.593	.156	1.062	3.812	.156	NA	.156	1.062	.375	3.687
6	K	2½ IN AUTOCOLLIMATOR (SXT)		1017448			B	II	NOTE 11 C	4.000	2.625	3.812	2.750	.156	.093	.156	.187	.125	.156	2.250	1.500	1.187	.906	2.031	.093	.375	.156	1.750	1.437	2.750	.437	2.312	3.687	.062	NA	1.750	.593	.156	1.062	3.812	.156	NA	.156	1.062	.375	3.687
5	K	RETROREFLECTING PRISM ASSEMBLY		1019840			B	I	NOTE 11 B	4.000	2.625	3.812	2.750	.156	.093	.156	.187	NA	NA	2.250	1.500	1.187	.906	2.031	.093	.375	.156	1.750	1.437	2.750	.437	NA	NA	.062	.062	1.750	.593	.156	1.062	3.812	.156	NA	.156	1.062	.375	NA
4	K	S/H SIMULATOR ASSEMBLY		1019896			B	I	NOTE 11 B	4.000	2.625	3.812	2.750	.156	.093	.156	.187	NA	NA	2.250	1.500	1.187	.906	2.031	.093	.375	.156	1.750	1.437	2.750	.437	NA	NA	.062	.062	1.750	.593	.156	1.062	3.812	.156	NA	.156	1.062	.375	NA
3	K	REFERENCE MIRROR		1001767			B	I	NOTE 11 B	2.000	1.312	1.906	1.375	.078	.048	.078	.093	NA	NA	1.125	.750	.593	.453	1.015	.062	.187	.078	.875	.718	1.375	.218	NA	NA	.048	.031	.875	.305	.078	.531	1.906	.078	NA	.078	.531	.187	NA
2	K	2 IN PLANE READING AUTOCOLLIMATOR		1017413			B	I	NOTE 11 B	2.000	1.312	1.906	1.375	.078	.048	.078	.093	NA	NA	1.125	.750	.593	.453	1.015	.062	.187	.078	.875	.718	1.375	.218	NA	NA	.048	.031	.875	.305	.078	.531	1.906	.078	NA	.078	.531	.187	NA
1	K	2 IN AUTOCOLLIMATOR		1001702			B	I	NOTE 11 B	2.000	1.312	1.906	1.375	.078	.048	.078	.093	NA	NA	1.125	.750	.593	.453	1.015	.062	.187	.078	.875	.718	1.375	.218	NA	NA	.048	.031	.875	.305	.078	.531	1.906	.078	NA	.078	.531	.187	NA

Ⓖ REPLACES REV F WITH CHANGE

KOLLSMAN DASH NUMBERS

NOTES FOR TABLE

STYLE A IS FOR G&N SYSTEM.
STYLE B IS FOR GROUND SUPPORT EQUIPMENT.
TYPE I IS WITHOUT MOUNTING HOLES.
TYPE II IS WITH MOUNTING HOLES.

MASTER

QTY REQD	PART OR IDENTIFYING NO.	MATERIAL OR NOTES	NOMENCLATURE OR DESCRIPTION	FIND NO.

LIST OF MATERIALS

NEXT ASSY	USED ON
AS APPLICABLE	

APPLICATION

UNLESS OTHERWISE SPECIFIED
DIMENSIONS ARE IN INCHES
CAPACITOR VALUES ARE IN µf
RESISTOR VALUES ARE IN OHMS
TOLERANCES ON
FRACTIONS ± — DECIMALS ±.005 ANGLES ± —
DO NOT SCALE THIS DRAWING

MATERIAL
SEE NOTE 11

MIT
INSTRUMENTATION LAB
CAMBRIDGE, MASS.

MANNED SPACECRAFT CENTER
HOUSTON, TEXAS

DRAWN R. A. Jones 7-16-65
CHECKED 7-22-65
APPROVED
APPROVED
APPROVED MIT
APPROVED MSC
DATE

NAMEPLATES, APOLLO G&N-GSE (STANDANDS)

CODE IDENT NO. 80230
SIZE E
DRAWING NO. 1004260
SCALE NONE
SHEET 2 OF 6

SYM	ZONE	DESCRIPTION	DR	CHK	DATE	APPROVED
		REVISIONS 02768				
G		REPLACES REV F WITH CHANGE PER TDRR 20854			7/22/65	
H		REVISED PER TDRR 20892				WK
J		REVISED PER TDRR 20904				WK
K		REVISED PER TDRR 21379				WK
L		REVISED PER TDRR 21410				WK
M		REVISED PER TDRR 21993				
N		REVISED PER TDRR 22621				
P		REVISED PER TDRR 22671				
R		REVISED PER TDRR 22672				
S		REVISED PER TDRR 22750				
T		REVISED PER TDRR 22823				WK
U		REVISED PER TDRR 23072			10-21-65	
V		REVISED PER TDRR 23521			10-26-65	WK
W		REVISED PER TDRR 23824	RAJ		11-9-65	WK
Y		REVISED PER TDRR 24018	RAJ		11-6-65	WK
Z		REVISED PER TDRR 24040	RAJ		11-19-65	WK
AA		REVISED PER TDRR 24060	RAJ		11-19-65	WK
AB		REVISED PER TDRR 24868	RAJ		12-22-65	WK
AC		REVISED PER TDRR 24973	RAJ		1-4-66	WK
AD		REVISED PER TDRR 25065.	RAJ		1-18-66	
AE		REVISED PER TDRR 25672	RAJ		2-4-66	WK
AF		REVISED PER TDRR 25671	RAJ		2-4-66	WK
AG		REVISED PER TDRR 26110	RAJ		2-15-66	WK
AH		REVISED PER TDRR 26372	"		3-16-66	
AJ		REVISED PER TDRR 26425	"		3-16-66	
AK		REVISED PER TDRR 26743	"		3-16-66	
AL		REVISED PER TDRR 26798	"		3-16-66	
AM		REVISED PER TDRR 27168	"		4-8-66	
AN		REVISED PER TDRR 27235	"		4-8-66	
AP		REVISED PER TDRR 27345	"		4-8-66	
AR		REVISED PER TDRR 27417	"		4-8-66	
AS		REVISED PER TDRR 27442	"		4-8-66	
AT		REVISED PER TDRR 27719	"		4-20-66	WK
AU		REVISED PER TDRR 27880	"		4-20-66	WK
AV		REVISED PER TDRR 27896	"		4-20-66	
AW		28110	"		5-16-66	
AY		28173	"		5-16-66	
AZ		28131	"		5-16-66	
BA		28124	"		5-16-66	
BB		REVISED PER TDRR 28511	"		5-16-66	
BC		" " " 28949	"		5-24-66	

DASH NO.	P/C	PART NAME	REMARKS	PART NO.	SER. NO.	CONT. NO.	STYLE	TYPE	MATERIAL	A
299	R									
298	R									
269	R	POWER CONTROL ASSY		2014044-021	NA	NAS 9-497	B	I	NOTE 11 B	FOR DIMENSIONS, SEE DASH 17 VALUES BELOW
268		SELF TEST ASSY		2014366-021						FOR DIMENSIONS, SEE DASH 15 VALUES BELOW
267		AGC JUNCTION ASSY		2014341-021						
266		POWER CONTROL ASSY		2014079-021						
265		BUFFER CIRCUIT ASSY		2014254-021						
264		DRAWER ASSY X Y INTERFACE		2014040-021						
263		DRAWER ASSY R D C INTERFACE		2014045-021						
262		DRAWER ASSY PROGRAMMER & MONITOR		2014041-021						FOR DIMENSIONS, SEE DASH 17 VALUES BELOW
261		LOGIC DRAWER ASSY NO. 2		2014037-021						
260		LOGIC DRAWER ASSY NO. 1		2014036-021				I	NOTE 11 B	
259		OPERATION CONSOLE		2014024-021				II	NOTE 11 C	FOR DIMENSIONS, SEE DASH 18 VALUES BELOW
258		COMPUTER TEST SET		2014042-021						
257		AUXILIARY CALIBRATION CONSOLE		2014059-021						
256		AGC CALIBRATION CONSOLE		2014049-021				II	NOTE 11 C	
255		AGC HANDLING FIXTURE		2014282-021				I	NOTE 11 B	FOR DIMENSIONS, SEE DASH 17 VALUES BELOW
254		DRAWER ASSY COMP. SIMULATOR		2014048-011				II	NOTE 11 C	FOR DIMENSIONS, SEE DASH 18 VALUES BELOW
253		SHIPPING KIT ASSY, NAV DSKY		2016312-011						
252		SHIPPING KIT ASSY, UNIVERSAL DSKY		2016316-011						
251		SHIPPING KIT ASSY, MAIN DSKY		2016313-011				II	NOTE 11 C	
250		AMPLIFIER, REWORK		2014386				I	NOTE 11 B	FOR DIMENSIONS, SEE DASH 15 VALUES BELOW
249		TEMP MONITOR ASSY		2014313-011					NOTE 11 C	FOR DIMENSIONS, SEE DASH 17 VALUES BELOW
248		AGC JUNCTION ASSY		2014341-011					NOTE 11 B	FOR DIMENSIONS, SEE DASH 15 VALUES BELOW
247		AC INPUT PANEL ASSY		2014302-011						
246		SELF TEST ASSY		2014392 011						
245		TAPE PUNCH ASSEMBLY		2014039-011						
244	R	TAPE READER ASSEMBLY		2014038-011	NA	NAS-9-497	B	I	NOTE 11 B	FOR DIMENSIONS, SEE DASH 15 VALUES BELOW
243										
242										
241	R	APOLLO GUIDANCE COMPUTER GROUP		6003001	NA	NAS-9-497	A	I	NOTE 11 B	FOR DIMENSIONS, SEE DASH 19 VALUES BELOW
240		SELF TEST ASSEMBLY		2014366-011	NA		B	I		FOR DIMENSIONS, SEE DASH 15 VALUES BELOW
239		POWER SUPPLY ASSY-115V., 400 CYCLE		2014207-011						FOR DIMENSIONS, SEE DASH 17 VALUES BELOW
238		AC INPUT PANEL ASSY		2014043-011						
237		POWER CONTROL ASSY		2014079-011						FOR DIMENSIONS, SEE DASH 15 VALUES BELOW
236		DRAWER ASSY-X Y INTERFACE		2014040-011						
235		DRAWER ASSY R D C INTERFACE		2014045-011						
234		BUFFER CIRCUIT ASSY		2014254-011						
233		CONTROL & INTERFACE ASSY		2014204-011						
232		POWER CONTROL ASSY		2014044-011						FOR DIMENSIONS, SEE DASH 17 VALUES BELOW
231		DRAWER ASSY, PROGRAMMER & MONITOR		2014041-011						
230		CONNECTOR INTERFACE ASSY		2014272-011						FOR DIMENSIONS, SEE DASH 15 VALUES BELOW
229		CONNECTOR INTERFACE ASSY		2014047-011						
228		ANTENNA TUNING CAPACITOR ASSY		2014209-011						
227		MOUNTING FIXTURE ASSY		2014006-011						FOR DIMENSIONS, SEE DASH 17 VALUES BELOW
226		POWER SUPPLY ASSY 3 VDC		2014234-011						FOR DIMENSIONS, SEE DASH 15 VALUES BELOW
225		PANEL ASSY — SIGNAL INTERFACE		2014010-011						
224		OSCILLOSCOPE ASSY		2014232-011						
223		AUXILIARY OUTLET ASSY		2014274-011						
222		FREQUENCY COUNTER		2014233-011						
221		POWER SUPPLY ASSY 10, 13, 28 VDC		2014235-011						
220		LOGIC DRAWER ASSY NO. 2		2014037-011						FOR DIMENSIONS, SEE DASH 17 VALUES BELOW
219		LOGIC DRAWER ASSY NO. 1		2014036-011						
218		COUNTER, ELECTRICAL ASSY		2014288-011						FOR DIMENSIONS, SEE DASH 15 VALUES BELOW
217		POWER SUPPLY ASSY		2014279-011						
216		TEST MOUNT ASSY		2014257-011						
215		UNIVERSAL DSKY PEDESTAL MOUNT		2014014-011						FOR DIMENSIONS, SEE DASH 17 VALUES BELOW
214		MAIN DSKY PEDESTAL MOUNT		2014343				I	NOTE 11 B	
213		SHIPPING CONTAINER, MAIN DSKY		1006229				II	NOTE 11 C	FOR DIMENSIONS, SEE DASH 18 VALUES BELOW
212		NAV DSKY		1006231						
211		AGC		1006230						
210		UNIVERSAL DSKY		1006422						
209		SHIPPING CONTAINER, AGC		1006421				II	NOTE 11 C	
208		UNIVERSAL DSKY HANDLING FIXTURE		2014013-011				I	NOTE 11 B	FOR DIMENSIONS, SEE DASH 15 VALUES BELOW
207		NAV DSKY HANDLING FIXTURE		1014377						FOR DIMENSIONS, SEE DASH 17 VALUES BELOW
206		MAIN DSKY HANDLING FIXTURE		1014334						
205		AGC HANDLING FIXTURE		2014282-011				I	NOTE 11 B	
204		OPERATION CONSOLE		2014024-011				II	NOTE 11 C	FOR DIMENSIONS, SEE DASH 18 VALUES BELOW
203		COMPUTER TEST SET		2014042-011		NAS-9-497				
202		DRAWER ASSY, COMPUTER SIMULATOR		2014048-011		FNP-12775				
201		AUXILIARY CALIBRATION CONSOLE		2014059-011		NAS-9-497				
200		AGC CALIBRATION CONSOLE		2014049-011	NA		B	II	NOTE 11 C	
21										
20		NA		NA	NA	NA	A	II	NOTE 11 C	2.000
19		NA		NA	NA	NA	A	I	NOTE 11 B	2.000
18		NA		NA	NA	NA	B	II	NOTE 11 C	4.187
17		NA		NA	NA	NA	B	I	NOTE 11 B	4.187
16		NA		NA	NA	NA	B	II	NOTE 11 C	2.000
15	R	NA		NA	NA	NA	B	I	NOTE 11 B	2.000

DASH NO.	B	C	D	E	F	G	H	J	K	L	M	N	P	R	S	T	U	V	W	Y	Z	AA	AB	AC	AD	AE	AF	AG	AH	AJ	AK	AL	AM	AN	AP	AR
20	1.312	1.687	1.375	.078	.031	.078	.093	.106 .113	.093	1.187	.750	.593	.453	1.015	.062	.187	.078	.875	.718	1.375	.218	1.156	1.843	.048	NA	.875	.305	.078	.312	1.687	.078	NA	.078	.312	.187	1.843
19	1.312	1.687	1.375	.078	.031	.078	.093	NA	NA	1.187	.750	.593	.453	1.015	.062	.187	.078	.875	.718	1.375	.218	NA	NA	.048	.031	.875	.305	.078	.312	1.687	.078	NA	.078	.312	.187	NA
18	1.875	3.469	2.750	.156	.093	.156	.125	.106 .113	.125	1.625	1.032	.844	.656	1.406	.093	.344	.156	1.781	1.531	2.844	.312	1.562	3.875	.062	NA	1.219	.500	.156	.719	3.469	.156	NA	.156	.719	.344	3.875
17	1.875	3.469	2.750	.156	.093	.156	.125	NA	NA	1.625	1.032	.844	.656	1.406	.093	.344	.156	1.781	1.531	2.844	.312	NA	NA	.062	.062	1.219	.500	.156	.719	3.469	.156	NA	.156	.719	.344	NA
16	1.312	1.687	1.375	.078	.031	.078	.093	.106 .113	.093	1.187	.750	.593	.453	1.015	.062	.187	.078	.875	.718	1.375	.218	1.156	1.843	.048	NA	.875	.305	.078	.312	1.687	.078	NA	.078	.312	.187	1.843
15	1.312	1.687	1.375	.078	.031	.078	.093	NA	NA	1.187	.750	.593	.453	1.015	.062	.187	.078	.875	.718	1.375	.218	NA	NA	.048	.031	.875	.305	.078	.312	1.687	.078	NA	.078	.312	.187	NA

NOTES FOR TABLE

STYLE A IS FOR G & N SYSTEM
STYLE B IS FOR GROUND SUPPORT EQUIPMENT
TYPE I IS WITHOUT MOUNTING HOLES
TYPE II IS WITH MOUNTING HOLES

THIS SHEET ADDED

Ⓖ REPLACES REV F WITH CHANGE

RAYTHEON DASH NUMBERS

QTY REQD	PART OR IDENTIFYING NO.	MATERIAL OR NOTES	NOMENCLATURE OR DESCRIPTION	FIND NO.

LIST OF MATERIALS

NEXT ASSY	USED ON
AS APPLICABLE	

APPLICATION

UNLESS OTHERWISE SPECIFIED
DIMENSIONS ARE IN INCHES
CAPACITOR VALUES ARE IN µf
RESISTOR VALUES ARE IN OHMS
TOLERANCES ON
FRACTIONS ± — DECIMALS ±.005 ANGLES ± —
DO NOT SCALE THIS DRAWING

MATERIAL
SEE NOTE 11

MIT
INSTRUMENTATION LAB
CAMBRIDGE, MASS.

MANNED SPACECRAFT CENTER
HOUSTON, TEXAS

DRAWN R. A. Jones 7-16-65
CHECKED
APPROVED
APPROVED
APPROVED MIT
APPROVED MSC
DATE

NAMEPLATES,
APOLLO GEN-GSE
(STANDARDS)

CODE IDENT NO. 80230
SIZE E
DRAWING NO. 1004260
SCALE NONE
SHEET 3 OF 6

MASTER

[illegible]

SYM	ZONE	DESCRIPTION	DR	CHK	DATE	APPROVED
G		REPLACES REV F WITH CHANGE PER TDRR 20854.			7/22/65	WK
H		REVISED PER TDRR 20892			8/3/65	WK
J		REVISED PER TDRR 20904			8/3/65	WK
K		REVISED PER TDRR 21379			8/16/65	WK
L		REVISED PER TDRR 21410			8/23/65	WK
M		REVISED PER TDRR 21993				
N		REVISED PER TDRR 22621				
P		REVISED PER TDRR 22671				
R		REVISED PER TDRR 22672				
S		REVISED PER TDRR 22750				
T		REVISED PER TDRR 22823			/65	WK
U		REVISED PER TDRR 23072			[illegible]	
V		REVISED PER TDRR 23521			10-26-65	WK
W		REVISED PER TDRR 23824	RAJ		11-9-65	WK
Y		REVISED PER TDRR 24018	RAJ		11-16-65	WK
Z		REVISED PER TDRR 24040	RAJ		11-19-65	WK
AA		REVISED PER TDRR 24060	RAJ		11-19-65	WK
AB		REVISED PER TDRR 24868	RAJ		12-22-65	WK
AC		REVISED PER TDRR 24973	RAJ		1-4-66	WK
AD		REVISED PER TDRR 25065	RAJ		1-18-66	
AE		REVISED PER TDRR 25672	RAJ		2-4-66	WK
AF		REVISED PER TDRR 25671	RAJ		2-4-66	WK
AG		REVISED PER TDRR 26110	RAJ		2-15-66	WK
AH		REVISED PER TDRR 26372	"		3-16-66	
AJ		REVISED PER TDRR 26425	"		3-16-66	
AK		REVISED PER TDRR 26743	"		3-16-66	
AL		REVISED PER TDRR 26798	"		3-16-66	
AM		REVISED PER TDRR 27168	"		4-8-66	
AN		REVISED PER TDRR 27235	"		4-8-66	
AP		REVISED PER TDRR 27345	"		4-8-66	
AR		REVISED PER TDRR 27417	"		4-8-66	
AS		REVISED PER TDRR 27442	"		4-8-66	
AT		REVISED PER TDRR 27719	"		4-21-66	WK
AU		REVISED PER TDRR 27880	"		4-21-66	WK
AV		REVISED PER TDRR 27896	"		4-21-66	WK
AW		28110	"		5-16-66	
AY		28173	"			
AZ		28131	"			
BA		28124	"			
BB		REVISED PER TDRR 28511	"		5-16-66	
BC		" " " 28949	"		5-24-66	

REVISIONS 02768

DASH NO.	P/C	PART NAME	REMARKS	PART NO.	SER. NO.	CONT. NO.	STYLE	TYPE	MATERIAL	A	B	C	D	E	F	G	H	J	K	L	M	N	P	R	S	T	U	V	W	Y	Z	AA	AB	AC	AD	AE	AF	AG	AH	AJ	AK	AL	AM	AN	AP	AR
199	AC	EYEPIECE STOWAGE UNIT		2021255-011			A	I		FOR DIMENSIONS, SEE DASH 100 VALUES BELOW																																				
198	AC	SIGNAL CONDITIONER ASSY C/M		2007234		NAS 9-497			NOTE 11B																																					
197	AC	SIGNAL CONDITIONER ASSY C/M		2007235																																										
196	AC	SIGNAL CONDITIONER ASSY LEM		6007010																																										
195	AC	PSA & SIGNAL CONDITIONER ASSY		6007009			A	I	NOTE 11B																																					
194	AC	PANEL, MONITOR		2900031-031			B	II	NOTE 11C	FOR DIMENSIONS, SEE DASH 141 VALUES BELOW																																				
193	AC	DISTRIBUTION BOX, GSE		2900024-031																																										
192	AC	ANALYZER, OPTICS-INERTIAL		2900023-031						FOR DIMENSIONS, SEE DASH 144 VALUES BELOW																																				
191	AC	TEST CONTROL		2900027-031						FOR DIMENSIONS, SEE DASH 141 VALUES BELOW																																				
190	AC	PANEL, PWR SUP AND LOAD		2900033-021																																										
189	AC	ADPT MODULE, P.S.A.		6900088-011																																										
188	AC	ADPT MODULE, P.S.A.		2901143-011																																										
187	AC	FIXTURE, MTG, PTA/PEA		2900066-021		NAS 9-497	B	II	NOTE 11C																																					
186	AC	ANN PNL & EYEPIECE STOW. ASSY		1021255-021			A	I		FOR DIMENSIONS, SEE DASH 100 VALUES BELOW																																				
185	AC	ANN PNL & EYEPIECE STOW. ASSY		1021255-011			A	I																																						
184	AC	FIX., HAND., G AND N HARNESS		1901846-041		NAS-9-497	B	II	NOTE 11C	FOR DIMENSIONS, SEE DASH 144 VALUES BELOW																																				
183	AC	INSTALLING TOOL, ELEC. CONN		1902586-011			B	II	NOTE 11C	FOR DIMENSIONS, SEE DASH 102 VALUES BELOW																																				
182	AC	ADPT MODULE, P.S.A.		6900088-011			B	II	NOTE 11C	FOR DIMENSIONS, SEE DASH 141 VALUES BELOW																																				
181	AC	G&N INDICATOR CONTROL PANEL ASSY		2014578-011			A	I	NOTE 11B	3.000	1.938	2.437	NA	.125	.062	.188	.156	NA	NA	1.750	1.125	.906	.688	1.500	NA	.281	.125	NA	1.094	2.062	.312	NA	2.500	.062	.125	1.312	.469	NA	NA	NA	.156	NA	.125	.469	.344	NA
180	AC	ADPT MODULE, P.S.A.		1902431-031			B	II		FOR DIMENSIONS, SEE DASH 121 VALUES BELOW																																				
179	AC	MOUNTING PLATE, IMU/PTA		6900083-011						FOR DIMENSIONS, SEE DASH 144 VALUES BELOW																																				
178	AC	MOUNTING PLATE, COMPONENT		6900007-021																																										
177	AC	FIX.,MOUNTING, SUBSYSTEM		2900070-021																																										
176	AC	FIX.,MOUNTING, G AND N		2900067-021																																										
175	AC	CSL, COOL. AND PWR, G AND N		1902134-031																																										
174	AC	FIX., HAND., C/M AND LEM CDU		2900999-011					NOTE 11C	FOR DIMENSIONS, SEE DASH 141 VALUES BELOW																																				
173	AC	FIX., HANDLING, C/M PSA		2900998-011																																										
172	AC	CAGING ELECTRONICS, GYRO		2900029-021																																										
171	AC	DISTRIBUTION BOX, GSE		2900024-021																																										
170	AC	ANALYZER, OPTICS-INERTIAL		2900023-021						FOR DIMENSIONS, SEE DASH 144 VALUES BELOW																																				
169	AC	ADPT, TEST POINT, P.S.A.		2900037-021						FOR DIMENSIONS, SEE DASH 141 VALUES BELOW																																				
168	AC	TEST SELECTOR		2900028-021																																										
167	AC	TEST CONTROL		2900027-021																																										
166	AC	PANEL, MONITOR		2900031-021																																										
165	AC	TERM. BOARD STORAGE DRAWER		2900927-011																																										
164	AC	INPUT/OUTPUT PANEL		2900926-011																																										
163	AC	CONTROL PANEL		2900896-011																																										
162	AC	CSL. CAL AND TEST, SCM/PSAAM		2900895-011						FOR DIMENSIONS, SEE DASH 144 VALUES BELOW																																				
161	AC	FIX., LIFT AND HAND., IMU		1015462-011						FOR DIMENSIONS, SEE DASH 141 VALUES BELOW																																				
160	AC	FIX., HAND., G AND N HARNESS		1901846-031						FOR DIMENSIONS, SEE DASH 144 VALUES BELOW																																				
159	AC	BATTERY POWER PACK		1900011-031			B	II	NOTE 11C																																					
158	AC	COUPLING DATA UNIT ASSEMBLY C/M		2007222			A	I	NOTE 11B	FOR DIMENSIONS, SEE DASH 100 VALUES BELOW																																				
157	AC	COUPLING DATA UNIT ASSEMBLY - LEM		2007222																																										
156	AC	POWER & SERVO ASSEMBLY C/M		2007200																																										
155	AC	PIPA ELECTRONICS ASSEMBLY		2007201																																										
154	AC	PULSE TORQUE ASSEMBLY - LEM		6007000																																										
153	AC	POWER & SERVO ASSEMBLY - LEM		6007200			A	I	NOTE 11B																																					
152	AC	CONT PNL, RSVR CKT TESTER		2900770-011			B	II	NOTE 11C	FOR DIMENSIONS, SEE DASH 141 VALUES BELOW																																				
151	AC	TESTER, RESOLVER CIRCUIT		2900708-011																																										
150	AC	JUNCTION BOX, P.S.A./G.S.E.		1901933-021						FOR DIMENSIONS, SEE DASH 144 VALUES BELOW																																				
149	AC	BATTERY PACK, LIFTING		2900812-011						FOR DIMENSIONS, SEE DASH 141 VALUES BELOW																																				
148	AC	MOUNTING PLATE, COMPONENT		6900007-011						FOR DIMENSIONS, SEE DASH 144 VALUES BELOW																																				
147	AC	MOUNTING PLATE, COMPONENT		2900677-011																																										
146	AC	CART, TRANS, G AND N		1900009-041																																										
145	AC	CONTAINER, SHIPPING, IMU		1900010-021		NAS-9-497	B	II	NOTE 11C																																					
144	AC	FIX., MOUNTING, G AND N		1902204-021			B	II	NOTE 11C	4.125	1.812	3.250	NA	.125	.062	.12	.156	.188 .104	.125	1.625	1.140	.890	.640	1.390	.725	.171	.125	1.875	1.687	2.625	.250	1.562	3.843	.093	NA	NA	.359	.125	.437	3.688	NA	3.687	.093	.40	.25	3.875
143	AC	CSL, COOL. AND PWR, G AND N		1902134-021						4.125	1.812	3.250		.125	.062	.12	.156		.125	1.625	1.140	.890	.640	1.390	.125	.171	.125	1.875	1.687	2.625	.250	1.562	3.843	.093			.359	.125	.437	3.688		3.687	.093	.40	.25	3.875
142	AC	ANALYZER, OPTICS-INERTIAL		2900023-011						4.125	1.812	3.250		.125	.062	.12	.156		.125	1.625	1.140	.890	.640	1.390	.125	.171	.125	1.875	1.687	2.625	.250	1.562	3.843	.093			.359	.125	.437	3.688		3.687	.093	.40	.25	3.875
141	AC	CONT, TEMP, PORTABLE		2900060-011						2.125	.968	1.718		.093	.031	.06	.093		.093	.858	.608	.484	.358	.733	.077	.116	.062	.937	.875	1.343	.125	.781	1.892	.046			.209	.093	.250	1.875		1.840	.046	.23	.16	1.938
140	AC	TESTER, CKT, IMU/CDU RSVR		2900286-011						4.125	1.812	3.250		.125	.062	.12	.156		.125	1.625	1.140	.890	.640	1.390	.125	.171	.125	1.875	1.687	2.625	.250	1.562	3.843	.093			.359	.125	.437	3.688		3.687	.093	.40	.25	3.875
139	AC	SIMULATOR, LD/SIG, CDU		2900285-011																																										
138	AC	SIMULATOR, LD/SIG, OPTICS		1902023-021																																										
137	AC	FIX., MOUNTING, IMU/NAV BASE		6900003-011																																										
136	AC	FIXTURE, OPTICS/NAV BASE		2900072-011																																										
135	AC	FIX., MOUNTING, SUB SYSTEM		2900070-011																																										
134	AC	FIX., HAND., G AND N HARNESS		2900069-011																																										
133	AC	CNTR, SHIPPING, NAV BASE		2900068-011																																										
132	AC	FIX., MOUNTING, G AND N		2900067-011																																										
131	AC	SIMULATOR, LD/SIG, IMU/CDU		2900062-011																																										
130	AC	TESTER, GYRO WHEEL		2900061-011																																										
129	AC	COOLANT SUPPLY		1902133-021																																										
128	AC	TABLE, ROTARY		1900926-021						4.125	1.812	3.250		.125	.062	.12	.156		.125	1.625	1.140	.890	.640	1.390	.125	.171	.125	1.875	1.687	2.625	.250	1.562	3.843	.093			.359	.125	.437	3.688		3.687	.093	.40	.25	3.875
127	AC	FIX., HAND., OPTICS		2900074-011						2.125	.968	1.718		.093	.031	.06	.093		.093	.858	.608	.484	.358	.733	.077	.116	.062	.937	.875	1.343	.125	.781	1.892	.046			.209	.093	.250	1.875		1.840	.046	.23	.16	1.938
126	AC	FIXTURE, MTG, PTA/PEA.		2900066-011																																										
125	AC	CONT, TEMP, IMU LIFTING		2900063-011																																										
124	AC	FIXTURE, HANDLING, IMU		2900064-011																																										
123	AC	CONT, OPTICS, REMOTE		1902046-021																																										
122	AC	TEST CONTROL		1902009-021																																										
121	AC	ADPT MODULE, P.S.A.		1902431-021																																										
120	AC	BRIDGE, DECADE ERROR		2900128-011																																										
119	AC	PWR SUP, ELECTRONICS		2900012-011																																										
118	AC	PWR SUP, RELAY AND LAMP		1900049-031																																										
117	AC	CONSOLE, OSCILLOGRAPH		1900000-021																																										
116	AC	ADPT MODULE, P.S.A.		1902431-011																																										
115	AC	ADPT, TEST POINT, PTA/PEA.		2900145-011																																										
114	AC	ADPT, TEST POINT, P.S.A.		2900037-011																																										
113	AC	CONTROL, GIMBAL POSITION		2900036-011																																										
112	AC	SELECTOR, SIGNAL, PRIMARY		2900035-011																																										
111	AC	SEL, SIG, OSCILLOGRAPH		2900034-011																																										
110	AC	PANEL, PWR SUP AND LOAD		2900033-011																																										
109	AC	PANEL, MONITOR		2900031-011																																										
108	AC	PANEL, AUXILIARY INPUT		2900030-011																																										
107	AC	CAGING ELECTRONICS, GYRO		2900029-011																																										
106	AC	TEST SELECTOR		2900028-011																																										
105	AC	TEST CONTROL		2900027-011																																										
104	AC	MONITOR AND CONTROL, TEMP		2900026-011																																										
103	AC	DISTRIBUTION BOX, GSE		2900024-011																																										
102	AC	VOLTMETER, DIGITAL		2900007-011			B	II	NOTE 11C	2.125	.968	1.718	NA	.093	.031	.06	.093	.188 .104	.093	.858	.608	.484	.358	.733	.077	.116	.062	.937	.875	1.343	.125	.781	1.892	.046	NA	NA	.209	.093	.250	1.875	NA	1.840	.046	.23	.16	1.938
101	AC	NAVIGATION BASE ASSEMBLY - LEM		6899950		NAS-9-497	A	I	NOTE 11B	2.000	1.312	1.906	1.375	.078	.048	.078	.093	NA	NA	1.125	.750	.593	.453	1.015	.062	.187	.078	.875	.718	1.375	.218	NA	NA	.048	.031	.875	.305	.078	.531	1.906	.078	NA	.078	.531	.187	NA
100	AC	NAVIGATION BASE ASSEMBLY		2899982		NAS-9-497	A	I	NOTE 11B	2.000	1.312	1.906	1.375	.078	.048	.078	.093	NA	NA	1.125	.750	.593	.453	1.015	.062	.187	.078	.875	.718	1.375	.218	NA	NA	.048	.031	.875	.305	.078	.531	1.906	.078	NA	.078	.531	.187	NA

THIS SHEET ADDED
Ⓖ REPLACES REV F WITH CHANGE

AC ELECTRONICS DASH NUMBERS

NOTES FOR TABLE
STYLE A IS FOR G&N SYSTEM
STYLE B IS FOR GROUND SUPPORT EQUIPMENT
TYPE I IS WITHOUT MOUNTING HOLES
TYPE II IS WITH MOUNTING HOLES

NOTE: AC DASH NO's. CONT. ON SH.6

QTY REQD	PART OR IDENTIFYING NO.	MATERIAL OR NOTES	NOMENCLATURE OR DESCRIPTION	FIND NO.

LIST OF MATERIALS

UNLESS OTHERWISE SPECIFIED
DIMENSIONS ARE IN INCHES
CAPACITOR VALUES ARE IN µf
RESISTOR VALUES ARE IN OHMS
TOLERANCES ON
FRACTIONS DECIMALS ANGLES
± — ±.005 ± —
DO NOT SCALE THIS DRAWING

MATERIAL
SEE NOTE 11

AS APPLICABLE
NEXT ASSY | USED ON
APPLICATION

MIT
INSTRUMENTATION LAB
CAMBRIDGE, MASS.

MANNED SPACECRAFT CENTER
HOUSTON, TEXAS

DRAWN R A Jones 7-16-65
CHECKED 7-22-65
APPROVED
APPROVED
APPROVED MIT
APPROVED MSC
DATE

NAMEPLATES,
APOLLO G&N-GSE
(STANDARDS)

CODE IDENT NO. 80230
SIZE E
DRAWING NO. 1004260
SCALE NONE
SHEET 4 OF 6

MASTER

NOTICE - WHEN GOVERNMENT DRAWINGS, SPECIFICATIONS, OR OTHER DATA ARE USED FOR ANY PURPOSE OTHER THAN IN CONNECTION WITH A DEFINITELY RELATED GOVERNMENT PROCUREMENT OPERATION, THE UNITED STATES GOVERNMENT THEREBY INCURS NO RESPONSIBILITY NOR ANY OBLIGATION WHATSOEVER; AND THE FACT THAT THE GOVERNMENT MAY HAVE FORMULATED, FURNISHED, OR IN ANY WAY SUPPLIED THE SAID DRAWINGS, SPECIFICATIONS OR OTHER DATA IS NOT TO BE REGARDED BY IMPLICATION OR OTHERWISE AS IN ANY MANNER LICENSING THE HOLDER OR ANY OTHER PERSON OR CORPORATION, OR CONVEYING ANY RIGHTS OR PERMISSION TO MANUFACTURE, USE, OR SELL ANY PATENTED INVENTION THAT MAY IN ANY WAY BE RELATED THERETO.

REVISIONS [illegible]276

SYM	ZONE	DESCRIPTION	DR	CHK	DATE	APPROVED
G		REPLACES REV F WITH CHANGE PER TDRR 20854	rj		7/[illegible]/65	W[illegible]
H		REVISED PER TDRR 20892	rj		8/3/65	WK
J		REVISED PER TDRR 20904	rj		8/3/65	WK
K		REVISED PER TDRR 21379	rj		[illegible]/65	WK
L		REVISED PER TDRR 21410	rj		[illegible]/65	WK
M		REVISED PER TDRR 21993	rj			
N		REVISED PER TDRR 22621	rj		10/	
P		REVISED PER TDRR 22671	rj		1/	
R		REVISED PER TDRR 22672	rj			
S		REVISED PER TDRR 22750	rj		/65	WK
T		REVISED PER TDRR 22823	rj			
U		REVISED PER TDRR 23072	rj		10-[illegible]-65	[illegible]
V		REVISED PER TDRR 23521	rj		10-26-65	WK
W		REVISED PER TDRR 23824	RAJ		11-9-65	WK
Y		REVISED PER TDRR 24018	RAJ		11-16-65	WK
Z		REVISED PER TDRR 24040	RAJ		11-1[illegible]-65	WK
AA		REVISED PER TDRR 24060	RAJ		1[illegible]-19-65	WK
AB		REVISED PER TDRR 24868	RAJ		12-22-65	WK
AC		REVISED PER TDRR 24973	RAJ		1-4-66	WK
AD		REVISED PER TDRR 25065	RAJ		1-18-66	[illegible]
AE		REVISED PER TDRR 25672	RAJ		2-4-66	WK
AF		REVISED PER TDRR 25671	RAJ		2-4-66	WK
AG		REVISED PER TDRR 26110	RAJ		2-15-66	WK
AH		REVISED PER TDRR 26372	"		3-16-66	WGM
AJ		REVISED PER TDRR 26425	"		3-16-66	WGM
AK		REVISED PER TDRR 26743	"		3-16-66	WGM
AL		REVISED PER TDRR 26798	"		3-16-66	WGM
AM		REVISED PER TDRR 27168	"		4-7-66	WGM
AN		REVISED PER TDRR 27235	"		4-7-66	WGM
AP		REVISED PER TDRR 27345	"		4-7-66	WGM
AR		REVISED PER TDRR 27417	"		4-7-66	WGM
AS		REVISED PER TDRR 27442	"		4-7-66	WGM
AT		REVISED PER TDRR 27719	"		4-20-66	WK
AU		REVISED PER TDRR 27880	"		4-20-66	WK
AV		REVISED PER TDRR 27896	"		4-20-66	WK
AW		28110	"		5-16-66	WGM
AY		28173	"			WGM
AZ		28131	"			WGM
BA		28124	"			WGM
BB		REVISED PER TDRR 28511	"		5-16-66	WGM
BC		" " " 28949	"		5-24-66	[illegible]

DASH NO.	P/C	PART NAME	REMARKS	PART NO.	SER. NO.	CONT. NO.	STYLE	TYPE	MATERIAL	A	B	C	D	E	F	G	H	J
499	MIT																	
498																		
401	MIT	COMPUTER ASSY		2003100		NAS-9-497	A	I	NOTE 11 B	2.000	1.312	1.906	1.375	.078	.048	.078	.093	NA
400	MIT	LIFTING SLING-G&N INST. QUAL. FIX. & AZM. REF. FIX.		1021640		NAS-9-4066	B	II	NOTE 11 C	2.000	1.312	1.687	1.375	.078	.048	.078	.093	[illegible]

DASH NO.	K	L	M	N	P	R	S	T	U	V	W	Y	Z	AA	AB	AC	AD	AE	AF	AG	AH	AJ	AK	AL	AM	AN	AP	AR
401	NA	1.125	.750	.593	.453	1.015	.062	.187	.078	.875	.718	1.375	.218	NA	NA	.048	.031	.875	.305	.078	.531	1.906	.078	NA	.078	.531	.187	NA
400	.093	1.187	.750	.593	.453	1.015	.062	.187	.078	.875	.718	1.375	.218	1.156	1.843	.048	NA	.875	.305	.078	.312	1.687	.110	1.830	.070	.275	.180	1.844

MIT DASH NUMBERS

THIS SHEET ADDED

Ⓖ REPLACES REV F WITH CHANGE

NOTES FOR TABLE

STYLE A IS FOR G&N SYSTEM
STYLE B IS FOR GROUND SUPPORT EQUIPMENT
TYPE I IS WITHOUT MOUNTING HOLES
TYPE II IS WITH MOUNTING HOLES

MASTER

QTY REQD	PART OR IDENTIFYING NO.	MATERIAL OR NOTES	NOMENCLATURE OR DESCRIPTION	FIND NO.

LIST OF MATERIALS

AS APPLICABLE	
NEXT ASSY	USED ON

APPLICATION

UNLESS OTHERWISE SPECIFIED
DIMENSIONS ARE IN INCHES
CAPACITOR VALUES ARE IN µf
RESISTOR VALUES ARE IN OHMS
TOLERANCES ON
FRACTIONS ± — DECIMALS ±.005 ANGLES ± —
DO NOT SCALE THIS DRAWING

MATERIAL
SEE NOTE H

MIT
INSTRUMENTATION LAB
CAMBRIDGE, MASS.

DRAWN R A Jones 7-16-65
CHECKED [illegible] 8-2[illegible]
APPROVED
APPROVED W Kupfer [illegible]
APPROVED MIT W Kupfer [illegible]
APPROVED MSC [illegible] 7/[illegible]
DATE

MANNED SPACECRAFT CENTER
HOUSTON, TEXAS

NAMEPLATES,
APOLLO G&N-GSE
(STANDARDS)

CODE IDENT NO. 80230
SIZE E
DRAWING NO. 1004260
SCALE NONE
SHEET 5 OF 6

NOTICE – WHEN GOVERNMENT DRAWINGS, SPECIFICATIONS, OR OTHER DATA ARE USED FOR ANY PURPOSE OTHER THAN IN CONNECTION WITH A DEFINITELY RELATED GOVERNMENT PROCUREMENT OPERATION, THE UNITED STATES GOVERNMENT THEREBY INCURS NO RESPONSIBILITY NOR ANY OBLIGATION WHATSOEVER, AND THE FACT THAT THE GOVERNMENT MAY HAVE FORMULATED, FURNISHED, OR IN ANY WAY SUPPLIED THE SAID DRAWINGS, SPECIFICATIONS OR OTHER DATA IS NOT TO BE REGARDED BY IMPLICATION OR OTHERWISE AS IN ANY MANNER LICENSING THE HOLDER OR ANY OTHER PERSON OR CORPORATION, OR CONVEYING ANY RIGHTS OR PERMISSION TO MANUFACTURE, USE, OR SELL ANY PATENTED INVENTION THAT MAY IN ANY WAY BE RELATED THERETO.

REVISIONS 02768

SYM	ZONE	DESCRIPTION	DR	CHK	DATE	APPROVED
AG		CHANGED NUMBER OF SHEETS FROM 5 TO 6 PER TDRR 26110.	RAJ		2-15-66	
AH		REVISED PER TDRR 26372	"		3-16-66	
AJ		REVISED PER TDRR 26425	"		3-16-66	
AK		REVISED PER TDRR 26743	"		3-16-66	
AL		REVISED PER TDRR 26796	"		3-16-66	
AM		REVISED PER TDRR 27168	"		4-7-66	
AN		REVISED PER TDRR 27235	"		4-7-66	
AP		REVISED PER TDRR 27345	"		4-7-66	
AR		REVISED PER TDRR 27417	"		4-7-66	
AS		REVISED PER TDRR 27442	"		4-7-66	
AT		REVISED PER TDRR 27719	"		4-20-66	
AU		REVISED PER TDRR 27880	"		4-20-66	
AV		REVISED PER TDRR 27896	"		4-20-66	
AW		28110	"		5-16-66	
AY		28173	"		5-16-66	
AZ		28131	"		5-16-66	
BA		28124	"		5-16-66	
BB		REVISED PER TDRR 28511	"		5-16-66	
BC		" " " 28949	"		5-24-66	

DASH NO.	P/C	PART NAME	REMARKS	PART NO.	SER NO.	CONT NO.	STYLE	TYPE	MATERIAL	A	B	C	D	E	F	G	H	J	K	L	M	N	P	R	S	T	U	V	W	Y	Z	AA	AB	AC	AD	AE	AF	AG	AH	AJ	AK	AL	AM	AN	AP	AR
599	AC																																													
598	AC																																													
519	AC	FIXTURE, HANDLING, LEM-PSA	(-141)	6900129-011		NAS-9-497	B	II	NOTE 11C	FOR DIMENSIONS, SEE DASH 504 VALUES BELOW																																				
518	AC	JUNCTION BOX, GSE-PSA	(-144)	1901933-031		NAS-9-497	B	II	NOTE 11C	FOR DIMENSIONS, SEE DASH 500 VALUES BELOW																																				
514	AC	SIGNAL COND. ASSY LEM OPER.	(-100)	6007013		NAS-9-497	A	I	NOTE 11B	FOR DIMENSIONS, SEE DASH 508 VALUES BELOW																																				
513		JUMPER, BY-PASS	(-141)	1021616			B	II	NOTE 11C	2.125	.968	1.718	NA	.093	.031	.06	.093	.100/.104	.093	.858	.608	.484	.358	.733	.077	.116	.062	.937	.875	1.343	.125	.781	1.892	.046	NA	NA	.209	.093	.250	1.875	NA	1.840	.046	.23	.16	1.938
512		COUPLING DATA UNIT ASSEMBLY C/M	(-100)	2007322-011			A	I	NOTE 11B	FOR DIMENSIONS, SEE DASH 508 VALUES BELOW																																				
511		COUPLING DATA UNIT ASSEMBLY - LEM	(-100)	2007322-021																																										
510		BATTERY POWER PACK	(-144)	1900011-041			B	II	NOTE 11C	FOR DIMENSIONS, SEE DASH 500 VALUES BELOW																																				
509		JUNCTION BOX, P.S.A./G.S.E.	(-144)	1902195-021			B	II	NOTE 11C																																					
508		NAVIGATION BASE ASSEMBLY - LEM	✓ (-101)	6899980			A	I	NOTE 11B	2.000	1.312	1.906	1.375	.078	.048	.078	.093	NA	NA	1.125	.750	.593	.453	1.015	.062	.187	.078	.875	.718	1.375	.218	NA	NA	.048	.031	.875	.305	.078	.531	1.906	.078	NA	.078	.531	.187	NA
507		CSL, COOL. AND PWR, G AND N	(-144)	1902134-041			B	II	NOTE 11C	FOR DIMENSIONS, SEE DASH 500 VALUES BELOW																																				
506		BREAKOUT BOX, CABLE ADAPTER	(-141)	2901011-011						2.125	.968	1.718	NA	.093	.031	.06	.093	.100/.104	.093	.858	.608	.484	.358	.733	.077	.116	.062	.937	.875	1.343	.125	.781	1.892	.046	NA	NA	.209	.093	.250	1.875	NA	1.840	.046	.23	.16	1.938
505		MONITOR AND CONTROL, TEMP	(-141)	2900026-021																																										
504		PWR SUP, GUIDANCE SYSTEM	✓ (-141)	1900033-021																																										
503		CONTROL, GIMBAL POSITION	(-141)	2900036-021																																										
502		ADPT, TEST POINT, PTA/PEA.	(-141)	2900145-021																																										
501		MOUNTING PLATE, COMPONENT	(-144)	6900007-031		NAS-9-497	B	II	NOTE 11C	FOR DIMENSIONS, SEE DASH 500 VALUES BELOW																																				
500	AC	MOUNTING PLATE, COMPONENT	✓ (-144)	2900677-021						4.125	1.812	3.250	NA	.125	.062	.12	.156	.100/.104	.125	1.625	1.140	.890	.640	1.390	.125	.171	.125	1.875	1.687	2.625	.250	1.562	3.843	.093	NA	NA	.359	.125	.437	3.688	NA	3.687	.093	.40	.25	3.875

AC ELECTRONICS DASH NUMBERS

Ⓐⓖ THIS SHEET ADDED

NOTES FOR TABLE

STYLE A IS FOR G&N SYSTEM
STYLE B IS FOR GROUND SUPPORT EQUIPMENT
TYPE I IS WITHOUT MOUNTING HOLES
TYPE II IS WITH MOUNTING HOLES

MASTER

MASTER

QTY REQD	PART OR IDENTIFYING NO.	MATERIAL OR NOTES	NOMENCLATURE OR DESCRIPTION	FIND NO.

LIST OF MATERIALS

NEXT ASSY	USED ON
AS APPLICABLE	

APPLICATION

UNLESS OTHERWISE SPECIFIED
DIMENSIONS ARE IN INCHES
CAPACITOR VALUES ARE IN μf
RESISTOR VALUES ARE IN OHMS
TOLERANCES ON
FRACTIONS ± — DECIMALS ±.005 ANGLES ± —
DO NOT SCALE THIS DRAWING

MATERIAL
SEE NOTE

MIT
INSTRUMENTATION LAB
CAMBRIDGE, MASS.

DRAWN R. A. Jones 2-15-66
CHECKED 2-15-66
APPROVED
APPROVED
APPROVED MIT C. METZGER 5-18-66
APPROVED MSC
DATE

MANNED SPACECRAFT CENTER
HOUSTON, TEXAS

NAMEPLATES,
APOLLO G&N-GSE
(STANDARDS)

CODE IDENT NO. 80230
SIZE E
DRAWING NO. 1004260
SCALE NONE
SHEET 6 OF 6

NOTICE - WHEN GOVERNMENT DRAWINGS, SPECIFICATIONS, OR OTHER DATA ARE USED FOR ANY PURPOSE OTHER THAN IN CONNECTION WITH A DEFINITELY RELATED GOVERNMENT PROCUREMENT OPERATION, THE UNITED STATES GOVERNMENT THEREBY INCURS NO RESPONSIBILITY NOR ANY OBLIGATION WHATSOEVER, AND THE FACT THAT THE GOVERNMENT MAY HAVE FORMULATED, FURNISHED, OR IN ANY WAY SUPPLIED THE SAID DRAWINGS, SPECIFICATIONS, OR OTHER DATA IS NOT TO BE REGARDED BY IMPLICATION OR OTHERWISE AS IN ANY MANNER LICENSING THE HOLDER OR ANY OTHER PERSON OR CORPORATION, OR CONVEYING ANY RIGHTS OR PERMISSION TO MANUFACTURE, USE, OR SELL ANY PATENTED INVENTION THAT MAY IN ANY WAY BE RELATED THERETO.

NOTES:

1. INTERPRET DRAWING IN ACCORDANCE WITH STANDARDS PRESCRIBED IN MIL-D-70327.
2. DIMENSIONS ON EACH VIEW APPLY TO ALL VIEWS. (WITH THE EXCEPTION OF MOUNTING HOLES).
3. FORMATS ILLUSTATED WILL BE APPLICABLE TO ALL ITEMS REQUIRING NAMEPLATES BELOW END ITEM DESIGNATION (SYSTEMS, ASSEMBLIES, ETC.)
4. PLATE BACKGROUND TO BE LUSTERLESS BLACK PER FED-STD-595, COLOR 37038. BORDER, MARKING AND LETTERING TO BE NATURAL METAL, (ANODIZED ALUMINUM).
5. MARKING METHOD TO BE DIE STAMPING, ETCHING OR ENGRAVING IN ACCORDANCE WITH MIL P 19834.
6. LETTERING STYLE TO BE GOTHIC, (SANS SERIFS), AND NUMBERS TO BE ARABIC.
7. WHERE LOCATING DIMENSIONS ARE NOT SHOWN, CHARACTERS SHALL BE SYMMETRICALLY POSITIONED.
8. IDENTIFY WITH DRAWING NUMBER PER ND1002019.
9. WHEN "AUTO MARK" METAL MARKING TYPEWRITER IS USED TO ADD DATA TO BLANK SPACES, TYPE SIZE IS TO BE SELECTED FROM DIMENSIONS U, AC AND AM.
10. NASA SYMBOL IS TO BE PROPORTIONAL TO NAMEPLATE IN RATIO OF 1 TO 5 WITH DIMENSION A VALUE AND IS TO HAVE NATURAL BACKGROUND. NASA SYMBOL LETTERS LETTERING AND FEATHER TO BE BLACK, (OR WHITE FOR SILK SCREENING). WHERE BLACK FEATHER PROTRUDES INTO BLACK BACKGROUND, A MINIMUM OUTLINE OF NATURAL BACKGROUND SHALL EXIST.
11. NAMEPLATES WILL BE APPLIED BY METHODS LISTED BELOW, SHOWN IN ORDER OF PREFERENCE, (I.E., FOR RELIABILITY AND WEIGHT).
    - A - STENCIL OR SILK SCREEN DIRECTLY ON EQUIPMENT USING INK PER SCD 1010920, (WHITE OR BLACK).
    - B - ALUMINUM FOIL, (STYLE A OR B, TYPE I):
      FOIL SHALL BE .0030 ± .0005 THICK PER MIL-A-148.
      FOIL SHALL HAVE NO ADHESIVE BACKING.
      FOIL SHALL BE BONDED PER ND 1002219, (METHOD II).
      FOIL SHALL BE CLEAR ANODIZED PER MIL-A-8625, TYPE II.
    - C - PLATE, (STYLE A OR B, TYPE II):
      MATERIAL: QQ-A-250, TEMPER O OR H14, TYPE 1100, ALUMINUM ALLOY, .032 THICK.
      ANODIZE PER MIL-A-8625, TYPE II.
      ALUMINUM PLATE MUST BE FREE FROM BURRS AND SHARP CORNERS, MOUNTED WITH APPLICABLE SIZE FASTENERS.
12. NAMEPLATES SHALL BE CAPABLE OF MEETING APPLICABLE REQUIREMENTS OF MIL-M-13231.
13. ON DIMENSION TABLES SHOWN ON PAGES 2, 3, 4 AND 5, NA MEANS, "NOT APPLICABLE".

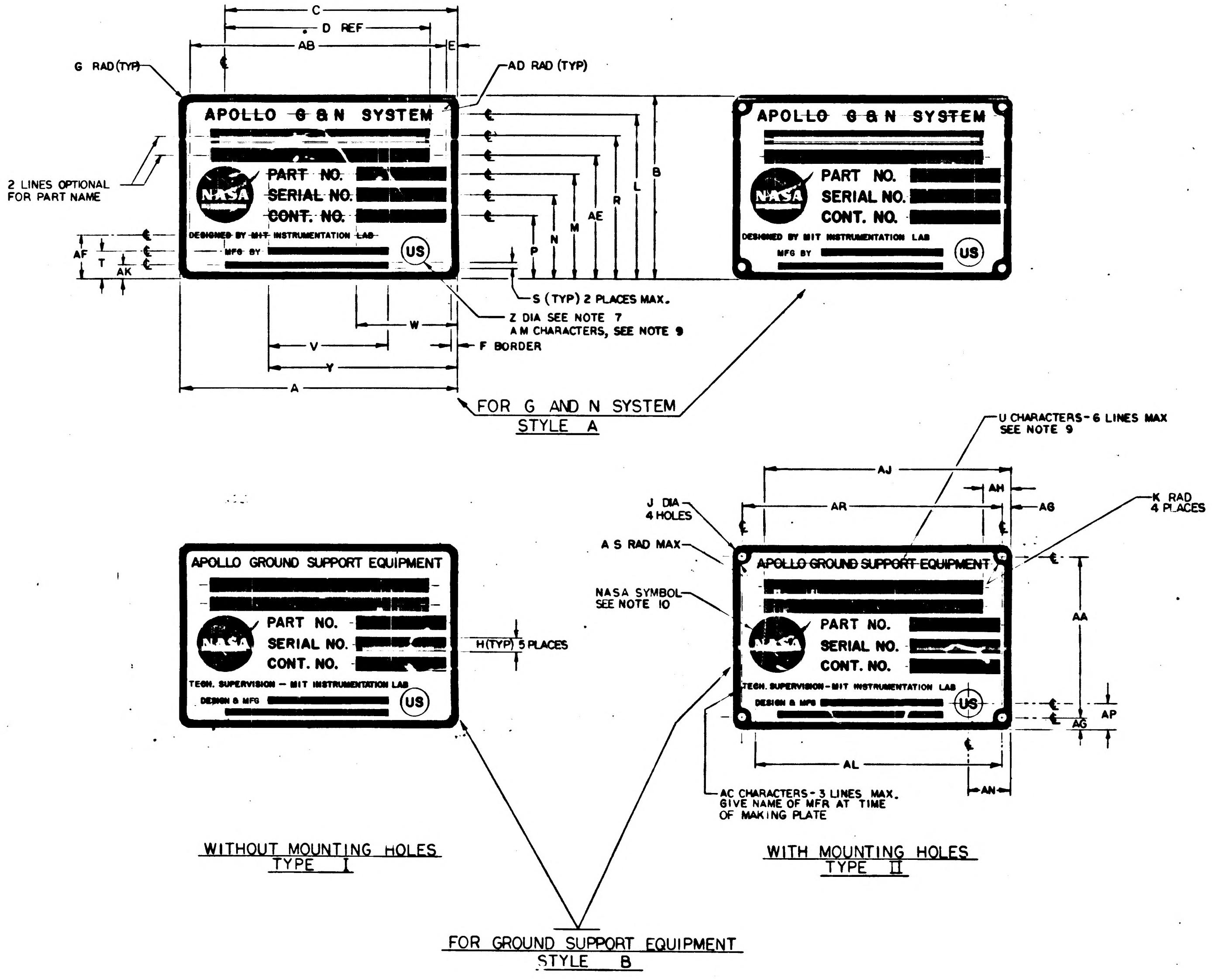
C
D REF
AB
E
G RAD (TYP)
AD RAD (TYP)
APOLLO G & N SYSTEM
PART NO.
SERIAL NO.
CONT. NO.
NASA
DESIGNED BY MIT INSTRUMENTATION LAB
MFG BY
US
2 LINES OPTIONAL FOR PART NAME
AF
T
AK
B
L
R
AE
M
N
P
S (TYP) 2 PLACES MAX.
Z DIA SEE NOTE 7
AM CHARACTERS, SEE NOTE 9
W
V
Y
F BORDER
A
FOR G AND N SYSTEM
STYLE A
APOLLO GROUND SUPPORT EQUIPMENT
TECH. SUPERVISION - MIT INSTRUMENTATION LAB
DESIGN & MFG
H (TYP) 5 PLACES
U CHARACTERS - 6 LINES MAX SEE NOTE 9
AJ
AH
AR
AG
K RAD 4 PLACES
J DIA 4 HOLES
A S RAD MAX
NASA SYMBOL SEE NOTE 10
AA
AP
AG
AL
AN
AC CHARACTERS - 3 LINES MAX. GIVE NAME OF MFR AT TIME OF MAKING PLATE
WITHOUT MOUNTING HOLES
TYPE I
WITH MOUNTING HOLES
TYPE II
FOR GROUND SUPPORT EQUIPMENT
STYLE B

REVISIONS 02768

	SYM	ZONE	DESCRIPTION	DR	CHK	DATE	APPROVED
	G		REPLACES REV F WITH CHANGE PER TDRR 20854			7/22/65	WK
★	H		REVISED PER TDRR 20892			8/3/65	WK
	J		REVISED PER TDRR 20904			8/3/65	WK
	K		REVISED PER TDRR 21379			9/1/65	WK
	L		REVISED PER TDRR 21410			8/23/65	WK
★	M		REVISED PER TDRR 21993			10/11/65	WK
★	N		REVISED PER TDRR 22621				
★	P		REVISED PER TDRR 22671				
★	R		REVISED PER TDRR 22672				
★	S		REVISED PER TDRR 22750				
	T		REVISED PER TDRR 22823				
★	U		REVISED PER TDRR 23072			10-22-65	WGM
	V		REVISED PER TDRR 23521			10-27-65	WK
★	W		REVISED PER TDRR 23824	RAJ		11-9-65	WK
★	Y		REVISED PER TDRR 24018	RAJ		11-16-65	WK
★	Z		REVISED PER TDRR 24040	RAJ		11-19-65	WK
Ⓜ	AA		REVISED PER TDRR 24060	RAJ		11-19-65	WK
Ⓜ	AB		REVISED PER TDRR 24868	RAJ		12-22-65	WK
Ⓜ	AC		REVISED PER TDRR 24973	RAJ		1-4-66	WK
Ⓜ	AD		REVISED PER TDRR 25065	RAJ		1-18-66	WGM
★	AE		REVISED PER TDRR 25672	RAJ		2-4-66	WK
Ⓜ	AF		REVISED PER TDRR 25671	RAJ		2-4-66	WK
	AG		REVISED PER TDRR 26110	RAJ		2-15-66	WK
★	AH		REVISED PER TDRR 26372	"		3-16-66	WGM
★	AJ		REVISED PER TDRR 26425	"		3-16-66	WGM
★	AK		REVISED PER TDRR 26743	"		3-16-66	WGM
Ⓜ	AL		REVISED PER TDRR 26798	"		3-16-66	WGM
★	AM		REVISED PER TDRR 27168	"		4-7-66	WGM
★	AN		REVISED PER TDRR 27235	"		4-7-66	WGM
★	AP		REVISED PER TDRR 27345	"		4-7-66	WGM
★	AR		REVISED PER TDRR 27417	"		4-7-66	WGM
Ⓜ	AS		REVISED PER TDRR 27442	"		4-7-66	WGM
Ⓜ	AT		REVISED PER TDRR 27719	"		4-20-66	WK
Ⓜ	AU		REVISED PER TDRR 27880	"		4-20-66	WK
Ⓜ	AV		REVISED PER TDRR 27896	"		4-20-66	WK
	AW		28110	"		5-16-66	WGM
	AY		28173	"			WGM
	AZ		28131	"			WGM
	BA		28124	"			WGM
	BB		REVISED PER TDRR 28511	"		5-16-66	WGM
Ⓜ	BC		" " " 28949	"		5-24-66	WGM
	BD		" " " 29222	"		6-8-66	WGM
	BE		" " " 29235	"		6-8-66	WGM

SUGGESTED PROPORTIONS FOR NAMEPLATE DIMENSIONS.
1. SELECT NAMEPLATE LENGTH, DIMENSION "A", TO FIT DESIGN NEEDS.
2. DIMENSIONS B THRU AS ON LINE 1 BELOW ARE PROPORTIONAL TO "A" BY MULTIPLIERS SHOWN IN LINE 2 BELOW.

1.	A	B	C	D	E	F	G	H	J	K	L	M	N	P	R	S	T
2.	1.000 A	.6563 A	.8438 A	.6875 A	.0391 A	.0240 A	.0391 A	.0469 A	.0547 A	.0469 A	.5938 A	.3750 A	.2969 A	.2187 A	.5079 A	.0313 A	.0938 A

1.	U	V	W	Y	Z	AA	AB	AC	AD	AE	AF	AG	AH	AJ	AK	AL	AM	AN	AP	AR	AS
2.	.0391 A	.4375 A	.3594 A	.6875 A	.1094 A	.5781 A	.9219 A	.0240 A	.0156 A	.4375 A	.1525 A	.0391 A	.1563 A	.8438 A	.0548 A	.8659 A	.0391 A	.1563 A	.0938 A	.9219 A	.0151 A

Ⓖ REPLACES REV F WITH CHANGE

QTY REQD	PART OR IDENTIFYING NO.	MATERIAL OR NOTES	NOMENCLATURE OR DESCRIPTION	FIND NO.

LIST OF MATERIALS

AS APPLICABLE
NEXT ASSY | USED ON
APPLICATION

UNLESS OTHERWISE SPECIFIED
DIMENSIONS ARE IN INCHES
CAPACITOR VALUES ARE IN µf
RESISTOR VALUES ARE IN OHMS
TOLERANCES ON
FRACTIONS ± — DECIMALS ± .005 ANGLES ± —
DO NOT SCALE THIS DRAWING

MATERIAL
SEE NOTE 11

MIT
INSTRUMENTATION LAB
CAMBRIDGE, MASS.

DRAWN R A Jones 7/16/65
CHECKED A. J. 7-22-65
APPROVED
APPROVED 7/22/65
APPROVED MIT 7/22/65
APPROVED MSC 7/22/65
DATE

MANNED SPACECRAFT CENTER
HOUSTON, TEXAS

NAMEPLATES,
APOLLO G&N—GSE
(STANDARDS)

CODE IDENT NO. 80230
SIZE E
DRAWING NO. 1004260
SCALE NONE
SHEET 1 OF 6

MASTER

1004260 EF

NOTICE – WHEN GOVERNMENT DRAWINGS, SPECIFICATIONS, OR OTHER DATA ARE USED FOR ANY PURPOSE OTHER THAN IN CONNECTION WITH A DEFINITELY RELATED GOVERNMENT PROCUREMENT OPERATION, THE UNITED STATES GOVERNMENT THEREBY INCURS NO RESPONSIBILITY NOR ANY OBLIGATION WHATSOEVER; AND THE FACT THAT THE GOVERNMENT MAY HAVE FORMULATED, FURNISHED, OR IN ANY WAY SUPPLIED THE SAID DRAWINGS, SPECIFICATIONS, OR OTHER DATA IS NOT TO BE REGARDED BY IMPLICATION OR OTHERWISE AS IN ANY MANNER LICENSING THE HOLDER OR ANY OTHER PERSON OR CORPORATION, OR CONVEYING ANY RIGHTS OR PERMISSION TO MANUFACTURE, USE, OR SELL ANY PATENTED INVENTION THAT MAY IN ANY WAY BE RELATED THERETO.

REVISIONS 02768

SYM	ZONE	DESCRIPTION	DR	CHK	DATE	APPROVED
G		REPLACES REV F WITH CHANGE PER TDRR 20854.	rj		7/22/65	WK
H		REVISED PER TDRR 20892	rj		8/3/65	WK
J		REVISED PER TDRR 20904	rj		8/3/65	WK
K		REVISED PER TDRR 21379	rj		[illegible]	WK
L		REVISED PER TDRR 21410	rj		[illegible]	WK
M		REVISED PER TDRR 21993	"		10/	
N		REVISED PER TDRR 22621	"			
P		REVISED PER TDRR 22671	"		11	
R		REVISED PER TDRR 22672	"			
S		REVISED PER TDRR 22750	"		65	
T		REVISED PER TDRR 22823	"			WK
U		REVISED PER TDRR 23072	"		10-[illegible]-65	
V		REVISED PER TDRR 23521	"		10-27-65	WK
W		REVISED PER TDRR 23824	RAJ		11-9-65	WK
Y		REVISED PER TDRR 24018	RAJ		11-16-65	WK
Z		REVISED PER TDRR 24040	RAJ		11-19-65	WK
AA		REVISED PER TDRR 24060	RAJ		11-19-65	WK
AB		REVISED PER TDRR 24868	RAJ		12-22-65	WK
AC		REVISED PER TDRR 24973	RAJ		1-4-66	WK
AD		REVISED PER TDRR 25065	RAJ		1-18-66	
AE		REVISED PER TDRR 25672	RAJ		2-4-66	WK
AF		REVISED PER TDRR 25671	RAJ		2-4-66	WK
AG		REVISED PER TDRR 26110	RAJ		2-15-66	WK
AH		REVISED PER TDRR 26372	"		3-16-66	
AJ		REVISED PER TDRR 26425	"		3-16-66	
AK		REVISED PER TDRR 26743	"		3-16-66	
AL		REVISED PER TDRR 26798	"		3-16-66	
AM		REVISED PER TDRR 27168	"		4-8-66	
AN		REVISED PER TDRR 27235	"		4-8-66	
AP		REVISED PER TDRR 27345	"		4-8-66	
AR		REVISED PER TDRR 27417	"		4-8-66	
AS		REVISED PER TDRR 27442	"		4-8-66	
AT		REVISED PER TDRR 27719	"		4-21-66	WK
AU		REVISED PER TDRR 27880	"		4-21-66	WK
AV		REVISED PER TDRR 27896	"		4-21-66	WK
AW		↕ 28110	"		5-16-66	
AY		↕ 28173	"		↕	
AZ		↕ 28131	"		↕	
BA		↕ 28124	"		↕	
BB		REVISED PER TDRR 28511	"		5-16-66	
BC		" " " 28949	"		5-24-66	
BD		" " " 29222	"		6-8-66	
BE		" " " 29235	"		"	

DASH NO.	P/C	PART NAME	REMARKS	PART NO.	SER. NO.	CONT. NO.	STYLE	TYPE	MATERIAL	A	B	C	D	E	F	G	H	J	K	L	M	N	P	R	S	T	U	V	W	Y	Z	AA	AB	AC	AD	AE	AF	AG	AH	AJ	AK	AL	AM	AN	AP	AR
399	K																																													
398	K																																													
350	K	ALIGNMENT OPTICAL TELESCOPE (LEM)		NA	NA	NA	A	I	NOTE 11 B	4.000	2.625	3.375	2.750	.156	.093	.156	.187	NA	NA	2.312	1.468	[illegible]	[illegible]	2.031	NA	.375	.156	NA	1.437	2.750	.437	NA	3.688	.062	.062	1.750	.593	NA	.625	3.375	.187	NA	.156	.531	.453	NA
309	K																																													
308	K																																													
307	K						B	I	NOTE 11 B	4.000	2.625	3.375	2.750	.156	.093	.156	.187	NA	NA	2.328	1.468	1.187	.906	2.031	.062	.375	.156	NA	1.437	2.750	.437	NA	3.687	.062	.062	1.750	.593	NA	NA	NA	NA	NA	NA	NA	NA	NA
306	K						B	II	NOTE 11 C	4.000	2.625	3.375	2.750	.156	.093	.156	.187	.125	.156	2.328	1.468	1.187	.906	2.031	.062	.375	.156	↕	1.437	2.750	.437	2.312	3.687	.062	NA	1.750	.593	↕	↕	↕	↕	↕	↕	↕	↕	↕
305	K						B	I	NOTE 11 B	2.000	1.312	1.687	1.375	.078	.048	.078	.093	NA	NA	1.164	.734	.593	.453	1.015	.048	.171	.078	↕	.718	1.375	.187	NA	NA	.048	.031	.875	.320	↕	↕	↕	↕	↕	↕	↕	↕	↕
304	K						B	II	NOTE 11 C	2.000	1.312	1.687	1.375	.078	.048	.078	.093	.070	.078	1.164	.734	.593	.453	1.015	.048	.171	.078	NA	.718	1.375	.187	.156	1.843	.048	NA	.875	.320	NA	NA	NA	NA	NA	NA	NA	NA	NA
303	K																																													
302	K																																													
301	K																																													
300	K	OPTICAL UNIT		NA	NA	NA	A	I	NOTE 11 B	2.000	1.312	1.675	NA	NA	.048	.078	NA	NA	NA	1.090	.812	.675	.540	.940	NA	.265	NA	NA	NA	1.375	.218	NA	NA	NA	NA	NA	.375	NA	NA	NA	.180	NA	.078	NA	NA	NA
9	K	2 IN AUTOCOLLIMATOR		1001702			B	II	NOTE 11 C	4.000	2.625	3.812	2.750	.156	.093	.156	.187	.125	.156	2.250	1.500	1.187	.906	2.031	.093	.375	.156	1.750	1.437	2.750	.437	2.312	3.687	.062	NA	1.750	.593	.156	1.062	3.812	.156	NA	.156	1.062	.375	3.687
8	K	5 IN AUTOCOLLIMATOR		1017410			B	II	NOTE 11 C	4.000	2.625	3.812	2.750	.156	.093	.156	.187	.125	.156	2.250	1.500	1.187	.906	2.031	.093	.375	.156	1.750	1.437	2.750	.437	2.312	3.687	.062	NA	1.750	.593	.156	1.062	3.812	.156	NA	.156	1.062	.375	3.687
7	K	2½ IN AUTOCOLLIMATOR (SCT)		1017435			B	II	NOTE 11 C	4.000	2.625	3.812	2.750	.156	.093	.156	.187	.125	.156	2.250	1.500	1.187	.906	2.031	.093	.375	.156	1.750	1.437	2.750	.437	2.312	3.687	.062	NA	1.750	.593	.156	1.062	3.812	.156	NA	.156	1.062	.375	3.687
6	K	2½ IN AUTOCOLLIMATOR (SXT)		1017448			B	II	NOTE 11 C	4.000	2.625	3.812	2.750	.156	.093	.156	.187	.125	.156	2.250	1.500	1.187	.906	2.031	.093	.375	.156	1.750	1.437	2.750	.437	2.312	3.637	.062	NA	1.750	.593	.156	1.062	3.812	.156	NA	.156	1.062	.375	3.687
5	K	RETROREFLECTING PRISM ASSEMBLY		1019840			B	I	NOTE 11 B	4.000	2.625	3.812	2.750	.156	.093	.156	.187	NA	NA	2.250	1.500	1.187	.906	2.031	.093	.375	.156	1.750	1.437	2.750	.437	NA	NA	.062	.062	1.750	.593	.156	1.062	3.812	.156	NA	.156	1.062	.375	NA
4	K	S/H SIMULATOR ASSEMBLY		1019896			B	I	NOTE 11 B	4.000	2.625	3.812	2.750	.156	.093	.156	.187	NA	NA	2.250	1.500	1.187	.906	2.031	.093	.375	.156	1.750	1.437	2.750	.437	NA	NA	.062	.062	1.750	.593	.156	1.062	3.812	.156	NA	.156	1.062	.375	NA
3	K	REFERENCE MIRROR		1001767			B	I	NOTE 11 B	2.000	1.312	1.906	1.375	.078	.048	.078	.093	NA	NA	1.125	.750	.593	.453	1.015	.062	.187	.078	.875	.718	1.375	.218	NA	NA	.048	.031	.875	.305	.078	.531	1.906	.078	NA	.078	.531	.187	NA
2	K	2 IN PLANE READING AUTOCOLLIMATOR		1017413			B	I	NOTE 11 B	2.000	1.312	1.906	1.375	.078	.048	.078	.093	NA	NA	1.125	.750	.593	.453	1.015	.062	.187	.078	.875	.718	1.375	.218	NA	NA	.048	.031	.875	.305	.078	.531	1.906	.078	NA	.078	.531	.187	NA
1	K	2 IN AUTOCOLLIMATOR		1001702			B	I	NOTE 11 B	2.000	1.312	1.906	1.375	.078	.048	.078	.093	NA	NA	1.125	.750	.593	.453	1.015	.062	.187	.078	.875	.718	1.375	.218	NA	NA	.048	.031	.875	.305	.078	.531	1.906	.078	NA	.078	.531	.187	NA

KOLLSMAN DASH NUMBERS

Ⓖ REPLACES REV F WITH CHANGE

NOTES FOR TABLE

STYLE A IS FOR G&N SYSTEM.
STYLE B IS FOR GROUND SUPPORT EQUIPMENT.
TYPE I IS WITHOUT MOUNTING HOLES.
TYPE II IS WITH MOUNTING HOLES.

MASTER

QTY REQD	PART OR IDENTIFYING NO.	MATERIAL OR NOTES	NOMENCLATURE OR DESCRIPTION	FIND NO.

LIST OF MATERIALS

NEXT ASSY	USED ON
AS APPLICABLE	

APPLICATION

UNLESS OTHERWISE SPECIFIED
DIMENSIONS ARE IN INCHES
CAPACITOR VALUES ARE IN µf
RESISTOR VALUES ARE IN OHMS
TOLERANCES ON
FRACTIONS ± — DECIMALS ±.005 ANGLES ± —
DO NOT SCALE THIS DRAWING

MATERIAL
SEE NOTE 11

MIT
INSTRUMENTATION LAB
CAMBRIDGE, MASS.

DRAWN R. A. Jones 7-16-65
CHECKED 7-22-65
APPROVED
APPROVED W. Cuyler
APPROVED MIT W. Cuyler
APPROVED MSC
DATE

MANNED SPACECRAFT CENTER
HOUSTON, TEXAS

NAMEPLATES,
APOLLO G&N-GSE
(STANDANDS)

CODE IDENT NO. 80230
SIZE E
DRAWING NO. 1004260
SCALE NONE
SHEET 2 OF 6

1004260

NOTICE - WHEN GOVERNMENT DRAWINGS, SPECIFICATIONS, OR OTHER DATA ARE USED FOR ANY PURPOSE OTHER THAN IN CONNECTION WITH A DEFINITELY RELATED GOVERNMENT PROCUREMENT OPERATION, THE UNITED STATES GOVERNMENT THEREBY INCURS NO RESPONSIBILITY NOR ANY OBLIGATION WHATSOEVER; AND THE FACT THAT THE GOVERNMENT MAY HAVE FORMULATED, FURNISHED, OR IN ANY WAY SUPPLIED THE SAID DRAWINGS, SPECIFICATIONS OR OTHER DATA IS NOT TO BE REGARDED BY IMPLICATION OR OTHERWISE AS IN ANY MANNER LICENSING THE HOLDER OR ANY OTHER PERSON OR CORPORATION, OR CONVEYING ANY RIGHTS OR PERMISSION TO MANUFACTURE, USE, OR SELL ANY PATENTED INVENTION THAT MAY IN ANY WAY BE RELATED THERETO.

REVISIONS

2768

SYM	ZONE	DESCRIPTION	DR	CHK	DATE	APPROVED
G		REPLACES REV F WITH CHANGE PER TDRR 20854			7/22/65	WK
H		REVISED PER TDRR 20892			8/3/65	WK
J		REVISED PER TDRR 20904			8/3/65	WK
K		REVISED PER TDRR 21379			8/6/65	WK
L		REVISED PER TDRR 21410			[illegible]	WK
M		REVISED PER TDRR 21993				
N		REVISED PER TDRR 22621			10/	
P		REVISED PER TDRR 22671				
R		REVISED PER TDRR 22672			11/	
S		REVISED PER TDRR 22750				
T		REVISED PER TDRR 22823			/65	WK
U		REVISED PER TDRR 23072			10-22-65	
V		REVISED PER TDRR 23521			10-26-65	WK
W		REVISED PER TDRR 23824	RAJ		11-9-65	WK
Y		REVISED PER TDRR 24018	RAJ		11-6-65	WK
Z		REVISED PER TDRR 24040	RAJ		11-19-65	WK
AA		REVISED PER TDRR 24060	RAJ		11-19-65	WK
AB		REVISED PER TDRR 24868	RAJ		12-22-65	WK
AC		REVISED PER TDRR 24973	RAJ		1-4-66	WK
AD		REVISED PER TDRR 25065	RAJ		1-18-66	
AE		REVISED PER TDRR 25672	RAJ		2-4-66	WK
AF		REVISED PER TDRR 25671	RAJ		2-4-66	WK
AG		REVISED PER TDRR 26110	RAJ		2-15-66	WK
AH		REVISED PER TDRR 26372	"		3-16-66	
AJ		REVISED PER TDRR 26425	"		3-16-66	
AK		REVISED PER TDRR 26743	"		3-16-66	
AL		REVISED PER TDRR 26798	"		3-16-66	
AM		REVISED PER TDRR 27168	"		4-8-66	
AN		REVISED PER TDRR 27235	"		4-8-66	
AP		REVISED PER TDRR 27345	"		4-8-66	
AR		REVISED PER TDRR 27417	"		4-8-66	
AS		REVISED PER TDRR 27442	"		4-8-66	
AT		REVISED PER TDRR 27719	"		4-20-66	WK
AU		REVISED PER TDRR 27880	"		4-20-66	WK
AV		REVISED PER TDRR 27896	"		4-20-66	WK
AW		28110			5-16-66	
AY		28173	"		5-16-66	
AZ		28131	"		5-16-66	
BA		28124	"		5-16-66	
BB		REVISED PER TDRR 28511	"		5-16-66	
BC		" " " 28949	"		5-24-66	
BD		" " " 29222	"		6-8-66	
BE		" " " 29235	"		"	

DASH NO.	P/C	PART NAME	REMARKS	PART NO.	SER. NO.	CONT. NO.	STYLE	TYPE	MATERIAL	
299	P									
298	R									
269	R	POWER CONTROL ASSY		2014044-021	NA	NAS-9-497	B	I	NOTE 11 B	FOR DIMENSIONS, SEE DASH 17 VALUES BELOW
268		SELF TEST ASSY		2014366-021						FOR DIMENSIONS, SEE DASH 15 VALUES BELOW
267		AGC JUNCTION ASSY		2014341-021						
266		POWER CONTROL ASSY		2014079-021						
265		BUFFER CIRCUIT ASSY		2014254-021						
264		DRAWER ASSY X Y INTERFACE		2014040-021						
263		DRAWER ASSY R D C INTERFACE		2014045-021						
262		DRAWER ASSY PROGRAMMER & MONITOR		2014041-021						FOR DIMENSIONS, SEE DASH 17 VALUES BELOW
261		LOGIC DRAWER ASSY NO. 2		2014037-021						
260		LOGIC DRAWER ASSY NO. 1		2014036-021				I	NOTE 11 B	
259		OPERATION CONSOLE		2014024-021				II	NOTE 11 C	FOR DIMENSIONS, SEE DASH 18 VALUES BELOW
258		COMPUTER TEST SET		2014042-021						
257		AUXILIARY CALIBRATION CONSOLE		2014059-021						
256		AGC CALIBRATION CONSOLE		2014049-021				II	NOTE 11 C	
255		AGC HANDLING FIXTURE		2014282-021				I	NOTE 11 B	FOR DIMENSIONS, SEE DASH 17 VALUES BELOW
254		DRAWER ASSY COMP. SIMULATOR		2014048-011				II	NOTE 11 C	FOR DIMENSIONS, SEE DASH 18 VALUES BELOW
253		SHIPPING KIT ASSY, NAV DSKY		2016312-011						
252		SHIPPING KIT ASSY, UNIVERSAL DSKY		2016316-011						
251		SHIPPING KIT ASSY, MAIN DSKY		2016313-011				II	NOTE 11 C	
250		AMPLIFIER, REWORK		2014386				I	NOTE 11 B	FOR DIMENSIONS, SEE DASH 15 VALUES BELOW
249		TEMP MONITOR ASSY		2014313-011					NOTE 11 C	FOR DIMENSIONS, SEE DASH 17 VALUES BELOW
248		AGC JUNCTION ASSY		2014341-011					NOTE 11 B	FOR DIMENSIONS, SEE DASH 15 VALUES BELOW
247		AC INPUT PANEL ASSY		2014302-011						
246		SELF TEST ASSY		2014392 011						
245		TAPE PUNCH ASSEMBLY		2014039-011						FOR DIMENSIONS, SEE DASH 15 VALUES BELOW
244	R	TAPE READER ASSEMBLY		2014038-011	NA	NAS-9-497	B	I	NOTE 11 B	
243										
242										
241	R	APOLLO GUIDANCE COMPUTER GROUP		6003001	NA	NAS-9-497	A	I	NOTE 11 B	FOR DIMENSIONS, SEE DASH 19 VALUES BELOW
240		SELF TEST ASSEMBLY		2014366-011	NA		B	I		FOR DIMENSIONS, SEE DASH 15 VALUES BELOW
239		POWER SUPPLY ASSY-115V., 400 CYCLE		2014207-011						FOR DIMENSIONS, SEE DASH 17 VALUES BELOW
238		AC INPUT PANEL ASSY		2014043-011						
237		POWER CONTROL ASSY		2014079-011						FOR DIMENSIONS, SEE DASH 15 VALUES BELOW
236		DRAWER ASSY-X Y INTERFACE		2014040-011						
235		DRAWER ASSY R D C INTERFACE		2014045-011						
234		BUFFER CIRCUIT ASSY		2014254-011						
233		CONTROL & INTERFACE ASSY		2014204-011						
232		POWER CONTROL ASSY		2014044-011						FOR DIMENSIONS, SEE DASH 17 VALUES BELOW
231		DRAWER ASSY, PROGRAMMER & MONITOR		2014041-011						
230		CONNECTOR INTERFACE ASSY		2014272-011						FOR DIMENSIONS, SEE DASH 15 VALUES BELOW
229		CONNECTOR INTERFACE ASSY		2014047-011						
228		ANTENNA TUNING CAPACITOR ASSY		2014209-011						
227		MOUNTING FIXTURE ASSY		2014006-011						FOR DIMENSIONS, SEE DASH 17 VALUES BELOW
226		POWER SUPPLY ASSY 3 VDC		2014234-011						FOR DIMENSIONS, SEE DASH 15 VALUES BELOW
225		PANEL ASSY — SIGNAL INTERFACE		2014010-011						
224		OSCILLOSCOPE ASSY		2014232-011						
223		AUXILIARY OUTLET ASSY		2014274-011						
222		FREQUENCY COUNTER		2014233-011						
221		POWER SUPPLY ASSY 10, 13, 28 VDC		2014235-011						
220		LOGIC DRAWER ASSY NO. 2		2014037-011						FOR DIMENSIONS, SEE DASH 17 VALUES BELOW
219		LOGIC DRAWER ASSY NO. 1		2014036-011						
218		COUNTER, ELECTRICAL ASSY		2014288-011						FOR DIMENSIONS, SEE DASH 15 VALUES BELOW
217		POWER SUPPLY ASSY		2014279-011						
216		TEST MOUNT ASSY		2014257-011						
215		UNIVERSAL DSKY PEDESTAL MOUNT		2014014-011						FOR DIMENSIONS, SEE DASH 17 VALUES BELOW
214		MAIN DSKY PEDESTAL MOUNT		2014343				I	NOTE 11B	
213		SHIPPING CONTAINER, MAIN DSKY		1006229				II	NOTE 11C	FOR DIMENSIONS, SEE DASH 18 VALUES BELOW
212		NAV DSKY		1006231						
211		AGC		1006230						
210		UNIVERSAL DSKY		1006422						
209		SHIPPING CONTAINER, AGC		1006421				II	NOTE 11C	
208		UNIVERSAL DSKY HANDLING FIXTURE		2014013-011				I	NOTE 11B	FOR DIMENSIONS, SEE DASH 15 VALUES BELOW
207		NAV DSKY HANDLING FIXTURE		1014377						FOR DIMENSIONS, SEE DASH 17 VALUES BELOW
206		MAIN DSKY HANDLING FIXTURE		1014334						
205		AGC HANDLING FIXTURE		2014282-011				I	NOTE 11B	
204		OPERATION CONSOLE		2014024-011				II	NOTE 11C	FOR DIMENSIONS, SEE DASH 18 VALUES BELOW
203		COMPUTER TEST SET		2014042-011		NAS-9-497				
202		DRAWER ASSY, COMPUTER SIMULATOR		2014048-011		FNP-12775				
201		AUXILIARY CALIBRATION CONSOLE		2014059-011		NAS-9-497				
200		AGC CALIBRATION CONSOLE		2014049-011	NA		B	II	NOTE 11C	
21										
20		NA		NA	NA	NA	A	II	NOTE 11 C	
19		NA		NA	NA	NA	A	I	NOTE 11 B	
18		NA		NA	NA	NA	B	II	NOTE 11 C	
17		NA		NA	NA	NA	B	I	NOTE 11 B	
16		NA		NA	NA	NA	B	II	NOTE 11 C	
15	R	NA		NA	NA	NA	B	I	NOTE 11 B	

DASH NO.	A	B	C	D	E	F	G	H	J	K	L	M	N	P	R	S	T	U	V	W	Y	Z	AA	AB	AC	AD	AE	AF	AG	AH	AJ	AK	AL	AM	AN	AP	AR
21																																					
20	2.000	1.312	1.687	1.375	.078	.031	.078	.093	.106 .113	.093	1.187	.750	.593	.453	1.015	.062	.187	.078	.875	.718	1.375	.218	1.156	1.843	.048	NA	.875	.305	.078	.312	1.687	.078	NA	.078	.312	.187	1.843
19	2.000	1.312	1.687	1.375	.078	.031	.078	.093	NA	NA	1.187	.750	.593	.453	1.015	.062	.187	.078	.875	.718	1.375	.218	NA	NA	.048	.031	.875	.305	.078	.312	1.687	.078	NA	.078	.312	.187	NA
18	4.187	1.875	3.469	2.750	.156	.093	.156	.125	.106 .113	.125	1.625	1.032	.844	.656	1.406	.093	.344	.156	1.781	1.531	2.844	.312	1.562	3.875	.062	NA	1.219	.500	.156	.719	3.469	.156	NA	.156	.719	.344	3.875
17	4.187	1.875	3.469	2.750	.156	.093	.156	.125	NA	NA	1.625	1.032	.844	.656	1.406	.093	.344	.156	1.781	1.531	2.844	.312	NA	NA	.062	.062	1.219	.500	.156	.719	3.469	.156	NA	.156	.719	.344	NA
16	2.000	1.312	1.687	1.375	.078	.031	.078	.093	.106 .113	.093	1.187	.750	.593	.453	1.015	.062	.187	.078	.875	.718	1.375	.218	1.156	1.843	.048	NA	.875	.305	.078	.312	1.687	.078	NA	.078	.312	.187	1.843
15	2.000	1.312	1.687	1.375	.078	.031	.078	.093	NA	NA	1.187	.750	.593	.453	1.015	.062	.187	.078	.875	.718	1.375	.218	NA	NA	.048	.031	.875	.305	.078	.312	1.687	.078	NA	.078	.312	.187	NA

THIS SHEET ADDED

Ⓖ REPLACES REV F WITH CHANGE

RAYTHEON DASH NUMBERS

NOTES FOR TABLE
STYLE A IS FOR G & N SYSTEM
STYLE B IS FOR GROUND SUPPORT EQUIPMENT
TYPE I IS WITHOUT MOUNTING HOLES
TYPE II IS WITH MOUNTING HOLES

QTY REQD	PART OR IDENTIFYING NO.	MATERIAL OR NOTES	NOMENCLATURE OR DESCRIPTION	FIND NO.

LIST OF MATERIALS

NEXT ASSY	USED ON
AS APPLICABLE	

APPLICATION

UNLESS OTHERWISE SPECIFIED
DIMENSIONS ARE IN INCHES
CAPACITOR VALUES ARE IN μf
RESISTOR VALUES ARE IN OHMS
TOLERANCES ON
FRACTIONS ± — DECIMALS ±.005 ANGLES ± —
DO NOT SCALE THIS DRAWING

MATERIAL
SEE NOTE 11

MIT
INSTRUMENTATION LAB
CAMBRIDGE, MASS.

DRAWN R. Q. Jones 7-16-65
CHECKED A. J. [illegible] 7-22-65
APPROVED
APPROVED W. Kupfer 7/22/65
APPROVED MIT W. Kupfer 7/22/65
APPROVED MSC [illegible]
DATE

MANNED SPACECRAFT CENTER
HOUSTON, TEXAS

NAMEPLATES,
APOLLO GEN-GSE
(STANDARDS)

CODE IDENT NO. 80230
SIZE E
DRAWING NO. 1004260
SCALE NONE
SHEET 3 OF 6

1004260E

MASTER

[illegible]

SYM	ZONE	DESCRIPTION	DR	CHK	DATE	APPROVED
		REVISIONS 02768				
G		REPLACES REV F WITH CHANGE PER TDRR 20854.			7/22/65	WK
H		REVISED PER TDRR 20892			8/5/65	WK
J		REVISED PER TDRR 20904			8/3/65	WK
K		REVISED PER TDRR 21379			8/6/65	WK
L		REVISED PER TDRR 21410			8/23/65	WK
M		REVISED PER TDRR 21993				
N		REVISED PER TDRR 22621				
P		REVISED PER TDRR 22671				
R		REVISED PER TDRR 22672				
S		REVISED PER TDRR 22750				
T		REVISED PER TDRR 22823			/65	WK
U		REVISED PER TDRR 23072			10-30-65	MGM
V		REVISED PER TDRR 23521			10-26-65	WK
W		REVISED PER TDRR 23824	RAJ		11-9-65	WK
Y		REVISED PER TDRR 24018	RAJ		11-16-65	WK
Z		REVISED PER TDRR 24040	RAJ		11-19-65	WK
AA		REVISED PER TDRR 24060	RAJ		11-19-65	WK
AB		REVISED PER TDRR 24868	RAJ		2-22-65	WK
AC		REVISED PER TDRR 24973	RAJ		1-4-66	WK
AD		REVISED PER TDRR 25065	RAJ		1-18-66	MGM
AE		REVISED PER TDRR 25672	RAJ		2-4-66	WK
AF		REVISED PER TDRR 25671	RAJ		2-4-66	WK
AG		REVISED PER TDRR 26110	RAJ		2-15-66	WK
AH		REVISED PER TDRR 26372	"		3-16-66	MGM
AJ		REVISED PER TDRR 26425	"		3-16-66	MGM
AK		REVISED PER TDRR 26743	"		3-16-66	MGM
AL		REVISED PER TDRR 26798	"		3-16-66	MGM
AM		REVISED PER TDRR 27168	"		4-8-66	MGM
AN		REVISED PER TDRR 27235	"		4-8-66	MGM
AP		REVISED PER TDRR 27345	"		4-8-66	MGM
AR		REVISED PER TDRR 27417	"		4-8-66	MGM
AS		REVISED PER TDRR 27442	"		4-8-66	MGM
AT		REVISED PER TDRR 27719	"		4-21-66	WK
AU		REVISED PER TDRR 27880	"		4-21-66	WK
AV		REVISED PER TDRR 27896	"		4-21-66	WK
AW		28110	"		5-16-66	MGM
AY		28173	"			MGM
AZ		28131	"			MGM
BA		28124	"			MGM
BB		REVISED PER TDRR 28511	"		5-16-66	MGM
BC		" " " 28949	"		5-24-66	MGM
BD		" " " 29222	"		6-8-66	MGM
BE		" " " 29235	"		"	MGM

DASH NO.	P/C	PART NAME	REMARKS	PART NO.	SER. NO.	CONT. NO.	STYLE	TYPE	MATERIAL	A	B	C	D	E	F	G	H	J	K	L	M	N	P	R	S	T	U	V	W	Y	Z	AA	AB	AC	AD	AE	AF	AG	AH	AJ	AK	AL	AM	AN	AP	AR
199	AC	EYEPIECE STOWAGE UNIT		2021255-011			A	I		FOR DIMENSIONS, SEE DASH 100 VALUES BELOW																																				
198	AC	SIGNAL CONDITIONER ASSY C/M		2007234		NAS 9-497			NOTE 11B																																					
197	AC	SIGNAL CONDITIONER ASSY C/M		2007235																																										
196	AC	SIGNAL CONDITIONER ASSY LEM		6007010																																										
195	AC	PSA & SIGNAL CONDITIONER ASSY		6007009			A	I	NOTE 11B																																					
194	AC	PANEL, MONITOR		2900031-031			B	II	NOTE 11C	FOR DIMENSIONS, SEE DASH 141 VALUES BELOW																																				
193	AC	DISTRIBUTION BOX, G S E		2900024-031																																										
192	AC	ANALYZER, OPTICS-INERTIAL		2900023-031						FOR DIMENSIONS, SEE DASH 144 VALUES BELOW																																				
191	AC	TEST CONTROL		2900027-031						FOR DIMENSIONS, SEE DASH 141 VALUES BELOW																																				
190	AC	PANEL, PWR SUP AND LOAD		2900033-021																																										
189	AC	ADPT MODULE, P. S. A.		6900088-011																																										
188	AC	ADPT MODULE, P. S. A.		2901143-011																																										
187	AC	FIXTURE, MTG, PTA/PEA		2900066-021		NAS 9-497	B	II	NOTE 11C																																					
186	AC	ANN PNL & EYEPIECE STOW. ASSY		1021255-021			A	I		FOR DIMENSIONS, SEE DASH 100 VALUES BELOW																																				
185	AC	ANN PNL & EYEPIECE STOW. ASSY		1021255-011			A	I																																						
184	AC	FIX., HAND., G AND N HARNESS		1901846-041		NAS-9-497	B	II	NOTE 11C	FOR DIMENSIONS, SEE DASH 144 VALUES BELOW																																				
183	AC	INSTALLING TOOL, ELEC. CONN		1902586-011			B	II	NOTE 11C	FOR DIMENSIONS, SEE DASH 102 VALUES BELOW																																				
182	AC	ADPT MODULE, P. S. A.		6900088-011			B	II	NOTE 11C	FOR DIMENSIONS, SEE DASH 141 VALUES BELOW																																				
181	AC	G & N INDICATOR CONTROL PANEL ASSY		2014578-011			A	I	NOTE 11B	3.000	1.938	2.437	NA	.125	.062	.188	.156	NA	NA	1.750	1.125	.906	.688	1.500	NA	.281	.125	NA	1.094	2.062	.312	NA	2.500	.062	.125	1.312	.469	NA	NA	NA	.156	NA	.125	.469	.344	NA
180	AC	ADPT MODULE, P. S. A.		1902431-031			B	II		FOR DIMENSIONS, SEE DASH 121 VALUES BELOW																																				
179	AC	MOUNTING PLATE, IMU/PTA		6900083-011						FOR DIMENSIONS, SEE DASH 144 VALUES BELOW																																				
178	AC	MOUNTING PLATE, COMPONENT		6900007-021																																										
177	AC	FIX., MOUNTING, SUBSYSTEM		2900070-021																																										
176	AC	FIX., MOUNTING, G AND N		2900067-021																																										
175	AC	CSL, COOL. AND PWR, G AND N		1902134-031																																										
174	AC	FIX., HAND., C/M AND LEM CDU		2900999-011					NOTE 11C	FOR DIMENSIONS, SEE DASH 141 VALUES BELOW																																				
173	AC	FIX., HANDLING, C/M PSA		2900998-011																																										
172	AC	CAGING ELECTRONICS, GYRO		2900029-021																																										
171	AC	DISTRIBUTION BOX, GSE		2900024-021																																										
170	AC	ANALYZER, OPTICS-INERTIAL		2900023-021						FOR DIMENSIONS, SEE DASH 144 VALUES BELOW																																				
169	AC	ADPT, TEST POINT, P.S.A.		2900037-021						FOR DIMENSIONS, SEE DASH 141 VALUES BELOW																																				
168	AC	TEST SELECTOR		2900028-021																																										
167	AC	TEST CONTROL		2900027-021																																										
166	AC	PANEL, MONITOR		2900031-021																																										
165	AC	TERM. BOARD STORAGE DRAWER		2900927-011																																										
164	AC	INPUT/OUTPUT PANEL		2900926-011																																										
163	AC	CONTROL PANEL		2900896-011																																										
162	AC	CSL. CAL AND TEST, SCM/PSAAM		2900895-011						FOR DIMENSIONS, SEE DASH 144 VALUES BELOW																																				
161	AC	FIX., LIFT AND HAND., IMU		1015462-011						FOR DIMENSIONS, SEE DASH 141 VALUES BELOW																																				
160	AC	FIX., HAND., G AND N HARNESS		1901846-031						FOR DIMENSIONS, SEE DASH 144 VALUES BELOW																																				
159	AC	BATTERY POWER PACK		1900011-031			B	II	NOTE 11C																																					
158	AC	COUPLING DATA UNIT ASSEMBLY C/M		2007222			A	I	NOTE 11B	FOR DIMENSIONS, SEE DASH 100 VALUES BELOW																																				
157	AC	COUPLING DATA UNIT ASSEMBLY-LEM		2007222																																										
156	AC	POWER & SERVO ASSEMBLY C/M		2007200																																										
155	AC	PIPA ELECTRONICS ASSEMBLY		2007201																																										
154	AC	PULSE TORQUE ASSEMBLY-LEM		6007000																																										
153	AC	POWER & SERVO ASSEMBLY-LEM		6007200			A	I	NOTE 11B																																					
152	AC	CONT PNL, RSVR CKT TESTER		2900770-011			B	II	NOTE 11C	FOR DIMENSIONS, SEE DASH 141 VALUES BELOW																																				
151	AC	TESTER, RESOLVER CIRCUIT		2900708-011																																										
150	AC	JUNCTION BOX, P.S.A./G.S.E.		1901933-021						FOR DIMENSIONS, SEE DASH 144 VALUES BELOW																																				
149	AC	BATTERY PACK, LIFTING		2900612-011						FOR DIMENSIONS, SEE DASH 141 VALUES BELOW																																				
148	AC	MOUNTING PLATE, COMPONENT		6900007-011						FOR DIMENSIONS, SEE DASH 144 VALUES BELOW																																				
147	AC	MOUNTING PLATE, COMPONENT		2900677-011																																										
146	AC	CART, TRANS, G AND N		1900009-041																																										
145	AC	CONTAINER, SHIPPING, IMU		1900010-021		NAS-9-497	B	II	NOTE 11C																																					
144	AC	FIX., MOUNTING, G AND N		1902204-021			B	II	NOTE 11C	4.125	1.812	3.250	NA	.125	.062	.12	.156	.100 .104	.125	1.625	1.140	.890	.640	1.390	.725	.171	.125	1.875	1.687	2.625	.250	1.562	3.843	.093	NA	NA	.359	.125	.437	3.688	NA	3.687	.093	.40	.25	3.875
143	AC	CSL, COOL. AND PWR, G AND N		1902134-021						4.125	1.812	3.250		.125	.062	.12	.156		.125	1.625	1.140	.890	.640	1.390	.125	.171	.125	1.875	1.687	2.625	.250	1.562	3.843	.093			.359	.125	.437	3.686		3.687	.093	.40	.25	3.875
142	AC	ANALYZER, OPTICS-INERTIAL		2900023-011						4.125	1.812	3.250		.125	.062	.12	.156		.125	1.625	1.140	.890	.640	1.390	.125	.171	.125	1.875	1.687	2.625	.250	1.562	3.843	.093			.359	.125	.437	3.688		3.687	.093	.40	.25	3.875
141	AC	CONT. TEMP, PORTABLE		2900060-011						2.125	.968	1.718		.093	.031	.06	.093		.093	.858	.608	.484	.358	.733	.077	.116	.062	.937	.875	1.343	.125	.781	1.892	.046			.209	.093	.250	1.875		1.840	.046	.23	.16	1.938
140	AC	TESTER, CKT, IMU/CDU RSVR		2900286-011						4.125	1.812	3.250		.125	.062	.12	.156		.125	1.625	1.140	.890	.640	1.390	.125	.171	.125	1.875	1.687	2.625	.250	1.562	3.843	.093			.359	.125	.437	3.688		3.687	.093	.40	.25	3.875
139	AC	SIMULATOR, LD/SIG, CDU		2900285-011																																										
138	AC	SIMULATOR, LD/SIG, OPTICS		1902023-021																																										
137	AC	FIX., MOUNTING, IMU/NAV BASE		6900003-011																																										
136	AC	FIXTURE, OPTICS/NAV BASE		2900072-011																																										
135	AC	FIX., MOUNTING, SUB SYSTEM		2900070-011																																										
134	AC	FIX., HAND., G AND N HARNESS		2900069-011																																										
133	AC	CNTR, SHIPPING, NAV BASE		2900068-011																																										
132	AC	FIX., MOUNTING, G AND N		2900067-011																																										
131	AC	SIMULATOR, LD/SIG, IMU/CDU		2900062-011																																										
130	AC	TESTER, GYRO WHEEL		2900061-011																																										
129	AC	COOLANT SUPPLY		1902133-021																																										
128	AC	TABLE, ROTARY		1900926-021						4.125	1.812	3.250		.125	.062	.12	.156		.125	1.625	1.140	.890	.640	1.390	.125	.171	.125	1.875	1.687	2.625	.250	1.562	3.843	.093			.359	.125	.437	3.688		3.687	.093	.40	.25	3.875
127	AC	FIX., HAND., OPTICS		2900074-011						2.125	.968	1.718		.093	.031	.06	.093		.093	.858	.608	.484	.358	.733	.077	.116	.062	.937	.875	1.343	.125	.781	1.892	.046			.209	.093	.250	1.875		1.840	.046	.23	.16	1.938
126	AC	FIXTURE, MTG, PTA/PEA.		2900066-011																																										
125	AC	CONT, TEMP, IMU LIFTING		2900063-011																																										
124	AC	FIXTURE, HANDLING, IMU		2900064-011																																										
123	AC	CONT, OPTICS, REMOTE		1902046-021																																										
122	AC	TEST CONTROL		1902009-021																																										
121	AC	ADPT MODULE, P.S.A.		1902431-021																																										
120	AC	BRIDGE, DECADE ERROR		2900128-011																																										
119	AC	PWR SUP, ELECTRONICS		2900012-011																																										
118	AC	PWR SUP, RELAY AND LAMP		1900049-031																																										
117	AC	CONSOLE, OSCILLOGRAPH		1900000-021																																										
116	AC	ADPT MODULE, P.S.A.		1902431-011																																										
115	AC	ADPT, TEST POINT, PTA/PEA.		2900145-011																																										
114	AC	ADPT, TEST POINT, P.S.A.		2900037-011																																										
113	AC	CONTROL, GIMBAL POSITION		2900036-011																																										
112	AC	SELECTOR, SIGNAL, PRIMARY		2900035-011																																										
111	AC	SEL, SIG, OSCILLOGRAPH		2900034-011																																										
110	AC	PANEL, PWR SUP AND LOAD		2900033-011																																										
109	AC	PANEL, MONITOR		2900031-011																																										
108	AC	PANEL, AUXILIARY INPUT		2900030-011																																										
107	AC	CAGING ELECTRONICS, GYRO		2900029-011																																										
106	AC	TEST SELECTOR		2900028-011																																										
105	AC	TEST CONTROL		2900027-011																																										
104	AC	MONITOR AND CONTROL, TEMP		2900026-011																																										
103	AC	DISTRIBUTION BOX, GSE		2900024-011																																										
102	AC	VOLTMETER, DIGITAL		2900007-011			B	II	NOTE 11C	2.125	.968	1.718	NA	.093	.031	.06	.093	.100 .104	.093	.858	.608	.484	.358	.733	.077	.116	.062	.937	.875	1.343	.125	.781	1.892	.046	NA	NA	.209	.093	.250	1.875	NA	1.840	.046	.23	.16	1.938
101	AC	NAVIGATION BASE ASSEMBLY-LEM		6899950		NAS-9-497	A	I	NOTE 11B	2.000	1.312	1.906	1.375	.078	.048	.078	.093	NA	NA	1.125	.750	.593	.453	1.015	.062	.187	.078	.875	.718	1.375	.218	NA	NA	.048	.031	.875	.305	.078	.531	1.906	.078	NA	.078	.531	.187	NA
100	AC	NAVIGATION BASE ASSEMBLY		2899982		NAS-9-497	A	I	NOTE 11B	2.000	1.312	1.906	1.375	.078	.048	.078	.093	NA	NA	1.125	.750	.593	.453	1.015	.062	.187	.078	.875	.718	1.375	.218	NA	NA	.048	.031	.875	.305	.078	.531	1.906	.078	NA	.078	.531	.187	NA

THIS SHEET ADDED

Ⓖ REPLACES REV F WITH CHANGE

AC ELECTRONICS DASH NUMBERS

NOTES FOR TABLE
STYLE A IS FOR G&N SYSTEM
STYLE B IS FOR GROUND SUPPORT EQUIPMENT
TYPE I IS WITHOUT MOUNTING HOLES
TYPE II IS WITH MOUNTING HOLES

NOTE: AC DASH NO's. CONT. ON SH.6

MASTER

QTY REQD	PART OR IDENTIFYING NO.	MATERIAL OR NOTES	NOMENCLATURE OR DESCRIPTION	FIND NO.

LIST OF MATERIALS

NEXT ASSY	USED ON
AS APPLICABLE	

APPLICATION

UNLESS OTHERWISE SPECIFIED
DIMENSIONS ARE IN INCHES
CAPACITOR VALUES ARE IN μf
RESISTOR VALUES ARE IN OHMS
TOLERANCES ON
FRACTIONS ± — DECIMALS ±.005 ANGLES ± —
DO NOT SCALE THIS DRAWING

MATERIAL
SEE NOTE 11

MIT
INSTRUMENTATION LAB
CAMBRIDGE, MASS.

MANNED SPACECRAFT CENTER
HOUSTON, TEXAS

		DATE
DRAWN	R A Jones	7-16-65
CHECKED		7-22-65
APPROVED		
APPROVED	W Kupfer	
APPROVED MIT	W Kupfer	
APPROVED MSC		

NAMEPLATES,
APOLLO G&N-GSE
(STANDARDS)

CODE IDENT NO. 80230
SIZE E
DRAWING NO. 1004260
SCALE NONE
SHEET 4 OF 6

1004260 BE

NOTICE – WHEN GOVERNMENT DRAWINGS, SPECIFICATIONS, OR OTHER DATA ARE USED FOR ANY PURPOSE OTHER THAN IN CONNECTION WITH A DEFINITELY RELATED GOVERNMENT PROCUREMENT OPERATION, THE UNITED STATES GOVERNMENT THEREBY INCURS NO RESPONSIBILITY NOR ANY OBLIGATION WHATSOEVER; AND THE FACT THAT THE GOVERNMENT MAY HAVE FORMULATED, FURNISHED, OR IN ANY WAY SUPPLIED THE SAID DRAWINGS, SPECIFICATIONS, OR OTHER DATA IS NOT TO BE REGARDED BY IMPLICATION OR OTHERWISE AS IN ANY MANNER LICENSING THE HOLDER OR ANY OTHER PERSON OR CORPORATION, OR CONVEYING ANY RIGHTS OR PERMISSION TO MANUFACTURE, USE, OR SELL ANY PATENTED INVENTION THAT MAY IN ANY WAY BE RELATED THERETO.

REVISIONS 02768

SYM	ZONE	DESCRIPTION	DR	CHK	DATE	APPROVED
G		REPLACES REV F WITH CHANGE PER TDRR 20854	rj		7/26/65	WK
H		REVISED PER TDRR 20892	rj		8/3/65	WK
J		REVISED PER TDRR 20904	rj		8/3/65	WK
K		REVISED PER TDRR 21379	rj		8/6/65	WK
L		REVISED PER TDRR 21410	rj		8/12/65	WK
M		REVISED PER TDRR 21993	rj			
N		REVISED PER TDRR 22621	rj		10/	
P		REVISED PER TDRR 22671	rj			
R		REVISED PER TDRR 22672	rj		11/	
S		REVISED PER TDRR 22750	rj			
T		REVISED PER TDRR 22823	rj		16/	WK
U		REVISED PER TDRR 23072	rj		10-11-65	
V		REVISED PER TDRR 23521	rj		10-26-65	WK
W		REVISED PER TDRR 23824	RAJ		11-9-65	WK
Y		REVISED PER TDRR 24018	RAJ		11-16-65	WK
Z		REVISED PER TDRR 24040	RAJ		11-19-65	WK
AA		REVISED PER TDRR 24060	RAJ		11-19-65	WK
AB		REVISED PER TDRR 24868	RAJ		12-22-65	WK
AC		REVISED PER TDRR 24973	RAJ		1-4-66	WK
AD		REVISED PER TDRR 25065	RAJ		1-18-66	
AE		REVISED PER TDRR 25672	RAJ		2-4-66	WK
AF		REVISED PER TDRR 25671	RAJ		2-4-66	WK
AG		REVISED PER TDRR 26110	RAJ		2-15-66	WK
AH		REVISED PER TDRR 26372	"		3-16-66	WGM
AJ		REVISED PER TDRR 26425	"		3-16-66	
AK		REVISED PER TDRR 26743	"		3-16-66	WGM
AL		REVISED PER TDRR 26798	"		3-16-66	WGM
AM		REVISED PER TDRR 27168	"		4-7-66	WGM
AN		REVISED PER TDRR 27235	"		4-7-66	WGM
AP		REVISED PER TDRR 27345	"		4-7-66	WGM
AR		REVISED PER TDRR 27417	"		4-7-66	WGM
AS		REVISED PER TDRR 27442	"		4-7-66	WGM
AT		REVISED PER TDRR 27719	"		4-20-66	WK
AU		REVISED PER TDRR 27880	"		4-20-66	WK
AV		REVISED PER TDRR 27896	"		4-20-66	WK
AW		28110			5-16-66	WGM
AY		28173	"			WGM
AZ		28131	"			WGM
BA		28124	"			WGM
BB		REVISED PER TDRR 28511	"		5-16-66	WGM
BC		" " " 28949	"		5-24-66	
BD		" " " 29222	"		6-8-66	
BE		" " " 29235	"		"	

DASH NO.	P/C	PART NAME	REMARKS	PART NO.	SER. NO.	CONT. NO.	STYLE	TYPE	MATERIAL	A	B	C	D	E	F	G	H	J	K	L	M	N	P	R	S	T	U	V	W	Y	Z	AA	AB	AC	AD	AE	AF	AG	AH	AJ	AK	AL	AM	AN	AP	AR
499	MIT																																													
498																																														
401	MIT	COMPUTER ASSY		2003100		NAS-9-497	A	I	NOTE 11 B	2.000	1.312	1.906	1.375	.078	.048	.078	.093	NA	NA	1.125	.750	.593	.453	1.015	.062	.187	.078	.875	.718	1.375	.218	NA	NA	.048	.031	.875	.305	.078	.531	1.906	.078	NA	.078	.531	.187	NA
400	MIT	LIFTING SLING-G&N INST. QUAL. FIX. & AZM. REF. FIX.		1021640		NAS-9-4065	B	II	NOTE 11 C	2.000	1.312	1.687	1.375	.078	.048	.078	.093	.086/.081	.093	1.187	.750	.593	.453	1.015	.062	.187	.078	.875	.718	1.375	.218	1.156	1.843	.048	NA	.875	.305	.078	.312	1.687	.110	1.830	.070	.275	.180	1.844

MIT DASH NUMBERS

THIS SHEET ADDED

Ⓖ REPLACES REV F WITH CHANGE

NOTES FOR TABLE

STYLE A IS FOR G&N SYSTEM
STYLE B IS FOR GROUND SUPPORT EQUIPMENT
TYPE I IS WITHOUT MOUNTING HOLES
TYPE II IS WITH MOUNTING HOLES

MASTER

QTY REQD	PART OR IDENTIFYING NO.	MATERIAL OR NOTES	NOMENCLATURE OR DESCRIPTION	FIND NO.

LIST OF MATERIALS

NEXT ASSY	USED ON
AS APPLICABLE	

APPLICATION

UNLESS OTHERWISE SPECIFIED
DIMENSIONS ARE IN INCHES
CAPACITOR VALUES ARE IN μf
RESISTOR VALUES ARE IN OHMS
TOLERANCES ON
FRACTIONS ± — DECIMALS ±.005 ANGLES ± —
DO NOT SCALE THIS DRAWING

MATERIAL
SEE NOTE 11

MIT
INSTRUMENTATION LAB
CAMBRIDGE, MASS.

DRAWN R A Jones 7-16-65
CHECKED 7-23-65
APPROVED
APPROVED W Kupfer 7/26/65
APPROVED MIT W Kupfer 7/26/65
APPROVED MSC 7/26/65
DATE

MANNED SPACECRAFT CENTER
HOUSTON, TEXAS

NAMEPLATES,
APOLLO G&N-GSE
(STANDARDS)

CODE IDENT NO. 80230
SIZE E
DRAWING NO. 1004260
SCALE NONE
SHEET 5 OF 6

1004260

NOTICE – WHEN GOVERNMENT DRAWINGS, SPECIFICATIONS, OR OTHER DATA ARE USED FOR ANY PURPOSE OTHER THAN IN CONNECTION WITH A DEFINITELY RELATED GOVERNMENT PROCUREMENT OPERATION, THE UNITED STATES GOVERNMENT THEREBY INCURS NO RESPONSIBILITY NOR ANY OBLIGATION WHATSOEVER; AND THE FACT THAT THE GOVERNMENT MAY HAVE FORMULATED, FURNISHED, OR IN ANY WAY SUPPLIED THE SAID DRAWINGS, SPECIFICATIONS OR OTHER DATA IS NOT TO BE REGARDED BY IMPLICATION OR OTHERWISE AS IN ANY MANNER LICENSING THE HOLDER OR ANY OTHER PERSON OR CORPORATION, OR CONVEYING ANY RIGHTS OR PERMISSION TO MANUFACTURE, USE, OR SELL ANY PATENTED INVENTION THAT MAY IN ANY WAY BE RELATED THERETO.

REVISIONS 02768

SYM	ZONE	DESCRIPTION	DR	CHK	DATE	APPROVED
AG		CHANGED NUMBER OF SHEETS FROM 5 TO 6 PER TDRR 26110.	RAJ		2-15-66	
AH		REVISED PER TDRR 26372	"		3-16-66	
AJ		REVISED PER TDRR 26425	"		3-16-66	
AK		REVISED PER TDRR 26743	"		3-16-66	
AL		REVISED PER TDRR 26798	"		3-16-66	
AM		REVISED PER TDRR 27168	"		4-7-66	
AN		REVISED PER TDRR 27235	"		4-7-66	
AP		REVISED PER TDRR 27345	"		4-7-66	
AR		REVISED PER TDRR 27417	"		4-7-66	
AS		REVISED PER TDRR 27442	"		4-7-66	
AT		REVISED PER TDRR 27719	"		4-20-66	
AU		REVISED PER TDRR 27880	"		4-20-66	
AV		REVISED PER TDRR 27896	"		4-20-66	
AW		28110	"		5-16-66	
AY		28173	"		5-16-66	
AZ		28131	"		5-16-66	
BA		28124	"		5-16-66	
BB		REVISED PER TDRR 28511	"		5-16-66	
BC		" " " 28949	"		5-24-66	
BD		" " " 29222	"		6-8-66	
BE		" " " 29235	"		"	

593	AC
598	AC

DASH NO.	P/C	PART NAME	REMARKS	PART NO.	SER NO.	CONT NO.	STYLE	TYPE	MATERIAL	A	B	C	D	E	F	G	H	J	K
527	AC	FIX., MOUNTING, G AND N	(-144)	1902204-021		NAS 9-497	B	II	NOTE 11C	FOR DIMENSIONS, SEE DASH 500 VALUES BELOW									
526	AC	FIX., MOUNTING, G AND N	(-144)	2900067-031															
525	AC	PORTABLE TEMP. CONTROLLER		1900496-021		NAS 9-497	B	II	NOTE 11C	3.000	1.937	2.437	2.312	.125	.031	.125	.156	.125	.125
519	AC	FIXTURE, HANDLING, LEM-PSA	(-141)	6900129-011		NAS-9-497	B	II	NOTE 11C	FOR DIMENSIONS, SEE DASH 504 VALUES BELOW									
518	AC	JUNCTION BOX, GSE-PSA	(-144)	1901933-031		NAS-9-497	B	II	NOTE 11C	FOR DIMENSIONS, SEE DASH 500 VALUES BELOW									
514	AC	SIGNAL COND. ASSY LEM OPER.	(-100)	6007013		NAS-9-497	A	I	NOTE 11B	FOR DIMENSIONS, SEE DASH 508 VALUES BELOW									
513		JUMPER, BY-PASS	(-141)	1021616			B	II	NOTE 11C	2.125	.968	1.718	NA	.093	.031	.06	.093	.100 .104	.093
512		COUPLING DATA UNIT ASSEMBLY C/M	(-100)	2007322-011			A	I	NOTE 11B	FOR DIMENSIONS, SEE DASH 508 VALUES BELOW									
511		COUPLING DATA UNIT ASSEMBLY - LEM	(-100)	2007322-021															
510		BATTERY POWER PACK	(-144)	1900011-041			B	II	NOTE 11C	FOR DIMENSIONS, SEE DASH 500 VALUES BELOW									
509		JUNCTION BOX, P.S.A./G.S.E.	(-144)	1902195-021			B	II	NOTE·11C										
508		NAVIGATION BASE ASSEMBLY - LEM	✓ (-101)	6899980			A	I	NOTE 11B	2.000	1.312	1.906	1.375	.078	.048	.078	.093	NA	NA
507		CSL, COOL. AND PWR, G AND N	(-144)	1902134-041			B	II	NOTE 11C	FOR DIMENSIONS, SEE DASH 500 VALUES BELOW									
506		BREAKOUT BOX, CABLE ADAPTER	(-141)	2901011-011						2.125	.968	1.718	NA	.093	.031	.06	.093	.100 .104	.093
505		MONITOR AND CONTROL, TEMP	(-141)	2900026-021															
504		PWR SUP, GUIDANCE SYSTEM	✓ (-141)	1900033-021															
503		CONTROL, GIMBAL POSITION	(-141)	2900036-021															
502		ADPT, TEST POINT, PTA/PEA,	(-141)	2900145-021															
501		MOUNTING PLATE, COMPONENT	(-144)	6900007-031			B	II	NOTE 11C	FOR DIMENSIONS, SEE DASH 500 VALUES BELOW									
500	AC	MOUNTING PLATE, COMPONENT	✓ (-144)	2900677-021		NAS-9-497				4.125	1.812	3.250	NA	.125	.062	.12	.156	.100/.104	.125

DASH NO.	L	M	N	P	R	S	T	U	V	W	Y	Z	AA	AB	AC	AD	AE	AF	AG	AH	AJ	AK	AL	AM	AN	AP	AR
527																											
526																											
525	1.718	1.187	.968	.749	1.452	.093	.295	.125	1.312	1.00	2.000	.250	1.687	2.750	.062	N/A	N/A	.463	.125	.125	2.315	.140	2.562	.090	.468	.359	2.750
519																											
518																											
514																											
513	.858	.608	.484	.358	.733	.077	.116	.062	.937	.875	1.343	.125	.781	1.892	.046	NA	NA	.209	.093	.250	1.875	NA	1.840	.046	.23	.16	1.938
512																											
511																											
510																											
509																											
508	1.125	.750	.593	.453	1.015	.062	.187	.078	.875	.718	1.375	.218	NA	NA	.048	.031	.875	.305	.078	.531	1.906	.078	NA	.078	.531	.187	NA
507																											
506	.858	.608	.484	.358	.733	.077	.116	.062	.937	.875	1.343	.125	.781	1.892	.046	NA	NA	.209	.093	.250	1.875	NA	1.840	.046	.23	.16	1.938
505																											
504																											
503																											
502																											
501																											
500	1.625	1.140	.890	.640	1.390	.125	.171	.125	1.875	1.687	2.625	.250	1.562	3.843	.093	NA	NA	.359	.125	.437	3.688	NA	3.687	.093	.40	.25	3.875

A C ELECTRONICS DASH NUMBERS

Ⓐⓖ THIS SHEET ADDED

NOTES FOR TABLE

STYLE A IS FOR G&N SYSTEM
STYLE B IS FOR GROUND SUPPORT EQUIPMENT
TYPE I IS WITHOUT MOUNTING HOLES
TYPE II IS WITH MOUNTING HOLES

MASTER

MASTER

QTY REQD	PART OR IDENTIFYING NO.	MATERIAL OR NOTES	NOMENCLATURE OR DESCRIPTION	FIND NO.

LIST OF MATERIALS

AS APPLICABLE	
NEXT ASSY	USED ON
APPLICATION	

UNLESS OTHERWISE SPECIFIED
DIMENSIONS ARE IN INCHES
CAPACITOR VALUES ARE IN μf
RESISTOR VALUES ARE IN OHMS
TOLERANCES ON
FRACTIONS ± — DECIMALS ±.005 ANGLES ± —
DO NOT SCALE THIS DRAWING

MATERIAL
SEE NOTE 11

MIT
INSTRUMENTATION LAB
CAMBRIDGE, MASS.

DRAWN E. A. Jones 2-15-66
CHECKED 2-15-66
APPROVED
APPROVED
APPROVED MIT A. C. METZGER 5-18-66
APPROVED MSC
DATE

MANNED SPACECRAFT CENTER
HOUSTON, TEXAS

NAMEPLATES,
APOLLO G&N-GSE
(STANDARDS)

CODE IDENT NO. 80230
SIZE E
DRAWING NO. 1004260
SCALE NONE
SHEET 6 OF 6

TICE - WHEN GOVERNMENT DRAWINGS, SPECIFICATIONS, OR OTHER DATA RE USED FOR ANY PURPOSE OTHER THAN IN CONNECTION WITH A DEFINITELY RELATED GOVERNMENT PROCUREMENT OPERATION, THE UNITED STATES GOVERNMENT THEREBY INCURS NO RESPONSIBILITY NOR ANY OBLIGATION WHATSOEVER, AND THE FACT THAT THE GOVERNMENT MAY HAVE FORMULATED, FURNISHED, OR IN ANY WAY SUPPLIED THE SAID DRAWINGS, SPECIFICATIONS, OR OTHER DATA IS NOT TO BE REGARDED BY IMPLICATION OR OTHERWISE AS IN ANY MANNER LICENSING THE HOLDER OR ANY OTHER PERSON OR CORPORATION, OR CONVEYING ANY RIGHTS OR PERMISSION TO MANUFACTURE, USE, OR SELL ANY PATENTED INVENTION THAT MAY IN ANY WAY BE RELATED THERETO.

NOTES:

1. INTERPRET DRAWING IN ACCORDANCE WITH STANDARDS PRESCRIBED IN MIL-D-70327.
2. DIMENSIONS ON EACH VIEW APPLY TO ALL VIEWS. (WITH THE EXCEPTION OF MOUNTING HOLES).
3. FORMATS ILLUSTATED WILL BE APPLICABLE TO ALL ITEMS REQUIRING NAMEPLATES BELOW END ITEM DESIGNATION (SYSTEMS, ASSEMBLIES, ETC.)
4. PLATE BACKGROUND TO BE LUSTERLESS BLACK PER FED-STD-595, COLOR 37038. BORDER, MARKING AND LETTERING TO BE NATURAL METAL,(ANODIZED ALUMINUM).
5. MARKING METHOD TO BE DIE STAMPING, ETCHING OR ENGRAVING IN ACCORDANCE WITH MIL P 19834.
6. LETTERING STYLE TO BE GOTHIC,(SANS SERIFS), AND NUMBERS TO BE ARABIC.
7. WHERE LOCATING DIMENSIONS ARE NOT SHOWN, CHARACTERS SHALL BE SYMMETRICALLY POSITIONED.
8. IDENTIFY WITH DRAWING NUMBER PER ND 1002019.
9. WHEN "AUTO MARK" METAL MARKING TYPEWRITER IS USED TO ADD DATA TO BLANK SPACES, T... SIZE IS TO BE SELECTED FROM DIMENSIONS U, AC AND AM.
10. NASA SYMBOL IS TO BE PROPORTIONAL TO NAMEPLATE IN RATIO OF 1 TO 5 WITH DIMENSION A VALUE AND IS TO HAVE NATURAL BACKGROUND. NASA SYMBOL LETTERS LETTERING AND FEATHER TO BE BLACK,(OR WHITE FOR SILK SCREENING). WHERE BLACK FEATHER PROTRUDES INTO BLACK BACKGROUND, A MINIMUM OUTLINE OF NATURAL BACKGROUND SHALL EXIST.
11. NAMEPLATES WILL BE APPLIED BY METHODS LISTED BELOW, SHOWN IN ORDER OF PREFERENCE, (I.E., FOR RELIABILITY AND WEIGHT).
    - A - STENCIL OR SILK SCREEN DIRECTLY ON EQUIPMENT USING INK PER SCD 1010920,(WHITE OR BLACK).
    - B - ALUMINUM FOIL,(STYLE A OR B, TYPE I):
      FOIL SHALL BE .0030 ±.0005 THICK PER MIL-A-148.
      FOIL SHALL HAVE NO ADHESIVE BACKING.
      FOIL SHALL BE BONDED PER ND 1002219,(METHOD II).
      FOIL SHALL BE CLEAR ANODIZED PER MIL-A-8625, TYPE II.
    - C - PLATE, (STYLE A OR B, TYPE II):
      MATERIAL: QQ-A-250, TEMPER O OR H14, TYPE 1100, ALUMINUM ALLOY, .032 THICK.
      ANODIZE PER MIL-A-8625, TYPE II.
      ALUMINUM PLATE MUST BE FREE FROM BURRS AND SHARP CORNERS, MOUNTED WITH APPLICABLE SIZE FASTENERS.
12. NAMEPLATES SHALL BE CAPABLE OF MEETING APPLICABLE REQUIREMENTS OF MIL-M-13231.
13. ON DIMENSION TABLES SHOWN ON PAGES 2, 3, 4 AND 5, NA MEANS, "NOT APPLICABLE".

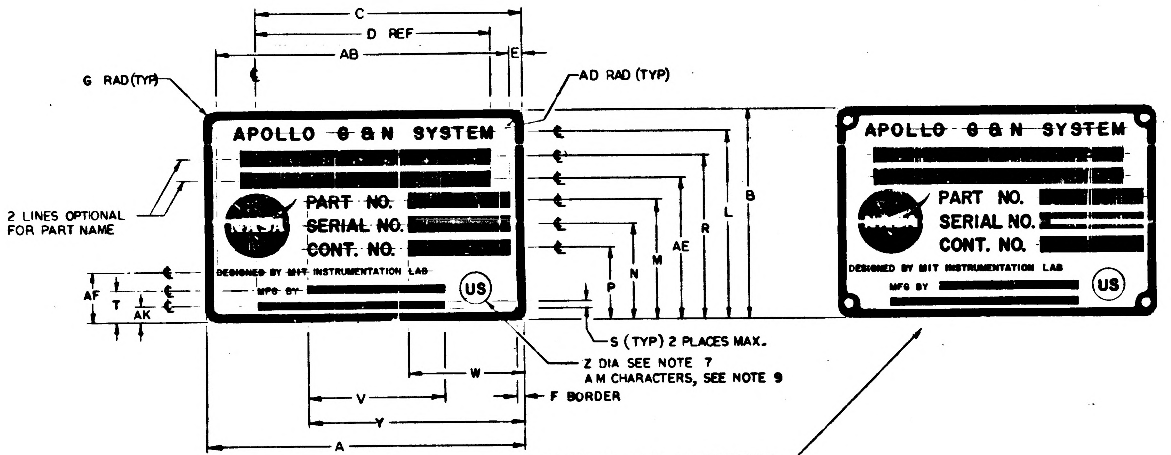

FOR G AND N SYSTEM
STYLE A

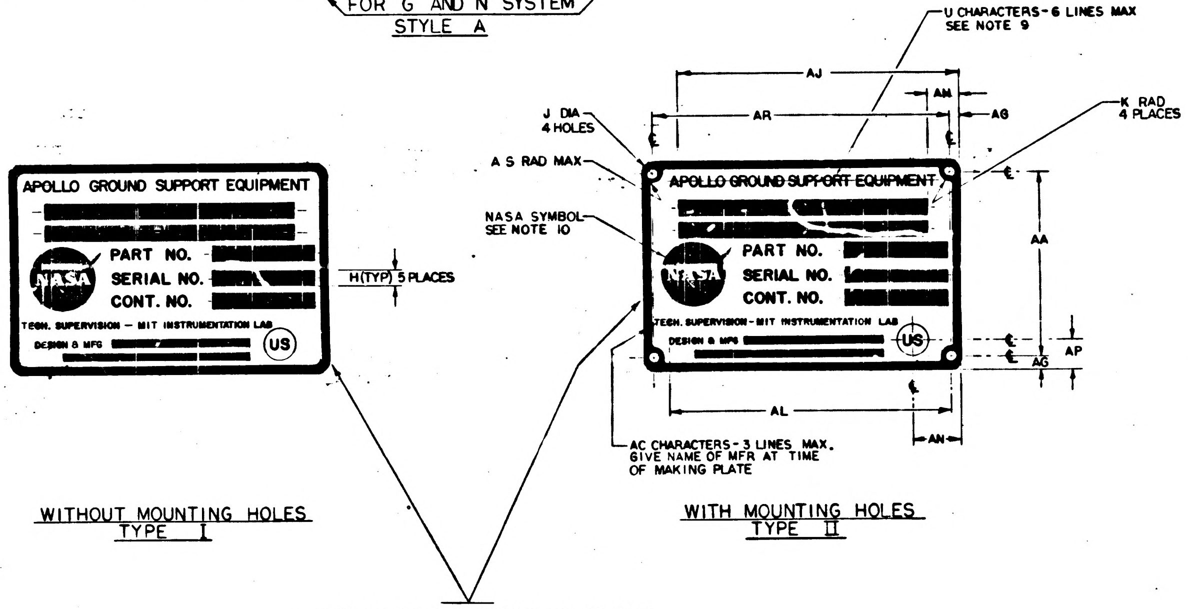

WITHOUT MOUNTING HOLES
TYPE I

WITH MOUNTING HOLES
TYPE II

FOR GROUND SUPPORT EQUIPMENT
STYLE B

REVISIONS 02768

SYM	ZONE	DESCRIPTION	DR	CHK	DATE	APPROVED
G		REPLACES REV F WITH CHANGE PER TDRR 20854			7/22/65	wk
H		REVISED PER TDRR 20892			[illegible]	wk
J		REVISED PER TDRR 20904			[illegible]	wk
K		REVISED PER TDRR 21379			[illegible]	wk
L		REVISED PER TDRR 21410			8/23/65	wk
M		REVISED PER TDRR 21993			10/	
N		REVISED PER TDRR 22621				
P		REVISED PER TDRR 22671				
R		REVISED PER TDRR 22672				
S		REVISED PER TDRR 22750			65	wk
T		REVISED PER TDRR 22823				
U		REVISED PER TDRR 23072			11-12-65	MGM
V		REVISED PER TDRR 23521			10-27-65	WK
W		REVISED PER TDRR 23824	RAJ		11-9-65	wk
Y		REVISED PER TDRR 24018	RAJ		11-16-65	wk
Z		REVISED PER TDRR 24040	RAJ		11-19-65	wk
AA		REVISED PER TDRR 24060	RAJ		11-19-65	wk
AB		REVISED PER TDRR 24868	RAJ		12-22-65	wk
AC		REVISED PER TDRR 24973	RAJ		1-4-66	wk
AD		REVISED PER TDRR 25065	RAJ		1-18-66	MGM
AE		REVISED PER TDRR 25672	RAJ		2-4-66	wk
AF		REVISED PER TDRR 25671	RAJ		2-4-66	wk
AG		REVISED PER TDRR 26110	RAJ		2-15-66	wk
AH		REVISED PER TDRR 26372	"		3-16-66	MGM
AJ		REVISED PER TDRR 26425	"		3-16-66	MGM
AK		REVISED PER TDRR 26743	"		3-16-66	MGM
AL		REVISED PER TDRR 26798	"		3-16-66	MGM
AM		REVISED PER TDRR 27168	"		4-7-66	MGM
AN		REVISED PER TDRR 27235	"		4-7-66	MGM
AP		REVISED PER TDRR 27345	"		4-7-66	MGM
AR		REVISED PER TDRR 27417	"		4-7-66	MGM
AS		REVISED PER TDRR 27442	"		4-7-66	MGM
AT		REVISED PER TDRR 27719	"		4-20-66	wk
AU		REVISED PER TDRR 27880	"		4-20-66	wk
AV		REVISED PER TDRR 27896	"		4-20-66	wk
AW		28110	"		5-16-66	MGM
AY		28173	"			MGM
AZ		28131	"			MGM
BA		28124	"			MGM
BB		REVISED PER TDRR 28511	"		5-16-66	MGM
BC		" " " 28949	"		5-24-66	MGM
BD		" " " 29222	"		6-8-66	MGM
BE		" " " 29235	"		6-8-66	MGM
BF		" " " 29322	"		6-30-66	MGM
BG		" " " 29429	"		"	MGM
BH		" " " 29449	"		"	MGM
BJ		" " " 29335	"		"	MGM
BK		" " " 296 9	"		"	MGM
BL		" " " 29696	"		"	MGM

SUGGESTED PROPORTIONS FOR NAMEPLATE DIMENSIONS.
1. SELECT NAMEPLATE LENGTH, DIMENSION "A", TO FIT DESIGN NEEDS.
2. DIMENSIONS B THRU AS ON LINE 1 BELOW ARE PROPORTIONAL TO "A" BY MULTIPLIERS SHOWN IN LINE 2 BELOW.

1.	A	B	C	D	E	F	G	H	J	K	L	M	N	P	R	S	T	U	V	W	Y	Z
2.	1.000 A	.6563A	.8438A	.6875A	.0391A	.0240A	.0391 A	.0469A	.0547A	.0469 A	.5938 A	.3750 A	.2969A	.2187 A	.5079A	.0313 A	.0938A	.0391 A	.4375 A	.3594A	.6875 A	.1094A

1.	AA	AB	AC	AD	AE	AF	AG	AH	AJ	AK	AL	AM	AN	AP	AR	AS
2.	.5781 A	.9219 A	.0240A	.0156 A	.4375A	.1525 A	.0391 A	.1563 A	.8438 A	.0548A	.8659 A	.0391A	.1563 A	.0938A	.9219A	.0151A

⑥ REPLACES REV F WITH CHANGE

QTY REQD	PART OR IDENTIFYING NO.	MATERIAL OR NOTES	NOMENCLATURE OR DESCRIPTION	FIND NO.

LIST OF MATERIALS

MASTER

AS APPLICABLE	
NEXT ASSY	USED ON
APPLICATION	

UNLESS OTHERWISE SPECIFIED
DIMENSIONS ARE IN INCHES
CAPACITOR VALUES ARE IN μf
RESISTOR VALUES ARE IN OHMS
TOLERANCES ON
FRACTIONS ± — DECIMALS ±.005 ANGLES ± —
DO NOT SCALE THIS DRAWING

MATERIAL
SEE NOTE 11

MIT
INSTRUMENTATION LAB
CAMBRIDGE, MASS.

DRAWN R A Jones 7/16/65
CHECKED A. J. 7-22-65
APPROVED
APPROVED W Kupfer 7/22/65
APPROVED MIT W Kupfer 7/22/65
APPROVED MSC
DATE

MANNED SPACECRAFT CENTER
HOUSTON, TEXAS

NAMEPLATES,
APOLLO G&N—GSE
(STANDARDS)

CODE IDENT NO. 80230
SIZE E
DRAWING NO. 1004260
SCALE NONE
SHEET 1 OF

NOTICE – WHEN GOVERNMENT DRAWINGS, SPECIFICATIONS, OR OTHER DATA ARE USED FOR ANY PURPOSE OTHER THAN IN CONNECTION WITH A DEFINITELY RELATED GOVERNMENT PROCUREMENT OPERATION, THE UNITED STATES GOVERNMENT THEREBY INCURS NO RESPONSIBILITY NOR ANY OBLIGATION WHATSOEVER; AND THE FACT THAT THE GOVERNMENT MAY HAVE FORMULATED, FURNISHED, OR IN ANY WAY SUPPLIED THE SAID DRAWINGS, SPECIFICATIONS OR OTHER DATA IS NOT TO BE REGARDED BY IMPLICATION OR OTHERWISE AS IN ANY MANNER LICENSING THE HOLDER OR ANY OTHER PERSON OR CORPORATION, OR CONVEYING ANY RIGHTS OR PERMISSION TO MANUFACTURE, USE, OR SELL ANY PATENTED INVENTION THAT MAY IN ANY WAY BE RELATED THERETO.

REVISIONS 02768

SYM	ZONE	DESCRIPTION	DR	CHK	DATE	APPROVED
G		REPLACES REV F WITH CHANGE PER TDRR 20854.	rj		7/22/65	WR
H		REVISED PER TDRR 20892	rj		8/3/65	WR
J		REVISED PER TDRR 20904	rj		8/3/65	WR
K		REVISED PER TDRR 21379	rj		8/19/65	WR
L		REVISED PER TDRR 21410	rj		8/23/65	WR
M		REVISED PER TDRR 21993	"			
N		REVISED PER TDRR 22621	"		10/11/65	
P		REVISED PER TDRR 22671	"			
R		REVISED PER TDRR 22672	"			
S		REVISED PER TDRR 22750	"			WR
T		REVISED PER TDRR 22823	"			
U		REVISED PER TDRR 23072	"		10-22-65	
V		REVISED PER TDRR 23521			10-27-65	
W		REVISED PER TDRR 23824	RAJ		11-9-65	WR
Y		REVISED PER TDRR 24018	RAJ		11-16-65	WR
Z		REVISED PER TDRR 24040	RAJ		11-19-65	WR
AA		REVISED PER TDRR 24060	RAJ		11-19-65	WR
AB		REVISED PER TDRR 24868	RAJ		12-22-65	WR
AC		REVISED PER TDRR 24973	RAJ		1-4-66	WR
AD		REVISED PER TDRR 25065	RAJ		1-18-66	
AE		REVISED PER TDRR 25672	RAJ		2-4-66	WR
AF		REVISED PER TDRR 25671	RAJ		2-4-66	WR
AG		REVISED PER TDRR 26110	RAJ		2-15-66	WR
AH		REVISED PER TDRR 26372	"		3-16-66	
AJ		REVISED PER TDRR 26425	"		3-16-66	
AK		REVISED PER TDRR 26743	"		3-16-66	
AL		REVISED PER TDRR 26798	"		3-16-66	
AM		REVISED PER TDRR 27168	"		4-8-66	
AN		REVISED PER TDRR 27235	"		4-8-66	
AP		REVISED PER TDRR 27345	"		4-8-66	
AR		REVISED PER TDRR 27417	"		4-8-66	
AS		REVISED PER TDRR 27442	"		4-8-66	
AT		REVISED PER TDRR 27719	"		4-21-66	WR
AU		REVISED PER TDRR 27880	"		4-21-66	
AV		REVISED PER TDRR 27896	"		4-21-66	WR
AW		↓ 28110	"		5-16-66	
AY		↓ 28173	"		↓	
AZ		↓ 28131	"		↓	
BA		↓ 28124	"		↓	
BB		REVISED PER TDRR 28511	"		5-16-66	
BC		" " " 28949	"		5-24-66	
BD		" " " 29222	"		6-8-66	
BE		" " " 29235	"		"	
BF		" " " 29322	"		6-30-66	
BG		" " " 29429	"		"	
BH		" " " 29449	"		"	
BJ		" " " 29335	"		"	
BK		" " " 29619	"		"	
BL		" " " 29696	"		"	

DASH NO.	P/C	PART NAME	REMARKS	PART NO.	SER. NO.	CONT. NO.	STYLE	TYPE	MATERIAL	A	B	C	D	E	F	G	H	J	K	L	M	N	P	R	S	T	U	V	W	Y	Z	AA	AB	AC	AD	AE	AF	AG	AH	AJ	AK	AL	AM	AN	AP	AR
399	K																																													
398	K																																													
350	K	ALIGNMENT OPTICAL TELESCOPE (LEM)		NA	NA	NA	A	I	NOTE 11B	4.000	2.625	3.375	2.750	.156	.093	.156	.187	NA	NA	2.312	1.468	1.187	.906	2.031	NA	.375	.156	NA	1.437	2.750	.437	NA	3.688	.062	.062	1.750	.593	NA	.625	3.375	.187	NA	.156	.531	.453	NA
309	K																																													
308	K																																													
307	K						B	I	NOTE 11 B	4.000	2.625	3.375	2.750	.156	.093	.156	.187	NA	NA	2.328	1.468	1.187	.906	2.031	.062	.375	.156	NA	1.437	2.750	.437	NA	3.687	.062	.062	1.750	.593	NA	NA	NA	NA	NA	NA	NA	NA	NA
306	K						B	II	NOTE 11 C	4.000	2.625	3.375	2.750	.156	.093	.156	.187	.125	.156	2.328	1.468	1.187	.906	2.031	.062	.375	.156	↓	1.437	2.750	.437	2.312	3.687	.062	NA	1.750	.593	↓	↓	↓	↓	↓	↓	↓	↓	↓
305	K						B	I	NOTE 11 B	2.000	1.312	1.687	1.375	.078	.048	.078	.093	NA	NA	1.164	.734	.593	.453	1.015	.048	.171	.078	↓	.718	1.375	.187	NA	NA	.048	.031	.875	.320	↓	↓	↓	↓	↓	↓	↓	↓	↓
304	K						B	II	NOTE 11 C	2.000	1.312	1.687	1.375	.078	.048	.078	.093	.070	.078	1.164	.734	.593	.453	1.015	.048	.171	.078	NA	.718	1.375	.187	.156	1.843	.048	NA	.875	.320	NA	NA	NA	NA	NA	NA	NA	NA	NA
303	K																																													
302	K																																													
301	K																																													
300	K	OPTICAL UNIT		NA	NA	NA	A	I	NOTE 11 B	2.000	1.312	1.675	NA	NA	.048	.078	NA	NA	NA	1.090	.812	.675	.540	.940	NA	.265	NA	NA	NA	1.375	.218	NA	NA	NA	NA	NA	.375	NA	NA	NA	.180	NA	.078	NA	NA	NA
9	K	2 IN AUTOCOLLIMATOR		1001702			B	II	NOTE 11 C	4.000	2.625	3.812	2.750	.156	.093	.156	.187	.125	.156	2.250	1.500	1.187	.906	2.031	.093	.375	.156	1.750	1.437	2.750	.437	2.312	3.687	.062	NA	1.750	.593	.156	1.062	3.812	.156	NA	.156	1.062	.375	3.687
8	K	5 IN AUTOCOLLIMATOR		1017410			B	II	NOTE 11 C	4.000	2.625	3.812	2.750	.156	.093	.156	.187	.125	.156	2.250	1.500	1.187	.906	2.031	.093	.375	.156	1.750	1.437	2.750	.437	2.312	3.687	.062	NA	1.750	.593	.156	1.062	3.812	.156	NA	.156	1.062	.375	3.687
7	K	2½ IN AUTOCOLLIMATOR (SCT)		1017435			B	II	NOTE 11 C	4.000	2.625	3.812	2.750	.156	.093	.156	.187	.125	.156	2.250	1.500	1.187	.906	2.031	.093	.375	.156	1.750	1.437	2.750	.437	2.312	3.687	.062	NA	1.750	.593	.156	1.062	3.812	.156	NA	.156	1.062	.375	3.687
6	K	2½ IN AUTOCOLLIMATOR (SXT)		1017448			B	II	NOTE 11 C	4.000	2.625	3.812	2.750	.156	.093	.156	.187	.125	.156	2.250	1.500	1.187	.906	2.031	.093	.375	.156	1.750	1.437	2.750	.437	2.312	3.687	.062	NA	1.750	.593	.156	1.062	3.812	.156	NA	.156	1.062	.375	3.687
5	K	RETROREFLECTING PRISM ASSEMBLY		1019840			B	I	NOTE 11 B	4.000	2.625	3.812	2.750	.156	.093	.156	.187	NA	NA	2.250	1.500	1.187	.906	2.031	.093	.375	.156	1.750	1.437	2.750	.437	NA	NA	.062	.062	1.750	.593	.156	1.062	3.812	.156	NA	.156	1.062	.375	NA
4	K	S/H SIMULATOR ASSEMBLY		1019896			B	I	NOTE 11 B	4.000	2.625	3.812	2.750	.156	.093	.156	.187	NA	NA	2.250	1.500	1.187	.906	2.031	.093	.375	.156	1.750	1.437	2.750	.437	NA	NA	.062	.062	1.750	.593	.156	1.062	3.812	.156	NA	.156	1.062	.375	NA
3	K	REFERENCE MIRROR		1001767			B	I	NOTE 11 B	2.000	1.312	1.906	1.375	.078	.048	.078	.093	NA	NA	1.125	.750	.593	.453	1.015	.062	.187	.078	.875	.718	1.375	.218	NA	NA	.048	.031	.875	.305	.078	.531	1.906	.078	NA	.078	.531	.187	NA
2	K	2 IN PLANE READING AUTOCOLLIMATOR		1017413			B	I	NOTE 11 B	2.000	1.312	1.906	1.375	.078	.048	.078	.093	NA	NA	1.125	.750	.593	.453	1.015	.062	.187	.078	.875	.718	1.375	.218	NA	NA	.048	.031	.875	.305	.078	.531	1.906	.078	NA	.078	.531	.187	NA
1	K	2 IN AUTOCOLLIMATOR		1001702			B	I	NOTE 11 B	2.000	1.312	1.906	1.375	.078	.048	.078	.093	NA	NA	1.125	.750	.593	.453	1.015	.062	.187	.078	.875	.718	1.375	.218	NA	NA	.048	.031	.875	.305	.078	.531	1.906	.078	NA	.078	.531	.187	NA

Ⓖ REPLACES REV F WITH CHANGE

KOLLSMAN DASH NUMBERS

NOTES FOR TABLE

STYLE A IS FOR G&N SYSTEM.
STYLE B IS FOR GROUND SUPPORT EQUIPMENT.
TYPE I IS WITHOUT MOUNTING HOLES.
TYPE II IS WITH MOUNTING HOLES.

QTY REQD	PART OR IDENTIFYING NO.	MATERIAL OR NOTES	NOMENCLATURE OR DESCRIPTION	FIND NO.

LIST OF MATERIALS

NEXT ASSY	USED ON
AS APPLICABLE	

APPLICATION

UNLESS OTHERWISE SPECIFIED
DIMENSIONS ARE IN INCHES
CAPACITOR VALUES ARE IN μf
RESISTOR VALUES ARE IN OHMS
TOLERANCES ON
FRACTIONS ± — DECIMALS ±.005 ANGLES ± —
DO NOT SCALE THIS DRAWING

MATERIAL
SEE NOTE 11

MIT
INSTRUMENTATION LAB
CAMBRIDGE, MASS.

DRAWN R. A. Jones 7-16-65
CHECKED 7-22-65
APPROVED
APPROVED W. Kupfer 7/22/65
APPROVED MIT W. Kupfer 7/22/65
APPROVED MSC
DATE

MANNED SPACECRAFT CENTER
HOUSTON, TEXAS

NAMEPLATES,
APOLLO G&N-GSE
(STANDANDS)

CODE IDENT NO. 80230
SIZE E
DRAWING NO. 1004260
SCALE NONE
SHEET 2 OF 6

MASTER

NOTICE – WHEN GOVERNMENT DRAWINGS, SPECIFICATIONS, OR OTHER DATA ARE USED FOR ANY PURPOSE OTHER THAN IN CONNECTION WITH A DEFINITELY RELATED GOVERNMENT PROCUREMENT OPERATION, THE UNITED STATES GOVERNMENT THEREBY INCURS NO RESPONSIBILITY NOR ANY OBLIGATION WHATSOEVER; AND THE FACT THAT THE GOVERNMENT MAY HAVE FORMULATED, FURNISHED, OR IN ANY WAY SUPPLIED THE SAID DRAWINGS, SPECIFICATIONS, OR OTHER DATA IS NOT TO BE REGARDED BY IMPLICATION OR OTHERWISE AS IN ANY MANNER LICENSING THE HOLDER OR ANY OTHER PERSON OR CORPORATION, OR CONVEYING ANY RIGHTS OR PERMISSION TO MANUFACTURE, USE, OR SELL ANY PATENTED INVENTION THAT MAY IN ANY WAY BE RELATED THERETO.

REVISIONS

[illegible]2768

SYM	ZONE	DESCRIPTION	DR	CHK	DATE	APPROVED
G		REPLACES REV F WITH CHANGE PER TDRR 20854			7/22/65	WK
H		REVISED PER TDRR 20892			8/3/65	WK
J		REVISED PER TDRR 20904			8/3/65	WK
K		REVISED PER TDRR 21379			8/9/65	WK
L		REVISED PER TDRR 21410			[illegible]	WK
M		REVISED PER TDRR 21993			[illegible]	
N		REVISED PER TDRR 22621				
P		REVISED PER TDRR 22671				
R		REVISED PER TDRR 22672				
S		REVISED PER TDRR 22750			/65	WK
T		REVISED PER TDRR 22823				
U		REVISED PER TDRR 23072			10-21-65	MGM
V		REVISED PER TDRR 23521			10-26-65	WK
W		REVISED PER TDRR 23824	RAJ		11-9-65	WK
Y		REVISED PER TDRR 24018	RAJ		11-16-65	WK
Z		REVISED PER TDRR 24040	RAJ		11-19-65	WK
AA		REVISED PER TDRR 24060	RAJ		11-19-65	WK
AB		REVISED PER TDRR 24868	RAJ		12-22-65	WK
AC		REVISED PER TDRR 24973	RAJ		1-4-66	WK
AD		REVISED PER TDRR 25065	RAJ		1-18-66	MGM
AE		REVISED PER TDRR 25672	RAJ		2-4-66	WK
AF		REVISED PER TDRR 25671	RAJ		2-4-66	WK
AG		REVISED PER TDRR 26110	RAJ		2-15-66	WK
AH		REVISED PER TDRR 26372	"		3-16-66	MGM
AJ		REVISED PER TDRR 26425	"		3-16-66	MGM
AK		REVISED PER TDRR 26743	"		3-16-66	MGM
AL		REVISED PER TDRR 26798	"		3-16-66	MGM
AM		REVISED PER TDRR 27168	"		4-8-66	MGM
AN		REVISED PER TDRR 27235	"		4-8-66	MGM
AP		REVISED PER TDRR 27345	"		4-8-66	MGM
AR		REVISED PER TDRR 27417	"		4-8-66	MGM
AS		REVISED PER TDRR 27442	"		4-8-66	MGM
AT		REVISED PER TDRR 27719	"		4-20-66	WK
AU		REVISED PER TDRR 27880	"		4-20-66	WK
AV		REVISED PER TDRR 27896	"		4-20-66	WK
AW		28110	"		5-16-66	MGM
AY		28173	"		5-16-66	MGM
AZ		28131	"		5-16-66	MGM
BA		28124	"		5-16-66	MGM
BB		REVISED PER TDRR 28511	"		5-16-66	MGM
BC		" " " 28949	"		5-24-66	MGM
BD		" " " 29222	"		6-8-66	MGM
BE		" " " 29235	"		"	MGM
BF		" " " 29322	"		6-29-66	MGM
BG		" " " 29429	"		"	MGM
BH		" " " 29449	"		"	MGM
BJ		" " " 29335	"		"	MGM
BK		" " " 29619	"		"	MGM
BL		" " " 29696	"		"	MGM

DASH NO.	P/C	PART NAME	REMARKS	PART NO.	SER. NO.	CONT. NO.	STYLE	TYPE	MATERIAL	A
299	R									
296	R									
274	R	SELF TEST ASSY		2014366-031	NA	NAS 9-497	B	I	NOTE 11B	FOR DIMENSIONS SEE DASH 15 VALUES BELOW
273		LOGIC DRAWER ASSY NO. 2		2014037-031						FOR DIMENSIONS - SEE DASH 17 VALUES BELOW
272		DRAWING ASSY PROGRAMMER & MONITOR		2014041-031						FOR DIMENSIONS, SEE DASH 17 VALUES BELOW
271		LOGIC DRAWER ASSY NO. 1		2014036-031				I	NOTE 11 B	
270		COMPUTER TEST SET		2014042-031				II	NOTE 11C	FOR DIMENSIONS, SEE DASH 18 VALUES BELOW
269		POWER CONTROL ASSY		2014044-021				I	NOTE 11 B	FOR DIMENSIONS, SEE DASH 17 VALUES BELOW
268		SELF TEST ASSY		2014366-021						FOR DIMENSIONS, SEE DASH 15 VALUES BELOW
267		AGC JUNCTION ASSY		2014341-021						
266		POWER CONTROL ASSY		2014079-021						
265		BUFFER CIRCUIT ASSY		2014254-021						
264		DRAWER ASSY. X Y INTERFACE		2014040-021						
263		DRAWER ASSY R D C INTERFACE		2014045-021						
262		DRAWER ASSY PROGRAMMER & MONITOR		2014041-021						FOR DIMENSIONS, SEE DASH 17 VALUES BELOW
261		LOGIC DRAWER ASSY NO. 2		2014037-021						
260		LOGIC DRAWER ASSY NO. 1		2014036-021				I	NOTE 11B	
259		OPERATION CONSOLE		2014024-021				II	NOTE 11C	FOR DIMENSIONS, SEE DASH 18 VALUES BELOW
258		COMPUTER TEST SET		2014042-021						
257		AUXILIARY CALIBRATION CONSOLE		2014059-021				II	NOTE 11C	
256		AGC CALIBRATION CONSOLE		2014049-021						
255		AGC HANDLING FIXTURE		2014282-021				I	NOTE 11B	FOR DIMENSIONS, SEE DASH 17 VALUES BELOW
254		DRAWER ASSY COMP. SIMULATOR		2014048-011				II	NOTE 11C	FOR DIMENSIONS, SEE DASH 18 VALUES BELOW
253		SHIPPING KIT ASSY, NAV DSKY		2016312-011						
252		SHIPPING KIT ASSY, UNIVERSAL DSKY		2016316-011						
251		SHIPPING KIT ASSY, MAIN DSKY		2016313-011				II	NOTE 11C	
250		AMPLIFIER, REWORK		2014386				I	NOTE 11B	FOR DIMENSIONS, SEE DASH 15 VALUES BELOW
249		TEMP MONITOR ASSY		2014313-011					NOTE 11C	FOR DIMENSIONS, SEE DASH 17 VALUES BELOW
248		AGC JUNCTION ASSY		2014341-011					NOTE 11B	FOR DIMENSIONS, SEE DASH 15 VALUES BELOW
247		AC INPUT PANEL ASSY		2014302-011						
246		SELF TEST ASSY		2014392-011						
245		TAPE PUNCH ASSEMBLY		2014039-011						FOR DIMENSIONS, SEE DASH 15 VALUES BELOW
244	R	TAPE READER ASSEMBLY		2014038-011	NA	NAS-9-497	B	I	NOTE 11B	
243										
242										
241	R	APOLLO GUIDANCE COMPUTER GROUP		6003001	NA	NAS-9-497	A	I	NOTE 11B	FOR DIMENSIONS, SEE DASH 19 VALUES BELOW
240		SELF TEST ASSEMBLY		2014366-011	NA		B	I		FOR DIMENSIONS, SEE DASH 15 VALUES BELOW
239		POWER SUPPLY ASSY-115V., 400 CYCLE		2014207-011						FOR DIMENSIONS, SEE DASH 17 VALUES BELOW
238		AC INPUT PANEL ASSY		2014043-011						
237		POWER CONTROL ASSY		2014079-011						FOR DIMENSIONS, SEE DASH 15 VALUES BELOW
236		DRAWER ASSY-X Y INTERFACE		2014040-011						
235		DRAWER ASSY R D C INTERFACE		2014045-011						
234		BUFFER CIRCUIT ASSY		2014254-011						
233		CONTROL & INTERFACE ASSY		2014204-011						
232		POWER CONTROL ASSY		2014044-011						FOR DIMENSIONS, SEE-DASH 17 VALUES BELOW
231		DRAWER ASSY, PROGRAMMER & MONITOR		2014041-011						
230		CONNECTOR INTERFACE ASSY		2014272-011						FOR DIMENSIONS, SEE DASH 15 VALUES BELOW
229		CONNECTOR INTERFACE ASSY		2014047-011						
228		ANTENNA, TUNING CAPACITOR ASSY		2014209-011						
227		MOUNTING FIXTURE ASSY		2014006-011						FOR DIMENSIONS, SEE DASH 17 VALUES BELOW
226		POWER SUPPLY ASSY 3 VDC		2014234-011						FOR DIMENSIONS, SEE DASH 15 VALUES BELOW
225		PANEL ASSY — SIGNAL INTERFACE		2014010-011						
224		OSCILLOSCOPE ASSY		2014232-011						
223		AUXILIARY OUTLET ASSY		2014274-011						
222		FREQUENCY COUNTER		2014233-011						
221		POWER SUPPLY ASSY 10, 13, 28 VDC		2014235-011						
220		LOGIC DRAWER ASSY NO. 2		2014037-011						FOR DIMENSIONS, SEE DASH 17 VALUES BELOW
219		LOGIC DRAWER ASSY NO. 1		2014036-011						
218		COUNTER, ELECTRICAL ASSY		2014288-011						FOR DIMENSIONS, SEE DASH 15 VALUES BELOW
217		POWER SUPPLY ASSY		2014279-011						
216		TEST MOUNT ASSY		2014257-011						
215		UNIVERSAL DSKY PEDESTAL MOUNT		2014014-011						FOR DIMENSIONS, SEE DASH 17 VALUES BELOW
214		MAIN DSKY PEDESTAL MOUNT		2014343				I	NOTE 11B	
213		SHIPPING CONTAINER, MAIN DSKY		1006229				II	NOTE 11C	FOR DIMENSIONS, SEE DASH 18 VALUES BELOW
212		NAV DSKY		1006231						
211		AGC		1006230						
210		UNIVERSAL DSKY		1006422						
209		SHIPPING CONTAINER, AGC		1006421				II	NOTE 11C	
208		UNIVERSAL DSKY HANDLING FIXTURE		2014013-011				I	NOTE 11B	FOR DIMENSIONS, SEE DASH 15 VALUES BELOW
207		NAV DSKY HANDLING FIXTURE		1014377						FOR DIMENSIONS, SEE DASH 17 VALUES BELOW
206		MAIN DSKY HANDLING FIXTURE		1014334						
205		AGC HANDLING FIXTURE		2014282-011				I	NOTE 11B	
204		OPERATION CONSOLE		2014024-011				II	NOTE 11C	FOR DIMENSIONS, SEE DASH 18 VALUES BELOW
203		COMPUTER TEST SET		2014042-011		NAS-9-497				
202		DRAWER ASSY, COMPUTER SIMULATOR		2014048-011		FNP-12775				
201		AUXILIARY CALIBRATION CONSOLE		2014059-011		NAS-9-497				
200		AGC CALIBRATION CONSOLE		2014049-011	NA		B	II	NOTE 11C	
21										
20		NA		NA	NA	NA	A	II	NOTE 11C	2.000
19		NA		NA	NA	NA	A	I	NOTE 11B	2.000
18		NA		NA	NA	NA	B	II	NOTE 11C	4.187
17		NA		NA	NA	NA	B	I	NOTE 11B	4.187
16		NA		NA	NA	NA	B	II	NOTE 11C	2.000
15	R	NA		NA	NA	NA	B	I	NOTE 11B	2.000

DASH NO.	A	B	C	D	E	F	G	H	J	K	L	M	N	P	R	S	T	U	V	W	Y	Z	AA	AB	AC	AD	AE	AF	AG	AH	AJ	AK	AL	AM	AN	AP	AR
20	2.000	1.312	1.687	1.375	.078	.031	.078	.093	.106 .113	.093	1.187	.750	.593	.453	1.015	.062	.187	.078	.875	.718	1.375	.218	1.156	1.843	.048	NA	.875	.305	.078	.312	1.687	.078	NA	.078	.312	.187	1.843
19	2.000	1.312	1.687	1.375	.078	.031	.078	.093	NA	NA	1.187	.750	.593	.453	1.015	.062	.187	.078	.875	.718	1.375	.218	NA	NA	.048	.031	.875	.305	.078	.312	1.687	.078	NA	.078	.312	.187	NA
18	4.187	1.875	3.469	2.750	.156	.093	.156	.125	.106 .113	.125	1.625	1.032	.844	.656	1.406	.093	.344	.156	1.781	1.531	2.844	.312	1.562	3.875	.062	NA	1.219	.500	.156	.719	3.469	.156	NA	.156	.719	.344	3.875
17	4.187	1.875	3.469	2.750	.156	.093	.156	.125	NA	NA	1.625	1.032	.844	.656	1.406	.093	.344	.156	1.781	1.531	2.844	.312	NA	NA	.062	.062	1.219	.500	.156	.719	3.469	.156	NA	.156	.719	.344	NA
16	2.000	1.312	1.687	1.375	.078	.031	.078	.093	.106 .113	.093	1.187	.750	.593	.453	1.015	.062	.187	.078	.875	.718	1.375	.218	1.156	1.843	.048	NA	.875	.305	.078	.312	1.687	.078	NA	.078	.312	.187	1.843
15	2.000	1.312	1.687	1.375	.078	.031	.078	.093	NA	NA	1.187	.750	.593	.453	1.015	.062	.187	.078	.875	.718	1.375	.218	NA	NA	.048	.031	.875	.305	.078	.312	1.687	.078	NA	.078	.312	.187	NA

THIS SHEET ADDED

Ⓖ REPLACES REV F WITH CHANGE

RAYTHEON DASH NUMBERS

NOTES FOR TABLE
STYLE A IS FOR G & N SYSTEM
STYLE B IS FOR GROUND SUPPORT EQUIPMENT
TYPE I IS WITHOUT MOUNTING HOLES
TYPE II IS WITH MOUNTING HOLES

QTY REQD	PART OR IDENTIFYING NO.	MATERIAL OR NOTES	NOMENCLATURE OR DESCRIPTION	FIND NO.

LIST OF MATERIALS

NEXT ASSY	USED ON
AS APPLICABLE	

APPLICATION

UNLESS OTHERWISE SPECIFIED
DIMENSIONS ARE IN INCHES
CAPACITOR VALUES ARE IN µf
RESISTOR VALUES ARE IN OHMS
TOLERANCES ON
FRACTIONS ± — DECIMALS ±.005 ANGLES ± —
DO NOT SCALE THIS DRAWING

MATERIAL
SEE NOTE 11

MIT
INSTRUMENTATION LAB
CAMBRIDGE, MASS.

DRAWN R. A. Jones 7-16-65
CHECKED A. J. [illegible] 7-22-65
APPROVED
APPROVED W. Kupfer 7/26/65
APPROVED MIT W. Kupfer 7/26/65
APPROVED MSC [illegible] 7/27/65
DATE

MANNED SPACECRAFT CENTER
HOUSTON, TEXAS

NAMEPLATES,
APOLLO GEN-GSE
(STANDARDS)

CODE IDENT NO. 80230
SIZE E
DRAWING NO. 1004260
SCALE NONE
SHEET 3 OF

MASTER

[illegible]

REVISIONS 02767						
SYM	ZONE	DESCRIPTION	DR	CHK	DATE	APPROVED
G		REPLACES REV F WITH CHANGE PER TDRR 20854.			7/23/65	
H		REVISED PER TDRR 20892				
J		REVISED PER TDRR 20904				
K		REVISED PER TDRR 21379				
L		REVISED PER TDRR 21410			8/23/65	
M		REVISED PER TDRR 21993				
N		REVISED PER TDRR 22621				
P		REVISED PER TDRR 22671				
R		REVISED PER TDRR 22672				
S		REVISED PER TDRR 22750				
T		REVISED PER TDRR 22823				
U		REVISED PER TDRR 23072			10-20-65	
V		REVISED PER TDRR 23521			10-26-65	
W		REVISED PER TDRR 23824	RAJ		11-9-65	
Y		REVISED PER TDRR 24018	RAJ		11-16-65	
Z		REVISED PER TDRR 24040	RAJ		11-19-65	
AA		REVISED PER TDRR 24060	RAJ		11-19-65	
AB		REVISED PER TDRR 24868	RAJ		2-22-65	
AC		REVISED PER TDRR 24973	RAJ		1-4-66	
AD		REVISED PER TDRR 25065	RAJ		1-18-66	
AE		REVISED PER TDRR 25672	RAJ		2-4-66	
AF		REVISED PER TDRR 25671	RAJ		2-4-66	
AG		REVISED PER TDRR 26110	RAJ		2-15-66	
AH		REVISED PER TDRR 26372	"		3-16-66	
AJ		REVISED PER TDRR 26425	"		3-16-66	
AK		REVISED PER TDRR 26743	"		3-16-66	
AL		REVISED PER TDRR 26798	"		3-16-66	
AM		REVISED PER TDRR 27168	"		4-8-66	
AN		REVISED PER TDRR 27235	"		4-8-66	
AP		REVISED PER TDRR 27345	"		4-8-66	
AR		REVISED PER TDRR 27417	"		4-8-66	
AS		REVISED PER TDRR 27442	"		4-8-66	
AT		REVISED PER TDRR 27719	"		4-21-66	
AU		REVISED PER TDRR 27880	"		4-21-66	
AV		REVISED PER TDRR 27896	"		4-21-66	
AW		28110	"		5-16-66	
AY		28173	"			
AZ		28131	"			
BA		28124	"			
BB		REVISED PER TDRR 28511	"		5-16-66	
BC		" " " 28949	"		5-24-66	
BD		" " " 29222	"		6-8-66	
BE		" " " 29235	"		"	
BF		" " " 29322	"		6-24-66	
BG		" " " 29429	"		"	
BH		" " " 29449	"		"	
BJ		" " " 29335	"		"	
BK		" " " 29619	"		"	
BL		" " " 29696	"		6-29-66	

DASH NO.	P/C	PART NAME	REMARKS	PART NO.	SER. NO.	CONT. NO.	STYLE	TYPE	MATERIAL	A	B	C	D	E	F	G	H	J	K	L	M	N	P	R	S	T	U	V	W	Y	Z	AA	AB	AC	AD	AE	AF	AG	AH	AJ	AK	AL	AM	AN	AP	AR
199	AC	EYEPIECE STOWAGE UNIT		2021255-011			A	I		FOR DIMENSIONS, SEE DASH 100 VALUES BELOW																																				
198	AC	SIGNAL CONDITIONER ASSY C/M		2007234		NAS 9-497			NOTE 11B																																					
197	AC	SIGNAL CONDITIONER ASSY C/M		2007235																																										
196	AC	SIGNAL CONDITIONER ASSY LEM		6007010																																										
195	AC	PSA & SIGNAL CONDITIONER ASSY		6007009			A	I	NOTE 11B																																					
194	AC	PANEL, MONITOR		2900031-031			B	II	NOTE 11C	FOR DIMENSIONS, SEE DASH 141 VALUES BELOW																																				
193	AC	DISTRIBUTION BOX, GSE		2900024-031																																										
192	AC	ANALYZER, OPTICS-INERTIAL		2900023-031						FOR DIMENSIONS, SEE DASH 144 VALUES BELOW																																				
191	AC	TEST CONTROL		2900027-031						FOR DIMENSIONS, SEE DASH 141 VALUES BELOW																																				
190	AC	PANEL, PWR SUP AND LOAD		2900033-021																																										
189	AC	ADPT MODULE, P.S.A.		6900088-011																																										
188	AC	ADPT MODULE, P.S.A.		2901143-011																																										
187	AC	FIXTURE, MTG, PTA/PEA		2900066-021		NAS 9-497	B	II	NOTE 11C																																					
186	AC	ANN PNL & EYEPIECE STOW. ASSY		1021255-021			A	I		FOR DIMENSIONS, SEE DASH 100 VALUES BELOW																																				
185	AC	ANN PNL & EYEPIECE STOW. ASSY		1021255-011			A	I																																						
184	AC	FIX., HAND., G AND N HARNESS		1901846-041		NAS-9-497	B	II	NOTE 11C	FOR DIMENSIONS, SEE DASH 144 VALUES BELOW																																				
183	AC	INSTALLING TOOL, ELEC. CONN		1902586-011			B	II	NOTE 11C	FOR DIMENSIONS, SEE DASH 102 VALUES BELOW																																				
182	AC	ADPT MODULE, P.S.A.		6900088-011			B	II	NOTE 11C	FOR DIMENSIONS, SEE DASH 141 VALUES BELOW																																				
181	AC	G & N INDICATOR CONTROL PANEL ASSY		2014578-011			A	I	NOTE 11B	3.000	1.938	2.437	NA	.125	.062	.188	.156	NA	NA	1.750	1.125	.906	.688	1.500	NA	.281	.125	NA	1.094	2.062	.312	NA	2.500	.062	.125	1.312	.469	NA	NA	NA	.156	NA	.125	.469	.344	NA
180	AC	ADPT MODULE, P.S.A.		1902431-031			B	II		FOR DIMENSIONS, SEE DASH 121 VALUES BELOW																																				
179	AC	MOUNTING PLATE, IMU/PTA		6900083-011						FOR DIMENSIONS, SEE DASH 144 VALUES BELOW																																				
178	AC	MOUNTING PLATE, COMPONENT		6900007-021																																										
177	AC	FIX., MOUNTING, SUBSYSTEM		2900070-021																																										
176	AC	FIX., MOUNTING, G AND N		2900067-021																																										
175	AC	CSL, COOL. AND PWR, G AND N		1902134-031																																										
174	AC	FIX., HAND., C/M AND LEM CDU		2900999-011					NOTE 11C	FOR DIMENSIONS, SEE DASH 141 VALUES BELOW																																				
173	AC	FIX., HANDLING, C/M PSA		2900998-011																																										
172	AC	CAGING ELECTRONICS, GYRO		2900029-021																																										
171	AC	DISTRIBUTION BOX, GSE		2900024-021																																										
170	AC	ANALYZER, OPTICS-INERTIAL		2900023-021						FOR DIMENSIONS, SEE DASH 144 VALUES BELOW																																				
169	AC	ADPT, TESTPOINT, P.S.A.		2900037-021						FOR DIMENSIONS, SEE DASH 141 VALUES BELOW																																				
168	AC	TEST SELECTOR		2900028-021																																										
167	AC	TEST CONTROL		2900027-021																																										
166	AC	PANEL, MONITOR		2900031-021																																										
165	AC	TERM. BOARD STORAGE DRAWER		2900927-011																																										
164	AC	INPUT/OUTPUT PANEL		2900926-011																																										
163	AC	CONTROL PANEL		2900896-011																																										
162	AC	CSL. CAL AND TEST, SCM/PSAAM		2900895-011						FOR DIMENSIONS, SEE DASH 144 VALUES BELOW																																				
161	AC	FIX., LIFT AND HAND., IMU		1015462-011						FOR DIMENSIONS, SEE DASH 141 VALUES BELOW																																				
160	AC	FIX., HAND., G AND N HARNESS		1901846-031						FOR DIMENSIONS, SEE DASH 144 VALUES BELOW																																				
159	AC	BATTERY POWER PACK		1900011-031			B	II	NOTE 11C																																					
158	AC	COUPLING DATA UNIT ASSEMBLY C/M		2007222			A	I	NOTE 11B	FOR DIMENSIONS SEE DASH 100 VALUES BELOW																																				
157	AC	COUPLING DATA UNIT ASSEMBLY - LEM		2007222																																										
156	AC	POWER & SERVO ASSEMBLY C/M		2007200						2.125	.968	1.718	NA	.093	.031	.06	.093	NA	NA	.858	.608	.484	.358	.733	.062	.140	.062	NA	.968	1.450	.125	NA	1.720	.046	.03	NA	.210	NA	NA	NA	.070	NA	.046	.32	.16	NA
155	AC	PIPA ELECTRONICS ASSEMBLY		2007201						FOR DIMENSIONS SEE DASH 100 VALUES BELOW																																				
154	AC	PULSE TORQUE ASSEMBLY - LEM		6007000																																										
153	AC	POWER & SERVO ASSEMBLY - LEM		6007200			A	I	NOTE 11B																																					
152	AC	CONT PNL, RSVR CKT TESTER		2900770-011			B	II	NOTE 11C	FOR DIMENSIONS, SEE DASH 141 VALUES BELOW																																				
151	AC	TESTER, RESOLVER CIRCUIT		2900708-011																																										
150	AC	JUNCTION BOX, P.S.A./G.S.E.		1901933-021						FOR DIMENSIONS, SEE DASH 144 VALUES BELOW																																				
149	AC	BATTERY PACK, LIFTING		2900812-011						FOR DIMENSIONS, SEE DASH 141 VALUES BELOW																																				
148	AC	MOUNTING PLATE, COMPONENT		6900007-011						FOR DIMENSIONS, SEE DASH 144 VALUES BELOW																																				
147	AC	MOUNTING PLATE, COMPONENT		2900677-011																																										
146	AC	CART, TRANS, G AND N		1900009-041																																										
145	AC	CONTAINER, SHIPPING, IMU		1900010-021		NAS-9-497	B	II	NOTE 11C																																					
144	AC	FIX., MOUNTING, G AND N		1902204-021			B	II	NOTE 11C	4.125	1.812	3.250	NA	.125	.062	.12	.156	.188 .194	.125	1.625	1.140	.890	.640	1.390	.125	.171	.125	1.875	1.687	2.625	.250	1.562	3.843	.093	NA	NA	.359	.125	.437	3.688	NA	3.687	.093	.40	.25	3.875
143	AC	CSL, COOL. AND PWR, G AND N		1902134-021						4.125	1.812	3.250		.125	.062	.12	.156		.125	1.625	1.140	.890	.640	1.390	.125	.171	.125	1.875	1.687	2.625	.250	1.562	3.843	.093			.359	.125	.437	3.688		3.687	.093	.40	.25	3.875
142	AC	ANALYZER, OPTICS-INERTIAL		2900023-011						4.125	1.812	3.250		.125	.062	.12	.156		.125	1.625	1.140	.890	.640	1.390	.125	.171	.125	1.875	1.687	2.625	.250	1.562	3.843	.093			.359	.125	.437	3.688		3.687	.093	.40	.25	3.875
141	AC	CONT, TEMP, PORTABLE		2900060-011						2.125	.968	1.718		.093	.031	.06	.093		.093	.858	.608	.484	.358	.733	.077	.116	.062	.937	.875	1.343	.125	.781	1.892	.046			.209	.093	.250	1.875		1.840	.046	.23	.16	1.938
140	AC	TESTER, CKT, IMU/CDU RSVR		2900286-011						4.125	1.812	3.250		.125	.062	.12	.156		.125	1.625	1.140	.890	.640	1.390	.125	.171	.125	1.875	1.687	2.625	.250	1.562	3.843	.093			.359	.125	.437	3.688		3.687	.093	.40	.25	3.875
139	AC	SIMULATOR, LD/SIG, CDU		2900285-011																																										
138	AC	SIMULATOR, LD/SIG, OPTICS		1902023-021																																										
137	AC	FIX., MOUNTING, IMU/NAV BASE		6900003-011																																										
136	AC	FIXTURE, OPTICS/NAV BASE		2900072-011																																										
135	AC	FIX., MOUNTING, SUB SYSTEM		2900070-011																																										
134	AC	FIX., HAND., G AND N HARNESS		2900069-011																																										
133	AC	CNTR, SHIPPING, NAV BASE		2900068-011																																										
132	AC	FIX., MOUNTING, G AND N		2900067-011																																										
131	AC	SIMULATOR, LD/SIG, IMU/CDU		2900062-011																																										
130	AC	TESTER, GYRO WHEEL		2900061-011																																										
129	AC	COOLANT SUPPLY		1902133-021																																										
128	AC	TABLE, ROTARY		1900926-021						4.125	1.812	3.250		.125	.062	.12	.156		.125	1.625	1.140	.890	.640	1.390	.125	.171	.125	1.875	1.687	2.625	.250	1.562	3.843	.093			.359	.125	.437	3.688		3.687	.093	.40	.25	3.875
127	AC	FIX., HAND., OPTICS		2900074-011						2.125	.968	1.718		.093	.031	.06	.093		.093	.858	.608	.484	.358	.733	.077	.116	.062	.937	.875	1.343	.125	.781	1.892	.046			.209	.093	.250	1.875		1.840	.046	.23	.16	1.938
126	AC	FIXTURE, MTG, PTA/PEA.		2900066-011																																										
125	AC	CONT, TEMP, IMU LIFTING		2900063-011																																										
124	AC	FIXTURE, HANDLING, IMU		2900064-011																																										
123	AC	CONT, OPTICS, REMOTE		1902046-021																																										
122	AC	TEST CONTROL		1902009-021																																										
121	AC	ADPT MODULE, P.S.A.		1902431-021																																										
120	AC	BRIDGE, DECADE ERROR		2900128-011																																										
119	AC	PWR SUP, ELECTRONICS		2900012-011																																										
118	AC	PWR SUP, RELAY AND LAMP		1900049-031																																										
117	AC	CONSOLE, OSCILLOGRAPH		1900000-021																																										
116	AC	ADPT MODULE, P.S.A.		1902431-011																																										
115	AC	ADPT, TEST POINT, PTA/PEA.		2900145-011																																										
114	AC	ADPT, TEST POINT, P.S.A.		2900037-011																																										
113	AC	CONTROL, GIMBAL POSITION		2900036-011																																										
112	AC	SELECTOR, SIGNAL, PRIMARY		2900035-011																																										
111	AC	SEL, SIG, OSCILLOGRAPH		2900034-011																																										
110	AC	PANEL, PWR SUP AND LOAD		2900033-011																																										
109	AC	PANEL, MONITOR		2900031-011																																										
108	AC	PANEL, AUXILIARY INPUT		2900030-011																																										
107	AC	CAGING ELECTRONICS, GYRO		2900029-011																																										
106	AC	TEST SELECTOR		2900028-011																																										
105	AC	TEST CONTROL		2900027-011																																										
104	AC	MONITOR AND CONTROL, TEMP		2900026-011																																										
103	AC	DISTRIBUTION BOX, GSE		2900024-011																																										
102	AC	VOLTMETER, DIGITAL		2900007-011			B	II	NOTE 11C	2.125	.968	1.718	NA	.093	.031	.06	.093	.188 .194	.093	.858	.608	.484	.358	.733	.077	.116	.062	.937	.875	1.343	.125	.781	1.892	.046	NA	NA	.209	.093	.250	1.875	NA	1.840	.046	.23	.16	1.938
101	AC	NAVIGATION BASE ASSEMBLY - LEM		6899950		NAS-9-497	A	I	NOTE 11B	2.000	1.312	1.906	1.375	.078	.048	.078	.093	NA	NA	1.125	.750	.593	.453	1.015	.062	.187	.078	.875	.718	1.375	.218	NA	NA	.048	.031	.875	.305	.078	.531	1.906	.078	NA	.078	.531	.187	NA
100	AC	NAVIGATION BASE ASSEMBLY		2899982		NAS-9-497	A	I	NOTE 11B	2.000	1.312	1.906	1.375	.078	.048	.078	.093	NA	NA	1.125	.750	.593	.453	1.015	.062	.187	.078	.875	.718	1.375	.218	NA	NA	.048	.031	.875	.305	.078	.531	1.906	.078	NA	.078	.531	.187	NA

AC ELECTRONICS DASH NUMBERS

THIS SHEET ADDED

© REPLACES REV F WITH CHANGE

NOTES FOR TABLE

STYLE A IS FOR G&N SYSTEM
STYLE B IS FOR GROUND SUPPORT EQUIPMENT
TYPE I IS WITHOUT MOUNTING HOLES
TYPE II IS WITH MOUNTING HOLES

NOTE: AC DASH NO'S. CONT. ON SH.6

QTY REQD	PART OR IDENTIFYING NO.	MATERIAL OR NOTES	NOMENCLATURE OR DESCRIPTION	FIND NO.

LIST OF MATERIALS

UNLESS OTHERWISE SPECIFIED
DIMENSIONS ARE IN INCHES
CAPACITOR VALUES ARE IN µf
RESISTOR VALUES ARE IN OHMS
TOLERANCES ON
FRACTIONS ± — DECIMALS ±.005 ANGLES ± —
DO NOT SCALE THIS DRAWING

MATERIAL
SEE NOTE 11

AS APPLICABLE	
NEXT ASSY	USED ON
APPLICATION	

MIT
INSTRUMENTATION LAB
CAMBRIDGE, MASS.

DRAWN R.O. Jones 7-16-65
CHECKED 7-22-65
APPROVED
APPROVED
APPROVED MIT
APPROVED MSC

MANNED SPACECRAFT CENTER
HOUSTON, TEXAS

NAMEPLATES,
APOLLO G&N-GSE
(STANDARDS)

CODE IDENT NO 80230
SIZE E
DRAWING NO. 1004260
SCALE NONE
SHEET 4 OF 6

MASTER

NOTICE - WHEN GOVERNMENT DRAWINGS, SPECIFICATIONS, OR OTHER DATA ARE USED FOR ANY PURPOSE OTHER THAN IN CONNECTION WITH A DEFINITELY RELATED GOVERNMENT PROCUREMENT OPERATION, THE UNITED STATES GOVERNMENT THEREBY INCURS NO RESPONSIBILITY NOR ANY OBLIGATION WHATSOEVER; AND THE FACT THAT THE GOVERNMENT MAY HAVE FORMULATED, FURNISHED, OR IN ANY WAY SUPPLIED THE SAID DRAWINGS, SPECIFICATIONS OR OTHER DATA IS NOT TO BE REGARDED BY IMPLICATION OR OTHERWISE AS IN ANY MANNER LICENSING THE HOLDER OR ANY OTHER PERSON OR CORPORATION, OR CONVEYING ANY RIGHTS OR PERMISSION TO MANUFACTURE, USE, OR SELL ANY PATENTED INVENTION THAT MAY IN ANY WAY BE RELATED THERETO.

REVISIONS 02768

SYM	ZONE	DESCRIPTION	DR	CHK	DATE	APPROVED
G		REPLACES REV F WITH CHANGE PER TDRR 20854	rj		7/26/65	WK
H		REVISED PER TDRR 20892	rj		8/3/65	WK
J		REVISED PER TDRR 20904	rj		8/3/65	WK
K		REVISED PER TDRR 21379	rj		8/16/65	WK
L		REVISED PER TDRR 21410	rj		8/16/65	WK
M		REVISED PER TDRR 21993	rj			
N		REVISED PER TDRR 22621	rj		10/	
P		REVISED PER TDRR 22671	rj		1/	
R		REVISED PER TDRR 22672	rj			
S		REVISED PER TDRR 22750	rj		65	WK
T		REVISED PER TDRR 22823	rj			
U		REVISED PER TDRR 23072	rj		10-11-65	WKG
V		REVISED PER TDRR 23521	rj		10-26-65	WK
W		REVISED PER TDRR 23824	RAJ		11-9-65	WK
Y		REVISED PER TDRR 24018	RAJ		11-16-65	WK
Z		REVISED PER TDRR 24040	RAJ		11-19-65	WK
AA		REVISED PER TDRR 24060	RAJ		11-19-65	WK
AB		REVISED PER TDRR 24868	RAJ		12-22-65	WK
AC		REVISED PER TDRR 24973	RAJ		1-4-66	WK
AD		REVISED PER TDRR 25065	RAJ		1-18-66	WKG
AE		REVISED PER TDRR 25672	RAJ		2-4-66	WK
AF		REVISED PER TDRR 25671	RAJ		2-4-66	WK
AG		REVISED PER TDRR 26110	RAJ		2-15-66	WK
AH		REVISED PER TDRR 26372	"		3-16-66	WKG
AJ		REVISED PER TDRR 26425	"		3-16-66	WKG
AK		REVISED PER TDRR 26743	"		3-16-66	WKG
AL		REVISED PER TDRR 26798	"		3-16-66	WKG
AM		REVISED PER TDRR 27168	"		4-7-66	WKG
AN		REVISED PER TDRR 27235	"		4-7-66	WKG
AP		REVISED PER TDRR 27345	"		4-7-66	WKG
AR		REVISED PER TDRR 27417	"		4-7-66	WKG
AS		REVISED PER TDRR 27442	"		4-7-66	WKG
AT		REVISED PER TDRR 27719	"		4-20-66	WK
AU		REVISED PER TDRR 27880	"		4-20-66	WK
AV		REVISED PER TDRR 27896	"		4-20-66	WK
AW		28110	"		5-16-66	WKG
AY		28173	"			WKG
AZ		28131	"			WKG
BA		28124	"			WKG
BB		REVISED PER TDRR 28511	"		5-16-66	WKG
BC		" " " 28949	"		5-24-66	WKG
BD		" " " 29222	"		6-8-66	WKG
BE		" " " 29235	"		"	WKG
BF		" " " 29322	"		6-24-66	WKG
BG		" " " 29429	"		"	WKG
BH		" " " 29449	"		"	WKG
BJ		" " " 29335	"		"	WKG
BK		" " " 29619	"		"	WKG
BL		" " " 29696	"		6-29-66	WKG

THIS SHEET ADDED

Ⓖ REPLACES REV F WITH CHANGE

DASH NO.	P/C	PART NAME	REMARKS	PART NO.	SER. NO.	CONT. NO.	STYLE	TYPE	MATERIAL
499	MIT								
498									
401	MIT	COMPUTER ASSY		2003100		NAS-9-497	A	I	NOTE 11 B
-00	MIT	LIFTING SLING-G&N INST. QUAL. FIX. & AZM. REF. FIX.		1021640		NAS-9-4065	B	II	NOTE 11 C

DASH NO.	A	B	C	D	E	F	G	H	J	K	L	M	N	P	R	S	T	U	V	W	Y	Z
401	2.000	1.312	1.906	1.375	.078	.048	.078	.093	NA	NA	1.125	.750	.593	.453	1.015	.062	.187	.078	.875	.718	1.375	.218
-00	2.000	1.312	1.687	1.375	.078	.048	.078	.093	7086/7081	.093	1.187	.750	.593	.453	1.015	.062	.187	.078	.875	.718	1.375	.218

DASH NO.	AA	AB	AC	AD	AE	AF	AG	AH	AJ	AK	AL	AM	AN	AP	AR
401	NA	NA	.048	.031	.875	.305	.078	.531	1.906	.078	NA	.078	.531	.187	NA
-00	1.156	1.843	.048	NA	.875	.305	.078	.312	1.687	.110	1.830	.070	.275	.180	1.844

MIT DASH NUMBERS

NOTES FOR TABLE
STYLE A IS FOR G&N SYSTEM
STYLE B IS FOR GROUND SUPPORT EQUIPMENT
TYPE I IS WITHOUT MOUNTING HOLES
TYPE II IS WITH MOUNTING HOLES

QTY REQD	PART OR IDENTIFYING NO.	MATERIAL OR NOTES	NOMENCLATURE OR DESCRIPTION	FIND NO.

LIST OF MATERIALS

NEXT ASSY	USED ON
AS APPLICABLE	

APPLICATION

UNLESS OTHERWISE SPECIFIED
DIMENSIONS ARE IN INCHES
CAPACITOR VALUES ARE IN µf
RESISTOR VALUES ARE IN OHMS
TOLERANCES ON
FRACTIONS ± — DECIMALS ±.005 ANGLES ± —
DO NOT SCALE THIS DRAWING

MATERIAL
SEE NOTE 11

MIT
INSTRUMENTATION LAB
CAMBRIDGE, MASS.

DRAWN R A Jones 7-16-65
CHECKED A J Campo 7-23-65
APPROVED
APPROVED W Kupfer 12/1/65
APPROVED MIT W Kupfer 12/1/65
APPROVED MSC 1/26/65
DATE

MANNED SPACECRAFT CENTER
HOUSTON, TEXAS

NAMEPLATES,
APOLLO G&N-GSE
(STANDARDS)

CODE IDENT NO. 80230
SIZE E
DRAWING NO. 1004260
SCALE NONE
SHEET 5 OF 6

MASTER

NOTICE – WHEN GOVERNMENT DRAWINGS, SPECIFICATIONS, OR OTHER DATA ARE USED FOR ANY PURPOSE OTHER THAN IN CONNECTION WITH A DEFINITELY RELATED GOVERNMENT PROCUREMENT OPERATION, THE UNITED STATES GOVERNMENT THEREBY INCURS NO RESPONSIBILITY NOR ANY OBLIGATION WHATSOEVER, AND THE FACT THAT THE GOVERNMENT MAY HAVE FORMULATED, FURNISHED, OR IN ANY WAY SUPPLIED THE SAID DRAWINGS, SPECIFICATIONS OR OTHER DATA IS NOT TO BE REGARDED BY IMPLICATION OR OTHERWISE AS IN ANY MANNER LICENSING THE HOLDER OR ANY OTHER PERSON OR CORPORATION, OR CONVEYING ANY RIGHTS OR PERMISSION TO MANUFACTURE, USE, OR SELL ANY PATENTED INVENTION THAT MAY IN ANY WAY BE RELATED THERETO.

REVISIONS 02768

SYM	ZONE	DESCRIPTION	DR	CHK	DATE	APPROVED
AG		CHANGED NUMBER OF SHEETS FROM 5 TO 6 PER TDRR 26110.	RAJ		2-15-66	
AH		REVISED PER TDRR 26372	"		3-16-66	
AJ		REVISED PER TDRR 26425	"		3-16-66	
AK		REVISED PER TDRR 26743	"		3-16-66	
AL		REVISED PER TDRR 26798			3-16-66	
AM		REVISED PER TDRR 27168			4-7-66	
AN		REVISED PER TDRR 27235			4-7-66	
AP		REVISED PER TDRR 27345			4-7-66	
AR		REVISED PER TDRR 27417			4-7-66	
AS		REVISED PER TDRR 27442			4-7-66	
AT		REVISED PER TDRR 27719			4-20-66	
AU		REVISED PER TDRR 27880			4-20-66	
AV		REVISED PER TDRR 27896			4-20-66	
AW		28110	"		5-16-66	
AY		28173	"		5-16-66	
AZ		28131	"		5-16-66	
BA		28124	"		5-16-66	
BB		REVISED PER TDRR 28511	"		5-16-66	
BC		" " " 28949			5-24-66	
BD		" " " 29222	"		6-8-66	
BE		" " " 29235			"	
BF		" " " 29322	"		6-24-66	
BG		" " " 29429				
BH		" " " 29449	"		"	
BJ		" " " 29335			"	
BK		" " " 29619	"		"	
BL		" " " 29696	"		6-29-66	

DASH NO.	P/C	PART NAME	REMARKS	PART NO.	SER NO.	CONT NO.	STYLE	TYPE	MATERIAL
599	AC								
598	AC								
527	AC	FIX., MOUNTING, G AND N	(-144)	1902204-021		NAS 9-497	B	II	NOTE 11C
526	AC	FIX., MOUNTING, G AND N	(-144)	2900067-031					
525	AC	PORTABLE TEMP. CONTROLLER		1900496-021			B	II	NOTE 11C
524	AC	POWER, SERVO AND THERMOCOUPLE ASSEMBLY C/M		2010743			A	I	NOTE 11B
523	AC	PULSE TORQUE AND THERMOCOUPLE ASSEMBLY-LEM		6010656					
522	AC	COUPLING DATA UNIT AND THERMOCOUPLE ASSEMBLY - LEM		2010744					
521	AC	COUPLING DATA UNIT AND THERMOCOUPLE ASSEMBLY - C/M		2010744					
520	AC	PIPA ELECTRONICS AND THERMOCOUPLE ASSEMBLY		2010745			A	I	NOTE 11B
519	AC	FIXTURE, HANDLING, LEM-PSA	(-141)	6900129-011			B	II	NOTE 11C
518	AC	JUNCTION BOX, GSE-PSA	(-144)	1901933-031			B	II	NOTE 11C
517	AC	FIX., HAND., OPTICS INSTL.	(-141)	2901380-011				II	NOTE 11C
516	AC	POWER, SERVO AND THERMOCOUPLE ASSEMBLY-LEM		6010655		NAS 9-497			
514	AC	SIGNAL COND. ASSY LEM OPER.	(-100)	600701[illegible]		NAS-9-497	A	I	NOTE 11B
513		JUMPER, BY-PASS	(-141)	1021616			B	II	NOTE 11C
512		COUPLING DATA UNIT ASSEMBLY C/M	(-100)	2007322-011			A	I	NOTE 11B
511		COUPLING DATA UNIT ASSEMBLY - LEM	(-100)	2007322-021					
510		BATTERY POWER PACK	(-144)	1900011-041			B	II	NOTE 11C
509		JUNCTION BOX, P.S.A./G.S.E.	(-144)	1902195-021			B	II	NOTE- 11C
508		NAVIGATION BASE ASSEMBLY - LEM	✓ (-101)	6899980			A	I	NOTE 11B
507		CSL, COOL. AND PWR, G AND N	(-144)	1902134-041			B	II	NOTE 11C
506		BREAKOUT BOX, CABLE ADAPTER	(-141)	2901011-011					
505		MONITOR AND CONTROL, TEMP	(-141)	2900026-021					
504		PWR SUP, GUIDANCE SYSTEM	✓ (-141)	1900033-021					
503		CONTROL, GIMBAL POSITION	(-141)	2900036-021					
502		ADPT, TEST POINT, PTA/PEA.	(-141)	2900145-021					
501		MOUNTING PLATE, COMPONENT	(-144)	6900007-031		NAS-9-497	B	II	NOTE 11C
500	AC	MOUNTING PLATE, COMPONENT	✓ (-144)	2900677-021					

DASH NO.	A	B	C	D	E	F	G	H	J	K	L	M	N	P	R	S	T	U	V	W	Y	Z
527	FOR DIMENSIONS, SEE DASH 500 VALUES BELOW																					
526																						
525	3.000	1.937	2.437	2.312	.125	.031	.125	.156	.125	.125	1.718	1.187	.968	.749	1.452	.093	.295	.090	1.312	1.00	2.000	.250
524	2.125	.968	1.718	NA	.093	.031	.06	.093	NA	NA	.859	.508	.484	.358	.731	.062	.140	.062	NA	.968	1.450	.125
523	FOR DIMENSIONS, SEE DASH 508 VALUES BELOW																					
522																						
521																						
520																						
519	FOR DIMENSIONS, SEE DASH 504 VALUES BELOW																					
518	FOR DIMENSIONS, SEE DASH 500 VALUES BELOW																					
517	FOR DIMENSIONS, SEE DASH 502 VALUES BELOW																					
516	FOR DIMENSIONS SEE DASH 508 VALUES BELOW																					
514	FOR DIMENSIONS, SEE DASH 508 VALUES BELOW																					
513	2.125	.968	1.718	NA	.093	.031	.06	.093	.100 .104	.093	.858	.608	.484	.358	.733	.077	.116	.062	.937	.875	1.343	.125
512	FOR DIMENSIONS, SEE DASH 508 VALUES BELOW																					
511																						
510	FOR DIMENSIONS, SEE DASH 500 VALUES BELOW																					
509																						
508	2.000	1.312	1.906	1.375	.078	.048	.078	.093	NA	NA	1.125	.750	.593	.453	1.015	.062	.187	.078	.875	.718	1.375	.218
507	FOR DIMENSIONS, SEE DASH 500 VALUES BELOW																					
506	2.125	.968	1.718	NA	.093	.031	.06	.093	.100 .104	.093	.858	.608	.484	.358	.733	.077	.116	.062	.937	.875	1.343	.125
505																						
504																						
503																						
502																						
501	FOR DIMENSIONS, SEE DASH 500 VALUES BELOW																					
500	4.125	1.812	3.250	NA	.125	.062	.12	.156	.100/.104	.125	1.625	1.140	.890	.640	1.390	.125	.171	.125	1.875	1.687	2.625	.250

DASH NO.	AA	AB	AC	AD	AE	AF	AG	AH	AJ	AK	AL	AM	AN	AP	AR
525	1.687	2.750	.062	N/A	N/A	.463	.125	.562	2.437	.140	2.562	.090	.468	.359	2.750
524	NA	1.720	.046	.03	NA	.210	NA	NA	NA	.070	NA	.046	.32	.16	NA
513	.781	1.892	.046	NA	NA	.209	.093	.250	1.875	NA	1.840	.046	.23	.16	1.938
508	NA	NA	.048	.031	.875	.305	.078	.531	1.906	.078	NA	.078	.531	.187	NA
506	.781	1.892	.046	NA	NA	.209	.093	.250	1.875	NA	1.840	.046	.23	.16	1.938
500	1.562	3.843	.093	NA	NA	.359	.125	.437	3.688	NA	3.687	.093	.40	.25	3.875

NOTES FOR TABLE
STYLE A IS FOR G&N SYSTEM
STYLE B IS FOR GROUND SUPPORT EQUIPMENT
TYPE I IS WITHOUT MOUNTING HOLES
TYPE II IS WITH MOUNTING HOLES

(AG) THIS SHEET ADDED

AC ELECTRONICS DASH NUMBERS

QTY REQD	PART OR IDENTIFYING NO.	MATERIAL OR NOTES	NOMENCLATURE OR DESCRIPTION	FIND NO.

LIST OF MATERIALS

AS APPLICABLE	
NEXT ASSY	USED ON
APPLICATION	

UNLESS OTHERWISE SPECIFIED
DIMENSIONS ARE IN INCHES
CAPACITOR VALUES ARE IN μf
RESISTOR VALUES ARE IN OHMS
TOLERANCES ON
FRACTIONS ± — DECIMALS ±.005 ANGLES ± —
DO NOT SCALE THIS DRAWING

MATERIAL
SEE NOTE 11

MIT
INSTRUMENTATION LAB
CAMBRIDGE, MASS.

DRAWN R. A. Jones 2-15-66
CHECKED 2-15-66
APPROVED
APPROVED
APPROVED MIT R. C. METZGER 5-18-66
APPROVED MSC
DATE

MANNED SPACECRAFT CENTER
HOUSTON, TEXAS

NAMEPLATES,
APOLLO G&N-GSE
(STANDARDS)

CODE IDENT NO. 80230
SIZE E
DRAWING NO. 1004260
SCALE NONE
SHEET 6 OF 6

MASTER
MASTER

NOTICE – WHEN GOVERNMENT DRAWINGS, SPECIFICATIONS, OR OTHER DATA ARE USED FOR ANY PURPOSE OTHER THAN IN CONNECTION WITH A DEFINITELY RELATED GOVERNMENT PROCUREMENT OPERATION, THE UNITED STATES GOVERNMENT THEREBY INCURS NO RESPONSIBILITY NOR ANY OBLIGATION WHATSOEVER; AND THE FACT THAT THE GOVERNMENT MAY HAVE FORMULATED, FURNISHED, OR IN ANY WAY SUPPLIED THE SAID DRAWINGS, SPECIFICATIONS, OR OTHER DATA IS NOT TO BE REGARDED BY IMPLICATION OR OTHERWISE AS IN ANY MANNER LICENSING THE HOLDER OR ANY OTHER PERSON OR CORPORATION, OR CONVEYING ANY RIGHTS OR PERMISSION TO MANUFACTURE, USE, OR SELL ANY PATENTED INVENTION THAT MAY IN ANY WAY BE RELATED THERETO.

NOTES:

1. INTERPRET DRAWING IN ACCORDANCE WITH STANDARDS PRESCRIBED IN MIL-D-70327.
2. DIMENSIONS ON EACH VIEW APPLY TO ALL VIEWS. (WITH THE EXCEPTION OF MOUNTING HOLES).
3. FORMATS ILLUSTATED WILL BE APPLICABLE TO ALL ITEMS REQUIRING NAMEPLATES BELOW END ITEM DESIGNATION (SYSTEMS, ASSEMBLIES, ETC.)
4. PLATE BACKGROUND TO BE LUSTERLESS BLACK PER FED-STD-595, COLOR 37038. BORDER, MARKING AND LETTERING TO BE NATURAL METAL,(ANODIZED ALUMINUM).
5. MARKING METHOD TO BE DIE STAMPING, ETCHING OR ENGRAVING IN ACCORDANCE WITH MIL P 19834.
6. LETTERING STYLE TO BE GOTHIC,(SANS SERIFS), AND NUMBERS TO BE ARABIC.
7. WHERE LOCATING DIMENSIONS ARE NOT SHOWN, CHARACTERS SHALL BE SYMMETRICALLY POSITIONED.
8. IDENTIFY WITH DRAWING NUMBER PER ND1002019.
9. WHEN "AUTO MARK" METAL MARKING TYPEWRITER IS USED TO ADD DATA TO BLANK SPACES, TYPE SIZE IS TO BE SELECTED FROM DIMENSIONS U, AC AND AM.
10. NASA SYMBOL IS TO BE PROPORTIONAL TO NAMEPLATE IN RATIO OF 1 TO 5 WITH DIMENSION A VALUE AND IS TO HAVE NATURAL BACKGROUND. NASA SYMBOL LETTERS LETTERING AND FEATHER TO BE BLACK,(OR WHITE FOR SILK SCREENING). WHERE BLACK FEATHER PROTRUDES INTO BLACK BACKGROUND, A MINIMUM OUTLINE OF NATURAL BACKGROUND SHALL EXIST.
11. NAMEPLATES WILL BE APPLIED BY METHODS LISTED BELOW, SHOWN IN ORDER OF PREFERENCE, (I.E., FOR RELIABILITY AND WEIGHT).
    - A - STENCIL OR SILK SCREEN DIRECTLY ON EQUIPMENT USING INK PER SCD 1010920,(WHITE OR BLACK).
    - B - ALUMINUM FOIL,(STYLE A OR B, TYPE I):
      FOIL SHALL BE .0030 ± .0005 THICK PER MIL-A-148.
      FOIL SHALL HAVE NO ADHESIVE BACKING.
      FOIL SHALL BE BONDED PER ND 1002219,(METHOD II).
      FOIL SHALL BE CLEAR ANODIZED PER MIL-A-8625, TYPE II.
    - C - PLATE, (STYLE A OR B, TYPE II):
      MATERIAL: QQ-A-250, TEMPER O OR H14, TYPE 1100,ALUMINUM ALLOY, .032 THICK.
      ANODIZE PER MIL-A-8625, TYPE II.
      ALUMINUM PLATE MUST BE FREE FROM BURRS AND SHARP CORNERS, MOUNTED WITH APPLICABLE SIZE FASTENERS.
12. NAMEPLATES SHALL BE CAPABLE OF MEETING APPLICABLE REQUIREMENTS OF MIL-M-13231.
13. ON DIMENSION TABLES SHOWN ON PAGES 2, 3, 4 AND 5, NA MEANS, "NOT APPLICABLE".

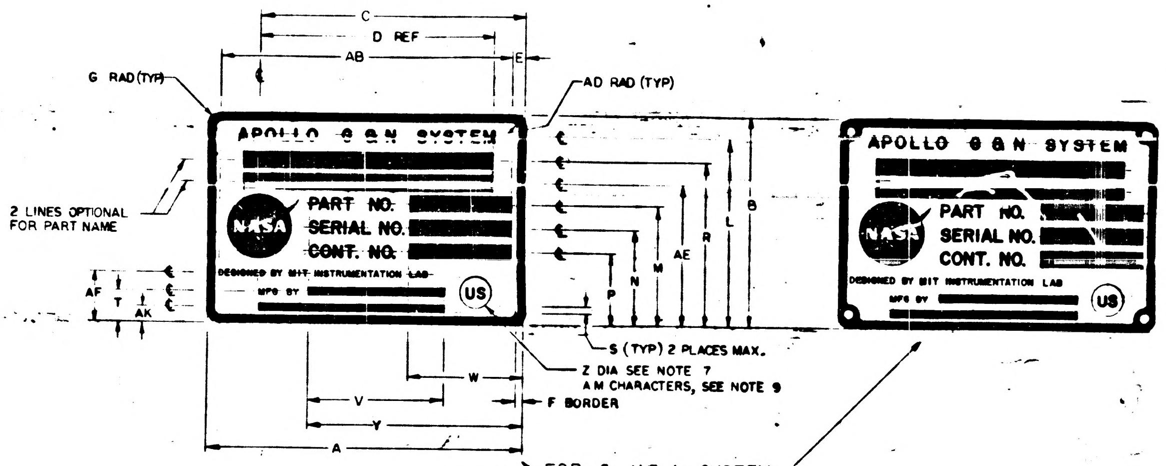

FOR G AND N SYSTEM
STYLE A

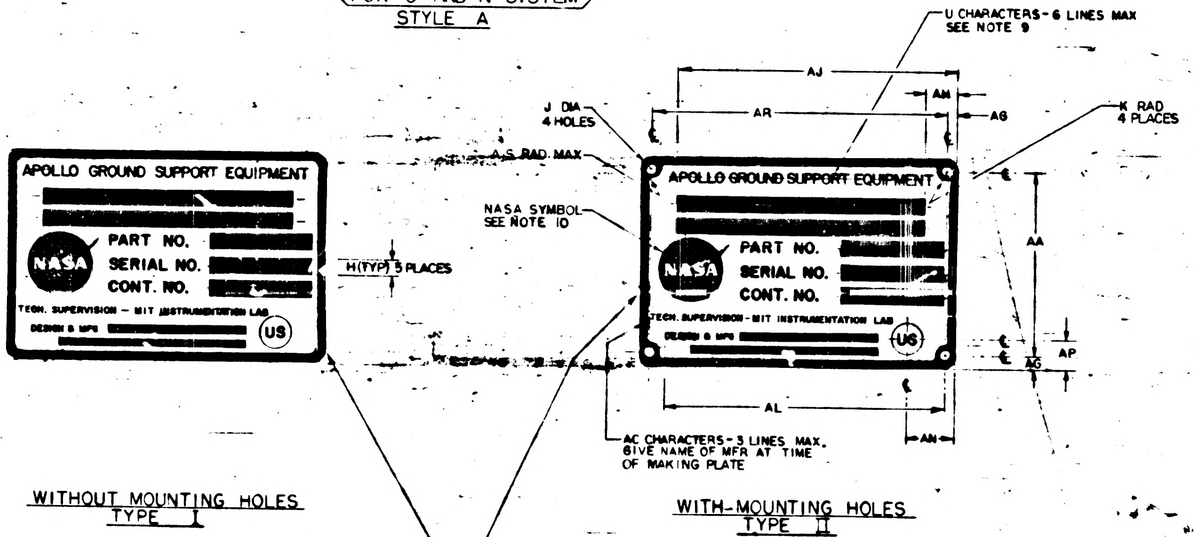
U CHARACTERS - 6 LINES MAX
SEE NOTE 9
AJ
AM
AR
AG
J DIA 4 HOLES
K RAD 4 PLACES
AS RAD MAX
APOLLO GROUND SUPPORT EQUIPMENT
NASA SYMBOL SEE NOTE 10
PART NO.
SERIAL NO.
CONT. NO.
NASA
H(TYP) 5 PLACES
TECH. SUPERVISION – MIT INSTRUMENTATION LAB
DESIGN & MFG
US
AA
AP
AG
AL
AN
AC CHARACTERS - 3 LINES MAX. GIVE NAME OF MFR AT TIME OF MAKING PLATE

WITHOUT MOUNTING HOLES
TYPE I

WITH-MOUNTING HOLES
TYPE II

FOR GROUND SUPPORT EQUIPMENT
STYLE B

REVISIONS						Q2768
SYM	ZONE	DESCRIPTION	DR.	CHK	DATE	APPROVED
G		REPLACES REV F WITH CHANGE PER TDRR 20854			7/16/65	
H		REVISED PER TDRR 20892			[illegible]	
J		REVISED PER TDRR 20904			[illegible]	
K		REVISED PER TDRR 21379			[illegible]	
L		REVISED PER TDRR 21410			8/23/65	
M		REVISED PER TDRR 21993				
N		REVISED PER TDRR 22621			10/	
P		REVISED PER TDRR 22671			11/	
R		REVISED PER TDRR 22672				
S		REVISED PER TDRR 22750			65	
T		REVISED PER TDRR 22823				
U		REVISED PER TDRR 23072			10-18-65	
V		REVISED PER TDRR 23521			10-27-65	
W		REVISED PER TDRR 23824	RAJ		11-9-65	
Y		REVISED PER TDRR 24018	RAJ		11-16-65	
Z		REVISED PER TDRR 24040	RAJ		11-19-65	
AA		REVISED PER TDRR 24060	RAJ		11-19-65	
AB		REVISED PER TDRR 24868	RAJ		12-22-65	
AC		REVISED PER TDRR 24973	RAJ		1-4-66	
AD		REVISED PER TDRR 25065	RAJ		1-18-66	
AE		REVISED PER TDRR 25672	RAJ		2-4-66	
AF		REVISED PER TDRR 25671	RAJ		2-4-66	
AG		REVISED PER TDRR 26110	RAJ		2-15-66	
AH		REVISED PER TDRR 26372	"		3-16-66	
AJ		REVISED PER TDRR 26425	"		3-16-66	
AK		REVISED PER TDRR 26743	"		3-16-66	
AL		REVISED PER TDRR 26798	"		3-16-66	
AM		REVISED PER TDRR 27168	"		4-7-66	
AN		REVISED PER TDRR 27235	"		4-7-66	
AP		REVISED PER TDRR 27345	"		4-7-66	
AR		REVISED PER TDRR 27417	"		4-7-66	
AS		REVISED PER TDRR 27442	"		4-7-66	
AT		REVISED PER TDRR 27719	"		4-20-66	
AU		REVISED PER TDRR 27680	"		4-20-66	
AV		REVISED PER TDRR 27896	"		4-20-66	
AW		28110	"		5-16-66	
AY		28173	"			
AZ		28131	"			
BA		28124	"			
BB		REVISED PER TDRR 28511	"		5-16-66	
BC		" " " 28949	"		5-24-66	
BD		" " " 29222	"		6-8-66	
BE		" " " 29235	"		6-8-66	
BF		" " " 29322	"		6-30-66	
BG		" " " 29429	"		"	
BH		" " " 29449	"		"	
BJ		" " " 29335	"		"	
BK		" " " 296 9	"		"	
BL		" " " 29696	"		"	
BM		REVISION STATUS CHANGED	JSD	NS	7-29-66	

SUGGESTED PROPORTIONS FOR NAMEPLATE DIMENSIONS.
1. SELECT NAMEPLATE LENGTH, DIMENSION "A", TO FIT DESIGN NEEDS.
2. DIMENSIONS B THRU AS ON LINE 1 BELOW ARE PROPORTIONAL TO "A" BY MULTIPLIERS SHOWN IN LINE 2 BELOW.

1.	A	B	C	D	E	F	G	H	J	K	L	M	N	P	R	S	T
2.	1.000 A	.6563 A	.8438 A	.6875 A	.0391 A	.0240 A	.0391 A	.0469 A	.0547 A	.0469 A	.5938 A	.3750 A	.2969 A	.2187 A	.5079 A	.0313 A	.0938 A

1.	U	V	W	Y	Z	AA	AB	AC	AD	AE	AF	AG	AH	AJ	AK	AL	AM	AN	AP	AR	AS
2.	.0391 A	.4375 A	.3594 A	.6875 A	.1094 A	.5781 A	.9219 A	.0240 A	.0156 A	.4375 A	.1525 A	.0391 A	.1563 A	.8438 A	.0548 A	.8659 A	.0391 A	.1563 A	.0938 A	.9219 A	.0151 A

Ⓖ REPLACES REV F WITH CHANGE

QTY REQD	PART OR IDENTIFYING NO.	MATERIAL OR NOTES	NOMENCLATURE OR DESCRIPTION	FIND NO.
			—	

LIST OF MATERIALS

AS APPLICABLE	
NEXT ASSY	USED ON
APPLICATION	

UNLESS OTHERWISE SPECIFIED
DIMENSIONS ARE IN INCHES
CAPACITOR VALUES ARE IN μf
RESISTOR VALUES ARE IN OHMS
TOLERANCES ON
FRACTIONS ± — DECIMALS ± .005 ANGLES ± —
DO NOT SCALE THIS DRAWING

MATERIAL
SEE NOTE 11

MIT
INSTRUMENTATION LAB
CAMBRIDGE, MASS.

MANNED SPACECRAFT CENTER
HOUSTON, TEXAS

DRAWN R a Jones 7/16/65
CHECKED A. J. [illegible] 7-22-65
APPROVED
APPROVED [illegible] 7/22/65
APPROVED MIT
APPROVED MSC
DATE

NAMEPLATES,
APOLLO G&N—GSE
(STANDARDS)

CODE IDENT NO. 80230
SIZE E
DRAWING NO. 1004260
SCALE NONE
SHEET OF

1004260 BM

NOTICE - WHEN GOVERNMENT DRAWINGS, SPECIFICATIONS, OR OTHER DATA ARE USED FOR ANY PURPOSE OTHER THAN IN CONNECTION WITH A DEFINITELY RELATED GOVERNMENT PROCUREMENT OPERATION, THE UNITED STATES GOVERNMENT THEREBY INCURS NO RESPONSIBILITY NOR ANY OBLIGATION WHATSOEVER; AND THE FACT THAT THE GOVERNMENT MAY HAVE FORMULATED, FURNISHED, OR IN ANY WAY SUPPLIED THE SAID DRAWINGS, SPECIFICATIONS, OR OTHER DATA IS NOT TO BE REGARDED BY IMPLICATION OR OTHERWISE AS IN ANY MANNER LICENSING THE HOLDER OR ANY OTHER PERSON OR CORPORATION, OR CONVEYING ANY RIGHTS OR PERMISSION TO MANUFACTURE, USE, OR SELL ANY PATENTED INVENTION THAT MAY IN ANY WAY BE RELATED THERETO.

02768

REVISIONS

SYM	ZONE	DESCRIPTION	DR	CHK	DATE	APPROVED
G		REPLACES REV F WITH CHANGE PER TDRR 20854.			7/24/65	
H		REVISED PER TDRR 20892			[illegible]	
J		REVISED PER TDRR 20904			[illegible]	
K		REVISED PER TDRR 21379			[illegible]	
L		REVISED PER TDRR 21410			[illegible]	
M		REVISED PER TDRR 21993	"			
N		REVISED PER TDRR 22621	"		[illegible]	
P		REVISED PER TDRR 22671	"			
R		REVISED PER TDRR 22672	"			
S		REVISED PER TDRR 22750	"			
T		REVISED PER TDRR 22823	"		[illegible]	
U		REVISED PER TDRR 23072	"		10-22-65	
V		REVISED PER TDRR 23521	"		10-27-65	
W		REVISED PER TDRR 23824	RAJ		11-9-65	
Y		REVISED PER TDRR 24018	RAJ		11-16-65	
Z		REVISED PER TDRR 24040	RAJ		11-19-65	
AA		REVISED PER TDRR 24060	RAJ		11-19-65	
AB		REVISED PER TDRR 24868	RAJ		12-22-65	
AC		REVISED PER TDRR 24973	RAJ		1-4-66	
AD		REVISED PER TDRR 25065	RAJ		1-18-66	
AE		REVISED PER TDRR 25672	RAJ		2-4-66	
AF		REVISED PER TDRR 25671	RAJ		2-4-66	
AG		REVISED PER TDRR 26110	RAJ		2-15-66	
AH		REVISED PER TDRR 26372	"		3-16-66	
AJ		REVISED PER TDRR 26425	"		3-16-66	
AK		REVISED PER TDRR 26743	"		3-16-66	
AL		REVISED PER TDRR 26798	"		3-16-66	
AM		REVISED PER TDRR 27168	"		4-8-66	
AN		REVISED PER TDRR 27235	"		4-8-66	
AP		REVISED PER TDRR 27345	"		4-8-66	
AR		REVISED PER TDRR 27417	"		4-8-66	
AS		REVISED PER TDRR 27442	"		4-8-66	
AT		REVISED PER TDRR 27719	"		4-21-66	
AU		REVISED PER TDRR 27880	"		4-21-66	
AV		REVISED PER TDRR 27896	"		4-21-66	
AW		↓	"		5-16-66	
AY		28173	"		↓	
AZ		28131	"		↓	
BA		28124	"		↓	
BB		REVISED PER TDRR 28511	"		5-16-66	
BC		" " " 28949	"		5-24-66	
BD		" " " 29222	"		6-8-66	
BE		" " " 29235	"		"	
BF		" " " 29322	"		6-30-66	
BG		" " " 29429	"		"	
BH		" " " 29449	"		"	
BJ		" " " 29335	"		"	
BK		" " " 29619	"		"	
BL		" " " 29696	"		"	
BM		REVISION STATUS CHANGED	JSD	N.S.	7-29-66	

DASH NO.	P/C	PART NAME	REMARKS	PART NO.	SER. NO.	CONT. NO.	STYLE	TYPE	MATERIAL	A	B	C	D	E	F	G	H	J	K	L	M	N	P	R	S	T	U	V	W	Y	Z	AA	AB	AC	AD	AE	AF	AG	AH	AJ	AK	AL	AM	AN	AP	AR
399	K																																													
398	K																																													
350	K	ALIGNMENT OPTICAL TELESCOPE (LEM)		NA	NA	NA	A	I	NOTE 11B	4.000	2.625	3.375	2.750	.156	.093	.156	.187	NA	NA	2.312	1.468	1.187	.906	2.031	NA	.375	.156	NA	1.437	2.750	.437	NA	3.688	.062	.062	1.750	.593	NA	.625	3.375	.187	NA	.156	.531	.453	NA
309	K																																													
308	K																																													
307	K						B	I	NOTE 11 B	4.000	2.625	3.375	2.750	.156	.093	.156	.187	NA	NA	2.328	1.468	1.187	.906	2.031	.062	.375	.156	NA	1.437	2.750	.437	NA	3.687	.062	.062	1.750	.593	NA	NA	NA	NA	NA	NA	NA	NA	NA
306	K						B	II	NOTE 11 C	4.000	2.625	3.375	2.750	.156	.093	.156	.187	.125	.156	2.328	1.468	1.187	.906	2.031	.062	.375	.156	↓	1.437	2.750	.437	2.312	3.687	.062	NA	1.750	.593	↓	↓	↓	↓	↓	↓	↓	↓	↓
305	K						B	I	NOTE 11 B	2.000	1.312	1.687	1.375	.078	.048	.078	.093	NA	NA	1.164	.734	.593	.453	1.015	.048	.171	.078	↓	.718	1.375	.187	NA	NA	.048	.031	.875	.320	↓	↓	↓	↓	↓	↓	↓	↓	↓
304	K						B	II	NOTE 11 C	2.000	1.312	1.687	1.375	.078	.048	.078	.093	.070	.078	1.164	.734	.593	.453	1.015	.048	.171	.078	NA	.718	1.375	.187	.156	1.843	.048	NA	.875	.320	NA	NA	NA	NA	NA	NA	NA	NA	NA
303	K																																													
302	K																																													
301	K																																													
300	K	OPTICAL UNIT		NA	NA	NA	A	I	NOTE 11 B	2.000	1.312	1.675	NA	NA	.048	.078	NA	NA	NA	1.090	.812	.675	.540	.940	NA	.265	NA	NA	NA	1.375	.218	NA	NA	NA	NA	NA	.375	NA	NA	NA	.180	NA	.078	NA	NA	NA
9	K	2 IN AUTOCOLLIMATOR		1001702			B	II	NOTE 11 C	4.000	2.625	3.812	2.750	.156	.093	.156	.187	.125	.156	2.250	1.500	1.187	.906	2.031	.093	.375	.156	1.750	1.437	2.750	.437	2.312	3.687	.062	NA	1.750	.593	.156	1.062	3.812	.156	NA	.156	1.062	.375	3.687
8	K	5 IN AUTOCOLLIMATOR		1017410			B	II	NOTE 11 C	4.000	2.625	3.812	2.750	.156	.093	.156	.187	.125	.156	2.250	1.500	1.187	.906	2.031	.093	.375	.156	1.750	1.437	2.750	.437	2.312	3.687	.062	NA	1.750	.593	.156	1.062	3.812	.156	NA	.156	1.062	.375	3.687
7	K	2½ IN AUTOCOLLIMATOR (SCT)		1017435			B	II	NOTE 11 C	4.000	2.625	3.812	2.750	.156	.093	.156	.187	.125	.156	2.250	1.500	1.187	.906	2.031	.093	.375	.156	1.750	1.437	2.750	.437	2.312	3.687	.062	NA	1.750	.593	.156	1.062	3.812	.156	NA	.156	1.062	.375	3.687
6	K	2½ IN AUTOCOLLIMATOR (SXT)		1017448			B	II	NOTE 11 C	4.000	2.625	3.812	2.750	.156	.093	.156	.187	.125	.156	2.250	1.500	1.187	.906	2.031	.093	.375	.156	1.750	1.437	2.750	.437	2.312	3.687	.062	NA	1.750	.593	.156	1.062	3.812	.156	NA	.156	1.062	.375	3.687
5	K	RETROREFLECTING PRISM ASSEMBLY		1019840			B	I	NOTE 11 B	4.000	2.625	3.812	2.750	.156	.093	.156	.187	NA	NA	2.250	1.500	1.187	.906	2.031	.093	.375	.156	1.750	1.437	2.750	.437	NA	NA	.062	.062	1.750	.593	.156	1.062	3.812	.156	NA	.156	1.062	.375	NA
4	K	S/H SIMULATOR ASSEMBLY		1019896			B	I	NOTE 11 B	4.000	2.625	3.812	2.750	.156	.093	.156	.187	NA	NA	2.250	1.500	1.187	.906	2.031	.093	.375	.156	1.750	1.437	2.750	.437	NA	NA	.062	.062	1.750	.593	.156	1.062	3.812	.156	NA	.156	1.062	.375	NA
3	K	REFERENCE MIRROR		1001767			B	I	NOTE 11 B	2.000	1.312	1.906	1.375	.078	.048	.078	.093	NA	NA	1.125	.750	.593	.453	1.015	.062	.187	.078	.875	.718	1.375	.218	NA	NA	.048	.031	.875	.305	.078	.531	1.906	.078	NA	.078	.531	.187	NA
2	K	2 IN PLANE READING AUTOCOLLIMATOR		1017413			B	I	NOTE 11 B	2.000	1.312	1.906	1.375	.078	.048	.078	.093	NA	NA	1.125	.750	.593	.453	1.015	.062	.187	.078	.875	.718	1.375	.218	NA	NA	.048	.031	.875	.305	.078	.531	1.906	.078	NA	.078	.531	.187	NA
1	K	2 IN AUTOCOLLIMATOR		1001702			B	I	NOTE 11 B	2.000	1.312	1.906	1.375	.078	.048	.078	.093	NA	NA	1.125	.750	.593	.453	1.015	.062	.187	.078	.875	.718	1.375	.218	NA	NA	.048	.031	.875	.305	.078	.531	1.906	.078	NA	.078	.531	.187	NA

NOTES FOR TABLE

STYLE A IS FOR G&N SYSTEM.
STYLE B IS FOR GROUND SUPPORT EQUIPMENT.
TYPE I IS WITHOUT MOUNTING HOLES.
TYPE II IS WITH MOUNTING HOLES.

Ⓖ REPLACES REV F WITH CHANGE

KOLLSMAN DASH NUMBERS

QTY REQD	PART OR IDENTIFYING NO.	MATERIAL OR NOTES	NOMENCLATURE OR DESCRIPTION	FIND NO.

LIST OF MATERIALS

AS APPLICABLE

NEXT ASSY	USED ON

APPLICATION

UNLESS OTHERWISE SPECIFIED
DIMENSIONS ARE IN INCHES •
CAPACITOR VALUES ARE IN μf
RESISTOR VALUES ARE IN OHMS
TOLERANCES ON
FRACTIONS ± — DECIMALS ±.005 ANGLES ± —
DO NOT SCALE THIS DRAWING

MATERIAL
SEE NOTE 11

MIT
INSTRUMENTATION LAB
CAMBRIDGE, MASS

MANNED SPACECRAFT CENTER
HOUSTON, TEXAS

DRAWN R A Jones 7-16-65
CHECKED 7-22-65
APPROVED
APPROVED
APPROVED MIT
APPROVED MSC
DATE

NAMEPLATES,
APOLLO G&N-GSE
(STANDANDS)

CODE IDENT NO. 80230
SIZE E
DRAWING NO. 1004260
SCALE NONE
SHEET 2 OF 6

[illegible]

REVISIONS						02768
SYM	ZONE	DESCRIPTION	DR	CHK	DATE	APPROVED
G		REPLACES REV F WITH CHANGE PER TDRR 20854				
H		REVISED PER TDRR 20892				
J		REVISED PER TDRR 20904				
K		REVISED PER TDRR 21379				
L		REVISED PER TDRR 21410				
M		REVISED PER TDRR 21993				
N		REVISED PER TDRR 22621				
P		REVISED PER TDRR 22671				
R		REVISED PER TDRR 22672				
S		REVISED PER TDRR 22750				
T		REVISED PER TDRR 22823				WK
U		REVISED PER TDRR 23072				
V		REVISED PER TDRR 23521			10-26-65	WK
W		REVISED PER TDRR 23824	RAJ		11-9-65	WK
Y		REVISED PER TDRR 24018	RAJ		11-16-65	WK
Z		REVISED PER TDRR 24040	RAJ		11-19-65	WK
AA		REVISED PER TDRR 24060	RAJ		11-19-65	WK
AB		REVISED PER TDRR 24868	RAJ		12-22-65	WK
AC		REVISED PER TDRR 24973	RAJ		1-4-66	WK
AD		REVISED PER TDRR 25065	RAJ		1-18-66	
AE		REVISED PER TDRR 25672	RAJ		2-4-66	WK
AF		REVISED PER TDRR 25671	RAJ		2-4-66	WK
AG		REVISED PER TDRR 26110	RAJ		2-15-66	WK
AH		REVISED PER TDRR 26372	"		3-16-66	
AJ		REVISED PER TDRR 26425	"		3-16-66	
AK		REVISED PER TDRR 26743	"		3-16-66	
AL		REVISED PER TDRR 26798	"		3-16-66	
AM		REVISED PER TDRR 27168	"		4-8-66	
AN		REVISED PER TDRR 27235	"		4-8-66	
AP		REVISED PER TDRR 27345	"		4-8-66	
AR		REVISED PER TDRR 27417	"		4-8-66	
AS		REVISED PER TDRR 27442	"		4-8-66	
AT		REVISED PER TDRR 27719	"		4-20-66	WK
AU		REVISED PER TDRR 27890				
AV		REVISED PER TDRR 27896	"		4-20-66	WK
AW		28110	"		5-16-66	
AY		28 73	"		5-16-66	
AZ		28131	"		5-16-66	
BA		28124	"		5-16-66	
BB		REVISED PER TDRR 28511	"		5-16-66	
BC		" " " 28949	"		5-24-66	
BD		" " " 29222	"		6-8-66	
BE		" " " 29235	"		"	
BF		" " " 29322	"		6-29-66	
BG		" " " 29429	"		"	
BH		" " " 29449	"		"	
BJ		" " " 29335	"		"	
BK		" " " 29619	"		"	
BL		" " " 29696	"		"	
BM		" " " 29802	JSD	N.S.	7-29-66	

DASH NO.	P/C	PART NAME	REMARKS	PART NO.	SER. NO.	CONT. NO.	STYLE	TYPE	MATERIAL	A
299	R									
298	R									
275	R	DRAWER ASSY RDC INTERFACE		2014045-031	NA	NAS 9-497	B	I	NOTE 11B	FOR DIMENSIONS SEE DASH 15 VALUES BELOW
274		SELF TEST ASSY		2014366-031						
273		LOGIC DRAWER ASSY NO. 2		2014037-031						FOR DIMENSIONS - SEE DASH 17 VALUES BELOW
272		DRAWING ASSY PROGRAMMER & MONITOR		2014041-031						FOR DIMENSIONS, SEE DASH 17 VALUES BELOW
271		LOGIC DRAWER ASSY NO. 1		2014036-031				I	NOTE 11 B	
270		COMPUTER TEST SET		2014042-031				II	NOTE 11C	FOR DIMENSIONS, SEE DASH 18 VALUES BELOW
269		POWER CONTROL ASSY		2014044-021				I	NOTE 11 B	FOR DIMENSIONS, SEE DASH 17 VALUES BELOW
268		SELF TEST ASSY		2014366-021						FOR DIMENSIONS, SEE DASH 15 VALUES BELOW
267		AGC JUNCTION ASSY		2014341-021						
266		POWER CONTROL ASSY		2014079-021						
265		BUFFER CIRCUIT ASSY		2014254-021						
264		DRAWER ASSY XY INTERFACE		2014040-021						
263		DRAWER ASSY RDC INTERFACE		2014045-021						
262		DRAWER ASSY PROGRAMMER & MONITOR		2014041-021						FOR DIMENSIONS, SEE DASH 17 VALUES BELOW
261		LOGIC DRAWER ASSY NO. 2		2014037-021						
260		LOGIC DRAWER ASSY NO. 1		2014036-02				I	NOTE 11 B	
259		OPERATION CONSOLE		2014024-02				II	NOTE 11 C	FOR DIMENSIONS, SEE DASH 18 VALUES BELOW
258		COMPUTER TEST SET		2014042-02						
257		AUXILIARY CALIBRATION CONSOLE		2014059-021						
256		AGC CALIBRATION CONSOLE		2014049-021				II	NOTE 11 C	
255		AGC HANDLING FIXTURE		2014282-021				I	NOTE 11 B	FOR DIMENSIONS, SEE DASH 17 VALUES BELOW
254		DRAWER ASSY COMP. SIMULATOR		2014048-011				II	NOTE 11 C	FOR DIMENSIONS, SEE DASH 18 VALUES BELOW
253		SHIPPING KIT ASSY, NAV DSKY		2016312-011						
252		SHIPPING KIT ASSY, UNIVERSAL DSKY		2016316-011						
251		SHIPPING KIT ASSY, MAIN DSKY		2016313-011				II	NOTE 11 C	
250		AMPLIFIER, REWORK		2014386				I	NOTE 11 B	FOR DIMENSIONS, SEE DASH 15 VALUES BELOW
249		TEMP MONITOR ASSY		2014313-011					NOTE 11 C	FOR DIMENSIONS, SEE DASH 17 VALUES BELOW
248		AGC JUNCTION ASSY		2014434-011					NOTE 11 B	FOR DIMENSIONS, SEE DASH 15 VALUES BELOW
247		AC INPUT PANEL ASSY		2014302-011						
246		SELF TEST ASSY		2014392-011						
245		TAPE PUNCH ASSEMBLY		2014039-011						FOR DIMENSIONS, SEE DASH 15 VALUES BELOW
244	R	TAPE READER ASSEMBLY		2014038-011	NA	NAS-9-497	B	I	NOTE 11 B	
243										
242										
241	R	APOLLO GUIDANCE COMPUTER GROUP		6003001	NA	NAS-9-497	A	I	NOTE 11 B	FOR DIMENSIONS, SEE DASH 19 VALUES BELOW
240		SELF TEST ASSEMBLY		2014366-011	NA		B	I		FOR DIMENSIONS, SEE DASH 15 VALUES BELOW
239		POWER SUPPLY ASSY-115V., 400 CYCLE		2014207-011						FOR DIMENSIONS, SEE DASH 17 VALUES BELOW
238		AC INPUT PANEL ASSY		2014043-011						
237		POWER CONTROL ASSY		2014079-011						FOR DIMENSIONS, SEE DASH 15 VALUES BELOW
236		DRAWER ASSY-XY INTERFACE		2014040-011						
235		DRAWER ASSY RDC INTERFACE		2014045-011						
234		BUFFER CIRCUIT ASSY		2014254-011						
233		CONTROL & INTERFACE ASSY		2014204-011						
232		POWER CONTROL ASSY		2014044-011						FOR DIMENSIONS, SEE DASH 17 VALUES BELOW
231		DRAWER ASSY, PROGRAMMER & MONITOR		2014041-011						
230		CONNECTOR INTERFACE ASSY		2014272-011						FOR DIMENSIONS, SEE DASH 15 VALUES BELOW
229		CONNECTOR INTERFACE ASSY		2014047-011						
228		ANTENNA, TUNING CAPACITOR ASSY		2014209-011						
227		MOUNTING FIXTURE ASSY		2014006-011						FOR DIMENSIONS, SEE DASH 17 VALUES BELOW
226		POWER SUPPLY ASSY 3 VDC		2014234-011						
225		PANEL ASSY - SIGNAL INTERFACE		2014010-011						FOR DIMENSIONS, SEE DASH 15 VALUES BELOW
224		OSCILLOSCOPE ASSY		2014232-011						
223		AUXILIARY OUTLET ASSY		2014274-011						
222		FREQUENCY COUNTER		2014233-011						
221		POWER SUPPLY ASSY 10, 13, 28 VDC		2014235-011						
220		LOGIC DRAWER ASSY NO. 2		2014037-011						FOR DIMENSIONS, SEE DASH 17 VALUES BELOW
219		LOGIC DRAWER ASSY NO. 1		2014036-011						
218		COUNTER, ELECTRICAL ASSY		2014288-011						FOR DIMENSIONS, SEE DASH 15 VALUES BELOW
217		POWER SUPPLY ASSY		2014279-011						
216		TEST MOUNT ASSY		2014257-011						
215		UNIVERSAL DSKY PEDESTAL MOUNT		2014014-011						
214		MAIN DSKY PEDESTAL MOUNT		2014343				I	NOTE 11B	FOR DIMENSIONS, SEE DASH 17 VALUES BELOW
213		SHIPPING CONTAINER, MAIN DSKY		1006229				II	NOTE 11C	FOR DIMENSIONS, SEE DASH 18 VALUES BELOW
212		NAV DSKY		1006231						
211		AGC		1006230						
210		UNIVERSAL DSKY		1006422						
209		SHIPPING CONTAINER, AGC		1006421				II	NOTE 11C	
208		UNIVERSAL DSKY HANDLING FIXTURE		2014C 3-011				I	NOTE 11B	FOR DIMENSIONS, SEE DASH 15 VALUES BELOW
207		NAV DSKY HANDLING FIXTURE		1014377						FOR DIMENSIONS, SEE DASH 17 VALUES BELOW
206		MAIN DSKY HANDLING FIXTURE		1014334						
205		AGC HANDLING FIXTURE		2014282-011				I	NOTE 11B	
204		OPERATION CONSOLE		2014024-011				II	NOTE 11C	FOR DIMENSIONS, SEE DASH 18 VALUES BELOW
203		COMPUTER TEST SET		2014042-011		NAS-9-497				
202		DRAWER ASSY, COMPUTER SIMULATOR		2014048-011		FNP12775				
201		AUXILIARY CALIBRATION CONSOLE		2014059-011		NAS-9-497				
200		AGC CALIBRATION CONSOLE		2014049-011	NA		B	II	NOTE 11C	
21										
20		NA		NA	NA	NA	A	II	NOTE 11C	2.000
19		NA		NA	NA	NA	A	I	NOTE 11B	2.000
18		NA		NA	NA	NA	B	II	NOTE 11C	4.187
17		NA		NA	NA	NA	B	I	NOTE 11B	4.187
16		NA		NA	NA	NA	B	II	NOTE 11C	2.000
15	R	NA		NA	NA	NA	B	I	NOTE 11B	2.000

DASH NO.	B	C	D	E	F	G	H	J	K	L	M	N	P	R	S	T	U	V	W	Y	Z	AA	AB	AC	AD	AE	AF	AG	AH	AJ	AK	AL	AM	AN	AP	AR
20	1.312	1.687	1.375	.078	.031	.078	.093	.106 .113	.093	1.187	.750	.593	.453	1.015	.062	.187	.078	.875	.718	1.375	.218	1.156	1.843	.048	NA	.875	.305	.078	.312	1.687	.078	NA	.078	.312	.187	1.843
19	1.312	1.687	1.375	.078	.031	.078	.093	NA	NA	1.187	.750	.593	.453	1.015	.062	.187	.078	.875	.718	1.375	.218	NA	NA	.048	.031	.875	.305	.078	.312	1.687	.078	NA	.078	.312	.187	NA
18	.875	3.469	2.750	.156	.093	.156	.125	.106 .113	.125	1.625	1.032	.844	.656	1.406	.093	.344	.156	1.781	1.531	2.844	.312	1.562	3.875	.062	NA	1.219	.500	.156	.719	3.469	.156	NA	.156	.719	.344	3.875
17	1.875	3.469	2.750	.156	.093	.156	.125	NA	NA	1.625	1.032	.844	.656	1.406	.093	.344	.156	1.781	1.531	2.844	.312	NA	NA	.062	.062	1.219	.500	.156	.719	3.469	.156	NA	.156	.719	.344	NA
16	1.312	1.687	1.375	.078	.031	.078	.093	.106 .113	.093	1.187	.750	.593	.453	1.015	.062	.187	.078	.875	.718	1.375	.218	1.156	1.843	.048	NA	.875	.305	.078	.312	1.687	.078	NA	.078	.312	.187	1.843
15	1.312	1.687	1.375	.078	.031	.078	.093	NA	NA	1.187	.750	.593	.453	1.015	.062	.187	.078	.875	.718	1.375	.218	NA	NA	.048	.031	.875	.305	.078	.312	1.687	.078	NA	.078	.312	.187	NA

NOTES FOR TABLE
STYLE A IS FOR G & N SYSTEM
STYLE B IS FOR GROUND SUPPORT EQUIPMENT
TYPE I IS WITHOUT MOUNTING HOLES
TYPE II IS WITH MOUNTING HOLES

THIS SHEET ADDED

Ⓖ REPLACES REV F WITH CHANGE

RAYTHEON DASH NUMBERS

QTY REQD	PART OR IDENTIFYING NO.	MATERIAL OR NOTES	NOMENCLATURE OR DESCRIPTION	FIND NO.

LIST OF MATERIALS

AS APPLICABLE	
NEXT ASSY	USED ON
APPLICATION	

UNLESS OTHERWISE SPECIFIED
DIMENSIONS ARE IN INCHES
CAPACITOR VALUES ARE IN µf
RESISTOR VALUES ARE IN OHMS
TOLERANCES ON
FRACTIONS ± — DECIMALS ±.005 ANGLES ± —
DO NOT SCALE THIS DRAWING

MATERIAL
SEE NOTE 11

MIT
INSTRUMENTATION LAB
CAMBRIDGE, MASS.

MANNED SPACECRAFT CENTER
HOUSTON, TEXAS

DRAWN R A Jones 7-16-65
CHECKED A. J.
APPROVED
APPROVED
APPROVED MIT
APPROVED MSC
DATE

NAMEPLATES,
APOLLO GEN-GSE
(STANDARDS)

CODE IDENT NO 80230
SIZE E
DRAWING NO. 1004260
SCALE NONE

[illegible]

SYM	ZONE	DESCRIPTION	DR	CHK	DATE	APPROVED
G		REPLACES REV F WITH CHANGE PER TDRR 20854.			[illegible]	WK
H		REVISED PER TDRR 20892			[illegible]	WK
J		REVISED PER TDRR 20904			[illegible]	WK
K		REVISED PER TDRR 21379			[illegible]	WK
L		REVISED PER TDRR 21410			8/23/65	WK
M		REVISED PER TDRR 21993				
N		REVISED PER TDRR 22621			[illegible]	
P		REVISED PER TDRR 22671				
R		REVISED PER TDRR 22672				
S		REVISED PER TDRR 22750				
T		REVISED PER TDRR 22823			[illegible]/65	WK
U		REVISED PER TDRR 23072			10-22-65	[illegible]
V		REVISED PER TDRR 23521			10-26-65	WK
W		REVISED PER TDRR 23824	RAJ		11-9-65	WK
Y		REVISED PER TDRR 24018	RAJ		11-16-65	WK
Z		REVISED PER TDRR 24040	RAJ		11-19-65	WK
AA		REVISED PER TDRR 24060	RAJ		11-19-65	WK
AB		REVISED PER TDRR 24868	RAJ		12-22-65	WK
AC		REVISED PER TDRR 24973	RAJ		1-4-66	WK
AD		REVISED PER TDRR 25065	RAJ		1-18-66	[illegible]
AE		REVISED PER TDRR 25672	RAJ		2-4-66	WK
AF		REVISED PER TDRR 25671	RAJ		2-4-66	WK
AG		REVISED PER TDRR 26110	RAJ		2-15-66	WK
AH		REVISED PER TDRR 26372	"		3-16-66	[illegible]
AJ		REVISED PER TDRR 26425	"		3-16-66	[illegible]
AK		REVISED PER TDRR 26743	"		3-16-66	[illegible]
AL		REVISED PER TDRR 26798	"		3-16-66	[illegible]
AM		REVISED PER TDRR 27168	"		4-8-66	[illegible]
AN		REVISED PER TDRR 27235	"		4-8-66	[illegible]
AP		REVISED PER TDRR 27345	"		4-8-66	[illegible]
AR		REVISED PER TDRR 27417	"		4-8-66	[illegible]
AS		REVISED PER TDRR 27442	"		4-8-66	[illegible]
AT		REVISED PER TDRR 27719	"		4-21-66	WK
AU		REVISED PER TDRR 27880	"		4-21-66	WK
AV		REVISED PER TDRR 27896	"		4-21-66	WK
AW		28110	"		5-16-66	[illegible]
AY		28173	"			[illegible]
AZ		28131	"			[illegible]
BA		28124	"			[illegible]
BB		REVISED PER TDRR 28511	"		5-16-66	[illegible]
BC		" " " 28949	"		5-24-66	[illegible]
BD		" " " 29222	"		6-8-66	[illegible]
BE		" " " 29235	"		"	[illegible]
BF		" " " 29322	"		6-24-66	[illegible]
BG		" " " 29429	"		"	[illegible]
BH		" " " 29449	"		"	[illegible]
BJ		" " " 29335	"		"	[illegible]
BK		" " " 29619	"		"	[illegible]
BL		" " " 29696	"		6-29-66	[illegible]
BM		REVISION STATUS CHANGED	JSD	NS	7-29-66	

DASH NO.	P/C	PART NAME	REMARKS	PART NO.	SER. NO.	CONT. NO.	STYLE	TYPE	MATERIAL
199	AC	EYEPIECE STOWAGE UNIT		2021255-011			A	I	
198	AC	SIGNAL CONDITIONER ASSY C/M		2007234		NAS 9-497			NOTE 11B
197	AC	SIGNAL CONDITIONER ASSY C/M		2007235					
196	AC	SIGNAL CONDITIONER ASSY LEM		6007010					
195	AC	PSA & SIGNAL CONDITIONER ASSY		6007009			A		NOTE 11B
194	AC	PANEL, MONITOR		2900031-031			B	II	NOTE 11C
193	AC	DISTRIBUTION BOX, G S E		2900024-031					
192	AC	ANALYZER, OPTICS-INERTIAL		2900023-031					
191	AC	TEST CONTROL		2900027-031					
190	AC	PANEL, PWR SUP AND LOAD		2900033-021					
189	AC	ADPT MODULE, P. S. A.		6900088-011					
188	AC	ADPT MODULE, P. S. A.		2901143-011					
187	AC	FIXTURE, MTG, PTA/PEA		2900066-021		NAS 9-497	B	II	NOTE 11C
186	AC	ANN PNL & EYEPIECE STOW. ASSY		1021255-021			A		
185	AC	ANN PNL & EYEPIECE STOW. ASSY		1021255-011			A		
184	AC	FIX., HAND., G AND N HARNESS		1901846-041		NAS-9-497	B	II	NOTE 11C
183	AC	INSTALLING TOOL, ELEC. CONN		1902586-011			B	II	NOTE 11C
182	AC	ADPT MODULE, P. S. A.		6900088-011			B	II	NOTE 11C
181	AC	G & N INDICATOR CONTROL PANEL ASSY		2014578-011			A	I	NOTE 11B
180	AC	ADPT MODULE, P. S. A.		1902431-031			B	II	
179	AC	MOUNTING PLATE, IMU/PTA		6900083-011					
178	AC	MOUNTING PLATE, COMPONENT		6900007-021					
177	AC	FIX., MOUNTING, SUBSYSTEM		2900070-021					
176	AC	FIX., MOUNTING, G AND N		2900067-021					
175	AC	CSL., COOL. AND PWR, G AND N		1902134-031					
174	AC	FIX., HAND., C/M AND LEM CDU		2900999-011					NOTE 11C
173	AC	FIX., HANDLING, C/M PSA		2900998-011					
172	AC	CAGING ELECTRONICS, GYRO		2900029-021					
171	AC	DISTRIBUTION BOX, GSE		2900024-021					
170	AC	ANALYZER, OPTICS-INERTIAL		2900023-021					
169	AC	ADPT, TESTPOINT, P.S.A.		2900037-021					
168	AC	TEST SELECTOR		2900028-021					
167	AC	TEST CONTROL		2900027-021					
166	AC	PANEL, MONITOR		2900031-021					
165	AC	TERM. BOARD STORAGE DRAWER		2900927-011					
164	AC	INPUT/OUTPUT PANEL		2900926-011					
163	AC	CONTROL PANEL		2900896-011					
162	AC	CSL. CAL AND TEST, SCM/PSAAM		2900895-011					
161	AC	FIX., LIFT AND HAND., IMU		[illegible]5462-011					
160	AC	FIX., HAND., G AND N HARNESS		1901846-031					
159	AC	BATTERY POWER PACK		1900011-031			B	II	NOTE 11C
158	AC	COUPLING DATA UNIT ASSEMBLY C/M		2007222			A	I	NOTE 11B
157	AC	COUPLING DATA UNIT ASSEMBLY - LEM		2007222					
156	AC	POWER & SERVO ASSEMBLY C/M		2007200					
155	AC	PIPA ELECTRONICS ASSEMBLY		2007201					
154	AC	PULSE TORQUE ASSEMBLY - LEM		6007000					
153	AC	POWER & SERVO ASSEMBLY - LEM		6007200			A	I	NOTE 11B
152	AC	CONT PNL, RSVR CKT TESTER		2900770-011			B	II	NOTE 11C
151	AC	TESTER, RESOLVER CIRCUIT		2900708-011					
150	AC	JUNCTION BOX, P.S.A./G.S.E.		1901933-021					
149	AC	BATTERY PACK, LIFTING		2900612-011					
148	AC	MOUNTING PLATE, COMPONENT		6900007-011					
147	AC	MOUNTING PLATE, COMPONENT		2900677-011					
146	AC	CART, TRANS, G AND N		1900009-041					
145	AC	CONTAINER, SHIPPING, IMU		1900010-021		NAS-9-497	B	II	NOTE 11C
144	AC	FIX., MOUNTING, G AND N		1902204-021			B	II	NOTE 11C
143	AC	CSL, COOL. AND PWR, G AND N		1902134-021					
142	AC	ANALYZER, OPTICS-INERTIAL		2900023-011					
141	AC	CONT, TEMP, PORTABLE		2900060-011					
140	AC	TESTER, CKT, IMU/CDU RSVR		2900286-011					
139	AC	SIMULATOR, LD/SIG, CDU		2900285-011					
138	AC	SIMULATOR, LD/SIG, OPTICS		1902023-021					
137	AC	FIX., MOUNTING, IMU/NAV BASE		6900003-011					
136	AC	FIXTURE, OPTICS/NAV BASE		2900072-011					
135	AC	FIX., MOUNTING, SUB SYSTEM		2900070-011					
134	AC	FIX., HAND., G AND N HARNESS		2900069-011					
133	AC	CNTR, SHIPPING, NAV BASE		2900068-011					
132	AC	FIX., MOUNTING, G AND N		2900067-011					
131	AC	SIMULATOR, LD/SIG, IMU/CDU		2900062-011					
130	AC	TESTER, GYRO WHEEL		2900061-011					
129	AC	COOLANT SUPPLY		1902133-021					
128	AC	TABLE, ROTARY		1900926-021					
127	AC	FIX., HAND., OPTICS		2900074-011					
126	AC	FIXTURE, MTG, PTA/PEA.		2900066-011					
125	AC	CONT, TEMP, IMU LIFTING		2900063-011					
124	AC	FIXTURE, HANDLING, IMU		2900064-011					
123	AC	CONT, OPTICS, REMOTE		1902046-021					
122	AC	TEST CONTROL		1902009-021					
121	AC	ADPT MODULE, P.S.A.		1902431-021					
120	AC	BRIDGE, DECADE ERROR		2900128-011					
119	AC	PWR SUP, ELECTRONICS		2900012-011					
118	AC	PWR SUP, RELAY AND LAMP		1900049-031					
117	AC	CONSOLE, OSCILLOGRAPH		1900000-021					
116	AC	ADPT MODULE, P.S.A.		1902431-011					
115	AC	ADPT, TEST POINT, PTA/PEA.		2900145-011					
114	AC	ADPT, TEST POINT, P.S.A.		2900037-011					
113	AC	CONTROL, GIMBAL POSITION		2900036-011					
112	AC	SELECTOR, SIGNAL, PRIMARY		2900035-011					
111	AC	SEL, SIG, OSCILLOGRAPH		2900034-011					
110	AC	PANEL, PWR SUP AND LOAD		2900033-011					
109	AC	PANEL, MONITOR		2900031-011					
108	AC	PANEL, AUXILIARY INPUT		2900030-011					
107	AC	CAGING ELECTRONICS, GYRO		2900029-011					
106	AC	TEST SELECTOR		2900028-011					
105	AC	TEST CONTROL		2900027-011					
104	AC	MONITOR AND CONTROL, TEMP		2900026-011					
103	AC	DISTRIBUTION BOX, GSE		2900024-011					
102	AC	VOLTMETER, DIGITAL		2900007-011			B	II	NOTE 11C
101	AC	NAVIGATION BASE ASSEMBLY - LEM		6899950		NAS-9-497	A	I	NOTE 11B
100	AC	NAVIGATION BASE ASSEMBLY		2899982		NAS-9-497	A	I	NOTE 11B

DASH NO.	A	B	C	D	E	F	G	H	J	K	L	M	N	P	R	S	T	U	V	W	Y	Z	AA	AB	AC	AD	AE	AF	AG	AH	AJ	AK	AL	AM	AN	AP	AR
199																																					
198																																					
197	FOR DIMENSIONS, SEE DASH 100 VALUES BELOW																																				
196																																					
195																																					
194																																					
193	FOR DIMENSIONS, SEE DASH 141 VALUES BELOW																																				
192	FOR DIMENSIONS, SEE DASH 144 VALUES BELOW																																				
191																																					
190																																					
189	FOR DIMENSIONS, SEE DASH 141 VALUES BELOW																																				
188																																					
187																																					
186																																					
185	FOR DIMENSIONS, SEE DASH 100 VALUES BELOW																																				
184	FOR DIMENSIONS, SEE DASH 144 VALUES BELOW																																				
183	FOR DIMENSIONS, SEE DASH 102 VALUES BELOW																																				
182	FOR DIMENSIONS, SEE DASH 141 VALUES BELOW																																				
181	3.000	1.938	2.437	NA	.125	.062	.188	.156	NA	NA	1.750	.125	.906	.688	1.500	NA	.281	.125	NA	1.094	2.062	.312	NA	2.500	.062	.125	1.312	.469	NA	NA	NA	.156	NA	.125	.469	.344	NA
180	FOR DIMENSIONS, SEE DASH 121 VALUES BELOW																																				
179																																					
178																																					
177	FOR DIMENSIONS, SEE DASH 144 VALUES BELOW																																				
176																																					
175																																					
174																																					
173																																					
172	FOR DIMENSIONS, SEE DASH 141 VALUES BELOW																																				
171																																					
170	FOR DIMENSIONS, SEE DASH 144 VALUES BELOW																																				
169																																					
168																																					
167																																					
166																																					
165																																					
164	FOR DIMENSIONS, SEE DASH 141 VALUES BELOW																																				
163																																					
162	FOR DIMENSIONS, SEE DASH 144 VALUES BELOW																																				
161	FOR DIMENSIONS, SEE DASH 141 VALUES BELOW																																				
160	FOR DIMENSIONS, SEE DASH 144 VALUES BELOW																																				
159																																					
158																																					
157	FOR DIMENSIONS SEE DASH 100 VALUES BELOW																																				
156	2.125	.968	1.718	NA	.093	.031	.06	.093	NA	NA	.858	.608	.484	.358	.733	.062	.140	.062	NA	.968	1.450	.125	NA	1.720	.046	.03	NA	.210	NA	NA	NA	.070	NA	.046	.32	.16	NA
155																																					
154	FOR DIMENSIONS SEE DASH 100 VALUES BELOW																																				
153																																					
152																																					
151	FOR DIMENSIONS, SEE DASH 141 VALUES BELOW																																				
150	FOR DIMENSIONS, SEE DASH 144 VALUES BELOW																																				
149	FOR DIMENSIONS, SEE DASH 141 VALUES BELOW																																				
148																																					
147	FOR DIMENSIONS, SEE DASH 144 VALUES BELOW																																				
146																																					
145																																					
144	4.125	1.812	3.250	NA	.125	.062	.12	.156	.188 .104	.125	1.625	1.140	.890	.640	.390	.125	.171	.125	1.875	1.687	2.625	.250	1.562	3.843	.093	NA	NA	.359	.125	.437	3.688	NA	3.687	.093	.40	.25	3.875
143	4.25	1.312	3.250		.125	.062	.12	.156		.125	1.625	1.140	.890	.640	.390	.125	.171	.125	1.875	1.687	2.625	.250	1.562	3.843	.093			.359	.125	.437	3.688		3.687	.093	.40	.25	3.875
142	4.25	1.812	3.250		.125	.062	.12	.156		.125	1.625	1.140	.890	.640	.390	.125	.171	.125	1.875	1.687	2.625	.250	1.562	3.843	.093			.359	.125	.437	3.688		3.687	.093	.40	.25	3.875
141	2.125	.968	1.718		.093	.031	.06	.093		.093	.858	.608	.484	.358	.733	.077	.116	.062	.937	.875	1.343	.125	.781	1.892	.046			.209	.093	.250	1.875		1.840	.046	.23	.16	1.938
140	4.125	.812	3.250		.125	.062	.12	.156		.125	1.625	1.140	.890	.640	.390	.125	.171	.125	1.875	1.687	2.625	.250	1.562	3.843	.093			.359	.125	.437	3.688		3.687	.093	.40	.25	3.875
139																																					
138																																					
137																																					
136																																					
135																																					
134																																					
133																																					
132																																					
131																																					
130																																					
129																																					
128	4.125	.812	3.250		.125	.062	.12	.156		.125	1.625	1.140	.890	.640	1.390	.125	.171	.125	1.875	1.687	2.625	.250	1.562	3.843	.093			.359	.125	.437	3.688		3.687	.093	.40	.25	3.875
127	2.125	.968	1.718		.093	.031	.06	.093		.093	.858	.608	.484	.358	.733	.077	.116	.062	.937	.875	1.343	.125	.781	1.892	.046			.209	.093	.250	1.875		1.840	.046	.23	.16	1.938
126																																					
125																																					
124																																					
123																																					
122																																					
121																																					
120																																					
119																																					
118																																					
117																																					
116																																					
115																																					
114																																					
113																																					
112																																					
111																																					
110																																					
109																																					
108																																					
107																																					
106																																					
105																																					
104																																					
103																																					
102	2.125	.968	1.718	NA	.093	.031	.06	.093	.188 .104	.093	.858	.608	.484	.358	.733	.077	.116	.062	.937	.875	1.343	.125	.781	1.892	.046	NA	NA	.209	.093	.250	1.875	NA	1.840	.046	.23	.16	1.938
101	2.000	1.312	1.906	1.375	.078	.048	.078	.093	NA	NA	1.125	.750	.593	.453	1.015	.062	.187	.078	.875	.718	1.375	.218	NA	NA	.048	.031	.875	.305	.078	.531	1.906	.078	NA	.078	.531	.187	NA
100	2.000	1.312	1.906	1.375	.078	.048	.078	.093	NA	NA	1.125	.750	.593	.453	1.015	.062	.187	.078	.875	.718	1.375	.218	NA	NA	.048	.031	.875	.305	.078	.531	1.906	.078	NA	.078	.531	.187	NA

AC ELECTRONICS DASH NUMBERS

THIS SHEET ADDED

Ⓖ REPLACES REV F WITH CHANGE

NOTES FOR TABLE

STYLE A IS FOR G&N SYSTEM

STYLE B IS FOR GROUND SUPPORT EQUIPMENT

TYPE I IS WITHOUT MOUNTING HOLES

TYPE II IS WITH MOUNTING HOLES

NOTE: AC DASH NO'S. CONT. ON SH.6

QTY REQD	PART OR IDENTIFYING NO	MATERIAL OR NOTES	NOMENCLATURE OR DESCRIPTION	FIND NO.

LIST OF MATERIALS

NEXT ASSY	USED ON
AS APPLICABLE	

APPLICATION

UNLESS OTHERWISE SPECIFIED
DIMENSIONS ARE IN INCHES
CAPACITOR VALUES ARE IN μf
RESISTOR VALUES ARE IN OHMS
TOLERANCES ON
FRACTIONS ± — DECIMALS ±.005 ANGLES ± —
DO NOT SCALE THIS DRAWING

MATERIAL
SEE NOTE 11

MIT
INSTRUMENTATION LAB
CAMBRIDGE MASS

MANNED SPACECRAFT CENTER,
HOUSTON, TEXAS

		DATE
DRAWN	R A Jones	7 16 65
CHECKED	[illegible]	7-22-[illegible]
APPROVED		
APPROVED	[illegible]	[illegible]
APPROVED MIT	[illegible]	[illegible]
APPROVED MSC	[illegible]	[illegible]

NAMEPLATES,
APOLLO G&N-GSE
(STANDARDS)

CODE IDENT NO. 80230
SIZE E
DRAWING NO. 1004260
SCALE NONE
SHEET 4 OF 6

NOTICE – WHEN GOVERNMENT DRAWINGS, SPECIFICATIONS, OR OTHER DATA ARE USED FOR ANY PURPOSE OTHER THAN IN CONNECTION WITH A DEFINITELY RELATED GOVERNMENT PROCUREMENT OPERATION, THE UNITED STATES GOVERNMENT THEREBY INCURS NO RESPONSIBILITY NOR ANY OBLIGATION WHATSOEVER; AND THE FACT THAT THE GOVERNMENT MAY HAVE FORMULATED, FURNISHED, OR IN ANY WAY SUPPLIED THE SAID DRAWINGS, SPECIFICATIONS, OR OTHER DATA IS NOT TO BE REGARDED BY IMPLICATION OR OTHERWISE AS IN ANY MANNER LICENSING THE HOLDER OR ANY OTHER PERSON OR CORPORATION, OR CONVEYING ANY RIGHTS OR PERMISSION TO MANUFACTURE, USE, OR SELL ANY PATENTED INVENTION THAT MAY IN ANY WAY BE RELATED THERETO.

REVISIONS 02789

SYM	ZONE	DESCRIPTION	DR	CHK	DATE	APPROVED
G		REPLACES REV F WITH CHANGE PER TDRR 20854	rj		7/24/65	WK
H		REVISED PER TDRR 20892	rj		8/3/65	
J		REVISED PER TDRR 20904	rj		8/3/65	WK
K		REVISED PER TDRR 21379	rj		8/16/65	WK
L		REVISED PER TDRR 21410	rj		8/?/65	WK
M		REVISED PER TDRR 21993	rj			
N		REVISED PER TDRR 22621	rj		10/	
P		REVISED PER TDRR 22671	rj		11/	
R		REVISED PER TDRR 22672	rj			
S		REVISED PER TDRR 22750	rj			
T		REVISED PER TDRR 22823	rj		10/65	WK
U		REVISED PER TDRR 23072	rj		10-?-65	[illegible]
V		REVISED PER TDRR 23521	rj		10-28-65	WK
W		REVISED PER TDRR 23924	RAJ		11-9-65	WK
Y		REVISED PER TDRR 24018	RAJ		11-16-65	WK
Z		REVISED PER TDRR 24040	RAJ		11-16-65	WK
AA		REVISED PER TDRR 24060	RAJ		11-19-65	WK
AB		REVISED PER TDRR 24868	RAJ		12-22-65	WK
AC		REVISED PER TDRR 24973	RAJ		1-4-66	WK
AD		REVISED PER TDRR 25065	RAJ		1-18-66	[illegible]
AE		REVISED PER TDRR 25672	RAJ		2-4-66	WK
AF		REVISED PER TDRR 25671	RAJ		2-4-66	WK
AG		REVISED PER TDRR 26110	RAJ		2-15-66	WK
AH		REVISED PER TDRR 26372	"		3-16-66	[illegible]
AJ		REVISED PER TDRR 26425	"		3-16-66	[illegible]
AK		REVISED PER TDRR 26743	"		3-16-66	[illegible]
AL		REVISED PER TDRR 26798	"		3-16-66	[illegible]
AM		REVISED PER TDRR 27166	"		4-7-66	[illegible]
AN		REVISED PER TDRR 27235	"		4-7-66	[illegible]
AP		REVISED PER TDRR 27345	"		4-7-66	[illegible]
AR		REVISED PER TDRR 27417	"		4-7-66	[illegible]
AS		REVISED PER TDRR 27442	"		4-7-66	[illegible]
AT		REVISED PER TDRR 27719	"		4-20-66	WK
AU		REVISED PER TDRR 27880	"		4-20-66	WK
AV		REVISED PER TDRR 27896	"		4-20-66	WK
AW		↑ ↑ 28110	"		5-16-66	[illegible]
AY		28173	"		↑	[illegible]
AZ		28131	"			[illegible]
BA		↓ ↓ 28124	"		↓	[illegible]
BB		REVISED PER TDRR 28511	"		5-16-66	[illegible]
BC		" " " 28949	"		5-24-66	[illegible]
BD		" " " 29222	"		6-8-66	[illegible]
BE		" " " 29235	"		"	[illegible]
BF		" " " 29322	"		6-24-66	[illegible]
BG		" " " 29429	"		"	[illegible]
BH		" " " 29449	"		"	[illegible]
BJ		" " " 29335	"		"	[illegible]
BK		" " " 29619	"		"	[illegible]
BL		" " " 29696	"		6-29-66	[illegible]
BM		REVISION STATUS CHANGED	JSD		7-29-66	

499	MIT
498	

DASH NO.	P/C	PART NAME	REMARKS	PART NO.	SER. NO.	CONT. NO.	STYLE	TYPE	MATERIAL
401	MIT	COMPUTER ASSY		2003100		NAS 9-497	A	I	NOTE 11 B
400	MIT	LIFTING SLING-G&N INST. QUAL. FIX. & AZM REF. FIX.		1021640		NAS 9-4065	B	II	NOTE 11 C

DASH NO.	A	B	C	D	E	F	G	H	J	K	L	M	N	P	R	S	T
401	2.000	1.312	1.906	1.375	.078	.048	.078	.093	NA	NA	1.125	.750	.593	.453	1.015	.062	.187
400	2.000	.312	.687	1.375	.078	.048	.078	.093	[illegible]	.093	1.187	.750	.593	.453	1.015	.062	.187

DASH NO.	U	V	W	Y	Z	AA	AB	AC	AD	AE	AF	AG	AH	AJ	AK	AL	AM	AN	AP	AR
401	.078	.875	.718	.375	.218	[illegible]	NA	.038	.031	.875	.305	.078	.531	1.906	.078	NA	.078	.531	.187	NA
400	.078	.875	.718	1.375	.218	1.156	1.843	.044	NA	.875	.305	.078	.312	[illegible]	.10	[illegible]	[illegible]	[illegible]	.185	[illegible]

MIT DASH NUMBERS

THIS SHEET ADDED

Ⓖ REPLACES REV F WITH CHANGE

NOTES FOR TABLE

STYLE A IS FOR G&N SYSTEM

STYLE B IS FOR GROUND SUPPORT EQUIPMENT

TYPE I IS WITHOUT MOUNTING HOLES

TYPE II IS WITH MOUNTING HOLES

QTY REQD	PART OR IDENTIFYING NO	MATERIAL OR NOTES	NOMENCLATURE OR DESCRIPTION	FIND NO.

LIST OF MATERIALS

AS APPLICABLE	
NEXT ASSY	USED ON

APPLICATION

UNLESS OTHERWISE SPECIFIED
DIMENSIONS ARE IN INCHES
CAPACITOR VALUES ARE IN μf
RESISTOR VALUES ARE IN OHMS
TOLERANCES ON
FRACTIONS ± — DECIMALS ±.005 ANGLES ± —
DO NOT SCALE THIS DRAWING

MATERIAL
SEE NOTE 11

MIT
INSTRUMENTATION LAB
CAMBRIDGE, MASS

MANNED SPACECRAFT CENTER
HOUSTON, TEXAS

DRAWN A. A. Jones 7-16-65
CHECKED
APPROVED
APPROVED W. Kupfer
APPROVED MIT W. Kupfer
APPROVED MSC

NAMEPLATES,
APOLLO G&N-GSE
(STANDARDS)

CODE IDENT NO 80230
SIZE E
DRAWING NO. 1004260
SCALE NONE
SHEET

1004260 BM

NOTICE - WHEN GOVERNMENT DRAWINGS, SPECIFICATIONS, OR OTHER DATA ARE USED FOR ANY PURPOSE OTHER THAN IN CONNECTION WITH A DEFINITELY RELATED GOVERNMENT PROCUREMENT OPERATION, THE UNITED STATES GOVERNMENT THEREBY INCURS NO RESPONSIBILITY NOR ANY OBLIGATION WHATSOEVER; AND THE FACT THAT THE GOVERNMENT MAY HAVE FORMULATED, FURNISHED, OR IN ANY WAY SUPPLIED THE SAID DRAWINGS, SPECIFICATIONS OR OTHER DATA IS NOT TO BE REGARDED BY IMPLICATION OR OTHERWISE AS IN ANY MANNER LICENSING THE HOLDER OR ANY OTHER PERSON OR CORPORATION, OR CONVEYING ANY RIGHTS OR PERMISSION TO MANUFACTURE, USE, OR SELL ANY PATENTED INVENTION THAT MAY IN ANY WAY BE RELATED THERETO.

REVISIONS 02768

SYM	ZONE	DESCRIPTION	DR	CHK	DATE	APPROVED
AG		CHANGED NUMBER OF SHEETS FROM 5 TO 6 PER TDRR 26110.	RAJ		2-15-66	
AH		REVISED PER TDRR 26372	"		3-16-66	
AJ		REVISED PER TDRR 26425	"		3-16-66	
AK		REVISED PER TDRR 26743	"		3-16-66	
AL		REVISED PER TDRR 26798	"		3-16-66	
AM		REVISED PER TDRR 27_68	"		4-7-66	
AN		REVISED PER TDRR 27235	"		4-7-66	
AP		REVISED PER TDRR 27345	"		4-7-66	
AR		REVISED PER TDRR 27417	"		4-7-66	
AS		REVISED PER TDRR 27442	"		4-7-66	
AT		REVISED PER TDRR 27719	"		4-20-66	
AU		REVISED PER TDRR 27880	"		4-20-66	
AV		REVISED PER TDRR 27896	"		4-20-66	
AW		28110	"		5-16-66	
AY		28173	"		5-16-66	
AZ		28131	"		5-16-66	
BA		28124	"		5-16-66	
BB		REVISED PER TDRR 28511	"		5-16-66	
BC		" " " 28949	"		5-24-66	
BD		" " " 29222	"		6-8-66	
BE		" " " 29235	"		"	
BF		" " " 29322	"		6-24-66	
BG		" " " 29429	"		"	
BH		" " 29449	"		"	
BJ		" " " 29335	"		"	
BK		" " " 29619	"		"	
BL		" " " 29696	"		6-29-66	
BM		REVISION STATUS CHANGED	JSD	N.S.	7-29-66	

DASH NO.	P/C	PART NAME	REMARKS	PART NO.	SER NO.	CONT NO.	STYLE	TYPE	MATERIAL	A	B	C	D	E	F	G	H	J	K	L	M	N	P	R	S	T	U	V	W	Y	Z	AA	AB	AC	AD	AE	AF	AG	AH	AJ	AK	AL	AM	AN	AP	AR
599	AC																																													
598	AC																																													
527	AC	FIX., MOUNTING, G AND N	(-144)	1902204-021		NAS 9-497	B	II	NOTE 11C	FOR DIMENSIONS, SEE DASH 500 VALUES BELOW																																				
526	AC	FIX., MOUNTING, G AND N	(-144)	2900067-031																																										
525	AC	PORTABLE TEMP.. CONTROLLER		1900496-021			B	II	NOTE 11C	3.000	1.937	2.437	2.312	.125	.031	.125	.156	.125	.125	1.718	1.187	.968	.749	.452	.093	.295	.090	1.312	1.00	2.000	.250	1.687	2.750	.062	N/A	N/A	.463	.125	.562	2.437	.140	2.562	.090	.468	.359	2.750
524	AC	POWER, SERVO AND THERMOCOUPLE ASSEMBLY C/M		2010743			A	I	NOTE 11B	2.25	.968	1.718	NA	.093	.031	.06	.093	NA	NA	.858	.608	.484	.358	.733	.062	.140	.062	NA	.968	1.450	.125	NA	1.720	.046	.03	NA	.210	NA	NA	NA	.070	NA	.046	.32	.16	NA
523	AC	PULSE TORQUE AND THERMOCOUPLE ASSEMBLY LEM		6010656						FOR DIMENSIONS, SEE DASH 508 VALUES BELOW																																				
522	AC	COUPLING DATA UNIT AND THERMOCOUPLE ASSEMBLY - LEM		2010744																																										
521	AC	COUPLING DATA UNIT AND THERMOCOUPLE ASSEMBLY - C/M		2010744																																										
520	AC	PIPA ELECTRONICS AND THERMOCOUPLE ASSEMBLY		2010745			A	I	NOTE 11B																																					
519	AC	FIXTURE, HANDLING, LEM-PSA	(-141)	6900129-011			B	II	NOTE 11C	FOR DIMENSIONS, SEE DASH 504 VALUES BELOW																																				
518	AC	JUNCTION BOX, GSE-PSA	(-144)	1901933-031			B	II	NOTE 11C	FOR DIMENSIONS, SEE DASH 500 VALUES BELOW																																				
517	AC	FIX., HAND., OPTICS INSTL.	(-141)	2901380-011			B	II	NOTE 11C	FOR DIMENSIONS SEE DASH 502 VALUES BELOW																																				
516	AC	POWER, SERVO AND THERMOCOUPLE ASSEMBLY-LEM		6010655		NAS 9 497	A	I	NOTE 11B	FOR DIMENSIONS SEE DASH 508 VALUES BELOW																																				
514	AC	SIGNAL COND. ASSY LEM OPER.	(-100)	6007013		NAS-9-497	A	I	NOTE 11B	FOR DIMENSIONS, SEE DASH 508 VALUES BELOW																																				
513		JUMPER, BY-PASS	(-141)	1021616			B	II	NOTE 11C	2.125	.968	1.718	NA	.093	.031	.06	.093	.100 .104	.093	.858	.608	.484	.358	.733	.077	.116	.062	.937	.875	1.343	.125	.781	1.892	.046	NA	NA	.209	.093	.250	1.875	NA	1.840	.046	.23	.16	1.938
512		COUPLING DATA UNIT ASSEMBLY C/M	(-100)	2007322-011			A	I	NOTE 11B	FOR DIMENSIONS, SEE DASH 508 VALUES BELOW																																				
511		COUPLING DATA UNIT ASSEMBLY-LEM	(-100)	2007322-021																																										
510		BATTERY POWER PACK	(-144)	1900011-041			B	II	NOTE 11C	FOR DIMENSIONS, SEE DASH 500 VALUES BELOW																																				
509		JUNCTION BOX, P.S.A./G.S.E.	(-144)	1902195-021			B	II	NOTE 11C																																					
508		NAVIGATION BASE ASSEMBLY - LEM	✓ (-10[illegible])	6899980			A	I	NOTE 11B	2.000	1.312	1.906	1.375	.078	.048	.078	.093	NA	NA	1.125	.750	.593	.453	1.015	.062	.187	.078	.875	.718	1.375	.218	NA	NA	.048	.031	.875	.305	.078	.531	1.906	.078	NA	.078	.531	.187	NA
507		CSL, COOL. AND PWR, G AND N	(-144)	1902134-041			B	II	NOTE 11C	FOR DIMENSIONS, SEE DASH 500 VALUE BELOW.																																				
506		BREAKOUT BOX, CABLE ADAPTER	(-141)	2901011-011						2.125	.968	1.718	NA	.093	.031	.06	.093	.100 .104	.093	.858	.608	.484	.358	.733	.077	.116	.062	.937	.875	1.343	.125	.781	1.892	.046	NA	NA	.209	.093	.250	1.875	NA	1.840	.046	.23	.16	1.938
505		MONITOR AND CONTROL, TEMP	(-141)	2900026-021																																										
504		PWR. SUP, GUIDANCE SYSTEM	✓ (-141)	1900033-021																																										
503		CONTROL, GIMBAL POSITION	(-141)	2900036-021																																										
502		ADPT, TEST POINT, PTA/PEA.	(-141)	2900145-021																																										
501		MOUNTING PLATE, COMPONENT	(-144)	6900007-031						FOR DIMENSIONS, SEE DASH 500 VALUES BELOW																																				
500	AC	MOUNTING PLATE, COMPONENT	✓ (-144)	2900677-02		NAS 9 497	B	II	NOTE 11C	4.125	1.812	3.250	NA	.125	.062	.2	.156	.102 .104	.25	.625	1.140	.890	.640	1.390	.125	.171	.25	1.675	.687	2.625	.250	.562	3.843	.093	NA	NA	.359	.125	.437	3.685	NA	3.687	.093	.40	.25	3.875

AC ELECTRONICS DASH NUMBERS

(AG) THIS SHEET ADDED

NOTES FOR TABLE
STYLE A IS FOR G&N SYSTEM
STYLE B IS FOR GROUND SUPPORT EQUIPMENT
TYPE I IS WITHOUT MOUNTING HOLES
TYPE II IS WITH MOUNTING HOLES

QTY REQD	PART OR IDENTIFYING NO.	MATERIAL OR NOTES	NOMENCLATURE OR DESCRIPTION	FIND NO.

LIST OF MATERIALS

NEXT ASSY	USED ON
AS APPLICABLE	

APPLICATION

UNLESS OTHERWISE SPECIFIED
DIMENSIONS ARE IN INCHES
CAPACITOR VALUES ARE IN µf
RESISTOR VALUES ARE IN OHMS
TOLERANCES ON
FRACTIONS ± — DECIMALS ±.005 ANGLES ± —
DO NOT SCALE THIS DRAWING

MATERIAL
SEE NOTE 11

MIT
INSTRUMENTATION LAB
CAMBRIDGE, MASS

DRAWN E. A. Jones 2-15-66
CHECKED 2-15-66
APPROVED
APPROVED
APPROVED MIT 5-16-66
APPROVED MSC
DATE

MANNED SPACECRAFT CENTER
HOUSTON, TEXAS

NAMEPLATES,
APOLLO G&N-GSE
(STANDARDS)

CODE IDENT NO. 80230
SIZE E
DRAWING NO. 1004260
SCALE NONE
SHEET 6 OF 6

1004260 BM

NOTES:

1. INTERPRET DRAWING IN ACCORDANCE WITH STANDARDS PRESCRIBED IN MIL-D-70327.
2. DIMENSIONS ON EACH VIEW APPLY TO ALL VIEWS. (WITH THE EXCEPTION OF MOUNTING HOLES).
3. FORMATS ILLUSTATED WILL BE APPLICABLE TO ALL ITEMS REQUIRING NAMEPLATES BELOW END ITEM DESIGNATION (SYSTEMS, ASSEMBLIES, ETC.)
4. PLATE BACKGROUND TO BE LUSTERLESS BLACK PER FED-STD-595, COLOR 37038. BORDER, MARKING AND LETTERING TO BE NATURAL METAL,(ANODIZED ALUMINUM).
5. MARKING METHOD TO BE DIE STAMPING, ETCHING OR ENGRAVING IN ACCORDANCE WITH MIL P 19834.
6. LETTERING STYLE TO BE GOTHIC,(SANS SERIFS), AND NUMBERS TO BE ARABIC.
7. WHERE LOCATING DIMENSIONS ARE NOT SHOWN, CHARACTERS SHALL BE SYMMETRICALLY POSITIONED.
8. IDENTIFY WITH DRAWING NUMBER PER ND1002019.
9. WHEN "AUTO MARK" METAL MARKING TYPEWRITER IS USED TO ADD DATA TO BLANK SPACES, TYPE SIZE IS TO BE SELECTED FROM DIMENSIONS U, AC AND AM.
10. NASA SYMBOL IS TO BE PROPORTIONAL TO NAMEPLATE IN RATIO OF 1 TO 5 WITH DIMENSION A VALUE AND IS TO HAVE NATURAL BACKGROUND. NASA SYMBOL LETTERS LETTERING AND FEATHER TO BE BLACK,(OR WHITE FOR SILK SCREENING). WHERE BLACK FEATHER PROTRUDES INTO BLACK BACKGROUND, A MINIMUM OUTLINE OF NATURAL BACKGROUND SHALL EXIST.
11. NAMEPLATES WILL BE APPLIED BY METHODS LISTED BELOW, SHOWN IN ORDER OF PREFERENCE, (I.E., FOR RELIABILITY AND WEIGHT).
    - A - STENCIL OR SILK SCREEN DIRECTLY ON EQUIPMENT USING INK PER SCD 1010920,(WHITE OR BLACK).
    - B - ALUMINUM FOIL,(STYLE A OR B, TYPE I):
      FOIL SHALL BE .0030 ± .0005 THICK PER MIL-A-148.
      FOIL SHALL HAVE NO ADHESIVE BACKING.
      FOIL SHALL BE BONDED PER ND 1002219,(METHOD II).
      FOIL SHALL BE CLEAR ANODIZED PER MIL-A-8625, TYPE II.
    - C - PLATE, (STYLE A OR B, TYPE II):
      MATERIAL: QQ-A-250, TEMPER O OR H14, TYPE 1100, ALUMINUM ALLOY, .032 THICK.
      ANODIZE PER MIL-A-8625, TYPE II.
      ALUMINUM PLATE MUST BE FREE FROM BURRS AND SHARP CORNERS, MOUNTED WITH APPLICABLE SIZE FASTENERS.
12. NAMEPLATES SHALL BE CAPABLE OF MEETING APPLICABLE REQUIREMENTS OF MIL-M-13231.
13. ON DIMENSION TABLES SHOWN ON PAGES 2, 3, 4 AND 5, NA MEANS, "NOT APPLICABLE".

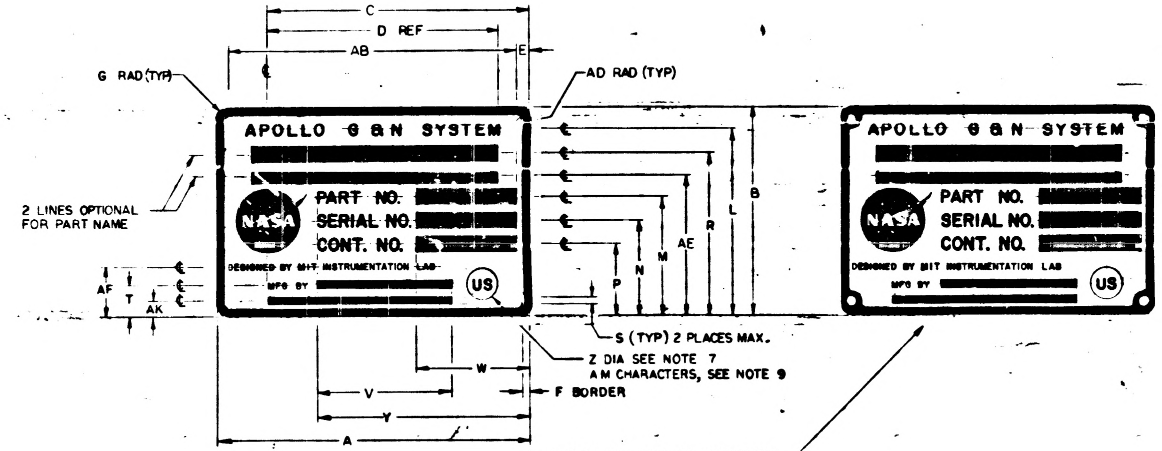
C
D REF
AB
E
G RAD (TYP)
AD RAD (TYP)
APOLLO G & N SYSTEM
PART NO.
SERIAL NO.
CONT. NO.
NASA
DESIGNED BY MIT INSTRUMENTATION LAB
MFG BY
US
2 LINES OPTIONAL FOR PART NAME
AF
T
AK
B
L
R
AE
M
N
P
S (TYP) 2 PLACES MAX.
Z DIA SEE NOTE 7
AM CHARACTERS, SEE NOTE 9
W
V
F BORDER
Y
A

FOR G AND N SYSTEM
STYLE A

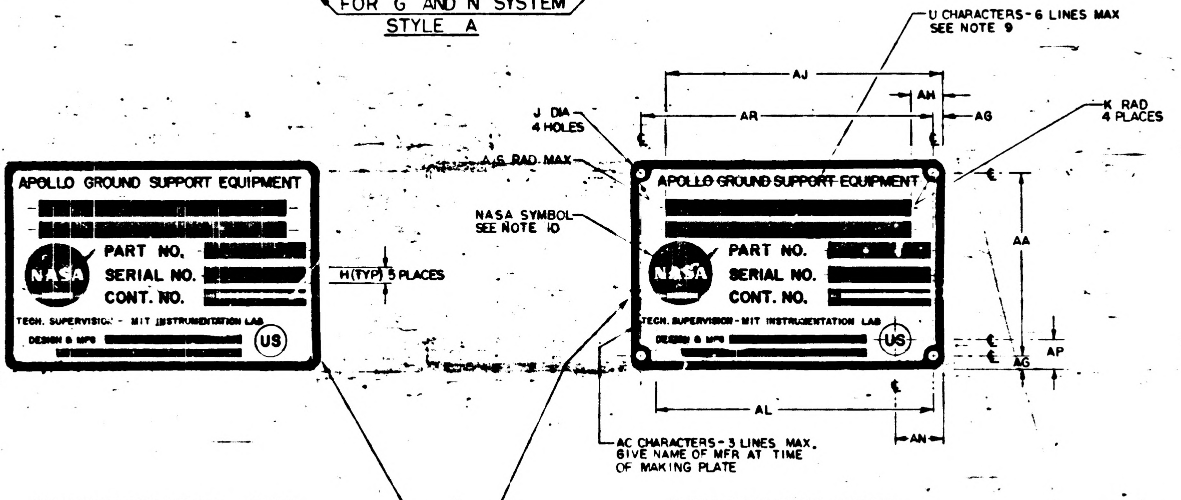
U CHARACTERS - 6 LINES MAX
SEE NOTE 9
AJ
AH
AR
AG
J DIA
4 HOLES
K RAD
4 PLACES
AS RAD. MAX
APOLLO GROUND SUPPORT EQUIPMENT
NASA SYMBOL
SEE NOTE 10
PART NO.
SERIAL NO.
CONT. NO.
NASA
TECH. SUPERVISION - MIT INSTRUMENTATION LAB
DESIGN & MFG
US
H (TYP) 5 PLACES
AA
AP
AG
AL
AN
AC CHARACTERS - 3 LINES MAX.
GIVE NAME OF MFR AT TIME
OF MAKING PLATE

WITHOUT MOUNTING HOLES
TYPE I

WITH-MOUNTING HOLES
TYPE II

FOR GROUND SUPPORT EQUIPMENT
STYLE B

REVISIONS Q2768

SYM	ZONE	DESCRIPTION	DR.	CHK	DATE	APPROVED
G		REPLACES REV F WITH CHANGE PER TDRR 20854				
H		REVISED PER TDRR 20892				
J		REVISED PER TDRR 20904				
K		REVISED PER TDRR 21379				
L		REVISED PER TDRR 21410				
M		REVISED PER TDRR 21993				
N		REVISED PER TDRR 22621				
P		REVISED PER TDRR 22671				
R		REVISED PER TDRR 22672				
S		REVISED PER TDRR 22750				
T		REVISED PER TDRR 22823				
U		REVISED PER TDRR 23072			10-28-65	
V		REVISED PER TDRR 23521			10-27-65	
W		REVISED PER TDRR 23824	RAJ		11-9-65	
Y		REVISED PER TDRR 24018	RAJ		11-16-65	
Z		REVISED PER TDRR 24040	RAJ		11-19-65	
AA		REVISED PER TDRR 24060	RAJ		11-19-65	
AB		REVISED PER TDRR 24868	RAJ		12-22-65	
AC		REVISED PER TDRR 24973	RAJ		1-4-66	
AD		REVISED PER TDRR 25065	RAJ		1-18-66	
AE		REVISED PER TDRR 25672	RAJ		2-4-66	
AF		REVISED PER TDRR 25671	RAJ		2-4-66	
AG		REVISED PER TDRR 26110	RAJ		2-15-66	
AH		REVISED PER TDRR 26372	"		3-16-66	
AJ		REVISED PER TDRR 26425	"		3-16-66	
AK		REVISED PER TDRR 26743	"		3-16-66	
AL		REVISED PER TDRR 26798	"		3-16-66	
AM		REVISED PER TDRR 27168	"		4-7-66	
AN		REVISED PER TDRR 27235	"		4-7-66	
AP		REVISED PER TDRR 27345	"		4-7-66	
AR		REVISED PER TDRR 27417	"		4-7-66	
AS		REVISED PER TDRR 27442	"		4-7-66	
AT		REVISED PER TDRR 27719	"		4-20-66	
AU		REVISED PER TDRR 27880	"		4-20-66	
AV		REVISED PER TDRR 27896	"		4-20-66	
AW		28110	"		5-16-66	
AY		28173	"			
AZ		28131	"			
BA		28124	"			
BB		REVISED PER TDRR 28511	"		5-16-66	
BC		" " " 28949	"		5-24-66	
BD		" " " 29222	"		6-8-66	
BE		" " " 29235	"		6-8-66	
BF		" " " 29322	"		6-30-66	
BG		" " " 29429	"		"	
BH		" " " 29449	"		"	
BJ		" " " 29335	"		"	
BK		" " " 296 9	"		"	
BL		" " " 29696	"		"	
BM		REVISION STATUS CHANGED	JSD	NS	7-29-66	
BN		REVISION STATUS CHANGED	JI	RLW	8-22-66	

SUGGESTED PROPORTIONS FOR NAMEPLATE DIMENSIONS.
1. SELECT NAMEPLATE LENGTH, DIMENSION "A", TO FIT DESIGN NEEDS.
2. DIMENSIONS B THRU AS ON LINE 1 BELOW ARE PROPORTIONAL TO "A" BY MULTIPLIERS SHOWN IN LINE 2 BELOW.

1.	A	B	C	D	E	F	G	H	J	K	L	M	N	P	R	S	T	U	V	W	Y	Z
2.	1.000 A	.6563 A	.8438 A	.6875 A	.0391 A	.0240 A	.0391 A	.0469 A	.0547 A	.0469 A	.5938 A	.3750 A	.2969 A	.2187 A	.5079 A	.0313 A	.0938 A	.0391 A	.4375 A	.3594 A	.6875 A	.1094 A

1.	AA	AB	AC	AD	AE	AF	AG	AH	AJ	AK	AL	AM	AN	AP	AR	AS
2.	.5781 A	.9219 A	.0240 A	.0156 A	.4375 A	.1525 A	.0391 A	.1563 A	.8438 A	.0548 A	.8659 A	.0391 A	.1563 A	.0938 A	.9219 A	.0151 A

Ⓖ REPLACES REV F WITH CHANGE

QTY REQD	PART OR IDENTIFYING NO.	MATERIAL OR NOTES	NOMENCLATURE OR DESCRIPTION	FIND NO

LIST OF MATERIALS

AS APPLICABLE	
NEXT ASSY	USED ON
APPLICATION	

UNLESS OTHERWISE SPECIFIED
DIMENSIONS ARE IN INCHES
CAPACITOR VALUES ARE IN μf
RESISTOR VALUES ARE IN OHMS
TOLERANCES ON
FRACTIONS ± — DECIMALS ±.005 ANGLES ± —
DO NOT SCALE THIS DRAWING

MATERIAL
SEE NOTE 11

MIT
INSTRUMENTATION LAB
CAMBRIDGE, MASS.

MANNED SPACECRAFT CENTER
HOUSTON, TEXAS

DRAWN R a Jonz 7/16/65
CHECKED A. J. 7-22-65
APPROVED
APPROVED 22/65
APPROVED MIT
APPROVED MSC
DATE

NAMEPLATES,
APOLLO G&N-GSE
(STANDARDS)

CODE IDENT NO 80230
SIZE E
DRAWING NO. 1004260
SCALE NONE
SHEET 1 OF 6

NOTICE – WHEN GOVERNMENT DRAWINGS, SPECIFICATIONS, OR OTHER DATA ARE USED FOR ANY PURPOSE OTHER THAN IN CONNECTION WITH A DEFINITELY RELATED GOVERNMENT PROCUREMENT OPERATION, THE UNITED STATES GOVERNMENT THEREBY INCURS NO RESPONSIBILITY NOR ANY OBLIGATION WHATSOEVER, AND THE FACT THAT THE GOVERNMENT MAY HAVE FORMULATED, FURNISHED, OR IN ANY WAY SUPPLIED THE SAID DRAWINGS, SPECIFICATIONS OR OTHER DATA IS NOT TO BE REGARDED BY IMPLICATION OR OTHERWISE AS IN ANY MANNER LICENSING THE HOLDER OR ANY OTHER PERSON OR CORPORATION, OR CONVEYING ANY RIGHTS OR PERMISSION TO MANUFACTURE, USE, OR SELL ANY PATENTED INVENTION THAT MAY IN ANY WAY BE RELATED THERETO.

REVISIONS 02768

SYM	ZONE	DESCRIPTION	DR	CHK	DATE	APPROVED
G		REPLACES REV F WITH CHANGE PER TDRR 20854.	rj		7/22/65	WK
H		REVISED PER TDRR 20892	rj		8/3/65	WK
J		REVISED PER TDRR 20904	rj		8/3/65	WK
K		REVISED PER TDRR 21379	rj		8/16/65	WK
L		REVISED PER TDRR 21410	rj		8/24/65	WK
M		REVISED PER TDRR 21993	"			
N		REVISED PER TDRR 22621	"		10/11/65	
P		REVISED PER TDRR 22671	"			
R		REVISED PER TDRR 22672	"			
S		REVISED PER TDRR 22750	"			WK
T		REVISED PER TDRR 22823	"			
U		REVISED PER TDRR 23072	"		10-12-65	WGM
V		REVISED PER TDRR 23521	"		10-27-65	WK
W		REVISED PER TDRR 23824	RAJ		11-9-65	WK
Y		REVISED PER TDRR 24018	RAJ		11-16-65	WK
Z		REVISED PER TDRR 24040	RAJ		11-19-65	WK
Ⓜ AA		REVISED PER TDRR 24060	RAJ		11-19-65	WK
Ⓜ AB		REVISED PER TDRR 24868	RAJ		12-22-65	WK
Ⓜ AC		REVISED PER TDRR 24973	RAJ		1-4-66	WK
Ⓜ AD		REVISED PER TDRR 25065 →	RAJ		1-18-66	WGM
AE		REVISED PER TDRR 25672	RAJ		2-4-66	WK
Ⓜ AF		REVISED PER TDRR 25671	RAJ		2-4-66	WK
AG		REVISED PER TDRR 26110	RAJ		2-15-66	WK
AH		REVISED PER TDRR 26372	"		3-16-66	WGM
AJ		REVISED PER TDRR 26425	"		3-16-66	WGM
AK		REVISED PER TDRR 26743	"		3-16-66	WGM
Ⓜ AL		REVISED PER TDRR 26798	"		3-16-66	WGM
AM		REVISED PER TDRR 27168	"		4-8-66	WGM
AN		REVISED PER TDRR 27235	"		4-8-66	WGM
AP		REVISED PER TDRR 27345	"		4-8-66	WGM
AR		REVISED PER TDRR 27417	"		4-8-66	WGM
Ⓜ AS		REVISED PER TDRR 27442	"		4-8-66	WGM
AT		REVISED PER TDRR 27719	"		4-21-66	
Ⓜ AU		REVISED PER TDRR 27880	"		4-21-66	WK
Ⓜ AV		REVISED PER TDRR 27896	"		4-21-66	WK
AW		28110	"		5-16-66	WGM
AY		28173	"			WGM
AZ		28131	"			WGM
BA		28124	"			WGM
BB		REVISED PER TDRR 28511	"		5-16-66	WGM
Ⓜ BC		" " " 28949	"		5-24-66	[illegible]
Ⓜ BD		" " " 29222	"		6-8-66	[illegible]
BE		" " " 29235	"		"	[illegible]
BF		" " " 29322	"		6-30-66	[illegible]
BG		" " " 29429	"		"	WGM
BH		" " " 29449	"		"	WGM
BJ		" " " 29335	"		"	WGM
BK		" " " 29619	"		"	WGM
Ⓜ BL		" " " 29696	"		"	WGM
BM		REVISION STATUS CHANGED	JSD	N.S.	7-29-66	
BN		REVISION STATUS CHANGED	JI	RLW	8-22-66	

DASH NO.	P/C	PART NAME	REMARKS	PART NO.	SER. NO.	CONT. NO.	STYLE	TYPE	MATERIAL	A	B	C	D	E	F	G	H	J	K	L	M	N	P	R	S	T	U	V	W	Y	Z	AA	AB	AC	AD	AE	AF	AG	AH	AJ	AK	AL	AM	AN	AP	AR
399	K																																													
398	K																																													
350	K	ALIGNMENT OPTICAL TELESCOPE (LEM)		NA	NA	NA	A	I	NOTE 11B	4.000	2.625	3.375	2.750	.156	.093	.156	.187	NA	NA	2.312	1.468	1.187	.906	2.031	NA	.375	.156	NA	1.437	2.750	.437	NA	3.688	.062	.062	1.750	.593	NA	.625	3.375	.187	NA	.156	.531	.453	NA
309	K																																													
308	K																																													
307	K						B	I	NOTE 11 B	4.000	2.625	3.375	2.750	.156	.093	.156	.187	NA	NA	2.328	1.468	1.187	.906	2.031	.062	.375	.156	NA	1.437	2.750	.437	NA	3.687	.062	.062	1.750	.593	NA	NA	NA	NA	NA	NA	NA	NA	NA
306	K						B	II	NOTE 11 C	4.000	2.625	3.375	2.750	.156	.093	.156	.187	.125	.156	2.328	1.468	1.187	.906	2.031	.062	.375	.156	↕	1.437	2.750	.437	2.312	3.687	.062	NA	1.750	.593	↕	↕	↕	↕	↕	↕	↕	↕	↕
305	K						B	I	NOTE 11 B	2.000	1.312	1.687	1.375	.078	.048	.078	.093	NA	NA	1.164	.734	.593	.453	1.015	.048	.171	.078	↕	.718	1.375	.187	NA	NA	.048	.031	.875	.320	↕	↕	↕	↕	↕	↕	↕	↕	↕
304	K						B	II	NOTE 11 C	2.000	1.312	1.687	1.375	.078	.048	.078	.093	.070	.078	1.164	.734	.593	.453	1.015	.048	.171	.078	NA	.718	1.375	.187	.156	1.843	.048	NA	.875	.320	NA	NA	NA	NA	NA	NA	NA	NA	NA
303	K																																													
302	K																																													
301	K																																													
300	K	OPTICAL UNIT		NA	NA	NA	A	I	NOTE 11 B	2.000	1.312	1.675	NA	NA	.048	.078	NA	NA	NA	1.090	.812	.675	.540	.940	NA	.265	NA	NA	NA	1.375	.218	NA	NA	NA	NA	NA	.375	NA	NA	NA	.180	NA	.078	NA	NA	NA
9	K	2 IN AUTOCOLLIMATOR		1001702			B	II	NOTE 11 C	4.000	2.625	3.812	2.750	.156	.093	.156	.187	.125	.156	2.250	1.500	1.187	.906	2.031	.093	.375	.156	1.750	1.437	2.750	.437	2.312	3.687	.062	NA	1.750	.593	.156	1.062	3.812	.156	NA	.156	1.062	.375	3.687
8	K	5 IN AUTOCOLLIMATOR		1017410			B	II	NOTE 11 C	4.000	2.625	3.812	2.750	.156	.093	.156	.187	.125	.156	2.250	1.500	1.187	.906	2.031	.093	.375	.156	1.750	1.437	2.750	.437	2.312	3.687	.062	NA	1.750	.593	.156	1.062	3.812	.156	NA	.156	1.062	.375	3.687
7	K	2½ IN AUTOCOLLIMATOR (SCT)		1017435			B	II	NOTE 11 C	4.000	2.625	3.812	2.750	.156	.093	.156	.187	.125	.156	2.250	1.500	1.187	.906	2.031	.093	.375	.156	1.750	1.437	2.750	.437	2.312	3.687	.062	NA	1.750	.593	.156	1.062	3.812	.156	NA	.156	1.062	.375	3.687
6	K	2½ IN AUTOCOLLIMATOR (SXT)		1017448			B	II	NOTE 11 C	4.000	2.625	3.812	2.750	.156	.093	.156	.187	.125	.156	2.250	1.500	1.187	.906	2.031	.093	.375	.156	1.750	1.437	2.750	.437	2.312	3.687	.062	NA	1.750	.593	.156	1.062	3.812	.156	NA	.156	1.062	.375	3.687
5	K	RETROREFLECTING PRISM ASSEMBLY		1019840			B	I	NOTE 11 B	4.000	2.625	3.812	2.750	.156	.093	.156	.187	NA	NA	2.250	1.500	1.187	.906	2.031	.093	.375	.156	1.750	1.437	2.750	.437	NA	NA	.062	.062	1.750	.593	.156	1.062	3.812	.156	NA	.156	1.062	.375	NA
4	K	S/H SIMULATOR ASSEMBLY		1019896			B	I	NOTE 11 B	4.000	2.625	3.812	2.750	.156	.093	.156	.187	NA	NA	2.250	1.500	1.187	.906	2.031	.093	.375	.156	1.750	1.437	2.750	.437	NA	NA	.062	.062	1.750	.593	.156	1.062	3.812	.156	NA	.156	1.062	.375	NA
3	K	REFERENCE MIRROR		1001767			B	I	NOTE 11 B	2.000	1.312	1.906	1.375	.078	.048	.078	.093	NA	NA	1.125	.750	.593	.453	1.015	.062	.187	.078	.875	.718	1.375	.218	NA	NA	.048	.031	.875	.305	.078	.531	1.906	.078	NA	.078	.531	.187	NA
2	K	2 IN PLANE READING AUTOCOLLIMATOR		1017413			B	I	NOTE 11 B	2.000	1.312	1.906	1.375	.078	.048	.078	.093	NA	NA	1.125	.750	.593	.453	1.015	.062	.187	.078	.875	.718	1.375	.218	NA	NA	.048	.031	.875	.305	.078	.531	1.906	.078	NA	.078	.531	.187	NA
1	K	2 IN AUTOCOLLIMATOR		1001702			B	I	NOTE 11 B	2.000	1.312	1.906	1.375	.078	.048	.078	.093	NA	NA	1.125	.750	.593	.453	1.015	.062	.187	.078	.875	.718	1.375	.218	NA	NA	.048	.031	.875	.305	.078	.531	1.906	.078	NA	.078	.531	.187	NA

NOTES FOR TABLE

STYLE A IS FOR G&N SYSTEM.
STYLE B IS FOR GROUND SUPPORT EQUIPMENT.
TYPE I IS WITHOUT MOUNTING HOLES.
TYPE II IS WITH MOUNTING HOLES.

Ⓖ REPLACES REV F WITH CHANGE

KOLLSMAN DASH NUMBERS

QTY REQD	PART OR IDENTIFYING NO.	MATERIAL OR NOTES	NOMENCLATURE OR DESCRIPTION	FIND NO.

LIST OF MATERIALS

NEXT ASSY	USED ON
AS APPLICABLE	

APPLICATION

UNLESS OTHERWISE SPECIFIED
DIMENSIONS ARE IN INCHES
CAPACITOR VALUES ARE IN μf
RESISTOR VALUES ARE IN OHMS
TOLERANCES ON
FRACTIONS ± — DECIMALS ±.005 ANGLES ± —
DO NOT SCALE THIS DRAWING

MATERIAL
SEE NOTE 11

MIT
INSTRUMENTATION LAB
CAMBRIDGE, MASS

DRAWN R A Jones 7-16-65
CHECKED E. J. [illegible] 7-22-65
APPROVED
APPROVED W Kupfer 7/22/65
APPROVED MIT W Kupfer 7/22/65
APPROVED MSC [illegible] 7/22/65
DATE

MANNED SPACECRAFT CENTER
HOUSTON, TEXAS

NAMEPLATES,
APOLLO G&N-GSE
(STANDANDS)

CODE IDENT NO. 80230
SIZE E
DRAWING NO. 1004260
SCALE NONE
SHEET 2 OF 6

NOTICE – WHEN GOVERNMENT DRAWINGS, SPECIFICATIONS, OR OTHER DATA ARE USED FOR ANY PURPOSE OTHER THAN IN CONNECTION WITH A DEFINITELY RELATED GOVERNMENT PROCUREMENT OPERATION, THE UNITED STATES GOVERNMENT THEREBY INCURS NO RESPONSIBILITY NOR ANY OBLIGATION WHATSOEVER; AND THE FACT THAT THE GOVERNMENT MAY HAVE FORMULATED, FURNISHED, OR IN ANY WAY SUPPLIED THE SAID DRAWINGS, SPECIFICATIONS, OR OTHER DATA IS NOT TO BE REGARDED BY IMPLICATION OR OTHERWISE AS IN ANY MANNER LICENSING THE HOLDER OR ANY OTHER PERSON OR CORPORATION, OR CONVEYING ANY RIGHTS OR PERMISSION TO MANUFACTURE, USE, OR SELL ANY PATENTED INVENTION THAT MAY IN ANY WAY BE RELATED THERETO.

REVISIONS 02768

SYM	ZONE	DESCRIPTION	DR	CHK	DATE	APPROVED
G		REPLACES REV F WITH CHANGE PER TDRR 20854			[illegible]	WK
H		REVISED PER TDRR 20892			[illegible]	WK
J		REVISED PER TDRR 20904			[illegible]	WK
K		REVISED PER TDRR 21379			[illegible]	WK
L		REVISED PER TDRR 214 0			[illegible]	WK
M		REVISED PER TDRR 2 993				
N		REVISED PER TDRR 22621			[illegible]	
P		REVISED PER TDRR 22671				
R		REVISED PER TDRR 22672			[illegible]	
S		REVISED PER TDRR 22750				
T		REVISED PER TDRR 22823			[illegible]	WK
U		REVISED PER TDRR 23072			[illegible] 65	[illegible]
V		REVISED PER TDRR 23521			10-26-65	WK
W		REVISED PER TDRR 23824	RAJ		11-9-65	WK
Y		REVISED PER TDRR 24018	RAJ		11-16-65	WK
Z		REVISED PER TDRR 24040	RAJ		11-19-65	WK
AA		REVISED PER TDRR 24060	RAJ		11-19-65	WK
AB		REVISED PER TDRR 24868	RAJ		12-22-65	WK
AC		REVISED PER TDRR 24973	RAJ		1-4-66	WK
AD		REVISED PER TDRR 25065	RAJ		1-18-66	WGM
AE		REVISED PER TDRR 25672	RAJ		2-4-66	WK
AF		REVISED PER TDRR 25671	RAJ		2-4-66	WK
AG		REVISED PER TDRR 26110	RAJ		2-15-66	WK
AH		REVISED PER TDRR 26372	"		3-16-66	WGM
AJ		REVISED PER TDRR 26425	"		3-16-66	WGM
AK		REVISED PER TDRR 26743	"		3-16-66	WGM
AL		REVISED PER TDRR 26798	"		3-16-66	WGM
AM		REVISED PER TDRR 27168	"		4-8-66	WGM
AN		REVISED PER TDRR 27235	"		4-8-66	WGM
AP		REVISED PER TDRR 27345	"		4-8-66	WGM
AR		REVISED PER TDRR 27417	"		4-8-66	WGM
AS		REVISED PER TDRR 27442	"		4-8-66	WGM
AT		REVISED PER TDRR 27719	"		4-20-66	WK
AU		REVISED PER TDRR 27880	"		4-20-66	WK
AV		REVISED PER TDRR 27896	"		4-20-66	WK
AW		28110	"		5-16-66	WGM
AY		28173	"		5-16-66	WGM
AZ		28131	"		5-16-66	WGM
BA		28124	"		5-16-66	WGM
BB		REVISED PER TDRR 28511	"		5-16-66	WGM
BC		" " " 28949	"		5-24-66	[illegible]
BD		" " " 29222	"		6-8-66	WGM
BE		" " " 29235	"		"	WGM
BF		" " " 29322	"		6-29-66	WGM
BG		" " " 29429	"		"	WGM
BH		" " " 29449	"		"	WGM
BJ		" " " 29335	"		"	WGM
BK		" " " 29619	"		"	WGM
BL		" " " 29696	"		"	WGM
BM		" " " 29802	JSD	N.S.	7-29-66	
BN		REVISION STATUS CHANGED	JI	GLW	8-23-66	

DASH NO.	P/C	PART NAME	REMARKS	PART NO.	SER. NO.	CONT. NO.	STYLE	TYPE	MATERIAL	A
299	R									
298	R									
275	R	DRAWER ASSY RDC INTERFACE		2014045-031	NA	NAS 9-497	B	I	NOTE 11B	
274		SELF TEST ASSY		2014366-031						FOR DIMENSIONS SEE DASH 15 VALUES BELOW
273		LOGIC DRAWER ASSY NO. 2		2014037-031						FOR DIMENSIONS SEE DASH 17 VALUES BELOW
272		DRAWING ASSY PROGRAMMER & MONITOR		2014041-031						FOR DIMENSIONS, SEE DASH 17 VALUES BELOW
271		LOGIC DRAWER ASSY NO. 1		2014036-031				I	NOTE 11B	
270		COMPUTER TEST SET		2014042-031				II	NOTE 11C	FOR DIMENSIONS, SEE DASH 18 VALUES BELOW
269		POWER CONTROL ASSY		2014044-021				I	NOTE 11B	FOR DIMENSIONS, SEE DASH 17 VALUES BELOW
268		SELF TEST ASSY		2014366-021						FOR DIMENSIONS, SEE DASH 15 VALUES BELOW
267		AGC JUNCTION ASSY		2014341-021						
266		POWER CONTROL ASSY		2014079-021						
265		BUFFER CIRCUIT ASSY		2014254-021						
264		DRAWER ASSY X Y INTERFACE		2014040-021						
263		DRAWER ASSY R D C INTERFACE		2014045-021						
262		DRAWER ASSY PROGRAMMER & MONITOR		2014041-021						FOR DIMENSIONS, SEE DASH 17 VALUES BELOW
261		LOGIC DRAWER ASSY NO. 2		2014037-021						
260		LOGIC DRAWER ASSY NO. 1		2014036-021				I	NOTE 11B	
259		OPERATION CONSOLE		2014024-021				II	NOTE 11C	FOR DIMENSIONS, SEE DASH 18 VALUES BELOW
258		COMPUTER TEST SET		2014042-021						
257		AUXILIARY CALIBRATION CONSOLE		2014059-021						
256		AGC CALIBRATION CONSOLE		2014049-021				II	NOTE 11C	
255		AGC HANDLING FIXTURE		2014282-021				I	NOTE 11B	FOR DIMENSIONS, SEE DASH 17 VALUES BELOW
254		DRAWER ASSY COMP. SIMULATOR		2014048-011				II	NOTE 11C	FOR DIMENSIONS, SEE DASH 18 VALUES BELOW
253		SHIPPING KIT ASSY, NAV DSKY		2016312-011						
252		SHIPPING KIT ASSY, UNIVERSAL DSKY		2016316-011						
251		SHIPPING KIT ASSY, MAIN DSKY		2016313-011				II	NOTE 11C	
250		AMPLIFIER, REWORK		2014386				I	NOTE 11B	FOR DIMENSIONS, SEE DASH 15 VALUES BELOW
249		TEMP MONITOR ASSY		2014313-011					NOTE 11C	FOR DIMENSIONS, SEE DASH 17 VALUES BELOW
248		AGC JUNCTION ASSY		2014341-011					NOTE 11B	FOR DIMENSIONS, SEE DASH 15 VALUES BELOW
247		AC INPUT PANEL ASSY		2014302-011						
246		SELF TEST ASSY		2014392-011						
245		TAPE PUNCH ASSEMBLY		2014039-011						FOR DIMENSIONS, SEE DASH 15 VALUES BELOW
244	R	TAPE READER ASSEMBLY		2014038-011	NA	NAS-9-497	B	I	NOTE 11B	
243										
242										
241	R	APOLLO GUIDANCE COMPUTER GROUP		6003001	NA	NAS-9-497	A	I	NOTE 11B	FOR DIMENSIONS, SEE DASH 19 VALUES BELOW
240		SELF TEST ASSEMBLY		2014366-011	NA		B	I		FOR DIMENSIONS, SEE DASH 15 VALUES BELOW
239		POWER SUPPLY ASSY-115V., 400 CYCLE		2014207-011						FOR DIMENSIONS, SEE DASH 17 VALUES BELOW
238		AC INPUT PANEL ASSY		2014043-011						
237		POWER CONTROL ASSY		2014079-011						FOR DIMENSIONS, SEE DASH 15 VALUES BELOW
236		DRAWER ASSY-X Y INTERFACE		2014040-011						
235		DRAWER ASSY R D C INTERFACE		2014045-011						
234		BUFFER CIRCUIT ASSY		2014254-011						
233		CONTROL & INTERFACE ASSY		2014204-011						
232		POWER CONTROL ASSY		2014044-011						FOR DIMENSIONS, SEE DASH 17 VALUES BELOW
231		DRAWER ASSY, PROGRAMMER & MONITOR		2014041-011						
230		CONNECTOR INTERFACE ASSY		2014272-011						FOR DIMENSIONS, SEE DASH 15 VALUES BELOW
229		CONNECTOR INTERFACE ASSY		2014047-011						
228		ANTENNA TUNING CAPACITOR ASSY		2014209-011						
227		MOUNTING FIXTURE ASSY		2014006-011						FOR DIMENSIONS, SEE DASH 17 VALUES BELOW
226		POWER SUPPLY ASSY 3 VDC		2014234-011						FOR DIMENSIONS, SEE DASH 15 VALUES BELOW
225		PANEL ASSY – SIGNAL INTERFACE		2014010-011						
224		OSCILLOSCOPE ASSY		2014232-011						
223		AUXILIARY OUTLET ASSY		2014274-011						
222		FREQUENCY COUNTER		2014233-011						
221		POWER SUPPLY ASSY 10, 13, 28 VDC		2014235-011						
220		LOGIC DRAWER ASSY NO. 2		2014037-011						FOR DIMENSIONS, SEE DASH 17 VALUES BELOW
219		LOGIC DRAWER ASSY NO. 1		2014036-011						
218		COUNTER, ELECTRICAL ASSY		2014288-011						FOR DIMENSIONS, SEE DASH 15 VALUES BELOW
217		POWER SUPPLY ASSY		2014279-011						
216		TEST MOUNT ASSY		2014257-011						
215		UNIVERSAL DSKY PEDESTAL MOUNT		2014014-011						FOR DIMENSIONS, SEE DASH 17 VALUES BELOW
214		MAIN DSKY PEDESTAL MOUNT		2014343				I	NOTE 11B	
213		SHIPPING CONTAINER, MAIN DSKY		1006229				II	NOTE 11C	FOR DIMENSIONS, SEE DASH 18 VALUES BELOW
212		NAV DSKY		1006231						
211		AGC		1006230						
210		UNIVERSAL DSKY		1006422						
209		SHIPPING CONTAINER, AGC		1006421				II	NOTE 11C	
208		UNIVERSAL DSKY HANDLING FIXTURE		2014013-011				I	NOTE 11B	FOR DIMENSIONS, SEE DASH 15 VALUES BELOW
207		NAV DSKY HANDLING FIXTURE		1014377						FOR DIMENSIONS, SEE DASH 17 VALUES BELOW
206		MAIN DSKY HANDLING FIXTURE		1014334						
205		AGC HANDLING FIXTURE		2014282-011				I	NOTE 11B	
204		OPERATION CONSOLE		2014024-011				II	NOTE 11C	FOR DIMENSIONS, SEE DASH 18 VALUES BELOW
203		COMPUTER TEST SET		2014042-011		NAS-9-497				
202		DRAWER ASSY, COMPUTER SIMULATOR		2014048-011		FNP-12775				
201		AUXILIARY CALIBRATION CONSOLE		2014059-011		NAS-9-497				
200		AGC CALIBRATION CONSOLE		2014049-011	NA		B	II	NOTE 11C	
21										
20		NA		NA	NA	NA	A	II	NOTE 11C	2.000
19		NA		NA	NA	NA	A	I	NOTE 11B	2.000
18		NA		NA	NA	NA	B	II	NOTE 11C	4.187
17		NA		NA	NA	NA	B	I	NOTE 11B	4.187
16		NA		NA	NA	NA	B	II	NOTE 11C	2.000
15	R	NA		NA	NA	NA	B	I	NOTE 11B	2.000

DASH NO.	B	C	D	E	F	G	H	J	K	L	M	N	P	R	S	T	U	V	W
21																			
20	1.312	1.687	1.375	.078	.031	.078	.093	.106 .113	.093	1.187	.750	.593	.453	1.015	.062	.187	.078	.875	.718
19	1.312	1.687	1.375	.078	.031	.078	.093	NA	NA	1.187	.750	.593	.453	1.015	.062	.167	.078	.875	.716
18	1.875	3.469	2.750	.156	.093	.156	.125	.106 .113	.125	1.625	1.032	.844	.656	1.406	.093	.344	.156	1.781	1.531
17	1.875	3.469	2.750	.156	.093	.156	.125	NA	NA	1.625	1.032	.844	.656	1.406	.093	.344	.156	1.781	1.531
16	1.312	1.687	1.375	.078	.031	.078	.093	.106 .113	.093	1.187	.750	.593	.453	1.015	.062	.187	.078	.875	.718
15	1.312	1.687	1.375	.078	.031	.078	.093	NA	NA	1.187	.750	.593	.453	1.015	.062	.187	.078	.875	.718

DASH NO.	Y	Z	AA	AB	AC	AD	AE	AF	AG	AH	AJ	AK	AL	AM	AN	AP	AR
21																	
20	1.375	.218	1.156	1.843	.048	NA	.875	.305	.078	.312	1.687	.078	NA	.078	.312	.187	1.843
19	1.375	.218	NA	NA	.048	.031	.875	.305	.078	.312	1.687	.078	NA	.078	.312	.187	NA
18	2.844	.312	1.562	3.875	.062	NA	1.219	.500	.156	.719	3.469	.156	NA	.156	.719	.344	3.875
17	2.844	.312	NA	NA	.062	.062	1.219	.500	.156	.719	3.469	.156	NA	.156	.719	.344	NA
16	1.375	.218	1.156	1.843	.048	NA	.875	.305	.078	.312	1.687	.078	NA	.078	.312	.187	1.843
15	1.375	.218	NA	NA	.048	.031	.875	.305	.078	.312	1.687	.078	NA	.078	.312	.187	NA

THIS SHEET ADDED

Ⓖ REPLACES REV F WITH CHANGE

RAYTHEON DASH NUMBERS

NOTES FOR TABLE
STYLE A IS FOR G & N SYSTEM
STYLE B IS FOR GROUND SUPPORT EQUIPMENT
TYPE I IS WITHOUT MOUNTING HOLES
TYPE II IS WITH MOUNTING HOLES

QTY REQD	PART OR IDENTIFYING NO.	MATERIAL OR NOTES	NOMENCLATURE OR DESCRIPTION	FIND NO

LIST OF MATERIALS

AS APPLICABLE	
NEXT ASSY	USED ON
APPLICATION	

UNLESS OTHERWISE SPECIFIED
DIMENSIONS ARE IN INCHES
CAPACITOR VALUES ARE IN µf
RESISTOR VALUES ARE IN OHMS
TOLERANCES ON
FRACTIONS ± — DECIMALS ±.005 ANGLES ± —
DO NOT SCALE THIS DRAWING

MATERIAL
SEE NOTE 11

MIT
INSTRUMENTATION LAB
CAMBRIDGE, MASS.

DRAWN R A Jones 9-16-65
CHECKED A. J. [illegible] 9-22-65
APPROVED
APPROVED W Kupfer 2/[illegible]/65
APPROVED MIT W Kupfer 2/[illegible]
APPROVED MSC [illegible]
DATE

MANNED SPACECRAFT CENTER
HOUSTON, TEXAS

NAMEPLATES,
APOLLO GEN-GSE
(STANDARDS)

CODE IDENT NO 80230
SIZE E
DRAWING NO. 1004260
SCALE NONE
SHEET [illegible] OF 6

REVISIONS

SYM	ZONE	DESCRIPTION	DR	CHK	DATE	APPROVED
G		REPLACES REV F WITH CHANGE PER TDRR 20854.			[illegible]	WK
H		REVISED PER TDRR 20892			[illegible]	WK
J		REVISED PER TDRR 20904			[illegible]	WK
K		REVISED PER TDRR 21379			[illegible]	WK
L		REVISED PER TDRR 21410			[illegible]	WK
M		REVISED PER TDRR 21993				
N		REVISED PER TDRR 22621				
P		REVISED PER TDRR 22671				
R		REVISED PER TDRR 22672				
S		REVISED PER TDRR 22750				WK
T		REVISED PER TDRR 22823				WK
U		REVISED PER TDRR 23072			[illegible]	
V		REVISED PER TDRR 23521			10-26-65	WK
W		REVISED PER TDRR 23824	RAJ		11-9-65	WK
Y		REVISED PER TDRR 24018	RAJ		11-16-65	WK
Z		REVISED PER TDRR 24040	RAJ		11-19-65	WK
AA		REVISED PER TDRR 24060	RAJ		11-19-65	WK
AB		REVISED PER TDRR 24868	RAJ		12-22-65	WK
AC		REVISED PER TDRR 24973	RAJ		1-4-66	WK
AD		REVISED PER TDRR 25065	RAJ		1-18-66	
AE		REVISED PER TDRR 25672	RAJ		2-4-66	WK
AF		REVISED PER TDRR 25671	RAJ		2-4-66	WK
AG		REVISED PER TDRR 26110	RAJ		2-15-66	WK
AH		REVISED PER TDRR 26372	"		3-16-66	
AJ		REVISED PER TDRR 26425	"		3-16-66	
AK		REVISED PER TDRR 26743	"		3-16-66	
AL		REVISED PER TDRR 26798	"		3-16-66	
AM		REVISED PER TDRR 27168	"		4-8-66	
AN		REVISED PER TDRR 27235	"		4-8-66	
AP		REVISED PER TDRR 27345	"		4-8-66	
AR		REVISED PER TDRR 27417	"		4-8-66	
AS		REVISED PER TDRR 27442	"		4-8-66	
AT		REVISED PER TDRR 27719	"		4-21-66	WK
AU		REVISED PER TDRR 27880	"		4-21-66	WK
AV		REVISED PER TDRR 27896	"		4-21-66	
AW		↕ ↕ 28110	"		5-16-66	
AY		↕ ↕ 28173	"		↕	
AZ		↕ ↕ 28131	"		↕	
BA		↕ ↕ 28124	"		↕	
BB		REVISED PER TDRR 28511	"		5-16-66	
BC		" " " 28949	"		5-24-66	
BD		" " " 29222	"		6-8-66	
BE		" " " 29235	"		"	
BF		" " " 29322	"		6-24-66	
BG		" " " 29429	"		"	
BH		" " " 29449	"		"	
BJ		" " " 29335	"		"	
BK		" " " 29619	"		"	
BL		" " " 29696	"		6-29-66	
BM		REVISION STATUS CHANGED	JSD	NS	7-29-66	
BN		REVISION STATUS CHANGED	JI		8-22-66	

DASH NO.	P/C	PART NAME	REMARKS	PART NO.	SER. NO.	CONT. NO.	STYLE	TYPE	MATERIAL	A	B	C	D	E	F	G	H	J	K	L	M	N	P	R	S	T	U	V	W	Y	Z	AA	AB	AC	AD	AE	AF	AG	AH	AJ	AK	AL	AM	AN	AP	AR
199	AC	EYEPIECE STOWAGE UNIT		2021255-011			A	I		FOR DIMENSIONS, SEE DASH 100 VALUES BELOW																																				
198	AC	SIGNAL CONDITIONER ASSY C/M		2007234		NAS 9-497	↕	↕	NOTE 11B																																					
197	AC	SIGNAL CONDITIONER ASSY C/M		2007235		↕	↕	↕	↕																																					
196	AC	SIGNAL CONDITIONER ASSY LEM		6007010		↕	↕	↕	↕																																					
195	AC	PSA & SIGNAL CONDITIONER ASSY		6007009		↕	A	I	NOTE 11B																																					
194	AC	PANEL, MONITOR		2900031-031		↕	B	II	NOTE 11C	FOR DIMENSIONS, SEE DASH 141 VALUES BELOW																																				
193	AC	DISTRIBUTION BOX, GSE		2900024-031		↕	↕	↕	↕																																					
192	AC	ANALYZER, OPTICS-INERTIAL		2900023-031		↕	↕	↕	↕	FOR DIMENSIONS, SEE DASH 144 VALUES BELOW																																				
191	AC	TEST CONTROL		2900027-031		↕	↕	↕	↕	FOR DIMENSIONS, SEE DASH 141 VALUES BELOW																																				
190	AC	PANEL, PWR SUP AND LOAD		2900033-021		↕	↕	↕	↕																																					
189	AC	ADPT MODULE, P. S. A.		6900088-011		↕	↕	↕	↕																																					
188	AC	ADPT MODULE, P. S. A.		2901143-011		↕	↕	↕	↕																																					
187	AC	FIXTURE, MTG, PTA/PEA		2900066-02		NAS 9-497	B	II	NOTE 11C																																					
186	AC	ANN PNL & EYEPIECE STOW. ASSY		1021255-021			A	I		FOR DIMENSIONS, SEE DASH 100 VALUES BELOW																																				
185	AC	ANN PNL & EYEPIECE STOW. ASSY		1021255-011			A	I																																						
184	AC	FIX., HAND., G AND N HARNESS		1901846-041		NAS 9-497	B	II	NOTE 11C	FOR DIMENSIONS, SEE DASH 144 VALUES BELOW																																				
183	AC	INSTALLING TOOL, ELEC. CONN		1902586-011		↕	B	II	NOTE 11C	FOR DIMENSIONS, SEE DASH 102 VALUES BELOW																																				
182	AC	ADPT MODULE, P. S. A.		6900088-011		↕	B	II	NOTE 11C	FOR DIMENSIONS, SEE DASH 141 VALUES BELOW																																				
181	AC	G&N INDICATOR CONTROL PANEL ASSY		2014578-011		↕	A	I	NOTE 11B	3.000	1.938	2.437	NA	.125	.062	.188	.156	NA	NA	1.750	.125	.906	.688	1.500	NA	.281	.125	NA	1.094	2.062	.312	NA	2.500	.062	.125	1.312	.469	NA	NA	NA	.156	NA	.125	.469	.344	NA
180	AC	ADPT MODULE, P. S. A.		1902431-031		↕	B	II		FOR DIMENSIONS, SEE DASH 121 VALUES BELOW																																				
179	AC	MOUNTING PLATE, IMU/PTA		6900083-011		↕	↕	↕		FOR DIMENSIONS, SEE DASH 144 VALUES BELOW																																				
178	AC	MOUNTING PLATE, COMPONENT		6900007-021		↕	↕	↕																																						
177	AC	FIX., MOUNTING, SUBSYSTEM		2900070-021		↕	↕	↕																																						
176	AC	FIX., MOUNTING, G AND N		2900067-021		↕	↕	↕																																						
175	AC	CSL, COOL. AND PWR, G AND N		1902134-031		↕	↕	↕																																						
174	AC	FIX., HAND., C/M AND LEM CDU		2900999-011		↕	↕	↕	NOTE 11C	FOR DIMENSIONS, SEE DASH 141 VALUES BELOW																																				
173	AC	FIX., HANDLING, C/M PSA		2900998-011		↕	↕	↕	↕																																					
172	AC	CAGING ELECTRONICS, GYRO		2900029-021		↕	↕	↕	↕																																					
171	AC	DISTRIBUTION BOX, GSE		2900024-021		↕	↕	↕	↕																																					
170	AC	ANALYZER, OPTICS-INERTIAL		2900023-021		↕	↕	↕	↕	FOR DIMENSIONS, SEE DASH 144 VALUES BELOW																																				
169	AC	ADPT, TESTPOINT, P.S.A.		2900037-021		↕	↕	↕	↕	FOR DIMENSIONS, SEE DASH 141 VALUES BELOW																																				
168	AC	TEST SELECTOR		2900028-021		↕	↕	↕	↕																																					
167	AC	TEST CONTROL		2900027-021		↕	↕	↕	↕																																					
166	AC	PANEL, MONITOR		2900031-021		↕	↕	↕	↕																																					
165	AC	TERM. BOARD STORAGE DRAWER		2900927-011		↕	↕	↕	↕																																					
164	AC	INPUT/OUTPUT PANEL		2900926-011		↕	↕	↕	↕																																					
163	AC	CONTROL PANEL		2900896-011		↕	↕	↕	↕																																					
162	AC	CSL. CAL AND TEST, SCM/PSAAM		2900895-011		↕	↕	↕	↕	FOR DIMENSIONS, SEE DASH 144 VALUES BELOW																																				
161	AC	FIX., LIFT AND HAND., IMU		1C 5462-011		↕	↕	↕	↕	FOR DIMENSIONS, SEE DASH 141 VALUES BELOW																																				
160	AC	FIX., HAND., G AND N HARNESS		1901846-031		↕	↕	↕	↕	FOR DIMENSIONS, SEE DASH 144 VALUES BELOW																																				
159	AC	BATTERY POWER PACK		1900011-031		↕	B	II	NOTE 11C																																					
158	AC	COUPLING DATA UNIT ASSEMBLY C/M		2007222		↕	A	I	NOTE 11B	FOR DIMENSIONS SEE DASH 100 VALUES BELOW																																				
157	AC	COUPLING DATA UNIT ASSEMBLY - LEM		2007222		↕	↕	↕	↕																																					
156	AC	POWER & SERVO ASSEMBLY C/M		2007200		↕	↕	↕	↕	2.125	.968	1.718	NA	.093	.031	.06	.093	NA	NA	.858	.608	.484	.358	.733	.062	.140	.062	NA	.968	1.450	.125	NA	1.720	.046	.03	NA	.210	NA	NA	NA	.070	NA	.046	.32	.16	NA
155	AC	PIPA ELECTRONICS ASSEMBLY		2007201		↕	↕	↕	↕	FOR DIMENSIONS SEE DASH 100 VALUES BELOW																																				
154	AC	PULSE TORQUE ASSEMBLY - LEM		6007000		↕	↕	↕	↕																																					
153	AC	POWER & SERVO ASSEMBLY - LEM		6007200		↕	A	I	NOTE 11B																																					
152	AC	CONT PNL, RSVR CKT TESTER		2900770-011		↕	B	II	NOTE 11C	FOR DIMENSIONS, SEE DASH 141 VALUES BELOW																																				
151	AC	TESTER, RESOLVER CIRCUIT		2900708-011		↕	↕	↕	↕																																					
150	AC	JUNCTION BOX, P.S.A./G.S.E.		1901933-021		↕	↕	↕	↕	FOR DIMENSIONS, SEE DASH 144 VALUES BELOW																																				
149	AC	BATTERY PACK, LIFTING		2900812-011		↕	↕	↕	↕	FOR DIMENSIONS, SEE DASH 141 VALUES BELOW																																				
148	AC	MOUNTING PLATE, COMPONENT		6900007-011		↕	↕	↕	↕	FOR DIMENSIONS, SEE DASH 144 VALUES BELOW																																				
147	AC	MOUNTING PLATE, COMPONENT		2900677-011		↕	↕	↕	↕																																					
146	AC	CART, TRANS, G AND N		1900009-041		↕	↕	↕	↕																																					
145	AC	CONTAINER, SHIPPING, IMU		1900010-021		NAS-9-497	B	II	NOTE 11C																																					
144	AC	FIX., MOUNTING, G AND N		1902204-021			B	II	NOTE 11C	4.125	1.812	3.250	NA	.125	.062	.12	.156	.188 .104	.125	1.625	1.140	.890	.640	.390	.125	.171	.125	1.875	1.687	2.625	.250	1.562	3.843	.093	NA	NA	.359	.125	.437	3.688	NA	3.687	.093	.40	.25	3.875
143	AC	CSL, COOL. AND PWR, G AND N		1902134-021			↕	↕	↕	4.125	1.812	3.250	↕	.125	.062	.12	.156	↕	.125	1.625	1.140	.890	.640	.390	.125	.171	.125	1.875	1.687	2.625	.250	1.562	3.843	.093	↕	↕	.359	.125	.437	3.688	↕	3.687	.093	.40	.25	3.875
142	AC	ANALYZER, OPTICS-INERTIAL		2900023-011			↕	↕	↕	4.125	1.812	3.250	↕	.125	.062	.12	.156	↕	.125	1.625	1.140	.890	.640	.390	.125	.171	.125	1.875	1.687	2.625	.250	1.562	3.843	.093	↕	↕	.359	.125	.437	3.688	↕	3.687	.093	.40	.25	3.875
141	AC	CONT, TEMP, PORTABLE		2900060-011			↕	↕	↕	2.125	.968	1.718	↕	.093	.031	.06	.093	↕	.093	.858	.608	.484	.358	.733	.077	.116	.062	.937	.875	1.343	.125	.781	1.892	.046	↕	↕	.209	.093	.250	1.875	↕	1.840	.046	.23	.16	1.938
140	AC	TESTER, CKT, IMU/CDU RSVR		2900286-011			↕	↕	↕	4.125	.812	3.250	↕	.125	.062	.12	.156	↕	.125	1.625	1.140	.890	.640	.390	.125	.171	.125	1.875	1.687	2.625	.250	1.562	3.843	.093	↕	↕	.359	.125	.437	3.688	↕	3.687	.093	.40	.25	3.875
139	AC	SIMULATOR, LD/SIG, CDU		2900285-011			↕	↕	↕	↕	↕	↕	↕	↕	↕	↕	↕	↕	↕	↕	↕	↕	↕	↕	↕	↕	↕	↕	↕	↕	↕	↕	↕	↕	↕	↕	↕	↕	↕	↕	↕	↕	↕	↕	↕	↕
138	AC	SIMULATOR, LD/SIG, OPTICS		1902023-021			↕	↕	↕	↕	↕	↕	↕	↕	↕	↕	↕	↕	↕	↕	↕	↕	↕	↕	↕	↕	↕	↕	↕	↕	↕	↕	↕	↕	↕	↕	↕	↕	↕	↕	↕	↕	↕	↕	↕	↕
137	AC	FIX., MOUNTING, IMU/NAV BASE		6900003-011			↕	↕	↕	↕	↕	↕	↕	↕	↕	↕	↕	↕	↕	↕	↕	↕	↕	↕	↕	↕	↕	↕	↕	↕	↕	↕	↕	↕	↕	↕	↕	↕	↕	↕	↕	↕	↕	↕	↕	↕
136	AC	FIXTURE, OPTICS/NAV. BASE		2900072-011			↕	↕	↕	↕	↕	↕	↕	↕	↕	↕	↕	↕	↕	↕	↕	↕	↕	↕	↕	↕	↕	↕	↕	↕	↕	↕	↕	↕	↕	↕	↕	↕	↕	↕	↕	↕	↕	↕	↕	↕
135	AC	FIX., MOUNTING, SUB SYSTEM		2900070-011			↕	↕	↕	↕	↕	↕	↕	↕	↕	↕	↕	↕	↕	↕	↕	↕	↕	↕	↕	↕	↕	↕	↕	↕	↕	↕	↕	↕	↕	↕	↕	↕	↕	↕	↕	↕	↕	↕	↕	↕
134	AC	FIX., HAND., G AND N HARNESS		2900069-011			↕	↕	↕	↕	↕	↕	↕	↕	↕	↕	↕	↕	↕	↕	↕	↕	↕	↕	↕	↕	↕	↕	↕	↕	↕	↕	↕	↕	↕	↕	↕	↕	↕	↕	↕	↕	↕	↕	↕	↕
133	AC	CNTR, SHIPPING, NAV BASE		2900068-011			↕	↕	↕	↕	↕	↕	↕	↕	↕	↕	↕	↕	↕	↕	↕	↕	↕	↕	↕	↕	↕	↕	↕	↕	↕	↕	↕	↕	↕	↕	↕	↕	↕	↕	↕	↕	↕	↕	↕	↕
132	AC	FIX., MOUNTING, G AND N		2900067-011			↕	↕	↕	↕	↕	↕	↕	↕	↕	↕	↕	↕	↕	↕	↕	↕	↕	↕	↕	↕	↕	↕	↕	↕	↕	↕	↕	↕	↕	↕	↕	↕	↕	↕	↕	↕	↕	↕	↕	↕
131	AC	SIMULATOR, LD/SIG, IMU/CDU		2900062-011			↕	↕	↕	↕	↕	↕	↕	↕	↕	↕	↕	↕	↕	↕	↕	↕	↕	↕	↕	↕	↕	↕	↕	↕	↕	↕	↕	↕	↕	↕	↕	↕	↕	↕	↕	↕	↕	↕	↕	↕
130	AC	TESTER, GYRO WHEEL		2900061-011			↕	↕	↕	↕	↕	↕	↕	↕	↕	↕	↕	↕	↕	↕	↕	↕	↕	↕	↕	↕	↕	↕	↕	↕	↕	↕	↕	↕	↕	↕	↕	↕	↕	↕	↕	↕	↕	↕	↕	↕
129	AC	COOLANT SUPPLY		1902133-021			↕	↕	↕	↕	↕	↕	↕	↕	↕	↕	↕	↕	↕	↕	↕	↕	↕	↕	↕	↕	↕	↕	↕	↕	↕	↕	↕	↕	↕	↕	↕	↕	↕	↕	↕	↕	↕	↕	↕	↕
128	AC	TABLE, ROTARY		1900926-021			↕	↕	↕	4.125	.812	3.250	↕	.125	.062	.12	.156	↕	.125	1.625	1.140	.890	.640	1.390	.125	.171	.125	1.875	1.687	2.625	.250	1.562	3.843	.093	↕	↕	.359	.125	.437	3.688	↕	3.687	.093	.40	.25	3.875
127	AC	FIX., HAND., OPTICS		2900074-011			↕	↕	↕	2.125	.968	1.718	↕	.093	.031	.06	.093	↕	.093	.858	.608	.484	.358	.733	.077	.116	.062	.937	.875	1.343	.125	.781	1.892	.046	↕	↕	.209	.093	.250	1.875	↕	1.840	.046	.23	.16	1.938
126	AC	FIXTURE, MTG, PTA/PEA.		2900066-011			↕	↕	↕	↕	↕	↕	↕	↕	↕	↕	↕	↕	↕	↕	↕	↕	↕	↕	↕	↕	↕	↕	↕	↕	↕	↕	↕	↕	↕	↕	↕	↕	↕	↕	↕	↕	↕	↕	↕	↕
125	AC	CONT, TEMP, IMU LIFTING		2900063-011			↕	↕	↕	↕	↕	↕	↕	↕	↕	↕	↕	↕	↕	↕	↕	↕	↕	↕	↕	↕	↕	↕	↕	↕	↕	↕	↕	↕	↕	↕	↕	↕	↕	↕	↕	↕	↕	↕	↕	↕
124	AC	FIXTURE, HANDLING, IMU		2900064-011			↕	↕	↕	↕	↕	↕	↕	↕	↕	↕	↕	↕	↕	↕	↕	↕	↕	↕	↕	↕	↕	↕	↕	↕	↕	↕	↕	↕	↕	↕	↕	↕	↕	↕	↕	↕	↕	↕	↕	↕
123	AC	CONT, OPTICS, REMOTE		1902046-021			↕	↕	↕	↕	↕	↕	↕	↕	↕	↕	↕	↕	↕	↕	↕	↕	↕	↕	↕	↕	↕	↕	↕	↕	↕	↕	↕	↕	↕	↕	↕	↕	↕	↕	↕	↕	↕	↕	↕	↕
122	AC	TEST CONTROL		1902009-021			↕	↕	↕	↕	↕	↕	↕	↕	↕	↕	↕	↕	↕	↕	↕	↕	↕	↕	↕	↕	↕	↕	↕	↕	↕	↕	↕	↕	↕	↕	↕	↕	↕	↕	↕	↕	↕	↕	↕	↕
121	AC	ADPT MODULE, P.S.A.		1902431-021			↕	↕	↕	↕	↕	↕	↕	↕	↕	↕	↕	↕	↕	↕	↕	↕	↕	↕	↕	↕	↕	↕	↕	↕	↕	↕	↕	↕	↕	↕	↕	↕	↕	↕	↕	↕	↕	↕	↕	↕
120	AC	BRIDGE, DECADE ERROR		2900128-011			↕	↕	↕	↕	↕	↕	↕	↕	↕	↕	↕	↕	↕	↕	↕	↕	↕	↕	↕	↕	↕	↕	↕	↕	↕	↕	↕	↕	↕	↕	↕	↕	↕	↕	↕	↕	↕	↕	↕	↕
119	AC	PWR SUP, ELECTRONICS		2900012-011			↕	↕	↕	↕	↕	↕	↕	↕	↕	↕	↕	↕	↕	↕	↕	↕	↕	↕	↕	↕	↕	↕	↕	↕	↕	↕	↕	↕	↕	↕	↕	↕	↕	↕	↕	↕	↕	↕	↕	↕
118	AC	PWR SUP, RELAY AND LAMP		1900049-031			↕	↕	↕	↕	↕	↕	↕	↕	↕	↕	↕	↕	↕	↕	↕	↕	↕	↕	↕	↕	↕	↕	↕	↕	↕	↕	↕	↕	↕	↕	↕	↕	↕	↕	↕	↕	↕	↕	↕	↕
117	AC	CONSOLE, OSCILLOGRAPH		1900000-021			↕	↕	↕	↕	↕	↕	↕	↕	↕	↕	↕	↕	↕	↕	↕	↕	↕	↕	↕	↕	↕	↕	↕	↕	↕	↕	↕	↕	↕	↕	↕	↕	↕	↕	↕	↕	↕	↕	↕	↕
116	AC	ADPT MODULE, P.S.A.		1902431-011			↕	↕	↕	↕	↕	↕	↕	↕	↕	↕	↕	↕	↕	↕	↕	↕	↕	↕	↕	↕	↕	↕	↕	↕	↕	↕	↕	↕	↕	↕	↕	↕	↕	↕	↕	↕	↕	↕	↕	↕
115	AC	ADPT, TEST POINT, PTA/PEA.		2900145-011			↕	↕	↕	↕	↕	↕	↕	↕	↕	↕	↕	↕	↕	↕	↕	↕	↕	↕	↕	↕	↕	↕	↕	↕	↕	↕	↕	↕	↕	↕	↕	↕	↕	↕	↕	↕	↕	↕	↕	↕
114	AC	ADPT, TEST POINT, P.S.A.		2900037-011			↕	↕	↕	↕	↕	↕	↕	↕	↕	↕	↕	↕	↕	↕	↕	↕	↕	↕	↕	↕	↕	↕	↕	↕	↕	↕	↕	↕	↕	↕	↕	↕	↕	↕	↕	↕	↕	↕	↕	↕
113	AC	CONTROL, GIMBAL POSITION		2900036-011			↕	↕	↕	↕	↕	↕	↕	↕	↕	↕	↕	↕	↕	↕	↕	↕	↕	↕	↕	↕	↕	↕	↕	↕	↕	↕	↕	↕	↕	↕	↕	↕	↕	↕	↕	↕	↕	↕	↕	↕
112	AC	SELECTOR, SIGNAL, PRIMARY		2900035-011			↕	↕	↕	↕	↕	↕	↕	↕	↕	↕	↕	↕	↕	↕	↕	↕	↕	↕	↕	↕	↕	↕	↕	↕	↕	↕	↕	↕	↕	↕	↕	↕	↕	↕	↕	↕	↕	↕	↕	↕
111	AC	SEL, SIG, OSCILLOGRAPH		2900034-011			↕	↕	↕	↕	↕	↕	↕	↕	↕	↕	↕	↕	↕	↕	↕	↕	↕	↕	↕	↕	↕	↕	↕	↕	↕	↕	↕	↕	↕	↕	↕	↕	↕	↕	↕	↕	↕	↕	↕	↕
110	AC	PANEL, PWR SUP AND LOAD		2900033-011			↕	↕	↕	↕	↕	↕	↕	↕	↕	↕	↕	↕	↕	↕	↕	↕	↕	↕	↕	↕	↕	↕	↕	↕	↕	↕	↕	↕	↕	↕	↕	↕	↕	↕	↕	↕	↕	↕	↕	↕
109	AC	PANEL, MONITOR		2900031-011			↕	↕	↕	↕	↕	↕	↕	↕	↕	↕	↕	↕	↕	↕	↕	↕	↕	↕	↕	↕	↕	↕	↕	↕	↕	↕	↕	↕	↕	↕	↕	↕	↕	↕	↕	↕	↕	↕	↕	↕
108	AC	PANEL, AUXILIARY INPUT		2900030-011			↕	↕	↕	↕	↕	↕	↕	↕	↕	↕	↕	↕	↕	↕	↕	↕	↕	↕	↕	↕	↕	↕	↕	↕	↕	↕	↕	↕	↕	↕	↕	↕	↕	↕	↕	↕	↕	↕	↕	↕
107	AC	CAGING ELECTRONICS, GYRO		2900029-011			↕	↕	↕	↕	↕	↕	↕	↕	↕	↕	↕	↕	↕	↕	↕	↕	↕	↕	↕	↕	↕	↕	↕	↕	↕	↕	↕	↕	↕	↕	↕	↕	↕	↕	↕	↕	↕	↕	↕	↕
106	AC	TEST SELECTOR		2900028-011			↕	↕	↕	↕	↕	↕	↕	↕	↕	↕	↕	↕	↕	↕	↕	↕	↕	↕	↕	↕	↕	↕	↕	↕	↕	↕	↕	↕	↕	↕	↕	↕	↕	↕	↕	↕	↕	↕	↕	↕
105	AC	TEST CONTROL		2900027-011			↕	↕	↕	↕	↕	↕	↕	↕	↕	↕	↕	↕	↕	↕	↕	↕	↕	↕	↕	↕	↕	↕	↕	↕	↕	↕	↕	↕	↕	↕	↕	↕	↕	↕	↕	↕	↕	↕	↕	↕
104	AC	MONITOR AND CONTROL, TEMP		2900026-011			↕	↕	↕	↕	↕	↕	↕	↕	↕	↕	↕	↕	↕	↕	↕	↕	↕	↕	↕	↕	↕	↕	↕	↕	↕	↕	↕	↕	↕	↕	↕	↕	↕	↕	↕	↕	↕	↕	↕	↕
103	AC	DISTRIBUTION BOX, GSE		2900024-011			↕	↕	↕	↕	↕	↕	↕	↕	↕	↕	↕	↕	↕	↕	↕	↕	↕	↕	↕	↕	↕	↕	↕	↕	↕	↕	↕	↕	↕	↕	↕	↕	↕	↕	↕	↕	↕	↕	↕	↕
102	AC	VOLTMETER, DIGITAL		2900007-011			B	II	NOTE 11C	2.125	.968	1.718	NA	.093	.031	.06	.093	.188 .104	.093	.858	.608	.484	.358	.733	.077	.116	.062	.937	.875	1.343	.125	.781	1.892	.046	NA	NA	.209	.093	.250	1.875	NA	1.840	.046	.23	.16	1.938
101	AC	NAVIGATION BASE ASSEMBLY - LEM		6R99950		NAS-9-497	A	I	NOTE 11B	2.000	1.312	1.906	1.375	.078	.048	.078	.093	NA	NA	1.125	.750	.593	.453	1.015	.062	.187	.078	.875	.718	1.375	.218	NA	NA	.048	.031	.875	.305	.078	.531	1.906	.078	NA	.078	.531	.187	NA
100	AC	NAVIGATION BASE ASSEMBLY		2899982		NAS-9-497	A	I	NOTE 11B	2.000	1.312	1.906	1.375	.078	.048	.078	.093	NA	NA	1.125	.750	.593	.453	1.015	.062	.187	.078	.875	.718	1.375	.218	NA	NA	.048	.031	.875	.305	.078	.531	1.906	.078	NA	.078	.531	.187	NA

NOTES FOR TABLE

STYLE A IS FOR G&N SYSTEM
STYLE B IS FOR GROUND SUPPORT EQUIPMENT
TYPE I IS WITHOUT MOUNTING HOLES
TYPE II IS WITH MOUNTING HOLES

NOTE: AC DASH NO'S. CONT. ON SH.6

THIS SHEET ADDED
Ⓖ REPLACES REV F WITH CHANGE

A C ELECTRONICS DASH NUMBERS

QTY REQD	PART OR IDENTIFYING NO.	MATERIAL OR NOTES	NOMENCLATURE OR DESCRIPTION	FIND NO.

LIST OF MATERIALS

NEXT ASSY	USED ON
AS APPLICABLE	

APPLICATION

UNLESS OTHERWISE SPECIFIED
DIMENSIONS ARE IN INCHES
CAPACITOR VALUES ARE IN µf
RESISTOR VALUES ARE IN OHMS
TOLERANCES ON
FRACTIONS ± — DECIMALS ±.005 ANGLES ± —
DO NOT SCALE THIS DRAWING

MATERIAL
SEE NOTE 11

MIT
INSTRUMENTATION LAB
CAMBRIDGE, MASS

DRAWN R O Jones 7 16 65
CHECKED 7-22-65
APPROVED
APPROVED
APPROVED MIT
APPROVED MSC
DATE

MANNED SPACECRAFT CENTER,
HOUSTON, TEXAS

NAMEPLATES,
APOLLO G&N-GSE
(STANDARDS)

CODE IDENT NO. 80230
SIZE E
DRAWING NO. 1004260
SCALE NONE
SHEET 4 OF 6

NOTICE – WHEN GOVERNMENT DRAWINGS, SPECIFICATIONS, OR OTHER DATA ARE USED FOR ANY PURPOSE OTHER THAN IN CONNECTION WITH A DEFINITELY RELATED GOVERNMENT PROCUREMENT OPERATION, THE UNITED STATES GOVERNMENT THEREBY INCURS NO RESPONSIBILITY NOR ANY OBLIGATION WHATSOEVER; AND THE FACT THAT THE GOVERNMENT MAY HAVE FORMULATED, FURNISHED, OR IN ANY WAY SUPPLIED THE SAID DRAWINGS, SPECIFICATIONS, OR OTHER DATA IS NOT TO BE REGARDED BY IMPLICATION OR OTHERWISE AS IN ANY MANNER LICENSING THE HOLDER OR ANY OTHER PERSON OR CORPORATION, OR CONVEYING ANY RIGHTS OR PERMISSION TO MANUFACTURE, USE, OR SELL ANY PATENTED INVENTION THAT MAY IN ANY WAY BE RELATED THERETO.

REVISIONS 02763

SYM	ZONE	DESCRIPTION	DR	CHK	DATE	APPROVED
G		REPLACES REV F WITH CHANGE PER TDRR 20854			7/2/65	WK
H		REVISED PER TDRR 20892				
J		REVISED PER TDRR 20904				
K		REVISED PER TDRR 21379				WK
L		REVISED PER TDRR 21410				WK
M		REVISED PER TDRR 21993				
N		REVISED PER TDRR 22621				
P		REVISED PER TDRR 22671				
R		REVISED PER TDRR 22672				
S		REVISED PER TDRR 22750				
T		REVISED PER TDRR 22823				WK
U		REVISED PER TDRR 23072				
V		REVISED PER TDRR 23521			10-28-65	WK
W		REVISED PER TDRR 23824	RAJ		11-9-65	
Y		REVISED PER TDRR 24018	RAJ		11-16-65	
Z		REVISED PER TDRR 24040	RAJ			
AA		REVISED PER TDRR 24060	RAJ			
AB		REVISED PER TDRR 24868	RAJ		12-22-65	
AC		REVISED PER TDRR 24973	RAJ		1-4-66	
AD		REVISED PER TDRR 25065	RAJ		1-18-66	
AE		REVISED PER TDRR 25672	RAJ		2-4-66	WK
AF		REVISED PER TDRR 25671	RAJ		2-4-66	
AG		REVISED PER TDRR 26110	RAJ		2-15-66	WK
AH		REVISED PER TDRR 26372	"		3-16-66	
AJ		REVISED PER TDRR 26425	"		3-16-66	
AK		REVISED PER TDRR 26743	"		3-16-66	
AL		REVISED PER TDRR 26798	"		3-16-66	
AM		REVISED PER TDRR 27168	"		4-7-66	
AN		REVISED PER TDRR 27235	"		4-7-66	
AP		REVISED PER TDRR 27345	"		4-7-66	
AR		REVISED PER TDRR 27417	"		4-7-66	
AS		REVISED PER TDRR 27442	"		4-7-66	
AT		REVISED PER TDRR 27719	"		4-20-66	
AU		REVISED PER TDRR 27880	"		4-20-66	
AV		REVISED PER TDRR 27896	"		4-20-66	WK
AW		28110	"		5-16-66	
AY		28173				
AZ		28131	"			
BA		28124	"			
BB		REVISED PER TDRR 28511	"		5-16-66	
BC		" " " 28949	"		5-24-66	
BD		" " " 29222	"		6-8-66	
BE		" " " 29235	"		"	
BF		" " " 29322	"		6-24-66	
BG		" " " 29429	"		"	
BH		" " " 29449	"		"	
BJ		" " " 29335	"		"	
BK		" " " 29619	"		"	
BL		" " " 29696	"		6-29-66	
BM		REVISION STATUS CHANGED	JSD		7-29-66	
BN		REVISION STATUS CHANGED	JL	RLW	8-22-66	

DASH NO.	P/C	PART NAME	REMARKS	PART NO.	SER. NO.	CONT. NO.	STYLE	TYPE	MATERIAL	A	B	C	D	E	F	G	H	J	K	L	M	N	P	R	S	T	U	V	W	Y	Z	AA	AB	AC	AD	AE	AF	AG	AH	AJ	AK	AL	AM	AN	AP	AR
499	MIT																																													
498																																														
-401	MIT	COMPUTER ASSY		2003100		NAS-9-497	A	I	NOTE 11 B	2.000	1.312	.906	1.375	.078	.048	.078	.093	NA	NA	1.125	.750	.593	.453	1.015	.062	.187	.078	.875	.718	.375	.218	NA	NA	.048	.031	.875	.305	.078	.531	1.906	.078	NA	.078	.531	.187	NA
-400	MIT	LIFTING SLING - G&N INST. QUAL. FIX. & AZM. REF. FIX.		1021640		NAS-9-4065	B	II	NOTE 11 C	2.000	.312	.687	1.375	.078	.048	.078	.093	[illegible]	.093	1.187	.750	.593	.453	1.015	.062	.187	.078	.875	.718	1.375	.218	1.156	1.843	.048	NA	.875	.305	.078	.312	1.687	.110	1.930	.070	.275	.180	[illegible]

MIT DASH NUMBERS

THIS SHEET ADDED

Ⓖ REPLACES REV F WITH CHANGE

NOTES FOR TABLE

STYLE A IS FOR G&N SYSTEM

STYLE B IS FOR GROUND SUPPORT EQUIPMENT

TYPE I IS WITHOUT MOUNTING HOLES

TYPE II IS WITH MOUNTING HOLES

QTY REQD	PART OR IDENTIFYING NO.	MATERIAL OR NOTES	NOMENCLATURE OR DESCRIPTION	FIND NO.

LIST OF MATERIALS

NEXT ASSY	USED ON
AS APPLICABLE	

APPLICATION

UNLESS OTHERWISE SPECIFIED
DIMENSIONS ARE IN INCHES
CAPACITOR VALUES ARE IN µf
RESISTOR VALUES ARE IN OHMS
TOLERANCES ON
FRACTIONS ± — DECIMALS ±.005 ANGLES ± —
DO NOT SCALE THIS DRAWING

MATERIAL
SEE NOTE 11

MIT
INSTRUMENTATION LAB
CAMBRIDGE, MASS.

MANNED SPACECRAFT CENTER
HOUSTON, TEXAS

DRAWN R A Jones 7-16-65
CHECKED
APPROVED
APPROVED
APPROVED MIT
APPROVED MSC
DATE

NAMEPLATES,
APOLLO G&N-GSE
(STANDARDS)

CODE IDENT NO 80230
SIZE E
DRAWING NO. 1004260
SCALE NONE
SHEET 5 OF 6

NOTICE – WHEN GOVERNMENT DRAWINGS, SPECIFICATIONS, OR OTHER DATA ARE USED FOR ANY PURPOSE OTHER THAN IN CONNECTION WITH A DEFINITELY RELATED GOVERNMENT PROCUREMENT OPERATION, THE UNITED STATES GOVERNMENT THEREBY INCURS NO RESPONSIBILITY NOR ANY OBLIGATION WHATSOEVER, AND THE FACT THAT THE GOVERNMENT MAY HAVE FORMULATED, FURNISHED, OR IN ANY WAY SUPPLIED THE SAID DRAWINGS, SPECIFICATIONS OR OTHER DATA IS NOT TO BE REGARDED BY IMPLICATION OR OTHERWISE AS IN ANY MANNER LICENSING THE HOLDER OR ANY OTHER PERSON OR CORPORATION, OR CONVEYING ANY RIGHTS OR PERMISSION TO MANUFACTURE, USE, OR SELL ANY PATENTED INVENTION THAT MAY IN ANY WAY BE RELATED THERETO.

REVISIONS 02768

SYM	ZONE	DESCRIPTION	DR	CHK	DATE	APPROVED
AG		CHANGED NUMBER OF SHEETS FROM 5 TO 6 PER TDRR 26110.	RAJ		2-15-66	
AH		REVISED PER TDRR 26372	"		3-16-66	
AJ		REVISED PER TDRR 26425	"		3-16-66	
AK		REVISED PER TDRR 26743	"		3-16-66	
AL		REVISED PER TDRR 26796	"		3-16-66	
AM		REVISED PER TDRR 27168	"		4-7-66	
AN		REVISED PER TDRR 27235	"		4-7-66	
AP		REVISED PER TDRR 27345	"		4-7-66	
AR		REVISED PER TDRR 27417	"		4-7-66	
AS		REVISED PER TDRR 27442	"		4-7-66	
AT		REVISED PER TDRR 27719	"		4-20-66	
AU		REVISED PER TDRR 27880	"		4-20-66	
AV		REVISED PER TDRR 27896	"		4-20-66	
AW		28110	"		5-16-66	
AY		28173	"		5-16-66	
AZ		28131	"		5-16-66	
BA		28124	"		5-16-66	
BB		REVISED PER TDRR 28511	"		5-16-66	
BC		" " " 28949	"		5-24-66	
BD		" " " 29222	"		6-8-66	
BE		" " " 29235	"		"	
BF		" " " 29322	"		6-24-66	
BG		" " " 29429	"		"	
BH		" " " 29449	"		"	
BJ		" " " 29335	"		"	
BK		" " " 29619	"		"	
BL		" " " 29696	"		6-29-66	
BM		REVISION STATUS CHANGED	JSD	N.S.	7-29-66	
BN		REVISED PER TDRR 29974	JI		8-19-66	

DASH NO.	P/C	PART NAME	REMARKS	PART NO.	SER NO.	CONT NO.	STYLE	TYPE	MATERIAL
599	AC								
598	AC								
537	AC	TEST SELECTOR		2900028-031		NAS 9-497	B	II	NOTE 11C
536	AC	ANALYZER, OPTICS-INERTIAL		2900023-041					
535	AC	CONT, TEMP, PORTABLE		2900060-021					
533	AC	ADPT MODULE, P.S.A.		1902431-041					
532	AC	TRAY BREAKOUT, 105 PIN		1900807-021					
531	AC	TRAY BREAKOUT, 84 PIN		1900806-021					
530	AC	HEAT SINK-TRAY EXTENDER		1900808-021					
529	AC	TESTER, FAILURE INDICATOR		1900809-021					
527	AC	FIX., MOUNTING, G AND N	(-144)	1902204-021					
526	AC	FIX., MOUNTING, G AND N	(-144)	2900067-031					
525	AC	PORTABLE TEMP. CONTROLLER		1900496-021			B	II	NOTE 11C
524	AC	POWER, SERVO AND THERMOCOUPLE ASSEMBLY C/M		2010743			A	I	NOTE 11B
523	AC	PULSE TORQUE AND THERMOCOUPLE ASSEMBLY - LEM		6010656					
522	AC	COUPLING DATA UNIT AND THERMOCOUPLE ASSEMBLY - LEM		2010744					
521	AC	COUPLING DATA UNIT AND THERMOCOUPLE ASSEMBLY - C/M		2010744					
520	AC	PIPA ELECTRONICS AND THERMOCOUPLE ASSEMBLY		2010745			A	I	NOTE 11B
519	AC	FIXTURE, HANDLING, LEM-PSA	(-141)	6900129-011			B	II	NOTE 11C
518	AC	JUNCTION BOX, GSE-PSA	(-144)	1901933-031			B	II	NOTE 11C
517	AC	FIX., HAND., OPTICS INSTL.	(-141)	2901380-011			B	II	NOTE 11C
516	AC	POWER, SERVO AND THERMOCOUPLE ASSEMBLY-LEM		6010655		NAS 9 497	A	I	NOTE 11B
514	AC	SIGNAL COND. ASSY LEM OPER.	(-100)	6007013		NAS-9-497	A	I	NOTE 11B
513		JUMPER, BY-PASS	(-141)	1021616			B	II	NOTE 11C
512		COUPLING DATA UNIT ASSEMBLY C/M	(-100)	2007322 - 011			A	I	NOTE 11B
511		COUPLING DATA UNIT ASSEMBLY - LEM	(-100)	2007322 - 021					
510		BATTERY POWER PACK	(-144)	1900011 - 041			B	II	NOTE 11C
509		JUNCTION BOX, PSA/GSE.	(-144)	1902195 - 021			B	II	NOTE 11C
508		NAVIGATION BASE ASSEMBLY - LEM	✓ (-101)	6899980			A	I	NOTE 11B
507		CSL, COOL. AND PWR, G AND N	(-144)	1902134 - 041			B	II	NOTE 11C
506		BREAKOUT BOX, CABLE ADAPTER	(-141)	2901011 - 011					
505		MONITOR AND CONTROL, TEMP	(-141)	2900026 - 021					
504		PWR. SUP, GUIDANCE SYSTEM	✓ (-141)	1900033-021					
503		CONTROL, GIMBAL POSITION	(-141)	2900036-02					
502		ADPT, TEST POINT, PTA/PEA.	(-141)	2900145-021					
501		MOUNTING PLATE, COMPONENT	(-144)	900067-03		[illegible]			NOTE 11C
500	AC	MOUNTING PLATE, COMPONENT	✓ (-144)	[illegible]					

DASH NO.	A	B	C	D	E	F	G	H	J	K	L	M	N	P	R	S	T	U	V	W	Y	Z	AA	AB	AC	AD	AE	AF	AG	AH	AJ	AK	AL	AM	AN	AP	AR
537	2.125	.968	1.718	NA	.093	.031	.06	.093	.100/.104	.093	.858	.608	.484	.358	.733	.077	.116	.062	.937	.875	1.343	.125	.781	1.892	.046	NA	NA	.209	.093	.250	1.875	NA	1.840	.046	.23	.16	1.938
536	4.125	1.812	3.250		.125	.062	.12	.156	.100/.104	.125	1.625	1.140	.890	.640	1.390	.125	.171	.125	1.875	1.687	2.625	.250	1.562	3.843	.093			.359	.125	.437	3.688		3.687	.093	.40	.25	3.875
535	2.125	.968	1.718		.093	.031	.06	.093	.100/.104	.093	.858	.608	.484	.358	.733	.077	.116	.062	.937	.875	1.343	.125	.781	1.892	.046			.209	.093	.250	1.875		1.840	.046	.23	.16	.938
533	2.125	.968	1.718		.093	.031	.06	.093	.100/.104	.093	.858	.608	.484	.358	.733	.077	.116	.062	.937	.875	1.343	.125	.781	1.892	.046			.209	.093	.250	1.875		1.840	.046	.23	.16	1.938
532	4.125	1.812	3.250		.125	.062	.12	.156	.100/.104	.125	1.625	1.140	.890	.640	1.390	.125	.171	.125	1.875	1.687	2.625	.250	1.562	3.843	.093			.359	.125	.437	3.688		3.687	.093	.40	.25	3.875
531	4.125	1.812	3.250		.125	.062	.12	.156	.100/.104	.125	1.625	1.140	.890	.640	1.390	.125	.171	.125	1.875	1.687	2.625	.250	1.562	3.843	.093			.359	.125	.437	3.688		3.687	.093	.40	.25	3.875
530	2.125	.968	1.718		.093	.031	.06	.093	.100/.104	.093	.858	.608	.484	.358	.733	.077	.116	.062	.937	.875	1.343	.125	.781	1.892	.046			.209	.093	.250	1.875		1.840	.046	.23	.16	1.938
529	2.125	.968	1.718	NA	.093	.031	.06	.093	.100/.104	.093	.858	.608	.484	.358	.733	.077	.116	.062	.937	.875	1.343	.125	.781	1.892	.046	NA	NA	.209	.093	.250	1.875	NA	1.840	.046	.23	.16	1.938
527	FOR DIMENSIONS, SEE DASH 500 VALUES BELOW																																				
526																																					
525	3.000	1.937	2.437	2.312	.125	.031	.25	.156	.125	.125	1.718	1.187	.968	.749	1.452	.093	.295	.090	1.312	1.00	2.000	.250	1.687	2.750	.062	N/A	N/A	.463	.125	.562	2.437	.140	2.562	.090	.468	.359	2.750
524	2.25	.968	1.718	NA	.093	.031	.06	.093	NA	NA	.858	.608	.484	.358	.733	.062	.140	.062	NA	.968	1.450	.125	NA	1.720	.046	.03	NA	.210	NA	NA	NA	.070	NA	.046	.32	.16	NA
523	FOR DIMENSIONS, SEE DASH 508 VALUES BELOW																																				
522																																					
521																																					
520																																					
519	FOR DIMENSIONS, SEE DASH 504 VALUES BELOW																																				
518	FOR DIMENSIONS, SEE DASH 500 VALUES BELOW																																				
517	FOR DIMENSIONS SEE DASH 502 VALUES BELOW																																				
516	FOR DIMENSIONS SEE DASH 508 VALUES BELOW																																				
514	FOR DIMENSIONS, SEE DASH 508 VALUES BELOW																																				
513	2.125	.968	1.718	NA	.093	.031	.06	.093	.100/.104	.093	.858	.608	.484	.358	.733	.077	.116	.062	.937	.875	1.343	.125	.781	1.892	.046	NA	NA	.209	.093	.250	1.875	NA	1.840	.046	.23	.16	1.938
512	FOR DIMENSIONS, SEE DASH 508 VALUES BELOW																																				
511																																					
510	FOR DIMENSIONS, SEE DASH 500 VALUES BELOW																																				
509																																					
508	2.000	1.312	1.906	1.375	.078	.048	.078	.093	NA	NA	1.125	.750	.593	.453	1.015	.062	.187	.078	.875	.718	1.375	.218	NA	NA	.048	.031	.875	.305	.078	.531	1.906	.078	NA	.078	.531	.187	NA
507	FOR DIMENSIONS, SEE DASH 500 VALUES BELOW-																																				
506																																					
505																																					
504	2.125	.968	1.718	NA	.093	.031	.06	.093	.100/.104	.093	.858	.608	.484	.358	.733	.077	.116	.062	.937	.875	1.343	.125	.781	1.892	.046	NA	NA	.209	.093	.250	1.875	NA	1.840	.046	.23	.16	1.938
503																																					
502																																					
501	FOR DIMENSIONS, SEE DASH 500 VALUES BELOW																																				
500	4.125	1.812	3.250	NA	.125	.062	.12	.156	.100/.104	.25	.625	1.140	.890	.640	1.390	.125	.171	.25	.875	.687	2.625	.250	.562	3.843	.093	NA	NA	.359	.125	.437	3.688	NA	3.687	.093	.40	.25	3.875

A C ELECTRONICS DASH NUMBERS

(AG) THIS SHEET ADDED

NOTES FOR TABLE

STYLE A IS FOR G&N SYSTEM
STYLE B IS FOR GROUND SUPPORT EQUIPMENT
TYPE I IS WITHOUT MOUNTING HOLES
TYPE II IS WITH MOUNTING HOLES

QTY REQD	PART OR IDENTIFYING NO.	MATERIAL OR NOTES	NOMENCLATURE OR DESCRIPTION	FIND NO.

LIST OF MATERIALS

NEXT ASSY	USED ON
AS APPLICABLE	

APPLICATION

UNLESS OTHERWISE SPECIFIED
DIMENSIONS ARE IN INCHES
CAPACITOR VALUES ARE IN µf
RESISTOR VALUES ARE IN OHMS
TOLERANCES ON
FRACTIONS ± — DECIMALS ±.005 ANGLES ± —
DO NOT SCALE THIS DRAWING

MATERIAL
SEE NOTE 11

MIT
INSTRUMENTATION LAB
CAMBRIDGE MASS

DRAWN E. A. Jones 2-15-66
CHECKED W. L. Chandler 2-15-66
APPROVED
APPROVED
APPROVED MIT 5-16-66
APPROVED MSC
DATE

MANNED SPACECRAFT CENTER
HOUSTON, TEXAS

NAMEPLATES,
APOLLO G&N-GSE
(STANDARDS)

CODE IDENT NO. 80230
SIZE E
DRAWING NO. 1004260
SCALE NONE
SHEET 6 OF 6

NOTICE - WHEN GOVERNMENT DRAWINGS, SPECIFICATIONS, OR OTHER DATA ARE USED FOR ANY PURPOSE OTHER THAN IN CONNECTION WITH A DEFINITELY RELATED GOVERNMENT PROCUREMENT OPERATION, THE UNITED STATES GOVERNMENT THEREBY INCURS NO RESPONSIBILITY NOR ANY OBLIGATION WHATSOEVER; AND THE FACT THAT THE GOVERNMENT MAY HAVE FORMULATED, FURNISHED, OR IN ANY WAY SUPPLIED THE SAID DRAWINGS, SPECIFICATIONS, OR OTHER DATA IS NOT TO BE REGARDED BY IMPLICATION OR OTHERWISE AS IN ANY MANNER LICENSING THE HOLDER OR ANY OTHER PERSON OR CORPORATION, OR CONVEYING ANY RIGHTS OR PERMISSION TO MANUFACTURE, USE, OR SELL ANY PATENTED INVENTION THAT MAY IN ANY WAY BE RELATED THERETO.

NOTES:

1. INTERPRET DRAWING IN ACCORDANCE WITH STANDARDS PRESCRIBED IN MIL-D-70327.
2. DIMENSIONS ON EACH VIEW APPLY TO ALL VIEWS. (WITH THE EXCEPTION OF MOUNTING HOLES).
3. FORMATS ILLUSTATED WILL BE APPLICABLE TO ALL ITEMS REQUIRING NAMEPLATES BELOW END ITEM DESIGNATION (SYSTEMS ASSEMBLIES, ETC.)
4. PLATE BACKGROUND TO BE LUSTERLESS BLACK PER FED-STD-595. COLOR 37038. BORDER, MARKING AND LETTERING TO BE NATURAL METAL,(ANODIZED ALUMINUM).
5. MARKING METHOD TO BE DIE STAMPING, ETCHING OR ENGRAVING IN ACCORDANCE WITH MIL P 19834.
6. LETTERING STYLE TO BE GOTHIC,(SANS SERIFS), AND NUMBERS TO BE ARABIC.
7. WHERE LOCATING DIMENSIONS ARE NOT SHOWN,CHARACTERS SHALL BE SYMMETRICALLY POSITIONED.
8. IDENTIFY WITH DRAWING NUMBER PER ND1002029.
9. WHEN "AUTO MARK" METAL MARKING TYPEWRITER IS USED TO ADD DATA TO BLANK SPACES, TYPE SIZE IS TO BE SELECTED FROM DIMENSIONS U, AC AND AM.
10. NASA SYMBOL IS TO BE PROPORTIONAL TO NAMEPLATE IN RATIO OF 1 TO 5 WITH DIMENSION A VALUE AND IS TO HAVE NATURAL BACKGROUND. NASA SYMBOL LETTERS LETTERING AND FEATHER TO BE BLACK,(OR WHITE FOR SILK SCREENING). WHERE BLACK FEATHER PROTRUDES INTO BLACK BACKGROUND, A MINIMUM OUTLINE OF NATURAL BACKGROUND SHALL EXIST.
11. NAMEPLATES WILL BE APPLIED BY METHODS LISTED BELOW, SHOWN IN ORDER OF PREFERENCE, (I.E., FOR RELIABILITY AND WEIGHT).
    - A - STENCIL OR SILK SCREEN DIRECTLY ON EQUIPMENT USING INK PER SCD 1010920,(WHITE OR BLACK).
    - B - ALUMINUM FOIL,(STYLE A OR B, TYPE I): FOIL SHALL BE .0030 ±.0005 THICK PER MIL-A-148. FOIL SHALL HAVE NO ADHESIVE BACKING. FOIL SHALL BE BONDED PER ND 1002219,(METHOD II). FOIL SHALL BE CLEAR ANODIZED PER MIL-A-8625, TYPE II.
    - C - PLATE, (STYLE A OR B, TYPE II): MATERIAL: QQ-A-250, TEMPER O OR H14, TYPE 1100,ALUMINUM ALLOY, .032 THICK. ANODIZE PER MIL-A-8625, TYPE II. ALUMINUM PLATE MUST BE FREE FROM BURRS AND SHARP CORNERS, MOUNTED WITH APPLICABLE SIZE FASTENERS.
12. NAMEPLATES SHALL BE CAPABLE OF MEETING APPLICABLE REQUIREMENTS OF MIL-M-13231.
13. ON DIMENSION TABLES SHOWN ON PAGES 2, 3, 4 AND 5, "NA MEANS, "NOT APPLICABLE".

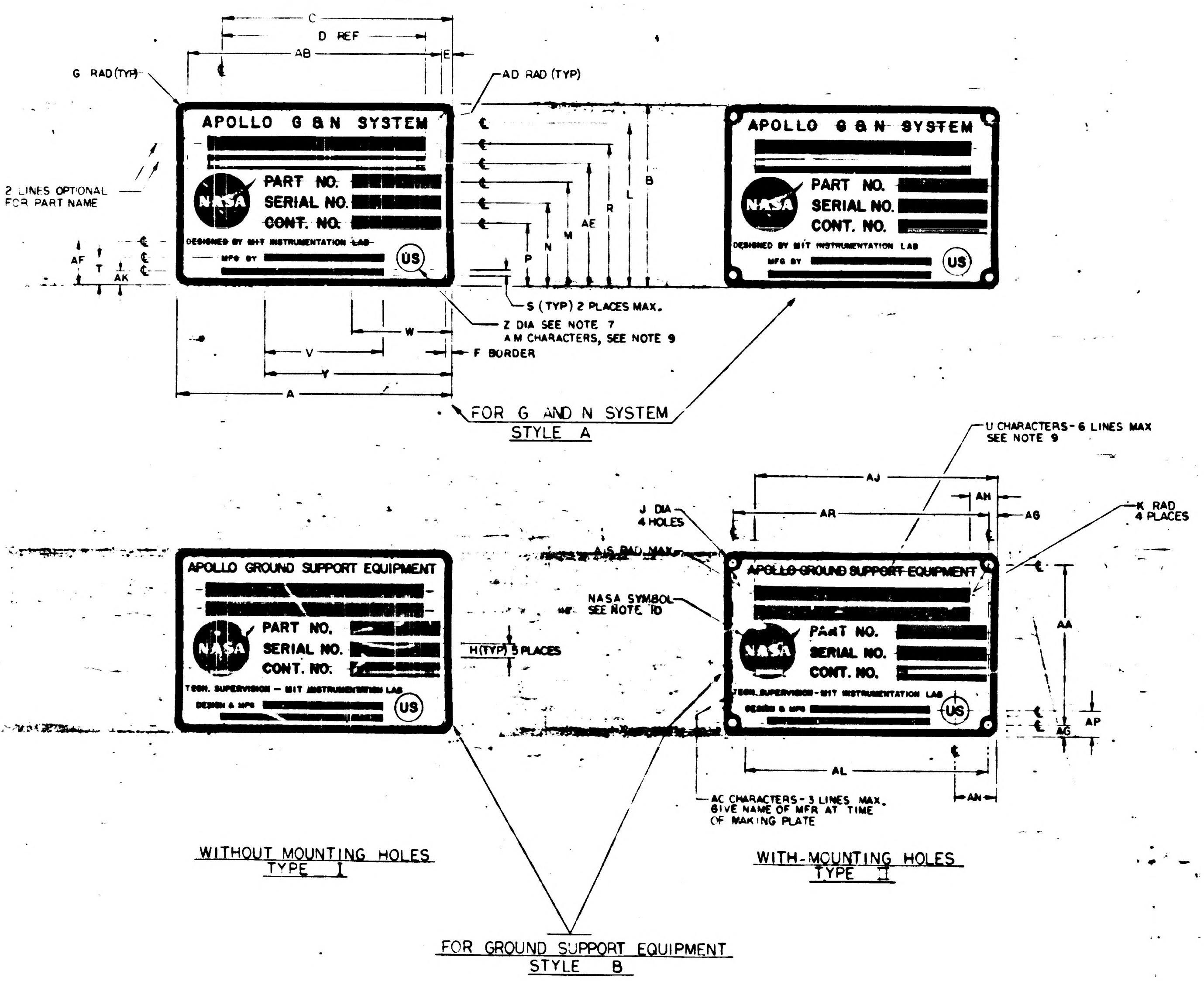
C
D REF
AB
E
G RAD (TYP)
AD RAD (TYP)
APOLLO G & N SYSTEM
PART NO.
SERIAL NO.
CONT. NO.
DESIGNED BY MIT INSTRUMENTATION LAB
MFG BY
US
2 LINES OPTIONAL FOR PART NAME
AF
T
AK
B
L
R
AE
M
N
P
S (TYP) 2 PLACES MAX.
Z DIA SEE NOTE 7
AM CHARACTERS, SEE NOTE 9
W
V
Y
A
F BORDER
FOR G AND N SYSTEM
STYLE A
U CHARACTERS - 6 LINES MAX
SEE NOTE 9
AJ
AH
AR
AG
J DIA 4 HOLES
K RAD 4 PLACES
AS RAD MAX
APOLLO GROUND SUPPORT EQUIPMENT
NASA
NASA SYMBOL SEE NOTE 10
H (TYP) 5 PLACES
TECH. SUPERVISION - MIT INSTRUMENTATION LAB
DESIGN & MFG
AA
AP
AL
AN
AC CHARACTERS - 3 LINES MAX. GIVE NAME OF MFR AT TIME OF MAKING PLATE
WITHOUT MOUNTING HOLES
TYPE I
WITH MOUNTING HOLES
TYPE II
FOR GROUND SUPPORT EQUIPMENT
STYLE B

REVISIONS 21768

SYM	ZONE	DESCRIPTION	DR	CHK	DATE	APPROVED
G		REPLACES REV F WITH CHANGE PER TDRR 20854			[illegible]	WK
H		REVISED PER TDRR 20892			[illegible]	WK
J		REVISED PER TDRR 20904			[illegible]	WK
K		REVISED PER TDRR 21379			[illegible]	WK
L		REVISED PER TDRR 21410			[illegible]	WK
M		REVISED PER TDRR 21993				
N		REVISED PER TDRR 22621			[illegible]	
P		REVISED PER TDRR 22671			[illegible]	
R		REVISED PER TDRR 22672				
S		REVISED PER TDRR 22750			[illegible]	WK
T		REVISED PER TDRR 22823				
U		REVISED PER TDRR 23072			10-22-65	WGM
V		REVISED PER TDRR 23521			10-27-65	WK
W		REVISED PER TDRR 23824	RAJ		11-9-65	WK
Y		REVISED PER TDRR 24018	RAJ		11-16-65	WK
Z		REVISED PER TDRR 24040	RAJ		11-19-65	WK
AA		REVISED PER TDRR 24060	RAJ		11-19-65	WK
AB		REVISED PER TDRR 24868	RAJ		12-22-65	WK
AC		REVISED PER TDRR 24973	RAJ		1-4-66	WK
AD		REVISED PER TDRR 25065	RAJ		1-18-66	WGM
AE		REVISED PER TDRR 25672	RAJ		2-4-66	WK
AF		REVISED PER TDRR 25671	RAJ		2-4-66	WK
AG		REVISED PER TDRR 26110	RAJ		2-15-66	WK
AH		REVISED PER TDRR 26372	"		3-6-66	WGM
AJ		REVISED PER TDRR 26425	"		3-16-66	WGM
AK		REVISED PER TDRR 26743	"		3-16-66	WGM
AL		REVISED PER TDRR 26798	"		3-16-66	WGM
AM		REVISED PER TDRR 27168	"		4-7-66	WGM
AN		REVISED PER TDRR 27235	"		4-7-66	WGM
AP		REVISED PER TDRR 27345	"		4-7-66	WGM
AR		REVISED PER TDRR 274 7	"		4-7-66	WGM
AS		REVISED PER TDRR 27442	"		4-7-66	WGM
AT		REVISED PER TDRR 27719	"		4-20-66	WK
AU		REVISED PER TDRR 27880	"		4-20-66	WK
AV		REVISED PER TDRR 27896	"		4-20-66	WK
AW		28110	"		5-16-66	WGM
AY		28173	"			WGM
AZ		28131	"			WGM
BA		28124	"			WGM
BB		REVISED PER TDRR 28511	"		5-16-66	WGM
BC		" " " 28949	"		5-24-66	WGM
BD		" " " 29222	"		[illegible]	WGM
BE		" " " 29235	"		6-8-66	WGM
BF		" " " 29322	"		6-30-66	WGM
BG		" " " 29429	"		"	WGM
BH		" " " 29449	"		"	WGM
BJ		" " " 29335	"		"	WGM
BK		" " " 296 9	"		"	WGM
BL		" " " 29696	"		"	WGM
BM		REVISION STATUS CHANGED	JSD	NS	7-29-66	
BN		REVISION STATUS CHANGED	JI	[illegible]	23 AUG 66	
BP		REVISION STATUS CHANGED	JI	[illegible]	[illegible]	

SUGGESTED PROPORTIONS FOR NAMEPLATE DIMENSIONS.
1. SELECT NAMEPLATE LENGTH, DIMENSION "A", TO FIT DESIGN NEEDS.
2. DIMENSIONS B THRU AS ON LINE 1 BELOW ARE PROPORTIONAL TO "A" BY MULTIPLIERS SHOWN IN LINE 2 BELOW.

1.	A	B	C	D	E	F	G	H	J	K	L	M	N	P	R	S	T	U	V	W
2.	1.000 A	.6563A	.8438A	.6875A	.0391A	.0240A	.0391 A	.0469A	.0547A	.0469 A	.5938 A	.3750 A	.2969A	.2187 A	.5079A	.0313 A	.0938A	.0391 A	.4375 A	.3594 A

1.	Y	Z	AA	AB	AC	AD	AE	AF	AG	AH	AJ	AK	AL	AM	AN	AP	AR	AS
2.	.6875 A	.1094 A	.5781 A	.9219 A	.0240A	.0156 A	.4375A	.1525 A	.0391 A	.1563 A	.8438 A	.0548A	.8659 A	.0391 A	.1563 A	.0938A	.9219 A	.0151 A

Ⓖ REPLACES REV F WITH CHANGE

QTY REQD	PART OR IDENTIFYING NO	MATERIAL OR NOTES	NOMENCLATURE OR DESCRIPTION	FIND NO

LIST OF MATERIALS

AS APPLICABLE	
NEXT ASSY	USED ON
APPLICATION	

UNLESS OTHERWISE SPECIFIED
DIMENSIONS ARE IN INCHES
CAPACITOR VALUES ARE IN μf
RESISTOR VALUES ARE IN OHMS
TOLERANCES ON
FRACTIONS ± — DECIMALS ±.005 ANGLES ± —
DO NOT SCALE THIS DRAWING

MATERIAL
SEE NOTE 11

MIT
INSTRUMENTATION LAB
CAMBRIDGE, MASS.

DRAWN R A Jones 7/16/65
CHECKED A. J. [illegible] 9-22-65
APPROVED
APPROVED W. [illegible] 9/22/65
APPROVED MIT W. [illegible] 9/22/65
APPROVED MSC [illegible]
DATE

MANNED SPACECRAFT CENTER
HOUSTON, TEXAS

NAMEPLATES,
APOLLO G&N-GSE
(STANDARDS)

CODE IDENT NO 80230
SIZE E
DRAWING NO. 1004260
SCALE NONE
SHEET 1 OF 6

NOTICE - WHEN GOVERNMENT DRAWINGS, SPECIFICATIONS, OR OTHER DATA ARE USED FOR ANY PURPOSE OTHER THAN IN CONNECTION WITH A DEFINITELY RELATED GOVERNMENT PROCUREMENT OPERATION, THE UNITED STATES GOVERNMENT THEREBY INCURS NO RESPONSIBILITY NOR ANY OBLIGATION WHATSOEVER; AND THE FACT THAT THE GOVERNMENT MAY HAVE FORMULATED, FURNISHED, OR IN ANY WAY SUPPLIED THE SAID DRAWINGS, SPECIFICATIONS, OR OTHER DATA IS NOT TO BE REGARDED BY IMPLICATION OR OTHERWISE AS IN ANY MANNER LICENSING THE HOLDER OR ANY OTHER PERSON OR CORPORATION, OR CONVEYING ANY RIGHTS OR PERMISSION TO MANUFACTURE, USE, OR SELL ANY PATENTED INVENTION THAT MAY IN ANY WAY BE RELATED THERETO.

REVISIONS 02768

SYM	ZONE	DESCRIPTION	BY	CHK	DATE	APPROVED
G		REPLACES REV F WITH CHANGE PER TDRR 20854.			[illegible]	WK
H		REVISED PER TDRR 20892			[illegible]	WK
J		REVISED PER TDRR 20904			[illegible]	WK
K		REVISED PER TDRR 21379			[illegible]	WK
L		REVISED PER TDRR 21410			[illegible]	WK
M		REVISED PER TDRR 21993	"			
N		REVISED PER TDRR 22621	"			
P		REVISED PER TDRR 22671	"			
R		REVISED PER TDRR 22672				
S		REVISED PER TDRR 22750	"			
T		REVISED PER TDRR 22823	"		65	WK
U		REVISED PER TDRR 23072			10-22-65	WGM
V		REVISED PER TDRR 23521	"		10-27-65	WK
W		REVISED PER TDRR 23824	RAJ		11-9-65	WK
Y		REVISED PER TDRR 24018	RAJ		11-16-65	WK
Z		REVISED PER TDRR 24040	RAJ		11-19-65	WK
AA		REVISED PER TDRR 24060	RAJ		11-19-65	WK
AB		REVISED PER TDRR 24868	RAJ		12-22-65	WK
AC		REVISED PER TDRR 24973	RAJ		1-4-66	WK
AD		REVISED PER TDRR 25065 —	RAJ		1-18-66	[illegible]
AE		REVISED PER TDRR 25672	RAJ		2-4-66	WK
AF		REVISED PER TDRR 25671	RAJ		2-4-66	WK
AG		REVISED PER TDRR 26110	RAJ		2-15-66	WK
AH		REVISED PER TDRR 26372	"		3-16-66	WGM
AJ		REVISED PER TDRR 26425	"		3-16-66	WGM
AK		REVISED PER TDRR 26743	"		3-16-66	WGM
AL		REVISED PER TDRR 26798	"		3-16-66	WGM
AM		REVISED PER TDRR 27168	"		4-8-66	WGM
AN		REVISED PER TDRR 27235	"		4-8-66	WGM
AP		REVISED PER TDRR 27345	"		4-8-66	WGM
AR		REVISED PER TDRR 27417	"		4-8-66	WGM
AS		REVISED PER TDRR 27442	"		4-8-66	WGM
AT		REVISED PER TDRR 27719	"		4-21-66	WK
AU		REVISED PER TDRR 27880	"		4-21-66	WK
AV		REVISED PER TDRR 27896	"		4-21-66	WK
AW		28110	"		5-16-66	WGM
AY		28173	"			WGM
AZ		28131	"			WGM
BA		28124	"			WGM
BB		REVISED PER TDRR 28511	"		5-16-66	WGM
BC		" " " 28949	"		5-24-66	[illegible]
BD		" " " 29222	"		6-8-66	[illegible]
BE		" " " 29235	"		"	WGM
BF		" " " 29322	"		6-30-66	WGM
BG		" " " 29429	"		"	WGM
BH		" " " 29449	"		"	WGM
BJ		" " " 29335	"		"	WGM
BK		" " " 29619	"		"	WGM
BL		" " " 29696	"		"	WGM
BM		REVISION STATUS CHANGED	JSD	N.S.	7-29-66	
BN		REVISION STATUS CHANGED	JI	RLW	8 AUG 66	
BP		REVISION STATUS CHANGED	JI	RLW	9 AUG 66	

DASH NO.	P/C	PART NAME	REMARKS	PART NO.	SER. NO.	CONT. NO.	STYLE	TYPE	MATERIAL	A	B	C	D	E	F	G	H	J	K	L	M	N	P	R	S	T	U	V	W	Y	Z	AA	AB	AC	AD	AE	AF	AG	AH	AJ	AK	AL	AM	AN	AP	AR
399	K																																													
398	K																																													
350	K	ALIGNMENT OPTICAL TELESCOPE (LEM)		NA	NA	NA	A	I	NOTE 11B	4.000	2.625	3.375	2.750	.156	.093	.156	.187	NA	NA	2.312	1.468	1.187	.906	2.031	NA	.375	.156	NA	1.437	2.750	.437	NA	3.688	.062	.062	1.750	.593	NA	.625	3.375	.187	NA	.156	.531	.453	NA
309	K																																													
308	K																																													
307	K						B	I	NOTE 11 B	4.000	2.625	3.375	2.750	.156	.093	.156	.187	NA	NA	2.328	1.468	1.187	.906	2.031	.062	.375	.156	NA	1.437	2.750	.437	NA	3.687	.062	.062	1.750	.593	NA	NA	NA	NA	NA	NA	NA	NA	NA
306	K						B	II	NOTE 11 C	4.000	2.625	3.375	2.750	.156	.093	.156	.187	.125	.156	2.328	1.468	1.187	.906	2.031	.062	.375	.156	↕	1.437	2.750	.437	2.312	3.687	.062	NA	1.750	.593	↕	↕	↕	↕	↕	↕	↕	↕	↕
305	K						B	I	NOTE 11 B	2.000	1.312	1.687	1.375	.078	.048	.078	.093	NA	NA	1.164	.734	.593	.453	1.015	.048	.171	.078	↕	.718	1.375	.187	NA	NA	.048	.031	.875	.320	↕	↕	↕	↕	↕	↕	↕	↕	↕
304	K						B	II	NOTE 11 C	2.000	1.312	1.687	1.375	.078	.048	.078	.093	.070	.078	1.164	.734	.593	.453	1.015	.048	.171	.078	NA	.718	1.375	.187	.156	1.843	.048	NA	.875	.320	NA	NA	NA	NA	NA	NA	NA	NA	NA
303	K																																													
302	K																																													
301	K																																													
300	K	OPTICAL UNIT		NA	NA	NA	A	I	NOTE 11 B	2.000	1.312	1.675	NA	NA	.048	.078	NA	NA	NA	1.090	.812	.675	.540	.940	NA	.265	NA	NA	NA	1.375	.218	NA	NA	NA	NA	NA	.375	NA	NA	NA	.180	NA	.078	NA	NA	NA
9	K	2 IN AUTOCOLLIMATOR		1001702			B	II	NOTE 11 C	4.000	2.625	3.812	2.750	.156	.093	.156	.187	.125	.156	2.250	1.500	1.187	.906	2.031	.093	.375	.156	1.750	1.437	2.750	.437	2.312	3.687	.062	NA	1.750	.593	.156	1.062	3.812	.156	NA	.156	1.062	.375	3.687
8	K	5 IN AUTOCOLLIMATOR		1017410			B	II	NOTE 11 C	4.000	2.625	3.812	2.750	.156	.093	.156	.187	.125	.156	2.250	1.500	1.187	.906	2.031	.093	.375	.156	1.750	1.437	2.750	.437	2.312	3.687	.062	NA	1.750	.593	.156	1.062	3.812	.156	NA	.156	1.062	.375	3.687
7	K	2½ IN AUTOCOLLIMATOR (SCT)		1017435			B	II	NOTE 11 C	4.000	2.625	3.812	2.750	.156	.093	.156	.187	.125	.156	2.250	1.500	1.187	.906	2.031	.093	.375	.156	1.750	1.437	2.750	.437	2.312	3.687	.062	NA	1.750	.593	.156	1.062	3.812	.156	NA	.156	1.062	.375	3.687
6	K	2½ IN AUTOCOLLIMATOR (SXT)		1017448			B	II	NOTE 11 C	4.000	2.625	3.812	2.750	.156	.093	.156	.187	.125	.156	2.250	1.500	1.187	.906	2.031	.093	.375	.156	1.750	1.437	2.750	.437	2.312	3.687	.062	NA	1.750	.593	.156	1.062	3.812	.156	NA	.156	1.062	.375	3.687
5	K	RETROREFLECTING PRISM ASSEMBLY		1019840			B	I	NOTE 11 B	4.000	2.625	3.812	2.750	.156	.093	.156	.187	NA	NA	2.250	1.500	1.187	.906	2.031	.093	.375	.156	1.750	1.437	2.750	.437	NA	NA	.062	.062	1.750	.593	.156	1.062	3.812	.156	NA	.156	1.062	.375	NA
4	K	S/H SIMULATOR ASSEMBLY		1019896			B	I	NOTE 11 B	4.000	2.625	3.812	2.750	.156	.093	.156	.187	NA	NA	2.250	1.500	1.187	.906	2.031	.093	.375	.156	1.750	1.437	2.750	.437	NA	NA	.062	.062	1.750	.593	.156	1.062	3.812	.156	NA	.156	1.062	.375	NA
3	K	REFERENCE MIRROR		1001767			B	I	NOTE 11 B	2.000	1.312	1.906	1.375	.078	.048	.078	.093	NA	NA	1.125	.750	.593	.453	1.015	.062	.187	.078	.875	.718	1.375	.218	NA	NA	.048	.031	.875	.305	.078	.531	1.906	.078	NA	.078	.531	.187	NA
2	K	2 IN PLANE READING AUTOCOLLIMATOR		1017413			B	I	NOTE 11 B	2.000	1.312	1.906	1.375	.078	.048	.078	.093	NA	NA	1.125	.750	.593	.453	1.015	.062	.187	.078	.875	.718	1.375	.218	NA	NA	.048	.031	.875	.305	.078	.531	1.906	.078	NA	.078	.531	.187	NA
1	K	2 IN AUTOCOLLIMATOR		1001702			B	I	NOTE 11 B	2.000	1.312	1.906	1.375	.078	.048	.078	.093	NA	NA	1.125	.750	.593	.453	1.015	.062	.187	.078	.875	.718	1.375	.218	NA	NA	.048	.031	.875	.305	.078	.531	1.906	.078	NA	.078	.531	.187	NA

NOTES FOR TABLE

STYLE A IS FOR G&N SYSTEM.
STYLE B IS FOR GROUND SUPPORT EQUIPMENT.
TYPE I IS WITHOUT MOUNTING HOLES.
TYPE II IS WITH MOUNTING HOLES.

Ⓖ REPLACES REV F WITH CHANGE

KOLLSMAN DASH NUMBERS

QTY REQD	PART OR IDENTIFYING NO.	MATERIAL OR NOTES	NOMENCLATURE OR DESCRIPTION	FIND NO.

LIST OF MATERIALS

AS APPLICABLE

NEXT ASSY	USED ON

APPLICATION

UNLESS OTHERWISE SPECIFIED
DIMENSIONS ARE IN INCHES
CAPACITOR VALUES ARE IN μf
RESISTOR VALUES ARE IN OHMS
TOLERANCES ON
FRACTIONS ± — DECIMALS ±.005 ANGLES ± —
DO NOT SCALE THIS DRAWING

MATERIAL
SEE NOTE 11

MIT
INSTRUMENTATION LAB
CAMBRIDGE, MASS

DRAWN R. G. Jones 7-16-65
CHECKED 7-22-65
APPROVED
APPROVED W Kupfer 22 Jul 65
APPROVED MIT W Kupfer 22 Jul 65
APPROVED MSC
DATE

MANNED SPACECRAFT CENTER
HOUSTON, TEXAS

NAMEPLATES,
APOLLO G&N-GSE
(STANDANDS)

CODE IDENT NO 80230
SIZE E
DRAWING NO. 1004260
SCALE NONE
SHEET 2 OF 6

SYM	ZONE	DESCRIPTION	DR	CHK	DATE	APPROVED
G		REPLACES REV F WITH CHANGE PER TDRR 20854				
H		REVISED PER TDRR 20892				
J		REVISED PER TDRR 20904				WK
K		REVISED PER TDRR 21379				
L		REVISED PER TDRR 21410				WK
M		REVISED PER TDRR 21993				
N		REVISED PER TDRR 22621				
P		REVISED PER TDRR 22671				
R		REVISED PER TDRR 22672				
S		REVISED PER TDRR 22750				WK
T		REVISED PER TDRR 22823				
U		REVISED PER TDRR 23072			10-?-65	
V		REVISED PER TDRR 23521			10-26-65	WK
W		REVISED PER TDRR 23824	RAJ		11-9-65	
Y		REVISED PER TDRR 24018	RAJ		11-16-65	WK
Z		REVISED PER TDRR 24040	RAJ		11-19-65	WK
AA		REVISED PER TDRR 24060	RAJ		11-19-65	WK
AB		REVISED PER TDRR 24868	RAJ		12-22-65	WK
AC		REVISED PER TDRR 24973	RAJ		1-4-66	WK
AD		REVISED PER TDRR 25065	RAJ		1-18-66	
AE		REVISED PER TDRR 25672	RAJ		2-4-66	WK
AF		REVISED PER TDRR 25671	RAJ		2-4-66	WK
AG		REVISED PER TDRR 26110	RAJ		2-15-66	WK
AH		REVISED PER TDRR 26372	"		3-16-66	
AJ		REVISED PER TDRR 26425	"		3-16-66	
AK		REVISED PER TDRR 26743	"		3-16-66	
AL		REVISED PER TDRR 26798	"		3-16-66	
AM		REVISED PER TDRR 27168	"		4-8-66	
AN		REVISED PER TDRR 27235	"		4-8-66	
AP		REVISED PER TDRR 27345	"		4-8-66	
AR		REVISED PER TDRR 27417	"		4-8-66	
AS		REVISED PER TDRR 27442	"		4-8-66	
AT		REVISED PER TDRR 27719	"		4-20-66	WK
AU		REVISED PER TDRR 27880	"		4-20-66	WK
AV		REVISED PER TDRR 27896			4-20-66	
AW		28110	"		5-16-66	
AY		28173	"		5-16-66	
AZ		28131	"		5-16-66	
BA		28124	"		5-16-66	
BB		REVISED PER TDRR 28511	"		5-16-66	
BC		" " " 28949	"		5-24-66	
BD		" " " 29222	"		6-8-66	
BE		" " " 29235	"		"	
BF		" " " 29322	"		6-29-66	
BG		" " " 29429	"		"	
BH		" " " 29449	"		"	
BJ		" " " 29335	"		"	
BK		" " " 29619	"		"	
BL		" " " 29696	"		"	
BM		" " " 29802	JSD	N.S.	7-29-66	
BN		REVISION STATUS CHANGED	JI	RW		
BP		REVISED PER TDRR 30168	JI	RW		

DASH NO.	P/C	PART NAME	REMARKS	PART NO.	SER. NO.	CONT. NO.	STYLE	TYPE	MATERIAL	A
39	R									
38	R									
277	R	COMPUTER TEST SET		2014042-041	NA	NAS-9-497	B	II	NOTE 11C	FOR DIMENSIONS, SEE DASH 18 VALUES BELOW
276		DRAWER ASSY - PROGRAM & MONITOR		2014041-041				I	NOTE 11 B	FOR DIMENSIONS, SEE DASH 17 VALUES BELOW
275		DRAWER ASSY RDC INTERFACE		2014045-031						FOR DIMENSIONS, SEE DASH 15 VALUES BELOW
274		SELF TEST ASSY		2014366-031						
273		LOGIC DRAWER ASSY NO. 2		2014037-031						FOR DIMENSIONS, SEE DASH 17 VALUES BELOW
272		DRAWING ASSY PROGRAMMER & MONITOR		2014041-031						FOR DIMENSIONS, SEE DASH 17 VALUES BELOW
271		LOGIC DRAWER ASSY NO. 1		2014036-031				I	NOTE 11 B	
270		COMPUTER TEST SET		2014042-031				II	NOTE 11C	FOR DIMENSIONS, SEE DASH 18 VALUES BELOW
269		POWER CONTROL ASSY		2014044-021				I	NOTE 11 B	FOR DIMENSIONS, SEE DASH 17 VALUES BELOW
268		SELF TEST ASSY		2014366-021						FOR DIMENSIONS, SEE DASH 15 VALUES BELOW
267		AGC JUNCTION ASSY		2014341-021						
266		POWER CONTROL ASSY		2014079-021						
265		BUFFER CIRCUIT ASSY		2014254-021						
264		DRAWER ASSY X Y INTERFACE		2014040-021						
263		DRAWER ASSY R D C INTERFACE		2014045-021						
262		DRAWER ASSY PROGRAMMER & MONITOR		2014041-021						FOR DIMENSIONS, SEE DASH 17 VALUES BELOW
261		LOGIC DRAWER ASSY NO. 2		2014037-021						
260		LOGIC DRAWER ASSY NO. 1		2014036-021				I	NOTE 11 B	
259		OPERATION CONSOLE		2014024-021				II	NOTE 11 C	FOR DIMENSIONS, SEE DASH 18 VALUES BELOW
258		COMPUTER TEST SET		2014042-021						
257		AUXILIARY CALIBRATION CONSOLE		2014059-021						
256		AGC CALIBRATION CONSOLE		2014049-021					NOTE 11 C	
255		AGC HANDLING FIXTURE		2014282-021				I	NOTE 11 B	FOR DIMENSIONS, SEE DASH 17 VALUES BELOW
254		DRAWER ASSY COMP. SIMULATOR		2014048-011				II	NOTE 11 C	FOR DIMENSIONS, SEE DASH 18 VALUES BELOW
253		SHIPPING KIT ASSY, NAV DSKY		2016312-011						
252		SHIPPING KIT ASSY, UNIVERSAL DSKY		2016316-011						
251		SHIPPING KIT ASSY, MAIN DSKY		2016313-011				II	NOTE 11 C	
250		AMPLIFIER, REWORK		2014386				I	NOTE 11 B	FOR DIMENSIONS, SEE DASH 15 VALUES BELOW
249		TEMP MONITOR ASSY		2014313-011					NOTE 11 C	FOR DIMENSIONS, SEE DASH 17 VALUES BELOW
248		AGC JUNCTION ASSY		2014341-011					NOTE 11 B	FOR DIMENSIONS, SEE DASH 15 VALUES BELOW
247		AC INPUT PANEL ASSY		2014302-011						
246		SELF TEST ASSY		2014392-011						
245		TAPE PUNCH ASSEMBLY		2014039-011						FOR DIMENSIONS, SEE DASH 5 VALUES BELOW
244	R	TAPE READER ASSEMBLY		2014038-011	NA	NAS-9-497	B	I	NOTE 11 B	
243										
242										
241	R	APOLLO GUIDANCE COMPUTER GROUP		6003001	NA	NAS-9-497	A	I	NOTE 11 B	FOR DIMENSIONS, SEE DASH 19 VALUES BELOW
240		SELF TEST ASSEMBLY		2014366-011	NA		B	I		FOR DIMENSIONS, SEE DASH 15 VALUES BELOW
239		POWER SUPPLY ASSY-115V., 400 CYCLE		2014207-011						FOR DIMENSIONS, SEE DASH 17 VALUES BELOW
238		AC INPUT PANEL ASSY		2014043-011						
237		POWER CONTROL ASSY		2014075-011						FOR DIMENSIONS, SEE DASH 15 VALUES BELOW
236		DRAWER ASSY - X Y INTERFACE		2014040-011						
235		DRAWER ASSY RDC INTERFACE		2014045-011						
234		BUFFER CIRCUIT ASSY		2014254-011						
233		CONTROL & INTERFACE ASSY		2014204-011						
232		POWER CONTROL ASSY		2014044-011						FOR DIMENSIONS, SEE DASH 17 VALUES BELOW
231		DRAWER ASSY, PROGRAMMER & MONITOR		2014041-011						
230		CONNECTOR INTERFACE ASSY		2014272-011						FOR DIMENSIONS, SEE DASH 15 VALUES BELOW
229		CONNECTOR INTERFACE ASSY		2014047-011						
228		ANTENNA TUNING CAPACITOR ASSY		2014209-011						
227		MOUNTING FIXTURE ASSY		2014006-011						FOR DIMENSIONS, SEE DASH 17 VALUES BELOW
226		POWER SUPPLY ASSY 3 VDC		2014234-011						FOR DIMENSIONS, SEE DASH 15 VALUES BELOW
225		PANEL ASSY - SIGNAL INTERFACE		2014010-011						
224		OSCILLOSCOPE ASSY		2014232-011						
223		AUXILIARY OUTLET ASSY		2014274-011						
222		FREQUENCY COUNTER		2014233-011						
221		POWER SUPPLY ASSY 10, 13, 28 VDC		2014235-011						
220		LOGIC DRAWER ASSY NO. 2		2014037-011						FOR DIMENSIONS, SEE DASH 17 VALUES BELOW
219		LOGIC DRAWER ASSY NO. 1		2014036-011						
218		COUNTER, ELECTRICAL ASSY		2014288-011						FOR DIMENSIONS, SEE DASH 15 VALUES BELOW
217		POWER SUPPLY ASSY		2014279-011						
216		TEST MOUNT ASSY		2014257-011						
215		UNIVERSAL DSKY PEDESTAL MOUNT		2014014-011						FOR DIMENSIONS, SEE DASH 17 VALUES BELOW
214		MAIN DSKY PEDESTAL MOUNT		2014343				I	NOTE 11B	
213		SHIPPING CONTAINER, MAIN DSKY		1006229				II	NOTE 11C	FOR DIMENSIONS, SEE DASH 18 VALUES BELOW
212		NAV DSKY		1006231						
211		AGC		1006230						
210		UNIVERSAL DSKY		1006422						
209		SHIPPING CONTAINER, AGC		1006421				II	NOTE 11C	
208		UNIVERSAL DSKY HANDLING FIXTURE		2014013-011				I	NOTE 11B	FOR DIMENSIONS, SEE DASH 15 VALUES BELOW
207		NAV DSKY HANDLING FIXTURE		1014377						FOR DIMENSIONS, SEE DASH 17 VALUES BELOW
206		MAIN DSKY HANDLING FIXTURE		1014334						
205		AGC HANDLING FIXTURE		2014282-011				I	NOTE 11B	
204		OPERATION CONSOLE		2014024-011				II	NOTE 11C	FOR DIMENSIONS, SEE DASH 18 VALUES BELOW
203		COMPUTER TEST SET		2014042-011		NAS-9-497				
202		DRAWER ASSY, COMPUTER SIMULATOR		2014048-011		FNP-2775				
201		AUXILIARY CALIBRATION CONSOLE		2014059-011		NAS-9-497				
200		AGC CALIBRATION CONSOLE		2014049-011	NA		B	II	NOTE 11C	
21										
20		NA		NA	NA	NA	A	II	NOTE 11 C	2.000
19		NA		NA	NA	NA	A	I	NOTE 11 B	2.000
18		NA		NA	NA	NA	B	II	NOTE 11 C	4.187
17		NA		NA	NA	NA	B	I	NOTE 11 B	4.187
16		NA		NA	NA	NA	B	II	NOTE 11 C	2.000
15	R	NA		NA	NA	NA	B	I	NOTE 11 B	2.000

DASH NO.	A	B	C	D	E	F	G	H	J	K	L	M	N	P	R	S
20	2.000	1.312	1.687	1.375	.078	.031	.078	.093	.06 .13	.093	1.187	.750	.593	.453	1.015	.062
19	2.000	1.312	1.687	1.375	.078	.031	.078	.093	NA	NA	1.187	.750	.593	.453	1.015	.062
18	4.187	1.875	3.469	2.750	.156	.093	.156	.125	.06 .13	.125	1.625	1.032	.844	.656	1.406	.093
17	4.187	1.875	3.469	2.750	.156	.093	.156	.125	NA	NA	1.625	1.032	.844	.656	1.406	.093
16	2.000	1.312	1.687	1.375	.078	.031	.078	.093	.06 .13	.093	1.187	.750	.593	.453	1.015	.062
15	2.000	1.312	1.687	1.375	.078	.031	.078	.093	NA	NA	1.187	.750	.593	.453	1.015	.062

DASH NO.	T	U	V	W	Y	Z	AA	AB	AC	AD	AE	AF	AG	AH	AJ	AK	AL	AM	AN	AP	AR
20	.187	.078	.875	.718	1.375	.218	1.156	1.843	.048	NA	.875	.305	.078	.312	1.687	.078	NA	.078	.312	.187	1.843
19	.187	.078	.875	.718	1.375	.218	NA	NA	.048	.031	.875	.305	.078	.312	1.687	.078	NA	.078	.312	.187	NA
18	.344	.156	1.781	1.531	2.844	.312	1.562	3.875	.062	NA	1.219	.500	.156	.719	3.469	.156	NA	.156	.719	.344	3.875
17	.344	.156	1.781	1.531	2.844	.312	NA	NA	.062	.062	1.219	.500	.156	.719	3.469	.156	NA	.156	.719	.344	NA
16	.187	.078	.875	.718	1.375	.218	1.156	1.843	.048	NA	.875	.305	.078	.312	1.687	.078	NA	.078	.312	.187	1.843
15	.187	.078	.875	.718	1.375	.218	NA	NA	.048	.031	.875	.305	.078	.312	1.687	.078	NA	.078	.312	.187	NA

THIS SHEET ADDED

Ⓖ REPLACES REV F WITH CHANGE

RAYTHEON DASH NUMBERS

NOTES FOR TABLE

STYLE A IS FOR G & N SYSTEM

STYLE B IS FOR GROUND SUPPORT EQUIPMENT

TYPE I IS WITHOUT MOUNTING HOLES

TYPE II IS WITH MOUNTING HOLES

QTY REQD	PART OR IDENTIFYING NO.	MATERIAL OR NOTES	NOMENCLATURE OR DESCRIPTION	FIND NO

LIST OF MATERIALS

NEXT ASSY	USED ON
AS APPLICABLE	

APPLICATION

UNLESS OTHERWISE SPECIFIED
DIMENSIONS ARE IN INCHES
CAPACITOR VALUES ARE IN μf
RESISTOR VALUES ARE IN OHMS
TOLERANCES ON
FRACTIONS ± — DECIMALS ±.005 ANGLES ± —
DO NOT SCALE THIS DRAWING

MATERIAL
SEE NOTE 11

MIT
INSTRUMENTATION LAB
CAMBRIDGE, MASS

MANNED SPACECRAFT CENTER
HOUSTON, TEXAS

DRAWN R A Jones 7-16-65
CHECKED A. J. 7-22-65
APPROVED
APPROVED
APPROVED MIT
APPROVED MSC
DATE

NAMEPLATES,
APOLLO GEN-GSE
(STANDARDS)

CODE IDENT NO. 80230 | SIZE E | DRAWING NO. 1004260

SCALE NONE | SHEET 3 OF

SYM	ZONE	DESCRIPTION	BY	CHK	DATE	APPROVED
G		REPLACES REV F WITH CHANGE PER TDRR 20854.			[illegible]	
H		REVISED PER TDRR 20892			[illegible]	
J		REVISED PER TDRR 20904			[illegible]	
K		REVISED PER TDRR 21379			[illegible]	
L		REVISED PER TDRR 21410			[illegible]	
M		REVISED PER TDRR 21993				
N		REVISED PER TDRR 22621				
P		REVISED PER TDRR 22671				
R		REVISED PER TDRR 22672				
S		REVISED PER TDRR 22750				
T		REVISED PER TDRR 22823				
U		REVISED PER TDRR 23072			[illegible]	
V		REVISED PER TDRR 23521			10-26-65	
W		REVISED PER TDRR 23824	RAJ		11-9-65	
Y		REVISED PER TDRR 24018	RAJ		11-16-65	
Z		REVISED PER TDRR 24040	RAJ		11-19-65	
AA		REVISED PER TDRR 24060	RAJ		11-19-65	
AB		REVISED PER TDRR 24868	RAJ		2-22-65	
AC		REVISED PER TDRR 24973	RAJ		1-4-66	
AD		REVISED PER TDRR 25055	RAJ		1-18-66	
AE		REVISED PER TDRR 25672	RAJ		2-4-66	
AF		REVISED PER TDRR 25671	RAJ		2-4-66	
AG		REVISED PER TDRR 26110	RAJ		2-15-66	
AH		REVISED PER TDRR 26372	"		3-16-66	
AJ		REVISED PER TDRR 26425	"		3-16-66	
AK		REVISED PER TDRR 26743	"		3-16-66	
AL		REVISED PER TDRR 26798	"		3-16-66	
AM		REVISED PER TDRR 27168	"		4-8-66	
AN		REVISED PER TDRR 27235	"		4-8-66	
AP		REVISED PER TDRR 27345	"		4-8-66	
AR		REVISED PER TDRR 27417	"		4-8-66	
AS		REVISED PER TDRR 27442	"		4-8-66	
AT		REVISED PER TDRR 27719	"		4-21-66	
AU		REVISED PER TDRR 27880	"		4-21-66	
AV		REVISED PER TDRR 27896	"		4-21-66	
AW		28110	"		5-16-66	
AY		28173	"			
AZ		28131	"			
BA		28124	"			
BB		REVISED PER TDRR 28511	"		5-16-66	
BC		" " " 28943	"		5-24-66	
BD		" " " 29222	"		6-8-66	
BE		" " " 29235	"		"	
BF		" " " 29322	"		6-24-66	
BG		" " " 29429	"		"	
BH		" " " 29449	"		"	
BJ		" " " 29335	"		"	
BK		" " " 29619	"		"	
BL		" " " 29696	"		6-29-66	
BM		REVISION STATUS CHANGED	JSD	NS	7-29-66	
BN		REVISION STATUS CHANGED	JI	RLW	[illegible] AUG. 66	
BP		REVISION STATUS CHANGED	JI	RLW	[illegible] AUG. 66	

	/C	PART NAME	REMARKS	PART NO.	SER. NO.	CONT. NO.	STYLE	TYPE	MATERIAL	A	B	C	D	E	F	G	H	J	K	L	M	N	P	R	S	T	U	V	W	Y	Z	AA	AB	AC	AD	AE	AF	AG	AH	AJ	AK	AL	AM	AN	AP	AR
199	AC	EYEPIECE STOWAGE UNIT		2021255-011			A	I																																						
198	AC	SIGNAL CONDITIONER ASSY C/M		2007234		NAS 9-497			NOTE 11B																																					
197	AC	SIGNAL CONDITIONER ASSY C/M		2007235						FOR DIMENSIONS, SEE DASH 100 VALUES BELOW																																				
196	AC	SIGNAL CONDITIONER ASSY LEM		6007010																																										
195	AC	PSA & SIGNAL CONDITIONER ASSY		6007009			A	I	NOTE 11B																																					
194	AC	PANEL, MONITOR		2900031-031			B	II	NOTE 11C	FOR DIMENSIONS, SEE DASH 141 VALUES BELOW																																				
193	AC	DISTRIBUTION BOX, GSE		2900024-031																																										
192	AC	ANALYZER, OPTICS-INERTIAL		2900023-031						FOR DIMENSIONS, SEE DASH 144 VALUES BELOW																																				
191	AC	TEST CONTROL		2900027-031																																										
190	AC	PANEL, PWR SUP AND LOAD		2900033-021						FOR DIMENSIONS, SEE DASH 141 VALUES BELOW																																				
189	AC	ADPT MODULE, P.S.A.		6900088-011																																										
188	AC	ADPT MODULE, P.S.A.		2901143-011																																										
187	AC	FIXTURE, MTG, PTA/PEA		2900066-02		NAS 9-497	B	II	NOTE 11C																																					
186	AC	ANN PNL & EYEPIECE STOW ASSY		1021255-021						FOR DIMENSIONS, SEE DASH 100 VALUES BELOW																																				
185	AC	ANN PNL & EYEPIECE STOW ASSY		1021255-011			A																																							
184	AC	FIX., HAND., G AND N HARNESS		1901846-041		NAS9-497	B	I	NOTE 11C	FOR DIMENSIONS, SEE DASH 144 VALUES BELOW																																				
183	AC	INSTALLING TOOL, ELEC. CONN		1902586-011			B	II	NOTE 11C	FOR DIMENSIONS, SEE DASH 102 VALUES BELOW																																				
182	AC	ADPT MODULE, P.S.A.		6900088-011			B	II	NOTE 11C	FOR DIMENSIONS, SEE DASH 141 VALUES BELOW																																				
181	AC	G & N INDICATOR CONTROL PANEL ASSY		2014578-011			A	I	NOTE 11B	3.000	1.938	2.437	NA	.125	.062	.188	.156	NA	NA	1.750	1.125	.906	.688	1.500	NA	.281	.125	NA	1.094	2.062	.312	NA	2.500	.062	.125	1.312	.469	NA	NA	NA	.156	NA	.125	.469	.344	NA
180	AC	ADPT MODULE, P.S.A.		1902431-031			B	II		FOR DIMENSIONS, SEE DASH 121 VALUES BELOW																																				
179	AC	MOUNTING PLATE, IMU/PTA.		6900083-011																																										
178	AC	MOUNTING PLATE, COMPONENT		6900007-021																																										
177	AC	FIX., MOUNTING, SUBSYSTEM		2900070-021						FOR DIMENSIONS, SEE DASH 144 VALUES BELOW																																				
176	AC	FIX., MOUNTING, G AND N		2900067-021																																										
175	AC	CSL, COOL. AND PWR, G AND N		1902134-031																																										
174	AC	FIX., HAND., C/M AND LEM CDU		2900999-011					NOTE 11C																																					
173	AC	FIX., HANDLING, C/M PSA		2900998-011						FOR DIMENSIONS, SEE DASH 141 VALUES BELOW																																				
172	AC	CAGING ELECTRONICS, GYRO		2900029-021																																										
171	AC	DISTRIBUTION BOX, GSE		2900024-021																																										
170	AC	ANALYZER, OPTICS-INERTIAL		2900023-021						FOR DIMENSIONS, SEE DASH 144 VALUES BELOW																																				
169	AC	ADPT, TESTPOINT, P.S.A.		2900037-021																																										
168	AC	TEST SELECTOR		2900028-021																																										
167	AC	TEST CONTROL		2900027-021																																										
166	AC	PANEL, MONITOR		2900031-021																																										
165	AC	TERM. BOARD STORAGE DRAWER		2900927-011																																										
164	AC	INPUT/OUTPUT PANEL		2900926-011						FOR DIMENSIONS, SEE DASH 141 VALUES BELOW																																				
163	AC	CONTROL PANEL		2900896-011																																										
162	AC	CSL. CAL AND TEST, SCM/PSAAM		2900895-011						FOR DIMENSIONS, SEE DASH 144 VALUES BELOW																																				
161	AC	FIX., LIFT AND HAND., IMU		[illegible]5452-011						FOR DIMENSIONS, SEE DASH 141 VALUES BELOW																																				
160	AC	FIX., HAND., G AND N HARNESS		1901846-031						FOR DIMENSIONS, SEE DASH 144 VALUES BELOW																																				
159	AC	BATTERY POWER PACK		1900011-031			B	II	NOTE 11C																																					
158	AC	COUPLING DATA UNIT ASSEMBLY C/M		2007222			A	I	NOTE 11B	FOR DIMENSIONS SEE DASH 100 VALUES BELOW																																				
157	AC	COUPLING DATA UNIT ASSEMBLY - LEM		2007222																																										
156	AC	POWER & SERVO ASSEMBLY C/M		2007200						2.125	.968	1.718	NA	.093	.031	.06	.093	NA	NA	.858	.608	.484	.358	.733	.062	.140	.062	NA	.968	1.450	.125	NA	1.720	.046	.03	NA	.210	NA	NA	NA	.070	NA	.046	.32	.16	NA
155	AC	PIPA ELECTRONICS ASSEMBLY		2007201																																										
154	AC	PULSE TORQUE ASSEMBLY - LEM		6007000						FOR DIMENSIONS SEE DASH 100 VALUES BELOW																																				
153	AC	POWER & SERVO ASSEMBLY - LEM		6007200			A	I	NOTE 11B																																					
152	AC	CONT PNL, RSVR CKT TESTER		2900770-011			B	II	NOTE 11C	FOR DIMENSIONS, SEE DASH 141 VALUES BELOW																																				
151	AC	TESTER, RESOLVER CIRCUIT		2900708-011																																										
150	AC	JUNCTION BOX, P.S.A./G.S.E.		1901933-021						FOR DIMENSIONS, SEE DASH 144 VALUES BELOW																																				
149	AC	BATTERY PACK, LIFTING		2900614-011						FOR DIMENSIONS, SEE DASH 141 VALUES BELOW																																				
148	AC	MOUNTING PLATE, COMPONENT		6900007-011						FOR DIMENSIONS, SEE DASH 144 VALUES BELOW																																				
147	AC	MOUNTING PLATE, COMPONENT		2900677-011																																										
146	AC	CART, TRANS, G AND N		1900009-041																																										
145	AC	CONTAINER, SHIPPING, IMU		1900010-021		NAS9-497	B	II	NOTE 11C																																					
144	AC	FIX., MOUNTING, G AND N		1902204-021			B	II	NOTE 11C	4.125	1.812	3.250	NA	.125	.062	.12	.156	.109 .104	.125	1.625	1.140	.890	.640	1.390	.125	.171	.125	1.875	1.687	2.625	.250	1.562	3.843	.093	NA	NA	.359	.125	.437	3.688	NA	3.687	.093	.40	.25	3.875
143	AC	CSL, COOL. AND PWR, G AND N		1902134-021						4.125	1.812	3.250		.125	.062	.12	.156		.125	1.625	1.140	.890	.640	1.390	.125	.171	.125	1.875	1.687	2.625	.250	1.562	3.843	.093			.359	.125	.437	3.688		3.687	.093	.40	.25	3.875
142	AC	ANALYZER, OPTICS-INERTIAL		2900023-011						4.125	1.812	3.250		.125	.062	.12	.156		.125	1.625	1.140	.890	.640	1.390	.125	.171	.125	1.875	1.687	2.625	.250	1.562	3.843	.093			.359	.125	.437	3.688		3.687	.093	.40	.25	3.875
141	AC	CONT, TEMP, PORTABLE		2900060-011						2.125	.968	1.718		.093	.031	.06	.093		.093	.858	.608	.484	.358	.733	.077	.116	.062	.937	.875	1.343	.125	.781	1.892	.046			.209	.093	.250	1.875		1.840	.046	.23	.16	1.938
140	AC	TESTER, CKT, IMU/CDU RSVR		2900286-011						4.125	1.812	3.250		.125	.062	.12	.156		.125	1.625	1.140	.890	.640	1.390	.125	.171	.125	1.875	1.687	2.625	.250	1.562	3.843	.093			.359	.125	.437	3.688		3.687	.093	.40	.25	3.875
139	AC	SIMULATOR, LD/SIG, CDU		2900285-011																																										
138	AC	SIMULATOR, LD/SIG, OPTICS		1902023-021																																										
137	AC	FIX., MOUNTING, IMU/NAV BASE		6900003-011																																										
136	AC	FIXTURE, OPTICS/NAV BASE		2900072-011																																										
135	AC	FIX., MOUNTING, SUB SYSTEM		2900070-011																																										
134	AC	FIX., HAND., G AND N HARNESS		2900069-011																																										
133	AC	CNTR, SHIPPING, NAV BASE		2900068-011																																										
132	AC	FIX., MOUNTING, G AND N		2900067-011																																										
131	AC	SIMULATOR, LD/SIG, IMU/CDU		2900062-011																																										
130	AC	TESTER, GYRO WHEEL		2900061-011																																										
129	AC	COOLANT SUPPLY		1902133-021																																										
128	AC	TABLE, ROTARY		1900926-021						4.125	1.812	3.250		.125	.062	.12	.156		.125	1.625	1.140	.890	.640	1.390	.125	.171	.125	1.875	1.687	2.625	.250	1.562	3.843	.093			.359	.125	.437	3.688		3.687	.093	.40	.25	3.875
127	AC	FIX., HAND., OPTICS		2900074-011						2.125	.968	1.718		.093	.031	.06	.093		.093	.858	.608	.484	.358	.733	.077	.116	.062	.937	.875	1.343	.125	.781	1.892	.046			.209	.093	.250	1.875		1.840	.046	.23	.16	1.938
126	AC	FIXTURE, MTG, PTA/PEA.		2900066-011																																										
125	AC	CONT, TEMP, IMU LIFTING		2900063-011																																										
124	AC	FIXTURE, HANDLING, IMU		2900064-011																																										
123	AC	CONT, OPTICS, REMOTE		1902046-021																																										
122	AC	TEST CONTROL		1902009-021																																										
121	AC	ADPT MODULE, P.S.A.		1902431-021																																										
120	AC	BRIDGE, DECADE ERROR		2900128-011																																										
119	AC	PWR SUP, ELECTRONICS		2900012-011																																										
118	AC	PWR SUP, RELAY AND LAMP		1900049-031																																										
117	AC	CONSOLE, OSCILLOGRAPH		1900000-021																																										
116	AC	ADPT MODULE, P.S.A.		1902431-011																																										
115	AC	ADPT, TEST POINT, PTA/PEA.		2900145-011																																										
114	AC	ADPT, TEST POINT, P.S.A.		2900037-011																																										
113	AC	CONTROL, GIMBAL POSITION		2900036-011																																										
112	AC	SELECTOR, SIGNAL, PRIMARY		2900035-011																																										
[illegible]	AC	SEL, SIG, OSCILLOGRAPH		2900034-011																																										
[illegible]	AC	PANEL, PWR SUP AND LOAD		2900033-011																																										
[illegible]	AC	PANEL, MONITOR		2900031-011																																										
[illegible]	AC	PANEL, AUXILIARY INPUT		2900030-011																																										
[illegible]	AC	CAGING ELECTRONICS, GYRO		2900029-011																																										
[illegible]	AC	TEST SELECTOR		2900028-011																																										
[illegible]	AC	TEST CONTROL		2900027-011																																										
[illegible]	AC	MONITOR AND CONTROL, TEMP		2900026-011																																										
[illegible]	AC	DISTRIBUTION BOX, GSE		2900024-011																																										
[illegible]	AC	VOLTMETER, DIGITAL		2900007-011			B	II	NOTE 11C	2.125	.968	1.718	NA	.093	.031	.06	.093	[illegible]	.093	.858	.608	.484	.358	.733	.077	.116	.062	.937	.875	1.343	.125	.781	1.892	.046	NA	NA	.209	.093	.250	1.875	NA	1.840	.046	.23	.16	1.938
[illegible]	AC	NAVIGATION BASE ASSEMBLY - LEM		6899950		NAS-9-497	A	I	NOTE 11B	2.000	1.312	1.906	1.375	.078	.048	.078	.093	NA	NA	1.125	.750	.593	.453	1.015	.062	.187	.078	.875	.718	1.375	.218	NA	NA	.048	.031	.875	.305	.078	.531	.906	.078	NA	.078	.531	.187	NA
[illegible]	AC	NAVIGATION BASE ASSEMBLY		2899982		NAS-9-497	A	I	NOTE 11B	2.000	.312	1.906	1.375	.078	.048	.078	.093	NA	NA	1.125	.750	.593	.453	1.015	.062	.187	.078	.875	.718	1.375	.218	NA	NA	.048	.031	.875	.305	.078	.531	1.906	.078	NA	.078	.531	.187	NA

AC ELECTRONICS DASH NUMBERS

THIS SHEET ADDED

Ⓖ REPLACES REV F WITH CHANGE

NOTES FOR TABLE

STYLE A IS FOR G & N SYSTEM
STYLE B IS FOR GROUND SUPPORT EQUIPMENT
TYPE I IS WITHOUT MOUNTING HOLES
TYPE II IS WITH MOUNTING HOLES

NOTE: AC DASH NO's. CONT. ON SH.6

QTY REQD	PART OR IDENTIFYING NO.	MATERIAL OR NOTES	NOMENCLATURE OR DESCRIPTION	FIND NO.

LIST OF MATERIALS

AS APPLICABLE
NEXT ASSY | USED ON
APPLICATION

UNLESS OTHERWISE SPECIFIED
DIMENSIONS ARE IN INCHES
CAPACITOR VALUES ARE IN μf
RESISTOR VALUES ARE IN OHMS
TOLERANCES ON
FRACTIONS ± — DECIMALS ±.005 ANGLES ± —
DO NOT SCALE THIS DRAWING

MATERIAL
SEE NOTE 11

MIT
INSTRUMENTATION LAB
CAMBRIDGE MASS

DRAWN R O Jones 7-16-65
CHECKED [illegible] 7-22-65
APPROVED
APPROVED [illegible]
APPROVED MIT [illegible]
APPROVED MSC [illegible]
DATE

MANNED SPACECRAFT CENTER
HOUSTON, TEXAS

NAMEPLATES,
APOLLO G&N-GSE
(STANDARDS)

CODE IDENT NO. 80230
SIZE E
DRAWING NO. 1004260
SCALE NONE
SHEET 4 OF 6

REVISIONS 02768

SYM	ZONE	DESCRIPTION	DR	CHK	DATE	APPROVED
G	-	REPLACES REV F WITH CHANGE PER TDRR 20854	rj		7/26/65	WK
H		REVISED PER TDRR 20892	rj		8/3/65	WK
J		REVISED PER TDRR 20904	rj		8/3/65	WK
K		REVISED PER TDRR 21379	rj		8/6/65	WK
L		REVISED PER TDRR 21410	rj		8/10/65	WK
M		REVISED PER TDRR 21993	rj		10/1/65	
N		REVISED PER TDRR 22621	rj			
P		REVISED PER TDRR 22671	rj			
R		REVISED PER TDRR 22672	rj			
S		REVISED PER TDRR 22750	rj			WK
T		REVISED PER TDRR 22823	rj			
U		REVISED PER TDRR 23072	rj		[illegible]-65	[illegible]
V		REVISED PER TDRR 23521	rj		10-27-65	WK
W		REVISED PER TDRR 23624	RAJ		11-9-65	WK
Y		REVISED PER TDRR 24018	RAJ		11-16-65	WK
Z		REVISED PER TDRR 24040	RAJ		11-15-65	WK
AA		REVISED PER TDRR 24060	RAJ		11-19-65	WK
AB		REVISED PER TDRR 24868	RAJ		2-22-65	WK
AC		REVISED PER TDRR 24973	RAJ		1-4-66	WK
AD		REVISED PER TDRR 25065	RAJ		1-18-66	[illegible]
AE		REVISED PER TDRR 25672	RAJ		2-4-66	WK
AF		REVISED PER TDRR 25671	RAJ		2-4-66	WK
AG		REVISED PER TDRR 26110	RAJ		2-15-66	WK
AH		REVISED PER TDRR 26372	"		3-16-66	[illegible]
AJ		REVISED PER TDRR 26425	"		3-16-66	[illegible]
AK		REVISED PER TDRR 26743	"		3-16-66	[illegible]
AL		REVISED PER TDRR 26798	"		3-16-66	[illegible]
AM		REVISED PER TDRR 27168	"		4-7-66	[illegible]
AN		REVISED PER TDRR 27235	"		4-7-66	[illegible]
AP		REVISED PER TDRR 27345	"		4-7-66	[illegible]
AR		REVISED PER TDRR 27417	"		4-7-66	[illegible]
AS		REVISED PER TDRR 27442	"		4-7-66	[illegible]
AT		REVISED PER TDRR 27719	"		4-20-66	WK
AU		REVISED PER TDRR 27880	"		4-20-66	WK
AV		REVISED PER TDRR 27896	"		4-20-66	WK
AW		28110	"		5-16-66	[illegible]
AY		28173	"			[illegible]
AZ		28131	"			[illegible]
BA		28124	"			[illegible]
BB		REVISED PER TDRR 28511	"		5-16-66	[illegible]
BC		" " " 28949	"		5-24-66	[illegible]
BD		" " " 29222	"		6-8-66	[illegible]
BE		" " " 29235	"		"	[illegible]
BF		" " " 29322	"		6-24-66	[illegible]
BG		" " " 29429	"		"	[illegible]
BH		" " " 29449	"		"	[illegible]
BJ		" " " 29335	"		"	[illegible]
BK		" " " 29619	"		"	[illegible]
BL		" " " 29696	"		6-29-66	[illegible]
BM		REVISION STATUS CHANGED	JSD	-	7-29-66	
BN		REVISION STATUS CHANGED	JI	RLW	[illegible] AUG 66	
BP		REVISION STATUS CHANGED	JI	RLW	[illegible] AUG 66	

499 MIT
498

DASH NO.	P/C	PART NAME	REMARKS	PART NO.	SER. NO.	CONT. NO.	STYLE	TYPE	MATERIAL	A	B	C	D	E	F	G	H	J	K	L	M	N	P	R	S	T	U	V	W	Y	Z	AA	AB	AC	AD	AE	AF	AG	AH	AJ	AK	AL	AM	AN	AP	AR
401	MIT	COMPUTER ASSY		2003100		NAS-9-497	A	I	NOTE 11 B	2.000	1.312	.906	1.375	.078	.048	.078	.093	NA	NA	1.125	.750	.593	.453	1.015	.062	.187	.078	.875	.718	1.375	.218	NA	NA	.048	.031	.875	.305	.078	.531	1.906	.078	NA	.078	.531	.187	NA
-00	MIT	LIFTING SLING-G&N INST. QUAL. FIX. & AZM REF. FIX.		1021640		NAS-9-4065	B	II	NOTE 11 C	2.000	1.312	1.687	1.375	.078	.048	.078	.093	[illegible]	.093	1.187	.750	.593	.453	1.015	.062	.187	.078	.875	.718	1.375	.218	1.156	1.843	.048	NA	.875	.305	.078	.312	1.687	.110	1.930	.070	.275	.190	1.[illegible]4

MIT DASH NUMBERS

THIS SHEET ADDED

Ⓖ REPLACES REV F WITH CHANGE

NOTES FOR TABLE

STYLE A IS FOR G&N SYSTEM
STYLE B IS FOR GROUND SUPPORT EQUIPMENT
TYPE I IS WITHOUT MOUNTING HOLES
TYPE II IS WITH MOUNTING HOLES

QTY REQD	PART OR IDENTIFYING NO.	MATERIAL OR NOTES	NOMENCLATURE OR DESCRIPTION	FIND NO

LIST OF MATERIALS

NEXT ASSY	USED ON
AS APPLICABLE	

APPLICATION

UNLESS OTHERWISE SPECIFIED
DIMENSIONS ARE IN INCHES
CAPACITOR VALUES ARE IN μf
RESISTOR VALUES ARE IN OHMS
TOLERANCES ON
FRACTIONS ± — DECIMALS ±.005 ANGLES ± —
DO NOT SCALE THIS DRAWING

MATERIAL
SEE NOTE 11

MIT
INSTRUMENTATION LAB
CAMBRIDGE MASS

MANNED SPACECRAFT CENTER
HOUSTON, TEXAS

DRAWN R A Jones 7-16-65
CHECKED [illegible] 7-28-65
APPROVED
APPROVED W Kupfer 7-26-65
APPROVED MIT W Kupfer 7-26-65
APPROVED MSC [illegible] 7-26-65
DATE

NAMEPLATES,
APOLLO G&N-GSE
(STANDARDS)

CODE IDENT NO 80230
SIZE E
DRAWING NO. 1004260
SCALE NONE
SHEET [illegible] OF [illegible]

NOTICE - WHEN GOVERNMENT DRAWINGS, SPECIFICATIONS, OR OTHER DATA ARE USED FOR ANY PURPOSE OTHER THAN IN CONNECTION WITH A DEFINITELY RELATED GOVERNMENT PROCUREMENT OPERATION, THE UNITED STATES GOVERNMENT THEREBY INCURS NO RESPONSIBILITY NOR ANY OBLIGATION WHATSOEVER, AND THE FACT THAT THE GOVERNMENT MAY HAVE FORMULATED, FURNISHED, OR IN ANY WAY SUPPLIED THE SAID DRAWINGS, SPECIFICATIONS OR OTHER DATA IS NOT TO BE REGARDED BY IMPLICATION OR OTHERWISE AS IN ANY MANNER LICENSING THE HOLDER OR ANY OTHER PERSON OR CORPORATION, OR CONVEYING ANY RIGHTS OR PERMISSION TO MANUFACTURE, USE, OR SELL ANY PATENTED INVENTION THAT MAY IN ANY WAY BE RELATED THERETO

REVISIONS 02768

SYM	ZONE	DESCRIPTION	DR	CHK	DATE	APPROVED
AG		CHANGED NUMBER OF SHEETS FROM 5 TO 6 PER TDRR 26110	RAJ		2-15-66	
AH		REVISED PER TDRR 26372	″		3-16-66	
AJ		REVISED PER TDRR 26425	″		3-16-66	
AK		REVISED PER TDRR 26743	″		3-16-66	
AL		REVISED PER TDRR 26798	″		3-16-66	
AM		REVISED PER TDRR 27[illegible]68	″		4-7-66	
AN		REVISED PER TDRR 27235	″		4-7-66	
AP		REVISED PER TDRR 27345	″		4-7-66	
AR		REVISED PER TDRR 27417	″		4-7-66	
AS		REVISED PER TDRR 27442	″		4-7-66	
AT		REVISED PER TDRR 27719	″		4-20-66	
AU		REVISED PER TDRR 27880	″		4-20-66	
AV		REVISED PER TDRR 27896	″		4-20-66	
AW		28110	″		5-16-66	
AY		28173	″		5-16-66	
AZ		28131	″		5-16-66	
BA		28124	″		5-16-66	
BB		REVISED PER TDRR 28511	″		5-16-66	
BC		″ ″ ″ 28949	″		5-24-66	
BD		″ ″ ″ 29222	″		6-8-66	
BE		″ ″ ″ 29235	″		″	
BF		″ ″ ″ 29322	″		6-24-66	
BG		″ ″ ″ 29429	″		″	
BH		″ ″ ″ 29449	″		″	
BJ		″ ″ ″ 29335	″		″	
BK		″ ″ ″ 29619	″		″	
BL		″ ″ ″ 29696	″		6-29-66	
BM		REVISION STATUS CHANGED	JSD	N.S.	7-29-66	
BN		REVISED PER TDRR 29974	JL	RLW	22 AUG 66	
BP		REVISION STATUS CHANGED	JL	RLW	22 AUG 66	

DASH NO.	P/C	PART NAME	REMARKS	PART NO.	SER NO.	CONT NO.	STYLE	TYPE	MATERIAL	A	B	C	D	E	F	G	H	J	K	L	M	N	P	R	S	T	U	V	W	Y	Z	AA	AB	AC	AD	AE	AF	AG	AH	AJ	AK	AL	AM	AN	AP	AR
599	AC																																													
598	AC																																													
537	AC	TEST SELECTOR		2900028-031		NAS9-497	B	II	NOTE 11C	2.125	.968	1.718	NA	.093	.031	.06	.093	.100/.104	.093	.858	.608	.484	.358	.733	.077	.116	.062	.937	.875	1.343	.125	.781	1.892	.046	NA	NA	.209	.093	.250	1.875	NA	1.840	.046	.23	.16	1.938
536	AC	ANALYZER, OPTICS-INERTIAL		2900023-041						4.125	1.812	3.250		.125	.062	.12	.156	.100/.104	.125	1.625	1.140	.890	.640	1.390	.125	.171	.125	1.875	1.687	2.625	.250	1.562	3.843	.093			.359	.125	.437	3.688		3.687	.093	.40	.25	3.875
535	AC	CONT. TEMP. PORTABLE		2900060-021						2.125	.968	1.718		.093	.031	.06	.093	.100/.104	.093	.858	.608	.484	.358	.733	.077	.116	.062	.937	.875	1.343	.125	.781	1.892	.046			.209	.093	.250	1.875		1.840	.046	.23	.16	1.938
533	AC	ADPT MODULE, P.S.A.		1902431-041						2.125	.968	1.718		.093	.031	.06	.093	.100/.104	.093	.858	.608	.484	.358	.733	.077	.116	.062	.937	.875	1.343	.125	.781	1.892	.046			.209	.093	.250	1.875		1.840	.046	.23	.16	1.938
532	AC	TRAY BREAKOUT, 105 PIN		1900807-021						4.125	1.812	3.250		.125	.062	.12	.156	.100/.104	.125	1.625	1.140	.890	.640	1.390	.125	.171	.125	1.875	1.687	2.625	.250	1.562	3.843	.093			.359	.125	.437	3.688		3.687	.093	.40	.25	3.875
531	AC	TRAY BREAKOUT, 84 PIN		1900806-021						4.125	1.812	3.250		.125	.062	.12	.156	.100/.104	.125	1.625	1.140	.890	.640	1.390	.125	.171	.125	1.875	1.687	2.625	.250	1.562	3.843	.093			.359	.125	.437	3.688		3.687	.093	.40	.25	3.875
530	AC	HEAT SINK - TRAY EXTENDER		1900808-021						2.125	.968	1.718		.093	.031	.06	.093	.100/.104	.093	.858	.608	.484	.358	.733	.077	.116	.062	.937	.875	1.343	.125	.781	1.892	.046			.209	.093	.250	1.875		1.840	.046	.23	.16	1.938
529	AC	TESTER, FAILURE INDICATOR		1900809-021						2.125	.968	1.718	NA	.093	.031	.06	.093	.100/.104	.093	.858	.608	.484	.358	.733	.077	.116	.062	.937	.875	1.343	.125	.781	1.892	.046	NA	NA	.209	.093	.250	1.875	NA	1.840	.046	.23	.16	1.938
527	AC	FIX., MOUNTING, G AND N	(-144)	1902204-021						FOR DIMENSIONS, SEE DASH 500 VALUES BELOW																																				
526	AC	FIX., MOUNTING, G AND N	(-144)	2900067-031																																										
525	AC	PORTABLE TEMP. CONTROLLER		1900496-021			B	II	NOTE 11C	3.000	1.937	2.437	2.312	.125	.031	.125	.156	.125	.125	1.718	1.187	.968	.749	1.452	.093	.295	.090	1.312	1.00	2.000	.250	1.687	2.750	.062	N/A	N/A	.463	.125	.562	2.437	.140	2.562	.090	.468	.359	2.750
524	AC	POWER, SERVO AND THERMOCOUPLE ASSEMBLY C/M		2010743			A	I	NOTE 11B	2.125	.968	1.718	NA	.093	.031	.06	.093	NA	NA	.858	.608	.484	.358	.733	.062	.140	.062	NA	.968	1.450	.125	NA	1.720	.046	.03	NA	.210	NA	NA	NA	.070	NA	.046	.32	.16	NA
523	AC	PULSE TORQUE AND THERMOCOUPLE ASSEMBLY-LEM		6010656						FOR DIMENSIONS, SEE DASH 508 VALUES BELOW																																				
522	AC	COUPLING DATA UNIT AND THERMOCOUPLE ASSEMBLY - LEM		2010744																																										
521	AC	COUPLING DATA UNIT AND THERMOCOUPLE ASSEMBLY - C/M		2010744																																										
520	AC	PIPA ELECTRONICS AND THERMOCOUPLE ASSEMBLY		2010745			A	I	NOTE 11B																																					
519	AC	FIXTURE, HANDLING, LEM-PSA	(-141)	6900129-011			B	II	NOTE 11C	FOR DIMENSIONS, SEE DASH 504 VALUES BELOW																																				
518	AC	JUNCTION BOX, GSE-PSA	(-144)	1901933-031			B	II	NOTE 11C	FOR DIMENSIONS, SEE DASH 500 VALUES BELOW																																				
517	AC	FIX., HAND., OPTICS INSTL.	(-141)	2901380-011			B	II	NOTE 11C	FOR DIMENSIONS SEE DASH 502 VALUES BELOW																																				
516	AC	POWER, SERVO AND THERMOCOUPLE ASSEMBLY-LEM		6010655		NAS 9-497	A	I	NOTE 11B	FOR DIMENSIONS SEE DASH 508 VALUES BELOW																																				
514	AC	SIGNAL COND. ASSY LEM OPER.	(-100)	6007013		NAS-9-497	A	I	NOTE 11B	FOR DIMENSIONS, SEE DASH 508 VALUES BELOW																																				
513		JUMPER, BY-PASS	(-141)	1021616			B	II	NOTE 11C	2.125	.968	1.718	NA	.093	.031	.06	.093	.100/.104	.093	.858	.608	.484	.358	.733	.077	.116	.062	.937	.875	1.343	.125	.781	1.892	.046	NA	NA	.209	.093	.250	1.875	NA	1.840	.046	.23	.16	1.938
512		COUPLING DATA UNIT ASSEMBLY C/M	(-100)	2007322-011			A	I	NOTE 11B	FOR DIMENSIONS, SEE DASH 508 VALUES BELOW																																				
511		COUPLING DATA UNIT ASSEMBLY - LEM	(-100)	2007322-021																																										
510		BATTERY POWER PACK	(-144)	1900011-041			B	II	NOTE 11C	FOR DIMENSIONS, SEE DASH 500 VALUES BELOW																																				
509		JUNCTION BOX, P.S.A./G.S.E.	(-144)	1902195-021			B	II	NOTE-11C																																					
508		NAVIGATION BASE ASSEMBLY - LEM	✓ (-101)	6899980			A	I	NOTE 11B	2.000	1.312	1.906	1.375	.078	.048	.078	.093	NA	NA	1.125	.750	.593	.453	1.015	.062	.187	.078	.875	.718	1.375	.218	NA	NA	.048	.031	.875	.305	.078	.531	1.906	.078	NA	.078	.531	.187	NA
507		CSL, COOL. AND PWR., G AND N	(-144)	1902134-041			B	II	NOTE 11C	FOR DIMENSIONS, SEE DASH 500 VALUES BELOW																																				
506		BREAKOUT BOX, CABLE ADAPTER	(-141)	2901011-011						2.125	.968	1.718	NA	.093	.031	.06	.093	.100/.104	.093	.858	.608	.484	.358	.733	.077	.116	.062	.937	.875	1.343	.125	.781	1.892	.046	NA	NA	.209	.093	.250	1.875	NA	1.840	.046	.23	.16	1.938
505		MONITOR AND CONTROL, TEMP	(-141)	2900026-021																																										
504		PWR SUP, GUIDANCE SYSTEM	✓ (-141)	1900033-021																																										
503		CONTROL, GIMBAL POSITION	(-141)	2900036-021																																										
502		ADPT, TEST POINT, PTA/PEA.	(-141)	2900145-021																																										
501		MOUNTING PLATE, COMPONENT	(-144)	6900007-03		NAS 9-497	B	II	NOTE 11C	FOR DIMENSIONS, SEE DASH 500 VALUES BELOW																																				
500	AC	MOUNTING PLATE, COMPONENT	✓ (-144)	2900677-02						4.125	1.812	3.250	NA	.125	.062	.12	.156	.100/.104	.25	1.625	1.140	.890	.640	1.390	.125	.171	.25	1.875	.687	2.625	.250	1.562	3.843	.093	NA	NA	.359	.125	.437	3.688	NA	3.687	.093	.40	.25	3.875

A C ELECTRONICS DASH NUMBERS

NOTES FOR TABLE
STYLE A IS FOR G&N SYSTEM
STYLE B IS FOR GROUND SUPPORT EQUIPMENT
TYPE I IS WITHOUT MOUNTING HOLES
TYPE II IS WITH MOUNTING HOLES

(AG) THIS SHEET ADDED

QTY REQD	PART OR IDENTIFYING NO.	MATERIAL OR NOTES	NOMENCLATURE OR DESCRIPTION	FIND NO.

LIST OF MATERIALS

AS APPLICABLE	
NEXT ASSY	USED ON
APPLICATION	

UNLESS OTHERWISE SPECIFIED
DIMENSIONS ARE IN INCHES
CAPACITOR VALUES ARE IN µf
RESISTOR VALUES ARE IN OHMS
TOLERANCES ON
FRACTIONS ± — DECIMALS ±.005 ANGLES ± —
DO NOT SCALE THIS DRAWING

MATERIAL
SEE NOTE 11

MIT
INSTRUMENTATION LAB
CAMBRIDGE MASS

DRAWN R. A. Jones 2-15-66
CHECKED 2-15-66
APPROVED
APPROVED
APPROVED MIT 5-18-66
APPROVED MSC
DATE

MANNED SPACECRAFT CENTER
HOUSTON, TEXAS

NAMEPLATES,
APOLLO G&N-GSE
(STANDARDS)

CODE IDENT NO. 80230
SIZE E
DRAWING NO. 1004260
SCALE NONE
SHEET 6 OF 6

NOTICE - WHEN GOVERNMENT DRAWINGS, SPECIFICATIONS, OR OTHER DATA ARE USED FOR ANY PURPOSE OTHER THAN IN CONNECTION WITH A DEFINITELY RELATED GOVERNMENT PROCUREMENT OPERATION, THE UNITED STATES GOVERNMENT THEREBY INCURS NO RESPONSIBILITY NOR ANY OBLIGATION WHATSOEVER; AND THE FACT THAT THE GOVERNMENT MAY HAVE FORMULATED, FURNISHED, OR IN ANY WAY SUPPLIED THE SAID DRAWINGS, SPECIFICATIONS, OR OTHER DATA IS NOT TO BE REGARDED BY IMPLICATION OR OTHERWISE AS IN ANY MANNER LICENSING THE HOLDER OR ANY OTHER PERSON OR CORPORATION, OR CONVEYING ANY RIGHTS OR PERMISSION TO MANUFACTURE, USE, OR SELL ANY PATENTED INVENTION THAT MAY IN ANY WAY BE RELATED THERETO.

NOTES:

1. INTERPRET DRAWING IN ACCORDANCE WITH STANDARDS PRESCRIBED IN MIL-D-70327.
2. DIMENSIONS ON EACH VIEW APPLY TO ALL VIEWS. (WITH THE EXCEPTION OF MOUNTING HOLES).
3. FORMATS ILLUSTATED WILL BE APPLICABLE TO ALL ITEMS REQUIRING NAMEPLATES BELOW END ITEM DESIGNATION (SYSTEMS ASSEMBLIES, ETC.)
4. PLATE BACKGROUND TO BE LUSTERLESS BLACK PER FED-STD-595, COLOR 37038. BORDER, MARKING AND LETTERING TO BE NATURAL METAL,(ANODIZED ALUMINUM).
5. MARKING METHOD TO BE DIE STAMPING, ETCHING OR ENGRAVING IN ACCORDANCE WITH MIL P 19834.
6. LETTERING STYLE TO BE GOTHIC,(SANS SERIFS), AND NUMBERS TO BE ARABIC.
7. WHERE LOCATING DIMENSIONS ARE NOT SHOWN, CHARACTERS SHALL BE SYMMETRICALLY POSITIONED.
8. IDENTIFY WITH DRAWING NUMBER PER ND 1002019.
9. WHEN "AUTO MARK" METAL MARKING TYPEWRITER IS USED TO ADD DATA TO BLANK SPACES, TYPE SIZE IS TO BE SELECTED FROM DIMENSIONS U, AC AND AM.
10. NASA SYMBOL IS TO BE PROPORTIONAL TO NAMEPLATE IN RATIO OF 1 TO 5 WITH DIMENSION A VALUE AND IS TO HAVE NATURAL BACKGROUND. NASA SYMBOL LETTERS LETTERING AND FEATHER TO BE BLACK,(OR WHITE FOR SILK SCREENING). WHERE BLACK FEATHER PROTRUDES INTO BLACK BACKGROUND, A MINIMUM OUTLINE OF NATURAL BACKGROUND SHALL EXIST.
11. NAMEPLATES WILL BE APPLIED BY METHODS LISTED BELOW, SHOWN IN ORDER OF PREFERENCE, (I.E., FOR RELIABILITY AND WEIGHT).
    A - STENCIL OR SILK SCREEN DIRECTLY ON EQUIPMENT USING INK PER SCD 1010920,(WHITE OR BLACK).
    B - ALUMINUM FOIL,(STYLE A OR B, TYPE I):
    FOIL SHALL BE .0030 ±.0005 THICK PER MIL-A-148.
    FOIL SHALL HAVE NO ADHESIVE BACKING.
    FOIL SHALL BE BONDED PER ND 1002219,(METHOD II).
    FOIL SHALL BE CLEAR ANODIZED PER MIL-A-8625, TYPE II.
    C - PLATE, (STYLE A OR B, TYPE II):
    MATERIAL: QQ-A-250, TEMPER O OR H14, TYPE 1100, ALUMINUM ALLOY, .032 THICK.
    ANODIZE PER MIL-A-8625, TYPE II.
    ALUMINUM PLATE MUST BE FREE FROM BURRS AND SHARP CORNERS, MOUNTED WITH APPLICABLE SIZE FASTENERS.
12. NAMEPLATES SHALL BE CAPABLE OF MEETING APPLICABLE REQUIREMENTS OF MIL-M-13231.
13. ON DIMENSION TABLES SHOWN ON PAGES 2,3,4 AND 5, NA MEANS, "NOT APPLICABLE".

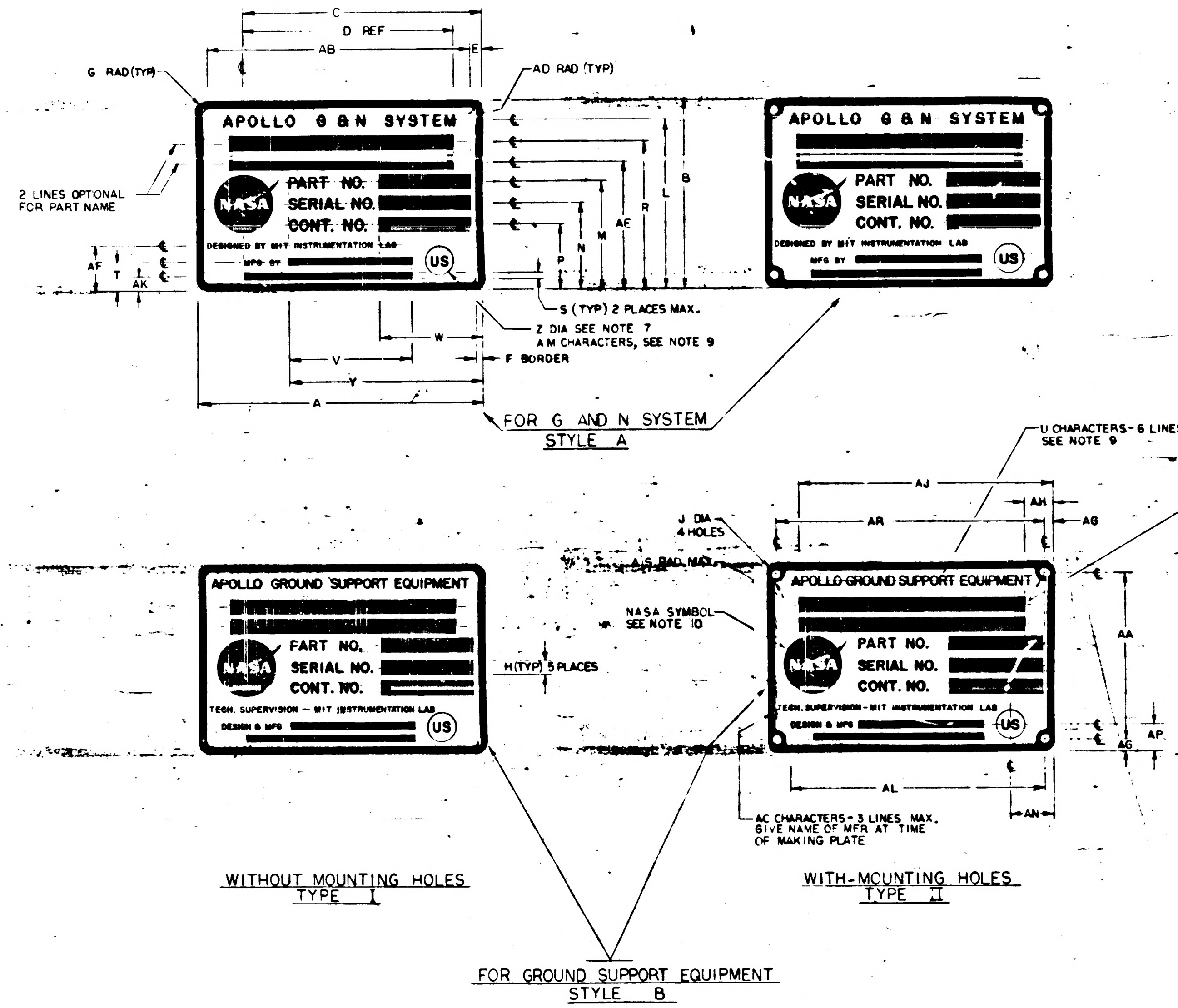

FOR G AND N SYSTEM
STYLE A

WITHOUT MOUNTING HOLES
TYPE I

WITH-MOUNTING HOLES
TYPE II

FOR GROUND SUPPORT EQUIPMENT
STYLE B

REVISIONS						
SYM	ZONE	DESCRIPTION	DR	CHK	DATE	APPROVED
G		REPLACES REV F WITH CHANGE PER TDRR 20854			7/16/65	WK
H		REVISED PER TDRR 20892			[illegible]	WK
J		REVISED PER TDRR 20904			[illegible]	WK
K		REVISED PER TDRR 21379			[illegible]	WK
L		REVISED PER TDRR 21410			[illegible]	WK
M		REVISED PER TDRR 21993				
N		REVISED PER TDRR 22621			10/	
P		REVISED PER TDRR 22671			[illegible]	
R		REVISED PER TDRR 22672			[illegible]	
S		REVISED PER TDRR 22750			[illegible] 65	WK
T		REVISED PER TDRR 22823				WK
U		REVISED PER TDRR 23072			10-22-65	WK
V		REVISED PER TDRR 23521			10-27-65	WK
W		REVISED PER TDRR 23824	RAJ		11-9-65	WK
Y		REVISED PER TDRR 24018	RAJ		11-16-65	WK
Z		REVISED PER TDRR 24040	RAJ		11-19-65	WK
AA		REVISED PER TDRR 24060	RAJ		11-19-65	WK
AB		REVISED PER TDRR 24868	RAJ		12-22-65	WK
AC		REVISED PER TDRR 24973	RAJ		1-4-66	WK
AD		REVISED PER TDRR 25065	RAJ		1-18-66	WK
AE		REVISED PER TDRR 25672	RAJ		2-4-66	WK
AF		REVISED PER TDRR 25671	RAJ		2-4-66	WK
AG		REVISED PER TDRR 26110	RAJ		2-15-66	WK
AH		REVISED PER TDRR 26372	"		3-16-66	WK
AJ		REVISED PER TDRR 26425	"		3-16-66	WK
AK		REVISED PER TDRR 26743	"		3-16-66	WK
AL		REVISED PER TDRR 26798	"		3-16-66	WK
AM		REVISED PER TDRR 27168	"		4-7-66	WK
AN		REVISED PER TDRR 27235	"		4-7-66	WK
AP		REVISED PER TDRR 27345	"		4-7-66	WK
AR		REVISED PER TDRR 27417	"		4-7-66	WK
AS		REVISED PER TDRR 27442	"		4-7-66	WK
AT		REVISED PER TDRR 27719	"		4-20-66	WK
AU		REVISED PER TDRR 27880	"		4-20-66	WK
AV		REVISED PER TDRR 27896	"		4-20-66	WK
AW		28110	"		5-16-66	WK
AY		28173	"			WK
AZ		28131	"			WK
BA		28124	"			WK
BB		REVISED PER TDRR 28511	"		5-16-66	WK
BC		" " " 28949	"		5-24-66	WK
BD		" " " 29222	"		6-8-66	WK
BE		" " " 29235	"		6-8-66	WK
BF		" " " 29322	"		6-30-66	WK
BG		" " " 29429	"		"	WK
BH		" " " 29449	"		"	WK
BJ		" " " 29335	"		"	WK
BK		" " " 29619	"		"	WK
BL		" " " 29696	"		"	WK
BM		REVISION STATUS CHANGED	JSD	NS	7-29-66	
BN		REVISION STATUS CHANGED	JI	RLW	22 AUG 66	
BP		REVISION STATUS CHANGED	JI	RLW	31 AUG 66	
BR		REVISION STATUS CHANGED	JI	RLW	31 AUG 66	

SUGGESTED PROPORTIONS FOR NAMEPLATE DIMENSIONS.
1. SELECT NAMEPLATE LENGTH, DIMENSION "A", TO FIT DESIGN NEEDS.
2. DIMENSIONS B THRU AS ON LINE 1 BELOW ARE PROPORTIONAL TO "A" BY MULTIPLIERS SHOWN IN LINE 2 BELOW.

1.	A	B	C	D	E	F	G	H	J	K	L	M	N	P	R	S	T	U	V
2.	1.000 A	.6563 A	.8438 A	.6875 A	.0391 A	.0240 A	.0391 A	.0469 A	.0547 A	.0469 A	.5938 A	.3750 A	.2969 A	.2187 A	.5079 A	.0313 A	.0938 A	.0391 A	.4375 A

1.	W	Y	Z	AA	AB	AC	AD	AE	AF	AG	AH	AJ	AK	AL	AM	AN	AP	AR	AS
2.	.3594 A	.6875 A	.1094 A	.5781 A	.9219 A	.0240 A	.0156 A	.4375 A	.1525 A	.0391 A	.1563 A	.8438 A	.0548 A	.8659 A	.0391 A	.1563 A	.0938 A	.9219 A	.0151 A

Ⓖ REPLACES REV F WITH CHANGE

QTY REQD	PART OR IDENTIFYING NO.	MATERIAL OR NOTES	NOMENCLATURE OR DESCRIPTION	FIND NO.

LIST OF MATERIALS

AS APPLICABLE	
NEXT ASSY	USED ON
APPLICATION	

UNLESS OTHERWISE SPECIFIED
DIMENSIONS ARE IN INCHES
CAPACITOR VALUES ARE IN µf
RESISTOR VALUES ARE IN OHMS
TOLERANCES ON
FRACTIONS ± — DECIMALS ±.005 ANGLES ± —
DO NOT SCALE THIS DRAWING

MATERIAL
SEE NOTE 11

MIT
INSTRUMENTATION LAB
CAMBRIDGE, MASS.

DRAWN R A Jones 7/16/65
CHECKED A. J. [illegible] 7-22-65
APPROVED
APPROVED W Kupfer 22/7/65
APPROVED MIT W Kupfer 22/7/65
APPROVED MSC [illegible]
DATE

MANNED SPACECRAFT CENTER
HOUSTON, TEXAS

NAMEPLATES,
APOLLO G&N-GSE
(STANDARDS)

CODE IDENT NO. 80230
SIZE E
DRAWING NO. 1004260
SCALE NONE
SHEET 1 OF 6

NOTICE – WHEN GOVERNMENT DRAWINGS, SPECIFICATIONS, OR OTHER DATA ARE USED FOR ANY PURPOSE OTHER THAN IN CONNECTION WITH A DEFINITELY RELATED GOVERNMENT PROCUREMENT OPERATION, THE UNITED STATES GOVERNMENT THEREBY INCURS NO RESPONSIBILITY NOR ANY OBLIGATION WHATSOEVER; AND THE FACT THAT THE GOVERNMENT MAY HAVE FORMULATED, FURNISHED, OR IN ANY WAY SUPPLIED THE SAID DRAWINGS, SPECIFICATIONS, OR OTHER DATA IS NOT TO BE REGARDED BY IMPLICATION OR OTHERWISE AS IN ANY MANNER LICENSING THE HOLDER OR ANY OTHER PERSON OR CORPORATION, OR CONVEYING ANY RIGHTS OR PERMISSION TO MANUFACTURE, USE, OR SELL ANY PATENTED INVENTION THAT MAY IN ANY WAY BE RELATED THERETO.

02768

REVISIONS

SYM	ZONE	DESCRIPTION	DR	CHK	DATE	APPROVED
G		REPLACES REV F WITH CHANGE PER TDRR 20854.			7/22/65	
H		REVISED PER TDRR 20892			8/3/65	
J		REVISED PER TDRR 20904			8/3/65	
K		REVISED PER TDRR 21379			8/16/65	
L		REVISED PER TDRR 21410			8/23/65	
M		REVISED PER TDRR 21993	"			
N		REVISED PER TDRR 22621	"		10/11/65	
P		REVISED PER TDRR 22671	"			
R		REVISED PER TDRR 22672	"			
S		REVISED PER TDRR 22750	"			
T		REVISED PER TDRR 22823	"			
U		REVISED PER TDRR 23072	"		10-22-65	
V		REVISED PER TDRR 23521	"		10-27-65	
W		REVISED PER TDRR 23824	RAJ		11-9-65	
Y		REVISED PER TDRR 24018	RAJ		11-16-65	
Z		REVISED PER TDRR 24040	RAJ		11-19-65	
AA		REVISED PER TDRR 24060	RAJ		11-19-65	
AB		REVISED PER TDRR 24868	RAJ		12-22-65	
AC		REVISED PER TDRR 24973	RAJ		1-4-66	
AD		REVISED PER TDRR 25065 –	RAJ		1-18-66	
AE		REVISED PER TDRR 25672	RAJ		2-4-66	
AF		REVISED PER TDRR 25671	RAJ		2-4-66	
AG		REVISED PER TDRR 26110	RAJ		2-15-66	
AH		REVISED PER TDRR 26372	"		3-16-66	
AJ		REVISED PER TDRR 26425	"		3-16-66	
AK		REVISED PER TDRR 26743	"		3-16-66	
AL		REVISED PER TDRR 26798	"		3-16-66	
AM		REVISED PER TDRR 27168	"		4-8-66	
AN		REVISED PER TDRR 27235	"		4-8-66	
AP		REVISED PER TDRR 27345	"		4-8-66	
AR		REVISED PER TDRR 27417	"		4-8-66	
AS		REVISED PER TDRR 27442	"		4-8-66	
AT		REVISED PER TDRR 27719	"		4-21-66	
AU		REVISED PER TDRR 27880	"		4-21-66	
AV		REVISED PER TDRR 27896	"		4-21-66	
AW		28110	"		5-16-66	
AY		28173	"			
AZ		28131	"			
BA		28124	"			
BB		REVISED PER TDRR 28511	"		5-16-66	
BC		" " " 28949	"		5-24-66	
BD		" " " 29222	"		6-8-66	
BE		" " " 29235	"		"	
BF		" " " 29322	"		6-30-66	
BG		" " " 29429	"		"	
BH		" " " 29449	"		"	
BJ		" " " 29335	"		"	
BK		" " " 29619	"		"	
BL		" " " 29696	"		"	
BM		REVISION STATUS CHANGED	JSD	N.S.	7-29-66	
BN		REVISION STATUS CHANGED	JI	RLW	[illegible] AUG 66	
BP		REVISION STATUS CHANGED	JI	RLW	[illegible] AUG 66	
BR		REVISION STATUS CHANGED	JI	RLW	[illegible] AUG 66	

CASH NO.	P/C	PART NAME	REMARKS	PART NO.	SER. NO.	CONT. NO.	STYLE	TYPE	MATERIAL	A	B	C	D	E	F	G	H	J	K	L	M	N	P	R	S	T	U	V	W	Y	Z	AA	AB	AC	AD	AE	AF	AG	AH	AJ	AK	AL	AM	AN	AP	AR
399	K																																													
398	K																																													
350	K	ALIGNMENT OPTICAL TELESCOPE (LEM)		NA	NA	NA	A	I	NOTE 11B	4.000	2.625	3.375	2.750	.156	.093	.156	.187	NA	NA	2.312	1.468	1.187	.906	2.031	NA	.375	.156	NA	1.437	2.750	.437	NA	3.688	.062	.062	1.750	.593	NA	.625	3.375	.187	NA	.156	.531	.453	NA
309	K																																													
308	K																																													
307	K						B	I	NOTE 11 B	4.000	2.625	3.375	2.750	.156	.093	.156	.187	NA	NA	2.328	1.468	1.187	.906	2.031	.062	.375	.156	NA	1.437	2.750	.437	NA	3.687	.062	.062	1.750	.593	NA	NA	NA	NA	NA	NA	NA	NA	NA
306	K						B	II	NOTE 11 C	4.000	2.625	3.375	2.750	.156	.093	.156	.187	.125	.156	2.328	1.468	1.187	.906	2.031	.062	.375	.156		1.437	2.750	.437	2.312	3.687	.062	NA	1.750	.593									
305	K						B	I	NOTE 11 B	2.000	1.312	1.687	1.375	.078	.048	.078	.093	NA	NA	1.164	.734	.593	.453	1.015	.048	.171	.078		.718	1.375	.187	NA	NA	.048	.031	.875	.320									
304	K						B	II	NOTE 11 C	2.000	1.312	1.687	1.375	.078	.048	.078	.093	.070	.078	1.164	.734	.593	.453	1.015	.048	.171	.078	NA	.718	1.375	.187	.156	1.843	.048	NA	.875	.320	NA	NA	NA	NA	NA	NA	NA	NA	NA
303	K																																													
302	K																																													
301	K																																													
300	K	OPTICAL UNIT		NA	NA	NA	A	I	NOTE 11 B	2.000	1.312	.675	NA	NA	.048	.078	NA	NA	NA	1.090	.812	.675	.540	.940	NA	.265	NA	NA	NA	1.375	.26	NA	NA	NA	NA	NA	.375	NA	NA	NA	.180	NA	.078	NA	NA	NA
9	K	2 IN AUTOCOLLIMATOR		1001702			B	II	NOTE 11 C	4.000	2.625	3.812	2.750	.156	.093	.156	.187	.125	.156	2.250	1.500	1.187	.906	2.031	.093	.375	.156	1.750	1.437	2.750	.437	2.312	3.687	.062	NA	1.750	.593	.156	1.062	3.812	.156	NA	.156	1.062	.375	3.687
8	K	5 IN AUTOCOLLIMATOR		1017410			B	II	NOTE 11 C	4.000	2.625	3.812	2.750	.156	.093	.156	.187	.125	.156	2.250	1.500	1.187	.906	2.031	.093	.375	.156	1.750	1.437	2.750	.437	2.312	3.687	.062	NA	1.750	.593	.156	1.062	3.812	.156	NA	.156	1.062	.375	3.687
7	K	2½ IN AUTOCOLLIMATOR (SCT)		1017435			B	II	NOTE 11 C	4.000	2.625	3.812	2.750	.156	.093	.156	.187	.125	.156	2.250	1.500	1.187	.906	2.031	.093	.375	.156	1.750	1.437	2.750	.437	2.312	3.687	.062	NA	1.750	.593	.156	1.062	3.812	.156	NA	.156	1.062	.375	3.687
6	K	2½ IN AUTOCOLLIMATOR (SXT)		1017448			B	II	NOTE 11 C	4.000	2.625	3.812	2.750	.156	.093	.156	.187	.125	.156	2.250	1.500	1.187	.906	2.031	.093	.375	.156	1.750	1.437	2.750	.437	2.312	3.687	.062	NA	1.750	.593	.156	1.062	3.812	.156	NA	.156	1.062	.375	3.687
5	K	RETROREFLECTING PRISM ASSEMBLY		1019840			B	I	NOTE 11 B	4.000	2.625	3.812	2.750	.156	.093	.156	.187	NA	NA	2.250	1.500	1.187	.906	2.031	.093	.375	.156	1.750	1.437	2.750	.437	NA	NA	.062	.062	1.750	.593	.156	1.062	3.812	.156	NA	.156	1.062	.375	NA
4	K	S/H SIMULATOR ASSEMBLY		1019896			B	I	NOTE 11 B	4.000	2.625	3.812	2.750	.156	.093	.156	.187	NA	NA	2.250	1.500	1.187	.906	2.031	.093	.375	.156	1.750	1.437	2.750	.437	NA	NA	.062	.062	1.750	.593	.156	1.062	3.812	.156	NA	.156	1.062	.375	NA
3	K	REFERENCE MIRROR		1001767			B	I	NOTE 11 B	2.000	1.312	1.906	1.375	.078	.048	.078	.093	NA	NA	1.125	.750	.593	.453	1.015	.062	.187	.078	.875	.718	1.375	.218	NA	NA	.048	.031	.875	.305	.078	.531	1.906	.078	NA	.078	.531	.187	NA
2	K	2 IN PLANE READING AUTOCOLLIMATOR		1017413			B	I	NOTE 11 B	2.000	1.312	1.906	1.375	.078	.048	.078	.093	NA	NA	1.125	.750	.593	.453	1.015	.062	.187	.078	.875	.718	1.375	.218	NA	NA	.048	.031	.875	.305	.078	.531	1.906	.078	NA	.078	.531	.187	NA
1	K	2 IN AUTOCOLLIMATOR		1001702			B	I	NOTE 11 B	2.000	1.312	1.906	1.375	.078	.048	.078	.093	NA	NA	1.125	.750	.593	.453	1.015	.062	.187	.078	.875	.718	1.375	.218	NA	NA	.048	.031	.875	.305	.078	.531	1.906	.078	NA	.078	.531	.187	NA

Ⓖ REPLACES REV F WITH CHANGE

KOLLSMAN DASH NUMBERS

NOTES FOR TABLE
STYLE A IS FOR G&N SYSTEM.
STYLE B IS FOR GROUND SUPPORT EQUIPMENT.
TYPE I IS WITHOUT MOUNTING HOLES.
TYPE II IS WITH MOUNTING HOLES.

QTY REQD	PART OR IDENTIFYING NO.	MATERIAL OR NOTES	NOMENCLATURE OR DESCRIPTION	FIND NO.

LIST OF MATERIALS

NEXT ASSY	USED ON
AS APPLICABLE	

APPLICATION

UNLESS OTHERWISE SPECIFIED
DIMENSIONS ARE IN INCHES
CAPACITOR VALUES ARE IN µf
RESISTOR VALUES ARE IN OHMS
TOLERANCES ON
FRACTIONS ± — DECIMALS ±.005 ANGLES ± —
DO NOT SCALE THIS DRAWING

MATERIAL
SEE NOTE 11

MIT
INSTRUMENTATION LAB
CAMBRIDGE MASS

MANNED SPACECRAFT CENTER
HOUSTON, TEXAS

DRAWN R A Jones 7-16-65
CHECKED 7-22-65
APPROVED
APPROVED W Kupfer 22/7/65
APPROVED MIT W Kupfer 22/7/65
APPROVED MSC
DATE

NAMEPLATES,
APOLLO G&N-GSE
(STANDANDS)

CODE IDENT NO 80230
SIZE E
DRAWING NO. 1004260
SCALE NONE
SHEET 2 OF 6

[illegible]

REVISIONS		02768				
SYM	ZONE	DESCRIPTION	DR	CHK	DATE	APPROVED
G		REPLACES REV F WITH CHANGE PER TDRR 20854			[illegible]	WK
H		REVISED PER TDRR 20892			[illegible]	WK
J		REVISED PER TDRR 20904			[illegible]	WK
K		REVISED PER TDRR 21379			[illegible]	WK
L		REVISED PER TDRR 21410			[illegible]	WK
M		REVISED PER TDRR 21993				
N		REVISED PER TDRR 22621			[illegible]	
P		REVISED PER TDRR 22671				
R		REVISED PER TDRR 22672			[illegible]	
S		REVISED PER TDRR 22750				WK
T		REVISED PER TDRR 22823			[illegible]	WK
U		REVISED PER TDRR 23072			10-[illegible]-65	[illegible]
V		REVISED PER TDRR 23521			10-26-65	[illegible]
W		REVISED PER TDRR 23824	RAJ		11-9-65	WK
Y		REVISED PER TDRR 24018	RAJ		11-16-65	WK
Z		REVISED PER TDRR 24040	RAJ		11-19-65	WK
AA		REVISED PER TDRR 24060	RAJ		11-19-65	WK
AB		REVISED PER TDRR 24868	RAJ		12-22-65	WK
AC		REVISED PER TDRR 24973	RAJ		1-4-66	WK
AD		REVISED PER TDRR 25065	RAJ		1-18-66	[illegible]
AE		REVISED PER TDRR 25672	RAJ		2-4-66	WK
AF		REVISED PER TDRR 25671	RAJ		2-4-66	WK
AG		REVISED PER TDRR 26110	RAJ		2-15-66	WK
AH		REVISED PER TDRR 26372	"		3-16-66	[illegible]
AJ		REVISED PER TDRR 26425	"		3-16-66	[illegible]
AK		REVISED PER TDRR 26743	"		3-16-66	[illegible]
AL		REVISED PER TDRR 26798	"		3-16-66	[illegible]
AM		REVISED PER TDRR 27168	"		4-8-66	[illegible]
AN		REVISED PER TDRR 27235	"		4-8-66	[illegible]
AP		REVISED PER TDRR 27345	"		4-8-66	[illegible]
AR		REVISED PER TDRR 27417	"		4-8-66	[illegible]
AS		REVISED PER TDRR 27442	"		4-8-66	[illegible]
AT		REVISED PER TDRR 27719	"		4-20-66	WK
AU		REVISED PER TDRR 27860			4-20-66	WK
AV		REVISED PER TDRR 27896	"		4-20-66	WK
AW		28110	"		5-16-66	[illegible]
AY		28173	"		5-16-66	[illegible]
AZ		28131	"		5-16-66	[illegible]
BA		28124	"		5-16-66	[illegible]
BB		REVISED PER TDRR 28511	"		5-16-66	[illegible]
BC		" " " 28949	"		5-24-66	[illegible]
BD		" " " 29222	"		6-8-66	[illegible]
BE		" " " 29235	"		"	[illegible]
BF		" " " 29322	"		6-29-66	[illegible]
BG		" " " 29429	"		"	[illegible]
BH		" " " 29449	"		"	[illegible]
BJ		" " " 29335	"		"	[illegible]
BK		" " " 29619	"		"	[illegible]
BL		" " " 29696	"		"	[illegible]
BM		" " " 29802	JSD	N.S.	7-29-66	
BN		REVISION STATUS CHANGED	JI	RW	[illegible]	
BP		REVISED PER TDRR 30168	JI	RW	[illegible]	
BR		REVISION STATUS CHANGED	JI	RW	[illegible]	

DASH NO.	P/C	PART NAME	REMARKS	PART NO.	SER. NO.	CONT. NO.	STYLE	TYPE	MATERIAL	
299	R									
298	R									
277	R	COMPUTER TEST SET		2014042-041	NA	NAS-9-497	B	II	NOTE 11C	FOR DIMENSIONS, SEE DASH 18 VALUES BELOW
276		DRAWER ASSY - PROGRAM & MONITOR		2014041-041				I	NOTE 11B	FOR DIMENSIONS, SEE DASH 17 VALUES BELOW
275		DRAWER ASSY RDC INTERFACE		2014045-031						FOR DIMENSIONS, SEE DASH 15 VALUES BELOW
274		SELF TEST ASSY		2014366-031						
273		LOGIC DRAWER ASSY NO. 2		2014037-031						FOR DIMENSIONS, SEE DASH 17 VALUES BELOW
272		DRAWING ASSY PROGRAMMER & MONITOR		2014041-031						FOR DIMENSIONS, SEE DASH 17 VALUES BELOW
271		LOGIC DRAWER ASSY NO. 1		2014036-031				I	NOTE 11 B	
270		COMPUTER TEST SET		2014042-03				II	NOTE 11C	FOR DIMENSIONS, SEE DASH 18 VALUES BELOW
269		POWER CONTROL ASSY		2014044-021				I	NOTE 11 B	FOR DIMENSIONS, SEE DASH 17 VALUES BELOW
268		SELF TEST ASSY		2014366-021						FOR DIMENSIONS, SEE DASH 15 VALUES BELOW
267		AGC JUNCTION ASSY		2014341-021						
266		POWER CONTROL ASSY		2014079-021						
265		BUFFER CIRCUIT ASSY		2014254-02						
264		DRAWER ASSY X Y INTERFACE		2014040-021						
263		DRAWER ASSY R D C INTERFACE		2014045-021						
262		DRAWER ASSY PROGRAMMER & MONITOR		2014041-021						FOR DIMENSIONS, SEE DASH 17 VALUES BELOW
261		LOGIC DRAWER ASSY NO. 2		2014037-021						
260		LOGIC DRAWER ASSY NO. 1		2014036-021				I	NOTE 11B	
259		OPERATION CONSOLE		2014024-021				II	NOTE 11C	FOR DIMENSIONS, SEE DASH 18 VALUES BELOW
258		COMPUTER TEST SET		2014042-021						
257		AUXILIARY CALIBRATION CONSOLE		2014059-021						
256		AGC CALIBRATION CONSOLE		2014049-021				II	NOTE 11C	
255		AGC HANDLING FIXTURE		2014282-021				I	NOTE 11B	FOR DIMENSIONS, SEE DASH 17 VALUES BELOW
254		DRAWER ASSY COMP. SIMULATOR		2014048-011				II	NOTE 11C	FOR DIMENSIONS, SEE DASH 18 VALUES BELOW
253		SHIPPING KIT ASSY, NAV DSKY		2016312-011						
252		SHIPPING KIT ASSY, UNIVERSAL DSKY		2016316-011						
251		SHIPPING KIT ASSY, MAIN DSKY		2016313-011				II	NOTE 11C	
250		AMPLIFIER, REWORK		2014386				I	NOTE 11B	FOR DIMENSIONS, SEE DASH 15 VALUES BELOW
249		TEMP MONITOR ASSY		2014313-011					NOTE 11C	FOR DIMENSIONS, SEE DASH 17 VALUES BELOW
248		AGC JUNCTION ASSY		2014341-011					NOTE 11B	FOR DIMENSIONS, SEE DASH 15 VALUES BELOW
247		AC INPUT PANEL ASSY		2014302-011						
246		SELF TEST ASSY		2014392 011						
245		TAPE PUNCH ASSEMBLY		2014039-011						FOR DIMENSIONS, SEE DASH 15 VALUES BELOW
244	R	TAPE READER ASSEMBLY		2014038-011	NA	NAS-9-497	B	I	NOTE 11B	
243										
242										
241	R	APOLLO GUIDANCE COMPUTER GROUP		6003001	NA	NAS-9-497	A	I	NOTE 11B	FOR DIMENSIONS, SEE DASH 19 VALUES BELOW
240		SELF TEST ASSEMBLY		2014366-011	NA		B	I		FOR DIMENSIONS, SEE DASH 15 VALUES BELOW
239		POWER SUPPLY ASSY-115V., 400 CYCLE		2014207-011						FOR DIMENSIONS, SEE DASH 17 VALUES BELOW
238		AC INPUT PANEL ASSY		2014043-011						
237		POWER CONTROL ASSY		2014079-011						FOR DIMENSIONS, SEE DASH 15 VALUES BELOW
236		DRAWER ASSY-X Y INTERFACE		2014040-011						
235		DRAWER ASSY RDC INTERFACE		2014045-011						
234		BUFFER CIRCUIT ASSY		2014254-011						
233		CONTROL & INTERFACE ASSY		2014204-011						
232		POWER CONTROL ASSY		2014044-011						FOR DIMENSIONS, SEE DASH 17 VALUES BELOW
231		DRAWER ASSY, PROGRAMMER & MONITOR		2014041-011						
230		CONNECTOR INTERFACE ASSY		2014272-011						FOR DIMENSIONS, SEE DASH 15 VALUES BELOW
229		CONNECTOR INTERFACE ASSY		2014047-011						
228		ANTENNA TUNING CAPACITOR ASSY		2014209-011						
227		MOUNTING FIXTURE ASSY		2014006-011						FOR DIMENSIONS, SEE DASH 17 VALUES BELOW
226		POWER SUPPLY ASSY 3 VDC		2014234-011						FOR DIMENSIONS, SEE DASH 15 VALUES BELOW
225		PANEL ASSY - SIGNAL INTERFACE		2014010-011						
224		OSCILLOSCOPE ASSY		2014232-011						
223		AUXILIARY OUTLET ASSY		2014274-011						
222		FREQUENCY COUNTER		2014233-011						
221		POWER SUPPLY ASSY 10, 13, 28 VDC		2014235-011						
220		LOGIC DRAWER ASSY NO. 2		2014037-011						FOR DIMENSIONS, SEE DASH 17 VALUES BELOW
219		LOGIC DRAWER ASSY NO. 1		2014036-011						
218		COUNTER, ELECTRICAL ASSY		2014288-011						FOR DIMENSIONS, SEE DASH 15 VALUES BELOW
217		POWER SUPPLY ASSY		2014279-011						
216		TEST MOUNT ASSY		2014257-011						
215		UNIVERSAL DSKY PEDESTAL MOUNT		2014014-011						FOR DIMENSIONS, SEE DASH 17 VALUES BELOW
214		MAIN DSKY PEDESTAL MOUNT		2014343				I	NOTE 11B	
213		SHIPPING CONTAINER, MAIN DSKY		1006229				II	NOTE 11C	FOR DIMENSIONS, SEE DASH 18 VALUES BELOW
212		NAV DSKY		1006231						
211		AGC		1006230						
210		UNIVERSAL DSKY		1006422						
209		SHIPPING CONTAINER, AGC		1006421				II	NOTE 11C	
208		UNIVERSAL DSKY HANDLING FIXTURE		2014013-011				I	NOTE 11B	FOR DIMENSIONS, SEE DASH 15 VALUES BELOW
207		NAV DSKY HANDLING FIXTURE		1014377						FOR DIMENSIONS, SEE DASH 17 VALUES BELOW
206		MAIN DSKY HANDLING FIXTURE		1014334						
205		AGC HANDLING FIXTURE		2014282-011				I	NOTE 11B	
204		OPERATION CONSOLE		2014024-011				II	NOTE 11C	FOR DIMENSIONS, SEE DASH 18 VALUES BELOW
203		COMPUTER TEST SET		2014042-011		NAS-9-497				
202		DRAWER ASSY, COMPUTER SIMULATOR		2014048-011		FNR-2775				
201		AUXILIARY CALIBRATION CONSOLE		2014059-011		NAS-9-497				
200		AGC CALIBRATION CONSOLE		2014049-011	NA		B	II	NOTE 11C	
21										
20		NA		NA	NA	NA	A	II	NOTE 11C	
19		NA		NA	NA	NA	A	I	NOTE 11B	
18		NA		NA	NA	NA	B	II	NOTE 11C	
17		NA		NA	NA	NA	B	I	NOTE 11B	
16		NA		NA	NA	NA	B	II	NOTE 11C	
15	R	NA		NA	NA	NA	B	I	NOTE 11B	

DASH NO.	A	B	C	D	E	F	G	H	J	K	L	M	N	P	R	S	T	U	V	W	Y	Z	AA	AB	AC	AD	AE	AF	AG	AH	AJ	AK	AL	AM	AN	AP	AR
21																																					
20	2.000	1.312	1.687	1.375	.078	.031	.078	.093	.106 .113	.093	1.187	.750	.593	.453	1.015	.062	.187	.078	.875	.718	1.375	.218	1.156	1.843	.048	NA	.875	.305	.078	.312	1.687	.078	NA	.078	.312	.187	1.843
19	2.000	1.312	1.687	1.375	.078	.031	.078	.093	NA	NA	1.187	.750	.593	.453	1.015	.062	.187	.078	.875	.718	1.375	.218	NA	NA	.048	.031	.875	.305	.078	.312	1.687	.078	NA	.078	.312	.187	NA
18	4.187	1.875	3.469	2.750	.156	.093	.156	.125	.106 .113	.125	1.625	1.032	.844	.656	1.406	.093	.344	.156	1.781	1.531	2.844	.312	1.562	3.875	.062	NA	1.219	.500	.156	.719	3.469	.156	NA	.156	.719	.344	3.875
17	4.187	1.875	3.469	2.750	.156	.093	.156	.125	NA	NA	1.625	1.032	.844	.656	1.406	.093	.344	.156	1.781	1.531	2.844	.312	NA	NA	.062	.062	1.219	.500	.156	.719	3.469	.156	NA	.156	.719	.344	NA
16	2.000	1.312	1.687	1.375	.078	.031	.078	.093	.106 .113	.093	1.187	.750	.593	.453	1.015	.062	.187	.078	.875	.718	1.375	.218	1.156	1.843	.048	NA	.875	.305	.078	.312	1.687	.078	NA	.078	.312	.187	1.843
15	2.000	1.312	1.687	1.375	.078	.031	.078	.093	NA	NA	1.187	.750	.593	.453	1.015	.062	.187	.078	.875	.718	1.375	.218	NA	NA	.048	.031	.875	.305	.078	.312	1.687	.078	NA	.078	.312	.187	NA

THIS SHEET ADDED

Ⓖ REPLACES REV F WITH CHANGE

RAYTHEON DASH NUMBERS

NOTES FOR TABLE

STYLE A IS FOR G & N SYSTEM
STYLE B IS FOR GROUND SUPPORT EQUIPMENT
TYPE I IS WITHOUT MOUNTING HOLES
TYPE II IS WITH MOUNTING HOLES

QTY REQD	PART OR IDENTIFYING NO	MATERIAL OR NOTES	NOMENCLATURE OR DESCRIPTION	FIND NO

LIST OF MATERIALS

AS APPLICABLE	
NEXT ASSY	USED ON
APPLICATION	

UNLESS OTHERWISE SPECIFIED
DIMENSIONS ARE IN INCHES
CAPACITOR VALUES ARE IN µf
RESISTOR VALUES ARE IN OHMS
TOLERANCES ON
FRACTIONS ± — DECIMALS ±.005 ANGLES ± —
DO NOT SCALE THIS DRAWING

MATERIAL
SEE NOTE 11

MIT
INSTRUMENTATION LAB
CAMBRIDGE, MASS

MANNED SPACECRAFT CENTER
HOUSTON, TEXAS

DRAWN	R Q Jones	7-16-65
CHECKED	A. J. [illegible]	7-22-65
APPROVED		
APPROVED	W Kupfer	7/[illegible]/65
APPROVED MIT	W Kupfer	7/[illegible]/65
APPROVED MSC	[illegible]	[illegible]
		DATE

NAMEPLATES,
APOLLO GEN-GSE
(STANDARDS)

CODE IDENT NO	SIZE	DRAWING NO.
80230	E	1004260
SCALE NONE		SHEET [illegible] OF [illegible]

[illegible]

REVISIONS

SYM	ZONE	DESCRIPTION	DR	CHK	DATE	APPROVED
G		REPLACES REV F WITH CHANGE PER TDRR 20854.			[illegible]	
H		REVISED PER TDRR 20892			[illegible]	
J		REVISED PER TDRR 20904			[illegible]	
K		REVISED PER TDRR 21379			[illegible]	
L		REVISED PER TDRR 21410			8/23/65	
M		REVISED PER TDRR 21993				
N		REVISED PER TDRR 22621				
P		REVISED PER TDRR 22671				
R		REVISED PER TDRR 22672				
S		REVISED PER TDRR 22750				
T		REVISED PER TDRR 22823				
U		REVISED PER TDRR 23072			[illegible]	
V		REVISED PER TDRR 23521			10-26-65	
W		REVISED PER TDRR 23824	RAJ		11-9-65	
Y		REVISED PER TDRR 24018	RAJ		11-16-65	
Z		REVISED PER TDRR 24040	RAJ		11-19-65	
AA		REVISED PER TDRR 24060	RAJ		11-19-65	
AB		REVISED PER TDRR 24868	RAJ		12-22-65	
AC		REVISED PER TDRR 24973	RAJ		1-4-66	
AD		REVISED PER TDRR 25065	RAJ		1-18-66	
AE		REVISED PER TDRR 25672	RAJ		2-4-66	
AF		REVISED PER TDRR 25671	RAJ		2-4-66	
AG		REVISED PER TDRR 26110	RAJ		2-15-66	
AH		REVISED PER TDRR 26372	"		3-16-66	
AJ		REVISED PER TDRR 26425	"		3-16-66	
AK		REVISED PER TDRR 26743	"		3-16-66	
AL		REVISED PER TDRR 26798	"		3-16-66	
AM		REVISED PER TDRR 27168	"		4-8-66	
AN		REVISED PER TDRR 27235	"		4-8-66	
AP		REVISED PER TDRR 27345	"		4-8-66	
AR		REVISED PER TDRR 27417	"		4-8-66	
AS		REVISED PER TDRR 27442	"		4-8-66	
AT		REVISED PER TDRR 27719	"		4-21-66	
AU		REVISED PER TDRR 27880	"		4-21-66	
AV		REVISED PER TDRR 27896	"		4-21-66	
AW		28110	"		5-16-66	
AY		28173	"			
AZ		28131	"			
BA		28124	"			
BB		REVISED PER TDRR 28511	"		5-16-66	
BC		" " " 28949	"		5-24-66	
BD		" " " 29222	"		6-8-66	
BE		" " " 29235	"		"	
BF		" " " 29322	"		6-24-66	
BG		" " " 29429	"		"	
BH		" " " 29449	"		"	
BJ		" " " 29335	"		"	
BK		" " " 29619	"		"	
BL		" " " 29696	"		6-29-66	
BM		REVISION STATUS CHANGED	JSD	NS	7-29-66	
BN		REVISION STATUS CHANGED	JI	RLW	12 AUG 66	
BP		REVISION STATUS CHANGED	JI	RLW	11 AUG 66	
BR		REVISED PER TDRR 30241	JI	RLW	11 AUG 66	

DASH NO.	P/C	PART NAME	REMARKS	PART NO.	SER. NO.	CONT. NO.	STYLE	TYPE	MATERIAL	A	B	C	D	E	F	G	H	J	K	L	M	N	P	R	S	T	U	V	W	Y	Z	AA	AB	AC	AD	AE	AF	AG	AH	AJ	AK	AL	AM	AN	AP	AR
199	AC	EYEPIECE STOWAGE UNIT		2021255-011			A	I		FOR DIMENSIONS, SEE DASH 100 VALUES BELOW																																				
198	AC	SIGNAL CONDITIONER ASSY C/M		2007234		NAS 9-497			NOTE 11B																																					
197	AC	SIGNAL CONDITIONER ASSY C/M		2007235																																										
196	AC	SIGNAL CONDITIONER ASSY LEM		6007010																																										
195	AC	PSA & SIGNAL CONDITIONER ASSY		6007009			A	I	NOTE 11B																																					
194	AC	PANEL, MONITOR		2900031-031			B	II	NOTE 11C	FOR DIMENSIONS, SEE DASH 141 VALUES BELOW																																				
193	AC	DISTRIBUTION BOX, GSE		2900024-031																																										
192	AC	ANALYZER, OPTICS-INERTIAL		2900023-031						FOR DIMENSIONS, SEE DASH 144 VALUES BELOW																																				
191	AC	TEST CONTROL		2900027-031						FOR DIMENSIONS, SEE DASH 141 VALUES BELOW																																				
190	AC	PANEL, PWR SUP AND LOAD		2900033-021																																										
189	AC	ADPT MODULE, P. S. A.		6900088-011																																										
188	AC	ADPT MODULE, P. S. A.		2901143-011																																										
187	AC	FIXTURE, MTG, PTA/PEA		2900066-021		NAS 9-497	B	II	NOTE 11C																																					
186	AC	ANNUNCIATOR PANEL AND EYEPIECE STORAGE ASSEMBLY		1021255-021			A	I		FOR DIMENSIONS, SEE DASH 100 VALUES BELOW																																				
185	AC	ANNUNCIATOR PANEL AND EYEPIECE STORAGE ASSEMBLY		1021255-011			A	I																																						
184	AC	FIX., HAND., G AND N HARNESS		1901846-041		NAS 9-497	B	II	NOTE 11C	FOR DIMENSIONS, SEE DASH 144 VALUES BELOW																																				
183	AC	INSTALLING TOOL, ELEC. CONN		1902586-011			B	II	NOTE 11C	FOR DIMENSIONS, SEE DASH 102 VALUES BELOW																																				
182	AC	ADPT MODULE, P. S. A.		6900088-011			B	II	NOTE 11C	FOR DIMENSIONS, SEE DASH 141 VALUES BELOW																																				
181	AC	G & N INDICATOR CONTROL PANEL ASSY		2014578-011			A	I	NOTE 11B	3.000	1.938	2.437	NA	.125	.062	.188	.156	NA	NA	1.750	.125	.906	.688	.500	NA	.281	.125	NA	1.094	2.062	.312	NA	2.500	.062	.125	1.312	.469	NA	NA	NA	.156	NA	.125	.469	.344	NA
180	AC	ADPT MODULE, P. S. A.		1902431-031			B	II		FOR DIMENSIONS, SEE DASH 121 VALUES BELOW																																				
179	AC	MOUNTING PLATE, IMU/PTA		6900083-011						FOR DIMENSIONS, SEE DASH 144 VALUES BELOW																																				
178	AC	MOUNTING PLATE, COMPONENT		6900007-021																																										
177	AC	FIX., MOUNTING, SUBSYSTEM		2900070-021																																										
176	AC	FIX., MOUNTING, G AND N		2900067-021																																										
175	AC	CSL, COOL. AND PWR, G AND N		1902134-031																																										
174	AC	FIX., HAND., C/M AND LEM CDU		2900999-011					NOTE 11C	FOR DIMENSIONS, SEE DASH 141 VALUES BELOW																																				
173	AC	FIX., HANDLING, C/M PSA		2900998-011																																										
172	AC	CAGING ELECTRONICS, GYRO		2900029-021																																										
171	AC	DISTRIBUTION BOX, GSE		2900024-021																																										
	AC	ANALYZER, OPTICS-INERTIAL		2900023-02						FOR DIMENSIONS, SEE DASH 144 VALUES BELOW																																				
169	AC	ADPT, TESTPOINT, P.S.A.		2900037-021						FOR DIMENSIONS, SEE DASH 141 VALUES BELOW																																				
168	AC	TEST SELECTOR		2900028-021																																										
167	AC	TEST CONTROL		2900027-021																																										
166	AC	PANEL, MONITOR		2900031-021																																										
165	AC	TERM. BOARD STORAGE DRAWER		2900927-011																																										
164	AC	INPUT/OUTPUT PANEL		2900926-011																																										
163	AC	CONTROL PANEL		2900896-011																																										
162	AC	CSL. CAL AND TEST, SCM/PSAAM		2900895-011						FOR DIMENSIONS, SEE DASH 144 VALUES BELOW																																				
161	AC	FIX., LIFT AND HAND., IMU		[illegible]-011						FOR DIMENSIONS, SEE DASH 141 VALUES BELOW																																				
160	AC	FIX., HAND., G AND N HARNESS		1901846-031						FOR DIMENSIONS, SEE DASH 144 VALUES BELOW																																				
159	AC	BATTERY POWER PACK		1900011-031			B	II	NOTE 11C																																					
158	AC	COUPLING DATA UNIT ASSEMBLY C/M		2007222			A	I	NOTE 11B	FOR DIMENSIONS SEE DASH 100 VALUES BELOW																																				
157	AC	COUPLING DATA UNIT ASSEMBLY - LEM		2007222																																										
156	AC	POWER & SERVO ASSEMBLY C/M		2007200						2.125	.968	1.718	NA	.093	.031	.06	.093	NA	NA	.858	.608	.484	.358	.733	.062	.140	.062	NA	.968	1.450	.125	NA	1.720	.046	.03	NA	.210	NA	NA	NA	.070	NA	.046	.32	.16	NA
155	AC	PIPA ELECTRONICS ASSEMBLY		2007201						FOR DIMENSIONS SEE DASH 100 VALUES BELOW																																				
154	AC	PULSE TORQUE ASSEMBLY - LEM		6007000																																										
153	AC	POWER & SERVO ASSEMBLY - LEM		6007200			A	I	NOTE 11B																																					
152	AC	CONT PNL, RSVR CKT TESTER		2900770-011			B	II	NOTE 11C	FOR DIMENSIONS, SEE DASH 141 VALUES BELOW																																				
151	AC	TESTER, RESOLVER CIRCUIT		2900708-011																																										
150	AC	JUNCTION BOX, P.S.A./G.S.E.		1901933-021						FOR DIMENSIONS, SEE DASH 144 VALUES BELOW																																				
149	AC	BATTERY PACK, LIFTING		2900812-011						FOR DIMENSIONS, SEE DASH 141 VALUES BELOW																																				
148	AC	MOUNTING PLATE, COMPONENT		6900007-011						FOR DIMENSIONS, SEE DASH 144 VALUES BELOW																																				
147	AC	MOUNTING PLATE, COMPONENT		2900677-011																																										
146	AC	CART, TRANS., G AND N		1900009-041																																										
145	AC	CONTAINER, SHIPPING, IMU		1900010-021		NAS9-497	B	II	NOTE 11C																																					
144	AC	FIX., MOUNTING, G AND N		1902204-021			B	II	NOTE 11C	4.125	1.812	3.250	NA	.125	.062	.12	.156	.188 .104	.125	1.625	1.140	.890	.640	1.390	.125	.171	.125	1.875	1.687	2.625	.250	1.562	3.843	.093	NA	NA	.359	.125	.437	3.688	NA	3.687	.093	.40	.25	3.875
143	AC	CSL, COOL. AND PWR, G AND N		1902134-021						4.125	1.812	3.250		.125	.062	.12	.156		.125	1.625	1.140	.890	.640	1.390	.125	.171	.125	1.875	1.687	2.625	.250	1.562	3.843	.093			.359	.125	.437	3.688		3.687	.093	.40	.25	3.875
142	AC	ANALYZER, OPTICS-INERTIAL		2900023-011						4.125	1.812	3.250		.125	.062	.12	.156		.125	1.625	1.140	.890	.640	1.390	.125	.171	.125	1.875	1.687	2.625	.250	1.562	3.843	.093			.359	.125	.437	3.688		3.687	.093	.40	.25	3.875
141	AC	CONT, TEMP, PORTABLE		2900060-011						2.125	.968	1.718		.093	.031	.06	.093		.093	.858	.608	.484	.358	.733	.077	.116	.062	.937	.875	1.343	.125	.781	1.892	.046			.209	.093	.250	1.875		1.840	.046	.23	.16	1.938
140	AC	TESTER, CKT, IMU/CDU RSVR		2900286-011						4.125	1.812	3.250		.125	.062	.12	.156		.125	1.625	1.140	.890	.640	1.390	.125	.171	.125	1.875	1.687	2.625	.250	1.562	3.843	.093			.359	.125	.437	3.688		3.687	.093	.40	.25	3.875
139	AC	SIMULATOR, LD/SIG, CDU		2900285-011																																										
138	AC	SIMULATOR, LD/SIG, OPTICS		1902023-021																																										
137	AC	FIX., MOUNTING, IMU/NAV BASE		6900003-011																																										
136	AC	FIXTURE, OPTICS/NAV BASE		2900072-011																																										
135	AC	FIX., MOUNTING, SUB SYSTEM		2900070-011																																										
134	AC	FIX., HAND., G AND N HARNESS		2900069-011																																										
133	AC	CNTR, SHIPPING, NAV BASE		2900068-011																																										
132	AC	FIX., MOUNTING, G AND N		2900067-011																																										
131	AC	SIMULATOR, LD/SIG, IMU/CDU		2900062-011																																										
130	AC	TESTER, GYRO WHEEL		2900061-011																																										
129	AC	COOLANT SUPPLY		1902133-021																																										
128	AC	TABLE, ROTARY		1900926-021						4.125	1.812	3.250		.125	.062	.12	.156		.125	1.625	1.140	.890	.640	1.390	.125	.171	.125	1.875	1.687	2.625	.250	1.562	3.843	.093			.359	.125	.437	3.688		3.687	.093	.40	.25	3.875
127	AC	FIX., HAND., OPTICS		2900074-011						2.125	.968	1.718		.093	.031	.06	.093		.093	.858	.608	.484	.358	.733	.077	.116	.062	.937	.875	1.343	.125	.781	1.892	.046			.209	.093	.250	1.875		1.840	.046	.23	.16	1.938
126	AC	FIXTURE, MTG, PTA/PEA.		2900066-011																																										
125	AC	CONT, TEMP, IMU LIFTING		2900063-011																																										
124	AC	FIXTURE, HANDLING, IMU		2900064-011																																										
123	AC	CONT, OPTICS, REMOTE		1902046-021																																										
122	AC	TEST CONTROL		1902009-021																																										
121	AC	ADPT MODULE, P.S.A.		1902431-021																																										
120	AC	BRIDGE, DECADE ERROR		2900128-011																																										
119	AC	PWR SUP, ELECTRONICS		2900012-011																																										
118	AC	PWR SUP, RELAY AND LAMP		1900049-031																																										
117	AC	CONSOLE, OSCILLOGRAPH		1900000-021																																										
116	AC	ADPT MODULE, P.S.A.		1902431-011																																										
115	AC	ADPT, TEST POINT, PTA/PEA.		2900145-011																																										
114	AC	ADPT, TEST POINT, P.S.A.		2900037-011																																										
113	AC	CONTROL, GIMBAL POSITION		2900036-011																																										
112	AC	SELECTOR, SIGNAL, PRIMARY		2900035-011																																										
111	AC	SEL, SIG, OSCILLOGRAPH		2900034-011																																										
110	AC	PANEL, PWR SUP AND LOAD		2900033-011																																										
109	AC	PANEL, MONITOR		2900031-011																																										
108	AC	PANEL, AUXILIARY INPUT		2900030-011																																										
107	AC	CAGING ELECTRONICS, GYRO		2900029-011																																										
106	AC	TEST SELECTOR		2900028-011																																										
105	AC	TEST CONTROL		2900027-011																																										
104	AC	MONITOR AND CONTROL, TEMP		2900026-011																																										
103	AC	DISTRIBUTION BOX, GSE		2900024-011																																										
102	AC	VOLTMETER, DIGITAL		2900007-011			B	II	NOTE 11C	2.125	.968	1.718	NA	.093	.031	.06	.093	.188 .104	.093	.858	.608	.484	.358	.733	.077	.116	.062	.937	.875	1.343	.125	.781	1.892	.046	NA	NA	.209	.093	.250	1.875	NA	1.840	.046	.23	.16	1.938
101	AC	NAVIGATION BASE ASSEMBLY - LEM		6899950		NAS-9-497	A	I	NOTE 11B	2.000	1.312	1.906	1.375	.078	.048	.078	.093	NA	NA	1.125	.750	.593	.453	1.015	.062	.187	.078	.875	.718	1.375	.218	NA	NA	.048	.031	.875	.305	.078	.531	1.906	.078	NA	.078	.531	.187	NA
100	AC	NAVIGATION BASE ASSEMBLY		2899982		NAS-9-497	A	I	NOTE 11B	2.000	.312	1.906	1.375	.078	.048	.078	.093	NA	NA	1.125	.750	.593	.453	1.015	.062	.187	.078	.875	.718	1.375	.218	NA	NA	.048	.031	.875	.305	.078	.531	1.906	.078	NA	.078	.531	.187	NA

NOTES FOR TABLE

STYLE A IS FOR G & N SYSTEM
STYLE B IS FOR GROUND SUPPORT EQUIPMENT
TYPE I IS WITHOUT MOUNTING HOLES
TYPE II IS WITH MOUNTING HOLES

NOTE: AC DASH NO'S. CONT. ON SH.6

THIS SHEET ADDED
(G) REPLACES REV F WITH CHANGE

A.C ELECTRONICS DASH NUMBERS

QTY REQD	PART OR IDENTIFYING NO	MATERIAL OR NOTES	NOMENCLATURE OR DESCRIPTION	FIND NO

LIST OF MATERIALS

AS APPLICABLE	
NEXT ASSY	USED ON
APPLICATION	

UNLESS OTHERWISE SPECIFIED
DIMENSIONS ARE IN INCHES
CAPACITOR VALUES ARE IN µf
RESISTOR VALUES ARE IN OHMS
TOLERANCES ON
FRACTIONS DECIMALS ANGLES
± — ±.005 ± —
DO NOT SCALE THIS DRAWING
MATERIAL
SEE NOTE 11

MIT
INSTRUMENTATION LAB
CAMBRIDGE, MASS.

DRAWN R. A. Jones 7-16-65
CHECKED [illegible]
APPROVED [illegible]
APPROVED MIT [illegible]
APPROVED MSC [illegible]

MANNED SPACECRAFT CENTER
HOUSTON, TEXAS

NAMEPLATES,
APOLLO G&N-GSE
(STANDARDS)

CODE IDENT NO 80230
SIZE E
DRAWING NO. 1004260
SCALE NONE
SHEET 4 OF 6

REVISIONS 02768

SYM	ZONE	DESCRIPTION	DR	CHK	DATE	APPROVED
G		REPLACES REV F WITH CHANGE PER TDRR 20854			[illegible]	
H		REVISED PER TDRR 20892			[illegible]	
J		REVISED PER TDRR 20904			[illegible]	
K		REVISED PER TDRR 21379			[illegible]	
L		REVISED PER TDRR 21410			[illegible]	
M		REVISED PER TDRR 21993				
N		REVISED PER TDRR 22621				
P		REVISED PER TDRR 22671				
R		REVISED PER TDRR 22672				
S		REVISED PER TDRR 22750				
T		REVISED PER TDRR 22823				
U		REVISED PER TDRR 23072			[illegible]	
V		REVISED PER TDRR 23521			[illegible]	
W		REVISED PER TDRR 23824	RAJ		11-9-65	
Y		REVISED PER TDRR 24018	RAJ		11-16-65	
Z		REVISED PER TDRR 24040	RAJ		[illegible]-65	
AA		REVISED PER TDRR 24060	RAJ		[illegible]-65	
AB		REVISED PER TDRR 24868	RAJ		2-22-65	
AC		REVISED PER TDRR 24973	RAJ		1-4-66	
AD		REVISED PER TDRR 25065	RAJ		1-18-66	
AE		REVISED PER TDRR 25672	RAJ		2-4-66	
AF		REVISED PER TDRR 25671	RAJ		2-4-66	
AG		REVISED PER TDRR 26110	RAJ		2-15-66	
AH		REVISED PER TDRR 26372	"		3-16-66	
AJ		REVISED PER TDRR 26425	"		3-16-66	
AK		REVISED PER TDRR 26743	"		3-16-66	
AL		REVISED PER TDRR 26798	"		3-16-66	
AM		REVISED PER TDRR 27168	"		4-7-66	
AN		REVISED PER TDRR 27235	"		4-7-66	
AP		REVISED PER TDRR 27345	"		4-7-66	
AR		REVISED PER TDRR 27417	"		4-7-66	
AS		REVISED PER TDRR 27442	"		4-7-66	
AT		REVISED PER TDRR 27719	"		4-20-66	
AU		REVISED PER TDRR 27880	"		4-20-66	
AV		REVISED PER TDRR 27896	"		4-20-66	
AW		28110	"		5-16-66	
AY		28173	"			
AZ		28131	"			
BA		28124	"			
BB		REVISED PER TDRR 28511	"		5-16-66	
BC		" " " 28949	"		5-24-66	
BD		" " " 29222	"		6-8-66	
BE		" " " 29235	"		"	
BF		" " " 29322	"		6-24-66	
BG		" " " 29429	"		"	
BH		" " " 29449	"		"	
BJ		" " " 29335	"		"	
BK		" " " 29619	"		"	
BL		" " " 29696	"		6-29-66	
BM		REVISION STATUS CHANGED	JSD		7-29-66	
BN		REVISION STATUS CHANGED	JI	RW	[illegible] AUG 66	
BP		REVISION STATUS CHANGED	JI	RLW	[illegible] AUG 66	
BR		REVISION STATUS CHANGED	JI	RLW	[illegible] AUG 66	

THIS SHEET ADDED

Ⓖ REPLACES REV F WITH CHANGE

DASH NO.	P/C	PART NAME	REMARKS	PART NO.	SER. NO.	CONT. NO.	STYLE	TYPE	MATERIAL	A	B	C	D	E	F	G	H	J	K	L	M	N	P	R	S	T	U	V	W	Y	Z	AA	AB	AC	AD	AE	AF	AG	AH	AJ	AK	AL	AM	AN	AP	AR
499	MIT																																													
498																																														
401	MIT	COMPUTER ASSY		2003100		NAS-9-497	A	I	NOTE 11 B	2.000	1.312	.906	1.375	.078	.048	.078	.093	NA	NA	1.125	.750	.593	.453	1.015	.062	.187	.078	.875	.718	.375	.218	NA	NA	.048	.031	.875	.305	.078	.531	1.906	.078	NA	.078	.531	.187	NA
400	MIT	LIFTING SLING - G&N INST. QUAL. FIX. & AZM REF. FIX.		1021640		NAS-9-4065	B	II	NOTE 11 C	2.000	1.312	1.687	1.375	.078	.048	.078	.093	[illegible]	.093	1.187	.750	.593	.453	1.015	.062	.187	.078	.875	.718	1.375	.218	1.156	1.843	.048	NA	.875	.305	.078	.312	1.687	.110	1.830	.070	.275	.180	[illegible]

MIT DASH NUMBERS

NOTES FOR TABLE

STYLE A IS FOR G&N SYSTEM
STYLE B IS FOR GROUND SUPPORT EQUIPMENT
TYPE I IS WITHOUT MOUNTING HOLES
TYPE II IS WITH MOUNTING HOLES

QTY REQD	PART OR IDENTIFYING NO.	MATERIAL OR NOTES	NOMENCLATURE OR DESCRIPTION	FIND NO.

LIST OF MATERIALS

NEXT ASSY	USED ON
AS APPLICABLE	

APPLICATION

UNLESS OTHERWISE SPECIFIED
DIMENSIONS ARE IN INCHES
CAPACITOR VALUES ARE IN μf
RESISTOR VALUES ARE IN OHMS
TOLERANCES ON
FRACTIONS ± — DECIMALS ±.005 ANGLES ± —
DO NOT SCALE THIS DRAWING

MATERIAL
SEE NOTE 11

MIT
INSTRUMENTATION LAB
CAMBRIDGE, MASS

MANNED SPACECRAFT CENTER
HOUSTON, TEXAS

DRAWN R A Jones 7-16-65
CHECKED [illegible]
APPROVED
APPROVED W Kupfer [illegible]
APPROVED MIT W Kupfer [illegible]
APPROVED MSC [illegible]
DATE

NAMEPLATES,
APOLLO G&N-GSE
(STANDARDS)

CODE IDENT NO 80230
SIZE E
DRAWING NO. 1004260
SCALE NONE
SHEET [illegible] OF 6

NOTICE - WHEN GOVERNMENT DRAWINGS, SPECIFICATIONS, OR OTHER DATA ARE USED FOR ANY PURPOSE OTHER THAN IN CONNECTION WITH A DEFINITELY RELATED GOVERNMENT PROCUREMENT OPERATION, THE UNITED STATES GOVERNMENT THEREBY INCURS NO RESPONSIBILITY NOR ANY OBLIGATION WHATSOEVER, AND THE FACT THAT THE GOVERNMENT MAY HAVE FORMULATED, FURNISHED, OR IN ANY WAY SUPPLIED THE SAID DRAWINGS, SPECIFICATIONS OR OTHER DATA IS NOT TO BE REGARDED BY IMPLICATION OR OTHERWISE AS IN ANY MANNER LICENSING THE HOLDER OR ANY OTHER PERSON OR CORPORATION, OR CONVEYING ANY RIGHTS OR PERMISSION TO MANUFACTURE, USE, OR SELL ANY PATENTED INVENTION THAT MAY IN ANY WAY BE RELATED THERETO

REVISIONS 02768

SYM	ZONE	DESCRIPTION	DR	CHK	DATE	APPROVED
AG		CHANGED NUMBER OF SHEETS FROM 5 TO 6 PER TDRR 26110	RAJ		2-15-66	
AH		REVISED PER TDRR 26372	"		3-16-66	
AJ		REVISED PER TDRR 26425	"		3-16-66	
AK		REVISED PER TDRR 26743	"		3-16-66	
AL		REVISED PER TDRR 26798	"		3-16-66	
AM		REVISED PER TDRR 27168	"		4-7-66	
AN		REVISED PER TDRR 27235	"		4-7-66	
AP		REVISED PER TDRR 27345	"		4-7-66	
AR		REVISED PER TDRR 27417	"		4-7-66	
AS		REVISED PER TDRR 27442	"		4-7-66	
AT		REVISED PER TDRR 27719	"		4-20-66	
AU		REVISED PER TDRR 27880	"		4-20-66	
AV		REVISED PER TDRR 27896	"		4-20-66	
AW		28110	"		5-16-66	
AY		28173	"		5-16-66	
AZ		28131	"		5-16-66	
BA		28124	"		5-16-66	
BB		REVISED PER TDRR 28511	"		5-16-66	
BC		" " " 28949	"		5-24-66	
BD		" " " 29222	"		6-8-66	
BE		" " " 29235	"		"	
BF		" " " 29322	"		6-24-66	
BG		" " " 29429	"		"	
BH		" " " 29449	"		"	
BJ		" " " 29335	"		"	
BK		" " " 29619	"		"	
BL		" " " 29696	"		6-29-66	
BM		REVISION STATUS CHANGED	JSD	N.S.	7-29-66	
BN		REVISED PER TDRR 29974	JI	RLW	22 AUG 66	
BP		REVISION STATUS CHANGED	JI	RLW	22 AUG 66	
BR		REVISION STATUS CHANGED	JI	RLW	23 AUG 66	

DASH NO.	P/C	PART NAME	REMARKS	PART NO.	SER NO.	CONT NO.	STYLE	TYPE	MATERIAL	A	B	C	D	E	F	G	H	J	K	L	M	N	P	R	S	T	U	V	W	Y	Z	AA	AB	AC	AD	AE	AF	AG	AH	AJ	AK	AL	AM	AN	AP	AR
599	AC																																													
598	AC																																													
537	AC	TEST SELECTOR		2900028-031		NAS9-497	B	II	NOTE 11C	2.125	.968	1.718	NA	.093	.031	.06	.093	.100/.104	.093	.858	.608	.484	.358	.733	.077	.116	.062	.937	.875	1.343	.125	.781	1.892	.046	NA	NA	.209	.093	.250	1.875	NA	1.840	.046	.23	.16	1.938
536	AC	ANALYZER, OPTICS- INERTIAL		2900023-041						4.125	1.812	3.250		.125	.062	.12	.156	.100/.104	.125	1.625	1.140	.890	.640	1.390	.125	.171	.125	1.875	1.687	2.625	.250	1.562	3.843	.093			.359	.125	.437	3.688		3.687	.093	.40	.25	3.875
535	AC	CONT, TEMP, PORTABLE		2900060-021						2.125	.968	1.718		.093	.031	.06	.093	.100/.104	.093	.858	.608	.484	.358	.733	.077	.116	.062	.937	.875	1.343	.125	.781	1.892	.046			.209	.093	.250	1.875		1.840	.046	.23	.16	1.938
533	AC	ADPT MODULE, P.S.A.		1902431-041						2.125	.968	1.718		.093	.031	.06	.093	.100/.104	.093	.858	.608	.484	.358	.733	.077	.116	.062	.937	.875	1.343	.125	.781	1.892	.046			.209	.093	.250	1.875		1.840	.046	.23	.16	1.938
532	AC	TRAY BREAKOUT, 105 PIN		1900807-021						4.125	1.812	3.250		.125	.062	.12	.156	.100/.104	.125	1.625	1.140	.890	.640	1.390	.125	.171	.125	1.875	1.687	2.625	.250	1.562	3.843	.093			.359	.125	.437	3.688		3.687	.093	.40	.25	3.875
531	AC	TRAY BREAKOUT, 84 PIN		1900806-021						4.125	1.812	3.250		.125	.062	.12	.156	.100/.104	.125	1.625	1.140	.890	.640	1.390	.125	.171	.125	1.875	1.687	2.625	.250	1.562	3.843	.093			.359	.125	.437	3.688		3.687	.093	.40	.25	3.875
530	AC	HEAT SINK - TRAY EXTENDER		1900808-021						2.125	.968	1.718		.093	.031	.06	.093	.100/.104	.093	.858	.608	.484	.358	.733	.077	.116	.062	.937	.875	1.343	.125	.781	1.892	.046			.209	.093	.250	1.875		1.840	.046	.23	.16	1.938
529	AC	TESTER, FAILURE INDICATOR		1900809-021						2.125	.968	1.718	NA	.093	.031	.06	.093	.100/.104	.093	.858	.608	.484	.358	.733	.077	.116	.062	.937	.875	1.343	.125	.781	1.892	.046	NA	NA	.209	.093	.250	1.875	NA	1.840	.046	.23	.16	1.938
527	AC	FIX., MOUNTING, G AND N	(-144)	1902204-021						FOR DIMENSIONS, SEE DASH 500 VALUES BELOW																																				
526	AC	FIX., MOUNTING, G AND N	(-144)	2900067-031																																										
525	AC	PORTABLE TEMP.. CONTROLLER		1900496-021			B	II	NOTE 11C	3.000	1.937	2.437	2.312	.125	.031	.125	.156	.125	.125	1.718	1.187	.968	.749	1.452	.093	.295	.040	1.312	1.00	2.000	.250	1.687	2.750	.062	N/A	NA	.463	.125	.562	2.437	.140	2.562	.090	.468	.359	2.750
524	AC	POWER, SERVO AND THERMOCOUPLE ASSEMBLY C/M		2010743			A	I	NOTE 11B	2.125	.968	1.718	NA	.093	.031	.06	.093	NA	NA	.858	.608	.484	.358	.733	.062	.140	.062	NA	.968	1.450	.125	NA	1.720	.046	.03	NA	.210	NA	NA	NA	.070	NA	.046	.12	.16	NA
523	AC	PULSE TORQUE AND THERMOCOUPLE ASSEMBLY-LEM		6010656						FOR DIMENSIONS, SEE DASH 508 VALUES BELOW																																				
522	AC	COUPLING DATA UNIT AND THERMOCOUPLE ASSEMBLY - LEM		2010744																																										
521	AC	COUPLING DATA UNIT AND THERMOCOUPLE ASSEMBLY - C/M		2010744																																										
520	AC	PIPA ELECTRONICS AND THERMOCOUPLE ASSEMBLY		2010745			A	I	NOTE 11B																																					
519	AC	FIXTURE, HANDLING, LEM-PSA	(-141)	6900129-011			B	II	NOTE 11C	FOR DIMENSIONS, SEE DASH 504 VALUES BELOW																																				
518	AC	JUNCTION BOX, GSE-PSA	(-144)	1901933-031			B	II	NOTE 11C	FOR DIMENSIONS, SEE DASH 500 VALUES BELOW																																				
517	AC	FIX., HAND., OPTICS INSTL.	(-141)	2901380-011			B	II	NOTE 11C	FOR DIMENSIONS SEE DASH 502 VALUES BELOW																																				
516	AC	POWER, SERVO AND THERMOCOUPLE ASSEMBLY-LEM		6010655		NAS 9-497	A	I	NOTE 11B	FOR DIMENSIONS SEE DASH 508 VALUES BELOW																																				
514	AC	SIGNAL COND. ASSY LEM OPER.	(-100)	6007013		NAS-9-497	A	I	NOTE 11B	FOR DIMENSIONS, SEE DASH 508 VALUES BELOW																																				
513		JUMPER, BY-PASS	(-141)	1021616			B	II	NOTE 11C	2.125	.968	1.718	NA	.093	.031	.06	.093	.100/.104	.093	.858	.608	.484	.358	.733	.077	.116	.062	.937	.875	1.343	.125	.781	1.892	.046	NA	NA	.209	.093	.250	1.875	NA	1.840	.046	.23	.16	1.938
512		COUPLING DATA UNIT ASSEMBLY C/M	(-100)	2007322-011			A	I	NOTE 11B	FOR DIMENSIONS, SEE DASH 508 VALUES BELOW																																				
511		COUPLING DATA UNIT ASSEMBLY - LEM	(-100)	2007322-021																																										
510		BATTERY POWER PACK	(-144)	1900011-041			B	II	NOTE 11C	FOR DIMENSIONS, SEE DASH 500 VALUES BELOW																																				
509		JUNCTION BOX, P.S.A/G.S.E.	(-144)	1902195-021			B	II	NOTE 11C																																					
508		NAVIGATION BASE ASSEMBLY - LEM	✓ (-101)	6899980			A	I	NOTE 11B	2.000	1.312	1.906	1.375	.078	.048	.078	.093	NA	NA	1.125	.750	.593	.453	1.015	.062	.187	.078	.875	.718	1.375	.218	NA	NA	.048	.031	.875	.305	.078	.531	1.906	.078	NA	.078	.53	.187	NA
507		CSL, COOL. AND PWR, G AND N	(-144)	1902134-041			B	II	NOTE 11C	FOR DIMENSIONS, SEE DASH 500 VALUES BELOW																																				
506		BREAKOUT BOX, CABLE ADAPTER	(-141)	2901011-011						2.125	.968	1.718	NA	.093	.031	.06	.093	.100/.104	.093	.858	.608	.484	.358	.733	.077	.116	.062	.937	.875	1.343	.125	.781	1.892	.046	NA	NA	.209	.093	.250	1.875	NA	1.840	.046	.23	.16	1.938
505		MONITOR AND CONTROL, TEMP	(-141)	2900026-021																																										
504		PWR SUP, GUIDANCE SYSTEM	✓ (-141)	1900033-021																																										
503		CONTROL, GIMBAL POSITION	(-141)	2900036-021																																										
502		ADPT, TEST POINT, PTA/PEA.	(-141)	2900145-021																																										
501		MOUNTING PLATE, COMPONENT	(-144)	6900007-03						FOR DIMENSIONS, SEE DASH 500 VALUES BELOW																																				
500	AC	MOUNTING PLATE, COMPONENT	✓ (-144)	1900677-02		NAS 9-497	B	II	NOTE 11C	4.125	1.812	3.250	NA	.125	.062	.12	.156	.100/.104	.25	1.625	1.140	.890	.640	1.390	.125	.171	.25	1.675	.687	2.625	.250	.562	3.843	.093	NA	NA	.359	.125	.437	3.688	NA	3.687	.093	.40	.25	3.875

AC ELECTRONICS DASH NUMBERS

(AG) THIS SHEET ADDED

NOTES FOR TABLE
STYLE A IS FOR G&N SYSTEM
STYLE B IS FOR GROUND SUPPORT EQUIPMENT
TYPE I IS WITHOUT MOUNTING HOLES
TYPE II IS WITH MOUNTING HOLES

QTY REQD	PART OR IDENTIFYING NO.	MATERIAL OR NOTES	NOMENCLATURE OR DESCRIPTION	FIND NO.

LIST OF MATERIALS

NEXT ASSY	USED ON
AS APPLICABLE	

APPLICATION

UNLESS OTHERWISE SPECIFIED
DIMENSIONS ARE IN INCHES
CAPACITOR VALUES ARE IN µf
RESISTOR VALUES ARE IN OHMS
TOLERANCES ON
FRACTIONS DECIMALS ANGLES
± — ±.005 ± —
DO NOT SCALE THIS DRAWING

MATERIAL
SEE NOTE 11

MIT
INSTRUMENTATION LAB
CAMBRIDGE, MASS

DRAWN R. A. Jones 2-15-66
CHECKED W. Chandler 2-15-66
APPROVED
APPROVED
APPROVED MIT A. C. METZGER 5-16-66
APPROVED MSC
DATE

MANNED SPACECRAFT CENTER
HOUSTON, TEXAS

NAMEPLATES,
APOLLO G&N-GSE
(STANDARDS)

CODE IDENT NO 80230
SIZE E
DRAWING NO. 1004260
SCALE NONE
SHEET 6 OF 6

NOTES:

1. INTERPRET DRAWING IN ACCORDANCE WITH STANDARDS PRESCRIBED IN MIL-D-70327.
2. DIMENSIONS ON EACH VIEW APPLY TO ALL VIEWS. (WITH THE EXCEPTION OF MOUNTING HOLES).
3. FORMATS ILLUSTATED WILL BE APPLICABLE TO ALL ITEMS REQUIRING NAMEPLATES BELOW END ITEM DESIGNATION (SYSTEMS, ASSEMBLIES, ETC.)
4. PLATE BACKGROUND TO BE LUSTERLESS BLACK PER FED-STD-595, COLOR 37038. BORDER, MARKING AND LETTERING TO BE NATURAL METAL,(ANODIZED ALUMINUM).
5. MARKING METHOD TO BE DIE STAMPING, ETCHING OR ENGRAVING IN ACCORDANCE WITH MIL P 19834.
6. LETTERING STYLE TO BE GOTHIC,(SANS SERIFS), AND NUMBERS TO BE ARABIC.
7. WHERE LOCATING DIMENSIONS ARE NOT SHOWN, CHARACTERS SHALL BE SYMMETRICALLY POSITIONED.
8. IDENTIFY WITH DRAWING NUMBER PER ND1002019.
9. WHEN "AUTO MARK" METAL MARKING TYPEWRITER IS USED TO ADD DATA TO BLANK SPACES, TYPE SIZE IS TO BE SELECTED FROM DIMENSIONS U, AC AND AM.
10. NASA SYMBOL IS TO BE PROPORTIONAL TO NAMEPLATE IN RATIO OF 1 TO 5 WITH DIMENSION A VALUE AND IS TO HAVE NATURAL BACKGROUND. NASA SYMBOL LETTERS LETTERING AND FEATHER TO BE BLACK,(OR WHITE FOR SILK SCREENING). WHERE BLACK FEATHER PROTRUDES INTO BLACK BACKGROUND, A MINIMUM OUTLINE OF NATURAL BACKGROUND SHALL EXIST.
11. NAMEPLATES WILL BE APPLIED BY METHODS LISTED BELOW, SHOWN IN ORDER OF PREFERENCE, (I.E., FOR RELIABILITY AND WEIGHT).
    - A - STENCIL OR SILK SCREEN DIRECTLY ON EQUIPMENT USING INK PER SCD 1010920,(WHITE OR BLACK).
    - B - ALUMINUM FOIL,(STYLE A OR B, TYPE I):
        FOIL SHALL BE .0030 ±.0005 THICK PER MIL-A-148.
        FOIL SHALL HAVE NO ADHESIVE BACKING.
        FOIL SHALL BE BONDED PER ND 1002219,(METHOD II).
        FOIL SHALL BE CLEAR ANODIZED PER MIL-A-8625, TYPE II.
    - C - PLATE, (STYLE A OR B, TYPE II):
        MATERIAL: QQ-A-250, TEMPER O OR H14, TYPE 1100,ALUMINUM ALLOY, .032 THICK.
        ANODIZE PER MIL-A-8625, TYPE II.
        ALUMINUM PLATE MUST BE FREE FROM BURRS AND SHARP CORNERS, MOUNTED WITH APPLICABLE SIZE FASTENERS.
12. NAMEPLATES SHALL BE CAPABLE OF MEETING APPLICABLE REQUIREMENTS OF MIL-M-13231.
13. ON DIMENSION TABLES SHOWN ON PAGES 2,3,4 AND 5, NA MEANS, "NOT APPLICABLE".

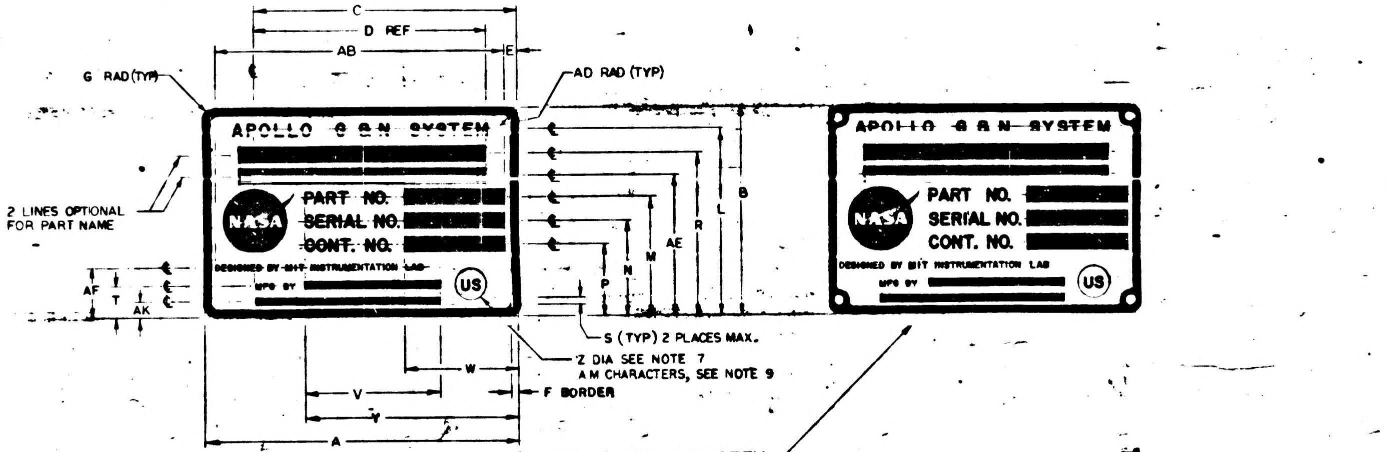
C
D REF
AB
E
G RAD(TYP)
AD RAD (TYP)
APOLLO G&N SYSTEM
PART NO.
SERIAL NO.
CONT. NO.
NASA
DESIGNED BY MIT INSTRUMENTATION LAB
MFD BY
US
2 LINES OPTIONAL FOR PART NAME
AF
T
AK
B
L
R
AE
M
N
P
S (TYP) 2 PLACES MAX.
Z DIA SEE NOTE 7
AM CHARACTERS, SEE NOTE 9
F BORDER
W
V
Y
A

FOR G AND N SYSTEM
STYLE A

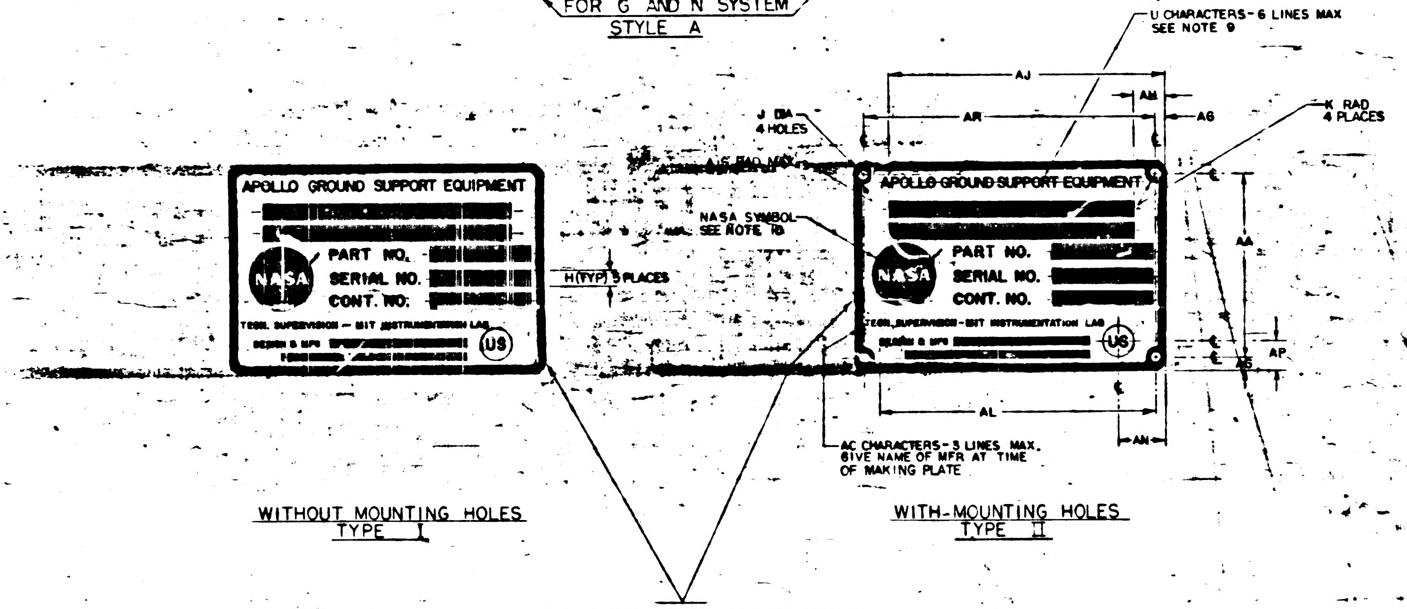
U CHARACTERS-6 LINES MAX SEE NOTE 9
AJ
AR
AM
AG
J DIA 4 HOLES
K RAD 4 PLACES
APOLLO GROUND SUPPORT EQUIPMENT
PART NO.
SERIAL NO.
CONT. NO.
NASA
NASA SYMBOL SEE NOTE 10
H(TYP) 3 PLACES
TEST SUPERVISION - MIT INSTRUMENTATION LAB
DESIGN & MFG
US
AA
AP
AL
AN
AC CHARACTERS-3 LINES MAX. GIVE NAME OF MFR AT TIME OF MAKING PLATE

WITHOUT MOUNTING HOLES
TYPE I

WITH MOUNTING HOLES
TYPE II

FOR GROUND SUPPORT EQUIPMENT
STYLE B

REVISIONS						
SYM	ZONE	DESCRIPTION	[illegible]	CHK	DATE	APPROVED
G		REPLACES REV F WITH CHANGE PER TDRR 20854				
H		REVISED PER TDRR 20892				
J		REVISED PER TDRR 20904				
K		REVISED PER TDRR 21379				
L		REVISED PER TDRR 21410				
M		REVISED PER TDRR 21998				
N		REVISED PER TDRR 22621				
P		REVISED PER TDRR 22671				
R		REVISED PER TDRR 22672				
S		REVISED PER TDRR 22750				
T		REVISED PER TDRR 22823				
U		REVISED PER TDRR 23072				
V		REVISED PER TDRR 23521			10-27-65	
W		REVISED PER TDRR 23824	RAJ		11-9-65	
Y		REVISED PER TDRR 24018	RAJ		11-16-65	
Z		REVISED PER TDRR 24040	RAJ		11-19-65	
AA		REVISED PER TDRR 24060	RAJ		11-19-65	
AB		REVISED PER TDRR 24868	RAJ		12-22-65	
AC		REVISED PER TDRR 24973	RAJ		1-4-66	
AD		REVISED PER TDRR 25065	RAJ		1-18-66	
AE		REVISED PER TDRR 25672	RAJ		2-4-66	
AF		REVISED PER TDRR 25671	RAJ		2-4-66	
AG		REVISED PER TDRR 26110	RAJ		2-15-66	
AH		REVISED PER TDRR 26372	"		3-16-66	
AJ		REVISED PER TDRR 26425	"		3-16-66	
AK		REVISED PER TDRR 26743	"		3-16-66	
AL		REVISED PER TDRR 26798	"		3-16-66	
AM		REVISED PER TDRR 27168	"		4-7-66	
AN		REVISED PER TDRR 27235	"		4-7-66	
AP		REVISED PER TDRR 27345	"		4-7-66	
AR		REVISED PER TDRR 27417	"		4-7-66	
AS		REVISED PER TDRR 27442	"		4-7-66	
AT		REVISED PER TDRR 27719	"		4-20-66	
AU		REVISED PER TDRR 27880	"		4-20-66	
AV		REVISED PER TDRR 27896	"		4-20-66	
AW		28110	"		5-16-66	
AY		28173	"			
AZ		28131	"			
BA		28124	"			
BB		REVISED PER TDRR 28511	"		5-16-66	
BC		" " " 28949	"		5-24-66	
BD		" " " 29222	"		6-8-66	
BE		" " " 29235	"		[illegible]	
BF		" " " 29322	"		[illegible]	
BG		" " " 29429				
BH		" " " 29449				
BJ		" " " 29335				
BK		" " " 296 9			"	
BL		" " " 29696	"		"	
BM		REVISION STATUS CHANGED	JSD	NS	7-29-66	
BN		REVISION STATUS CHANGED	JI	[illegible]	[illegible] AUG 66	
BP		REVISION STATUS CHANGED	JI	RLW	[illegible] 66	
BR		REVISION STATUS CHANGED	JI	RLW	[illegible] AUG 66	
BS		REVISION STATUS CHANGED	GW	RLW	[illegible]	

SUGGESTED PROPORTIONS FOR NAMEPLATE DIMENSIONS.
1. SELECT NAMEPLATE LENGTH, DIMENSION "A", TO FIT DESIGN NEEDS.
2. DIMENSIONS B THRU AS ON LINE 1 BELOW ARE PROPORTIONAL TO "A" BY MULTIPLIERS SHOWN IN LINE 2 BELOW.

1.	A	B	C	D	E	F	G	H	J	K	L	M	N	P	R	S	T
2.	1.000 A	.6563 A	.8438 A	.6875 A	.0391 A	.0240 A	.0391 A	.0469 A	.0547 A	.0469 A	.5938 A	.3750 A	.2969 A	.2187 A	.5079 A	.0313 A	.0938 A

1.	U	V	W	Y	Z	AA	AB	AC	AD	AE	AF	AG	AH	AJ	AK	AL	AM	AN	AP	AR	AS
2.	.0391 A	.4375 A	.3594 A	.6875 A	.1094 A	.5781 A	.9219 A	.0240 A	.0156 A	.4375 A	.1525 A	.0391 A	.1563 A	.8438 A	.0548 A	.8659 A	.0391 A	.1563 A	.0938 A	.9219 A	.0151 A

Ⓖ REPLACES REV F WITH CHANGE

QTY REQD	PART OR IDENTIFYING NO.	MATERIAL OR NOTES	NOMENCLATURE OR DESCRIPTION	FIND NO.

LIST OF MATERIALS

AS APPLICABLE
NEXT ASSY | USED ON
APPLICATION

UNLESS OTHERWISE SPECIFIED
DIMENSIONS ARE IN INCHES
CAPACITOR VALUES ARE IN µf
RESISTOR VALUES ARE IN OHMS
TOLERANCES ON
FRACTIONS ± — DECIMALS ±.005 ANGLES ± —
DO NOT SCALE THIS DRAWING

MATERIAL
SEE NOTE 11

MIT
INSTRUMENTATION LAB
CAMBRIDGE, MASS.

DRAWN R. A. Jones 7/16/65
CHECKED C. J. [illegible] 7-22-65
APPROVED
APPROVED
APPROVED MIT
APPROVED MSC
DATE

MANNED SPACECRAFT CENTER
HOUSTON, TEXAS

NAMEPLATES,
APOLLO G&N-GSE
(STANDARDS)

CODE IDENT NO 80230
SIZE E
DRAWING NO. 1004260
SCALE NONE
SHEET 1 OF 6

NOTICE – WHEN GOVERNMENT DRAWINGS, SPECIFICATIONS, OR OTHER DATA ARE USED FOR ANY PURPOSE OTHER THAN IN CONNECTION WITH A DEFINITELY RELATED GOVERNMENT PROCUREMENT OPERATION, THE UNITED STATES GOVERNMENT THEREBY INCURS NO RESPONSIBILITY NOR ANY OBLIGATION WHATSOEVER; AND THE FACT THAT THE GOVERNMENT MAY HAVE FORMULATED, FURNISHED, OR IN ANY WAY SUPPLIED THE SAID DRAWINGS, SPECIFICATIONS, OR OTHER DATA IS NOT TO BE REGARDED BY IMPLICATION OR OTHERWISE AS IN ANY MANNER LICENSING THE HOLDER OR ANY OTHER PERSON OR CORPORATION, OR CONVEYING ANY RIGHTS OR PERMISSION TO MANUFACTURE, USE, OR SELL ANY PATENTED INVENTION THAT MAY IN ANY WAY BE RELATED THERETO.

REVISIONS 02768

SYM	ZONE	DESCRIPTION	DR	CHK	DATE	APPROVED
G		REPLACES REV F WITH CHANGE PER TDRR 20854.	[illegible]		7/22/65	WR
H		REVISED PER TDRR 20892	[illegible]		[illegible]	WR
J		REVISED PER TDRR 20904	[illegible]		[illegible]	WR
K		REVISED PER TDRR 21379	[illegible]		[illegible]	WR
L		REVISED PER TDRR 21410	[illegible]		[illegible]	WR
M		REVISED PER TDRR 21993	"			
N		REVISED PER TDRR 22621	"		10/11/65	
P		REVISED PER TDRR 22671	"			
R		REVISED PER TDRR 22672				
S		REVISED PER TDRR 22750	"			WR
T		REVISED PER TDRR 22823	"			
U		REVISED PER TDRR 23072	"		10-12-65	[illegible]
V		REVISED PER TDRR 23521	"		10-27-65	WR
W		REVISED PER TDRR 23824	RAJ		11-9-65	WR
Y		REVISED PER TDRR 24018	RAJ		11-16-65	WR
Z		REVISED PER TDRR 24040	RAJ		11-19-65	WR
AA		REVISED PER TDRR 24060	RAJ		11-19-65	WR
AB		REVISED PER TDRR 24868	RAJ		12-22-65	WR
AC		REVISED PER TDRR 24973	RAJ		1-4-66	WR
AD		REVISED PER TDRR 25065 →	RAJ		1-18-66	[illegible]
AE		REVISED PER TDRR 25672	RAJ		2-4-66	WR
AF		REVISED PER TDRR 25671	RAJ		2-4-66	WR
AG		REVISED PER TDRR 26110	RAJ		2-15-66	WR
AH		REVISED PER TDRR 26372	"		3-16-66	[illegible]
AJ		REVISED PER TDRR 26425	"		3-16-66	[illegible]
AK		REVISED PER TDRR 26743	"		3-16-66	[illegible]
AL		REVISED PER TDRR 26798	"		3-16-66	[illegible]
AM		REVISED PER TDRR 27168	"		4-8-66	[illegible]
AN		REVISED PER TDRR 27235	"		4-8-66	[illegible]
AP		REVISED PER TDRR 27345	"		4-8-66	[illegible]
AR		REVISED PER TDRR 27417	"		4-8-66	[illegible]
AS		REVISED PER TDRR 27442	"		4-8-66	[illegible]
AT		REVISED PER TDRR 27719	"		4-21-66	WR
AU		REVISED PER TDRR 27880	"		4-21-66	WR
AV		REVISED PER TDRR 27896	"		4-21-66	WR
AW		28110	"		5-16-66	[illegible]
AY		28173	"			[illegible]
AZ		28131				[illegible]
BA		28124	"			[illegible]
BB		REVISED PER TDRR 28511	"		5-16-66	[illegible]
BC		" " " 28949	"		5-24-66	[illegible]
BD		" " " 29222	"		6-8-66	[illegible]
BE		" " " 29235	"		"	[illegible]
BF		" " " 29322	"		6-30-66	[illegible]
BG		" " " 29429	"		"	[illegible]
BH		" " " 29449	"		"	[illegible]
BJ		" " " 29335	"		"	[illegible]
BK		" " " 29619	"		"	[illegible]
BL		" " " 29696	"		"	[illegible]
BM		REVISION STATUS CHANGED	JSD	N.S.	7-29-66	
BN		REVISION STATUS CHANGED	JI	RLW	[illegible]	
BP		REVISION STATUS CHANGED	JI	RLW	[illegible]	
BR		REVISION STATUS CHANGED	JI	RLW	[illegible]	
BS		REVISION STATUS CHANGED	GW	RLW	[illegible] AUG 66	

DASH NO.	P/C	PART NAME	REMARKS	PART NO.	SER. NO.	CONT. NO.	STYLE	TYPE	MATERIAL	A	B	C	D	E	F	G	H	J	K	L	M	N	P	R	S	T	U	V	W	Y	Z	AA	AB	AC	AD	AE	AF	AG	AH	AJ	AK	AL	AM	AN	AP	AR
399	K																																													
398	K																																													
350	K	ALIGNMENT OPTICAL TELESCOPE (LEM)		NA	NA	NA	A	I	NOTE 11B	4.000	2.625	3.375	2.750	.156	.093	.156	.187	NA	NA	2.312	1.468	1.187	.906	2.031	NA	.375	.156	NA	1.437	2.750	.437	NA	3.688	.062	.062	1.750	.593	NA	.625	3.375	.187	NA	.156	.531	.453	NA
309	K																																													
308	K																																													
307	K						B	I	NOTE 11 B	4.000	2.625	3.375	2.750	.156	.093	.156	.187	NA	NA	2.328	1.468	1.187	.906	2.031	.062	.375	.156	NA	1.437	2.750	.437	NA	3.687	.062	.062	1.750	.593	NA	NA	NA	NA	NA	NA	NA	NA	NA
306	K						B	II	NOTE 11 C	4.000	2.625	3.375	2.750	.156	.093	.156	.187	.125	.156	2.328	1.468	1.187	.906	2.031	.062	.375	.156	↕	1.437	2.750	.437	2.312	3.687	.062	NA	1.750	.593	↕	↕	↕	↕	↕	↕	↕	↕	↕
305	K						B	I	NOTE 11 B	2.000	1.312	1.687	1.375	.078	.048	.078	.093	NA	NA	1.164	.734	.593	.453	1.015	.048	.171	.078	↕	.718	1.375	.187	NA	NA	.048	.031	.875	.320	↕	↕	↕	↕	↕	↕	↕	↕	↕
304	K						B	II	NOTE 11 C	2.000	1.312	1.687	1.375	.078	.048	.078	.093	.070	.078	1.164	.734	.593	.453	1.015	.048	.171	.078	NA	.718	1.375	.187	.156	1.843	.048	NA	.875	.320	NA	NA	NA	NA	NA	NA	NA	NA	NA
303	K																																													
302	K																																													
301	K																																													
300	K	OPTICAL UNIT		NA	NA	NA	A	I	NOTE 11 B	2.000	1.312	.675	NA	NA	.048	.078	NA	NA	NA	1.090	.812	.675	.540	.940	NA	.265	NA	NA	NA	1.375	.218	NA	NA	NA	NA	NA	.375	NA	NA	NA	.180	NA	.078	NA	NA	NA
9	K	2 IN AUTOCOLLIMATOR		1001702			B	II	NOTE 11 C	4.000	2.625	3.812	2.750	.156	.093	.156	.187	.125	.156	2.250	1.500	1.187	.906	2.031	.093	.375	.156	1.750	1.437	2.750	.437	2.312	3.687	.062	NA	1.750	.593	.156	1.062	3.812	.156	NA	.156	1.062	.375	3.687
8	K	5 IN AUTOCOLLIMATOR		1017410			B	II	NOTE 11 C	4.000	2.625	3.812	2.750	.156	.093	.156	.187	.125	.156	2.250	1.500	1.187	.906	2.031	.093	.375	.156	1.750	1.437	2.750	.437	2.312	3.687	.062	NA	1.750	.593	.156	1.062	3.812	.156	NA	.156	1.062	.375	3.687
7	K	2½ IN AUTOCOLLIMATOR (SCT)		1017435			B	II	NOTE 11 C	4.000	2.625	3.812	2.750	.156	.093	.156	.187	.125	.156	2.250	1.500	1.187	.906	2.031	.093	.375	.156	1.750	1.437	2.750	.437	2.312	3.687	.062	NA	1.750	.593	.156	1.062	3.812	.156	NA	.156	1.062	.375	3.687
6	K	2½ IN AUTOCOLLIMATOR (SXT)		1017448			B	II	NOTE 11 C	4.000	2.625	3.812	2.750	.156	.093	.156	.187	.125	.156	2.250	1.500	1.187	.906	2.031	.093	.375	.156	1.750	1.437	2.750	.437	2.312	3.687	.062	NA	1.750	.593	.156	1.062	3.812	.156	NA	.156	1.062	.375	3.687
5	K	RETROREFLECTING PRISM ASSEMBLY		1019840			B	I	NOTE 11 B	4.000	2.625	3.812	2.750	.156	.093	.156	.187	NA	NA	2.250	1.500	1.187	.906	2.031	.093	.375	.156	1.750	1.437	2.750	.437	NA	NA	.062	.062	1.750	.593	.156	1.062	3.812	.156	NA	.156	1.062	.375	NA
4	K	S/H SIMULATOR ASSEMBLY		1019896			B	I	NOTE 11 B	4.000	2.625	3.812	2.750	.156	.093	.156	.187	NA	NA	2.250	1.500	1.187	.906	2.031	.093	.375	.156	1.750	1.437	2.750	.437	NA	NA	.062	.062	1.750	.593	.156	1.062	3.812	.156	NA	.156	1.062	.375	NA
3	K	REFERENCE MIRROR		1001767			B	I	NOTE 11 B	2.000	1.312	1.906	1.375	.078	.048	.078	.093	NA	NA	1.125	.750	.593	.453	1.015	.062	.187	.078	.875	.718	1.375	.218	NA	NA	.048	.031	.875	.305	.078	.531	1.906	.078	NA	.078	.531	.187	NA
2	K	2 IN PLANE READING AUTOCOLLIMATOR		1017413			B	I	NOTE 11 B	2.000	1.312	1.906	1.375	.078	.048	.078	.093	NA	NA	1.125	.750	.593	.453	1.015	.062	.187	.078	.875	.718	1.375	.218	NA	NA	.048	.031	.875	.305	.078	.531	1.906	.078	NA	.078	.531	.187	NA
1	K	2 IN AUTOCOLLIMATOR		1001702			B	I	NOTE 11 B	2.000	1.312	1.906	1.375	.078	.048	.078	.093	NA	NA	1.125	.750	.593	.453	1.015	.062	.187	.078	.875	.718	1.375	.218	NA	NA	.048	.031	.875	.305	.078	.531	1.906	.078	NA	.078	.531	.187	NA

NOTES FOR TABLE

STYLE A IS FOR G&N SYSTEM
STYLE B IS FOR GROUND SUPPORT EQUIPMENT
TYPE I IS WITHOUT MOUNTING HOLES
TYPE II IS WITH MOUNTING HOLES.

Ⓖ REPLACES REV F WITH CHANGE

KOLLSMAN DASH NUMBERS

QTY REQD	PART OR IDENTIFYING NO.	MATERIAL OR NOTES	NOMENCLATURE OR DESCRIPTION	FIND NO.

LIST OF MATERIALS

NEXT ASSY	USED ON
AS APPLICABLE	

APPLICATION

UNLESS OTHERWISE SPECIFIED
DIMENSIONS ARE IN INCHES
CAPACITOR VALUES ARE IN µf
RESISTOR VALUES ARE IN OHMS
TOLERANCES ON
FRACTIONS ± — DECIMALS ±.005 ANGLES ± —
DO NOT SCALE THIS DRAWING

MATERIAL
SEE NOTE 11

MIT
INSTRUMENTATION LAB
CAMBRIDGE, MASS.

MANNED SPACECRAFT CENTER
HOUSTON, TEXAS

		DATE
DRAWN	R. A. Jones	7-16-65
CHECKED	[illegible]	7-22-65
APPROVED		
APPROVED	W. Kupfer	7/22/65
APPROVED MIT	W. Kupfer	7/22/65
APPROVED MSC	[illegible]	[illegible]

NAMEPLATES,
APOLLO G&N-GSE
(STANDANDS)

CODE IDENT NO. 80230
SIZE E
DRAWING NO. 1004260
SCALE NONE
SHEET 2 OF 6

REVISIONS

02768

SYM	ZONE	DESCRIPTION	DR	CHK	DATE
G		REPLACES REV F WITH CHANGE PER TDRR 20854			[illegible]
H		REVISED PER TDRR 20892			[illegible]
J		REVISED PER TDRR 20904			[illegible]
K		REVISED PER TDRR 21379			[illegible]
L		REVISED PER TDRR 21410			[illegible]
M		REVISED PER TDRR 21993			
N		REVISED PER TDRR 22621			[illegible]
P		REVISED PER TDRR 22671			[illegible]
R		REVISED PER TDRR 22672			
S		REVISED PER TDRR 22750			[illegible]
T		REVISED PER TDRR 22823			[illegible]
U		REVISED PER TDRR 23072			10-[illegible]-65
V		REVISED PER TDRR 23521			10-26-65
W		REVISED PER TDRR 23824	RAJ		11-9-65
Y		REVISED PER TDRR 24018	RAJ		11-16-65
Z		REVISED PER TDRR 24040	RAJ		11-19-65
AA		REVISED PER TDRR 24060	RAJ		11-19-65
AB		REVISED PER TDRR 24868	RAJ		12-22-65
AC		REVISED PER TDRR 24973	RAJ		1-4-66
AD		REVISED PER TDRR 25065	RAJ		1-18-66
AE		REVISED PER TDRR 25672	RAJ		2-4-66
AF		REVISED PER TDRR 25671	RAJ		2-4-66
AG		REVISED PER TDRR 26110	RAJ		2-15-66
AH		REVISED PER TDRR 26372	"		3-16-66
AJ		REVISED PER TDRR 26425	"		3-16-66
AK		REVISED PER TDRR 26743	"		3-16-66
AL		REVISED PER TDRR 26798	"		3-16-66
AM		REVISED PER TDRR 27168	"		4-8-66
AN		REVISED PER TDRR 27235	"		4-8-66
AP		REVISED PER TDRR 27345	"		4-8-66
AR		REVISED PER TDRR 27417	"		4-8-66
AS		REVISED PER TDRR 27442	"		4-8-66
AT		REVISED PER TDRR 27719	"		4-20-66
AU		REVISED PER TDRR 27880	"		4-20-66
AV		REVISED PER TDRR 27896	"		4-20-66
AW		28110	"		5-16-66
AY		28173	"		5-16-66
AZ		28131	"		5-16-66
BA		28124	"		5-16-66
BB		REVISED PER TDRR 28511	"		5-16-66
BC		" " " 28949	"		5-24-66
BD		" " " 29222	"		6-8-66
BE		" " " 29235	"		"
BF		" " " 29322	"		6-29-66
BG		" " " 29429	"		"
BH		" " " 29449	"		"
BJ		" " " 29335	"		"
BK		" " " 29619	"		"
BL		" " " 29696	"		"
BM		" " " 29802	JSD	N.S.	7-29-66
BN		REVISION STATUS CHANGED	JI	RLW	[illegible] AUG 66
BP		REVISED PER TDRR 30168	JI	RLW	[illegible] AUG 66
BR		REVISION STATUS CHANGED	JI	RLW	[illegible] AUG 66
BS		REVISION STATUS CHANGED	GW		26 AUG 66

DASH NO.	P/C	PART NAME	REMARKS	PART NO.	SER. NO.	CONT. NO.	STYLE	TYPE	MATERIAL	A
299	R									
298	R									
277	R	COMPUTER TEST SET		2014042-041	NA	NAS-9-497	B	II	NOTE 11 C	FOR DIMENSIONS, SEE DASH 18 VALUES BELOW
276		DRAWER ASSY - PROGRAM & MONITOR		2014041-041				I	NOTE 11 B	FOR DIMENSIONS, SEE DASH 17 VALUES BELOW
275		DRAWER ASSY RDC INTERFACE		2014045-031						
274		SELF TEST ASSY		2014366-031						FOR DIMENSIONS, SEE DASH 15 VALUES BELOW
273		LOGIC DRAWER ASSY NO. 2		2014037-031						FOR DIMENSIONS, SEE DASH 17 VALUES BELOW
272		DRAWING ASSY PROGRAMMER & MONITOR		2014041-031						FOR DIMENSIONS, SEE DASH 17 VALUES BELOW
271		LOGIC DRAWER ASSY NO. 1		2014036-031				I	NOTE 11 B	
270		COMPUTER TEST SET		2014042-031				II	NOTE 11 C	FOR DIMENSIONS, SEE DASH 18 VALUES BELOW
269		POWER CONTROL ASSY		2014044-021				I	NOTE 11 B	FOR DIMENSIONS, SEE DASH 17 VALUES BELOW
268		SELF TEST ASSY		2014366-021						
267		AGC JUNCTION ASSY		2014341-021						
266		POWER CONTROL ASSY		2014079-021						FOR DIMENSIONS, SEE DASH 15 VALUES BELOW
265		BUFFER CIRCUIT ASSY		2014254-021						
264		DRAWER ASSY X Y INTERFACE		2014040-021						
263		DRAWER ASSY R D C INTERFACE		2014045-021						
262		DRAWER ASSY PROGRAMMER & MONITOR		2014041-021						
261		LOGIC DRAWER ASSY NO. 2		2014037-021						FOR DIMENSIONS, SEE DASH 17 VALUES BELOW
260		LOGIC DRAWER ASSY NO. 1		2014036-021				I	NOTE 11 B	
259		OPERATION CONSOLE		2014024-021				II	NOTE 11 C	
258		COMPUTER TEST SET		2014042-021						
257		AUXILIARY CALIBRATION CONSOLE		2014059-021						FOR DIMENSIONS, SEE DASH 18 VALUES BELOW
256		AGC CALIBRATION CONSOLE		2014049-021				II	NOTE 11 C	
255		AGC HANDLING FIXTURE		2014282-021				I	NOTE 11 B	FOR DIMENSIONS, SEE DASH 17 VALUES BELOW
254		DRAWER ASSY COMP. SIMULATOR		2014048-011				II	NOTE 11 C	
253		SHIPPING KIT ASSY, NAV DSKY		2016312-011						FOR DIMENSIONS, SEE DASH 18 VALUES BELOW
252		SHIPPING KIT ASSY, UNIVERSAL DSKY		2016316-011						
251		SHIPPING KIT ASSY, MAIN DSKY		2016313-011				II	NOTE 11 C	
250		AMPLIFIER, REWORK		2014386				I	NOTE 11 B	FOR DIMENSIONS, SEE DASH 15 VALUES BELOW
249		TEMP MONITOR ASSY		2014313-011					NOTE 11 C	FOR DIMENSIONS, SEE DASH 17 VALUES BELOW
248		AGC JUNCTION ASSY		2014341-011					NOTE 11 B	
247		AC INPUT PANEL ASSY		2014302-011						FOR DIMENSIONS, SEE DASH 15 VALUES BELOW
246		SELF TEST ASSY		2014392-011						
245		TAPE PUNCH ASSEMBLY		2014039-011						FOR DIMENSIONS, SEE DASH 15 VALUES BELOW
244	R	TAPE READER ASSEMBLY		2014038-011	NA	NAS-9-497	B	I	NOTE 11 B	
243										
242										
241	R	APOLLO GUIDANCE COMPUTER GROUP		6003001	NA	NAS-9-497	A	I	NOTE 11 B	FOR DIMENSIONS, SEE DASH 19 VALUES BELOW
240		SELF TEST ASSEMBLY		2014366-011	NA		B	I		FOR DIMENSIONS, SEE DASH 15 VALUES BELOW
239		POWER SUPPLY ASSY-115V., 400 CYCLE		2014207-011						FOR DIMENSIONS, SEE DASH 17 VALUES BELOW
238		AC INPUT PANEL ASSY		2014043-011						
237		POWER CONTROL ASSY		2014079-011						
236		DRAWER ASSY - X Y INTERFACE		2014040-011						
235		DRAWER ASSY RDC INTERFACE		2014045-011						FOR DIMENSIONS, SEE DASH 15 VALUES BELOW
234		BUFFER CIRCUIT ASSY		2014254-011						
233		CONTROL & INTERFACE ASSY		2014204-011						
232		POWER CONTROL ASSY		2014044-011						
231		DRAWER ASSY, PROGRAMMER & MONITOR		2014041-011						FOR DIMENSIONS, SEE DASH 17 VALUES BELOW
230		CONNECTOR INTERFACE ASSY		2014272-011						
229		CONNECTOR INTERFACE ASSY		2014047-011						FOR DIMENSIONS, SEE DASH 15 VALUES BELOW
228		ANTENNA TUNING CAPACITOR ASSY		2014209-011						
227		MOUNTING FIXTURE ASSY		2014006-011						FOR DIMENSIONS, SEE DASH 17 VALUES BELOW
226		POWER SUPPLY ASSY 3 VDC		2014234-011						
225		PANEL ASSY – SIGNAL INTERFACE		2014010-011						
224		OSCILLOSCOPE ASSY		2014232-011						FOR DIMENSIONS, SEE DASH 15 VALUES BELOW
223		AUXILIARY OUTLET ASSY		2014274-011						
222		FREQUENCY COUNTER		2014233-011						
221		POWER SUPPLY ASSY 10, 13, 28 VDC		2014235-011						
220		LOGIC DRAWER ASSY NO. 2		2014037-011						FOR DIMENSIONS, SEE DASH 17 VALUES BELOW
219		LOGIC DRAWER ASSY NO. 1		2014036-011						
218		COUNTER, ELECTRICAL ASSY		2014288-011						
217		POWER SUPPLY ASSY		2014279-011						FOR DIMENSIONS, SEE DASH 15 VALUES BELOW
216		TEST MOUNT ASSY		2014257-011						
215		UNIVERSAL DSKY PEDESTAL MOUNT		201[illegible]4-011						FOR DIMENSIONS, SEE DASH 17 VALUES BELOW
214		MAIN DSKY PEDESTAL MOUNT		2014343				I	NOTE 11 B	
213		SHIPPING CONTAINER, MAIN DSKY		1006229				II	NOTE 11 C	
212		NAV DSKY		1006231						
211		AGC		1006230						FOR DIMENSIONS, SEE DASH 18 VALUES BELOW
210		UNIVERSAL DSKY		1006422						
209		SHIPPING CONTAINER, AGC		1006421				II	NOTE 11 C	
208		UNIVERSAL DSKY HANDLING FIXTURE		2014[illegible]3-011				I	NOTE 11 B	FOR DIMENSIONS, SEE DASH 15 VALUES BELOW
207		NAV DSKY HANDLING FIXTURE		1014377						
206		MAIN DSKY HANDLING FIXTURE		1014334						FOR DIMENSIONS, SEE DASH 17 VALUES BELOW
205		AGC HANDLING FIXTURE		2014282-011				I	NOTE 11 B	
204		OPERATION CONSOLE		2014024-011				II	NOTE 11 C	
203		COMPUTER TEST SET		2014042-011		NAS-9-497				
202		DRAWER ASSY, COMPUTER SIMULATOR		2014048-011		FNP-2775				FOR DIMENSIONS, SEE DASH 18 VALUES BELOW
201		AUXILIARY CALIBRATION CONSOLE		2014059-011		[illegible]				
200		AGC CALIBRATION CONSOLE		2014049-011	N.A		B	II	NOTE 11 C	
21										
20		NA		NA	NA	NA	A	II	NOTE 11 C	2.000
19		NA		NA	NA	NA	A	I	NOTE 11 B	2.000
18		NA		NA	NA	NA	B	II	NOTE 11 C	4.187
17		NA		NA	NA	NA	B	I	NOTE 11 B	4.187
16		NA		NA	NA	NA	B	II	NOTE 11 C	2.000
15	R	NA		NA	NA	NA	B	I	NOTE 11 B	2.000

DASH NO.	B	C	D	E	F	G	H	J	K	L	M	N	P	R	S	T	U	V	W	Y	Z	AA	AB	AC	AD	AE	AF	AG	AH	AJ	AK	AL	AM	AN	AP	AR
21																																				
20	1.312	1.687	1.375	.078	.031	.076	.093	[illegible]	.093	1.187	.750	.593	.453	1.015	.062	.187	.078	.875	.718	1.375	.218	1.156	1.843	.048	NA	.875	.305	.078	.312	1.687	.078	NA	.078	.312	.187	1.843
19	1.312	1.687	1.375	.078	.031	.078	.093	NA	NA	1.187	.750	.593	.453	1.015	.062	.187	.078	.875	.718	1.375	.218	NA	NA	.048	.031	.875	.305	.078	.312	1.687	.078	NA	.078	.312	.187	NA
18	1.875	3.469	2.750	.156	.093	.156	.125	[illegible]	.125	1.625	1.032	.844	.656	1.406	.093	.344	.156	1.781	1.531	2.844	.312	1.562	3.875	.062	NA	1.219	.500	.156	.719	3.469	.156	NA	.156	.719	.344	3.875
17	1.875	3.469	2.750	.156	.093	.156	.125	NA	NA	1.625	1.032	.844	.656	1.406	.093	.344	.156	1.781	1.531	2.844	.312	NA	NA	.062	.062	1.219	.500	.156	.719	3.469	.156	NA	.156	.719	.344	NA
16	1.312	1.687	1.375	.078	.031	.078	.093	[illegible]	.093	1.187	.750	.593	.453	1.015	.062	.187	.078	.875	.718	1.375	.218	1.156	1.843	.048	NA	.875	.305	.078	.312	1.687	.078	NA	.078	.312	.187	1.843
15	1.312	1.687	1.375	.078	.031	.078	.093	NA	NA	1.187	.750	.593	.453	1.015	.062	.187	.078	.875	.718	1.375	.218	NA	NA	.048	.031	.875	.305	.078	.312	1.687	.078	NA	.078	.312	.187	NA

THIS SHEET ADDED

Ⓖ REPLACES REV F WITH CHANGE

RAYTHEON DASH NUMBERS

NOTES FOR TABLE
STYLE A IS FOR G & N SYSTEM
STYLE B IS FOR GROUND SUPPORT EQUIPMENT
TYPE I IS WITHOUT MOUNTING HOLES
TYPE II IS WITH MOUNTING HOLES

QTY REQD	PART OR IDENTIFYING NO.	MATERIAL OR NOTES	NOMENCLATURE OR DESCRIPTION	FIND NO

LIST OF MATERIALS

NEXT ASSY	USED ON
AS APPLICABLE	

APPLICATION

UNLESS OTHERWISE SPECIFIED
DIMENSIONS ARE IN INCHES
CAPACITOR VALUES ARE IN μf
RESISTOR VALUES ARE IN OHMS
TOLERANCES ON
FRACTIONS ± — DECIMALS ±.005 ANGLES ± —
DO NOT SCALE THIS DRAWING

MATERIAL
SEE NOTE 11

MIT
INSTRUMENTATION LAB
CAMBRIDGE MASS

DRAWN R. A. Jones 7-16-65
CHECKED A. J. [illegible] 7-22-65
APPROVED
APPROVED W. Kupfer [illegible]
APPROVED MIT W. Kupfer [illegible]
APPROVED MSC [illegible]
DATE

MANNED SPACECRAFT CENTER
HOUSTON, TEXAS

NAMEPLATES,
APOLLO GEN-GSE
(STANDARDS)

CODE IDENT NO 80230
SIZE E
DRAWING NO. 1004260
SCALE NONE
SHEET [illegible] OF 6

SYM	ZONE	DESCRIPTION	BR	CHK	DATE	APPROVED
G		REPLACES REV F WITH CHANGE PER TDRR 20854.				WK
H		REVISED PER TDRR 20892				
J		REVISED PER TDRR 20904				
K		REVISED PER TDRR 21379				WK
L		REVISED PER TDRR 21410				WK
M		REVISED PER TDRR 21993				
N		REVISED PER TDRR 22621				
P		REVISED PER TDRR 22671				
R		REVISED PER TDRR 22672				
S		REVISED PER TDRR 22750				WK
T		REVISED PER TDRR 22823				WK
U		REVISED PER TDRR 23072				
V		REVISED PER TDRR 23521			10-26-65	WK
W		REVISED PER TDRR 23824	RAJ		11-9-65	WK
Y		REVISED PER TDRR 24018	RAJ		11-16-65	WK
Z		REVISED PER TDRR 24040	RAJ		11-19-65	WK
AA		REVISED PER TDRR 24060	RAJ		11-19-65	WK
AB		REVISED PER TDRR 24868	RAJ		2-22-65	WK
AC		REVISED PER TDRR 24973	RAJ		1-4-66	WK
AD		REVISED PER TDRR 25065	RAJ		1-18-66	WK
AE		REVISED PER TDRR 25672	RAJ		2-4-66	WK
AF		REVISED PER TDRR 25671	RAJ		2-4-66	WK
AG		REVISED PER TDRR 26110	RAJ		2-15-66	WK
AH		REVISED PER TDRR 26372	"		3-16-66	
AJ		REVISED PER TDRR 26425	"		3-16-66	
AK		REVISED PER TDRR 26743	"		3-16-66	
AL		REVISED PER TDRR 26798	"		3-16-66	
AM		REVISED PER TDRR 27168	"		4-8-66	
AN		REVISED PER TDRR 27235	"		4-8-66	
AP		REVISED PER TDRR 27345	"		4-8-66	
AR		REVISED PER TDRR 27417	"		4-8-66	
AS		REVISED PER TDRR 27442	"		4-6-66	
AT		REVISED PER TDRR 27719	"		4-21-66	
AU		REVISED PER TDRR 27880	"		4-21-66	WK
AV		REVISED PER TDRR 27896	"		4-21-66	WK
AW		28110	"		5-16-66	
AY		28173	"			
AZ		28131	"			
BA		28124	"			
BB		REVISED PER TDRR 28511	"		5-16-66	
BC		" " " 28949	"		5-24-66	
BD		" " " 29222	"		6-8-66	
BE		" " " 29235	"		"	
BF		" " " 29322	"		6-24-66	
BG		" " " 29429	"		"	
BH		" " " 29449	"		"	
BJ		" " " 29335	"		"	
BK		" " " 29619	"		"	
BL		" " " 29696	"		6-29-66	
BM		REVISION STATUS CHANGED	JSD	NS	7-29-66	
BN		REVISION STATUS CHANGED	JI	RLW		
BP		REVISION STATUS CHANGED	JI	RLW	AUG. 66	
BR		REVISED PER TDRR 30241	JI	RLW	AUG 66	
BS		REVISION STATUS CHANGED	GW	RLW	AUG 66	

DASH NO.	P/C	PART NAME	REMARKS	PART NO.	SER. NO.	CONT. NO.	STYLE	TYPE	MATERIAL	A
199	AC	EYEPIECE STOWAGE UNIT		2021255-011			A	I		FOR DIMENSIONS, SEE DASH 100 VALUES BELOW
198	AC	SIGNAL CONDITIONER ASSY C/M		2007234		NAS 9-497			NOTE 11B	
197	AC	SIGNAL CONDITIONER ASSY C/M		2007235						
196	AC	SIGNAL CONDITIONER ASSY LEM		6007010						
195	AC	PSA & SIGNAL CONDITIONER ASSY		6007009			A	I	NOTE 11B	
194	AC	PANEL, MONITOR		2900031-031			B	II	NOTE 11C	FOR DIMENSIONS, SEE DASH 141 VALUES BELOW
193	AC	DISTRIBUTION BOX, GSE		2900024-031						
192	AC	ANALYZER, OPTICS-INERTIAL		2900023-031						FOR DIMENSIONS, SEE DASH 144 VALUES BELOW
191	AC	TEST CONTROL		2900027-031						FOR DIMENSIONS, SEE DASH 141 VALUES BELOW
190	AC	PANEL, PWR SUP AND LOAD		2900033-031						
189	AC	ADPT MODULE, P. S. A.		6900088-011						
188	AC	ADPT MODULE, P. S. A.		2901143-011						
187	AC	FIXTURE, MTG, PTA/PEA		2900066-021		NAS 9-497	B	II	NOTE 11C	
186	AC	ANNUNCIATOR PANEL AND EYEPIECE STORAGE ASSEMBLY		1021255-021			A	I		FOR DIMENSIONS, SEE DASH 100 VALUES BELOW
185	AC	ANNUNCIATOR PANEL AND EYEPIECE STORAGE ASSEMBLY		1021255-011			A	I		
184	AC	FIX., HAND., G AND N HARNESS		1901846-041		NAS9-497	B	II	NOTE 11C	FOR DIMENSIONS, SEE DASH 144 VALUES BELOW
183	AC	INSTALLING TOOL, ELEC. CONN		1902586-011			B	II	NOTE 11C	FOR DIMENSIONS, SEE DASH 102 VALUES BELOW
182	AC	ADPT MODULE, P.S.A.		6900088-011			B	II	NOTE 11C	FOR DIMENSIONS, SEE DASH 141 VALUES BELOW
181	AC	G&N INDICATOR CONTROL PANEL ASSY		2014578-011			A	I	NOTE 11B	
180	AC	ADPT MODULE, P.S.A.		1902431-031			B	II		FOR DIMENSIONS, SEE DASH 121 VALUES BELOW
179	AC	MOUNTING PLATE, IMU/PTA		6900083-011						FOR DIMENSIONS, SEE DASH 144 VALUES BELOW
178	AC	MOUNTING PLATE, COMPONENT		6900007-021						
177	AC	FIX., MOUNTING, SUBSYSTEM		2900070-021						
176	AC	FIX., MOUNTING, G AND N		2900067-021						
175	AC	CSL, COOL. AND PWR, G AND N		1902134-031						
174	AC	FIX., HAND., C/M AND LEM CDU		2900999-011					NOTE 11C	FOR DIMENSIONS, SEE DASH 141 VALUES BELOW
173	AC	FIX., HANDLING, C/M PSA		2900998-011						
172	AC	CAGING ELECTRONICS, GYRO		2900029-021						
171	AC	DISTRIBUTION BOX, GSE		2900024-021						
170	AC	ANALYZER, OPTICS-INERTIAL		2900023-021						FOR DIMENSIONS, SEE DASH 144 VALUES BELOW
169	AC	ADPT, TESTPOINT, P.S.A.		2900037-021						FOR DIMENSIONS, SEE DASH 141 VALUES BELOW
168	AC	TEST SELECTOR		2900028-021						
167	AC	TEST CONTROL		2900027-021						
166	AC	PANEL, MONITOR		2900031-021						
165	AC	TERM. BOARD STORAGE DRAWER		2900927-011						
164	AC	INPUT OUTPUT PANEL		2900926-011						
163	AC	CONTROL PANEL		2900896-011						
162	AC	CSL. CAL AND TEST, SCM/PSAAM		2900895-011						FOR DIMENSIONS, SEE DASH 144 VALUES BELOW
161	AC	FIX., LIFT AND HAND., IMU		1005462-011						FOR DIMENSIONS, SEE DASH 141 VALUES BELOW
160	AC	FIX., HAND., G AND N HARNESS		1901846-031						FOR DIMENSIONS, SEE DASH 144 VALUES BELOW
159	AC	BATTERY POWER PACK		1900011-031			B	II	NOTE 11C	
158	AC	COUPLING DATA UNIT ASSEMBLY C/M		2007222			A	I	NOTE 11B	FOR DIMENSIONS SEE DASH 100 VALUES BELOW
157	AC	COUPLING DATA UNIT ASSEMBLY - LEM		2007222						
156	AC	POWER & SERVO ASSEMBLY C/M		2007200						
155	AC	PIPA ELECTRONICS ASSEMBLY		2007201						FOR DIMENSIONS SEE DASH 100 VALUES BELOW
154	AC	PULSE TORQUE ASSEMBLY - LEM		6007000						
153	AC	POWER & SERVO ASSEMBLY - LEM		6007200			A	I	NOTE 11B	
152	AC	CONT PNL, RSVR CKT TESTER		2900770-011			B	II	NOTE 11C	FOR DIMENSIONS, SEE DASH 141 VALUES BELOW
151	AC	TESTER, RESOLVER CIRCUIT		2900708-011						
150	AC	JUNCTION BOX, PSA/GSE		1901933-021						FOR DIMENSIONS, SEE DASH 144 VALUES BELOW
149	AC	BATTERY PACK, LIFTING		2900812-011						FOR DIMENSIONS, SEE DASH 141 VALUES BELOW
148	AC	MOUNTING PLATE, COMPONENT		6900007-011						FOR DIMENSIONS, SEE DASH 144 VALUES BELOW
147	AC	MOUNTING PLATE, COMPONENT		2900677-011						
146	AC	CART, TRANS, G AND N		1900089-041						
145	AC	CONTAINER, SHIPPING, IMU		1900010-021		NAS9-497	B	II	NOTE 11C	
144	AC	FIX., MOUNTING, G AND N		1902204-021			B	II	NOTE 11C	
143	AC	CSL, COOL. AND PWR, G AND N		1902134-021						
142	AC	ANALYZER, OPTICS-INERTIAL		2900023-011						
141	AC	CONT, TEMP, PORTABLE		2900060-011						
140	AC	TESTER, CKT, IMU/CDU RSVR		2900286-011						
139	AC	SIMULATOR, LD/SIG, CDU		2900285-011						
138	AC	SIMULATOR, LD/SIG, OPTICS		1902023-021						
137	AC	FIX., MOUNTING, IMU/NAV BASE		6900003-011						
136	AC	FIXTURE, OPTICS/NAV BASE		2900072-011						
135	AC	FIX. MOUNTING, SUB SYSTEM		2900070-011						
134	AC	FIX., HAND., G AND N HARNESS		2900069-011						
133	AC	CNTR, SHIPPING, NAV BASE		2900068-011						
132	AC	FIX., MOUNTING, G AND N		2900067-011						
131	AC	SIMULATOR, LD/SIG, IMU/CDU		2900062-011						
130	AC	TESTER, GYRO WHEEL		2900061-011						
129	AC	COOLANT SUPPLY		1902133-021						
128	AC	TABLE, ROTARY		1900926-021						
127	AC	FIX., HAND., OPTICS		2900074-011						
126	AC	FIXTURE, MTG, PTA/PEA.		2900066-011						
125	AC	CONT, TEMP, IMU LIFTING		2900063-011						
124	AC	FIXTURE, HANDLING, IMU		2900064-011						
123	AC	CONT, OPTICS, REMOTE		1902046-021						
122	AC	TEST CONTROL		1902009-021						
121	AC	ADPT MODULE, P.S.A.		1902431-021						
120	AC	BRIDGE, DECADE ERROR		2900128-011						
119	AC	PWR SUP, ELECTRONICS		2900012-011						
118	AC	PWR SUP, RELAY AND LAMP		1900049-031						
117	AC	CONSOLE, OSCILLOGRAPH		1900000-021						
116	AC	ADPT MODULE, P.S.A.		1902431-011						
115	AC	ADPT, TEST POINT, PTA/PEA.		2900145-011						
114	AC	ADPT, TEST POINT, P.S.A.		2900037-011						
113	AC	CONTROL, GIMBAL POSITION		2900036-011						
112	AC	SELECTOR, SIGNAL, PRIMARY		2900035-011						
111	AC	SEL, SIG, OSCILLOGRAPH		2900034-011						
110	AC	PANEL, PWR SUP AND LOAD		2900033-011						
109	AC	PANEL, MONITOR		2900031-011						
108	AC	PANEL, AUXILIARY INPUT		2900030-011						
107	AC	CAGING ELECTRONICS, GYRO		2900029-011						
106	AC	TEST SELECTOR		2900028-011						
105	AC	TEST CONTROL		2900027-011						
104	AC	MONITOR AND CONTROL, TEMP		2900026-011						
103	AC	DISTRIBUTION BOX, GSE		2900024-011						
102	AC	VOLTMETER, DIGITAL		2900007-011			B	II	NOTE 11C	
101	AC	NAVIGATION BASE ASSEMBLY - LEM		6899950		NAS-9-497	A	I	NOTE 11B	
100	AC	NAVIGATION BASE ASSEMBLY		2899982		NAS-9-497	A	I	NOTE 11B	

DASH NO.	A	B	C	D	E	F	G	H	J	K	L	M	N	P	R	S	T	U	V	W	Y	Z	AA	AB	AC	AD	AE	AF	AG	AH	AJ	AK	AL	AM	AN	AP	AR
181	3.000	1.938	2.437	NA	.125	.062	.188	.156	NA	NA	1.750	.125	.906	.688	1.500	NA	.281	.125	NA	1.094	2.062	.312	NA	2.500	.062	.125	1.312	.469	NA	NA	NA	.156	NA	.125	.469	.344	NA
156	2.125	.968	1.718	NA	.093	.031	.06	.093	NA	NA	.858	.608	.484	.358	.733	.062	.140	.062	NA	.968	1.450	.125	NA	1.720	.046	.03	NA	.210	NA	NA	NA	.070	NA	.046	.32	.16	NA
144	4.125	1.812	3.250	NA	.125	.062	.12	.156	.188 .104	.125	1.625	1.140	.890	.640	1.390	.125	.171	.125	1.875	1.687	2.625	.250	1.562	3.843	.093	NA	NA	.359	.125	.437	3.688	NA	3.687	.093	.40	.25	3.875
143	4.125	1.812	3.250		.125	.062	.12	.156		.125	1.625	1.140	.890	.640	1.390	.125	.171	.125	1.875	1.687	2.625	.250	1.562	3.843	.093			.359	.125	.437	3.688		3.687	.093	.40	.25	3.875
142	4.125	1.812	3.250		.125	.062	.12	.156		.125	1.625	1.140	.890	.640	1.390	.125	.171	.125	1.875	1.687	2.625	.250	1.562	3.843	.093			.359	.125	.437	3.688		3.687	.093	.40	.25	3.875
141	2.125	.968	1.718		.093	.031	.06	.093		.093	.858	.608	.484	.358	.733	.077	.116	.062	.937	.875	1.343	.125	.781	1.892	.046			.209	.093	.250	1.875		1.840	.046	.23	.16	1.938
140	4.125	1.812	3.250		.125	.062	.12	.156		.125	1.625	1.140	.890	.640	1.390	.125	.171	.125	1.875	1.687	2.625	.250	1.562	3.843	.093			.359	.125	.437	3.688		3.687	.093	.40	.25	3.875
128	4.125	1.812	3.250		.125	.062	.12	.156		.125	1.625	1.140	.890	.640	1.390	.125	.171	.125	1.875	1.687	2.625	.250	1.562	3.843	.093			.359	.125	.437	3.688		3.687	.093	.40	.25	3.875
127	2.125	.968	1.718		.093	.031	.06	.093		.093	.858	.608	.484	.358	.733	.077	.116	.062	.937	.875	1.343	.125	.781	1.892	.046			.209	.093	.250	1.875		1.840	.046	.23	.16	1.938
102	2.125	.968	1.718	NA	.093	.031	.06	.093	.188 .104	.093	.858	.608	.484	.358	.733	.077	.116	.062	.937	.875	1.343	.125	.781	1.892	.046	NA	NA	.209	.093	.250	1.875	NA	1.840	.046	.23	.16	1.938
101	2.000	1.312	1.906	1.375	.078	.048	.078	.093	NA	NA	1.125	.750	.593	.453	1.015	.062	.187	.078	.875	.718	1.375	.218	NA	NA	.048	.031	.875	.305	.078	.531	1.906	.078	NA	.078	.531	.187	NA
100	2.000	1.312	1.906	1.375	.078	.048	.078	.093	NA	NA	1.125	.750	.593	.453	1.015	.062	.187	.078	.875	.718	1.375	.218	NA	NA	.048	.031	.875	.305	.078	.531	1.906	.078	NA	.078	.531	.187	NA

AC ELECTRONICS DASH NUMBERS

THIS SHEET ADDED

Ⓖ REPLACES REV F WITH CHANGE

NOTES FOR TABLE

STYLE A IS FOR G&N SYSTEM
STYLE B IS FOR GROUND SUPPORT EQUIPMENT
TYPE I IS WITHOUT MOUNTING HOLES
TYPE II IS WITH MOUNTING HOLES

NOTE: AC DASH NO's. CONT. ON SH.6

QTY REQD	PART OR IDENTIFYING NO.	MATERIAL OR NOTES	NOMENCLATURE OR DESCRIPTION	FIND NO.

LIST OF MATERIALS

UNLESS OTHERWISE SPECIFIED
DIMENSIONS ARE IN INCHES
CAPACITOR VALUES ARE IN µf
RESISTOR VALUES ARE IN OHMS
TOLERANCES ON
FRACTIONS DECIMALS ANGLES
± ±.005 ±
DO NOT SCALE THIS DRAWING

MATERIAL
SEE NOTE 11

AS APPLICABLE
NEXT ASSY | USED ON
APPLICATION

MIT
INSTRUMENTATION LAB
CAMBRIDGE, MASS.

DRAWN 7-15-65
CHECKED
APPROVED
APPROVED
APPROVED MIT
APPROVED MSC

MANNED SPACECRAFT CENTER
HOUSTON, TEXAS

NAMEPLATES,
APOLLO G&N-GSE
(STANDARDS)

CODE IDENT NO. 80230
SIZE E
DRAWING NO. 1004260
SCALE NONE

NOTICE - WHEN GOVERNMENT DRAWINGS, SPECIFICATIONS, OR OTHER DATA ARE USED FOR ANY PURPOSE OTHER THAN IN CONNECTION WITH A DEFINITELY RELATED GOVERNMENT PROCUREMENT OPERATION, THE UNITED STATES GOVERNMENT THEREBY INCURS NO RESPONSIBILITY NOR ANY OBLIGATION WHATSOEVER, AND THE FACT THAT THE GOVERNMENT MAY HAVE FORMULATED, FURNISHED, OR IN ANY WAY SUPPLIED THE SAID DRAWINGS, SPECIFICATIONS, OR OTHER DATA IS NOT TO BE REGARDED BY IMPLICATION OR OTHERWISE AS IN ANY MANNER LICENSING THE HOLDER OR ANY OTHER PERSON OR CORPORATION, OR CONVEYING ANY RIGHTS OR PERMISSION TO MANUFACTURE, USE, OR SELL ANY PATENTED INVENTION THAT MAY IN ANY WAY BE RELATED THERETO

REVISIONS 02768

SYM	ZONE	DESCRIPTION	DR	CHK	DATE	APPROVED
G		REPLACES REV F WITH CHANGE PER TDRR 20854			7/24/64	WK
H		REVISED PER TDRR 20892			[illegible]	[illegible]
J		REVISED PER TDRR 20904			[illegible]	WK
K		REVISED PER TDRR 21379			[illegible]	WK
L		REVISED PER TDRR 21410			[illegible]	WK
M		REVISED PER TDRR 21993				
N		REVISED PER TDRR 22621				
P		REVISED PER TDRR 22671				
R		REVISED PER TDRR 22672				
S		REVISED PER TDRR 22750				
T		REVISED PER TDRR 22823				WK
U		REVISED PER TDRR 23072			10-22-65	[illegible]
V		REVISED PER TDRR 23521			10-26-65	WK
W		REVISED PER TDRR 23924	RAJ		11-9-65	WK
Y		REVISED PER TDRR 24018	RAJ		11-16-65	WK
Z		REVISED PER TDRR 24040	RAJ		[illegible]-65	WK
AA		REVISED PER TDRR 24060	RAJ		11-19-65	WK
AB		REVISED PER TDRR 24868	RAJ		12-22-65	WK
AC		REVISED PER TDRR 24973	RAJ		1-4-66	WK
AD		REVISED PER TDRR 25065	RAJ		1-18-66	[illegible]
AE		REVISED PER TDRR 25672	RAJ		2-4-66	WK
AF		REVISED PER TDRR 25671	RAJ		2-4-66	WK
AG		REVISED PER TDRR 26110	RAJ		2-15-66	WK
AH		REVISED PER TDRR 26372	"		3-16-66	WGM
AJ		REVISED PER TDRR 26425	"		3-16-66	WGM
AK		REVISED PER TDRR 26743	"		3-16-66	WGM
AL		REVISED PER TDRR 26798	"		3-16-66	WGM
AM	-	REVISED PER TDRR 27168	"		4-7-66	WGM
AN		REVISED PER TDRR 27235	"		4-7-66	WGM
AP		REVISED PER TDRR 27345	"		4-7-66	WGM
AR		REVISED PER TDRR 27417	"		4-7-66	WGM
AS		REVISED PER TDRR 27442	"		4-7-66	WGM
AT		REVISED PER TDRR 27719			4-20-66	WK
AU		REVISED PER TDRR 27880	"		4-20-66	WK
AV		REVISED PER TDRR 27696			4-20-66	WK
AW		28110	"		5-16-66	WGM
AY		28173				WGM
AZ		28131	"			WGM
BA		28124	"			WGM
BB		REVISED PER TDRR 28511			5-16-66	WGM
BC		" " " 28949	"		5-24-66	WGM
BD		" " " 29222	"		6-8-66	WGM
BE		" " " 29235	"		"	WGM
BF		" " " 29322	"		6-24-66	WGM
BG		" " " 29429	"		"	WGM
BH		" " " 29449	"		"	WGM
BJ		" " " 29335	"		"	WGM
BK		" " " 29619	"		"	WGM
BL		" " " 29696	"		6-29-66	WGM
BM		REVISION STATUS CHANGED	JSD	-	7-29-66	
BN		REVISION STATUS CHANGED	JI	RLW	[illegible] AUG 66	
BP		REVISION STATUS CHANGED	JI	RLW	[illegible] AUG 66	
BR		REVISION STATUS CHANGED	JI	RLW	[illegible] AUG 66	
BS		REVISION STATUS CHANGED	GW	[illegible]	[illegible] AUG	

DASH NO.	P/C	PART NAME	REMARKS	PART NO.	SER. NO.	CONT. NO.	STYLE	TYPE	MATERIAL	A	B	C	D	E	F	G	H	J	K	L	M	N	P	R	S	T	U	V	W	Y	Z	AA	AB	AC	AD	AE	AF	AG	AH	AJ	AK	AL	AM	AN	AP	AR
-40	MIT	COMPUTER ASSY		2003100		NAS 9-497	A	I	NOTE 11 B	2.000	1.312	.906	1.375	.078	.048	.078	.093	NA	NA	.125	.750	.593	.453	1.015	.062	.187	.078	.875	.718	.375	.218	NA	NA	.048	.031	.875	.305	.078	.531	1.906	.078	NA	.078	.531	.187	NA
-00	MIT	LIFTING SLING - G&N INST. QUAL. FIX. & AZM REF. FIX.		1021640		NAS-9-4065	B	II	NOTE 11 C	2.000	1.312	1.687	1.375	.078	.048	.078	.093	[illegible]	.093	1.187	.750	.593	.453	1.015	.062	.187	.078	.875	.718	1.375	.218	1.156	1.843	.048	NA	.875	.305	.078	.312	1.687	.110	1.830	.070	.275	.190	1.844

MIT DASH NUMBERS

THIS SHEET ADDED

Ⓖ REPLACES REV F WITH CHANGE

NOTES FOR TABLE

STYLE A IS FOR G&N SYSTEM

STYLE B IS FOR GROUND SUPPORT EQUIPMENT

TYPE I IS WITHOUT MOUNTING HOLES

TYPE II IS WITH MOUNTING HOLES

QTY REQD	PART OR IDENTIFYING NO.	MATERIAL OR NOTES	NOMENCLATURE OR DESCRIPTION	FIND NO.

LIST OF MATERIALS

NEXT ASSY	USED ON
AS APPLICABLE	

APPLICATION

UNLESS OTHERWISE SPECIFIED
DIMENSIONS ARE IN INCHES
CAPACITOR VALUES ARE IN µf
RESISTOR VALUES ARE IN OHMS
TOLERANCES ON
FRACTIONS ± — DECIMALS ±.005 ANGLES ± —
DO NOT SCALE THIS DRAWING

MATERIAL
SEE NOTE 11

MIT
INSTRUMENTATION LAB
CAMBRIDGE, MASS

DRAWN R A Jones 7-16-65
CHECKED [illegible] 2-23-65
APPROVED
APPROVED W Kupfer [illegible]
APPROVED MIT W Kupfer [illegible]
APPROVED MSC [illegible]
DATE

MANNED SPACECRAFT CENTER
HOUSTON, TEXAS

NAMEPLATES,
APOLLO G&N-GSE
(STANDARDS)

CODE IDENT NO 80230
SIZE E
DRAWING NO. 1004260
SCALE NONE
SHEET [illegible] OF [illegible]

NOTICE - WHEN GOVERNMENT DRAWINGS, SPECIFICATIONS, OR OTHER DATA ARE USED FOR ANY PURPOSE OTHER THAN IN CONNECTION WITH A DEFINITELY RELATED GOVERNMENT PROCUREMENT OPERATION, THE UNITED STATES GOVERNMENT THEREBY INCURS NO RESPONSIBILITY NOR ANY OBLIGATION WHATSOEVER; AND THE FACT THAT THE GOVERNMENT MAY HAVE FORMULATED, FURNISHED, OR IN ANY WAY SUPPLIED THE SAID DRAWINGS, SPECIFICATIONS, OR OTHER DATA IS NOT TO BE REGARDED BY IMPLICATION OR OTHERWISE AS IN ANY MANNER LICENSING THE HOLDER OR ANY OTHER PERSON OR CORPORATION, OR CONVEYING ANY RIGHTS OR PERMISSION TO MANUFACTURE, USE, OR SELL ANY PATENTED INVENTION THAT MAY IN ANY WAY BE RELATED THERETO.

REVISIONS 02768

SYM	ZONE	DESCRIPTION	BR	CHK	DATE	APPROVED
AG		CHANGED NUMBER OF SHEETS FROM 5 TO 6 PER TDRR 26110	RAJ		2-15-66	
AH		REVISED PER TDRR 26872	"			
AJ		REVISED PER TDRR 26425	"		3-16-66	
AK		REVISED PER TDRR 26743	"		3-16-66	
AL		REVISED PER TDRR 26798	"		3-16-66	
AM		REVISED PER TDRR 27168	"		4-7-66	
AN		REVISED PER TDRR 27235	"		4-7-66	
AP		REVISED PER TDRR 27345	"		4-7-66	
AR		REVISED PER TDRR 27417	"		4-7-66	
AS		REVISED PER TDRR 27442	"		4-7-66	
AT		REVISED PER TDRR 27719	"		4-20-66	
AU		REVISED PER TDRR 27880	"		4-20-66	
AV		REVISED PER TDRR 27896	"		4-20-66	
AW		28110	"		5-16-66	
AY		28173	"		5-16-66	
AZ		28131	"		5-16-66	
BA		28124	"		5-16-66	
BB		REVISED PER TDRR 28511	"		5-16-66	
BC		" " " 28949	"		5-24-66	
BD		" " " 29222	"		6-8-66	
BE		" " " 29235	"		"	
BF		" " " 29322	"		6-20-66	
BG		" " " 29429	"		"	
BH		" " " 29449	"		"	
BJ		" " " 29335	"		"	
BK		" " " 29619	"		"	
BL		" " " 29696	"		6-29-66	
BM		REVISION STATUS CHANGED	JSD	N.S.	7-29-66	
BN		REVISED PER TDRR 29974	JI	RLW	22 AUG 66	
BP		REVISION STATUS CHANGED	JI	RLW	22 AUG 66	
BR		REVISION STATUS CHANGED	JI	RLW	23 AUG 66	
BS		REVISED PER TDRR 30530	GW	RLW	26 AUG 66	

DASH NO.	P/C	PART NAME	REMARKS	PART NO.	SER NO.	CONT NO.	STYLE	TYPE	MATERIAL	A	B	C	D	E	F	G	H	J	K	L	M	N	P	R	S	T	U	V	W	Y	Z	AA	AB	AC	AD	AE	AF	AG	AH	AJ	AK	AL	AM	AN	AP	AR
599	AC																																													
598	AC																																													
537	AC	TEST SELECTOR		2900028-031		NAS9-497	B	II	NOTE 11C	2.125	.968	1.718	NA	.093	.031	.06	.093	100 104	.093	.858	.608	.484	.358	.733	.077	.116	.062	.937	.875	1.343	.125	.781	1.892	.046	NA	NA	.209	.093	.250	1.875	NA	1.840	.046	.23	.16	1.938
536	AC	ANALYZER, OPTICS-INERTIAL		2900023-041			B	II	NOTE 11C	4.125	1.812	3.250	NA	.125	.062	.12	.156	100 104	.125	1.625	1.140	.890	.640	1.390	.125	.171	.125	1.875	1.687	2.625	.250	1.562	3.843	.093	NA	NA	.359	.125	.437	3.688	NA	3.687	.093	.40	.25	3.875
535	AC	CONT, TEMP, PORTABLE		2900060-021			B	II	NOTE 11C	2.125	.968	1.718	NA	.093	.031	.06	.093	100 104	.093	.858	.608	.484	.358	.733	.077	.116	.062	.937	.875	1.343	.125	.781	1.892	.046	NA	NA	.209	.093	.250	1.875	NA	1.840	.046	.23	.16	1.938
534	AC	COMPUTER CONT & RETICLE DIMMER		6014512-021			A	I	NOTE 11B	2.000	1.312	1.906	1.375	.078	.048	.078	.093	NA	NA	1.125	.750	.593	.453	1.015	.062	.187	.078	.875	.718	1.375	.218	NA	NA	.048	.031	.875	.305	.078	.531	1.906	.078	NA	.078	.531	.187	NA
533	AC	A.PT MODULE, P.S.A.		1902431-041			B	II	NOTE 11C	2.125	.968	1.718	NA	.093	.031	.06	.093	100 104	.093	.858	.608	.484	.358	.733	.077	.116	.062	.937	.875	1.343	.125	.781	1.892	.046	NA	NA	.209	.093	.250	1.875	NA	1.840	.046	.23	.16	1.938
532	AC	TRAY BREAKOUT, 105 PIN		1900807-021						4.125	1.812	3.250		.125	.062	.12	.156	100 104	.125	1.625	1.140	.890	.640	1.390	.125	.171	.125	1.875	1.687	2.625	.250	1.562	3.843	.093			.359	.125	.437	3.688		3.687	.093	.40	.25	3.875
531	AC	TRAY BREAKOUT, 84 PIN		1900806-021						4.125	1.812	3.250		.125	.062	.12	.156	100 104	.125	1.625	1.140	.890	.640	1.390	.125	.171	.125	1.875	1.687	2.625	.250	1.562	3.843	.093			.359	.125	.437	3.688		3.687	.093	.40	.25	3.875
530	AC	HEAT SINK - TRAY EXTENDER		1900808-021						2.125	.968	1.718		.093	.031	.06	.093	100 104	.093	.858	.608	.484	.358	.733	.077	.116	.062	.937	.875	1.343	.125	.781	1.892	.046			.209	.093	.250	1.875		1.840	.046	.23	.16	1.938
529	AC	TESTER, FAILURE INDICATOR		1900809-021						2.125	.968	1.718	NA	.093	.031	.06	.093	100 104	.093	.858	.608	.484	.358	.733	.077	.116	.062	.937	.875	1.343	.125	.781	1.892	.046	NA	NA	.209	.093	.250	1.875	NA	1.840	.046	.23	.16	1.938
527	AC	FIX., MOUNTING, G AND N	(-144)	1902204-021						FOR DIMENSIONS, SEE DASH 500 VALUES BELOW																																				
526	AC	FIX., MOUNTING, G AND N	(-144)	2900067-031																																										
525	AC	PORTABLE TEMP. CONTROLLER		1900496-021			B	II	NOTE 11C	3.000	1.937	2.437	2.312	.125	.031	.125	.156	.125	.125	1.718	1.187	.968	.749	1.452	.093	.295	.090	1.312	1.00	2.000	.250	1.687	2.750	.062	N/A	NA	.463	.125	.562	2.437	.140	2.562	.090	.468	.359	2.750
524	AC	POWER, SERVO AND THERMOCOUPLE ASSEMBLY C/M		2010743			A	I	NOTE 11B	2.125	.968	1.718	NA	.093	.031	.06	.093	NA	NA	.858	.608	.484	.358	.733	.062	.140	.062	NA	.968	1.450	.125	NA	1.720	.046	.03	NA	.210	NA	NA	NA	.070	NA	.046	.32	.16	NA
523	AC	PULSE TORQUE AND THERMOCOUPLE ASSEMBLY - LEM		6010656																																										
522	AC	COUPLING DATA UNIT AND THERMOCOUPLE ASSEMBLY - LEM		2010744						FOR DIMENSIONS, SEE DASH 508 VALUES BELOW																																				
521	AC	COUPLING DATA UNIT AND THERMOCOUPLE ASSEMBLY - C/M		2010744																																										
520	AC	PIPA ELECTRONICS AND THERMOCOUPLE ASSEMBLY		2010745			A	I	NOTE 11B																																					
519	AC	FIXTURE, HANDLING, LEM-PSA	(-141)	6900129-011			B	II	NOTE 11C	FOR DIMENSIONS, SEE DASH 504 VALUES BELOW																																				
518	AC	JUNCTION BOX, GSE-PSA	(-144)	1901933-031			B	II	NOTE 11C	FOR DIMENSIONS, SEE DASH 500 VALUES BELOW																																				
517	AC	FIX., HAND., OPTICS INSTL.	(-141)	2901380-011			B	II	NOTE 11C	FOR DIMENSIONS SEE DASH 502 VALUES BELOW																																				
516	AC	POWER, SERVO AND THERMOCOUPLE ASSEMBLY-LEM		6010655		NAS 9-497	A	I	NOTE 11B	FOR DIMENSIONS SEE DASH 508 VALUES BELOW																																				
514	AC	SIGNAL COND. ASSY LEM OPER.	(-100)	6007013		NAS-9-497	A	I	NOTE 11B	FOR DIMENSIONS, SEE DASH 508 VALUES BELOW																																				
513		JUMPER, BY-PASS	(-141)	1021616			B	II	NOTE 11C	2.125	.968	1.718	NA	.093	.031	.06	.093	100 104	.093	.858	.608	.484	.358	.733	.077	.116	.062	.937	.875	1.343	.125	.781	1.892	.046	NA	NA	.209	.093	.250	1.875	NA	1.840	.046	.23	.16	1.938
512		COUPLING DATA UNIT ASSEMBLY C/M	(-100)	2007322-011			A	I	NOTE 11B	FOR DIMENSIONS, SEE DASH 508 VALUES BELOW																																				
511		COUPLING DATA UNIT ASSEMBLY - LEM	(-100)	2007322-021																																										
510		BATTERY POWER PACK	(-144)	1900011-041			B	II	NOTE 11C	FOR DIMENSIONS, SEE DASH 500 VALUES BELOW																																				
509		JUNCTION BOX, P.S.A./G.S.E.	(-144)	1902195-021			B	II	NOTE 11C																																					
508		NAVIGATION BASE ASSEMBLY - LEM	✓ (-101)	6899980			A	I	NOTE 11B	2.000	1.312	1.906	1.375	.078	.048	.078	.093	NA	NA	1.125	.750	.593	.453	1.015	.062	.187	.078	.875	.718	1.375	.218	NA	NA	.048	.031	.875	.305	.078	.531	1.906	.078	NA	.078	.531	.187	NA
507		CSL, COOL, AND PWR, G AND N	(-144)	1902134-041			B	II	NOTE 11C	FOR DIMENSIONS, SEE DASH 500 VALUES BELOW																																				
506		BREAKOUT BOX, CABLE ADAPTER	(-141)	2301011-011																																										
505		MONITOR AND CONTROL, TEMP	(-141)	2900026-021																																										
504		PWR SUP, GUIDANCE SYSTEM	✓ (-141)	1900033-021						2.125	.968	1.718	NA	.093	.031	.06	.093	100 104	.093	.858	.608	.484	.358	.733	.077	.116	.062	.937	.875	1.343	.125	.781	1.892	.046	NA	NA	.209	.093	.250	1.875	NA	1.840	.046	.23	.16	1.938
503		CONTROL, GIMBAL POSITION	(-141)	2900036-021																																										
502		ADPT, TEST POINT, PTA/PEA.	(-141)	2900145-021																																										
501		MOUNTING PLATE, COMPONENT	(-144)	6900007-031		NAS-9-497	B	II	NOTE 11C	FOR DIMENSIONS, SEE DASH 500 VALUES BELOW																																				
500	AC	MOUNTING PLATE, COMPONENT	✓ (-144)	2900677-02						4.125	1.812	3.250	NA	.125	.062	.12	.156	100 104	.25	1.625	1.140	.890	.640	1.390	.125	.171	.25	1.875	1.687	2.625	.250	1.562	3.843	.093	NA	NA	.359	.125	.437	3.688	NA	3.687	.093	.40	.25	3.875

AC ELECTRONICS DASH NUMBERS

(AG) THIS SHEET ADDED

NOTES FOR TABLE

STYLE A IS FOR G&N SYSTEM
STYLE B IS FOR GROUND SUPPORT EQUIPMENT
TYPE I IS WITHOUT MOUNTING HOLES
TYPE II IS WITH MOUNTING HOLES

QTY REQD	PART OR IDENTIFYING NO.	MATERIAL OR NOTES	NOMENCLATURE OR DESCRIPTION	FIND NO.

LIST OF MATERIALS

NEXT ASSY	USED ON
AS APPLICABLE	

APPLICATION

UNLESS OTHERWISE SPECIFIED
DIMENSIONS ARE IN INCHES
CAPACITOR VALUES ARE IN µf
RESISTOR VALUES ARE IN OHMS
TOLERANCES ON
FRACTIONS ± — DECIMALS ±.005 ANGLES ± —
DO NOT SCALE THIS DRAWING

MATERIAL
SEE NOTE 11

MIT
INSTRUMENTATION LAB
CAMBRIDGE, MASS

DRAWN R. A. Jones 2-15-66
CHECKED
APPROVED
APPROVED
APPROVED MIT
A. C. METZGER
APPROVED MSC
DATE

MANNED SPACECRAFT CENTER
HOUSTON, TEXAS

NAMEPLATES,
APOLLO G&N-GSE
(STANDARDS)

CODE IDENT NO. 80230
SIZE E
DRAWING NO. 1004260
SCALE NONE
SHEET

NOTICE - WHEN GOVERNMENT DRAWINGS, SPECIFICATIONS, OR OTHER DATA ARE USED FOR ANY PURPOSE OTHER THAN IN CONNECTION WITH A DEFINITELY RELATED GOVERNMENT PROCUREMENT OPERATION, THE UNITED STATES GOVERNMENT THEREBY INCURS NO RESPONSIBILITY NOR ANY OBLIGATION WHATSOEVER; AND THE FACT THAT THE GOVERNMENT MAY HAVE FORMULATED, FURNISHED, OR IN ANY WAY SUPPLIED THE SAID DRAWINGS, SPECIFICATIONS, OR OTHER DATA IS NOT TO BE REGARDED BY IMPLICATION OR OTHERWISE AS IN ANY MANNER LICENSING THE HOLDER OR ANY OTHER PERSON OR CORPORATION, OR CONVEYING ANY RIGHTS OR PERMISSION TO MANUFACTURE, USE, OR SELL ANY PATENTED INVENTION THAT MAY IN ANY WAY BE RELATED THERETO.

NOTES:

1. INTERPRET DRAWING IN ACCORDANCE WITH STANDARDS PRESCRIBED IN MIL-D-70327.
2. DIMENSIONS ON EACH VIEW APPLY TO ALL VIEWS. (WITH THE EXCEPTION OF MOUNTING HOLES).
3. FORMATS ILLUSTRATED WILL BE APPLICABLE TO ALL ITEMS REQUIRING NAMEPLATES BELOW END ITEM DESIGNATION (SYSTEMS, ASSEMBLIES, ETC.)
4. PLATE BACKGROUND TO BE LUSTERLESS BLACK PER FED-STD-595, COLOR 37038. BORDER, MARKING AND LETTERING TO BE NATURAL METAL,(ANODIZED ALUMINUM).
5. MARKING METHOD TO BE DIE STAMPING, ETCHING OR ENGRAVING IN ACCORDANCE WITH MIL P 19834.
6. LETTERING STYLE TO BE GOTHIC,(SANS SERIFS), AND NUMBERS TO BE ARABIC.
7. WHERE LOCATING DIMENSIONS ARE NOT SHOWN, CHARACTERS SHALL BE SYMMETRICALLY POSITIONED.
8. IDENTIFY WITH DRAWING NUMBER PER ND 1002019.
9. WHEN "AUTO MARK" METAL MARKING TYPEWRITER IS USED TO ADD DATA TO BLANK SPACES, TYPE SIZE IS TO BE SELECTED FROM DIMENSIONS U, AC AND AM.
10. NASA SYMBOL IS TO BE PROPORTIONAL TO NAMEPLATE IN RATIO OF 1 TO 5 WITH DIMENSION A VALUE AND IS TO HAVE NATURAL BACKGROUND. NASA SYMBOL LETTERS LETTERING AND FEATHER TO BE BLACK,(OR WHITE FOR SILK SCREENING). WHERE BLACK FEATHER PROTRUDES INTO BLACK BACKGROUND, A MINIMUM OUTLINE OF NATURAL BACKGROUND SHALL EXIST.
11. NAMEPLATES WILL BE APPLIED BY METHODS LISTED BELOW, SHOWN IN ORDER OF PREFERENCE, (I.E., FOR RELIABILITY AND WEIGHT).
    - A - STENCIL OR SILK SCREEN DIRECTLY ON EQUIPMENT USING INK PER SCD 1010920,(WHITE OR BLACK).
    - B - ALUMINUM FOIL,(STYLE A OR B, TYPE I): FOIL SHALL BE .0030 ±.0005 THICK PER MIL-A-148. FOIL SHALL HAVE NO ADHESIVE BACKING. FOIL SHALL BE BONDED PER ND 1002219,(METHOD II). FOIL SHALL BE CLEAR ANODIZED PER MIL-A-8625, TYPE II.
    - C - PLATE, (STYLE A OR B, TYPE II): MATERIAL: QQ-A-250, TEMPER O OR H14, TYPE 1100, ALUMINUM ALLOY, .032 THICK. ANODIZE PER MIL-A-8625, TYPE II. ALUMINUM PLATE MUST BE FREE FROM BURRS AND SHARP CORNERS, MOUNTED WITH APPLICABLE SIZE FASTENERS.
12. NAMEPLATES SHALL BE CAPABLE OF MEETING APPLICABLE REQUIREMENTS OF MIL-M-13231.
13. ON DIMENSION TABLES SHOWN ON PAGES 2, 3, 4 AND 5, NA MEANS, "NOT APPLICABLE".

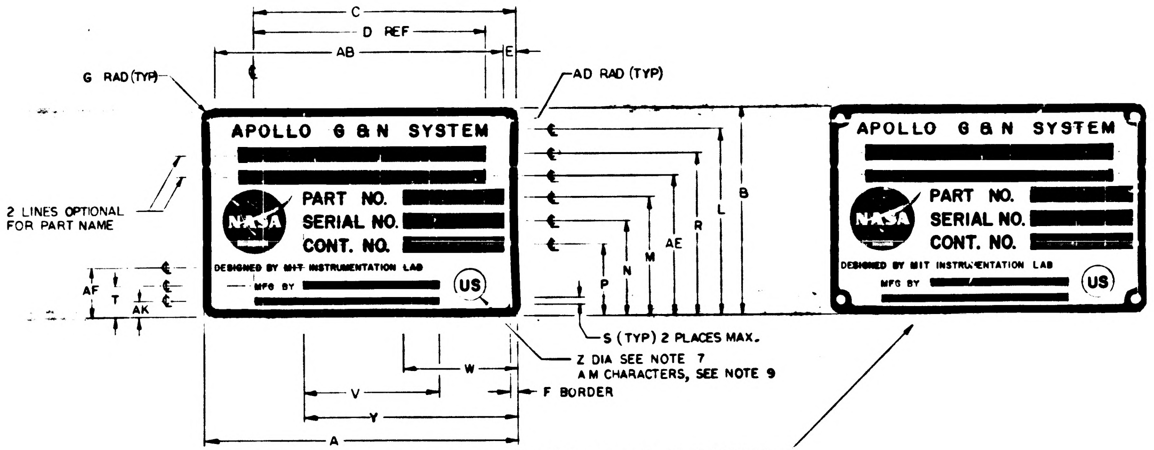

FOR G AND N SYSTEM
STYLE A

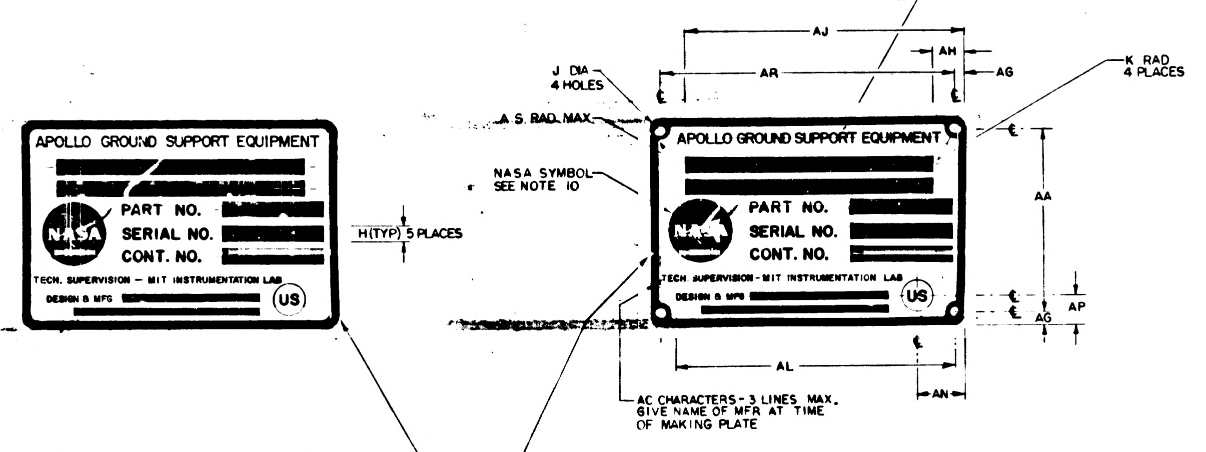
U CHARACTERS - 6 LINES MAX SEE NOTE 9
AJ
AH
AG
AR
K RAD 4 PLACES
J DIA 4 HOLES
A S RAD. MAX.
NASA SYMBOL SEE NOTE 10
APOLLO GROUND SUPPORT EQUIPMENT
PART NO.
SERIAL NO.
CONT. NO.
NASA
TECH. SUPERVISION - MIT INSTRUMENTATION LAB
DESIGN & MFG
US
H(TYP) 5 PLACES
AA
AP
AG
AL
AN
AC CHARACTERS - 3 LINES MAX. GIVE NAME OF MFR AT TIME OF MAKING PLATE

WITHOUT MOUNTING HOLES
TYPE I

WITH MOUNTING HOLES
TYPE II

FOR GROUND SUPPORT EQUIPMENT
STYLE B

SUGGESTED PROPORTIONS FOR NAMEPLATE DIMENSIONS.
1. SELECT NAMEPLATE LENGTH, DIMENSION "A", TO FIT DESIGN NEEDS.
2. DIMENSIONS B THRU AS ON LINE 1 BELOW ARE PROPORTIONAL TO "A" BY MULTIPLIERS SHOWN IN LINE 2 BELOW.

1.	A	B	C	D	E	F	G	H	J	K	L	M	N	P	R	S	T	U	V	W
2.	1.000 A	.6563 A	.8438 A	.6875 A	.0391 A	.0240 A	.0391 A	.0469 A	.0547 A	.0469 A	.5938 A	.3750 A	.2969 A	.2187 A	.5079 A	.0313 A	.0938 A	.0391 A	.4375 A	.3594 A

1.	Y	Z	AA	AB	AC	AD	AE	AF	AG	AH	AJ	AK	AL	AM	AN	AP	AR	AS
2.	.6875 A	.1094 A	.5781 A	.9219 A	.0240 A	.0156 A	.4375 A	.1525 A	.0391 A	.1563 A	.8438 A	.0548 A	.8659 A	.0391 A	.1563 A	.0938 A	.9219 A	.0151 A

REVISIONS

SYM	ZONE	DESCRIPTION	DR	CHK	DATE	APPROVED
G		REPLACES REV F WITH CHANGE PER TDRR 20854			7/22/65	WK
H		REVISED PER TDRR 20892			8/3/65	WK
J		REVISED PER TDRR 20904			8/3/65	WK
K		REVISED PER TDRR 21379			8/16/65	WK
L		REVISED PER TDRR 21410			8/23/65	WK
M		REVISED PER TDRR 21993				
N		REVISED PER TDRR 22621			10/	
P		REVISED PER TDRR 22671			1/	
R		REVISED PER TDRR 22672				
S		REVISED PER TDRR 22750			65	WK
T		REVISED PER TDRR 22823				
U		REVISED PER TDRR 23072			10-22-65	WGW
V		REVISED PER TDRR 23521			10-27-65	WK
W		REVISED PER TDRR 23824	RAJ		11-9-65	WK
Y		REVISED PER TDRR 24018	RAJ		11-16-65	WK
Z		REVISED PER TDRR 24040	RAJ		11-19-65	WK
AA		REVISED PER TDRR 24060	RAJ		11-19-65	WK
AB		REVISED PER TDRR 24868	RAJ		12-22-65	WK
AC		REVISED PER TDRR 24973	RAJ		1-4-66	WK
AD		REVISED PER TDRR 25065	RAJ		1-18-66	WGW
AE		REVISED PER TDRR 25672	RAJ		2-4-66	WK
AF		REVISED PER TDRR 25671	RAJ		2-4-66	WK
AG		REVISED PER TDRR 26110	RAJ		2-15-66	WK
AH		REVISED PER TDRR 26372	″		3-6-66	WGW
AJ		REVISED PER TDRR 26425	″		3-6-66	WGW
AK		REVISED PER TDRR 26743	″		3-16-66	WGW
AL		REVISED PER TDRR 26798	″		3-16-66	WGW
AM		REVISED PER TDRR 27168	″		4-7-66	WGW
AN		REVISED PER TDRR 27235	″		4-7-66	WGW
AP		REVISED PER TDRR 27345	″		4-7-66	WGW
AR		REVISED PER TDRR 27417	″		4-7-66	WGW
AS		REVISED PER TDRR 27442	″		4-7-66	WGW
AT		REVISED PER TDRR 27719	″		4-20-66	WK
AU		REVISED PER TDRR 27880	″		4-20-66	WK
AV		REVISED PER TDRR 27896	″		4-20-66	WK
AW		28110	″		5-16-66	WGW
AY		28173	″			WGW
AZ		28131	″			WGW
BA		28124	″			WGW
BB		REVISED PER TDRR 28511	″		5-16-66	WGW
BC		″ ″ ″ 28949	″		5-24-66	WGW
BD		″ ″ ″ 29222	″		6-8-66	WGW
BE		″ ″ ″ 29235	″		6-8-66	WGW
BF		″ ″ ″ 29322	″		6-30-66	WGW
BG		″ ″ ″ 29429	″		″	WGW
BH		″ ″ ″ 29449	″		″	WGW
BJ		″ ″ ″ 29335			″	WGW
BK		″ ″ ″ 29619	″		″	WGW
BL		″ ″ ″ 29696	″		″	WGW
BM		REVISION STATUS CHANGED	JSD	NS	7-29-66	
BN		REVISION STATUS CHANGED	JI	RLW	22 AUG 66	
BP		REVISION STATUS CHANGED	JI	RLW	22 AUG 66	
BR		REVISION STATUS CHANGED	JI	RLW	23 AUG 66	
BS		REVISION STATUS CHANGED	GW	RLW	26 AUG 66	
BT		REVISION STATUS CHANGED	GW	RLW	26 AUG 66	

Ⓖ REPLACES REV F WITH CHANGE

QTY REQD	PART OR IDENTIFYING NO.	MATERIAL OR NOTES	NOMENCLATURE OR DESCRIPTION	FIND NO.

LIST OF MATERIALS

NEXT ASSY	USED ON
AS APPLICABLE	

APPLICATION

UNLESS OTHERWISE SPECIFIED
DIMENSIONS ARE IN INCHES
CAPACITOR VALUES ARE IN μf
RESISTOR VALUES ARE IN OHMS
TOLERANCES ON
FRACTIONS ± — DECIMALS ±.005 ANGLES ± —
DO NOT SCALE THIS DRAWING

MATERIAL
SEE NOTE 11

MIT
INSTRUMENTATION LAB
CAMBRIDGE, MASS

MANNED SPACECRAFT CENTER
HOUSTON, TEXAS

DRAWN R A Jones 7/16/65
CHECKED A. J. 7-22-65
APPROVED
APPROVED W Kupfer 7/22/65
APPROVED MIT W Kupfer 7/22/65
APPROVED MSC
DATE

NAMEPLATES,
APOLLO G&N-GSE
(STANDARDS)

CODE IDENT NO 80230
SIZE E
DRAWING NO. 1004260
SCALE NONE
SHEET 1 OF 5

NOTICE – WHEN GOVERNMENT DRAWINGS, SPECIFICATIONS, OR OTHER DATA ARE USED FOR ANY PURPOSE OTHER THAN IN CONNECTION WITH A DEFINITELY RELATED GOVERNMENT PROCUREMENT OPERATION, THE UNITED STATES GOVERNMENT THEREBY INCURS NO RESPONSIBILITY NOR ANY OBLIGATION WHATSOEVER, AND THE FACT THAT THE GOVERNMENT MAY HAVE FORMULATED, FURNISHED, OR IN ANY WAY SUPPLIED THE SAID DRAWINGS, SPECIFICATIONS OR OTHER DATA IS NOT TO BE REGARDED BY IMPLICATION OR OTHERWISE AS IN ANY MANNER LICENSING THE HOLDER OR ANY OTHER PERSON OR CORPORATION, OR CONVEYING ANY RIGHTS OR PERMISSION TO MANUFACTURE, USE, OR SELL ANY PATENTED INVENTION THAT MAY IN ANY WAY BE RELATED THERETO.

REVISIONS 02768

SYM	ZONE	DESCRIPTION	DR	CHK	DATE	APPROVED
G		REPLACES REV F WITH CHANGE PER TDRR 20854.	rj		7/22/65	WK
H		REVISED PER TDRR 20892	rj		8/3/65	WK
J		REVISED PER TDRR 20904	rj		8/3/65	WK
K		REVISED PER TDRR 21379	rj		8/9/65	WK
L		REVISED PER TDRR 21410	rj		8/23/65	WK
M		REVISED PER TDRR 21993	"			
N		REVISED PER TDRR 22621	"		10/1/65	
P		REVISED PER TDRR 22671	"			
R		REVISED PER TDRR 22672				
S		REVISED PER TDRR 22750				
T		REVISED PER TDRR 22823				WK
U		REVISED PER TDRR 23072			10-22-65	
V		REVISED PER TDRR 23521			10-27-65	
W		REVISED PER TDRR 23824	RAJ		11-5-65	
Y		REVISED PER TDRR 24018	RAJ		11-16-65	WK
Z		REVISED PER TDRR 24040	RAJ		11-19-65	WK
AA		REVISED PER TDRR 24060	RAJ		11-19-65	WK
AB		REVISED PER TDRR 24868	RAJ		12-22-65	WK
AC		REVISED PER TDRR 24973	RAJ		1-4-66	WK
AD		REVISED PER TDRR 25065	RAJ		1-18-66	
AE		REVISED PER TDRR 25672	RAJ		2-4-66	WK
AF		REVISED PER TDRR 25671	RAJ		2-4-66	WK
AG		REVISED PER TDRR 26110	RAJ		2-15-66	WK
AH		REVISED PER TDRR 26372	"		3-16-66	
AJ		REVISED PER TDRR 26425	"		3-16-66	
AK		REVISED PER TDRR 26743	"		3-16-66	
AL		REVISED PER TDRR 26798	"		3-16-66	
AM		REVISED PER TDRR 27168	"		4-8-66	
AN		REVISED PER TDRR 27235	"		4-8-66	
AP		REVISED PER TDRR 27345	"		4-8-66	
AR		REVISED PER TDRR 27417	"		4-8-66	
AS		REVISED PER TDRR 27442	"		4-8-66	
AT		REVISED PER TDRR 27719	"		4-21-66	WK
AU		REVISED PER TDRR 27880	"		4-21-66	WK
AV		REVISED PER TDRR 27896	"		4-21-66	WK
AW		↕ ↕ 28110	"		5-16-66	
AY		↕ ↕ 28175	"		↕	
AZ		↕ ↕ 28131	"		↕	
BA		↕ ↕ 28124	"		↕	
BB		REVISED PER TDRR 28511	"		5-16-66	
BC		" " " 28949	"		5-24-66	
BD		" " " 29222	"		6-8-66	
BE		" " " 29235	"		"	
BF		" " " 29322	"		6-30-66	
BG		" " " 29429	"		"	
BH		" " " 29449	"		"	
BJ		" " " 29335	"		"	
BK		" " " 29619	"		"	
BL		" " " 29696	"		"	
BM		REVISION STATUS CHANGED	JSD	N.S.	7-29-66	
BN		REVISION STATUS CHANGED	JI	RLW	2? AUG 66	
BP		REVISION STATUS CHANGED	JI	RLW	? AUG 66	
BR		REVISION STATUS CHANGED	JI	RLW	22 AUG 66	
BS		REVISION STATUS CHANGED	GW	RLW	25 AUG 66	
BT		REVISION STATUS CHANGED	GW	RLW	26 AUG 66	

DASH NO.	P/C	PART NAME	REMARKS	PART NO.	SER. NO.	CONT. NO.	STYLE	TYPE	MATERIAL	A	B	C	D	E	F	G	H	J	K	L	M	N	P	R	S	T	U	V	W	Y	Z	AA	AB	AC	AD	AE	AF	AG	AH	AJ	AK	AL	AM	AN	AP	AR
350	K	ALIGNMENT OPTICAL TELESCOPE (LEM)		NA	NA	NA	A	I	NOTE 11B	4.000	2.625	3.375	2.750	.156	.093	.156	.187	NA	NA	2.312	1.468	1.187	.906	2.031	NA	.375	.156	NA	1.437	2.750	.437	NA	3.688	.062	.062	1.750	.593	NA	.625	3.375	.187	NA	.156	.531	.453	NA
309	K																																													
308	K																																													
307	K						B	I	NOTE 11 B	4.000	2.625	3.375	2.750	.156	.093	.156	.187	NA	NA	2.328	1.468	1.187	.906	2.031	.062	.375	.156	NA	1.437	2.750	.437	NA	3.687	.062	.062	1.750	.593	NA	NA	NA	NA	NA	NA	NA	NA	NA
306	K						B	II	NOTE 11 C	4.000	2.625	3.375	2.750	.156	.093	.156	.187	.125	.156	2.328	1.468	1.187	.906	2.031	.062	.375	.156	↕	1.437	2.750	.437	2.312	3.687	.062	NA	1.750	.593	↕	↕	↕	↕	↕	↕	↕	↕	↕
305	K						B	I	NOTE 11 B	2.000	1.312	1.687	1.375	.078	.048	.078	.093	NA	NA	1.164	.734	.593	.453	1.015	.048	.171	.078	↕	.718	1.375	.187	NA	NA	.048	.031	.875	.320	↕	↕	↕	↕	↕	↕	↕	↕	↕
304	K						B	II	NOTE 11 C	2.000	1.312	1.687	1.375	.078	.048	.078	.093	.070	.078	1.164	.734	.593	.453	1.015	.048	.171	.078	NA	.718	1.375	.187	.156	1.843	.048	NA	.875	.320	NA	NA	NA	NA	NA	NA	NA	NA	NA
303	K																																													
302	K																																													
301	K																																													
300	K	OPTICAL UNIT		NA	NA	NA	A	I	NOTE 11 B	2.000	1.312	1.675	NA	NA	.048	.078	NA	NA	NA	1.090	.812	.675	.540	.940	NA	.265	NA	NA	NA	1.375	.218	NA	NA	NA	NA	NA	.375	NA	NA	NA	.180	NA	.078	NA	NA	NA
9	K	2 IN AUTOCOLLIMATOR		1001702			B	II	NOTE 11 C	4.000	2.625	3.812	2.750	.156	.093	.156	.187	.125	.156	2.250	1.500	1.187	.906	2.031	.093	.375	.156	1.750	1.437	2.750	.437	2.312	3.687	.062	NA	1.750	.593	.156	1.062	3.812	.156	NA	.156	1.062	.375	3.687
8	K	5 IN AUTOCOLLIMATOR		1017410			B	II	NOTE 11 C	4.000	2.625	3.812	2.750	.156	.093	.156	.187	.125	.156	2.250	1.500	1.187	.906	2.031	.093	.375	.156	1.750	1.437	2.750	.437	2.312	3.687	.062	NA	1.750	.593	.156	1.062	3.812	.156	NA	.156	1.062	.375	3.687
7	K	2½ IN AUTOCOLLIMATOR (SCT)		1017435			B	II	NOTE 11 C	4.000	2.625	3.812	2.750	.156	.093	.156	.187	.125	.156	2.250	1.500	1.187	.906	2.031	.093	.375	.156	1.750	1.437	2.750	.437	2.312	3.687	.062	NA	1.750	.593	.156	1.062	3.812	.156	NA	.156	1.062	.375	3.687
6	K	2½ IN AUTOCOLLIMATOR (SXT)		1017448			B	II	NOTE 11 C	4.000	2.625	3.812	2.750	.156	.093	.156	.187	.125	.156	2.250	1.500	1.187	.906	2.031	.093	.375	.156	1.750	1.437	2.750	.437	2.312	3.687	.062	NA	1.750	.593	.156	1.062	3.812	.156	NA	.156	1.062	.375	3.687
5	K	RETROREFLECTING PRISM ASSEMBLY		1019840			B	I	NOTE 11 B	4.000	2.625	3.812	2.750	.156	.093	.156	.187	NA	NA	2.250	1.500	1.187	.906	2.031	.093	.375	.156	1.750	1.437	2.750	.437	NA	NA	.062	.062	1.750	.593	.156	1.062	3.812	.156	NA	.156	1.062	.375	NA
4	K	S/H SIMULATOR ASSEMBLY		1019896			B	I	NOTE 11 B	4.000	2.625	3.812	2.750	.156	.093	.156	.187	NA	NA	2.250	1.500	1.187	.906	2.031	.093	.375	.156	1.750	1.437	2.750	.437	NA	NA	.062	.062	1.750	.593	.156	1.062	3.812	.156	NA	.156	1.062	.375	NA
3	K	REFERENCE MIRROR		1001767			B	I	NOTE 11 B	2.000	1.312	1.906	1.375	.078	.048	.078	.093	NA	NA	1.125	.750	.593	.453	1.015	.062	.187	.078	.875	.718	1.375	.218	NA	NA	.048	.031	.875	.305	.078	.531	1.906	.078	NA	.078	.531	.187	NA
2	K	2 IN PLANE READING AUTOCOLLIMATOR		1017413			B	I	NOTE 11 B	2.000	1.312	1.906	1.375	.078	.048	.078	.093	NA	NA	1.125	.750	.593	.453	1.015	.062	.187	.078	.875	.718	1.375	.218	NA	NA	.048	.031	.875	.305	.078	.531	1.906	.078	NA	.078	.531	.187	NA
1	K	2 IN AUTOCOLLIMATOR		1001702			B	I	NOTE 11 B	2.000	1.312	1.906	1.375	.078	.048	.078	.093	NA	NA	1.125	.750	.593	.453	1.015	.062	.187	.078	.875	.718	1.375	.218	NA	NA	.048	.031	.875	.305	.078	.531	1.906	.078	NA	.078	.531	.187	NA

Ⓖ REPLACES REV F WITH CHANGE

KOLLSMAN DASH NUMBERS

NOTES FOR TABLE

STYLE A IS FOR G&N SYSTEM.
STYLE B IS FOR GROUND SUPPORT EQUIPMENT.
TYPE I IS WITHOUT MOUNTING HOLES.
TYPE II IS WITH MOUNTING HOLES.

QTY REQD	PART OR IDENTIFYING NO.	MATERIAL OR NOTES	NOMENCLATURE OR DESCRIPTION	FIND NO.

LIST OF MATERIALS

NEXT ASSY	USED ON
AS APPLICABLE	

APPLICATION

UNLESS OTHERWISE SPECIFIED
DIMENSIONS ARE IN INCHES
CAPACITOR VALUES ARE IN μf
RESISTOR VALUES ARE IN OHMS
TOLERANCES ON
FRACTIONS ± — DECIMALS ±.005 ANGLES ± —
DO NOT SCALE THIS DRAWING

MATERIAL
SEE NOTE 11

MIT
INSTRUMENTATION LAB
CAMBRIDGE, MASS.

DRAWN R. A. Jones 7-16-65
CHECKED 7-22-65
APPROVED
APPROVED W. Kupfer
APPROVED MIT W. Kupfer
APPROVED MSC
DATE

MANNED SPACECRAFT CENTER
HOUSTON, TEXAS

NAMEPLATES,
APOLLO G&N-GSE
(STANDARDS)

CODE IDENT NO. 80230
SIZE E
DRAWING NO. 1004260
SCALE NONE
SHEET 2 OF

NOTICE – WHEN GOVERNMENT DRAWINGS, SPECIFICATIONS, OR OTHER DATA ARE USED FOR ANY PURPOSE OTHER THAN IN CONNECTION WITH A DEFINITELY RELATED GOVERNMENT PROCUREMENT OPERATION, THE UNITED STATES GOVERNMENT THEREBY INCURS NO RESPONSIBILITY NOR ANY OBLIGATION WHATSOEVER, AND THE FACT THAT THE GOVERNMENT MAY HAVE FORMULATED, FURNISHED, OR IN ANY WAY SUPPLIED THE SAID DRAWINGS, SPECIFICATIONS OR OTHER DATA IS NOT TO BE REGARDED BY IMPLICATION OR OTHERWISE AS IN ANY MANNER LICENSING THE HOLDER OR ANY OTHER PERSON OR CORPORATION, OR CONVEYING ANY RIGHTS OR PERMISSION TO MANUFACTURE, USE, OR SELL ANY PATENTED INVENTION THAT MAY IN ANY WAY BE RELATED THERETO.

299	R
298	R

REVISIONS 02768

SYM	ZONE	DESCRIPTION	DR	CHK	DATE	APPROVED
G		REPLACES REV F WITH CHANGE PER TDRR 20854			7/21/65	WK
H		REVISED PER TDRR 20892			8/3/65	WK
J		REVISED PER TDRR 20904			8/3/65	WK
K		REVISED PER TDRR 21379			8/6/65	WK
L		REVISED PER TDRR 21410			[illegible]	WK
M		REVISED PER TDRR 21993				
N		REVISED PER TDRR 22621			10/11/65	
P		REVISED PER TDRR 22671				
R		REVISED PER TDRR 22672				
S		REVISED PER TDRR 22750				WK
T		REVISED PER TDRR 22823				
U		REVISED PER TDRR 23072			10-22-65	MGM
V		REVISED PER TDRR 23521			10-26-65	WK
W		REVISED PER TDRR 23824	RAJ		11-9-65	WK
Y		REVISED PER TDRR 24018	RAJ		11-16-65	WK
Z		REVISED PER TDRR 24040	RAJ		11-19-65	WK
AA		REVISED PER TDRR 24060	RAJ		11-19-65	WK
AB		REVISED PER TDRR 24868	RAJ		12-22-65	WK
AC		REVISED PER TDRR 24973	RAJ		1-4-66	WK
AD		REVISED PER TDRR 25065	RAJ		1-18-66	MGM
AE		REVISED PER TDRR 25672	RAJ		2-4-66	WK
AF		REVISED PER TDRR 25671	RAJ		2-4-66	WK
AG		REVISED PER TDRR 26110	RAJ		2-17-66	WK
AH		REVISED PER TDRR 26372	"		3-16-66	MGM
AJ		REVISED PER TDRR 26425	"		3-16-66	MGM
AK		REVISED PER TDRR 26743	"		3-6-66	MGM
AL		REVISED PER TDRR 26798	"		3-16-66	MGM
AM		REVISED PER TDRR 27168	"		4-8-66	MGM
AN		REVISED PER TDRR 27235	"		4-8-66	MGM
AP		REVISED PER TDRR 27345	"		4-8-66	MGM
AR		REVISED PER TDRR 27417	"		4-8-66	MGM
AS		REVISED PER TDRR 27442	"		4-8-66	MGM
AT		REVISED PER TDRR 27719	"		4-20-66	WK
AU		REVISED PER TDRR 27880	"		4-20-66	WK
AV		REVISED PER TDRR 27896	"		4-20-66	WK
AW		28110	"		5-16-66	MGM
AY		28173	"		5-16-66	MGM
AZ		28131	"		5-16-66	MGM
BA		28124	"		5-16-66	MGM
BB		REVISED PER TDRR 28511	"		5-16-66	MGM
BC		" " " 28949	"		5-24-66	
BD		" " " 29222	"		6-8-66	
BE		" " " 29235	"		"	
BF		" " " 29322	"		6-29-66	MGM
BG		" " " 29429	"		"	MGM
BH		" " " 29449	"		"	MGM
BJ		" " " 29335	"		"	MGM
BK		" " " 29619	"		"	MGM
BL		" " " 29696	"		"	MGM
BM		" " " 29802	JSD	N.S.	7-29-66	
BN		REVISION STATUS CHANGED	JI	RLW	5 AUG 66	
BP		REVISED PER TDRR 30168	JI	RLW	8 AUG 66	
BR		REVISION STATUS CHANGED	JI	RLW	23 AUG 66	
BS		REVISION STATUS CHANGED	GW	RLW	26 AUG 66	
BT		REVISION STATUS CHANGED	GW	RLW	26 AUG 66	

DASH NO.	F/C	PART NAME	REMARKS	PART NO.	SER. NO.	CONT. NO.	STYLE	TYPE	MATERIAL	
277	R	COMPUTER TEST SET		2014042-041	NA	NAS-9-497	B	II	NOTE 11C	FOR DIMENSIONS, SEE DASH 18 VALUES BELOW
276		DRAWER ASSY - PROGRAM & MONITOR		2014041-041				I	NOTE 11 B	FOR DIMENSIONS, SEE DASH 17 VALUES BELOW
275		DRAWER ASSY RDC INTERFACE		2014045-031						FOR DIMENSIONS, SEE DASH 15 VALUES BELOW
274		SELF TEST ASSY		2014366-031						
273		LOGIC DRAWER ASSY NO. 2		2014037-031						FOR DIMENSIONS, SEE DASH 17 VALUES BELOW
272		DRAWING ASSY PROGRAMMER & MONITOR		2014041-031						FOR DIMENSIONS, SEE DASH 17 VALUES BELOW
271		LOGIC DRAWER ASSY NO. 1		2014036-031				I	NOTE 11 B	
270		COMPUTER TEST SET		2014042-031				II	NOTE 11C	FOR DIMENSIONS, SEE DASH 18 VALUES BELOW
269		POWER CONTROL ASSY		2014044-021				I	NOTE 11 B	FOR DIMENSIONS, SEE DASH 17 VALUES BELOW
268		SELF TEST ASSY		2014366-021						FOR DIMENSIONS, SEE DASH 15 VALUES BELOW
267		AGC JUNCTION ASSY		2014341-021						
266		POWER CONTROL ASSY		2014079-021						
265		BUFFER CIRCUIT ASSY		2014254-021						
264		DRAWER ASSY X Y INTERFACE		2014040-021						
263		DRAWER ASSY R D C INTERFACE		2014045-021						
262		DRAWER ASSY PROGRAMMER & MONITOR		2014041-021						FOR DIMENSIONS, SEE DASH 17 VALUES BELOW
261		LOGIC DRAWER ASSY NO. 2		2014037-021						
260		LOGIC DRAWER ASSY NO. 1		2014036-021				I	NOTE 11 B	
259		OPERATION CONSOLE		2014024-021				II	NOTE 11 C	FOR DIMENSIONS, SEE DASH 18 VALUES BELOW
258		COMPUTER TEST SET		2014042-021						
257		AUXILIARY CALIBRATION CONSOLE		2014059-021						
256		AGC CALIBRATION CONSOLE		2014049-021				II	NOTE 11 C	
255		AGC HANDLING FIXTURE		2014282-021				I	NOTE 11 B	FOR DIMENSIONS, SEE DASH 17 VALUES BELOW
254		DRAWER ASSY COMP. SIMULATOR		2014048-011				II	NOTE 11 C	FOR DIMENSIONS, SEE DASH 18 VALUES BELOW
253		SHIPPING KIT ASSY, NAV DSKY		2016312-011						
252		SHIPPING KIT ASSY, UNIVERSAL DSKY		2016316-011						
251		SHIPPING KIT ASSY, MAIN DSKY		2016313-011				II	NOTE 11 C	
250		AMPLIFIER, REWORK		2014386				I	NOTE 11 B	FOR DIMENSIONS, SEE DASH 15 VALUES BELOW
249		TEMP MONITOR ASSY		2014313-011					NOTE 11 C	FOR DIMENSIONS, SEE DASH 17 VALUES BELOW
248		AGC JUNCTION ASSY		2014341-011					NOTE 11 B	FOR DIMENSIONS, SEE DASH 15 VALUES BELOW
247		AC INPUT PANEL ASSY		2014302-011						
246		SELF TEST ASSY		2014392-011						
245		TAPE PUNCH ASSEMBLY		2014039-011						FOR DIMENSIONS, SEE DASH 15 VALUES BELOW
244	R	TAPE READER ASSEMBLY		2014038-011	NA	NAS-9-497	B	I	NOTE 11 B	
243										
242										
241	R	APOLLO GUIDANCE COMPUTER GROUP		6003001	NA	NAS-9-497	A	I	NOTE 11 B	FOR DIMENSIONS, SEE DASH 19 VALUES BELOW
240		SELF TEST ASSEMBLY		2014366-011	NA		B	I		FOR DIMENSIONS, SEE DASH 15 VALUES BELOW
239		POWER SUPPLY ASSY-115 V., 400 CYCLE		2014207-011						FOR DIMENSIONS, SEE DASH 17 VALUES BELOW
238		AC INPUT PANEL ASSY		2014043-011						
237		POWER CONTROL ASSY		2014079-011						FOR DIMENSIONS, SEE DASH 15 VALUES BELOW
236		DRAWER ASSY - X Y INTERFACE		2014040-011						
235		DRAWER ASSY R D C INTERFACE		2014045-011						
234		BUFFER CIRCUIT ASSY		2014254-011						
233		CONTROL & INTERFACE ASSY		2014204-011						
232		POWER CONTROL ASSY		2014044-011						FOR DIMENSIONS, SEE DASH 17 VALUES BELOW
231		DRAWER ASSY, PROGRAMMER & MONITOR		2014041-011						
230		CONNECTOR INTERFACE ASSY		2014272-011						FOR DIMENSIONS, SEE DASH 15 VALUES BELOW
229		CONNECTOR INTERFACE ASSY		2014047-011						
228		ANTENNA TUNING CAPACITOR ASSY		2014209-011						
227		MOUNTING FIXTURE ASSY		2014006-011						FOR DIMENSIONS, SEE DASH 17 VALUES BELOW
226		POWER SUPPLY ASSY 3 VDC		2014234-011						FOR DIMENSIONS, SEE DASH 15 VALUES BELOW
225		PANEL ASSY – SIGNAL INTERFACE		2014010-011						
224		OSCILLOSCOPE ASSY		2014232-011						
223		AUXILIARY OUTLET ASSY		2014274-011						
222		FREQUENCY COUNTER		2014233-011						
221		POWER SUPPLY ASSY 10, 13, 28 VDC		2014235-011						
220		LOGIC DRAWER ASSY NO. 2		2014037-011						FOR DIMENSIONS, SEE DASH 17 VALUES BELOW
219		LOGIC DRAWER ASSY NO. 1		2014036-011						
218		COUNTER, ELECTRICAL ASSY		2014288-011						FOR DIMENSIONS, SEE DASH 15 VALUES BELOW
217		POWER SUPPLY ASSY		2014279-011						
216		TEST MOUNT ASSY		2014257-011						
215		UNIVERSAL DSKY PEDESTAL MOUNT		2014014-011						FOR DIMENSIONS, SEE DASH 17 VALUES BELOW
214		MAIN DSKY PEDESTAL MOUNT		2014343				I	NOTE 11B	
213		SHIPPING CONTAINER, MAIN DSKY		1006229				II	NOTE 11C	FOR DIMENSIONS, SEE DASH 18 VALUES BELOW
212		NAV DSKY		1006231						
211		AGC		1006230						
210		UNIVERSAL DSKY		1006422						
209		SHIPPING CONTAINER, AGC		1006421				II	NOTE 11C	
208		UNIVERSAL DSKY HANDLING FIXTURE		2014013-011				I	NOTE 11B	FOR DIMENSIONS, SEE DASH 15 VALUES BELOW
207		NAV DSKY HANDLING FIXTURE		1014377						FOR DIMENSIONS, SEE DASH 17 VALUES BELOW
206		MAIN DSKY HANDLING FIXTURE		1014334						
205		AGC HANDLING FIXTURE		2014282-011				I	NOTE 11B	
204		OPERATION CONSOLE		2014024-011				II	NOTE 11C	FOR DIMENSIONS, SEE DASH 18 VALUES BELOW
203		COMPUTER TEST SET		2014042-011		NAS-9-497				
202		DRAWER ASSY, COMPUTER SIMULATOR		2014048-011		FNP 12775				
201		AUXILIARY CALIBRATION CONSOLE		2014059-011		NAS-9-497				
200		AGC CALIBRATION CONSOLE		2014049-011	NA		B	II	NOTE 11C	
21										
20		NA		NA	NA	NA	A	II	NOTE 11 C	
19		NA		NA	NA	NA	A	I	NOTE 11 B	
18		NA		NA	NA	NA	B	II	NOTE 11 C	
17		NA		NA	NA	NA	B	I	NOTE 11 B	
16		NA		NA	NA	NA	B	II	NOTE 11 C	
15	R	NA		NA	NA	NA	B	I	NOTE 11 B	

DASH NO.	A	B	C	D	E	F	G	H	J	K	L	M	N	P	R	S	T	U	V	W	Y	Z	AA	AB	AC	AD	AE	AF	AG	AH	AJ	AK	AL	AM	AN	AP	AR
20	2.000	1.312	1.687	1.375	.078	.031	.078	.093	.106 .113	.093	1.187	.750	.593	.453	1.015	.062	.187	.078	.875	.718	1.375	.218	1.156	1.843	.048	NA	.875	.305	.078	.312	1.687	.078	NA	.078	.312	.187	1.843
19	2.000	1.312	1.687	1.375	.078	.031	.078	.093	NA	NA	1.187	.750	.593	.453	1.015	.062	.187	.078	.875	.718	1.375	.218	NA	NA	.048	.031	.875	.305	.078	.312	1.687	.078	NA	.078	.312	.187	NA
18	4.187	1.875	3.469	2.750	.156	.093	.156	.125	.106 .113	.125	1.625	1.032	.844	.656	1.406	.093	.344	.156	1.781	1.531	2.844	.312	1.562	3.875	.062	NA	1.219	.500	.156	.719	3.469	.156	NA	.156	.719	.344	3.875
17	4.187	1.875	3.469	2.750	.156	.093	.156	.125	NA	NA	1.625	1.032	.844	.656	1.406	.093	.344	.156	1.781	1.531	2.844	.312	NA	NA	.062	.062	1.219	.500	.156	.719	3.469	.156	NA	.156	.719	.344	NA
16	2.000	1.312	1.687	1.375	.078	.031	.078	.093	.106 .113	.093	1.187	.750	.593	.453	1.015	.062	.187	.078	.875	.718	1.375	.218	1.156	1.843	.048	NA	.875	.305	.078	.312	1.687	.078	NA	.078	.312	.187	1.843
15	2.000	1.312	1.687	1.375	.078	.031	.078	.093	NA	NA	1.187	.750	.593	.453	1.015	.062	.187	.078	.875	.718	1.375	.218	NA	NA	.048	.031	.875	.305	.078	.312	1.687	.078	NA	.078	.312	.187	NA

THIS SHEET ADDED

Ⓖ REPLACES REV F WITH CHANGE

RAYTHEON DASH NUMBERS

NOTES FOR TABLE
STYLE A IS FOR G & N SYSTEM
STYLE B IS FOR GROUND SUPPORT EQUIPMENT
TYPE I IS WITHOUT MOUNTING HOLES
TYPE II IS WITH MOUNTING HOLES

QTY REQD	PART OR IDENTIFYING NO.	MATERIAL OR NOTES	NOMENCLATURE OR DESCRIPTION	FIND NO.

LIST OF MATERIALS

AS APPLICABLE	
NEXT ASSY	USED ON
APPLICATION	

UNLESS OTHERWISE SPECIFIED
DIMENSIONS ARE IN INCHES
CAPACITOR VALUES ARE IN μf
RESISTOR VALUES ARE IN OHMS
TOLERANCES ON
FRACTIONS ± — DECIMALS ±.005 ANGLES ± —
DO NOT SCALE THIS DRAWING

MATERIAL
SEE NOTE 11

MIT
INSTRUMENTATION LAB
CAMBRIDGE, MASS.

MANNED SPACECRAFT CENTER
HOUSTON, TEXAS

DRAWN	R A Jones	7-16-65
CHECKED	A. J.	7-22-65
APPROVED		
APPROVED	WKupfer	7/ /65
APPROVED MIT	WKupfer	7/ /65
APPROVED MSC		
		DATE

NAMEPLATES,
APOLLO GEN-GSE
(STANDARDS)

CODE IDENT NO 80230
SIZE E
DRAWING NO. 1004260
SCALE NONE
SHEET 3 OF

DASH NO.	P/C	PART NAME	REMARKS	PART NO.	SER. NO.	CONT. NO.	STYLE	TYPE	MATERIAL	A	B	C	D	E	F	G	H	J	K	L	M	N	P	R	S	T	U	V	W	Y	Z	AA	AB	AC	AD	AE	AF	AG	AH	AJ	AK	AL	AM	AN	AP	AR
199	AC	EYEPIECE STOWAGE UNIT		2021255-011			A	I		FOR DIMENSIONS, SEE DASH 100 VALUES BELOW																																				
198	AC	SIGNAL CONDITIONER ASSY C/M		2007234		NAS 9-497			NOTE 11B																																					
197	AC	SIGNAL CONDITIONER ASSY C/M		2007235																																										
196	AC	SIGNAL CONDITIONER ASSY LEM		6007010																																										
195	AC	PSA & SIGNAL CONDITIONER ASSY		6007009			A	I	NOTE 11B																																					
194	AC	PANEL, MONITOR		2900031-031			B	II	NOTE 11C	FOR DIMENSIONS, SEE DASH 141 VALUES BELOW																																				
193	AC	DISTRIBUTION BOX, GSE		2900024-031																																										
192	AC	ANALYZER, OPTICS-INERTIAL		2900023-031						FOR DIMENSIONS, SEE DASH 144 VALUES BELOW																																				
191	AC	TEST CONTROL		2900027-031						FOR DIMENSIONS, SEE DASH 141 VALUES BELOW																																				
190	AC	PANEL, PWR SUP AND LOAD		2900033-021																																										
189	AC	ADPT MODULE, P. S. A.		6900088-011																																										
188	AC	ADPT MODULE, P. S. A.		2901143-011																																										
187	AC	FIXTURE, MTG, PTA/PEA		2900066-021		NAS 9-497	B	II	NOTE 11C																																					
186	AC	ANNUNCIATOR PANEL AND EYEPIECE STORAGE ASSEMBLY		1021255-021			A	I		FOR DIMENSIONS, SEE DASH 100 VALUES BELOW																																				
185	AC	ANNUNCIATOR PANEL AND EYEPIECE STORAGE ASSEMBLY		1021255-011			A	I																																						
184	AC	FIX., HAND., G AND N HARNESS		1901846-041		NAS-9-497	B	II	NOTE 11C	FOR DIMENSIONS, SEE DASH 144 VALUES BELOW																																				
183	AC	INSTALLING TOOL, ELEC. CONN		1902586-011			B	II	NOTE 11C	FOR DIMENSIONS, SEE DASH 102 VALUES BELOW																																				
182	AC	ADPT MODULE, P.S.A.		6900088-011			B	II	NOTE 11C	FOR DIMENSIONS, SEE DASH 141 VALUES BELOW																																				
181	AC	G & N INDICATOR CONTROL PANEL ASSY		2014578-011			A	I	NOTE 11B	3.000	1.938	2.437	NA	.125	.062	.188	.156	NA	NA	1.750	1.125	.906	.688	1.500	NA	.281	.125	NA	1.094	2.062	.312	NA	2.500	.062	.125	1.312	.469	NA	NA	NA	.156	NA	.125	.469	.344	NA
180	AC	ADPT MODULE, P.S.A.		1902431-031			B	II		FOR DIMENSIONS, SEE DASH 121 VALUES BELOW																																				
179	AC	MOUNTING PLATE, IMU/PTA		6900083-011						FOR DIMENSIONS, SEE DASH 144 VALUES BELOW																																				
178	AC	MOUNTING PLATE, COMPONENT		6900007-021																																										
177	AC	FIX., MOUNTING, SUBSYSTEM		2900070-021																																										
176	AC	FIX., MOUNTING, G AND N		2900067-021																																										
175	AC	CSL, COOL. AND PWR, G AND N		1902134-031																																										
174	AC	FIX., HAND., C/M AND LEM CDU		2900999-011					NOTE 11C	FOR DIMENSIONS, SEE DASH 141 VALUES BELOW																																				
173	AC	FIX., HANDLING, C/M PSA		2900998-011																																										
172	AC	CAGING ELECTRONICS, GYRO		2900029-021																																										
171	AC	DISTRIBUTION BOX, GSE		2900024-021																																										
170	AC	ANALYZER, OPTICS-INERTIAL		2900023-021						FOR DIMENSIONS, SEE DASH 144 VALUES BELOW																																				
169	AC	ADPT, TESTPOINT, P.S.A.		2900037-021						FOR DIMENSIONS, SEE DASH 141 VALUES BELOW																																				
168	AC	TEST SELECTOR		2900028-021																																										
167	AC	TEST CONTROL		2900027-021																																										
166	AC	PANEL, MONITOR		2900031-021																																										
165	AC	TERM. BOARD STORAGE DRAWER		2900927-011																																										
164	AC	INPUT/OUTPUT PANEL		2900926-011																																										
163	AC	CONTROL PANEL		2900896-011																																										
162	AC	CSL. CAL AND TEST, SCM/PSAAM		2900895-011						FOR DIMENSIONS, SEE DASH 144 VALUES BELOW																																				
161	AC	FIX., LIFT AND HAND., IMU		[illegible]5462-011						FOR DIMENSIONS, SEE DASH 141 VALUES BELOW																																				
160	AC	FIX., HAND., G AND N HARNESS		1901846-031						FOR DIMENSIONS, SEE DASH 144 VALUES BELOW																																				
159	AC	BATTERY POWER PACK		1900011-031			B	II	NOTE 11C																																					
158	AC	COUPLING DATA UNIT ASSEMBLY C/M		2007222			A	I	NOTE 11B	FOR DIMENSIONS SEE DASH 100 VALUES BELOW																																				
157	AC	COUPLING DATA UNIT ASSEMBLY - LEM		2007222																																										
156	AC	POWER & SERVO ASSEMBLY C/M		2007200						2.125	.968	1.718	NA	.093	.031	.06	.093	NA	NA	.858	.608	.484	.358	.733	.062	.140	.062	NA	.968	1.450	.125	NA	1.720	.046	.03	NA	.210	NA	NA	NA	.070	NA	.046	.32	.16	NA
155	AC	PIPA ELECTRONICS ASSEMBLY		2007201						FOR DIMENSIONS SEE DASH 100 VALUES BELOW																																				
154	AC	PULSE TORQUE ASSEMBLY - LEM		6007000																																										
153	AC	POWER & SERVO ASSEMBLY - LEM		6007200			A	I	NOTE 11B																																					
152	AC	CONT PNL, RSVR CKT TESTER		2900770-011			B	II	NOTE 11C	FOR DIMENSIONS, SEE DASH 141 VALUES BELOW																																				
151	AC	TESTER, RESOLVER CIRCUIT		2900708-011																																										
150	AC	JUNCTION BOX, P.S.A./G.S.E.		1901933-021						FOR DIMENSIONS, SEE DASH 144 VALUES BELOW																																				
149	AC	BATTERY PACK, LIFTING		2900612-011						FOR DIMENSIONS, SEE DASH 141 VALUES BELOW																																				
148	AC	MOUNTING PLATE, COMPONENT		6900007-011						FOR DIMENSIONS, SEE DASH 144 VALUES BELOW																																				
147	AC	MOUNTING PLATE, COMPONENT		2900677-011																																										
146	AC	CART, TRANS, G AND N		1900009-041																																										
145	AC	CONTAINER, SHIPPING, IMU		1900010-021		NAS-9-497	B	II	NOTE 11C																																					
144	AC	FIX., MOUNTING, G AND N		1902204-021			B	II	NOTE 11C	4.125	1.812	3.250	NA	.125	.062	.12	.156	.100 .104	.125	1.625	1.140	.890	.640	1.390	.125	.171	.125	1.875	1.687	2.625	.250	1.562	3.843	.093	NA	NA	.359	.125	.437	3.688	NA	3.687	.093	.40	.25	3.875
143	AC	CSL, COOL. AND PWR, G AND N		1902134-021						4.125	1.812	3.250		.125	.062	.12	.156		.125	1.625	1.140	.890	.640	1.390	.125	.171	.125	1.875	1.687	2.625	.250	1.562	3.843	.093			.359	.125	.437	3.688		3.687	.093	.40	.25	3.875
142	AC	ANALYZER, OPTICS-INERTIAL		2900023-011						4.125	1.812	3.250		.125	.062	.12	.156		.125	1.625	1.140	.890	.640	1.390	.125	.171	.125	1.875	1.687	2.625	.250	1.562	3.843	.093			.359	.125	.437	3.688		3.687	.093	.40	.25	3.875
141	AC	CONT, TEMP, PORTABLE		2900060-011						2.125	.968	1.718		.093	.031	.06	.093		.093	.858	.608	.484	.358	.733	.077	.116	.062	.937	.875	1.343	.125	.781	1.892	.046			.209	.093	.250	1.875		1.840	.046	.23	.16	1.938
140	AC	TESTER, CKT, IMU/CDU RSVR		2900286-011						4.125	1.812	3.250		.125	.062	.12	.156		.125	1.625	1.140	.890	640	1.390	.125	.171	.125	1.875	1.687	2.625	.250	1.562	3.843	.093			.359	.125	.437	3.688		3.687	.093	.40	.25	3.875
139	AC	SIMULATOR, LD/SIG, CDU		2900285-011																																										
138	AC	SIMULATOR, LD/SIG, OPTICS		1902023-021																																										
137	AC	FIX., MOUNTING, IMU/NAV BASE		6900003-011																																										
136	AC	FIXTURE, OPTICS/NAV BASE		2900072-011																																										
135	AC	FIX., MOUNTING, SUB SYSTEM		2900070-011																																										
134	AC	FIX., HAND., G AND N HARNESS		2900069-011																																										
133	AC	CNTR, SHIPPING, NAV BASE		2900068-011																																										
132	AC	FIX., MOUNTING, G AND N		2900067-011																																										
131	AC	SIMULATOR, LD/SIG, IMU/CDU		2900062-011																																										
130	AC	TESTER, GYRO WHEEL		2900061-011																																										
129	AC	COOLANT SUPPLY		1902133-021																																										
128	AC	TABLE, ROTARY		1900926-021						4.125	1.812	3.250		.125	.062	.12	.156		.125	1.625	1.140	.890	.640	1.390	.125	.171	.125	1.875	1.687	2.625	.250	1.562	3.843	.093			.359	.125	.437	3.688		3.687	.093	.40	.25	3.875
127	AC	FIX., HAND., OPTICS		2900074-011						2.125	.968	1.718		.093	.031	.06	.093		.093	.858	.608	.484	.358	.733	.077	.116	.062	.937	.875	1.343	.125	.781	1.892	.046			.209	.093	.250	1.875		1.840	.046	.23	.16	1.938
126	AC	FIXTURE, MTG, PTA/PEA.		2900066-011																																										
125	AC	CONT, TEMP, IMU LIFTING		2900063-011																																										
124	AC	FIXTURE, HANDLING, IMU		2900064-011																																										
123	AC	CONT, OPTICS, REMOTE		1902046-021																																										
122	AC	TEST CONTROL		1902009-021																																										
121	AC	ADPT MODULE, P.S.A.		1902431-021																																										
120	AC	BRIDGE, DECADE ERROR		2900128-011																																										
119	AC	PWR SUP, ELECTRONICS		2900012-011																																										
118	AC	PWR SUP, RELAY AND LAMP		1900049-031																																										
117	AC	CONSOLE, OSCILLOGRAPH		1900000-021																																										
116	AC	ADPT MODULE, P.S.A.		1902431-011																																										
115	AC	ADPT, TEST POINT, PTA/PEA.		2900145-011																																										
114	AC	ADPT, TEST POINT, P.S.A.		2900037-011																																										
113	AC	CONTROL, GIMBAL POSITION		2900036-011																																										
112	AC	SELECTOR, SIGNAL, PRIMARY		2900035-011																																										
111	AC	SEL, SIG. OSCILLOGRAPH		2900034-011																																										
110	AC	PANEL, PWR SUP AND LOAD		2900033-011																																										
109	AC	PANEL, MONITOR		2900031-011																																										
108	AC	PANEL, AUXILIARY INPUT		2900030-011																																										
107	AC	CAGING ELECTRONICS, GYRO		2900029-011																																										
106	AC	TEST SELECTOR		2900028-011																																										
105	AC	TEST CONTROL		2900027-011																																										
104	AC	MONITOR AND CONTROL, TEMP		2900026-011																																										
103	AC	DISTRIBUTION BOX, GSE		2900024-011																																										
102	AC	VOLTMETER, DIGITAL		2900007-011			B	II	NOTE 11C	2.125	.968	1.718	NA	.093	.031	.06	.093	.100 .104	.093	.858	.608	.484	.358	.733	.077	.116	.062	.937	.875	1.343	.125	.781	1.892	.046	NA	NA	.209	.093	.250	1.875	NA	1.840	.046	.23	.16	1.938
101	AC	NAVIGATION BASE ASSEMBLY - LEM		6899950		NAS-9-497	A	I	NOTE 11B	2.000	1.312	1.906	1.375	.078	.048	.078	.093	NA	NA	1.125	.750	.593	.453	1.015	.062	.187	.078	.875	.719	1.375	.218	NA	NA	.048	.031	.875	.305	.078	.531	1.906	.078	NA	.078	.531	.187	NA
100	AC	NAVIGATION BASE ASSEMBLY		2899982		NAS-9-497	A	I	NOTE 11B	2.000	1.312	1.906	1.375	.078	.048	.078	.093	NA	NA	1.125	.750	.593	.453	1.015	.062	.187	.078	.875	.718	1.375	.218	NA	NA	.048	.031	.875	.305	.078	.531	1.906	.078	NA	.078	.531	.187	NA

AC ELECTRONICS DASH NUMBERS

THIS SHEET ADDED

Ⓖ REPLACES REV F WITH CHANGE

NOTES FOR TABLE
STYLE A IS FOR G & N SYSTEM
STYLE B IS FOR GROUND SUPPORT EQUIPMENT
TYPE I IS WITHOUT MOUNTING HOLES
TYPE II IS WITH MOUNTING HOLES

NOTE: AC DASH NO's. CONT. ON SH. 6

REVISIONS

SYM	ZONE	DESCRIPTION	DR	CHK	DATE	APPROVED
G		REPLACES REV F WITH CHANGE PER TDRR 20854.			1/22/65	WK
H		REVISED PER TDRR 20892				WK
J		REVISED PER TDRR 20904				WK
K		REVISED PER TDRR 21379				WK
L		REVISED PER TDRR 21410			8/23/65	WK
M		REVISED PER TDRR 21993				
N		REVISED PER TDRR 22621				
P		REVISED PER TDRR 22671				
R		REVISED PER TDRR 22672				
S		REVISED PER TDRR 22750				
T		REVISED PER TDRR 22823			/65	WK
U		REVISED PER TDRR 23072				MGM
V		REVISED PER TDRR 23521			10-26-65	WK
W		REVISED PER TDRR 23824	RAJ		11-9-65	WK
Y		REVISED PER TDRR 24018	RAJ		11-16-65	WK
Z		REVISED PER TDRR 24040	RAJ		11-19-65	WK
AA		REVISED PER TDRR 24060	RAJ		11-19-65	WK
AB		REVISED PER TDRR 24868	RAJ		2-22-65	WK
AC		REVISED PER TDRR 24973	RAJ		1-4-66	WK
AD		REVISED PER TDRR 25065	RAJ		1-18-66	MGM
AE		REVISED PER TDRR 25672	RAJ		2-4-66	WK
AF		REVISED PER TDRR 25671	RAJ		2-4-66	WK
AG		REVISED PER TDRR 26110	RAJ		2-15-66	WK
AH		REVISED PER TDRR 26372	"		3-16-66	MGM
AJ		REVISED PER TDRR 26425	"		3-16-66	MGM
AK		REVISED PER TDRR 26743	"		3-16-66	MGM
AL		REVISED PER TDRR 26798	"		3-16-66	MGM
AM		REVISED PER TDRR 27168	"		4-8-66	MGM
AN		REVISED PER TDRR 27235	"		4-8-66	MGM
AP		REVISED PER TDRR 27345	"		4-8-66	MGM
AR		REVISED PER TDRR 27417	"		4-8-66	MGM
AS		REVISED PER TDRR 27442	"		4-8-66	MGM
AT		REVISED PER TDRR 27719	"		4-21-66	WK
AU		REVISED PER TDRR 27880	"		4-21-66	WK
AV		REVISED PER TDRR 27896	"		4-21-66	WK
AW		28110	"		5-16-66	MGM
AY		28173	"			MGM
AZ		28131	"			MGM
BA		28124	"			MGM
BB		REVISED PER TDRR 28511	"		5-16-66	MGM
BC		" " " 28949	"		5-24-66	MGM
BD		" " " 29222	"		6-3-66	MGM
BE		" " " 29235	"		"	MGM
BF		" " " 29322	"		6-24-66	MGM
BG		" " " 29429	"		"	MGM
BH		" " " 29449	"		"	MGM
BJ		" " " 29335	"		"	MGM
BK		" " " 29619	"		"	MGM
BL		" " " 29696	"		6-29-66	MGM
BM		REVISION STATUS CHANGED	JSD	NS	7-29-66	
BN		REVISION STATUS CHANGED	JI	RLW	22 AUG 66	
BP		REVISION STATUS CHANGED	JI	RLW	22 AUG 66	
BR		REVISED PER TDRR 30241	JI	RLW	22 AUG 66	
BS		REVISION STATUS CHANGED	GW	RLW	26 AUG 66	
BT		REVISION STATUS CHANGED	GW	RLW	26 AUG 66	

QTY REQD	PART OR IDENTIFYING NO.	MATERIAL OR NOTES	NOMENCLATURE OR DESCRIPTION	FIND NO.

LIST OF MATERIALS

AS APPLICABLE	
NEXT ASSY	USED ON
APPLICATION	

UNLESS OTHERWISE SPECIFIED
DIMENSIONS ARE IN INCHES
CAPACITOR VALUES ARE IN μf
RESISTOR VALUES ARE IN OHMS
TOLERANCES ON
FRACTIONS ± — DECIMALS ±.005 ANGLES ± —
DO NOT SCALE THIS DRAWING

MATERIAL
SEE NOTE 11

MIT
INSTRUMENTATION LAB
CAMBRIDGE, MASS

MANNED SPACECRAFT CENTER
HOUSTON, TEXAS

DRAWN R. A. Jones 7-1-66
CHECKED 7-22-66
APPROVED
APPROVED
APPROVED MIT
APPROVED MSC

NAMEPLATES,
APOLLO G&N-GSE
(STANDARDS)

CODE IDENT NO. 80230
SIZE E
DRAWING NO. 1004260
SCALE NONE
SHEET 4 OF

NOTICE - WHEN GOVERNMENT DRAWINGS, SPECIFICATIONS, OR OTHER DATA ARE USED FOR ANY PURPOSE OTHER THAN IN CONNECTION WITH A DEFINITELY RELATED GOVERNMENT PROCUREMENT OPERATION, THE UNITED STATES GOVERNMENT THEREBY INCURS NO RESPONSIBILITY NOR ANY OBLIGATION WHATSOEVER; AND THE FACT THAT THE GOVERNMENT MAY HAVE FORMULATED, FURNISHED, OR IN ANY WAY SUPPLIED THE SAID DRAWINGS, SPECIFICATIONS, OR OTHER DATA IS NOT TO BE REGARDED BY IMPLICATION OR OTHERWISE AS IN ANY MANNER LICENSING THE HOLDER OR ANY OTHER PERSON OR CORPORATION, OR CONVEYING ANY RIGHTS OR PERMISSION TO MANUFACTURE, USE, OR SELL ANY PATENTED INVENTION THAT MAY IN ANY WAY BE RELATED THERETO.

REVISIONS 02768

SYM	ZONE	DESCRIPTION	DR	CHK	DATE	APPROVED
G		REPLACES REV F WITH CHANGE PER TDRR 20854			7/26/65	WK
H		REVISED PER TDRR 20892			8/3/65	WK
J		REVISED PER TDRR 20904			8/3/65	WK
K		REVISED PER TDRR 21379			8/6/65	WK
L		REVISED PER TDRR 21410			8/23/65	WK
M		REVISED PER TDRR 21993				
N		REVISED PER TDRR 22621			10/1/65	
P		REVISED PER TDRR 22671				
R		REVISED PER TDRR 22672				
S		REVISED PER TDRR 22750				
T		REVISED PER TDRR 22823				WK
U		REVISED PER TDRR 23072			10-22-65	
V		REVISED PER TDRR 23521			10-26-65	WK
W		REVISED PER TDRR 23624	RAJ		11-9-65	WK
Y		REVISED PER TDRR 24018	RAJ		11-16-65	WK
Z		REVISED PER TDRR 24040	RAJ		11-15-65	WK
AA		REVISED PER TDRR 24060	RAJ		11-19-65	WK
AB		REVISED PER TDRR 24868	RAJ		12-22-65	WK
AC		REVISED PER TDRR 24973	RAJ		1-4-66	WK
AD		REVISED PER TDRR 25065	RAJ		1-18-66	
AE		REVISED PER TDRR 25672	RAJ		2-4-66	WK
AF		REVISED PER TDRR 25671	RAJ		2-4-66	WK
AG		REVISED PER TDRR 26110	RAJ		2-15-66	WK
AH		REVISED PER TDRR 26372	"		3-16-66	WGM
AJ		REVISED PER TDRR 26425	"		3-16-66	WGM
AK		REVISED PER TDRR 26743	"		3-16-66	WGM
AL		REVISED PER TDRR 26798	"		3-16-66	WGM
AM		REVISED PER TDRR 27163	"		4-7-66	WGM
AN		REVISED PER TDRR 27235	"		4-7-66	WGM
AP		REVISED PER TDRR 27345	"		4-7-66	WGM
AR		REVISED PER TDRR 27417	"		4-7-66	WGM
AS		REVISED PER TDRR 27442	"		4-7-66	WGM
AT		REVISED PER TDRR 27719	"		4-20-66	WK
AU		REVISED PER TDRR 27880	"		4-20-66	WK
AV		REVISED PER TDRR 27896	"		4-20-66	WK
AW		↑ ↑ 28110	"		5-16-66	WGM
AY		28173	"		↑	WGM
AZ		28131	"			WGM
BA		↓ ↓ 28124	"		↓	WGM
BB		REVISED PER TDRR 28511	"		5-16-66	WGM
BC		" " " 28949	"		5-24-66	
BD		" " " 29222	"		6-8-66	WGM
BE		" " " 29235	"		"	WGM
BF		" " " 29322	"		6-24-66	WGM
BG		" " " 29429	"		"	WGM
BH		" " " 29449	"		"	WGM
BJ		" " " 29335	"		"	WGM
BK		" " " 29619	"		"	WGM
BL		" " " 29696	"		6-29-66	WGM
BM		REVISION STATUS CHANGED	JSD		7-29-66	
BN		REVISION STATUS CHANGED	JI	RLW	22 AUG 66	
BP		REVISION STATUS CHANGED	JI	RLW	22 AUG 66	
BR		REVISION STATUS CHANGED	JI	RLW	22 AUG 66	
BS		REVISION STATUS CHANGED	GW	RLW	26 AUG 66	
BT		REVISION STATUS CHANGED	GW	RLW	26 AUG 66	

499 T
498

DASH NO.	P/C	PART NAME	REMARKS	PART NO.	SER. NO.	CONT. NO.	STYLE	TYPE	MATERIAL	A	B	C	D	E	F	G	H	J	K
40	MIT	COMPUTER ASSY		2003100		NAS-9-497	A	I	NOTE 11 B	2.000	1.312	1.906	1.375	.078	.048	.078	.093	NA	NA
-00	MIT	LIFTING SLING - G&N INST. QUAL. FIX. & AZM REF. FIX.		1021640		NAS-9-4065	B	II	NOTE 11 C	2.000	1.312	1.687	1.375	.078	.048	.078	.093	.066/.081	.093

DASH NO.	L	M	N	P	R	S	T	U	V	W	Y	Z	AA	AB	AC	AD	AE	AF	AG	AH	AJ	AK	AL	AM	AN	AP	AR
40	1.125	.750	.593	.453	1.015	.062	.187	.078	.875	.718	1.375	.218	NA	NA	.048	.031	.875	.305	.078	.531	1.906	.078	NA	.078	.531	.187	NA
-00	1.187	.750	.593	.453	1.015	.062	.187	.078	.875	.718	1.375	.218	1.156	1.843	.048	NA	.875	.305	.078	.312	1.687	.110	1.830	.070	.275	.180	1.844

MIT DASH NUMBERS

THIS SHEET ADDED

Ⓖ REPLACES REV F WITH CHANGE

NOTES FOR TABLE

STYLE A IS FOR G&N SYSTEM
STYLE B IS FOR GROUND SUPPORT EQUIPMENT
TYPE I IS WITHOUT MOUNTING HOLES
TYPE II IS WITH MOUNTING HOLES

QTY REQD	PART OR IDENTIFYING NO.	MATERIAL OR NOTES	NOMENCLATURE OR DESCRIPTION	FIND NO.

LIST OF MATERIALS

NEXT ASSY	USED ON
AS APPLICABLE	

APPLICATION

UNLESS OTHERWISE SPECIFIED
DIMENSIONS ARE IN INCHES
CAPACITOR VALUES ARE IN μf
RESISTOR VALUES ARE IN OHMS
TOLERANCES ON
FRACTIONS ± — DECIMALS ±.005 ANGLES ± —
DO NOT SCALE THIS DRAWING

MATERIAL
SEE NOTE 11

MIT
INSTRUMENTATION LAB
CAMBRIDGE, MASS

DRAWN R A Jones 7-16-65
CHECKED 7-22-65
APPROVED
APPROVED W Kupfer 7-22-65
APPROVED MIT W Kupfer 7-22-65
APPROVED MSC
DATE

MANNED SPACECRAFT CENTER
HOUSTON, TEXAS

NAMEPLATES,
APOLLO G&N-GSE
(STANDARDS)

CODE IDENT NO. 80230
SIZE E
DRAWING NO. 1004260
SCALE NONE
SHEET OF

NOTICE – WHEN GOVERNMENT DRAWINGS, SPECIFICATIONS, OR OTHER DATA ARE USED FOR ANY PURPOSE OTHER THAN IN CONNECTION WITH A DEFINITELY RELATED GOVERNMENT PROCUREMENT OPERATION, THE UNITED STATES GOVERNMENT THEREBY INCURS NO RESPONSIBILITY NOR ANY OBLIGATION WHATSOEVER, AND THE FACT THAT THE GOVERNMENT MAY HAVE FORMULATED, FURNISHED, OR IN ANY WAY SUPPLIED THE SAID DRAWINGS, SPECIFICATIONS OR OTHER DATA IS NOT TO BE REGARDED BY IMPLICATION OR OTHERWISE AS IN ANY MANNER LICENSING THE HOLDER OR ANY OTHER PERSON OR CORPORATION, OR CONVEYING ANY RIGHTS OR PERMISSION TO MANUFACTURE, USE, OR SELL ANY PATENTED INVENTION THAT MAY IN ANY WAY BE RELATED THERETO.

REVISIONS 02768

SYM	ZONE	DESCRIPTION	DR	CHK	DATE	APPROVED
AG		CHANGED NUMBER OF SHEETS FROM 5 TO 6 PER TDRR 26110.	RAJ		2-15-66	
AH		REVISED PER TDRR 26372	″		3-16-66	
AJ		REVISED PER TDRR 26425	″		3-16-66	
AK		REVISED PER TDRR 26743	″		3-16-66	
AL		REVISED PER TDRR 26798	″		3-16-66	
AM		REVISED PER TDRR 27168	″		4-7-66	
AN		REVISED PER TDRR 27235	″		4-7-66	
AP		REVISED PER TDRR 27345	″		4-7-66	
AR		REVISED PER TDRR 27417	″		4-7-66	
AS		REVISED PER TDRR 27442	″		4-7-66	
AT		REVISED PER TDRR 27719	″		4-20-66	
AU		REVISED PER TDRR 27880	″		4-20-66	
AV		REVISED PER TDRR 27896	″		4-20-66	
AW		↕ 28110	″		5-16-66	
AY		↕ 28173	″		5-16-66	
AZ		↕ 28131	″		5-16-66	
BA		↕ 28124	″		5-16-66	
BB		REVISED PER TDRR 28511	″		5-16-66	
BC		″ ″ ″ 28949	″		5-24-66	
BD		″ ″ ″ 29222	″		6-8-66	
BE		″ ″ ″ 29235	″		″	
BF		″ ″ ″ 29322	″		6-24-66	
BG		″ ″ ″ 29429	″		″	
BH		″ ″ ″ 29449	″		″	
BJ		″ ″ ″ 29335	″		″	
BK		″ ″ ″ 29619	″		″	
BL		″ ″ ″ 29696	″		6-29-66	
BM		REVISION STATUS CHANGED	JSD	N.S.	7-29-66	
BN		REVISED PER TDRR 29974	JL	RLW	22 AUG 66	
BP		REVISION STATUS CHANGED	JL	RLW	22 AUG 66	
BR		REVISION STATUS CHANGED	JL	RLW	23 AUG 66	
BS		REVISED PER TDRR 30530	GW	RLW	26 AUG 66	
BT		REVISED PER TDRR 30543	GW		26 AUG 66	

539	AC	
538	AC	

DASH NO	P/C	PART NAME	REMARKS	PART NO.	SER NO.	CONT NO.	STYLE	TYPE	MATERIAL	A	B	C	D	E	F	G	H	J	K	L	M	N	P	R	S	T	U	V	W	Y	Z	AA	AB	AC	AD	AE	AF	AG	AH	AJ	AK	AL	AM	AN	AP	AR
539	AC	ANNUNCIATOR PANEL AND EYEPIECE STORAGE ASSEMBLY		1021255-041		NAS9-497	A	I	NOTE 11B	2000	1.312	1906	1375	.078	.048	.078	.093	NA	NA	1.125	.750	.593	.453	1.015	.062	.187	.078	.875	.718	1375	.218	NA	NA	.048	.031	875	305	.078	531	1906	078	NA	.078	.531	.157	NA
538	AC	ANNUNCIATOR PANEL AND EYEPIECE STORAGE ASSEMBLY		1021255-031		↕	A	I	NOTE 11B	2000	1.312	1.906	1.375	.078	.048	.078	.093	NA	NA	1.125	.750	.593	.453	1.015	.062	.187	.078	.875	.718	1375	.218	NA	NA	.048	.031	875	305	078	531	1.906	.078	NA	078	531	.187	NA
537	AC	TEST SELECTOR		2900028-031		↕	B	II	NOTE 11C	2.125	.968	1.718	NA	.093	.031	.06	.093	.100 .104	.093	.858	.608	.484	.358	.733	.077	.116	.062	.937	.875	1.343	.125	.781	1.892	.046	NA	NA	.209	.093	.250	1.875	NA	1.840	.046	.23	.16	1.938
536	AC	ANALYZER, OPTICS - INERTIAL		2900023-041		↕	B	II	NOTE 11C	4.125	1.812	3.250	NA	.125	.062	.12	.156	.100 .104	.125	1.625	1.140	.890	.640	1.390	.125	.171	.125	1.875	1.687	2.625	.250	1.562	3.843	.093	NA	NA	.359	.125	.437	3.688	NA	3.687	.093	.40	.25	3.875
535	AC	CONT, TEMP, PORTABLE		2900060-021		↕	B	II	NOTE 11C	2.125	.968	1.718	NA	.093	.031	.06	.093	.100 .104	.093	.858	.608	.484	.358	.733	.077	.116	.062	.937	.875	1.343	.125	.781	1.892	.046	NA	NA	.209	.093	.250	1.875	NA	1.840	.046	.23	.16	1.938
534	AC	COMPUTER CONT & RETICLE DIMMER		6014512-021		↕	A	I	NOTE 11B	2000	1.312	1906	1.375	.078	.048	.078	.093	NA	NA	1.125	.750	.593	.453	1.015	.062	.187	.078	.875	.718	1.375	.218	NA	NA	.048	.031	.875	.305	.078	.531	1.906	.078	NA	078	.531	.187	NA
533	AC	ADPT MODULE, P.S.A.		1902431-041		↕	B	II	NOTE 11C	2.125	.968	1.718	NA	.093	.031	.06	.093	.100 .104	.093	.858	.608	.484	.358	.733	.077	.116	.062	.937	.875	1.343	.125	.781	1.892	.046	NA	NA	.209	.093	.250	1.875	NA	1.840	.046	.23	.16	1.938
532	AC	TRAY BREAKOUT, 105 PIN		1900807-021		↕	↕	↕	↕	4.125	1.812	3.250	↕	.125	.062	.12	.156	.100 .104	.125	1.625	1.140	.890	.640	1.390	.125	.171	.125	1.875	1.687	2.625	.250	1.562	3.843	.093	↕	↕	.359	.125	.437	3.688	↕	3.687	.093	.40	.25	3.875
531	AC	TRAY BREAKOUT, 84 PIN		1900806-021		↕	↕	↕	↕	4.125	1.812	3.250	↕	.125	.062	.12	.156	.100 .104	.125	1.625	1.140	.890	.640	1.390	.125	.171	.125	1.875	1.687	2.625	.250	1.562	3.843	.093	↕	↕	.359	.125	.437	3.688	↕	3.687	.093	.40	.25	3.875
530	AC	HEAT SINK - TRAY EXTENDER		1900808-021		↕	↕	↕	↕	2.125	.968	1.718	↕	.093	.031	.06	.093	.100 .104	.093	.858	.608	.484	.358	.733	.077	.116	.062	.937	.875	1.343	.125	.781	1.892	.046	↕	↕	.209	.093	.250	1.875	↕	1.840	.046	.23	.16	1.938
529	AC	TESTER, FAILURE INDICATOR		1900809-021		↕	↕	↕	↕	2.125	.968	1.718	NA	.093	.031	.06	.093	.100 .104	.093	.858	.608	.484	.358	.733	.077	.116	.062	.937	.875	1.343	.125	.781	1.892	.046	NA	NA	.209	.093	.250	1.875	NA	1.840	.046	.23	.16	1.938
						↕	↕	↕	↕																																					
527	AC	FIX., MOUNTING, G AND N	(-144)	1902204-021		↕	↕	↕	↕	FOR DIMENSIONS, SEE DASH 500 VALUES BELOW																																				
526	AC	FIX., MOUNTING, G AND N	(-144)	2900067-031		↕	↕	↕	↕																																					
525	AC	PORTABLE TEMP. CONTROLLER		1900496-021		↕	B	II	NOTE 11C	3.000	1.937	2.437	2.312	.125	.031	.125	.156	.125	.125	1.718	1.187	.968	.749	1.452	.093	.295	.090	1.312	1.00	2.000	.250	1.687	2.750	.062	N/A	N/A	.463	.125	.562	2.437	.140	2.562	.090	.468	.359	2.750
524	AC	POWER, SERVO AND THERMOCOUPLE ASSEMBLY C/M		2010743		↕	A	I	NOTE 11B	2.125	.968	1.718	NA	.093	.031	.06	.093	NA	NA	.858	.608	.484	.358	.733	.062	.140	.062	NA	.968	1.450	.125	NA	1.720	.046	.03	NA	.210	NA	NA	NA	.070	NA	.046	.32	.16	NA
523	AC	PULSE TORQUE AND THERMOCOUPLE ASSEMBLY - LEM		6010656		↕	↕	↕	↕	FOR DIMENSIONS, SEE DASH 508 VALUES BELOW																																				
522	AC	COUPLING DATA UNIT AND THERMOCOUPLE ASSEMBLY - LEM		2010744		↕	↕	↕	↕																																					
521	AC	COUPLING DATA UNIT AND THERMOCOUPLE ASSEMBLY - C/M		2010744		↕	↕	↕	↕																																					
520	AC	PIPA ELECTRONICS AND THERMOCOUPLE ASSEMBLY		2010745		↕	A	I	NOTE 11B																																					
519	AC	FIXTURE, HANDLING, LEM-PSA	(-141)	6900129-011		↕	B	II	NOTE 11C	FOR DIMENSIONS, SEE DASH 504 VALUES BELOW																																				
518	AC	JUNCTION BOX, GSE-PSA	(-144)	1901933-031		↕	B	II	NOTE 11C	FOR DIMENSIONS, SEE DASH 500 VALUES BELOW																																				
517	AC	FIX., HAND., OPTICS INSTL.	(-141)	2901380-011		↕	B	II	NOTE 11C	FOR DIMENSIONS SEE DASH 502 VALUES BELOW																																				
516	AC	POWER, SERVO AND THERMOCOUPLE ASSEMBLY-LEM		6010655		NAS 9-497	A	I	NOTE 11B	FOR DIMENSIONS SEE DASH 508 VALUES BELOW																																				
514	AC	SIGNAL COND. ASSY LEM OPER.	(-100)	6007013		NAS-9-497	A	I	NOTE 11B	FOR DIMENSIONS, SEE DASH 508 VALUES BELOW																																				
513	↕	JUMPER, BY-PASS	(-141)	1021616		↕	B	II	NOTE 11C	2.125	.968	1.718	NA	.093	.031	.06	.093	.100 .104	.093	.858	.608	.484	.358	.733	.077	.116	.062	.937	.875	1.343	.125	.781	1.892	.046	NA	NA	.209	.093	.250	1.875	NA	1.840	.046	.23	.16	1.938
512	↕	COUPLING DATA UNIT ASSEMBLY C/M	(-100)	2007322-011		↕	A	I	NOTE 11B	FOR DIMENSIONS, SEE DASH 508 VALUES BELOW																																				
511	↕	COUPLING DATA UNIT ASSEMBLY - LEM	(-100)	2007322-021		↕																																								
510	↕	BATTERY POWER PACK	(-144)	1900011-041		↕	B	II	NOTE 11C	FOR DIMENSIONS, SEE DASH 500 VALUES BELOW																																				
509	↕	JUNCTION BOX, P.S.A./G.S.E.	(-144)	1902195-021		↕	B	II	NOTE 11C																																					
508	↕	NAVIGATION BASE ASSEMBLY - LEM	✓ (-101)	6899980		↕	A	I	NOTE 11B	2.000	1.312	1.906	1.375	.078	.048	.078	.093	NA	NA	1.125	.750	.593	.453	1.015	.062	.187	.078	.875	.718	1.375	.218	NA	NA	.048	.031	.875	.305	.078	.531	1.906	.078	NA	.078	.531	.187	NA
507	↕	CSL, COOL. AND PWR, G AND N	(-144)	1902134-041		↕	B	II	NOTE 11C	FOR DIMENSIONS, SEE DASH 500 VALUES BELOW																																				
506	↕	BREAKOUT BOX, CABLE ADAPTER	(-141)	2901011-011		↕	↕	↕	↕																																					
505	↕	MONITOR AND CONTROL, TEMP	(-141)	2900026-021		↕	↕	↕	↕																																					
504	↕	PWR SUP, GUIDANCE SYSTEM	✓ (-141)	1900033-021		↕	↕	↕	↕	2.125	.968	1.718	NA	.093	.031	.06	.093	.100 .104	.093	.858	.608	.484	.358	.733	.077	.116	.062	.937	.875	1.343	.125	.781	1.892	.046	NA	NA	.209	.093	.250	1.875	NA	1.840	.046	.23	.16	1.938
503	↕	CONTROL, GIMBAL POSITION	(-141)	2900036-021		↕	↕	↕	↕																																					
502	↕	ADPT, TEST POINT, PTA/PEA.	(-141)	2900145-021		↕	↕	↕	↕																																					
501	↕	MOUNTING PLATE, COMPONENT	(-144)	6900007-031		↕	↕	↕	↕	FOR DIMENSIONS, SEE DASH 500 VALUES BELOW																																				
500	AC	MOUNTING PLATE, COMPONENT	✓ (-144)	2900677-02		NAS-9-497	B	II	NOTE 11C	4.125	1.812	3.250	NA	.125	.062	.12	.156	.100/.104	.25	1.625	1.140	.890	.640	1.390	.125	.171	.25	1.875	.687	2.625	.250	1.562	3.843	.093	NA	NA	.359	.125	.437	3.688	NA	3.687	.093	.40	.25	3.875

AC ELECTRONICS DASH NUMBERS

AG THIS SHEET ADDED

NOTES FOR TABLE
STYLE A IS FOR G&N SYSTEM
STYLE B IS FOR GROUND SUPPORT EQUIPMENT
TYPE I IS WITHOUT MOUNTING HOLES
TYPE II IS WITH MOUNTING HOLES

QTY REQD	PART OR IDENTIFYING NO.	MATERIAL OR NOTES	NOMENCLATURE OR DESCRIPTION	FIND NO.

LIST OF MATERIALS

NEXT ASSY	USED ON
AS APPLICABLE	

APPLICATION

UNLESS OTHERWISE SPECIFIED
DIMENSIONS ARE IN INCHES
CAPACITOR VALUES ARE IN µf
RESISTOR VALUES ARE IN OHMS
TOLERANCES ON
FRACTIONS ± — DECIMALS ±.005 ANGLES ± —
DO NOT SCALE THIS DRAWING

MATERIAL
SEE NOTE 11

MIT
INSTRUMENTATION LAB
CAMBRIDGE, MASS

DRAWN R. A. Jones 2-15-66
CHECKED 2-15-66
APPROVED
APPROVED
APPROVED MIT A. C. METZGER 5-18-66
APPROVED MSC
DATE

MANNED SPACECRAFT CENTER
HOUSTON, TEXAS

NAMEPLATES,
APOLLO G&N-GSE
(STANDARDS)

CODE IDENT NO 80230
SIZE E
DRAWING NO. 1004260
SCALE NONE
SHEET 6 OF 6

NOTICE - WHEN GOVERNMENT DRAWINGS, SPECIFICATIONS, OR OTHER DATA ARE USED FOR ANY PURPOSE OTHER THAN IN CONNECTION WITH A DEFINITELY RELATED GOVERNMENT PROCUREMENT OPERATION, THE UNITED STATES GOVERNMENT THEREBY INCURS NO RESPONSIBILITY NOR ANY OBLIGATION WHATSOEVER; AND THE FACT THAT THE GOVERNMENT MAY HAVE FORMULATED, FURNISHED, OR IN ANY WAY SUPPLIED THE SAID DRAWINGS, SPECIFICATIONS, OR OTHER DATA IS NOT TO BE REGARDED BY IMPLICATION OR OTHERWISE AS IN ANY MANNER LICENSING THE HOLDER OR ANY OTHER PERSON OR CORPORATION, OR CONVEYING ANY RIGHTS OR PERMISSION TO MANUFACTURE, USE, OR SELL ANY PATENTED INVENTION THAT MAY IN ANY WAY BE RELATED THERETO.

NOTES:

1. INTERPRET DRAWING IN ACCORDANCE WITH STANDARDS PRESCRIBED IN MIL-D-70327.
2. DIMENSIONS ON EACH VIEW APPLY TO ALL VIEWS. (WITH THE EXCEPTION OF MOUNTING HOLES).
3. FORMATS ILLUSTATED WILL BE APPLICABLE TO ALL ITEMS REQUIRING NAMEPLATES BELOW END ITEM DESIGNATION (SYSTEMS, ASSEMBLIES, ETC.)
4. PLATE BACKGROUND TO BE LUSTERLESS BLACK PER FED-STD-595, COLOR 37038. BORDER, MARKING AND LETTERING TO BE NATURAL METAL,(ANODIZED ALUMINUM).
5. MARKING METHOD TO BE DIE STAMPING, ETCHING OR ENGRAVING IN ACCORDANCE WITH MIL P 19834.
6. LETTERING STYLE TO BE GOTHIC,(SANS SERIFS), AND NUMBERS TO BE ARABIC.
7. WHERE LOCATING DIMENSIONS ARE NOT SHOWN, CHARACTERS SHALL BE SYMMETRICALLY POSITIONED.
8. IDENTIFY WITH DRAWING NUMBER PER ND 1002019.
9. WHEN "AUTO MARK" METAL MARKING TYPEWRITER IS USED TO ADD DATA TO BLANK SPACES, TYPE SIZE IS TO BE SELECTED FROM DIMENSIONS U, AC AND AM.
10. NASA SYMBOL IS TO BE PROPORTIONAL TO NAMEPLATE IN RATIO OF 1 TO 5 WITH DIMENSION A VALUE AND IS TO HAVE NATURAL BACKGROUND. NASA SYMBOL LETTERS LETTERING AND FEATHER TO BE BLACK,(OR WHITE FOR SILK SCREENING). WHERE BLACK FEATHER PROTRUDES INTO BLACK BACKGROUND, A MINIMUM OUTLINE OF NATURAL BACKGROUND SHALL EXIST.
11. NAMEPLATES WILL BE APPLIED BY METHODS LISTED BELOW, SHOWN IN ORDER OF PREFERENCE, (I.E., FOR RELIABILITY AND WEIGHT).
    - A - STENCIL OR SILK SCREEN DIRECTLY ON EQUIPMENT USING INK PER SCD 1010920,(WHITE OR BLACK).
    - B - ALUMINUM FOIL,(STYLE A OR B, TYPE I): FOIL SHALL BE .0030 ± .0005 THICK PER MIL-A-148. FOIL SHALL HAVE NO ADHESIVE BACKING. FOIL SHALL BE BONDED PER ND 1002219,(METHOD II). FOIL SHALL BE CLEAR ANODIZED PER MIL-A-8625, TYPE II.
    - C - PLATE, (STYLE A OR B, TYPE II): MATERIAL: QQ-A-250, TEMPER O OR H14, TYPE 1100, ALUMINUM ALLOY, .032 THICK. ANODIZE PER MIL-A-8625, TYPE II. ALUMINUM PLATE MUST BE FREE FROM BURRS AND SHARP CORNERS, MOUNTED WITH APPLICABLE SIZE FASTENERS.
12. NAMEPLATES SHALL BE CAPABLE OF MEETING APPLICABLE REQUIREMENTS OF MIL-M-13231.
13. ON DIMENSION TABLES SHOWN ON PAGES 2, 3, 4 AND 5, NA MEANS, "NOT APPLICABLE".

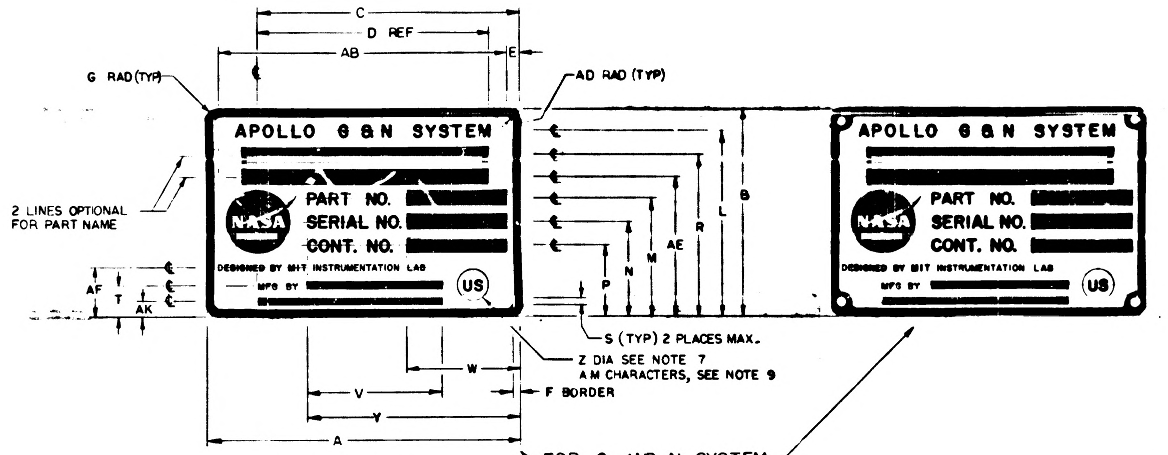

FOR G AND N SYSTEM
STYLE A

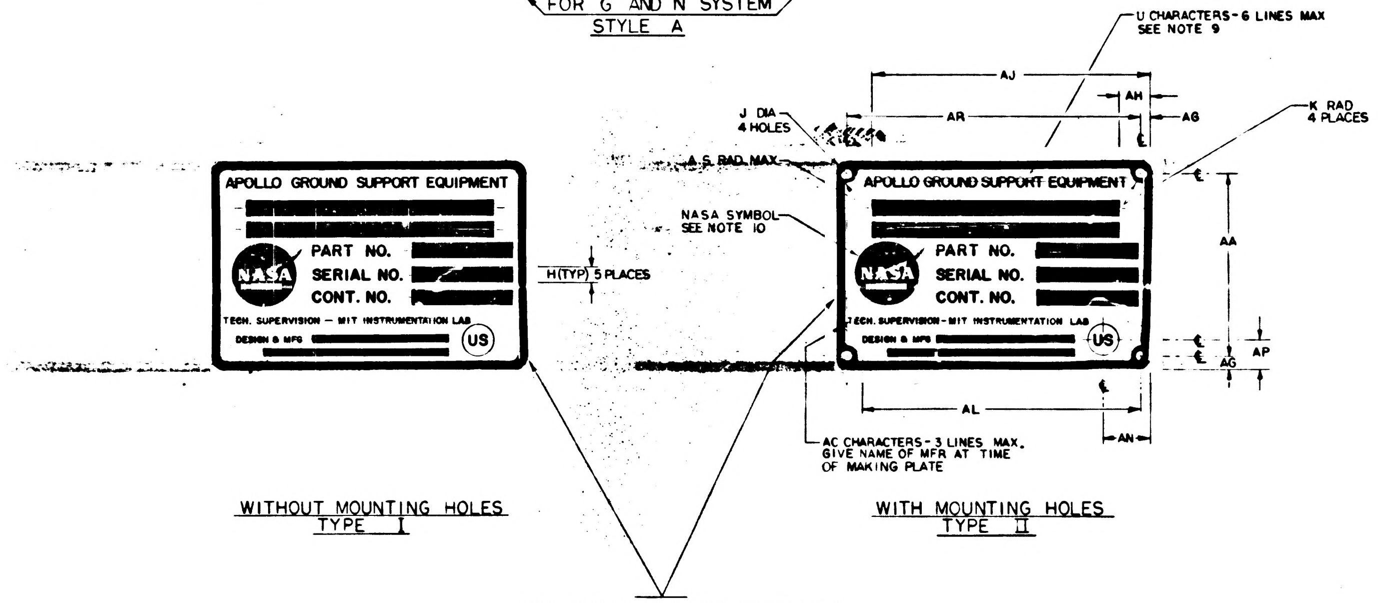

WITHOUT MOUNTING HOLES
TYPE I

WITH MOUNTING HOLES
TYPE II

FOR GROUND SUPPORT EQUIPMENT
STYLE B

REVISIONS 22768

SYM	ZONE	DESCRIPTION	DR	CHK	DATE	APPROVED
G		REPLACES REV F WITH CHANGE PER TDRR 20854			7/22/65	WK
H		REVISED PER TDRR 20892			8/?/65	WK
J		REVISED PER TDRR 20904			8/?/65	WK
K		REVISED PER TDRR 21379			[illegible]	WK
L		REVISED PER TDRR 21410			8/23/65	WK
M		REVISED PER TDRR 21993				
N		REVISED PER TDRR 22621			10/	
P		REVISED PER TDRR 22671			11/	
R		REVISED PER TDRR 22672				
S		REVISED PER TDRR 22750			65	WK
T		REVISED PER TDRR 22823				
U		REVISED PER TDRR 23072			11-22-65	WGM
V		REVISED PER TDRR 23521			10-27-65	WK
W		REVISED PER TDRR 23824	RAJ		11-9-65	WK
Y		REVISED PER TDRR 24018	RAJ		11-9-65	WK
Z		REVISED PER TDRR 24040	RAJ		11-9-65	WK
AA		REVISED PER TDRR 24060	RAJ		11-19-65	WK
AB		REVISED PER TDRR 24868	RAJ		12-2-65	WK
AC		REVISED PER TDRR 24973	RAJ		1-4-66	WK
AD		REVISED PER TDRR 25065	RAJ		1-18-66	WGM
AE		REVISED PER TDRR 25672	RAJ		2-4-66	WK
AF		REVISED PER TDRR 25671	RAJ		2-4-66	WK
AG		REVISED PER TDRR 26110	RAJ		2-15-66	WK
AH		REVISED PER TDRR 26372	"		3-6-66	WGM
AJ		REVISED PER TDRR 26425	"		3-6-66	WGM
AK		REVISED PER TDRR 26743	"		3-6-66	WGM
AL		REVISED PER TDRR 26798	"		3-16-66	WGM
AM		REVISED PER TDRR 27168	"		4-7-66	WGM
AN		REVISED PER TDRR 27235	"		4-7-66	WGM
AP		REVISED PER TDRR 27345	"		4-7-66	WGM
AR		REVISED PER TDRR 274 7	"		4-7-66	WGM
AS		REVISED PER TDRR 27442	"		4-7-66	WGM
AT		REVISED PER TDRR 27719	"		4-20-66	WK
AU		REVISED PER TDRR 27680	"		4-20-66	WK
AV		REVISED PER TDRR 27896	"		4-20-66	WK
AW		28110	"		5-16-66	WGM
AY		28173	"			WGM
AZ		28131	"			WGM
BA		28124	"			WGM
BB		REVISED PER TDRR 28511	"		5-16-66	WGM
BC		" " " 28949	"		5-24-66	WGM
BD		" " " 29122	"		6-8-66	WGM
BE		" " " 29235	"		6-8-66	WGM
BF		" " " 29322	"		6-30-66	WGM
BG		" " " 29429	"		"	WGM
BH		" " " 29449	"		"	WGM
B		" " " 29335	"		"	WGM
BK		" " " 29 3	"		"	WGM
BL		" " " 29696	"		"	WGM
BM		REVISION STATUS CHANGED	JSD	NS	7-29-66	
BN		REVISION STATUS CHANGED	JI	RLW	2 AUG 66	
BP		REVISION STATUS CHANGED	JI	RLW	AUG 66	
BR		REVISION STATUS CHANGED	JI	RLW	AUG 66	
BS		REVISION STATUS CHANGED	GW	RLW	26 AUG 66	
BT		REVISION STATUS CHANGED	GW	RLW	26 AUG 66	
BU		REVISION STATUS CHANGED	EH	JI	2 SEPT 66	

SUGGESTED PROPORTIONS FOR NAMEPLATE DIMENSIONS.
1. SELECT NAMEPLATE LENGTH, DIMENSION "A", TO FIT DESIGN NEEDS.
2. DIMENSIONS B THRU AS ON LINE 1 BELOW ARE PROPORTIONAL TO "A" BY MULTIPLIERS SHOWN IN LINE 2 BELOW.

1.	A	B	C	D	E	F	G	H	J	K	L	M	N	P	R	S	T	U	V	W	Y	Z	AA	AB	AC	AD	AE	AF	AG	AH	AJ	AK	AL	AM	AN	AP	AR	AS
2.	1.000 A	.6563 A	.8438 A	.6875 A	.0391 A	.0240 A	.0391 A	.0469 A	.0547 A	.0469 A	.5938 A	.3750 A	.2969 A	.2187 A	.5079 A	.0313 A	.0938 A	.0391 A	.4375 A	.3594 A	.6875 A	.1094 A	.5781 A	.9219 A	.0240 A	.0156 A	.4375 A	.1525 A	.0391 A	.1563 A	.8438 A	.0548 A	.8659 A	.0391 A	.1563 A	.0938	.9219 A	.0151 A

Ⓖ REPLACES REV F WITH CHANGE

QTY REQD	PART OR IDENTIFYING NO.	MATERIAL OR NOTES	NOMENCLATURE OR DESCRIPTION	FIND NO.

LIST OF MATERIALS

AS APPLICABLE
NEXT ASSY | USED ON
APPLICATION

UNLESS OTHERWISE SPECIFIED
DIMENSIONS ARE IN INCHES
CAPACITOR VALUES ARE IN µf
RESISTOR VALUES ARE IN OHMS
TOLERANCES ON
FRACTIONS ± — DECIMALS ±.005 ANGLES ± —
DO NOT SCALE THIS DRAWING

MATERIAL
SEE NOTE 11

MIT
INSTRUMENTATION LAB
CAMBRIDGE, MASS

DRAWN R A Jones 7/16/65
CHECKED A. J. [illegible] 7-22-65
APPROVED
APPROVED W Kupfer 7/22/65
APPROVED MIT W Kupfer 7/22/65
APPROVED MSC [illegible] 7/22/65
DATE

MANNED SPACECRAFT CENTER
HOUSTON, TEXAS

NAMEPLATES,
APOLLO G&N-GSE
(STANDARDS)

CODE IDENT NO. 80230
SIZE E
DRAWING NO. 1004260
SCALE NONE
SHEET 1 OF 5

NOTICE – WHEN GOVERNMENT DRAWINGS, SPECIFICATIONS, OR OTHER DATA ARE USED FOR ANY PURPOSE OTHER THAN IN CONNECTION WITH A DEFINITELY RELATED GOVERNMENT PROCUREMENT OPERATION, THE UNITED STATES GOVERNMENT THEREBY INCURS NO RESPONSIBILITY NOR ANY OBLIGATION WHATSOEVER; AND THE FACT THAT THE GOVERNMENT MAY HAVE FORMULATED, FURNISHED, OR IN ANY WAY SUPPLIED THE SAID DRAWINGS, SPECIFICATIONS OR OTHER DATA IS NOT TO BE REGARDED BY IMPLICATION OR OTHERWISE AS IN ANY MANNER LICENSING THE HOLDER OR ANY OTHER PERSON OR CORPORATION, OR CONVEYING ANY RIGHTS OR PERMISSION TO MANUFACTURE, USE, OR SELL ANY PATENTED INVENTION THAT MAY IN ANY WAY BE RELATED THERETO.

REVISIONS

02768

SYM	ZONE	DESCRIPTION	DR	CHK	DATE	APPROVED
G		REPLACES REV F WITH CHANGE PER TDRR 20854.	"		7/22/65	WK
H		REVISED PER TDRR 20892	"		8/3/65	WK
J		REVISED PER TDRR 20904	"		8/3/65	WK
K		REVISED PER TDRR 21379	"		8/9/65	WK
L		REVISED PER TDRR 21410	"		8/23/65	WK
M		REVISED PER TDRR 21993	"			
N		REVISED PER TDRR 22621	"		10/	
P		REVISED PER TDRR 22671	"		1/	
R		REVISED PER TDRR 22672	"			
S		REVISED PER TDRR 22750	"			
T		REVISED PER TDRR 22823	"		65	WK
U		REVISED PER TDRR 23072	"		10-22-65	
V		REVISED PER TDRR 23521	"		10-27-65	
W		REVISED PER TDRR 23824	RAJ		11-9-65	WK
Y		REVISED PER TDRR 24018	RAJ		11-16-65	WK
Z		REVISED PER TDRR 24040	RAJ		11-19-65	WK
AA		REVISED PER TDRR 24060	RAJ		11-19-65	WK
AB		REVISED PER TDRR 24868	RAJ		12-22-65	WK
AC		REVISED PER TDRR 24973	RAJ		1-4-66	WK
AD		REVISED PER TDRR 25065	RAJ		1-18-66	
AE		REVISED PER TDRR 25672	RAJ		2-4-66	WK
AF		REVISED PER TDRR 25671	RAJ		2-4-66	WK
AG		REVISED PER TDRR 26110	RAJ		2-15-66	WK
AH		REVISED PER TDRR 26372	"		3-16-66	
AJ		REVISED PER TDRR 26425	"		3-16-66	
AK		REVISED PER TDRR 26743	"		3-16-66	
AL		REVISED PER TDRR 26798	"		3-16-66	
AM		REVISED PER TDRR 27168	"		4-8-66	
AN		REVISED PER TDRR 27235	"		4-8-66	
AP		REVISED PER TDRR 27345	"		4-8-66	
AR		REVISED PER TDRR 27417	"		4-8-66	
AS		REVISED PER TDRR 27442	"		4-8-66	
AT		REVISED PER TDRR 27719	"		4-21-66	
AU		REVISED PER TDRR 27880	"		4-21-66	WK
AV		REVISED PER TDRR 27896	"		4-21-66	WK
AW		28110	"		5-16-66	
AY		28173	"			
AZ		28131	"			
BA		28124	"			
BB		REVISED PER TDRR 28511	"		5-16-66	
BC		" " " 28949	"		5-24-66	
BD		" " " 29222	"		6-8-66	
BE		" " " 29235	"		"	
BF		" " " 29322	"		6-30-66	
BG		" " " 29429	"			
BH		" " " 29449	"		"	
BJ		" " " 29335	"		"	
BK		" " " 29619	"		"	
BL		" " " 29696	"		"	
BM		REVISION STATUS CHANGED	JSD	N.S.	7-29-66	
BN		REVISION STATUS CHANGED	JI	RLW	2 AUG 66	
BP		REVISION STATUS CHANGED	JI	RLW	9 AUG 66	
BR		REVISION STATUS CHANGED	JI	RLW	22 AUG 66	
BS		REVISION STATUS CHANGED	GW	RLW	25 AUG 66	
BT		REVISION STATUS CHANGED	GW	RLW	26 AUG 66	
BU		REVISION STATUS CHANGED	EH	JI	9 SEP 66	

DASH NO.	P/C	PART NAME	REMARKS	PART NO.	SER. NO.	CONT. NO.	STYLE	TYPE	MATERIAL	A	B	C	D	E	F	G	H	J	K	L	M	N	P	R	S	T	U	V	W	Y	Z	AA	AB	AC	AD	AE	AF	AG	AH	AJ	AK	AL	AM	AN	AP	AR
399	K																																													
398	K																																													
350	K	ALIGNMENT OPTICAL TELESCOPE (LEM)		NA	NA	NA	A	I	NOTE 11B	4.000	2.625	3.375	2.750	.156	.093	.156	.187	NA	NA	2.312	1.468	1.187	.906	2.031	NA	.375	.156	NA	1.437	2.750	.437	NA	3.688	.062	.062	1.750	.593	NA	.625	3.375	.187	NA	.156	.531	.453	NA
309	K																																													
308	K																																													
307	K						B	I	NOTE 11 B	4.000	2.625	3.375	2.750	.156	.093	.156	.187	NA	NA	2.328	1.468	1.187	.906	2.031	.062	.375	.156	NA	1.437	2.750	.437	NA	3.687	.062	.062	1.750	.593	NA	NA	NA	NA	NA	NA	NA	NA	NA
306	K						B	II	NOTE 11 C	4.000	2.625	3.375	2.750	.156	.093	.156	.187	.125	.156	2.328	1.468	1.187	.906	2.031	.062	.375	.156		1.437	2.750	.437	2.312	3.687	.062	NA	1.750	.593									
305	K						B	I	NOTE 11 B	2.000	1.312	1.687	1.375	.078	.048	.078	.093	NA	NA	1.164	.734	.593	.453	1.015	.048	.171	.078		.718	1.375	.187	NA	NA	.048	.031	.875	.320									
304	K						B	II	NOTE 11 C	2.000	1.312	1.687	1.375	.078	.048	.078	.093	.070	.078	1.164	.734	.593	.453	1.015	.048	.171	.078	NA	.718	1.375	.187	.156	1.843	.048	NA	.875	.320	NA	NA	NA	NA	NA	NA	NA	NA	NA
303	K																																													
302	K																																													
301	K																																													
300	K	OPTICAL UNIT		NA	NA	NA	A	I	NOTE 11 B	2.000	1.312	1.675	NA	NA	.048	.078	NA	NA	NA	1.090	.812	.675	.540	.940	NA	.265	NA	NA	NA	1.375	.218	NA	NA	NA	NA	NA	.375	NA	NA	NA	.180	NA	.078	NA	NA	NA
9	K	2 IN AUTOCOLLIMATOR		1001702			B	II	NOTE 11 C	4.000	2.625	3.812	2.750	.156	.093	.156	.187	.125	.156	2.250	1.500	1.187	.906	2.031	.093	.375	.156	1.750	1.437	2.750	.437	2.312	3.687	.062	NA	1.750	.593	.156	1.062	3.812	.156	NA	.156	1.062	.375	3.687
8	K	5 IN AUTOCOLLIMATOR		1017410			B	II	NOTE 11 C	4.000	2.625	3.812	2.750	.156	.093	.156	.187	.125	.156	2.250	1.500	1.187	.906	2.031	.093	.375	.156	1.750	1.437	2.750	.437	2.312	3.687	.062	NA	1.750	.593	.156	1.062	3.812	.156	NA	.156	1.062	.375	3.687
7	K	2½ IN AUTOCOLLIMATOR (SCT)		1017435			B	II	NOTE 11 C	4.000	2.625	3.812	2.750	.156	.093	.156	.187	.125	.156	2.250	1.500	1.187	.906	2.031	.093	.375	.156	1.750	1.437	2.750	.437	2.312	3.687	.062	NA	1.750	.593	.156	1.062	3.812	.156	NA	.156	1.062	.375	3.687
6	K	2½ IN AUTOCOLLIMATOR (SXT)		1017448			B	II	NOTE 11 C	4.000	2.625	3.812	2.750	.156	.093	.156	.187	.125	.156	2.250	1.500	1.187	.906	2.031	.093	.375	.156	1.750	1.437	2.750	.437	2.312	3.687	.062	NA	1.750	.593	.156	1.062	3.812	.156	NA	.156	1.062	.375	3.687
5	K	RETROREFLECTING PRISM ASSEMBLY		1019840			B	I	NOTE 11 B	4.000	2.625	3.812	2.750	.156	.093	.156	.187	NA	NA	2.250	1.500	1.187	.906	2.031	.093	.375	.156	1.750	1.437	2.750	.437	NA	NA	.062	.062	1.750	.593	.156	1.062	3.812	.156	NA	.156	1.062	.375	NA
4	K	S/H SIMULATOR ASSEMBLY		1019896			B	I	NOTE 11 B	4.000	2.625	3.812	2.750	.156	.093	.156	.187	NA	NA	2.250	1.500	1.187	.906	2.031	.093	.375	.156	1.750	1.437	2.750	.437	NA	NA	.062	.062	1.750	.593	.156	1.062	3.812	.156	NA	.156	1.062	.375	NA
3	K	REFERENCE MIRROR		1001767			B	I	NOTE 11 B	2.000	1.312	1.906	1.375	.078	.048	.078	.093	NA	NA	1.125	.750	.593	.453	1.015	.062	.187	.078	.875	.718	1.375	.218	NA	NA	.048	.031	.875	.305	.078	.531	1.906	.078	NA	.078	.531	.187	NA
2	K	2 IN PLANE READING AUTOCOLLIMATOR		1017413			B	I	NOTE 11 B	2.000	1.312	1.906	1.375	.078	.048	.078	.093	NA	NA	1.125	.750	.593	.453	1.015	.062	.187	.078	.875	.718	1.375	.218	NA	NA	.048	.031	.875	.305	.078	.531	1.906	.078	NA	.078	.531	.187	NA
1	K	2 IN AUTOCOLLIMATOR		1001702			B	I	NOTE 11 B	2.000	1.312	1.906	1.375	.078	.048	.078	.093	NA	NA	1.125	.750	.593	.453	1.015	.062	.187	.078	.875	.718	1.375	.218	NA	NA	.048	.031	.875	.305	.078	.531	1.906	.078	NA	.078	.531	.187	NA

NOTES FOR TABLE

STYLE A IS FOR G&N SYSTEM.
STYLE B IS FOR GROUND SUPPORT EQUIPMENT.
TYPE I IS WITHOUT MOUNTING HOLES.
TYPE II IS WITH MOUNTING HOLES.

Ⓖ REPLACES REV F WITH CHANGE

KOLLSMAN DASH NUMBERS

QTY REQD	PART OR IDENTIFYING NO.	MATERIAL OR NOTES	NOMENCLATURE OR DESCRIPTION	FIND NO

LIST OF MATERIALS

NEXT ASSY	USED ON
AS APPLICABLE	

APPLICATION

UNLESS OTHERWISE SPECIFIED
DIMENSIONS ARE IN INCHES
CAPACITOR VALUES ARE IN µf
RESISTOR VALUES ARE IN OHMS
TOLERANCES ON
FRACTIONS ± — DECIMALS ±.005 ANGLES ± —
DO NOT SCALE THIS DRAWING

MATERIAL
SEE NOTE 11

MIT
INSTRUMENTATION LAB
CAMBRIDGE, MASS.

MANNED SPACECRAFT CENTER
HOUSTON, TEXAS

DRAWN	R. A. Jones	7-16-65
CHECKED		7-22-65
APPROVED		
APPROVED	W. Kupfer	7/22/65
APPROVED MIT	W. Kupfer	7/22/65
APPROVED MSC		
		DATE

NAMEPLATES,
APOLLO G&N-GSE
(STANDANDS)

CODE IDENT NO. 80230
SIZE E
DRAWING NO. 1004260
SCALE NONE
SHEET 2 OF

NOTICE – WHEN GOVERNMENT DRAWINGS, SPECIFICATIONS, OR OTHER DATA ARE USED FOR ANY PURPOSE OTHER THAN IN CONNECTION WITH A DEFINITELY RELATED GOVERNMENT PROCUREMENT OPERATION, THE UNITED STATES GOVERNMENT THEREBY INCURS NO RESPONSIBILITY NOR ANY OBLIGATION WHATSOEVER, AND THE FACT THAT THE GOVERNMENT MAY HAVE FORMULATED, FURNISHED, OR IN ANY WAY SUPPLIED THE SAID DRAWINGS, SPECIFICATIONS OR OTHER DATA IS NOT TO BE REGARDED BY IMPLICATION OR OTHERWISE AS IN ANY MANNER LICENSING THE HOLDER OR ANY OTHER PERSON OR CORPORATION, OR CONVEYING ANY RIGHTS OR PERMISSION TO MANUFACTURE, USE, OR SELL ANY PATENTED INVENTION THAT MAY IN ANY WAY BE RELATED THERETO.

REVISIONS [illegible]2768

SYM	ZONE	DESCRIPTION	DR	CHK	DATE	APPROVED
G		REPLACES REV F WITH CHANGE PER TDRR 20854			7/21/65	WK
H		REVISED PER TDRR 20892			8/3/65	WK
J		REVISED PER TDRR 20904			8/3/65	WK
K		REVISED PER TDRR 21379			8/10/65	WK
L		REVISED PER TDRR 21410			[illegible]	WK
M		REVISED PER TDRR 21993				
N		REVISED PER TDRR 22621				
P		REVISED PER TDRR 22671				
R		REVISED PER TDRR 22672				
S		REVISED PER TDRR 22750			10/11/65	WK
T		REVISED PER TDRR 22823				
U		REVISED PER TDRR 23072			10-22-65	
V		REVISED PER TDRR 23521			10-26-65	WK
W		REVISED PER TDRR 23824	RAJ		11-9-65	WK
Y		REVISED PER TDRR 24018	RAJ		11-16-65	WK
Z		REVISED PER TDRR 24040	RAJ		11-19-65	WK
AA		REVISED PER TDRR 24060	RAJ		11-19-65	WK
AB		REVISED PER TDRR 24868	RAJ		12-22-65	WK
AC		REVISED PER TDRR 24973	RAJ		1-4-66	WK
AD		REVISED PER TDRR 25065	RAJ		1-18-66	
AE		REVISED PER TDRR 25672	RAJ		2-4-66	WK
AF		REVISED PER TDRR 25671	RAJ		2-4-66	WK
AG		REVISED PER TDRR 26110	RAJ		[illegible]	WK
AH		REVISED PER TDRR 26372	"		3-16-66	
AJ		REVISED PER TDRR 26425	"		3-16-66	
AK		REVISED PER TDRR 26743	"		3-16-66	
AL		REVISED PER TDRR 26798	"		3-16-66	
AM		REVISED PER TDRR 27168	"		4-8-66	
AN		REVISED PER TDRR 27235	"		4-8-66	
AP		REVISED PER TDRR 27345	"		4-8-66	
AR		REVISED PER TDRR 27417	"		4-8-66	
AS		REVISED PER TDRR 27442	"		4-8-66	
AT		REVISED PER TDRR 27719	"		4-20-66	WK
AU		REVISED PER TDRR 27880			4-20-66	WK
AV		REVISED PER TDRR 27896	"		4-20-66	WK
AW		28110	"		5-16-66	
AY		28173	"		5-16-66	
AZ		28131	"		5-16-66	
BA		28124	"		5-16-66	
BB		REVISED PER TDRR 28511	"		5-16-66	
BC		" " " 28949	"		5-24-66	
BD		" " " 29222	"		6-8-66	
BE		" " " 29235	"		"	
BF		" " " 29322	"		6-29-66	
BG		" " " 29429	"		"	
BH		" " " 29449	"		"	
BJ		" " " 29335	"		"	
BK		" " " 29619	"		"	
BL		" " " 29696	"		"	
BM		" " " 29802	JSD	N.S.	7-29-66	
BN		REVISION STATUS CHANGED	JI	RLW	[illegible] AUG 66	
BP		REVISED PER TDRR 30168	JI	RLW	[illegible] AUG 66	
BR		REVISION STATUS CHANGED	JI	RLW	23 AUG 66	
BS		REVISION STATUS CHANGED	GW	RLW	26 AUG 66	
BT		REVISION STATUS CHANGED	GW	RLW	26 AUG 66	
BU		REVISION STATUS CHANGED	EH	JI	5 SEPT 66	

DASH NO.	P/C	PART NAME	REMARKS	PART NO.	SER. NO.	CONT. NO.	STYLE	TYPE	MATERIAL
299	R								
298	R								
277	R	COMPUTER TEST SET		2014042-041	NA	NAS-9-497	B	II	NOTE 11C
276		DRAWER ASSY - PROGRAM & MONITOR		2014041-041				I	NOTE 11B
275		DRAWER ASSY RDC INTERFACE		2014045-031					
274		SELF TEST ASSY		2014366-031					
273		LOGIC DRAWER ASSY NO. 2		2014037-031					
272		DRAWING ASSY PROGRAMMER & MONITOR		2014041-031					
271		LOGIC DRAWER ASSY NO. 1		2014036-031				I	NOTE 11 B
270		COMPUTER TEST SET		2014042-031				II	NOTE 11C
269		POWER CONTROL ASSY		2014044-021				I	NOTE 11 B
268		SELF TEST ASSY		2014366-021					
267		AGC JUNCTION ASSY		2014341-021					
266		POWER CONTROL ASSY		2014079-021					
265		BUFFER CIRCUIT ASSY		2014254-021					
264		DRAWER ASSY X Y INTERFACE		2014040-021					
263		DRAWER ASSY R D C INTERFACE		2014045-021					
262		DRAWER ASSY PROGRAMMER & MONITOR		2014041-021					
261		LOGIC DRAWER ASSY NO. 2		2014037-021					
260		LOGIC DRAWER ASSY NO. 1		2014036-021				I	NOTE 11 B
259		OPERATION CONSOLE		2014024-021				II	NOTE 11 C
258		COMPUTER TEST SET		2014042-021					
257		AUXILIARY CALIBRATION CONSOLE		2014059-021				II	NOTE 11C
256		AGC CALIBRATION CONSOLE		2014049-021					
255		AGC HANDLING FIXTURE		2014282-021				I	NOTE 11 B
254		DRAWER ASSY COMP. SIMULATOR		2014048-011				II	NOTE 11 C
253		SHIPPING KIT ASSY, NAV DSKY		2016312-011					
252		SHIPPING KIT ASSY, UNIVERSAL DSKY		2016316-011					
251		SHIPPING KIT ASSY, MAIN DSKY		2016313-011				II	NOTE 11C
250		AMPLIFIER, REWORK		2014386				I	NOTE 11 B
249		TEMP MONITOR ASSY		2014313-011					NOTE 11 C
248		AGC JUNCTION ASSY		2014341-011					NOTE 11 B
247		AC INPUT PANEL ASSY		2014302-011					
246		SELF TEST ASSY		2014392-011					
245		TAPE PUNCH ASSEMBLY		2014039-011					
244	R	TAPE READER ASSEMBLY		2014038-011	NA	NAS-9-497	B	I	NOTE 11 B
243									
242									
241	R	APOLLO GUIDANCE COMPUTER GROUP		6003001	NA	NAS-[illegible]	A	I	NOTE 11B
240		SELF TEST ASSEMBLY		2014366-011	NA		B	I	
239		POWER SUPPLY ASSY-115V., 400 CYCLE		2014207-011					
238		AC INPUT PANEL ASSY		2014043-011					
237		POWER CONTROL ASSY		2014079-011					
236		DRAWER ASSY-X Y INTERFACE		2014040-011					
235		DRAWER ASSY R D C INTERFACE		2014045-011					
234		BUFFER CIRCUIT ASSY		2014254-011					
233		CONTROL & INTERFACE ASSY		2014204-011					
232		POWER CONTROL ASSY		2014044-011					
231		DRAWER ASSY, PROGRAMMER & MONITOR		2014041-011					
230		CONNECTOR INTERFACE ASSY		2014272-011					
229		CONNECTOR INTERFACE ASSY		2014047-011					
228		ANTENNA TUNING CAPACITOR ASSY		2014209-011					
227		MOUNTING FIXTURE ASSY		2014006-011					
226		POWER SUPPLY ASSY 3 VDC		2014234-011					
225		PANEL ASSY – SIGNAL INTERFACE		2014010-011					
224		OSCILLOSCOPE ASSY		2014232-011					
223		AUXILIARY OUTLET ASSY		2014274-011					
222		FREQUENCY COUNTER		2014233-011					
221		POWER SUPPLY ASSY 10, 13, 28 VDC		2014235-011					
220		LOGIC DRAWER ASSY NO. 2		2014037-011					
219		LOGIC DRAWER ASSY NO. 1		2014036-011					
218		COUNTER, ELECTRICAL ASSY		2014288-011					
217		POWER SUPPLY ASSY		2014279-011					
216		TEST MOUNT ASSY		2014257-011					
215		UNIVERSAL DSKY PEDESTAL MOUNT		2014014-011					
214		MAIN DSKY PEDESTAL MOUNT		2014343				I	NOTE 11B
213		SHIPPING CONTAINER, MAIN DSKY		1006229				II	NOTE 11C
212		NAV DSKY		1006231					
211		AGC		1006230					
210		UNIVERSAL DSKY		1006422					
209		SHIPPING CONTAINER, AGC		1006421				II	NOTE 11C
208		UNIVERSAL DSKY HANDLING FIXTURE		2014013-011				I	NOTE 11B
207		NAV DSKY HANDLING FIXTURE		1014377					
206		MAIN DSKY HANDLING FIXTURE		1014334					
205		AGC HANDLING FIXTURE		2014282-011				I	NOTE 11B
204		OPERATION CONSOLE		2014024-011				II	NOTE 11C
203		COMPUTER TEST SET		2014042-011		NAS-9-497			
202		DRAWER ASSY, COMPUTER SIMULATOR		2014048-011		FNP12775			
201		AUXILIARY CALIBRATION CONSOLE		2014059-011		NAS-9-497			
200		AGC CALIBRATION CONSOLE		2014049-011	NA		B	II	NOTE 11C
21									
20		NA		NA	NA	NA	A	II	NOTE 11 C
19		NA		NA	NA	NA	A	I	NOTE 11 B
18		NA		NA	NA	NA	B	II	NOTE 11 C
17		NA		NA	NA	NA	B	I	NOTE 11 B
16		NA		NA	NA	NA	B	II	NOTE 11 C
15	R	NA		NA	NA	NA	B	I	NOTE 11 B

DASH NO.	A	B	C	D	E	F	G	H	J	K	L	M	N	P	R	S	T	U	V	W	Y	Z	AA	AB	AC	AD	AE	AF	AG	AH	AJ	AK	AL	AM	AN	AP	AR
277	FOR DIMENSIONS, SEE DASH 18 VALUES BELOW																																				
276	FOR DIMENSIONS, SEE DASH 17 VALUES BELOW																																				
275	FOR DIMENSIONS, SEE DASH 15 VALUES BELOW																																				
274																																					
273	FOR DIMENSIONS, SEE DASH 17 VALUES BELOW																																				
272	FOR DIMENSIONS, SEE DASH 17 VALUES BELOW																																				
271																																					
270	FOR DIMENSIONS, SEE DASH 18 VALUES BELOW																																				
269	FOR DIMENSIONS, SEE DASH 17 VALUES BELOW																																				
268	FOR DIMENSIONS, SEE DASH 15 VALUES BELOW																																				
267																																					
266																																					
265																																					
264																																					
263	FOR DIMENSIONS, SEE DASH 17 VALUES BELOW																																				
262																																					
261																																					
260																																					
259	FOR DIMENSIONS, SEE DASH 18 VALUES BELOW																																				
258																																					
257																																					
256																																					
255	FOR DIMENSIONS, SEE DASH 17 VALUES BELOW																																				
254	FOR DIMENSIONS, SEE DASH 18 VALUES BELOW																																				
253																																					
252																																					
251																																					
250	FOR DIMENSIONS, SEE DASH 15 VALUES BELOW																																				
249	FOR DIMENSIONS, SEE DASH 17 VALUES BELOW																																				
248	FOR DIMENSIONS, SEE DASH 15 VALUES BELOW																																				
247																																					
246																																					
245	FOR DIMENSIONS, SEE DASH 15 VALUES BELOW																																				
244																																					
243																																					
242																																					
241	FOR DIMENSIONS, SEE DASH 19 VALUES BELOW																																				
240	FOR DIMENSIONS, SEE DASH 15 VALUES BELOW																																				
239	FOR DIMENSIONS, SEE DASH 17 VALUES BELOW																																				
238																																					
237	FOR DIMENSIONS, SEE DASH 15 VALUES BELOW																																				
236																																					
235																																					
234																																					
233																																					
232	FOR DIMENSIONS, SEE DASH 17 VALUES BELOW																																				
231																																					
230	FOR DIMENSIONS, SEE DASH 15 VALUES BELOW																																				
229																																					
228																																					
227	FOR DIMENSIONS, SEE DASH 17 VALUES BELOW																																				
226	FOR DIMENSIONS, SEE DASH 15 VALUES BELOW																																				
225																																					
224																																					
223																																					
222																																					
221																																					
220	FOR DIMENSIONS, SEE DASH 17 VALUES BELOW																																				
219																																					
218	FOR DIMENSIONS, SEE DASH 15 VALUES BELOW																																				
217																																					
216																																					
215	FOR DIMENSIONS, SEE DASH 17 VALUES BELOW																																				
214																																					
213	FOR DIMENSIONS, SEE DASH 18 VALUES BELOW																																				
212																																					
211																																					
210																																					
209																																					
208	FOR DIMENSIONS, SEE DASH 15 VALUES BELOW																																				
207	FOR DIMENSIONS, SEE DASH 17 VALUES BELOW																																				
206																																					
205																																					
204	FOR DIMENSIONS, SEE DASH 18 VALUES BELOW																																				
203																																					
202																																					
201																																					
200																																					
21																																					
20	2.000	1.312	1.687	1.375	.078	.031	.078	.093	.106 .113	.093	1.187	.750	.593	.453	1.015	.062	.187	.078	.875	.718	1.375	.218	1.156	1.843	.048	NA	.875	.305	.078	.312	1.687	.078	NA	.078	.312	.187	1.843
19	2.000	1.312	1.687	1.375	.078	.031	.078	.093	NA	NA	1.187	.750	.593	.453	1.015	.062	.187	.078	.875	.718	1.375	.218	NA	NA	.048	.031	.875	.305	.078	.312	1.687	.078	NA	.078	.312	.187	NA
18	4.187	1.875	3.469	2.750	.156	.093	.156	.125	.106 .113	.125	1.625	1.032	.844	.656	1.406	.093	.344	.156	1.781	1.531	2.844	.312	1.562	3.875	.062	NA	1.219	.500	.156	.719	3.469	.156	NA	.156	.719	.344	3.875
17	4.187	1.875	3.469	2.750	.156	.093	.156	.125	NA	NA	1.625	1.032	.844	.656	1.406	.093	.344	.156	1.781	1.531	2.844	.312	NA	NA	.062	.062	1.219	.500	.156	.719	3.469	.156	NA	.156	.719	.344	NA
16	2.000	1.312	1.687	1.375	.078	.031	.078	.093	.106 .113	.093	1.187	.750	.593	.453	1.015	.062	.187	.078	.875	.718	1.375	.218	1.156	1.843	.048	NA	.875	.305	.078	.312	1.687	.078	NA	.078	.312	.187	1.843
15	2.000	1.312	1.687	1.375	.078	.031	.078	.093	NA	NA	1.187	.750	.593	.453	1.015	.062	.187	.078	.875	.718	1.375	.218	NA	NA	.048	.031	.875	.305	.078	.312	1.687	.078	NA	.078	.312	.187	NA

NOTES FOR TABLE
STYLE A IS FOR G & N SYSTEM
STYLE B IS FOR GROUND SUPPORT EQUIPMENT
TYPE I IS WITHOUT MOUNTING HOLES
TYPE II IS WITH MOUNTING HOLES

THIS SHEET ADDED

Ⓖ REPLACES REV F WITH CHANGE

RAYTHEON DASH NUMBERS

QTY REQD	PART OR IDENTIFYING NO.	MATERIAL OR NOTES	NOMENCLATURE OR DESCRIPTION	FIND NO.

LIST OF MATERIALS

NEXT ASSY	USED ON
AS APPLICABLE	

APPLICATION

UNLESS OTHERWISE SPECIFIED
DIMENSIONS ARE IN INCHES
CAPACITOR VALUES ARE IN μf
RESISTOR VALUES ARE IN OHMS
TOLERANCES ON
FRACTIONS ± — DECIMALS ±.005 ANGLES ± —
DO NOT SCALE THIS DRAWING

MATERIAL
SEE NOTE 11

MIT
INSTRUMENTATION LAB
CAMBRIDGE MASS

DRAWN R A Jones 7-16-65
CHECKED A. J. [illegible] 7-22-65
APPROVED
APPROVED [illegible] 7/[illegible]/65
APPROVED MIT [illegible] 7/[illegible]/65
APPROVED MSC [illegible]
DATE

MANNED SPACECRAFT CENTER
HOUSTON, TEXAS

NAMEPLATES,
APOLLO GEN-GSE
(STANDARDS)

CODE IDENT NO 80230
SIZE E
DRAWING NO. 1004260
SCALE NONE
SHEET 3 OF 6

NOTICE – [illegible]

SYM	ZONE	DESCRIPTION	DR	CHK	DATE	APPROVED
G		REPLACES REV F WITH CHANGE PER TDRR 20854.			1/22/65	
H		REVISED PER TDRR 20892			[illegible]	
J		REVISED PER TDRR 20904			8/3/65	
K		REVISED PER TDRR 21379			8/16/65	
L		REVISED PER TDRR 21410			8/23/65	
M		REVISED PER TDRR 21993				
N		REVISED PER TDRR 22621			10/	
P		REVISED PER TDRR 22671				
R		REVISED PER TDRR 22672				
S		REVISED PER TDRR 22750				
T		REVISED PER TDRR 22823			/65	
U		REVISED PER TDRR 23072			[illegible]	
V		REVISED PER TDRR 23521			10-26-65	
W		REVISED PER TDRR 23824	RAJ		11-9-65	
Y		REVISED PER TDRR 24018	RAJ		11-16-65	
Z		REVISED PER TDRR 24040	RAJ		11-19-65	
AA		REVISED PER TDRR 24060	RAJ		11-19-65	
AB		REVISED PER TDRR 24868	RAJ		2-22-65	
AC		REVISED PER TDRR 24973	RAJ		1-4-66	
AD		REVISED PER TDRR 25065	RAJ		1-18-66	
AE		REVISED PER TDRR 25672	RAJ		2-4-66	
AF		REVISED PER TDRR 25671	RAJ		2-4-66	
AG		REVISED PER TDRR 26110	RAJ		2-15-66	
AH		REVISED PER TDRR 26372	"		3-16-66	
AJ		REVISED PER TDRR 26425	"		3-16-66	
AK		REVISED PER TDRR 26743	"		3-16-66	
AL		REVISED PER TDRR 26798	"		3-16-66	
AM		REVISED PER TDRR 27168			4-8-66	
AN		REVISED PER TDRR 27235	"		4-8-66	
AP		REVISED PER TDRR 27345	"		4-8-66	
AR		REVISED PER TDRR 27417	"		4-8-66	
AS		REVISED PER TDRR 27442	"		4-8-66	
AT		REVISED PER TDRR 27719	"		4-21-66	
AU		REVISED PER TDRR 27880	"		4-21-66	
AV		REVISED PER TDRR 27896	"		4-21-66	
AW		28110	"		5-16-66	
AY		28173	"			
AZ		28131	"			
BA		28124	"			
BB		REVISED PER TDRR 28511	"		5-16-66	
BC		" " " 28949	"		5-24-66	
BD		" " " 29222	"		6-3-66	
BE		" " " 29235	"		"	
BF		" " " 29322	"		6-24-66	
BG		" " " 29429	"		"	
BH		" " " 29449	"		"	
BJ		" " " 29335	"		"	
BK		" " " 29619	"		"	
BL		" " " 29696	"		6-29-66	
BM		REVISION STATUS CHANGED	JSD	NS	7-29-66	
BN		REVISION STATUS CHANGED	JI	RLW	22 AUG 66	
BP		REVISION STATUS CHANGED	JI	RLW	22 AUG 66	
BR		REVISED PER TDRR 30241	JI	RLW	22 AUG 66	
BS		REVISION STATUS CHANGED	GW	RLW	26 AUG 66	
BT		REVISION STATUS CHANGED	GW	RLW	26 AUG 66	
BU		REVISION STATUS CHANGED	EH	JI	9 SEPT 66	

DASH NO.	P/C	PART NAME	REMARKS	PART NO.	SER. NO.	CONT. NO.	STYLE	TYPE	MATERIAL	A	B	C	D	E	F	G	H	J	K	L	M	N	P	R	S	T	U	V	W	Y	Z	AA	AB	AC	AD	AE	AF	AG	AH	AJ	AK	AL	AM	AN	AP	AR
199	AC	EYEPIECE STORAGE UNIT		2021255-011			A	I		FOR DIMENSIONS, SEE DASH 100 VALUES BELOW																																				
198	AC	SIGNAL CONDITIONER ASSY C/M		2007234		NAS 9-497			NOTE 11B																																					
197	AC	SIGNAL CONDITIONER ASSY C/M		2007235																																										
196	AC	SIGNAL CONDITIONER ASSY LEM		6007010																																										
195	AC	PSA & SIGNAL CONDITIONER ASSY		6007009			A	I	NOTE 11B																																					
194	AC	PANEL, MONITOR		2900031-031			B	II	NOTE 11C	FOR DIMENSIONS, SEE DASH 141 VALUES BELOW																																				
193	AC	DISTRIBUTION BOX, GSE		2900024-031																																										
192	AC	ANALYZER, OPTICS-INERTIAL		2900023-031						FOR DIMENSIONS, SEE DASH 144 VALUES BELOW																																				
191	AC	TEST CONTROL		2900027-031						FOR DIMENSIONS, SEE DASH 141 VALUES BELOW																																				
190	AC	PANEL, PWR SUP AND LOAD		2900033-021																																										
189	AC	ADPT MODULE, P.S.A.		6900088-011																																										
188	AC	ADPT MODULE, P.S.A.		2901143-011																																										
187	AC	FIXTURE, MTG, PTA/PEA		2900066-021		NAS 9-497	B	II	NOTE 11C																																					
186	AC	ANNUNCIATOR PANEL AND EYEPIECE STORAGE ASSEMBLY		1021255-021			A	I		FOR DIMENSIONS, SEE DASH 100 VALUES BELOW																																				
185	AC	ANNUNCIATOR PANEL AND EYEPIECE STORAGE ASSEMBLY		1021255-011			A	I																																						
184	AC	FIX., HAND., G AND N HARNESS		1901846-041		NAS 9-497	B	II	NOTE 11C	FOR DIMENSIONS, SEE DASH 144 VALUES BELOW																																				
183	AC	INSTALLING TOOL, ELEC. CONN		1902586-011			B	II	NOTE 11C	FOR DIMENSIONS, SEE DASH 102 VALUES BELOW																																				
182	AC	ADPT MODULE, P.S.A.		6900088-011			B	II	NOTE 11C	FOR DIMENSIONS, SEE DASH 141 VALUES BELOW																																				
181	AC	G & N INDICATOR CONTROL PANEL ASSY		2014578-011			A	I	NOTE 11B	3.000	1.938	2.437	NA	.125	.062	.188	.156	NA	NA	1.750	1.125	.906	.688	1.500	NA	.281	.125	NA	1.094	2.062	.312	NA	2.500	.062	.125	1.312	.469	NA	NA	NA	.156	NA	.125	.469	.344	NA
180	AC	ADPT MODULE, P.S.A.		1902431-031			B	II		FOR DIMENSIONS, SEE DASH 121 VALUES BELOW																																				
179	AC	MOUNTING PLATE, IMU/PTA		6900083-011						FOR DIMENSIONS, SEE DASH 144 VALUES BELOW																																				
178	AC	MOUNTING PLATE, COMPONENT		6900007-021																																										
177	AC	FIX., MOUNTING, SUBSYSTEM		2900070-021																																										
176	AC	FIX., MOUNTING, G AND N		2900067-021																																										
175	AC	CSL, COOL. AND PWR, G AND N		1902134-031																																										
174	AC	FIX., HAND., C/M AND LEM CDU		2900999-011					NOTE 11C	FOR DIMENSIONS, SEE DASH 141 VALUES BELOW																																				
173	AC	FIX., HANDLING, C/M PSA		2900998-011																																										
172	AC	CAGING ELECTRONICS, GYRO		2900029-021																																										
171	AC	DISTRIBUTION BOX, GSE		2900024-021																																										
170	AC	ANALYZER, OPTICS-INERTIAL		2900023-021						FOR DIMENSIONS, SEE DASH 144 VALUES BELOW																																				
169	AC	ADPT, TESTPOINT, P.S.A.		2900037-021						FOR DIMENSIONS, SEE DASH 141 VALUES BELOW																																				
168	AC	TEST SELECTOR		2900028-021																																										
167	AC	TEST CONTROL		2900027-021																																										
166	AC	PANEL, MONITOR		2900031-021																																										
165	AC	TERM. BOARD STORAGE DRAWER		2900927-011																																										
164	AC	INPUT OUTPUT PANEL		2900926-011																																										
163	AC	CONTROL PANEL		2900896-011																																										
162	AC	CSL. CAL AND TEST, SCM/PSAAM		2900895-011						FOR DIMENSIONS, SEE DASH 144 VALUES BELOW																																				
161	AC	FIX., LIFT AND HAND., IMU		1[illegible]-011						FOR DIMENSIONS, SEE DASH 141 VALUES BELOW																																				
160	AC	FIX., HAND., G AND N HARNESS		1901846-031						FOR DIMENSIONS, SEE DASH 144 VALUES BELOW																																				
159	AC	BATTERY POWER PACK		1900011-031			B	II	NOTE 11C																																					
158	AC	COUPLING DATA UNIT ASSEMBLY C/M		2007222			A	I	NOTE 11B	FOR DIMENSIONS SEE DASH 100 VALUES BELOW																																				
157	AC	COUPLING DATA UNIT ASSEMBLY - LEM		2007222																																										
156	AC	POWER & SERVO ASSEMBLY C/M		2007200						2.125	.968	1.718	NA	.093	.031	.06	.093	NA	NA	.858	.608	.484	.358	.733	.062	.140	.062	NA	.968	1.450	.125	NA	1.720	.046	.03	NA	.210	NA	NA	NA	.070	NA	.046	.32	.16	NA
155	AC	PIPA ELECTRONICS ASSEMBLY		2007201						FOR DIMENSIONS SEE DASH 100 VALUES BELOW																																				
154	AC	PULSE TORQUE ASSEMBLY - LEM		6007000																																										
153	AC	POWER & SERVO ASSEMBLY - LEM		6007200			A	I	NOTE 11B																																					
152	AC	CONT PNL, RSVR CKT TESTER		2900770-011			B	II	NOTE 11C	FOR DIMENSIONS, SEE DASH 141 VALUES BELOW																																				
151	AC	TESTER, RESOLVER CIRCUIT		2900708-011																																										
150	AC	JUNCTION BOX, P.S.A./G.S.E.		1901933-021						FOR DIMENSIONS, SEE DASH 144 VALUES BELOW																																				
149	AC	BATTERY PACK, LIFTING		2900812-011						FOR DIMENSIONS, SEE DASH 141 VALUES BELOW																																				
148	AC	MOUNTING PLATE, COMPONENT		6900007-011						FOR DIMENSIONS, SEE DASH 144 VALUES BELOW																																				
147	AC	MOUNTING PLATE, COMPONENT		2900677-011																																										
146	AC	CART, TRANS, G AND N		1900009-041																																										
145	AC	CONTAINER, SHIPPING, IMU		1900010-021		NAS-9-497	B	II	NOTE 11C																																					
144	AC	FIX., MOUNTING, G AND N		1902204-021			B	II	NOTE 11C	4.125	1.812	3.250	NA	.125	.062	.12	.156	.188 .194	.125	1.625	1.140	.890	.640	1.390	.125	.171	.125	1.875	1.687	2.625	.250	1.562	3.843	.093	NA	NA	.359	.125	.437	3.688	NA	3.687	.093	.40	.25	3.875
143	AC	CSL, COOL. AND PWR, G AND N		1902134-021						4.125	1.812	3.250		.125	.062	.12	.156		.125	1.625	1.140	.890	.640	1.390	.125	.171	.125	1.875	1.687	2.625	.250	1.562	3.843	.093			.359	.125	.437	3.688		3.687	.093	.40	.25	3.875
142	AC	ANALYZER, OPTICS-INERTIAL		2900023-011						4.125	1.812	3.250		.125	.062	.12	.156		.125	1.625	1.140	.890	.640	1.390	.125	.171	.125	1.875	1.687	2.625	.250	1.562	3.843	.093			.359	.125	.437	3.688		3.687	.093	.40	.25	3.875
141	AC	CONT. TEMP, PORTABLE		2900060-011						2.125	.968	1.718		.093	.031	.06	.093		.093	.858	.608	.484	.358	.733	.077	.116	.062	.937	.875	1.343	.125	.781	1.892	.046			.209	.093	.250	1.875		1.840	.046	.23	.16	1.938
140	AC	TESTER, CKT, IMU/CDU RSVR		2900286-011						4.125	1.812	3.250		.125	.062	.12	.156		.125	1.625	1.140	.890	.640	1.390	.125	.171	.125	1.875	1.687	2.625	.250	1.562	3.843	.093			.359	.125	.437	3.688		3.687	.093	.40	.25	3.875
139	AC	SIMULATOR, LD/SIG, CDU		2900285-011																																										
138	AC	SIMULATOR, LD/SIG, OPTICS		1902023-021																																										
137	AC	FIX., MOUNTING, IMU/NAV BASE		6900003-011																																										
136	AC	FIXTURE, OPTICS/NAV BASE		2900072-011																																										
135	AC	FIX., MOUNTING, SUB SYSTEM		2900070-011																																										
134	AC	FIX., HAND., G AND N HARNESS		2900069-011																																										
133	AC	CNTR, SHIPPING, NAV BASE		2900068-011																																										
132	AC	FIX., MOUNTING, G AND N		2900067-011																																										
131	AC	SIMULATOR, LD/SIG, IMU/CDU		2900062-011																																										
130	AC	TESTER, GYRO WHEEL		2900061-011																																										
129	AC	COOLANT SUPPLY		1902133-021																																										
128	AC	TABLE, ROTARY		1900926-021						4.125	1.812	3.250		.125	.062	.12	.156		.125	1.625	1.140	.890	.640	1.390	.125	.171	.125	1.875	1.687	2.625	.250	1.562	3.843	.093			.359	.125	.437	3.688		3.687	.093	.40	.25	3.875
127	AC	FIX., HAND., OPTICS		2900074-011						2.125	.968	1.718		.093	.031	.06	.093		.093	.858	.608	.484	.358	.733	.077	.116	.062	.937	.875	1.343	.125	.781	1.892	.046			.209	.093	.250	1.875		1.840	.046	.23	.16	1.938
126	AC	FIXTURE, MTG, PTA PEA.		2900066-011																																										
125	AC	CONT, TEMP, IMU LIFTING		2900063-011																																										
124	AC	FIXTURE, HANDLING, IMU		2900064-011																																										
123	AC	CONT, OPTICS, REMOTE		1902046-021																																										
122	AC	TEST CONTROL		1902009-021																																										
121	AC	ADPT MODULE, P.S.A.		1902431-021																																										
120	AC	BRIDGE, DECADE ERROR		2900128-011																																										
119	AC	PWR SUP, ELECTRONICS		2900012-011																																										
118	AC	PWR SUP, RELAY AND LAMP		1900049-031																																										
117	AC	CONSOLE, OSCILLOGRAPH		1900000-021																																										
116	AC	ADPT MODULE, P.S.A.		1902431-011																																										
115	AC	ADPT, TEST POINT, PTA/PEA.		2900145-011																																										
114	AC	ADPT, TEST POINT, P.S.A.		2900037-011																																										
113	AC	CONTROL, GIMBAL POSITION		2900036-011																																										
112	AC	SELECTOR, SIGNAL, PRIMARY		2900035-011																																										
111	AC	SEL, SIG, OSCILLOGRAPH		2900034-011																																										
110	AC	PANEL, PWR SUP AND LOAD		2900033-011																																										
109	AC	PANEL, MONITOR		2900031-011																																										
108	AC	PANEL, AUXILIARY INPUT		2900030-011																																										
107	AC	CAGING ELECTRONICS, GYRO		2900029-011																																										
106	AC	TEST SELECTOR		2900028-011																																										
105	AC	TEST CONTROL		2900027-011																																										
104	AC	MONITOR AND CONTROL, TEMP		2900026-011																																										
103	AC	DISTRIBUTION BOX, GSE		2900024-011																																										
102	AC	VOLTMETER, DIGITAL		2900007-011			B	II	NOTE 11C	2.125	.968	1.718	NA	.093	.031	.06	.093	.188 .194	.093	.858	.608	.484	.358	.733	.077	.116	.062	.937	.875	1.343	.125	.781	1.892	.046	NA	NA	.209	.093	.250	1.875	NA	1.840	.046	.23	.16	1.938
101	AC	NAVIGATION BASE ASSEMBLY - LEM		6899950		NAS-9-497	A	I	NOTE 11B	2.000	1.312	1.906	1.375	.078	.048	.078	.093	NA	NA	1.125	.750	.593	.453	1.015	.062	.187	.078	.875	.718	1.375	.218	NA	NA	.048	.031	.875	.305	.078	.531	1.906	.078	NA	.078	.531	.187	NA
100	AC	NAVIGATION BASE ASSEMBLY		2899982		NAS-9-497	A	I	NOTE 11B	2.000	1.312	1.906	1.375	.078	.048	.078	.093	NA	NA	1.125	.750	.593	.453	1.015	.062	.187	.078	.875	.718	1.375	.218	NA	NA	.048	.031	.875	.305	.078	.531	1.906	.078	NA	.078	.531	.187	NA

THIS SHEET ADDED

Ⓖ REPLACES REV F WITH CHANGE

AC ELECTRONICS DASH NUMBERS

NOTES FOR TABLE
STYLE A IS FOR G&N SYSTEM
STYLE B IS FOR GROUND SUPPORT EQUIPMENT
TYPE I IS WITHOUT MOUNTING HOLES
TYPE II IS WITH MOUNTING HOLES

NOTE: AC DASH NO'S. CONT. ON SH.6

QTY REQD	PART OR IDENTIFYING NO.	MATERIAL OR NOTES	NOMENCLATURE OR DESCRIPTION	FIND NO.
		LIST OF MATERIALS		

UNLESS OTHERWISE SPECIFIED
DIMENSIONS ARE IN INCHES
CAPACITOR VALUES ARE IN µf
RESISTOR VALUES ARE IN OHMS
TOLERANCES ON
FRACTIONS DECIMALS ANGLES
± ±.005 ±
DO NOT SCALE THIS DRAWING
MATERIAL
SEE NOTE 11

AS APPLICABLE
NEXT ASSY | USED ON
APPLICATION

MIT
INSTRUMENTATION LAB
CAMBRIDGE, MASS.

DRAWN R A Jones 7 15 65
CHECKED 7-22-65
APPROVED
APPROVED
APPROVED MIT
APPROVED MSC

MANNED SPACECRAFT CENTER
HOUSTON, TEXAS

NAMEPLATES,
APOLLO G&N-GSE
(STANDARDS)

CODE IDENT NO. 80230 | SIZE E | DRAWING NO. 1004260
SCALE NONE | SHEET 4 OF

NOTICE - WHEN GOVERNMENT DRAWINGS, SPECIFICATIONS, OR OTHER DATA ARE USED FOR ANY PURPOSE OTHER THAN IN CONNECTION WITH A DEFINITELY RELATED GOVERNMENT PROCUREMENT OPERATION, THE UNITED STATES GOVERNMENT THEREBY INCURS NO RESPONSIBILITY NOR ANY OBLIGATION WHATSOEVER, AND THE FACT THAT THE GOVERNMENT MAY HAVE FORMULATED, FURNISHED, OR IN ANY WAY SUPPLIED THE SAID DRAWINGS, SPECIFICATIONS OR OTHER DATA IS NOT TO BE REGARDED BY IMPLICATION OR OTHERWISE AS IN ANY MANNER LICENSING THE HOLDER OR ANY OTHER PERSON OR CORPORATION, OR CONVEYING ANY RIGHTS OR PERMISSION TO MANUFACTURE, USE, OR SELL ANY PATENTED INVENTION THAT MAY IN ANY WAY BE RELATED THERETO.

REVISIONS 02768

SYM	ZONE	DESCRIPTION	DR	CHK	DATE	APPROVED
G		REPLACES REV F WITH CHANGE PER TDRR 20854	rj		7/24/65	WK
H		REVISED PER TDRR 20892	rj		8/3/65	WK
J		REVISED PER TDRR 20904	rj		9/3/65	WK
K		REVISED PER TDRR 21379	rj		8/6/65	WK
L		REVISED PER TDRR 21410	rj		8/23/65	WK
M		REVISED PER TDRR 21593	rj			
N		REVISED PER TDRR 22621	rj		10/1/65	
P		REVISED PER TDRR 22671	rj			
R		REVISED PER TDRR 22672	rj			
S		REVISED PER TDRR 22750	rj			WK
T		REVISED PER TDRR 22823	rj			
U		REVISED PER TDRR 23072	rj		[illegible]-65	WGM
V		REVISED PER TDRR 23521	rj		9-26-65	WK
W		REVISED PER TDRR 23524	RAJ		11-9-65	WK
Y		REVISED PER TDRR 24018	RAJ		11-16-65	WK
Z		REVISED PER TDRR 24040	RAJ		11-15-65	WK
AA		REVISED PER TDRR 24060	RAJ		11-19-65	WK
AB		REVISED PER TDRR 24868	RAJ		12-22-65	WK
AC		REVISED PER TDRR 24973	RAJ		1-4-66	WK
AD		REVISED PER TDRR 25065	RAJ		1-18-66	WGM
AE		REVISED PER TDRR 25672	RAJ		2-4-66	WK
AF		REVISED PER TDRR 25671	RAJ		2-4-66	WK
AG		REVISED PER TDRR 26110	RAJ		2-15-66	WK
AH		REVISED PER TDRR 26372	"		3-16-66	WGM
AJ		REVISED PER TDRR 26425	"		3-16-66	WGM
AK		REVISED PER TDRR 26743	"		3-16-66	WGM
AL		REVISED PER TDRR 26738	"		3-16-66	WGM
AM		REVISED PER TDRR 27163	"		4-7-66	WGM
AN		REVISED PER TDRR 27235	"		4-7-66	WGM
AP		REVISED PER TDRR 27345	"		4-7-66	WGM
AR		REVISED PER TDRR 27417	"		4-7-66	WGM
AS		REVISED PER TDRR 27442	"		4-7-66	WGM
AT		REVISED PER TDRR 27719	"		4-20-66	WK
AU		REVISED PER TDRR 27880	"		4-20-66	WK
AV		REVISED PER TDRR 27896	"		4-20-66	WK
AW		↕ ↕ 28110	"		5-16-66	WGM
AY		28173	"		↕	WGM
AZ		28131	"			WGM
BA		28124	"			WGM
BB		REVISED PER TDRR 28511	"		5-16-66	WGM
BC		" " " 28949	"		5-24-66	WGM
BD		" " " 29222	"		6-8-66	WGM
BE		" " " 29235	"		"	WGM
BF		" " " 29322	"		6-24-66	WGM
BG		" " " 29429	"		"	WGM
BH		" " " 29449	"		"	WGM
BJ		" " " 29335	"		"	WGM
BK		" " " 29619	"		"	WGM
BL		" " " 29696	"		6-29-66	WGM
BM		REVISION STATUS CHANGED	JSD		7-29-66	
BN		REVISION STATUS CHANGED	JI	RLW	22 AUG 66	
BP		REVISION STATUS CHANGED	JI	RLW	22 AUG 66	
BR		REVISION STATUS CHANGED	JI	RLW	23 AUG 66	
BS		REVISION STATUS CHANGED	GW	RLW	26 AUG 66	
BT		REVISION STATUS CHANGED	GW	RLW	26 AUG 66	
BU		REVISION STATUS CHANGED	EH	JL	3 SEPT 66	

-99	M	T
-98		

DASH NO.	P/C	PART NAME	REMARKS	PART NO.	SER. NO.	CONT. NO.	STYLE	TYPE	MATERIAL	A	B	C	D	E	F	G	H	J	K
40	MIT	COMPUTER ASSY		2003100		NAS-9-497	A	I	NOTE 11 B	2.000	1.312	1.906	1.375	.078	.048	.078	.093	NA	NA
-00	MIT	LIFTING SLING-G&N INST. QUAL. FIX. & AZM REF. FIX.		1021640		NAS-9-4065	B	II	NOTE 11 C	2.000	1.312	1.687	1.375	.078	.048	.078	.093	.086/.081	.093

DASH NO.	L	M	N	P	R	S	T	U	V	W	Y	Z	AA	AB	AC	AD	AE	AF	AG	AH	AJ	AK	AL	AM	AN	AP	AR
40	1.125	.750	.593	.453	1.015	.062	.187	.078	.875	.718	1.375	.218	NA	NA	.048	.031	.875	.305	.078	.531	1.906	.078	NA	.078	.531	.187	NA
-00	1.187	.750	.593	.453	1.015	.062	.187	.078	.875	.718	1.375	.218	1.156	1.843	.048	NA	.875	.305	.078	.312	1.687	.110	1.830	.070	.275	.180	1.844

MIT DASH NUMBERS

THIS SHEET ADDED

Ⓖ REPLACES REV F WITH CHANGE

NOTES FOR TABLE
STYLE A IS FOR G&N SYSTEM
STYLE B IS FOR GROUND SUPPORT EQUIPMENT
TYPE I IS WITHOUT MOUNTING HOLES
TYPE II IS WITH MOUNTING HOLES

QTY REQD	PART OR IDENTIFYING NO.	MATERIAL OR NOTES	NOMENCLATURE OR DESCRIPTION	FIND NO.

LIST OF MATERIALS

NEXT ASSY	USED ON
AS APPLICABLE	

APPLICATION

UNLESS OTHERWISE SPECIFIED
DIMENSIONS ARE IN INCHES
CAPACITOR VALUES ARE IN µf
RESISTOR VALUES ARE IN OHMS
TOLERANCES ON
FRACTIONS ± — DECIMALS ±.005 ANGLES ± —
DO NOT SCALE THIS DRAWING

MATERIAL
SEE NOTE 11

MIT
INSTRUMENTATION LAB
CAMBRIDGE MASS

		DATE
DRAWN	R A Jones	7-16-65
CHECKED		7-22-65
APPROVED		
APPROVED	W Kupfer	7/22/65
APPROVED MIT	W Kupfer	7/22/65
APPROVED MSC		

MANNED SPACECRAFT CENTER
HOUSTON, TEXAS

NAMEPLATES,
APOLLO G&N-GSE
(STANDARDS)

CODE IDENT NO. 80230
SIZE E
DRAWING NO. 1004260
SCALE NONE
SHEET 5 OF

NOTICE – WHEN GOVERNMENT DRAWINGS, SPECIFICATIONS, OR OTHER DATA ARE USED FOR ANY PURPOSE OTHER THAN IN CONNECTION WITH A DEFINITELY RELATED GOVERNMENT PROCUREMENT OPERATION, THE UNITED STATES GOVERNMENT THEREBY INCURS NO RESPONSIBILITY NOR ANY OBLIGATION WHATSOEVER, AND THE FACT THAT THE GOVERNMENT MAY HAVE FORMULATED, FURNISHED, OR IN ANY WAY SUPPLIED THE SAID DRAWINGS, SPECIFICATIONS, OR OTHER DATA IS NOT TO BE REGARDED BY IMPLICATION OR OTHERWISE AS IN ANY MANNER LICENSING THE HOLDER OR ANY OTHER PERSON OR CORPORATION, OR CONVEYING ANY RIGHTS OR PERMISSION TO MANUFACTURE, USE, OR SELL ANY PATENTED INVENTION THAT MAY IN ANY WAY BE RELATED THERETO.

REVISIONS 02768

SYM	ZONE	DESCRIPTION	DR	CHK	DATE	APPROVED
AG		CHANGED NUMBER OF SHEETS FROM 5 TO 6 PER TDRR 26110.	RAJ		2-15-66	
AH		REVISED PER TDRR 26372	"		3-16-66	
AJ		REVISED PER TDRR 26425	"		3-16-66	
AK		REVISED PER TDRR 26743	"		3-16-66	
AL		REVISED PER TDRR 26798	"		3-16-66	
AM		REVISED PER TDRR 27168	"		4-7-66	
AN		REVISED PER TDRR 27235	"		4-7-66	
AP		REVISED PER TDRR 27345	"		4-7-66	
AR		REVISED PER TDRR 27417	"		4-7-66	
AS		REVISED PER TDRR 27442	"		4-7-66	
AT		REVISED PER TDRR 27719	"		4-20-66	
AU		REVISED PER TDRR 27880	"		4-20-66	
AV		REVISED PER TDRR 27896	"		4-20-66	
AW		28110	"		5-16-66	
AY		28173	"		5-16-66	
AZ		28131	"		5-16-66	
BA		28124	"		5-16-66	
BB		REVISED PER TDRR 28511	"		5-16-66	
BC		" " " 28949	"		5-24-66	
BD		" " " 29222	"		6-8-66	
BE		" " " 29235	"		"	
BF		" " " 29322	"		6-24-66	
BG		" " " 29429	"			
BH		" " " 29449	"		"	
BJ		" " " 29335	"		"	
BK		" " " 29619	"		"	
BL		" " " 29696	"		6-29-66	
BM		REVISION STATUS CHANGED	JSD	N.S.	7-29-66	
BN		REVISED PER TDRR 29974	JI	RLW	22 AUG 66	
BP		REVISION STATUS CHANGED	JI	RLW	22 AUG 66	
BR		REVISION STATUS CHANGED	JI	RLW	23 AUG 66	
BS		REVISED PER TDRR 30530	GW	RLW	26 AUG 66	
BT		REVISED PER TDRR 30543	GW	RLW	26 AUG 66	
BU		REVISED PER TDRR 30898	EH	JI	[illegible] 66	

DASH NO.	P/C
539	AC
538	AC

A C ELECTRONICS DASH NUMBERS

DASH NO.	P/C	PART NAME	REMARKS	PART NO.	SER NO.	CONT NO.	STYLE	TYPE	MATERIAL
543	AC	PANEL, MONITOR		2900031-041		NAS9-497	B	II	NOTE 11C
542	AC	BATTERY PACK, LIFTING		2900812-021		NAS9-497	B	II	NOTE 11C
540	AC	ADPT, TEST POINT, P.S.A.		2900037-031		NAS9-497	B	II	NOTE 11C
539	AC	ANNUNCIATOR PANEL AND EYEPIECE STORAGE ASSEMBLY		1021255-041			A	I	NOTE 11B
538	AC	ANNUNCIATOR PANEL AND EYEPIECE STORAGE ASSEMBLY		1021255-031			A	I	NOTE 11B
537	AC	TEST SELECTOR		2900028-031			B	II	NOTE 11C
536	AC	ANALYZER, OPTICS-INERTIAL		2900023-041			B	II	NOTE 11C
535	AC	CONT, TEMP, PORTABLE		2900060-021			B	II	NOTE 11C
534	AC	COMPUTER CONT & RETICLE DIMMER		6014512-021			A	I	NOTE 11B
533	AC	ADPT MODULE, P.S.A.		1902431-041			B	II	NOTE 11C
532	AC	TRAY BREAKOUT, 105 PIN		1900807-021					
531	AC	TRAY BREAKOUT, 84 PIN		1900806-021					
530	AC	HEAT SINK - TRAY EXTENDER		1900808-021					
529	AC	TESTER, FAILURE INDICATOR		1900809-021					
527	AC	FIX., MOUNTING, G AND N	(-144)	1902204-021					
526	AC	FIX., MOUNTING, G AND N	(-144)	2900067-031					
525	AC	PORTABLE TEMP. CONTROLLER		1900496-021			B	II	NOTE 11C
524	AC	POWER, SERVO AND THERMOCOUPLE ASSEMBLY C/M		2010743			A	I	NOTE 11B
523	AC	PULSE TORQUE AND THERMOCOUPLE ASSEMBLY-LEM		6010656					
522	AC	COUPLING DATA UNIT AND THERMOCOUPLE ASSEMBLY - LEM		2010744					
521	AC	COUPLING DATA UNIT AND THERMOCOUPLE ASSEMBLY - C/M		2010744					
520	AC	PIPA ELECTRONICS AND THERMOCOUPLE ASSEMBLY		2010745			A	I	NOTE 11B
519	AC	FIXTURE, HANDLING, LEM-PSA	(-141)	6900129-011			B	II	NOTE 11C
518	AC	JUNCTION BOX, GSE-PSA	(-144)	1901933-031			B	II	NOTE 11C
517	AC	FIX., HAND., OPTICS INSTL.	(-141)	2901380-011			B	II	NOTE 11C
516	AC	POWER, SERVO AND THERMOCOUPLE ASSEMBLY-LEM		6010655		NAS 9-497	A	I	NOTE 11B
514	AC	SIGNAL COND. ASSY LEM OPER.	(-100)	6007013		NAS-9-497	A	I	NOTE 11B
513		JUMPER, BY-PASS	(-141)	1021616			B	II	NOTE 11C
512		COUPLING DATA UNIT ASSEMBLY C/M	(-100)	2007322-011			A	I	NOTE 11B
511		COUPLING DATA UNIT ASSEMBLY - LEM	(-100)	2007322-021					
510		BATTERY POWER PACK	(-144)	1900011-041			B	II	NOTE 11C
509		JUNCTION BOX, P.S.A./G.S.E.	(-144)	1902195-021			B	II	NOTE-11C
508		NAVIGATION BASE ASSEMBLY - LEM	✓ (-101)	6899980			A	I	NOTE 11B
507		CSL, COOL. AND PWR., G AND N	(-144)	1902134-041			B	II	NOTE 11C
506		BREAKOUT BOX, CABLE ADAPTER	(-141)	2901011-011					
505		MONITOR AND CONTROL, TEMP	(-141)	2900026-021					
504		PWR SUP, GUIDANCE SYSTEM	✓ (-141)	1900033-021					
503		CONTROL, GIMBAL POSITION	(-141)	2900036-021					
502		ADPT, TEST POINT, PTA/PEA,	(-141)	2900145-021					
501		MOUNTING PLATE, COMPONENT	(-144)	6900007-031		NAS-9-497	B	II	NOTE 11C
500	AC	MOUNTING PLATE, COMPONENT	✓ (-144)	2900677-021					

DASH NO.	A	B	C	D	E	F	G	H	J	K
543										
542										
540										
539	2000	1.312	1.906	1.375	.078	.048	.078	.093	NA	NA
538	2000	1.312	1.906	1.375	.078	.048	.078	.093	NA	NA
537	2.125	.968	1.718	NA	.093	.031	.06	.093	.100 .104	.093
536	4.125	1.812	3.250	NA	.125	.062	.12	.156	.100 .104	.125
535	2.125	.968	1.718	NA	.093	.031	.06	.093	.100 .104	.093
534	2.000	1.312	1.906	1.375	.078	.048	.078	.093	NA	NA
533	2.125	.968	1.718	NA	.093	.031	.06	.093	.100 .104	.093
532	4.125	1.812	3.250		.125	.062	.12	.156	.100 .104	.125
531	4.125	1.812	3.250		.125	.062	.12	.156	.100 .104	.125
530	2.125	.968	1.718		.093	.031	.06	.093	.100 .104	.093
529	2.125	.968	1.718	NA	.093	.031	.06	.093	.100 .104	.093
527	FOR DIMENSIONS, SEE DASH 500 VALUES BELOW									
526										
525	3.000	1.937	2.437	2.312	.125	.031	.125	.156	.125	.125
524	2.125	.968	1.718	NA	.093	.031	.06	.093	NA	NA
523	FOR DIMENSIONS, SEE DASH 508 VALUES BELOW									
522										
521										
520										
519	FOR DIMENSIONS, SEE DASH 504 VALUES BELOW									
518	FOR DIMENSIONS, SEE DASH 500 VALUES BELOW									
517	FOR DIMENSIONS SEE DASH 502 VALUES BELOW									
516	FOR DIMENSIONS SEE DASH 508 VALUES BELOW									
514	FOR DIMENSIONS, SEE DASH 508 VALUES BELOW									
513	2.125	.968	1.718	NA	.093	.031	.06	.093	.100 .104	.093
512	FOR DIMENSIONS, SEE DASH 508 VALUES BELOW									
511										
510	FOR DIMENSIONS, SEE DASH 500 VALUES BELOW									
509										
508	2.000	1.312	1.906	1.375	.078	.048	.078	.093	NA	NA
507	FOR DIMENSIONS, SEE DASH 500 VALUES BELOW									
506	2.125	.968	1.718	NA	.093	.031	.06	.093	.100 .104	.093
505										
504										
503										
502										
501	FOR DIMENSIONS, SEE DASH 500 VALUES BELOW									
500	4.125	1.812	3.250	NA	.125	.062	.12	.156	.100 .104	.125

DASH NO.	L	M	N	P	R	S	T	U	V	W	Y	Z
539	1.125	.750	.593	.453	1.015	.062	.187	.078	.375	.718	1.375	.218
538	1.125	.750	.593	.453	1.015	.062	.187	.078	.875	.718	1.375	.218
537	.858	.608	.484	.358	.733	.077	.116	.062	.937	.875	1.343	.125
536	1.625	1.140	.890	.640	1.390	.125	.171	.125	1.875	1.687	2.625	.250
535	.858	.608	.484	.358	.733	.077	.116	.062	.937	.875	1.343	.125
534	1.125	.750	.593	.453	1.015	.062	.187	.078	.875	.718	1.375	.218
533	.858	.608	.484	.358	.733	.077	.116	.062	.937	.875	1.343	.125
532	1.625	1.140	.890	.640	1.390	.125	.171	.125	1.875	1.687	2.625	.250
531	1.625	1.140	.890	.640	1.390	.125	.171	.125	1.875	1.687	2.625	.250
530	.858	.608	.484	.358	.733	.077	.116	.062	.937	.875	1.343	.125
529	.858	.608	.484	.358	.733	.077	.116	.062	.937	.875	1.343	.125
525	1.718	1.187	.968	.749	1.452	.093	.295	.090	1.312	1.00	2.000	.250
524	.858	.608	.484	.358	.733	.062	.140	.062	NA	.968	1.450	.125
513	.858	.608	.484	.358	.733	.077	.116	.062	.937	.875	1.343	.125
508	1.125	.750	.593	.453	1.015	.062	.187	.078	.875	.718	1.375	.218
506	.858	.608	.484	.358	.733	.077	.116	.062	.937	.875	1.343	.125
500	1.625	1.140	.890	.640	1.390	.125	.171	.25	1.875	1.687	2.625	.250

DASH NO.	AA	AB	AC	AD	AE	AF	AG	AH	AJ	AK	AL	AM	AN	AP	AR
539	NA	NA	.048	.031	.875	305	.078	.531	1.906	.078	NA	.078	.531	.187	NA
538	NA	NA	.048	.031	.875	305	078	531	1.906	.078	NA	078	531	.187	NA
537	.781	1.892	.046	NA	NA	.209	.093	.250	1.875	NA	1.840	.046	.23	.16	1.938
536	1.562	3.843	.093	NA	NA	.359	.125	.437	3.688	NA	3.687	.093	.40	.25	3.875
535	.781	1.892	.046	NA	NA	.209	.093	.250	1.875	NA	1.840	.046	.23	.16	1.938
534	NA	NA	.048	.031	.875	.305	.078	.531	1.906	.078	NA	078	.531	.187	NA
533	.781	1.892	.046	NA	NA	.209	.093	.250	1.875	NA	1.840	.046	.23	.16	1.938
532	1.562	3.843	.093			.359	.125	.437	3.688		3.687	.093	.40	.25	3.875
531	1.562	3.843	.093			.359	.125	.437	3.688		3.687	.093	.40	.25	3.875
530	.781	1.892	.046			.209	.093	.250	1.875		1.840	.046	.23	.16	1.938
529	.781	1.892	.046	NA	NA	.209	.093	.250	1.875	NA	1.840	.046	.23	.16	1.938
525	1.687	2.750	.062	N/A	N/A	.463	.125	.562	2.437	.140	2.562	.090	.468	.359	2.750
524	NA	1.720	.046	.03	NA	.210	NA	NA	NA	.070	NA	.046	.32	.16	NA
513	.781	1.892	.046	NA	NA	.209	.093	.250	1.875	NA	1.840	.046	.23	.16	1.938
508	NA	NA	.048	.031	.875	.305	.078	.531	1.906	.078	NA	.078	.531	.187	NA
506	.781	1.892	.046	NA	NA	.209	.093	.250	1.875	NA	1.840	.046	.23	.16	1.938
500	1.562	3.843	.093	NA	NA	.359	.125	.437	3.688	NA	3.687	.093	.40	.25	3.875

NOTES FOR TABLE

STYLE A IS FOR G&N SYSTEM
STYLE B IS FOR GROUND SUPPORT EQUIPMENT
TYPE I IS WITHOUT MOUNTING HOLES
TYPE II IS WITH MOUNTING HOLES

(AG) THIS SHEET ADDED

QTY REQD	PART OR IDENTIFYING NO.	MATERIAL OR NOTES	NOMENCLATURE OR DESCRIPTION	FIND NO.

LIST OF MATERIALS

NEXT ASSY	USED ON
AS APPLICABLE	

APPLICATION

UNLESS OTHERWISE SPECIFIED
DIMENSIONS ARE IN INCHES
CAPACITOR VALUES ARE IN µf
RESISTOR VALUES ARE IN OHMS
TOLERANCES ON
FRACTIONS DECIMALS ANGLES
± —— ±.005 ± ——
DO NOT SCALE THIS DRAWING

MATERIAL
SEE NOTE 11

MIT
INSTRUMENTATION LAB
CAMBRIDGE, MASS

DRAWN R. A. Jones 2-15-66
CHECKED Chandler 2-15-66
APPROVED
APPROVED
APPROVED MIT McMurley R. C. [illegible] 5-16-66
APPROVED MSC
DATE

MANNED SPACECRAFT CENTER
HOUSTON, TEXAS

NAMEPLATES,
APOLLO G&N-GSE
(STANDARDS)

CODE IDENT NO. 80230
SIZE E
DRAWING NO. 1004260
SCALE NONE
SHEET 6 OF 6

NOTICE – WHEN GOVERNMENT DRAWINGS, SPECIFICATIONS, OR OTHER DATA ARE USED FOR ANY PURPOSE OTHER THAN IN CONNECTION WITH A DEFINITELY RELATED GOVERNMENT PROCUREMENT OPERATION, THE UNITED STATES GOVERNMENT THEREBY INCURS NO RESPONSIBILITY NOR ANY OBLIGATION WHATSOEVER; AND THE FACT THAT THE GOVERNMENT MAY HAVE FORMULATED, FURNISHED, OR IN ANY WAY SUPPLIED THE SAID DRAWINGS, SPECIFICATIONS, OR OTHER DATA IS NOT TO BE REGARDED BY IMPLICATION OR OTHERWISE AS IN ANY MANNER LICENSING THE HOLDER OR ANY OTHER PERSON OR CORPORATION, OR CONVEYING ANY RIGHTS OR PERMISSION TO MANUFACTURE, USE, OR SELL ANY PATENTED INVENTION THAT MAY IN ANY WAY BE RELATED THERETO.

NOTES:

1. INTERPRET DRAWING IN ACCORDANCE WITH STANDARDS PRESCRIBED IN MIL-D-70327.
2. DIMENSIONS ON EACH VIEW APPLY TO ALL VIEWS. (WITH THE EXCEPTION OF MOUNTING HOLES).
3. FORMATS ILLUSTATED WILL BE APPLICABLE TO ALL ITEMS REQUIRING NAMEPLATES BELOW END ITEM DESIGNATION (SYSTEMS ASSEMBLIES, ETC.)
4. PLATE BACKGROUND TO BE LUSTERLESS BLACK PER FED-STD-595, COLOR 37038. BORDER, MARKING AND LETTERING TO BE NATURAL METAL,(ANODIZED ALUMINUM).
5. MARKING METHOD TO BE DIE STAMPING, ETCHING OR ENGRAVING IN ACCORDANCE WITH MIL P 19834.
6. LETTERING STYLE TO BE GOTHIC,(SANS SERIFS), AND NUMBERS TO BE ARABIC.
7. WHERE LOCATING DIMENSIONS ARE NOT SHOWN, CHARACTERS SHALL BE SYMMETRICALLY POSITIONED.
8. IDENTIFY WITH DRAWING NUMBER PER ND1002019.
9. WHEN "AUTO MARK" METAL MARKING TYPEWRITER IS USED TO ADD DATA TO BLANK SPACES, TYPE SIZE IS TO BE SELECTED FROM DIMENSIONS U, AC AND AM.
10. NASA SYMBOL IS TO BE PROPORTIONAL TO NAMEPLATE IN RATIO OF 1 TO 5 A TH DIMENSION A VALUE AND IS TO HAVE NATURAL BACKGROUND. NASA SYMBOL LETTERS LETTERING AND FEATHER TO BE BLACK,(OR WHITE FOR SILK SCREENING). WHERE BLACK FEATHER PROTRUDES INTO BLACK BACKGROUND, A MINIMUM OUTLINE OF NATURAL BACKGROUND SHALL EXIST.
11. NAMEPLATES WILL BE APPLIED BY METHODS LISTED BELOW, SHOWN, IN ORDER OF PREFERENCE, (IE., FOR RELIABILITY AND WEIGHT).
    - A - STENCIL OR SILK SCREEN DIRECTLY ON EQUIPMENT USING INK PER SCD 1010920,(WHITE OR BLACK).
    - B - ALUMINUM FOIL,(STYLE A OR B, TYPE I): FOIL SHALL BE .0030 ±.0005 THICK PER MIL-A-148. FOIL SHALL HAVE NO ADHESIVE BACKING. FOIL SHALL BE BONDED PER ND 1002219,(METHOD II). FOIL SHALL BE CLEAR ANODIZED PER MIL-A-8625, TYPE I.
    - C - PLATE, (STYLE A OR B, TYPE II): MATERIAL: QQ-A-250, TEMPER O OR H14, TYPE 1100, ALUMINUM ALLOY, .032 THICK. ANODIZE PER MIL-A-8625, TYPE II. ALUMINUM PLATE MUST BE FREE FROM BURRS AND SHARP CORNERS, MOUNTED WITH APPLICABLE SIZE FASTENERS.
12. NAMEPLATES SHALL BE CAPABLE OF MEETING APPLICABLE REQUIREMENTS OF MIL-M-13231.
13. ON DIMENSION TABLES SHOWN ON PAGES 2, 3, 4 AND 5, NA MEANS, "NOT APPLICABLE".

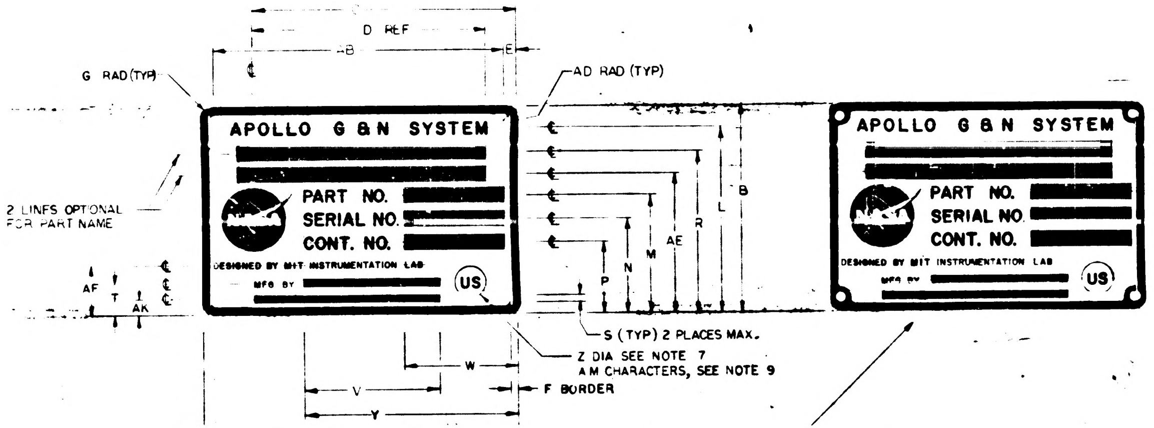

FOR G AND N SYSTEM
STYLE A

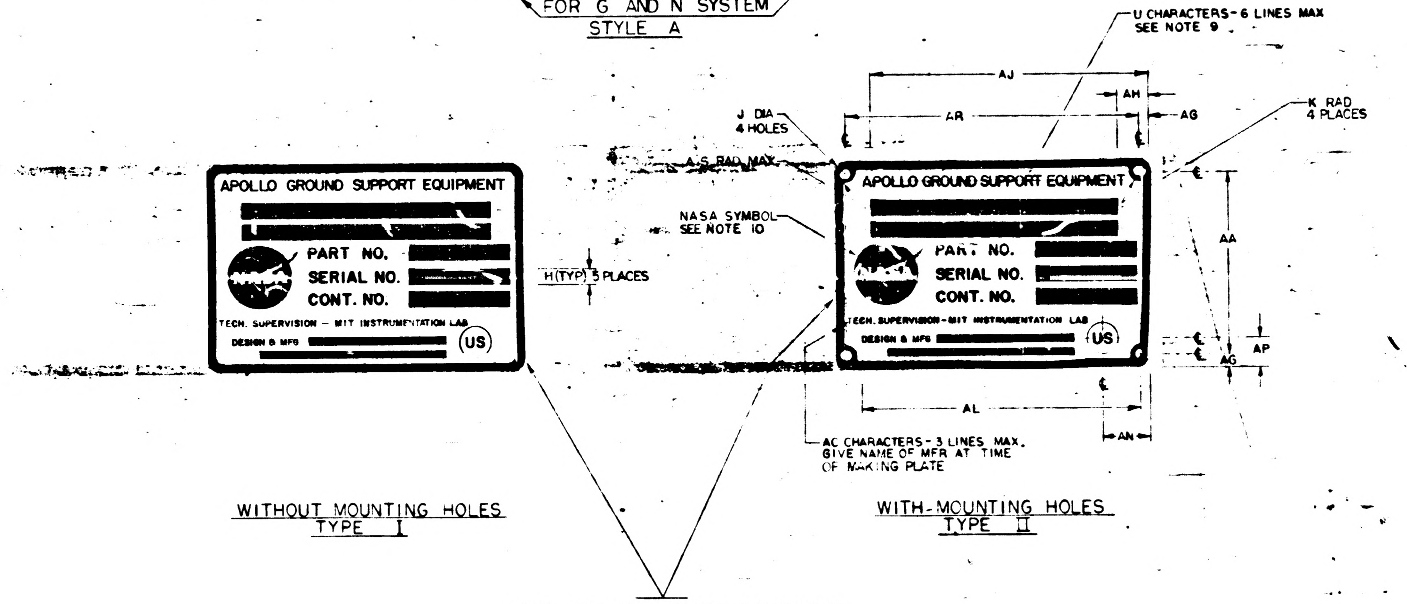

WITHOUT MOUNTING HOLES
TYPE I

WITH-MOUNTING HOLES
TYPE II

FOR GROUND SUPPORT EQUIPMENT
STYLE B

REVISIONS Q2768

SYM	ZONE	DESCRIPTION	DR	CHK	DATE	APPROVED
G		REPLACES REV F WITH CHANGE PER TDRR 20854			[illegible]	
H		REVISED PER TDRR 20892			[illegible]	
J		REVISED PER TDRR 20904			[illegible]	
K		REVISED PER TDRR 21379			5/8/65	
L		REVISED PER TDRR 21410			6/23/65	
M		REVISED PER TDRR 21993				
N		REVISED PER TDRR 22621			10/	
P		REVISED PER TDRR 22671			1/	
R		REVISED PER TDRR 22672				
S		REVISED PER TDRR 22750			65	
T		REVISED PER TDRR 22823				
U		REVISED PER TDRR 23072			10-28-65	
V		REVISED PER TDRR 23521			10-27-65	
W		REVISED PER TDRR 23824	RAJ		11-9-65	
Y		REVISED PER TDRR 24018	RAJ		11-16-65	
Z		REVISED PER TDRR 24040	RAJ		11-19-65	
AA		REVISED PER TDRR 24060	RAJ		11-19-65	
AB		REVISED PER TDRR 24868	RAJ		12-22-65	
AC		REVISED PER TDRR 24973	RAJ		1-4-66	
AD		REVISED PER TDRR 25065	RAJ		1-18-66	
AE		REVISED PER TDRR 25672	RAJ		2-4-66	
AF		REVISED PER TDRR 25671	RAJ		2-4-66	
AG		REVISED PER TDRR 26110	RAJ		2-15-66	
AH		REVISED PER TDRR 26372	"		3-6-66	
AJ		REVISED PER TDRR 26425	"		3-16-66	
AK		REVISED PER TDRR 26743	"		3-16-66	
AL		REVISED PER TDRR 26798	"		3-16-66	
AM		REVISED PER TDRR 27168	"		4-7-66	
AN		REVISED PER TDRR 27235	"		4-7-66	
AP		REVISED PER TDRR 27345	"		4-7-66	
AR		REVISED PER TDRR 27417	"		4-7-66	
AS		REVISED PER TDRR 27442	"		4-7-66	
AT		REVISED PER TDRR 27719	"		4-20-66	
AU		REVISED PER TDRR 27880	"		4-20-66	
AV		REVISED PER TDRR 27896	"		4-20-66	
AW		28110	"		5-16-66	
AY		28173	"			
AZ		28131	"			
BA		28124	"			
BB		REVISED PER TDRR 28511	"		5-16-66	
BC		" " " 28949	"		5-24-66	
BD		" " " 29222	"		6-8-66	
BE		" " " 29235	"		6-8-66	
BF		" " " 29322	"		6-30-66	
BG		" " " 29429	"			
BH		" " " 29449	"			
BJ		" " " 29335	"		"	
BK		" " " 29619	"		"	
BL		" " " 29696	"		"	
BM		REVISION STATUS CHANGED	JSD	NS	7-29-66	
BN		REVISION STATUS CHANGED	JI	RLW	23 AUG 66	
BP		REVISION STATUS CHANGED	JI	RLW	[illegible] AUG 66	
BR		REVISION STATUS CHANGED	JI	RLW	18 AUG 66	
BS		REVISION STATUS CHANGED	GW	RLW	26 AUG 66	
BT		REVISION STATUS CHANGED	GW	RLW	26 AUG 66	
BU		REVISION STATUS CHANGED	EH	JI	9 SEPT 66	
BV		REVISION STATUS CHANGED	JJB	RLW	30 SEPT 66	

SUGGESTED PROPORTIONS FOR NAMEPLATE DIMENSIONS.
1. SELECT NAMEPLATE LENGTH, DIMENSION "A", TO FIT DESIGN NEEDS.
2. DIMENSIONS B THRU AS ON LINE 1 BELOW ARE PROPORTIONAL TO "A" BY MULTIPLIERS SHOWN IN LINE 2 BELOW.

1.	A	B	C	D	E	F	G	H	J	K	L	M	N	P	R	S	T	U
2.	1.000 A	.6563 A	.8438 A	.6875 A	.0391 A	.0240 A	.0391 A	.0469 A	.0547 A	.0469 A	.5938 A	.3750 A	.2969 A	.2187 A	.5079 A	.0313 A	.0938 A	.0391 A

1.	V	W	Y	Z	AA	AB	AC	AD	AE	AF	AG	AH	AJ	AK	AL	AM	AN	AP	AR	AS
2.	.4375 A	.3594 A	.6875 A	.1094 A	.5781 A	.9219 A	.0240 A	.0156 A	.4375 A	.1525 A	.0391 A	.1563 A	.8438 A	.0548 A	.8659 A	.0391 A	.1563 A	.0938 A	.9219 A	.0151 A

Ⓖ REPLACES REV F WITH CHANGE

QTY REQD	PART OR IDENTIFYING NO	MATERIAL OR NOTES	NOMENCLATURE OR DESCRIPTION	FIND NO.

LIST OF MATERIALS

AS APPL CABLE	
NEXT ASSY	USED ON
APPLICATION	

UNLESS OTHERWISE SPECIFIED
DIMENSIONS ARE IN INCHES
CAPACITOR VALUES ARE IN µf
RESISTOR VALUES ARE IN OHMS
TOLERANCES ON
FRACTIONS ± — DECIMALS ±.005 ANGLES ± —
DO NOT SCALE THIS DRAWING

MATERIAL
SEE NOTE H

MIT
INSTRUMENTATION LAB
CAMBRIDGE, MASS.

DRAWN R A Jones 7/16/65
CHECKED A. J. 7-22-65
APPROVED
APPROVED 7/22/65
APPROVED MIT 7/22/65
APPROVED MSC
DATE

MANNED SPACECRAFT CENTER
HOUSTON, TEXAS

NAMEPLATES,
APOLLO G&N–GSE
(STANDARDS)

CODE IDENT NO 80230
SIZE E
DRAWING NO. 1004260
SCALE NONE
SHEET 1 OF 6

1004260

NOTICE - WHEN GOVERNMENT DRAWINGS, SPECIFICATIONS, OR OTHER DATA ARE USED FOR ANY PURPOSE OTHER THAN IN CONNECTION WITH A DEFINITELY RELATED GOVERNMENT PROCUREMENT OPERATION, THE UNITED STATES GOVERNMENT THEREBY INCURS NO RESPONSIBILITY NOR ANY OBLIGATION WHATSOEVER; AND THE FACT THAT THE GOVERNMENT MAY HAVE FORMULATED, FURNISHED, OR IN ANY WAY SUPPLIED THE SAID DRAWINGS, SPECIFICATIONS, OR OTHER DATA IS NOT TO BE REGARDED BY IMPLICATION OR OTHERWISE AS IN ANY MANNER LICENSING THE HOLDER OR ANY OTHER PERSON OR CORPORATION, OR CONVEYING ANY RIGHTS OR PERMISSION TO MANUFACTURE, USE, OR SELL ANY PATENTED INVENTION THAT MAY IN ANY WAY BE RELATED THERETO.

REVISIONS

SYM	ZONE	DESCRIPTION	DR	CHK	DATE	APPROVED
G		REPLACES REV F WITH CHANGE PER TDRR 20854.			[illegible]	
H		REVISED PER TDRR 20892			[illegible]	
J		REVISED PER TDRR 20904			[illegible]	
K		REVISED PER TDRR 21379			[illegible]	
L		REVISED PER TDRR 21410			[illegible]	
M		REVISED PER TDRR 21993	"			
N		REVISED PER TDRR 22621	"			
P		REVISED PER TDRR 22671	"			
R		REVISED PER TDRR 22672				
S		REVISED PER TDRR 22750	"			
T		REVISED PER TDRR 22823	"			
U		REVISED PER TDRR 23072	"		[illegible]	
V		REVISED PER TDRR 23521	"		10-27-65	
W		REVISED PER TDRR 23824	RAJ		11-9-65	
Y		REVISED PER TDRR 24018	RAJ		11-16-65	
Z		REVISED PER TDRR 24040	RAJ		11-19-65	
AA		REVISED PER TDRR 24060	RAJ		11-19-65	
AB		REVISED PER TDRR 24868	RAJ		12-22-65	
AC		REVISED PER TDRR 24973	RAJ		1-4-66	
AD		REVISED PER TDRR 25065	RAJ		1-18-66	
AE		REVISED PER TDRR 25672	RAJ		2-4-66	
AF		REVISED PER TDRR 25671	RAJ		2-4-66	
AG		REVISED PER TDRR 26110	RAJ		2-15-66	
AH		REVISED PER TDRR 26372	"		3-16-66	
AJ		REVISED PER TDRR 26425	"		3-16-66	
AK		REVISED PER TDRR 26743	"		3-16-66	
AL		REVISED PER TDRR 26798	"		3-16-66	
AM		REVISED PER TDRR 27168	"		4-8-66	
AN		REVISED PER TDRR 27235	"		4-8-66	
AP		REVISED PER TDRR 27345	"		4-8-66	
AR		REVISED PER TDRR 27417	"		4-8-66	
AS		REVISED PER TDRR 27442	"		4-8-66	
AT		REVISED PER TDRR 27719	"		4-21-66	
AU		REVISED PER TDRR 27880	"		4-21-66	
AV		REVISED PER TDRR 27896	"		4-21-66	
AW		28110	"		5-16-66	
AY		28173	"			
AZ		28131	"			
BA		28124	"			
BB		REVISED PER TDRR 28[illegible]	"		5-16-66	
BC		" " " 28949	"		5-24-66	
BD		" " " 29222	"		6-8-66	
BE		" " " 29235	"		"	
BF		" " " 29322	"		6-30-66	
BG		" " " 29429	"		"	
BH		" " " 29449	"		"	
BJ		" " " 29335	"		"	
BK		" " " 29619	"		"	
BL		" " " 29696	"		"	
BM		REVISION STATUS CHANGED	JSD	N.S.	7-29-66	
BN		REVISION STATUS CHANGED	JI	RLW	[illegible] AUG 66	
BP		REVISION STATUS CHANGED	JI	RLW	[illegible] AUG 66	
BR		REVISION STATUS CHANGED	JI	RLW	[illegible] AUG 66	
BS		REVISION STATUS CHANGED	GW	RLW	[illegible] AUG 66	
BT		REVISION STATUS CHANGED	GW	RLW	26 AUG 66	
BU		REVISION STATUS CHANGED	EH	JI	9 SEP 66	
BV		REVISION STATUS CHANGED	JJB	RLW	30 SEP 66	

DASH NO.	P/C	PART NAME	REMARKS	PART NO.	SER. NO.	CONT. NO.	STYLE	TYPE	MATERIAL	A	B	C	D	E	F	G	H	J	K	L	M	N	P	R	S	T	U	V	W	Y	Z	AA	AB	AC	AD	AE	AF	AG	AH	AJ	AK	AL	AM	AN	AP	AR
399	K																																													
398	K																																													
350	K	ALIGNMENT OPTICAL TELESCOPE (LEM)		NA	NA	NA	A	I	NOTE 11B	4.000	2.625	3.375	2.750	.156	.093	.156	.187	NA	NA	2.312	1.468	1.187	.906	2.031	NA	.375	.156	NA	1.437	2.750	.437	NA	3.688	.062	.062	1.750	.593	NA	.625	3.375	.187	NA	.156	.531	.453	NA
309	K																																													
308	K						B	I	NOTE 11 B	4.000	2.625	3.375	2.750	.156	.093	.156	.187	NA	NA	2.328	1.468	1.187	.906	2.031	.062	.375	.156	NA	1.437	2.750	.437	NA	3.687	.062	.062	1.750	.593	NA	NA	NA	NA	NA	NA	NA	NA	NA
307	K						B	II	NOTE 11 C	4.000	2.625	3.375	2.750	.156	.093	.156	.187	.125	.156	2.328	1.468	1.187	.906	2.031	.062	.375	.156	↕	1.437	2.750	.437	2.312	3.687	.062	NA	1.750	.593	↕	↕	↕	↕	↕	↕	↕	↕	↕
306	K						B	I	NOTE 11 B	2.000	1.312	1.687	1.375	.078	.048	.078	.093	NA	NA	1.164	.734	.593	.453	1.015	.048	.171	.078	↕	.718	1.375	.187	NA	NA	.048	.031	.875	.320	↕	↕	↕	↕	↕	↕	↕	↕	↕
305	K						B	II	NOTE 11 C	2.000	1.312	1.687	1.375	.078	.048	.078	.093	.070	.078	1.164	.734	.593	.453	1.015	.048	.171	.078	NA	.718	1.375	.187	.156	1.843	.048	NA	.875	.320	NA	NA	NA	NA	NA	NA	NA	NA	NA
304	K																																													
303	K																																													
302	K																																													
301	K																																													
300	K	OPTICAL UNIT		NA	NA	NA	A	I	NOTE 11 B	2.000	1.312	1.675	NA	NA	.048	.078	NA	NA	NA	1.090	.812	.675	.540	.940	NA	.265	NA	NA	NA	1.375	.218	NA	NA	NA	NA	NA	.375	NA	NA	NA	.180	NA	.078	NA	NA	NA
9	K	2 IN AUTOCOLLIMATOR		1001702			B	II	NOTE 11 C	4.000	2.625	3.812	2.750	.156	.093	.156	.187	.125	.156	2.250	1.500	1.187	.906	2.031	.093	.375	56	1.750	1.437	2.750	.437	2.312	3.687	.062	NA	1.750	.593	.156	1.062	3.812	.156	NA	.156	1.062	.375	3.687
8	K	5 IN AUTOCOLLIMATOR		1017410			B	II	NOTE 11 C	4.000	2.625	3.812	2.750	.156	.093	.156	.187	.125	.156	2.250	1.500	1.187	.906	2.031	.093	.375	.156	1.750	1.437	2.750	.437	2.312	3.687	.062	NA	1.750	.593	.156	1.062	3.812	.156	NA	.156	1.062	.375	3.687
7	K	2½ IN AUTOCOLLIMATOR (SCT)		1017435			B	II	NOTE 11 C	4.000	2.625	3.812	2.750	.156	.093	.156	.187	.125	.156	2.250	1.500	1.187	.906	2.031	.093	.375	.156	1.750	1.437	2.750	.437	2.312	3.687	.062	NA	1.750	.593	.156	1.062	3.812	.156	NA	.156	1.062	.375	3.687
6	K	2½ IN AUTOCOLLIMATOR (SXT)		1017448			B	II	NOTE 11 C	4.000	2.625	3.812	2.750	.156	.093	.156	.187	.125	.156	2.250	1.500	1.187	.906	2.031	.093	.375	.156	1.750	1.437	2.750	.437	2.312	3.687	.062	NA	1.750	.593	.156	1.062	3.812	.156	NA	.156	1.062	.375	3.687
5	K	RETROREFLECTING PRISM ASSEMBLY		1019840			B	I	NOTE 11 B	4.000	2.625	3.812	2.750	.156	.093	.156	.187	NA	NA	2.250	1.500	1.187	.906	2.031	.093	.375	.156	1.750	1.437	2.750	.437	NA	NA	.062	.062	1.750	.593	.156	1.062	3.812	.156	NA	.156	1.062	.375	NA
4	K	S/H SIMULATOR ASSEMBLY		1019896			B	I	NOTE 11 B	4.000	2.625	3.812	2.750	.156	.093	.156	.187	NA	NA	2.250	1.500	1.187	.906	2.031	.093	.375	.156	1.750	1.437	2.750	.437	NA	NA	.062	.062	1.750	.593	.156	1.062	3.812	.156	NA	.156	1.062	.375	NA
3	K	REFERENCE MIRROR		1001767			B	I	NOTE 11 B	2.000	1.312	1.906	1.375	.078	.048	.078	.093	NA	NA	1.125	.750	.593	.453	1.015	.062	.187	.078	.875	.718	1.375	.218	NA	NA	.048	.031	.875	.305	.078	.531	1.906	.078	NA	.078	.531	.187	NA
2	K	2 IN PLANE READING AUTOCOLLIMATOR		1017413			B	I	NOTE 11 B	2.000	1.312	1.906	1.375	.078	.048	.078	.093	NA	NA	1.125	.750	.593	.453	1.015	.062	.187	.078	.875	.718	1.375	.218	NA	NA	.048	.031	.875	.305	.078	.531	1.906	.078	NA	.078	.531	.187	NA
1	K	2 IN AUTOCOLLIMATOR		1001702			B	I	NOTE 11 B	2.000	1.312	1.906	1.375	.078	.048	.078	.093	NA	NA	1.125	.750	.593	.453	1.015	.062	.187	.078	.875	.718	1.375	.218	NA	NA	.048	.031	.875	.305	.078	.531	1.906	.078	NA	.078	.531	.187	NA

NOTES FOR TABLE

STYLE A IS FOR G&N SYSTEM.
STYLE B IS FOR GROUND SUPPORT EQUIPMENT
TYPE I IS WITHOUT MOUNTING HOLES
TYPE II IS WITH MOUNTING HOLES.

Ⓖ REPLACES REV F WITH CHANGE

KOLLSMAN DASH NUMBERS

QTY REQD	PART OR IDENTIFYING NO	MATERIAL OR NOTES	NOMENCLATURE OR DESCRIPTION	FIND NO.

LIST OF MATERIALS

NEXT ASSY	USED ON
AS APPLICABLE	

APPLICATION

UNLESS OTHERWISE SPECIFIED
DIMENSIONS ARE IN INCHES
CAPACITOR VALUES ARE IN μf
RESISTOR VALUES ARE IN OHMS
TOLERANCES ON
FRACTIONS ± — DECIMALS ±.005 ANGLES ± —
DO NOT SCALE THIS DRAWING

MATERIAL
SEE NOTE 11

MIT
INSTRUMENTATION LAB
CAMBRIDGE, MASS

DRAWN R A Jones 7-16-65
CHECKED 7-22-65
APPROVED
APPROVED 22/[illegible]/65
APPROVED MIT 22/[illegible]/65
APPROVED MSC
DATE

MANNED SPACECRAFT CENTER
HOUSTON, TEXAS

NAMEPLATES,
APOLLO G&N-GSE
(STANDANDS)

CODE IDENT NO. 80230
SIZE E
DRAWING NO. 1004260
SCALE NONE
SHEET 2 OF 6

1004260 EV

NOTICE - WHEN GOVERNMENT DRAWINGS, SPECIFICATIONS, OR OTHER DATA ARE USED FOR ANY PURPOSE OTHER THAN IN CONNECTION WITH A DEFINITELY RELATED GOVERNMENT PROCUREMENT OPERATION, THE UNITED STATES GOVERNMENT THEREBY INCURS NO RESPONSIBILITY NOR ANY OBLIGATION WHATSOEVER; AND THE FACT THAT THE GOVERNMENT MAY HAVE FORMULATED, FURNISHED, OR IN ANY WAY SUPPLIED THE SAID DRAWINGS, SPECIFICATIONS, OR OTHER DATA IS NOT TO BE REGARDED BY IMPLICATION OR OTHERWISE AS IN ANY MANNER LICENSING THE HOLDER OR ANY OTHER PERSON OR CORPORATION, OR CONVEYING ANY RIGHTS OR PERMISSION TO MANUFACTURE, USE, OR SELL ANY PATENTED INVENTION THAT MAY IN ANY WAY BE RELATED THERETO.

REVISIONS 22768

SYM	ZONE	DESCRIPTION	DR	CHK	DATE	APPROVED
G		REPLACES REV F WITH CHANGE PER TDRR 20854			7/21/65	WK
H		REVISED PER TDRR 20892			[illegible]	WK
J		REVISED PER TDRR 20904			[illegible]	WK
K		REVISED PER TDRR 21379			[illegible]	WK
L		REVISED PER TDRR 21410			[illegible]	WK
M		REVISED PER TDRR 21993				
N		REVISED PER TDRR 22621				
P		REVISED PER TDRR 22671				
R		REVISED PER TDRR 22672				
S		REVISED PER TDRR 22750				
T		REVISED PER TDRR 22823			65	WK
U		REVISED PER TDRR 23072			[illegible]	[illegible]
V		REVISED PER TDRR 23521			10-26-65	WK
W		REVISED PER TDRR 23824	RAJ		11-9-65	WK
Y		REVISED PER TDRR 24018	RAJ		11-16-65	WK
Z		REVISED PER TDRR 24040	RAJ		11-19-65	WK
AA		REVISED PER TDRR 24060	RAJ		11-19-65	WK
AB		REVISED PER TDRR 24868	RAJ		12-22-65	WK
AC		REVISED PER TDRR 24973	RAJ		1-4-66	WK
AD		REVISED PER TDRR 25065	RAJ		1-18-66	WG
AE		REVISED PER TDRR 25672	RAJ		2-4-66	WK
AF		REVISED PER TDRR 25671	RAJ		2-4-66	WK
AG		REVISED PER TDRR 26110	RAJ		2-15-66	WK
AH		REVISED PER TDRR 26372	"		3-16-66	WG
AJ		REVISED PER TDRR 26425	"		3-16-66	WG
AK		REVISED PER TDRR 26743	"		3-16-66	WG
AL		REVISED PER TDRR 26798	"		3-16-66	WG
AM		REVISED PER TDRR 27168	"		4-8-66	WG
AN		REVISED PER TDRR 27235	"		4-8-66	WG
AP		REVISED PER TDRR 27345	"		4-8-66	WG
AR		REVISED PER TDRR 27417	"		4-8-66	WG
AS		REVISED PER TDRR 27442	"		4-8-66	WG
AT		REVISED PER TDRR 277[illegible]9	"		4-20-66	WK
AU		REVISED PER TDRR 27880	"		4-20-66	WK
AV		REVISED PER TDRR 27896	"		4-20-66	WK
AW			281[illegible]0	"		5-16-66	WG
AY		28[illegible]73	"		5-16-66	WG
AZ		28131	"		5-16-66	WG
BA		28[illegible]24	"		5-16-66	WG
BB		REVISED PER TDRR 28511	"		5-16-66	WG
BC		" " " 28949	"		5-24-66	
BD		" " " 29222	"		6-8-66	[illegible]
BE		" " " 29235	"		"	[illegible]
BF		" " " 29372	"		6-29-66	WG
BG		" " " 29429	"		"	WG
BH		" " " 29449	"		"	WG
BJ		" " " 29335	"		"	WG
BK		" " " 29619	"		"	WG
BL		" " " 29696	"		"	WG
BM		" " " 29802	JSD	N.S.	7-29-66	
BN		REVISION STATUS CHANGED	JI	RLW	1 AUG 66	
BP		REVISED PER TDRR 30168	JI	RLW	1 AUG 66	
BR		REVISION STATUS CHANGED	JI	RLW	22 AUG 66	
BS		REVISION STATUS CHANGED	GW	RLW	22 AUG 66	
BT		REVISION STATUS CHANGED	GW	RLW	26 AUG 66	
BU		REVISION STATUS CHANGED	EH	JI	3 SEP	
BV		REVISION STATUS CHANGED	JJB	RLW	30 SEP 66	

DASH NO.	P/C	PART NAME	REMARKS	PART NO.	SER. NO.	CONT. NO.	STYLE	TYPE	MATERIAL	
299	R									
298	R									
280	R	COMPUTER TEST SET		2014042-051	N A	NAS9-497	B	II	NOTE 11C	FOR DIMENSIONS SEE DASH 18 VALUES BELOW
279	R	SELF TEST ASSY		2014366-041	N A	NAS9-497	B	I	NOTE 11B	FOR DIMENSIONS SEE DASH 15 VALUES BELOW
278	R	LOGIC DRAWER ASSY NO.1		2014036-041	N A	NAS 9-497	B	I	NOTE 11B	FOR DIMENSIONS SEE DASH 17 VALUES BELOW
277	R	COMPUTER TEST SET		2014042-041	N A	NAS-9-497	B	II	NOTE 11C	FOR DIMENSIONS, SEE DASH 18 VALUES BELOW
276		DRAWER ASSY - PROGRAM & MONITOR		2014041-041				I	NOTE 11B	FOR DIMENSIONS, SEE DASH 17 VALUES BELOW
275		DRAWER ASSY RDC INTERFACE		2014045-031						FOR DIMENSIONS, SEE DASH 15 VALUES BELOW
274		SELF TEST ASSY		2014366-031						
273		LOGIC DRAWER ASSY NO. 2		2014037-031						FOR DIMENSIONS, SEE DASH 17 VALUES BELOW
272		DRAWING ASSY PROGRAMMER & MONITOR		2014041-031						FOR DIMENSIONS, SEE DASH 17 VALUES BELOW
271		LOGIC DRAWER ASSY NO. 1		2014036-031				I	NOTE 11B	
270		COMPUTER TEST SET		2014042-031				II	NOTE 11C	FOR DIMENSIONS, SEE DASH 18 VALUES BELOW
269		POWER CONTROL ASSY		2014044-021				I	NOTE 11B	FOR DIMENSIONS, SEE DASH 17 VALUES BELOW
268		SELF TEST ASSY		2014366-021						FOR DIMENSIONS, SEE DASH 15 VALUES BELOW
267		AGC JUNCTION ASSY		2014434-021						
266		POWER CONTROL ASSY		2014079-021						
265		BUFFER CIRCUIT ASSY		2014254-021						
264		DRAWER ASSY X Y INTERFACE		2014040-021						
263		DRAWER ASSY R D C INTERFACE		2014045-021						
262		DRAWER ASSY PROGRAMMER & MONITOR		2014[illegible]4-021						FOR DIMENSIONS, SEE DASH 17 VALUES BELOW
261		LOGIC DRAWER ASSY NO. 2		2014037-021						
260		LOGIC DRAWER ASSY NO. 1		2014036-021				I	NOTE 11B	
259		OPERATION CONSOLE		2014024-021				II	NOTE 11C	FOR DIMENSIONS, SEE DASH 18 VALUES BELOW
258		COMPUTER TEST SET		2014042-021						
257		AUXILIARY CALIBRATION CONSOLE		2014059-021						
256		AGC CALIBRATION CONSOLE		2014049-021					NOTE 11C	
255		AGC HANDLING FIXTURE		2014282-021				I	NOTE 11B	FOR DIMENSIONS, SEE DASH 17 VALUES BELOW
254		DRAWER ASSY COMP. SIMULATOR		2014048-011				II	NOTE 11C	FOR DIMENSIONS, SEE DASH 18 VALUES BELOW
253		SHIPPING KIT ASSY, NAV DSKY		2016312-011						
252		SHIPPING KIT ASSY, UNIVERSAL DSKY		2016316-011						
251		SHIPPING KIT ASSY, MAIN DSKY		2016313-011				II	NOTE 11C	
250		AMPLIFIER, REWORK		2014386				I	NOTE 11B	FOR DIMENSIONS, SEE DASH 15 VALUES BELOW
249		TEMP MONITOR ASSY		2014313-011					NOTE 11C	FOR DIMENSIONS, SEE DASH 17 VALUES BELOW
248		AGC JUNCTION ASSY		2014434-011					NOTE 11B	FOR DIMENSIONS, SEE DASH 15 VALUES BELOW
247		AC INPUT PANEL ASSY		2014302-011						
246		SELF TEST ASSY		2014392-011						
245		TAPE PUNCH ASSEMBLY		2014039-011						FOR DIMENSIONS, SEE DASH 5 VALUES BELOW
244	R	TAPE READER ASSEMBLY		2014038-011	NA	NAS-9-497	B	I	NOTE 11B	
243										
242										
241	R	APOLLO GUIDANCE COMPUTER GROUP		6003001	NA	NAS-9-497	A	I	NOTE 11B	FOR DIMENSIONS, SEE DASH 19 VALUES BELOW
240		SELF TEST ASSEMBLY		2014366-011	NA		B	I		FOR DIMENSIONS, SEE DASH 15 VALUES BELOW
239		POWER SUPPLY ASSY-115V., 400 CYCLE		2014207-011						FOR DIMENSIONS, SEE DASH 17 VALUES BELOW
238		AC INPUT PANEL ASSY		2014043-011						
237		POWER CONTROL ASSY		2014079-011						FOR DIMENSIONS, SEE DASH 15 VALUES BELOW
236		DRAWER ASSY - X Y INTERFACE		2014040-011						
235		DRAWER ASSY R D C INTERFACE		2014045-011						
234		BUFFER CIRCUIT ASSY		2014254-011						
233		CONTROL & INTERFACE ASSY		2014204-011						
232		POWER CONTROL ASSY		2014044-011						FOR DIMENSIONS, SEE DASH 17 VALUES BELOW
231		DRAWER ASSY, PROGRAMMER & MONITOR		2014041-011						
230		CONNECTOR INTERFACE ASSY		2014272-011						FOR DIMENSIONS, SEE DASH 15 VALUES BELOW
229		CONNECTOR INTERFACE ASSY		2014047-011						
228		ANTENNA TUNING CAPACITOR ASSY		2014209-011						
227		MOUNTING FIXTURE ASSY		2014006-011						FOR DIMENSIONS, SEE DASH 17 VALUES BELOW
226		POWER SUPPLY ASSY 3 V DC		2014234-011						FOR DIMENSIONS, SEE DASH 15 VALUES BELOW
225		PANEL ASSY - SIGNAL INTERFACE		2014010-011						
224		OSCILLOSCOPE ASSY		2014232-011						
223		AUXILIARY OUTLET ASSY		2014274-011						
222		FREQUENCY COUNTER		2014233-011						
221		POWER SUPPLY ASSY 10,13, 28 VDC		2014235-011						
220		LOGIC DRAWER ASSY NO. 2		2014037-011						FOR DIMENSIONS, SEE DASH 17 VALUES BELOW
219		LOGIC DRAWER ASSY NO. 1		2014036-011						
218		COUNTER, ELECTRICAL ASSY		2014288-011						FOR DIMENSIONS, SEE DASH 15 VALUES BELOW
217		POWER SUPPLY ASSY		2014279-011						
216		TEST MOUNT ASSY		2014257-011						
215		UNIVERSAL DSKY PEDESTAL MOUNT		2014[illegible]4-011						FOR DIMENSIONS, SEE DASH 17 VALUES BELOW
214		MAIN DSKY PEDESTAL MOUNT		2014343				I	NOTE 11B	
213		SHIPPING CONTAINER, MAIN DSKY		1006229				II	NOTE 11C	FOR DIMENSIONS, SEE DASH 18 VALUES BELOW
212		NAV DSKY		1006231						
211		AGC		1006230						
210		UNIVERSAL DSKY		1006422						
209		SHIPPING CONTAINER, AGC		1006421				II	NOTE 11C	
208		UNIVERSAL DSKY HANDLING FIXTURE		2014[illegible]3-011				I	NOTE 11B	FOR DIMENSIONS, SEE DASH 15 VALUES BELOW
207		NAV DSKY HANDLING FIXTURE		1014377						FOR DIMENSIONS, SEE DASH 17 VALUES BELOW
206		MAIN DSKY HANDLING FIXTURE		1014334						
205		AGC HANDLING FIXTURE		2014282-011				I	NOTE 11B	
204		OPERATION CONSOLE		2014024-011				II	NOTE 11C	FOR DIMENSIONS, SEE DASH 18 VALUES BELOW
203		COMPUTER TEST SET		2014042-011		NAS-9-497				
202		DRAWER ASSY, COMPUTER SIMULATOR		2014048-011		FNP-[illegible]75				
201		AUXILIARY CALIBRATION CONSOLE		2014059-011		NAS-9-497				
200		AGC CALIBRATION CONSOLE		2014049-011	NA		B	II	NOTE 11C	
21										
20		NA		NA	NA	NA	A	II	NOTE 11C	
19		NA		NA	NA	NA	A	I	NOTE 11B	
18		NA		NA	NA	NA	B	II	NOTE 11C	
17		NA		NA	NA	NA	B	I	NOTE 11B	
16		NA		NA	NA	NA	B	II	NOTE 11C	
15	R	NA		NA	NA	NA	B	I	NOTE 11B	

DASH NO.	A	B	C	D	E	F	G	H	J	K	L	M	N	P	R	S	T	U
21																		
20	2.000	1.312	1.687	1.375	.078	.031	.078	.093	[illegible]	.093	1.187	.750	.593	.453	1.015	.062	.187	.078
19	2.000	1.312	1.687	1.375	.078	.031	.078	.093	NA	NA	1.187	.750	.593	.453	1.015	.062	.187	.078
18	4.187	1.875	3.469	2.750	.156	.093	.156	.125	[illegible]	.125	1.625	1.032	.844	.656	1.406	.093	.344	.156
17	4.187	1.875	3.469	2.750	.156	.093	.156	.125	NA	NA	1.625	1.032	.844	.656	1.406	.093	.344	.156
16	2.000	1.312	1.687	1.375	.078	.031	.078	.093	[illegible]	.093	1.187	.750	.593	.453	1.015	.062	.187	.078
15	2.000	1.312	1.687	1.375	.078	.031	.078	.093	NA	NA	1.187	.750	.593	.453	1.015	.062	.187	.078

DASH NO.	V	W	Y	Z	AA	AB	AC	AD	AE	AF	AG	AH	AJ	AK	AL	AM	AN	AP	AR
21																			
20	.875	.718	1.375	.218	1.156	1.843	.048	NA	.875	.305	.078	.312	1.687	.078	NA	.078	.312	.187	1.843
19	.875	.718	1.375	.218	NA	NA	.048	.031	.875	.305	.078	.312	1.687	.078	NA	.078	.312	.187	NA
18	1.781	1.531	2.844	.312	1.562	3.875	.062	NA	1.219	.500	.156	.719	3.469	.156	NA	.156	.719	.344	3.875
17	1.781	1.531	2.844	.312	NA	NA	.062	.062	1.219	.500	.156	.719	3.469	.156	NA	.156	.719	.344	NA
16	.875	.718	1.375	.218	1.156	1.843	.048	NA	.875	.305	.078	.312	1.687	.078	NA	.078	.312	.187	1.843
15	.875	.718	1.375	.218	NA	NA	.048	.031	.875	.305	.078	.312	1.687	.078	NA	.078	.312	.187	NA

RAYTHEON DASH NUMBERS

THIS SHEET ADDED

Ⓖ REPLACES REV F WITH CHANGE

NOTES FOR TABLE

STYLE A IS FOR G & N SYSTEM
STYLE B IS FOR GROUND SUPPORT EQUIPMENT
TYPE I IS WITHOUT MOUNTING HOLES
TYPE II IS WITH MOUNTING HOLES

QTY REQD	PART OR IDENTIFYING NO	MATERIAL OR NOTES	NOMENCLATURE OR DESCRIPTION	FIND NO

LIST OF MATERIALS

NEXT ASSY	USED ON
AS APPLICABLE	

APPLICATION

UNLESS OTHERWISE SPECIFIED
DIMENSIONS ARE IN INCHES
CAPACITOR VALUES ARE IN µf
RESISTOR VALUES ARE IN OHMS
TOLERANCES ON
FRACTIONS ± — DECIMALS ±.005 ANGLES ± —
DO NOT SCALE THIS DRAWING

MATERIAL
SEE NOTE 11

MIT
INSTRUMENTATION LAB
CAMBRIDGE MASS

DRAWN R Q Jones 7-16-65
CHECKED A. J. [illegible] 7-22-65
APPROVED
APPROVED W Kupfer 2/[illegible]/65
APPROVED MIT W Kupfer 2/[illegible]/65
APPROVED MSC [illegible]
DATE

MANNED SPACECRAFT CENTER
HOUSTON, TEXAS

NAMEPLATES,
APOLLO GEN-GSE.
(STANDARDS)

CODE IDENT NO. 80230
SIZE E
DRAWING NO. 1004260
SCALE NONE
SHEET [illegible] OF [illegible]

1004260 BW

[illegible]

REVISIONS 02768

SYM	ZONE	DESCRIPTION	DR	CHK	DATE	APPROVED
G		REPLACES REV F WITH CHANGE PER TDRR 20854.			7/26/6[illegible]	
H		REVISED PER TDRR 20692			8/[illegible]/66	
J		REVISED PER TDRR 20904				
K		REVISED PER TDRR 21379				
L		REVISED PER TDRR 21410			8/13/6[illegible]	
M		REVISED PER TDRR 21993				
N		REVISED PER TDRR 22621				
P		REVISED PER TDRR 22671				
R		REVISED PER TDRR 22672				
S		REVISED PER TDRR 22750				
T		REVISED PER TDRR 22823				
U		REVISED PER TDRR 23072				
V		REVISED PER TDRR 23[illegible]			10-26-65	
W		REVISED PER TDRR 23824	RAJ		11-9-65	
Y		REVISED PER TDRR 24018	RAJ		11-16-65	
Z		REVISED PER TDRR 24040	RAJ		11-19-65	
AA		REVISED PER TDRR 24060	RAJ		11-19-65	
AB		REVISED PER TDRR 24868	RAJ		12-22-65	
AC		REVISED PER TDRR 24973	RAJ		1-4-66	
AD		REVISED PER TDRR 25065	RAJ		1-18-66	
AE		REVISED PER TDRR 25672	RAJ		2-4-66	
AF		REVISED PER TDRR 25671	RAJ		2-4-66	
AG		REVISED PER TDRR 26110	RAJ		2-15-66	
AH		REVISED PER TDRR 26372	"		3-16-66	
AJ		REVISED PER TDRR 26425	"		3-16-66	
AK		REVISED PER TDRR 26743	"		3-16-66	
AL		REVISED PER TDRR 26798	"		3-16-66	
AM		REVISED PER TDRR 27169			4-8-66	
AN		REVISED PER TDRR 27235	"		4-8-66	
AP		REVISED PER TDRR 27345	"		4-8-66	
AR		REVISED PER TDRR 27417	"		4-8-66	
AS		REVISED PER TDRR 27442	"		4-8-66	
AT		REVISED PER TDRR 27719	"		4-21-66	
AU		REVISED PER TDRR 27880	"		4-21-66	
AV		REVISED PER TDRR 27896	"		4-21-66	
AW		28[illegible]				
AY		28173	"			
AZ		28131	"			
BA		28124	"			
BB		REVISED PER TDRR 28511	"		5-16-66	
BC		" " " 28943			5-24-66	
BD		" " " 29222	"		6-8-66	
BE		" " " 29235	"		"	
BF		" " " 29322	"		6-24-66	
BG		29429	"		"	
BH		" " " 29449	"		"	
BJ		" " 29335	"		"	
BK		" " 29619	"			
BL		" " " 29696	"		6-29-66	
BM		REVISION STATUS CHANGED	JSD	NS	7-29-66	
BN		REVISION STATUS CHANGED	JI	RLW	8 AUG 66	
BP		REVISION STATUS CHANGED	JI	RLW	[illegible] AUG 66	
BR		REVISED PER TDRR 30241	JI	RLW	11 AUG 66	
BS		REVISION STATUS CHANGED	GW	RLW	22 AUG 66	
BT		REVISION STATUS CHANGED	GW	RLW	26 AUG 66	
BU		REVISION STATUS CHANGED	EH	JI		
BV		REVISION STATUS CHANGED	WJB	RLW		

DASH NO.	P/C	PART NAME	REMARKS	PART NO.	SER. NO.	CONT. NO.	STYLE	TYPE	MATERIAL	A
199	AC	EYEPIECE STOWAGE UNIT		2021255-011			A	I		
198	AC	SIGNAL CONDITIONER ASSY C/M		2007234		NAS9-497			NOTE 11B	FOR DIMENSIONS, SEE DASH 100 VALUES BELOW
197	AC	SIGNAL CONDITIONER ASSY C/M		2007235						
196	AC	SIGNAL CONDITIONER ASSY LEM		[illegible]						
195	AC	PSA & SIGNAL CONDITIONER ASSY		6007009					NOTE 11B	
194	AC	PANEL, MONITOR		2900031-031			B	II	NOTE 11C	FOR DIMENSIONS, SEE DASH 141 VALUES BELOW
193	AC	DISTRIBUTION BOX, G S E		2900024-031						FOR DIMENSIONS, SEE DASH 144 VALUES BELOW
192	AC	ANALYZER, OPTICS-INERTIAL		2900023-031						
191	AC	TEST CONTROL		2900027-031						
190	AC	PANEL, PWR SUP AND LOAD		2900033-031						FOR DIMENSIONS, SEE DASH 141 VALUES BELOW
189	AC	ADPT MODULE, P. S. A.		6900088-021						
188	AC	ADPT MODULE, P. S. A.		2900145-021						
187	AC	FIXTURE, MTG, PTA/PEA		2900066-021		NAS9-497	B	II	NOTE 11C	
186	AC	ANNUNCIATOR PANEL AND EYEPIECE STORAGE ASSEMBLY		1021255-021						FOR DIMENSIONS, SEE DASH 100 VALUES BELOW
185	AC	ANNUNCIATOR PANEL AND EYEPIECE STORAGE ASSEMBLY		1021255-011			A	I		
184	AC	FIX., HAND., G AND N HARNESS		1901846-041		NAS9-497	B	II	NOTE 11C	FOR DIMENSIONS, SEE DASH 144 VALUES BELOW
183	AC	INSTALLING TOOL, ELEC. CONN		1902586-011			B	II	NOTE 11C	FOR DIMENSIONS, SEE DASH 102 VALUES BELOW
182	AC	ADPT MODULE, P. S. A.		6900088-011			B	II	NOTE 11C	FOR DIMENSIONS, SEE DASH 141 VALUES BELOW
181	AC	G & N INDICATOR CONTROL PANEL ASSY		2014578-011			A	I	NOTE 11B	
180	AC	ADPT MODULE, P. S. A.		1902431-031			B	II		FOR DIMENSIONS, SEE DASH 141 VALUES BELOW
179	AC	MOUNTING PLATE, IMU/PTA		6900083-011						
178	AC	MOUNTING PLATE, COMPONENT		6900007-021						FOR DIMENSIONS, SEE DASH 144 VALUES BELOW
177	AC	FIX., MOUNTING, SUBSYSTEM		2900070-021						
176	AC	FIX., MOUNTING, G AND N		2900067-021						
175	AC	[illegible], COOL. AND PWR, G AND N		1902134-031						
174	AC	FIX., HAND., C/M AND LEM CDU		2900999-011					NOTE 11C	
173	AC	FIX., HANDLING, C/M PSA		2900998-011						FOR DIMENSIONS, SEE DASH 141 VALUES BELOW
172	AC	CAGING ELECTRONICS, GYRO		2900029-021						
171	AC	DISTRIBUTION BOX, GSE		2900024-021						
	AC	ANALYZER, OPTICS-INERTIAL		2900023-021						FOR DIMENSIONS, SEE DASH 44 VALUES BELOW
169	AC	ADPT, TEST [illegible]		2900037-021						
168	AC	TEST SELECTOR		2900028-021						
167	AC	TEST CONTROL		2900027-021						
166	AC	PANEL, MONITOR		2900031-021						
165	AC	TERM. BOARD STORAGE DRAWER		2900927-011						
164	AC	INPUT OUTPUT PANEL		2900926-011						FOR DIMENSIONS, SEE DASH 141 VALUES BELOW
163	AC	CONTROL PANEL		2900896-011						
162	AC	CSL. CAL AND TEST, SCM/PSAAM		2900895-011						FOR DIMENSIONS, SEE DASH 144 VALUES BELOW
161	AC	FIX., LIFT AND HAND., IMU		[illegible]5412-011						FOR DIMENSIONS, SEE DASH 141 VALUES BELOW
160	AC	FIX., HAND., G AND N HARNESS		1901846-031						FOR DIMENSIONS, SEE DASH 144 VALUES BELOW
159	AC	BATTERY POWER PACK		1900011-031			B	II	NOTE 11C	
158	AC	COUPLING DATA UNIT ASSEMBLY C/M		2007222			A	I	NOTE 11B	FOR DIMENSIONS SEE DASH 100 VALUES BELOW
157	AC	COUPLING DATA UNIT ASSEMBLY - LEM		2007222						
156	AC	POWER & SERVO ASSEMBLY C/M		2007200						
155	AC	PIPA ELECTRONICS ASSEMBLY		2007201						
154	AC	PULSE TORQUE ASSEMBLY - LEM		6007000						FOR DIMENSIONS SEE DASH 100 VALUES BELOW
153	AC	POWER & SERVO ASSEMBLY - LEM		6007200			A	I	NOTE 11B	
152	AC	CONT PNL, RSVR CKT TESTER		2900770-011			B	II	NOTE 11C	FOR DIMENSIONS, SEE DASH 141 VALUES BELOW
151	AC	TESTER, RESOLVER CIRCUIT		2900708-011						
150	AC	JUNCTION BOX, P.S.A./G.S.E.		1901933-021						FOR DIMENSIONS, SEE DASH 144 VALUES BELOW
149	AC	BATTERY PACK, LIFTING		29006[illegible]4-011						FOR DIMENSIONS, SEE DASH 141 VALUES BELOW
148	AC	MOUNTING PLATE, COMPONENT		6900007-011						FOR DIMENSIONS, SEE DASH 144 VALUES BELOW
147	AC	MOUNTING PLATE, COMPONENT		2900677-011						
146	AC	CART, TRANS, G AND N		1900009-041						
145	AC	CONTAINER, SHIPPING, IMU		1900010-021		NAS9-497	B	II	NOTE 11C	
144	AC	FIX., MOUNTING, G AND N		1902204-021			B	II	NOTE 11C	
143	AC	CSL, COOL. AND PWR, G AND N		1902134-021						
142	AC	ANALYZER, OPTICS-INERTIAL		2900023-011						
141	AC	CONT. TEMP. PORTABLE		2900060-011						
140	AC	TESTER, CKT, IMU/CDU RSVR		2900286-011						
139	AC	SIMULATOR, LD/SIG, CDU		2900285-011						
138	AC	SIMULATOR, LD/SIG, OPTICS		1902023-021						
137	AC	FIX., MOUNTING, IMU/NAV BASE		6900003-011						
136	AC	FIXTURE, [illegible] BASE		2900072-011						
135	AC	FIX., MOUNTING, SUB SYSTEM		2900070-011						
134	AC	FIX., HAND., G AND N HARNESS		2900069-011						
133	AC	CNTR, SHIPPING, NAV BASE		2900068-011						
132	AC	FIX., MOUNTING, G AND N		2900067-011						
131	AC	SIMULATOR, LD/SIG, IMU/CDU		2900062-011						
130	AC	TESTER, GYRO WHEEL		2900061-011						
129	AC	COOLANT SUPPLY		1902133-021						
128	AC	TABLE, ROTARY		1900926-021						
127	AC	FIX., HAND., OPTICS		2900074-011						
126	AC	FIXTURE, MTG, PTA/PEA.		2900066-011						
125	AC	CONT, TEMP, IMU LIFTING		2900063-011						
124	AC	FIXTURE, [illegible] IMU		2900064-011						
123	AC	CONT, OPTICS, REMOTE		1902046-021						
122	AC	TEST CONTROL		1902009-021						
121	AC	ADPT MODULE, P.S.A.		1902431-021						
120	AC	BRIDGE, DECADE ERROR		2900128-011						
119	AC	PWR SUP, ELECTRONICS		1900012-011						
118	AC	PWR SUP, RELAY AND LAMP		1900049-031						
117	AC	CONSOLE, OSCILLOGRAPH		1900000-021						
116	AC	ADPT MODULE, P.S.A.		1902431-011						
115	AC	ADPT, TEST POINT, PTA/PEA.		2900145-011						
114	AC	ADPT, TEST POINT, P.S.A.		2900037-011						
113	AC	CONTROL, GIMBAL POSITION		2900036-011						
112	AC	SELECTOR, SIGNAL, PRIMARY		2900035-011						
111	AC	SEL, SIG, OSCILLOGRAPH		2900034-011						
110	AC	PANEL, PWR SUP AND LOAD		2900033-011						
109	AC	PANEL, MONITOR		2900031-011						
108	AC	PANEL, AUXILIARY INPUT		2900030-011						
107	AC	CAGING ELECTRONICS, GYRO		2900029-011						
106	AC	TEST SELECTOR		2900028-011						
105	AC	TEST CONTROL		2900027-011						
104	AC	MONITOR AND CONTROL, TEMP		2900026-011						
103	AC	DISTRIBUTION BOX, GSE		2900024-011						
102	AC	VOLTMETER, DIGITAL		2900007-011			B	II	NOTE 11C	
101	AC	NAVIGATION BASE ASSEMBLY - LEM		6899950		NAS-9-497	A	I	NOTE 11B	
100	AC	NAVIGATION BASE ASSEMBLY		2899982		NAS-9-497	A	I	NOTE 11B	

DASH NO.	A	B	C	D	E	F	G	H	J	K	L	M	N	P	R	S	T	U	V	W	Y	Z	AA	AB	AC	AD	AE	AF	AG	AH	AJ	AK	AL	AM	AN	AP	AR
181	3.000	1.938	2.437	NA	.125	.062	.186	.56	NA	NA	1.750	.125	.906	.688	.500	NA	.281	.125	NA	.094	2.062	.312	NA	2.500	.062	.125	1.312	.469	NA	NA	NA	.156	NA	.25	.469	.344	NA
157	2.[illegible]	[illegible]	[illegible]	NA	[illegible]	[illegible]	.06	.093	NA	NA	.858	.608	.484	.358	.733	.062	.140	.062	NA	.968	1.450	.125	NA	1.720	.046	.03	NA	.210	NA	NA	NA	.070	NA	.046	.32	.16	NA
144	4.125	1.812	3.250	NA	.125	.062	.12	.156	[illegible]	.125	.625	1.140	.890	.640	1.390	.125	.171	.125	.875	1.687	2.625	.250	1.562	3.843	.093	NA	NA	.359	.125	.437	3.688	NA	3.687	.093	.40	.25	3.875
143	4.25	1.512	3.250		.125	.062	.12	.156		.125	.625	1.140	.890	.640	1.390	.125	.171	.125	.875	1.687	2.625	.250	1.562	3.843	.093			.359	.125	.437	3.688		3.687	.093	.40	.25	3.875
142	4.125	1.812	3.250		.125	.062	.12	.156		.125	1.625	1.140	.890	.640	1.390	.125	.171	.125	.875	1.687	2.625	.250	.562	3.843	.093			.359	.125	.437	3.688		3.687	.093	.40	.25	3.875
141	2.125	.968	.718		.093	.031	.06	.093		.093	.858	.608	.484	.358	.733	.077	.116	.062	.937	.875	1.343	.125	.781	1.892	.046			.209	.093	.250	1.875		1.840	.046	.23	.16	1.938
140	4.125	[illegible]	3.250		.125	.062	.12	.156		.125	.625	1.140	.890	.640	.390	.125	.171	.125	.875	.687	2.625	.250	1.562	3.843	.093			.359	.125	.437	3.688		3.687	.093	.40	.25	3.875
128	4.125	.812	3.250		.125	.062	.12	.156		.125	1.625	1.140	.890	.640	1.390	.125	.171	.125	1.875	.687	2.625	.250	.562	3.843	.093			.359	.25	.437	3.688		3.687	.093	.40	.25	3.875
127	2.125	.968	1.718		.093	.031	.06	.093		.093	.858	.608	.484	.358	.733	.077	.116	.062	.937	.875	1.343	.125	.781	1.892	.046			.209	.093	.250	1.875		1.840	.046	.23	.16	1.938
102	.125	.968	.718	NA	.093	.031	.06	.093	[illegible]	.093	.858	.608	.484	.358	.733	.077	.116	.062	.937	.875	1.343	.125	.781	1.892	.046	NA	NA	.209	.093	.250	1.875	NA	1.840	.046	.23	.16	1.938
101	2.000	1.312	1.906	1.375	.078	.048	.078	.093	NA	NA	1.125	.750	.593	.453	1.015	.062	.187	.078	.875	.718	.375	.218	NA	NA	.048	.031	.875	.305	.078	.531	1.906	.078	NA	.078	.531	.187	N–
100	2.000	1.312	1.906	1.375	.078	.048	.078	.093	NA	NA	1.125	.750	.593	.453	1.015	.062	.187	.078	.875	.718	1.375	.218	NA	NA	.048	.031	.875	.305	.078	.531	1.906	.078	NA	.078	.531	.187	NA

THIS SHEET ADDED

Ⓖ REPLACES REV F WITH CHANGE

A C ELECTRONICS DASH NUMBERS

NOTES FOR TABLE
- STYLE A IS FOR G&N SYSTEM
- STYLE B IS FOR GROUND SUPPORT EQUIPMENT
- TYPE I IS WITHOUT MOUNTING HOLES
- TYPE II IS WITH MOUNTING HOLES

NOTE: AC DASH NO'S. CONT. ON SH.6

QTY REQD	PART OR IDENTIFYING NO.	MATERIAL OR NOTES	NOMENCLATURE OR DESCRIPTION	FIND NO.

LIST OF MATERIALS

AS APPLICABLE	
NEXT ASSY	USED ON
APPLICATION	

UNLESS OTHERWISE SPECIFIED
DIMENSIONS ARE IN INCHES
CAPACITOR VALUES ARE IN µf
RESISTOR VALUES ARE IN OHMS
TOLERANCES ON
FRACTIONS ± — DECIMALS ±.005 ANGLES ± —
DO NOT SCALE THIS DRAWING

MATERIAL
SEE NOTE 11

MIT
INSTRUMENTATION LAB
CAMBRIDGE MASS

DRAWN R A Jones 7-16-65
CHECKED A. J. [illegible] 7-22-65
APPROVED
APPROVED [illegible]
APPROVED MIT [illegible]
APPROVED MSC [illegible]
DATE

MANNED SPACECRAFT CENTER
HOUSTON, TEXAS

NAMEPLATES,
APOLLO G&N-GSE
(STANDARDS)

CODE IDENT NO 80230
SIZE E
DRAWING NO. 1004260
SCALE NONE
SHEET 4 OF [illegible]

1004260

NOTICE – WHEN GOVERNMENT DRAWINGS, SPECIFICATIONS, OR OTHER DATA ARE USED FOR ANY PURPOSE OTHER THAN IN CONNECTION WITH A DEFINITELY RELATED GOVERNMENT PROCUREMENT OPERATION, THE UNITED STATES GOVERNMENT THEREBY INCURS NO RESPONSIBILITY NOR ANY OBLIGATION WHATSOEVER; AND THE FACT THAT THE GOVERNMENT MAY HAVE FORMULATED, FURNISHED, OR IN ANY WAY SUPPLIED THE SAID DRAWINGS, SPECIFICATIONS, OR OTHER DATA IS NOT TO BE REGARDED BY IMPLICATION OR OTHERWISE AS IN ANY MANNER LICENSING THE HOLDER OR ANY OTHER PERSON OR CORPORATION, OR CONVEYING ANY RIGHTS OR PERMISSION TO MANUFACTURE, USE, OR SELL ANY PATENTED INVENTION THAT MAY IN ANY WAY BE RELATED THERETO.

REVISIONS

SYM	ZONE	DESCRIPTION	DR	CHK	DATE	APPROVED
G		REPLACES REV F WITH CHANGE PER TDRR 20854			[illegible]	
H		REVISED PER TDRR 20842			[illegible]	
J		REVISED PER TDRR 20904			[illegible]	
K		REVISED PER TDRR 21379			[illegible]	
L		REVISED PER TDRR 21410			[illegible]	
M		REVISED PER TDRR 21993				
N		REVISED PER TDRR 22621				
P		REVISED PER TDRR 22671				
R		REVISED PER TDRR 22672				
S		REVISED PER TDRR 22750				
T		REVISED PER TDRR 22823				
U		REVISED PER TDRR 23072			[illegible]-65	
V		REVISED PER TDRR 23521			[illegible]	
W		REVISED PER TDRR 23624	RAJ		11-9-65	
Y		REVISED PER TDRR 24018	RAJ		11-16-65	
Z		REVISED PER TDRR 24040	RAJ		11-[illegible]-65	
AA		REVISED PER TDRR 24060	RAJ		11-19-65	
AB		REVISED PER TDRR 24868	RAJ		2-22-65	
AC		REVISED PER TDRR 24973	RAJ		1-4-66	
AD		REVISED PER TDRR 25065	RAJ		1-18-66	
AE		REVISED PER TDRR 25672	RAJ		2-4-66	
AF		REVISED PER TDRR 25671	RAJ		2-4-66	
AG		REVISED PER TDRR 26110	RAJ		2-15-66	
AH		REVISED PER TDRR 26372	"		3-16-66	
AJ		REVISED PER TDRR 26425	"		3-16-66	
AK		REVISED PER TDRR 26743	"		3-16-66	
AL		REVISED PER TDRR 26798	"		3-16-66	
AM		REVISED PER TDRR 27168	"		4-7-66	
AN		REVISED PER TDRR 27235	"		4-7-66	
AP		REVISED PER TDRR 27345	"		4-7-66	
AR		REVISED PER TDRR 27417	"		4-7-66	
AS		REVISED PER TDRR 27442	"		4-7-66	
AT		REVISED PER TDRR 27719	"		4-20-66	
AU		REVISED PER TDRR 27880	"		4-20-66	
AV		REVISED PER TDRR 27896	"		4-20-66	
AW		28110	"		5-16-66	
AY		28173	"			
AZ		28131	"			
BA		28124	"			
BB		REVISED PER TDRR 28511	"		5-16-66	
BC		" " " 28949	"		5-24-66	
BD		" " " 29222	"		6-8-66	
BE		" " " 29235	"		"	
BF		" " " 29322	"		6-24-66	
BG		" " " 29429	"		"	
BH		" " " 29449	"		"	
BJ		" " " 29335	"		"	
BK		" " " 29619	"		"	
BL		" " " 29696	"		6-29-66	
BM		REVISION STATUS CHANGED	JSD		7-29-66	
BN		REVISION STATUS CHANGED	JI	RLW	12 AUG 66	
BP		REVISION STATUS CHANGED	JI	RLW	[illegible] AUG 66	
BR		REVISION STATUS CHANGED	JI	RLW	18 AUG 66	
BS		REVISION STATUS CHANGED	GW	RLW	[illegible] AUG 66	
BT		REVISION STATUS CHANGED	GW	RLW	26 AUG 66	
BU		REVISION STATUS CHANGED	EH	JI	9 SEPT 66	
BV		REVISION STATUS CHANGED	JJB	RLW	30 SEPT 66	

499	MIT	
498		

MIT DASH NUMBERS

DASH NO.	P/C	PART NAME	REMARKS	PART NO.	SER. NO.	CONT. NO.	STYLE	TYPE	MATERIAL	A	B	C	D	E	F	G	H	J	K
401	MIT	COMPUTER ASSY		2003100		NAS-9-497	A	I	NOTE 11 B	2.000	1.312	.906	1.375	.078	.048	.078	.093	NA	NA
400	MIT	LIFTING SLING-G&N INST. QUAL. FIX. & AZM. REF. FIX.		1021640		NAS-9-4065	B	II	NOTE 11 C	2.000	.312	1.687	1.375	.078	.048	.078	.093	[illegible]	.093

DASH NO.	L	M	N	P	R	S	T	U	V	W	Y	Z	AA	AB	AC	AD	AE	AF	AG	AH	AJ	AK	AL	AM	AN	AP	AR
401	1.125	.750	.593	.453	1.015	.062	.187	.078	.875	.718	1.375	.218	NA	NA	.048	.031	.875	.305	.078	.531	1.906	.078	NA	.078	.531	.187	NA
400	1.187	.750	.593	.453	1.015	.062	.187	.078	.875	.718	1.375	.218	1.156	1.843	.048	NA	.875	.305	.078	.312	1.687	.110	1.830	.070	.275	.180	1.844

THIS SHEET ADDED

Ⓖ REPLACES REV F WITH CHANGE

NOTES FOR TABLE

STYLE A IS FOR G&N SYSTEM
STYLE B IS FOR GROUND SUPPORT EQUIPMENT
TYPE I IS WITHOUT MOUNTING HOLES
TYPE II IS WITH MOUNTING HOLES

QTY REQD	PART OR IDENTIFYING NO.	MATERIAL OR NOTES	NOMENCLATURE OR DESCRIPTION	FIND NO

LIST OF MATERIALS

NEXT ASSY	USED ON
AS APPLICABLE	

APPLICATION

UNLESS OTHERWISE SPECIFIED
DIMENSIONS ARE IN INCHES
CAPACITOR VALUES ARE IN µf
RESISTOR VALUES ARE IN OHMS
TOLERANCES ON
FRACTIONS ± — DECIMALS ±.005 ANGLES ± —
DO NOT SCALE THIS DRAWING

MATERIAL
SEE NOTE 11

MIT
INSTRUMENTATION LAB
CAMBRIDGE, MASS.

DRAWN R A Jones 7-16-65
CHECKED [illegible] 2-23-65
APPROVED
APPROVED W Kupfer 12/[illegible]/65
APPROVED MIT W Kupfer 12/[illegible]/65
APPROVED MSC [illegible]
DATE

MANNED SPACECRAFT CENTER
HOUSTON, TEXAS

NAMEPLATES,
APOLLO G&N-GSE
(STANDARDS)

CODE IDENT NO 80230 | SIZE E | DRAWING NO. 1004260
SCALE NONE | SHEET [illegible] OF

1004260 BV

NOTICE - WHEN GOVERNMENT DRAWINGS, SPECIFICATIONS, OR OTHER DATA ARE USED FOR ANY PURPOSE OTHER THAN IN CONNECTION WITH A DEFINITELY RELATED GOVERNMENT PROCUREMENT OPERATION, THE UNITED STATES GOVERNMENT THEREBY INCURS NO RESPONSIBILITY NOR ANY OBLIGATION WHATSOEVER; AND THE FACT THAT THE GOVERNMENT MAY HAVE FORMULATED, FURNISHED, OR IN ANY WAY SUPPLIED THE SAID DRAWINGS, SPECIFICATIONS, OR OTHER DATA IS NOT TO BE REGARDED BY IMPLICATION OR OTHERWISE AS IN ANY MANNER LICENSING THE HOLDER OR ANY OTHER PERSON OR CORPORATION, OR CONVEYING ANY RIGHTS OR PERMISSION TO MANUFACTURE, USE, OR SELL ANY PATENTED INVENTION THAT MAY IN ANY WAY BE RELATED THERETO.

REVISIONS 02768

SYM	ZONE	DESCRIPTION	DR	CHK	DATE	APPROVED
AG		CHANGED NUMBER OF SHEETS FROM 5 TO 6 PER TDRR 26110	RAJ		2-15-66	
AH		REVISED PER TDRR 26372	"		3-16-66	
AJ		REVISED PER TDRR 26425	"		3-16-66	
AK		REVISED PER TDRR 26743	"		3-16-66	
AL		REVISED PER TDRR 26798	"		3-16-66	
AM		REVISED PER TDRR 27[illegible]68	"		4-7-66	
AN		REVISED PER TDRR 27235			4-7-66	
AP		REVISED PER TDRR 27345	"		4-7-66	
AR		REVISED PER TDRR 27417	"		4-7-66	
AS		REVISED PER TDRR 27442			4-7-66	
AT		REVISED PER TDRR 27719	"		4-20-66	
AU		REVISED PER TDRR 27880	"		4-20-66	
AV		REVISED PER TDRR 27896	"		4-20-66	
AW		↕ [illegible]	"		5-16-66	
AY		↕ 28173	"		5-16-66	
AZ		↕ 28131	"		5-16-66	
BA		↕ 28124	"		5-16-66	
BB		REVISED PER TDRR 28511	"		5-16-66	
BC		" " " 28949	"		5-24-66	
BD		" " " 29222	"		6-8-66	
BE		" " " 29235	"		"	
BF		" " 29322	"		6-24-66	
BG		" " " 29429	"		"	
BH		" " 29449	"		"	
BJ		" " " 29335	"		"	
BK		" " " 29619	"		"	
BL		" " " 29696	"		6-29-66	
BM		REVISION STATUS CHANGED	JSD	N.S.	7-29-66	
BN		REVISED PER TDRR 29974	JI	RLW	22 AUG 66	
BP		REVISION STATUS CHANGED	JI	RLW	22 AUG 66	
BR		REVISION STATUS CHANGED	JI	RLW	23 AUG 66	
BS		REVISED PER TDRR 30530	GW	RLW	26 AUG 66	
BT		REVISED PER TDRR 30543	GW	RLW	26 AUG 66	
BU		REVISED PER TDRR 30898	EH	JI	9 SEP 66	
BV		REVISED PER TDRR 31241	WB	RLW	[illegible] SEP 66	

DASH NO.	P/C	PART NAME	REMARKS	PART NO.	SER NO.	CONT NO.	STYLE	TYPE	MATERIAL	A	B	C	D	E	F	G	H	J	K	L	M	N	P	R	S	T	U	V	W	Y	Z	AA	AB	AC	AD	AE	AF	AG	AH	AJ	AK	AL	AM	AN	AP	AR
599	AC																																													
598	AC																																													
541	AC	FIXTURE, MOUNTING, IMU		2900000-021		NAS 9-497	B	II	NOTE 11C	4.125	.812	3.250	NA	.125	.062	.12	.156	.100 .104	.125	1.625	1.140	.890	.640	1.390	.125	.171	.125	1.875	1.687	2.625	.250	1.562	3.843	.093	NA	NA	.359	.125	.437	3.688	NA	3.687	.093	.40	.25	3.875
543	AC	PANEL, MONITOR		2900031-041		NAS9-497	B	II	NOTE 11C	2.125	.968	1.718	NA	.093	.031	.06	.093	.100 .104	.093	.858	.608	.484	.358	.733	.077	.116	.062	.937	.875	1.343	.125	.781	1.892	.046	NA	NA	.209	.093	.250	1.875	NA	1.840	.046	.23	.25	1.938
542	AC	BATTERY PACK, LIFTING		2900812-021		NAS9-497	B	II	NOTE 11C	2.125	.968	1.718	NA	.093	.031	.06	.093	.100 .104	.093	.858	.608	.484	.356	.733	.077	.116	.062	.937	.875	1.343	.125	.781	1.892	.046	NA	NA	.209	.093	.250	1.875	NA	1.840	.046	.23	.16	1.938
540	AC	ADPT, TEST POINT, P.S.A.		2900037-031		NAS 9-497	[illegible]	[illegible]	NOTE 11C	2.125	.968	1.718	NA	.093	.031	.06	.093	.100 .104	.093	.858	.608	.484	.358	.733	.077	.116	.062	.937	.875	1.343	.125	.781	1.892	.046	NA	NA	.209	.093	.250	1.875	NA	1.840	.045	.23	.16	1.938
539	AC	ANNUNCIATOR PANEL AND EYEPIECE STORAGE ASSEMBLY		1021255-041		↕	A	I	NOTE 11B	2.000	1.312	1.906	1.375	.078	.048	.078	.093	NA	NA	1.125	.750	.593	.453	1.015	.062	.187	.078	.875	.718	1.375	.218	NA	NA	.048	.031	.875	.305	.078	.531	1.906	.078	NA	.078	.531	.187	NA
538	AC	ANNUNCIATOR PANEL AND EYEPIECE STORAGE ASSEMBLY		1021255-031		↕	A	I	NOTE 11B	2.000	.312	1.906	1.375	.078	.048	.078	.093	NA	NA	1.125	.750	.593	.453	1.015	.062	.187	.078	.875	.718	1.375	.218	NA	NA	.048	.031	.875	.305	.078	.531	1.906	.078	NA	.078	.531	.187	NA
537	AC	TEST SELECTOR		2900028-031		↕	B	II	NOTE 11C	2.125	.968	1.718	NA	.093	.031	.06	.093	.100 .104	.093	.858	.608	.484	.358	.733	.077	.116	.062	.937	.875	1.343	.125	.781	1.892	.046	NA	NA	.209	.093	.250	1.875	NA	1.840	.046	.23	.16	1.938
536	AC	ANALYZER, OPTICS-INERTIAL		2900023-041		↕	B	II	NOTE 11C	4.125	1.812	3.250	NA	.125	.062	.12	.156	.100 .104	.125	1.625	1.140	.890	.640	1.390	.125	.171	.125	1.875	1.687	2.625	.250	1.562	3.843	.093	NA	NA	.359	.125	.437	3.688	NA	3.687	.093	.40	.25	3.875
535	AC	CONT, TEMP, PORTABLE		2900066-021		↕	B	II	NOTE 11C	2.125	.968	1.718	NA	.093	.031	.06	.093	.100 .104	.093	.858	.608	.484	.358	.733	.077	.116	.062	.937	.875	1.343	.125	.781	1.892	.046	NA	NA	.209	.093	.250	1.875	NA	1.840	.046	.23	.16	1.938
534	AC	COMPUTER CONT & RETICLE DIMMER		6014512-021		↕	A	I	NOTE 11B	2.000	1.312	1.906	1.375	.078	.048	.078	.093	NA	NA	1.125	.750	.593	.453	1.015	.062	.187	.078	.875	.718	1.375	.218	NA	NA	.048	.031	.875	.305	.078	.531	1.906	.078	NA	.078	.531	.187	NA
533	AC	ADPT MODULE, P.S.A.		1902431-041		↕	B	II	NOTE 11C	2.125	.968	1.718	NA	.093	.031	.06	.093	.100 .104	.093	.858	.608	.484	.358	.733	.077	.116	.062	.937	.875	1.343	.125	.781	1.892	.046	NA	NA	.209	.093	.250	1.875	NA	1.840	.046	.23	.16	1.938
532	AC	TRAY BREAKOUT, 105 PIN		1900807-021		↕	↕	↕	↕	4.125	1.812	3.250	↕	.125	.062	.12	.156	.100 .103	.125	1.625	1.140	.890	.640	1.390	.125	.171	.125	1.875	1.687	2.625	.250	1.562	3.843	.093	↕	↕	.359	.125	.437	3.688	↕	3.687	.093	.40	.25	3.875
531	AC	TRAY BREAKOUT, 84 PIN		1900806-021		↕	↕	↕	↕	4.125	1.312	3.250	↕	.125	.062	.12	.156	.100 .104	.125	1.625	1.140	.890	.640	1.390	.125	.171	.125	1.875	1.687	2.625	.250	1.562	3.843	.093	↕	↕	.359	.125	.437	3.688	↕	3.687	.093	.40	.25	3.875
530	AC	HEAT SINK - TRAY EXTENDER		1900808-021		↕	↕	↕	↕	2.125	.968	1.718	↕	.093	.031	.06	.093	.100 .104	.093	.858	.608	.484	.358	.733	.077	.116	.062	.937	.875	1.343	.125	.781	1.892	.046	↕	↕	.209	.093	.250	1.875	↕	1.840	.046	.23	.16	1.938
529	AC	TESTER, FAILURE INDICATOR		1900809-021		↕	↕	↕	↕	2.125	.968	1.718	NA	.093	.031	.06	.093	.100 .104	.093	.858	.608	.484	.358	.733	.077	.116	.062	.937	.875	1.343	.125	.781	1.892	.046	NA	NA	.209	.093	.250	1.875	NA	1.840	.046	.23	.16	1.938
527	AC	FIX., MOUNTING, G AND N	(-144)	1902204-021		↕	↕	↕	↕	FOR DIMENSIONS, SEE DASH 500 VALUES BELOW																																				
526	AC	FIX., MOUNTING, G AND N	(-144)	2900067-031		↕	B	II	NOTE 11C	3.000	1.937	2.437	2.312	.125	.031	.125	.156	.125	.125	1.718	1.187	.968	.749	1.452	.093	.295	.090	1.312	1.00	2.000	.250	1.687	2.750	.062	N/A	NA	.463	.125	.562	2.437	.140	2.562	.090	.468	.359	2.750
525	AC	PORTABLE TEMP. CONTROLLER		1900496-021		↕	A	I	NOTE 11B	2.125	.968	1.718	NA	.093	.031	.06	.093	NA	NA	.858	.608	.484	.358	.733	.062	.140	.062	NA	.968	1.450	.125	NA	1.720	.046	.03	NA	.210	NA	NA	NA	.070	NA	.046	.32	.16	NA
524	AC	POWER, SERVO AND THERMOCOUPLE ASSEMBLY C/M		2010743		↕	↕	↕	↕																																					
523	AC	PULSE TORQUE AND THERMOCOUPLE ASSEMBLY - LEM		6010656		↕	↕	↕	↕																																					
522	AC	COUPLING DATA UNIT AND THERMOCOUPLE ASSEMBLY - LEM		2010744		↕	↕	↕	↕	FOR DIMENSIONS, SEE DASH 508 VALUES BELOW																																				
521	AC	COUPLING DATA UNIT AND THERMOCOUPLE ASSEMBLY - C/M		2010744		↕	↕	↕	↕																																					
520	AC	PIPA ELECTRONICS AND THERMOCOUPLE ASSEMBLY		2010745		↕	A	I	NOTE 11B																																					
519	AC	FIXTURE, HANDLING, LEM-PSA	(-141)	6900129-011		↕	B	II	NOTE 11C	FOR DIMENSIONS, SEE DASH 504 VALUES BELOW																																				
518	AC	JUNCTION BOX, GSE-PSA	(-144)	1901933-031		↕	B	II	NOTE 11C	FOR DIMENSIONS, SEE DASH 500 VALUES BELOW																																				
517	AC	FIX., HAND., OPTICS INSTL.	(-141)	2901380-011		↕	B	II	NOTE 11C	FOR DIMENSIONS SEE DASH 502 VALUES BELOW																																				
516	AC	POWER, SERVO AND THERMOCOUPLE ASSEMBLY-LEM		6010655		NAS 9-497	A	I	NOTE 11B	FOR DIMENSIONS SEE DASH 508 VALUES BELOW																																				
514	AC	SIGNAL COND. ASSY LEM OPER.	(-100)	6007013		NAS-9-497	A	I	NOTE 11B	FOR DIMENSIONS, SEE DASH 508 VALUES BELOW																																				
513	↕	JUMPER, BY-PASS	(-141)	1021616		↕	B	II	NOTE 11C	2.125	.968	1.718	NA	.093	.031	.06	.093	.100 .104	.093	.858	.608	.484	.358	.733	.077	.116	.062	.937	.875	1.343	.125	.781	1.892	.046	NA	NA	.209	.093	.250	1.875	NA	1.840	.046	.23	.16	1.938
512	↕	COUPLING DATA UNIT ASSEMBLY C/M	(-100)	2007322-011		↕	A	I	NOTE 11B	FOR DIMENSIONS, SEE DASH 508 VALUES BELOW																																				
511	↕	COUPLING DATA UNIT ASSEMBLY-LEM	(-100)	2007322-021		↕																																								
510	↕	BATTERY POWER PACK	(-144)	1900011-041		↕	B	II	NOTE 11C	FOR DIMENSIONS, SEE DASH 500 VALUES BELOW																																				
509	↕	JUNCTION BOX, P.S.A/G.S.E.	(-144)	1902195-021		↕	B	II	NOTE 11C																																					
508	↕	NAVIGATION BASE ASSEMBLY - LEM	✓ (-101)	6899980		↕	A	I	NOTE 11B	2.000	1.312	1.906	1.375	.078	.048	.078	.093	NA	NA	1.125	.750	.593	.453	1.015	.062	.187	.078	.875	.718	1.375	.218	NA	NA	.048	.031	.875	.305	.078	.531	1.906	.078	NA	.078	.531	.187	NA
507	↕	CSL, COOL, AND PWR, G AND N	(-144)	1902134-041		↕	B	II	NOTE 11C	FOR DIMENSIONS, SEE DASH 500 VALUES BELOW																																				
506	↕	BREAKOUT BOX, CABLE ADAPTER	(-141)	2901011-011		↕	↕	↕	↕	2.125	.968	1.718	NA	.093	.031	.06	.093	.100 .104	.093	.858	.608	.484	.358	.733	.077	.116	.062	.937	.875	1.343	.125	.781	1.892	.046	NA	NA	.209	.093	.250	1.875	NA	1.840	.046	.23	.16	1.938
505	↕	MONITOR AND CONTROL, TEMP	(-141)	2900026-021		↕	↕	↕	↕																																					
504	↕	PWR SUP, GUIDANCE SYSTEM	✓ (-141)	1900033-021		↕	↕	↕	↕																																					
503	↕	CONTROL, GIMBAL POSITION	(-141)	2900036-021		↕	↕	↕	↕																																					
502	↕	ADPT, TEST POINT, PTA/PEA,	(-141)	2900145-021		↕	↕	↕	↕																																					
501	↕	MOUNTING PLATE, COMPONENT	(-144)	6900007-031		NAS-9-497	B	II	NOTE 11C	FOR DIMENSIONS, SEE DASH 500 VALUES BELOW																																				
500	AC	MOUNTING PLATE, COMPONENT	✓ (-144)	2900677-021						4.125	1.812	3.250	NA	.125	.062	.12	.156	.100 .104	.125	1.625	1.140	.890	.640	1.390	.125	.171	.25	1.875	1.687	2.625	.250	1.562	3.843	.093	NA	NA	.359	.125	.437	3.688	NA	3.687	.093	.40	.25	3.875

AC ELECTRONICS DASH NUMBERS

Ⓐⓖ THIS SHEET ADDED

NOTES FOR TABLE

STYLE A IS FOR G&N SYSTEM
STYLE B IS FOR GROUND SUPPORT EQUIPMENT
TYPE I IS WITHOUT MOUNTING HOLES
TYPE II IS WITH MOUNTING HOLES

QTY REQD	PART OR IDENTIFYING NO.	MATERIAL OR NOTES	NOMENCLATURE OR DESCRIPTION	FIND NO.

LIST OF MATERIALS

AS APPLICABLE	
NEXT ASSY	USED ON
APPLICATION	

UNLESS OTHERWISE SPECIFIED
DIMENSIONS ARE IN INCHES
CAPACITOR VALUES ARE IN µf
RESISTOR VALUES ARE IN OHMS
TOLERANCES ON
FRACTIONS ± — DECIMALS ±.005 ANGLES ± —
DO NOT SCALE THIS DRAWING

MATERIAL
SEE NOTE 11

MIT
INSTRUMENTATION LAB
CAMBRIDGE, MASS

DRAWN E. A. Jones 2-15-66
CHECKED 2-15-66
APPROVED
APPROVED
APPROVED MIT A. C. METZLER 5-16-66
APPROVED MSC
DATE

MANNED SPACECRAFT CENTER
HOUSTON, TEXAS

NAMEPLATES,
APOLLO G&N-GSE
(STANDARDS)

CODE IDENT NO. 80230
SIZE E
DRAWING NO. 1004260
SCALE NONE
SHEET 6 OF 6

NOTICE - WHEN GOVERNMENT DRAWINGS, SPECIFICATIONS, OR OTHER DATA ARE USED FOR ANY PURPOSE OTHER THAN IN CONNECTION WITH A DEFINITELY RELATED GOVERNMENT PROCUREMENT OPERATION, THE UNITED STATES GOVERNMENT THEREBY INCURS NO RESPONSIBILITY NOR ANY OBLIGATION WHATSOEVER; AND THE FACT THAT THE GOVERNMENT MAY HAVE FORMULATED, FURNISHED, OR IN ANY WAY SUPPLIED THE SAID DRAWINGS, SPECIFICATIONS, OR OTHER DATA IS NOT TO BE REGARDED BY IMPLICATION OR OTHERWISE AS IN ANY MANNER LICENSING THE HOLDER OR ANY OTHER PERSON OR CORPORATION OR CONVEYING ANY RIGHTS OR PERMISSION TO MANUFACTURE, USE OR SELL ANY PATENTED INVENTION THAT MAY IN ANY WAY BE RELATED THERETO.

NOTES:

1. INTERPRET DRAWING IN ACCORDANCE WITH STANDARDS PRESCRIBED IN MIL-D-70327.
2. DIMENSIONS ON EACH VIEW APPLY TO ALL VIEWS. (WITH THE EXCEPTION OF MOUNTING HOLES).
3. FORMATS ILLUSTATED WILL BE APPLICABLE TO ALL ITEMS REQUIRING NAMEPLATES BELOW END ITEM DESIGNATION (SYSTEMS ASSEMBLIES, ETC.)
4. PLATE BACKGROUND TO BE LUSTERLESS BLACK PER FED-STD-595, COLOR 37038. BORDER, MARKING AND LETTERING TO BE NATURAL METAL,(ANODIZED ALUMINUM).
5. MARKING METHOD TO BE DIE STAMPING, ETCHING OR ENGRAVING IN ACCORDANCE WITH MIL P 19834.
6. LETTERING STYLE TO BE GOTHIC,(SANS SERIFS), AND NUMBERS TO BE ARABIC.
7. WHERE LOCATING DIMENSIONS ARE NOT SHOWN, CHARACTERS SHALL BE SYMMETRICALLY POSITIONED.
8. IDENTIFY WITH DRAWING NUMBER PER ND1002009.
9. WHEN "AUTO MARK" METAL MARKING TYPEWRITER IS USED TO ADD DATA TO BLANK SPACES, TYPE SIZE IS TO BE SELECTED FROM DIMENSIONS U, AC AND AM.
10. NASA SYMBOL IS TO BE PROPORTIONAL TO NAMEPLATE IN RATIO OF 1 TO 5 WITH DIMENSION A VALUE AND IS TO HAVE NATURAL BACKGROUND. NASA SYMBOL LETTERS LETTERING AND FEATHER TO BE BLACK,(OR WHITE FOR SILK SCREENING). WHERE BLACK FEATHER PROTRUDES INTO BLACK BACKGROUND, A MINIMUM OUTLINE OF NATURAL BACKGROUND SHALL EXIST.
11. NAMEPLATES WILL BE APPLIED BY METHODS LISTED BELOW, SHOWN IN ORDER OF PREFERENCE, (I.E., FOR RELIABILITY AND WEIGHT).
    - A - STENCIL OR SILK SCREEN DIRECTLY ON EQUIPMENT USING INK PER SCD 1010920,(WHITE OR BLACK).
    - B - ALUMINUM FOIL,(STYLE A OR B, TYPE I):
      FOIL SHALL BE .0030 ±.0005 THICK PER MIL-A-148.
      FOIL SHALL HAVE NO ADHESIVE BACKING.
      FOIL SHALL BE BONDED PER ND 1002219,(METHOD II).
      FOIL SHALL BE CLEAR ANODIZED PER MIL-A-8625, TYPE II.
    - C - PLATE, (STYLE A OR B, TYPE II):
      MATERIAL: QQ-A-250, TEMPER O OR H14, TYPE 1100, ALUMINUM ALLOY, .032 THICK.
      ANODIZE PER MIL-A-8625, TYPE II.
      ALUMINUM PLATE MUST BE FREE FROM BURRS AND SHARP CORNERS, MOUNTED WITH APPLICABLE SIZE FASTENERS.
12. NAMEPLATES SHALL BE CAPABLE OF MEETING APPLICABLE REQUIREMENTS OF MIL-M-13231.
13. ON DIMENSION TABLES SHOWN ON PAGES 2, 3, 4 AND 5, NA MEANS, "NOT APPLICABLE".

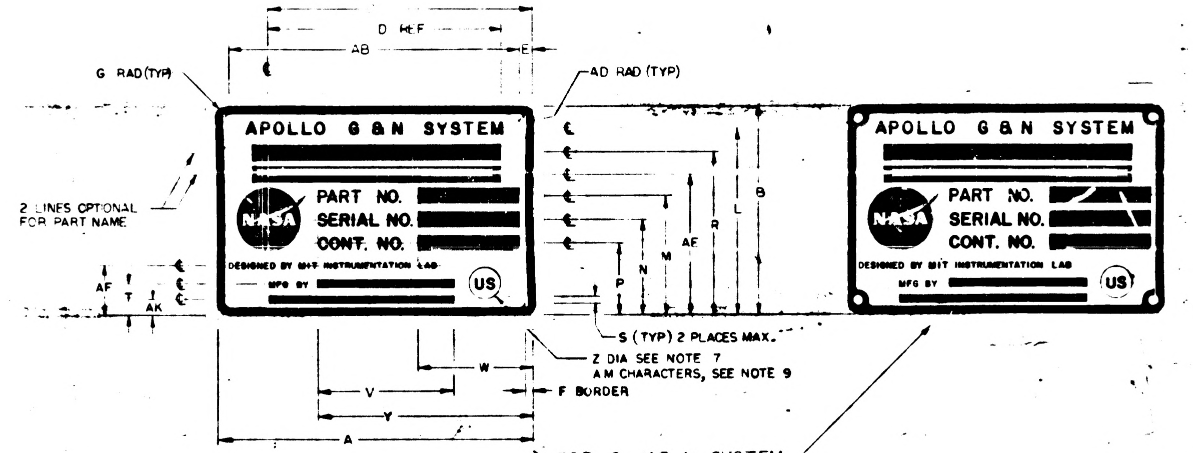

FOR G AND N SYSTEM
STYLE A

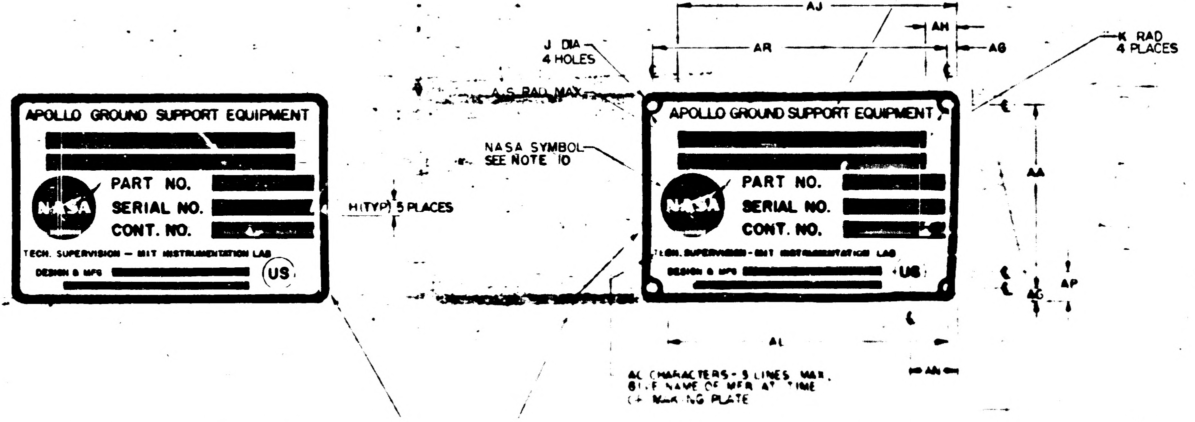
U CHARACTERS-6 LINES MAX SEE NOTE 9
AJ
AH
AR
AG
K RAD 4 PLACES
J DIA 4 HOLES
AS RAD MAX
APOLLO GROUND SUPPORT EQUIPMENT
PART NO.
SERIAL NO.
CONT. NO.
NASA
TECH. SUPERVISION — MIT INSTRUMENTATION LAB
DESIGN & MFG
US
H(TYP) 5 PLACES
NASA SYMBOL SEE NOTE 10
AA
AP
AL
AN
AC CHARACTERS-5 LINES MAX. BLANK NAME OF MFR AT TIME OF MAKING PLATE

WITHOUT MOUNTING HOLES
TYPE I

WITH MOUNTING HOLES
TYPE II

FOR GROUND SUPPORT EQUIPMENT
STYLE B

REVISIONS						
SYM	ZONE	DESCRIPTION	DR	CHK	DATE	APPROVED
G		REPLACES REV F WITH CHANGE PER TDRR 20854				
H		REVISED PER TDRR 20892				
J		REVISED PER TDRR 20904				
K		REVISED PER TDRR 21379			5/6/65	
L		REVISED PER TDRR 21410				
M		REVISED PER TDRR 21993				
N		REVISED PER TDRR 22621				
P		REVISED PER TDRR 22671				
R		REVISED PER TDRR 22672				
S		REVISED PER TDRR 22750				
T		REVISED PER TDRR 22823				
U		REVISED PER TDRR 23072			10-13-65	
V		REVISED PER TDRR 23521			10-27-65	
W		REVISED PER TDRR 23824	RAJ		11-9-65	
Y		REVISED PER TDRR 24018	RAJ		11-16-65	
Z		REVISED PER TDRR 24040	RAJ		11-19-65	
AA		REVISED PER TDRR 24060	RAJ		11-19-65	
AB		REVISED PER TDRR 24868	RAJ		12-22-65	
AC		REVISED PER TDRR 24973	RAJ		1-4-66	
AD		REVISED PER TDRR 25065	RAJ		1-18-66	
AE		REVISED PER TDRR 25672	RAJ		2-4-66	
AF		REVISED PER TDRR 25671	RAJ		2-4-66	
AG		REVISED PER TDRR 26110	RAJ		2-15-66	
AH		REVISED PER TDRR 26372	"		3-6-66	
AJ		REVISED PER TDRR 26425	"		3-16-66	
AK		REVISED PER TDRR 26743	"		3-16-66	
AL		REVISED PER TDRR 26798	"		3-16-66	
AM		REVISED PER TDRR 27168	"		4-7-66	
AN		REVISED PER TDRR 27235	"		4-7-66	
AP		REVISED PER TDRR 27345	"		4-7-66	
AR		REVISED PER TDRR 27417	"		4-7-66	
AS		REVISED PER TDRR 27442	"		4-7-66	
AT		REVISED PER TDRR 27719	"		4-20-66	
AU		REVISED PER TDRR 27880	"		4-20-66	
AV		REVISED PER TDRR 2[illegible]	"		4-20-66	
AW		28110	"		5-16-66	
AY		28173	"			
AZ		28131	"			
BA		28124	"			
BB		REVISED PER TDRR 28511	"		5-16-66	
BC		" " " 28949	"		5-24-66	
BD		" " " 29222	"		6-8-66	
BE		" " " 29235	"		6-8-66	
BF		" " " 29322			6-30-66	
BG		" " " 29429				
BH		" " " 29449	"			
BJ		" " " 29335				
BK		" " " 29619				
BL		" " " 29696				
BM		REVISION STATUS CHANGED	JSD	NS	7-29-66	
BN		REVISION STATUS CHANGED	JI		23 AUG 66	
BP		REVISION STATUS CHANGED	JI	RLW	23 AUG 66	
BR		REVISION STATUS CHANGED	JJ	RLW	23 AUG 66	
BS		REVISION STATUS CHANGED	GW	RLW	26 AUG 66	
BT		REVISION STATUS CHANGED	GW	RLW	26 AUG 66	
BU		REVISION STATUS CHANGED	EH	JI	9 SEPT 66	
BV		REVISION STATUS CHANGED	JJB	RLW	30 SEP 66	
BW		REVISION STATUS CHANGED	JJB	RLW	30 SEP 66	

SUGGESTED PROPORTIONS FOR NAMEPLATE DIMENSIONS.
1. SELECT NAMEPLATE LENGTH, DIMENSION "A", TO FIT DESIGN NEEDS.
2. DIMENSIONS B THRU AS ON LINE 1 BELOW ARE PROPORTIONAL TO "A" BY MULTIPLIERS SHOWN IN LINE 2 BELOW.

1.	A	B	C	D	E	F	G	H	J	K	L	M	N	P	R	S	T	U	V	W	Y	Z	AA	AB	AC	AD	AE	AF	AG	AH	AJ	AK	AL	AM	AN	AP	AR	AS
2.	1.000 A	.6563 A	.8438 A	.6875 A	.0391 A	.0240 A	.0391 A	.0469 A	.0547 A	.0469 A	.5938 A	.3750 A	.2969 A	.2187 A	.5079 A	.0313 A	.0938 A	.0391 A	.4375 A	.3594 A	.6875 A	.1094 A	.5781 A	.9219 A	.0240 A	.0156 A	.4375 A	.525 A	.0391 A	.563 A	.8438 A	.0548 A	.8659 A	.0391 A	.1563 A	.0938 A	.9219 A	.0151 A

Ⓖ REPLACES REV F WITH CHANGE

QTY REQD	PART OR IDENTIFYING NO.	MATERIAL OR NOTES	NOMENCLATURE OR DESCRIPTION	FIND NO

LIST OF MATERIALS

NEXT ASSY	USED ON
AS APPLICABLE	

APPLICATION

UNLESS OTHERWISE SPECIFIED
DIMENSIONS ARE IN INCHES
CAPACITOR VALUES ARE IN µf
RESISTOR VALUES ARE IN OHMS
TOLERANCES ON
FRACTIONS ± — DECIMALS ±.005 ANGLES ± —
DO NOT SCALE THIS DRAWING

MATERIAL
SEE NOTE 11

MIT
INSTRUMENTATION LAB
CAMBRIDGE, MASS.

DRAWN R A Jones 7/16/65
CHECKED A. J. [illegible] 7-22-65
APPROVED
APPROVED 7/22/65
APPROVED MIT 7/22/65
APPROVED MSC
DATE

MANNED SPACECRAFT CENTER
HOUSTON, TEXAS

NAMEPLATES,
APOLLO G&N—GSE
(STANDARDS)

CODE IDENT NO 80230
SIZE E
DRAWING NO. 1004260
SCALE NONE
SHEET 1 OF 6

NOTICE – WHEN GOVERNMENT DRAWINGS, SPECIFICATIONS, OR OTHER DATA ARE USED FOR ANY PURPOSE OTHER THAN IN CONNECTION WITH A DEFINITELY RELATED GOVERNMENT PROCUREMENT OPERATION, THE UNITED STATES GOVERNMENT THEREBY INCURS NO RESPONSIBILITY NOR ANY OBLIGATION WHATSOEVER; AND THE FACT THAT THE GOVERNMENT MAY HAVE FORMULATED, FURNISHED, OR IN ANY WAY SUPPLIED THE SAID DRAWINGS, SPECIFICATIONS, OR OTHER DATA IS NOT TO BE REGARDED BY IMPLICATION OR OTHERWISE AS IN ANY MANNER LICENSING THE HOLDER OR ANY OTHER PERSON OR CORPORATION, OR CONVEYING ANY RIGHTS OR PERMISSION TO MANUFACTURE, USE, OR SELL ANY PATENTED INVENTION THAT MAY IN ANY WAY BE RELATED THERETO.

REVISIONS

SYM	ZONE	DESCRIPTION	DR	CHK	DATE	APPROVED
G		REPLACES REV F WITH CHANGE PER TDRR 20854.			7/22/65	
H		REVISED PER TDRR 20892			[illegible]	
J		REVISED PER TDRR 20904			[illegible]	
K		REVISED PER TDRR 21379			[illegible]	
L		REVISED PER TDRR 21410			[illegible]	
M		REVISED PER TDRR 21993	"			
N		REVISED PER TDRR 22621	"			
P		REVISED PER TDRR 22671	"			
R		REVISED PER TDRR 22672	"			
S		REVISED PER TDRR 22750	"			
T		REVISED PER TDRR 22823	"			
U		REVISED PER TDRR 23072	"		10-12-65	
V		REVISED PER TDRR 23521	"		10-27-65	
W		REVISED PER TDRR 23824	RAJ		11-9-65	
Y		REVISED PER TDRR 24018	RAJ		11-16-65	
Z		REVISED PER TDRR 24040	RAJ		11-19-65	
AA		REVISED PER TDRR 24060	RAJ		11-19-65	
AB		REVISED PER TDRR 24868	RAJ		12-22-65	
AC		REVISED PER TDRR 24973	RAJ		1-4-66	
AD		REVISED PER TDRR 25065	RAJ		1-18-66	
AE		REVISED PER TDRR 25672	RAJ		2-4-66	
AF		REVISED PER TDRR 25671	RAJ		2-4-66	
AG		REVISED PER TDRR 26110	RAJ		2-15-66	
AH		REVISED PER TDRR 26372	"		3-16-66	
AJ		REVISED PER TDRR 26425	"		3-16-66	
AK		REVISED PER TDRR 26743	"		3-15-66	
AL		REVISED PER TDRR 26798	"		3-16-66	
AM		REVISED PER TDRR 27168	"		4-8-66	
AN		REVISED PER TDRR 27235	"		4-8-66	
AP		REVISED PER TDRR 27345	"		4-8-66	
AR		REVISED PER TDRR 27417	"		4-8-66	
AS		REVISED PER TDRR 27442	"		4-8-66	
AT		REVISED PER TDRR 27719	"		4-21-66	
AU		REVISED PER TDRR 27880	"		4-21-66	
AV		REVISED PER TDRR 27896	"		4-21-66	
AW		↓ 28110	"		5-16-66	
AY		↓ 28173	"		↓	
AZ		↓ 28131	"		↓	
BA		↓ 28124	"		↓	
BB		REVISED PER TDRR 28511	"		5-16-66	
BC		" " " 28949	"		5-24-66	
BD		" " " 29222	"		6-8-66	
BE		" " " 29235	"		"	
BF		" " " 29322	"		6-30-66	
BG		" " " 29429	"		"	
BH		" " " 29449	"		"	
BJ		" " " 29335	"		"	
BK		" " " 29619	"		"	
BL		" " " 29696	"		"	
BM		REVISION STATUS CHANGED	JSD	N.S.	7-29-66	
BN		REVISION STATUS CHANGED	JI	RLW	[illegible] AUG 66	
BP		REVISION STATUS CHANGED	JI	RLW	[illegible] AUG 66	
BR		REVISION STATUS CHANGED	JI	RLW	[illegible] AUG 66	
BS		REVISION STATUS CHANGED	GW	RLW	[illegible] AUG 66	
BT		REVISION STATUS CHANGED	GW	RLW	26 AUG 66	
BU		REVISION STATUS CHANGED	EH	JI	3 SEP 66	
BV		REVISION STATUS CHANGED	JJB	RLW	30 SEP 66	
BW		" "	JJB	RLW	30 SEP 66	

DASH NO.	P/C	PART NAME	REMARKS	PART NO.	SER. NO.	CONT. NO.	STYLE	TYPE	MATERIAL	A	B	C	D	E	F	G	H	J	K	L	M	N	P	R	S	T	U	V	W	Y	Z	AA	AB	AC	AD	AE	AF	AG	AH	AJ	AK	AL	AM	AN	AP	AR
399	K																																													
398	K																																													
350	K	ALIGNMENT OPTICAL TELESCOPE (LEM)		NA	NA	NA	A	I	NOTE 11 B	4.000	2.625	3.375	2.750	.156	.093	.156	.187	NA	NA	2.312	1.468	1.187	.906	2.031	NA	.375	.156	NA	1.437	2.750	.437	NA	3.688	.062	.062	1.750	.593	NA	.625	3.375	.187	NA	.156	.531	.453	NA
309	K																																													
308	K																																													
307	K						B	I	NOTE 11 B	4.000	2.625	3.375	2.750	.156	.093	.156	.187	NA	NA	2.328	1.468	1.187	.906	2.031	.062	.375	.156	NA	1.437	2.750	.437	NA	3.687	.062	.062	1.750	.593	NA	NA	NA	NA	NA	NA	NA	NA	NA
306	K						B	II	NOTE 11 C	4.000	2.625	3.375	2.750	.156	.093	.156	.187	.125	.156	2.328	1.468	1.187	.906	2.031	.062	.375	.156	↕	1.437	2.750	.437	2.312	3.687	.062	NA	1.750	.593	↕	↕	↕	↕	↕	↕	↕	↕	↕
305	K						B	I	NOTE 11 B	2.000	1.312	1.687	.375	.078	.048	.078	.093	NA	NA	1.164	.734	.593	.453	1.015	.048	.171	.078	↕	.718	1.375	.187	NA	NA	.048	.031	.875	.320	↕	↕	↕	↕	↕	↕	↕	↕	↕
304	K						B	II	NOTE 11 C	2.000	1.312	1.687	1.375	.078	.048	.078	.093	.070	.078	1.164	.734	.593	.453	1.015	.048	.171	.078	NA	.718	1.375	.187	.156	1.843	.048	NA	.875	.320	NA	NA	NA	NA	NA	NA	NA	NA	NA
303	K																																													
302	K																																													
301	K																																													
300	K	OPTICAL UNIT		NA	NA	NA	A	I	NOTE 11 B	2.000	1.312	.675	NA	NA	.048	.078	NA	NA	NA	1.090	.812	.675	.540	.940	NA	.265	NA	NA	NA	1.375	.218	NA	NA	NA	NA	NA	.375	NA	NA	NA	.180	NA	.078	NA	NA	NA
9	K	2 IN AUTOCOLLIMATOR		1001702			B	II	NOTE 11 C	4.000	2.625	3.812	2.750	.156	.093	.156	.187	.125	.156	2.250	1.500	1.187	.906	2.031	.093	.375	.156	1.750	1.437	2.750	.437	2.312	3.687	.062	NA	1.750	.593	.156	1.062	3.812	.156	NA	.156	1.062	.375	3.687
8	K	5 IN AUTOCOLLIMATOR		1017410			B	II	NOTE 11 C	4.000	2.625	3.812	2.750	.156	.093	.156	.187	.125	.156	2.250	1.500	1.187	.906	2.031	.093	.375	.156	1.750	1.437	2.750	.437	2.312	3.687	.062	NA	1.750	.593	.156	1.062	3.812	.156	NA	.156	1.062	.375	3.687
7	K	2½ IN AUTOCOLLIMATOR (SCT)		1017435			B	II	NOTE 11 C	4.000	2.625	3.812	2.750	.156	.093	.156	.187	.125	.156	2.250	1.500	1.187	.906	2.031	.093	.375	.156	1.750	1.437	2.750	.437	2.312	3.687	.062	NA	1.750	.593	.156	1.062	3.812	.156	NA	.156	1.062	.375	3.687
6	K	2½ IN AUTOCOLLIMATOR (SXT)		1017448			B	II	NOTE 11 C	4.000	2.625	3.812	2.750	.156	.093	.156	.187	.125	.156	2.250	1.500	1.187	.906	2.031	.093	.375	.156	1.750	1.437	2.750	.437	2.312	3.687	.062	NA	1.750	.593	.156	1.062	3.812	.156	NA	.156	1.062	.375	3.687
5	K	RETROREFLECTING PRISM ASSEMBLY		1019840			B	I	NOTE 11 B	4.000	2.625	3.812	2.750	.156	.093	.156	.187	NA	NA	2.250	1.500	1.187	.906	2.031	.093	.375	.156	1.750	1.437	2.750	.437	NA	NA	.062	.062	1.750	.593	.156	1.062	3.812	.156	NA	.156	1.062	.375	NA
4	K	S/H SIMULATOR ASSEMBLY		1019896			B	I	NOTE 11 B	4.000	2.625	3.812	2.750	.156	.093	.156	.187	NA	NA	2.250	1.500	1.187	.906	2.031	.093	.375	.156	1.750	1.437	2.750	.437	NA	NA	.062	.062	1.750	.593	.156	1.062	3.812	.156	NA	.156	1.062	.375	NA
3	K	REFERENCE MIRROR		1001767			B	I	NOTE 11 B	2.000	1.312	1.906	1.375	.078	.048	.078	.093	NA	NA	1.125	.750	.593	.453	1.015	.062	.187	.078	.875	.718	1.375	.218	NA	NA	.048	.031	.875	.305	.078	.531	1.906	.078	NA	.078	.531	.187	NA
2	K	2 IN PLANE READING AUTOCOLLIMATOR		1017413			B	I	NOTE 11 B	2.000	1.312	1.906	1.375	.078	.048	.078	.093	NA	NA	1.125	.750	.593	.453	1.015	.062	.187	.078	.875	.718	1.375	.218	NA	NA	.048	.031	.875	.305	.078	.531	1.906	.078	NA	.078	.531	.187	NA
1	K	2 IN AUTOCOLLIMATOR		1001702			B	I	NOTE 11 B	2.000	1.312	1.906	1.375	.078	.048	.078	.093	NA	NA	1.125	.750	.593	.453	1.015	.062	.187	.078	.875	.718	1.375	.218	NA	NA	.048	.031	.875	.305	.078	.531	1.906	.078	NA	.078	.531	.187	NA

Ⓖ REPLACES REV F WITH CHANGE

KOLLSMAN DASH NUMBERS

NOTES FOR TABLE
STYLE A IS FOR G&N SYSTEM.
STYLE B IS FOR GROUND SUPPORT EQUIPMENT.
TYPE I IS WITHOUT MOUNTING HOLES.
TYPE II IS WITH MOUNTING HOLES.

QTY REQD	PART OR IDENTIFYING NO.	MATERIAL OR NOTES	NOMENCLATURE OR DESCRIPTION	FIND NO.

LIST OF MATERIALS

NEXT ASSY	USED ON
AS APPLICABLE	

APPLICATION

UNLESS OTHERWISE SPECIFIED
DIMENSIONS ARE IN INCHES
CAPACITOR VALUES ARE IN µf
RESISTOR VALUES ARE IN OHMS
TOLERANCES ON
FRACTIONS ± — DECIMALS ±.005 ANGLES ± —
DO NOT SCALE THIS DRAWING

MATERIAL
SEE NOTE 11

MIT
INSTRUMENTATION LAB
CAMBRIDGE MASS

DRAWN R. A. Jones 7-16-65
CHECKED 7-22-65
APPROVED
APPROVED W. Kupfer
APPROVED MIT W. Kupfer
APPROVED MSC
DATE

MANNED SPACECRAFT CENTER
HOUSTON, TEXAS

NAMEPLATES,
APOLLO G&N-GSE
(STANDANDS)

CODE IDENT NO. 80230
SIZE E
DRAWING NO. 1004260
SCALE NONE
SHEET 2 OF 6

1004260 BW

REVISIONS						02768
SYM	ZONE	DESCRIPTION	DR	CHK	DATE	APPROVED
G		REPLACES REV F WITH CHANGE PER TDRR 20854				
H		REVISED PER TDRR 20892				
J		REVISED PER TDRR 20904				
K		REVISED PER TDRR 21379				
L		REVISED PER TDRR 21410				
M		REVISED PER TDRR 21993				
N		REVISED PER TDRR 22621				
P		REVISED PER TDRR 22671				
R		REVISED PER TDRR 22672				
S		REVISED PER TDRR 22750				
T		REVISED PER TDRR 22823				
U		REVISED PER TDRR 23072				
V		REVISED PER TDRR 23521			10-26-65	
W		REVISED PER TDRR 23824	RAJ		11-9-65	
Y		REVISED PER TDRR 24018	RAJ		11-16-65	
Z		REVISED PER TDRR 24040	RAJ		11-19-65	
AA		REVISED PER TDRR 24060	RAJ		11-19-65	
AB		REVISED PER TDRR 24868	RAJ		12-22-65	
AC		REVISED PER TDRR 24973	RAJ		1-4-66	
AD		REVISED PER TDRR 25065	RAJ		1-18-66	
AE		REVISED PER TDRR 25672	RAJ		2-4-66	
AF		REVISED PER TDRR 25671	RAJ		2-4-66	
AG		REVISED PER TDRR 26110	RAJ		2-15-66	
AH		REVISED PER TDRR 26372	"		3-16-66	
AJ		REVISED PER TDRR 26425	"		3-16-66	
AK		REVISED PER TDRR 26743	"		3-16-66	
AL		REVISED PER TDRR 26798	"		3-16-66	
AM		REVISED PER TDRR 27168	"		4-8-66	
AN		REVISED PER TDRR 27235	"		4-8-66	
AP		REVISED PER TDRR 27345	"		4-8-66	
AR		REVISED PER TDRR 27417	"		4-8-66	
AS		REVISED PER TDRR 27442	"		4-8-66	
AT		REVISED PER TDRR 27719	"		4-20-66	
AU		REVISED PER TDRR 27880	"		4-20-66	
AV		REVISED PER TDRR 27896	"		4-20-66	
AW		28110	"		5-16-66	
AY		28173	"		5-16-66	
AZ		28131	"		5-16-66	
BA		28124	"		5-16-66	
BB		REVISED PER TDRR 28511	"		5-16-66	
BC		" " " 28949	"		5-24-66	
BD		" " " 29222	"		6-8-66	
BE		" " " 29235	"		"	
BF		" " " 29322	"		6-29-66	
BG		" " " 29429	"		"	
BH		" " " 29449	"		"	
BJ		" " " 29335	"		"	
BK		" " " 29619	"		"	
BL		" " " 29696	"		"	
BM		" " " 29802	JSD	N.S.	7-29-66	
BN		REVISION STATUS CHANGED	JI	RLW	2 AUG 66	
BP		REVISED PER TDRR 30168	JI	RLW	AUG 66	
BR		REVISION STATUS CHANGED	JI	RLW	23 AUG 66	
BS		REVISION STATUS CHANGED	GW	RLW	26 AUG 66	
BT		REVISION STATUS CHANGED	GW	RLW	66	
BU		REVISION STATUS CHANGED	EH	JI	SEP 66	
BV		REVISION STATUS CHANGED	JJB	RLW	SEP 66	
BW		REVISED PER TDRR 31279	JJB	RLW	30 SEP 66	

DASH NO.	P/C	PART NAME	REMARKS	PART NO.	SER. NO.	CONT. NO.	STYLE	TYPE	MATERIAL	
299	R									
298	R									
280	R	COMPUTER TEST SET		2014042-051	N A	NAS9-497	B	II	NOTE 11C	FOR DIMENSIONS SEE DASH 18 VALUES BELOW
279	R	SELF TEST ASSY		2014366-041	N A	NAS9-497	B	I	NOTE 11B	FOR DIMENSIONS SEE DASH- 15 VALUES BELOW
278	R	LOGIC DRAWER ASSY NO.1		2014036-041	N A	NAS 9-497	B	I	NOTE 11B	FOR DIMENSIONS SEE DASH 17 VALUES BELOW
277	R	COMPUTER TEST SET		2014042-041	N A	NAS 9-497	B	II	NOTE 11C	FOR DIMENSIONS, SEE DASH 18 VALUES BELOW
276		DRAWER ASSY - PROGRAM & MONITOR		2014041-041				I	NOTE 11 B	FOR DIMENSIONS, SEE DASH 17 VALUES BELOW
275		DRAWER ASSY RDC INTERFACE		2014045-031						
274		SELF TEST ASSY		2014366-031						FOR DIMENSIONS, SEE DASH 15 VALUES BELOW
273		LOGIC DRAWER ASSY NO. 2		2014037-031						FOR DIMENSIONS, SEE DASH 17 VALUES BELOW
272		DRAWING ASSY PROGRAMMER & MONITOR		2014041-031						FOR DIMENSIONS, SEE DASH 17 VALUES BELOW
271		LOGIC DRAWER ASSY NO. 1		2014036-031					NOTE 11 B	
270		COMPUTER TEST SET		2014042-031				II	NOTE 11C	FOR DIMENSIONS, SEE DASH 18 VALUES BELOW
269		POWER CONTROL ASSY		2014044-021				I	NOTE 11 B	FOR DIMENSIONS, SEE DASH 17 VALUES BELOW
268		SELF TEST ASSY		[illegible]						FOR DIMENSIONS, SEE DASH 15 VALUES BELOW
267		AGC JUNCTION ASSY		2014341-021						
266		POWER CONTROL ASSY		2014079-021						
265		BUFFER CIRCUIT ASSY		2014254-021						
264		DRAWER ASSY X Y INTERFACE		2014040-021						
263		DRAWER ASSY R D C INTERFACE		2014045-021						
262		DRAWER ASSY PROGRAMMER & MONITOR		20140 4 -021						FOR DIMENSIONS, SEE DASH 17 VALUES BELOW
261		LOGIC DRAWER ASSY NO. 2		2014037-021						
260		LOGIC DRAWER ASSY NO. 1		2014036-021				I	NOTE 11 B	
259		OPERATION CONSOLE		2014024-021				II	NOTE 11 C	FOR DIMENSIONS, SEE DASH 18 VALUES BELOW
258		COMPUTER TEST SET		2014042-021						
257		AUXILIARY CALIBRATION CONSOLE		2014059-021				I	NOTE 11 C	
256		AGC CALIBRATION CONSOLE		2014049-021						
255		AGC HANDLING FIXTURE		2014282-021				I	NOTE 11 B	FOR DIMENSIONS, SEE DASH 17 VALUES BELOW
254		DRAWER ASSY COMP. SIMULATOR		2014048-011				II	NOTE 11 C	FOR DIMENSIONS, SEE DASH 18 VALUES BELOW
253		SHIPPING KIT ASSY, NAV DSKY		2016312-011						
252		SHIPPING KIT ASSY, UNIVERSAL DSKY		2016316-011						
251		SHIPPING KIT ASSY, MAIN DSKY		2016313-011				II	NOTE 11 C	
250		AMPLIFIER, REWORK		2014386				I	NOTE 11 B	FOR DIMENSIONS, SEE DASH 15 VALUES BELOW
249		TEMP MONITOR ASSY		2014313-011					NOTE 11 C	FOR DIMENSIONS, SEE DASH 17 VALUES BELOW
248		AGC JUNCTION ASSY		201434 -011					NOTE 11 B	FOR DIMENSIONS, SEE DASH 15 VALUES BELOW
247		AC INPUT PANEL ASSY		2014302-011						
246		SELF TEST ASSY		2014392-011						
245		TAPE PUNCH ASSEMBLY		2014039-011						FOR DIMENSIONS, SEE DASH 15 VALUES BELOW
244	R	TAPE READER ASSEMBLY		2014038-011	NA	NAS-9-497	B	I	NOTE 11 B	
243										
242										
241	R	APOLLO GUIDANCE COMPUTER GROUP		6003001	NA	NAS-9-497	A	I	NOTE 11 B	FOR DIMENSIONS, SEE DASH 19 VALUES BELOW
240		SELF TEST ASSEMBLY		2014366-011	NA		B	I		FOR DIMENSIONS, SEE DASH 15 VALUES BELOW
239		POWER SUPPLY ASSY-115V., 400CYCLE		2014207-011						FOR DIMENSIONS, SEE DASH 17 VALUES BELOW
238		AC INPUT PANEL ASSY		2014043-011						
237		POWER CONTROL ASSY		2014079-011						FOR DIMENSIONS, SEE DASH 15 VALUES BELOW
236		DRAWER ASSY-X Y INTERFACE		2014040-011						
235		DRAWER ASSY RDC INTERFACE		2014045-011						
234		BUFFER CIRCUIT ASSY		2014254-011						
233		CONTROL & INTERFACE ASSY		2014204-011						
232		POWER CONTROL ASSY		2014044-011						FOR DIMENSIONS, SEE DASH 17 VALUES BELOW
231		DRAWER ASSY, PROGRAMMER & MONITOR		2014041-011						
230		CONNECTOR INTERFACE ASSY		2014272-011						FOR DIMENSIONS, SEE DASH 15 VALUES BELOW
229		CONNECTOR INTERFACE ASSY		2014047-011						
228		ANTENNA TUNING CAPACITOR ASSY		2014209-011						
227		MOUNTING FIXTURE ASSY		2014006-011						FOR DIMENSIONS, SEE DASH 17 VALUES BELOW
226		POWER SUPPLY ASSY 3 VDC		2014234-011						FOR DIMENSIONS, SEE DASH 15 VALUES BELOW
225		PANEL ASSY - SIGNAL INTERFACE		2014010-011						
224		OSCILLOSCOPE ASSY		2014232-011						
223		AUXILIARY OUTLET ASSY		2014274-011						
222		FREQUENCY COUNTER		2014233-011						
221		POWER SUPPLY ASSY 10, 13, 28 VDC		2014235-011						FOR DIMENSIONS, SEE DASH 17 VALUES BELOW
220		LOGIC DRAWER ASSY NO. 2		2014037-011						
219		LOGIC DRAWER ASSY NO. 1		2014036-011						
218		COUNTER, ELECTRICAL ASSY		2014288-011						FOR DIMENSIONS, SEE DASH 15 VALUES BELOW
217		POWER SUPPLY ASSY		2014279-011						
216		TEST MOUNT ASSY		2014257-011						
215		UNIVERSAL DSKY PEDESTAL MOUNT		2014014-011						FOR DIMENSIONS, SEE DASH 17 VALUES BELOW
214		MAIN DSKY PEDESTAL MOUNT		2014343				I	NOTE 11B	
213		SHIPPING CONTAINER, MAIN DSKY		1006229				II	NOTE 11C	FOR DIMENSIONS, SEE DASH 18 VALUES BELOW
212		NAV DSKY		1006231						
211		AGC		1006230						
210		UNIVERSAL DSKY		1006422						
209		SHIPPING CONTAINER, AGC		1006421				II	NOTE 11C	
208		UNIVERSAL DSKY HANDLING FIXTURE		20140 3-011				I	NOTE 11B	FOR DIMENSIONS, SEE DASH 15 VALUES BELOW
207		NAV DSKY HANDLING FIXTURE		1014377						FOR DIMENSIONS, SEE DASH 17 VALUES BELOW
206		MAIN DSKY HANDLING FIXTURE		1014334						
205		AGC HANDLING FIXTURE		2014282-011				I	NOTE 11B	
204		OPERATION CONSOLE		2014024-011				II	NOTE 11C	FOR DIMENSIONS, SEE DASH 18 VALUES BELOW
203		COMPUTER TEST SET		2014042-011		NAS-9-497				
202		DRAWER ASSY, COMPUTER SIMULATOR		2014048-011		FNP-12775				
201		AUXILIARY CALIBRATION CONSOLE		2014059-011		NAS-9-497				
200		AGC CALIBRATION CONSOLE		2014049-011	NA		B	II	NOTE 11C	

DASH NO.	P/C	PART NAME	REMARKS	PART NO.	SER. NO.	CONT. NO.	STYLE	TYPE	MATERIAL	A	B	C	D	E	F	G	H	J	K	L	M	N	P	R	S	T	U	V	W	Y	Z	AA	AB	AC	AD	AE	AF	AG	AH	AJ	AK	AL	AM	AN	AP	AR
21																																														
20		NA		NA	NA	NA	A	II	NOTE 11 C	2.000	1.312	1.687	1.375	.078	.031	.078	.093	[illegible]	.093	1.187	.750	.593	.453	1.015	.062	.187	.078	.875	.718	1.375	.218	1.156	1.843	.048	NA	.875	.305	.078	.312	1.687	.078	NA	.078	.312	.187	1.843
19		NA		NA	NA	NA	A	I	NOTE 11 B	2.000	1.312	1.687	1.375	.078	.031	.078	.093	NA	NA	1.187	.750	.593	.453	1.015	.062	.187	.078	.875	.718	1.375	.218	NA	NA	.048	.031	.875	.305	.078	.312	1.687	.078	NA	.078	.312	.187	NA
18		NA		NA	NA	NA	B	II	NOTE 11 C	4.187	1.875	3.469	2.750	.156	.093	.156	.125	[illegible]	.125	1.625	1.032	.844	.656	1.406	.093	.344	.156	1.781	1.531	2.844	.312	1.562	3.875	.062	NA	1.219	.500	.156	.719	3.469	.156	NA	.156	.719	.344	3.875
17		NA		NA	NA	NA	B	I	NOTE 11 B	4.187	1.875	3.469	2.750	.156	.093	.156	.125	NA	NA	1.625	1.032	.844	.656	1.406	.093	.344	.156	1.781	1.531	2.844	.312	NA	NA	.062	.062	1.219	.500	.156	.719	3.469	.156	NA	.156	.719	.344	NA
16		NA		NA	NA	NA	B	II	NOTE 11 C	2.000	1.312	1.687	1.375	.078	.031	.078	.093	[illegible]	.093	1.187	.750	.593	.453	1.015	.062	.187	.078	.875	.718	1.375	.218	1.156	1.843	.048	NA	.875	.305	.078	.312	1.687	.078	NA	.078	.312	.187	1.843
15	R	NA		NA	NA	NA	B	I	NOTE 11 B	2.000	1.312	1.687	1.375	.078	.031	.078	.093	NA	NA	1.187	.750	.593	.453	1.015	.062	.187	.078	.875	.718	1.375	.218	NA	NA	.048	.031	.875	.305	.078	.312	1.687	.078	NA	.078	.312	.187	NA

THIS SHEET ADDED

Ⓖ REPLACES REV F WITH CHANGE

RAYTHEON DASH NUMBERS

NOTES FOR TABLE

STYLE A IS FOR G & N SYSTEM
STYLE B IS FOR GROUND SUPPORT EQUIPMENT
TYPE I IS WITHOUT MOUNTING HOLES
TYPE II IS WITH MOUNTING HOLES

QTY REQD	PART OR IDENTIFYING NO	MATERIAL OR NOTES	NOMENCLATURE OR DESCRIPTION	FIND NO

LIST OF MATERIALS

NEXT ASSY	USED ON
AS APPLICABLE	

APPLICATION

UNLESS OTHERWISE SPECIFIED
DIMENSIONS ARE IN INCHES
CAPACITOR VALUES ARE IN µf
RESISTOR VALUES ARE IN OHMS
TOLERANCES ON
FRACTIONS ± — DECIMALS ±.005 ANGLES ± —
DO NOT SCALE THIS DRAWING

MATERIAL
SEE NOTE 11

MIT
INSTRUMENTATION LAB
CAMBRIDGE MASS

MANNED SPACECRAFT CENTER
HOUSTON, TEXAS

		DATE
DRAWN	R A Jones	7-16-65
CHECKED	A. J.	7-22-65
APPROVED		
APPROVED		
APPROVED MIT		
APPROVED MSC		

NAMEPLATES,
APOLLO GEN-GSE
(STANDARDS)

CODE IDENT NO. 80230
SIZE E
DRAWING NO. 1004260
SCALE NONE
SHEET OF

1004260 BW

DASH NO.	P/C	PART NAME	REMARKS	PART NO.	SER. NO.	CONT. NO.	STYLE	TYPE	MATERIAL
199	AC	EYEPIECE STOWAGE UNIT		2021255-011			A	I	
198	AC	SIGNAL CONDITIONER ASSY C/M		2007234		NAS 9-497			NOTE 11B
197	AC	SIGNAL CONDITIONER ASSY C/M		2007235					
196	AC	SIGNAL CONDITIONER ASSY LEM		600700					
195	AC	PSA & SIGNAL CONDITIONER ASSY		6007009			A	I	NOTE 11B
194	AC	PANEL, MONITOR		2900031-031			B	II	NOTE 11C
193	AC	DISTRIBUTION BOX, GSE		2900024-031					
192	AC	ANALYZER, OPTICS-INERTIAL		2900023-031					
191	AC	TEST CONTROL		2900027-031					
190	AC	PANEL, PWR SUP AND LOAD		2900033-021					
189	AC	ADPT MODULE, P.S.A.		6900088-011					
188	AC	ADPT MODULE, P.S.A.		2901143-011					
187	AC	FIXTURE, MTG, PTA/PEA		2901066-02		NAS 9-497	B	II	NOTE 11C
186	AC	ANNUNCIATOR PANEL AND EYEPIECE STORAGE ASSEMBLY		1021255-021			A	I	
185	AC	ANNUNCIATOR PANEL AND EYEPIECE STORAGE ASSEMBLY		1021255-011			A	I	
184	AC	FIX., HAND., G AND N HARNESS		1901846-041		NAS 9 137	B	II	NOTE 11C
183	AC	INSTALLING TOOL, ELEC. CONN		1902586-011			B	II	NOTE 11C
182	AC	ADPT MODULE, P.S.A.		6900088-011			B	II	NOTE 11C
181	AC	G&N INDICATOR CONTROL PANEL ASSY		2014578-011			A	I	NOTE 11B
180	AC	ADPT MODULE, P.S.A.		1902431-031			B	II	
179	AC	MOUNTING PLATE, IMU/PTA		6900053-011					
178	AC	MOUNTING PLATE, COMPONENT		6900007-021					
177	AC	FIX., MOUNTING, SUBSYSTEM		2900070-021					
176	AC	FIX., MOUNTING, G AND N		2900067-021					
175	AC	CSL, COOL. AND PWR, G AND N		1902134-031					
174	AC	FIX., HAND., C/M AND LEM CDU		2900999-011					NOTE 11C
173	AC	FIX., HANDLING, C/M PSA		2900998-011					
172	AC	CAGING ELECTRONICS, GYRO		2900029-021					
171	AC	DISTRIBUTION BOX, GSE		2900024-021					
[illegible]	AC	ANALYZER, OPTICS-INERTIAL		2900023-021					
169	AC	ADPT, TESTPOINT, P.S.A.		2900037-021					
168	AC	TEST SELECTOR		2900028-021					
167	AC	TEST CONTROL		2900027-021					
166	AC	PANEL, MONITOR		2900031-021					
165	AC	TERM. BOARD STORAGE DRAWER		2900927-011					
164	AC	INPUT/OUTPUT PANEL		2900926-011					
163	AC	CONTROL PANEL		2900896-011					
162	AC	CSL. CAL AND TEST, SCM/PSAAM		2900895-011					
161	AC	FIX., LIFT AND HAND., IMU		10[illegible]462-011					
160	AC	FIX., HAND., G AND N HARNESS		1901846-031					
159	AC	BATTERY POWER PACK		1900011-031			B	II	NOTE 11C
158	AC	COUPLING DATA UNIT ASSEMBLY C/M		2007222			A	I	NOTE 11B
157	AC	COUPLING DATA UNIT ASSEMBLY - LEM		2007222					
156	AC	POWER & SERVO ASSEMBLY C/M		2007200					
155	AC	PIPA ELECTRONICS ASSEMBLY		2007201					
154	AC	PULSE TORQUE ASSEMBLY - LEM		6007000					
153	AC	POWER & SERVO ASSEMBLY - LEM		6007200			A	I	NOTE 11B
152	AC	CONT PNL, RSVR CKT TESTER		2900770-011			B	II	NOTE 11C
151	AC	TESTER, RESOLVER CIRCUIT		2900708-011					
150	AC	JUNCTION BOX, P.S.A./G.S.E.		1901933-021					
149	AC	BATTERY PACK, LIFTING		2900614-011					
148	AC	MOUNTING PLATE, COMPONENT		6900007-011					
147	AC	MOUNTING PLATE, COMPONENT		2900677-011					
146	AC	CART, TRANS, G AND N		1900009-041					
145	AC	CONTAINER, SHIPPING, IMU		1900010-021		NAS 9-497	B	II	NOTE 11C
144	AC	FIX., MOUNTING, G AND N		1902204-021			B	II	NOTE 11C
143	AC	CSL. COOL. AND PWR, G AND N		1902134-021					
142	AC	ANALYZER, OPTICS-INERTIAL		2900023-011					
141	AC	CONT, TEMP, PORTABLE		2900060-011					
140	AC	TESTER CKT, IMU/CDU RSVR		2900286-011					
139	AC	SIMULATOR, LD/SIG, CDU		2900285-011					
138	AC	SIMULATOR, LD/SIG, OPTICS		1902023-021					
137	AC	FIX., MOUNTING, IMU/NAV BASE		6900003-011					
136	AC	FIXTURE, OPTICS/NAV BASE		2900072-011					
135	AC	FIX., MOUNTING, SUB SYSTEM		2900070-011					
134	AC	FIX., HAND., G AND N HARNESS		2900069-011					
133	AC	CNTR, SHIPPING, NAV BASE		2900068-011					
132	AC	FIX., MOUNTING, G AND N		2900067-011					
131	AC	SIMULATOR, LD/SIG, IMU/CDU		2900062-011					
130	AC	TESTER, GYRO WHEEL		2900061-011					
129	AC	COOLANT SUPPLY		1902133-021					
128	AC	TABLE, ROTARY		1900926-021					
127	AC	FIX., HAND., OPTICS		2900074-011					
126	AC	FIXTURE, MTG, PTA/PEA.		2900056-011					
125	AC	CONT, TEMP, IMU LIFTING		2900063-011					
124	AC	FIXTURE, HANDLING, IMU		2900064-011					
123	AC	CONT, OPTICS, REMOTE		1902046-021					
122	AC	TEST CONTROL		1902009-021					
121	AC	ADPT MODULE, P.S.A.		1902431-021					
120	AC	BRIDGE, DECADE ERROR		2900128-011					
119	AC	PWR SUP, ELECTRONICS		2900012-011					
118	AC	PWR SUP, RELAY AND LAMP		1900049-031					
117	AC	CONSOLE, OSCILLOGRAPH		1900000-021					
116	AC	ADPT MODULE, P.S.A.		1902431-011					
115	AC	ADPT, TEST POINT, PTA/PEA.		2900145-011					
114	AC	ADPT, TEST POINT, P.S.A.		2900037-011					
113	AC	CONTROL, GIMBAL POSITION		2900036-011					
112	AC	SELECTOR, SIGNAL, PRIMARY		2900035-011					
111	AC	SEL, SIG, OSCILLOGRAPH		2900034-011					
110	AC	PANEL, PWR SUP AND LOAD		2900033-011					
109	AC	PANEL, MONITOR		2900031-011					
108	AC	PANEL, AUXILIARY INPUT		2900030-011					
107	AC	CAGING ELECTRONICS, GYRO		2900029-011					
106	AC	TEST SELECTOR		2900028-011					
105	AC	TEST CONTROL		2900027-011					
104	AC	MONITOR AND CONTROL, TEMP		2900026-011					
103	AC	DISTRIBUTION BOX, GSE		2900024-011					
102	AC	VOLTMETER, DIGITAL		2900007-011			B	II	NOTE 11C
101	AC	NAVIGATION BASE ASSEMBLY - LEM		6899950		NAS-9-497	A	I	NOTE 11B
100	AC	NAVIGATION BASE ASSEMBLY		2899982		NAS-9-497	A	I	NOTE 11B

DASH NO.	A	B	C	D	E	F	G	H	J	K	L	M	N	P	R	S	T	U	V	W	Y	Z	AA	AB	AC	AD	AE	AF	AG	AH	AJ	AK	AL	AM	AN	AP	AR
197	FOR DIMENSIONS, SEE DASH 100 VALUES BELOW																																				
194	FOR DIMENSIONS, SEE DASH 141 VALUES BELOW																																				
192	FOR DIMENSIONS, SEE DASH 144 VALUES BELOW																																				
189	FOR DIMENSIONS, SEE DASH 141 VALUES BELOW																																				
186	FOR DIMENSIONS, SEE DASH 100 VALUES BELOW																																				
184	FOR DIMENSIONS, SEE DASH 144 VALUES BELOW																																				
183	FOR DIMENSIONS, SEE DASH 102 VALUES BELOW																																				
182	FOR DIMENSIONS, SEE DASH 141 VALUES BELOW																																				
181	3.000	1.938	2.437	NA	.125	.062	.188	.156	NA	NA	1.750	.125	.906	.688	1.500	NA	.281	.125	NA	1.094	2.062	.312	NA	2.500	.062	.125	1.312	.469	NA	NA	NA	.156	NA	.125	.469	.344	NA
180	FOR DIMENSIONS, SEE DASH 121 VALUES BELOW																																				
177	FOR DIMENSIONS, SEE DASH 144 VALUES BELOW																																				
172	FOR DIMENSIONS, SEE DASH 141 VALUES BELOW																																				
[illegible]	FOR DIMENSIONS, SEE DASH 144 VALUES BELOW																																				
164	FOR DIMENSIONS, SEE DASH 141 VALUES BELOW																																				
162	FOR DIMENSIONS, SEE DASH 144 VALUES BELOW																																				
161	FOR DIMENSIONS, SEE DASH 141 VALUES BELOW																																				
160	FOR DIMENSIONS, SEE DASH 144 VALUES BELOW																																				
158	FOR DIMENSIONS SEE DASH 100 VALUES BELOW																																				
156	2.125	.968	1.718	NA	.093	.031	.06	.093	NA	NA	.858	.608	.484	.358	.733	.062	.140	.062	NA	.968	1.450	.125	NA	1.720	.046	.03	NA	.210	NA	NA	NA	.070	NA	.046	.32	.16	NA
154	FOR DIMENSIONS SEE DASH 100 VALUES BELOW																																				
152	FOR DIMENSIONS, SEE DASH 141 VALUES BELOW																																				
150	FOR DIMENSIONS, SEE DASH 144 VALUES BELOW																																				
149	FOR DIMENSIONS, SEE DASH 141 VALUES BELOW																																				
148	FOR DIMENSIONS, SEE DASH 144 VALUES BELOW																																				
144	4.125	1.812	3.250	NA	.125	.062	.12	.156	.188 .194	.125	1.625	1.140	.890	.640	1.390	.125	.171	.125	1.875	1.687	2.625	.250	1.562	3.843	.093	NA	NA	.359	.125	.437	3.688	NA	3.687	.093	.40	.25	3.875
143	4.125	1.812	3.250		.125	.062	.12	.156		.125	1.625	1.140	.890	.640	1.390	.125	.171	.125	1.875	1.687	2.625	.250	1.562	3.843	.093			.359	.125	.437	3.688		3.687	.093	.40	.25	3.875
142	4.125	1.812	3.250		.125	.062	.12	.156		.125	1.625	1.140	.890	.640	1.390	.125	.171	.125	1.875	1.687	2.625	.250	1.562	3.843	.093			.359	.125	.437	3.688		3.687	.093	.40	.25	3.875
141	2.125	.968	1.718		.093	.031	.06	.093		.093	.858	.608	.484	.358	.733	.077	.116	.062	.937	.875	1.343	.125	.781	1.892	.046			.209	.093	.250	1.875		1.840	.046	.23	.16	1.938
140	4.125	1.812	3.250		.125	.062	.12	.156		.125	1.625	1.140	.890	.640	1.390	.125	.171	.125	1.875	1.687	2.625	.250	1.562	3.843	.093			.359	.125	.437	3.688		3.687	.093	.40	.25	3.875
128	4.125	1.812	3.250		.125	.062	.12	.156		.125	1.625	1.140	.890	.640	1.390	.125	.171	.125	1.875	1.687	2.625	.250	1.562	3.843	.093			.359	.125	.437	3.688		3.687	.093	.40	.25	3.875
127	2.125	.968	1.718		.093	.031	.06	.093		.093	.858	.608	.484	.358	.733	.077	.116	.062	.937	.875	1.343	.125	.781	1.892	.046			.209	.093	.250	1.875		1.840	.046	.23	.16	1.938
102	2.125	.968	1.718	NA	.093	.031	.06	.093	.188 .194	.093	.858	.608	.484	.358	.733	.077	.116	.062	.937	.875	1.343	.125	.781	1.892	.046	NA	NA	.209	.093	.250	1.875	NA	1.840	.046	.23	.16	1.938
101	2.000	1.312	1.906	1.375	.078	.048	.078	.093	NA	NA	1.125	.750	.593	.453	1.015	.062	.187	.078	.875	.718	1.375	.218	NA	NA	.048	.031	.875	.305	.078	.531	1.906	.078	NA	.078	.531	.187	NA
100	2.000	1.312	1.906	1.375	.078	.048	.078	.093	NA	NA	1.125	.750	.593	.453	1.015	.062	.187	.078	.875	.718	1.375	.218	NA	NA	.048	.031	.875	.305	.078	.531	1.906	.078	NA	.078	.531	.187	NA

AC ELECTRONICS DASH NUMBERS

NOTES FOR TABLE
STYLE A IS FOR G&N SYSTEM
STYLE B IS FOR GROUND SUPPORT EQUIPMENT
TYPE I IS WITHOUT MOUNTING HOLES
TYPE II IS WITH MOUNTING HOLES

NOTE: AC DASH NO'S. CONT. ON SH. 6

THIS SHEET ADDED
Ⓖ REPLACES REV F WITH CHANGE

REVISIONS

SYM	ZONE	DESCRIPTION	DR	CHK	DATE	APPROVED
G		REPLACES REV F WITH CHANGE PER TDRR 20854.			7/22/65	WK
H		REVISED PER TDRR 20892				
J		REVISED PER TDRR 20904				
K		REVISED PER TDRR 21379				
L		REVISED PER TDRR 21410				
M		REVISED PER TDRR 21993				
N		REVISED PER TDRR 22621				
P		REVISED PER TDRR 22671				
R		REVISED PER TDRR 22672				
S		REVISED PER TDRR 22750				
T		REVISED PER TDRR 22823				
U		REVISED PER TDRR 23072				
V		REVISED PER TDRR 23527			10-26-65	
W		REVISED PER TDRR 23824	RAJ		11-9-65	
Y		REVISED PER TDRR 24018	RAJ		11-16-65	
Z		REVISED PER TDRR 24040	RAJ		11-19-65	
AA		REVISED PER TDRR 24060	RAJ		11-19-65	
AB		REVISED PER TDRR 24868	RAJ		12-22-65	
AC		REVISED PER TDRR 24973	RAJ		1-4-66	
AD		REVISED PER TDRR 25065	RAJ		1-18-66	
AE		REVISED PER TDRR 25672	RAJ		2-4-66	
AF		REVISED PER TDRR 25671	RAJ		2-4-66	
AG		REVISED PER TDRR 26110	RAJ		2-15-66	
AH		REVISED PER TDRR 26372	"		3-16-66	
AJ		REVISED PER TDRR 26425	"		3-16-66	
AK		REVISED PER TDRR 26743	"		3-16-66	
AL		REVISED PER TDRR 26798	"		3-16-66	
AM		REVISED PER TDRR 27168	"		4-8-66	
AN		REVISED PER TDRR 27235	"		4-8-66	
AP		REVISED PER TDRR 27345	"		4-8-66	
AR		REVISED PER TDRR 27417	"		4-8-66	
AS		REVISED PER TDRR 27442	"		4-8-66	
AT		REVISED PER TDRR 27719	"		4-21-66	
AU		REVISED PER TDRR 27880	"		4-21-66	
AV		REVISED PER TDRR 27896	"		4-21-66	
AW		28110	"		5-16-66	
AY		28173	"			
AZ		28131	"			
BA		28124	"			
BB		REVISED PER TDRR 28511	"		5-16-66	
BC		" " " 28949	"		5-24-66	
BD		" " " 29222	"		6-8-66	
BE		" " " 29235	"		"	
BF		" " " 29322	"		6-24-66	
BG		" " " 29429	"		"	
BH		" " " 29449	"		"	
BJ		" " " 29335	"		"	
BK		" " " 29619	"		"	
BL		" " " 29696	"		6-29-66	
BM		REVISION STATUS CHANGED	JSD	NS	7-29-66	
BN		REVISION STATUS CHANGED	JI	RLW	22 AUG 66	
BP		REVISION STATUS CHANGED	JI	RLW	11 AUG 66	
BR		REVISED PER TDRR 30241	JI	RLW	11 AUG 66	
BS		REVISION STATUS CHANGED	GW	RLW	26 AUG 66	
BT		REVISION STATUS CHANGED	GW	RLW	26 AUG 66	
BU		REVISION STATUS CHANGED	EH	JI	9 SEPT 66	
BV		REVISION STATUS CHANGED	JJB	RLW	30 SEP 66	
BW		REVISION STATUS CHANGED	JJB	RLW	30 SEP 66	

QTY REQD	PART OR IDENTIFYING NO	MATERIAL OR NOTES	NOMENCLATURE OR DESCRIPTION	FIND NO.

LIST OF MATERIALS

UNLESS OTHERWISE SPECIFIED
DIMENSIONS ARE IN INCHES
CAPACITOR VALUES ARE IN µf
RESISTOR VALUES ARE IN OHMS
TOLERANCES ON
FRACTIONS ± — DECIMALS ±.005 ANGLES ± —
DO NOT SCALE THIS DRAWING

MATERIAL
SEE NOTE 11

AS APPLICABLE
NEXT ASSY | USED ON
APPLICATION

MIT
INSTRUMENTATION LAB
CAMBRIDGE MASS

DRAWN 7-16-65
CHECKED
APPROVED
APPROVED
APPROVED MIT
APPROVER MSC

MANNED SPACECRAFT CENTER
HOUSTON, TEXAS

NAMEPLATES,
APOLLO G&N-GSE
(STANDARDS)

CODE IDENT NO 80230
SIZE E
DRAWING NO. 1004260
SCALE NONE

499	MIT
498	

REVISIONS

SYM	ZONE	DESCRIPTION	DR	CHK	DATE	APPROVED
G	-	REPLACES REV F WITH CHANGE PER TDRR 20854			[illegible]	WK
H		REVISED PER TDRR 20892			8/3/65	WK
J		REVISED PER TDRR 20904			8/3/65	WK
K		REVISED PER TDRR 21379			8/6/65	WK
L		REVISED PER TDRR 21410			[illegible]	WK
M		REVISED PER TDRR 21993				
N		REVISED PER TDRR 22621				
P		REVISED PER TDRR 22671				
R		REVISED PER TDRR 22672				
S		REVISED PER TDRR 22750				WK
T		REVISED PER TDRR 22823				WK
U		REVISED PER TDRR 23072			[illegible]	
V		REVISED PER TDRR 23521			[illegible]	WK
W		REVISED PER TDRR 23624	RAJ		11-9-65	WK
Y		REVISED PER TDRR 24018	RAJ		11-16-65	WK
Z		REVISED PER TDRR 24040	RAJ		[illegible]-65	WK
AA		REVISED PER TDRR 24060	RAJ		11-19-65	WK
AB		REVISED PER TDRR 24868	RAJ		12-22-65	WK
AC		REVISED PER TDRR 24973	RAJ		[illegible]	WK
AD		REVISED PER TDRR 25065	RAJ		1-18-66	
AE		REVISED PER TDRR 25672	RAJ		2-4-66	WK
AF		REVISED PER TDRR 25671	RAJ		2-4-66	WK
AG		REVISED PER TDRR 26110	RAJ		2-15-66	WK
AH		REVISED PER TDRR 26372	"		3-16-66	
AJ		REVISED PER TDRR 26425	"		3-16-66	
AK		REVISED PER TDRR 26743	"		3-16-66	
AL		REVISED PER TDRR 26798	"		3-16-66	
AM		REVISED PER TDRR 27168	"		4-7-66	
AN		REVISED PER TDRR 27235	"		4-7-66	
AP		REVISED PER TDRR 27345	"		4-7-66	
AR		REVISED PER TDRR 27417	"		4-7-66	
AS		REVISED PER TDRR 27442	"		4-7-66	
AT		REVISED PER TDRR 27719	"		4-20-66	WK
AU		REVISED PER TDRR 27880	"		4-20-66	WK
AV		REVISED PER TDRR 27896	"		4-20-66	WK
AW		28110	"		5-16-66	
AY		28173	"			
AZ		28131	"			
BA		28124	"			
BB		REVISED PER TDRR 28511	"		5-16-66	
BC		" " " 28949	"		5-20-66	
BD		" " " 29222	"		6-8-66	
BE		" " " 29235	"		"	
BF		" " " 29322	"		6-24-66	
BG		" " " 29429	"		"	
BH		" " " 29449	"		"	
BJ		" " " 29335	"		"	
BK		" " " 29619	"		"	
BL		" " " 29696	"		6-29-66	
BM		REVISION STATUS CHANGED	JSD		7-29-66	
BN		REVISION STATUS CHANGED	JI	RLW	[illegible] AUG 66	
BP		REVISION STATUS CHANGED	JI	RLW	[illegible] AUG 66	
BR		REVISION STATUS CHANGED	JI	RLW	[illegible] AUG 66	
BS		REVISION STATUS CHANGED		RLW	[illegible] AUG 66	
BT		REVISION STATUS CHANGED	GW	RLW	26 AUG 66	
BU		REVISION STATUS CHANGED	EH	II	9 SEPT 66	
BV		REVISION STATUS CHANGED	JJB	RLW	[illegible] SEP 66	
BW		REVISION STATUS CHANGED	JJB	RLW	[illegible] 66	

DASH NO.	P/C	PART NAME	REMARKS	PART NO.	SER. NO.	CONT. NO.	STYLE	TYPE	MATERIAL	A	B	C	D	E	F	G	H	J	K	L	M	N	P	R	S	T	U	V	W	Y	Z	AA	AB	AC	AD	AE	AF	AG	AH	AJ	AK	AL	AM	AN	AP	AR
401	MIT	COMPUTER ASSY		2003100		NAS-9-497	A	I	NOTE 11 B	2.000	1.312	1.906	1.375	.078	.048	.078	.093	NA	NA	1.125	.750	.593	.453	1.015	.062	.187	.078	.875	.718	1.375	.218	NA	NA	.048	.031	.875	.305	.078	.531	1.906	.078	NA	.078	.531	.187	NA
400	MIT	LIFTING SLING-G&N INST. QUAL. FIX. & AZM REF. FIX.		1021640		NAS-9-4066	B	II	NOTE 11 C	2.000	.312	1.687	1.375	.078	.048	.078	.093	[illegible]	.093	1.187	.750	.593	.453	1.015	.062	.187	.078	.875	.718	1.375	.218	1.156	1.843	.048	NA	.875	.305	.078	.312	1.697	.110	1.330	.070	.275	.180	[illegible]

MIT DASH NUMBERS

THIS SHEET ADDED

Ⓖ REPLACES REV F WITH CHANGE

NOTES FOR TABLE

STYLE A IS FOR G&N SYSTEM
STYLE B IS FOR GROUND SUPPORT EQUIPMENT
TYPE I IS WITHOUT MOUNTING HOLES
TYPE II IS WITH MOUNTING HOLES

QTY REQD	PART OR IDENTIFYING NO	MATERIAL OR NOTES	NOMENCLATURE OR DESCRIPTION	FIND NO.

LIST OF MATERIALS

NEXT ASSY	USED ON
AS APPLICABLE	

APPLICATION

UNLESS OTHERWISE SPECIFIED
DIMENSIONS ARE IN INCHES
CAPACITOR VALUES ARE IN μf
RESISTOR VALUES ARE IN OHMS
TOLERANCES ON
FRACTIONS ± — DECIMALS ±.005 ANGLES ± —
DO NOT SCALE THIS DRAWING

MATERIAL
SEE NOTE 11

MIT
INSTRUMENTATION LAB
CAMBRIDGE, MASS

DRAWN R A Jones 7-16-65
CHECKED [illegible]
APPROVED
APPROVED [illegible]
APPROVED MIT [illegible]
APPROVED MSC [illegible]
DATE

MANNED SPACECRAFT CENTER
HOUSTON, TEXAS

NAMEPLATES,
APPOLLO G&N-GSE
(STANDARDS)

CODE IDENT NO. 80230
SIZE E
DRAWING NO. 1004260
SCALE NONE
SHEET [illegible] OF [illegible]

1004260 BW

NOTICE – WHEN GOVERNMENT DRAWINGS, SPECIFICATIONS, OR OTHER DATA ARE USED FOR ANY PURPOSE OTHER THAN IN CONNECTION WITH A DEFINITELY RELATED GOVERNMENT PROCUREMENT OPERATION, THE UNITED STATES GOVERNMENT THEREBY INCURS NO RESPONSIBILITY NOR ANY OBLIGATION WHATSOEVER; AND THE FACT THAT THE GOVERNMENT MAY HAVE FORMULATED, FURNISHED, OR IN ANY WAY SUPPLIED THE SAID DRAWINGS, SPECIFICATIONS, OR OTHER DATA IS NOT TO BE REGARDED BY IMPLICATION OR OTHERWISE AS IN ANY MANNER LICENSING THE HOLDER OR ANY OTHER PERSON OR CORPORATION, OR CONVEYING ANY RIGHTS OR PERMISSION TO MANUFACTURE, USE, OR SELL ANY PATENTED INVENTION THAT MAY IN ANY WAY BE RELATED THERETO.

REVISIONS

02768

SYM	ZONE	DESCRIPTION	BR	CHK	DATE	APPROVED
AG		CHANGED NUMBER OF SHEETS FROM 5 TO 6 PER TDRR 26110	RAJ		2-15-66	
AH		REVISED PER TDRR 26372	"		3-16-66	
AJ		REVISED PER TDRR 26425	"		3-16-66	
AK		REVISED PER TDRR 26743	"		3-16-66	
AL		REVISED PER TDRR 26798	"		3-16-66	
AM		REVISED PER TDRR 27168	"		4-7-66	
AN		REVISED PER TDRR 27235	"		4-7-66	
AP		REVISED PER TDRR 27345	"		4-7-66	
AR		REVISED PER TDRR 27417	"		4-7-66	
AS		REVISED PER TDRR 27442	"		4-7-66	
AT		REVISED PER TDRR 27719	"		4-20-66	
AU		REVISED PER TDRR 27880	"		4-20-66	
AV		REVISED PER TDRR 27896	"		4-20-66	
AW		↕ 28110	"		5-16-66	
AY		↕ 28173	"		5-16-66	
AZ		↕ 28131	"		5-16-66	
BA		↕ 28124	"		5-16-66	
BB		REVISED PER TDRR 28511	"		5-16-66	
BC		" " " 28949	"		5-24-66	
BD		" " " 29222	"		6-8-66	
BE		" " " 29235	"		"	
BF		" " " 29322	"		6-20-66	
BG		" " " 29429	"		"	
BH		" " " 29449	"		"	
BJ		" " " 29335	"		"	
BK		" " " 29619	"		"	
BL		" " " 29696	"		6-29-66	
BM		REVISION STATUS CHANGED	JSD	N.S.	7-29-66	
BN		REVISED PER TDRR 29974	JI	RLW	22 AUG 66	
BP		REVISION STATUS CHANGED	JI	RLW	22 AUG 66	
BR		REVISION STATUS CHANGED	JI	RLW	22 AUG 66	
BS		REVISED PER TDRR 30530	GW	RLW	26 AUG 66	
BT		REVISED PER TDRR 30543	GW	RLW	26 AUG 66	
BU		REVISED PER TDRR 30898	EH	JI	9 SEP 66	
BV		REVISED PER TDRR 31241	JJB	RLW	66	
BW		REVISION STATUS CHANGED	JJB	RLW	30 SEP 66	

599	AC
598	AC

A C ELECTRONICS DASH NUMBERS

DASH NO.	P/C	PART NAME	REMARKS	PART NO.	SER NO.	CONT NO.	STYLE	TYPE	MATERIAL
541	AC	FIXTURE, MOUNTING, IMU		2900000-021		NAS 9-497	B	II	NOTE 11C
543	AC	PANEL, MONITOR		2900031-041		NAS 9-497	B	II	NOTE 11C
542	AC	BATTERY PACK, LIFTING		2900812-021		NAS 9-497	B	II	NOTE 11C
540	AC	ADPT, TEST POINT, P.S.A.		2900037-031		NAS 9-497	B	II	NOTE 11C
539	AC	ANNUNCIATOR PANEL AND EYEPIECE STORAGE ASSEMBLY		1021265-041		↕	A	I	NOTE 11B
538	AC	ANNUNCIATOR PANEL AND EYEPIECE STORAGE ASSEMBLY		1021255-031		↕	A	I	NOTE 11B
537	AC	TEST SELECTOR		2900028-031		↕	B	II	NOTE 11C
536	AC	ANALYZER, OPTICS-INERTIAL		2900023-041		↕	B	II	NOTE 11C
535	AC	CONT, TEMP, PORTABLE		2900060-021		↕	B	II	NOTE 11C
534	AC	COMPUTER CONT & RETICLE DIMMER		6014512-021		↕	A	I	NOTE 11B
533	AC	ADPT MODULE, P.S.A.		1902431-041		↕	B	II	NOTE 11C
532	AC	TRAY BREAKOUT, 105 PIN		1900807-021		↕	↕	↕	↕
531	AC	TRAY BREAKOUT, 84 PIN		1900806-021		↕	↕	↕	↕
530	AC	HEAT SINK - TRAY EXTENDER		1900808-021		↕	↕	↕	↕
529	AC	TESTER, FAILURE INDICATOR		1900809-021		↕	↕	↕	↕
527	AC	FIX., MOUNTING, G AND N	(-144)	1902204-021		↕	↕	↕	↕
526	AC	FIX., MOUNTING, G AND N	(-144)	2900067-031		↕	↕	↕	↕
525	AC	PORTABLE TEMP. CONTROLLER		1900496-021		↕	B	II	NOTE 11C
524	AC	POWER, SERVO AND THERMOCOUPLE ASSEMBLY C/M		2010743		↕	A	I	NOTE 11B
523	AC	PULSE TORQUE AND THERMOCOUPLE ASSEMBLY - LEM		6010656		↕	↕	↕	↕
522	AC	COUPLING DATA UNIT AND THERMOCOUPLE ASSEMBLY - LEM		2010744		↕	↕	↕	↕
521	AC	COUPLING DATA UNIT AND THERMOCOUPLE ASSEMBLY - C/M		2010744		↕	↕	↕	↕
520	AC	PIPA ELECTRONICS AND THERMOCOUPLE ASSEMBLY.		2010745		↕	A	I	NOTE 11B
519	AC	FIXTURE, HANDLING, LEM-PSA	(-141)	6900129-011		↕	B	II	NOTE 11C
518	AC	JUNCTION BOX, GSE-PSA	(-144)	1901933-031		↕	B	II	NOTE 11C
517	AC	FIX., HAND., OPTICS INSTL.	(-141)	2901380-011		↕	B	II	NOTE 11C
516	AC	POWER, SERVO AND THERMOCOUPLE ASSEMBLY-LEM		6010655		NAS 9-497	A	I	NOTE 11B
514	AC	SIGNAL COND. ASSY LEM OPER.	(-100)	6007013		NAS-9-497	A	I	NOTE 11B
513	↕	JUMPER, BY-PASS	(-141)	1021616		↕	B	II	NOTE 11C
512	↕	COUPLING DATA UNIT ASSEMBLY C/M	(-100)	2007322-011		↕	A	I	NOTE 11B
511	↕	COUPLING DATA UNIT ASSEMBLY - LEM	(-100)	2007322-021		↕			
510	↕	BATTERY POWER PACK	(-144)	1900011-041		↕	B	II	NOTE 11C
509	↕	JUNCTION BOX, P.S.A./G.S.E.	(-144)	1902195-021		↕	B	II	NOTE 11C
508	↕	NAVIGATION BASE ASSEMBLY - LEM	(-101)	6899980		↕	A	I	NOTE 11B
507	↕	CSL, COOL, AND PWR, G AND N	(-144)	1902134-041		↕	B	II	NOTE 11C
506	↕	BREAKOUT BOX, CABLE ADAPTER	(-141)	2901011-011		↕	↕	↕	↕
505	↕	MONITOR AND CONTROL, TEMP	(-141)	2900026-021		↕	↕	↕	↕
504	↕	PWR SUP, GUIDANCE SYSTEM	(-141)	1900033-021		↕	↕	↕	↕
503	↕	CONTROL, GIMBAL POSITION	(-141)	2900036-021		↕	↕	↕	↕
502	↕	ADPT, TEST POINT, PTA/PEA,	(-141)	2900145-021		↕	↕	↕	↕
501	↕	MOUNTING PLATE, COMPONENT	(-144)	2900007-031		↕	↕	↕	↕
500	AC	MOUNTING PLATE, COMPONENT	(-144)	2900077-021		NAS 9-497	B	II	NOTE 11C

DASH NO.	A	B	C	D	E	F	G	H	J	K	L	M	N	P	R	S	T	U	V	W
541	4.125	1.812	3.250	NA	.125	.062	.12	.156	100 104	.125	1.625	1.140	.890	.640	1.390	.125	.171	.125	1.875	1.687
543	2.125	.968	1.718	NA	.093	.031	.06	.093	100 104	.093	.858	.608	.484	.358	.733	.077	.116	.062	.937	.875
542	2.125	.968	1.718	NA	.093	.031	.06	.093	100 104	.093	.858	.608	.484	.358	.733	.077	.116	.062	.937	.875
540	2.125	.968	1.718	NA	.093	.031	.06	.093	100 104	.093	.858	.608	.484	.358	.733	.077	.116	.062	.937	.875
539	2.000	1.312	1.906	1.375	.078	.048	.078	.093	NA	NA	1.125	.750	.593	.453	1.015	.062	.187	.078	.875	.718
538	2.000	1.312	1.906	1.375	.078	.048	.078	.093	NA	NA	1.125	.750	.593	.453	1.015	.062	.187	.078	.875	.718
537	2.125	.968	1.718	NA	.093	.031	.06	.093	100 104	.093	.858	.608	.484	.358	.733	.077	.116	.062	.937	.875
536	4.125	1.812	3.250	NA	.125	.062	.12	.156	100 104	.125	1.625	1.140	.890	.640	1.390	.125	.171	.125	1.875	1.687
535	2.125	.968	1.718	NA	.093	.031	.06	.093	100 104	.093	.858	.608	.484	.358	.733	.077	.116	.062	.937	.875
534	2.000	1.312	1.906	1.375	.078	.048	.078	.093	NA	NA	1.125	.750	.593	.453	1.015	.062	.187	.078	.875	.718
533	2.125	.968	1.718	NA	.093	.031	.06	.093	100 104	.093	.858	.608	.484	.358	.733	.077	.116	.062	.937	.875
532	4.125	1.812	3.250	↕	.125	.062	.12	.156	100 104	.125	1.625	1.140	.890	.640	1.390	.125	.171	.125	1.875	1.687
531	4.125	1.812	3.250	↕	.125	.062	.12	.156	100 104	.125	1.625	1.140	.890	.640	1.390	.125	.171	.125	1.875	1.687
530	2.125	.968	1.718	↕	.093	.031	.06	.093	100 104	.093	.858	.608	.484	.358	.733	.077	.116	.062	.937	.875
529	2.125	.968	1.718	NA	.093	.031	.06	.093	100 104	.093	.858	.608	.484	.358	.733	.077	.116	.062	.937	.875
527	FOR DIMENSIONS, SEE DASH 500 VALUES BELOW																			
526																				
525	3.000	1.937	2.437	2.312	.125	.031	.125	.156	.125	.125	1.718	1.187	.968	.749	1.452	.093	.295	.090	1.312	1.00
524	2.125	.968	1.718	NA	.093	.031	.06	.093	NA	NA	.858	.608	.484	.358	.733	.062	.140	.062	NA	.968
523	FOR DIMENSIONS, SEE DASH 508 VALUES BELOW																			
522																				
521																				
520																				
519	FOR DIMENSIONS, SEE DASH 504 VALUES BELOW																			
518	FOR DIMENSIONS, SEE DASH 500 VALUES BELOW																			
517	FOR DIMENSIONS, SEE DASH 502 VALUES BELOW																			
516	FOR DIMENSIONS, SEE DASH 508 VALUES BELOW																			
514	FOR DIMENSIONS, SEE DASH 508 VALUES BELOW																			
513	2.125	.968	1.718	NA	.093	.031	.06	.093	100 104	.093	.858	.608	.484	.358	.733	.077	.116	.062	.937	.875
512	FOR DIMENSIONS, SEE DASH 508 VALUES BELOW																			
511																				
510	FOR DIMENSIONS, SEE DASH 500 VALUES BELOW																			
509																				
508	2.000	1.312	1.906	1.375	.078	.048	.078	.093	NA	NA	1.125	.750	.593	.453	1.015	.062	.187	.078	.875	.718
507	FOR DIMENSIONS, SEE DASH 500 VALUES BELOW																			
506	2.125	.968	1.718	NA	.093	.031	.06	.093	100 104	.093	.858	.608	.484	.358	.733	.077	.116	.062	.937	.875
505																				
504																				
503																				
502																				
501	FOR DIMENSIONS, SEE DASH 500 VALUES BELOW																			
500	4.125	1.812	3.250	NA	.125	.062	.12	.156	100 104	.125	1.625	1.140	.890	.640	1.390	.125	.171	.125	1.875	1.687

DASH NO.	Y	Z	AA	AB	AC	AD	AE	AF	AG	AH	AJ	AK	AL	AM	AN	AP	AR
541	2.625	.250	1.562	3.843	.093	NA	NA	.359	.125	.437	3.688	NA	3.687	.093	.40	.25	3.875
543	1.343	.125	.781	1.892	.046	NA	NA	.209	.093	.250	1.875	NA	1.840	.046	.23	.25	1.938
542	1.343	.125	.781	1.892	.046	NA	NA	.209	.093	.250	1.875	NA	1.840	.046	.23	.16	1.938
540	1.343	.125	.781	1.892	.046	NA	NA	.209	.093	.250	1.875	NA	1.840	.046	.23	.16	1.938
539	1.375	.218	NA	NA	.048	.031	.875	.305	.078	.531	1.906	.078	NA	.078	.531	.187	NA
538	1.375	.218	NA	NA	.048	.031	.875	.305	.078	.531	1.906	.078	NA	.078	.531	.157	NA
537	1.343	.125	.781	1.892	.046	NA	NA	.209	.093	.250	1.875	NA	1.840	.046	.23	.16	1.938
536	2.625	.250	1.562	3.843	.093	NA	NA	.359	.125	.437	3.688	NA	3.687	.093	.40	.25	3.875
535	1.343	.125	.781	1.892	.046	NA	NA	.209	.093	.250	1.875	NA	1.840	.046	.23	.16	1.938
534	1.375	.218	NA	NA	.048	.031	.875	.305	.078	.531	1.906	.078	NA	.078	.531	.187	NA
533	1.343	.125	.781	1.892	.046	NA	NA	.209	.093	.250	1.875	NA	1.840	.046	.23	.16	1.938
532	2.625	.250	1.562	3.843	.093	↕	↕	.359	.125	.437	3.688	↕	3.687	.093	.40	.25	3.875
531	2.625	.250	1.562	3.843	.093	↕	↕	.359	.125	.437	3.688	↕	3.687	.093	.40	.25	3.875
530	1.343	.125	.781	1.892	.046	↕	↕	.209	.093	.250	1.875	↕	1.840	.046	.23	.16	1.938
529	1.343	.125	.781	1.892	.046	NA	NA	.209	.093	.250	1.875	NA	1.840	.046	.23	.16	1.938
525	2.000	.250	1.687	2.750	.062	N/A	N/A	.463	.125	.562	2.437	.140	2.562	.090	.468	.359	2.750
524	1.450	.125	NA	1.720	.046	.03	NA	.210	NA	NA	NA	.070	NA	.046	.32	.16	NA
513	1.343	.125	.781	1.892	.046	NA	NA	.209	.093	.250	1.875	NA	1.840	.046	.23	.16	1.938
508	1.375	.218	NA	NA	.048	.031	.875	.305	.078	.531	1.906	.078	NA	.078	.531	.187	NA
506	1.343	.125	.781	1.892	.046	NA	NA	.209	.093	.250	1.875	NA	1.840	.046	.23	.16	1.938
500	2.625	.250	1.562	3.843	.093	NA	NA	.359	.125	.437	3.688	NA	3.687	.093	.40	.25	3.875

(AG) THIS SHEET ADDED

NOTES FOR TABLE
- STYLE A IS FOR G&N SYSTEM
- STYLE B IS FOR GROUND SUPPORT EQUIPMENT
- TYPE I IS WITHOUT MOUNTING HOLES
- TYPE II IS WITH MOUNTING HOLES

QTY REQD	PART OR IDENTIFYING NO.	MATERIAL OR NOTES	NOMENCLATURE OR DESCRIPTION	FIND NO.

LIST OF MATERIALS

NEXT ASSY	USED ON
AS APPLICABLE	

APPLICATION

UNLESS OTHERWISE SPECIFIED
DIMENSIONS ARE IN INCHES
CAPACITOR VALUES ARE IN μf
RESISTOR VALUES ARE IN OHMS
TOLERANCES ON
FRACTIONS ± — DECIMALS ±.005 ANGLES ± —
DO NOT SCALE THIS DRAWING

MATERIAL
SEE NOTE 11

MIT
INSTRUMENTATION LAB
CAMBRIDGE, MASS

DRAWN E. A. Jones 2-15-66
CHECKED 2-15-66
APPROVED
APPROVED
APPROVED MIT A. C. METZGER 5-15-66
APPROVED MSC
DATE

MANNED SPACECRAFT CENTER
HOUSTON, TEXAS

NAMEPLATES,
APOLLO G&N-GSE
(STANDARDS)

CODE IDENT NO. 80230
SIZE E
DRAWING NO. 1004260
SCALE NONE
SHEET 6 OF 6

1004260 BW

NOTICE – WHEN GOVERNMENT DRAWINGS, SPECIFICATIONS, OR OTHER DATA ARE USED FOR ANY PURPOSE OTHER THAN IN CONNECTION WITH A DEFINITELY RELATED GOVERNMENT PROCUREMENT OPERATION, THE UNITED STATES GOVERNMENT THEREBY INCURS NO RESPONSIBILITY NOR ANY OBLIGATION WHATSOEVER; AND THE FACT THAT THE GOVERNMENT MAY HAVE FORMULATED, FURNISHED, OR IN ANY WAY SUPPLIED THE SAID DRAWINGS, SPECIFICATIONS, OR OTHER DATA IS NOT TO BE REGARDED BY IMPLICATION OR OTHERWISE AS IN ANY MANNER LICENSING THE HOLDER OR ANY OTHER PERSON OR CORPORATION, OR CONVEYING ANY RIGHTS OR PERMISSION TO MANUFACTURE, USE, OR SELL ANY PATENTED INVENTION THAT MAY IN ANY WAY BE RELATED THERETO.

NOTES:

1. INTERPRET DRAWING IN ACCORDANCE WITH STANDARDS PRESCRIBED IN MIL-D-70327.
2. DIMENSIONS ON EACH VIEW APPLY TO ALL VIEWS. (WITH THE EXCEPTION OF MOUNTING HOLES).
3. FORMATS ILLUSTATED WILL BE APPLICABLE TO ALL ITEMS REQUIRING NAMEPLATES BELOW END ITEM DESIGNATION (SYSTEMS, ASSEMBLIES, ETC.)
4. PLATE BACKGROUND TO BE LUSTERLESS BLACK PER FED-STD-595, COLOR 37038. BORDER, MARKING AND LETTERING TO BE NATURAL METAL,(ANODIZED ALUMINUM).
5. MARKING METHOD TO BE DIE STAMPING, ETCHING OR ENGRAVING IN ACCORDANCE WITH MIL P 19834.
6. LETTERING STYLE TO BE GOTHIC,(SANS SERIFS), AND NUMBERS TO BE ARABIC.
7. WHERE LOCATING DIMENSIONS ARE NOT SHOWN, CHARACTERS SHALL BE SYMMETRICALLY POSITIONED.
8. IDENTIFY WITH DRAWING NUMBER PER ND 1002019.
9. WHEN "AUTO MARK" METAL MARKING TYPEWRITER IS USED TO ADD DATA TO BLANK SPACES, TYPE SIZE IS TO BE SELECTED FROM DIMENSIONS U, AC AND AM.
10. NASA SYMBOL IS TO BE PROPORTIONAL TO NAMEPLATE IN RATIO OF 1 TO 5 WITH DIMENSION A VALUE AND IS TO HAVE NATURAL BACKGROUND. NASA SYMBOL LETTERS, LETTERING AND FEATHER TO BE BLACK,(OR WHITE FOR SILK SCREENING). WHERE BLACK FEATHER PROTRUDES INTO BLACK BACKGROUND, A MINIMUM OUTLINE OF NATURAL BACKGROUND SHALL EXIST.
11. NAMEPLATES WILL BE APPLIED BY METHODS LISTED BELOW, SHOWN IN ORDER OF PREFERENCE, (I.E., FOR RELIABILITY AND WEIGHT).
    - A - STENCIL OR SILK SCREEN DIRECTLY ON EQUIPMENT USING INK PER SCD 1010920,(WHITE OR BLACK).
    - B - ALUMINUM FOIL,(STYLE A OR B, TYPE I):
      FOIL SHALL BE .0030 ± .0005 THICK PER MIL-A-148.
      FOIL SHALL HAVE NO ADHESIVE BACKING.
      FOIL SHALL BE BONDED PER ND 002219,(METHOD II).
      FOIL SHALL BE CLEAR ANODIZED PER MIL-A-8625, TYPE II.
    - C - PLATE, (STYLE A OR B, TYPE II):
      MATERIAL: QQ-A-250, TEMPER O OR H14, TYPE 1100, ALUMINUM ALLOY, .032 THICK.
      ANODIZE PER MIL-A-8625, TYPE II.
      ALUMINUM PLATE MUST BE FREE FROM BURRS AND SHARP CORNERS, MOUNTED WITH APPLICABLE SIZE FASTENERS.
12. NAMEPLATES SHALL BE CAPABLE OF MEETING APPLICABLE REQUIREMENTS OF MIL-M-13231.
13. ON DIMENSION TABLES SHOWN ON PAGES 2, 3, 4 AND 5, NA MEANS, "NOT APPLICABLE".

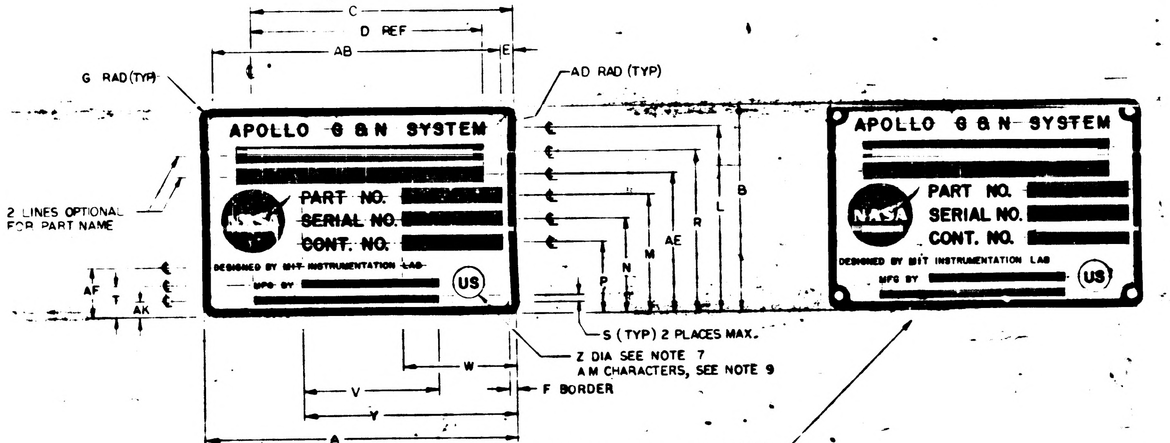

FOR G AND N SYSTEM
STYLE A

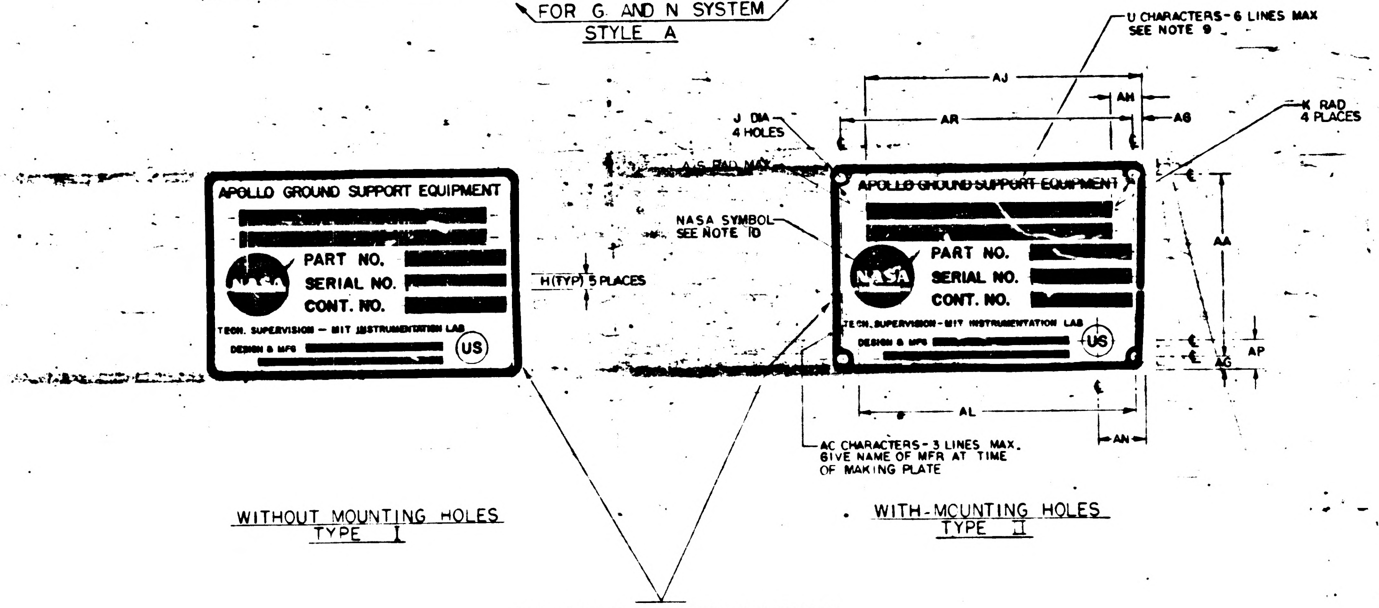

WITHOUT MOUNTING HOLES
TYPE I

WITH MOUNTING HOLES
TYPE II

FOR GROUND SUPPORT EQUIPMENT
STYLE B

REVISIONS

Q2767

SYM	ZONE	DESCRIPTION	BY	CHK	DATE	APPROVED
G		REPLACES REV F WITH CHANGE PER TDRR 20854			[illegible]	
H		REVISED PER TDRR 20892			[illegible]	
J		REVISED PER TDRR 20904			[illegible]	
K		REVISED PER TDRR 21379			[illegible]	
L		REVISED PER TDRR 21410			[illegible]	
M		REVISED PER TDRR 21993				
N		REVISED PER TDRR 22621			[illegible]	
P		REVISED PER TDRR 22671			[illegible]	
R		REVISED PER TDRR 22672				
S		REVISED PER TDRR 22750.				
T		REVISED PER TDRR 22823				
U		REVISED PER TDRR 23072			11-18-65	
V		REVISED PER TDRR 23521			10-27-65	
W		REVISED PER TDRR 23824	RAJ		11-9-65	
Y		REVISED PER TDRR 24018	RAJ		11-16-65	
Z		REVISED PER TDRR 24040	RAJ		11-19-65	
AA		REVISED PER TDRR 24060	RAJ		11-19-65	
AB		REVISED PER TDRR 24868	RAJ		12-22-65	
AC		REVISED PER TDRR 24973	RAJ		1-4-66	
AD		REVISED PER TDRR 25065	RAJ		1-18-66	
AE		REVISED PER TDRR 25672	RAJ		2-4-66	
AF		REVISED PER TDRR 25671	RAJ		2-4-66	
AG		REVISED PER TDRR 26110	RAJ		2-15-66	
AH		REVISED PER TDRR 26372	"		3-16-66	
AJ		REVISED PER TDRR 26425	"		3-16-66	
AK		REVISED PER TDRR 26743	"		3-16-66	
AL		REVISED PER TDRR 26798	"		3-16-66	
AM		REVISED PER TDRR 27168	"		4-7-66	
AN		REVISED PER TDRR 27236	"		4-7-66	
AP		REVISED PER TDRR 27345	"		4-7-66	
AR		REVISED PER TDRR 27417	"		4-7-66	
AS		REVISED PER TDRR 27442	"		4-7-66	
AT		REVISED PER TDRR 27719	"		4-20-66	
AU		REVISED PER TDRR 27880	"		4-20-66	
AV		REVISED PER TDRR 27896	"		4-20-66	
AW		28110	"		5-16-66	
AY		28173	"			
AZ		28131	"			
BA		28124	"			
BB		REVISED PER TDRR 28511	"		5-16-66	
BC		" " " 28949	"		5-24-66	
BD		" " " 29222	"		[illegible]	
BE		" " " 29235	"		6-8-66	
BF		" " " 29322	"		6-30-66	
BG		" " " 29429	"		"	
BH		" " " 29449	"		"	
BJ		" " " 29335	"		"	
BK		" " " 29619	"		"	
BL		" " " 29696	"		"	
BM		REVISION STATUS CHANGED	JSD	NS	7-29-66	
BN		REVISION STATUS CHANGED	JI	RLW	12 AUG 66	
BP		REVISION STATUS CHANGED	JI	RLW	[illegible] AUG 66	
BR		REVISION STATUS CHANGED	JI	RLW	[illegible] AUG 66	
BS		REVISION STATUS CHANGED	GW	RLW	24 AUG 66	
BT		REVISION STATUS CHANGED	CW	RLW	26 AUG 66	
BU		REVISION STATUS CHANGED	EH	JI	8 SEPT 66	
BV		REVISION STATUS CHANGED	JJB	RLW	30 SEP 66	
BW		REVISION STATUS CHANGED	JJB	RLW	30 SEP 66	
BY		REVISION STATUS CHANGED	JJB	RLW	10 OCT 66	

SUGGESTED PROPORTIONS FOR NAMEPLATE DIMENSIONS.
1. SELECT NAMEPLATE LENGTH, DIMENSION "A", TO FIT DESIGN NEEDS.
2. DIMENSIONS B THRU AS ON LINE 1 BELOW ARE PROPORTIONAL TO "A" BY MULTIPLIERS SHOWN IN LINE 2 BELOW.

	A	B	C	D	E	F	G	H	J	K	L	M	N	P	R	S	T
2.	1.000 A	.6563 A	.8438 A	.6875 A	.0391 A	.0240 A	.0391 A	.0469 A	.0547 A	.0469 A	.5938 A	.3750 A	.2969 A	.2187 A	.5079 A	.0313 A	.0938 A

	U	V	W	Y	Z	AA	AB	AC	AD	AE	AF	AG	AH	AJ	AK	AL	AM	AN	AP	AR	AS
2.	.0391 A	.4375 A	.3594 A	.6875 A	.1094 A	.5781 A	.9219 A	.0240 A	.0156 A	.4375 A	.1525 A	.0391 A	.1563 A	.8438 A	.0548 A	.8659 A	.0391 A	.1563 A	.0938 A	.9219 A	.0151 A

Ⓖ REPLACES REV F WITH CHANGE

QTY REQD	PART OR IDENTIFYING NO.	MATERIAL OR NOTES	NOMENCLATURE OR DESCRIPTION	FIND NO.
			—	

LIST OF MATERIALS

NEXT ASSY	USED ON
AS APPLICABLE	

APPLICATION

UNLESS OTHERWISE SPECIFIED
DIMENSIONS ARE IN INCHES
CAPACITOR VALUES ARE IN µf
RESISTOR VALUES ARE IN OHMS
TOLERANCES ON
FRACTIONS ± — DECIMALS ± .005 ANGLES ± —
DO NOT SCALE THIS DRAWING

MATERIAL
SEE NOTE 11

MIT
INSTRUMENTATION LAB
CAMBRIDGE, MASS.

		DATE
DRAWN	R. A. Jones	7/16/65
CHECKED	A. J. Longo	7-22-65
APPROVED		
APPROVED	W. Wyfer	7/22/65
APPROVED MIT	W. Wyfer	7/22/65
APPROVED MSC	[illegible]	[illegible]

MANNED SPACECRAFT CENTER
HOUSTON, TEXAS

NAMEPLATES,
APOLLO G&N—GSE
(STANDARDS)

CODE IDENT NO	SIZE	DRAWING NO.
80230	E	1004260

SCALE NONE
SHEET 1 OF

NOTICE - WHEN GOVERNMENT DRAWINGS, SPECIFICATIONS, OR OTHER DATA ARE USED FOR ANY PURPOSE OTHER THAN IN CONNECTION WITH A DEFINITELY RELATED GOVERNMENT PROCUREMENT OPERATION, THE UNITED STATES GOVERNMENT THEREBY INCURS NO RESPONSIBILITY NOR ANY OBLIGATION WHATSOEVER; AND THE FACT THAT THE GOVERNMENT MAY HAVE FORMULATED, FURNISHED, OR IN ANY WAY SUPPLIED THE SAID DRAWINGS, SPECIFICATIONS, OR OTHER DATA IS NOT TO BE REGARDED BY IMPLICATION OR OTHERWISE AS IN ANY MANNER LICENSING THE HOLDER OR ANY OTHER PERSON OR CORPORATION, OR CONVEYING ANY RIGHTS OR PERMISSION TO MANUFACTURE, USE, OR SELL ANY PATENTED INVENTION THAT MAY IN ANY WAY BE RELATED THERETO.

REVISIONS

SYM	ZONE	DESCRIPTION	DR	CHK	DATE	APPROVED
G		REPLACES REV F WITH CHANGE PER TDRR 20854.				
H		REVISED PER TDRR 20892				
J		REVISED PER TDRR 20904				
K		REVISED PER TDRR 21379				
L		REVISED PER TDRR 21410				
M		REVISED PER TDRR 21993				
N		REVISED PER TDRR 22621				
P		REVISED PER TDRR 22671				
R		REVISED PER TDRR 22672				
S		REVISED PER TDRR 22750				
T		REVISED PER TDRR 22823				
U		REVISED PER TDRR 23072			10-22-65	
V		REVISED PER TDRR 23521			10-27-65	
W		REVISED PER TDRR 23824	RAJ		11-9-65	
Y		REVISED PER TDRR 24018	RAJ		11-16-65	
Z		REVISED PER TDRR 24040	RAJ		11-19-65	
AA		REVISED PER TDRR 24060	RAJ		11-19-65	
AB		REVISED PER TDRR 24868	RAJ		12-22-65	
AC		REVISED PER TDRR 24973	RAJ		1-4-66	
AD		REVISED PER TDRR 25065	RAJ		1-18-66	
AE		REVISED PER TDRR 25672	RAJ		2-4-66	
AF		REVISED PER TDRR 25671	RAJ		2-4-66	
AG		REVISED PER TDRR 26110	RAJ		2-15-66	
AH		REVISED PER TDRR 26372	"		3-16-66	
AJ		REVISED PER TDRR 26425	"		3-16-66	
AK		REVISED PER TDRR 26743	"		3-16-66	
AL		REVISED PER TDRR 26798	"		3-16-66	
AM		REVISED PER TDRR 27168	"		4-8-66	
AN		REVISED PER TDRR 27235	"		4-8-66	
AP		REVISED PER TDRR 27345	"		4-8-66	
AR		REVISED PER TDRR 27417	"		4-8-66	
AS		REVISED PER TDRR 27442	"		4-8-66	
AT		REVISED PER TDRR 27719	"		4-21-66	
AU		REVISED PER TDRR 27880	"		4-21-66	
AV		REVISED PER TDRR 27896	"		4-21-66	
AW		28110	"		5-16-66	
AY		28173	"			
AZ		28131	"			
BA		28124	"			
BB		REVISED PER TDRR 28511	"		5-16-66	
BC		" " " 28949	"		5-24-66	
BD		" " " 29222	"		6-8-66	
BE		" " " 29235	"		"	
BF		" " " 29322	"		6-30-66	
BG		" " " 29429	"		"	
BH		" " " 29449	"		"	
BJ		" " " 29335	"		"	
BK		" " " 29619	"		"	
BL		" " " 29696	"		"	
BM		REVISION STATUS CHANGED	JSD	N.S.	7-29-66	
BN		REVISION STATUS CHANGED	JI	RLW	5 AUG 66	
BP		REVISION STATUS CHANGED	JI	RLW	AUG 66	
BR		REVISION STATUS CHANGED	JI	RLW	AUG 66	
BS		REVISION STATUS CHANGED	GW	RLW	AUG 66	
BT		REVISION STATUS CHANGED	GW	RLW	AUG 66	
BU		REVISION STATUS CHANGED	EH	JI	9 SEP 66	
BV		REVISION STATUS CHANGED	JJB	RLW	30 SEP 66	
BW		" "	JJB	RLW	30 SEP 66	
BY		" " "	JJB	RLW	10 OCT 66	

DASH NO.	P/C	PART NAME	REMARKS	PART NO.	SER. NO.	CONT. NO.	STYLE	TYPE	MATERIAL	A	B	C	D	E	F	G	H	J	K	L	M	N	P	R	S	T	U	V	W	Y	Z	AA	AB	AC	AD	AE	AF	AG	AH	AJ	AK	AL	AM	AN	AP	AR
399 (109)	K																																													
398	K																																													
350	K	ALIGNMENT OPTICAL TELESCOPE (LEM)		NA	NA	NA	A	I	NOTE 11B	4.000	2.625	3.375	2.750	.156	.093	.156	.187	NA	NA	2.312	1.468	1.187	.906	2.031	NA	.375	.156	NA	1.437	2.750	.437	NA	3.688	.062	.062	1.750	.593	NA	.625	3.375	.187	NA	.156	.531	.453	NA
309	K																																													
308	K						B	I	NOTE 11 B	4.000	2.625	3.375	2.750	.156	.093	.156	.187	NA	NA	2.328	1.468	1.187	.906	2.031	.062	.375	.156	NA	1.437	2.750	.437	NA	3.687	.062	.062	1.750	.593	NA	NA	NA	NA	NA	NA	NA	NA	NA
307	K						B	II	NOTE 11 C	4.000	2.625	3.375	2.750	.156	.093	.156	.187	.125	.156	2.328	1.468	1.187	.906	2.031	.062	.375	.156	↓	1.437	2.750	.437	2.312	3.687	.062	NA	1.750	.593	↓	↓	↓	↓	↓	↓	↓	↓	↓
306	K						B	I	NOTE 11 B	2.000	1.312	1.687	.375	.078	.048	.078	.093	NA	NA	1.164	.734	.593	.453	1.015	.048	.171	.078	↓	.718	1.375	.187	NA	NA	.048	.031	.875	.320	↓	↓	↓	↓	↓	↓	↓	↓	↓
305	K						B	II	NOTE 11 C	2.000	1.312	1.687	1.375	.078	.048	.078	.093	.070	.078	1.164	.734	.593	.453	1.015	.048	.171	.078	NA	.718	1.375	.187	.156	1.843	.048	NA	.875	.320	NA	NA	NA	NA	NA	NA	NA	NA	NA
304	K																																													
303	K																																													
302	K																																													
301	K																																													
300	K	OPTICAL UNIT		NA	NA	NA	A	I	NOTE 11 B	2.000	1.312	.675	NA	NA	.048	.078	NA	NA	NA	1.090	.812	.675	.540	.940	NA	.265	NA	NA	NA	1.375	.218	NA	NA	NA	NA	NA	.375	NA	NA	NA	.180	NA	.078	NA	NA	NA
9	K	2 IN AUTOCOLLIMATOR		1001702			B	II	NOTE 11 C	4.000	2.625	3.812	2.750	.156	.093	.156	.187	.125	.156	2.250	1.500	1.187	.906	2.031	.093	.375	.156	1.750	1.437	2.750	.437	2.312	3.687	.062	NA	1.750	.593	.156	1.062	3.812	.156	NA	.156	1.062	.375	3.687
8	K	5 IN AUTOCOLLIMATOR		1017410			B	II	NOTE 11 C	4.000	2.625	3.812	2.750	.156	.093	.156	.187	.125	.156	2.250	1.500	1.187	.906	2.031	.093	.375	.156	1.750	1.437	2.750	.437	2.312	3.687	.062	NA	1.750	.593	.156	1.062	3.812	.156	NA	.156	1.062	.375	3.687
7	K	2½ IN AUTOCOLLIMATOR (SCT)		1017435			B	II	NOTE 11 C	4.000	2.625	3.812	2.750	.156	.093	.156	.187	.125	.156	2.250	1.500	1.187	.906	2.031	.093	.375	.156	1.750	1.437	2.750	.437	2.312	3.687	.062	NA	1.750	.593	.156	1.062	3.812	.156	NA	.156	1.062	.375	3.687
6	K	2½ IN AUTOCOLLIMATOR (SXT)		1017448			B	II	NOTE 11 C	4.000	2.625	3.812	2.750	.156	.093	.156	.187	.125	.156	2.250	1.500	1.187	.906	2.031	.093	.375	.156	1.750	1.437	2.750	.437	2.312	3.687	.062	NA	1.750	.593	.156	1.062	3.812	.156	NA	.156	1.062	.375	3.687
5	K	RETROREFLECTING PRISM ASSEMBLY		1019840			B	I	NOTE 11 B	4.000	2.625	3.812	2.750	.156	.093	.156	.187	NA	NA	2.250	1.500	1.187	.906	2.031	.093	.375	.156	1.750	1.437	2.750	.437	NA	NA	.062	.062	1.750	.593	.156	1.062	3.812	.156	NA	.156	1.062	.375	NA
4	K	S/H SIMULATOR ASSEMBLY		1019896			B	I	NOTE 11 B	4.000	2.625	3.812	2.750	.156	.093	.156	.187	NA	NA	2.250	1.500	1.187	.906	2.031	.093	.375	.156	1.750	1.437	2.750	.437	NA	NA	.062	.062	1.750	.593	.156	1.062	3.812	.156	NA	.156	1.062	.375	NA
3	K	REFERENCE MIRROR		1001767			B	I	NOTE 11 B	2.000	1.312	1.906	1.375	.078	.048	.078	.093	NA	NA	1.125	.750	.593	.453	1.015	.062	.187	.078	.875	.718	1.375	.218	NA	NA	.048	.031	.875	.305	.078	.531	1.906	.078	NA	.078	.531	.187	NA
2	K	2 IN PLANE READING AUTOCOLLIMATOR		1017413			B	I	NOTE 11 B	2.000	1.312	1.906	1.375	.078	.048	.078	.093	NA	NA	1.125	.750	.593	.453	1.015	.062	.187	.078	.875	.718	1.375	.218	NA	NA	.048	.031	.875	.305	.078	.531	1.906	.078	NA	.078	.531	.187	NA
1	K	2 IN AUTOCOLLIMATOR		1001702			B	I	NOTE 11 B	2.000	1.312	1.906	1.375	.078	.048	.078	.093	NA	NA	1.125	.750	.593	.453	1.015	.062	.187	.078	.875	.718	1.375	.218	NA	NA	.048	.031	.875	.305	.078	.531	1.906	.078	NA	.078	.531	.187	NA

Ⓖ REPLACES REV F WITH CHANGE

KOLLSMAN DASH NUMBERS

NOTES FOR TABLE

STYLE A IS FOR G&N SYSTEM.
STYLE B IS FOR GROUND SUPPORT EQUIPMENT.
TYPE I IS WITHOUT MOUNTING HOLES
TYPE II IS WITH MOUNTING HOLES.

QTY REQD	PART OR IDENTIFYING NO.	MATERIAL OR NOTES	NOMENCLATURE OR DESCRIPTION	FIND NO.

LIST OF MATERIALS

NEXT ASSY	USED ON
AS APPLICABLE	

APPLICATION

UNLESS OTHERWISE SPECIFIED
DIMENSIONS ARE IN INCHES
CAPACITOR VALUES ARE IN µf
RESISTOR VALUES ARE IN OHMS
TOLERANCES ON
FRACTIONS ± — DECIMALS ±.005 ANGLES ± —
DO NOT SCALE THIS DRAWING

MATERIAL
SEE NOTE 11

MIT
INSTRUMENTATION LAB
CAMBRIDGE, MASS

DRAWN R.A. Jones 7-16-65
CHECKED 7-22-65
APPROVED
APPROVED W. Kupfer 7/22/65
APPROVED MIT W. Kupfer 7/22/65
APPROVED MSC
DATE

MANNED SPACECRAFT CENTER
HOUSTON, TEXAS

NAMEPLATES
APOLLO G&N-GSE
(STANDANDS)

CODE IDENT NO 80230
SIZE E
DRAWING NO. 1004260
SCALE NONE
SHEET 2 OF 6

SYM	ZONE	DESCRIPTION	DR	CHK	DATE	APPROVED
G		REPLACES REV F WITH CHANGE PER TDRR 20854				
H		REVISED PER TDRR 20892				
J		REVISED PER TDRR 20904				WK
K		REVISED PER TDRR 21379				
L		REVISED PER TDRR 21410				
M		REVISED PER TDRR 21993				
N		REVISED PER TDRR 22621				
P		REVISED PER TDRR 22671				
R		REVISED PER TDRR 22672				
S		REVISED PER TDRR 22750				WK
T		REVISED PER TDRR 22823				
U		REVISED PER TDRR 23072			10-[illegible]-65	
V		REVISED PER TDRR 23521			10 26 65	WK
W		REVISED PER TDRR 23824	RAJ		11 3 65	WK
Y		REVISED PER TDRR 24018	RAJ		11 6 65	WK
Z		REVISED, PER TDRR 24040	RAJ		11-19-65	WK
AA		REVISED PER TDRR 24060	RAJ		11-19-65	WK
AB		REVISED PER TDRR 24868	RAJ		12-22-65	WK
AC		REVISED PER TDRR 24973	RAJ		1-4-66	WK
AD		REVISED PER TDRR 25065	RAJ		1-18-66	
AE		REVISED PER TDRR 25672	RAJ		2-4-66	WK
AF		REVISED PER TDRR 25671	RAJ		2-4-66	WK
AG		REVISED PER TDRR 26110	RAJ		2-15-66	WK
AH		REVISED PER TDRR 26372	"		3 16 66	
AJ		REVISED PER TDRR 26425	"		3-16-66	
AK		REVISED PER TDRR 26743	"		3-16-66	
AL		REVISED PER TDRR 26798	"		3-16-66	
AM		REVISED PER TDRR 27168	"		4-8-66	
AN		REVISED PER TDRR 27235	"		4-8-66	
AP		REVISED PER TDRR 27345	"		4-8-66	
AR		REVISED PER TDRR 27417	"		4-8-66	
AS		REVISED PER TDRR 27442	"		4-8-66	
AT		REVISED PER TDRR 27719	"		4-20-66	WK
AU		REVISED PER TDRR 27880	"		4-20-66	WK
AV		REVISED PER TDRR 27896			4-20-66	WK
AW		28110	"		5-16-66	
AY		28173	"		5-16-66	
AZ		28131	"		5-16-66	
BA		28124	"		5-16-66	
BB		REVISED PER TDRR 28511	"		5-16-66	
BC		" " " 28949	"		5-24-66	
BD		" " " 29222	"		6-8-66	
BE		" " " 29235	"		"	
BF		" " " 29322	"		6-23-66	
BG		" " " 29429	"		"	
BH		" " " 29449	"		"	
BJ		" " " 29335	"		"	
BK		" " " 29619	"		"	
BL		" " " 29696	"		"	
BM		" " " 29802	JSD	N.S.	7-29-66	
BN		REVISION STATUS CHANGED	JI	RLW	[illegible] AUG 66	
BP		REVISED PER TDRR 30168	JI	RLW	[illegible] AUG 66	
BR		REVISION STATUS CHANGED	JI	RLW	31 AUG 66	
BS		REVISION STATUS CHANGED	GW	RLW	26 AUG 66	
BT		REVISION STATUS CHANGED	GW	RLW	26 AUG	
BU		REVISION STATUS CHANGED	EH	JI	[illegible] SEP	
BV		REVISION STATUS CHANGED	JJB	RLW	[illegible] SEP 66	
BW		REVISED PER TDRR 31279	JJB	RLW	30 SEP 66	
BY		REVISION STATUS CHANGED	JJB	RLW	30 OCT 66	

DASH NO.	P/C	PART NAME	REMARKS	PART NO.	SER. NO.	CONT. NO.	STYLE	TYPE	MATERIAL	A	B	C	D	E	F	G	H	J	K
299	R																		
298	R																		
280	R	COMPUTER TEST SET		2014042-051	N A	NAS9 497	B	II	NOTE 11C	FOR DIMENSIONS SEE DASH 18 VALUES BELOW									
279	R	SELF TEST ASSY		2014366-041	N A	NAS9-497	B	I	NOTE 11B	FOR DIMENSIONS SEE DASH 15 VALUES BELOW									
278	R	LOGIC DRAWER ASSY NO. 1		2014036-041	N A	NAS 9 497	B	I	NOTE 11B	FOR DIMENSIONS SEE DASH 17 VALUES BELOW									
277	R	COMPUTER TEST SET		2014042-041	N A	NAS-9-497	B	II	NOTE 11C	FOR DIMENSIONS, SEE DASH 18 VALUES BELOW									
276		DRAWER ASSY - PROGRAM & MONITOR		2014041-041				I	NOTE 11 B	FOR DIMENSIONS, SEE DASH 17 VALUES BELOW									
275		DRAWER ASSY RDC INTERFACE		2014045-031						FOR DIMENSIONS, SEE DASH 15 VALUES BELOW									
274		SELF TEST ASSY		2014366-031						FOR DIMENSIONS, SEE DASH 17 VALUES BELOW									
273		LOGIC DRAWER ASSY NO. 2		2014037-031						FOR DIMENSIONS, SEE DASH 17 VALUES BELOW									
272		DRAWING ASSY PROGRAMMER & MONITOR		2014041-031															
271		LOGIC DRAWER ASSY NO. 1		2014036-031				I	NOTE 11 B										
270		COMPUTER TEST SET		2014042-031				II	NOTE 11C	FOR DIMENSIONS, SEE DASH 18 VALUES BELOW									
269		POWER CONTROL ASSY		2014044-021				I	NOTE 11 B	FOR DIMENSIONS, SEE DASH 17 VALUES BELOW									
268		SELF TEST ASSY		2014366-021						FOR DIMENSIONS, SEE DASH 15 VALUES BELOW									
267		AGC JUNCTION ASSY		[illegible]															
266		POWER CONTROL ASSY		2014079-021															
265		BUFFER CIRCUIT ASSY		2014254-021															
264		DRAWER ASSY X Y INTERFACE		2014040-021															
263		DRAWER ASSY RDC INTERFACE		2014045-021						FOR DIMENSIONS, SEE DASH 17 VALUES BELOW									
262		DRAWER ASSY PROGRAMMER & MONITOR		2014041-021															
261		LOGIC DRAWER ASSY NO. 2		2014037-021															
260		LOGIC DRAWER ASSY NO. 1		2014036-021				I	NOTE 11B										
259		OPERATION CONSOLE		2014024-021				II	NOTE 11C	FOR DIMENSIONS, SEE DASH 18 VALUES BELOW									
258		COMPUTER TEST SET		2014042-021															
257		AUXILIARY CALIBRATION CONSOLE		2014059-021															
256		AGC CALIBRATION CONSOLE		2014049-021					NOTE 11C										
255		AGC HANDLING FIXTURE		2014282-021				I	NOTE 11B	FOR DIMENSIONS, SEE DASH 17 VALUES BELOW									
254		DRAWER ASSY COMP. SIMULATOR		2014048-011				II	NOTE 11C	FOR DIMENSIONS, SEE DASH 18 VALUES BELOW									
253		SHIPPING KIT ASSY, NAV DSKY		2016312-011															
252		SHIPPING KIT ASSY, UNIVERSAL DSKY		2016316-011															
251		SHIPPING KIT ASSY, MAIN DSKY		2016313-011				II	NOTE 11C										
250		AMPLIFIER, REWORK		2014386				I	NOTE 11B	FOR DIMENSIONS, SEE DASH 15 VALUES BELOW									
249		TEMP MONITOR ASSY		2014313-011					NOTE 11C	FOR DIMENSIONS, SEE DASH 17 VALUES BELOW									
248		AGC JUNCTION ASSY		201434-011					NOTE 11B	FOR DIMENSIONS, SEE DASH 15 VALUES BELOW									
247		AC INPUT PANEL ASSY		2014302-011															
246		SELF TEST ASSY		2014392-011						FOR DIMENSIONS, SEE DASH 15 VALUES BELOW									
245		TAPE PUNCH ASSEMBLY		2014039-011															
244		TAPE READER ASSEMBLY		2014038-011	NA	NAS-9-497	B	I	NOTE 11 B										
243																			
242																			
241	R	APOLLO GUIDANCE COMPUTER GROUP		6003001	NA	NAS-9-497	A	I	NOTE 11B	FOR DIMENSIONS, SEE DASH 19 VALUES BELOW									
240		SELF TEST ASSEMBLY		2014366-011	NA		B	I		FOR DIMENSIONS, SEE DASH 15 VALUES BELOW									
239		POWER SUPPLY ASSY-115V., 400 CYCLE		2014207-011						FOR DIMENSIONS, SEE DASH 17 VALUES BELOW									
238		AC INPUT PANEL ASSY		2014043-011															
237		POWER CONTROL ASSY		2014079-011						FOR DIMENSIONS, SEE DASH 15 VALUES BELOW									
236		DRAWER ASSY-XY INTERFACE		2014040-011															
235		DRAWER ASSY RDC INTERFACE		2014045-011															
234		BUFFER CIRCUIT ASSY		2014254-011															
233		CONTROL INTERFACE ASSY		2014204-011															
232		POWER CONTROL ASSY		2014044-011						FOR DIMENSIONS, SEE DASH 17 VALUES BELOW									
231		DRAWER ASSY, PROGRAMMER & MONITOR		2014041-011															
230		CONNECTOR INTERFACE ASSY		2014272-011						FOR DIMENSIONS, SEE DASH 15 VALUES BELOW									
229		CONNECTOR INTERFACE ASSY		2014047-011															
228		ANTENNA TUNING CAPACITOR ASSY		2014209-011															
227		MOUNTING FIXTURE ASSY		2014006-011						FOR DIMENSIONS, SEE DASH 17 VALUES BELOW									
226		POWER SUPPLY ASSY 3 VDC		2014234-011						FOR DIMENSIONS, SEE DASH 15 VALUES BELOW									
225		PANEL ASSY - SIGNAL INTERFACE		2014010-011															
224		OSCILLOSCOPE ASSY		2014232-011															
223		AUXILIARY OUTLET ASSY		2014274-011															
222		FREQUENCY COUNTER		2014233-011															
221		POWER SUPPLY ASSY 10,13, 28 VDC		2014235-011															
220		LOGIC DRAWER ASSY NO. 2		2014037-011						FOR DIMENSIONS, SEE DASH 17 VALUES BELOW									
219		LOGIC DRAWER ASSY NO. 1		2014036-011															
218		COUNTER, ELECTRICAL ASSY		2014288-011						FOR DIMENSIONS, SEE DASH 15 VALUES BELOW									
217		POWER SUPPLY ASSY		2014279-011															
216		TEST MOUNT ASSY		2014257-011															
215		UNIVERSAL DSKY PEDESTAL MOUNT		2014014-011						FOR DIMENSIONS, SEE DASH 17 VALUES BELOW									
214		MAIN DSKY PEDESTAL MOUNT		2014343				I	NOTE 11B										
213		SHIPPING CONTAINER, MAIN DSKY		1006229				II	NOTE 11C	FOR DIMENSIONS, SEE DASH 18 VALUES BELOW									
212		NAV DSKY		1006231															
211		AGC		1006230															
210		UNIVERSAL DSKY		1006422															
209		SHIPPING CONTAINER, AGC		1006421				II	NOTE 11C										
208		UNIVERSAL DSKY HANDLING FIXTURE		20140[illegible]3-011				I	NOTE 11B	FOR DIMENSIONS, SEE DASH 15 VALUES BELOW									
207		NAV DSKY HANDLING FIXTURE		1014377						FOR DIMENSIONS, SEE DASH 17 VALUES BELOW									
206		MAIN DSKY HANDLING FIXTURE		1014334															
205		AGC HANDLING FIXTURE		2014282-011				I	NOTE 11B										
204		OPERATION CONSOLE		2014024-011				II	NOTE 11C	FOR DIMENSIONS, SEE DASH 18 VALUES BELOW									
203		COMPUTER TEST SET		2014042-011		NAS-9-497													
202		DRAWER ASSY, COMPUTER SIMULATOR		2014048-011		FNP[illegible]													
201		AUXILIARY CALIBRATION CONSOLE		2014059-011		NAS-9-497													
200		AGC CALIBRATION CONSOLE		2014049-011	NA		B	II	NOTE 11C										
21																			
20		NA		NA	NA	NA	A	II	NOTE 11C	2.000	1.312	1.687	1.375	.078	.031	.078	.093	.06 .13	.093
19		NA		NA	NA	NA	A	I	NOTE 11B	2.000	1.312	1.687	1.375	.078	.031	.078	.093	NA	NA
18		NA		NA	NA	NA	B	II	NOTE 11C	4.187	1.875	3.469	2.750	.156	.093	.156	.125	.06 .13	.125
17		NA		NA	NA	NA	B	I	NOTE 11B	4.187	1.875	3.469	2.750	.156	.093	.156	.125	NA	NA
16		NA		NA	NA	NA	B	II	NOTE 11C	2.000	1.312	1.687	1.375	.078	.031	.078	.093	.06 .13	.093
15	R	NA		NA	NA	NA	B	I	NOTE 11B	2.000	1.312	1.687	1.375	.078	.031	.078	.093	NA	NA

DASH NO.	L	M	N	P	R	S	T	U	V	W	Y	Z	AA	AB	AC	AD	AE	AF	AG	AH	AJ	AK	AL	AM	AN	AP	AR
21																											
20	1.187	.750	.593	.453	1.015	.062	.187	.078	.875	.718	1.375	.218	1.156	1.843	.048	NA	.875	.305	.078	.312	1.687	.078	NA	.078	.312	.187	1.843
19	1.187	.750	.593	.453	1.015	.062	.187	.078	.875	.718	1.375	.218	NA	NA	.048	.031	.875	.305	.078	.312	1.687	.078	NA	.078	.312	.187	NA
18	1.625	1.032	.844	.656	1.406	.093	.344	.156	1.781	1.531	2.844	.312	1.562	3.875	.062	NA	1.219	.500	.156	.719	3.469	.156	NA	.156	.719	.344	3.875
17	1.625	1.032	.844	.656	1.406	.093	.344	.156	1.781	1.531	2.844	.312	NA	NA	.062	.062	1.219	.500	.156	.719	3.469	.156	NA	.156	.719	.344	NA
16	1.187	.750	.593	.453	1.015	.062	.187	.078	.875	.718	1.375	.218	1.156	1.843	.048	NA	.875	.305	.078	.312	1.687	.078	NA	.078	.312	.187	1.843
15	1.187	.750	.593	.453	1.015	.062	.187	.078	.875	.718	1.375	.218	NA	NA	.048	.031	.875	.305	.078	.312	1.687	.078	NA	.078	.312	.187	NA

THIS SHEET ADDED

G REPLACES REV F WITH CHANGE

RAYTHEON DASH NUMBERS

NOTES FOR TABLE
STYLE A IS FOR G & N SYSTEM
STYLE B IS FOR GROUND SUPPORT EQUIPMENT
TYPE I IS WITHOUT MOUNTING HOLES
TYPE II IS WITH MOUNTING HOLES

QTY REQD	PART OR IDENTIFYING NO.	MATERIAL OR NOTES	NOMENCLATURE OR DESCRIPTION	FIND NO.

LIST OF MATERIALS

NEXT ASSY	USED ON
AS APPLICABLE	

APPLICATION

UNLESS OTHERWISE SPECIFIED
DIMENSIONS ARE IN INCHES
CAPACITOR VALUES ARE IN µf
RESISTOR VALUES ARE IN OHMS
TOLERANCES ON
FRACTIONS ± — DECIMALS ±.005 ANGLES ± —
DO NOT SCALE THIS DRAWING

MATERIAL
SEE NOTE 11

MIT
INSTRUMENTATION LAB
CAMBRIDGE, MASS

DRAWN R A Jones 7-16-65
CHECKED A. J. 7-22-65
APPROVED
APPROVED 2/1/65
APPROVED MIT 2/1/65
APPROVED MSC
DATE

MANNED SPACECRAFT CENTER
HOUSTON, TEXAS

NAMEPLATES,
APOLLO GEN-GSE
(STANDARDS)

CODE IDENT NO. 80230
SIZE E
DRAWING NO. 1004260
SCALE NONE
SHEET OF

1004260BY

SYM	ZONE	DESCRIPTION	DR	CHK	DATE	APPROVED
G		REPLACES REV F WITH CHANGE PER TDRR 20854.				
H		REVISED PER TDRR 20892				
J		REVISED PER TDRR 20904				
K		REVISED PER TDRR 21379				
L		REVISED PER TDRR 21410				
M		REVISED PER TDRR 21993				
N		REVISED PER TDRR 22621				
P		REVISED PER TDRR 22671				
R		REVISED PER TDRR 22672				
S		REVISED PER TDRR 22750				
T		REVISED PER TDRR 22823				
U		REVISED PER TDRR 23072				
V		REVISED PER TDRR 23524			10-26-65	
W		REVISED PER TDRR 23824	RAJ		11-9-65	
Y		REVISED PER TDRR 24018	RAJ		11-16-65	
Z		REVISED PER TDRR 24040	RAJ		11-19-65	
AA		REVISED PER TDRR 24060	RAJ		11-19-65	
AB		REVISED PER TDRR 24868	RAJ		12-2-65	
AC		REVISED PER TDRR 24973	RAJ		1-4-66	
AD		REVISED PER TDRR 25065	RAJ		1-18-66	
AE		REVISED PER TDRR 25672	RAJ		2-4-66	
AF		REVISED PER TDRR 25671	RAJ		2-4-66	
AG		REVISED PER TDRR 26110	RAJ		2-15-66	
AH		REVISED PER TDRR 26372	"		3-16-66	
AJ		REVISED PER TDRR 26425	"		3-16-66	
AK		REVISED PER TDRR 26743	"		3-16-66	
AL		REVISED PER TDRR 26798	"		3-16-66	
AM		REVISED PER TDRR 27168	"		4-8-66	
AN		REVISED PER TDRR 27235	"		4-8-66	
AP		REVISED PER TDRR 27345	"		4-8-66	
AR		REVISED PER TDRR 27417	"		4-8-66	
AS		REVISED PER TDRR 27442	"		4-8-66	
AT		REVISED PER TDRR 27719	"		4-21-66	
AU		REVISED PER TDRR 27880	"		4-21-66	
AV		REVISED PER TDRR 27896	"		4-21-66	
AW		28110	"		5-16-66	
AY		28173	"			
AZ		28131	"			
BA		28124	"			
BB		REVISED PER TDRR 28511	"		5-16-66	
BC		" " " 28949	"		5-24-66	
BD		" " " 29222	"		6-8-66	
BE		" " " 29235	"		"	
BF		" " " 29322	"		6-20-66	
BG		" " " 29429	"		"	
BH		" " " 29449	"		"	
BJ		" " " 29335	"		"	
BK		" " " 29619	"		"	
BL		" " " 29696	"		6-29-66	
BM		REVISION STATUS CHANGED	USD	NS	7-29-66	
BN		REVISION STATUS CHANGED	JI	RLW	11 AUG 66	
BP		REVISION STATUS CHANGED	JI	RLW	11 AUG 66	
BR		REVISED PER TDRR 30241	JI	RLW	11 AUG 66	
BS		REVISION STATUS CHANGED	GW	RLW	26 AUG 66	
BT		REVISION STATUS CHANGED	GW	RLW	26 AUG 66	
BU		REVISION STATUS CHANGED	EH	JI		
BV		REVISION STATUS CHANGED	JJB	RLW	30 SEP 66	
BW		REVISION STATUS CHANGED	JJB	RLW	30 SEP 66	
BY		REVISION STATUS CHANGED	JJB		10 OCT 66	

DASH NO.	P/C	PART NAME	REMARKS	PART NO.	SER. NO.	CONT. NO.	STYLE	TYPE	MATERIAL	A	B	C	D	E	F	G	H	J	K	L	M	N	P	R	S	T	U	V	W	Y	Z	AA	AB	AC	AD	AE	AF	AG	AH	AJ	AK	AL	AM	AN	AP	AR
199	AC	EYEPIECE STOWAGE UNIT		2021255-011			A	I		FOR DIMENSIONS, SEE DASH 100 VALUES BELOW																																				
198	AC	SIGNAL CONDITIONER ASSY C/M		2007234		NAS 9-497			NOTE 11B																																					
197	AC	SIGNAL CONDITIONER ASSY C/M		2007235																																										
196	AC	SIGNAL CONDITIONER ASSY LEM		6007010																																										
195	AC	PSA & SIGNAL CONDITIONER ASSY		6007009			A	I	NOTE 11B																																					
194	AC	PANEL, MONITOR		2900031-031			B	II	NOTE 11C	FOR DIMENSIONS, SEE DASH 141 VALUES BELOW																																				
193	AC	DISTRIBUTION BOX, GSE		2900024-031																																										
192	AC	ANALYZER, OPTICS-INERTIAL		2900023-03						FOR DIMENSIONS, SEE DASH 144 VALUES BELOW																																				
191	AC	TEST CONTROL		2900027-03						FOR DIMENSIONS, SEE DASH 141 VALUES BELOW																																				
190	AC	PANEL, PWR SUP AND LOAD		2900033-031																																										
189	AC	ADPT MODULE, P.S.A.		6900088-011																																										
188	AC	ADPT MODULE, P.S.A.		2901143-011																																										
187	AC	FIXTURE, MTG, PTA/PEA		2900066-02		NAS 9-497	B	II	NOTE 11C																																					
186	AC	ANNUNCIATOR PANEL AND EYEPIECE STORAGE ASSEMBLY		1021255-021						FOR DIMENSIONS, SEE DASH 100 VALUES BELOW																																				
185	AC	ANNUNCIATOR PANEL AND EYEPIECE STORAGE ASSEMBLY		1021255-011			A																																							
184	AC	FIX., HAND., G AND N HARNESS		1901846-041		NAS 9-497	B	II	NOTE 11C	FOR DIMENSIONS, SEE DASH 144 VALUES BELOW																																				
183	AC	INSTALLING TOOL, ELEC. CONN		1902586-011			B	II	NOTE 11C	FOR DIMENSIONS, SEE DASH 102 VALUES BELOW																																				
182	AC	ADPT MODULE, P.S.A.		6900088-011			B	II	NOTE 11C	FOR DIMENSIONS, SEE DASH 141 VALUES BELOW																																				
181	AC	G&N INDICATOR CONTROL PANEL ASSY		2014578-011			A	I	NOTE 11B	3.000	1.938	2.437	NA	.125	.062	.188	.156	NA	NA	1.750	.125	.906	.688	1.500	NA	.281	.125	NA	1.094	2.062	.312	NA	2.500	.062	.125	1.312	.469	NA	NA	NA	.156	NA	.125	.469	.344	NA
180	AC	ADPT MODULE, P.S.A.		1902431-031			B	II		FOR DIMENSIONS, SEE DASH 121 VALUES BELOW																																				
179	AC	MOUNTING PLATE, IMU/PTA		6900083-011						FOR DIMENSIONS, SEE DASH 144 VALUES BELOW																																				
178	AC	MOUNTING PLATE, COMPONENT		6900007-021																																										
177	AC	FIX., MOUNTING, SUBSYSTEM		2900070-021																																										
176	AC	FIX., MOUNTING, G AND N		2900067-021																																										
175	AC	CSL, COOL. AND PWR, G AND N		1902134-031																																										
174	AC	FIX., HAND., C/M AND LEM CDU		2900999-011					NOTE 11C	FOR DIMENSIONS, SEE DASH 141 VALUES BELOW																																				
173	AC	FIX., HANDLING, C/M PSA		2900998-011																																										
172	AC	CAGING ELECTRONICS, GYRO		2900029-02																																										
171	AC	DISTRIBUTION BOX, GSE		2900024-021																																										
170	AC	ANALYZER, OPTICS-INERTIAL		2900023-02						FOR DIMENSIONS, SEE DASH 144 VALUES BELOW																																				
169	AC	ADPT, TESTPOINT, P.S.A.		2900037-021						FOR DIMENSIONS, SEE DASH 141 VALUES BELOW																																				
168	AC	TEST SELECTOR		2900028-021																																										
167	AC	TEST CONTROL		2900027-02																																										
166	AC	PANEL, MONITOR		2900031-021																																										
165	AC	TERM. BOARD STORAGE DRAWER		2900927-011																																										
164	AC	INPUT/OUTPUT PANEL		2900926-011																																										
163	AC	CONTROL PANEL		2900896-011																																										
162	AC	CSL. CAL AND TEST, SCM/PSAAM		2900895-011						FOR DIMENSIONS, SEE DASH 144 VALUES BELOW																																				
161	AC	FIX., LIFT AND HAND., IMU		10[illegible]5462-011						FOR DIMENSIONS, SEE DASH 141 VALUES BELOW																																				
160	AC	FIX., HAND., G AND N HARNESS		1901846-031						FOR DIMENSIONS, SEE DASH 144 VALUES BELOW																																				
159	AC	BATTERY POWER PACK		1900011-031			B	II	NOTE 11C																																					
158	AC	COUPLING DATA UNIT ASSEMBLY C/M		2007222			A	I	NOTE 11B	FOR DIMENSIONS SEE DASH 100 VALUES. BELOW																																				
157	AC	COUPLING DATA UNIT ASSEMBLY - LEM		2007222						2.125	.968	.718	NA	.093	.031	.06	.093	NA	NA	.858	.608	.484	.358	.733	.062	.140	.062	NA	.968	1.450	.125	NA	1.720	.046	.03	NA	.210	NA	NA	NA	.070	NA	.046	.32	.16	NA
156	AC	POWER & SERVO ASSEMBLY C/M		2007200						FOR DIMENSIONS SEE DASH 100 VALUES BELOW																																				
155	AC	PIPA ELECTRONICS ASSEMBLY		2007201																																										
154	AC	PULSE TORQUE ASSEMBLY - LEM		6007000																																										
153	AC	POWER & SERVO ASSEMBLY - LEM		6007200			A	I	NOTE 11B																																					
152	AC	CONT PNL, RSVR CKT TESTER		2900770-011			B	II	NOTE 11C	FOR DIMENSIONS, SEE DASH 141 VALUES BELOW																																				
151	AC	TESTER, RESOLVER CIRCUIT		2900708-011																																										
150	AC	JUNCTION BOX, PSA/GSE		1901933-021						FOR DIMENSIONS, SEE DASH 144 VALUES BELOW																																				
149	AC	BATTERY PACK, LIFTING		2900812-011						FOR DIMENSIONS, SEE DASH 141 VALUES BELOW																																				
148	AC	MOUNTING PLATE, COMPONENT		6900007-011						FOR DIMENSIONS, SEE DASH 144 VALUES BELOW																																				
147	AC	MOUNTING PLATE, COMPONENT		2900677-011																																										
146	AC	CART, TRANS, G AND N		1900009-041																																										
145	AC	CONTAINER, SHIPPING, IMU		1900010-021		NAS 9-497	B	II	NOTE 11C																																					
144	AC	FIX., MOUNTING, G AND N		1902204-021			B	II	NOTE 11C	4.125	1.812	3.250	NA	.125	.062	.12	.156	.188 .194	.125	1.625	1.140	.890	.640	1.390	.125	.171	.125	1.875	1.687	2.625	.250	1.562	3.843	.093	NA	NA	.359	.125	.437	3.688	NA	3.687	.093	.40	.25	3.875
143	AC	CSL, COOL. AND PWR, G AND N		1902134-021						4.125	1.812	3.250		.125	.062	.12	.156		.125	1.625	1.140	.890	.640	1.390	.125	.171	.125	1.875	1.687	2.625	.250	1.562	3.843	.093			.359	.125	.437	3.688		3.687	.093	.40	.25	3.875
142	AC	ANALYZER, OPTICS-INERTIAL		2900023-011						4.125	1.812	3.250		.125	.062	.12	.156		.125	1.625	1.140	.890	.640	1.390	.125	.171	.125	1.875	1.687	2.625	.250	1.562	3.843	.093			.359	.125	.437	3.688		3.687	.093	.40	.25	3.875
141	AC	CONT, TEMP, PORTABLE		2900060-011						2.125	.968	1.718		.093	.031	.06	.093		.093	.858	.608	.484	.358	.733	.077	.116	.062	.937	.875	1.343	.125	.781	1.892	.046			.209	.093	.250	1.875		1.840	.046	.23	.16	1.938
140	AC	TESTER, CKT, IMU/CDU RSVR		2900286-011						4.125	1.812	3.250		.125	.062	.12	.156		.125	1.625	1.140	.890	.640	1.390	.125	.171	.125	1.875	1.687	2.625	.250	1.562	3.843	.093			.359	.125	.437	3.688		3.687	.093	.40	.25	3.875
139	AC	SIMULATOR, LD/SIG, CDU		2900285-011																																										
138	AC	SIMULATOR, LD/SIG, OPTICS		1902023-021																																										
137	AC	FIX., MOUNTING, IMU/NAV BASE		6900003-011																																										
136	AC	FIXTURE, OPTICS/NAV BASE		2900072-011																																										
135	AC	FIX., MOUNTING, SUB SYSTEM		2900070-011																																										
134	AC	FIX., HAND., G AND N HARNESS		2900069-011																																										
133	AC	CNTR, SHIPPING, NAV BASE		2900068-011																																										
132	AC	FIX., MOUNTING, G AND N		2900067-01																																										
131	AC	SIMULATOR, LD/SIG, IMU/CDU		2900062-011																																										
130	AC	TESTER, GYRO WHEEL		2900061-011																																										
129	AC	COOLANT SUPPLY		1902133-021																																										
128	AC	TABLE, ROTARY		1900926-021						4.125	1.812	3.250		.125	.062	.12	.156		.125	1.625	1.140	.890	.640	1.390	.125	.171	.125	1.875	1.687	2.625	.250	1.562	3.843	.093			.359	.125	.437	3.688		3.687	.093	.40	.25	3.875
127	AC	FIX., HAND., OPTICS		2900074-011						2.125	.968	1.718		.093	.031	.06	.093		.093	.858	.608	.484	.358	.733	.077	.116	.062	.937	.875	1.343	.125	.781	1.892	.046			.209	.093	.250	1.875		1.840	.046	.23	.16	1.938
126	AC	FIXTURE, MTG, PTA/PEA.		2900066-011																																										
125	AC	CONT, TEMP, IMU LIFTING		2900063-011																																										
124	AC	FIXTURE, HANDLING, IMU		2900064-011																																										
123	AC	CONT, OPTICS, REMOTE		1902046-021																																										
122	AC	TEST CONTROL		1902009-021																																										
121	AC	ADPT MODULE, P.S.A.		1902431-021																																										
120	AC	BRIDGE, DECADE ERROR		2900128-011																																										
119	AC	PWR SUP, ELECTRONICS		2900012-011																																										
118	AC	PWR SUP, RELAY AND LAMP		1900049-031																																										
117	AC	CONSOLE, OSCILLOGRAPH		1900000-021																																										
116	AC	ADPT MODULE, P.S.A.		1902431-011																																										
115	AC	ADPT, TEST POINT, PTA/PEA.		2900145-011																																										
114	AC	ADPT, TEST POINT, P.S.A.		2900037-011																																										
113	AC	CONTROL, GIMBAL POSITION		2900036-011																																										
112	AC	SELECTOR, SIGNAL, PRIMARY		2900035-011																																										
111	AC	SEL, SIG, OSCILLOGRAPH		2900034-011																																										
110	AC	PANEL, PWR SUP AND LOAD		2900033-011																																										
109	AC	PANEL, MONITOR		2900031-011																																										
108	AC	PANEL, AUXILIARY INPUT		2900030-011																																										
107	AC	CAGING ELECTRONICS, GYRO		2900029-011																																										
106	AC	TEST SELECTOR		2900028-011																																										
105	AC	TEST CONTROL		2900027-011																																										
104	AC	MONITOR AND CONTROL, TEMP		2900026-011																																										
103	AC	DISTRIBUTION BOX, GSE		2900024-011																																										
102	AC	VOLTMETER, DIGITAL		2900007-011			B	II	NOTE 11C	2.125	.968	1.718	NA	.093	.031	.06	.093	.188 .194	.093	.858	.608	.484	.358	.733	.077	.116	.062	.937	.875	1.343	.125	.781	1.892	.046	NA	NA	.209	.093	.250	1.875	NA	1.840	.046	.23	.16	1.938
101	AC	NAVIGATION BASE ASSEMBLY - LEM		6899950		NAS-9-497	A	I	NOTE 11B	2.000	1.312	1.906	1.375	.078	.048	.078	.093	NA	NA	1.125	.750	.593	.453	1.015	.062	.187	.078	.875	.718	1.375	.218	NA	NA	.048	.031	.875	.305	.078	.531	1.906	.078	NA	.078	.531	.187	NA
100	AC	NAVIGATION BASE ASSEMBLY		2899982		NAS-9-497	A	I	NOTE 11B	2.000	1.312	1.906	1.375	.078	.048	.078	.093	NA	NA	1.125	.750	.593	.453	1.015	.062	.187	.078	.875	.718	1.375	.218	NA	NA	.048	.031	.875	.305	.078	.531	1.906	.078	NA	.078	.531	.187	NA

NOTES FOR TABLE
STYLE A IS FOR G&N SYSTEM
STYLE B IS FOR GROUND SUPPORT EQUIPMENT
TYPE I IS WITHOUT MOUNTING HOLES
TYPE II IS WITH MOUNTING HOLES

NOTE: AC DASH NO's. CONT. ON SH.6

THIS SHEET ADDED
Ⓖ REPLACES REV F WITH CHANGE

A C ELECTRONICS DASH NUMBERS

QTY REQD	PART OR IDENTIFYING NO.	MATERIAL OR NOTES	NOMENCLATURE OR DESCRIPTION	FIND NO.

LIST OF MATERIALS

NEXT ASSY	USED ON
AS APPLICABLE	

APPLICATION

UNLESS OTHERWISE SPECIFIED
DIMENSIONS ARE IN INCHES
CAPACITOR VALUES ARE IN µf
RESISTOR VALUES ARE IN OHMS
TOLERANCES ON
FRACTIONS ± — DECIMALS ±.005 ANGLES ± —
DO NOT SCALE THIS DRAWING

MATERIAL
SEE NOTE 11

MIT
INSTRUMENTATION LAB
CAMBRIDGE MASS

DRAWN R. A. Jones 7-16-65
CHECKED A. J. 7-22-65
APPROVED
APPROVED W. Kupfer
APPROVED MIT W. Kupfer
APPROVED MSC
DATE

MANNED SPACECRAFT CENTER
HOUSTON, TEXAS

NAMEPLATES,
APOLLO G&N-GSE
(STANDARDS)

CODE IDENT NO. 80230
SIZE E
DRAWING NO. 1004260
SCALE NONE
SHEET 4 OF 6

499	MIT
498	

REVISIONS

SYM	ZONE	DESCRIPTION	DR	CHK	DATE	APPROVED
G	-	REPLACES REV F WITH CHANGE PER TDRR 20854				
H		REVISED PER TDRR 20892				
J		REVISED PER TDRR 20904				
K		REVISED PER TDRR 21379				
L		REVISED PER TDRR 21410				
M		REVISED PER TDRR 21993				
N		REVISED PER TDRR 22621				
P		REVISED PER TDRR 22671				
R		REVISED PER TDRR 22672				
S		REVISED PER TDRR 22750				
T		REVISED PER TDRR 22823				
U		REVISED PER TDRR 23072				
V		REVISED PER TDRR 23521			10-26-65	
W		REVISED PER TDRR 23624	RAJ		11-9-65	
Y		REVISED PER TDRR 24018	RAJ		11-16-65	
Z		REVISED PER TDRR 24040	RAJ			
AA		REVISED PER TDRR 24060	RAJ			
AB		REVISED PER TDRR 24868	RAJ			
AC		REVISED PER TDRR 24973	RAJ			
AD		REVISED PER TDRR 25065	RAJ		1-18-66	
AE		REVISED PER TDRR 25672			2-4-66	
AF		REVISED PER TDRR 25671	RAJ		2-4-66	
AG		REVISED PER TDRR 26110	RAJ		2-8-66	
AH		REVISED PER TDRR 26372	"		3-16-66	
AJ		REVISED PER TDRR 26425	"		3-16-66	
AK		REVISED PER TDRR 26743	"		3-16-66	
AL		REVISED PER TDRR 26798	"		3-16-66	
AM		REVISED PER TDRR 27168	"		4-7-66	
AN		REVISED PER TDRR 27235	"		4-7-66	
AP		REVISED PER TDRR 27345	"		4-7-66	
AR		REVISED PER TDRR 27417	"		4-7-66	
AS		REVISED PER TDRR 27442	"		4-7-66	
AT		REVISED PER TDRR 27719	"		4-20-66	
AU		REVISED PER TDRR 27880	"		4-20-66	
AV		REVISED PER TDRR 27896	"		4-20-66	
AW		28110	"		5-16-66	
AY		28173	"			
AZ		28131	"			
BA		28124	"			
BB		REVISED PER TDRR 28511	"		5-16-66	
BC		" " " 28949	"		5-24-66	
BD		" " " 29222	"		6-8-66	
BE		" " " 29235	"		"	
BF		" " " 29322	"		6-24-66	
BG		" " " 29429	"		"	
BH		" " " 29449	"		"	
BJ		" " " 29335	"		"	
BK		" " " 29619	"		"	
BL		" " " 29696	"		6-28-66	
BM		REVISION STATUS CHANGED	JSB		7-29-66	
BN		REVISION STATUS CHANGED				
BP		REVISION STATUS CHANGED				
BR		REVISION STATUS CHANGED				
BS		REVISION STATUS CHANGED	GW			
BT		REVISION STATUS CHANGED	GW			
BU		REVISION STATUS CHANGED				
BV		REVISION STATUS CHANGED				
BW		REVISION STATUS CHANGED	JJB			
BY		REVISION STATUS CHANGED	JJB			

DASH NO.	P/C	PART NAME	REMARKS	PART NO.	SER. NO.	CONT. NO.	STYLE	TYPE	MATERIAL	A	B	C	D	E	F	G	H	J	K	L	M	N	P	R	S	T	U	V	W	Y	Z	AA	AB	AC	AD	AE	AF	AG	AH	AJ	AK	AL	AM	AN	AP	AR
401	MIT	COMPUTER ASSY		2003100		NAS-9-497	A	I	NOTE 11 B	2.000	1.312	.906	1.375	.078	.048	.078	.093	NA	NA	1.125	.750	.593	.453	1.015	.062	.187	.078	.875	.718	1.375	.218	NA	NA	.048	.031	.875	.305	.078	.531	1.906	.078	NA	.078	.531	.187	NA
400	MIT	LIFTING SLING-G&N INST. QUAL. FIX. & AZM REF. FIX.		1021640		NAS-9-4065	B	II	NOTE 11 C	2.000	1.312	1.687	1.375	.078	.048	.078	.093	[illegible]	.093	1.187	.750	.593	.453	1.015	.062	.187	.078	.875	.718	1.375	.218	1.156	1.843	.048	NA	.875	.305	.078	.312	1.687	.110	1.830	.070	.275	.180	1.844

MIT DASH NUMBERS

NOTES FOR TABLE
STYLE A IS FOR G&N SYSTEM
STYLE B IS FOR GROUND SUPPORT EQUIPMENT
TYPE I IS WITHOUT MOUNTING HOLES
TYPE II IS WITH MOUNTING HOLES

THIS SHEET ADDED
Ⓖ REPLACES REV F WITH CHANGE

QTY REQD	PART OR IDENTIFYING NO.	MATERIAL OR NOTES	NOMENCLATURE OR DESCRIPTION	FIND NO.

LIST OF MATERIALS

AS APPLICABLE	
NEXT ASSY	USED ON

APPLICATION

UNLESS OTHERWISE SPECIFIED
DIMENSIONS ARE IN INCHES
CAPACITOR VALUES ARE IN µf
RESISTOR VALUES ARE IN OHMS
TOLERANCES ON
FRACTIONS ± — DECIMALS ±.005 ANGLES ± —
DO NOT SCALE THIS DRAWING

MATERIAL
SEE NOTE 11

MIT
INSTRUMENTATION LAB
CAMBRIDGE, MASS.

DRAWN R A Jones 7-16-65
CHECKED
APPROVED
APPROVED
APPROVED MIT
APPROVED MSC
DATE

MANNED SPACECRAFT CENTER
HOUSTON, TEXAS

NAMEPLATES,
APOLLO G&N-GSE
(STANDARDS)

CODE IDENT NO 80230
SIZE E
DRAWING NO. 1004260
SCALE NONE
SHEET

1004260 BY

NOTICE - WHEN GOVERNMENT DRAWINGS, SPECIFICATIONS, OR OTHER DATA ARE USED FOR ANY PURPOSE OTHER THAN IN CONNECTION WITH A DEFINITELY RELATED GOVERNMENT PROCUREMENT OPERATION, THE UNITED STATES GOVERNMENT THEREBY INCURS NO RESPONSIBILITY NOR ANY OBLIGATION WHATSOEVER; AND THE FACT THAT THE GOVERNMENT MAY HAVE FORMULATED, FURNISHED, OR IN ANY WAY SUPPLIED THE SAID DRAWINGS, SPECIFICATIONS, OR OTHER DATA IS NOT TO BE REGARDED BY IMPLICATION OR OTHERWISE AS IN ANY MANNER LICENSING THE HOLDER OR ANY OTHER PERSON OR CORPORATION, OR CONVEYING ANY RIGHTS OR PERMISSION TO MANUFACTURE, USE, OR SELL ANY PATENTED INVENTION THAT MAY IN ANY WAY BE RELATED THERETO.

REVISIONS 02768

SYM	ZONE	DESCRIPTION	DR	CHK	DATE	APPROVED
AG		CHANGED NUMBER OF SHEETS FROM 5 TO 6 PER TDRR 26110.	RAJ		2-15-66	
AH		REVISED PER TDRR 26372	"		3-16-66	
AJ		REVISED PER TDRR 26425	"		3-16-66	
AK		REVISED PER TDRR 26743	"		3-16-66	
AL		REVISED PER TDRR 26798	"		3-16-66	
AM		REVISED PER TDRR 27[illegible]68	"		4-7-66	
AN		REVISED PER TDRR 27235			4-7-66	
AP		REVISED PER TDRR 27345	"		4-7-66	
AR		REVISED PER TDRR 27417	"		4-7-66	
AS		REVISED PER TDRR 27442	"		4-7-66	
AT		REVISED PER TDRR 27719	"		4-20-66	
AU		REVISED PER TDRR 27880	"		4-20-66	
AV		REVISED PER TDRR 27896	"		4-20-66	
AW		28110	"		5-16-66	
AY		28173	"		5-16-66	
AZ		28131	"		5-16-66	
BA		28124	"		5-16-66	
BB		REVISED PER TDRR 28511	"		5-16-66	
BC		" " " 28949	"		5-24-66	
BD		" " " 29222	"		6-8-66	
BE		" " " 29235	"		"	
BF		" " " 29322	"		6-24-66	
BG		" " " 29429	"		"	
BH		" " 29449	"		"	
BJ		" " " 29335	"		"	
BK		" " " 29619	"		"	
BL		" " " 29696	"		6-29-66	
BM		REVISION STATUS CHANGED	JSD	N.S.	7-29-66	
BN		REVISED PER TDRR 29974	JI	RLW	22 AUG 66	
BP		REVISION STATUS CHANGED	JI	RLW	22 AUG 66	
BR		REVISION STATUS CHANGED	JI	RLW	23 AUG 66	
BS		REVISED PER TDRR 30530	GW	RLW	26 AUG 66	
BT		REVISED PER TDRR 30543	GW	RLW	26 AUG 66	
BU		REVISED PER TDRR 30898	EH	JI	9 SEP 66	
BV		REVISED PER TDRR 31241	JJB	RLW	[illegible]	
BW		REVISION STATUS CHANGED	JJB	RLW	30 SEP 66	
BY		REVISED PER TDRR 31341	JJB	RLW	10 OCT 66	

DASH NO.	P/C	PART NAME	REMARKS	PART NO.	SER NO.	CONT NO.	STYLE	TYPE	MATERIAL	A	B	C	D	E	F	G	H	J	K	L	M	N	P	R	S	T	U	V	W	Y	Z	AA	AB	AC	AD	AE	AF	AG	AH	AJ	AK	AL	AM	AN	AP	AR
599	AC																																													
598	AC																																													
546		FIX, HAND., C/M AND LEM CDU		2900999-021		NAS-9-497	B	II	NOTE 11C	2.125	.968	1.718	NA	.093	.031	.06	.093	.100 .104	.093	.858	.608	.484	.358	.733	.077	.116	.062	.937	.875	1.343	.125	.781	1.892	.046	NA	NA	.209	.093	.250	1.875	NA	1.840	.046	.23	.16	1.938
541	AC	FIXTURE, MOUNTING, IMU		2900000-021		NAS 9-497	B	II	NOTE 11C	4.125	1.812	3.250	NA	.125	.062	.12	.156	.100 .104	.125	1.625	1.140	.890	.640	1.390	.125	.171	.125	1.875	1.687	2.625	.250	1.562	3.843	.093	NA	NA	.359	.125	.437	3.688	NA	3.687	.093	.40	.25	3.875
543	AC	PANEL, MONITOR		2900031-041		NAS9-497	B	II	NOTE 11C	2.125	.968	1.718	NA	.093	.031	.06	.093	.100 .104	.093	.858	.608	.484	.358	.733	.077	.116	.062	.937	.875	1.343	.125	.781	1.892	.046	NA	NA	.209	.093	.250	1.875	NA	1.840	.046	.23	.25	1.938
542	AC	BATTERY PACK, LIFTING		2900812-021		NAS 9-497	B	II	NOTE 11C	2.125	.968	1.718	NA	.093	.031	.06	.093	.100 .104	.093	.858	.608	.484	.358	.733	.077	.116	.062	.937	.875	1.343	.125	.781	1.892	.046	NA	NA	.209	.093	.250	1.875	NA	1.840	.046	.23	.16	1.938
540	AC	ADPT, TEST POINT, P.S.A.		2900037-031		NAS 9-497	B	II	NOTE 11C	2.125	.968	1.718	NA	.093	.031	.06	.093	.100 .104	.093	.858	.608	.484	.358	.733	.077	.116	.062	.937	.875	1.343	.125	.781	1.892	.046	NA	NA	.209	.093	.250	1.875	NA	1.840	.046	.23	.16	1.938
539	AC	ANNUNCIATOR PANEL AND EYEPIECE STORAGE ASSEMBLY		1021255-041			A	I	NOTE 11B	2.000	1.312	1.906	1.375	.078	.048	.078	.093	NA	NA	1.125	.750	.593	.453	1.015	.062	.187	.078	.875	.718	1.375	.218	NA	NA	.048	.031	.875	.305	.078	.531	1.906	.078	NA	.078	.531	.187	NA
538	AC	ANNUNCIATOR PANEL AND EYEPIECE STORAGE ASSEMBLY		1021255-031			A	I	NOTE 11B	2.000	1.312	1.906	1.375	.078	.048	.078	.093	NA	NA	1.125	.750	.593	.453	1.015	.062	.187	.078	.875	.718	1.375	.218	NA	NA	.048	.031	.875	.305	.078	.531	1.906	.078	NA	.078	.531	.187	NA
537	AC	TEST SELECTOR		2900028-031			B	II	NOTE 11C	2.125	.968	1.718	NA	.093	.031	.06	.093	.100 .104	.093	.858	.608	.484	.358	.733	.077	.116	.062	.937	.875	1.343	.125	.781	1.892	.046	NA	NA	.209	.093	.250	1.875	NA	1.840	.046	.23	.16	1.938
536	AC	ANALYZER, OPTICS - INERTIAL		2900023-041			B	II	NOTE 11C	4.125	1.812	3.250	NA	.125	.062	.12	.156	.100 .104	.125	1.625	1.140	.890	.640	1.390	.125	.171	.125	1.875	1.687	2.625	.250	.562	3.843	.093	NA	NA	.359	.125	.437	3.688	NA	3.687	.093	.40	.25	3.875
535	AC	CONT, TEMP, PORTABLE		2900060-021			B	II	NOTE 11C	2.125	.968	1.718	NA	.093	.031	.06	.093	.100 .104	.093	.858	.608	.484	.358	.733	.077	.116	.062	.937	.875	1.343	.125	.781	1.892	.046	NA	NA	.209	.093	.250	1.875	NA	1.840	.046	.23	.16	1.938
534	AC	COMPUTER CONT & RETICLE DIMMER		6014512-021			A	I	NOTE 11B	2.000	1.312	1.906	1.375	.078	.048	.078	.093	NA	NA	1.125	.750	.593	.453	1.015	.062	.187	.078	.875	.718	1.375	.218	NA	NA	.048	.031	.875	.305	.078	.531	1.906	.078	NA	.078	.531	.187	NA
533	AC	ADPT MODULE, P.S.A.		1902431-041			B	II	NOTE 11C	2.125	.968	1.718	NA	.093	.031	.06	.093	.100 .104	.093	.858	.608	.484	.358	.733	.077	.116	.062	.937	.875	1.343	.125	.781	1.892	.046	NA	NA	.209	.093	.250	1.875	NA	1.840	.046	.23	.16	1.938
532	AC	TRAY BREAKOUT, 105 PIN		1900807-021						4.125	1.812	3.250		.125	.062	.12	.156	.100 .104	.125	1.625	1.140	.890	.640	1.390	.125	.171	.125	1.875	1.687	2.625	.250	1.562	3.843	.093			.359	.125	.437	3.688		3.687	.093	.40	.25	3.875
531	AC	TRAY BREAKOUT, 84 PIN		1900806-021						4.125	1.812	3.250		.125	.062	.12	.156	.100 .104	.125	1.625	1.140	.890	.640	1.390	.125	.171	.125	1.875	1.687	2.625	.250	1.562	3.843	.093			.359	.125	.437	3.688		3.687	.093	.40	.25	3.875
530	AC	HEAT SINK - TRAY EXTENDER		1900808-021						2.125	.968	1.718		.093	.031	.06	.093	.100 .104	.093	.858	.608	.484	.358	.733	.077	.116	.062	.937	.875	1.343	.125	.781	1.892	.046			.209	.093	.250	1.875		1.840	.046	.23	.16	1.938
529	AC	TESTER, FAILURE INDICATOR		1900809-021						2.125	.968	1.718	NA	.093	.031	.06	.093	.100 .104	.093	.858	.608	.484	.358	.733	.077	.116	.062	.937	.875	1.343	.125	.781	1.892	.046	NA	NA	.209	.093	.250	1.875	NA	1.840	.046	.23	.16	1.938
527	AC	FIX., MOUNTING, G AND N	(-44)	1902204-021						FOR DIMENSIONS, SEE DASH 500 VALUES BELOW																																				
526	AC	FIX., MOUNTING, G AND N	(-144)	2900067-031																																										
525	AC	PORTABLE TEMP. CONTROLLER		1900496-021			B	II	NOTE 11C	3.000	1.937	2.437	2.312	.125	.031	.125	.156	.125	.125	1.718	1.187	.968	.749	1.452	.093	.295	[illegible]	1.312	1.00	2.000	.250	1.687	2.750	.062	N/A	N/A	.463	.125	.562	2.437	.140	2.562	.090	.468	.359	2.750
524	AC	POWER, SERVO AND THERMOCOUPLE ASSEMBLY C/M		2010743			A	I	NOTE 11B	2.125	.968	1.718	NA	.093	.031	.06	.093	NA	NA	.858	.608	.484	.358	.733	.062	.140	.062	NA	.968	1.450	.125	NA	1.720	.046	.03	NA	.210	NA	NA	NA	.070	NA	.046	.32	.16	NA
523	AC	PULSE TORQUE AND THERMOCOUPLE ASSEMBLY - LEM		6010656						FOR DIMENSIONS, SEE DASH 508 VALUES BELOW																																				
522	AC	COUPLING DATA UNIT AND THERMOCOUPLE ASSEMBLY - LEM		2010744																																										
521	AC	COUPLING DATA UNIT AND THERMOCOUPLE ASSEMBLY - C/M		2010744																																										
520	AC	PIPA ELECTRONICS AND THERMOCOUPLE ASSEMBLY		2010745			A	I	NOTE 11B																																					
519	AC	FIXTURE, HANDLING, LEM-PSA	(-141)	6900129-011			B	II	NOTE 11C	FOR DIMENSIONS, SEE DASH 504 VALUES BELOW																																				
518	AC	JUNCTION BOX, GSE-PSA	(-144)	1901933-031			B	II	NOTE 11C	FOR DIMENSIONS, SEE DASH 500 VALUES BELOW																																				
517	AC	FIX., HAND., OPTICS INSTL.	(-141)	2901380-011			B	II	NOTE 11C	FOR DIMENSIONS, SEE DASH 502 VALUES BELOW																																				
516	AC	POWER, SERVO AND THERMOCOUPLE ASSEMBLY-LEM		6010655		NAS 9-497	A	I	NOTE 11B	FOR DIMENSIONS, SEE DASH 508 VALUES BELOW																																				
514	AC	SIGNAL COND. ASSY LEM OPER.	(-100)	6007013		NAS-9-497	A	I	NOTE 11B	FOR DIMENSIONS, SEE DASH 508 VALUES BELOW																																				
513		JUMPER, BY-PASS	(-141)	1021616			B	II	NOTE 11C	2.125	.968	1.718	NA	.093	.031	.06	.093	.100 .104	.093	.858	.608	.484	.358	.733	.077	.116	.062	.937	.875	1.343	.125	.781	1.892	.046	NA	NA	.209	.093	.250	1.875	NA	1.840	.046	.23	.16	1.938
512		COUPLING DATA UNIT ASSEMBLY C/M	(-100)	2007322-011			A	I	NOTE 11B	FOR DIMENSIONS, SEE DASH 508 VALUES BELOW																																				
511		COUPLING DATA UNIT ASSEMBLY - LEM	(-100)	2007322-021																																										
510		BATTERY POWER PACK	(-144)	1900011-041			B	II	NOTE 11C	FOR DIMENSIONS, SEE DASH 500 VALUES BELOW																																				
509		JUNCTION BOX, P.S.A./G.S.E.	(-144)	1902195-021			B	II	NOTE 11C																																					
508		NAVIGATION BASE ASSEMBLY - LEM	✓ (-100)	6899980			A	I	NOTE 11B	2.000	1.312	1.906	1.375	.078	.048	.078	.093	NA	NA	1.125	.750	.593	.453	1.015	.062	.187	.078	.875	.718	1.375	.218	NA	NA	.048	.031	.875	.305	.078	.531	1.906	.078	NA	.078	.531	.187	NA
507		CSL, COOL. AND PWR, G AND N	(-144)	1902134-041			B	II	NOTE 11C	FOR DIMENSIONS, SEE DASH 500 VALUES BELOW																																				
506		BREAKOUT BOX, CABLE ADAPTER	(-141)	2901011-011						2.125	.968	1.718	NA	.093	.031	.06	.093	.100 .104	.093	.858	.608	.484	.358	.733	.077	.116	.062	.937	.875	1.343	.125	.781	1.892	.046	NA	NA	.209	.093	.250	1.875	NA	1.840	.046	.23	.16	1.938
505		MONITOR AND CONTROL, TEMP	(-141)	2900026-021																																										
504		PWR SUP, GUIDANCE SYSTEM	✓ (-141)	1900033-021																																										
503		CONTROL, GIMBAL POSITION	(-141)	2900036-021																																										
502		ADPT, TEST POINT, PTA/PEA.	(-141)	2900145-021																																										
501		MOUNTING PLATE, COMPONENT	(-144)	6900007-031		NAS 9-497	B	II	NOTE 11C	FOR DIMENSIONS, SEE DASH 500 VALUES BELOW																																				
500	AC	MOUNTING PLATE, COMPONENT	✓ (-144)	[illegible]						4.125	1.812	3.250	NA	.125	.062	.12	.156	.100 .104	.25	.625	1.140	.890	.640	1.390	.125	.171	.25	1.875	.687	2.625	.250	.562	3.843	.093	NA	NA	.359	.125	.437	3.688	NA	3.687	.093	.40	.25	3.875

A C ELECTRONICS DASH NUMBERS

(AG) THIS SHEET ADDED

NOTES FOR TABLE
STYLE A IS FOR G&N SYSTEM
STYLE B IS FOR GROUND SUPPORT EQUIPMENT
TYPE I IS WITHOUT MOUNTING HOLES
TYPE II IS WITH MOUNTING HOLES

QTY REQD	PART OR IDENTIFYING NO.	MATERIAL OR NOTES	NOMENCLATURE OR DESCRIPTION	FIND NO.

LIST OF MATERIALS

NEXT ASSY	USED ON
AS APPLICABLE	

APPLICATION

UNLESS OTHERWISE SPECIFIED
DIMENSIONS ARE IN INCHES
CAPACITOR VALUES ARE IN µf
RESISTOR VALUES ARE IN OHMS
TOLERANCES ON
FRACTIONS ± — DECIMALS ±.005 ANGLES ± —
DO NOT SCALE THIS DRAWING

MATERIAL
SEE NOTE 11

MIT
INSTRUMENTATION LAB
CAMBRIDGE MASS

DRAWN R. L. Jones 2-15-66
CHECKED 2-15-66
APPROVED
APPROVED
APPROVED MIT 5-16-66
APPROVED MSC
DATE

MANNED SPACECRAFT CENTER
HOUSTON, TEXAS

NAMEPLATES,
APOLLO G&N-GSE
(STANDARDS)

CODE IDENT NO. 80230
SIZE E
DRAWING NO. 1004260
SCALE NONE
SHEET 6 OF 6

NOTICE – WHEN GOVERNMENT DRAWINGS, SPECIFICATIONS, OR OTHER DATA ARE USED FOR ANY PURPOSE OTHER THAN IN CONNECTION WITH A DEFINITELY RELATED GOVERNMENT PROCUREMENT OPERATION, THE UNITED STATES GOVERNMENT THEREBY INCURS NO RESPONSIBILITY NOR ANY OBLIGATION WHATSOEVER, AND THE FACT THAT THE GOVERNMENT MAY HAVE FORMULATED, FURNISHED, OR IN ANY WAY SUPPLIED THE SAID DRAWINGS, SPECIFICATIONS OR OTHER DATA IS NOT TO BE REGARDED BY IMPLICATION OR OTHERWISE AS IN ANY MANNER LICENSING THE HOLDER OR ANY OTHER PERSON OR CORPORATION, OR CONVEYING ANY RIGHTS OR PERMISSION TO MANUFACTURE, USE, OR SELL ANY PATENTED INVENTION THAT MAY IN ANY WAY BE RELATED THERETO.

NOTES:

1. INTERPRET DRAWING IN ACCORDANCE WITH STANDARDS PRESCRIBED IN MIL-D-70327.
2. DIMENSIONS ON EACH VIEW APPLY TO ALL VIEWS. (WITH THE EXCEPTION OF MOUNTING HOLES).
3. FORMATS ILLUSTATED WILL BE APPLICABLE TO ALL ITEMS REQUIRING NAMEPLATES BELOW END ITEM DESIGNATION (SYSTEMS, ASSEMBLIES, ETC.)
4. PLATE BACKGROUND TO BE LUSTERLESS BLACK PER FED-STD-595, COLOR 37038. BORDER, MARKING AND LETTERING TO BE NATURAL METAL,(ANODIZED ALUMINUM).
5. MARKING METHOD TO BE DIE STAMPING, ETCHING OR ENGRAVING IN ACCORDANCE WITH MIL P 19834.
6. LETTERING STYLE TO BE GOTHIC,(SANS SERIFS), AND NUMBERS TO BE ARABIC.
7. WHERE LOCATING DIMENSIONS ARE NOT SHOWN, CHARACTERS SHALL BE SYMMETRICALLY POSITIONED.
8. IDENTIFY WITH DRAWING NUMBER PER ND1002019.
9. WHEN "AUTO MARK" METAL MARKING TYPEWRITER IS USED TO ADD DATA TO BLANK SPACES, TYPE SIZE IS TO BE SELECTED FROM DIMENSIONS U, AC AND AM.
10. NASA SYMBOL IS TO BE PROPORTIONAL TO NAMEPLATE IN RATIO OF 1 TO 5 WITH DIMENSION A VALUE AND IS TO HAVE NATURAL BACKGROUND. NASA SYMBOL LETTERS LETTERING AND FEATHER TO BE BLACK,(OR WHITE FOR SILK SCREENING). WHERE BLACK FEATHER PROTRUDES INTO BLACK BACKGROUND, A MINIMUM OUTLINE OF NATURAL BACKGROUND SHALL EXIST.
11. NAMEPLATES WILL BE APPLIED BY METHODS LISTED BELOW, SHOWN IN ORDER OF PREFERENCE, (I.E., FOR RELIABILITY AND WEIGHT).
    - A - STENCIL OR SILK SCREEN DIRECTLY ON EQUIPMENT USING INK PER SCD 1010920,(WHITE OR BLACK).
    - B - ALUMINUM FOIL,(STYLE A OR B, TYPE I):
      FOIL SHALL BE .0030 ± .0005 THICK PER MIL-A-148.
      FOIL SHALL HAVE NO ADHESIVE BACKING.
      FOIL SHALL BE BONDED PER ND 1002219,(METHOD II).
      FOIL SHALL BE CLEAR ANODIZED PER MIL-A-8625, TYPE II.
    - C - PLATE, (STYLE A OR B, TYPE II):
      MATERIAL: QQ-A-250, TEMPER O OR H14, TYPE 1100, ALUMINUM ALLOY, .032 THICK.
      ANODIZE PER MIL-A-8625, TYPE II.
      ALUMINUM PLATE MUST BE FREE FROM BURRS AND SHARP CORNERS, MOUNTED WITH APPLICABLE SIZE FASTENERS.
12. NAMEPLATES SHALL BE CAPABLE OF MEETING APPLICABLE REQUIREMENTS OF MIL-M-13231.
13. ON DIMENSION TABLES SHOWN ON PAGES 2, 3, 4 AND 5, NA MEANS, "NOT APPLICABLE".

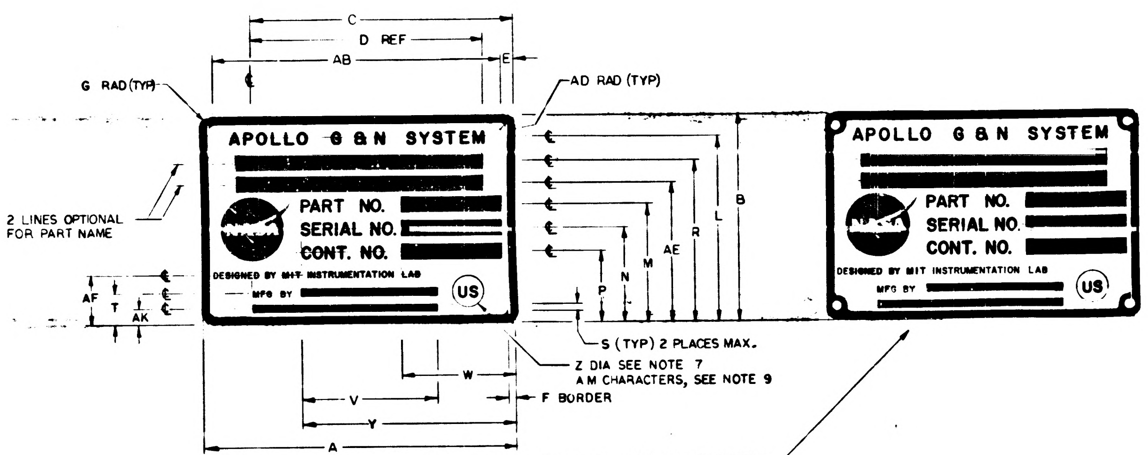

FOR G AND N SYSTEM
STYLE A

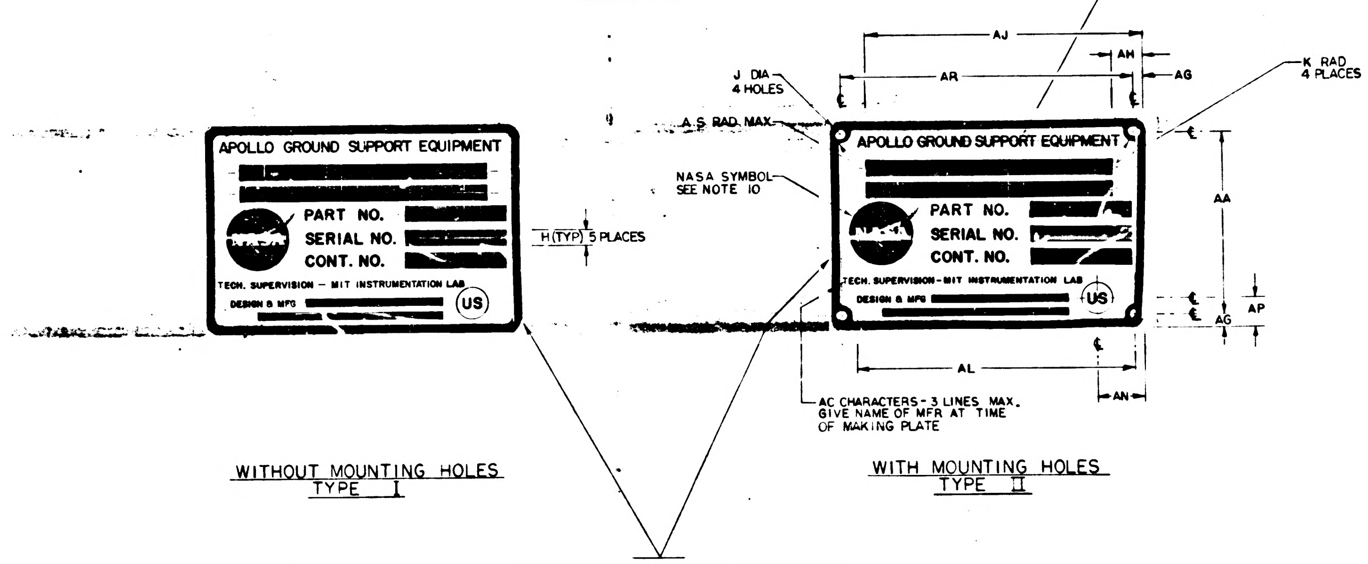
U CHARACTERS - 6 LINES MAX SEE NOTE 9
AJ
AR
AH
AG
J DIA 4 HOLES
AS RAD. MAX.
K RAD 4 PLACES
NASA SYMBOL SEE NOTE 10
APOLLO GROUND SUPPORT EQUIPMENT
PART NO.
SERIAL NO.
CONT. NO.
TECH. SUPERVISION – MIT INSTRUMENTATION LAB
DESIGN & MFG
US
H (TYP) 5 PLACES
AA
AP
AG
AL
AN
AC CHARACTERS - 3 LINES MAX. GIVE NAME OF MFR AT TIME OF MAKING PLATE
WITHOUT MOUNTING HOLES TYPE I
WITH MOUNTING HOLES TYPE II

FOR GROUND SUPPORT EQUIPMENT
STYLE B

REVISIONS

	SYM	ZONE	DESCRIPTION	DR	CHK	DATE	APPROVED
	G		REPLACES REV F WITH CHANGE PER TDRR 20854			7/22/65	WK
★	H		REVISED PER TDRR 20892			[illegible]	WK
	J		REVISED PER TDRR 20904			[illegible]	WK
	K		REVISED PER TDRR 21379			[illegible]	WK
	L		REVISED PER TDRR 21410			8/23/65	WK
★	M		REVISED PER TDRR 21993				
★	N		REVISED PER TDRR 22621			[illegible]	
★	P		REVISED PER TDRR 22671			[illegible]	
★	R		REVISED PER TDRR 22672			[illegible]	
★	S		REVISED PER TDRR 22750			[illegible]/65	WK
	T		REVISED PER TDRR 22823				WK
★	U		REVISED PER TDRR 23072			[illegible]	MGM
	V		REVISED PER TDRR 23521			10-2[illegible]	WK
★	W		REVISED PER TDRR 23824	RAJ		11-9-65	WK
★	Y		REVISED PER TDRR 240[illegible]8	RAJ		11-16-65	WK
★	Z		REVISED PER TDRR 24040	RAJ		11-19-65	WK
Ⓜ	AA		REVISED PER TDRR 24060	RAJ		11-19-65	WK
Ⓜ	AB		REVISED PER TDRR 24868	RAJ		12-2-65	WK
Ⓜ	AC		REVISED PER TDRR 24973	RAJ		1-4-66	WK
Ⓜ	AD		REVISED PER TDRR 25065	RAJ		1-18-66	MGM
★	AE		REVISED PER TDRR 25672	RAJ		2-4-66	WK
Ⓜ	AF		REVISED PER TDRR 25671	RAJ		2-4-66	WK
	AG		REVISED PER TDRR 26110	RAJ		2-15-66	WK
★	AH		REVISED PER TDRR 26372	"		3-16-66	MGM
★	AJ		REVISED PER TDRR 26425	"		3-16-66	MGM
★	AK		REVISED PER TDRR 26743	"		3-16-66	MGM
Ⓜ	AL		REVISED PER TDRR 26798	"		3-16-66	MGM
★	AM		REVISED PER TDRR 27166	"		4-7-66	MGM
★	AN		REVISED PER TDRR 27235	"		4-7-66	MGM
★	AP		REVISED PER TDRR 27345	"		4-7-66	MGM
★	AR		REVISED PER TDRR 274[illegible]7	"		4-7-66	MGM
Ⓜ	AS		REVISED PER TDRR 27442	"		4-7-66	MGM
	AT		REVISED PER TDRR 27719	"		4-20-66	WK
Ⓜ	AU		REVISED PER TDRR 27880	"		4-20-66	WK
Ⓜ	AV		REVISED PER TDRR 27896	"		4-20-66	WK
	AW		28110	"		5-16-66	MGM
	AY		28173	"			MGM
	AZ		28131	"			MGM
	BA		28124	"			MGM
	BB		REVISED PER TDRR 28511	"		5-16-66	MGM
Ⓜ	BC		" " " 28949	"		5-24-66	MGM
	BD		" " " 29222	"		6-8-66	MGM
Ⓜ	BE		" " " 29235	"		6-8-66	MGM
	BF		" " " 29322	"		6-30-66	MGM
	BG		" " " 29429	"		"	MGM
	BH		" " " 29449	"		"	MGM
	BJ		" " " 29335	"		"	MGM
	BK		" " " 296[illegible]9	"		"	MGM
Ⓜ	BL		" " " 29696	"		"	MGM
	BM		REVISION STATUS CHANGED	JSD	NS	7-29-66	
	BN		REVISION STATUS CHANGED	JI	RLW	22 AUG 66	
	BP		REVISION STATUS CHANGED	JI	RLW	22 AUG 66	
	BR		REVISION STATUS CHANGED	JI	RLW	22 AUG 66	
	BS		REVISION STATUS CHANGED	GW	RLW	26 AUG 66	
Ⓜ	BT		REVISION STATUS CHANGED	GW	RLW	26 AUG 66	
Ⓜ	BU		REVISION STATUS CHANGED	EH	JI	9 SEPT 66	
	BV		REVISION STATUS CHANGED	JJB	RLW	30 SEP 66	
	BW		REVISION STATUS CHANGED	JJB	RLW	30 SEP 66	
	BY		REVISION STATUS CHANGED	JJB	RLW	10 OCT 66	
	BZ		REVISION STATUS CHANGED	[illegible]	RLW	10 OCT 66	

SUGGESTED PROPORTIONS FOR NAMEPLATE DIMENSIONS.
1. SELECT NAMEPLATE LENGTH, DIMENSION "A", TO FIT DESIGN NEEDS.
2. DIMENSIONS B THRU AS ON LINE 1 BELOW ARE PROPORTIONAL TO "A" BY MULTIPLIERS SHOWN IN LINE 2 BELOW.

1.	A	B	C	D	E	F	G	H	J	K	L	M	N	P	R	S	T	U
2.	1.000 A	.6563 A	.8438 A	.6875 A	.0391 A	.0240 A	.0391 A	.0469 A	.0547 A	.0469 A	.5938 A	.3750 A	.2969 A	.2187 A	.5079 A	.0313 A	.0938 A	.0391 A

1.	V	W	Y	Z	AA	AB	AC	AD	AE	AF	AG	AH	AJ	AK	AL	AM	AN	AP	AR	AS
2.	.4375 A	.3594 A	.6875 A	.1094 A	.5781 A	.9219 A	.0240 A	.0156 A	.4375 A	.1525 A	.0391 A	.1563 A	.8438 A	.0548 A	.8659 A	.0391 A	.1563 A	.0938 A	.9219 A	.0151 A

Ⓖ REPLACES REV F WITH CHANGE

QTY REQD	PART OR IDENTIFYING NO.	MATERIAL OR NOTES	NOMENCLATURE OR DESCRIPTION	FIND NO

LIST OF MATERIALS

UNLESS OTHERWISE SPECIFIED
DIMENSIONS ARE IN INCHES
CAPACITOR VALUES ARE IN µf
RESISTOR VALUES ARE IN OHMS
TOLERANCES ON
FRACTIONS ± — DECIMALS ±.005 ANGLES ± —
DO NOT SCALE THIS DRAWING

MATERIAL
SEE NOTE 11

NEXT ASSY	USED ON
AS APPLICABLE	

APPLICATION

MIT
INSTRUMENTATION LAB
CAMBRIDGE, MASS.

MANNED SPACECRAFT CENTER
HOUSTON, TEXAS

DRAWN R A Jones 7/16/65
CHECKED A. J. [illegible] 7-22-65
APPROVED
APPROVED W Kupfer 22/65
APPROVED MIT W Kupfer 22/65
APPROVED MSC [illegible] 7/22/65
DATE

NAMEPLATES,
APOLLO G&N–GSE
(STANDARDS)

CODE IDENT NO 80230
SIZE E
DRAWING NO. 1004260
SCALE NONE
SHEET 1 OF [illegible]

NOTICE – WHEN GOVERNMENT DRAWINGS, SPECIFICATIONS, OR OTHER DATA ARE USED FOR ANY PURPOSE OTHER THAN IN CONNECTION WITH A DEFINITELY RELATED GOVERNMENT PROCUREMENT OPERATION, THE UNITED STATES GOVERNMENT THEREBY INCURS NO RESPONSIBILITY NOR ANY OBLIGATION WHATSOEVER, AND THE FACT THAT THE GOVERNMENT MAY HAVE FORMULATED, FURNISHED, OR IN ANY WAY SUPPLIED THE SAID DRAWINGS, SPECIFICATIONS OR OTHER DATA IS NOT TO BE REGARDED BY IMPLICATION OR OTHERWISE AS IN ANY MANNER LICENSING THE HOLDER OR ANY OTHER PERSON OR CORPORATION, OR CONVEYING ANY RIGHTS OR PERMISSION TO MANUFACTURE, USE, OR SELL ANY PATENTED INVENTION THAT MAY IN ANY WAY BE RELATED THERETO.

REVISIONS

SYM	ZONE	DESCRIPTION	DR	CHK	DATE	APPROVED
G		REPLACES REV F WITH CHANGE PER TDRR 20854.			7/22	WK
H		REVISED PER TDRR 20892				WK
J		REVISED PER TDRR 20904				
K		REVISED PER TDRR 21379				
L		REVISED PER TDRR 21410				
M		REVISED PER TDRR 21993				
N		REVISED PER TDRR 22621			10/	
P		REVISED PER TDRR 22671				
R		REVISED PER TDRR 22672				
S		REVISED PER TDRR 22750				
T		REVISED PER TDRR 22823				
U		REVISED PER TDRR 23072				
V		REVISED PER TDRR 23521			10-27-65	
W		REVISED PER TDRR 23824	RAJ			
Y		REVISED PER TDRR 24018	RAJ			WK
Z		REVISED PER TDRR 24040	RAJ		11-19-65	WK
AA		REVISED PER TDRR 24060	RAJ		11-19-65	
AB		REVISED PER TDRR 24868	RAJ		12-22-65	
AC		REVISED PER TDRR 24973	RAJ			
AD		REVISED PER TDRR 25065	RAJ			
AE		REVISED PER TDRR 25672	RAJ			
AF		REVISED PER TDRR 25671	RAJ			WK
AG		REVISED PER TDRR 26110	RAJ			
AH		REVISED PER TDRR 26372	"			
AJ		REVISED PER TDRR 26425	"			
AK		REVISED PER TDRR 26743	"			
AL		REVISED PER TDRR 26798	"			
AM		REVISED PER TDRR 27168	"			
AN		REVISED PER TDRR 27235	"			
AP		REVISED PER TDRR 27345	"			
AR		REVISED PER TDRR 27417	"			
AS		REVISED PER TDRR 27442	"		4-8-66	
AT		REVISED PER TDRR 27719	"		4-21-66	
AU		REVISED PER TDRR 27880	"		4-21-66	WK
AV		REVISED PER TDRR 27896	"		4-21-66	WK
AW		↕		28110	"		5-16-66	
AY		28173	"		↕	
AZ		28131	"		↕	
BA		28124	"		↕	
BB		REVISED PER TDRR 28511	"		5-16-66	
BC		" " " 28949	"		5-24-66	
BD		" " " 29222	"		6-8-66	
BE		" " " 29235	"		"	
BF		" " " 29322	"		6-30-66	
BG		" " " 29429	"		"	
BH		" " " 29449	"		"	
BJ		" " " 29335	"		"	
BK		" " " 29619	"		"	
BL		" " " 29696	"		"	
BM		REVISION STATUS CHANGED	JSD	N.S.	7-29-66	
BN		REVISION STATUS CHANGED	JI	RLW	24 AUG 66	
BP		REVISION STATUS CHANGED	JI	RLW	24 AUG 66	
BR		REVISION STATUS CHANGED	JI	RLW	24 AUG 66	
BS		REVISION STATUS CHANGED	GW	RLW	26 AUG 66	
BT		REVISION STATUS CHANGED	GW	RLW	26 AUG 66	
BU		REVISION STATUS CHANGED	EH	JI	9 SEP 66	
BV		REVISION STATUS CHANGED	JJB	RLW	30 SEP 66	
BW		" " "	JJB	RLW	30 SEP 66	
BY		" " "	JJB	RLW	10 OCT 66	
BZ		REVISION STATUS CHANGED	JJB	RLW	10 OCT 66	

DASH NO.	P/C	PART NAME	REMARKS	PART NO.	SER. NO.	CONT. NO.	STYLE	TYPE	MATERIAL	A	B	C	D	E	F	G	H	J	K	L	M	N	P	R	S	T	U	V	W	Y	Z	AA	AB	AC	AD	AE	AF	AG	AH	AJ	AK	AL	AM	AN	AP	AR
3[illegible]	K																																													
3[illegible]8	K																																													
350	K	ALIGNMENT OPTICAL TELESCOPE (LEM)		NA	NA	NA	A	I	NOTE 11 B	4.000	2.625	3.375	2.750	.156	.093	.156	.187	NA	NA	2.312	1.468	1.187	.906	2.031	NA	.375	.156	NA	1.437	2.750	.437	NA	3.688	.062	.062	1.750	.593	NA	.625	3.375	.187	NA	.156	.531	.453	NA
309	K																																													
308	K																																													
307	K						B	I	NOTE 11 B	4.000	2.625	3.375	2.750	.156	.093	.156	.187	NA	NA	2.328	1.468	1.187	.906	2.031	.062	.375	.156	NA	1.437	2.750	.437	NA	3.687	.062	.062	1.750	.593	NA	NA	NA	NA	NA	NA	NA	NA	NA
306	K						B	II	NOTE 11 C	4.000	2.625	3.375	2.750	.156	.093	.156	.187	.125	.156	2.328	1.468	1.187	.906	2.031	.062	.375	.156	↕	1.437	2.750	.437	2.312	3.687	.062	NA	1.750	.593	↕	↕	↕	↕	↕	↕	↕	↕	↕
305	K						B	I	NOTE 11 B	2.000	1.312	1.687	1.375	.078	.048	.078	.093	NA	NA	1.164	.734	.593	.453	1.015	.048	.171	.078	↕	.718	1.375	.187	NA	NA	.048	.031	.875	.320	↕	↕	↕	↕	↕	↕	↕	↕	↕
304	K						B	II	NOTE 11 C	2.000	1.312	1.687	1.375	.078	.048	.078	.093	.070	.078	1.164	.734	.593	.453	1.015	.048	.171	.078	NA	.718	1.375	.187	.156	1.843	.048	NA	.875	.320	NA	NA	NA	NA	NA	NA	NA	NA	NA
303	K																																													
302	K																																													
301	K																																													
300	K	OPTICAL UNIT		NA	NA	NA	A	I	NOTE 11 B	2.000	1.312	.675	NA	NA	.048	.078	NA	NA	NA	1.090	.812	.675	.540	.940	NA	.265	NA	NA	NA	1.375	.218	NA	NA	NA	NA	NA	.375	NA	NA	NA	.180	NA	.078	NA	NA	NA
9	K	2 IN AUTOCOLLIMATOR		1001702			B	II	NOTE 11 C	4.000	2.625	3.812	2.750	.156	.093	.156	.187	.125	.156	2.250	1.500	1.187	.906	2.031	.093	.375	.156	1.750	1.437	2.750	.437	2.312	3.687	.062	NA	1.750	.593	.156	1.062	3.812	.156	NA	.156	1.062	.375	3.687
8	K	5 IN AUTOCOLLIMATOR		1017410			B	II	NOTE 11 C	4.000	2.625	3.812	2.750	.156	.093	.156	.187	.125	.156	2.250	1.500	1.187	.906	2.031	.093	.375	.156	1.750	1.437	2.750	.437	2.312	3.687	.062	NA	1.750	.593	.156	1.062	3.812	.156	NA	.156	1.062	.375	3.687
7	K	2½ IN AUTOCOLLIMATOR (SCT)		1017435			B	II	NOTE 11 C	4.000	2.625	3.812	2.750	.156	.093	.156	.187	.125	.156	2.250	1.500	1.187	.906	2.031	.093	.375	.156	1.750	1.437	2.750	.437	2.312	3.687	.062	NA	1.750	.593	.156	1.062	3.812	.156	NA	.156	1.062	.375	3.687
6	K	2½ IN AUTOCOLLIMATOR (SXT)		1017448			B	II	NOTE 11 C	4.000	2.625	3.812	2.750	.156	.093	.156	.187	.125	.156	2.250	1.500	1.187	.906	2.031	.093	.375	.156	1.750	1.437	2.750	.437	2.312	3.687	.062	NA	1.750	.593	.156	1.062	3.812	.156	NA	.156	1.062	.375	3.687
5	K	RETROREFLECTING PRISM ASSEMBLY		1019840			B	I	NOTE 11 B	4.000	2.625	3.812	2.750	.156	.093	.156	.187	NA	NA	2.250	1.500	1.187	.906	2.031	.093	.375	.156	1.750	1.437	2.750	.437	NA	NA	.062	.062	1.750	.593	.156	1.062	3.812	.156	NA	.156	1.062	.375	NA
4	K	S/H SIMULATOR ASSEMBLY		1019896			B	I	NOTE 11 B	4.000	2.625	3.812	2.750	.156	.093	.156	.187	NA	NA	2.250	1.500	1.187	.906	2.031	.093	.375	.156	1.750	1.437	2.750	.437	NA	NA	.062	.062	1.750	.593	.156	1.062	3.812	.156	NA	.156	1.062	.375	NA
3	K	REFERENCE MIRROR		1001767			B	I	NOTE 11 B	2.000	1.312	1.906	1.375	.078	.048	.078	.093	NA	NA	1.125	.750	.593	.453	1.015	.062	.187	.078	.875	.718	1.375	.218	NA	NA	.048	.031	.875	.305	.078	.531	1.906	.078	NA	.078	.531	.187	NA
2	K	2 IN PLANE READING AUTOCOLLIMATOR		1017413			B	I	NOTE 11 B	2.000	1.312	1.906	1.375	.078	.048	.078	.093	NA	NA	1.125	.750	.593	.453	1.015	.062	.187	.078	.875	.718	1.375	.218	NA	NA	.048	.031	.875	.305	.078	.531	1.906	.078	NA	.078	.531	.187	NA
1	K	2 IN AUTOCOLLIMATOR		1001702			B	I	NOTE 11 B	2.000	1.312	1.906	1.375	.078	.048	.078	.093	NA	NA	1.125	.750	.593	.453	1.015	.062	.187	.078	.875	.718	1.375	.218	NA	NA	.048	.031	.875	.305	.078	.531	1.906	.078	NA	.078	.531	.187	NA

NOTES FOR TABLE

STYLE A IS FOR G&N SYSTEM.
STYLE B IS FOR GROUND SUPPORT EQUIPMENT.
TYPE I IS WITHOUT MOUNTING HOLES.
TYPE II IS WITH MOUNTING HOLES.

Ⓖ REPLACES REV F WITH CHANGE

KOLLSMAN DASH NUMBERS

QTY REQD	PART OR IDENTIFYING NO.	MATERIAL OR NOTES	NOMENCLATURE OR DESCRIPTION	FIND NO

LIST OF MATERIALS

AS APPLICABLE	
NEXT ASSY	USED ON
APPLICATION	

UNLESS OTHERWISE SPECIFIED
DIMENSIONS ARE IN INCHES
CAPACITOR VALUES ARE IN µf
RESISTOR VALUES ARE IN OHMS
TOLERANCES ON
FRACTIONS ± — DECIMALS ±.005 ANGLES ± —
DO NOT SCALE THIS DRAWING

MATERIAL
SEE NOTE 11

MIT
INSTRUMENTATION LAB
CAMBRIDGE, MASS

DRAWN R A Jones 7-16-65
CHECKED 7-22-65
APPROVED
APPROVED W Kupfer
APPROVED MIT W Kupfer
APPROVED MSC
DATE

MANNED SPACECRAFT CENTER
HOUSTON, TEXAS

NAMEPLATES,
APOLLO G&N-GSE
(STANDARDS)

CODE IDENT NO. 80230
SIZE E
DRAWING NO. 1004260
SCALE NONE
SHEET 2 OF

8 7 6 5 4 3 2 1

NOTICE – WHEN GOVERNMENT DRAWINGS, SPECIFICATIONS, OR OTHER DATA ARE USED FOR ANY PURPOSE OTHER THAN IN CONNECTION WITH A DEFINITELY RELATED GOVERNMENT PROCUREMENT OPERATION, THE UNITED STATES GOVERNMENT THEREBY INCURS NO RESPONSIBILITY NOR ANY OBLIGATION WHATSOEVER, AND THE FACT THAT THE GOVERNMENT MAY HAVE FORMULATED, FURNISHED, OR IN ANY WAY SUPPLIED THE SAID DRAWINGS, SPECIFICATIONS, OR OTHER DATA IS NOT TO BE REGARDED BY IMPLICATION OR OTHERWISE AS IN ANY MANNER LICENSING THE HOLDER OR ANY OTHER PERSON OR CORPORATION, OR CONVEYING ANY RIGHTS OR PERMISSION TO MANUFACTURE, USE, OR SELL ANY PATENTED INVENTION THAT MAY IN ANY WAY BE RELATED THERETO.

REVISIONS 02768

SYM	ZONE	DESCRIPTION	DR	CHK	DATE	APPROVED
G		REPLACES REV F WITH CHANGE PER TDRR 20854			7/22/65	WK
H		REVISED PER TDRR 20892			8/3/65	WK
J		REVISED PER TDRR 20904			8/3/65	WK
K		REVISED PER TDRR 21379			8/10/65	WK
L		REVISED PER TDRR 21410			8/23/65	WK
M		REVISED PER TDRR 21993			10/11/65	WK
N		REVISED PER TDRR 22621				
P		REVISED PER TDRR 22671				
R		REVISED PER TDRR 22672				
S		REVISED PER TDRR 22750				
T		REVISED PER TDRR 22823				
U		REVISED PER TDRR 23072			10-21-65	MGM
V		REVISED PER TDRR 23521			10-26-65	WK
W		REVISED PER TDRR 23824	RAJ		11-9-65	WK
Y		REVISED PER TDRR 24018	RAJ		11-16-65	WK
Z		REVISED PER TDRR 24040	RAJ		11-19-65	WK
AA		REVISED PER TDRR 24060	RAJ		11-19-65	WK
AB		REVISED PER TDRR 24868	RAJ		12-22-65	WK
AC		REVISED PER TDRR 24973	RAJ		1-4-66	WK
AD		REVISED PER TDRR 25065	RAJ		1-18-66	MGM
AE		REVISED PER TDRR 25672	RAJ		2-4-66	WK
AF		REVISED PER TDRR 25671	RAJ		2-4-66	WK
AG		REVISED PER TDRR 26110	RAJ		2-17-66	WK
AH		REVISED PER TDRR 26372	"		3-16-66	MGM
AJ		REVISED PER TDRR 26425	"		3-16-66	MGM
AK		REVISED PER TDRR 26743	"		3-16-66	MGM
AL		REVISED PER TDRR 26798	"		3-16-66	MGM
AM		REVISED PER TDRR 27168	"		4-8-66	MGM
AN		REVISED PER TDRR 27235	"		4-8-66	MGM
AP		REVISED PER TDRR 27345	"		4-8-66	MGM
AR		REVISED PER TDRR 27417	"		4-8-66	MGM
AS		REVISED PER TDRR 27442	"		4-8-66	MGM
AT		REVISED PER TDRR 27719	"		4-20-66	WK
AU		REVISED PER TDRR 27880	"		4-20-66	WK
AV		REVISED PER TDRR 27896	"		4-20-66	WK
AW		28110	"		5-16-66	MGM
AY		28173	"		5-16-66	MGM
AZ		28131	"		5-16-66	MGM
BA		28124	"		5-16-66	MGM
BB		REVISED PER TDRR 28511	"		5-16-66	MGM
BC		" " " 28949	"		5-24-66	MGM
BD		" " " 29222	"		6-8-66	MGM
BE		" " " 29235	"		"	MGM
BF		" " " 29322	"		6-29-66	MGM
BG		" " " 29429	"		"	MGM
BH		" " " 29449	"		"	MGM
BJ		" " " 29335	"		"	MGM
BK		" " " 29619	"		"	MGM
BL		" " " 29696	"		"	MGM
BM		" " " 29802	JSD	N.S.	7-29-66	
BN		REVISION STATUS CHANGED	JI	RLW	AUG 66	
BP		REVISED PER TDRR 30168	JI	RLW	AUG 66	
BR		REVISION STATUS CHANGED	JI	RLW	23 AUG 66	
BS		REVISION STATUS CHANGED	GW	RLW	26 AUG 66	
BT		REVISION STATUS CHANGED	GW	RLW	26 AUG 66	
BU		REVISION STATUS CHANGED	EH	JI	9 SEPT 66	
BV		REVISION STATUS CHANGED	JJB	RLW	30 SEP 66	
BW		REVISED PER TDRR 31279	JJB	RLW	30 SEP 66	
BY		REVISION STATUS CHANGED	JJB	RLW	10 OCT 66	
BZ		FEVISION STATUS CHANGED	JJB	RLW	10 OCT 66	

DASH NO.	P/C	PART NAME	REMARKS	PART NO.	SER. NO.	CONT. NO.	STYLE	TYPE	MATERIAL	A
299	R									
298	R									
280	R	COMPUTER TEST SET		2014042-051	N A	NAS9 497	B	II	NOTE 11C	FOR DIMENSIONS SEE DASH 18 VALUES BELOW
279	R	SELF TEST ASSY		2014366-041	N A	NAS9-497	B	I	NOTE 11B	FOR DIMENSIONS SEE DASH- 15 VALUES BELOW
278	R	LOGIC DRAWER ASSY NO.1		2014036-041	N A	NAS 9-497	B	I	NOTE 11B	FOR DIMENSIONS SEE DASH 17 VALUES BELOW
277	R	COMPUTER TEST SET		2014042-041	N A	NAS-9-497	B	II	NOTE 11C	FOR DIMENSIONS, SEE DASH 18 VALUES BELOW
276		DRAWER ASSY - PROGRAM & MONITOR		2014041-041				I	NOTE 11 B	FOR DIMENSIONS, SEE DASH -17 VALUES BELOW
275		DRAWER ASSY RDC INTERFACE		2014045-031						FOR DIMENSIONS, SEE DASH 15 VALUES BELOW
274		SELF TEST ASSY		2014366-031						
273		LOGIC DRAWER ASSY NO. 2		2014037-031						FOR DIMENSIONS, SEE DASH 17 VALUES BELOW
272		DRAWING ASSY PROGRAMMER & MONITOR		2014041-031						FOR DIMENSIONS, SEE DASH 17 VALUES BELOW
271		LOGIC DRAWER ASSY NO. 1		2014036-031				I	NOTE 11 B	
270		COMPUTER TEST SET		2014042-031				II	NOTE 11C	FOR DIMENSIONS, SEE DASH 18 VALUES BELOW
269		POWER CONTROL ASSY		2014044-021				I	NOTE 11 B	FOR DIMENSIONS, SEE DASH 17 VALUES BELOW
268		SELF TEST ASSY		2014366-021						FOR DIMENSIONS, SEE DASH 15 VALUES BELOW
267		AGC JUNCTION ASSY		2014341-021						
266		POWER CONTROL ASSY		2014079-021						
265		BUFFER CIRCUIT ASSY		2014254-021						
264		DRAWER ASSY X Y INTERFACE		2014040-021						
263		DRAWER ASSY R D C INTERFACE		2014045-021						
262		DRAWER ASSY PROGRAMMER & MONITOR		2014041-021						FOR DIMENSIONS, SEE DASH 17 VALUES BELOW
261		LOGIC DRAWER ASSY NO. 2		2014037-021						
260		LOGIC DRAWER ASSY NO. 1		2014036-021				I	NOTE 11 B	
259		OPERATION CONSOLE		2014024-021				II	NOTE 11 C	FOR DIMENSIONS, SEE DASH 18 VALUES BELOW
258		COMPUTER TEST SET		2014042-021						
257		AUXILIARY CALIBRATION CONSOLE		2014059-021				II	NOTE 11 C	
256		AGC CALIBRATION CONSOLE		2014049-021						
255		AGC HANDLING FIXTURE		2014282-021				I	NOTE 11 B	FOR DIMENSIONS, SEE DASH 17 VALUES BELOW
254		DRAWER ASSY COMP. SIMULATOR		2014048-011				II	NOTE 11 C	FOR DIMENSIONS, SEE DASH 18 VALUES BELOW
253		SHIPPING KIT ASSY, NAV DSKY		2016312-011						
252		SHIPPING KIT ASSY, UNIVERSAL DSKY		2016316-011						
251		SHIPPING KIT ASSY, MAIN DSKY		2016313-011				II	NOTE 11 C	
250		AMPLIFIER, REWORK		2014385				I	NOTE 11 B	FOR DIMENSIONS, SEE DASH 15 VALUES BELOW
249		TEMP MONITOR ASSY		2014313-011					NOTE 11 C	FOR DIMENSIONS, SEE DASH 17 VALUES BELOW
248		AGC JUNCTION ASSY		201434[illegible]-011					NOTE 11 B	FOR DIMENSIONS, SEE DASH 15 VALUES BELOW
247		AC INPUT PANEL ASSY		20[illegible]4302-011						
246		SELF TEST ASSY		2014392-011						
245		TAPE PUNCH ASSEMBLY		2014039-011						FOR DIMENSIONS, SEE DASH 15 VALUES BELOW
244	R	TAPE READER ASSEMBLY		2014038-011	NA	NAS-9-497	B	I	NOTE 11 B	
243										
242										
241	R	APOLLO GUIDANCE COMPUTER GROUP		6003001	NA	NAS-9-497	A	I	NOTE 11 B	FOR DIMENSIONS, SEE DASH 19 VALUES BELOW
240		SELF TEST ASSEMBLY		2014366-011	NA		B	I		FOR DIMENSIONS, SEE DASH 15 VALUES BELOW
239		POWER SUPPLY ASSY-115 V., 400 CYCLE		2014207-011						FOR DIMENSIONS, SEE DASH 17 VALUES BELOW
238		AC INPUT PANEL ASSY		2014043-011						
237		POWER CONTROL ASSY		2014079-011						FOR DIMENSIONS, SEE DASH 15 VALUES BELOW
236		DRAWER ASSY - X Y INTERFACE		2014040-011						
235		DRAWER ASSY R D C INTERFACE		2014045-011						
234		BUFFER CIRCUIT ASSY		2014254-011						
233		CONTROL & INTERFACE ASSY		2014204-011						
232		POWER CONTROL ASSY		2014044-011						FOR DIMENSIONS, SEE-DASH 17 VALUES BELOW
231		DRAWER ASSY, PROGRAMMER & MONITOR		2014041-011						
230		CONNECTOR INTERFACE ASSY		2014272-011						FOR DIMENSIONS, SEE DASH 15 VALUES BELOW
229		CONNECTOR INTERFACE ASSY		2014047-011						
228		ANTENNA TUNING CAPACITOR ASSY		2014209-011						
227		MOUNTING FIXTURE ASSY		2014006-011						FOR DIMENSIONS, SEE DASH 17 VALUES BELOW
226		POWER SUPPLY ASSY 3 VDC		2014234-011						FOR DIMENSIONS, SEE DASH 15 VALUES BELOW
225		PANEL ASSY - S[illegible]AL INTERFACE		2014010-011						
224		OSCILLOSCOPE ASSY		2014232-011						
223		AUXILIARY OUTLET ASSY		2014274-011						
222		FREQUENCY COUNTER		2014233-011						
221		POWER SUPPLY ASSY 10, 13, 28 VDC		2014235-011						
220		LOGIC DRAWER ASSY NO. 2		2014037-011						FOR DIMENSIONS, SEE DASH 17 VALUES BELOW
219		LOGIC DRAWER ASSY NO. 1		2014036-011						
218		COUNTER, ELECTRICAL ASSY		2014288-011						FOR DIMENSIONS, SEE DASH 15 VALUES BELOW
217		POWER SUPPLY ASSY		2014279-011						
216		TEST MOUNT ASSY		2014257-011						
215		UNIVERSAL DSKY PEDESTAL MOUNT		2014014-011						FOR DIMENSIONS, SEE DASH 17 VALUES BELOW
214		MAIN DSKY PEDESTAL MOUNT		2014343				I	NOTE 11B	
213		SHIPPING CONTAINER, MAIN DSKY		1006229				II	NOTE 11C	FOR DIMENSIONS, SEE DASH 18 VALUES BELOW
212		NAV DSKY		1006231						
211		AGC		1006230						
210		UNIVERSAL DSKY		1006422						
209		SHIPPING CONTAINER, AGC		1006421				II	NOTE 11C	
208		UNIVERSAL DSKY HANDLING FIXTURE		2014013-011				I	NOTE 11B	FOR DIMENSIONS, SEE DASH 15 VALUES BELOW
207		NAV DSKY HANDLING FIXTURE		1014377						FOR DIMENSIONS, SEE DASH 17 VALUES BELOW
206		MAIN DSKY HANDLING FIXTURE		1014334						
205		AGC HANDLING FIXTURE		2014282-011				I	NOTE 11B	
204		OPERATION CONSOLE		2014024-011				II	NOTE 11C	FOR DIMENSIONS, SEE DASH 18 VALUES BELOW
203		COMPUTER TEST SET		2014042-011		NAS-9-497				
202		DRAWER ASSY, COMPUTER SIMULATOR		2014048-011		FNP-2775				
201		AUXILIARY CALIBRATION CONSOLE		2014059-011		NAS-9-497				
200		AGC CALIBRATION CONSOLE		2014049-011	NA		B	II	NOTE 11C	
21										
20		NA		NA	NA	NA	A	II	NOTE 11 C	2.000
19		NA		NA	NA	NA	A	I	NOTE 11 B	2.000
18		NA		NA	NA	NA	B	II	NOTE 11 C	4.187
17		NA		NA	NA	NA	B	I	NOTE 11 B	4.187
16		NA		NA	NA	NA	B	II	NOTE 11 C	2.000
15	R	NA		NA	NA	NA	B	I	NOTE 11 B	2.000

DASH NO.	B	C	D	E	F	G	H	J	K	L	M	N	P	R	S	T	U
20	1.312	1.687	1.375	.078	.031	.078	.093	.106 .113	.093	1.187	.750	.593	.453	1.015	.062	.187	.078
19	1.312	1.687	1.375	.078	.031	.078	.093	NA	NA	1.187	.750	.593	.453	1.015	.062	.187	.078
18	1.875	3.469	2.750	.156	.093	.156	.125	.106 .113	.125	1.625	1.032	.844	.656	1.406	.093	.344	.156
17	1.875	3.469	2.750	.156	.093	.156	.125	NA	NA	1.625	1.032	.844	.656	1.406	.093	.344	.156
16	1.312	1.687	1.375	.078	.031	.078	.093	.106 .113	.093	1.187	.750	.593	.453	1.015	.062	.187	.078
15	1.312	1.687	1.375	.078	.031	.078	.093	NA	NA	1.187	.750	.593	.453	1.015	.062	.187	.078

DASH NO.	V	W	Y	Z	AA	AB	AC	AD	AE	AF	AG	AH	AJ	AK	AL	AM	AN	AP	AR
20	.875	.718	1.375	.218	1.156	1.843	.048	NA	.875	.305	.078	.312	1.687	.078	NA	.078	.312	.187	1.843
19	.875	.718	1.375	.218	NA	NA	.048	.031	.875	.305	.078	.312	1.687	.078	NA	.078	.312	.187	NA
18	1.781	1.531	2.844	.312	1.562	3.875	.062	NA	1.219	.500	.156	.719	3.469	.156	NA	.156	.719	.344	3.875
17	1.781	1.531	2.844	.312	NA	NA	.062	.062	1.219	.500	.156	.719	3.469	.156	NA	.156	.719	.344	NA
16	.875	.718	1.375	.218	1.156	1.843	.048	NA	.875	.305	.078	.312	1.687	.078	NA	.078	.312	.187	1.843
15	.875	.718	1.375	.218	NA	NA	.048	.031	.875	.305	.078	.312	1.687	.078	NA	.078	.312	.187	NA

THIS SHEET ADDED

Ⓖ REPLACES REV F WITH CHANGE

RAYTHEON DASH NUMBERS

NOTES FOR TABLE
STYLE A IS FOR G & N SYSTEM
STYLE B IS FOR GROUND SUPPORT EQUIPMENT
TYPE I IS WITHOUT MOUNTING HOLES
TYPE II IS WITH MOUNTING HOLES

QTY REQD	PART OR IDENTIFYING NO.	MATERIAL OR NOTES	NOMENCLATURE OR DESCRIPTION	FIND NO.

LIST OF MATERIALS

NEXT ASSY	USED ON
AS APPLICABLE	

APPLICATION

UNLESS OTHERWISE SPECIFIED
DIMENSIONS ARE IN INCHES
CAPACITOR VALUES ARE IN µf
RESISTOR VALUES ARE IN OHMS
TOLERANCES ON
FRACTIONS ± — DECIMALS ±.005 ANGLES ± —
DO NOT SCALE THIS DRAWING

MATERIAL
SEE NOTE 11

MIT
INSTRUMENTATION LAB
CAMBRIDGE, MASS

DRAWN R A Jones 7-16-65
CHECKED A. J. 7-22-65
APPROVED
APPROVED WKupfer 7/22/65
APPROVED MIT WKupfer 7/22/65
APPROVED MSC DATE

MANNED SPACECRAFT CENTER
HOUSTON TEXAS

NAMEPLATES,
APOLLO GEN-GSE
(STANDARDS)

CODE IDENT NO. 80230
SIZE E
DRAWING NO. 1004260
SCALE NONE
SHEET 3 OF 6

8 7 6 5 4 3 2 1

[illegible]

		REVISIONS	02768			
SYM	ZONE	DESCRIPTION	DR	CHK	DATE	APPROVED
G		REPLACES REV F WITH CHANGE PER TDRR 20854.			7/22/65	WK
H		REVISED PER TDRR 20892			8/3/65	WK
J		REVISED PER TDRR 20904			8/3/65	WK
K		REVISED PER TDRR 21379			8/6/65	WK
L		REVISED PER TDRR 21410			8/23/65	WK
M		REVISED PER TDRR 21993			10/	
N		REVISED PER TDRR 22621				
P		REVISED PER TDRR 22671				
R		REVISED PER TDRR 22672				
S		REVISED PER TDRR 22750			/65	WK
T		REVISED PER TDRR 22923				
U		REVISED PER TDRR 23072			10-22-65	MGM
V		REVISED PER TDRR 23521			10-26-65	WK
W		REVISED PER TDRR 23824	RAJ		11-9-65	WK
Y		REVISED PER TDRR 24018	RAJ		11-16-65	WK
Z		REVISED PER TDRR 24040	RAJ		11-19-65	WK
AA		REVISED PER TDRR 24060	RAJ		11-19-65	WK
AB		REVISED PER TDRR 24868	RAJ		12-22-65	WK
AC		REVISED PER TDRR 24973	RAJ		1-4-66	WK
AD		REVISED PER TDRR 25065	RAJ		1-18-66	
AE		REVISED PER TDRR 25672	RAJ		2-4-66	WK
AF		REVISED PER TDRR 25671	RAJ		2-4-66	WK
AG		REVISED PER TDRR 26110	RAJ		2-15-66	WK
AH		REVISED PER TDRR 26372	"		3-16-66	MGM
AJ		REVISED PER TDRR 26425	"		3-16-66	MGM
AK		REVISED PER TDRR 26743	"		3-16-66	MGM
AL		REVISED PER TDRR 26798	"		3-16-66	MGM
AM		REVISED PER TDRR 27168	"		4-8-66	MGM
AN		REVISED PER TDRR 27235	"		4-8-66	MGM
AP		REVISED PER TDRR 27345	"		4-8-66	MGM
AR		REVISED PER TDRR 27417	"		4-8-66	MGM
AS		REVISED PER TDRR 27442	"		4-8-66	MGM
AT		REVISED PER TDRR 27719	"		4-21-66	WK
AU		REVISED PER TDRR 27880	"		4-21-66	WK
AV		REVISED PER TDRR 27896	"		4-21-66	WK
AW		28110	"		5-16-66	MGM
AY		28173	"			MGM
AZ		28131	"			MGM
BA		28124	"			MGM
BB		REVISED PER TDRR 28511	"		5-16-66	MGM
BC		" " " 28949	"		5-24-66	MGM
BD		" " " 29222	"		6-8-66	MGM
BE		" " " 29235	"		"	MGM
BF		" " " 29322	"		6-24-66	MGM
BG		" " " 29429	"		"	MGM
BH		" " " 29449	"		"	MGM
BJ		" " " 29335	"		"	MGM
BK		" " " 29619	"		"	MGM
BL		" " " 29696	"		6-29-66	MGM
BM		REVISION STATUS CHANGED	JSD	NS	7-29-66	
BN		REVISION STATUS CHANGED	JI	RLW	22 AUG 66	
BP		REVISION STATUS CHANGED	JI	RLW	22 AUG 66	
BR		REVISED PER TDRR 30241	JI	RLW	22 AUG 66	
BS		REVISION STATUS CHANGED	GW	RLW	26 AUG 66	
BT		REVISION STATUS CHANGED	GW	RLW	26 AUG 66	
BU		REVISION STATUS CHANGED	EH	JI	9 SEPT 66	
BV		REVISION STATUS CHANGED	JJB	RLW	30 SEP 66	
BW		REVISION STATUS CHANGED	JJB	RLW	30 SEP 66	
BY		REVISION STATUS CHANGED	JJB	RLW	10 OCT 66	
BZ		REVISION STATUS CHANGE	JJB	RLW	10 OCT 66	

DASH NO.	P/C	PART NAME	REMARKS	PART NO.	SER. NO.	CONT. NO.	STYLE	TYPE	MATERIAL	A	B	C	D	E	F	G	H	J	K	L	M	N	P	R	S	T	U	V	W	Y	Z	AA	AB	AC	AD	AE	AF	AG	AH	AJ	AK	AL	AM	AN	AP	AR
199	AC	EYEPIECE STOWAGE UNIT		2021255-011			A	I		FOR DIMENSIONS, SEE DASH 100 VALUES BELOW																																				
198	AC	SIGNAL CONDITIONER ASSY C/M		2007234		NAS 9-497			NOTE 11B																																					
197	AC	SIGNAL CONDITIONER ASSY C/M		2007235																																										
196	AC	SIGNAL CONDITIONER ASSY LEM		6007010																																										
195	AC	PSA & SIGNAL CONDITIONER ASSY		6007009			A	I	NOTE 11B																																					
194	AC	PANEL, MONITOR		2900031-031			B	II	NOTE 11C	FOR DIMENSIONS, SEE DASH 141 VALUES BELOW																																				
193	AC	DISTRIBUTION BOX, G S E		2900024-031																																										
192	AC	ANALYZER, OPTICS-INERTIAL		2900023-031						FOR DIMENSIONS, SEE DASH 144 VALUES BELOW																																				
191	AC	TEST CONTROL		2900027-031						FOR DIMENSIONS, SEE DASH 141 VALUES BELOW																																				
190	AC	PANEL, PWR SUP AND LOAD		2900033-021																																										
189	AC	ADPT MODULE, P. S. A.		6900088-011																																										
188	AC	ADPT MODULE, P. S. A.		2901143-011																																										
187	AC	FIXTURE, MTG, PTA/PEA		2900066-021		NAS 9-497	B	II	NOTE 11C																																					
186	AC	ANNUNCIATOR PANEL AND EYEPIECE STORAGE ASSEMBLY		1021255-021			A	I		FOR DIMENSIONS, SEE DASH 100 VALUES BELOW																																				
185	AC	ANNUNCIATOR PANEL AND EYEPIECE STORAGE ASSEMBLY		1021255-011			A	I																																						
184	AC	FIX., HAND., G AND N HARNESS		1901846-041		NAS-9-497	B	II	NOTE 11C	FOR DIMENSIONS, SEE DASH 144 VALUES BELOW																																				
183	AC	INSTALLING TOOL, ELEC. CONN		1902586-011			B	II	NOTE 11C	FOR DIMENSIONS, SEE DASH 102 VALUES BELOW																																				
182	AC	ADPT MODULE, P. S. A.		6900088-011			B	II	NOTE 11C	FOR DIMENSIONS, SEE DASH 141 VALUES BELOW																																				
181	AC	G & N INDICATOR CONTROL PANEL ASSY		2014578-011			A	I	NOTE 11B	3.000	1.938	2.437	NA	.125	.062	.188	.156	NA	NA	1.750	1.125	.906	.688	1.500	NA	.281	.125	NA	1.094	2.062	.312	NA	2.500	.062	.125	1.312	.469	NA	NA	NA	.156	NA	.125	.469	.344	NA
180	AC	ADPT MODULE, P. S. A.		1902431-031			B	II		FOR DIMENSIONS, SEE DASH 121 VALUES BELOW																																				
179	AC	MOUNTING PLATE, IMU/PTA		6900083-011						FOR DIMENSIONS, SEE DASH 144 VALUES BELOW																																				
178	AC	MOUNTING PLATE, COMPONENT		6900007-021																																										
177	AC	FIX., MOUNTING, SUBSYSTEM		2900070-021																																										
176	AC	FIX., MOUNTING, G AND N		2900067-021																																										
175	AC	CSL., COOL. AND PWR, G AND N		1902134-031																																										
174	AC	FIX., HAND., C/M AND LEM CDU		2900999-0[illegible]					NOTE 11C	FOR DIMENSIONS, SEE DASH 141 VALUES BELOW																																				
173	AC	FIX., HANDLING, C/M PSA		2900998-011																																										
172	AC	CAGING ELECTRONICS, GYRO		2900029-021																																										
171	AC	DISTRIBUTION BOX, GSE		2900024-021																																										
170	AC	ANALYZER, OPTICS-INERTIAL		2900023-021						FOR DIMENSIONS, SEE DASH 144 VALUES BELOW																																				
169	AC	ADPT, TESTPOINT, P.S.A.		2900037-021						FOR DIMENSIONS, SEE DASH 141 VALUES BELOW																																				
168	AC	TEST SELECTOR		2900028-021																																										
167	AC	TEST CONTROL		2900027-021																																										
166	AC	PANEL, MONITOR		2900031-021																																										
165	AC	TERM. BOARD STORAGE DRAWER		2900927-011																																										
164	AC	INPUT/OUTPUT PANEL		2900926-011																																										
163	AC	CONTROL PANEL		2900896-011																																										
162	AC	CSL. CAL AND TEST, SCM/PSAAM		2900895-011						FOR DIMENSIONS, SEE DASH 144 VALUES BELOW																																				
161	AC	FIX., LIFT AND HAND., IMU		[illegible]54[illegible]2-011						FOR DIMENSIONS, SEE DASH 141 VALUES BELOW																																				
160	AC	FIX., HAND., G AND N HARNESS		1901846-031						FOR DIMENSIONS, SEE DASH 144 VALUES BELOW																																				
159	AC	BATTERY POWER PACK		1900011-031			B	II	NOTE 11C																																					
158	AC	COUPLING DATA UNIT ASSEMBLY C/M		2007222			A	I	NOTE 11B	FOR DIMENSIONS SEE DASH 100 VALUES BELOW																																				
157	AC	COUPLING DATA UNIT ASSEMBLY - LEM		2007222																																										
156	AC	POWER & SERVO ASSEMBLY C/M		2007200						2.125	.968	1.718	NA	.093	.031	.06	.093	NA	NA	.858	.608	.484	.358	.733	.062	.140	.062	NA	.968	1.450	.125	NA	1.720	.046	.03	NA	.210	NA	NA	NA	.070	NA	.046	.32	.16	NA
155	AC	PIPA ELECTRONICS ASSEMBLY		2007201						FOR DIMENSIONS SEE DASH 100 VALUES BELOW																																				
154	AC	PULSE TORQUE ASSEMBLY - LEM		6007000																																										
153	AC	POWER & SERVO ASSEMBLY - LEM		6007200			A	I	NOTE 11B																																					
152	AC	CONT PNL, RSVR CKT TESTER		2900770-011			B	II	NOTE 11C	FOR DIMENSIONS, SEE DASH 141 VALUES BELOW																																				
151	AC	TESTER, RESOLVER CIRCUIT		2900708-011																																										
150	AC	JUNCTION BOX, P.S.A./G.S.E.		1901933-021						FOR DIMENSIONS, SEE DASH 144 VALUES BELOW																																				
149	AC	BATTERY PACK, LIFTING		29006[illegible]2-011						FOR DIMENSIONS, SEE DASH 141 VALUES BELOW																																				
148	AC	MOUNTING PLATE, COMPONENT		6900007-011						FOR DIMENSIONS, SEE DASH 144 VALUES BELOW																																				
147	AC	MOUNTING PLATE, COMPONENT		2900677-011																																										
146	AC	CART, TRANS., G AND N		1900009-041																																										
145	AC	CONTAINER, SHIPPING, IMU		1900010-021		NAS-9-497	B	II	NOTE 11C																																					
144	AC	FIX., MOUNTING, G AND N		1902204-021			B	II	NOTE 11C	4.125	1.812	3.250	NA	.125	.062	.12	.156	.100 .104	.125	1.625	1.140	.890	.640	1.390	.125	.171	.125	1.875	1.687	2.625	.250	1.562	3.843	.093	NA	NA	.359	.125	.437	3.688	NA	3.687	.093	.40	.25	3.875
143	AC	CSL, COOL. AND PWR, G AND N		1902134-021						4.125	1.812	3.250		.125	.062	.12	.156		.125	1.625	1.140	.890	.640	1.390	.125	.171	.125	1.875	1.687	2.625	.250	1.562	3.843	.093			.359	.125	.437	3.688		3.687	.093	.40	.25	3.875
142	AC	ANALYZER, OPTICS-INERTIAL		2900023-011						4.125	1.812	3.250		.125	.062	.12	.156		.125	1.625	1.140	.890	.640	1.390	.125	.171	.125	1.875	1.687	2.625	.250	1.562	3.843	.093			.359	.125	.437	3.688		3.687	.093	.40	.25	3.875
141	AC	CONT, TEMP, PORTABLE		2900060-011						2.125	.968	1.718		.093	.031	.06	.093		.093	.858	.608	.484	.358	.733	.077	.116	.062	.937	.875	1.343	.125	.781	1.892	.046			.209	.093	.250	1.875		1.840	.046	.23	.16	1.938
140	AC	TESTER, CKT, IMU/CDU RSVR		2900286-011						4.125	1.812	3.250		.125	.062	.12	.156		.125	1.625	1.140	.890	.640	1.390	.125	.171	.125	1.875	1.687	2.625	.250	1.562	3.843	.093			.359	.125	.437	3.688		3.687	.093	.40	.25	3.875
139	AC	SIMULATOR, LD/SIG, CDU		2900285-011																																										
138	AC	SIMULATOR, LD/SIG, OPTICS		1902023-021																																										
137	AC	FIX., MOUNTING, IMU/NAV BASE		6900003-011																																										
136	AC	FIXTURE, OPTICS/NAV BASE		2900072-011																																										
135	AC	FIX., MOUNTING, SUB SYSTEM		2900070-011																																										
134	AC	FIX., HAND., G AND N HARNESS		2900069-011																																										
133	AC	CNTR, SHIPPING, NAV BASE		2900068-011																																										
132	AC	FIX., MOUNTING, G AND N		2900067-011																																										
131	AC	SIMULATOR, LD/SIG, IMU/CDU		2900062-011																																										
130	AC	TESTER, GYRO WHEEL		2900061-011																																										
129	AC	COOLANT SUPPLY		1902133-021						4.125	1.812	3.250		.125	.062	.12	.156		.125	1.625	1.140	.890	.640	1.390	.125	.171	.125	1.875	1.687	2.625	.250	1.562	3.843	.093			.359	.125	.437	3.688		3.687	.093	.40	.25	3.875
128	AC	TABLE, ROTARY		1900926-021						2.125	.968	1.718		.093	.031	.06	.093		.093	.858	.608	.484	.358	.733	.077	.116	.062	.937	.875	1.343	.125	.781	1.892	.046			.209	.093	.250	1.875		1.840	.046	.23	.16	1.938
127	AC	FIX., HAND., OPTICS		2900074-011																																										
126	AC	FIXTURE, MTG, PTA PEA.		2900066-011																																										
125	AC	CONT, TEMP, IMU LIFTING		2900063-011																																										
124	AC	FIXTURE, HANDLING, IMU		2900064-011																																										
123	AC	CONT, OPTICS, REMOTE		1902046-021																																										
122	AC	TEST CONTROL		1902009-021																																										
121	AC	ADPT MODULE, P.S.A.		1902431-021																																										
120	AC	BRIDGE, DECADE ERROR		2900128-011																																										
119	AC	PWR SUP, ELECTRONICS		2900012-011																																										
118	AC	PWR SUP, RELAY AND LAMP		1900049-031																																										
117	AC	CONSOLE, OSCILLOGRAPH		1900000-021																																										
116	AC	ADPT MODULE, P.S.A.		1902431-011																																										
115	AC	ADPT, TEST POINT, PTA/PEA.		2900145-011																																										
114	AC	ADPT, TEST POINT, P.S.A.		2900037-011																																										
113	AC	CONTROL, GIMBAL POSITION		2900036-011																																										
112	AC	SELECTOR, SIGNAL, PRIMARY		2900035-011																																										
111	AC	SEL, SIG, OSCILLOGRAPH		2900034-011																																										
110	AC	PANEL, PWR SUP AND LOAD		2900033-011																																										
109	AC	PANEL, MONITOR		2900031-011																																										
108	AC	PANEL, AUXILIARY INPUT		2900030-011																																										
107	AC	CAGING ELECTRONICS, GYRO		2900029-011																																										
106	AC	TEST SELECTOR		2900028-011																																										
105	AC	TEST CONTROL		2900027-011																																										
104	AC	MONITOR AND CONTROL, TEMP		2900026-011																																										
103	AC	DISTRIBUTION BOX, GSE		2900024-011																																										
102	AC	VOLTMETER, DIGITAL		2900007 011			B	II	NOTE 11C	2.125	.968	1.718	NA	.093	.031	.06	.093	.100 .104	.093	.858	.608	.484	.358	.733	.077	.116	.062	.937	.875	1.343	.125	.781	1.892	.046	NA	NA	.209	.093	.250	1.875	NA	1.840	.046	.23	.16	1.938
101	AC	NAVIGATION BASE ASSEMBLY - LEM		6899950		NAS-9-497	A	I	NOTE 11B	2.000	1.312	1.906	1.375	.078	.048	.078	.093	NA	NA	1.125	.750	.593	.453	1.015	.062	.187	.078	.875	.718	1.375	.218	NA	NA	.048	.031	.875	.305	.078	.531	1.906	.078	NA	.078	.531	.187	NA
100	AC	NAVIGATION BASE ASSEMBLY		2899982		NAS-9-497	A	I	NOTE 11B	2.000	1.312	1.906	1.375	.078	.048	.078	.093	NA	NA	1.125	.750	.593	.453	1.015	.062	.187	.078	.875	.718	1.375	.218	NA	NA	.048	.031	.875	.305	.078	.531	1.906	.078	NA	.078	.531	.187	NA

THIS SHEET ADDED

Ⓖ REPLACES REV F, WITH CHANGE

AC ELECTRONICS DASH NUMBERS

NOTES FOR TABLE

STYLE A IS FOR G&N SYSTEM
STYLE B IS FOR GROUND SUPPORT EQUIPMENT
TYPE I IS WITHOUT MOUNTING HOLES
TYPE II IS WITH MOUNTING HOLES

NOTE: AC DASH NO's. CONT. ON SH.6

QTY REQD	PART OR IDENTIFYING NO.	MATERIAL OR NOTES	NOMENCLATURE OR DESCRIPTION	FIND NO.

LIST OF MATERIALS

AS APPLICABLE	
NEXT ASSY	USED ON
APPLICATION	

UNLESS OTHERWISE SPECIFIED
DIMENSIONS ARE IN INCHES
CAPACITOR VALUES ARE IN µf
RESISTOR VALUES ARE IN OHMS
TOLERANCES ON
FRACTIONS ± — DECIMALS ±.005 ANGLES ± —
DO NOT SCALE THIS DRAWING

MATERIAL
SEE NOTE 11

MIT
INSTRUMENTATION LAB
CAMBRIDGE MASS

MANNED SPACECRAFT CENTER
HOUSTON, TEXAS

DRAWN	R A Jones	7 16 65
CHECKED	A. J.	7-22-65
APPROVED		
APPROVED	W Kupfer	22/65
APPROVED MIT	W Kupfer	22/65
APPROVED MSC		
		DATE

NAMEPLATES,
APOLLO G&N-GSE
(STANDARDS)

CODE IDENT NO. 80230
SIZE E
DRAWING NO. 1004260
SCALE NONE
SHEET 4 OF

NOTICE – WHEN GOVERNMENT DRAWINGS, SPECIFICATIONS, OR OTHER DATA ARE USED FOR ANY PURPOSE OTHER THAN IN CONNECTION WITH A DEFINITELY RELATED GOVERNMENT PROCUREMENT OPERATION, THE UNITED STATES GOVERNMENT THEREBY INCURS NO RESPONSIBILITY NOR ANY OBLIGATION WHATSOEVER, AND THE FACT THAT THE GOVERNMENT MAY HAVE FORMULATED, FURNISHED, OR IN ANY WAY SUPPLIED THE SAID DRAWINGS, SPECIFICATIONS OR OTHER DATA IS NOT TO BE REGARDED BY IMPLICATION OR OTHERWISE AS IN ANY MANNER LICENSING THE HOLDER OR ANY OTHER PERSON OR CORPORATION, OR CONVEYING ANY RIGHTS OR PERMISSION TO MANUFACTURE, USE, OR SELL ANY PATENTED INVENTION THAT MAY IN ANY WAY BE RELATED THERETO.

REVISIONS 02768

SYM	ZONE	DESCRIPTION	DR	CHK	DATE	APPROVED
G		REPLACES REV F WITH CHANGE PER TDRR 20854			7/22/65	WK
H		REVISED PER TDRR 20892			8/3/65	WK
J		REVISED PER TDRR 20904			8/3/65	WK
K		REVISED PER TDRR 21379			8/6/65	WK
L		REVISED PER TDRR 21410			8/23/65	WK
M		REVISED PER TDRR 21993				
N		REVISED PER TDRR 22621			10/	
P		REVISED PER TDRR 22671			11/	
R		REVISED PER TDRR 22672				
S		REVISED PER TDRR 22750			65	WK
T		REVISED PER TDRR 22823				
U		REVISED PER TDRR 23072			10-22-65	
V		REVISED PER TDRR 23521			10-28-65	WK
W		REVISED PER TDRR 23824	RAJ		11-9-65	WK
Y		REVISED PER TDRR 24018	RAJ		11-16-65	WK
Z		REVISED PER TDRR 24040	RAJ		11-15-65	WK
AA		REVISED PER TDRR 24060	RAJ		11-19-65	WK
AB		REVISED PER TDRR 24868	RAJ		12-22-65	WK
AC		REVISED PER TDRR 24973	RAJ		1-4-66	WK
AD		REVISED PER TDRR 25065	RAJ		1-18-66	
AE		REVISED PER TDRR 25672	RAJ		2-4-66	WK
AF		REVISED PER TDRR 25671	RAJ		2-4-66	WK
AG		REVISED PER TDRR 26110	RAJ		2-15-66	WK
AH		REVISED PER TDRR 26372	"		3-16-66	WGM
AJ		REVISED PER TDRR 26425	"		3-16-66	WGM
AK		REVISED PER TDRR 26743	"		3-16-66	WGM
AL		REVISED PER TDRR 26798	"		3-16-66	WGM
AM		REVISED PER TDRR 27168	"		4-7-66	WGM
AN		REVISED PER TDRR 27235	"		4-7-66	WGM
AP		REVISED PER TDRR 27345	"		4-7-66	WGM
AR		REVISED PER TDRR 27417	"		4-7-66	WGM
AS		REVISED PER TDRR 27442	"		4-7-66	WGM
AT		REVISED PER TDRR 27719			4-20-66	WK
AU		REVISED PER TDRR 27880	"		4-20-66	WK
AV		REVISED PER TDRR 27896	"		4-20-66	WK
AW		28110			5-16-66	WGM
AY		28173	"			WGM
AZ		28131	"			WGM
BA		28124	"			WGM
BB		REVISED PER TDRR 28511	"		5-16-66	WGM
BC		" " " 28949	"		5-24-66	
BD		" " " 29222	"		6-8-66	WGM
BE		" " " 29235	"		"	WGM
BF		" " " 29322	"		6-24-66	WGM
BG		" " " 29429	"		"	WGM
BH		" " " 29449	"		"	WGM
BJ		" " " 29335	"		"	WGM
BK		" " " 29619	"		"	WGM
BL		" " " 29696	"		6-29-66	WGM
BM		REVISION STATUS CHANGED	JSD		7-29-66	
BN		REVISION STATUS CHANGED	JI	RW	22 AUG 66	
BP		REVISION STATUS CHANGED	JI	RLW	23 AUG 66	
BR		REVISION STATUS CHANGED	JI	RLW	23 AUG 66	
BS		REVISION STATUS CHANGED	GW	RLW	26 AUG 66	
BT		REVISION STATUS CHANGED	GW	RLW	26 AUG 66	
BU		REVISION STATUS CHANGED	EH	JI	9 SEPT 66	
BV		REVISION STATUS CHANGED	JJB	RLW	3 SEP 66	
BW		REVISION STATUS CHANGED	JJB	RLW	30 SEP 66	
BY		REVISION STATUS CHANGED	JJB	RLW	10 OCT 66	
BZ		REVISION STATUS CHANGED	JJB	RLW	10 OCT 66	

499	MIT
498	

DASH NO.	P/C	PART NAME	REMARKS	PART NO.	SER. NO.	CONT. NO.	STYLE	TYPE	MATERIAL	A	B	C	D	E	F	G	H	J	K
40	MIT	COMPUTER ASSY		2003100		NAS-9-497	A	I	NOTE 11 B	2.000	1.312	1.906	1.375	.078	.048	.078	.093	NA	NA
-00	MIT	LIFTING SLING-G&N INST. QUAL. FIX. & AZM. REF. FIX.		1021640		NAS-9-4065	B	II	NOTE 11 C	2.000	1.312	1.687	1.375	.078	.048	.078	.093	.066/.081	.093

DASH NO.	L	M	N	P	R	S	T	U	V	W	Y	Z	AA	AB	AC	AD	AE	AF	AG	AH	AJ	AK	AL	AM	AN	AP	AR
40	1.25	.750	.593	.453	1.015	.062	.187	.078	.875	.718	1.375	.218	NA	NA	.048	.031	.875	.305	.078	.531	1.906	.078	NA	.078	.531	.187	NA
-00	1.187	.750	.593	.453	1.015	.062	.187	.078	.875	.718	1.375	.218	1.156	1.843	.048	NA	.875	.305	.078	.312	1.687	.110	1.830	.070	.275	.180	1.844

MIT DASH NUMBERS

THIS SHEET ADDED

Ⓖ REPLACES REV F WITH CHANGE

NOTES FOR TABLE

STYLE A IS FOR G&N SYSTEM
STYLE B IS FOR GROUND SUPPORT EQUIPMENT
TYPE I IS WITHOUT MOUNTING HOLES
TYPE II IS WITH MOUNTING HOLES

QTY REQD	PART OR IDENTIFYING NO.	MATERIAL OR NOTES	NOMENCLATURE OR DESCRIPTION	FIND NO.

LIST OF MATERIALS

NEXT ASSY	USED ON
AS APPLICABLE	

APPLICATION

UNLESS OTHERWISE SPECIFIED
DIMENSIONS ARE IN INCHES
CAPACITOR VALUES ARE IN μf
RESISTOR VALUES ARE IN OHMS
TOLERANCES ON
FRACTIONS ± — DECIMALS ±.005 ANGLES ± —
DO NOT SCALE THIS DRAWING

MATERIAL
SEE NOTE 11

MIT
INSTRUMENTATION LAB
CAMBRIDGE, MASS

DRAWN R A Jones 7-16-65
CHECKED A J 7-22-65
APPROVED
APPROVED W Kupfer 7/22/65
APPROVED MIT W Kupfer 7/22/65
APPROVED MSC
DATE

MANNED SPACECRAFT CENTER
HOUSTON, TEXAS

NAMEPLATES,
APOLLO G&N-GSE
(STANDARDS)

CODE IDENT NO 80230
SIZE E
DRAWING NO. 1004260
SCALE NONE
SHEET 5 OF

NOTICE – WHEN GOVERNMENT DRAWINGS, SPECIFICATIONS, OR OTHER DATA ARE USED FOR ANY PURPOSE OTHER THAN IN CONNECTION WITH A DEFINITELY RELATED GOVERNMENT PROCUREMENT OPERATION, THE UNITED STATES GOVERNMENT THEREBY INCURS NO RESPONSIBILITY NOR ANY OBLIGATION WHATSOEVER, AND THE FACT THAT THE GOVERNMENT MAY HAVE FORMULATED, FURNISHED, OR IN ANY WAY SUPPLIED THE SAID DRAWINGS, SPECIFICATIONS OR OTHER DATA IS NOT TO BE REGARDED BY IMPLICATION OR OTHERWISE AS IN ANY MANNER LICENSING THE HOLDER OR ANY OTHER PERSON OR CORPORATION, OR CONVEYING ANY RIGHTS OR PERMISSION TO MANUFACTURE, USE, OR SELL ANY PATENTED INVENTION THAT MAY IN ANY WAY BE RELATED THERETO.

539 AC
538 AC

REVISIONS 02768

SYM	ZONE	DESCRIPTION	DR	CHK	DATE	APPROVED
AG		CHANGED NUMBER OF SHEETS FROM 5 TO 6 PER TDRR 26110.	RAJ		2-15-66	
AH		REVISED PER TDRR 26372	"		3-16-66	
AJ		REVISED PER TDRR 26425	"		3-16-66	
AK		REVISED PER TDRR 26743	"		3-16-66	
AL		REVISED PER TDRR 26798	"		3-16-66	
AM		REVISED PER TDRR 2[illegible]68	"		4-7-66	
AN		REVISED PER TDRR 27235	"		4-7-66	
AP		REVISED PER TDRR 27345	"		4-7-66	
AR		REVISED PER TDRR 27417	"		4-7-66	
AS		REVISED PER TDRR 27442	"		4-7-66	
AT		REVISED PER TDRR 27719	"		4-20-66	
AU		REVISED PER TDRR 27880	"		4-20-66	
AV		REVISED PER TDRR 27896	"		4-20-66	
AW		28110	"		5-16-66	
AY		28173	"		5-16-66	
AZ		28131	"		5-16-66	
BA		28124	"		5-16-66	
BB		REVISED PER TDRR 28511	"		5-16-66	
BC		" " " 28949	"		5-24-66	
BD		" " " 29222	"		6-8-66	
BE		" " " 29235	"		"	
BF		" " " 29322	"		6-24-66	
BG		" " " 29429	"		"	
BH		" " " 29449	"		"	
BJ		" " " 29335	"		"	
BK		" " " 29619	"		"	
BL		" " " 29696	"		6-29-66	
BM		REVISION STATUS CHANGED	JSD	N.S.	7-29-66	
BN		REVISED PER TDRR 29974	JI	RLW	22 AUG 66	
BP		REVISION STATUS CHANGED	JI	RLW	22 AUG 66	
BR		REVISION STATUS CHANGED	JI	RLW	25 AUG 66	
BS		REVISED PER TDRR 30530	GW	RLW	26 AUG 66	
BT		REVISED PER TDRR 30543	GW	RLW	26 AUG 66	
BU		REVISED PER TDRR 30998	EH	TI	9 SEPT 66	
BV		REVISED PER TDRR 31241	JJB	RLW	[illegible] SEP 66	
BW		REVISION STATUS CHANGED	JJB	RLW	30 SEP 66	
BY		REVISED PER TDRR 3134[illegible]	JJB	RLW	10 OCT 66	
BZ		REVISED PER TDRR 31393	JJB	RLW	10 OCT 66	

DASH NO.	P/C	PART NAME	REMARKS	PART NO.	SER NO.	CONT NO.	STYLE	TYPE	MATERIAL	A	B	C	D	E	F	G	H	J	K	L	M	N	P	R	S	T	U	V	W	Y	Z	AA	AB	AC	AD	AE	AF	AG	AH	AJ	AK	AL	AM	AN	AP	AR
546		FIX., HAND., C/M AND LEM CDU		2900999-021		NAS-9-497	B	II	NOTE 11 C	2.125	.968	1.718	NA	.093	.031	.06	.093	.100/.104	.093	.858	.608	.484	.358	.733	.077	.116	.062	.937	.875	1.343	.125	.781	1.892	.046	NA	NA	.209	.093	.250	1.875	NA	1.840	.046	.23	.16	1.938
544		ADPT MODULE, P.S.A.		1902431-051		NAS-9-497	B	II	NOTE 11 C	2.125	.968	1.718	NA	.093	.031	.06	.093	.100/.104	.093	.858	.608	.484	.358	.733	.077	.116	.062	.937	.875	1.343	.125	.781	1.892	.046	NA	NA	.209	.093	.250	1.875	NA	1.840	.046	.23	.16	1.938
541	AC	FIXTURE, MOUNTING, IMU		2900000-021		NAS 9-497	B	II	NOTE 11C	4.125	1.812	3.250	NA	.125	.062	.12	.156	.100/.104	.125	1.625	1.140	.890	.640	1.390	.125	.171	.125	1.875	1.687	2.625	.250	1.562	3.843	.093	NA	NA	.359	.125	.437	3.688	NA	3.687	.093	.40	.25	3.875
543	AC	PANEL, MONITOR		2900031-041		NAS9-497	B	II	NOTE 11C	2.125	.968	1.718	NA	.093	.031	.06	.093	.100/.104	.093	.858	.608	.484	.358	.733	.077	.116	.062	.937	.875	1.343	.125	.781	1.892	.046	NA	NA	.209	.093	.250	1.875	NA	1.840	.046	.23	.25	1.938
542	AC	BATTERY PACK, LIFTING		2900812-021		NAS9-497	B	II	NOTE 11C	2.125	.968	1.718	NA	.093	.031	.06	.093	.100/.104	.093	.858	.608	.484	.358	.733	.077	.116	.062	.937	.875	1.343	.125	.781	1.892	.046	NA	NA	.209	.093	.250	1.875	NA	1.840	.046	.23	.16	1.938
540	AC	ADPT, TEST POINT, P.S.A.		2900037-031		NAS 9-497	B	II	NOTE 11C	2.125	.968	1.718	NA	.093	.031	.06	.093	.100/.104	.093	.858	.608	.484	.358	.733	.077	.116	.062	.937	.875	1.343	.125	.781	1.892	.046	NA	NA	.209	.093	.250	1.875	NA	1.840	.046	.23	.16	1.938
539	AC	ANNUNCIATOR PANEL AND EYEPIECE STORAGE ASSEMBLY		1021255-041			A	I	NOTE 11B	2.000	1.312	1.906	1.375	.078	.048	.078	.093	NA	NA	1.125	.750	.593	.453	1.015	.062	.187	.078	.875	.718	1.375	.218	NA	NA	.048	.031	.875	.305	.078	.531	1.906	.078	NA	.078	.531	.187	NA
538	AC	ANNUNCIATOR PANEL AND EYEPIECE STORAGE ASSEMBLY		1021255-031			A	I	NOTE 11B	2.000	1.312	1.906	1.375	.078	.048	.078	.093	NA	NA	1.125	.750	.593	.453	1.015	.062	.187	.078	.875	.718	1.375	.218	NA	NA	.048	.031	.875	.305	.078	.531	1.906	.078	NA	.078	.531	.187	NA
537	AC	TEST SELECTOR		2900028-031			B	II	NOTE 11C	2.125	.968	1.718	NA	.093	.031	.06	.093	.100/.104	.093	.858	.608	.484	.358	.733	.077	.116	.062	.937	.875	1.343	.125	.781	1.892	.046	NA	NA	.209	.093	.250	1.875	NA	1.840	.046	.23	.16	1.938
536	AC	ANALYZER, OPTICS- INERTIAL		2900023-041			B	II	NOTE 11C	4.125	1.812	3.250	NA	.125	.062	.12	.156	.100/.104	.125	1.625	1.140	.890	.640	1.390	.125	.171	.125	1.875	1.687	2.625	.250	1.562	3.843	.093	NA	NA	.359	.125	.437	3.688	NA	3.687	.093	.40	.25	3.875
535	AC	CONT, TEMP, PORTABLE		2900060-021			B	II	NOTE 11C	2.125	.968	1.718	NA	.093	.031	.06	.093	.100/.104	.093	.858	.608	.484	.358	.733	.077	.116	.062	.937	.875	1.343	.125	.781	1.892	.046	NA	NA	.209	.093	.250	1.875	NA	1.840	.046	.23	.16	1.938
534	AC	COMPUTER CONT & RETICLE DIMMER		6014512-021			A	I	NOTE 11B	2.000	1.312	1.906	1.375	.078	.048	.078	.093	NA	NA	1.125	.750	.593	.453	1.015	.062	.187	.078	.875	.718	1.375	.218	NA	NA	.048	.031	.875	.305	.078	.531	1.906	.078	NA	.078	.531	.187	NA
533	AC	ADPT MODULE, P.S.A.		1902431-041			B	II	NOTE 11C	2.125	.968	1.718	NA	.093	.031	.06	.093	.100/.104	.093	.858	.608	.484	.358	.733	.077	.116	.062	.937	.875	1.343	.125	.781	1.892	.046	NA	NA	.209	.093	.250	1.875	NA	1.840	.046	.23	.16	1.938
532	AC	TRAY BREAKOUT, 105 PIN		1900807-021						4.125	1.812	3.250		.125	.062	.12	.156	.100/.104	.125	1.625	1.140	.890	.640	1.390	.125	.171	.125	1.875	1.687	2.625	.250	1.562	3.843	.093			.359	.125	.437	3.688		3.687	.093	.40	.25	3.875
531	AC	TRAY BREAKOUT, 84 PIN		1900806-021						4.125	1.812	3.250		.125	.062	.12	.156	.100/.104	.125	1.625	1.140	.890	.640	1.390	.125	.171	.125	1.875	1.687	2.625	.250	1.562	3.843	.093			.359	.125	.437	3.688		3.687	.093	.40	.25	3.875
530	AC	HEAT SINK - TRAY EXTENDER		1900808-021						2.125	.968	1.718		.093	.031	.06	.093	.100/.104	.093	.858	.608	.484	.358	.733	.077	.116	.062	.937	.875	1.343	.125	.781	1.892	.046			.209	.093	.250	1.875		1.840	.046	.23	.16	1.938
529	AC	TESTER, FAILURE INDICATOR		1900809-021						2.125	.968	1.718	NA	.093	.031	.06	.093	.100/.104	.093	.858	.608	.484	.358	.733	.077	.116	.062	.937	.875	1.343	.125	.781	1.892	.046	NA	NA	.209	.093	.250	1.875	NA	1.840	.046	.23	.16	1.938
527	AC	FIX., MOUNTING, G AND N	(-144)	1902204-021						FOR DIMENSIONS, SEE DASH 500 VALUES BELOW																																				
526	AC	FIX., MOUNTING, G AND N	(-144)	2900067-031																																										
525	AC	PORTABLE TEMP. CONTROLLER		1900496-021			B	II	NOTE 11 C	3.000	1.937	2.437	2.312	.125	.031	.125	.156	.125	.125	1.718	1.187	.968	.749	1.452	.093	.295	.090	1.312	1.00	2.000	.250	1.687	2.750	.062	N/A	N/A	.463	.125	.562	2.437	.140	2.562	.090	.468	.359	2.750
524	AC	POWER, SERVO AND THERMOCOUPLE ASSEMBLY C/M		2010743			A	I	NOTE 11 B	2.125	.968	1.718	NA	.093	.031	.06	.093	NA	NA	.858	.608	.484	.358	.733	.062	.140	.062	NA	.968	1.450	.125	NA	1.720	.046	.03	NA	.210	NA	NA	NA	.070	NA	.046	.32	.16	NA
523	AC	PULSE TORQUE AND THERMOCOUPLE ASSEMBLY - LEM		6010656						FOR DIMENSIONS, SEE DASH 508 VALUES BELOW																																				
522	AC	COUPLING DATA UNIT AND THERMOCOUPLE ASSEMBLY - LEM		2010744																																										
521	AC	COUPLING DATA UNIT AND THERMOCOUPLE ASSEMBLY - C/M		2010744																																										
520	AC	PIPA ELECTRONICS AND THERMOCOUPLE ASSEMBLY		2010745			A	I	NOTE 11 B																																					
519	AC	FIXTURE, HANDLING, LEM-PSA	(-141)	6900129-011			B	II	NOTE 11C	FOR DIMENSIONS, SEE DASH 504 VALUES BELOW																																				
518	AC	JUNCTION BOX, GSE-PSA	(-144)	1901933-031			B	II	NOTE 11C	FOR DIMENSIONS, SEE DASH 500 VALUES BELOW																																				
517	AC	FIX., HAND., OPTICS INSTL.	(-141)	2901380-011			B	II	NOTE 11C	FOR DIMENSIONS SEE DASH 502 VALUES BELOW																																				
516	AC	POWER, SERVO AND THERMOCOUPLE ASSEMBLY-LEM		6010655		NAS 9 497	A	I	NOTE 11B	FOR DIMENSIONS SEE DASH 508 VALUES BELOW																																				
514	AC	SIGNAL COND. ASSY LEM OPER.	(-100)	6007013		NAS-9-497	A	I	NOTE 11B	FOR DIMENSIONS, SEE DASH 508 VALUES BELOW																																				
513		JUMPER, BY-PASS	(-141)	1021616			B	II	NOTE 11C	2.125	.968	1.718	NA	.093	.031	.06	.093	.100/.104	.093	.858	.608	.484	.358	.733	.077	.116	.062	.937	.875	1.343	.125	.781	1.892	.046	NA	NA	.209	.093	.250	1.875	NA	1.840	.046	.23	.16	1.938
512		COUPLING DATA UNIT ASSEMBLY C/M	(-100)	2007322-011			A	I	NOTE 11B	FOR DIMENSIONS, SEE DASH 508 VALUES BELOW																																				
511		COUPLING DATA UNIT ASSEMBLY - LEM	(-100)	2007322-021																																										
510		BATTERY POWER PACK	(-144)	1900011-041			B	II	NOTE 11C	FOR DIMENSIONS, SEE DASH 500 VALUES BELOW																																				
509		JUNCTION BOX, P.S.A./G.S.E.	(-144)	1902195-021			B	II	NOTE 11C																																					
508		NAVIGATION BASE ASSEMBLY - LEM	✓ (-101)	6899980			A	I	NOTE 11B	2.000	1.312	1.906	1.375	.078	.048	.078	.093	NA	NA	1.125	.750	.593	.453	1.015	.062	.187	.078	.875	.718	1.375	.218	NA	NA	.048	.031	.875	.305	.078	.531	1.906	.078	NA	.078	.531	.187	NA
507		CSL, COOL. AND PWR, G AND N	(-144)	1902134-041			B	II	NOTE 11C	FOR DIMENSIONS, SEE DASH 500 VALUES BELOW																																				
506		BREAKOUT BOX, CABLE ADAPTER	(-141)	2901011-011						2.125	.968	1.718	NA	.093	.031	.06	.093	.100/.104	.093	.858	.608	.484	.358	.733	.077	.116	.062	.937	.875	1.343	.125	.781	1.892	.046	NA	NA	.209	.093	.250	1.875	NA	1.840	.046	.23	.16	1.938
505		MONITOR AND CONTROL, TEMP	(-141)	2900026-021																																										
504		PWR SUP, GUIDANCE SYSTEM	✓ (-141)	1900033-021																																										
503		CONTROL, GIMBAL POSITION	(-141)	2900036-021																																										
502		ADPT, TEST POINT, PTA/PEA.	(-141)	2900145-021																																										
501		MOUNTING PLATE, COMPONENT	(-144)	6900007-031		NAS-9-497	B	II	NOTE 11C	FOR DIMENSIONS, SEE DASH 500 VALUES BELOW																																				
500	AC	MOUNTING PLATE, COMPONENT	✓ (-144)	2900677-02						4.125	1.812	3.250	NA	.125	.062	.12	.156	.100/.104	.125	1.625	1.140	.890	.640	1.390	.125	.171	.25	1.675	.687	2.625	.250	1.562	3.843	.093	NA	NA	.359	.125	.437	3.688	NA	3.687	.093	.40	.25	3.875

A C ELECTRONICS DASH NUMBERS

Ⓐⓖ THIS SHEET ADDED

NOTES FOR TABLE
STYLE A IS FOR G&N SYSTEM
STYLE B IS FOR GROUND SUPPORT EQUIPMENT
TYPE I IS WITHOUT MOUNTING HOLES
TYPE II IS WITH MOUNTING HOLES

QTY REQD	PART OR IDENTIFYING NO.	MATERIAL OR NOTES	NOMENCLATURE OR DESCRIPTION	FIND NO.

LIST OF MATERIALS

NEXT ASSY	USED ON
AS APPLICABLE	

APPLICATION

UNLESS OTHERWISE SPECIFIED
DIMENSIONS ARE IN INCHES
CAPACITOR VALUES ARE IN μf
RESISTOR VALUES ARE IN OHMS
TOLERANCES ON
FRACTIONS ± — DECIMALS ±.005 ANGLES ± —
DO NOT SCALE THIS DRAWING

MATERIAL
SEE NOTE 11

MIT
INSTRUMENTATION LAB
CAMBRIDGE, MASS

DRAWN R. A. Jones 2-15-66
CHECKED W. Chandler 2-15-66
APPROVED
APPROVED
APPROVED MIT 5-15-66
APPROVED MSC
DATE

MANNED SPACECRAFT CENTER
HOUSTON, TEXAS

NAMEPLATES,
APOLLO G&N-GSE
(STANDARDS)

CODE IDENT NO. 80230
SIZE E
DRAWING NO. 1004260
SCALE NONE
SHEET 6 OF 6

NOTICE – WHEN GOVERNMENT DRAWINGS, SPECIFICATIONS, OR OTHER DATA ARE USED FOR ANY PURPOSE OTHER THAN IN CONNECTION WITH A DEFINITELY RELATED GOVERNMENT PROCUREMENT OPERATION, THE UNITED STATES GOVERNMENT THEREBY INCURS NO RESPONSIBILITY NOR ANY OBLIGATION WHATSOEVER, AND THE FACT THAT THE GOVERNMENT MAY HAVE FORMULATED, FURNISHED, OR IN ANY WAY SUPPLIED THE SAID DRAWINGS, SPECIFICATIONS OR OTHER DATA IS NOT TO BE REGARDED BY IMPLICATION OR OTHERWISE AS IN ANY MANNER LICENSING THE HOLDER OR ANY OTHER PERSON OR CORPORATION, OR CONVEYING ANY RIGHTS OR PERMISSION TO MANUFACTURE, USE, OR SELL ANY PATENTED INVENTION THAT MAY IN ANY WAY BE RELATED THERETO.

NOTES:

1. INTERPRET DRAWING IN ACCORDANCE WITH STANDARDS PRESCRIBED IN MIL-D-70327.
2. DIMENSIONS ON EACH VIEW APPLY TO ALL VIEWS. (WITH THE EXCEPTION OF MOUNTING HOLES).
3. FORMATS ILLUSTATED WILL BE APPLICABLE TO ALL ITEMS REQUIRING NAMEPLATES BELOW END ITEM DESIGNATION (SYSTEMS, ASSEMBLIES, ETC.)
4. PLATE BACKGROUND TO BE LUSTERLESS BLACK PER FED-STD-595, COLOR 37038. BORDER, MARKING AND LETTERING TO BE NATURAL METAL, (ANODIZED ALUMINUM).
5. MARKING METHOD TO BE DIE STAMPING, ETCHING OR ENGRAVING IN ACCORDANCE WITH MIL P 19834.
6. LETTERING STYLE TO BE GOTHIC, (SANS SERIFS), AND NUMBERS TO BE ARABIC.
7. WHERE LOCATING DIMENSIONS ARE NOT SHOWN, CHARACTERS SHALL BE SYMMETRICALLY POSITIONED.
8. IDENTIFY WITH DRAWING NUMBER PER ND1002019.
9. WHEN "AUTO MARK" METAL MARKING TYPEWRITER IS USED TO ADD DATA TO BLANK SPACES, TYPE SIZE IS TO BE SELECTED FROM DIMENSIONS U, AC AND AM.
10. NASA SYMBOL IS TO BE PROPORTIONAL TO NAMEPLATE IN RATIO OF 1 TO 5 WITH DIMENSION A VALUE AND IS TO HAVE NATURAL BACKGROUND. NASA SYMBOL LETTERS LETTERING AND FEATHER TO BE BLACK, (OR WHITE FOR SILK SCREENING). WHERE BLACK FEATHER PROTRUDES INTO BLACK BACKGROUND, A MINIMUM OUTLINE OF NATURAL BACKGROUND SHALL EXIST.
11. NAMEPLATES WILL BE APPLIED BY METHODS LISTED BELOW, SHOWN IN ORDER OF PREFERENCE, (I.E., FOR RELIABILITY AND WEIGHT).
    - A - STENCIL OR SILK SCREEN DIRECTLY ON EQUIPMENT USING INK PER SCD 1010920, (WHITE OR BLACK).
    - B - ALUMINUM FOIL, (STYLE A OR B, TYPE I):
      FOIL SHALL BE .0030 ±.0005 THICK PER MIL-A-148.
      FOIL SHALL HAVE NO ADHESIVE BACKING.
      FOIL SHALL BE BONDED PER ND 1002219, (METHOD II).
      FOIL SHALL BE CLEAR ANODIZED PER MIL-A-8625, TYPE II.
    - C - PLATE, (STYLE A OR B, TYPE II):
      MATERIAL: QQ-A-250, TEMPER O OR H14, TYPE 1100, ALUMINUM ALLOY, .032 THICK.
      ANODIZE PER MIL A 8625, TYPE II.
      ALUMINUM PLATE MUST BE FREE FROM BURRS AND SHARP CORNERS, MOUNTED WITH APPLICABLE SIZE FASTENERS.
12. NAMEPLATES SHALL BE CAPABLE OF MEETING APPLICABLE REQUIREMENTS OF MIL-M-13231.
13. ON DIMENSION TABLES SHOWN ON PAGES 2, 3, 4 AND 5, NA MEANS, "NOT APPLICABLE".

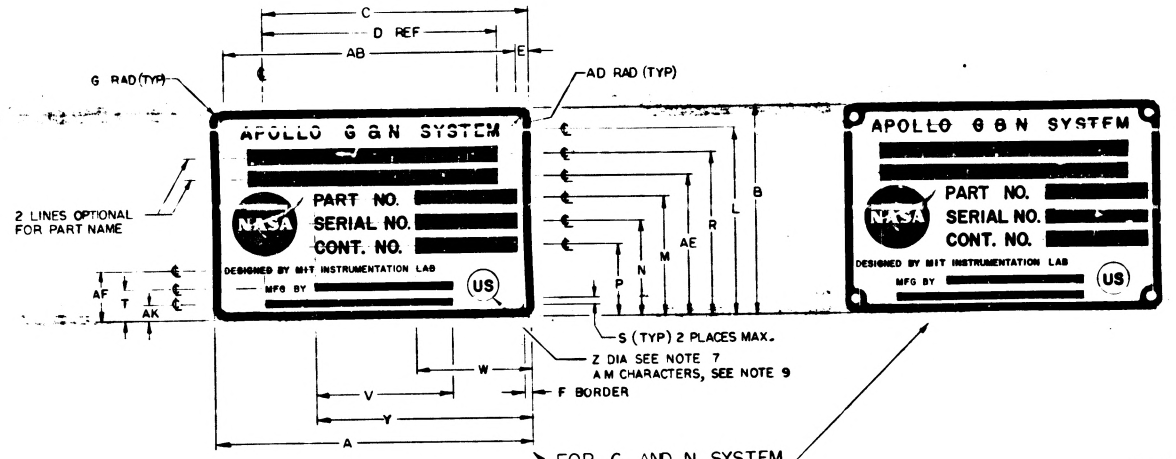

FOR G AND N SYSTEM
STYLE A

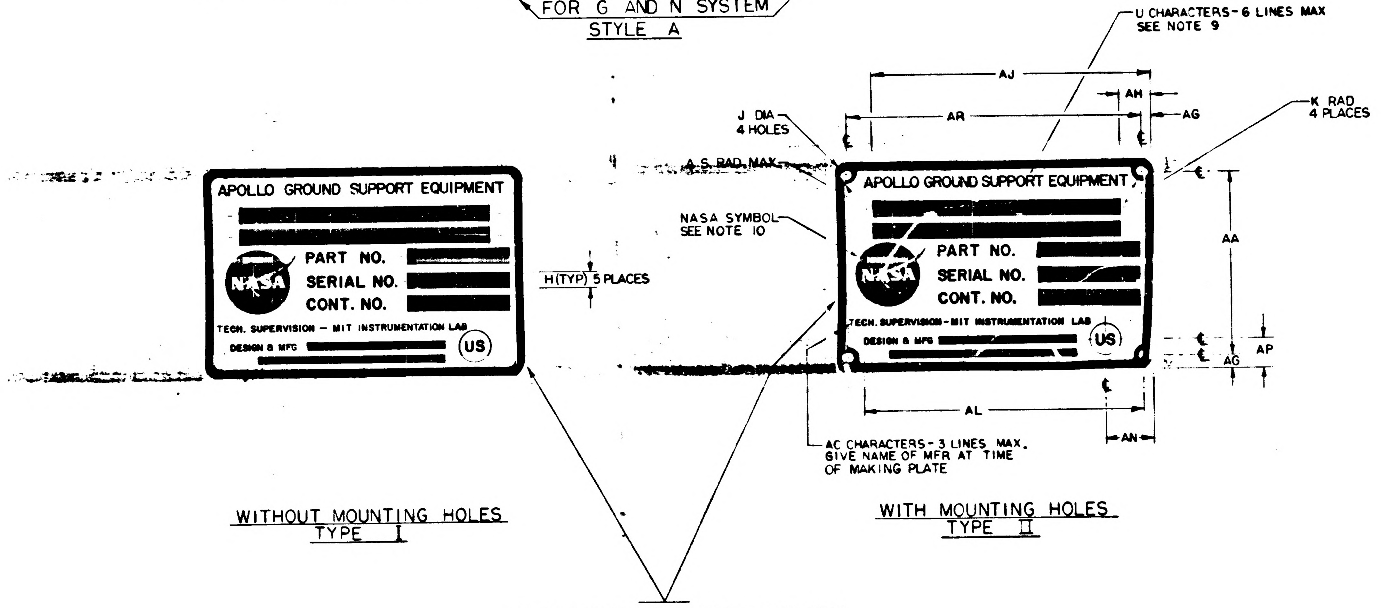
U CHARACTERS - 6 LINES MAX
SEE NOTE 9
AJ
AH
AR
AG
J DIA 4 HOLES
K RAD 4 PLACES
AS RAD MAX
APOLLO GROUND SUPPORT EQUIPMENT
PART NO.
SERIAL NO.
CONT. NO.
NASA
TECH. SUPERVISION - MIT INSTRUMENTATION LAB
DESIGN & MFG
US
H (TYP) 5 PLACES
NASA SYMBOL SEE NOTE 10
AA
AP
AG
AL
AN
AC CHARACTERS - 3 LINES MAX. GIVE NAME OF MFR AT TIME OF MAKING PLATE

WITHOUT MOUNTING HOLES
TYPE I

WITH MOUNTING HOLES
TYPE II

FOR GROUND SUPPORT EQUIPMENT
STYLE B

SUGGESTED PROPORTIONS FOR NAMEPLATE DIMENSIONS.
1. SELECT NAMEPLATE LENGTH, DIMENSION "A", TO FIT DESIGN NEEDS.
2. DIMENSIONS B THRU AS ON LINE 1 BELOW ARE PROPORTIONAL TO "A" BY MULTIPLIERS SHOWN IN LINE 2 BELOW.

1.	A	B	C	D	E	F	G	H	J	K	L	M	N	P	R	S	T
2.	1.000 A	.6563 A	.8438 A	.6875 A	.0391 A	.0240 A	.0391 A	.0469 A	.0547 A	.0469 A	.5938 A	.3750 A	.2969 A	.2187 A	.5079 A	.0313 A	.0938 A

1.	U	V	W	Y	Z	AA	AB	AC	AD	AE	AF	AG	AH	AJ	AK	AL	AM	AN	AP	AR	AS
2.	.0391 A	.4375 A	.3594 A	.6875 A	.1094 A	.5781 A	.9219 A	.0240 A	.0156 A	.4375 A	.1525 A	.0391 A	.1563 A	.8438 A	.0548 A	.8659 A	.0391 A	.1563 A	.0938 A	.9219 A	.0151 A

REVISIONS

SYM	ZONE	DESCRIPTION	DR	CHK	DATE	APPROVED
G		REPLACES REV F WITH CHANGE PER TDRR 20854			7/22/65	wk
★ H		REVISED PER TDRR 20892			[illegible]	wk
J		REVISED PER TDRR 20904			[illegible]	wk
K		REVISED PER TDRR 21379			[illegible]	wk
L		REVISED PER TDRR 21410			8/23/65	wk
★ M		REVISED PER TDRR 21993			10/11/65	
★ N		REVISED PER TDRR 22621				
★ P		REVISED PER TDRR 22671				
★ R		REVISED PER TDRR 22672				
★ S		REVISED PER TDRR 22750				WK
T		REVISED PER TDRR 22823				
★ U		REVISED PER TDRR 23072			[illegible]	[illegible]
V		REVISED PER TDRR 23521			10-27-65	wk
★ W		REVISED PER TDRR 23824	RAJ		11-9-65	wk
★ Y		REVISED PER TDRR 24018	RAJ		11-16-65	wk
★ Z		REVISED PER TDRR 24040	RAJ		11-19-65	wk
(M) AA		REVISED PER TDRR 24060	RAJ		11-19-65	wk
AB		REVISED PER TDRR 24868	RAJ		12-22-65	WK
(M) AC		REVISED PER TDRR 24973	RAJ		1-4-66	wk
(M) AD		REVISED PER TDRR 25065	RAJ		1-18-66	MGM
★ AE		REVISED PER TDRR 25672	RAJ		2-4-66	wk
(M) AF		REVISED PER TDRR 25671	RAJ		2-4-66	wk
AG		REVISED PER TDRR 26110	RAJ		2-15-66	wk
★ AH		REVISED PER TDRR 26372	"		3-6-66	MGM
★ AJ		REVISED PER TDRR 26425	"		3-6-66	MGM
★ AK		REVISED PER TDRR 26743	"		3-16-66	MGM
(M) AL		REVISED PER TDRR 26798	"		3-16-66	MGM
★ AM		REVISED PER TDRR 27168	"		4-7-66	MGM
★ AN		REVISED PER TDRR 27235	"		4-7-66	MGM
★ AP		REVISED PER TDRR 27345	"		4-7-66	MGM
★ AR		REVISED PER TDRR 27417	"		4-7-66	MGM
(M) AS		REVISED PER TDRR 27442	"		4-7-66	MGM
AT		REVISED PER TDRR 27719	"		4-20-66	wk
(M) AU		REVISED PER TDRR 27880	"		4-20-66	wk
(M) AV		REVISED PER TDRR 27896	"		4-20-66	wk
AW		28110	"		5-16-66	MGM
AY		28173	"			MGM
AZ		28131	"			MGM
BA		28124	"			MGM
BB		REVISED PER TDRR 28511	"		5-16-66	MGM
(M) BC		" " " 28949	"		5-24-66	MGM
BD		" " " 29222	"		6-8-66	MGM
(M) BE		" " " 29235	"		6-8-66	MGM
BF		" " " 29322	"		6-30-66	MGM
BG		" " " 29429	"		"	MGM
BH		" " " 29449	"		"	MGM
BJ		" " " 29335	"		"	MGM
BK		" " " 29619	"		"	MGM
(M) BL		" " " 29696	"		"	MGM
BM		REVISION STATUS CHANGED	JSD	NS	7-29-66	
BN		REVISION STATUS CHANGED	JI	RLW	22 AUG 66	
BP		REVISION STATUS CHANGED	JI	RLW	22 AUG 66	
BR		REVISION STATUS CHANGED	JI	RLW	22 AUG 66	
BS		REVISION STATUS CHANGED	GW	RLW	26 AUG 66	
(M) BT		REVISION STATUS CHANGED	GW	RLW	26 AUG 66	
(M) BU		REVISION STATUS CHANGED	EH	JI	9 SEPT 66	
BV		REVISION STATUS CHANGED	JJB	RLW	30 SEP 66	
BW		REVISION STATUS CHANGED	JJB	RLW	30 SEP 66	
BY		REVISION STATUS CHANGED	JJB	RLW	10 OCT 66	
(M) BZ		REVISION STATUS CHANGED	JJB	RLW	10 OCT 66	
CA		REVISION STATUS CHANGED	JJB	[illegible]	25 OCT 66	

Ⓖ REPLACES REV F WITH CHANGE

QTY REQD	PART OR IDENTIFYING NO.	MATERIAL OR NOTES	NOMENCLATURE OR DESCRIPTION	FIND NO

LIST OF MATERIALS

NEXT ASSY	USED ON
AS APPLICABLE	

APPLICATION

UNLESS OTHERWISE SPECIFIED
DIMENSIONS ARE IN INCHES
CAPACITOR VALUES ARE IN µf
RESISTOR VALUES ARE IN OHMS
TOLERANCES ON
FRACTIONS ± — DECIMALS ±.005 ANGLES ± —
DO NOT SCALE THIS DRAWING

MATERIAL
SEE NOTE 11

MIT
INSTRUMENTATION LAB
CAMBRIDGE, MASS

DRAWN R.A. Jones 7/16/65
CHECKED A.J. [illegible] 7-22-65
APPROVED
APPROVED W Kupfer 7/22/65
APPROVED MIT W Kupfer 7/22/65
APPROVED MSC [illegible]
DATE

MANNED SPACECRAFT CENTER
HOUSTON, TEXAS

NAMEPLATES,
APOLLO G&N—GSE
(STANDARDS)

CODE IDENT NO 80230
SIZE E
DRAWING NO 1004200
SCALE NONE
SHEET 1 OF 5

NOTICE - WHEN GOVERNMENT DRAWINGS, SPECIFICATIONS, OR OTHER DATA ARE USED FOR ANY PURPOSE OTHER THAN IN CONNECTION WITH A DEFINITELY RELATED GOVERNMENT PROCUREMENT OPERATION, THE UNITED STATES GOVERNMENT THEREBY INCURS NO RESPONSIBILITY NOR ANY OBLIGATION WHATSOEVER, AND THE FACT THAT THE GOVERNMENT MAY HAVE FORMULATED, FURNISHED, OR IN ANY WAY SUPPLIED THE SAID DRAWINGS, SPECIFICATIONS OR OTHER DATA IS NOT TO BE REGARDED BY IMPLICATION OR OTHERWISE AS IN ANY MANNER LICENSING THE HOLDER OR ANY OTHER PERSON OR CORPORATION, OR CONVEYING ANY RIGHTS OR PERMISSION TO MANUFACTURE, USE, OR SELL ANY PATENTED INVENTION THAT MAY IN ANY WAY BE RELATED THERETO.

REVISIONS 52768

SYM	ZONE	DESCRIPTION	DR	CHK	DATE	APPROVED
G		REPLACES REV F WITH CHANGE PER TDRR 20854.	rj		7/22/65	WK
H		REVISED PER TDRR 20892	rj		8/3/65	WK
J		REVISED PER TDRR 20904	rj		8/4/65	WK
K		REVISED PER TDRR 21379	rj		[illegible]	WK
L		REVISED PER TDRR 21410	rj		8/23/65	WK
M		REVISED PER TDRR 21993	"		10/11/65	WK
N		REVISED PER TDRR 22621	"			
P		REVISED PER TDRR 22671	"			
R		REVISED PER TDRR 22672				
S		REVISED PER TDRR 22750	"			
T		REVISED PER TDRR 22823	"			
U		REVISED PER TDRR 23072	"		10-22-65	
V		REVISED PER TDRR 23521	"		10-27-65	WK
W		REVISED PER TDRR 23824	RAJ		11-5-65	WK
Y		REVISED PER TDRR 24018	RAJ		11-6-65	WK
Z		REVISED PER TDRR 24040	RAJ		11-19-65	WK
AA		REVISED PER TDRR 24060	RAJ		[illegible]-65	WK
AB		REVISED PER TDRR 24868	RAJ		12-22-65	WK
AC		REVISED PER TDRR 24973	RAJ		1-4-66	WK
AD		REVISED PER TDRR 25065	RAJ		1-18-66	
AE		REVISED PER TDRR 25672	RAJ		2-4-66	WK
AF		REVISED PER TDRR 25671	RAJ		2-4-66	WK
AG		REVISED PER TDRR 26110	RAJ		2-15-66	WK
AH		REVISED PER TDRR 26372	"		3-16-66	
AJ		REVISED PER TDRR 26425	"		3-16-66	
AK		REVISED PER TDRR 26743	"		3-16-66	
AL		REVISED PER TDRR 26798	"		3-16-66	
AM		REVISED PER TDRR 27168	"		4-8-66	
AN		REVISED PER TDRR 27235	"		4-8-66	
AP		REVISED PER TDRR 27345	"		4-8-66	
AR		REVISED PER TDRR 27417	"		4-8-66	
AS		REVISED PER TDRR 27442	"		4-8-66	
AT		REVISED PER TDRR 27719	"		4-21-66	WK
AU		REVISED PER TDRR 27880	"		4-21-66	WK
AV		REVISED PER TDRR 27896	"		4-21-66	WK
AW		↓ ↓ 28110	"		5-16-66	
AY		↓ ↓ 28173	"		↓	
AZ		↓ ↓ 28131	"		↓	
BA		↓ ↓ 28124	"		↓	
BB		REVISED PER TDRR 28511	"		5-16-66	
BC		" " " 28949	"		5-24-66	
BD		" " " 29222	"		6-8-66	
BE		" " " 29235	"		"	
BF		" " " 29322	"		6-30-66	
BG		" " " 29429	"		"	
BH		" " " 29449	"		"	
BJ		" " " 29335	"		"	
BK		" " " 29619	"		"	
BL		" " " 29696	"		"	
BM		REVISION STATUS CHANGED	JSD	N.S.	7-29-66	
BN		REVISION STATUS CHANGED	JI	RLW	22 AUG 66	
BP		REVISION STATUS CHANGED	JI	RLW	22 AUG 66	
BR		REVISION STATUS CHANGED	JI	RLW	22 AUG 66	
BS		REVISION STATUS CHANGED	GW	RLW	26 AUG 66	
BT		REVISION STATUS CHANGED	GW	RLW	26 AUG 66	
BU		REVISION STATUS CHANGED	EH	JI	9 SEP 66	
BV		REVISION STATUS CHANGED	JJB	RLW	30 SEP 66	
BW		" " "	JJB	RLW	30 SEP 66	
BY		" " "	JJB	RLW	10 OCT 66	
BZ		REVISION STATUS CHANGED	JJB	RLW	[illegible] OCT 66	
CA		REVISION STATUS CHANGED	JJB		25 OCT 66	

DASH NO.	P/C	PART NAME	REMARKS	PART NO.	SER. NO.	CONT. NO.	STYLE	TYPE	MATERIAL	A	B	C	D	E	F	G	H	J	K	L	M	N	P	R	S	T	U	V	W	Y	Z	AA	AB	AC	AD	AE	AF	AG	AH	AJ	AK	AL	AM	AN	AP	AR
350	K	ALIGNMENT OPTICAL TELESCOPE (LEM)		NA	NA	NA	A	I	NOTE 11B	4.000	2.625	3.375	2.750	.156	.093	.156	.187	NA	NA	2.312	1.468	1.187	.906	2.031	NA	.375	.156	NA	1.437	2.750	.437	NA	3.688	.062	.062	1.750	.593	NA	.625	3.375	.187	NA	.156	.531	.453	NA
309	K																																													
308	K																																													
307	K						B	I	NOTE 11 B	4.000	2.625	3.375	2.750	.156	.093	.156	.187	NA	NA	2.328	1.468	1.187	.906	2.031	.062	.375	.156	NA	1.437	2.750	.437	NA	3.687	.062	.062	1.750	.593	NA	NA	NA	NA	NA	NA	NA	NA	NA
306	K						B	II	NOTE 11 C	4.000	2.625	3.375	2.750	.156	.093	.156	.187	.125	.156	2.328	1.468	1.187	.906	2.031	.062	.375	.156	↕	1.437	2.750	.437	2.312	3.687	.062	NA	1.750	.593	↕	↕	↕	↕	↕	↕	↕	↕	↕
305	K						B	I	NOTE 11 B	2.000	1.312	1.687	1.375	.078	.048	.078	.093	NA	NA	1.164	.734	.593	.453	1.015	.048	.171	.078	↕	.718	1.375	.187	NA	NA	.048	.031	.875	.320	↕	↕	↕	↕	↕	↕	↕	↕	↕
304	K						B	II	NOTE 11 C	2.000	1.312	1.687	1.375	.078	.048	.078	.093	.070	.078	1.164	.734	.593	.453	1.015	.048	.171	.078	NA	.718	1.375	.187	.156	1.843	.048	NA	.875	.320	NA	NA	NA	NA	NA	NA	NA	NA	NA
303	K																																													
302	K																																													
301	K																																													
300	K	OPTICAL UNIT		NA	NA	NA	A	I	NOTE 11 B	2.000	1.312	.675	NA	NA	.048	.078	NA	NA	NA	1.090	.812	.675	.540	.940	NA	.265	NA	NA	NA	1.375	.218	NA	NA	NA	NA	NA	.375	NA	NA	NA	.180	NA	.078	NA	NA	NA
9	K	2 IN AUTOCOLLIMATOR		1001702			B	II	NOTE 11 C	4.000	2.625	3.812	2.750	.156	.093	.156	.187	.125	.156	2.250	1.500	1.187	.906	2.031	.093	.375	.156	1.750	1.437	2.750	.437	2.312	3.687	.062	NA	1.750	.593	.156	1.062	3.812	.156	NA	.156	1.062	.375	3.687
8	K	5 IN AUTOCOLLIMATOR		1017410			B	II	NOTE 11 C	4.000	2.625	3.812	2.750	.156	.093	.156	.187	.125	.156	2.250	1.500	1.187	.906	2.031	.093	.375	.156	1.750	1.437	2.750	.437	2.312	3.687	.062	NA	1.750	.593	.156	1.062	3.812	.156	NA	.156	1.062	.375	3.687
7	K	2½ IN AUTOCOLLIMATOR (SCT)		1017435			B	II	NOTE 11 C	4.000	2.625	3.812	2.750	.156	.093	.156	.187	.125	.156	2.250	1.500	1.187	.906	2.031	.093	.375	.156	1.750	1.437	2.750	.437	2.312	3.687	.062	NA	1.750	.593	.156	1.062	3.812	.156	NA	.156	1.062	.375	3.687
6	K	2½ IN AUTOCOLLIMATOR (SXT)		1017448			B	II	NOTE 11 C	4.000	2.625	3.812	2.750	.156	.093	.156	.187	.125	.156	2.250	1.500	1.187	.906	2.031	.093	.375	.156	1.750	1.437	2.750	.437	2.312	3.687	.062	NA	1.750	.593	.156	1.062	3.812	.156	NA	.156	1.062	.375	3.687
5	K	RETROREFLECTING PRISM ASSEMBLY		1019840			B	I	NOTE 11 B	4.000	2.625	3.812	2.750	.156	.093	.156	.187	NA	NA	2.250	1.500	1.187	.906	2.031	.093	.375	.156	1.750	1.437	2.750	.437	NA	NA	.062	.062	1.750	.593	.156	1.062	3.812	.156	NA	.156	1.062	.375	NA
4	K	S/H SIMULATOR ASSEMBLY		1019896			B	I	NOTE 11 B	4.000	2.625	3.812	2.750	.156	.093	.156	.187	NA	NA	2.250	1.500	1.187	.906	2.031	.093	.375	.156	1.750	1.437	2.750	.437	NA	NA	.062	.062	1.750	.593	.156	1.062	3.812	.156	NA	.156	1.062	.375	NA
3	K	REFERENCE MIRROR		1001767			B	I	NOTE 11 B	2.000	1.312	1.906	1.375	.078	.048	.078	.093	NA	NA	1.125	.750	.593	.453	1.015	.062	.187	.078	.875	.718	1.375	.218	NA	NA	.048	.031	.875	.305	.078	.531	1.906	.078	NA	.078	.531	.187	NA
2	K	2 IN PLANE READING AUTOCOLLIMATOR		1017413			B	I	NOTE 11 B	2.000	1.312	1.906	1.375	.078	.048	.078	.093	NA	NA	1.125	.750	.593	.453	1.015	.062	.187	.078	.875	.718	1.375	.218	NA	NA	.048	.031	.875	.305	.078	.531	1.906	.078	NA	.078	.531	.187	NA
1	K	2 IN AUTOCOLLIMATOR		1001702			B	I	NOTE 11 B	2.000	1.312	1.906	1.375	.078	.048	.078	.093	NA	NA	1.125	.750	.593	.453	1.015	.062	.187	.078	.875	.718	1.375	.218	NA	NA	.048	.031	.875	.305	.078	.531	1.906	.078	NA	.078	.531	.187	NA

NOTES FOR TABLE

STYLE A IS FOR G&N SYSTEM.
STYLE B IS FOR GROUND SUPPORT EQUIPMENT.
TYPE I IS WITHOUT MOUNTING HOLES.
TYPE II IS WITH MOUNTING HOLES.

Ⓖ REPLACES REV F WITH CHANGE

KOLLSMAN DASH NUMBERS

QTY REQD	PART OR IDENTIFYING NO.	MATERIAL OR NOTES	NOMENCLATURE OR DESCRIPTION	FIND NO

LIST OF MATERIALS

NEXT ASSY	USED ON
AS APPLICABLE	

APPLICATION

UNLESS OTHERWISE SPECIFIED
DIMENSIONS ARE IN INCHES
CAPACITOR VALUES ARE IN μf
RESISTOR VALUES ARE IN OHMS
TOLERANCES ON
FRACTIONS ± — DECIMALS ±.005 ANGLES ± —
DO NOT SCALE THIS DRAWING

MATERIAL
SEE NOTE 11

MIT
INSTRUMENTATION LAB
CAMBRIDGE, MASS.

DRAWN R A Jones 7-16-65
CHECKED 7-22-65
APPROVED
APPROVED W Kupfer 2/2/66
APPROVED MIT W Kupfer 2/2/66
APPROVED MSC
DATE

MANNED SPACECRAFT CENTER
HOUSTON, TEXAS

NAMEPLATES,
APOLLO G&N-GSE
(STANDARDS)

CODE IDENT NO 80230
SIZE E
DRAWING NO. 1004260
SCALE NONE
SHEET 2 OF

NOTICE - WHEN GOVERNMENT DRAWINGS, SPECIFICATIONS, OR OTHER DATA ARE USED FOR ANY PURPOSE OTHER THAN IN CONNECTION WITH A DEFINITELY RELATED GOVERNMENT PROCUREMENT OPERATION, THE UNITED STATES GOVERNMENT THEREBY INCURS NO RESPONSIBILITY NOR ANY OBLIGATION WHATSOEVER; AND THE FACT THAT THE GOVERNMENT MAY HAVE FORMULATED, FURNISHED, OR IN ANY WAY SUPPLIED THE SAID DRAWINGS, SPECIFICATIONS, OR OTHER DATA IS NOT TO BE REGARDED BY IMPLICATION OR OTHERWISE AS IN ANY MANNER LICENSING THE HOLDER OR ANY OTHER PERSON OR CORPORATION, OR CONVEYING ANY RIGHTS OR PERMISSION TO MANUFACTURE, USE, OR SELL ANY PATENTED INVENTION THAT MAY IN ANY WAY BE RELATED THERETO.

REVISIONS						
SYM	ZONE	DESCRIPTION	DR	CHK	DATE	APPROVED
G		REPLACES REV F WITH CHANGE PER TDRR 20854			7/ /65	WK
H		REVISED PER TDRR 20892			8/ /65	WK
J		REVISED PER TDRR 20904			8/3/65	WK
K		REVISED PER TDRR 21379			8/10/65	WK
L		REVISED PER TDRR 21410				WK
M		REVISED PER TDRR 21993				
N		REVISED PER TDRR 22621				
P		REVISED PER TDRR 22671				
R		REVISED PER TDRR 22672				
S		REVISED PER TDRR 22750				
T		REVISED PER TDRR 22823			/65	WK
U		REVISED PER TDRR 23072				
V		REVISED PER TDRR 23521			10 26 65	WK
W		REVISED PER TDRR 23824	RAJ		11-9-65	WK
Y		REVISED PER TDRR 24018	RAJ		11-16-65	WK
Z		REVISED PER TDRR 24040	RAJ		11-19-65	WK
AA		REVISED PER TDRR 24060	RAJ		11-19-65	WK
AB		REVISED PER TDRR 24868	RAJ		12-22-65	WK
AC		REVISED PER TDRR 24973	RAJ		1-4-66	WK
AD		REVISED PER TDRR 25065	RAJ		1-18-66	
AE		REVISED PER TDRR 25672	RAJ		2-4-66	WK
AF		REVISED PER TDRR 25671	RAJ		2-4-66	WK
AG		REVISED PER TDRR 26110	RAJ		2-17-66	WK
AH		REVISED PER TDRR 26372	"		3 16 66	
AJ		REVISED PER TDRR 26425	"		3-16-66	
AK		REVISED PER TDRR 26743	"		3-6-66	
AL		REVISED PER TDRR 26798	"		3-16-66	
AM		REVISED PER TDRR 27168	"		4-8-66	
AN		REVISED PER TDRR 27235	"		4-8-66	
AP		REVISED PER TDRR 27345	"		4-8-66	
AR		REVISED PER TDRR 27417	"		4-8-66	
AS		REVISED PER TDRR 27442	"		4-8-66	
AT		REVISED PER TDRR 27719	"		4-20-66	WK
AU		REVISED PER TDRR 27880	"		4-20-66	WK
AV		REVISED PER TDRR 27896	"		4-20-66	WK
AW		28110	"		5-16-66	
AY		28173	"		5-16-66	
AZ		28131	"		5-16-66	
BA		28124	"		5-16-66	
BB		REVISED PER TDRR 28511	"		5-16-66	
BC		" " " 28949	"		5-24-66	
BD		" " " 29222	"		6-8-66	
BE		" " " 29235	"		"	
BF		" " " 29322	"		6-29-66	
BG		" " " 29429	"		"	
BH		" " " 29449	"		"	
BJ		" " " 29335	"		"	
BK		" " " 29619	"		"	
BL		" " " 29696	"		"	
BM		" " " 29802	JSD	N.S.	7-29-66	
BN		REVISION STATUS CHANGED		RLW	AUG 66	
BP		REVISED PER TDRR 30168	JI	RLW	AUG. 66	
BR		REVISION STATUS CHANGED	JI	RLW	22 AUG. 66	
BS		REVISION STATUS CHANGED	GW	RLW	26 AUG 66	
BT		REVISION STATUS CHANGED	GW	RLW	26 AUG 66	
BU		REVISION STATUS CHANGED	EH	JI	9 SEPT 66	
BV		REVISION STATUS CHANGED	JJB	RLW	30 SEP 66	
BW		REVISED PER TDRR 31279	JJB	RLW	30 SEP 66	
BY		REVISION STATUS CHANGED	JJB	RLW	10 OCT 66	
BZ		REVISION STATUS CHANGED	JJB	RLW	10 OCT 66	
CA		REVISION STATUS CHANGED	JJB		25 OCT 66	

DASH NO.	P/C	PART NAME	REMARKS	PART NO.	SER. NO.	CONT. NO.	STYLE	TYPE	MATERIAL	
299	R									
298	R									
280	R	COMPUTER TEST SET		2014042-051	NA	NAS9 497	B	II	NOTE 11C	FOR DIMENSIONS SEE DASH 18 VALUES BELOW
279	R	SELF TEST ASSY		2014366-041	NA	NAS9-497	B	I	NOTE 11B	FOR DIMENSIONS SEE DASH- 15 VALUES BELOW
278	R	LOGIC DRAWER ASSY NO.1		2014036-041	NA	NAS-9-497	B	I	NOTE 11B	FOR DIMENSIONS SEE DASH 17 VALUES BELOW
277	R	COMPUTER TEST SET		2014042-041	NA	NAS-9-497	B	II	NOTE 11C	FOR DIMENSIONS, SEE DASH 18 VALUES BELOW
276		DRAWER ASSY - PROGRAM & MONITOR		2014041-041				I	NOTE 11 B	FOR DIMENSIONS, SEE DASH-17 VALUES BELOW
275		DRAWER ASSY RDC INTERFACE		2014043-031						FOR DIMENSIONS, SEE DASH 15 VALUES BELOW
274		SELF TEST ASSY		2014366-031						
273		LOGIC DRAWER ASSY NO. 2		2014037-031						FOR DIMENSIONS, SEE DASH 17 VALUES BELOW
272		DRAWING ASSY PROGRAMMER & MONITOR		2014041-031						FOR DIMENSIONS, SEE DASH 17 VALUES BELOW
271		LOGIC DRAWER ASSY NO. 1		2014036-031				I	NOTE 11 B	
270		COMPUTER TEST SET		2014042-031				II	NOTE 11C	FOR DIMENSIONS, SEE DASH 18 VALUES BELOW
269		POWER CONTROL ASSY		2014044-021				I	NOTE 11 B	FOR DIMENSIONS, SEE DASH 17 VALUES BELOW
268		SELF TEST ASSY		2014366-021						FOR DIMENSIONS, SEE DASH 15 VALUES BELOW
267		AGC JUNCTION ASSY		2014341-021						
266		POWER CONTROL ASSY		2014079-021						
265		BUFFER CIRCUIT ASSY		2014254-021						
264		DRAWER ASSY X Y INTERFACE		2014040-021						
263		DRAWER ASSY R D C INTERFACE		2014045-021						
262		DRAWER ASSY PROGRAMMER & MONITOR		2014041-021						FOR DIMENSIONS, SEE DASH 17 VALUES BELOW
261		LOGIC DRAWER ASSY NO. 2		2014037-021						
260		LOGIC DRAWER ASSY NO. 1		2014036-021				I	NOTE 11 B	
259		OPERATION CONSOLE		2014024-021				II	NOTE 11 C	FOR DIMENSIONS, SEE DASH 18 VALUES BELOW
258		COMPUTER TEST SET		2014042-021						
257		AUXILIARY CALIBRATION CONSOLE		2014059-021						
256		AGC CALIBRATION CONSOLE		2014049-021				II	NOTE 11 C	
255		AGC HANDLING FIXTURE		2014282-021				I	NOTE 11 B	FOR DIMENSIONS, SEE DASH 17 VALUES BELOW
254		DRAWER ASSY COMP. SIMULATOR		2014048-011				II	NOTE 11 C	FOR DIMENSIONS, SEE DASH 18 VALUES BELOW
253		SHIPPING KIT ASSY, NAV DSKY		2016312-011						
252		SHIPPING KIT ASSY, UNIVERSAL DSKY		2016316-011						
251		SHIPPING KIT ASSY, MAIN DSKY		2016313-011				II	NOTE 11 C	
250		AMPLIFIER, REWORK		2014386				I	NOTE 11 B	FOR DIMENSIONS, SEE DASH 15 VALUES BELOW
249		TEMP MONITOR ASSY		2014313-011					NOTE 11 C	FOR DIMENSIONS, SEE DASH 17 VALUES BELOW
248		AGC JUNCTION ASSY		2014341-011					NOTE 1 B	FOR DIMENSIONS, SEE DASH 15 VALUES BELOW
247		AC INPUT PANEL ASSY		2014302-011						
246		SELF TEST ASSY		2014392-011						
245		TAPE PUNCH ASSEMBLY		2014039-011						FOR DIMENSIONS, SEE DASH 15 VALUES BELOW
244	R	TAPE READER ASSEMBLY		2014038-011	NA	NAS-9-497	B	I	NOTE 11 B	
243										
242										
241	R	APOLLO GUIDANCE COMPUTER GROUP		6003001	NA	NAS-9-497	A	I	NOTE 11 B	FOR DIMENSIONS, SEE DASH 19 VALUES BELOW
240		SELF TEST ASSEMBLY		2014366-011	NA		B	I		FOR DIMENSIONS, SEE DASH 15 VALUES BELOW
239		POWER SUPPLY ASSY-115 V., 400 CYCLE		2014207-011						FOR DIMENSIONS, SEE DASH 17 VALUES BELOW
238		AC INPUT PANEL ASSY		2014043-011						
237		POWER CONTROL ASSY		2014079-011						FOR DIMENSIONS, SEE DASH 15 VALUES BELOW
236		DRAWER ASSY-X Y INTERFACE		2014040-011						
235		DRAWER ASSY R D C INTERFACE		2014045-011						
234		BUFFER CIRCUIT ASSY		2014254-011						
233		CONTROL & INTERFACE ASSY		2014204-011						
232		POWER CONTROL ASSY		2014044-011						FOR DIMENSIONS, SEE DASH 17 VALUES BELOW
231		DRAWER ASSY, PROGRAMMER & MONITOR		2014041-011						
230		CONNECTOR INTERFACE ASSY		2014272-011						FOR DIMENSIONS, SEE DASH 15 VALUES BELOW
229		CONNECTOR INTERFACE ASSY		2014047-011						
228		ANTENNA TUNING CAPACITOR ASSY		2014209-011						
227		MOUNTING FIXTURE ASSY		2014006-011						FOR DIMENSIONS, SEE DASH 17 VALUES BELOW
226		POWER SUPPLY ASSY 3 VDC		2014234-011						FOR DIMENSIONS, SEE DASH 15 VALUES BELOW
225		PANEL ASSY - SIGNAL INTERFACE		2014010-011						
224		OSCILLOSCOPE ASSY		2014232-011						
223		AUXILIARY OUTLET ASSY		2014274-011						
222		FREQUENCY COUNTER		2014233-011						
221		POWER SUPPLY ASSY 10, 13, 28 VDC		2014235-011						
220		LOGIC DRAWER ASSY NO. 2		2014037-011						FOR DIMENSIONS, SEE DASH 17 VALUES BELOW
219		LOGIC DRAWER ASSY NO. 1		2014036-011						
218		COUNTER, ELECTRICAL ASSY		2014288-011						FOR DIMENSIONS, SEE DASH 15 VALUES BELOW
217		POWER SUPPLY ASSY		2014279-011						
216		TEST MOUNT ASSY		2014257-011						
215		UNIVERSAL DSKY PEDESTAL MOUNT		2014014-011						FOR DIMENSIONS, SEE DASH 17 VALUES BELOW
214		MAIN DSKY PEDESTAL MOUNT		2014343				I	NOTE 11B	
213		SHIPPING CONTAINER, MAIN DSKY		1006229				II	NOTE 11C	FOR DIMENSIONS, SEE DASH 18 VALUES BELOW
212		NAV DSKY		1006231						
211		AGC		1006230						
210		UNIVERSAL DSKY		1006422						
209		SHIPPING CONTAINER, AGC		1006421				II	NOTE 11C	
208		UNIVERSAL DSKY HANDLING FIXTURE		2014013-011				I	NOTE 11B	FOR DIMENSIONS, SEE DASH 15 VALUES BELOW
207		NAV DSKY HANDLING FIXTURE		1014377						FOR DIMENSIONS, SEE DASH 17 VALUES BELOW
206		MAIN DSKY HANDLING FIXTURE		1014334						
205		AGC HANDLING FIXTURE		2014282-011				I	NOTE 11B	
204		OPERATION CONSOLE		2014024-011				II	NOTE 11C	FOR DIMENSIONS, SEE DASH 18 VALUES BELOW
203		COMPUTER TEST SET		2014042-011		NAS-9-497				
202		DRAWER ASSY, COMPUTER SIMULATOR		2014048-011		FNP-12775				
201		AUXILIARY CALIBRATION CONSOLE		2014059-011		NAS-9-497				
200		AGC CALIBRATION CONSOLE		2014049-011	NA		B	II	NOTE 11C	
21										
20		NA		NA	NA	NA	A	II	NOTE 11 C	
19		NA		NA	NA	NA	A	I	NOTE 11 B	
18		NA		NA	NA	NA	B	II	NOTE 11 C	
17		NA		NA	NA	NA	B	I	NOTE 11 B	
16		NA		NA	NA	NA	B	II	NOTE 11 C	
15	R	NA		NA	NA	NA	B	I	NOTE 11 B	

DASH NO.	A	B	C	D	E	F	G	H	J	K	L	M	N	P	R	S	T	U	V
20	2.000	1.312	1.687	1.375	.078	.031	.076	.093	.106 .113	.093	1.187	.750	.593	.453	1.015	.062	.187	.078	.875
19	2.000	1.312	1.687	1.375	.078	.031	.078	.093	NA	NA	1.187	.750	.593	.453	1.015	.062	.187	.078	.875
18	4.187	1.875	3.469	2.750	.156	.093	.156	.125	.106 .113	.125	1.625	1.032	.844	.656	1.406	.093	.344	.156	1.781
17	4.187	1.875	3.469	2.750	.156	.093	.156	.125	NA	NA	1.625	1.032	.844	.656	1.406	.093	.344	.156	1.781
16	2.000	1.312	1.687	1.375	.078	.031	.078	.093	.106 .113	.093	1.187	.750	.593	.453	1.015	.062	.187	.078	.875
15	2.000	1.312	1.687	1.375	.078	.031	.078	.093	NA	NA	1.187	.750	.593	.453	1.015	.062	.187	.078	.875

DASH NO.	W	Y	Z	AA	AB	AC	AD	AE	AF	AG	AH	AJ	AK	AL	AM	AN	AP	AR
20	.718	1.375	.218	1.156	1.843	.048	NA	.875	.305	.078	.312	1.687	.078	NA	.078	.312	.187	1.843
19	.718	1.375	.218	NA	NA	.048	.031	.875	.305	.078	.312	1.687	.078	NA	.078	.312	.187	NA
18	1.531	2.844	.312	1.562	3.875	.062	NA	1.219	.500	.156	.719	3.469	.156	NA	.156	.719	.344	3.875
17	1.531	2.844	.312	NA	NA	.062	.062	1.219	.500	.156	.719	3.469	.156	NA	.156	.719	.344	NA
16	.718	1.375	.218	1.156	1.843	.048	NA	.875	.305	.078	.312	1.687	.078	NA	.078	.312	.187	1.843
15	.718	1.375	.218	NA	NA	.048	.031	.875	.305	.078	.312	1.687	.078	NA	.078	.312	.187	NA

THIS SHEET ADDED

Ⓖ REPLACES REV F WITH CHANGE

RAYTHEON DASH NUMBERS

NOTES FOR TABLE

STYLE A IS FOR G & N SYSTEM

STYLE B IS FOR GROUND SUPPORT EQUIPMENT

TYPE I IS WITHOUT MOUNTING HOLES

TYPE II IS WITH MOUNTING HOLES

QTY REQD	PART OR IDENTIFYING NO.	MATERIAL OR NOTES	NOMENCLATURE OR DESCRIPTION	FIND NO.
LIST OF MATERIALS				

NEXT ASSY	USED ON
AS APPLICABLE	
APPLICATION	

UNLESS OTHERWISE SPECIFIED
DIMENSIONS ARE IN INCHES
CAPACITOR VALUES ARE IN µf
RESISTOR VALUES ARE IN OHMS
TOLERANCES ON
FRACTIONS ± — DECIMALS ±.005 ANGLES ± —
DO NOT SCALE THIS DRAWING

MATERIAL
SEE NOTE 11

MIT
INSTRUMENTATION LAB
CAMBRIDGE, MASS

		DATE
DRAWN	R A Jones	7-16-65
CHECKED	A. J.	7-22-65
APPROVED		
APPROVED	W Kupfer	22/7/65
APPROVED MIT	W Kupfer	22/7/65
APPROVED MSC		

MANNED SPACECRAFT CENTER
HOUSTON, TEXAS

NAMEPLATES,
APOLLO GEN-GSE
(STANDARDS)

CODE IDENT NO	SIZE	DRAWING NO.
80230	E	1004260

SCALE NONE

SHEET 3 OF

NOTICE – [illegible]

SYM	ZONE	DESCRIPTION	DR	CHK	DATE	APPROVED
G		REPLACES REV F WITH CHANGE PER TDRR 20854.			7/22/65	WK
H		REVISED PER TDRR 20892			8/3/65	WK
J		REVISED PER TDRR 20904			8/3/65	WK
K		REVISED PER TDRR 21379			8/16/65	WK
L		REVISED PER TDRR 21410			8/23/65	WK
M		REVISED PER TDRR 21993				
N		REVISED PER TDRR 22621				
P		REVISED PER TDRR 22671				
R		REVISED PER TDRR 22672				
S		REVISED PER TDRR 22750				
T		REVISED PER TDRR 22823			/65	WK
U		REVISED PER TDRR 23072				MGM
V		REVISED PER TDRR 23521			10-26-65	WK
W		REVISED PER TDRR 23824	RAJ		11-9-65	WK
Y		REVISED PER TDRR 24018	RAJ		11-16-65	WK
Z		REVISED PER TDRR 24040	RAJ		11-19-65	WK
AA		REVISED PER TDRR 24060	RAJ		11-19-65	WK
AB		REVISED PER TDRR 24868	RAJ		12-22-65	WK
AC		REVISED PER TDRR 24973	RAJ		1-4-66	WK
AD		REVISED PER TDRR 25065	RAJ		1-18-66	MGM
AE		REVISED PER TDRR 25672	RAJ		2-4-66	WK
AF		REVISED PER TDRR 25671	RAJ		2-4-66	WK
AG		REVISED PER TDRR 26110	RAJ		2-15-66	WK
AH		REVISED PER TDRR 26372	"		3-16-66	MGM
AJ		REVISED PER TDRR 26425	"		3-16-66	MGM
AK		REVISED PER TDRR 26743	"		3-16-66	MGM
AL		REVISED PER TDRR 26798	"		3-16-66	MGM
AM		REVISED PER TDRR 27168			4-8-66	MGM
AN		REVISED PER TDRR 27235	"		4-8-66	MGM
AP		REVISED PER TDRR 27345	"		4-8-66	MGM
AR		REVISED PER TDRR 27417	"		4-8-66	MGM
AS		REVISED PER TDRR 27442	"		4-8-66	MGM
AT		REVISED PER TDRR 27719	"		4-21-66	WK
AU		REVISED PER TDRR 27880	"		4-21-66	WK
AV		REVISED PER TDRR 27896	"		4-21-66	WK
AW		28110	"		5-16-66	MGM
AY		28173	"			MGM
AZ		28131	"			MGM
BA		28124	"			MGM
BB		REVISED PER TDRR 28511	"		5-16-66	MGM
BC		" " " 28949	"		5-24-66	MGM
BD		" " " 29222	"		6-8-66	MGM
BE		" " " 29235	"		"	MGM
BF		" " " 29322	"		6-24-66	MGM
BG		" " " 29429	"		"	MGM
BH		" " " 29449	"		"	MGM
BJ		" " " 29335	"		"	MGM
BK		" " " 29619	"		"	MGM
BL		" " " 29696	"		6-29-66	MGM
BM		REVISION STATUS CHANGED	JSD	NS	7-29-66	
BN		REVISION STATUS CHANGED	JI	RLW	22 AUG 66	
BP		REVISION STATUS CHANGED	JI	RLW	22 AUG 66	
BR		REVISED PER TDRR 30241	JI	RLW	22 AUG 66	
BS		REVISION STATUS CHANGED	GW	RLW	26 AUG 66	
BT		REVISION STATUS CHANGED	GW	RLW	26 AUG 66	
BU		REVISION STATUS CHANGED	EH	JI	9 SEP 66	
BV		REVISION STATUS CHANGED	JJB	RLW	30 SEP 66	
BW		REVISION STATUS CHANGED	JJB	RLW	30 SEP 66	
BY		REVISION STATUS CHANGED	JJB	RLW	10 OCT 66	
BZ		REVISION STATUS CHANGED	JJB	RLW	10 OCT 66	
CA		REVISION STATUS CHANGED	JJB		25 OCT 66	

DASH NO.	P/C	PART NAME	REMARKS	PART NO.	SER. NO.	CONT. NO.	STYLE	TYPE	MATERIAL	A	B	C	D	E	F	G	H	J	K	L	M	N	P	R	S	T	U	V	W	Y	Z	AA	AB	AC	AD	AE	AF	AG	AH	AJ	AK	AL	AM	AN	AP	AR
199	AC	EYEPIECE STOWAGE UNIT		2021255-011			A	I		FOR DIMENSIONS, SEE DASH 100 VALUES BELOW																																				
198	AC	SIGNAL CONDITIONER ASSY C/M		2007234		NAS 9-497			NOTE 11B																																					
197	AC	SIGNAL CONDITIONER ASSY C/M		2007235																																										
196	AC	SIGNAL CONDITIONER ASSY LEM		6007010																																										
195	AC	PSA & SIGNAL CONDITIONER ASSY		6007009			A	I	NOTE 11B																																					
194	AC	PANEL, MONITOR		2900031-031			B	II	NOTE 11C	FOR DIMENSIONS, SEE DASH 141 VALUES BELOW																																				
193	AC	DISTRIBUTION BOX, GSE		2900024-031																																										
192	AC	ANALYZER, OPTICS-INERTIAL		2900023-031						FOR DIMENSIONS, SEE DASH 144 VALUES BELOW																																				
191	AC	TEST CONTROL		2900027-031						FOR DIMENSIONS, SEE DASH 141 VALUES BELOW																																				
190	AC	PANEL, PWR SUP AND LOAD		2900033-021																																										
189	AC	ADPT MODULE, P.S.A.		6900088-011																																										
188	AC	ADPT MODULE, P.S.A.		2901143-011																																										
187	AC	FIXTURE, MTG, PTA/PEA		2900066-021		NAS 9-497	B	II	NOTE 11C																																					
186	AC	ANNUNCIATOR PANEL AND EYEPIECE STORAGE ASSEMBLY		1021255-021			A	I		FOR DIMENSIONS, SEE DASH 100 VALUES BELOW																																				
185	AC	ANNUNCIATOR PANEL AND EYEPIECE STORAGE ASSEMBLY		1021255-011			A	I																																						
184	AC	FIX., HAND., G AND N HARNESS		1901846-041		NAS-9-497	B	II	NOTE 11C	FOR DIMENSIONS, SEE DASH 144 VALUES BELOW																																				
183	AC	INSTALLING TOOL, ELEC. CONN		1902586-011			B	II	NOTE 11C	FOR DIMENSIONS, SEE DASH 102 VALUES BELOW																																				
182	AC	ADPT MODULE, P.S.A.		6900088-011			B	II	NOTE 11C	FOR DIMENSIONS, SEE DASH 141 VALUES BELOW																																				
181	AC	G&N INDICATOR CONTROL PANEL ASSY		2014578-011			A	I	NOTE 11B	3.000	1.938	2.437	NA	.125	.062	.188	.156	NA	NA	1.750	1.125	.906	.688	1.500	NA	.281	.125	NA	1.094	2.062	.312	NA	2.500	.062	.125	1.312	.469	NA	NA	NA	.156	NA	.125	.469	.344	NA
180	AC	ADPT MODULE, P.S.A.		1902431-031			B	II		FOR DIMENSIONS, SEE DASH 121 VALUES BELOW																																				
179	AC	MOUNTING PLATE, IMU/PTA		6900083-011						FOR DIMENSIONS, SEE DASH 144 VALUES BELOW																																				
178	AC	MOUNTING PLATE, COMPONENT		6900007-021																																										
177	AC	FIX., MOUNTING, SUBSYSTEM		2900070-021																																										
176	AC	FIX., MOUNTING, G AND N		2900067-021																																										
175	AC	CSL, COOL. AND PWR, G AND N		1902134-031																																										
174	AC	FIX., HAND., C/M AND LEM CDU		2900999-011					NOTE 11C	FOR DIMENSIONS, SEE DASH 141 VALUES BELOW																																				
173	AC	FIX., HANDLING, C/M PSA		2900998-011																																										
172	AC	CAGING ELECTRONICS, GYRO		2900029-021																																										
171	AC	DISTRIBUTION BOX, GSE		2900024-021																																										
	AC	ANALYZER, OPTICS-INERTIAL		2900023-021						FOR DIMENSIONS, SEE DASH 144 VALUES BELOW																																				
169	AC	ADPT, TESTPOINT, P.S.A.		2900037-021						FOR DIMENSIONS, SEE DASH 141 VALUES BELOW																																				
168	AC	TEST SELECTOR		2900028-021																																										
167	AC	TEST CONTROL		2900027-021																																										
166	AC	PANEL, MONITOR		2900031-021																																										
165	AC	TERM. BOARD STORAGE DRAWER		2900927-011																																										
164	AC	INPUT/OUTPUT PANEL		2900926-011																																										
163	AC	CONTROL PANEL		2900896-011																																										
162	AC	CSL. CAL AND TEST, SCM/PSAAM		2900895-011						FOR DIMENSIONS, SEE DASH 144 VALUES BELOW																																				
161	AC	FIX., LIFT AND HAND., IMU		[illegible]-011						FOR DIMENSIONS, SEE DASH 141 VALUES BELOW																																				
160	AC	FIX., HAND., G AND N HARNESS		1901846-031						FOR DIMENSIONS, SEE DASH 144 VALUES BELOW																																				
159	AC	BATTERY POWER PACK		1900011-031			B	II	NOTE 11C																																					
158	AC	COUPLING DATA UNIT ASSEMBLY C/M		2007222			A	I	NOTE 11B	FOR DIMENSIONS SEE DASH 100 VALUES BELOW																																				
157	AC	COUPLING DATA UNIT ASSEMBLY - LEM		2007222						2.125	.968	1.718	NA	.093	.031	.06	.093	NA	NA	.858	.608	.484	.358	.733	.062	.140	.062	NA	.968	1.450	.125	NA	1.720	.046	.03	NA	.210	NA	NA	NA	.070	NA	.046	.32	.16	NA
156	AC	POWER & SERVO ASSEMBLY C/M		2007200						FOR DIMENSIONS SEE DASH 100 VALUES BELOW																																				
155	AC	PIPA ELECTRONICS ASSEMBLY		2007201																																										
154	AC	PULSE TORQUE ASSEMBLY - LEM		6007000																																										
153	AC	POWER & SERVO ASSEMBLY - LEM		6007200			A	I	NOTE 11B																																					
152	AC	CONT PNL, RSVR CKT TESTER		2900770-011			B	II	NOTE 11C	FOR DIMENSIONS, SEE DASH 141 VALUES BELOW																																				
151	AC	TESTER, RESOLVER CIRCUIT		2900708-011						FOR DIMENSIONS, SEE DASH 144 VALUES BELOW																																				
150	AC	JUNCTION BOX, P.S.A./G.S.E.		1901933-021						FOR DIMENSIONS, SEE DASH 141 VALUES BELOW																																				
149	AC	BATTERY PACK, LIFTING		2900[illegible]-011						FOR DIMENSIONS, SEE DASH 144 VALUES BELOW																																				
148	AC	MOUNTING PLATE, COMPONENT		6900007-011																																										
147	AC	MOUNTING PLATE, COMPONENT		2900677-011																																										
146	AC	CART, TRANS, G AND N		1900009-041																																										
145	AC	CONTAINER, SHIPPING, IMU		1900010-021		NAS-9-497	B	II	NOTE 11C																																					
144	AC	FIX., MOUNTING, G AND N		1902204-021			B	II	NOTE 11C	4.125	1.812	3.250	NA	.125	.062	.12	.156	.100 .104	.125	1.625	1.140	.890	.640	1.390	.125	.171	.125	1.875	1.687	2.625	.250	1.562	3.843	.093	NA	NA	.359	.125	.437	3.688	NA	3.687	.093	.40	.25	3.875
143	AC	CSL, COOL. AND PWR, G AND N		1902134-021						4.125	1.812	3.250		.125	.062	.12	.156		.125	1.625	1.140	.890	.640	1.390	.125	.171	.125	1.875	1.687	2.625	.250	1.562	3.843	.093			.359	.125	.437	3.688		3.687	.093	.40	.25	3.875
142	AC	ANALYZER, OPTICS-INERTIAL		2900023-011						4.125	1.812	3.250		.125	.062	.12	.156		.125	1.625	1.140	.890	.640	1.390	.125	.171	.125	1.875	1.687	2.625	.250	1.562	3.843	.093			.359	.125	.437	3.688		3.687	.093	.40	.25	3.875
141	AC	CONT. TEMP, PORTABLE		2900060-011						2.125	.968	1.718		.093	.031	.06	.093		.093	.858	.608	.484	.358	.733	.077	.116	.062	.937	.875	1.343	.125	.781	1.892	.046			.209	.093	.250	1.875		1.840	.046	.23	.16	1.938
140	AC	TESTER, CKT, IMU/CDU RSVR		2900286-011						4.125	1.812	3.250		.125	.062	.12	.156		.125	1.625	1.140	.890	.640	1.390	.125	.171	.125	1.875	1.687	2.625	.250	1.562	3.843	.093			.359	.125	.437	3.688		3.687	.093	.40	.25	3.875
139	AC	SIMULATOR, LD/SIG, CDU		2900285-011																																										
138	AC	SIMULATOR, LD/SIG, OPTICS		1902023-021																																										
137	AC	FIX., MOUNTING, IMU/NAV BASE		6900003-011																																										
136	AC	FIXTURE, OPTICS/NAV BASE		2900072-011																																										
135	AC	FIX., MOUNTING, SUB SYSTEM		2900070-011																																										
134	AC	FIX., HAND., G AND N HARNESS		2900069-011																																										
133	AC	CNTR, SHIPPING, NAV BASE		2900068-011																																										
132	AC	FIX., MOUNTING, G AND N		2900067-011																																										
131	AC	SIMULATOR, LD/SIG, IMU/CDU		2900062-011																																										
130	AC	TESTER, GYRO WHEEL		2900061-011																																										
129	AC	COOLANT SUPPLY		1902133-021																																										
128	AC	TABLE, ROTARY		1900926-021						4.125	1.812	3.250		.125	.062	.12	.156		.125	1.625	1.140	.890	.640	1.390	.125	.171	.125	1.875	1.687	2.625	.250	1.562	3.843	.093			.359	.125	.437	3.688		3.687	.093	.40	.25	3.875
127	AC	FIX., HAND., OPTICS		2900074-011						2.125	.968	1.718		.093	.031	.06	.093		.093	.858	.608	.484	.358	.733	.077	.116	.062	.937	.875	1.343	.125	.781	1.892	.046			.209	.093	.250	1.875		1.840	.046	.23	.16	1.938
126	AC	FIXTURE, MTG, PTA/PEA.		2900066-011																																										
125	AC	CONT, TEMP, IMU LIFTING		2900063-011																																										
124	AC	FIXTURE, HANDLING, IMU		2900064-011																																										
123	AC	CONT, OPTICS, REMOTE		1902046-021																																										
122	AC	TEST CONTROL		1902009-021																																										
121	AC	ADPT MODULE, P.S.A.		1902431-021																																										
120	AC	BRIDGE, DECADE ERROR		2900128-011																																										
119	AC	PWR SUP, ELECTRONICS		2900012-011																																										
118	AC	PWR SUP, RELAY AND LAMP		1900049-031																																										
117	AC	CONSOLE, OSCILLOGRAPH		1900000-021																																										
116	AC	ADPT MODULE, P.S.A.		1902431-011																																										
115	AC	ADPT, TEST POINT, PTA/PEA.		2900145-011																																										
114	AC	ADPT, TEST POINT, P.S.A.		2900037-011																																										
113	AC	CONTROL, GIMBAL POSITION		2900036-011																																										
112	AC	SELECTOR, SIGNAL, PRIMARY		2900035-011																																										
111	AC	SEL, SIG, OSCILLOGRAPH		2900034-011																																										
110	AC	PANEL, PWR SUP AND LOAD		2900033-011																																										
109	AC	PANEL, MONITOR		2900031-011																																										
108	AC	PANEL, AUXILIARY INPUT		2900030-011																																										
107	AC	CAGING ELECTRONICS, GYRO		2900029-011																																										
106	AC	TEST SELECTOR		2900028-011																																										
105	AC	TEST CONTROL		2900027-011																																										
104	AC	MONITOR AND CONTROL, TEMP		2900026-011																																										
103	AC	DISTRIBUTION BOX, GSE		2900024-011																																										
102	AC	VOLTMETER, DIGITAL		2900007-011			B	II	NOTE 11C	2.125	.968	1.718	NA	.093	.031	.06	.093	.100 .104	.093	.858	.608	.484	.358	.733	.077	.116	.062	.937	.875	1.343	.125	.781	1.892	.046	NA	NA	.209	.093	.250	1.875	NA	1.840	.046	.23	.16	1.938
101	AC	NAVIGATION BASE ASSEMBLY - LEM		6899950		NAS-9-497	A	I	NOTE 11B	2.000	1.312	1.906	1.375	.078	.048	.078	.093	NA	NA	1.125	.750	.593	.453	1.015	.062	.187	.078	.875	.718	1.375	.218	NA	NA	.048	.031	.875	.305	.078	.531	1.906	.078	NA	.078	.531	.187	NA
100	AC	NAVIGATION BASE ASSEMBLY		2899982		NAS-9-497	A	I	NOTE 11B	2.000	1.312	1.906	1.375	.078	.048	.078	.093	NA	NA	1.125	.750	.593	.453	1.015	.062	.187	.078	.875	.718	1.375	.218	NA	NA	.048	.031	.875	.305	.078	.531	1.906	.078	NA	.078	.531	.187	NA

THIS SHEET ADDED

Ⓖ REPLACES REV F WITH CHANGE

AC ELECTRONICS DASH NUMBERS

NOTES FOR TABLE

STYLE A IS FOR G&N SYSTEM
STYLE B IS FOR GROUND SUPPORT EQUIPMENT
TYPE I IS WITHOUT MOUNTING HOLES
TYPE II IS WITH MOUNTING HOLES

NOTE: AC DASH NO'S. CONT. ON SH.6

QTY REQD	PART OR IDENTIFYING NO.	MATERIAL OR NOTES	NOMENCLATURE OR DESCRIPTION	FIND NO.

LIST OF MATERIALS

UNLESS OTHERWISE SPECIFIED
DIMENSIONS ARE IN INCHES
CAPACITOR VALUES ARE IN µf
RESISTOR VALUES ARE IN OHMS
TOLERANCES ON
FRACTIONS ± — DECIMALS ±.005 ANGLES ± —
DO NOT SCALE THIS DRAWING

MATERIAL
SEE NOTE 11

FS APPLICABLE

NEXT ASSY | USED ON
APPLICATION

MIT
INSTRUMENTATION LAB
CAMBRIDGE, MASS

DRAWN R A Jones 7-16-65
CHECKED 7-22-65
APPROVED
APPROVED 7-22-65
APPROVED MIT
APPROVED NASA

MANNED SPACECRAFT CENTER
HOUSTON, TEXAS

NAMEPLATES,
APOLLO G&N-GSE
(STANDARDS)

SIZE E | CODE IDENT NO. 80230 | DRAWING NO. 1004260

SCALE NONE | SHEET 4 OF

NOTICE – WHEN GOVERNMENT DRAWINGS, SPECIFICATIONS, OR OTHER DATA ARE USED FOR ANY PURPOSE OTHER THAN IN CONNECTION WITH A DEFINITELY RELATED GOVERNMENT PROCUREMENT OPERATION, THE UNITED STATES GOVERNMENT THEREBY INCURS NO RESPONSIBILITY NOR ANY OBLIGATION WHATSOEVER, AND THE FACT THAT THE GOVERNMENT MAY HAVE FORMULATED, FURNISHED, OR IN ANY WAY SUPPLIED THE SAID DRAWINGS, SPECIFICATIONS OR OTHER DATA IS NOT TO BE REGARDED BY IMPLICATION OR OTHERWISE AS IN ANY MANNER LICENSING THE HOLDER OR ANY OTHER PERSON OR CORPORATION, OR CONVEYING ANY RIGHTS OR PERMISSION TO MANUFACTURE, USE, OR SELL ANY PATENTED INVENTION THAT MAY IN ANY WAY BE RELATED THERETO.

REVISIONS

SYM	ZONE	DESCRIPTION	DR	CHK	DATE	APPROVED
G		REPLACES REV F WITH CHANGE PER TDRR 20854	[illegible]		7/22/65	WK
H		REVISED PER TDRR 20892	[illegible]		8/3/65	WK
J		REVISED PER TDRR 20904	[illegible]		8/3/65	WK
K		REVISED PER TDRR 21379	[illegible]		8/6/65	WK
L		REVISED PER TDRR 21410	[illegible]		8/23/65	WK
M		REVISED PER TDRR 21993	[illegible]			
N		REVISED PER TDRR 22621	[illegible]		10/	
P		REVISED PER TDRR 22671	[illegible]		1/	
R		REVISED PER TDRR 22672	[illegible]			
S		REVISED PER TDRR 22750	[illegible]		65	WK
T		REVISED PER TDRR 22823	[illegible]			
U		REVISED PER TDRR 23072	[illegible]		[illegible]	[illegible]
V		REVISED PER TDRR 23521	[illegible]		10-26-65	WK
W		REVISED PER TDRR 23824	RAJ		11-9-65	WK
Y		REVISED PER TDRR 24018	RAJ		11-16-65	WK
Z		REVISED PER TDRR 24040	RAJ		11-15-65	WK
AA		REVISED PER TDRR 24060	RAJ		11-19-65	WK
AB		REVISED PER TDRR 24868	RAJ		12-22-65	WK
AC		REVISED PER TDRR 24973	RAJ		1-4-66	WK
AD		REVISED PER TDRR 25065	RAJ		1-18-66	[illegible]
AE		REVISED PER TDRR 25672	RAJ		2-4-66	WK
AF		REVISED PER TDRR 25671	RAJ		2-4-66	WK
AG		REVISED PER TDRR 26110	RAJ		2-15-66	WK
AH		REVISED PER TDRR 26372	"		3-16-66	WGM
AJ		REVISED PER TDRR 26425	"		3-18-66	WGM
AK		REVISED PER TDRR 26743	"		3-16-66	WGM
AL		REVISED PER TDRR 26798	"		3-16-66	WGM
AM		REVISED PER TDRR 27168	"		4-7-66	WGM
AN		REVISED PER TDRR 27235	"		4-7-66	WGM
AP		REVISED PER TDRR 27345	"		4-7-66	WGM
AR		REVISED PER TDRR 27417	"		4-7-66	WGM
AS		REVISED PER TDRR 27442	"		4-7-66	WGM
AT		REVISED PER TDRR 27719	"		4-20-66	WK
AU		REVISED PER TDRR 27680	"		4-20-66	WK
AV		REVISED PER TDRR 27896	"		4-20-66	WK
AW		28110	"		5-16-66	WGM
AY		28173	"			WGM
AZ		28131	"			WGM
BA		28124	"			WGM
BB		REVISED PER TDRR 28511	"		5-16-66	WGM
BC		" " " 28949	"		5-24-66	[illegible]
BD		" " " 29222	"		6-8-66	[illegible]
BE		" " " 29235	"		"	[illegible]
BF		" " " 29322	"		6-24-66	WGM
BG		" " " 29429	"		"	WGM
BH		" " " 29449	"		"	WGM
BJ		" " " 29335	"		"	WGM
BK		" " " 29619	"		"	WGM
BL		" " " 29696	"		6-29-66	WGM
BM		REVISION STATUS CHANGED	JSD		7-29-66	
BN		REVISION STATUS CHANGED	JI	RW	22 AUG 66	
BP		REVISION STATUS CHANGED	JI	RLW	24 AUG 66	
BR		REVISION STATUS CHANGED	JI	RLW	25 AUG 66	
BS		REVISION STATUS CHANGED	GW	RLW	26 AUG 66	
BT		REVISION STATUS CHANGED	GW	RLW	26 AUG 66	
BU		REVISION STATUS CHANGED	EH	JI	9 SEPT 66	
BV		REVISION STATUS CHANGED	JJB	RLW	22 SEP 66	
BW		REVISION STATUS CHANGED	JJB	RLW	30 SEP 66	
BY		REVISION STATUS CHANGED	JJB	RLW	10 OCT 66	
BZ		REVISION STATUS CHANGED	JJB	RLW	10 OCT 66	
CA		REVISION STATUS CHANGED	JJB	[illegible]	25 OCT 66	

499	M	T
498		

NO.	P/C	PART NAME	REMARKS	PART NO.	SER. NO.	CONT. NO.	STYLE	TYPE	MATERIAL	A	B	C	D	E	F	G	H	J	K	L	M	N	P	R	S	T	U	V	W	Y	Z	AA	AB	AC	AD	AE	AF	AG	AH	AJ	AK	AL	AM	AN	AP	AR
40	MIT	COMPUTER ASSY		2003100		NAS-9-497	A	I	NOTE 11 B	2.000	1.312	1.906	1.375	.078	.048	.078	.093	NA	NA	1.125	.750	.593	.453	1.015	.062	.187	.078	.875	.718	1.375	.218	NA	NA	.048	.031	.875	.305	.078	.531	1.906	.078	NA	.078	.531	.187	NA
00	M T	LIFTING SLING-G&N INST. QUAL. FIX. & AZM. REF. FIX.		1021640		NAS-9-4065	B	II	NOTE 11 C	2.000	1.312	1.687	1.375	.078	.048	.078	.093	.261	.093	1.187	.750	.593	.453	1.015	.062	.187	.078	.875	.718	1.375	.218	1.156	1.843	.048	NA	.875	.305	.078	.312	1.687	.110	1.830	.070	.275	.180	1.844

MIT DASH NUMBERS

THIS SHEET ADDED

Ⓖ REPLACES REV F WITH CHANGE

NOTES FOR TABLE

STYLE A IS FOR G&N SYSTEM

STYLE B IS FOR GROUND SUPPORT EQUIPMENT

TYPE I IS WITHOUT MOUNTING HOLES

TYPE II IS WITH MOUNTING HOLES

QTY REQD	PART OR IDENTIFYING NO.	MATERIAL OR NOTES	NOMENCLATURE OR DESCRIPTION	FIND NO.

LIST OF MATERIALS

NEXT ASSY	USED ON
AS APPLICABLE	

APPLICATION

UNLESS OTHERWISE SPECIFIED
DIMENSIONS ARE IN INCHES
CAPACITOR VALUES ARE IN μf
RESISTOR VALUES ARE IN OHMS
TOLERANCES ON
FRACTIONS ± — DECIMALS ±.005 ANGLES ± —
DO NOT SCALE THIS DRAWING

MATERIAL
SEE NOTE 11

MIT
INSTRUMENTATION LAB
CAMBRIDGE, MASS.

DRAWN	R A Jones	7-16-65
CHECKED		7-22-65
APPROVED		
APPROVED	W Kupfer	7/22/65
APPROVED MIT	W Kupfer	7/22/65
APPROVED MSC		
		DATE

MANNED SPACECRAFT CENTER
HOUSTON, TEXAS

NAMEPLATES,
APOLLO G&N-GSE
(STANDARDS)

CODE IDENT NO 80230 | SIZE E | DRAWING NO. 1004260

SCALE NONE | SHEET 5 OF

NOTICE – WHEN GOVERNMENT DRAWINGS, SPECIFICATIONS, OR OTHER DATA ARE USED FOR ANY PURPOSE OTHER THAN IN CONNECTION WITH A DEFINITELY RELATED GOVERNMENT PROCUREMENT OPERATION, THE UNITED STATES GOVERNMENT THEREBY INCURS NO RESPONSIBILITY NOR ANY OBLIGATION WHATSOEVER; AND THE FACT THAT THE GOVERNMENT MAY HAVE FORMULATED, FURNISHED, OR IN ANY WAY SUPPLIED THE SAID DRAWINGS, SPECIFICATIONS, OR OTHER DATA IS NOT TO BE REGARDED BY IMPLICATION OR OTHERWISE AS IN ANY MANNER LICENSING THE HOLDER OR ANY OTHER PERSON OR CORPORATION, OR CONVEYING ANY RIGHTS OR PERMISSION TO MANUFACTURE, USE, OR SELL ANY PATENTED INVENTION THAT MAY IN ANY WAY BE RELATED THERETO.

REVISIONS C2768

SYM	ZONE	DESCRIPTION	DR	CHK	DATE	APPROVED
AG		CHANGED NUMBER OF SHEETS FROM 5 TO 6 PER TDRR 26110.	RAJ		[illegible]	
AH		REVISED PER TDRR 26372	″		3-16-66	
AJ		REVISED PER TDRR 26425	″		3-16-66	
AK		REVISED PER TDRR 26743	″		3-16-66	
AL		REVISED PER TDRR 26798	″		3-16-66	
AM		REVISED PER TDRR 27168	″		4-7-66	
AN		REVISED PER TDRR 27235			4-7-66	
AP		REVISED PER TDRR 27345	″		4-7-66	
AR		REVISED PER TDRR 27417	″		4-7-66	
AS		REVISED PER TDRR 27442	″		4-7-66	
AT		REVISED PER TDRR 27719	″		4-20-66	
AU		REVISED PER TDRR 27880	″		4-20-66	
AV		REVISED PER TDRR 27896	″		4-20-66	
AW		↕ ↕ 28110	″		5-16-66	
AY		↕ ↕ 28173	″		5-16-66	
AZ		↕ ↕ 28131	″		5-16-66	
BA		↕ ↕ 28124	″		5-16-66	
BB		REVISED PER TDRR 28511	″		5-16-66	
BC		″ ″ ″ 28949	″		5-24-66	
BD		″ ″ ″ 29222	″		6-8-66	
BE		″ ″ ″ 29235	″		″	
BF		″ ″ ″ 29322	″		6-24-66	
BG		″ ″ ″ 29429	″		″	
BH		″ ″ ″ 29449	″		″	
BJ		″ ″ ″ 29335	″		″	
BK		″ ″ ″ 29619	″		″	
BL		″ ″ ″ 29696	″		6-29-66	
BM		REVISION STATUS CHANGED	JSD	N.S.	7-23-66	
BN		REVISED PER TDRR 29974	JI	RLW	22 AUG 66	
BP		REVISION STATUS CHANGED	JI	RLW	22 AUG 66	
BR		REVISION STATUS CHANGED	JI	RLW	23 AUG 66	
BS		REVISED PER TDRR 30530	GW	RLW	26 AUG 66	
BT		REVISED PER TDRR 30543	GW	RLW	26 AUG 66	
BU		REVISED PER TDRR 30898	EH	JI	9 SEP 66	
BV		REVISED PER TDRR 31241	JJB	RLW	30 SEP 66	
BW		REVISION STATUS CHANGED	JJB	RLW	30 SEP 66	
BY		REVISED PER TDRR 31341	JJB	RLW	10 OCT 66	
BZ		REVISED PER TDRR 31393	JJB	RLW	10 OCT 66	
CA		REVISED PER TDRR 31593	JJB		25 OCT 66	

DASH NO	P/C	PART NAME	REMARKS	PART NO.	SER NO.	CONT NO.	STYLE	TYPE	MATERIAL	A	B	C	D	E	F	G	H	J	K	L	M	N	P	R	S	T	U	V	W	Y	Z	AA	AB	AC	AD	AE	AF	AG	AH	AJ	AK	AL	AM	AN	AP	AR
547		CSL, CAL AND TEST, SCM/PSAAM		2900895-021		NAS-497	B	II	NOTE 11 C	4.125	1.812	3.250	NA	.125	.062	.12	.156	.100/.104	.125	1.625	1.140	.890	.640	1.390	.125	.171	.125	1.875	1.687	2.625	.250	1.562	3.843	.093	NA	NA	.359	.125	.437	3.688	NA	3.687	.093	.40	.25	3.875
546		FIX., HAND., C/M AND LEM CDU		2900999-021		NAS-9-497	B	II	NOTE 11 C	2.125	.968	1.718	NA	.093	.031	.06	.093	.100/.104	.093	.858	.608	.484	.358	.733	.077	.116	.062	.937	.875	1.343	.125	.781	1.892	.046	NA	NA	.209	.093	.250	1.875	NA	1.840	.046	.23	.16	1.938
544		ADPT MODULE, P.S.A.		1902431-051		NAS-9-497	B	II	NOTE 11 C	2.125	.968	1.718	NA	.093	.031	.06	.093	.100/.104	.093	.858	.608	.484	.358	.733	.077	.116	.062	.937	.875	1.343	.125	.781	1.892	.046	NA	NA	.209	.093	.250	1.875	NA	1.840	.046	.23	.16	1.938
541	AC	FIXTURE, MOUNTING, IMU		2900000-021		NAS 9-497	B	II	NOTE 11C	4.125	1.812	3.250	NA	.125	.062	.12	.156	.100/.104	.125	1.625	1.140	.890	.640	1.390	.125	.171	.125	1.875	1.687	2.625	.250	1.562	3843	.093	NA	NA	.359	.125	.437	3.688	NA	3.687	.093	.40	.25	3.875
543	AC	PANEL, MONITOR		2900031-041		NAS9-497	B	II	NOTE 11C	2.125	.968	1.718	NA	.093	.031	.06	.093	.100/.104	.093	.858	.608	.484	.358	.733	.077	.116	.062	.937	.875	1.343	.125	.781	1.892	.046	NA	NA	.209	.093	.250	1.875	NA	1.840	.046	.23	.25	1.938
542	AC	BATTERY PACK, LIFTING		2900812-021		NAS9-497	B	II	NOTE 11C	2.125	.968	1.718	NA	.093	.031	.06	.093	.100/.104	.093	.858	.608	.484	.358	.733	.077	.116	.062	.937	.875	1.343	.125	.781	1.892	.046	NA	NA	.209	.093	.250	1.875	NA	1.840	.046	.23	.16	1.938
540	AC	ADPT, TEST POINT, P.S.A.		2900037-031		NAS 9-497	B	II	NOTE 11C	2.125	.968	1.718	NA	.093	.031	.06	.093	.100/.104	.093	.858	.608	.484	.358	.733	.077	.116	.062	.937	.875	1.343	.125	.781	1.892	.046	NA	NA	.209	.093	.250	1.875	NA	1.840	.046	.23	.16	1.938
539	AC	ANNUNCIATOR PANEL AND EYEPIECE STORAGE ASSEMBLY		1021255-041		↕	A	I	NOTE 11B	2.000	1.312	1.906	1.375	.078	.048	.078	.093	NA	NA	1.125	.750	.593	.453	1.015	.062	.187	.078	.875	.718	1.375	.218	NA	NA	.048	.031	.875	.305	.078	.531	1.906	.078	NA	.078	.531	.187	NA
538	AC	ANNUNCIATOR PANEL AND EYEPIECE STORAGE ASSEMBLY		1021255-031		↕	A	I	NOTE 11B	2.000	1.312	1.906	1.375	.078	.048	.078	.093	NA	NA	1.125	.750	.593	.453	1.015	.062	.187	.078	.875	.718	1.375	.218	NA	NA	.048	.031	.875	.305	.078	.531	1.906	.078	NA	.078	.531	.187	NA
537	AC	TEST SELECTOR		2900028-031		↕	B	II	NOTE 11C	2.125	.968	1.718	NA	.093	.031	.06	.093	.100/.104	.093	.858	.608	.484	.358	.733	.077	.116	.062	.937	.875	1.343	.125	.781	1.892	.046	NA	NA	.209	.093	.250	1.875	NA	1.840	.046	.23	.16	1.938
536	AC	ANALYZER, OPTICS-INERTIAL		2900023-041		↕	B	II	NOTE 11C	4.125	1.812	3.250	NA	.125	.062	.12	.156	.100/.104	.125	1.625	1.140	.890	.640	1.390	.125	.171	.125	1.875	1.637	2.625	.250	1.562	3.843	.093	NA	NA	.359	.125	.437	3.688	NA	3.687	.093	.40	.25	3.875
535	AC	CONT, TEMP, PORTABLE		2900060-021		↕	B	II	NOTE 11C	2.125	.968	1.718	NA	.093	.031	.06	.093	.100/.104	.093	.858	.608	.484	.358	.733	.077	.116	.062	.937	.875	1.343	.125	.781	1.892	.046	NA	NA	.209	.093	.250	1.875	NA	1.840	.046	.23	.16	1.938
534	AC	COMPUTER CONT & RETICLE DIMMER		6014512-021		↕	A	I	NOTE 11B	2.000	1.312	1.906	1.375	.078	.048	.078	.093	NA	NA	1.125	.750	.593	.453	1.015	.062	.187	.078	.875	.718	1.375	.218	NA	NA	.048	.031	.875	.305	.078	.531	1.906	.078	NA	.078	.531	.187	NA
533	AC	ADPT MODULE, P.S.A.		1902431-041		↕	B	II	NOTE 11C	2.125	.968	1.718	NA	.093	.031	.06	.093	.100/.104	.093	.858	.608	.484	.358	.733	.077	.116	.062	.937	.875	1.343	.125	.781	1.892	.046	NA	NA	.209	.093	.250	1.875	NA	1.840	.046	.23	.16	1.938
532	AC	TRAY BREAKOUT, 105 PIN		1900807-021		↕	↕	↕	↕	4.125	1.812	3.250	↕	.125	.062	.12	.156	.100/.104	.125	1.625	1.140	.890	.640	1.390	.125	.171	.125	1.875	1.687	2.625	.250	1.562	3.843	.093	↕	↕	.359	.125	.437	3.688	↕	3.687	.093	.40	.25	3.875
531	AC	TRAY BREAKOUT, 84 PIN		1900806-021		↕	↕	↕	↕	4.125	1.812	3.250	↕	.125	.062	.12	.156	.100/.104	.125	1.625	1.140	.890	.640	1.390	.125	.171	.125	1.875	1.687	2.625	.250	1.562	3.843	.093	↕	↕	.359	.125	.437	3.688	↕	3.687	.093	.40	.25	3.875
530	AC	HEAT SINK - TRAY EXTENDER		1900808-021		↕	↕	↕	↕	2.125	.968	1.718	↕	.093	.031	.06	.093	.100/.104	.093	.858	.608	.484	.358	.733	.077	.116	.062	.937	.875	1.343	.125	.781	1.892	.046	↕	↕	.209	.093	.250	1.875	↕	1.840	.046	.23	.16	1.938
529	AC	TESTER, FAILURE INDICATOR		1900809-021		↕	↕	↕	↕	2.125	.968	1.718	NA	.093	.031	.06	.093	.100/.104	.093	.858	.608	.484	.358	.733	.077	.116	.062	.937	.875	1.343	.125	.781	1.892	.046	NA	NA	.209	.093	.250	1.875	NA	1.840	.046	.23	.16	1.938
						↕	↕	↕	↕																																					
527	AC	FIX., MOUNTING, G AND N	(-144)	1902204-021		↕	↕	↕	↕	FOR DIMENSIONS, SEE DASH 500 VALUES BELOW																																				
526	AC	FIX., MOUNTING, G AND N	(-144)	2900067-031		↕	↕	↕	↕																																					
525	AC	PORTABLE TEMP. CONTROLLER		1900496-021		↕	B	II	NOTE 11 C	3.000	1.937	2.437	2.312	.125	.031	.125	.156	.125	.125	1.718	1.187	.968	.749	1.452	.093	.295	.090	1.312	1.00	2.000	.250	1.687	2.750	.062	N/A	N/A	.463	.125	.562	2.437	.140	2.562	.090	.468	.359	2.750
524	AC	POWER, SERVO AND THERMOCOUPLE ASSEMBLY C/M		2010743		↕	A	I	NOTE 11 B	2.125	.968	1.718	NA	.093	.031	.06	.093	NA	NA	.858	.608	.484	.358	.733	.062	.140	.062	NA	.968	1.450	.125	NA	1.720	.046	.03	NA	.210	NA	NA	NA	.070	NA	.046	.32	.16	NA
523	AC	PULSE TORQUE AND THERMOCOUPLE ASSEMBLY-LEM		6010656		↕	↕	↕	↕	FOR DIMENSIONS, SEE DASH 508 VALUES BELOW																																				
522	AC	COUPLING DATA UNIT AND THERMOCOUPLE ASSEMBLY - LEM		2010744		↕	↕	↕	↕																																					
521	AC	COUPLING DATA UNIT AND THERMOCOUPLE ASSEMBLY - C/M		2010744		↕	↕	↕	↕																																					
520	AC	PIPA ELECTRONICS AND THERMOCOUPLE ASSEMBLY		2010745		↕	A	I	NOTE 11B																																					
519	AC	FIXTURE, HANDLING, LEM-PSA	(-141)	6900129-011		↕	B	II	NOTE 11C	FOR DIMENSIONS, SEE DASH 504 VALUES BELOW																																				
518	AC	JUNCTION BOX, GSE-PSA	(-144)	1901933-031		↕	B	II	NOTE 11C	FOR DIMENSIONS, SEE DASH 500 VALUES BELOW																																				
517	AC	FIX., HAND., OPTICS INSTL.	(-141)	2901380-011		↕	B	II	NOTE 11C	FOR DIMENSIONS, SEE DASH 502 VALUES BELOW																																		
516	AC	POWER, SERVO AND THERMOCOUPLE ASSEMBLY-LEM		6010655		NAS 9-497	A	I	NOTE 11B	FOR DIMENSIONS, SEE DASH 508 VALUES BELOW																																		
514	AC	SIGNAL COND. ASSY LEM OPER.	(-100)	6007013		NAS-9-497	A	I	NOTE 11B	FOR DIMENSIONS, SEE DASH 508 VALUES BELOW																																		
513	↕	JUMPER, BY-PASS	(-141)	1021616		↕	B	II	NOTE 11C	2.125	.968	1.718	NA	.093	.031	.06	.093	.100/.104	.093	.858	.608	.484	.358	.733	.077	.116	.062	.937	.875	1.343	.125	.781	1.892	.046	NA	NA	.209	.093	.250	1.875	NA	1.840	.046	.23	.16	1.938
512	↕	COUPLING DATA UNIT ASSEMBLY C/M	(-100)	2007322-011		↕	A	I	NOTE 11B	FOR DIMENSIONS, SEE DASH 508 VALUES BELOW																																		
511	↕	COUPLING DATA UNIT ASSEMBLY - LEM	(-100)	2007322-021		↕																																								
510	↕	BATTERY POWER PACK	(-144)	1900011-041		↕	B	II	NOTE 11C	FOR DIMENSIONS, SEE DASH 500 VALUES BELOW																																		
509	↕	JUNCTION BOX, P.S.A/G.S.E.	(-144)	1902195-021		↕	B	II	NOTE 11C																																					
508	↕	NAVIGATION BASE ASSEMBLY - LEM	✓ (-101)	6899980		↕	A	I	NOTE 11B	2.000	1.312	1.906	1.375	.078	.048	.078	.093	NA	NA	1.125	.750	.593	.453	1.015	.062	.187	.078	.875	.718	1.375	.218	NA	NA	.048	.031	.875	.305	.078	.531	1.906	.078	NA	.078	.531	.187	NA
507	↕	CSL, COOL. AND PWR, G AND N	(-144)	1902134-041		↕	B	II	NOTE 11C	FOR DIMENSIONS, SEE DASH 500 VALUES BELOW																																		
506	↕	BREAKOUT BOX, CABLE ADAPTER	(-141)	2901011-011		↕	↕	↕	↕	2.125	.968	1.718	NA	.093	.031	.06	.093	.100/.104	.093	.858	.608	.484	.358	.733	.077	.116	.062	.937	.875	1.343	.125	.781	1.892	.046	NA	NA	.209	.093	.250	1.875	NA	1.840	.046	.23	.16	1.938
505	↕	MONITOR AND CONTROL, TEMP	(-141)	2900026-021		↕	↕	↕	↕																																					
504	↕	PWR SUP, GUIDANCE SYSTEM	✓ (-141)	1900033-021		↕	↕	↕	↕																																					
503	↕	CONTROL, GIMBAL POSITION	(-141)	2900036-021		↕	↕	↕	↕																																					
502	↕	ADPT, TEST POINT, PTA/PEA.	(-141)	2900145-021		↕	↕	↕	↕																																					
501	↕	MOUNTING PLATE, COMPONENT	(-144)	6900007-031		NAS-9-497	B	II	NOTE 11C	FOR DIMENSIONS, SEE DASH 500 VALUES BELOW																																		
500	AC	MOUNTING PLATE, COMPONENT	✓ (-144)	2900677-021						4.125	1.812	3.250	NA	.125	.062	.12	.156	.100/.104	.125	1.625	1.140	.890	.640	1.390	.125	.171	.25	1.875	1.687	2.625	.250	1.562	3.843	.093	NA	NA	.359	.125	.437	3.688	NA	3.687	.093	.40	.25	3.875

AC ELECTRONICS DASH NUMBERS

NOTES FOR TABLE
STYLE A IS FOR G&N SYSTEM
STYLE B IS FOR GROUND SUPPORT EQUIPMENT
TYPE I IS WITHOUT MOUNTING HOLES
TYPE II IS WITH MOUNTING HOLES

(AG) THIS SHEET ADDED

QTY REQD	PART OR IDENTIFYING NO.	MATERIAL OR NOTES	NOMENCLATURE OR DESCRIPTION	FIND NO.

LIST OF MATERIALS

NEXT ASSY	USED ON
AS APPLICABLE	

APPLICATION

UNLESS OTHERWISE SPECIFIED
DIMENSIONS ARE IN INCHES
CAPACITOR VALUES ARE IN µf
RESISTOR VALUES ARE IN OHMS
TOLERANCES ON
FRACTIONS ± — DECIMALS ±.005 ANGLES ± —
DO NOT SCALE THIS DRAWING

MATERIAL
SEE NOTE 11

MIT
INSTRUMENTATION LAB
CAMBRIDGE, MASS.

DRAWN R. A. Jones 2-15-66
CHECKED W. L. Chandler 2-15-66
APPROVED
APPROVED
APPROVED MIT 5-16-66
APPROVED MSC
DATE

MANNED SPACECRAFT CENTER
HOUSTON, TEXAS

NAMEPLATES,
APOLLO G&N-GSE
(STANDARDS)

CODE IDENT NO. 80230
SIZE E
DRAWING NO. 1004260
SCALE NONE
SHEET 6 OF 6

NOTICE – WHEN GOVERNMENT DRAWINGS, SPECIFICATIONS, OR OTHER DATA ARE USED FOR ANY PURPOSE OTHER THAN IN CONNECTION WITH A DEFINITELY RELATED GOVERNMENT PROCUREMENT OPERATION, THE UNITED STATES GOVERNMENT THEREBY INCURS NO RESPONSIBILITY NOR ANY OBLIGATION WHATSOEVER; AND THE FACT THAT THE GOVERNMENT MAY HAVE FORMULATED, FURNISHED, OR IN ANY WAY SUPPLIED THE SAID DRAWINGS, SPECIFICATIONS OR OTHER DATA IS NOT TO BE REGARDED BY IMPLICATION OR OTHERWISE AS IN ANY MANNER LICENSING THE HOLDER OR ANY OTHER PERSON OR CORPORATION, OR CONVEYING ANY RIGHTS OR PERMISSION TO MANUFACTURE, USE, OR SELL ANY PATENTED INVENTION THAT MAY IN ANY WAY BE RELATED THERETO.

NOTES:

1. INTERPRET DRAWING IN ACCORDANCE WITH STANDARDS PRESCRIBED IN MIL-D-70327.
2. DIMENSIONS ON EACH VIEW APPLY TO ALL VIEWS. (WITH THE EXCEPTION OF MOUNTING HOLES).
3. FORMATS ILLUSTATED WILL BE APPLICABLE TO ALL ITEMS REQUIRING NAMEPLATES BELOW END ITEM DESIGNATION (SYSTEMS, ASSEMBLIES, ETC.)
4. PLATE BACKGROUND TO BE LUSTERLESS BLACK PER FED-STD-595, COLOR 37038. BORDER, MARKING AND LETTERING TO BE NATURAL METAL,(ANODIZED ALUMINUM).
5. MARKING METHOD TO BE DIE STAMPING, ETCHING OR ENGRAVING IN ACCORDANCE WITH MIL P 19834.
6. LETTERING STYLE TO BE GOTHIC,(SANS SERIFS), AND NUMBERS TO BE ARABIC.
7. WHERE LOCATING DIMENSIONS ARE NOT SHOWN, CHARACTERS SHALL BE SYMMETRICALLY POSITIONED.
8. IDENTIFY WITH DRAWING NUMBER PER ND1002019.
9. WHEN "AUTO MARK" METAL MARKING TYPEWRITER IS USED TO ADD DATA TO BLANK SPACES, TYPE SIZE IS TO BE SELECTED FROM DIMENSIONS U, AC AND AM.
10. NASA SYMBOL IS TO BE PROPORTIONAL TO NAMEPLATE IN RATIO OF 1 TO 5 WITH DIMENSION A VALUE AND IS TO HAVE NATURAL BACKGROUND. NASA SYMBOL LETTERS LETTERING AND FEATHER TO BE BLACK,(OR WHITE FOR SILK SCREENING), WHERE BLACK FEATHER PROTRUDES INTO BLACK BACKGROUND, A MINIMUM OUTLINE OF NATURAL BACKGROUND SHALL EXIST.
11. NAMEPLATES WILL BE APPLIED BY METHODS LISTED BELOW, SHOWN IN ORDER OF PREFERENCE, (I.E., FOR RELIABILITY AND WEIGHT).
    - A - STENCIL OR SILK SCREEN DIRECTLY ON EQUIPMENT USING INK PER SCD 1010920,(WHITE OR BLACK).
    - B - ALUMINUM FOIL,(STYLE A OR B, TYPE I):
      FOIL SHALL BE .0030 ± .0005 THICK PER MIL-A-148.
      FOIL SHALL HAVE NO ADHESIVE BACKING.
      FOIL SHALL BE BONDED PER ND 1002219,(METHOD II).
      FOIL SHALL BE CLEAR ANODIZED PER MIL-A-8625, TYPE II.
    - C - PLATE, (STYLE A OR B, TYPE II):
      MATERIAL: QQ-A-250, TEMPER O OR H14, TYPE 1100, ALUMINUM ALLOY, .032 THICK.
      ANODIZE PER MIL-A-8625, TYPE II.
      ALUMINUM PLATE MUST BE FREE FROM BURRS AND SHARP CORNERS, MOUNTED WITH APPLICABLE SIZE FASTENERS.
12. NAMEPLATES SHALL BE CAPABLE OF MEETING APPLICABLE REQUIREMENTS OF MIL-M-13231.
13. ON DIMENSION TABLES SHOWN ON PAGES 2,3,4 AND 5, NA MEANS, "NOT APPLICABLE".

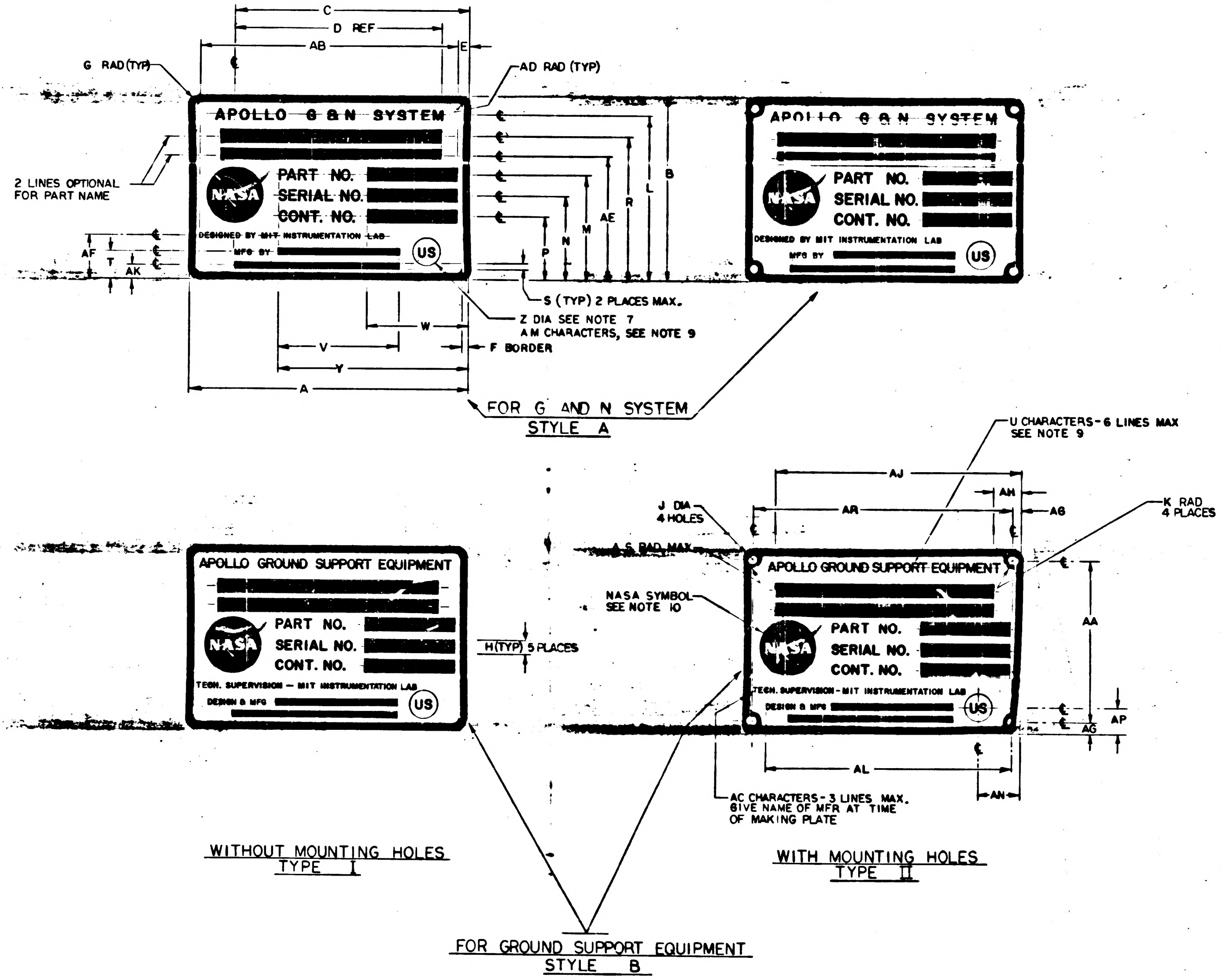

			REVISIONS			02768	
	SYM	ZONE	DESCRIPTION	DR	CHK	DATE	APPROVED
	G		REPLACES REV F WITH CHANGE PER TDRR 20854			7/22/65	WK
★	H		REVISED PER TDRR 20892			8/4/65	WK
	J		REVISED PER TDRR 20904			8/5/65	WK
	K		REVISED PER TDRR 21379			8/6/65	WK
	L		REVISED PER TDRR 21410			8/23/65	WK
★	M		REVISED PER TDRR 21993			10/1/65	
★	N		REVISED PER TDRR 22621				
★	P		REVISED PER TDRR 22671				
★	R		REVISED PER TDRR 22672				
★	S		REVISED PER TDRR 22750				WK
	T		REVISED PER TDRR 22823				
★	U		REVISED PER TDRR 23072			10-22-65	MGM
	V		REVISED PER TDRR 23521			10-27-65	WK
★	W		REVISED PER TDRR 23824	RAJ		11-9-65	WK
★	Y		REVISED PER TDRR 24018	RAJ		11-16-65	WK
★	Z		REVISED PER TDRR 24040	RAJ		11-19-65	WK
Ⓜ	AA		REVISED PER TDRR 24060	RAJ		11-19-65	WK
Ⓜ	AB		REVISED PER TDRR 24868	RAJ		12-22-65	WK
Ⓜ	AC		REVISED PER TDRR 24973	RAJ		1-4-66	WK
Ⓜ	AD		REVISED PER TDRR 25065	RAJ		1-18-66	MGM
★	AE		REVISED PER TDRR 25672	RAJ		2-4-66	WK
Ⓜ	AF		REVISED PER TDRR 25671	RAJ		2-4-66	WK
	AG		REVISED PER TDRR 26110	RAJ		2-15-66	WK
★	AH		REVISED PER TDRR 26372	"		3-16-66	MGM
★	AJ		REVISED PER TDRR 26425	"		3-16-66	MGM
★	AK		REVISED PER TDRR 26743	"		3-16-66	MGM
Ⓜ	AL		REVISED PER TDRR 26798	"		3-16-66	MGM
★	AM		REVISED PER TDRR 27168	"		4-7-66	MGM
★	AN		REVISED PER TDRR 27235	"		4-7-66	MGM
★	AP		REVISED PER TDRR 27345	"		4-7-66	MGM
★	AR		REVISED PER TDRR 27417	"		4-7-66	MGM
Ⓜ	AS		REVISED PER TDRR 27442	"		4-7-66	MGM
	AT		REVISED PER TDRR 27719	"		4-20-66	WK
Ⓜ	AU		REVISED PER TDRR 27880	"		4-20-66	WK
Ⓜ	AV		REVISED PER TDRR 27896	"		4-20-66	WK
	AW		28110	"		5-16-66	MGM
	AY		28173	"			MGM
	AZ		28131	"			MGM
	BA		28124	"			MGM
	BB		REVISED PER TDRR 28511	"		5-16-66	MGM
Ⓜ	BC		" " " 28949	"		5-24-66	MGM
Ⓜ	BD		" " " 29222	"		6-8-66	MGM
	BE		" " " 29235	"		6-8-66	MGM
	BF		" " " 29322	"		6-30-66	MGM
	BG		" " " 29429	"		"	MGM
	BH		" " " 29449	"		"	MGM
	BJ		" " " 29335	"		"	MGM
	BK		" " " 29619	"		"	MGM
Ⓜ	BL		" " " 29696	"		"	MGM
	BM		REVISION STATUS CHANGED	JSD	NS	7-29-66	
	BN		REVISION STATUS CHANGED	JI	RLW	22 AUG 66	
	BP		REVISION STATUS CHANGED	JI	RLW	22 AUG 66	
	BR		REVISION STATUS CHANGED	JI	RLW	23 AUG 66	
	BS		REVISION STATUS CHANGED	GW	RLW	26 AUG 66	
Ⓜ	BT		REVISION STATUS CHANGED	GW	RLW	26 AUG 66	
Ⓜ	BU		REVISION STATUS CHANGED	EH	JI	9 SEPT 66	
	BV		REVISION STATUS CHANGED	JJB	RLW	30 SEP 66	
	BW		REVISION STATUS CHANGED	JJB	RLW	30 SEP 66	
	BY		REVISION STATUS CHANGED	JJB	RLW	10 OCT 66	
Ⓜ	BZ		REVISION STATUS CHANGED	JJB	RLW	10 OCT 66	
Ⓜ	CA		REVISION STATUS CHANGED	JJB	SPW	25 OCT 66	
	CB		REVISION STATUS CHANGED	REF		10 DEC 66	

SUGGESTED PROPORTIONS FOR NAMEPLATE DIMENSIONS.
1. SELECT NAMEPLATE LENGTH, DIMENSION "A", TO FIT DESIGN NEEDS.
2. DIMENSIONS B THRU AS ON LINE 1 BELOW ARE PROPORTIONAL TO "A" BY MULTIPLIERS SHOWN IN LINE 2 BELOW.

1.	A	B	C	D	E	F	G	H	J	K	L	M	N	P	R	S	T	U	V
2.	1.000 A	.6563 A	.8438 A	.6875 A	.0391 A	.0240 A	.0391 A	.0469 A	.0547 A	.0469 A	.5938 A	.3750 A	.2969 A	.2187 A	.5079 A	.0313 A	.0938 A	.0391 A	.4375 A

1.	W	Y	Z	AA	AB	AC	AD	AE	AF	AG	AH	AJ	AK	AL	AM	AN	AP	AR	AS
2.	.3594 A	.6875 A	.1094 A	.5781 A	.9219 A	.0240 A	.0156 A	.4375 A	.1525 A	.0391 A	.1563 A	.8438 A	.0548 A	.8659 A	.0391 A	.1563 A	.0938 A	.9219 A	.0151 A

Ⓖ REPLACES REV F WITH CHANGE

QTY REQD	PART OR IDENTIFYING NO.	MATERIAL OR NOTES	NOMENCLATURE OR DESCRIPTION	FIND NO.

LIST OF MATERIALS

AS APPLICABLE	
NEXT ASSY	USED ON
APPLICATION	

UNLESS OTHERWISE SPECIFIED
DIMENSIONS ARE IN INCHES
CAPACITOR VALUES ARE IN μf
RESISTOR VALUES ARE IN OHMS
TOLERANCES ON
FRACTIONS ± — DECIMALS ±.005 ANGLES ± —
DO NOT SCALE THIS DRAWING

MATERIAL
SEE NOTE 11

MIT
INSTRUMENTATION LAB
CAMBRIDGE, MASS.

MANNED SPACECRAFT CENTER
HOUSTON, TEXAS

DRAWN R. A. Jones 7/16/65
CHECKED A. J. 7-22-65
APPROVED
APPROVED W Kupfer 7/22/65
APPROVED MIT W Kupfer 7/22/65
APPROVED MSC 7/22/65
DATE

NAMEPLATES,
APOLLO G&N–GSE
(STANDARDS)

CODE IDENT NO. 80230
SIZE E
DRAWING NO. 1004260
SCALE NONE
SHEET 1 OF 6

NOTICE — WHEN GOVERNMENT DRAWINGS, SPECIFICATIONS, OR OTHER DATA ARE USED FOR ANY PURPOSE OTHER THAN IN CONNECTION WITH A DEFINITELY RELATED GOVERNMENT PROCUREMENT OPERATION, THE UNITED STATES GOVERNMENT THEREBY INCURS NO RESPONSIBILITY NOR ANY OBLIGATION WHATSOEVER; AND THE FACT THAT THE GOVERNMENT MAY HAVE FORMULATED, FURNISHED, OR IN ANY WAY SUPPLIED THE SAID DRAWINGS, SPECIFICATIONS OR OTHER DATA IS NOT TO BE REGARDED BY IMPLICATION OR OTHERWISE AS IN ANY MANNER LICENSING THE HOLDER OR ANY OTHER PERSON OR CORPORATION, OR CONVEYING ANY RIGHTS OR PERMISSION TO MANUFACTURE, USE, OR SELL ANY PATENTED INVENTION THAT MAY IN ANY WAY BE RELATED THERETO.

NOTES:

1. INTERPRET DRAWING IN ACCORDANCE WITH STANDARDS PRESCRIBED IN MIL-D-70327.
2. DIMENSIONS ON EACH VIEW APPLY TO ALL VIEWS. (WITH THE EXCEPTION OF MOUNTING HOLES).
3. FORMATS ILLUSTATED WILL BE APPLICABLE TO ALL ITEMS REQUIRING NAMEPLATES BELOW END ITEM DESIGNATION (SYSTEMS, ASSEMBLIES, ETC.)
4. PLATE BACKGROUND TO BE LUSTERLESS BLACK PER FED-STD-595, COLOR 37038. BORDER, MARKING AND LETTERING TO BE NATURAL METAL,(ANODIZED ALUMINUM).
5. MARKING METHOD TO BE DIE STAMPING, ETCHING OR ENGRAVING IN ACCORDANCE WITH MIL P 19834.
6. LETTERING STYLE TO BE GOTHIC,(SANS SERIFS), AND NUMBERS TO BE ARABIC.
7. WHERE LOCATING DIMENSIONS ARE NOT SHOWN,CHARACTERS SHALL BE SYMMETRICALLY POSITIONED.
8. IDENTIFY WITH DRAWING NUMBER PER ND1002019.
9. WHEN "AUTO MARK" METAL MARKING TYPEWRITER IS USED TO ADD DATA TO BLANK SPACES, TYPE SIZE IS TO BE SELECTED FROM DIMENSIONS U, AC AND AM.
10. NASA SYMBOL IS TO BE PROPORTIONAL TO NAMEPLATE IN RATIO OF 1 TO 5 WITH DIMENSION A VALUE AND IS TO HAVE NATURAL BACKGROUND. NASA SYMBOL LETTERS LETTERING AND FEATHER TO BE BLACK,(OR WHITE FOR SILK SCREENING). WHERE BLACK FEATHER PROTRUDES INTO BLACK BACKGROUND, A MINIMUM OUTLINE OF NATURAL BACKGROUND SHALL EXIST.
11. NAMEPLATES WILL BE APPLIED BY METHODS LISTED BELOW, SHOWN IN ORDER OF PREFERENCE, (I.E., FOR RELIABILITY AND WEIGHT).
    - A - STENCIL OR SILK SCREEN DIRECTLY ON EQUIPMENT USING INK PER SCD 1010920,(WHITE OR BLACK).
    - B - ALUMINUM FOIL,(STYLE A OR B, TYPE I):
      FOIL SHALL BE .0030 ±.0005 THICK PER MIL-A-148.
      FOIL SHALL HAVE NO ADHESIVE BACKING.
      FOIL SHALL BE BONDED PER ND 1002219,(METHOD II).
      FOIL SHALL BE CLEAR ANODIZED PER MIL-A-8625, TYPE II.
    - C - PLATE, (STYLE A OR B, TYPE II):
      MATERIAL: QQ-A-250, TEMPER O OR H14, TYPE 1100,ALUMINUM ALLOY, .032 THICK.
      ANODIZE PER MIL-A-8625, TYPE II.
      ALUMINUM PLATE MUST BE FREE FROM BURRS AND SHARP CORNERS, MOUNTED WITH APPLICABLE SIZE FASTENERS.
12. NAMEPLATES SHALL BE CAPABLE OF MEETING APPLICABLE REQUIREMENTS OF MIL-M-13231.
13. ON DIMENSION TABLES SHOWN ON PAGES 2, 3, 4 AND 5, NA MEANS, "NOT APPLICABLE".

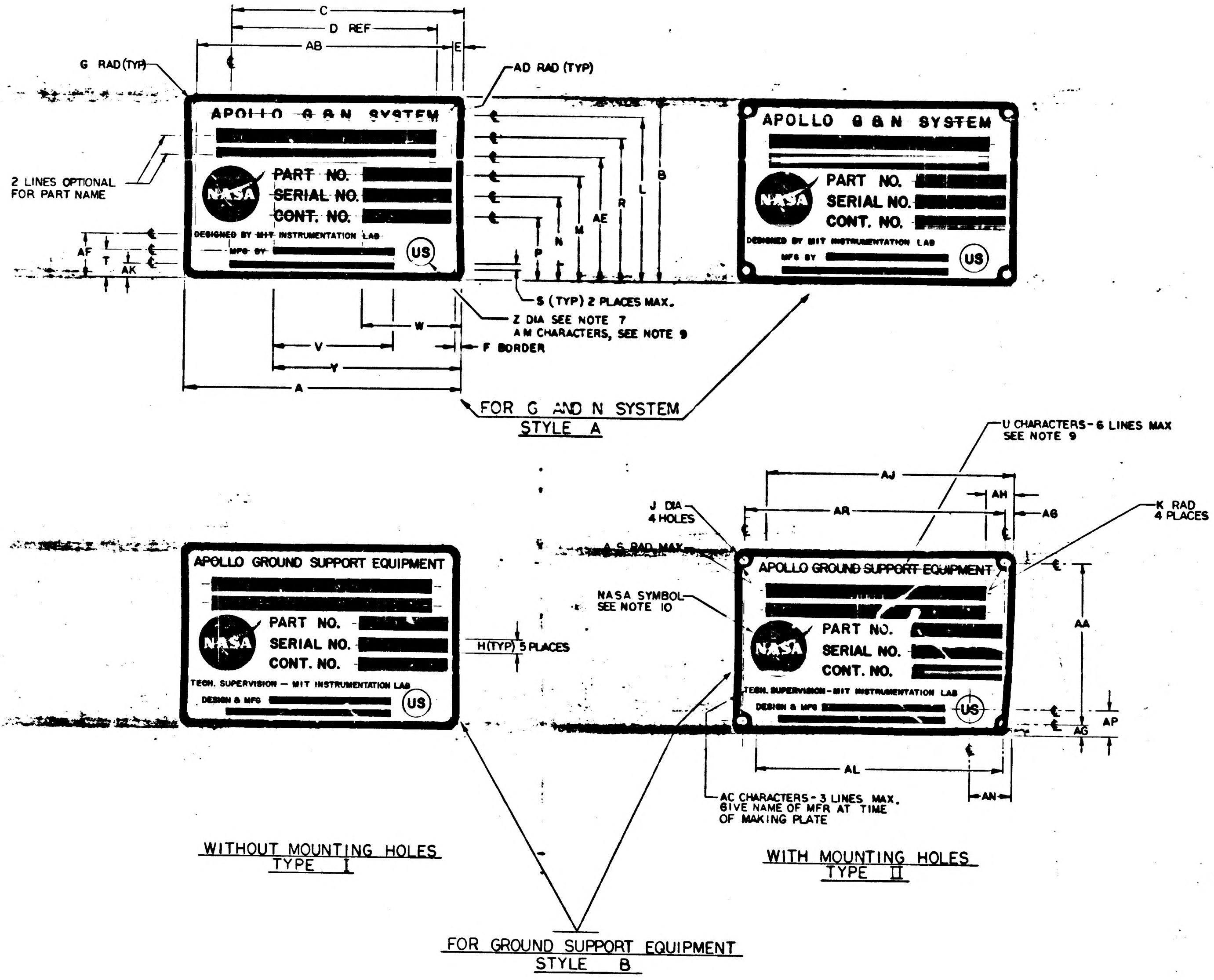

REVISIONS 02768

SYM	ZONE	DESCRIPTION	DR	CHK	DATE	APPROVED
G		REPLACES REV F WITH CHANGE PER TDRR 20854			7/22/65	WK
H		REVISED PER TDRR 20892			8/4/65	WK
J		REVISED PER TDRR 20904			8/13/65	WK
K		REVISED PER TDRR 21379			5/6/65	WK
L		REVISED PER TDRR 21410			8/23/65	WK
M		REVISED PER TDRR 21993				
N		REVISED PER TDRR 22621			10/	
P		REVISED PER TDRR 22671			11/	
R		REVISED PER TDRR 22672				
S		REVISED PER TDRR 22750			65	WK
T		REVISED PER TDRR 22823				
U		REVISED PER TDRR 23072			10-22-65	MGM
V		REVISED PER TDRR 23521			10-27-65	WK
W		REVISED PER TDRR 23824	RAJ		11-9-65	WK
Y		REVISED PER TDRR 24018	RAJ		11-16-65	WK
Z		REVISED PER TDRR 24040	RAJ		11-19-65	WK
AA		REVISED PER TDRR 24060	RAJ		11-19-65	WK
AB		REVISED PER TDRR 24868	RAJ		12-22-65	WK
AC		REVISED PER TDRR 24973	RAJ		1-4-66	WK
AD		REVISED PER TDRR 25065	RAJ		1-18-66	MGM
AE		REVISED PER TDRR 25672	RAJ		2-4-66	WK
AF		REVISED PER TDRR 25671	RAJ		2-4-66	WK
AG		REVISED PER TDRR 26110	RAJ		2-15-66	WK
AH		REVISED PER TDRR 26372	"		3-6-66	MGM
AJ		REVISED PER TDRR 26425	"		3-16-66	MGM
AK		REVISED PER TDRR 26743	"		3-16-66	MGM
AL		REVISED PER TDRR 26798	"		3-16-66	MGM
AM		REVISED PER TDRR 27168	"		4-7-66	MGM
AN		REVISED PER TDRR 27235	"		4-7-66	MGM
AP		REVISED PER TDRR 27345	"		4-7-66	MGM
AR		REVISED PER TDRR 27417	"		4-7-66	MGM
AS		REVISED PER TDRR 27442	"		4-7-66	MGM
AT		REVISED PER TDRR 27719	"		4-20-66	WK
AU		REVISED PER TDRR 27880	"		4-20-66	WK
AV		REVISED PER TDRR 27896	"		4-20-66	WK
AW		28110	"		5-16-66	MGM
AY		28173	"			MGM
AZ		28131	"			MGM
BA		28124	"			MGM
BB		REVISED PER TDRR 28511	"		5-16-66	MGM
BC		" " " 28949	"		5-24-66	MGM
BD		" " " 29222	"		6-8-66	MGM
BE		" " " 29235	"		6-8-66	MGM
BF		" " " 29322	"		6-30-66	MGM
BG		" " " 29429	"		"	MGM
BH		" " " 29449	"		"	MGM
BJ		" " " 29335	"		"	MGM
BK		" " " 29619	"		"	MGM
BL		" " " 29696	"		"	MGM
BM		REVISION STATUS CHANGED	JSD	NS	7-29-66	
BN		REVISION STATUS CHANGED	JI	RLW	22 AUG 66	
BP		REVISION STATUS CHANGED	JI	RLW	22 AUG 66	
BR		REVISION STATUS CHANGED	JI	RLW	23 AUG 66	
BS		REVISION STATUS CHANGED	GW	RLW	26 AUG 66	
BT		REVISION STATUS CHANGED	GW	RLW	[illegible] 66	
BU		REVISION STATUS CHANGED	EH	JI	9 SEPT 66	
BV		REVISION STATUS CHANGED	JJB	RLW	30 SEP 66	
BW		REVISION STATUS CHANGED	JJB	RLW	30 SEP 66	
BY		REVISION STATUS CHANGED	JJB	RLW	10 OCT 66	
BZ		REVISION STATUS CHANGED	JJB	RLW	10 OCT 66	
CA		REVISION STATUS CHANGED	JJB	SPW	25 OCT 66	
CB		REVISION STATUS CHANGED	REF		10 DEC 66	

SUGGESTED PROPORTIONS FOR NAMEPLATE DIMENSIONS.
1. SELECT NAMEPLATE LENGTH, DIMENSION "A", TO FIT DESIGN NEEDS.
2. DIMENSIONS B THRU AS ON LINE 1 BELOW ARE PROPORTIONAL TO "A" BY MULTIPLIERS SHOWN IN LINE 2 BELOW.

1.	A	B	C	D	E	F	G	H	J	K	L	M	N	P	R	S	T	U	V	W
2.	1.000 A	.6563 A	.8438 A	.6875 A	.0391 A	.0240 A	.0391 A	.0469 A	.0547 A	.0469 A	.5938 A	.3750 A	.2969 A	.2187 A	.5079 A	.0313 A	.0938 A	.0391 A	.4375 A	.3594 A

1.	Y	Z	AA	AB	AC	AD	AE	AF	AG	AH	AJ	AK	AL	AM	AN	AP	AR	AS
2.	.6875 A	.1094 A	.5781 A	.9219 A	.0240 A	.0156 A	.4375 A	.1525 A	.0391 A	.1563 A	.8438 A	.0548 A	.8659 A	.0391 A	.1563 A	.0938 A	.9219 A	.0151 A

Ⓖ REPLACES REV F WITH CHANGE

QTY REQD	PART OR IDENTIFYING NO.	MATERIAL OR NOTES	NOMENCLATURE OR DESCRIPTION	FIND NO.

LIST OF MATERIALS

AS APPLICABLE	
NEXT ASSY	USED ON
APPLICATION	

UNLESS OTHERWISE SPECIFIED
DIMENSIONS ARE IN INCHES
CAPACITOR VALUES ARE IN µf
RESISTOR VALUES ARE IN OHMS
TOLERANCES ON
FRACTIONS ± — DECIMALS ±.005 ANGLES ± —
DO NOT SCALE THIS DRAWING

MATERIAL
SEE NOTE 11

MIT
INSTRUMENTATION LAB
CAMBRIDGE, MASS.

DRAWN R. A. Jones 7/16/65
CHECKED A. J. [illegible] 7-22-65
APPROVED
APPROVED W Kupfer 7/22/65
APPROVED MIT W Kupfer 7/22/65
APPROVED MSC 7/22/65
DATE

MANNED SPACECRAFT CENTER
HOUSTON, TEXAS

NAMEPLATES,
APOLLO G&N-GSE
(STANDARDS)

CODE IDENT NO. 80230
SIZE E
DRAWING NO. 1004260
SCALE NONE
SHEET 1 OF 6

NOTICE – WHEN GOVERNMENT DRAWINGS, SPECIFICATIONS, OR OTHER DATA ARE USED FOR ANY PURPOSE OTHER THAN IN CONNECTION WITH A DEFINITELY RELATED GOVERNMENT PROCUREMENT OPERATION, THE UNITED STATES GOVERNMENT THEREBY INCURS NO RESPONSIBILITY NOR ANY OBLIGATION WHATSOEVER; AND THE FACT THAT THE GOVERNMENT MAY HAVE FORMULATED, FURNISHED, OR IN ANY WAY SUPPLIED THE SAID DRAWINGS, SPECIFICATIONS OR OTHER DATA IS NOT TO BE REGARDED BY IMPLICATION OR OTHERWISE AS IN ANY MANNER LICENSING THE HOLDER OR ANY OTHER PERSON OR CORPORATION, OR CONVEYING ANY RIGHTS OR PERMISSION TO MANUFACTURE, USE, OR SELL ANY PATENTED INVENTION THAT MAY IN ANY WAY BE RELATED THERETO.

REVISIONS 02768

SYM	ZONE	DESCRIPTION	DR	CHK	DATE	APPROVED
G		REPLACES REV F WITH CHANGE PER TDRR 20854.	rj		7/22/65	WK
H		REVISED PER TDRR 20892	rj		8/3/65	WK
J		REVISED PER TDRR 20904	rj		8/3/65	WK
K		REVISED PER TDRR 21379	rj		8/9/65	WK
L		REVISED PER TDRR 21410	rj		8/23/65	WK
M		REVISED PER TDRR 21993	"			
N		REVISED PER TDRR 22621	"		10/	
P		REVISED PER TDRR 22671	"			
R		REVISED PER TDRR 22672	"		11/	
S		REVISED PER TDRR 22750	"			
T		REVISED PER TDRR 22823	"		/65	WK
U		REVISED PER TDRR 23072	"		10-22-65	WGM
V		REVISED PER TDRR 23521	"		10-27-65	WK
W		REVISED PER TCRR 23824	RAJ		11-9-65	WK
Y		REVISED PER TDRR 24018	RAJ		11-16-65	WK
Z		REVISED PER TDRR 24040	RAJ		11-19-65	WK
AA		REVISED PER TDRR 24060	RAJ		11-19-65	WK
AB		REVISED PER TDRR 24868	RAJ		12-22-65	WK
AC		REVISED PER TDRR 24973	RAJ		1-4-66	WK
AD		REVISED PER TDRR 25065	RAJ		1-18-66	WGM
AE		REVISED PER TDRR 25672	RAJ		2-4-66	WK
AF		REVISED PER TDRR 25671	RAJ		2-4-66	WK
AG		REVISED PER TDRR 26110	RAJ		2-15-66	WK
AH		REVISED PER TDRR 26372	"		3-16-66	WGM
AJ		REVISED PER TDRR 26425	"		3-16-66	WGM
AK		REVISED PER TDRR 26743	"		3-16-66	WGM
AL		REVISED PER TDRR 26798	"		3-16-66	WGM
AM		REVISED PER TDRR 27168	"		4-8-66	WGM
AN		REVISED PER TDRR 27235	"		4-8-66	WGM
AP		REVISED PER TDRR 27345	"		4-8-66	WGM
AR		REVISED PER TDRR 27417	"		4-8-66	WGM
AS		REVISED PER TDRR 27442	"		4-8-66	WGM
AT		REVISED PER TDRR 27719	"		4-21-66	
AU		REVISED PER TDRR 27880	"		4-21-66	WK
AV		REVISED PER TDRR 27896	"		4-21-66	WK
AW		↕ ↕ 28110	"		5-16-66	WGM
AY		↕ ↕ 28173	"		↕	WGM
AZ		↕ ↕ 28131	"		↕	WGM
BA		↕ ↕ 28124	"		↕	WGM
BB		REVISED PER TDRR 28511	"		5-16-66	WGM
BC		" " " 28949	"		5-24-66	WGM
BD		" " " 29222	"		6-8-66	WGM
BE		" " " 29235	"		"	WGM
BF		" " " 29322	"		6-30-66	WGM
BG		" " " 29429	"		"	WGM
BH		" " " 29449	"		"	WGM
BJ		" " " 29335	"		"	WGM
BK		" " " 29619	"		"	WGM
BL		" " " 29696	"		"	WGM
BM		REVISION STATUS CHANGED	JSD	N.S.	7-29-66	
BN		REVISION STATUS CHANGED	JI	RLW	2 AUG 66	
BP		REVISION STATUS CHANGED	JI	RLW	AUG 66	
BR		REVISION STATUS CHANGED	JI	RLW	AUG 66	
BS		REVISION STATUS CHANGED	GW	RLW	AUG 66	
BT		REVISION STATUS CHANGED	GW	RLW	26 AUG 66	
BU		REVISION STATUS CHANGED	EH	JI	9 SEPT 66	
BV		REVISION STATUS CHANGED	JJB	RLW	30 SEP 66	
BW		" " "	JJB	RLW	30 SEP 66	
BY		" " "	JJB	RLW	10 OCT 66	
BZ		REVISION STATUS CHANGED	JJB	RLW	10 OCT 66	
CA		REVISION STATUS CHANGED	JJB	MW	25 OCT 66	
CB		REVISION STATUS CHANGED	REF		10 DEC 66	

DASH NO.	P/C	PART NAME	REMARKS	PART NO.	SER. NO.	CONT. NO.	STYLE	TYPE	MATERIAL	A	B	C	D	E	F	G	H	J	K	L	M	N	P	R	S	T	U	V	W	Y	Z	AA	AB	AC	AD	AE	AF	AG	AH	AJ	AK	AL	AM	AN	AP	AR
359	K																																													
358	K																																													
350	K	ALIGNMENT OPTICAL TELESCOPE (LEM)		NA	NA	NA	A	I	NOTE 11 B	4.000	2.625	3.375	2.750	.156	.093	.156	.187	NA	NA	2.312	1.468	1.187	.906	2.031	NA	.375	.156	NA	1.437	2.750	.437	NA	3.688	.062	.062	1.750	.593	NA	.625	3.375	.187	NA	.156	.531	.453	NA
309	K																																													
308	K																																													
307	K						B	I	NOTE 11 B	4.000	2.625	3.375	2.750	.156	.093	.156	.187	NA	NA	2.328	1.468	1.187	.906	2.031	.062	.375	.156	NA	1.437	2.750	.437	NA	3.687	.062	.062	1.750	.593	NA	NA	NA	NA	NA	NA	NA	NA	NA
306	K						B	II	NOTE 11 C	4.000	2.625	3.375	2.750	.156	.093	.156	.187	.125	.156	2.328	1.468	1.187	.906	2.031	.062	.375	.156	↕	1.437	2.750	.437	2.312	3.687	.062	NA	1.750	.593	↕	↕	↕	↕	↕	↕	↕	↕	↕
305	K						B	I	NOTE 11 B	2.000	1.312	1.687	1.375	.078	.048	.078	.093	NA	NA	1.164	.734	.593	.453	1.015	.048	.171	.078	↕	.718	1.375	.187	NA	NA	.048	.031	.875	.320	↕	↕	↕	↕	↕	↕	↕	↕	↕
304	K						B	II	NOTE 11 C	2.000	1.312	1.687	1.375	.078	.048	.078	.093	.070	.078	1.164	.734	.593	.453	1.015	.048	.171	.078	NA	.718	1.375	.187	.156	1.843	.048	NA	.875	.320	NA	NA	NA	NA	NA	NA	NA	NA	NA
303	K																																													
302	K																																													
301	K																																													
300	K	OPTICAL UNIT		NA	NA	NA	A	I	NOTE 11 B	2.000	1.312	1.675	NA	NA	.048	.078	NA	NA	NA	1.090	.812	.675	.540	.940	NA	.265	NA	NA	NA	1.375	.218	NA	NA	NA	NA	NA	.375	NA	NA	NA	.180	NA	.078	NA	NA	NA
9	K	2 IN AUTOCOLLIMATOR		1001702			B	II	NOTE 11 C	4.000	2.625	3.812	2.750	.156	.093	.156	.187	.125	.156	2.250	1.500	1.187	.906	2.031	.093	.375	.156	1.750	1.437	2.750	.437	2.312	3.687	.062	NA	1.750	.593	.156	1.062	3.812	.156	NA	.156	1.062	.375	3.687
8	K	5 IN AUTOCOLLIMATOR		1017410			B	II	NOTE 11 C	4.000	2.625	3.812	2.750	.156	.093	.156	.187	.125	.156	2.250	1.500	1.187	.906	2.031	.093	.375	.156	1.750	1.437	2.750	.437	2.312	3.687	.062	NA	1.750	.593	.156	1.062	3.812	.156	NA	.156	1.062	.375	3.687
7	K	2½ IN AUTOCOLLIMATOR (SCT)		1017435			B	II	NOTE 11 C	4.000	2.625	3.812	2.750	.156	.093	.156	.187	.125	.156	2.250	1.500	1.187	.906	2.031	.093	.375	.156	1.750	1.437	2.750	.437	2.312	3.687	.062	NA	1.750	.593	.156	1.062	3.812	.156	NA	.156	1.062	.375	3.687
6	K	2½ IN AUTOCOLLIMATOR (SXT)		1017448			B	II	NOTE 11 C	4.000	2.625	3.812	2.750	.156	.093	.156	.187	.125	.156	2.250	1.500	1.187	.906	2.031	.093	.375	.156	1.750	1.437	2.750	.437	2.312	3.687	.062	NA	1.750	.593	.156	1.062	3.812	.156	NA	.156	1.062	.375	3.687
5	K	RETROREFLECTING PRISM ASSEMBLY		1019840			B	I	NOTE 11 B	4.000	2.625	3.812	2.750	.156	.093	.156	.187	NA	NA	2.250	1.500	1.187	.906	2.031	.093	.375	.156	1.750	1.437	2.750	.437	NA	NA	.062	.062	1.750	.593	.156	1.062	3.812	.156	NA	.156	1.062	.375	NA
4	K	S/H SIMULATOR ASSEMBLY		1019896			B	I	NOTE 11 B	4.000	2.625	3.812	2.750	.156	.093	.156	.187	NA	NA	2.250	1.500	1.187	.906	2.031	.093	.375	.156	1.750	1.437	2.750	.437	NA	NA	.062	.062	1.750	.593	.156	1.062	3.812	.156	NA	.156	1.062	.375	NA
3	K	REFERENCE MIRROR		1001767			B	I	NOTE 11 B	2.000	1.312	1.906	1.375	.078	.048	.078	.093	NA	NA	1.125	.750	.593	.453	1.015	.062	.187	.078	.875	.718	1.375	.218	NA	NA	.048	.031	.675	.305	.078	.531	1.906	.078	NA	.078	.531	.187	NA
2	K	2 IN PLANE READING AUTOCOLLIMATOR		1017413			B	I	NOTE 11 B	2.000	1.312	1.906	1.375	.078	.048	.078	.093	NA	NA	1.125	.750	.593	.453	1.015	.062	.187	.078	.875	.718	1.375	.218	NA	NA	.048	.031	.875	.305	.078	.531	1.906	.078	NA	.078	.531	.187	NA
1	K	2 IN AUTOCOLLIMATOR		1001702			B	I	NOTE 11 B	2.000	1.312	1.906	1.375	.078	.048	.078	.093	NA	NA	1.125	.750	.593	.453	1.015	.062	.187	.078	.875	.718	1.375	.218	NA	NA	.048	.031	.875	.305	.078	.531	1.906	.078	NA	.078	.531	.187	NA

NOTES FOR TABLE

STYLE A IS FOR G&N SYSTEM.
STYLE B IS FOR GROUND SUPPORT EQUIPMENT.
TYPE I IS WITHOUT MOUNTING HOLES.
TYPE II IS WITH MOUNTING HOLES.

Ⓖ REPLACES REV F WITH CHANGE

KOLLSMAN DASH NUMBERS

QTY REQD	PART OR IDENTIFYING NO.	MATERIAL OR NOTES	NOMENCLATURE OR DESCRIPTION	FIND NO.

LIST OF MATERIALS

AS APPLICABLE	
NEXT ASSY	USED ON
APPLICATION	

UNLESS OTHERWISE SPECIFIED
DIMENSIONS ARE IN INCHES
CAPACITOR VALUES ARE IN µf
RESISTOR VALUES ARE IN OHMS
TOLERANCES ON
FRACTIONS ± — DECIMALS ±.005 ANGLES ± —
DO NOT SCALE THIS DRAWING

MATERIAL
SEE NOTE 11

MIT
INSTRUMENTATION LAB
CAMBRIDGE, MASS.

MANNED SPACECRAFT CENTER
HOUSTON, TEXAS

DRAWN R. A. Jones 7-16-65
CHECKED E. J. 7-22-65
APPROVED
APPROVED W. Kupfer 22 Jul 65
APPROVED MIT W. Kupfer 22 Jul 65
APPROVED MSC
DATE

NAMEPLATES,
APOLLO G&N-GSE
(STANDANDS)

CODE IDENT NO. 80230
SIZE E
DRAWING NO. 1004260
SCALE NONE
SHEET 2 OF 6

NOTICE – WHEN GOVERNMENT DRAWINGS, SPECIFICATIONS, OR OTHER DATA ARE USED FOR ANY PURPOSE OTHER THAN IN CONNECTION WITH A DEFINITELY RELATED GOVERNMENT PROCUREMENT OPERATION, THE UNITED STATES GOVERNMENT THEREBY INCURS NO RESPONSIBILITY NOR ANY OBLIGATION WHATSOEVER; AND THE FACT THAT THE GOVERNMENT MAY HAVE FORMULATED, FURNISHED, OR IN ANY WAY SUPPLIED THE SAID DRAWINGS, SPECIFICATIONS OR OTHER DATA IS NOT TO BE REGARDED BY IMPLICATION OR OTHERWISE AS IN ANY MANNER LICENSING THE HOLDER OR ANY OTHER PERSON OR CORPORATION, OR CONVEYING ANY RIGHTS OR PERMISSION TO MANUFACTURE, USE, OR SELL ANY PATENTED INVENTION THAT MAY IN ANY WAY BE RELATED THERETO.

REVISIONS 0276

SYM	ZONE	DESCRIPTION	DR	CHK	DATE	APPROVED
G		REPLACES REV F WITH CHANGE PER TDRR 20854.	rj		7/22/65	WK
H		REVISED PER TDRR 20892	rj		8/3/65	
J		REVISED PER TDRR 20904	rj		8/3/65	
K		REVISED PER TDRR 21379	rj		8/9/65	
L		REVISED PER TDRR 21410	rj		8/23/65	WK
M		REVISED PER TDRR 21993	"			
N		REVISED PER TDRR 22621	"		10/	
P		REVISED PER TDRR 22671	"			
R		REVISED PER TDRR 22672	"			
S		REVISED PER TDRR 22750	"			
T		REVISED PER TDRR 22823	"		/65	
U		REVISED PER TDRR 23072	"		10-22-65	
V		REVISED PER TDRR 23521	"		10-27-65	
W		REVISED PER TDRR 23824	RAJ		11-9-65	
Y		REVISED PER TDRR 24018	RAJ		11-16-65	
Z		REVISED PER TDRR 24040	RAJ		11-19-65	
Ⓜ AA		REVISED PER TDRR 24060	RAJ		11-19-65	
Ⓜ AB		REVISED PER TDRR 24868	RAJ		12-22-65	
Ⓜ AC		REVISED PER TDRR 24973	RAJ		1-4-66	
Ⓜ AD		REVISED PER TDRR 25065	RAJ		1-18-66	
AE		REVISED PER TDRR 25672	RAJ		2-4-66	
Ⓜ AF		REVISED PER TDRR 25671	RAJ		2-4-66	
AG		REVISED PER TDRR 26110	RAJ		2-15-66	
AH		REVISED PER TDRR 26372	"		3-16-66	
AJ		REVISED PER TDRR 26425	"		3-16-66	
AK		REVISED PER TDRR 26743	"		3-16-66	
Ⓜ AL		REVISED PER TDRR 26798	"		3-16-66	
AM		REVISED PER TDRR 27168	"		4-8-66	
AN		REVISED PER TDRR 27235	"		4-8-66	
AP		REVISED PER TDRR 27345	"		4-8-66	
AR		REVISED PER TDRR 27417	"		4-8-66	
Ⓜ AS		REVISED PER TDRR 27442	"		4-8-66	
AT		REVISED PER TDRR 27719	"		4-21-66	
Ⓜ AU		REVISED PER TDRR 27880	"		4-21-66	
Ⓜ AV		REVISED PER TDRR 27896	"		4-21-66	
AW		28110	"		5-16-66	
AY		28173	"			
AZ		28131	"			
BA		28124	"			
BB		REVISED PER TDRR 28511	"		5-15-66	
Ⓜ BC		" " " 28949	"		5-24-66	
Ⓜ BD		" " " 29222	"		6-8-66	
BE		" " " 29235	"		"	
BF		" " " 29322	"		6-30-66	
BG		" " " 29429	"		"	
BH		" " " 29449	"		"	
BJ		" " " 29335	"		"	
BK		" " " 29619	"		"	
Ⓜ BL		" " " 29696	"		"	
BM		REVISION STATUS CHANGED	JSD	N.S.	7-29-66	
BN		REVISION STATUS CHANGED	JI	RLW	24 AUG 66	
BP		REVISION STATUS CHANGED	JI	RLW	24 AUG 66	
BR		REVISION STATUS CHANGED	JI	RLW	31 AUG 66	
BS		REVISION STATUS CHANGED	GW	RLW	66	
Ⓜ BT		REVISION STATUS CHANGED	GW	RLW	26 AUG 66	
Ⓜ BU		REVISION STATUS CHANGED	EH	JI	9 SEP 66	
BV		REVISION STATUS CHANGED	JJB	RLW	30 SEP 66	
BW		" " "	JJB	RLW	30 SEP 66	
BY		" " "	JJB	RLW	10 OCT 66	
Ⓜ BZ		REVISION STATUS CHANGED	JJB	RLW	10 OCT 66	
Ⓜ CA		REVISION STATUS CHANGED	JJB		25 OCT 66	
CB		REVISION STATUS CHANGED	REF		10 DEC 66	

DASH NO.	P/C	PART NAME	REMARKS	PART NO.	SER. NO.	CONT. NO.	STYLE	TYPE	MATERIAL	A	B	C	D	E	F	G	H	J	K	L	M	N	P	R	S	T	U	V	W	Y	Z	AA	AB	AC	AD	AE	AF	AG	AH	AJ	AK	AL	AM	AN	AP	AR
399	K																																													
398	K																																													
350	K	ALIGNMENT OPTICAL TELESCOPE (LEM)		NA	NA	NA	A	I	NOTE 11B	4.000	2.625	3.375	2.750	.156	.093	.156	.187	NA	NA	2.312	1.468	1.187	.906	2.031	NA	.375	.156	NA	1.437	2.750	.437	NA	3.688	.062	.062	1.750	.593	NA	.625	3.375	.187	NA	.156	.531	.453	NA
309	K																																													
308	K																																													
307	K						B	I	NOTE 11 B	4.000	2.625	3.375	2.750	.156	.093	.156	.187	NA	NA	2.328	1.468	1.187	.906	2.031	.062	.375	.156	NA	1.437	2.750	.437	NA	3.687	.062	.062	1.750	.593	NA	NA	NA	NA	NA	NA	NA	NA	NA
306	K						B	II	NOTE 11 C	4.000	2.625	3.375	2.750	.156	.093	.156	.187	.125	.156	2.328	1.468	1.187	.906	2.031	.062	.375	.156	↕	1.437	2.750	.437	2.312	3.687	.062	NA	1.750	.593	↕	↕	↕	↕	↕	↕	↕	↕	↕
305	K						B	I	NOTE 11 B	2.000	1.312	1.687	1.375	.078	.048	.078	.093	NA	NA	1.164	.734	.593	.453	1.015	.048	.171	.078	↕	.718	1.375	.187	NA	NA	.048	.031	.875	.320	↕	↕	↕	↕	↕	↕	↕	↕	↕
304	K						B	II	NOTE 11 C	2.000	1.312	1.687	1.375	.078	.048	.078	.093	.070	.078	1.164	.734	.593	.453	1.015	.048	.171	.078	NA	.718	1.375	.187	.156	1.843	.048	NA	.875	.320	NA	NA	NA	NA	NA	NA	NA	NA	NA
303	K																																													
302	K																																													
301	K																																													
300	K	OPTICAL UNIT		NA	NA	NA	A	I	NOTE 11 B	2.000	1.312	1.675	NA	NA	.048	.078	NA	NA	NA	1.090	.812	.675	.540	.940	NA	.265	NA	NA	NA	1.375	.218	NA	NA	NA	NA	NA	.375	NA	NA	NA	.180	NA	.078	NA	NA	NA
9	K	2 IN AUTOCOLLIMATOR		1001702			B	II	NOTE 11 C	4.000	2.625	3.812	2.750	.156	.093	.156	.187	.125	.156	2.250	1.500	1.187	.906	2.031	.093	.375	.156	1.750	1.437	2.750	.437	2.312	3.687	.062	NA	1.750	.593	.156	1.062	3.812	.156	NA	.156	1.062	.375	3.687
8	K	5 IN AUTOCOLLIMATOR		1017410			B	II	NOTE 11 C	4.000	2.625	3.812	2.750	.156	.093	.156	.187	.125	.156	2.250	1.500	1.187	.906	2.031	.093	.375	.156	1.750	1.437	2.750	.437	2.312	3.687	.062	NA	1.750	.593	.156	1.062	3.812	.156	NA	.156	1.062	.375	3.687
7	K	2½ IN AUTOCOLLIMATOR (SCT)		1017435			B	II	NOTE 11 C	4.000	2.625	3.812	2.750	.156	.093	.156	.187	.125	.156	2.250	1.500	1.187	.906	2.031	.093	.375	.156	1.750	1.437	2.750	.437	2.312	3.687	.062	NA	1.750	.593	.156	1.062	3.812	.156	NA	.156	1.062	.375	3.687
6	K	2½ IN AUTOCOLLIMATOR (SXT)		1017448			B	II	NOTE 11 C	4.000	2.625	3.812	2.750	.156	.093	.156	.187	.125	.156	2.250	1.500	1.187	.906	2.031	.093	.375	.156	1.750	1.437	2.750	.437	2.312	3.687	.062	NA	1.750	.593	.156	1.062	3.812	.156	NA	.156	1.062	.375	3.687
5	K	RETROREFLECTING PRISM ASSEMBLY		1019840			B	I	NOTE 11 B	4.000	2.625	3.812	2.750	.156	.093	.156	.187	NA	NA	2.250	1.500	1.187	.906	2.031	.093	.375	.156	1.750	1.437	2.750	.437	NA	NA	.062	.062	1.750	.593	.156	1.062	3.812	.156	NA	.156	1.062	.375	NA
4	K	S/H SIMULATOR ASSEMBLY		1019896			B	I	NOTE 11 B	4.000	2.625	3.812	2.750	.156	.093	.156	.187	NA	NA	2.250	1.500	1.187	.906	2.031	.093	.375	.156	1.750	1.437	2.750	.437	NA	NA	.062	.062	1.750	.593	.156	1.062	3.812	.156	NA	.156	1.062	.375	NA
3	K	REFERENCE MIRROR		1001767			B	I	NOTE 11 B	2.000	1.312	1.906	1.375	.078	.048	.078	.093	NA	NA	1.125	.750	.593	.453	1.015	.062	.187	.078	.875	.718	1.375	.218	NA	NA	.048	.031	.875	.305	.078	.531	1.906	.078	NA	.078	.531	.187	NA
2	K	2 IN PLANE READING AUTOCOLLIMATOR		1017413			B	I	NOTE 11 B	2.000	1.312	1.906	1.375	.078	.048	.078	.093	NA	NA	1.125	.750	.593	.453	1.015	.062	.187	.078	.875	.718	1.375	.218	NA	NA	.048	.031	.875	.305	.078	.531	1.906	.078	NA	.078	.531	.187	NA
1	K	2 IN AUTOCOLLIMATOR		1001702			B	I	NOTE 11 B	2.000	1.312	1.906	1.375	.078	.048	.078	.093	NA	NA	1.125	.750	.593	.453	1.015	.062	.187	.078	.875	.718	1.375	.218	NA	NA	.048	.031	.875	.305	.078	.531	1.906	.078	NA	.078	.531	.187	NA

Ⓖ REPLACES REV F WITH CHANGE

KOLLSMAN DASH NUMBERS

NOTES FOR TABLE

STYLE A IS FOR G&N SYSTEM.
STYLE B IS FOR GROUND SUPPORT EQUIPMENT.
TYPE I IS WITHOUT MOUNTING HOLES.
TYPE II IS WITH MOUNTING HOLES.

QTY REQD	PART OR IDENTIFYING NO.	MATERIAL OR NOTES	NOMENCLATURE OR DESCRIPTION	FIND NO.

LIST OF MATERIALS

NEXT ASSY	USED ON
AS APPLICABLE	

APPLICATION

UNLESS OTHERWISE SPECIFIED
DIMENSIONS ARE IN INCHES
CAPACITOR VALUES ARE IN μf
RESISTOR VALUES ARE IN OHMS
TOLERANCES ON
FRACTIONS ± — DECIMALS ±.005 ANGLES ± —
DO NOT SCALE THIS DRAWING

MATERIAL
SEE NOTE 11

MIT
INSTRUMENTATION LAB
CAMBRIDGE, MASS.

MANNED SPACECRAFT CENTER
HOUSTON, TEXAS

DRAWN R. A. Jones 7-16-65
CHECKED 7-22-65
APPROVED
APPROVED W Kupfer 7/22/65
APPROVED MIT W Kupfer
APPROVED MSC
DATE

NAMEPLATES,
APOLLO G&N-GSE
(STANDANDS)

CODE IDENT NO. 80230
SIZE E
DRAWING NO. 1004260
SCALE NONE
SHEET 2 OF 6

NOTICE – WHEN GOVERNMENT DRAWINGS, SPECIFICATIONS, OR OTHER DATA ARE USED FOR ANY PURPOSE OTHER THAN IN CONNECTION WITH A DEFINITELY RELATED GOVERNMENT PROCUREMENT OPERATION, THE UNITED STATES GOVERNMENT THEREBY INCURS NO RESPONSIBILITY NOR ANY OBLIGATION WHATSOEVER; AND THE FACT THAT THE GOVERNMENT MAY HAVE FORMULATED, FURNISHED, OR IN ANY WAY SUPPLIED THE SAID DRAWINGS, SPECIFICATIONS OR OTHER DATA IS NOT TO BE REGARDED BY IMPLICATION OR OTHERWISE AS IN ANY MANNER LICENSING THE HOLDER OR ANY OTHER PERSON OR CORPORATION, OR CONVEYING ANY RIGHTS OR PERMISSION TO MANUFACTURE, USE, OR SELL ANY PATENTED INVENTION THAT MAY IN ANY WAY BE RELATED THERETO.

REVISIONS						
SYM	ZONE	DESCRIPTION	DR	CHK	DATE	APPROVED
G		REPLACES REV F WITH CHANGE PER TDRR 20854			7/22/65	WK
H		REVISED PER TDRR 20892			8/3/65	WK
J		REVISED PER TDRR 20904			8/3/65	WK
K		REVISED PER TDRR 21379			8/9/65	WK
L		REVISED PER TDRR 21410			[illegible]	wk
M		REVISED PER TDRR 21993				
N		REVISED PER TDRR 22621			10/11/65	
P		REVISED PER TDRR 22671				
R		REVISED PER TDRR 22672				
S		REVISED PER TDRR 22750				
T		REVISED PER TDRR 22823				WK
U		REVISED PER TDRR 23072			10-22-65	
V		REVISED PER TDRR 23521			10-26-65	WK
W		REVISED PER TDRR 23824	RAJ		11-9-65	WK
Y		REVISED PER TDRR 24018	RAJ		11-16-65	WK
Z		REVISED PER TDRR 24040	RAJ		11-19-65	WK
AA		REVISED PER TDRR 24060	RAJ		11-19-65	WK
AB		REVISED PER TDRR 24868	RAJ		12-22-65	WK
AC		REVISED PER TDRR 24973	RAJ		1-4-66	WK
AD		REVISED PER TDRR 25065	RAJ		1-18-66	
AE		REVISED PER TDRR 25672	RAJ		2-4-66	WK
AF		REVISED PER TDRR 25671	RAJ		2-4-66	WK
AG		REVISED PER TDRR 26110	RAJ		2-15-66	WK
AH		REVISED PER TDRR 26372	"		3-16-66	
AJ		REVISED PER TDRR 26425	"		3-16-66	
AK		REVISED PER TDRR 26743	"		3-16-66	
AL		REVISED PER TDRR 26798	"		3-16-66	
AM		REVISED PER TDRR 27168	"		4-8-66	
AN		REVISED PER TDRR 27235	"		4-8-66	
AP		REVISED PER TDRR 27345	"		4-8-66	
AR		REVISED PER TDRR 27417	"		4-8-66	
AS		REVISED PER TDRR 27442	"		4-8-66	
AT		REVISED PER TDRR 27719	"		4-20-66	WK
AU		REVISED PER TDRR 27880	"		4-20-66	WK
AV		REVISED PER TDRR 27896	"		4-20-66	WK
AW		28110	"		5-16-66	
AY		28173	"		5-16-66	
AZ		28131	"		5-16-66	
BA		28124	"		5-16-66	
BB		REVISED PER TDRR 28511	"		5-16-66	
BC		" " " 28949	"		5-24-66	
BD		" " " 29222	"		6-8-66	
BE		" " " 29235	"		"	
BF		" " " 29322	"		6-29-66	
BG		" " " 29429	"		"	
BH		" " " 29449	"		"	
BJ		" " " 29335	"		"	
BK		" " " 29619	"		"	
BL		" " " 29696	"		"	
BM		" " " 29802	JSD	N.S.	7-29-66	
BN		REVISION STATUS CHANGED	JI	RLW	12 AUG 66	
BP		REVISED PER TDRR 30168	JI	RLW	12 AUG. '66	
BR		REVISION STATUS CHANGED	JI	RLW	23 AUG. 66	
BS		REVISION STATUS CHANGED	GW	RLW	26 AUG 66	
BT		REVISION STATUS CHANGED	GW	RLW	26 AUG 66	
BU		REVISION STATUS CHANGED	EH	JI	9 SEPT 66	
BV		REVISION STATUS CHANGED	JJB	RLW	30 SEP 66	
BW		REVISED PER TDRR 31279	JJB	RLW	30 SEP 66	
BY		REVISION STATUS CHANGED	JJB	RLW	10 OCT 66	
BZ		REVISION STATUS CHANGED	JJB	RLW	10 OCT 66	
CA		REVISION STATUS CHANGED	JJB		25 OCT 66	
CB		REVISION STATUS CHANGED	REF		10 DEC 66	

02768

DASH NO.	P/C	PART NAME	REMARKS	PART NO.	SER. NO.	CONT. NO.	STYLE	TYPE	MATERIAL	A
299	R									
298	R									
280	R	COMPUTER TEST SET		2014042-051	N A	NAS9-497	B	II	NOTE 11C	FOR DIMENSIONS SEE DASH 18 VALUES BELOW
279	R	SELF TEST ASSY		2014366-041	N A	NAS9-497	B	I	NOTE 11B	FOR DIMENSIONS SEE DASH 15 VALUES BELOW
278	R	LOGIC DRAWER ASSY NO.1		2014036-041	N A	NAS-9-497	B	I	NOTE 11B	FOR DIMENSIONS SEE DASH 17 VALUES BELOW
277	R	COMPUTER TEST SET		2014042-041	N A	NAS-9-497	B	II	NOTE 11C	FOR DIMENSIONS, SEE DASH 18 VALUES BELOW
276		DRAWER ASSY - PROGRAM & MONITOR		2014041-041				I	NOTE 11 B	FOR DIMENSIONS, SEE DASH 17 VALUES BELOW
275		DRAWER ASSY RDC INTERFACE		2014045-031						FOR DIMENSIONS, SEE DASH 15 VALUES BELOW
274		SELF TEST ASSY		2014366-031						
273		LOGIC DRAWER ASSY NO. 2		2014037-031						FOR DIMENSIONS, SEE DASH 17 VALUES BELOW
272		DRAWING ASSY PROGRAMMER & MONITOR		2014041-031						FOR DIMENSIONS, SEE DASH 17 VALUES BELOW
271		LOGIC DRAWER ASSY NO. 1		2014036-031				I	NOTE 11 B	
270		COMPUTER TEST SET		2014042-031				II	NOTE 11C	FOR DIMENSIONS, SEE DASH 18 VALUES BELOW
269		POWER CONTROL ASSY		2014044-021				I	NOTE 11 B	FOR DIMENSIONS, SEE DASH 17 VALUES BELOW
268		SELF TEST ASSY		2014366-021						FOR DIMENSIONS, SEE DASH 15 VALUES BELOW
267		AGC JUNCTION ASSY		2014341-021						
266		POWER CONTROL ASSY		2014079-021						
265		BUFFER CIRCUIT ASSY		2014254-021						
264		DRAWER ASSY X Y INTERFACE		2014040-021						
263		DRAWER ASSY R D C INTERFACE		2014045-021						
262		DRAWER ASSY PROGRAMMER & MONITOR		2014041-021						FOR DIMENSIONS, SEE DASH 17 VALUES BELOW
261		LOGIC DRAWER ASSY NO. 2		2014037-021						
260		LOGIC DRAWER ASSY NO. 1		2014036-021				I	NOTE 11 B	
259		OPERATION CONSOLE		2014024-021				II	NOTE 11 C	FOR DIMENSIONS, SEE DASH 18 VALUES BELOW
258		COMPUTER TEST SET		2014042-021						
257		AUXILIARY CALIBRATION CONSOLE		2014059-021						
256		AGC CALIBRATION CONSOLE		2014049-021				II	NOTE 11 C	
255		AGC HANDLING FIXTURE		2014282-021				I	NOTE 11 B	FOR DIMENSIONS, SEE DASH 17 VALUES BELOW
254		DRAWER ASSY COMP. SIMULATOR		2014048-011				II	NOTE 11 C	FOR DIMENSIONS, SEE DASH 18 VALUES BELOW
253		SHIPPING KIT ASSY, NAV DSKY		2016312-011						
252		SHIPPING KIT ASSY, UNIVERSAL DSKY		2016316-011						
251		SHIPPING KIT ASSY, MAIN DSKY		2016313-011				II	NOTE 11 C	
250		AMPLIFIER, REWORK		2014386				I	NOTE 11 B	FOR DIMENSIONS, SEE DASH 15 VALUES BELOW
249		TEMP MONITOR ASSY		2014313-011					NOTE 11 C	FOR DIMENSIONS, SEE DASH 17 VALUES BELOW
248		AGC JUNCTION ASSY		2014341-011					NOTE 11 B	FOR DIMENSIONS, SEE DASH 15 VALUES BELOW
247		AC INPUT PANEL ASSY		2014302-011						
246		SELF TEST ASSY		2014392 011						
245		TAPE PUNCH ASSEMBLY		2014039-011						
244	R	TAPE READER ASSEMBLY		2014038-011	NA	NAS-9-497	B	I	NOTE 11 B	FOR DIMENSIONS, SEE DASH 15 VALUES BELOW
243										
242										
241	R	APOLLO GUIDANCE COMPUTER GROUP		6003001	NA	NAS-9-497	A	I	NOTE 11 B	FOR DIMENSIONS, SEE DASH 19 VALUES BELOW
240		SELF TEST ASSEMBLY		2014366-011	NA		B	I		FOR DIMENSIONS, SEE DASH 15 VALUES BELOW
239		POWER SUPPLY ASSY-115V., 400 CYCLE		2014207-011						FOR DIMENSIONS, SEE DASH 17 VALUES BELOW
238		AC INPUT PANEL ASSY		2014043-011						
237		POWER CONTROL ASSY		2014079-011						FOR DIMENSIONS, SEE DASH 15 VALUES BELOW
236		DRAWER ASSY - X Y INTERFACE		2014040-011						
235		DRAWER ASSY RDC INTERFACE		2014045-011						
234		BUFFER CIRCUIT ASSY		2014254-011						
233		CONTROL & INTERFACE ASSY		2014204-011						
232		POWER CONTROL ASSY		2014044-011						
231		DRAWER ASSY, PROGRAMMER & MONITOR		2014041-011						FOR DIMENSIONS, SEE-DASH 17 VALUES BELOW
230		CONNECTOR INTERFACE ASSY		2014272-011						FOR DIMENSIONS, SEE DASH 15 VALUES BELOW
229		CONNECTOR INTERFACE ASSY		2014047-011						
228		ANTENNA, TUNING CAPACITOR ASSY		2014209-011						
227		MOUNTING FIXTURE ASSY		2014006-011						FOR DIMENSIONS, SEE DASH 17 VALUES BELOW
226		POWER SUPPLY ASSY 3 VDC		2014234-011						FOR DIMENSIONS, SEE DASH 15 VALUES BELOW
225		PANEL ASSY – SIGNAL INTERFACE		2014010-011						
224		OSCILLOSCOPE ASSY		2014232-011						
223		AUXILIARY OUTLET ASSY		2014274-011						
222		FREQUENCY COUNTER		2014233-011						
221		POWER SUPPLY ASSY 10, 13, 28 VDC		2014235-011						
220		LOGIC DRAWER ASSY NO. 2		2014037-011						FOR DIMENSIONS, SEE DASH 17 VALUES BELOW
219		LOGIC DRAWER ASSY NO. 1		2014036-011						
218		COUNTER, ELECTRICAL ASSY		2014288-011						FOR DIMENSIONS, SEE DASH 15 VALUES BELOW
217		POWER SUPPLY ASSY		2014279-011						
216		TEST MOUNT ASSY		2014257-011						
215		UNIVERSAL DSKY PEDESTAL MOUNT		2014014-011						FOR DIMENSIONS, SEE DASH 17 VALUES BELOW
214		MAIN DSKY PEDESTAL MOUNT		2014343				I	NOTE 11B	
213		SHIPPING CONTAINER, MAIN DSKY		1006229				II	NOTE 11C	FOR DIMENSIONS, SEE DASH 18 VALUES BELOW
212		NAV DSKY		1006231						
211		AGC		1006230						
210		UNIVERSAL DSKY		1006422						
209		SHIPPING CONTAINER, AGC		1006421				II	NOTE 11C	
208		UNIVERSAL DSKY HANDLING FIXTURE		2014013-011				I	NOTE 11B	FOR DIMENSIONS, SEE DASH 15 VALUES BELOW
207		NAV DSKY HANDLING FIXTURE		1014377						FOR DIMENSIONS, SEE DASH 17 VALUES BELOW
206		MAIN DSKY HANDLING FIXTURE		1014334						
205		AGC HANDLING FIXTURE		2014282-011				I	NOTE 11B	
204		OPERATION CONSOLE		2014024-011				II	NOTE 11C	FOR DIMENSIONS, SEE DASH 18 VALUES BELOW
203		COMPUTER TEST SET		2014042-011		NAS-9-497				
202		DRAWER ASSY, COMPUTER SIMULATOR		2014048-011		FNP-12775				
201		AUXILIARY CALIBRATION CONSOLE		2014059-011		NAS-9-497				
200		AGC CALIBRATION CONSOLE		2014049-011	NA		B	II	NOTE 11C	
21										
20		NA		NA	NA	NA	A	II	NOTE 11C	2.000
19		NA		NA	NA	NA	A	I	NOTE 11 B	2.000
18		NA		NA	NA	NA	B	II	NOTE 11 C	4.187
17		NA		NA	NA	NA	B	I	NOTE 11 B	4.187
16		NA		NA	NA	NA	B	II	NOTE 11 C	2.000
15	R	NA		NA	NA	NA	B	I	NOTE 11 B	2.000

DASH NO.	B	C	D	E	F	G	H	J	K	L	M	N	P	R	S	T	U	V	W	Y	Z	AA	AB	AC	AD	AE	AF	AG	AH	AJ	AK	AL	AM	AN	AP	AR
20	1.312	1.687	1.375	.078	.031	.078	.093	.106 .113	.093	1.187	.750	.593	.453	1.015	.062	.187	.078	.875	.718	1.375	.218	1.156	1.843	.048	NA	.875	.305	.078	.312	1.687	.078	NA	.078	.312	.187	1.843
19	1.312	1.687	1.375	.078	.031	.078	.093	NA	NA	1.187	.750	.593	.453	1.015	.062	.187	.078	.875	.718	1.375	.218	NA	NA	.048	.031	.875	.305	.078	.312	1.687	.078	NA	.078	.312	.187	NA
18	1.875	3.469	2.750	.156	.093	.156	.125	.106 .113	.125	1.625	1.032	.844	.656	1.406	.093	.344	.156	1.781	1.531	2.844	.312	1.562	3.875	.062	NA	1.219	.500	.156	.719	3.469	.156	NA	.156	.719	.344	3.875
17	1.875	3.469	2.750	.156	.093	.156	.125	NA	NA	1.625	1.032	.844	.656	1.406	.093	.344	.156	1.781	1.531	2.844	.312	NA	NA	.062	.062	1.219	.500	.156	.719	3.469	.156	NA	.156	.719	.344	NA
16	1.312	1.687	1.375	.078	.031	.078	.093	.106 .113	.093	1.187	.750	.593	.453	1.015	.062	.187	.078	.875	.718	1.375	.218	1.156	1.843	.048	NA	.875	.305	.078	.312	1.687	.078	NA	.078	.312	.187	1.843
15	1.312	1.687	1.375	.078	.031	.078	.093	NA	NA	1.187	.750	.593	.453	1.015	.062	.187	.078	.875	.718	1.375	.218	NA	NA	.048	.031	.875	.305	.078	.312	1.687	.078	NA	.078	.312	.187	NA

THIS SHEET ADDED

Ⓖ REPLACES REV F WITH CHANGE

RAYTHEON DASH NUMBERS

NOTES FOR TABLE
STYLE A IS FOR G & N SYSTEM
STYLE B IS FOR GROUND SUPPORT EQUIPMENT
TYPE I IS WITHOUT MOUNTING HOLES
TYPE II IS WITH MOUNTING HOLES

QTY REQD	PART OR IDENTIFYING NO.	MATERIAL OR NOTES	NOMENCLATURE OR DESCRIPTION	FIND NO.

LIST OF MATERIALS

AS APPLICABLE	
NEXT ASSY	USED ON
APPLICATION	

UNLESS OTHERWISE SPECIFIED
DIMENSIONS ARE IN INCHES
CAPACITOR VALUES ARE IN µf
RESISTOR VALUES ARE IN OHMS
TOLERANCES ON
FRACTIONS ± — DECIMALS ±.005 ANGLES ± —
DO NOT SCALE THIS DRAWING

MATERIAL
SEE NOTE 11

MIT
INSTRUMENTATION LAB
CAMBRIDGE, MASS.

DRAWN	R. A. Jones	7-16-65
CHECKED	A. J.	7-22-65
APPROVED		
APPROVED		7/22/65
APPROVED MIT		7/22/65
APPROVED MSC		
		DATE

MANNED SPACECRAFT CENTER
HOUSTON, TEXAS

NAMEPLATES,
APOLLO GEN-GSE
(STANDARDS)

CODE IDENT NO.	SIZE	DRAWING NO.
80230	E	1004260
SCALE NONE		SHEET 3 OF 6

NOTICE – WHEN GOVERNMENT DRAWINGS, SPECIFICATIONS, OR OTHER DATA ARE USED FOR ANY PURPOSE OTHER THAN IN CONNECTION WITH A DEFINITELY RELATED GOVERNMENT PROCUREMENT OPERATION, THE UNITED STATES GOVERNMENT THEREBY INCURS NO RESPONSIBILITY NOR ANY OBLIGATION WHATSOEVER; AND THE FACT THAT THE GOVERNMENT MAY HAVE FORMULATED, FURNISHED, OR IN ANY WAY SUPPLIED THE SAID DRAWINGS, SPECIFICATIONS OR OTHER DATA IS NOT TO BE REGARDED BY IMPLICATION OR OTHERWISE AS IN ANY MANNER LICENSING THE HOLDER OR ANY OTHER PERSON OR CORPORATION, OR CONVEYING ANY RIGHTS OR PERMISSION TO MANUFACTURE, USE, OR SELL ANY PATENTED INVENTION THAT MAY IN ANY WAY BE RELATED THERETO.

REVISIONS

02768

SYM	ZONE	DESCRIPTION	DR	CHK	DATE	APPROVED
G		REPLACES REV F WITH CHANGE PER TDRR 20854			7/21/65	WK
H		REVISED PER TDRR 20892			8/3/65	WK
J		REVISED PER TDRR 20904			8/3/65	WK
K		REVISED PER TDRR 21379			8/10/65	WK
L		REVISED PER TDRR 21410			8/23/65	WK
M		REVISED PER TDRR 21993				
N		REVISED PER TDRR 22621			10/11/65	
P		REVISED PER TDRR 22671				
R		REVISED PER TDRR 22672				
S		REVISED PER TDRR 22750				
T		REVISED PER TDRR 22823				WK
U		REVISED PER TDRR 23072			10-22-65	
V		REVISED PER TDRR 23521			10-26-65	WK
W		REVISED PER TDRR 23824	RAJ		11-9-65	WK
Y		REVISED PER TDRR 24018	RAJ		11-16-65	WK
Z		REVISED PER TDRR 24040	RAJ		11-19-65	WK
AA		REVISED PER TDRR 24060	RAJ		11-19-65	WK
AB		REVISED PER TDRR 24868	RAJ		12-22-65	WK
AC		REVISED PER TDRR 24973	RAJ		1-4-66	WK
AD		REVISED PER TDRR 25065	RAJ		1-18-66	
AE		REVISED PER TDRR 25672	RAJ		2-4-66	WK
AF		REVISED PER TDRR 25671	RAJ		2-4-66	WK
AG		REVISED PER TDRR 26110	RAJ		2-15-66	WK
AH		REVISED PER TDRR 26372	"		3-16-66	
AJ		REVISED PER TDRR 26425	"		3-16-66	
AK		REVISED PER TDRR 26743	"		3-16-66	
AL		REVISED PER TDRR 26798	"		3-16-66	
AM		REVISED PER TDRR 27168	"		4-8-66	
AN		REVISED PER TDRR 27235	"		4-8-66	
AP		REVISED PER TDRR 27345	"		4-8-66	
AR		REVISED PER TDRR 27417	"		4-8-66	
AS		REVISED PER TDRR 27442	"		4-8-66	
AT		REVISED PER TDRR 27719	"		4-20-66	WK
AU		REVISED PER TDRR 27880	"		4-20-66	WK
AV		REVISED PER TDRR 27896	"		4-20-66	WK
AW		28110	"		5-16-66	
AY		28173	"		5-16-66	
AZ		28131	"		5-16-66	
BA		28124	"		5-16-66	
BB		REVISED PER TDRR 28511	"		5-16-66	
BC		" " " 28949	"		5-24-66	
BD		" " " 29222	"		6-8-66	
BE		" " " 29235	"		"	
BF		" " " 29322	"		6-29-66	
BG		" " " 29429	"		"	
BH		" " " 29449	"		"	
BJ		" " " 29335	"		"	
BK		" " " 29619	"		"	
BL		" " " 29696	"		"	
BM		" " " 29802	JSD	N.S.	7-29-66	
BN		REVISION STATUS CHANGED	JI	RLW	12 AUG 66	
BP		REVISED PER TDRR 30168	JI	RLW	12 AUG 66	
BR		REVISION STATUS CHANGED	JI	RLW	23 AUG 66	
BS		REVISION STATUS CHANGED	GW	RLW	26 AUG 66	
BT		REVISION STATUS CHANGED	GW	RLW	26 AUG 66	
BU		REVISION STATUS CHANGED	EH	JI	9 SEPT 66	
BV		REVISION STATUS CHANGED	JJB	RLW	30 SEP 66	
BW		REVISED PER TDRR 31279	JJB	RLW	30 SEP 66	
BY		REVISION STATUS CHANGED	JJB	RLW	10 OCT 66	
BZ		REVISION STATUS CHANGED	JJB	RLW	10 OCT 66	
CA		REVISION STATUS CHANGED	JJB		25 OCT 66	
CB		REVISION STATUS CHANGED	REF		10 DEC 66	

DASH NO.	P/C	PART NAME	REMARKS	PART NO.	SER. NO.	CONT. NO.	STYLE	TYPE	MATERIAL	
299	R									
298	R									
280	R	COMPUTER TEST SET		2014042-051	NA	NAS9-497	B	II	NOTE 11C	FOR DIMENSIONS SEE DASH 18 VALUES BELOW
279	R	SELF TEST ASSY		2014366-041	NA	NAS9-497	B	I	NOTE 11B	FOR DIMENSIONS SEE DASH 15 VALUES BELOW
278	R	LOGIC DRAWER ASSY NO.1		2014036-041	NA	NAS-9-497	B	I	NOTE 11B	FOR DIMENSIONS SEE DASH 17 VALUES BELOW
277	R	COMPUTER TEST SET		2014042-041	NA	NAS-9-497	B	II	NOTE 11C	FOR DIMENSIONS, SEE DASH 18 VALUES BELOW
276		DRAWER ASSY - PROGRAM & MONITOR		2014041-041				I	NOTE 11B	FOR DIMENSIONS, SEE DASH 17 VALUES BELOW
275		DRAWER ASSY RDC INTERFACE		2014045-031						FOR DIMENSIONS, SEE DASH 15 VALUES BELOW
274		SELF TEST ASSY		2014366-031						
273		LOGIC DRAWER ASSY NO. 2		2014037-031						FOR DIMENSIONS, SEE DASH 17 VALUES BELOW
272		DRAWING ASSY PROGRAMMER & MONITOR		2014041-031						FOR DIMENSIONS, SEE DASH 17 VALUES BELOW
271		LOGIC DRAWER ASSY NO. 1		2014036-031				I	NOTE 11B	
270		COMPUTER TEST SET		2014042-031				II	NOTE 11C	FOR DIMENSIONS, SEE DASH 18 VALUES BELOW
269		POWER CONTROL ASSY		2014044-021				I	NOTE 11B	FOR DIMENSIONS, SEE DASH 17 VALUES BELOW
268		SELF TEST ASSY		2014366-021						FOR DIMENSIONS, SEE DASH 15 VALUES BELOW
267		AGC JUNCTION ASSY		2014341-021						
266		POWER CONTROL ASSY		2014079-021						
265		BUFFER CIRCUIT ASSY		2014254-021						
264		DRAWER ASSY XY INTERFACE		2014040-021						
263		DRAWER ASSY RDC INTERFACE		2014045-021						
262		DRAWER ASSY PROGRAMMER & MONITOR		2014041-021						FOR DIMENSIONS, SEE DASH 17 VALUES BELOW
261		LOGIC DRAWER ASSY NO. 2		2014037-021						
260		LOGIC DRAWER ASSY NO. 1		2014036-021				I	NOTE 11B	
259		OPERATION CONSOLE		2014024-021				II	NOTE 11C	FOR DIMENSIONS, SEE DASH 18 VALUES BELOW
258		COMPUTER TEST SET		2014042-021						
257		AUXILIARY CALIBRATION CONSOLE		2014059-021						
256		AGC CALIBRATION CONSOLE		2014049-021				II	NOTE 11C	
255		AGC HANDLING FIXTURE		2014282-021				I	NOTE 11B	FOR DIMENSIONS, SEE DASH 17 VALUES BELOW
254		DRAWER ASSY COMP. SIMULATOR		2014048-011				II	NOTE 11C	FOR DIMENSIONS, SEE DASH 18 VALUES BELOW
253		SHIPPING KIT ASSY, NAV DSKY		2016312-011						
252		SHIPPING KIT ASSY, UNIVERSAL DSKY		2016316-011						
251		SHIPPING KIT ASSY, MAIN DSKY		2016313-011				II	NOTE 11C	
250		AMPLIFIER, REWORK		2014386				I	NOTE 11B	FOR DIMENSIONS, SEE DASH 15 VALUES BELOW
249		TEMP MONITOR ASSY		2014313-011					NOTE 11C	FOR DIMENSIONS, SEE DASH 17 VALUES BELOW
248		AGC JUNCTION ASSY		2014341-011					NOTE 11B	FOR DIMENSIONS, SEE DASH 15 VALUES BELOW
247		AC INPUT PANEL ASSY		2014302-011						
246		SELF TEST ASSY		2014392 011						
245		TAPE PUNCH ASSEMBLY		2014039-011						
244	R	TAPE READER ASSEMBLY		2014038-011	NA	NAS-9-497	B	I	NOTE 11B	FOR DIMENSIONS, SEE DASH 15 VALUES BELOW
243										
242										
241	R	APOLLO GUIDANCE COMPUTER GROUP		6003001	NA	NAS-9-497	A	I	NOTE 11B	FOR DIMENSIONS, SEE DASH 19 VALUES BELOW
240		SELF TEST ASSEMBLY		2014366-011	NA		B	I		FOR DIMENSIONS, SEE DASH 15 VALUES BELOW
239		POWER SUPPLY ASSY-115V., 400 CYCLE		2014207-011						FOR DIMENSIONS, SEE DASH 17 VALUES BELOW
238		AC INPUT PANEL ASSY		2014043-011						
237		POWER CONTROL ASSY		2014079-011						FOR DIMENSIONS, SEE DASH 15 VALUES BELOW
236		DRAWER ASSY - XY INTERFACE		2014040-011						
235		DRAWER ASSY RDC INTERFACE		2014045-011						
234		BUFFER CIRCUIT ASSY		2014254-011						
233		CONTROL & INTERFACE ASSY		2014204-011						
232		POWER CONTROL ASSY		2014044-011						
231		DRAWER ASSY, PROGRAMMER & MONITOR		2014041-011						FOR DIMENSIONS, SEE DASH 17 VALUES BELOW
230		CONNECTOR INTERFACE ASSY		2014272-011						FOR DIMENSIONS, SEE DASH 15 VALUES BELOW
229		CONNECTOR INTERFACE ASSY		2014047-011						
228		ANTENNA, TUNING CAPACITOR ASSY		2014209-011						
227		MOUNTING FIXTURE ASSY		2014006-011						FOR DIMENSIONS, SEE DASH 17 VALUES BELOW
226		POWER SUPPLY ASSY 3 VDC		2014234-011						FOR DIMENSIONS, SEE DASH 15 VALUES BELOW
225		PANEL ASSY – SIGNAL INTERFACE		2014010-011						
224		OSCILLOSCOPE ASSY		2014232-011						
223		AUXILIARY OUTLET ASSY		2014274-011						
222		FREQUENCY COUNTER		2014233-011						
221		POWER SUPPLY ASSY 10, 13, 28 VDC		2014235-011						
220		LOGIC DRAWER ASSY NO. 2		2014037-011						FOR DIMENSIONS, SEE DASH 17 VALUES BELOW
219		LOGIC DRAWER ASSY NO. 1		2014036-011						
218		COUNTER, ELECTRICAL ASSY		2014288-011						FOR DIMENSIONS, SEE DASH 15 VALUES BELOW
217		POWER SUPPLY ASSY		2014279-011						
216		TEST MOUNT ASSY		2014257-011						
215		UNIVERSAL DSKY PEDESTAL MOUNT		2014014-011						FOR DIMENSIONS, SEE DASH 17 VALUES BELOW
214		MAIN DSKY PEDESTAL MOUNT		2014343				I	NOTE 11B	
213		SHIPPING CONTAINER, MAIN DSKY		1006229				II	NOTE 11C	FOR DIMENSIONS, SEE DASH 18 VALUES BELOW
212		NAV DSKY		1006231						
211		AGC		1006230						
210		UNIVERSAL DSKY		1006422						
209		SHIPPING CONTAINER, AGC		1006421				II	NOTE 11C	
208		UNIVERSAL DSKY HANDLING FIXTURE		2014013-011				I	NOTE 11B	FOR DIMENSIONS, SEE DASH 15 VALUES BELOW
207		NAV DSKY HANDLING FIXTURE		1014377						FOR DIMENSIONS, SEE DASH 17 VALUES BELOW
206		MAIN DSKY HANDLING FIXTURE		1014334						
205		AGC HANDLING FIXTURE		2014282-011				I	NOTE 11B	
204		OPERATION CONSOLE		2014024-011				II	NOTE 11C	FOR DIMENSIONS, SEE DASH 18 VALUES BELOW
203		COMPUTER TEST SET		2014042-011		NAS-9-497				
202		DRAWER ASSY, COMPUTER SIMULATOR		2014048-011		FNP-12775				
201		AUXILIARY CALIBRATION CONSOLE		2014059-011		NAS-9-497				
200		AGC CALIBRATION CONSOLE		2014049-011	NA		B	II	NOTE 11C	
21										

DASH NO.	P/C	PART NAME	REMARKS	PART NO.	SER. NO.	CONT. NO.	STYLE	TYPE	MATERIAL	A	B	C	D	E	F	G	H	J	K	L	M	N	P	R	S	T	U	V	W	Y	Z	AA	AB	AC	AD	AE	AF	AG	AH	AJ	AK	AL	AM	AN	AP	AR
20		NA		NA	NA	NA	A	II	NOTE 11C	2.000	1.312	1.687	1.375	.078	.031	.078	.093	.106 .113	.093	1.187	.750	.593	.453	1.015	.062	.187	.078	.875	.718	1.375	.218	1.156	1.843	.048	NA	.875	.305	.078	.312	1.687	.078	NA	.078	.312	.187	1.843
19		NA		NA	NA	NA	A	I	NOTE 11B	2.000	1.312	1.687	1.375	.078	.031	.078	.093	NA	NA	1.187	.750	.593	.453	1.015	.062	.187	.078	.875	.718	1.375	.218	NA	NA	.048	.031	.875	.305	.078	.312	1.687	.078	NA	.078	.312	.187	NA
18		NA		NA	NA	NA	B	II	NOTE 11C	4.187	1.875	3.469	2.750	.156	.093	.156	.125	.106 .113	.125	1.625	1.032	.844	.656	1.406	.093	.344	.156	1.781	1.531	2.844	.312	1.562	3.875	.062	NA	1.219	.500	.156	.719	3.469	.156	NA	.156	.719	.344	3.875
17		NA		NA	NA	NA	B	I	NOTE 11B	4.187	1.875	3.469	2.750	.156	.093	.156	.125	NA	NA	1.625	1.032	.844	.656	1.406	.093	.344	.156	1.781	1.531	2.844	.312	NA	NA	.062	.062	1.219	.500	.156	.719	3.469	.156	NA	.156	.719	.344	NA
16		NA		NA	NA	NA	B	II	NOTE 11C	2.000	1.312	1.687	1.375	.078	.031	.078	.093	.106 .113	.093	1.187	.750	.593	.453	1.015	.062	.187	.078	.875	.718	1.375	.218	1.156	1.843	.048	NA	.875	.305	.078	.312	1.687	.078	NA	.078	.312	.187	1.843
15	R	NA		NA	NA	NA	B	I	NOTE 11B	2.000	1.312	1.687	1.375	.078	.031	.078	.093	NA	NA	1.187	.750	.593	.453	1.015	.062	.187	.078	.875	.718	1.375	.218	NA	NA	.048	.031	.875	.305	.078	.312	1.687	.078	NA	.078	.312	.187	NA

THIS SHEET ADDED

Ⓖ REPLACES REV F WITH CHANGE

RAYTHEON DASH NUMBERS

NOTES FOR TABLE

STYLE A IS FOR G & N SYSTEM
STYLE B IS FOR GROUND SUPPORT EQUIPMENT
TYPE I IS WITHOUT MOUNTING HOLES
TYPE II IS WITH MOUNTING HOLES

QTY REQD	PART OR IDENTIFYING NO.	MATERIAL OR NOTES	NOMENCLATURE OR DESCRIPTION	FIND NO.

LIST OF MATERIALS

AS APPLICABLE	
NEXT ASSY	USED ON
APPLICATION	

UNLESS OTHERWISE SPECIFIED
DIMENSIONS ARE IN INCHES
CAPACITOR VALUES ARE IN µf
RESISTOR VALUES ARE IN OHMS
TOLERANCES ON
FRACTIONS ± — DECIMALS ±.005 ANGLES ± —
DO NOT SCALE THIS DRAWING

MATERIAL
SEE NOTE 11

MIT
INSTRUMENTATION LAB
CAMBRIDGE, MASS.

DRAWN R. A. Jones 7-16-65
CHECKED A. J. Lange 7-22-65
APPROVED
APPROVED W Kupfer 7/22/65
APPROVED MIT W Kupfer 7/22/65
APPROVED MSC 7/26/65
DATE

MANNED SPACECRAFT CENTER
HOUSTON, TEXAS

NAMEPLATES,
APOLLO GEN-GSE
(STANDARDS)

CODE IDENT NO. 80230
SIZE E
DRAWING NO. 1004260
SCALE NONE
SHEET 3 OF 6

SYM	ZONE	DESCRIPTION	DR	CHK	DATE	APPROVED
G		REPLACES REV F WITH CHANGE PER TDRR 20854.			7/22/65	WK
H		REVISED PER TDRR 20892			8/3/65	WK
J		REVISED PER TDRR 20904			8/3/65	WK
K		REVISED PER TDRR 21379			8/16/65	WK
L		REVISED PER TDRR 21410			8/23/65	WK
M		REVISED PER TDRR 21993				
N		REVISED PER TDRR 22621				
P		REVISED PER TDRR 22671				
R		REVISED PER TDRR 22672				
S		REVISED PER TDRR 22750				
T		REVISED PER TDRR 22823			/65	WK
U		REVISED PER TDRR 23072			[illegible]	WGM
V		REVISED PER TDRR 23521			10-26-65	WK
W		REVISED PER TDRR 23824	RAJ		11-9-65	WK
Y		REVISED PER TDRR 24018	RAJ		11-16-65	WK
Z		REVISED PER TDRR 24040	RAJ		11-19-65	WK
AA		REVISED PER TDRR 24060	RAJ		11-19-65	WK
AB		REVISED PER TDRR 24868	RAJ		2-22-65	WK
AC		REVISED PER TDRR 24973	RAJ		1-4-66	WK
AD		REVISED PER TDRR 25065	RAJ		1-18-66	WGM
AE		REVISED PER TDRR 25672	RAJ		2-4-66	WK
AF		REVISED PER TDRR 25671	RAJ		2-4-66	WK
AG		REVISED PER TDRR 26110	RAJ		2-15-66	WK
AH		REVISED PER TDRR 26372	"		3-16-66	WGM
AJ		REVISED PER TDRR 26425	"		3-16-66	WGM
AK		REVISED PER TDRR 26743	"		3-16-66	WGM
AL		REVISED PER TDRR 26798	"		3-16-66	WGM
AM		REVISED PER TDRR 27168	"		4-8-66	WGM
AN		REVISED PER TDRR 27235	"		4-8-66	WGM
AP		REVISED PER TDRR 27345	"		4-8-66	WGM
AR		REVISED PER TDRR 27417	"		4-8-66	WGM
AS		REVISED PER TDRR 27442	"		4-8-66	WGM
AT		REVISED PER TDRR 27719	"		4-21-66	WK
AU		REVISED PER TDRR 27880	"		4-21-66	WK
AV		REVISED PER TDRR 27896	"		4-21-66	WK
AW		28110	"		5-16-66	WGM
AY		28173	"			WGM
AZ		28131	"			WGM
BA		28124	"			WGM
BB		REVISED PER TDRR 28511	"		5-16-66	WGM
BC		" " " 28849	"		5-24-66	WGM
BD		" " " 29222	"		6-8-66	WGM
BE		" " " 29235	"		"	WGM
BF		" " " 29322	"		6-24-66	WGM
BG		" " " 29429	"		"	WGM
BH		" " " 29449	"		"	WGM
BJ		" " " 29335	"		"	WGM
BK		" " " 29619	"		"	WGM
BL		" " " 29696	"		6-29-66	WGM
BM		REVISION STATUS CHANGED	JSD	NS	7-29-66	
BN		REVISION STATUS CHANGED	JI	RLW	22 AUG 66	
BP		REVISION STATUS CHANGED	JI	RLW	11 AUG 66	
BR		REVISED PER TDRR 30241	JI	RLW	11 AUG 66	
BS		REVISION STATUS CHANGED	GW	RLW	25 AUG 66	
BT		REVISION STATUS CHANGED	GW	RLW	26 AUG 66	
BU		REVISION STATUS CHANGED	EH	JI	9 SEP 66	
BV		REVISION STATUS CHANGED	JJB	RLW	30 SEP 66	
BW		REVISION STATUS CHANGED	JJB	RLW	30 SEP 66	
BY		REVISION STATUS CHANGED	JJB	RLW	10 OCT 66	
BZ		REVISION STATUS CHANGED	JJB	RLW	10 OCT 66	
CA		REVISION STATUS CHANGED	JJB		25 OCT 66	
CB		REVISION STATUS CHANGED	REF		10 DEC 66	

REVISIONS 02768

DASH NO.	P/C	PART NAME	REMARKS	PART NO.	SER. NO.	CONT. NO.	STYLE	TYPE	MATERIAL	A	B	C	D	E	F	G	H	J	K	L	M	N	P	R	S	T	U	V	W	Y	Z	AA	AB	AC	AD	AE	AF	AG	AH	AJ	AK	AL	AM	AN	AP	AR
199	AC	EYEPIECE STOWAGE UNIT		2021255-011			A	I		FOR DIMENSIONS, SEE DASH 100 VALUES BELOW																																				
198	AC	SIGNAL CONDITIONER ASSY C/M		2007234		NAS 9-497			NOTE 11B																																					
197	AC	SIGNAL CONDITIONER ASSY C/M		2007235																																										
196	AC	SIGNAL CONDITIONER ASSY LEM		6007010																																										
195	AC	PSA & SIGNAL CONDITIONER ASSY		6007009			A	I	NOTE 11B																																					
194	AC	PANEL, MONITOR		2900031-031			B	II	NOTE 11C	FOR DIMENSIONS, SEE DASH 141 VALUES BELOW																																				
193	AC	DISTRIBUTION BOX, GSE		2900024-031																																										
192	AC	ANALYZER, OPTICS-INERTIAL		2900023-031						FOR DIMENSIONS, SEE DASH 144 VALUES BELOW																																				
191	AC	TEST CONTROL		2900027-031						FOR DIMENSIONS, SEE DASH 141 VALUES BELOW																																				
190	AC	PANEL, PWR SUP AND LOAD		2900033-021																																										
189	AC	ADPT MODULE, P.S.A.		6900088-011																																										
188	AC	ADPT MODULE, P.S.A.		2901143-011																																										
187	AC	FIXTURE, MTG, PTA/PEA		2900066-021		NAS 9-497	B	II	NOTE 11C																																					
186	AC	ANNUNCIATOR PANEL AND EYEPIECE STORAGE ASSEMBLY		1021255-021			A	I		FOR DIMENSIONS, SEE DASH 100 VALUES BELOW																																				
185	AC	ANNUNCIATOR PANEL AND EYEPIECE STORAGE ASSEMBLY		1021255-011			A	I																																						
184	AC	FIX., HAND., G AND N HARNESS		1901846-041		NAS-9-497	B	II	NOTE 11C	FOR DIMENSIONS, SEE DASH 144 VALUES BELOW																																				
183	AC	INSTALLING TOOL, ELEC. CONN		1902586-011			B	II	NOTE 11C	FOR DIMENSIONS, SEE DASH 102 VALUES BELOW																																				
182	AC	ADPT MODULE, P.S.A.		6900088-011			B	II	NOTE 11C	FOR DIMENSIONS, SEE DASH 141 VALUES BELOW																																				
181	AC	G & N INDICATOR CONTROL PANEL ASSY		2014578-011			A	I	NOTE 11B	3.000	1.938	2.437	NA	.125	.062	.188	.156	NA	NA	1.750	1.125	.906	.688	1.500	NA	.281	.125	NA	1.094	2.062	.312	NA	2.500	.062	.125	1.312	.469	NA	NA	NA	.156	NA	.125	.469	.344	NA
180	AC	ADPT MODULE, P.S.A.		1902431-031			B	II		FOR DIMENSIONS, SEE DASH 121 VALUES BELOW																																				
179	AC	MOUNTING PLATE, IMU/PTA		6900083-011						FOR DIMENSIONS, SEE DASH 144 VALUES BELOW																																				
178	AC	MOUNTING PLATE, COMPONENT		6900007-021																																										
177	AC	FIX., MOUNTING, SUBSYSTEM		2900070-021																																										
176	AC	FIX., MOUNTING, G AND N		2900067-021																																										
175	AC	CSL. COOL. AND PWR. G AND N		1902134-031																																										
174	AC	FIX., HAND., C/M AND LEM CDU		2900999-011					NOTE 11C	FOR DIMENSIONS, SEE DASH 141 VALUES BELOW																																				
173	AC	FIX., HANDLING, C/M PSA		2900998-011																																										
172	AC	CAGING ELECTRONICS, GYRO		2900029-021																																										
171	AC	DISTRIBUTION BOX, GSE		2900024-021																																										
170	AC	ANALYZER. OPTICS-INERTIAL		2900023-021						FOR DIMENSIONS, SEE DASH 144 VALUES BELOW																																				
169	AC	ADPT, TESTPOINT, P.S.A.		2900037-021						FOR DIMENSIONS, SEE DASH 141 VALUES BELOW																																				
168	AC	TEST SELECTOR		2900028-021																																										
167	AC	TEST CONTROL		2900027-021																																										
166	AC	PANEL, MONITOR		2900031-021																																										
165	AC	TERM. BOARD STORAGE DRAWER		2900927-011																																										
164	AC	INPUT/OUTPUT PANEL		2900926-011																																										
163	AC	CONTROL PANEL		2900896-011																																										
162	AC	CSL. CAL AND TEST, SCM/PSAAM		2900895-011						FOR DIMENSIONS, SEE DASH 144 VALUES BELOW																																				
161	AC	FIX., LIFT AND HAND., IMU		1015462-011						FOR DIMENSIONS, SEE DASH 141 VALUES BELOW																																				
160	AC	FIX., HAND., G AND N HARNESS		1901846-031						FOR DIMENSIONS, SEE DASH 144 VALUES BELOW																																				
159	AC	BATTERY POWER PACK		1900011-031			B	II	NOTE 11C																																					
158	AC	COUPLING DATA UNIT ASSEMBLY C/M		2007222			A	I	NOTE 11B	FOR DIMENSIONS SEE DASH 100 VALUES BELOW																																				
157	AC	COUPLING DATA UNIT ASSEMBLY - LEM		2007222																																										
156	AC	POWER & SERVO ASSEMBLY C/M		2007200						2.125	.968	1.718	NA	.093	.031	.06	.093	NA	NA	.858	.608	.484	.358	.733	.062	.140	.062	NA	.968	1.450	.125	NA	1.720	.046	.03	NA	.210	NA	NA	NA	.070	NA	.046	.32	.16	NA
155	AC	PIPA ELECTRONICS ASSEMBLY		2007201						FOR DIMENSIONS SEE DASH 100 VALUES BELOW																																				
154	AC	PULSE TORQUE ASSEMBLY - LEM		6007000																																										
153	AC	POWER & SERVO ASSEMBLY - LEM		6007200			A	I	NOTE 11B																																					
152	AC	CONT PNL, RSVR CKT TESTER		2900770-011			B	II	NOTE 11C	FOR DIMENSIONS, SEE DASH 141 VALUES BELOW																																				
151	AC	TESTER, RESOLVER CIRCUIT		2900708-011																																										
150	AC	JUNCTION BOX, P.S.A./G.S.E.		1901933-021						FOR DIMENSIONS, SEE DASH 144 VALUES BELOW																																				
149	AC	BATTERY PACK, LIFTING		2900812-011						FOR DIMENSIONS, SEE DASH 144 VALUES BELOW																																				
148	AC	MOUNTING PLATE, COMPONENT		6900007-011						FOR DIMENSIONS, SEE DASH 144 VALUES BELOW																																				
147	AC	MOUNTING PLATE, COMPONENT		2900677-011																																										
146	AC	CART, TRANS, G AND N		1900009-041																																										
145	AC	CONTAINER, SHIPPING, IMU		1900010-021		NAS-9-497	B	II	NOTE 11C																																					
144	AC	FIX., MOUNTING, G AND N		1902204-021			B	II	NOTE 11C	4.125	1.812	3.250	NA	.125	.062	.12	.156	.100 .104	.125	1.625	1.140	.890	.640	1.390	.125	.171	.125	1.875	1.687	2.625	.250	1.562	3.843	.093	NA	NA	.359	.125	.437	3.688	NA	3.687	.093	.40	.25	3.875
143	AC	CSL, COOL. AND PWR, G AND N		1902134-021						4.125	1.812	3.250		.125	.062	.12	.156		.125	1.625	1.140	.890	.640	1.390	.125	.171	.125	1.875	1.687	2.625	.250	1.562	3.843	.093			.359	.125	.437	3.688		3.687	.093	.40	.25	3.875
142	AC	ANALYZER, OPTICS-INERTIAL		2900023-011						4.125	1.812	3.250		.125	.062	.12	.156		.125	1.625	1.140	.890	.640	1.390	.125	.171	.125	1.875	1.687	2.625	.250	1.562	3.843	.093			.359	.125	.437	3.688		3.687	.093	.40	.25	3.875
141	AC	CONT, TEMP, PORTABLE		2900060-011						2.125	.968	1.718		.093	.031	.06	.093		.093	.858	.608	.484	.358	.733	.077	.116	.062	.937	.875	1.343	.125	.781	1.892	.046			.209	.093	.250	1.875		1.840	.046	.23	.16	1.938
140	AC	TESTER, CKT, IMU/CDU RSVR		2900286-011						4.125	1.812	3.250		.125	.062	.12	.156		.125	1.625	1.140	.890	.640	1.390	.125	.171	.125	1.875	1.687	2.625	.250	1.562	3.843	.093			.359	.125	.437	3.688		3.687	.093	.40	.25	3.875
139	AC	SIMULATOR, LD/SIG, CDU		2900285-011																																										
138	AC	SIMULATOR, LD/SIG, OPTICS		1902023-021																																										
137	AC	FIX., MOUNTING, IMU/NAV BASE		6900003-011																																										
136	AC	FIXTURE, OPTICS/NAV BASE		2900072-011																																										
135	AC	FIX., MOUNTING, SUB SYSTEM		2900070-011																																										
134	AC	FIX., HAND., G AND N HARNESS		2900069-011																																										
133	AC	CNTR, SHIPPING, NAV BASE		2900068-011																																										
132	AC	FIX., MOUNTING, G AND N		2900067-011																																										
131	AC	SIMULATOR, LD/SIG, IMU/CDU		2900062-011																																										
130	AC	TESTER, GYRO WHEEL		2900061-011																																										
129	AC	COOLANT SUPPLY		1902133-021																																										
128	AC	TABLE, ROTARY		1900926-021						4.125	1.812	3.250		.125	.062	.12	.156		.125	1.625	1.140	.890	.640	1.390	.125	.171	.125	1.875	1.687	2.625	.250	1.562	3.843	.093			.359	.125	.437	3.688		3.687	.093	.40	.25	3.875
127	AC	FIX., HAND., OPTICS		2900074-011						2.125	.968	1.718		.093	.031	.06	.093		.093	.858	.608	.484	.358	.733	.077	.116	.062	.937	.875	1.343	.125	.781	1.892	.046			.209	.093	.250	1.875		1.840	.046	.23	.16	1.938
126	AC	FIXTURE, MTG, PTA/PEA.		2900066-011																																										
125	AC	CONT, TEMP, IMU LIFTING		2900063-011																																										
124	AC	FIXTURE, HANDLING, IMU		2900064-011																																										
123	AC	CONT, OPTICS, REMOTE		1902046-021																																										
122	AC	TEST CONTROL		1902009-021																																										
121	AC	ADPT MODULE, P.S.A		1902431-021																																										
120	AC	BRIDGE, DECADE ERROR		2900128-011																																										
119	AC	PWR SUP, ELECTRONICS		2900012-011																																										
118	AC	PWR SUP, RELAY AND LAMP		1900049-031																																										
117	AC	CONSOLE, OSCILLOGRAPH		1900000-021																																										
116	AC	ADPT MODULE, P.S.A.		1902431-011																																										
115	AC	ADPT, TEST POINT, PTA/PEA.		2900145-011																																										
114	AC	ADPT, TEST POINT, P.S.A.		2900037-011																																										
113	AC	CONTROL, GIMBAL POSITION		2900036-011																																										
112	AC	SELECTOR, SIGNAL, PRIMARY		2900035-011																																										
111	AC	SEL, SIG, OSCILLOGRAPH		2900034-011																																										
110	AC	PANEL, PWR SUP AND LOAD		2900033-011																																										
109	AC	PANEL, MONITOR		2900031-011																																										
108	AC	PANEL, AUXILIARY INPUT		2900030-011																																										
107	AC	CAGING ELECTRONICS, GYRO		2900029-011																																										
106	AC	TEST SELECTOR		2900028-011																																										
105	AC	TEST CONTROL		2900027-011																																										
104	AC	MONITOR AND CONTROL, TEMP		2900026-011																																										
103	AC	DISTRIBUTION BOX, GSE		2900024-011																																										
102	AC	VOLTMETER, DIGITAL		2900007 011			B	II	NOTE 11C	2.125	.968	1.718	NA	.093	.031	.06	.093	.100 .104	.093	.858	.608	.484	.358	.733	.077	.116	.062	.937	.875	1.343	.125	.781	1.892	.046	NA	NA	.209	.093	.250	1.875	NA	1.840	.046	.23	.16	1.938
101	AC	NAVIGATION BASE ASSEMBLY - LEM		6899950		NAS-9-497	A	I	NOTE 11B	2.000	1.312	1.906	1.375	.078	.048	.078	.093	NA	NA	1.125	.750	.593	.453	1.015	.062	.187	.078	.875	.718	1.375	.218	NA	NA	.048	.031	.875	.305	.078	.531	1.906	.078	NA	.078	.531	.187	NA
100	AC	NAVIGATION BASE ASSEMBLY		2899982		NAS-9-497	A	I	NOTE 11B	2.000	1.312	1.906	1.375	.078	.048	.078	.093	NA	NA	1.125	.750	.593	.453	1.015	.062	.187	.078	.875	.718	1.375	.218	NA	NA	.048	.031	.875	.305	.078	.531	1.906	.078	NA	.078	.531	.187	NA

THIS SHEET ADDED

Ⓖ REPLACES REV F WITH CHANGE

AC ELECTRONICS DASH NUMBERS

NOTES FOR TABLE
STYLE A IS FOR G&N SYSTEM
STYLE B IS FOR GROUND SUPPORT EQUIPMENT
TYPE I IS WITHOUT MOUNTING HOLES
TYPE II IS WITH MOUNTING HOLES

NOTE: AC DASH NO'S. CONT. ON SH.6

QTY REQD	PART OR IDENTIFYING NO.	MATERIAL OR NOTES	NOMENCLATURE OR DESCRIPTION	FIND NO.

LIST OF MATERIALS

NEXT ASSY	USED ON
AS APPLICABLE	

APPLICATION

UNLESS OTHERWISE SPECIFIED
DIMENSIONS ARE IN INCHES
CAPACITOR VALUES ARE IN µf
RESISTOR VALUES ARE IN OHMS
TOLERANCES ON
FRACTIONS ± — DECIMALS ±.005 ANGLES ± —
DO NOT SCALE THIS DRAWING

MATERIAL
SEE NOTE 11

MIT
INSTRUMENTATION LAB
CAMBRIDGE, MASS.

MANNED SPACECRAFT CENTER
HOUSTON, TEXAS

DRAWN R A Jones 7-16-65
CHECKED 7-2-65
APPROVED
APPROVED W Kupfer 22 Jul 65
APPROVED MIT W Kupfer 22 Jul 65
APPROVED MSC 7/22/65
DATE

NAMEPLATES,
APOLLO G&N-GSE
(STANDARDS)

CODE IDENT NO. 80230
SIZE E
DRAWING NO. 1004260
SCALE NONE
SHEET 4 OF 6

NOTICE – WHEN GOVERNMENT DRAWINGS, SPECIFICATIONS, OR OTHER DATA ARE USED FOR ANY PURPOSE OTHER THAN IN CONNECTION WITH A DEFINITELY RELATED GOVERNMENT PROCUREMENT OPERATION, THE UNITED STATES GOVERNMENT THEREBY INCURS NO RESPONSIBILITY NOR ANY OBLIGATION WHATSOEVER; AND THE FACT THAT THE GOVERNMENT MAY HAVE FORMULATED, FURNISHED, OR IN ANY WAY SUPPLIED THE SAID DRAWINGS, SPECIFICATIONS OR OTHER DATA IS NOT TO BE REGARDED BY IMPLICATION OR OTHERWISE AS IN ANY MANNER LICENSING THE HOLDER OR ANY OTHER PERSON OR CORPORATION, OR CONVEYING ANY RIGHTS OR PERMISSION TO MANUFACTURE, USE, OR SELL ANY PATENTED INVENTION THAT MAY IN ANY WAY BE RELATED THERETO.

REVISIONS 02768

SYM	ZONE	DESCRIPTION	DR	CHK	DATE	APPROVED
G		REPLACES REV F WITH CHANGE PER TDRR 20854.			7/22/65	WK
H		REVISED PER TDRR 20892			8/3/65	WK
J		REVISED PER TDRR 20904			8/3/65	WK
K		REVISED PER TDRR 21379			8/16/65	WK
L		REVISED PER TDRR 21410			8/23/65	WK
M		REVISED PER TDRR 21993			10/	
N		REVISED PER TDRR 22621				
P		REVISED PER TDRR 22671			1/	
R		REVISED PER TDRR 22672				
S		REVISED PER TDRR 22750				
T		REVISED PER TDRR 22823			/65	WK
U		REVISED PER TDRR 23072			[illegible]	MGM
V		REVISED PER TDRR 23521			10-26-65	WK
W		REVISED PER TDRR 23824	RAJ		11-9-65	WK
Y		REVISED PER TDRR 24018	RAJ		11-16-65	WK
Z		REVISED PER TDRR 24040	RAJ		11-19-65	WK
AA		REVISED PER TDRR 24060	RAJ		11-19-65	WK
AB		REVISED PER TDRR 24868	RAJ		2-22-65	WK
AC		REVISED PER TDRR 24973	RAJ		1-4-66	WK
AD		REVISED PER TDRR 25065	RAJ		1-18-66	MGM
AE		REVISED PER TDRR 25672	RAJ		2-4-66	WK
AF		REVISED PER TDRR 25671	RAJ		2-4-66	WK
AG		REVISED PER TDRR 26110	RAJ		2-15-66	WK
AH		REVISED PER TDRR 26372	"		3-16-66	MGM
AJ		REVISED PER TDRR 26425	"		3-16-66	MGM
AK		REVISED PER TDRR 26743	"		3-16-66	MGM
AL		REVISED PER TDRR 26798	"		3-16-66	MGM
AM		REVISED PER TDRR 27168	"		4-8-66	MGM
AN		REVISED PER TDRR 27235	"		4-8-66	MGM
AP		REVISED PER TDRR 27345	"		4-8-66	MGM
AR		REVISED PER TDRR 27417	"		4-8-66	MGM
AS		REVISED PER TDRR 27442	"		4-8-66	MGM
AT		REVISED PER TDRR 27719	"		4-21-66	WK
AU		REVISED PER TDRR 27890	"		4-21-66	WK
AV		REVISED PER TDRR 27896	"		4-21-66	WK
AW		28110	"		5-16-66	MGM
AY		28173	"			MGM
AZ		28131	"			MGM
BA		28124	"			MGM
BB		REVISED PER TDRR 28511	"		5-16-66	MGM
BC		" " " 28949	"		5-24-66	MGM
BD		" " " 29222	"		6-8-66	MGM
BE		" " " 29235	"		"	MGM
BF		" " " 29322	"		6-24-66	MGM
BG		" " " 29429	"		"	MGM
BH		" " " 29449	"		"	MGM
BJ		" " " 29335	"		"	MGM
BK		" " " 29619	"		"	MGM
BL		" " " 29696	"		6-29-66	MGM
BM		REVISION STATUS CHANGED	JSD	NS	7-29-66	
BN		REVISION STATUS CHANGED	JI	RLW	22 AUG 66	
BP		REVISION STATUS CHANGED	JI	RLW	22 AUG 66	
BR		REVISED PER TDRR 30241	JI	RLW	22 AUG 66	
BS		REVISION STATUS CHANGED	GW	RLW	26 AUG 66	
BT		REVISION STATUS CHANGED	GW	RLW	26 AUG 66	
BU		REVISION STATUS CHANGED	EH	JI	9 SEPT 66	
BV		REVISION STATUS CHANGED	JJB	RLW	30 SEP 66	
BW		REVISION STATUS CHANGED	JJB	RLW	30 SEP 66	
BY		REVISION STATUS CHANGED	JJB	RLW	10 OCT 66	
BZ		REVISION STATUS CHANGED	JJB	RLW	10 OCT 66	
CA		REVISION STATUS CHANGED	JJB		25 OCT 66	
CB		REVISION STATUS CHANGED	REF		10 DEC 66	

DASH NO.	P/C	PART NAME	REMARKS	PART NO.	SER. NO.	CONT. NO.	STYLE	TYPE	MATERIAL	A	B	C	D	E	F	G	H	J	K	L	M	N	P	R	S	T	U	V	W	Y	Z	AA	AB	AC	AD	AE	AF	AG	AH	AJ	AK	AL	AM	AN	AP	AR
199	AC	EYEPIECE STOWAGE UNIT		2021255-0[illegible]			A	I		FOR DIMENSIONS, SEE DASH 100 VALUES BELOW																																				
198	AC	SIGNAL CONDITIONER ASSY C/M		2007234		NAS 9-497			NOTE 11B																																					
197	AC	SIGNAL CONDITIONER ASSY C/M		2007235																																										
196	AC	SIGNAL CONDITIONER ASSY LEM		6007010																																										
195	AC	PSA & SIGNAL CONDITIONER ASSY		6007009			A	I	NOTE 11B																																					
194	AC	PANEL, MONITOR		2900031-031			B	II	NOTE 11C	FOR DIMENSIONS, SEE DASH 141 VALUES BELOW																																				
193	AC	DISTRIBUTION BOX, GSE		2900024-031																																										
192	AC	ANALYZER, OPTICS-INERTIAL		2900023-031						FOR DIMENSIONS, SEE DASH 144 VALUES BELOW																																				
191	AC	TEST CONTROL		2900027-031						FOR DIMENSIONS, SEE DASH 141 VALUES BELOW																																				
190	AC	PANEL, PWR SUP AND LOAD		2900033-021																																										
189	AC	ADPT MODULE, P.S.A.		6900088-011																																										
188	AC	ADPT MODULE, P.S.A.		2901143-011																																										
187	AC	FIXTURE, MTG, PTA/PEA		2900066-021		NAS 9-497	B	II	NOTE 11C																																					
186	AC	ANNUNCIATOR PANEL AND EYEPIECE STORAGE ASSEMBLY		1021255-021			A	I		FOR DIMENSIONS, SEE DASH 100 VALUES BELOW																																				
185	AC	ANNUNCIATOR PANEL AND EYEPIECE STORAGE ASSEMBLY		1021255-011			A	I																																						
184	AC	FIX., HAND., G AND N HARNESS		1901846-041		NAS-9-497	B	II	NOTE 11C	FOR DIMENSIONS, SEE DASH 144 VALUES BELOW																																				
183	AC	INSTALLING TOOL, ELEC. CONN		1902586-011			B	II	NOTE 11C	FOR DIMENSIONS, SEE DASH 102 VALUES BELOW																																				
182	AC	ADPT MODULE, P.S.A.		6900088-011			B	II	NOTE 11C	FOR DIMENSIONS, SEE DASH 141 VALUES BELOW																																				
181	AC	G & N INDICATOR CONTROL PANEL ASSY		2014578-011			A	I	NOTE 11B	3.000	1.938	2.437	NA	.125	.062	.188	.156	NA	NA	1.750	1.125	.906	.688	1.500	NA	.281	.125	NA	1.094	2.062	.312	NA	2.500	.062	.125	1.312	.469	NA	NA	NA	.156	NA	.125	.469	.344	NA
180	AC	ADPT MODULE, P.S.A.		1902431-031			B	II		FOR DIMENSIONS, SEE DASH 121 VALUES BELOW																																				
179	AC	MOUNTING PLATE, IMU/PTA		6900083-011						FOR DIMENSIONS, SEE DASH 144 VALUES BELOW																																				
178	AC	MOUNTING PLATE, COMPONENT		6900007-021																																										
177	AC	FIX., MOUNTING, SUBSYSTEM		2900070-021																																										
176	AC	FIX., MOUNTING, G AND N		2900067-021																																										
175	AC	CSL, COOL. AND PWR, G AND N		1902134-031																																										
174	AC	FIX., HAND., C/M AND LEM CDU		2900999-011					NOTE 11C	FOR DIMENSIONS, SEE DASH 141 VALUES BELOW																																				
173	AC	FIX., HANDLING, C/M PSA		2900998-011																																										
172	AC	CAGING ELECTRONICS, GYRO		2900029-021																																										
171	AC	DISTRIBUTION BOX, GSE		2900024-021																																										
170	AC	ANALYZER, OPTICS-INERTIAL		2900023-021						FOR DIMENSIONS, SEE DASH 144 VALUES BELOW																																				
169	AC	ADPT, TESTPOINT, P.S.A.		2900037-021						FOR DIMENSIONS, SEE DASH 141 VALUES BELOW																																				
168	AC	TEST SELECTOR		2900028-021																																										
167	AC	TEST CONTROL		2900027-021																																										
166	AC	PANEL, MONITOR		2900031-021																																										
165	AC	TERM. BOARD STORAGE DRAWER		2900927-011																																										
164	AC	INPUT/OUTPUT PANEL		2900926-011																																										
163	AC	CONTROL PANEL		2900896-011																																										
162	AC	CSL. CAL AND TEST, SCM/PSAAM		2900895-011						FOR ~~DIMENSIONS~~, SEE DASH 144 VALUES BELOW																																				
161	AC	FIX., LIFT AND HAND., IMU		1015462-011						FOR DIMENSIONS, SEE DASH 141 VALUES BELOW																																				
160	AC	FIX., HAND., G AND N HARNESS		1901846-031						FOR DIMENSIONS, SEE DASH 144 VALUES BELOW																																				
159	AC	BATTERY POWER PACK		1900011-031			B	II	NOTE 11C																																					
158	AC	COUPLING DATA UNIT ASSEMBLY C/M		2007222			A	I	NOTE 11B	FOR DIMENSIONS SEE DASH 100 VALUES BELOW																																				
157	AC	COUPLING DATA UNIT ASSEMBLY - LEM		2007222																																										
156	AC	POWER & SERVO ASSEMBLY C/M		2007200						2.125	.968	1.718	NA	.093	.031	.06	.093	NA	NA	.858	.608	.484	.358	.733	.062	.140	.062	NA	.968	1.450	.125	NA	1.720	.046	.03	NA	.210	NA	NA	NA	.070	NA	.046	.32	.16	NA
155	AC	PIPA ELECTRONICS ASSEMBLY		2007201						FOR DIMENSIONS SEE DASH 100 VALUES BELOW																																				
154	AC	PULSE TORQUE ASSEMBLY - LEM		6007000																																										
153	AC	POWER & SERVO ASSEMBLY - LEM		6007200			A	I	NOTE 11B																																					
152	AC	CONT PNL, RSVR CKT TESTER		2900770-011			B	II	NOTE 11C	FOR DIMENSIONS, SEE DASH 141 VALUES BELOW																																				
151	AC	TESTER, RESOLVER CIRCUIT		2900708-011																																										
150	AC	JUNCTION BOX, P.S.A./G.S.E.		1901933-021						FOR DIMENSIONS, SEE DASH 144 VALUES BELOW																																				
149	AC	BATTERY PACK, LIFTING		2900812-011						FOR DIMENSIONS, SEE DASH 141 VALUES BELOW																																				
148	AC	MOUNTING PLATE, COMPONENT		6900007-011						FOR DIMENSIONS, SEE DASH 144 VALUES BELOW																																				
147	AC	MOUNTING PLATE, COMPONENT		2900677-011																																										
146	AC	CART, TRANS, G AND N		1900009-041																																										
145	AC	CONTAINER, SHIPPING, IMU		1900010-021		NAS-9-497	B	II	NOTE 11C																																					
144	AC	FIX., MOUNTING, G AND N		1902204-021			B	II	NOTE 11C	4.125	1.812	3.250	NA	.125	.062	.12	.156	.100 .104	.125	1.625	1.140	.890	.640	1.390	.125	.171	.125	1.875	1.687	2.625	.250	1.562	3.843	.093	NA	NA	.359	.125	.437	3.688	NA	3.687	.093	.40	.25	3.875
143	AC	CSL, COOL. AND PWR, G AND N		1902134-021						4.25	1.812	3.250		.125	.062	.12	.156		.125	1.625	1.140	.890	.640	1.390	.125	.171	.125	1.875	1.687	2.625	.250	1.562	3.843	.093			.359	.125	.437	3.688		3.687	.093	.40	.25	3.875
142	AC	ANALYZER, OPTICS-INERTIAL		2900023-011						4.125	1.812	3.250		.125	.062	.12	.156		.125	1.625	1.140	.890	.640	1.390	.125	.171	.125	1.875	1.687	2.625	.250	1.562	3.843	.093			.359	.125	.437	3.688		3.687	.093	.40	.25	3.875
141	AC	CONT, TEMP, PORTABLE		2900060-011						2.125	.968	1.718		.093	.031	.06	.093		.093	.858	.608	.484	.358	.733	.077	.116	.062	.937	.875	1.343	.125	.781	1.892	.046			.209	.093	.250	1.875		1.840	.046	.23	.16	1.938
140	AC	TESTER, CKT, IMU/CDU RSVR		2900286-011						4.125	1.812	3.250		.125	.062	.12	.156		.125	1.625	1.140	.890	.640	1.390	.125	.171	.125	1.875	1.687	2.625	.250	1.562	3.843	.093			.359	.125	.437	3.688		3.687	.093	.40	.25	3.875
139	AC	SIMULATOR, LD/SIG, CDU		2900285-011																																										
138	AC	SIMULATOR, LD/SIG, OPTICS		1902023-021																																										
137	AC	FIX., MOUNTING, IMU/NAV BASE		6900003-011																																										
136	AC	FIXTURE, OPTICS/NAV BASE		2900072-011																																										
135	AC	FIX., MOUNTING, SUB SYSTEM		2900070-011																																										
134	AC	FIX., HAND., G AND N HARNESS		2900069-011																																										
133	AC	CNTR, SHIPPING, NAV BASE		2900068-011																																										
132	AC	FIX., MOUNTING, G AND N		2900067-011																																										
131	AC	SIMULATOR, LD/SIG, IMU/CDU		2900062-011																																										
130	AC	TESTER, GYRO WHEEL		2900061-011																																										
129	AC	COOLANT SUPPLY		1902133-021																																										
128	AC	TABLE, ROTARY		1900926-021																																										
127	AC	FIX., HAND., OPTICS		2900074-011						4.125	1.812	3.250		.125	.062	.12	.156		.125	1.625	1.140	.890	.640	1.390	.125	.171	.125	1.875	1.687	2.625	.250	1.562	3.843	.093			.359	.125	.437	3.688		3.687	.093	.40	.25	3.875
126	AC	FIXTURE, MTG, PTA/PEA.		2900066-011						2.125	.968	1.718		.093	.031	.06	.093		.093	.858	.608	.484	.358	.733	.077	.116	.062	.937	.875	1.343	.125	.781	1.892	.046			.209	.093	.250	1.875		1.840	.046	.23	.16	1.938
125	AC	CONT, TEMP, IMU LIFTING		2900063-011																																										
124	AC	FIXTURE, HANDLING, IMU		2900064-011																																										
123	AC	CONT, OPTICS, REMOTE		1902046-021																																										
122	AC	TEST CONTROL		1902009-021																																										
121	AC	ADPT MODULE, P.S.A.		1902431-021																																										
120	AC	BRIDGE, DECADE ERROR		2900128-011																																										
119	AC	PWR SUP, ELECTRONICS		2900012-011																																										
118	AC	PWR SUP, RELAY AND LAMP		1900049-031																																										
117	AC	CONSOLE, OSCILLOGRAPH		1900000-021																																										
116	AC	ADPT MODULE, P.S.A.		1902431-011																																										
115	AC	ADPT, TEST POINT, PTA/PEA.		2900145-011																																										
114	AC	ADPT, TEST POINT, P.S.A.		2900037-011																																										
113	AC	CONTROL, GIMBAL POSITION		2900036-011																																										
112	AC	SELECTOR, SIGNAL, PRIMARY		2900035-011																																										
111	AC	SEL, SIG, OSCILLOGRAPH		2900034-011																																										
110	AC	PANEL, PWR SUP AND LOAD		2900033-011																																										
109	AC	PANEL, MONITOR		2900031-011																																										
108	AC	PANEL, AUXILIARY INPUT		2900030-011																																										
107	AC	CAGING ELECTRONICS, GYRO		2900029-011																																										
106	AC	TEST SELECTOR		2900028-011																																										
105	AC	TEST CONTROL		2900027-011																																										
104	AC	MONITOR AND CONTROL, TEMP		2900026-011																																										
103	AC	DISTRIBUTION BOX, GSE		2900024-011																																										
102	AC	VOLTMETER, DIGITAL		2900007 011			B	II	NOTE 11C	2.125	.968	.718	NA	.093	.031	.06	.093	.100 .104	.093	.858	.608	.484	.358	.733	.077	.116	.062	.937	.875	1.343	.125	.781	1.892	.046	NA	NA	.209	.093	.250	1.875	NA	1.840	.046	.23	.16	1.938
101	AC	NAVIGATION BASE ASSEMBLY - LEM		6899950		NAS-9-497	A	I	NOTE 11B	2.000	1.312	1.906	1.375	.078	.048	.078	.093	NA	NA	1.125	.750	.593	.453	1.015	.062	.187	.078	.875	.718	1.375	.218	NA	NA	.048	.031	.875	.305	.078	.531	1.906	.078	NA	.078	.531	.187	NA
100	AC	NAVIGATION BASE ASSEMBLY		2899982		NAS-9-497	A	I	NOTE 11B	2.000	1.312	1.906	1.375	.078	.048	.078	.093	NA	NA	1.125	.750	.593	.453	1.015	.062	.187	.078	.875	.718	1.375	.218	NA	NA	.048	.031	.875	.305	.078	.531	1.906	.078	NA	.078	.531	.187	NA

THIS SHEET ADDED

Ⓖ REPLACES REV F WITH CHANGE

AC ELECTRONICS DASH NUMBERS

NOTES FOR TABLE

STYLE A IS FOR G&N SYSTEM
STYLE B IS FOR GROUND SUPPORT EQUIPMENT
TYPE I IS WITHOUT MOUNTING HOLES
TYPE II IS WITH MOUNTING HOLES

NOTE: AC DASH NO'S. CONT. ON SH.6

QTY REQD	PART OR IDENTIFYING NO.	MATERIAL OR NOTES	NOMENCLATURE OR DESCRIPTION	FIND NO.

LIST OF MATERIALS

NEXT ASSY	USED ON
AS APPLICABLE	

APPLICATION

UNLESS OTHERWISE SPECIFIED
DIMENSIONS ARE IN INCHES
CAPACITOR VALUES ARE IN µf
RESISTOR VALUES ARE IN OHMS
TOLERANCES ON
FRACTIONS ± — DECIMALS ±.005 ANGLES ± —
DO NOT SCALE THIS DRAWING

MATERIAL
SEE NOTE 11

MIT
INSTRUMENTATION LAB
CAMBRIDGE, MASS.

		DATE
DRAWN	R a Jones	7-16-65
CHECKED	A J Cuoyo	7-22-65
APPROVED		
APPROVED	W Kupfer	22 Jul 65
APPROVED MIT	W Kupfer	22 Jul 65
APPROVED MSC		7/22/65

MANNED SPACECRAFT CENTER
HOUSTON, TEXAS

NAMEPLATES,
APOLLO G&N-GSE
(STANDARDS)

CODE IDENT NO. 80230
SIZE E
DRAWING NO. 1004260
SCALE NONE
SHEET 4 OF 6

NOTICE – WHEN GOVERNMENT DRAWINGS, SPECIFICATIONS, OR OTHER DATA ARE USED FOR ANY PURPOSE OTHER THAN IN CONNECTION WITH A DEFINITELY RELATED GOVERNMENT PROCUREMENT OPERATION, THE UNITED STATES GOVERNMENT THEREBY INCURS NO RESPONSIBILITY NOR ANY OBLIGATION WHATSOEVER; AND THE FACT THAT THE GOVERNMENT MAY HAVE FORMULATED, FURNISHED, OR IN ANY WAY SUPPLIED THE SAID DRAWINGS, SPECIFICATIONS OR OTHER DATA IS NOT TO BE REGARDED BY IMPLICATION OR OTHERWISE AS IN ANY MANNER LICENSING THE HOLDER OR ANY OTHER PERSON OR CORPORATION, OR CONVEYING ANY RIGHTS OR PERMISSION TO MANUFACTURE, USE, OR SELL ANY PATENTED INVENTION THAT MAY IN ANY WAY BE RELATED THERETO.

REVISIONS 02768

SYM	ZONE	DESCRIPTION	DR	CHK	DATE	APPROVED
G		REPLACES REV F WITH CHANGE PER TDRR 20854	rj		7/22/65	WK
H		REVISED PER TDRR 20892	rj		8/3/65	WK
J		REVISED PER TDRR 20904	rj		8/3/65	WK
K		REVISED PER TDRR 21379	rj		8/16/65	WK
L		REVISED PER TDRR 21410	rj		8/23/65	WK
M		REVISED PER TDRR 21993	rj			
N		REVISED PER TDRR 22621	rj		10/1/65	
P		REVISED PER TDRR 22671	rj			
R		REVISED PER TDRR 22672	rj			
S		REVISED PER TDRR 22750	rj			
T		REVISED PER TDRR 22823	rj			WK
U		REVISED PER TDRR 23072	rj		10-22-65	WGM
V		REVISED PER TDRR 23521	rj		10-26-65	WK
W		REVISED PER TDRR 23824	RAJ		11-9-65	WK
Y		REVISED PER TDRR 24018	RAJ		11-16-65	WK
Z		REVISED PER TDRR 24040	RAJ		11-19-65	WK
AA		REVISED PER TDRR 24060	RAJ		11-19-65	WK
AB		REVISED PER TDRR 24868	RAJ		12-22-65	WK
AC		REVISED PER TDRR 24973	RAJ		1-4-66	WK
AD		REVISED PER TDRR 25065	RAJ		1-18-66	WGM
AE		REVISED PER TDRR 25672	RAJ		2-4-66	WK
AF		REVISED PER TDRR 25671	RAJ		2-4-66	WK
AG		REVISED PER TDRR 26110	RAJ		2-15-66	WK
AH		REVISED PER TDRR 26372	"		3-16-66	WGM
AJ		REVISED PER TDRR 26425	"		3-16-66	WGM
AK		REVISED PER TDRR 26743	"		3-16-66	WGM
AL		REVISED PER TDRR 26798	"		3-16-66	WGM
AM		REVISED PER TDRR 27168	"		4-7-66	WGM
AN		REVISED PER TDRR 27235	"		4-7-66	WGM
AP		REVISED PER TDRR 27345	"		4-7-66	WGM
AR		REVISED PER TDRR 27417	"		4-7-66	WGM
AS		REVISED PER TDRR 27442	"		4-7-66	WGM
AT		REVISED PER TDRR 27719	"		4-20-66	WK
AU		REVISED PER TDRR 27880	"		4-20-66	WK
AV		REVISED PER TDRR 27896	"		4-20-66	WK
AW		↑ ↑ 28110	"		5-16-66	WGM
AY		28173	"		↑	WGM
AZ		28131	"			WGM
BA		↓ ↓ 28124	"		↓	WGM
BB		REVISED PER TDRR 28511	"		5-16-66	WGM
BC		" " " 28949	"		5-24-66	WGM
BD		" " " 29222	"		6-8-66	WGM
BE		" " " 29235	"		"	WGM
BF		" " " 29322	"		6-24-66	WGM
BG		" " " 29429	"		"	WGM
BH		" " " 29449	"		"	WGM
BJ		" " " 29335	"		"	WGM
BK		" " " 29619	"		"	WGM
BL		" " " 29696	"		6 29 66	WGM
BM		REVISION STATUS CHANGED	JSD		7-29-66	
BN		REVISION STATUS CHANGED	JI	RLW	12 AUG 66	
BP		REVISION STATUS CHANGED	JI	RLW	19 AUG 66	
BR		REVISION STATUS CHANGED	JI	RLW	23 AUG 66	
BS		REVISION STATUS CHANGED	GW	RLW	26 AUG 66	
BT		REVISION STATUS CHANGED	GW	RLW	26 AUG 66	
BU		REVISION STATUS CHANGED	EH	JI	9 SEPT 66	
BV		REVISION STATUS CHANGED	JJB	RLW	22 SEP 66	
BW		REVISION STATUS CHANGED	JJB	RLW	30 SEP 66	
BY		REVISION STATUS CHANGED	JJB	RLW	10 OCT 66	
BZ		REVISION STATUS CHANGED	JJB	RLW	10 OCT 66	
CA		REVISION STATUS CHANGED	JJB	NW	25 OCT 66	
CB		REVISION STATUS CHANGED	REF		10 DEC 66	

DASH NO.	P/C	PART NAME	REMARKS	PART NO.	SER. NO.	CONT. NO.	STYLE	TYPE	MATERIAL	A	B	C	D	E	F	G	H	J	K	L	M	N	P	R	S	T	U	V	W	Y	Z	AA	AB	AC	AD	AE	AF	AG	AH	AJ	AK	AL	AM	AN	AP	AR
499	MIT																																													
498																																														
401	MIT	COMPUTER ASSY		2003100		NAS-9-497	A	I	NOTE 11 B	2.000	1.312	1.906	1.375	.078	.048	.078	.093	NA	NA	1.125	.750	.593	.453	1.015	.062	.187	.078	.875	.718	1.375	.218	NA	NA	.048	.031	.875	.305	.078	.531	1.906	.078	NA	.078	.531	.187	NA
400	MIT	LIFTING SLING-G&N INST. QUAL. FIX. & AZM. REF. FIX.		1021640		NAS-9-4065	B	II	NOTE 11 C	2.000	1.312	1.687	1.375	.078	.048	.078	.093	.086/.081	.093	1.187	.750	.593	.453	1.015	.062	.187	.078	.875	.718	1.375	.218	1.156	1.843	.048	NA	.875	.305	.078	.312	1.687	.110	1.830	.070	.275	.180	1.844

MIT DASH NUMBERS

NOTES FOR TABLE
STYLE A IS FOR G&N SYSTEM
STYLE B IS FOR GROUND SUPPORT EQUIPMENT
TYPE I IS WITHOUT MOUNTING HOLES
TYPE II IS WITH MOUNTING HOLES

THIS SHEET ADDED

Ⓖ REPLACES REV F WITH CHANGE

QTY REQD	PART OR IDENTIFYING NO.	MATERIAL OR NOTES	NOMENCLATURE OR DESCRIPTION	FIND NO.

LIST OF MATERIALS

NEXT ASSY	USED ON
AS APPLICABLE	

APPLICATION

UNLESS OTHERWISE SPECIFIED
DIMENSIONS ARE IN INCHES
CAPACITOR VALUES ARE IN µf
RESISTOR VALUES ARE IN OHMS
TOLERANCES ON
FRACTIONS ± — DECIMALS ±.005 ANGLES ± —
DO NOT SCALE THIS DRAWING

MATERIAL
SEE NOTE 11

MIT
INSTRUMENTATION LAB
CAMBRIDGE, MASS.

		DATE
DRAWN	R A Jones	7-16-65
CHECKED		7-22-65
APPROVED		
APPROVED	W Kupfer	7/22/65
APPROVED MIT	W Kupfer	7/22/65
APPROVED MSC		7/24/65

MANNED SPACECRAFT CENTER
HOUSTON, TEXAS

NAMEPLATES,
APOLLO G&N-GSE
(STANDARDS)

CODE IDENT NO. 80230
SIZE E
DRAWING NO. 1004260
SCALE NONE
SHEET 5 OF 6

NOTICE — WHEN GOVERNMENT DRAWINGS, SPECIFICATIONS, OR OTHER DATA ARE USED FOR ANY PURPOSE OTHER THAN IN CONNECTION WITH A DEFINITELY RELATED GOVERNMENT PROCUREMENT OPERATION, THE UNITED STATES GOVERNMENT THEREBY INCURS NO RESPONSIBILITY NOR ANY OBLIGATION WHATSOEVER; AND THE FACT THAT THE GOVERNMENT MAY HAVE FORMULATED, FURNISHED, OR IN ANY WAY SUPPLIED THE SAID DRAWINGS, SPECIFICATIONS OR OTHER DATA IS NOT TO BE REGARDED BY IMPLICATION OR OTHERWISE AS IN ANY MANNER LICENSING THE HOLDER OR ANY OTHER PERSON OR CORPORATION, OR CONVEYING ANY RIGHTS OR PERMISSION TO MANUFACTURE, USE, OR SELL ANY PATENTED INVENTION THAT MAY IN ANY WAY BE RELATED THERETO.

REVISIONS 02768

SYM	ZONE	DESCRIPTION	DR	CHK	DATE	APPROVED
G		REPLACES REV F WITH CHANGE PER TDRR 20854	rj		7/22/65	WK
H		REVISED PER TDRR 20892	rj		8/3/65	WK
J		REVISED PER TDRR 20904	rj		8/3/	WK
K		REVISED PER TDRR 21379	rj		8/6/65	WK
L		REVISED PER TDRR 21410	rj		8/23/65	WK
M		REVISED PER TDRR 21993	rj			
N		REVISED PER TDRR 22621	rj		10/	
P		REVISED PER TDRR 22671	rj		1/	
R		REVISED PER TDRR 22672	rj			
S		REVISED PER TDRR 22750	rj		65	WK
T		REVISED PER TDRR 22823	rj			
U		REVISED PER TDRR 23072	rj		10-22-65	
V		REVISED PER TDRR 23521	rj		10-26-65	WK
W		REVISED PER TDRR 23824	RAJ		11-9-65	WK
Y		REVISED PER TDRR 24018	RAJ		11-16-65	WK
Z		REVISED PER TDRR 24040	RAJ		11-15-65	WK
AA		REVISED PER TDRR 24060	RAJ		11-19-65	WK
AB		REVISED PER TDRR 24868	RAJ		12-22-65	WK
AC		REVISED PER TDRR 24973	RAJ		1-4-66	WK
AD		REVISED PER TDRR 25065	RAJ		1-18-66	WGM
AE		REVISED PER TDRR 25672	RAJ		2-4-66	WK
AF		REVISED PER TDRR 25671	RAJ		2-4-66	WK
AG		REVISED PER TDRR 26110	RAJ		2-15-66	WK
AH		REVISED PER TDRR 26372	"		3-16-66	WGM
AJ		REVISED PER TDRR 26425	"		3-16-66	WGM
AK		REVISED PER TDRR 26743	"		3-16-66	WGM
AL		REVISED PER TDRR 26798	"		3-16-66	WGM
AM		REVISED PER TDRR 27168	"		4-7-66	WGM
AN		REVISED PER TDRR 27235	"		4-7-66	WGM
AP		REVISED PER TDRR 27345	"		4-7-66	WGM
AR		REVISED PER TDRR 27417	"		4-7-66	WGM
AS		REVISED PER TDRR 27442	"		4-7-66	WGM
AT		REVISED PER TDRR 27719	"		4-20-66	WK
AU		REVISED PER TDRR 27880	"		4-20-66	WK
AV		REVISED PER TDRR 27896	"		4-20-66	WK
AW		↑ ↑ 28110	"		5-16-66	WGM
AY		28173	"		↑	WGM
AZ		28131	"			WGM
BA		↓ ↓ 28124	"		↓	WGM
BB		REVISED PER TDRR 28511	"		5-16-66	WGM
BC		" " " 28949	"		5-24-66	WGM
BD		" " " 29222	"		6-8-66	WGM
BE		" " " 29235	"		"	WGM
BF		" " " 29322	"		6-24-66	WGM
BG		" " " 29429	"		"	WGM
BH		" " " 29449	"		"	WGM
BJ		" " " 29335	"		"	WGM
BK		" " " 29619	"		"	WGM
BL		" " " 29696	"		6-29-66	WGM
BM		REVISION STATUS CHANGED	JSD		7-29-66	
BN		REVISION STATUS CHANGED	JI	RLW	22 AUG 66	
BP		REVISION STATUS CHANGED	JI	RLW	23 AUG 66	
BR		REVISION STATUS CHANGED	JI	RLW	25 AUG 66	
BS		REVISION STATUS CHANGED	GW	RLW	26 AUG 66	
BT		REVISION STATUS CHANGED	GW	RLW	26 AUG 66	
BU		REVISION STATUS CHANGED	EH	JI	9 SEPT 66	
BV		REVISION STATUS CHANGED	JJB	RLW	30 SEP 66	
BW		REVISION STATUS CHANGED	JJB	RLW	30 SEP 66	
BY		REVISION STATUS CHANGED	JJB	RLW	10 OCT 66	
BZ		REVISION STATUS CHANGED	JJB	RLW	10 OCT 66	
CA		REVISION STATUS CHANGED	JJB	NW	25 OCT 66	
CB		REVISION STATUS CHANGED	REF		10 DEC 66	

DASH NO.	P/C	PART NAME	REMARKS	PART NO.	SER. NO.	CONT. NO.	STYLE	TYPE	MATERIAL	A	B	C	D	E	F	G	H
499	MIT																
498																	
401	MIT	COMPUTER ASSY		2003100		NAS-9-497	A	I	NOTE 11 B	2.000	1.312	1.906	1.375	.078	.048	.078	.093
400	MIT	LIFTING SLING-G&N INST. QUAL. FIX. & AZM. REF. FIX.		1021640		NAS-9-4065	B	II	NOTE 11 C	2.000	1.312	1.687	1.375	.078	.048	.078	.093

DASH NO.	J	K	L	M	N	P	R	S	T	U	V	W	Y	Z	AA	AB	AC	AD	AE	AF	AG	AH	AJ	AK	AL	AM	AN	AP	AR
499																													
498																													
401	NA	NA	1.125	.750	.593	.453	1.015	.062	.187	.078	.875	.718	1.375	.218	NA	NA	.048	.031	.875	.305	.078	.531	1.906	.078	NA	.078	.531	.187	NA
400	.086/.081	.093	1.187	.750	.593	.453	1.015	.062	.187	.078	.875	.718	1.375	.218	1.156	1.843	.048	NA	.875	.305	.078	.312	1.687	.110	1.830	.070	.275	.180	1.844

MIT DASH NUMBERS

THIS SHEET ADDED

Ⓖ REPLACES REV F WITH CHANGE

NOTES FOR TABLE

STYLE A IS FOR G&N SYSTEM
STYLE B IS FOR GROUND SUPPORT EQUIPMENT
TYPE I IS WITHOUT MOUNTING HOLES
TYPE II IS WITH MOUNTING HOLES

QTY REQD	PART OR IDENTIFYING NO.	MATERIAL OR NOTES	NOMENCLATURE OR DESCRIPTION	FIND NO.

LIST OF MATERIALS

NEXT ASSY	USED ON
AS APPLICABLE	

APPLICATION

UNLESS OTHERWISE SPECIFIED
DIMENSIONS ARE IN INCHES
CAPACITOR VALUES ARE IN µf
RESISTOR VALUES ARE IN OHMS
TOLERANCES ON
FRACTIONS ± — DECIMALS ±.005 ANGLES ± —
DO NOT SCALE THIS DRAWING

MATERIAL
SEE NOTE 11

MIT
INSTRUMENTATION LAB
CAMBRIDGE, MASS.

DRAWN R A Jones 7-16-65
CHECKED 7-22-65
APPROVED
APPROVED W Kupfer 7/22/65
APPROVED MIT W Kupfer 7/22/65
APPROVED MSC 7/22/65
DATE

MANNED SPACECRAFT CENTER
HOUSTON, TEXAS

NAMEPLATES,
APOLLO G&N-GSE
(STANDARDS)

CODE IDENT NO. 80230
SIZE E
DRAWING NO. 1004260
SCALE NONE
SHEET 5 OF 6

NOTICE – WHEN GOVERNMENT DRAWINGS, SPECIFICATIONS, OR OTHER DATA ARE USED FOR ANY PURPOSE OTHER THAN IN CONNECTION WITH A DEFINITELY RELATED GOVERNMENT PROCUREMENT OPERATION, THE UNITED STATES GOVERNMENT THEREBY INCURS NO RESPONSIBILITY NOR ANY OBLIGATION WHATSOEVER; AND THE FACT THAT THE GOVERNMENT MAY HAVE FORMULATED, FURNISHED, OR IN ANY WAY SUPPLIED THE SAID DRAWINGS, SPECIFICATIONS OR OTHER DATA IS NOT TO BE REGARDED BY IMPLICATION OR OTHERWISE AS IN ANY MANNER LICENSING THE HOLDER OR ANY OTHER PERSON OR CORPORATION, OR CONVEYING ANY RIGHTS OR PERMISSION TO MANUFACTURE, USE, OR SELL ANY PATENTED INVENTION THAT MAY IN ANY WAY BE RELATED THERETO.

REVISIONS 02768

SYM	ZONE	DESCRIPTION	DR	CHK	DATE	APPROVED
AG		CHANGED NUMBER OF SHEETS FROM 5 TO 6 PER TDRR 26110.	RAJ		2-15-66	
AH		REVISED PER TDRR 26372	"		3-16-66	
AJ		REVISED PER TDRR 26425	"		3-16-66	
AK		REVISED PER TDRR 26743	"		3-16-66	
AL		REVISED PER TDRR 26798	"		3-16-66	
AM		REVISED PER TDRR 27168	"		4-7-66	
AN		REVISED PER TDRR 27235	"		4-7-66	
AP		REVISED PER TDRR 27345	"		4-7-66	
AR		REVISED PER TDRR 27417	"		4-7-66	
AS		REVISED PER TDRR 27442	"		4-7-66	
AT		REVISED PER TDRR 27719	"		4-20-66	
AU		REVISED PER TDRR 27880	"		4-20-66	
AV		REVISED PER TDRR 27896	"		4-20-66	WK
AW		↕ 28110	"		5-16-66	
AY		↕ 28173	"		5-16-66	
AZ		↕ 28131	"		5-16-66	
BA		↕ 28124	"		5-16-66	
BB		REVISED PER TDRR 28511	"		5-16-66	
BC		" " " 28949	"		5-24-66	
BD		" " " 29222	"		6-8-66	
BE		" " " 29235	"		"	
BF		" " " 29322	"		6-24-66	
BG		" " " 29429	"		"	
BH		" " " 29449	"		"	
BJ		" " " 29335	"		"	
BK		" " " 29619	"		"	
BL		" " " 29696	"		6-29-66	
BM		REVISION STATUS CHANGED	JSD	N.S.	7-29-66	
BN		REVISED PER TDRR 29974	JI	RLW	22 AUG 66	
BP		REVISION STATUS CHANGED	JI	RLW	22 AUG 66	
BR		REVISION STATUS CHANGED	JI	RLW	23 AUG 66	
BS		REVISED PER TDRR 30530	GW	RLW	26 AUG 66	
BT		REVISED PER TDRR 30543	GW	RLW	26 AUG 66	
BU		REVISED PER TDRR 30898.	EH	JI	9 SEPT 66	
BV		REVISED PER TDRR 31241	JJB	RLW	66	
BW		REVISION STATUS CHANGED	JJB	RLW	30 SEPT 66	
BY		REVISED PER TDRR 31341	JJB	RLW	10 OCT 66	
BZ		REVISED PER TDRR 31393	JJB	RLW	10 OCT 66	
CA		REVISED PER TDRR 31593	JJB		25 OCT 66	
CB		REVISED PER TDRR 32187	REF		10 DEC 66	

DASH NO.	P/C	PART NAME	REMARKS	PART NO.	SER NO.	CONT NO.	STYLE	TYPE	MATERIAL	A	B	C	D	E	F	G	H	J	K	L	M	N	P	R	S	T	U	V	W	Y	Z	AA	AB	AC	AD	AE	AF	AG	AH	AJ	AK	AL	AM	AN	AP	AR
599	AC																																													
598	AC																																													
548		CAGING ELECTRONICS, GYRO		2900029-031		NAS-9-497	B	II	NOTE 11C	2.125	.968	1.718	NA	.093	.031	.06	.093	.100 .104	.093	.858	.608	.484	.358	.733	.077	.116	.062	.937	.875	1.343	.125	.781	1.892	.046	NA	NA	.209	.093	.250	1.875	NA	1.840	.046	.23	.16	1.938
547		CSL, CAL AND TEST, SCM/PSAAM		2900895-021		NAS-9-497	B	II	NOTE 11C	4.125	1.812	3.250	NA	.125	.062	.12	.156	.100 .104	.125	1.625	1.140	.890	.640	1.390	.125	.171	.125	1.875	1.687	2.625	.250	1.562	3.843	.093	NA	NA	.359	.125	.437	3.688	NA	3.687	.093	.40	.25	3.875
546		FIX., HAND., C/M AND LEM CDU		2900999-021		NAS-9-497	B	II	NOTE 11C	2.125	.968	1.718	NA	.093	.031	.06	.093	.100 .104	.093	.858	.608	.484	.358	.733	.077	.116	.062	.937	.875	1.343	.125	.781	1.892	.046	NA	NA	.209	.093	.250	1.875	NA	1.840	.046	.23	.16	1.938
544		ADPT MODULE, P.S.A.		1902431-051		NAS-9-497	B	II	NOTE 11C	2.125	.968	1.718	NA	.093	.031	.06	.093	.100 .104	.093	.858	.608	.484	.358	.733	.077	.116	.062	.937	.875	1.343	.125	.781	1.892	.046	NA	NA	.209	.093	.250	1.875	NA	1.840	.046	.23	.16	1.938
541	AC	FIXTURE, MOUNTING, IMU		2900000-021		NAS 9-497	B	II	NOTE 11C	4.125	1.812	3.250	NA	.125	.062	.12	.156	.100 .104	.125	1.625	1.140	.890	.640	1.390	.125	.171	.125	1.875	1.687	2.625	.250	1.562	3.843	.093	NA	NA	.359	.125	.437	3.688	NA	3.687	.093	.40	.25	3.875
543	AC	PANEL, MONITOR		2900031-041		NAS9-497	B	II	NOTE 11C	2.125	.968	1.718	NA	.093	.031	.06	.093	.100 .104	.093	.858	.608	.484	.358	.733	.077	.116	.062	.937	.875	1.343	.125	.781	1.892	.046	NA	NA	.209	.093	.250	1.875	NA	1.840	.046	.23	.25	1.938
542	AC	BATTERY PACK, LIFTING		2900812-021		NAS9-497	B	II	NOTE 11C	2.125	.968	1.718	NA	.093	.031	.06	.093	.100 .104	.093	.858	.608	.484	.358	.733	.077	.116	.062	.937	.875	1.343	.125	.781	1.892	.046	NA	NA	.209	.093	.250	1.875	NA	1.840	.046	.23	.16	1.938
540	AC	ADPT, TEST POINT, P.S.A.		2900037-031		NAS 9-497	B	II	NOTE 11C	2.125	.968	1.718	NA	.093	.031	.06	.093	.100 .104	.093	.858	.608	.484	.358	.733	.077	.116	.062	.937	.875	1.343	.125	.781	1.892	.046	NA	NA	.209	.093	.250	1.875	NA	1.840	.046	.23	.16	1.938
539	AC	ANNUNCIATOR PANEL AND EYEPIECE STORAGE ASSEMBLY		1021255-041		↕	A	I	NOTE 11B	2.000	1.312	1.906	1.375	.078	.048	.078	.093	NA	NA	1.125	.750	.593	.453	1.015	.062	.187	.078	.875	.718	1.375	.218	NA	NA	.048	.031	.875	.305	.078	.531	1.906	.078	NA	.078	.531	.187	NA
538	AC	ANNUNCIATOR PANEL AND EYEPIECE STORAGE ASSEMBLY		1021255-031		↕	A	I	NOTE 11B	2.000	1.312	1.906	1.375	.078	.048	.078	.093	NA	NA	1.125	.750	.593	.453	1.015	.062	.187	.078	.875	.718	1.375	.218	NA	NA	.048	.031	.875	.305	.078	.531	1.906	.078	NA	.078	.531	.187	NA
537	AC	TEST SELECTOR		2900028-031		↕	B	II	NOTE 11C	2.125	.968	1.718	NA	.093	.031	.06	.093	.100 .104	.093	.858	.608	.484	.358	.733	.077	.116	.062	.937	.875	1.343	.125	.781	1.892	.046	NA	NA	.209	.093	.250	1.875	NA	1.840	.046	.23	.16	1.938
536	AC	ANALYZER, OPTICS-INERTIAL		2900023-041		↕	B	II	NOTE 11C	4.125	1.812	3.250	NA	.125	.062	.12	.156	.100 .104	.125	1.625	1.140	.890	.640	1.390	.125	.171	.125	1.875	1.687	2.625	.250	1.562	3.843	.093	NA	NA	.359	.125	.437	3.688	NA	3.687	.093	.40	.25	3.875
535	AC	CONT, TEMP, PORTABLE		2900060-021		↕	B	II	NOTE 11C	2.125	.968	1.718	NA	.093	.031	.06	.093	.100 .104	.093	.858	.608	.484	.358	.733	.077	.116	.062	.937	.875	1.343	.125	.781	1.892	.046	NA	NA	.209	.093	.250	1.875	NA	1.840	.046	.23	.16	1.938
534	AC	COMPUTER CONT & RETICLE DIMMER		6014512-021		↕	A	I	NOTE 11B	2.000	1.312	1.906	1.375	.078	.048	.078	.093	NA	NA	1.125	.750	.593	.453	1.015	.062	.187	.078	.875	.718	1.375	.218	NA	NA	.048	.031	.875	.305	.078	.531	1.906	.078	NA	.078	.531	.187	NA
533	AC	ADPT MODULE, P.S.A.		1902431-041		↕	B	II	NOTE 11C	2.125	.968	1.718	NA	.093	.031	.06	.093	.100 .104	.093	.858	.608	.484	.358	.733	.077	.116	.062	.937	.875	1.343	.125	.781	1.892	.046	NA	NA	.209	.093	.250	1.875	NA	1.840	.046	.23	.16	1.938
532	AC	TRAY BREAKOUT, 105 PIN		1900807-021		↕	↕	↕	↕	4.125	1.812	3.250	↕	.125	.062	.12	.156	.100 .104	.125	1.625	1.140	.890	.640	1.390	.125	.171	.125	1.875	1.687	2.625	.250	1.562	3.843	.093	↕	↕	.359	.125	.437	3.688	↕	3.687	.093	.40	.25	3.875
531	AC	TRAY BREAKOUT, 84 PIN		1900806-021		↕	↕	↕	↕	4.125	1.812	3.250	↕	.125	.062	.12	.156	.100 .104	.125	1.625	1.140	.890	.640	1.390	.125	.171	.125	1.875	1.687	2.625	.250	1.562	3.843	.093	↕	↕	.359	.125	.437	3.688	↕	3.687	.093	.40	.25	3.875
530	AC	HEAT SINK - TRAY EXTENDER		1900808-021		↕	↕	↕	↕	2.125	.968	1.718	↕	.093	.031	.06	.093	.100 .104	.093	.858	.608	.484	.358	.733	.077	.116	.062	.937	.875	1.343	.125	.781	1.892	.046	↕	↕	.209	.093	.250	1.875	↕	1.840	.046	.23	.16	1.938
529	AC	TESTER, FAILURE INDICATOR		1900809-021		↕	↕	↕	↕	2.125	.968	1.718	NA	.093	.031	.06	.093	.100 .104	.093	.858	.608	.484	.358	.733	.077	.116	.062	.937	.875	1.343	.125	.781	1.892	.046	NA	NA	.209	.093	.250	1.875	NA	1.840	.046	.23	.16	1.938
527	AC	FIX., MOUNTING, G AND N	(-144)	1902204-021		↕	↕	↕	↕	FOR DIMENSIONS, SEE DASH 500 VALUES BELOW																																				
526	AC	FIX., MOUNTING, G AND N	(-144)	2900067-031		↕	↕	↕	↕																																					
525	AC	PORTABLE TEMP. CONTROLLER		1900496-021		↕	B	II	NOTE 11C	3.000	1.937	2.437	2.312	.125	.031	.125	.156	.125	.125	1.718	1.187	.968	.749	1.452	.093	.295	.090	1.312	1.00	2.000	.250	1.687	2.750	.062	N/A	N/A	.463	.125	.562	2.437	.140	2.562	.090	.468	.359	2.750
524	AC	POWER, SERVO AND THERMOCOUPLE ASSEMBLY C/M		2010743		↕	A	I	NOTE 11B	2.125	.968	1.718	NA	.093	.031	.06	.093	NA	NA	.858	.608	.484	.358	.733	.062	.140	.062	NA	.968	1.450	.125	NA	1.720	.046	.03	NA	.210	NA	NA	NA	.070	NA	.046	.32	.16	NA
523	AC	PULSE TORQUE AND THERMOCOUPLE ASSEMBLY-LEM		6010656		↕	↕	↕	↕	FOR DIMENSIONS, SEE DASH 508 VALUES BELOW																																				
522	AC	COUPLING DATA UNIT AND THERMOCOUPLE ASSEMBLY - LEM		2010744		↕	↕	↕	↕																																					
521	AC	COUPLING DATA UNIT AND THERMOCOUPLE ASSEMBLY - C/M		2010744		↕	↕	↕	↕																																					
520	AC	PIPA ELECTRONICS AND THERMOCOUPLE ASSEMBLY		2010745		↕	A	I	NOTE 11B																																					
519	AC	FIXTURE, HANDLING, LEM-PSA	(-141)	6900129-011		↕	B	II	NOTE 11C	FOR DIMENSIONS, SEE DASH 504 VALUES BELOW																																				
518	AC	JUNCTION BOX, GSE-PSA	(-144)	1901933-031		↕	B	II	NOTE 11C	FOR DIMENSIONS, SEE DASH 500 VALUES BELOW																																				
517	AC	FIX., HAND., OPTICS INSTL.	(-141)	2901380-011		↕	B	II	NOTE 11C	FOR DIMENSIONS SEE DASH 502 VALUES BELOW																																				
516	AC	POWER, SERVO AND THERMOCOUPLE ASSEMBLY-LEM		6010655		NAS 9-497	A	I	NOTE 11B	FOR DIMENSIONS SEE DASH 508 VALUES BELOW																																				
514	AC	SIGNAL COND. ASSY LEM OPER.	(-100)	6007013		NAS-9-497	A	I	NOTE 11B	FOR DIMENSIONS, SEE DASH 508 VALUES BELOW																																				
513	↕	JUMPER, BY-PASS	(-141)	1021616		↕	B	II	NOTE 11C	2.125	.968	1.718	NA	.093	.031	.06	.093	.100 .104	.093	.858	.608	.484	.358	.733	.077	.116	.062	.937	.875	1.343	.125	.781	1.892	.046	NA	NA	.209	.093	.250	1.875	NA	1.840	.046	.23	.16	1.938
512	↕	COUPLING DATA UNIT ASSEMBLY C/M	(-100)	2007322-011		↕	A	I	NOTE 11B	FOR DIMENSIONS, SEE DASH 508 VALUES BELOW																																				
511	↕	COUPLING DATA UNIT ASSEMBLY - LEM	(-100)	2007322-021		↕																																								
510	↕	BATTERY POWER PACK	(-144)	1900011-041		↕	B	II	NOTE 11C	FOR DIMENSIONS, SEE DASH 500 VALUES BELOW																																				
509	↕	JUNCTION BOX, P.S.A./G.S.E.	(-144)	1902195-021		↕	B	II	NOTE 11C																																					
508	↕	NAVIGATION BASE ASSEMBLY - LEM	✓ (-101)	6899980		↕	A	I	NOTE 11B	2.000	1.312	1.906	1.375	.078	.048	.078	.093	NA	NA	1.125	.750	.593	.453	1.015	.062	.187	.078	.875	.718	1.375	.218	NA	NA	.048	.031	.875	.305	.078	.531	1.906	.078	NA	.078	.531	.187	NA
507	↕	CSL, COOL. AND PWR, G AND N	(-144)	1902134-041		↕	B	II	NOTE 11C	FOR DIMENSIONS, SEE DASH 500 VALUES BELOW																																				
506	↕	BREAKOUT BOX, CABLE ADAPTER	(-141)	2901011-011		↕	↕	↕	↕	2.125	.968	1.718	NA	.093	.031	.06	.093	.100 .104	.093	.858	.608	.484	.358	.733	.077	.116	.062	.937	.875	1.343	.125	.781	1.892	.046	NA	NA	.209	.093	.250	1.875	NA	1.840	.046	.23	.16	1.938
505	↕	MONITOR AND CONTROL, TEMP	(-141)	2900026-021		↕	↕	↕	↕																																					
504	↕	PWR SUP, GUIDANCE SYSTEM	✓ (-141)	1900033-021		↕	↕	↕	↕																																					
503	↕	CONTROL, GIMBAL POSITION	(-141)	2900036-021		↕	↕	↕	↕																																					
502	↕	ADPT, TEST POINT, PTA/PEA.	(-141)	2900145-021		↕	↕	↕	↕																																					
501	↕	MOUNTING PLATE, COMPONENT	(-144)	6900007-031		↕	↕	↕	↕	FOR DIMENSIONS, SEE DASH 500 VALUES BELOW																																				
500	AC	MOUNTING PLATE, COMPONENT	✓ (-144)	2900677-021		NAS-9-497	B	II	NOTE 11C	4.125	1.812	3.250	NA	.125	.062	.12	.156	.100 .104	.125	1.625	1.140	.890	.640	1.390	.125	.171	.125	1.875	1.687	2.625	.250	1.562	3.843	.093	NA	NA	.359	.125	.437	3.688	NA	3.687	.093	.40	.25	3.875

AC ELECTRONICS DASH NUMBERS

(AG) THIS SHEET ADDED

NOTES FOR TABLE

STYLE A IS FOR G & N SYSTEM
STYLE B IS FOR GROUND SUPPORT EQUIPMENT
TYPE I IS WITHOUT MOUNTING HOLES
TYPE II IS WITH MOUNTING HOLES

QTY REQD	PART OR IDENTIFYING NO.	MATERIAL OR NOTES	NOMENCLATURE OR DESCRIPTION	FIND NO.

LIST OF MATERIALS

NEXT ASSY	USED ON
AS APPLICABLE	

APPLICATION

UNLESS OTHERWISE SPECIFIED
DIMENSIONS ARE IN INCHES
CAPACITOR VALUES ARE IN µf
RESISTOR VALUES ARE IN OHMS
TOLERANCES ON
FRACTIONS ± — DECIMALS ±.005 ANGLES ± —
DO NOT SCALE THIS DRAWING

MATERIAL
SEE NOTE 11

MIT
INSTRUMENTATION LAB
CAMBRIDGE, MASS.

DRAWN R. A. Jones 2-15-66
CHECKED 2-15-66
APPROVED
APPROVED
APPROVED MIT A. C. METZGER 5-18-66
APPROVED MSC
DATE

MANNED SPACECRAFT CENTER
HOUSTON, TEXAS

NAMEPLATES,
APOLLO G&N-GSE
(STANDARDS)

CODE IDENT NO. 80230 SIZE E DRAWING NO. 1004260

SCALE NONE SHEET 6 OF 6

NOTICE — WHEN GOVERNMENT DRAWINGS, SPECIFICATIONS, OR OTHER DATA ARE USED FOR ANY PURPOSE OTHER THAN IN CONNECTION WITH A DEFINITELY RELATED GOVERNMENT PROCUREMENT OPERATION, THE UNITED STATES GOVERNMENT THEREBY INCURS NO RESPONSIBILITY NOR ANY OBLIGATION WHATSOEVER; AND THE FACT THAT THE GOVERNMENT MAY HAVE FORMULATED, FURNISHED, OR IN ANY WAY SUPPLIED THE SAID DRAWINGS, SPECIFICATIONS OR OTHER DATA IS NOT TO BE REGARDED BY IMPLICATION OR OTHERWISE AS IN ANY MANNER LICENSING THE HOLDER OR ANY OTHER PERSON OR CORPORATION, OR CONVEYING ANY RIGHTS OR PERMISSION TO MANUFACTURE, USE, OR SELL ANY PATENTED INVENTION THAT MAY IN ANY WAY BE RELATED THERETO.

REVISIONS						02768
SYM	ZONE	DESCRIPTION	DR	CHK	DATE	APPROVED
AG		CHANGED NUMBER OF SHEETS FROM 5 TO 6 PER TDRR 26110.	RAJ		2-15-66	
AH		REVISED PER TDRR 26372	"		3-16-66	
AJ		REVISED PER TDRR 26425	"		3-16-66	
AK		REVISED PER TDRR 26743	"		3-16-66	
AL		REVISED PER TDRR 26798	"		3-16-66	
AM		REVISED PER TDRR 27168	"		4-7-66	
AN		REVISED PER TDRR 27235	"		4-7-66	
AP		REVISED PER TDRR 27345	"		4-7-66	
AR		REVISED PER TDRR 27417	"		4-7-66	
AS		REVISED PER TDRR 27442	"		4-7-66	
AT		REVISED PER TDRR 27719	"		4-20-66	
AU		REVISED PER TDRR 27880	"		4-20-66	
AV		REVISED PER TDRR 27896	"		4-20-66	
AW		↕ 28110	"		5-16-66	
AY		↕ 28173	"		5-16-66	
AZ		↕ 28131	"		5-16-66	
BA		↕ 28124	"		5-16-66	
BB		REVISED PER TDRR 28511	"		5-16-66	
BC		" " " 28949	"		5-24-66	
BD		" " " 29222	"		6-8-66	
BE		" " " 29235	"		"	
BF		" " " 29322	"		6-24-66	
BG		" " " 29429	"		"	
BH		" " " 29449	"		"	
BJ		" " " 29335	"		"	
BK		" " " 29619	"		"	
BL		" " " 29696	"		6-29-66	
BM		REVISION STATUS CHANGED	JSD	N.S.	7-29-66	
BN		REVISED PER TDRR 29974	JL	RLW	22 AUG 66	
BP		REVISION STATUS CHANGED	JL	RLW	22 AUG 66	
BR		REVISION STATUS CHANGED	JL	RLW	23 AUG 66	
BS		REVISED PER TDRR 30530	GW	RLW	26 AUG 66	
BT		REVISED PER TDRR 30543	GW	RLW	26 AUG 66	
BU		REVISED PER TDRR 30898	EH	JL	9 SEPT 66	
BV		REVISED PER TDRR 31241	JJB	RLW	[illegible] 66	
BW		REVISION STATUS CHANGED	JJB	RLW	30 SEP 66	
BY		REVISED PER TDRR 31341	JJB	RLW	10 OCT 66	
BZ		REVISED PER TDRR 31393	JJB	RLW	10 OCT 66	
CA		REVISED PER TDRR 31593	JJB		25 OCT 66	
CB		REVISED PER TDRR 32187	REF		10 DEC 66	

DASH NO.	P/C
599	AC
598	AC

DASH NO.	P/C	PART NAME	REMARKS	PART NO.	SER NO.	CONT NO.	STYLE	TYPE	MATERIAL	A	B	C	D	E	F	G	H	J	K	L	M	N	P	R	S	T	U	V	W	Y	Z	AA	AB	AC	AD	AE	AF	AG	AH	AJ	AK	AL	AM	AN	AP	AR
548		CAGING ELECTRONICS, GYRO		2900029-031		NAS-9-497	B	II	NOTE 11C	2.125	.968	1.718	NA	.093	.031	.06	.093	.100 .104	.093	.858	.608	.484	.358	.733	.077	.116	.062	.937	.875	1.343	.125	.781	1.892	.046	NA	NA	.209	.093	.250	1.875	NA	1.840	.046	.23	.16	1.938
547		CSL, CAL AND TEST, SCM/PSAAM		2900895-021		NAS-9-497	B	II	NOTE 11C	4.125	1.812	3.250	NA	.125	.062	.12	.156	.100 .104	.125	1.625	1.140	.890	.640	1.390	.125	.171	.125	1.875	1.687	2.625	.250	1.562	3.843	.093	NA	NA	.359	.125	.437	3.688	NA	3.687	.093	.40	.25	3.875
546		FIX., HAND., C/M AND LEM CDU		2900999-021		NAS-9-497	B	II	NOTE 11C	2.125	.968	1.718	NA	.093	.031	.06	.093	.100 .104	.093	.858	.608	.484	.358	.733	.077	.116	.062	.937	.875	1.343	.125	.781	1.892	.046	NA	NA	.209	.093	.250	1.875	NA	1.840	.046	.23	.16	1.938
544		ADPT MODULE, P.S.A.		1902431-051		NAS-9-497	B	II	NOTE 11C	2.125	.968	1.718	NA	.093	.031	.06	.093	.100 .104	.093	.858	.608	.484	.358	.733	.077	.116	.062	.937	.875	1.343	.125	.781	1.892	.046	NA	NA	.209	.093	.250	1.875	NA	1.840	.046	.23	.16	1.938
541	AC	FIXTURE, MOUNTING, IMU		2900000-021		NAS 9-497	B	II	NOTE 11C	4.125	1.812	3.250	NA	.125	.062	.12	.156	.100 .104	.125	1.625	1.140	.890	.640	1.390	.125	.171	.125	1.875	1.687	2.625	.250	1.562	3.843	.093	NA	NA	.359	.125	.437	3.688	NA	3.687	.093	.40	.25	3.875
543	AC	PANEL, MONITOR		2900031-041		NAS9-497	B	II	NOTE 11C	2.125	.968	1.718	NA	.093	.031	.06	.093	.100 .104	.093	.858	.608	.484	.358	.733	.077	.116	.062	.937	.875	1.343	.125	.781	1.892	.046	NA	NA	.209	.093	.250	1.875	NA	1.840	.046	.23	.25	1.938
542	AC	BATTERY PACK, LIFTING		2900812-021		NAS9-497	B	II	NOTE 11C	2.125	.968	1.718	NA	.093	.031	.06	.093	.100 .104	.093	.858	.608	.484	.358	.733	.077	.116	.062	.937	.875	1.343	.125	.781	1.892	.046	NA	NA	.209	.093	.250	1.875	NA	1.840	.046	.23	.16	1.938
540	AC	ADPT, TEST POINT, P.S.A.		2900037-031		NAS 9-497	B	II	NOTE 11C	2.125	.968	1.718	NA	.093	.031	.06	.093	.100 .104	.093	.858	.608	.484	.358	.733	.077	.116	.062	.937	.875	1.343	.125	.781	1.892	.046	NA	NA	.209	.093	.250	1.875	NA	1.840	.046	.23	.16	1.938
539	AC	ANNUNCIATOR PANEL AND EYEPIECE STORAGE ASSEMBLY		1021255-041		↕	A	I	NOTE 11B	2.000	1.312	1.906	1.375	.078	.048	.078	.093	NA	NA	1.125	.750	.593	.453	1.015	.062	.187	.078	.875	.718	1.375	.218	NA	NA	.048	.031	.875	.305	.078	.531	1.906	.078	NA	.078	.531	.187	NA
538	AC	ANNUNCIATOR PANEL AND EYEPIECE STORAGE ASSEMBLY		1021255-031		↕	A	I	NOTE 11B	2.000	1.312	1.906	1.375	.078	.048	.078	.093	NA	NA	1.125	.750	.593	.453	1.015	.062	.187	.078	.875	.718	1.375	.218	NA	NA	.048	.031	.875	.305	.078	.531	1.906	.078	NA	.078	.531	.187	NA
537	AC	TEST SELECTOR		2900[illegible]-031		↕	B	II	NOTE 11C	2.125	.968	1.718	NA	.093	.031	.06	.093	.100 .104	.093	.858	.608	.484	.358	.733	.077	.116	.062	.937	.875	1.343	.125	.781	1.892	.046	NA	NA	.209	.093	.250	1.875	NA	1.840	.046	.23	.16	1.938
536	AC	ANALYZER, OPTICS-INERTIAL		2900023-041		↕	B	II	NOTE 11C	4.125	1.812	3.250	NA	.125	.062	.12	.156	.100 .104	.125	1.625	1.140	.890	.640	1.390	.125	.171	.125	1.875	1.687	2.625	.250	1.562	3.843	.093	NA	NA	.359	.125	.437	3.688	NA	3.687	.093	.40	.25	3.875
535	AC	CONT, TEMP, PORTABLE		2900060-02		↕	B	II	NOTE 11C	2.125	.968	1.718	NA	.093	.031	.06	.093	.100 .104	.093	.858	.608	.484	.358	.733	.077	.116	.062	.937	.875	1.343	.125	.781	1.892	.046	NA	NA	.209	.093	.250	1.875	NA	1.840	.046	.23	.16	1.938
534	AC	COMPUTER CONT & RETICLE DIMMER		6014512-021		↕	A	I	NOTE 11B	2.000	1.312	1.906	1.375	.078	.048	.078	.093	NA	NA	1.125	.750	.593	.453	1.015	.062	.187	.078	.875	.718	1.375	.218	NA	NA	.048	.031	.875	.305	.078	.531	1.906	.078	NA	.078	.531	.187	NA
533	AC	ADPT MODULE, P.S.A.		1902431-041		↕	B	II	NOTE 11C	2.125	.968	1.718	NA	.093	.031	.06	.093	.100 .104	.093	.858	.608	.484	.358	.733	.077	.116	.062	.937	.875	1.343	.125	.781	1.892	.046	NA	NA	.209	.093	.250	1.875	NA	1.840	.046	.23	.16	1.938
532	AC	TRAY BREAKOUT, 105 PIN		1900807-021		↕	↕	↕	↕	4.125	1.812	3.250	↕	.125	.062	.12	.156	.100 .104	.125	1.625	1.140	.890	.640	1.390	.125	.171	.125	1.875	1.687	2.625	.250	1.562	3.843	.093	↕	↕	.359	.125	.437	3.688	↕	3.687	.093	.40	.25	3.875
531	AC	TRAY BREAKOUT, 84 PIN		1900806-021		↕	↕	↕	↕	4.125	1.812	3.250	↕	.125	.062	.12	.156	.100 .104	.125	1.625	1.140	.890	.640	1.390	.125	.171	.125	1.875	1.687	2.625	.250	1.562	3.843	.093	↕	↕	.359	.125	.437	3.688	↕	3.687	.093	.40	.25	3.875
530	AC	HEAT SINK - TRAY EXTENDER		1900808-021		↕	↕	↕	↕	2.125	.968	1.718	↕	.093	.031	.06	.093	.100 .104	.093	.858	.608	.484	.358	.733	.077	.116	.062	.937	.875	1.343	.125	.781	1.892	.046	↕	↕	.209	.093	.250	1.875	↕	1.840	.046	.23	.16	1.938
529	AC	TESTER, FAILURE INDICATOR		1900809-021		↕	↕	↕	↕	2.125	.968	1.718	NA	.093	.031	.06	.093	.100 .104	.093	.858	.608	.484	.358	.733	.077	.116	.062	.937	.875	1.343	.125	.781	1.892	.046	NA	NA	.209	.093	.250	1.875	NA	1.840	.046	.23	.16	1.938
527	AC	FIX., MOUNTING, G AND N	(-144)	1902204-021		↕	↕	↕	↕	FOR DIMENSIONS, SEE DASH 500 VALUES BELOW																																				
526	AC	FIX., MOUNTING, G AND N	(-144)	2900067-031		↕	↕	↕	↕																																					
525	AC	PORTABLE TEMP. CONTROLLER		1900496-021		↕	B	II	NOTE 11C	3.000	1.937	2.437	2.312	.125	.031	.125	.156	.125	.125	1.718	1.187	.968	.749	1.452	.093	.295	.090	1.312	1.00	2.000	.250	1.687	2.750	.062	N/A	N/A	.463	.125	.562	2.437	.140	2.562	.090	.468	.359	2.750
524	AC	POWER, SERVO AND THERMOCOUPLE ASSEMBLY C/M		2010743		↕	A	I	NOTE 11B	2.125	.968	1.718	NA	.093	.031	.06	.093	NA	NA	.858	.608	.484	.358	.733	.062	.140	.062	NA	.968	1.450	.125	NA	1.720	.046	.03	NA	.210	NA	NA	NA	.070	NA	.046	.32	.16	NA
523	AC	PULSE TORQUE AND THERMOCOUPLE ASSEMBLY-LEM		6010656		↕	↕	↕	↕	FOR DIMENSIONS, SEE DASH 508 VALUES BELOW																																				
522	AC	COUPLING DATA UNIT AND THERMOCOUPLE ASSEMBLY - LEM		2010744		↕	↕	↕	↕																																					
521	AC	COUPLING DATA UNIT AND THERMOCOUPLE ASSEMBLY - C/M		2010744		↕	↕	↕	↕																																					
520	AC	PIPA ELECTRONICS AND THERMOCOUPLE ASSEMBLY		2010745		↕	A	I	NOTE 11B																																					
519	AC	FIXTURE, HANDLING, LEM-PSA	(-141)	6900129-011		↕	B	II	NOTE 11C	FOR DIMENSIONS, SEE DASH 504 VALUES BELOW																																				
518	AC	JUNCTION BOX, GSE-PSA	(-144)	1901933-031		↕	B	II	NOTE 11C	FOR DIMENSIONS, SEE DASH 500 VALUES BELOW																																				
517	AC	FIX., HAND., OPTICS INSTL.	(-141)	2901380-011		↕	B	II	NOTE 11C	FOR DIMENSIONS SEE DASH 502 VALUES BELOW																																				
516	AC	POWER, SERVO AND THERMOCOUPLE ASSEMBLY-LEM		6010655		NAS 9-497	A	I	NOTE 11B	FOR DIMENSIONS SEE DASH 508 VALUES BELOW																																				
514	AC	SIGNAL COND. ASSY LEM OPER.	(-100)	6007013		NAS-9-497	A	I	NOTE 11B	FOR DIMENSIONS, SEE DASH 508 VALUES BELOW																																				
513	↕	JUMPER, BY-PASS	(-141)	1021616		↕	B	II	NOTE 11C	2.125	.968	1.718	NA	.093	.031	.06	.093	.100 .104	.093	.858	.608	.484	.358	.733	.077	.116	.062	.937	.875	1.343	.125	.781	1.892	.046	NA	NA	.209	.093	.250	1.875	NA	1.840	.046	.23	.16	1.938
512	↕	COUPLING DATA UNIT ASSEMBLY C/M	(-100)	2007322 - 011		↕	A	I	NOTE 11B	FOR DIMENSIONS, SEE DASH 508 VALUES BELOW																																				
511	↕	COUPLING DATA UNIT ASSEMBLY - LEM	(-100)	2007322 - 021		↕																																								
510	↕	BATTERY POWER PACK	(-144)	1900011 - 041		↕	B	II	NOTE 11C	FOR DIMENSIONS, SEE DASH 500 VALUES BELOW																																				
509	↕	JUNCTION BOX, P.S.A./G.S.E.	(-144)	1902195 - 021		↕	B	II	NOTE-11C																																					
508	↕	NAVIGATION BASE ASSEMBLY - LEM	✓ (-101)	6899980		↕	A	I	NOTE 11B	2.000	1.312	1.906	1.375	.078	.048	.078	.093	NA	NA	1.125	.750	.593	.453	1.015	.062	.187	.078	.875	.718	1.375	.218	NA	NA	.048	.031	.875	.305	.078	.531	1.906	.078	NA	.078	.531	.187	NA
507	↕	CSL, COOL, AND PWR, G AND N	(-144)	1902134 - 041		↕	B	II	NOTE 11C	FOR DIMENSIONS, SEE DASH 500 VALUES BELOW																																				
506	↕	BREAKOUT BOX, CABLE ADAPTER	(-141)	2901011 - 011		↕	↕	↕	↕	2.125	.968	1.718	NA	.093	.031	.06	.093	.100 .104	.093	.858	.608	.484	.358	.733	.077	.116	.062	.937	.875	1.343	.125	.781	1.892	.046	NA	NA	.209	.093	.250	1.875	NA	1.840	.046	.23	.16	1.938
505	↕	MONITOR AND CONTROL, TEMP	(-141)	2900026 - 021		↕	↕	↕	↕																																					
504	↕	PWR SUP, GUIDANCE SYSTEM	✓ (-141)	1900033-021		↕	↕	↕	↕																																					
503	↕	CONTROL, GIMBAL POSITION	(-141)	2900036-021		↕	↕	↕	↕																																					
502	↕	ADPT, TEST POINT, PTA/PEA.	(-141)	2900145-021		↕	↕	↕	↕																																					
501	↕	MOUNTING PLATE, COMPONENT	(-144)	6900007-031		↕	↕	↕	↕	FOR DIMENSIONS, SEE DASH 500 VALUES BELOW																																				
500	AC	MOUNTING PLATE, COMPONENT	✓ (-144)	2900677-021		NAS-9-497	B	II	NOTE 11C	4.125	1.812	3.250	NA	.125	.062	.12	.156	.100 .104	.125	1.625	1.140	.890	.640	1.390	.125	.171	.125	1.875	1.687	2.625	.250	1.562	3.842	.093	NA	NA	.359	.125	.437	3.688	NA	3.687	.093	.40	.25	3.875

A C ELECTRONICS DASH NUMBERS

NOTES FOR TABLE
STYLE A IS FOR G & N SYSTEM
STYLE B IS FOR GROUND SUPPORT EQUIPMENT
TYPE I IS WITHOUT MOUNTING HOLES
TYPE II IS WITH MOUNTING HOLES

(AG) THIS SHEET ADDED

QTY REQD	PART OR IDENTIFYING NO.	MATERIAL OR NOTES	NOMENCLATURE OR DESCRIPTION	FIND NO.

LIST OF MATERIALS

AS APPLICABLE	
NEXT ASSY	USED ON
APPLICATION	

UNLESS OTHERWISE SPECIFIED
DIMENSIONS ARE IN INCHES
CAPACITOR VALUES ARE IN μf
RESISTOR VALUES ARE IN OHMS
TOLERANCES ON
FRACTIONS DECIMALS ANGLES
± — ±.005 ± —
DO NOT SCALE THIS DRAWING

MATERIAL
SEE NOTE 11

MIT
INSTRUMENTATION LAB
CAMBRIDGE, MASS.

DRAWN R. A. Jones 2-15-66
CHECKED W. L. Chandler 2-15-66
APPROVED
APPROVED
APPROVED MIT A. C. METZGER 5-18-66
APPROVED MSC
DATE

MANNED SPACECRAFT CENTER
HOUSTON, TEXAS

NAMEPLATES,
APOLLO G&N-GSE
(STANDARDS)

CODE IDENT NO. 80230
SIZE E
DRAWING NO. 1004260
SCALE NONE
SHEET 6 OF 6

NOTICE - WHEN GOVERNMENT DRAWINGS, SPECIFICATIONS, OR OTHER DATA ARE USED FOR ANY PURPOSE OTHER THAN IN CONNECTION WITH A DEFINITELY RELATED GOVERNMENT PROCUREMENT OPERATION, THE UNITED STATES GOVERNMENT THEREBY INCURS NO RESPONSIBILITY NOR ANY OBLIGATION WHATSOEVER; AND THE FACT THAT THE GOVERNMENT MAY HAVE FORMULATED, FURNISHED, OR IN ANY WAY SUPPLIED THE SAID DRAWINGS, SPECIFICATIONS, OR OTHER DATA IS NOT TO BE REGARDED BY IMPLICATION OR OTHERWISE AS IN ANY MANNER LICENSING THE HOLDER OR ANY OTHER PERSON OR CORPORATION, OR CONVEYING ANY RIGHTS OR PERMISSION TO MANUFACTURE, USE, OR SELL ANY PATENTED INVENTION THAT MAY IN ANY WAY BE RELATED THERETO.

NOTES:

1. INTERPRET DRAWING IN ACCORDANCE WITH STANDARDS PRESCRIBED IN MIL-D-70327.
2. DIMENSIONS ON EACH VIEW APPLY TO ALL VIEWS. (WITH THE EXCEPTION OF MOUNTING HOLES).
3. FORMATS ILLUSTATED WILL BE APPLICABLE TO ALL ITEMS REQUIRING NAMEPLATES BELOW END ITEM DESIGNATION (SYSTEMS, ASSEMBLIES, ETC.)
4. PLATE BACKGROUND TO BE LUSTERLESS BLACK PER FED-STD-595, COLOR 37038. BORDER, MARKING AND LETTERING TO BE NATURAL METAL,(ANODIZED ALUMINUM).
5. MARKING METHOD TO BE DIE STAMPING, ETCHING OR ENGRAVING IN ACCORDANCE WITH MIL P 19834.
6. LETTERING STYLE TO BE GOTHIC,(SANS SERIFS), AND NUMBERS TO BE ARABIC.
7. WHERE LOCATING DIMENSIONS ARE NOT SHOWN, CHARACTERS SHALL BE SYMMETRICALLY POSITIONED.
8. IDENTIFY WITH DRAWING NUMBER PER ND1002019.
9. WHEN "AUTO MARK" METAL MARKING TYPEWRITER IS USED TO ADD DATA TO BLANK SPACES, TYPE SIZE IS TO BE SELECTED FROM DIMENSIONS U, AC AND AM.
10. NASA SYMBOL IS TO BE PROPORTIONAL TO NAMEPLATE IN RATIO OF 1 TO 5 WITH DIMENSION A VALUE AND IS TO HAVE NATURAL BACKGROUND. NASA SYMBOL LETTERS LETTERING AND FEATHER TO BE BLACK,(OR WHITE FOR SILK SCREENING). WHERE BLACK FEATHER PROTRUDES INTO BLACK BACKGROUND, A MINIMUM OUTLINE OF NATURAL BACKGROUND SHALL EXIST.
11. NAMEPLATES WILL BE APPLIED BY METHODS LISTED BELOW, SHOWN IN ORDER OF PREFERENCE, (I.E., FOR RELIABILITY AND WEIGHT).
    A - STENCIL OR SILK SCREEN DIRECTLY ON EQUIPMENT USING INK PER SCD 1010920,(WHITE OR BLACK).
    B - ALUMINUM FOIL,(STYLE A OR B, TYPE I):
    FOIL SHALL BE .0030 ± .0005 THICK PER MIL-A-148.
    FOIL SHALL HAVE NO ADHESIVE BACKING.
    FOIL SHALL BE BONDED PER ND 1002219,(METHOD II).
    FOIL SHALL BE CLEAR ANODIZED PER MIL-A-8625, TYPE II.
    C - PLATE, (STYLE A OR B, TYPE II):
    MATERIAL: QQ-A-250, TEMPER O OR H14, TYPE 1100, ALUMINUM ALLOY, .032 THICK.
    ANODIZE PER MIL-A-8625, TYPE II.
    ALUMINUM PLATE MUST BE FREE FROM BURRS AND SHARP CORNERS, MOUNTED WITH APPLICABLE SIZE FASTENERS.
12. NAMEPLATES SHALL BE CAPABLE OF MEETING APPLICABLE REQUIREMENTS OF MIL-M-13231.
13. ON DIMENSION TABLES SHOWN ON PAGES 2, 3, 4 AND 5, NA MEANS, "NOT APPLICABLE".

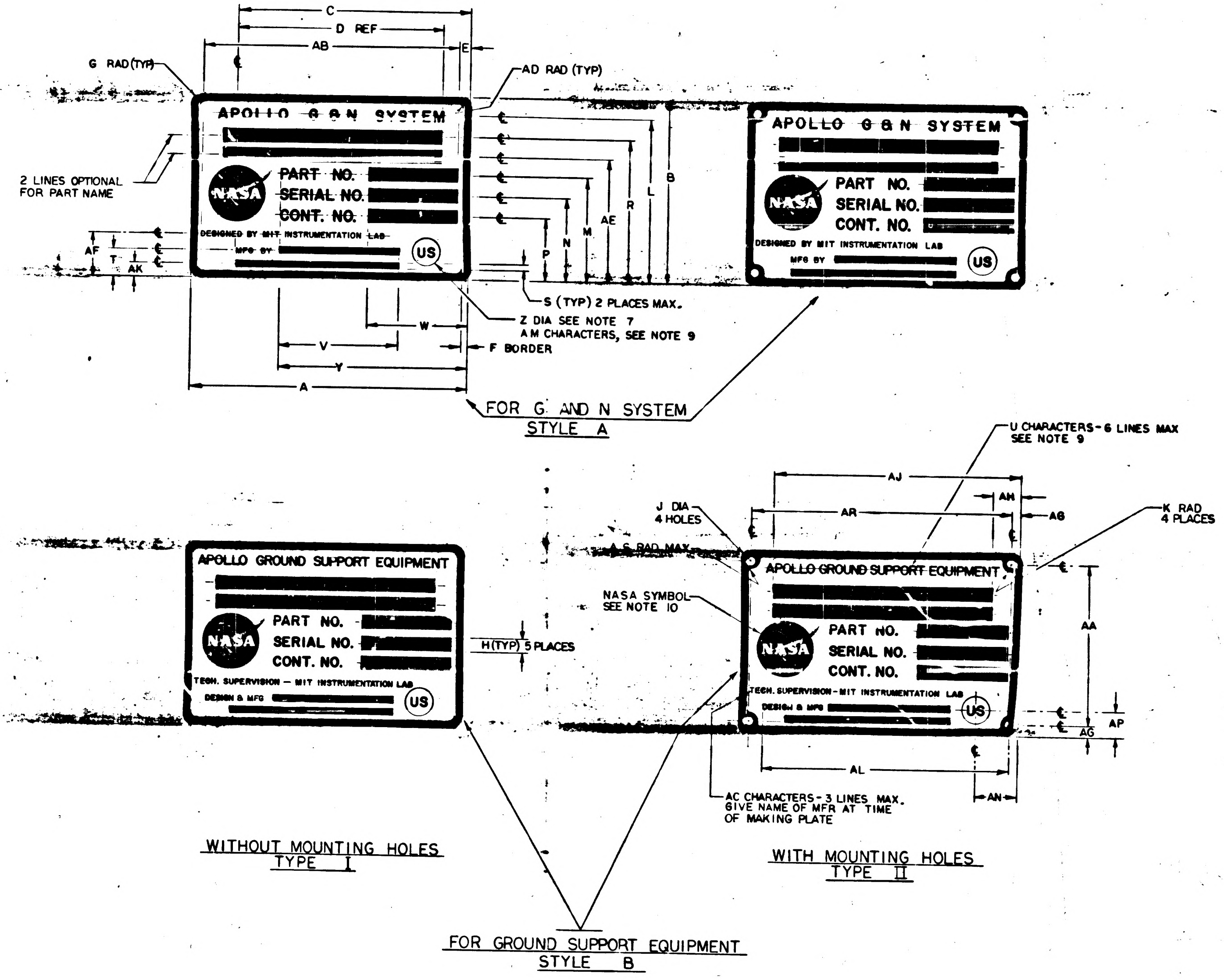

REVISIONS 02768

	SYM	ZONE	DESCRIPTION	DR	CHK	DATE	APPROVED
	G		REPLACES REV F WITH CHANGE PER TDRR 20854			7/22/65	WK
★	H		REVISED PER TDRR 20892			8/3/65	WK
	J		REVISED PER TDRR 20904			8/3/65	WK
	K		REVISED PER TDRR 21379			[illegible]/65	WK
	L		REVISED PER TDRR 21410			8/23/65	WK
★	M		REVISED PER TDRR 21993				
★	N		REVISED PER TDRR 22621			10/	
★	P		REVISED PER TDRR 22671			11/	
★	R		REVISED PER TDRR 22672				
★	S		REVISED PER TDRR 22750			65	WK
	T		REVISED PER TDRR 22823				
★	U		REVISED PER TDRR 23072			10-22-65	MGM
	V		REVISED PER TDRR 23521			10-27-65	WK
★	W		REVISED PER TDRR 23824	RAJ		11-9-65	WK
★	Y		REVISED PER TDRR 24018	RAJ		11-16-65	WK
★	Z		REVISED PER TDRR 24040	RAJ		11-19-65	WK
Ⓜ	AA		REVISED PER TDRR 24060	RAJ		11-19-65	WK
Ⓜ	AB		REVISED PER TDRR 24868	RAJ		12-22-65	WK
Ⓜ	AC		REVISED PER TDRR 24973	RAJ		1-4-66	WK
Ⓜ	AD		REVISED PER TDRR 25065	RAJ		1-18-66	MGM
★	AE		REVISED PER TDRR 25672	RAJ		2-4-66	WK
Ⓜ	AF		REVISED PER TDRR 25671	RAJ		2-4-66	WK
	AG		REVISED PER TDRR 26110	RAJ		2-15-66	WK
★	AH		REVISED PER TDRR 26372	"		3-16-66	MGM
★	AJ		REVISED PER TDRR 26425	"		3-16-66	MGM
★	AK		REVISED PER TDRR 26743	"		3-16-66	MGM
Ⓜ	AL		REVISED PER TDRR 26798	"		3-16-66	MGM
★	AM		REVISED PER TDRR 27168	"		4-7-66	MGM
★	AN		REVISED PER TDRR 27235	"		4-7-66	MGM
★	AP		REVISED PER TDRR 27345	"		4-7-66	MGM
★	AR		REVISED PER TDRR 27417	"		4-7-66	MGM
Ⓜ	AS		REVISED PER TDRR 27442	"		4-7-66	MGM
Ⓜ	AT		REVISED PER TDRR 27719	"		4-20-66	WK
Ⓜ	AU		REVISED PER TDRR 27880	"		4-20-66	WK
Ⓜ	AV		REVISED PER TDRR 27896	"		4-20-66	WK
	AW		28110	"		5-16-66	MGM
	AY		28173	"			MGM
	AZ		28131	"			MGM
	BA		28124	"			MGM
	BB		REVISED PER TDRR 28511	"		5-16-66	MGM
Ⓜ	BC		" " " 28949	"		5-24-66	MGM
	BD		" " " 29222	"		6-8-66	MGM
Ⓜ	BE		" " " 29235	"		6-8-66	MGM
	BF		" " " 29322	"		6-30-66	MGM
	BG		" " " 29429	"		"	MGM
	BH		" " " 29449	"		"	MGM
	BJ		" " " 29335	"		"	MGM
	BK		" " " 29619	"		"	MGM
Ⓜ	BL		" " " 29696	"		"	MGM
	BM		REVISION STATUS CHANGED	JSD	NS	7-29-66	
	BN		REVISION STATUS CHANGED	JI	RLW	22 AUG 66	
	BP		REVISION STATUS CHANGED	JI	RLW	22 AUG 66	
	BR		REVISION STATUS CHANGED	JI	RLW	22 AUG 66	
	BS		REVISION STATUS CHANGED	GW	[illegible]	26 AUG 66	
Ⓜ	BT		REVISION STATUS CHANGED	GW	RLW	26 AUG 66	
Ⓜ	BU		REVISION STATUS CHANGED	EH	JI	9 SEPT 66	
	BV		REVISION STATUS CHANGED	JJB	RLW	30 SEP 66	
	BW		REVISION STATUS CHANGED	JJB	RLW	30 SEP 66	
	BY		REVISION STATUS CHANGED	JJB	RLW	10 OCT 66	
Ⓜ	BZ		REVISION STATUS CHANGED	JJB	RLW	10 OCT 66	
Ⓜ	CA		REVISION STATUS CHANGED	JJB	SAW	25 OCT 66	
Ⓜ	CB		REVISION STATUS CHANGED	REF	SAA	10 DEC 66	
	CC		REVISION STATUS CHANGED	AF	AW	13 JAN 67	

SUGGESTED PROPORTIONS FOR NAMEPLATE DIMENSIONS.
1. SELECT NAMEPLATE LENGTH, DIMENSION "A", TO FIT DESIGN NEEDS.
2. DIMENSIONS B THRU AS ON LINE 1 BELOW ARE PROPORTIONAL TO "A" BY MULTIPLIERS SHOWN IN LINE 2 BELOW.

1.	A	B	C	D	E	F	G	H	J	K	L	M	N	P	R	S	T	U	V
2.	1.000 A	.6563 A	.8438 A	.6875 A	.0391 A	.0240 A	.0391 A	.0469 A	.0547 A	.0469 A	.5938 A	.3750 A	.2969 A	.2187 A	.5079 A	.0313 A	.0938 A	.0391 A	.4375 A

1.	W	Y	Z	AA	AB	AC	AD	AE	AF	AG	AH	AJ	AK	AL	AM	AN	AP	AR	AS
2.	.3594 A	.6875 A	.1094 A	.5781 A	.9219 A	.0240 A	.0156 A	.4375 A	.1525 A	.0391 A	.1563 A	.8438 A	.0548 A	.8659 A	.0391 A	.1563 A	.0938 A	.9219 A	.0151 A

Ⓖ REPLACES REV F WITH CHANGE

QTY REQD	PART OR IDENTIFYING NO.	MATERIAL OR NOTES	NOMENCLATURE OR DESCRIPTION	FIND NO.

LIST OF MATERIALS

NEXT ASSY	USED ON
AS APPLICABLE	

APPLICATION

UNLESS OTHERWISE SPECIFIED
DIMENSIONS ARE IN INCHES
CAPACITOR VALUES ARE IN μf
RESISTOR VALUES ARE IN OHMS
TOLERANCES ON
FRACTIONS ± — DECIMALS ±.005 ANGLES ± —
DO NOT SCALE THIS DRAWING

MATERIAL
SEE NOTE 11

MIT
INSTRUMENTATION LAB
CAMBRIDGE, MASS.

		DATE
DRAWN	R A Jones	7/16/65
CHECKED	A. J. [illegible]	7-22-65
APPROVED		
APPROVED	W Kupfer	7/22/65
APPROVED MIT	W Kupfer	7/22/65
APPROVED MSC	[illegible]	7/22/65

MANNED SPACECRAFT CENTER
HOUSTON, TEXAS

NAMEPLATES,
APOLLO G&N-GSE
(STANDARDS)

CODE IDENT NO. 80230
SIZE E
DRAWING NO. 1004260
SCALE NONE
SHEET 1 OF 6

NOTICE – WHEN GOVERNMENT DRAWINGS, SPECIFICATIONS, OR OTHER DATA ARE USED FOR ANY PURPOSE OTHER THAN IN CONNECTION WITH A DEFINITELY RELATED GOVERNMENT PROCUREMENT OPERATION, THE UNITED STATES GOVERNMENT THEREBY INCURS NO RESPONSIBILITY NOR ANY OBLIGATION WHATSOEVER; AND THE FACT THAT THE GOVERNMENT MAY HAVE FORMULATED, FURNISHED, OR IN ANY WAY SUPPLIED THE SAID DRAWINGS, SPECIFICATIONS OR OTHER DATA IS NOT TO BE REGARDED BY IMPLICATION OR OTHERWISE AS IN ANY MANNER LICENSING THE HOLDER OR ANY OTHER PERSON OR CORPORATION, OR CONVEYING ANY RIGHTS OR PERMISSION TO MANUFACTURE, USE, OR SELL ANY PATENTED INVENTION THAT MAY IN ANY WAY BE RELATED THERETO.

REVISIONS 02768

SYM	ZONE	DESCRIPTION	DR	CHK	DATE	APPROVED
G		REPLACES REV F WITH CHANGE PER TDRR 20854.	nj		7/22/65	
H		REVISED PER TDRR 20892	nj		8/3/65	
J		REVISED PER TDRR 20904	nj		8/3/65	
K		REVISED PER TDRR 21379	nj		8/4/65	
L		REVISED PER TDRR 21410	nj		8/23/65	
M		REVISED PER TDRR 21993	″			
N		REVISED PER TDRR 22621	″			
P		REVISED PER TDRR 22671	″			
R		REVISED PER TDRR 22672	″			
S		REVISED PER TDRR 22750	″			
T		REVISED PER TDRR 22823	″			
U		REVISED PER TDRR 23072	″		[illegible]	
V		REVISED PER TDRR 23521	″		10-27-65	
W		REVISED PER TDRR 23824	RAJ		11-9-65	
Y		REVISED PER TDRR 24018	RAJ		11-16-65	
Z		REVISED PER TDRR 24040	RAJ		11-19-65	
AA		REVISED PER TDRR 24060	RAJ		11-19-65	
AB		REVISED PER TDRR 24868	RAJ		12-22-65	
AC		REVISED PER TDRR 24973	RAJ		1-4-66	
AD		REVISED PER TDRR 25065	RAJ		1-18-66	
AE		REVISED PER TDRR 25672	RAJ		2-4-66	
AF		REVISED PER TDRR 25671	RAJ		2-4-66	
AG		REVISED PER TDRR 26110	RAJ		2-15-66	
AH		REVISED PER TDRR 26372	″		3-16-66	
AJ		REVISED PER TDRR 26425	″		3-16-66	
AK		REVISED PER TDRR 26743	″		3-16-66	
AL		REVISED PER TDRR 26798	″		3-16-66	
AM		REVISED PER TDRR 27168	″		4-8-66	
AN		REVISED PER TDRR 27235	″		4-8-66	
AP		REVISED PER TDRR 27345	″		4-8-66	
AR		REVISED PER TDRR 27417	″		4-8-66	
AS		REVISED PER TDRR 27442	″		4-8-66	
AT		REVISED PER TDRR 27719	″		4-21-66	
AU		REVISED PER TDRR 27880	″		4-21-66	
AV		REVISED PER TDRR 27896	″		4-21-66	
AW		28110	″		5-16-66	
AY		28173	″			
AZ		28131	″			
BA		28124	″			
BB		REVISED PER TDRR 28511	″		5-16-66	
BC		″ ″ ″ 28949	″		5-24-66	
BD		″ ″ ″ 29222	″		6-8-66	
BE		″ ″ ″ 29235	″		″	
BF		″ ″ ″ 29322	″		6-30-66	
BG		″ ″ ″ 29429	″		″	
BH		″ ″ ″ 29449	″		″	
BJ		″ ″ ″ 29335	″		″	
BK		″ ″ ″ 29619	″		″	
BL		″ ″ ″ 29696	″		″	
BM		REVISION STATUS CHANGED	JSD	N.S.	7-29-66	
BN		REVISION STATUS CHANGED	JI	RLW	3 AUG 66	
BP		REVISION STATUS CHANGED	JI	RLW	AUG 66	
BR		REVISION STATUS CHANGED	JI	RLW	AUG 66	
BS		REVISION STATUS CHANGED	GW	RLW	AUG 66	
BT		REVISION STATUS CHANGED	GW	RLW	AUG 66	
BU		REVISION STATUS CHANGED	EH	JI	9 SEP 66	
BV		REVISION STATUS CHANGED	JJB	RLW	30 SEP 66	
BW		″ ″ ″	JJB	RLW	30 SEP 66	
BY		″ ″ ″	JJB	RLW	10 OCT 66	
BZ		REVISION STATUS CHANGED	JJB	RLW	10 OCT 66	
CA		REVISION STATUS CHANGED	JJB		25 OCT 66	
CB		REVISION STATUS CHANGED	REF		10 DEC 66	
CC		REVISION STATUS CHANGED	AF	AW	13	

DASH NO.	P/C	PART NAME	REMARKS	PART NO.	SER. NO.	CONT. NO.	STYLE	TYPE	MATERIAL	A	B	C	D	E	F	G	H	J	K	L	M	N	P	R	S	T	U	V	W	Y	Z	AA	AB	AC	AD	AE	AF	AG	AH	AJ	AK	AL	AM	AN	AP	AR
399	K																																													
398	K																																													
350	K	ALIGNMENT OPTICAL TELESCOPE (LEM)		NA	NA	NA	A	I	NOTE 11 B	4.000	2.625	3.375	2.750	.156	.093	.156	.187	NA	NA	2.312	1.468	1.187	.906	2.031	NA	.375	.156	NA	1.437	2.750	.437	NA	3.688	.062	.062	1.750	.593	NA	.625	3.375	.187	NA	.156	.531	.453	NA
309	K																																													
308	K																																													
307	K						B	I	NOTE 11 B	4.000	2.625	3.375	2.750	.156	.093	.156	.187	NA	NA	2.328	1.468	1.187	.906	2.031	.062	.375	.156	NA	1.437	2.750	.437	NA	3.687	.062	.062	1.750	.593	NA	NA	NA	NA	NA	NA	NA	NA	NA
306	K						B	II	NOTE 11 C	4.000	2.625	3.375	2.750	.156	.093	.156	.187	.125	.156	2.328	1.468	1.187	.906	2.031	.062	.375	.156	↕	1.437	2.750	.437	2.312	3.687	.062	NA	1.750	.593	↕	↕	↕	↕	↕	↕	↕	↕	↕
305	K						B	I	NOTE 11 B	2.000	1.312	1.687	1.375	.078	.048	.078	.093	NA	NA	1.164	.734	.593	.453	1.015	.048	.171	.078	↕	.718	1.375	.187	NA	NA	.048	.031	.875	.320	↕	↕	↕	↕	↕	↕	↕	↕	↕
304	K						B	II	NOTE 11 C	2.000	1.312	1.687	1.375	.078	.048	.078	.093	.070	.078	1.164	.734	.593	.453	1.015	.048	.171	.078	NA	.718	1.375	.187	.156	1.843	.048	NA	.875	.320	NA	NA	NA	NA	NA	NA	NA	NA	NA
303	K																																													
302	K																																													
301	K																																													
300	K	OPTICAL UNIT		NA	NA	NA	A	I	NOTE 11 B	2.000	1.312	1.675	NA	NA	.048	.078	NA	NA	NA	1.090	.812	.675	.540	.940	NA	.265	NA	NA	NA	1.375	.218	NA	NA	NA	NA	NA	.375	NA	NA	NA	.180	NA	.078	NA	NA	NA
9	K	2 IN AUTOCOLLIMATOR		1001702			B	II	NOTE 11 C	4.000	2.625	3.812	2.750	.156	.093	.156	.187	.125	.156	2.250	1.500	1.187	.906	2.031	.093	.375	.156	1.750	1.437	2.750	.437	2.312	3.687	.062	NA	1.750	.593	.156	1.062	3.812	.156	NA	.156	1.062	.375	3.687
8	K	5 IN AUTOCOLLIMATOR		1017410			B	II	NOTE 11 C	4.000	2.625	3.812	2.750	.156	.093	.156	.187	.125	.156	2.250	1.500	1.187	.906	2.031	.093	.375	.156	1.750	1.437	2.750	.437	2.312	3.687	.062	NA	1.750	.593	.156	1.062	3.812	.156	NA	.156	1.062	.375	3.687
7	K	2½ IN AUTOCOLLIMATOR (SCT)		1017435			B	II	NOTE 11 C	4.000	2.625	3.812	2.750	.156	.093	.156	.187	.125	.156	2.250	1.500	1.187	.906	2.031	.093	.375	.156	1.750	1.437	2.750	.437	2.312	3.687	.062	NA	1.750	.593	.156	1.062	3.812	.156	NA	.156	1.062	.375	3.687
6	K	2½ IN AUTOCOLLIMATOR (SXT)		1017448			B	II	NOTE 11 C	4.000	2.625	3.812	2.750	.156	.093	.156	.187	.125	.156	2.250	1.500	1.187	.906	2.031	.093	.375	.156	1.750	1.437	2.750	.437	2.312	3.687	.062	NA	1.750	.593	.156	1.062	3.812	.156	NA	.156	1.062	.375	3.687
5	K	RETROREFLECTING PRISM ASSEMBLY		1019840			B	I	NOTE 11 B	4.000	2.625	3.812	2.750	.156	.093	.156	.187	NA	NA	2.250	1.500	1.187	.906	2.031	.093	.375	.156	1.750	1.437	2.750	.437	NA	NA	.062	.062	1.750	.593	.156	1.062	3.812	.156	NA	.156	1.062	.375	NA
4	K	S/H SIMULATOR ASSEMBLY		1019896			B	I	NOTE 11 B	4.000	2.625	3.812	2.750	.156	.093	.156	.187	NA	NA	2.250	1.500	1.187	.906	2.031	.093	.375	.156	1.750	1.437	2.750	.437	NA	NA	.062	.062	1.750	.593	.156	1.062	3.812	.156	NA	.156	1.062	.375	NA
3	K	REFERENCE MIRROR		1001767			B	I	NOTE 11 B	2.000	1.312	1.906	1.375	.078	.048	.078	.093	NA	NA	1.125	.750	.593	.453	1.015	.062	.187	.078	.875	.718	1.375	.218	NA	NA	.048	.031	.875	.305	.078	.531	1.906	.078	NA	.078	.531	.187	NA
2	K	2 IN PLANE READING AUTOCOLLIMATOR		1017413			B	I	NOTE 11 B	2.000	1.312	1.906	1.375	.078	.048	.078	.093	NA	NA	1.125	.750	.593	.453	1.015	.062	.187	.078	.875	.718	1.375	.218	NA	NA	.048	.031	.875	.305	.078	.531	1.906	.078	NA	.078	.531	.187	NA
1	K	2 IN AUTOCOLLIMATOR		1001702			B	I	NOTE 11 B	2.000	1.312	1.906	1.375	.078	.048	.078	.093	NA	NA	1.125	.750	.593	.453	1.015	.062	.187	.078	.875	.718	1.375	.218	NA	NA	.048	.031	.875	.305	.078	.531	1.906	.078	NA	.078	.531	.187	NA

NOTES FOR TABLE

STYLE A IS FOR G&N SYSTEM.
STYLE B IS FOR GROUND SUPPORT EQUIPMENT.
TYPE I IS WITHOUT MOUNTING HOLES.
TYPE II IS WITH MOUNTING HOLES.

Ⓖ REPLACES REV F WITH CHANGE

KOLLSMAN DASH NUMBERS

QTY REQD	PART OR IDENTIFYING NO.	MATERIAL OR NOTES	NOMENCLATURE OR DESCRIPTION	FIND NO.

LIST OF MATERIALS

AS APPLICABLE	
NEXT ASSY	USED ON

APPLICATION

UNLESS OTHERWISE SPECIFIED
DIMENSIONS ARE IN INCHES
CAPACITOR VALUES ARE IN µf
RESISTOR VALUES ARE IN OHMS
TOLERANCES ON
FRACTIONS ± — DECIMALS ±.005 ANGLES ± —
DO NOT SCALE THIS DRAWING

MATERIAL
SEE NOTE 11

MIT
INSTRUMENTATION LAB
CAMBRIDGE, MASS.

DRAWN R. A. Jones 7-16-65
CHECKED 7-22-65
APPROVED
APPROVED W. Kupfer 22/7/65
APPROVED MIT W. Kupfer 22/7/65
APPROVED MSC 7/22/65
DATE

MANNED SPACECRAFT CENTER
HOUSTON, TEXAS

NAMEPLATES,
APOLLO G&N-GSE
(STANDANDS)

CODE IDENT NO. 80230
SIZE E
DRAWING NO. 1004260
SCALE NONE
SHEET 2 OF 6

NOTICE – WHEN GOVERNMENT DRAWINGS, SPECIFICATIONS, OR OTHER DATA ARE USED FOR ANY PURPOSE OTHER THAN IN CONNECTION WITH A DEFINITELY RELATED GOVERNMENT PROCUREMENT OPERATION, THE UNITED STATES GOVERNMENT THEREBY INCURS NO RESPONSIBILITY NOR ANY OBLIGATION WHATSOEVER; AND THE FACT THAT THE GOVERNMENT MAY HAVE FORMULATED, FURNISHED, OR IN ANY WAY SUPPLIED THE SAID DRAWINGS, SPECIFICATIONS OR OTHER DATA IS NOT TO BE REGARDED BY IMPLICATION OR OTHERWISE AS IN ANY MANNER LICENSING THE HOLDER OR ANY OTHER PERSON OR CORPORATION, OR CONVEYING ANY RIGHTS OR PERMISSION TO MANUFACTURE, USE, OR SELL ANY PATENTED INVENTION THAT MAY IN ANY WAY BE RELATED THERETO.

REVISIONS						
SYM	ZONE	DESCRIPTION	DR	CHK	DATE	APPROVED
G		REPLACES REV F WITH CHANGE PER TDRR 20854			7/22/65	WK
H		REVISED PER TDRR 20892			8/3/65	WK
J		REVISED PER TDRR 20904			8/3/65	WK
K		REVISED PER TDRR 21379			8/9/65	WK
L		REVISED PER TDRR 21410			8/23/65	WK
M		REVISED PER TDRR 21993				
N		REVISED PER TDRR 22621			10/	
P		REVISED PER TDRR 22671				
R		REVISED PER TDRR 22672			/11/	
S		REVISED PER TDRR 22750				
T		REVISED PER TDRR 22823			/65	WK
U		REVISED PER TDRR 23072			10-22-65	MGM
V		REVISED PER TDRR 23521			10-26-65	WK
W		REVISED PER TDRR 23824	RAJ		11-9-65	WK
Y		REVISED PER TDRR 24018	RAJ		11-16-65	WK
Z		REVISED PER TDRR 24040	RAJ		11-19-65	WK
AA		REVISED PER TDRR 24060	RAJ		11-19-65	WK
AB		REVISED PER TDRR 24868	RAJ		12-22-65	WK
AC		REVISED PER TDRR 24973	RAJ		1-4-66	WK
AD		REVISED PER TDRR 25065	RAJ		1-18-66	MGM
AE		REVISED PER TDRR 25672	RAJ		2-4-66	WK
AF		REVISED PER TDRR 25671	RAJ		2-4-66	WK
AG		REVISED PER TDRR 26110	RAJ		2-15-66	WK
AH		REVISED PER TDRR 26372	"		3-16-66	MGM
AJ		REVISED PER TDRR 26425	"		3-16-66	MGM
AK		REVISED PER TDRR 26743	"		3-16-66	MGM
AL		REVISED PER TDRR 26798	"		3-16-66	MGM
AM		REVISED PER TDRR 27168	"		4-8-66	MGM
AN		REVISED PER TDRR 27235	"		4-8-66	MGM
AP		REVISED PER TDRR 27345	"		4-8-66	MGM
AR		REVISED PER TDRR 27417	"		4-8-66	MGM
AS		REVISED PER TDRR 27442	"		4-8-66	MGM
AT		REVISED PER TDRR 27719	"		4-20-66	WK
AU		REVISED PER TDRR 27880	"		4-20-66	WK
AV		REVISED PER TDRR 27896	"		4-20-66	WK
AW		28110	"		5-16-66	MGM
AY		28173	"		5-16-66	MGM
AZ		28131	"		5-16-66	MGM
BA		28124	"		5-16-66	MGM
BB		REVISED PER TDRR 28511	"		5-16-66	MGM
BC		" " " 28949	"		5-24-66	MGM
BD		" " " 29222	"		6-8-66	MGM
BE		" " " 29235	"		"	MGM
BF		" " " 29322	"		6-29-66	MGM
BG		" " " 29429	"		"	MGM
BH		" " " 29449	"		"	MGM
BJ		" " " 29335	"		"	MGM
BK		" " " 29619	"		"	MGM
BL		" " " 29696	"		"	MGM
BM		" " " 29802	JSD	N.S.	7-29-66	
BN		REVISION STATUS CHANGED	JI	RLW	12 AUG 66	
BP		REVISED PER TDRR 30168	JI	RLW	22 AUG 66	
BR		REVISION STATUS CHANGED	JI	RLW	23 AUG 66	
BS		REVISION STATUS CHANGED	GW	RLW	26 AUG 66	
BT		REVISION STATUS CHANGED	GW	RLW	26 AUG 66	
BU		REVISION STATUS CHANGED	EH	JI	9 SEPT 66	
BV		REVISION STATUS CHANGED	JJB	RLW	30 SEP 66	
BW		REVISED PER TDRR 31279	JJB	RLW	30 SEP 66	
BY		REVISION STATUS CHANGED	JJB	RLW	10 OCT 66	
BZ		REVISION STATUS CHANGED	JJB	RLW	10 OCT 66	
CA		REVISION STATUS CHANGED	JJB	RLW	25 OCT 66	
CB		REVISION STATUS CHANGED	REF		10 DEC 66	
CC		REVISION STATUS CHANGED	AF	AW	12 JAN 67	

02768

DASH NO.	P/C	PART NAME	REMARKS	PART NO.	SER. NO.	CONT. NO.	STYLE	TYPE	MATERIAL	
299	R									
298	R									
280	R	COMPUTER TEST SET		2014042-051	N A	NAS9-497	B	II	NOTE 11C	FOR DIMENSIONS SEE DASH 18 VALUES BELOW
279	R	SELF TEST ASSY		2014366-041	N A	NAS9-497	B	I	NOTE 11B	FOR DIMENSIONS SEE DASH- 15 VALUES BELOW
278	R	LOGIC DRAWER ASSY NO.1		2014036-041	N A	NAS-9-497	B	I	NOTE 11B	FOR DIMENSIONS SEE DASH 17 VALUES BELOW
277	R	COMPUTER TEST SET		2014042-041	N A	NAS-9-497	B	II	NOTE 11C	FOR DIMENSIONS, SEE DASH 18 VALUES BELOW
276		DRAWER ASSY - PROGRAM & MONITOR		2014041-041				I	NOTE 11B	FOR DIMENSIONS, SEE DASH 17 VALUES BELOW
275		DRAWER ASSY RDC INTERFACE		2014045-031						FOR DIMENSIONS, SEE DASH 15 VALUES BELOW
274		SELF TEST ASSY		2014366-031						
273		LOGIC DRAWER ASSY NO. 2		2014037-031						FOR DIMENSIONS, SEE DASH 17 VALUES BELOW
272		DRAWING ASSY PROGRAMMER & MONITOR		2014041-031						FOR DIMENSIONS, SEE DASH 17 VALUES BELOW
271		LOGIC DRAWER ASSY NO. 1		2014036-031				I	NOTE 11B	
270		COMPUTER TEST SET		2014042-031				II	NOTE 11C	FOR DIMENSIONS, SEE DASH 18 VALUES BELOW
269		POWER CONTROL ASSY		2014044-021				I	NOTE 11B	FOR DIMENSIONS, SEE DASH 17 VALUES BELOW
268		SELF TEST ASSY		2014366-021						FOR DIMENSIONS, SEE DASH 15 VALUES BELOW
267		AGC JUNCTION ASSY		2014341-021						
266		POWER CONTROL ASSY		2014079-021						
265		BUFFER CIRCUIT ASSY		2014254-021						
264		DRAWER ASSY X Y INTERFACE		2014040-021						
263		DRAWER ASSY R D C INTERFACE		2014045-021						
262		DRAWER ASSY PROGRAMMER & MONITOR		2014041-021						FOR DIMENSIONS, SEE DASH 17 VALUES BELOW
261		LOGIC DRAWER ASSY NO. 2		2014037-021						
260		LOGIC DRAWER ASSY NO. 1		2014036-021				I	NOTE 11B	
259		OPERATION CONSOLE		2014024-021				II	NOTE 11C	FOR DIMENSIONS, SEE DASH 18 VALUES BELOW
258		COMPUTER TEST SET		2014042-021						
257		AUXILIARY CALIBRATION CONSOLE		2014059-021						
256		AGC CALIBRATION CONSOLE		2014049-021				II	NOTE 11C	
255		AGC HANDLING FIXTURE		2014282-021				I	NOTE 11B	FOR DIMENSIONS, SEE DASH 17 VALUES BELOW
254		DRAWER ASSY COMP. SIMULATOR		2014048-011				II	NOTE 11C	FOR DIMENSIONS, SEE DASH 18 VALUES BELOW
253		SHIPPING KIT ASSY, NAV DSKY		2016312-011						
252		SHIPPING KIT ASSY, UNIVERSAL DSKY		2016316-011						
251		SHIPPING KIT ASSY, MAIN DSKY		2016313-011				II	NOTE 11C	
250		AMPLIFIER, REWORK		2014386				I	NOTE 11B	FOR DIMENSIONS, SEE DASH 15 VALUES BELOW
249		TEMP MONITOR ASSY		2014313-011					NOTE 11C	FOR DIMENSIONS, SEE DASH 17 VALUES BELOW
248		AGC JUNCTION ASSY		2014341-011					NOTE 11B	FOR DIMENSIONS, SEE DASH 15 VALUES BELOW
247		AC INPUT PANEL ASSY		2014302-011						
246		SELF TEST ASSY		2014392-011						
245		TAPE PUNCH ASSEMBLY		2014039-011						
244	R	TAPE READER ASSEMBLY		2014038-011	NA	NAS-9-497	B	I	NOTE 11B	FOR DIMENSIONS, SEE DASH 15 VALUES BELOW
243										
242										
241	R	APOLLO GUIDANCE COMPUTER GROUP		6003001	NA	NAS-9-497	A	I	NOTE 11B	FOR DIMENSIONS, SEE DASH 19 VALUES BELOW
240		SELF TEST ASSEMBLY		2014366-011	NA		B	I		FOR DIMENSIONS, SEE DASH 15 VALUES BELOW
239		POWER SUPPLY ASSY-115V., 400 CYCLE		2014207-011						FOR DIMENSIONS, SEE DASH 17 VALUES BELOW
238		AC INPUT PANEL ASSY		2014043-011						
237		POWER CONTROL ASSY		2014079-011						FOR DIMENSIONS, SEE DASH 15 VALUES BELOW
236		DRAWER ASSY - X Y INTERFACE		2014040-011						
235		DRAWER ASSY RDC INTERFACE		2014045-011						
234		BUFFER CIRCUIT ASSY		2014254-011						
233		CONTROL & INTERFACE ASSY		2014204-011						
232		POWER CONTROL ASSY		2014044-011						FOR DIMENSIONS, SEE DASH 17 VALUES BELOW
231		DRAWER ASSY, PROGRAMMER & MONITOR		2014041-011						
230		CONNECTOR INTERFACE ASSY		2014272-011						FOR DIMENSIONS, SEE DASH 15 VALUES BELOW
229		CONNECTOR INTERFACE ASSY		2014047-011						
228		ANTENNA, TUNING CAPACITOR ASSY		2014209-011						
227		MOUNTING FIXTURE ASSY		2014006-011						FOR DIMENSIONS, SEE DASH 17 VALUES BELOW
226		POWER SUPPLY ASSY 3 VDC		2014234-011						FOR DIMENSIONS, SEE DASH 15 VALUES BELOW
225		PANEL ASSY – SIGNAL INTERFACE		2014010-011						
224		OSCILLOSCOPE ASSY		2014232-011						
223		AUXILIARY OUTLET ASSY		2014274-011						
222		FREQUENCY COUNTER		2014233-011						
221		POWER SUPPLY ASSY 10, 13, 28 VDC		2014235-011						
220		LOGIC DRAWER ASSY NO. 2		2014037-011						FOR DIMENSIONS, SEE DASH 17 VALUES BELOW
219		LOGIC DRAWER ASSY NO. 1		2014036-011						
218		COUNTER, ELECTRICAL ASSY		2014288-011						FOR DIMENSIONS, SEE DASH 15 VALUES BELOW
217		POWER SUPPLY ASSY		2014279-011						
216		TEST MOUNT ASSY		2014257-011						
215		UNIVERSAL DSKY PEDESTAL MOUNT		2014014-011						FOR DIMENSIONS, SEE DASH 17 VALUES BELOW
214		MAIN DSKY PEDESTAL MOUNT		2014343				I	NOTE 11B	
213		SHIPPING CONTAINER, MAIN DSKY		1006229				II	NOTE 11C	FOR DIMENSIONS, SEE DASH 18 VALUES BELOW
212		NAV DSKY		1006231						
211		AGC		1006230						
210		UNIVERSAL DSKY		1006422						
209		SHIPPING CONTAINER, AGC		1006421				II	NOTE 11C	
208		UNIVERSAL DSKY HANDLING FIXTURE		2014013-011				I	NOTE 11B	FOR DIMENSIONS, SEE DASH 15 VALUES BELOW
207		NAV DSKY HANDLING FIXTURE		1014377						FOR DIMENSIONS, SEE DASH 17 VALUES BELOW
206		MAIN DSKY HANDLING FIXTURE		1014334						
205		AGC HANDLING FIXTURE		2014282-011				I	NOTE 11B	
204		OPERATION CONSOLE		2014024-011				II	NOTE 11C	FOR DIMENSIONS, SEE DASH 18 VALUES BELOW
203		COMPUTER TEST SET		2014042-011		NAS-9-497				
202		DRAWER ASSY, COMPUTER SIMULATOR		2014048-011		FNP-12775				
201		AUXILIARY CALIBRATION CONSOLE		2014059-011		NAS-9-497				
200		AGC CALIBRATION CONSOLE		2014049-011	N A		B	II	NOTE 11C	
21										
20		N A		NA	NA	NA	A	II	NOTE 11C	
19		N A		NA	NA	NA	A	I	NOTE 11B	
18		N A		NA	NA	NA	B	II	NOTE 11C	
17		N A		NA	NA	NA	B	I	NOTE 11B	
16		N A		NA	NA	NA	B	II	NOTE 11C	
15	R	N A		NA	NA	NA	B	I	NOTE 11B	

DASH NO.	A	B	C	D	E	F	G	H	J	K	L	M	N	P	R	S	T
21																	
20	2.000	1.312	1.687	1.375	.078	.031	.078	.093	.106 .113	.093	1.187	.750	.593	.453	1.015	.062	.187
19	2.000	1.312	1.687	1.375	.078	.031	.078	.093	NA	NA	1.187	.750	.593	.453	1.015	.062	.187
18	4.187	1.875	3.469	2.750	.156	.093	.156	.125	.106 .113	.125	1.625	1.032	.844	.656	1.406	.093	.344
17	4.187	1.875	3.469	2.750	.156	.093	.156	.125	NA	NA	1.625	1.032	.844	.656	1.406	.093	.344
16	2.000	1.312	1.687	1.375	.078	.031	.078	.093	.106 .113	.093	1.187	.750	.593	.453	1.015	.062	.187
15	2.000	1.312	1.687	1.375	.078	.031	.078	.093	NA	NA	1.187	.750	.593	.453	1.015	.062	.187

DASH NO.	U	V	W	Y	Z	AA	AB	AC	AD	AE	AF	AG	AH	AJ	AK	AL	AM	AN	AP	AR
21																				
20	.078	.875	.718	1.375	.218	1.156	1.843	.048	NA	.875	.305	.078	.312	1.687	.078	NA	.078	.312	.187	1.843
19	.078	.875	.718	1.375	.218	NA	NA	.048	.031	.875	.305	.078	.312	1.687	.078	NA	.078	.312	.187	NA
18	.156	1.781	1.531	2.844	.312	1.562	3.875	.062	NA	1.219	.500	.156	.719	3.469	.156	NA	.156	.719	.344	3.875
17	.156	1.781	1.531	2.844	.312	NA	NA	.062	.062	1.219	.500	.156	.719	3.469	.156	NA	.156	.719	.344	NA
16	.078	.875	.718	1.375	.218	1.156	1.843	.048	NA	.875	.305	.078	.312	1.687	.078	NA	.078	.312	.187	1.843
15	.078	.875	.718	1.375	.218	NA	NA	.048	.031	.875	.305	.078	.312	1.687	.078	NA	.078	.312	.187	NA

RAYTHEON DASH NUMBERS

THIS SHEET ADDED

Ⓖ REPLACES REV F WITH CHANGE

NOTES FOR TABLE
STYLE A IS FOR G & N SYSTEM
STYLE B IS FOR GROUND SUPPORT EQUIPMENT
TYPE I IS WITHOUT MOUNTING HOLES
TYPE II IS WITH MOUNTING HOLES

QTY REQD	PART OR IDENTIFYING NO.	MATERIAL OR NOTES	NOMENCLATURE OR DESCRIPTION	FIND NO.

LIST OF MATERIALS

AS APPLICABLE	
NEXT ASSY	USED ON
APPLICATION	

UNLESS OTHERWISE SPECIFIED
DIMENSIONS ARE IN INCHES
CAPACITOR VALUES ARE IN μf
RESISTOR VALUES ARE IN OHMS
TOLERANCES ON
FRACTIONS DECIMALS ANGLES
± — ±.005 ± —
DO NOT SCALE THIS DRAWING

MATERIAL
SEE NOTE 11

MIT
INSTRUMENTATION LAB
CAMBRIDGE, MASS.

DRAWN R. Q. Jones 7-16-65
CHECKED A. J. 7-22-65
APPROVED
APPROVED 7/22/65
APPROVED MIT 7/22/65
APPROVED MSC
DATE

MANNED SPACECRAFT CENTER
HOUSTON, TEXAS

NAMEPLATES,
APOLLO GEN-GSE
(STANDARDS)

CODE IDENT NO. 80230
SIZE E
DRAWING NO. 1004260
SCALE NONE
SHEET 3 OF 6

REVISIONS						
SYM	ZONE	DESCRIPTION	DR	CHK	DATE	APPROVED
G		REPLACES REV F WITH CHANGE PER TDRR 20854.			7/22/65	WK
H		REVISED PER TDRR 20892			8/3/65	WK
J		REVISED PER TDRR 20904			8/3/65	WK
K		REVISED PER TDRR 21379			8/16/65	WK
L		REVISED PER TDRR 21410			8/23/65	WK
M		REVISED PER TDRR 21993				
N		REVISED PER TDRR 22621			10/	
P		REVISED PER TDRR 22671				
R		REVISED PER TDRR 22672			1/	
S		REVISED PER TDRR 22750				
T		REVISED PER TDRR 22823			/65	WK
U		REVISED PER TDRR 23072			10-22-65	MGM
V		REVISED PER TDRR 23521			10-26-65	WK
W		REVISED PER TDRR 23824	RAJ		11-9-65	WK
Y		REVISED PER TDRR 24018	RAJ		11-16-65	WK
Z		REVISED PER TDRR 24040	RAJ		11-19-65	WK
AA		REVISED PER TDRR 24060	RAJ		11-19-65	WK
AB		REVISED PER TDRR 24868	RAJ		2-22-65	WK
AC		REVISED PER TDRR 24973	RAJ		1-4-66	WK
AD		REVISED PER TDRR 25065	RAJ		1-18-66	MGM
AE		REVISED PER TDRR 25672	RAJ		2-4-66	WK
AF		REVISED PER TDRR 25671	RAJ		2-4-66	WK
AG		REVISED PER TDRR 26110	RAJ		2-15-66	WK
AH		REVISED PER TDRR 26372	"		3-16-66	MGM
AJ		REVISED PER TDRR 26425	"		3-16-66	MGM
AK		REVISED PER TDRR 26743	"		3-16-66	MGM
AL		REVISED PER TDRR 26798	"		3-16-66	MGM
AM		REVISED PER TDRR 27168	"		4-8-66	MGM
AN		REVISED PER TDRR 27235	"		4-8-66	MGM
AP		REVISED PER TDRR 27345	"		4-8-66	MGM
AR		REVISED PER TDRR 27417	"		4-8-66	MGM
AS		REVISED PER TDRR 27442	"		4-8-66	MGM
AT		REVISED PER TDRR 27719	"		4-21-66	WK
AU		REVISED PER TDRR 27880	"		4-21-66	WK
AV		REVISED PER TDRR 27896	"		4-21-66	WK
AW		28110	"		5-16-66	MGM
AY		28173	"			MGM
AZ		28131	"			MGM
BA		28124	"			MGM
BB		REVISED PER TDRR 28511	"		5-16-66	MGM
BC		" " " 28949	"		5-24-66	MGM
BD		" " " 29222	"		6-8-66	MGM
BE		" " " 29235	"		"	MGM
BF		" " " 29322	"		6-24-66	MGM
BG		" " " 29429	"		"	MGM
BH		" " " 29449	"		"	MGM
BJ		" " " 29335	"		"	MGM
BK		" " " 29619	"		"	MGM
BL		" " " 29696	"		6-29-66	MGM
BM		REVISION STATUS CHANGED	JSD	NS	7-29-66	
BN		REVISION STATUS CHANGED	JI	RLW	22 AUG 66	
BP		REVISION STATUS CHANGED	JI	RLW	AUG. 66	
BR		REVISED PER TDRR 30241	JI	RLW	22 AUG 66	
BS		REVISION STATUS CHANGED	GW	RLW	26 AUG 66	
BT		REVISION STATUS CHANGED	GW	RLW	26 AUG 66	
BU		REVISION STATUS CHANGED	EH	JI	9 SEPT 66	
BV		REVISION STATUS CHANGED	JJB	RLW	30 SEP 66	
BW		REVISION STATUS CHANGED	JJB	RLW	30 SEP 66	
BY		REVISION STATUS CHANGED	JJB	RLW	10 OCT 66	
BZ		REVISION STATUS CHANGED	JJB	RLW	10 OCT 66	
CA		REVISION STATUS CHANGED	JJB		25 OCT 66	
CB		REVISION STATUS CHANGED	REF		10 DEC 66	
CC		REVISION STATUS CHANGED	AF	DW	12 JAN 67	

DASH NO.	P/C	PART NAME	REMARKS	PART NO.	SER. NO.	CONT. NO.	STYLE	TYPE	MATERIAL	A	B	C	D	E	F	G	H	J	K	L	M	N	P	R	S	T	U	V	W	Y	Z	AA	AB	AC	AD	AE	AF	AG	AH	AJ	AK	AL	AM	AN	AP	AR
199	AC	EYEPIECE STOWAGE UNIT		2021255-011			A	I		FOR DIMENSIONS, SEE DASH 100 VALUES BELOW																																				
198	AC	SIGNAL CONDITIONER ASSY C/M		2007234		NAS 9-497			NOTE 11B																																					
197	AC	SIGNAL CONDITIONER ASSY C/M		2007235																																										
196	AC	SIGNAL CONDITIONER ASSY LEM		6007010																																										
195	AC	PSA & SIGNAL CONDITIONER ASSY		6007009			A	I	NOTE 11B																																					
194	AC	PANEL, MONITOR		2900031-031			B	II	NOTE 11C	FOR DIMENSIONS, SEE DASH 141 VALUES BELOW																																				
193	AC	DISTRIBUTION BOX, GSE		2900024-031																																										
192	AC	ANALYZER, OPTICS-INERTIAL		2900023-031						FOR DIMENSIONS, SEE DASH 144 VALUES BELOW																																				
191	AC	TEST CONTROL		2900027-031						FOR DIMENSIONS, SEE DASH 141 VALUES BELOW																																				
190	AC	PANEL, PWR SUP AND LOAD		2900033-021																																										
189	AC	ADPT MODULE, P.S.A.		6900088-011																																										
188	AC	ADPT MODULE, P.S.A.		2901143-011																																										
187	AC	FIXTURE, MTG, PTA/PEA		2900066-021		NAS 9-497	B	II	NOTE 11C																																					
186	AC	ANNUNCIATOR PANEL AND EYEPIECE STORAGE ASSEMBLY		1021255-021			A	I		FOR DIMENSIONS, SEE DASH 100 VALUES BELOW																																				
185	AC	ANNUNCIATOR PANEL AND EYEPIECE STORAGE ASSEMBLY		1021255-011			A	I																																						
184	AC	FIX., HAND., G AND N HARNESS		1901846-041		NAS-9-497	B	II	NOTE 11C	FOR DIMENSIONS, SEE DASH 144 VALUES BELOW																																				
183	AC	INSTALLING TOOL, ELEC. CONN		1902586-011			B	II	NOTE 11C	FOR DIMENSIONS, SEE DASH 102 VALUES BELOW																																				
182	AC	ADPT MODULE, P.S.A.		6900088-011			B	II	NOTE 11C	FOR DIMENSIONS, SEE DASH 141 VALUES BELOW																																				
181	AC	G & N INDICATOR CONTROL PANEL ASSY		2014578-011			A	I	NOTE 11B	3.000	1.938	2.437	NA	.125	.062	.188	.156	NA	NA	1.750	1.125	.906	.688	1.500	NA	.281	.125	NA	1.094	2.062	.312	NA	2.500	.062	.125	1.312	.469	NA	NA	NA	.156	NA	.125	.469	.344	NA
180	AC	ADPT MODULE, P.S.A.		1902431-031			B	II		FOR DIMENSIONS, SEE DASH 121 VALUES BELOW																																				
179	AC	MOUNTING PLATE, IMU/PTA		6900083-011						FOR DIMENSIONS, SEE DASH 144 VALUES BELOW																																				
178	AC	MOUNTING PLATE, COMPONENT		6900007-021																																										
177	AC	FIX., MOUNTING, SUBSYSTEM		2900070-021																																										
176	AC	FIX., MOUNTING, G AND N		2900067-021																																										
175	AC	CSL, COOL. AND PWR, G AND N		1902134-031																																										
174	AC	FIX., HAND., C/M AND LEM CDU		2900999-011					NOTE 11C	FOR DIMENSIONS, SEE DASH 141 VALUES BELOW																																				
173	AC	FIX., HANDLING, C/M PSA		2900998-011																																										
172	AC	CAGING ELECTRONICS, GYRO		2900029-021																																										
171	AC	DISTRIBUTION BOX, GSE		2900024-021																																										
170	AC	ANALYZER, OPTICS-INERTIAL		2900023-021						FOR DIMENSIONS, SEE DASH 144 VALUES BELOW																																				
169	AC	ADPT, TESTPOINT, P.S.A.		2900037-021						FOR DIMENSIONS, SEE DASH 141 VALUES BELOW																																				
168	AC	TEST SELECTOR		2900028-021																																										
167	AC	TEST CONTROL		2900027-021																																										
166	AC	PANEL, MONITOR		2900031-021																																										
165	AC	TERM. BOARD STORAGE DRAWER		2900927-011																																										
164	AC	INPUT/OUTPUT PANEL		2900926-011																																										
163	AC	CONTROL PANEL		2900896-011																																										
162	AC	CSL. CAL AND TEST, SCM/PSAAM		2900895-011						FOR DIMENSIONS, SEE DASH 144 VALUES BELOW																																				
161	AC	FIX., LIFT AND HAND., IMU		1015462-011						FOR DIMENSIONS, SEE DASH 141 VALUES BELOW																																				
160	AC	FIX., HAND., G AND N HARNESS		1901846-031						FOR DIMENSIONS, SEE DASH 144 VALUES BELOW																																				
159	AC	BATTERY POWER PACK		1900011-031			B	II	NOTE 11C																																					
158	AC	COUPLING DATA UNIT ASSEMBLY C/M		2007222			A	I	NOTE 11B	FOR DIMENSIONS SEE DASH 100 VALUES BELOW																																				
157	AC	COUPLING DATA UNIT ASSEMBLY - LEM		2007222																																										
156	AC	POWER & SERVO ASSEMBLY C/M		2007200						2.125	.968	1.718	NA	.093	.031	.06	.093	NA	NA	.858	.608	.484	.358	.733	.062	.140	.062	NA	.968	1.450	.125	NA	1.720	.046	.03	NA	.210	NA	NA	NA	.070	NA	.046	.32	.16	NA
155	AC	PIPA ELECTRONICS ASSEMBLY		2007201						FOR DIMENSIONS SEE DASH 100 VALUES BELOW																																				
154	AC	PULSE TORQUE ASSEMBLY - LEM		6007000																																										
153	AC	POWER & SERVO ASSEMBLY - LEM		6007200			A	I	NOTE 11B																																					
152	AC	CONT PNL, RSVR CKT TESTER		2900770-011			B	II	NOTE 11C	FOR DIMENSIONS, SEE DASH 141 VALUES BELOW																																				
151	AC	TESTER, RESOLVER CIRCUIT		2900708-011																																										
150	AC	JUNCTION BOX, P.S.A./G.S.E.		1901933-021						FOR DIMENSIONS, SEE DASH 144 VALUES BELOW																																				
149	AC	BATTERY PACK, LIFTING		2900612-011						FOR DIMENSIONS, SEE DASH 141 VALUES BELOW																																				
148	AC	MOUNTING PLATE, COMPONENT		6900007-011						FOR DIMENSIONS, SEE DASH 144 VALUES BELOW																																				
147	AC	MOUNTING PLATE, COMPONENT		2900677-011																																										
146	AC	CART, TRANS, G AND N		1900009-041																																										
145	AC	CONTAINER, SHIPPING, IMU		1900010-021		NAS-9-497	B	II	NOTE 11C																																					
144	AC	FIX., MOUNTING, G AND N		1902204-021			B	II	NOTE 11C	4.125	1.812	3.250	NA	.125	.062	.12	.156	.188 .104	.125	1.625	1.140	.890	.640	1.390	.125	.171	.125	1.875	1.687	2.625	.250	1.562	3.843	.093	NA	NA	.359	.125	.437	3.688	NA	3.687	.093	.40	.25	3.875
143	AC	CSL, COOL. AND PWR, G AND N		1902134-021						4.125	1.812	3.250		.125	.062	.12	.156		.125	1.625	1.140	.890	.640	1.390	.125	.171	.125	1.875	1.687	2.625	.250	1.562	3.843	.093			.359	.125	.437	3.688		3.687	.093	.40	.25	3.875
142	AC	ANALYZER, OPTICS-INERTIAL		2900023-011						4.125	1.812	3.250		.125	.062	.12	.156		.125	1.625	1.140	.890	.640	1.390	.125	.171	.125	1.875	1.687	2.625	.250	1.562	3.843	.093			.359	.125	.437	3.688		3.687	.093	.40	.25	3.875
141	AC	CONT, TEMP, PORTABLE		2900060-011						2.125	.968	1.718		.093	.031	.06	.093		.093	.858	.608	.484	.358	.733	.077	.116	.062	.937	.875	1.343	.125	.781	1.89	.046			.209	.093	.250	1.875		1.840	.046	.23	.16	1.938
140	AC	TESTER, CKT, IMU/CDU RSVR		2900286-011						4.125	1.812	3.250		.125	.062	.12	.156		.125	1.625	1.140	.890	.640	1.390	.125	.171	.125	1.875	1.687	2.625	.250	1.562	3.843	.093			.359	.125	.437	3.688		3.687	.093	.40	.25	3.875
139	AC	SIMULATOR, LD/SIG, CDU		2900285-011																																										
138	AC	SIMULATOR, LD/SIG, OPTICS		1902023-021																																										
137	AC	FIX., MOUNTING, IMU/NAV BASE		6900003-011																																										
136	AC	FIXTURE, OPTICS/NAV BASE		2900072-011																																										
135	AC	FIX., MOUNTING, SUB SYSTEM		2900070-011																																										
134	AC	FIX., HAND., G AND N HARNESS		2900069-011																																										
133	AC	CNTR, SHIPPING, NAV BASE		2900068-011																																										
132	AC	FIX., MOUNTING, G AND N		2900067-011																																										
131	AC	SIMULATOR, LD/SIG, IMU/CDU		2900062-011																																										
130	AC	TESTER, GYRO WHEEL		2900061-011																																										
129	AC	COOLANT SUPPLY		1902133-021																																										
128	AC	TABLE, ROTARY		1900926-021						4.125	1.812	3.250		.125	.062	.12	.156		.125	1.625	1.140	.890	.640	1.390	.125	.171	.125	1.875	1.687	2.625	.250	1.562	3.843	.093			.359	.125	.437	3.688		3.687	.093	.40	.25	3.875
127	AC	FIX., HAND., OPTICS		2900074-011						2.125	.968	1.718		.093	.031	.06	.093		.093	.858	.608	.484	.358	.733	.077	.116	.062	.937	.875	1.343	.125	.781	1.892	.046			.209	.093	.250	1.875		1.840	.046	.23	.16	1.938
126	AC	FIXTURE, MTG, PTA/PEA.		2900066-011																																										
125	AC	CONT, TEMP, IMU LIFTING		2900063-011																																										
124	AC	FIXTURE, HANDLING, IMU		2900064-011																																										
123	AC	CONT, OPTICS, REMOTE		1902046-021																																										
122	AC	TEST CONTROL		1902009-021																																										
121	AC	ADPT MODULE, P.S.A.		1902431-021																																										
120	AC	BRIDGE, DECADE ERROR		2900128-011																																										
119	AC	PWR SUP, ELECTRONICS		2900012-011																																										
118	AC	PWR SUP, RELAY AND LAMP		1900049-031																																										
117	AC	CONSOLE, OSCILLOGRAPH		1900000-021																																										
116	AC	ADPT MODULE, P.S.A.		1902431-011																																										
115	AC	ADPT, TEST POINT, PTA/PEA.		2900145-011																																										
114	AC	ADPT, TEST POINT, P.S.A.		2900037-011																																										
113	AC	CONTROL, GIMBAL POSITION		2900036-011																																										
112	AC	SELECTOR, SIGNAL, PRIMARY		2900035-011																																										
111	AC	SEL, SIG, OSCILLOGRAPH		2900034-011																																										
110	AC	PANEL, PWR SUP AND LOAD		2900033-011																																										
109	AC	PANEL, MONITOR		2900031-011																																										
108	AC	PANEL, AUXILIARY INPUT		2900030-011																																										
107	AC	CAGING ELECTRONICS, GYRO		2900029-011																																										
106	AC	TEST SELECTOR		2900028-011																																										
105	AC	TEST CONTROL		2900027-011																																										
104	AC	MONITOR AND CONTROL, TEMP		2900026-011																																										
103	AC	DISTRIBUTION BOX, GSE		2900024-011																																										
102	AC	VOLTMETER, DIGITAL		2900007-011			B	II	NOTE 11C	2.125	.968	1.718	NA	.093	.031	.06	.093	.188 .104	.093	.858	.608	.484	.358	.733	.077	.116	.062	.937	.875	1.343	.125	.781	1.892	.046	NA	NA	.209	.093	.250	1.875	NA	1.840	.046	.23	.16	1.938
101	AC	NAVIGATION BASE ASSEMBLY - LEM		6899950		NAS-9-497	A	I	NOTE 11B	2.000	1.312	1.906	1.375	.078	.048	.078	.093	NA	NA	1.125	.750	.593	.453	1.015	.062	.187	.078	.875	.718	1.375	.218	NA	NA	.048	.031	.875	.305	.078	.531	1.906	.078	NA	.078	.531	.187	NA
100	AC	NAVIGATION BASE ASSEMBLY		2899982		NAS-9-497	A	I	NOTE 11B	2.000	1.312	1.906	1.375	.078	.048	.078	.093	NA	NA	1.125	.750	.593	.453	1.015	.062	.187	.078	.875	.718	1.375	.218	NA	NA	.048	.031	.875	.305	.078	.531	1.906	.078	NA	.078	.531	.187	NA

AC ELECTRONICS DASH NUMBERS

THIS SHEET ADDED

Ⓖ REPLACES REV F WITH CHANGE

NOTES FOR TABLE

STYLE A IS FOR G & N SYSTEM
STYLE B IS FOR GROUND SUPPORT EQUIPMENT
TYPE I IS WITHOUT MOUNTING HOLES
TYPE II IS WITH MOUNTING HOLES

NOTE: AC DASH NO's. CONT. ON SH. 6

QTY REQD	PART OR IDENTIFYING NO.	MATERIAL OR NOTES	NOMENCLATURE OR DESCRIPTION	FIND NO.

LIST OF MATERIALS

AS APPLICABLE	
NEXT ASSY	USED ON
APPLICATION	

UNLESS OTHERWISE SPECIFIED
DIMENSIONS ARE IN INCHES
CAPACITOR VALUES ARE IN μf
RESISTOR VALUES ARE IN OHMS
TOLERANCES ON
FRACTIONS ± — DECIMALS ±.005 ANGLES ± —
DO NOT SCALE THIS DRAWING

MATERIAL
SEE NOTE 11

MIT
INSTRUMENTATION LAB
CAMBRIDGE, MASS.

MANNED SPACECRAFT CENTER
HOUSTON, TEXAS

DRAWN	R A Jones	7-16-65
CHECKED	A J Lucas	7-22-65
APPROVED		
APPROVED	W Kupfer	22 Jul 65
APPROVED MIT	W Kupfer	22 Jul 65
APPROVED MSC		7/22/65
		DATE

NAMEPLATES,
APOLLO G&N-GSE
(STANDARDS)

CODE IDENT NO. 80230
SIZE E
DRAWING NO. 1004260
SCALE NONE
SHEET 4 OF 6

NOTICE – WHEN GOVERNMENT DRAWINGS, SPECIFICATIONS, OR OTHER DATA ARE USED FOR ANY PURPOSE OTHER THAN IN CONNECTION WITH A DEFINITELY RELATED GOVERNMENT PROCUREMENT OPERATION, THE UNITED STATES GOVERNMENT THEREBY INCURS NO RESPONSIBILITY NOR ANY OBLIGATION WHATSOEVER; AND THE FACT THAT THE GOVERNMENT MAY HAVE FORMULATED, FURNISHED, OR IN ANY WAY SUPPLIED THE SAID DRAWINGS, SPECIFICATIONS OR OTHER DATA IS NOT TO BE REGARDED BY IMPLICATION OR OTHERWISE AS IN ANY MANNER LICENSING THE HOLDER OR ANY OTHER PERSON OR CORPORATION, OR CONVEYING ANY RIGHTS OR PERMISSION TO MANUFACTURE, USE, OR SELL ANY PATENTED INVENTION THAT MAY IN ANY WAY BE RELATED THERETO.

REVISIONS 02768

SYM	ZONE	DESCRIPTION	DR	CHK	DATE	APPROVED
G		REPLACES REV F WITH CHANGE PER TDRR 20854	rj		7/26/65	WK
H		REVISED PER TDRR 20892	rj		8/3/65	WK
J		REVISED PER TDRR 20904	rj		8/3/65	WK
K		REVISED PER TDRR 21379	rj		8/6/65	WK
L		REVISED PER TDRR 21410	rj		8/23/65	WK
M		REVISED PER TDRR 21993	rj			
N		REVISED PER TDRR 22621	rj		10/14/65	
P		REVISED PER TDRR 22671	rj			
R		REVISED PER TDRR 22672	rj			
S		REVISED PER TDRR 22750	rj			
T		REVISED PER TDRR 22823	rj			WK
U		REVISED PER TDRR 23072	rj		[illegible]-65	WGM
V		REVISED PER TDRR 23521	rj		10-26-65	WK
W		REVISED PER TDRR 23824	RAJ		11-9-65	WK
Y		REVISED PER TDRR 24018	RAJ		11-16-65	WK
Z		REVISED PER TDRR 24040	RAJ		11-19-65	WK
AA		REVISED PER TDRR 24060	RAJ		11-19-65	WK
AB		REVISED PER TDRR 24868	RAJ		12-22-65	WK
AC		REVISED PER TDRR 24973	RAJ		1-4-66	WK
AD		REVISED PER TDRR 25065	RAJ		1-18-66	WGM
AE		REVISED PER TDRR 25672	RAJ		2-4-66	WK
AF		REVISED PER TDRR 25671	RAJ		2-4-66	WK
AG		REVISED PER TDRR 26110	RAJ		2-15-66	WK
AH		REVISED PER TDRR 26372	"		3-16-66	WGM
AJ		REVISED PER TDRR 26425	"		3-18-66	WGM
AK		REVISED PER TDRR 26743	"		3-16-66	WGM
AL		REVISED PER TDRR 26798	"		3-16-66	WGM
AM		REVISED PER TDRR 27168	"		4-7-66	WGM
AN		REVISED PER TDRR 27235	"		4-7-66	WGM
AP		REVISED PER TDRR 27345	"		4-7-66	WGM
AR		REVISED PER TDRR 27417	"		4-7-66	WGM
AS		REVISED PER TDRR 27442	"		4-7-66	WGM
AT		REVISED PER TDRR 27719	"		4-20-66	WK
AU		REVISED PER TDRR 27880	"		4-20-66	WK
AV		REVISED PER TDRR 27896	"		4-20-66	WK
AW		28110	"		5-16-66	WGM
AY		28173	"			WGM
AZ		28131	"			WGM
BA		28124	"			WGM
BB		REVISED PER TDRR 28511	"		5-16-66	WGM
BC		" " " 28949	"		5-24-66	WGM
BD		" " " 29222	"		6-8-66	WGM
BE		" " " 29235	"		"	WGM
BF		" " " 29322	"		6-24-66	WGM
BG		" " " 29429	"		"	WGM
BH		" " " 29449	"		"	WGM
BJ		" " " 29335	"		"	WGM
BK		" " " 29619	"		"	WGM
BL		" " " 29696	"		6 29 66	WGM
BM		REVISION STATUS CHANGED	JSD		7-29-66	
BN		REVISION STATUS CHANGED	JI	RLW	22 AUG 66	
BP		REVISION STATUS CHANGED	JI	RLW	AUG. 66	
BR		REVISION STATUS CHANGED	JI	RLW	23 AUG. 66	
BS		REVISION STATUS CHANGED	GW	RLW	26 AUG 66	
BT		REVISION STATUS CHANGED	GW	RLW	26 AUG 66	
BU		REVISION STATUS CHANGED	EH	JI	9 SEPT 66	
BV		REVISION STATUS CHANGED	JJB	RLW	30 SEP 66	
BW		REVISION STATUS CHANGED	JJB	RLW	30 SEP 66	
BY		REVISION STATUS CHANGED	JJB	RLW	10 OCT 66	
BZ		REVISION STATUS CHANGED	JJB	RLW	10 OCT 66	
CA		REVISION STATUS CHANGED	JJB	NW	25 OCT 66	
CB		REVISION STATUS CHANGED	REF	[illegible]	10 DEC 66	
CC		REVISION STATUS CHANGED	AF	AW	13 JAN 67	

DASH NO.	P/C	PART NAME	REMARKS	PART NO.	SER. NO.	CONT. NO.	STYLE	TYPE	MATERIAL	A	B	C	D	E	F	G	H	J	K	L	M	N	P	R	S	T	U	V	W	Y	Z	AA	AB	AC	AD	AE	AF	AG	AH	AJ	AK	AL	AM	AN	AP	AR
499	MIT																																													
498																																														
401	MIT	COMPUTER ASSY		2003100		NAS-9-497	A	I	NOTE 11 B	2.000	1.312	1.906	1.375	.078	.048	.078	.093	NA	NA	1.125	.750	.593	.453	1.015	.062	.187	.078	.875	.718	1.375	.218	NA	NA	.048	.031	.875	.305	.078	.531	1.906	.078	NA	.078	.531	.187	NA
400	MIT	LIFTING SLING-G&N INST. QUAL. FIX. & AZM. REF. FIX.		1021640		NAS-9-4065	B	II	NOTE 11 C	2.000	1.312	1.687	1.375	.078	.048	.078	.093	.086/.081	.093	1.187	.750	.593	.453	1.015	.062	.187	.078	.875	.718	1.375	.218	1.156	1.843	.048	NA	.875	.305	.078	.312	1.687	.110	1.830	.070	.275	.180	1.844

MIT DASH NUMBERS

NOTES FOR TABLE
STYLE A IS FOR G & N SYSTEM
STYLE B IS FOR GROUND SUPPORT EQUIPMENT
TYPE I IS WITHOUT MOUNTING HOLES
TYPE II IS WITH MOUNTING HOLES

THIS SHEET ADDED
Ⓖ REPLACES REV F WITH CHANGE

QTY REQD	PART OR IDENTIFYING NO.	MATERIAL OR NOTES	NOMENCLATURE OR DESCRIPTION	FIND NO.

LIST OF MATERIALS

NEXT ASSY	USED ON
AS APPLICABLE	

APPLICATION

UNLESS OTHERWISE SPECIFIED
DIMENSIONS ARE IN INCHES
CAPACITOR VALUES ARE IN μf
RESISTOR VALUES ARE IN OHMS
TOLERANCES ON
FRACTIONS ± — DECIMALS ±.005 ANGLES ± —
DO NOT SCALE THIS DRAWING

MATERIAL
SEE NOTE 11

MIT
INSTRUMENTATION LAB
CAMBRIDGE, MASS.

		DATE
DRAWN	R A Jones	7-16-65
CHECKED	[illegible]	7-22-65
APPROVED		
APPROVED	W Kupfer	22/7/65
APPROVED MIT	W Kupfer	22/7/65
APPROVED MSC		7/26/65

MANNED SPACECRAFT CENTER
HOUSTON, TEXAS

NAMEPLATES,
APOLLO G & N-GSE
(STANDARDS)

CODE IDENT NO. 80230
SIZE E
DRAWING NO. 1004260
SCALE NONE
SHEET 5 OF 6

NOTICE – WHEN GOVERNMENT DRAWINGS, SPECIFICATIONS, OR OTHER DATA ARE USED FOR ANY PURPOSE OTHER THAN IN CONNECTION WITH A DEFINITELY RELATED GOVERNMENT PROCUREMENT OPERATION, THE UNITED STATES GOVERNMENT THEREBY INCURS NO RESPONSIBILITY NOR ANY OBLIGATION WHATSOEVER; AND THE FACT THAT THE GOVERNMENT MAY HAVE FORMULATED, FURNISHED, OR IN ANY WAY SUPPLIED THE SAID DRAWINGS, SPECIFICATIONS OR OTHER DATA IS NOT TO BE REGARDED BY IMPLICATION OR OTHERWISE AS IN ANY MANNER LICENSING THE HOLDER OR ANY OTHER PERSON OR CORPORATION, OR CONVEYING ANY RIGHTS OR PERMISSION TO MANUFACTURE, USE, OR SELL ANY PATENTED INVENTION THAT MAY IN ANY WAY BE RELATED THERETO.

REVISIONS 02768

SYM	ZONE	DESCRIPTION	DR	CHK	DATE	APPROVED
AG		CHANGED NUMBER OF SHEETS FROM 5 TO 6 PER TDRR 26110.	RAJ		2-15-66	
AH		REVISED PER TDRR 26372	"		3-16-66	
AJ		REVISED PER TDRR 26425	"		3-16-66	
AK		REVISED PER TDRR 26743	"		3-16-66	
AL		REVISED PER TDRR 26798	"		3-16-66	
AM		REVISED PER TDRR 27168	"		4-7-66	
AN		REVISED PER TDRR 27235	"		4-7-66	
AP		REVISED PER TDRR 27345	"		4-7-66	
AR		REVISED PER TDRR 27417	"		4-7-66	
AS		REVISED PER TDRR 27442	"		4-7-66	
AT		REVISED PER TDRR 27719	"		4-20-66	
AU		REVISED PER TDRR 27880	"		4-20-66	
AV		REVISED PER TDRR 27896	"		4-20-66	
AW		↕ ↕ 28110	"		5-16-66	
AY		↕ ↕ 28173	"		5-16-66	
AZ		↕ ↕ 28131	"		5-16-66	
BA		↕ ↕ 28124	"		5-16-66	
BB		REVISED PER TDRR 28511	"		5-16-66	
BC		" " " 28949	"		5-24-66	
BD		" " " 29222	"		6-8-66	
BE		" " " 29235	"		"	
BF		" " " 29322	"		6-24-66	
BG		" " " 29429	"		"	
BH		" " " 29449	"		"	
BJ		" " " 29335	"		"	
BK		" " " 29619	"		"	
BL		" " " 29696	"		6-29-66	
BM		REVISION STATUS CHANGED	JSD	N.S.	7-29-66	
BN		REVISED PER TDRR 29974	JL	RLW	22 AUG 66	
BP		REVISION STATUS CHANGED	JL	RLW	22 AUG 66	
BR		REVISION STATUS CHANGED	JL	RLW	23 AUG 66	
BS		REVISED PER TDRR 30530	GW	RLW	26 AUG 66	
BT		REVISED PER TDRR 30543	GW	RLW	26 AUG 66	
BU		REVISED PER TDRR 30898	EH	TT	9 SEPT	
BV		REVISED PER TDRR 31241	JJB	RLW	30 SEP 66	
BW		REVISION STATUS CHANGED	JJB	RLW	30 SEP 66	
BY		REVISED PER TDRR 31341	JJB	RLW	10 OCT 66	
BZ		REVISED PER TDRR 31393	JJB	RLW	10 OCT 66	
CA		REVISED PER TDRR 31593	JJB		25 OCT 66	
CB		REVISED PER TDRR 32187	REF		10 DEC 66	
CC		REVISED PER TDRR 32512	AF	BW	12 JAN 67	

DASH NO.	P/C	PART NAME	REMARKS	PART NO.	SER NO.	CONT NO.	STYLE	TYPE	MATERIAL	A	B	C	D	E	F	G	H	J	K	L	M	N	P	R	S	T	U	V	W	Y	Z	AA	AB	AC	AD	AE	AF	AG	AH	AJ	AK	AL	AM	AN	AP	AR
599	AC																																													
598	AC																																													
548		CAGING ELECTRONICS, GYRO		2900029-031		NAS-9-497	B	II	NOTE 11C	2.125	.968	1.718	NA	.093	.031	.06	.093	.100 .104	.093	.858	.608	.484	.358	.733	.077	.116	.062	.937	.875	1.343	.125	.781	1.892	.046	NA	NA	.209	.093	.250	1.875	NA	1.840	.046	.23	.16	1.938
547		CSL, CAL AND TEST, SCM/PSAAM		2900895-021		NAS-9-497	B	II	NOTE 11C	4.125	1.812	3.250	NA	.125	.062	.12	.156	.100 .104	.125	1.625	1.140	.890	.640	1.390	.125	.171	.125	1.875	1.687	2.625	.250	1.562	3.843	.093	NA	NA	.359	.125	.437	3.688	NA	3.687	.093	.40	.25	3.875
546		FIX., HAND., C/M AND LEM CDU		2900999-021		NAS-9-497	B	II	NOTE 11C	2.125	.968	1.718	NA	.093	.031	.06	.093	.100 .104	.093	.858	.608	.484	.358	.733	.077	.116	.062	.937	.875	1.343	.125	.781	1.892	.046	NA	NA	.209	.093	.250	1.875	NA	1.840	.046	.23	.16	1.938
545	AC	G&N INDICATOR CONTROL PANEL ASSY		2014578-021		NAS-9-497	A	I	NOTE 11B	3.000	1.938	2.437	NA	.125	.062	.188	.156	NA	NA	1.750	1.125	.906	.688	1.500	NA	.281	.125	NA	1.094	2.062	.312	NA	2.500	.062	.125	1.312	.469	NA	NA	NA	.156	NA	.125	.469	.344	NA
544		ADPT MODULE, P.S.A.		1902431-051		NAS-9-497	B	II	NOTE 11C	2.125	.968	1.718	NA	.093	.031	.05	.093	.100 .104	.093	.858	.608	.484	.358	.733	.077	.116	.062	.937	.875	1.343	.125	.781	1.892	.046	NA	NA	.209	.093	.250	1.875	NA	1.840	.046	.23	.16	1.938
541	AC	FIXTURE, MOUNTING, IMU		2900000-021		NAS 9-497	B	II	NOTE 11C	4.125	1.812	3.250	NA	.125	.062	.12	.156	.100 .104	.125	1.625	1.140	.890	.640	1.390	.125	.171	.125	1.875	1.687	2.625	.250	1.562	3.843	.093	NA	NA	.359	.125	.437	3.688	NA	3.687	.093	.40	.25	3.875
543	AC	PANEL, MONITOR		2900031-041		NAS9-497	B	II	NOTE 11C	2.125	.968	1.718	NA	.093	.031	.06	.093	.100 .104	.093	.858	.608	.464	.358	.733	.077	.116	.062	.937	.875	1.343	.125	.781	1.892	.046	NA	NA	.209	.093	.250	1.875	NA	1.840	.046	.23	.25	1.938
542	AC	BATTERY PACK, LIFTING		2900812-021		NAS9-497	B	II	NOTE 11C	2.125	.968	1.718	NA	.093	.031	.06	.093	.100 .104	.093	.858	.608	.484	.358	.733	.077	.116	.062	.937	.875	1.343	.125	.781	1.892	.046	NA	NA	.209	.093	.250	1.875	NA	1.840	.046	.23	.16	1.938
540	AC	ADPT, TEST POINT, P.S.A.		2900037-031		NAS 9-497	B	II	NOTE 11C	2.125	.968	1.718	NA	.093	.031	.06	.093	.100 .104	.093	.858	.608	.484	.358	.733	.077	.116	.062	.937	.875	1.343	.125	.781	1.892	.046	NA	NA	.209	.093	.250	1.875	NA	1.840	.046	.23	.16	1.938
539	AC	ANNUNCIATOR PANEL AND EYEPIECE STORAGE ASSEMBLY		1021255-041		↕	A	I	NOTE 11B	2.000	1.312	1.906	1.375	.078	.048	.078	.093	NA	NA	1.125	.750	.593	.453	1.015	.062	.187	.078	.875	.718	1.375	.218	NA	NA	.048	.031	.875	.305	.078	.531	1.906	.078	NA	.078	.531	.187	NA
538	AC	ANNUNCIATOR PANEL AND EYEPIECE STORAGE ASSEMBLY		1021255-031		↕	A	I	NOTE 11B	2.000	1.312	1.906	1.375	.078	.048	.078	.093	NA	NA	1.125	.750	.593	.453	1.015	.062	.187	.078	.875	.718	1.375	.218	NA	NA	.048	.031	.875	.305	.078	.531	1.906	.078	NA	.078	.531	.187	NA
537	AC	TEST SELECTOR		2900028-031		↕	B	II	NOTE 11C	2.125	.968	1.718	NA	.093	.031	.06	.093	.100 .104	.093	.858	.608	.484	.358	.733	.077	.116	.062	.937	.875	1.343	.125	.781	1.892	.046	NA	NA	.209	.093	.250	1.875	NA	1.840	.046	.23	.16	1.938
536	AC	ANALYZER, OPTICS-INERTIAL		2900023-041		↕	B	II	NOTE 11C	4.125	1.812	3.250	NA	.125	.062	.12	.156	.100 .104	.125	1.625	1.140	.890	.640	1.390	.125	.171	.125	1.875	1.687	2.625	.250	1.562	3.843	.093	NA	NA	.359	.125	.437	3.688	NA	3.687	.093	.40	.25	3.875
535	AC	CONT, TEMP, PORTABL.		2900060-021		↕	B	II	NOTE 11C	2.125	.968	1.718	NA	.093	.031	.06	.093	.100 .104	.093	.858	.608	.484	.358	.733	.077	.116	.062	.937	.875	1.343	.125	.781	1.892	.046	NA	NA	.209	.093	.250	1.875	NA	1.840	.046	.23	.16	1.938
534	AC	COMPUTER CONT & RETICLE DIMMER		6014512-021		↕	A	I	NOTE 11B	2.000	1.312	1.906	1.375	.078	.048	.078	.093	NA	NA	1.125	.750	.593	.453	1.015	.062	.187	.078	.875	.718	1.375	.218	NA	NA	.048	.031	.875	.305	.078	.531	1.906	.078	NA	.078	.531	.187	NA
533	AC	ADPT MODULE, P.S.A.		1902431-041		↕	B	II	NOTE 11C	2.125	.968	1.718	NA	.093	.031	.06	.093	.100 .104	.093	.858	.608	.484	.358	.733	.077	.116	.062	.937	.875	1.343	.125	.781	1.892	.046	NA	NA	.209	.093	.250	1.875	NA	1.840	.046	.23	.16	1.938
532	AC	TRAY BREAKOUT, 105 PIN		1900807-021		↕	↕	↕	↕	4.125	1.812	3.250	↕	.125	.062	.12	.156	.100 .104	.125	1.625	1.140	.890	.640	1.390	.125	.171	.125	1.875	1.687	2.625	.250	1.562	3.843	.093	↕	↕	.359	.125	.437	3.688	↕	3.687	.093	.40	.25	3.875
531	AC	TRAY BREAKOUT, 84 PIN		1900806-021		↕	↕	↕	↕	4.125	1.812	3.250	↕	.125	.062	.12	.156	.100 .104	.125	1.625	1.140	.890	.640	1.390	.125	.171	.125	1.875	1.687	2.625	.250	1.562	3.843	.093	↕	↕	.359	.125	.437	3.688	↕	3.687	.093	.40	.25	3.875
530	A	HEAT SINK - TRAY EXTENDER		1900808-021		↕	↕	↕	↕	2.125	.968	1.718	↕	.093	.031	.06	.093	.100 .104	.093	.858	.608	.484	.358	.733	.077	.116	.062	.937	.875	1.343	.125	.781	1.892	.046	↕	↕	.209	.093	.250	1.875	↕	1.840	.046	.23	.16	1.938
529	AC	TESTER, FAILURE INDICATOR		1900809-021		↕	↕	↕	↕	2.125	.968	1.718	NA	.093	.031	.06	.093	.100 .104	.093	.858	.608	.484	.358	.733	.077	.116	.062	.937	.875	1.343	.125	.781	1.392	.046	NA	NA	.209	.093	.250	1.875	NA	1.840	.046	.23	.16	1.938
527	AC	FIX., MOUNTING, G AND N	(-144)	1902204-021		↕	↕	↕	↕																																					
526	AC	FIX., MOUNTING, G AND N	(-144)	2900067-031		↕	↕	↕	↕	FOR DIMENSIONS, SEE DASH 500 VALUES BELOW																																				
525	AC	PORTABLE TEMP. CONTROLLER		1900496-021		↕	↕	↕	↕																																					
524	AC	POWER, SERVO AND THERMOCOUPLE ASSEMBLY C/M		2010743		↕	B	II	NOTE 11C	3.000	1.937	2.437	2.312	.125	.031	.125	.156	.125	.125	1.718	1.187	.968	.749	1.452	.093	.295	.090	1.312	1.00	2.000	.250	1.687	2.750	.062	N/A	N/A	.463	.125	.562	2.437	.140	2.562	.090	.468	.359	2.750
523	AC	PULSE TORQUE AND THERMOCOUPLE ASSEMBLY-LEM		6010656		↕	A	I	NOTE 11B	2.125	.968	1.718	NA	.093	.031	.06	.093	NA	NA	.858	.608	.484	.358	.733	.062	.140	.062	NA	.968	1.450	.125	NA	1.720	.046	.03	NA	.210	NA	NA	NA	.070	NA	.046	.32	.16	NA
522	AC	COUPLING DATA UNIT AND THERMOCOUPLE ASSEMBLY - LEM		2010744		↕	↕	↕	↕																																					
521	AC	COUPLING DATA UNIT AND THERMOCOUPLE ASSEMBLY - C/M		2010744		↕	↕	↕	↕	FOR DIMENSIONS, SEE DASH 508 VALUES BELOW																																				
520	AC	PIPA ELECTRONICS AND THERMOCOUPLE ASSEMBLY		2010745		↕	A	I	NOTE 11B																																					
519	AC	FIXTURE, HANDLING, LEM-PSA	(-141)	6900129-011		↕	B	II	NOTE 11C	FOR DIMENSIONS, SEE DASH 504 VALUES BELOW																																				
518	AC	JUNCTION BOX, GSE-PSA	(-144)	1901933-031		↕	B	II	NOTE 11C	FOR DIMENSIONS, SEE DASH 500 VALUES BELOW																																				
517	AC	FIX., HAND., OPTICS INSTL.	(-141)	2901380-011		↕	B	II	NOTE 11C	FOR DIMENSIONS SEE DASH 502 VALUES BELOW																																				
516	AC	POWER, SERVO AND THERMOCOUPLE ASSEMBLY-LEM		6010655		NAS 9-497	A	I	NOTE 11B	FOR DIMENSIONS SEE DASH 508 VALUES BELOW																																				
514	AC	SIGNAL COND. ASSY LEM OPER.	(-100)	6007013		NAS-9-497	A	I	NOTE 11B	FOR DIMENSIONS, SEE DASH 508 VALUES BELOW																																				
513	↕	JUMPER, BY-PASS	(-141)	1021616		↕																																								
512	↕	COUPLING DATA UNIT ASSEMBLY C/M	(-100)	2007322-011		↕	B	II	NOTE 11C	2.125	.968	1.718	NA	.093	.031	.06	.093	.100 .104	.093	.858	.608	.484	.358	.733	.077	.116	.062	.937	.875	1.343	.125	.781	1.892	.046	NA	NA	.209	.093	.250	1.875	NA	1.840	.046	.23	.16	1.938
511	↕	COUPLING DATA UNIT ASSEMBLY-LEM	(-100)	2007322-021		↕	A	I	NOTE 11B	FOR DIMENSIONS, SEE DASH 508 VALUES BELOW																																				
510	↕	BATTERY POWER PACK	(-144)	1900011-041		↕																																								
509	↕	JUNCTION BOX, P.S.A./G.S.E.	(-144)	1902195-021		↕	B	II	NOTE 11C	FOR DIMENSIONS, SEE DASH 500 VALUES BELOW																																				
508	↕	NAVIGATION BASE ASSEMBLY - LEM	✓ (-101)	6899980		↕	B	II	NOTE 11C																																					
507	↕	CSL, COOL. AND PWR, G AND N	(-144)	1902134-041		↕	A	I	NOTE 11B	2.000	1.312	1.906	1.375	.078	.048	.078	.093	NA	NA	1.125	.750	.593	.453	1.015	.062	.187	.078	.875	.718	1.375	.218	NA	NA	.048	.031	.875	.305	.078	.531	1.906	.078	NA	.078	.531	.187	NA
506	↕	BREAKOUT BOX, CABLE ADAPTER	(-141)	2901011-011		↕	B	II	NOTE 11C	FOR DIMENSIONS, SEE DASH 500 VALUES BELOW																																				
505	↕	MONITOR AND CONTROL, TEMP	(-141)	2900026-021		↕	↕	↕	↕																																					
504	↕	PWR SUP, GUIDANCE SYSTEM	✓ (-141)	1900033-021		↕	↕	↕	↕																																					
503	↕	CONTROL, GIMBAL POSITION	(-141)	2900036-021		↕	↕	↕	↕	2.125	.968	1.718	NA	.093	.031	.06	.093	.100 .104	.093	.858	.608	.484	.358	.733	.077	.116	.062	.937	.875	1.343	.125	.781	1.892	.046	NA	NA	.209	.093	.250	1.875	NA	1.840	.046	.23	.16	1.938
502	↕	ADPT, TEST POINT, PTA/PEA.	(-141)	2900145-021		↕	↕	↕	↕																																					
501	↕	MOUNTING PLATE, COMPONENT	(-144)	6900007-031		↕	↕	↕	↕																																					
500	AC	MOUNTING PLATE, COMPONENT	✓ (-144)	2900677-021		NAS-9-497	B	II	NOTE 11C	FOR DIMENSIONS, SEE DASH 500 VALUES BELOW																																				
										4.125	1.812	3.250	NA	.125	.062	.12	.156	.100 .104	.125	1.625	1.140	.890	.640	1.390	.125	.171	.125	1.875	1.687	2.625	.250	1.562	3.843	.093	NA	NA	.359	.125	.437	3.688	NA	3.687	.093	.40	.25	3.875

A C ELECTRONICS DASH NUMBERS

(AG) THIS SHEET ADDED

NOTES FOR TABLE

STYLE A IS FOR G&N SYSTEM
STYLE B IS FOR GROUND SUPPORT EQUIPMENT
TYPE I IS WITHOUT MOUNTING HOLES
TYPE II IS WITH MOUNTING HOLES

QTY REQD	PART OR IDENTIFYING NO.	MATERIAL OR NOTES	NOMENCLATURE OR DESCRIPTION	FIND NO.

LIST OF MATERIALS

NEXT ASSY	USED ON
AS APPLICABLE	

APPLICATION

UNLESS OTHERWISE SPECIFIED
DIMENSIONS ARE IN INCHES
CAPACITOR VALUES ARE IN μf
RESISTOR VALUES ARE IN OHMS
TOLERANCES ON
FRACTIONS ± — DECIMALS ±.005 ANGLES ± —
DO NOT SCALE THIS DRAWING

MATERIAL
SEE NOTE 11

MIT
INSTRUMENTATION LAB
CAMBRIDGE, MASS.

DRAWN R. A. Jones 2-15-66
CHECKED 2-15-66
APPROVED
APPROVED
APPROVED MIT A. C. METZGER 5-18-66
APPROVED MSC
DATE

MANNED SPACECRAFT CENTER
HOUSTON, TEXAS

NAMEPLATES,
APOLLO G&N-GSE
(STANDARDS)

CODE IDENT NO.	SIZE	DRAWING NO.
80230	E	1004260

SCALE NONE
SHEET 6 OF 6

NOTICE - WHEN GOVERNMENT DRAWINGS, SPECIFICATIONS, OR OTHER DATA ARE USED FOR ANY PURPOSE OTHER THAN IN CONNECTION WITH A DEFINITELY RELATED GOVERNMENT PROCUREMENT OPERATION, THE UNITED STATES GOVERNMENT THEREBY INCURS NO RESPONSIBILITY NOR ANY OBLIGATION WHATSOEVER; AND THE FACT THAT THE GOVERNMENT MAY HAVE FORMULATED, FURNISHED, OR IN ANY WAY SUPPLIED THE SAID DRAWINGS, SPECIFICATIONS, OR OTHER DATA IS NOT TO BE REGARDED BY IMPLICATION OR OTHERWISE AS IN ANY MANNER LICENSING THE HOLDER OR ANY OTHER PERSON OR CORPORATION, OR CONVEYING ANY RIGHTS OR PERMISSION TO MANUFACTURE, USE, OR SELL ANY PATENTED INVENTION THAT MAY IN ANY WAY BE RELATED THERETO.

NOTES:

1. INTERPRET DRAWING IN ACCORDANCE WITH STANDARDS PRESCRIBED IN MIL-D-70327.
2. DIMENSIONS ON EACH VIEW APPLY TO ALL VIEWS. (WITH THE EXCEPTION OF MOUNTING HOLES).
3. FORMATS ILLUSTATED WILL BE APPLICABLE TO ALL ITEMS REQUIRING NAMEPLATES BELOW END ITEM DESIGNATION (SYSTEMS, ASSEMBLIES, ETC.)
4. PLATE BACKGROUND TO BE LUSTERLESS BLACK PER FED-STD-595, COLOR 37038. BORDER, MARKING AND LETTERING TO BE NATURAL METAL,(ANODIZED ALUMINUM).
5. MARKING METHOD TO BE DIE STAMPING, ETCHING OR ENGRAVING IN ACCORDANCE WITH MIL P 19834.
6. LETTERING STYLE TO BE GOTHIC,(SANS SERIFS), AND NUMBERS TO BE ARABIC.
7. WHERE LOCATING DIMENSIONS ARE NOT SHOWN, CHARACTERS SHALL BE SYMMETRICALLY POSITIONED.
8. IDENTIFY WITH DRAWING NUMBER PER ND1002019.
9. WHEN "AUTO MARK" METAL MARKING TYPEWRITER IS USED TO ADD DATA TO BLANK SPACES, TYPE SIZE IS TO BE SELECTED FROM DIMENSIONS U, AC AND AM.
10. NASA SYMBOL IS TO BE PROPORTIONAL TO NAMEPLATE IN RATIO OF 1 TO 5 WITH DIMENSION A VALUE AND IS TO HAVE NATURAL BACKGROUND. NASA SYMBOL LETTERS LETTERING AND FEATHER TO BE BLACK,(OR WHITE FOR SILK SCREENING). WHERE BLACK FEATHER PROTRUDES INTO BLACK BACKGROUND, A MINIMUM OUTLINE OF NATURAL BACKGROUND SHALL EXIST.
11. NAMEPLATES WILL BE APPLIED BY METHODS LISTED BELOW, SHOWN IN ORDER OF PREFERENCE, (IE., FOR RELIABILITY AND WEIGHT).
    - A - STENCIL OR SILK SCREEN DIRECTLY ON EQUIPMENT USING INK PER SCD 1010920,(WHITE OR BLACK).
    - B - ALUMINUM FOIL,(STYLE A OR B, TYPE I):
      FOIL SHALL BE .0030 ± .0005 THICK PER MIL-A-148.
      FOIL SHALL HAVE NO ADHESIVE BACKING.
      FOIL SHALL BE BONDED PER ND 1002219,(METHOD II).
      FOIL SHALL BE CLEAR ANODIZED PER MIL-A-8625, TYPE II.
    - C - PLATE, (STYLE A OR B, TYPE II):
      MATERIAL: QQ-A-250, TEMPER O OR H14, TYPE 1100, ALUMINUM ALLOY, .032 THICK.
      ANODIZE PER MIL-A-8625, TYPE II.
      ALUMINUM PLATE MUST BE FREE FROM BURRS AND SHARP CORNERS, MOUNTED WITH APPLICABLE SIZE FASTENERS.
12. NAMEPLATES SHALL BE CAPABLE OF MEETING APPLICABLE REQUIREMENTS OF MIL-M-13231.
13. ON DIMENSION TABLES SHOWN ON PAGES 2, 3, 4 AND 5, NA MEANS, "NOT APPLICABLE".

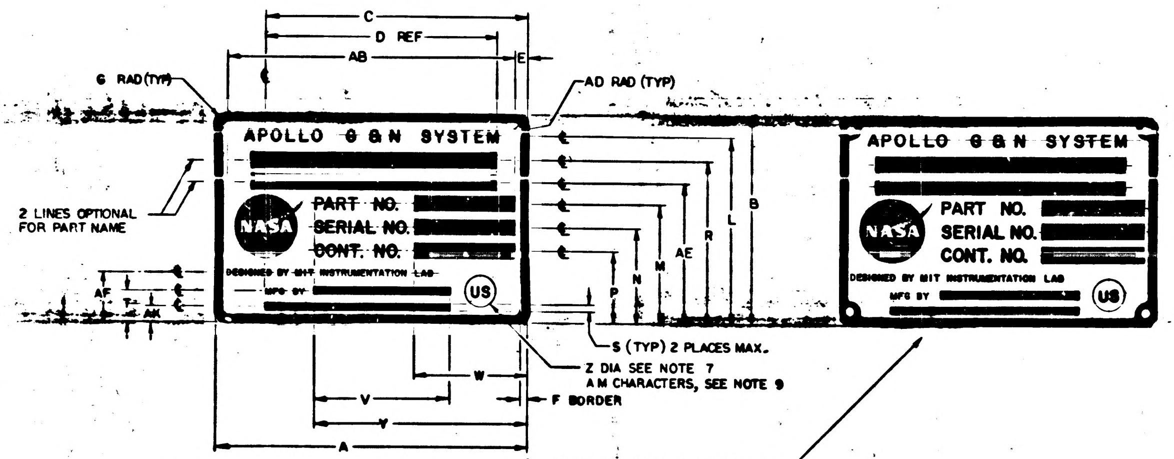

FOR G AND N SYSTEM
STYLE A

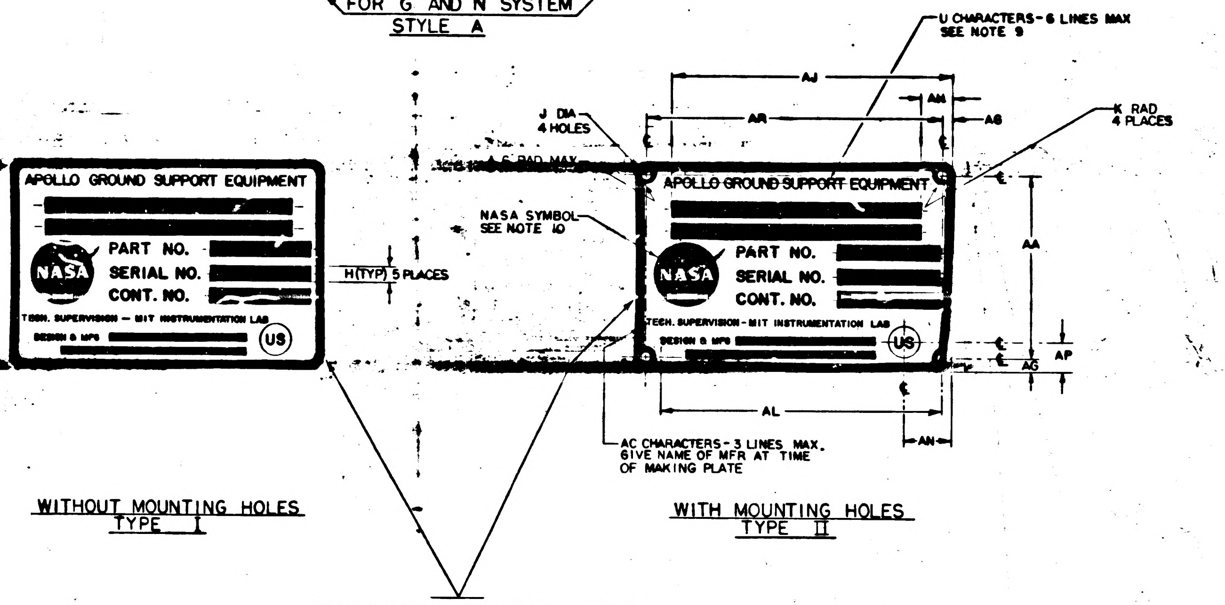
APOLLO GROUND SUPPORT EQUIPMENT
NASA
PART NO.
SERIAL NO.
CONT. NO.
TECH. SUPERVISION — MIT INSTRUMENTATION LAB
DESIGN & MFG
US
H (TYP) 5 PLACES
U CHARACTERS - 6 LINES MAX SEE NOTE 9
AJ
AM
AR
AG
J DIA 4 HOLES
A G RAD MAX
K RAD 4 PLACES
NASA SYMBOL SEE NOTE 10
AA
AP
AG
AL
AN
AC CHARACTERS - 3 LINES MAX. GIVE NAME OF MFR AT TIME OF MAKING PLATE

WITHOUT MOUNTING HOLES
TYPE I

WITH MOUNTING HOLES
TYPE II

FOR GROUND SUPPORT EQUIPMENT
STYLE B

REVISIONS

02768

	SYM	ZONE	DESCRIPTION	DR	CHK	DATE	APPROVED
	G		REPLACES REV F WITH CHANGE PER TDRR 20854			7/22/65	WK
★	H		REVISED PER TDRR 20892			8/3/65	WK
	J		REVISED PER TDRR 20904			8/4/65	WK
	K		REVISED PER TDRR 21379			8/16/65	WK
	L		REVISED PER TDRR 21410			8/23/65	WK
★	M		REVISED PER TDRR 21993				
★	N		REVISED PER TDRR 22621			10/	
★	P		REVISED PER TDRR 22671			11/	
★	R		REVISED PER TDRR 22672				
★	S		REVISED PER TDRR 22750			65	WK
	T		REVISED PER TDRR 22823				
★	U		REVISED PER TDRR 23072			10-22-65	MGM
	V		REVISED PER TDRR 23521			10-27-65	WK
★	W		REVISED PER TDRR 23824	RAJ		11-9-65	WK
★	Y		REVISED PER TDRR 24018	RAJ		11-16-65	WK
★	Z		REVISED PER TDRR 24040	RAJ		11-19-65	WK
Ⓜ	AA		REVISED PER TDRR 24060	RAJ		11-19-65	WK
Ⓜ	AB		REVISED PER TDRR 24868	RAJ		12-2-65	WK
Ⓜ	AC		REVISED PER TDRR 24973	RAJ		1-4-66	WK
Ⓜ	AD		REVISED PER TDRR 25065	RAJ		1-18-66	MGM
★	AE		REVISED PER TDRR 25672	RAJ		2-4-66	WK
Ⓜ	AF		REVISED PER TDRR 25671	RAJ		2-4-66	WK
	AG		REVISED PER TDRR 26110	RAJ		2-15-66	WK
★	AH		REVISED PER TDRR 26372	"		3-16-66	MGM
★	AJ		REVISED PER TDRR 26425	"		3-16-66	MGM
★	AK		REVISED PER TDRR 26743	"		3-16-66	MGM
Ⓜ	AL		REVISED PER TDRR 26798	"		3-16-66	MGM
★	AM		REVISED PER TDRR 27168	"		4-7-66	MGM
★	AN		REVISED PER TDRR 27235	"		4-7-66	MGM
★	AP		REVISED PER TDRR 27345	"		4-7-66	MGM
★	AR		REVISED PER TDRR 27417	"		4-7-66	MGM
Ⓜ	AS		REVISED PER TDRR 27442	"		4-7-66	MGM
	AT		REVISED PER TDRR 27719	"		4-20-66	WK
Ⓜ	AU		REVISED PER TDRR 27880	"		4-20-66	WK
Ⓜ	AV		REVISED PER TDRR 27896	"		4-20-66	WK
	AW		↑ ↑ ↑ 28110	"		5-16-66	MGM
	AY		28173	"		↑	MGM
	AZ		28131	"			MGM
	BA		↓ ↓ ↓ 28124	"		↓	MGM
	BB		REVISED PER TDRR 28511	"		5-16-66	MGM
Ⓜ	BC		" " " 28949	"		5-24-66	MGM
	BD		" " " 29222	"		6-8-66	MGM
Ⓜ	BE		" " " 29235	"		6-8-66	MGM
	BF		" " " 29322	"		6-30-66	MGM
	BG		" " " 29429	"		"	MGM
	BH		" " " 29449	"		"	MGM
	BJ		" " " 29335	"		"	MGM
	BK		" " " 29619	"		"	MGM
Ⓜ	BL		" " " 29696	"		"	MGM
	BM		REVISION STATUS CHANGED	JSD	MS	7-29-66	
	BN		REVISION STATUS CHANGED	JI	RLW	22 AUG 66	
	BP		REVISION STATUS CHANGED	JI	RLW	22 AUG 66	
	BR		REVISION STATUS CHANGED	JI	RLW	22 AUG 66	
	BS		REVISION STATUS CHANGED	GW	RLW	26 AUG 66	
Ⓜ	BT		REVISION STATUS CHANGED	GW	RLW	66	
Ⓜ	BU		REVISION STATUS CHANGED	EH	JI	8 SEPT 66	
	BV		REVISION STATUS CHANGED	JJB	RLW	30 SEP 66	
	BW		REVISION STATUS CHANGED	JJB	RLW	30 SEP 66	
	BY		REVISION STATUS CHANGED	JJB	RLW	10 OCT 66	
Ⓜ	BZ		REVISION STATUS CHANGED	JJB	RLW	10 OCT 66	
Ⓜ	CA		REVISION STATUS CHANGED	JJB	SM	25 OCT 66	
Ⓜ	CB		REVISION STATUS CHANGED	REF		10 DEC 66	
Ⓜ	CC		REVISION STATUS CHANGED	AF	AW	13 JAN 67	
	CD		REVISION STATUS CHANGED	DR		14 FEB 67	

SUGGESTED PROPORTIONS FOR NAMEPLATE DIMENSIONS.
1. SELECT NAMEPLATE LENGTH, DIMENSION "A", TO FIT DESIGN NEEDS.
2. DIMENSIONS B THRU AS ON LINE 1 BELOW ARE PROPORTIONAL TO "A" BY MULTIPLIERS SHOWN IN LINE 2 BELOW.

1.	A	B	C	D	E	F	G	H	J	K	L	M	N	P	R	S	T	U
2.	1.000 A	.6563 A	.8438 A	.6875 A	.0391 A	.0240 A	.0391 A	.0469 A	.0547 A	.0469 A	.5938 A	.3750 A	.2969 A	.2187 A	.5079 A	.0313 A	.0938 A	.0391 A

1.	V	W	Y	Z	AA	AB	AC	AD	AE	AF	AG	AH	AJ	AK	AL	AM	AN	AP	AR	AS
2.	.4375 A	.3594 A	.6875 A	.1094 A	.5781 A	.9219 A	.0240 A	.0156 A	.4375 A	.1525 A	.0391 A	.1563 A	.8438 A	.0548 A	.8659 A	.0391 A	.1563 A	.0938 A	.9219 A	.0151 A

Ⓖ REPLACES REV F WITH CHANGE

QTY REQD	PART OR IDENTIFYING NO.	MATERIAL OR NOTES	NOMENCLATURE OR DESCRIPTION	FIND NO.

LIST OF MATERIALS

AS APPLICABLE	
NEXT ASSY	USED ON

APPLICATION

UNLESS OTHERWISE SPECIFIED
DIMENSIONS ARE IN INCHES
CAPACITOR VALUES ARE IN µf
RESISTOR VALUES ARE IN OHMS
TOLERANCES ON
FRACTIONS ± — DECIMALS ± .005 ANGLES ± —
DO NOT SCALE THIS DRAWING

MATERIAL
SEE NOTE 11

MIT
INSTRUMENTATION LAB
CAMBRIDGE, MASS.

DRAWN R. A. Jones 7/16/65
CHECKED A. J. Lanza 9-22-65
APPROVED
APPROVED W. Kupfer 7/22/65
APPROVED MIT W. Kupfer 7/22/65
APPROVED MSC 7/22/65
DATE

MANNED SPACECRAFT CENTER
HOUSTON, TEXAS

NAMEPLATES,
APOLLO G&N—GSE
(STANDARDS)

CODE IDENT NO. 80230
SIZE E
DRAWING NO. 1004260
SCALE NONE
SHEET 1 OF 6

MASTER

NOTICE – WHEN GOVERNMENT DRAWINGS, SPECIFICATIONS, OR OTHER DATA ARE USED FOR ANY PURPOSE OTHER THAN IN CONNECTION WITH A DEFINITELY RELATED GOVERNMENT PROCUREMENT OPERATION, THE UNITED STATES GOVERNMENT THEREBY INCURS NO RESPONSIBILITY NOR ANY OBLIGATION WHATSOEVER; AND THE FACT THAT THE GOVERNMENT MAY HAVE FORMULATED, FURNISHED, OR IN ANY WAY SUPPLIED THE SAID DRAWINGS, SPECIFICATIONS OR OTHER DATA IS NOT TO BE REGARDED BY IMPLICATION OR OTHERWISE AS IN ANY MANNER LICENSING THE HOLDER OR ANY OTHER PERSON OR CORPORATION, OR CONVEYING ANY RIGHTS OR PERMISSION TO MANUFACTURE, USE, OR SELL ANY PATENTED INVENTION THAT MAY IN ANY WAY BE RELATED THERETO.

REVISIONS 0278

SYM	ZONE	DESCRIPTION	DR	CHK	DATE	APPROVED
G		REPLACES REV F WITH CHANGE PER TDRR 20854.	"		7/22/65	WR
H		REVISED PER TDRR 20892	"		8/3/65	WR
J		REVISED PER TDRR 20904	"		8/3/65	WR
K		REVISED PER TDRR 21379	"		9/16/65	WR
L		REVISED PER TDRR 21410	"		9/23/65	WR
M		REVISED PER TDRR 21993	"			
N		REVISED PER TDRR 22621	"		10/1/65	
P		REVISED PER TDRR 22671	"			
R		REVISED PER TDRR 22672	"			
S		REVISED PER TDRR 22750	"			WR
T		REVISED PER TDRR 22823	"			
U		REVISED PER TDRR 23072	"		10-12-65	
V		REVISED PER TDRR 23521			10-27-65	
W		REVISED PER TDRR 23824	RAJ		11-9-65	
Y		REVISED PER TDRR 24018	RAJ		11-16-65	WR
Z		REVISED PER TDRR 24040	RAJ		11-19-65	WR
Ⓜ AA		REVISED PER TDRR 24060	RAJ		11-19-65	WR
Ⓜ AB		REVISED PER TDRR 24868	RAJ		12-22-65	WR
Ⓜ AC		REVISED PER TDRR 24973	RAJ		1-4-66	WR
Ⓜ AD		REVISED PER TDRR 25065	RAJ		1-18-66	
AE		REVISED PER TDRR 25672	RAJ		2-4-66	WR
Ⓜ AF		REVISED PER TDRR 25671	RAJ		2-4-66	WR
AG		REVISED PER TDRR 26110	RAJ		2-15-66	WR
AH		REVISED PER TDRR 26372	"		3-16-66	
AJ		REVISED PER TDRR 26425	"		3-16-66	
AK		REVISED PER TDRR 26743	"		3-16-66	
Ⓜ AL		REVISED PER TDRR 26798	"		3-16-66	
AM		REVISED PER TDRR 27168	"		4-8-66	
AN		REVISED PER TDRR 27235	"		4-8-66	
AP		REVISED PER TDRR 27345	"		4-8-66	
AR		REVISED PER TDRR 27417	"		4-8-66	
Ⓜ AS		REVISED PER TDRR 27442	"		4-8-66	
AT		REVISED PER TDRR 27719	"		4-21-66	WR
Ⓜ AU		REVISED PER TDRR 27880	"		4-21-66	WR
Ⓜ AV		REVISED PER TDRR 27896	"		4-21-66	WR
AW		↓ ↓ 28110	"		5-16-66	
AY		28173	"		↓	
AZ		28131	"			
BA		28124	"			
BB		REVISED PER TDRR 28511	"		5-16-66	
Ⓜ BC		" " " 28949	"		5-24-66	
Ⓜ BD		" " " 29222	"		6-8-66	
BE		" " " 29235	"		"	
BF		" " " 29322	"		6-30-66	
BG		" " " 29429	"		"	
BH		" " " 29449	"		"	
BJ		" " " 29335	"		"	
BK		" " " 29619	"		"	
Ⓜ BL		" " " 29696	"		"	
BM		REVISION STATUS CHANGED	JSD	N.S.	[illegible]29-66	
BN		REVISION STATUS CHANGED	JI	RLW	31 AUG 66	
BP		REVISION STATUS CHANGED	JI	RLW	31 AUG 66	
BR		REVISION STATUS CHANGED	JI	RLW	31 AUG 66	
BS		REVISION STATUS CHANGED	GW	RLW	31 AUG 66	
Ⓜ BT		REVISION STATUS CHANGED	GW	RLW	31 AUG 66	
Ⓜ BU		REVISION STATUS CHANGED	EH	JI	9 SEP 66	
BV		REVISION STATUS CHANGED	JJB	RLW	30 SEP 66	
BW		" " "	JJB	RLW	30 SEP 66	
BY		" " "	JJB	RLW	10 OCT 66	
Ⓜ BZ		REVISION STATUS CHANGED	JJB	RLW	10 OCT 66	
Ⓜ CA		REVISION STATUS CHANGED	JJB		25 OCT 66	
Ⓜ CB		REVISION STATUS CHANGED	REF		10 DEC 66	
Ⓜ CC		REVISION STATUS CHANGED	AF	AW	13 [illegible]	
CD		REVISION STATUS CHANGED	DR	R.W.	14 FEB [illegible]	

DASH NO.	P/C	PART NAME	REMARKS	PART NO.	SER. NO.	CONT. NO.	STYLE	TYPE	MATERIAL	A	B	C	D	E	F	G	H	J	K	L	M	N	P	R	S	T	U	V	W	Y	Z	AA	AB	AC	AD	AE	AF	AG	AH	AJ	AK	AL	AM	AN	AP	AR
399	K																																													
398	K																																													
350	K	ALIGNMENT OPTICAL TELESCOPE (LEM)		NA	NA	NA	A	I	NOTE 11B	4.000	2.625	3.375	2.750	.156	.093	.156	.187	NA	NA	2.312	1.468	1.187	.906	2.031	NA	.375	.156	NA	1.437	2.750	.437	NA	3.688	.062	.062	1.750	.593	NA	.625	3.375	.187	NA	.156	.531	.453	NA
309	K																																													
308	K																																													
307	K						B	I	NOTE 11 B	4.000	2.625	3.375	2.750	.156	.093	.156	.187	NA	NA	2.328	1.468	1.187	.906	2.031	.062	.375	.156	NA	1.437	2.750	.437	NA	3.687	.062	.062	1.750	.593	NA	NA	NA	NA	NA	NA	NA	NA	NA
306	K						B	II	NOTE 11 C	4.000	2.625	3.375	2.750	.156	.093	.156	.187	.125	.156	2.328	1.468	1.187	.906	2.031	.062	.375	.156	↓	1.437	2.750	.437	2.312	3.687	.062	NA	1.750	.593	↓	↓	↓	↓	↓	↓	↓	↓	↓
305	K						B	I	NOTE 11 B	2.000	1.312	1.687	1.375	.078	.048	.078	.093	NA	NA	1.164	.734	.593	.453	1.015	.048	.171	.078	↓	.718	1.375	.187	NA	NA	.048	.031	.875	.320	↓	↓	↓	↓	↓	↓	↓	↓	↓
304	K						B	II	NOTE 11 C	2.000	1.312	1.687	1.375	.078	.048	.078	.093	.070	.078	1.164	.734	.593	.453	1.015	.048	.171	.078	NA	.718	1.375	.187	.156	1.843	.048	NA	.875	.320	NA	NA	NA	NA	NA	NA	NA	NA	NA
303	K																																													
302	K																																													
301	K																																													
300	K	OPTICAL UNIT		NA	NA	NA	A	I	NOTE 11 B	2.000	1.312	1.675	NA	NA	.048	.078	NA	NA	NA	1.090	.812	.675	.540	.940	NA	.265	NA	NA	NA	1.375	.218	NA	NA	NA	NA	NA	.375	NA	NA	NA	.180	NA	.078	NA	NA	NA
9	K	2 IN AUTOCOLLIMATOR		1001702			B	II	NOTE 11 C	4.000	2.625	3.812	2.750	.156	.093	.156	.187	.125	.156	2.250	1.500	1.187	.906	2.031	.093	.375	.156	1.750	1.437	2.750	.437	2.312	3.687	.062	NA	1.750	.593	.156	1.062	3.812	.156	NA	.156	1.062	.375	3.687
8	K	5 IN AUTOCOLLIMATOR		1017410			B	II	NOTE 11 C	4.000	2.625	3.812	2.750	.156	.093	.156	.187	.125	.156	2.250	1.500	1.187	.906	2.031	.093	.375	.156	1.750	1.437	2.750	.437	2.312	3.687	.062	NA	1.750	.593	.156	1.062	3.812	.156	NA	.156	1.062	.375	3.687
7	K	2½ IN AUTOCOLLIMATOR (SCT)		1017435			B	II	NOTE 11 C	4.000	2.625	3.812	2.750	.156	.093	.156	.187	.125	.156	2.250	1.500	1.187	.906	2.031	.093	.375	.156	1.750	1.437	2.750	.437	2.312	3.687	.062	NA	1.750	.593	.156	1.062	3.812	.156	NA	.156	1.062	.375	3.687
6	K	2½ IN AUTOCOLLIMATOR (SXT)		1017448			B	II	NOTE 11 C	4.000	2.625	3.812	2.750	.156	.093	.156	.187	.125	.156	2.250	1.500	1.187	.906	2.031	.093	.375	.156	1.750	1.437	2.750	.437	2.312	3.687	.062	NA	1.750	.593	.156	1.062	3.812	.156	NA	.156	1.062	.375	3.687
5	K	RETROREFLECTING PRISM ASSEMBLY		1019840			B	I	NOTE 11 B	4.000	2.625	3.812	2.750	.156	.093	.156	.187	NA	NA	2.250	1.500	1.187	.906	2.031	.093	.375	.156	1.750	1.437	2.750	.437	NA	NA	.062	.062	1.750	.593	.156	1.062	3.812	.156	NA	.156	1.062	.375	NA
4	K	S/H SIMULATOR ASSEMBLY		1019896			B	I	NOTE 11 B	4.000	2.625	3.812	2.750	.156	.093	.156	.187	NA	NA	2.250	1.500	1.187	.906	2.031	.093	.375	.156	1.750	1.437	2.750	.437	NA	NA	.062	.062	1.750	.593	.156	1.062	3.812	.156	NA	.156	1.062	.375	NA
3	K	REFERENCE MIRROR		1001767			B	I	NOTE 11 B	2.000	1.312	1.906	1.375	.078	.048	.078	.093	NA	NA	1.125	.750	.593	.453	1.015	.062	.187	.078	.875	.718	1.375	.218	NA	NA	.048	.031	.875	.305	.078	.531	1.906	.078	NA	.078	.531	.187	NA
2	K	2 IN PLANE READING AUTOCOLLIMATOR		1017413			B	I	NOTE 11 B	2.000	1.312	1.906	1.375	.078	.048	.078	.093	NA	NA	1.125	.750	.593	.453	1.015	.062	.187	.078	.875	.718	1.375	.218	NA	NA	.048	.031	.875	.305	.078	.531	1.906	.078	NA	.078	.531	.187	NA
1	K	2 IN AUTOCOLLIMATOR		1001702			B	I	NOTE 11 B	2.000	1.312	1.906	1.375	.078	.048	.078	.093	NA	NA	1.125	.750	.593	.453	1.015	.062	.187	.078	.875	.718	1.375	.218	NA	NA	.048	.031	.875	.305	.078	.531	1.906	.078	NA	.078	.531	.187	NA

Ⓖ REPLACES REV F WITH CHANGE

KOLLSMAN DASH NUMBERS

NOTES FOR TABLE

STYLE A IS FOR G&N SYSTEM.
STYLE B IS FOR GROUND SUPPORT EQUIPMENT.
TYPE I IS WITHOUT MOUNTING HOLES.
TYPE II IS WITH MOUNTING HOLES.

MASTER

QTY REQD	PART OR IDENTIFYING NO.	MATERIAL OR NOTES	NOMENCLATURE OR DESCRIPTION	FIND NO.

LIST OF MATERIALS

NEXT ASSY	USED ON
AS APPLICABLE	

APPLICATION

UNLESS OTHERWISE SPECIFIED
DIMENSIONS ARE IN INCHES
CAPACITOR VALUES ARE IN μf
RESISTOR VALUES ARE IN OHMS
TOLERANCES ON
FRACTIONS ± — DECIMALS ±.005 ANGLES ± —
DO NOT SCALE THIS DRAWING

MATERIAL
SEE NOTE 11

MIT
INSTRUMENTATION LAB
CAMBRIDGE, MASS.

DRAWN R.A. Jones 7-16-65
CHECKED 7-22-65
APPROVED
APPROVED W Ryder 7/22/65
APPROVED MIT W Ryder 7/22/65
APPROVED MSC 7/22/65
DATE

MANNED SPACECRAFT CENTER
HOUSTON, TEXAS

NAMEPLATES,
APOLLO G&N-GSE
(STANDANDS)

CODE IDENT NO. 80230
SIZE E
DRAWING NO. 1004260
SCALE NONE
SHEET 2 OF 6

NOTICE – WHEN GOVERNMENT DRAWINGS, SPECIFICATIONS, OR OTHER DATA ARE USED FOR ANY PURPOSE OTHER THAN IN CONNECTION WITH A DEFINITELY RELATED GOVERNMENT PROCUREMENT OPERATION, THE UNITED STATES GOVERNMENT THEREBY INCURS NO RESPONSIBILITY NOR ANY OBLIGATION WHATSOEVER; AND THE FACT THAT THE GOVERNMENT MAY HAVE FORMULATED, FURNISHED, OR IN ANY WAY SUPPLIED THE SAID DRAWINGS, SPECIFICATIONS, OR OTHER DATA IS NOT TO BE REGARDED BY IMPLICATION OR OTHERWISE AS IN ANY MANNER LICENSING THE HOLDER OR ANY OTHER PERSON OR CORPORATION, OR CONVEYING ANY RIGHTS OR PERMISSION TO MANUFACTURE, USE, OR SELL ANY PATENTED INVENTION THAT MAY IN ANY WAY BE RELATED THERETO.

REVISIONS

02768

SYM	ZONE	DESCRIPTION	DR	CHK	DATE	APPROVED
G		REPLACES REV F WITH CHANGE PER TDRR 20854			7/22/65	
H		REVISED PER TDRR 20892			8/3/65	
J		REVISED PER TDRR 20904			8/3/65	
K		REVISED PER TDRR 21379			8/9/65	
L		REVISED PER TDRR 21410			[illegible]	
M		REVISED PER TDRR 21993				
N		REVISED PER TDRR 22621			10/11/65	
P		REVISED PER TDRR 22671				
R		REVISED PER TDRR 22672				
S		REVISED PER TDRR 22750				
T		REVISED PER TDRR 22823				
U		REVISED PER TDRR 23072			10-22-65	
V		REVISED PER TDRR 23521			10-26-65	
W		REVISED PER TDRR 23824	RAJ		11-9-65	
Y		REVISED PER TDRR 24018	RAJ		11-16-65	
Z		REVISED PER TDRR 24040	RAJ		11-19-65	
AA		REVISED PER TDRR 24060	RAJ		11-19-65	
AB		REVISED PER TDRR 24868	RAJ		12-22-65	
AC		REVISED PER TDRR 24973	RAJ		1-4-66	
AD		REVISED PER TDRR 25065	RAJ		1-18-66	
AE		REVISED PER TDRR 25672	RAJ		2-4-66	
AF		REVISED PER TDRR 25671	RAJ		2-4-66	
AG		REVISED PER TDRR 26110	RAJ		2-15-66	
AH		REVISED PER TDRR 26372	"		3-16-66	
AJ		REVISED PER TDRR 26425	"		3-16-66	
AK		REVISED PER TDRR 26743	"		3-16-66	
AL		REVISED PER TDRR 26798	"		3-16-66	
AM		REVISED PER TDRR 27168	"		4-8-66	
AN		REVISED PER TDRR 27235	"		4-8-66	
AP		REVISED PER TDRR 27345	"		4-8-66	
AR		REVISED PER TDRR 27417	"		4-8-66	
AS		REVISED PER TDRR 27442	"		4-8-66	
AT		REVISED PER TDRR 27719	"		4-20-66	
AU		REVISED PER TDRR 27880	"		4-20-66	
AV		REVISED PER TDRR 27896	"		4-20-66	
AW		28110	"		5-16-66	
AY		28173	"		5-16-66	
AZ		28131	"		5-16-66	
BA		28124	"		5-16-66	
BB		REVISED PER TDRR 28511	"		5-16-66	
BC		" " " 28949	"		5-24-66	
BD		" " " 29222	"		6-8-66	
BE		" " " 29235	"		"	
BF		" " " 29322	"		6-29-66	
BG		" " " 29429	"		"	
BH		" " " 29449	"		"	
BJ		" " " 29335	"		"	
BK		" " " 29619	"		"	
BL		" " " 29696	"		"	
BM		" " " 29802	JSD	N.S.	7-29-66	
BN		REVISION STATUS CHANGED	JI	RLW	12 AUG 66	
BP		REVISED PER TDRR 30168	JI	RLW	17 AUG 66	
BR		REVISION STATUS CHANGED	JI	RLW	22 AUG 66	
BS		REVISION STATUS CHANGED	GW	RLW	26 AUG 66	
BT		REVISION STATUS CHANGED	GW	RLW	26 AUG 66	
BU		REVISION STATUS CHANGED	EH	JI	9 SEPT 66	
BV		REVISION STATUS CHANGED	JJB	RLW	30 SEP 66	
BW		REVISED PER TDRR 31279	JJB	RLW	30 SEP 66	
BY		REVISION STATUS CHANGED	JJB	RLW	10 OCT 66	
BZ		REVISION STATUS CHANGED	JJB	RLW	10 OCT 66	
CA		REVISION STATUS CHANGED	JJB		25 OCT 66	
CB		REVISION STATUS CHANGED	REF		10 DEC 66	
CC		REVISION STATUS CHANGED	AF	DW	12 JAN 67	
CD		REVISED PER TDRR 32640	DR	J.W.	14 FEB 67	

DASH NO.	P/C	PART NAME	REMARKS	PART NO.	SER. NO.	CONT. NO.	STYLE	TYPE	MATERIAL	A
299	R									
298	R									
285	R	BUFFER CIRCUIT ASSY		2014254-031	NA	NAS9497	B	I	NOTE 11B	FOR DIMENSIONS SEE DASH 15 VALUES BELOW
284	R	LOGIC DRAWER ASSY NO. 2		2014037-041	NA	NAS9497	B	I	NOTE 11B	FOR DIMENSIONS SEE DASH 17 VALUES BELOW
280	R	COMPUTER TEST SET		2014042-051	NA	NAS9-497	B	II	NOTE 11C	FOR DIMENSIONS SEE DASH 18 VALUES BELOW
279	R	SELF TEST ASSY		2014366-041	NA	NAS9-497	B	I	NOTE 11B	FOR DIMENSIONS SEE DASH- 15 VALUES BELOW
278	R	LOGIC DRAWER ASSY NO.1		2014036-041	NA	NAS9-497	B	I	NOTE 11B	FOR DIMENSIONS SEE DASH 17 VALUES BELOW
277	R	COMPUTER TEST SET		2014042-041	NA	NAS-9-497	B	II	NOTE 11C	FOR DIMENSIONS, SEE DASH 18 VALUES BELOW
276		DRAWER ASSY - PROGRAM & MONITOR		2014041-041				I	NOTE 11B	~~FOR DIMENSIONS, SEE DASH 17 VALUES BELOW~~
275		DRAWER ASSY RDC INTERFACE		2014045-031						
274		SELF TEST ASSY		2014366-031						~~FOR DIMENSIONS, SEE DASH 15 VALUES BELOW~~
273		LOGIC DRAWER ASSY NO. 2		2014037-031						FOR DIMENSIONS, SEE DASH 17 VALUES BELOW
272		DRAWING ASSY PROGRAMMER & MONITOR		2014041-031						FOR DIMENSIONS, SEE DASH 17 VALUES BELOW
271		LOGIC DRAWER ASSY NO. 1		2014036-031				I	NOTE 11B	
270		COMPUTER TEST SET		2014042-031				II	NOTE 11C	FOR DIMENSIONS, SEE DASH 18 VALUES BELOW
269		POWER CONTROL ASSY		2014044-021				I	NOTE 11B	FOR DIMENSIONS, SEE DASH 17 VALUES BELOW
268		SELF TEST ASSY		2014366-021						FOR DIMENSIONS, SEE DASH 15 VALUES BELOW
267		AGC JUNCTION ASSY		2014341-021						
266		POWER CONTROL ASSY		2014079-021						
265		BUFFER CIRCUIT ASSY		2014254-021						
264		DRAWER ASSY X Y INTERFACE		2014040-021						
263		DRAWER ASSY R D C INTERFACE		2014045-021						
262		DRAWER ASSY PROGRAMMER & MONITOR		2014041-021						FOR DIMENSIONS, SEE DASH 17 VALUES BELOW
261		LOGIC DRAWER ASSY NO. 2		2014037-021						
260		LOGIC DRAWER ASSY NO. 1		2014036-021				I	NOTE 11B	
259		OPERATION CONSOLE		2014024-021				II	NOTE 11C	FOR DIMENSIONS, SEE DASH 18 VALUES BELOW
258		COMPUTER TEST SET		2014042-021						
257		AUXILIARY CALIBRATION CONSOLE		2014059-021						
256		AGC CALIBRATION CONSOLE		2014049-021				II	NOTE 11C	
255		AGC HANDLING FIXTURE		2014282-021				I	NOTE 11B	FOR DIMENSIONS, SEE DASH 17 VALUES BELOW
254		DRAWER ASSY COMP. SIMULATOR		2014048-011				II	NOTE 11C	FOR DIMENSIONS, SEE DASH 18 VALUES BELOW
253		SHIPPING KIT ASSY, NAV DSKY		2016312-011						
252		SHIPPING KIT ASSY, UNIVERSAL DSKY		2016316-011						
251		SHIPPING KIT ASSY, MAIN DSKY		2016313-011				II	NOTE 11C	
250		AMPLIFIER, REWORK		2014386				I	NOTE 11B	FOR DIMENSIONS, SEE DASH 15 VALUES BELOW
249		TEMP MONITOR ASSY		2014313-011					NOTE 11C	FOR DIMENSIONS, SEE DASH 17 VALUES BELOW
248		AGC JUNCTION ASSY		2014341-011					NOTE 11B	FOR DIMENSIONS, SEE DASH 15 VALUES BELOW
247		AC INPUT PANEL ASSY		2014302-011						
246		SELF TEST ASSY		2014392 011						
245		TAPE PUNCH ASSEMBLY		2014039-011						FOR DIMENSIONS, SEE DASH 15 VALUES BELOW
244	R	TAPE READER ASSEMBLY		2014038-011	NA	NAS-9-497	B	I	NOTE 11B	
243										
242										
241	R	APOLLO GUIDANCE COMPUTER GROUP		6003001	NA	NAS-9-497	A	I	NOTE 11B	FOR DIMENSIONS, SEE DASH 19 VALUES BELOW
240		SELF TEST ASSEMBLY		2014366-011	NA		B	I		FOR DIMENSIONS, SEE DASH 15 VALUES BELOW
239		POWER SUPPLY ASSY-115V., 400 CYCLE		2014207-011						FOR DIMENSIONS, SEE DASH 17 VALUES BELOW
238		AC INPUT PANEL ASSY		2014043-011						
237		POWER CONTROL ASSY		2014079-011						FOR DIMENSIONS, SEE DASH 15 VALUES BELOW
236		DRAWER ASSY - X Y INTERFACE		2014040-011						
235		DRAWER ASSY RDC INTERFACE		2014045-011						
234		BUFFER CIRCUIT ASSY		2014254-011						
233		CONTROL & INTERFACE ASSY		2014204-011						
232		POWER CONTROL ASSY		2014044-011						FOR DIMENSIONS, SEE-DASH 17 VALUES BELOW
231		DRAWER ASSY, PROGRAMMER & MONITOR		2014041-011						
230		CONNECTOR INTERFACE ASSY		2014272-011						FOR DIMENSIONS, SEE DASH 15 VALUES BELOW
229		CONNECTOR INTERFACE ASSY		2014047-011						
228		ANTENNA, TUNING CAPACITOR ASSY		2014209-011						
227		MOUNTING FIXTURE ASSY		2014006-011						FOR DIMENSIONS, SEE DASH 17 VALUES BELOW
226		POWER SUPPLY ASSY 3 VDC		2014234-011						FOR DIMENSIONS, SEE DASH 15 VALUES BELOW
225		PANEL ASSY - SIGNAL INTERFACE		2014010-011						
224		OSCILLOSCOPE ASSY		2014232-011						
223		AUXILIARY OUTLET ASSY		2014274-011						
222		FREQUENCY COUNTER		2014233-011						
221		POWER SUPPLY ASSY 10, 13, 28 VDC		2014235-011						
220		LOGIC DRAWER ASSY NO. 2		2014037-011						FOR DIMENSIONS, SEE DASH 17 VALUES BELOW
219		LOGIC DRAWER ASSY NO. 1		2014036-011						
218		COUNTER, ELECTRICAL ASSY		2014288-011						FOR DIMENSIONS, SEE DASH 15 VALUES BELOW
217		POWER SUPPLY ASSY		2014279-011						
216		TEST MOUNT ASSY		2014257-011						
215		UNIVERSAL DSKY PEDESTAL MOUNT		2014014-011						FOR DIMENSIONS, SEE DASH 17 VALUES BELOW
214		MAIN DSKY PEDESTAL MOUNT		2014343				I	NOTE 11B	
213		SHIPPING CONTAINER, MAIN DSKY		1006229				II	NOTE 11C	FOR DIMENSIONS, SEE DASH 18 VALUES BELOW
212		NAV DSKY		1006231						
211		AGC		1006230						
210		UNIVERSAL DSKY		1006422						
209		SHIPPING CONTAINER, AGC		1006421				II	NOTE 11C	
208		UNIVERSAL DSKY HANDLING FIXTURE		2014013-011				I	NOTE 11B	FOR DIMENSIONS, SEE DASH 15 VALUES BELOW
207		NAV DSKY HANDLING FIXTURE		1014377						FOR DIMENSIONS, SEE DASH 17 VALUES BELOW
206		MAIN DSKY HANDLING FIXTURE		1014334						
205		AGC HANDLING FIXTURE		2014282-011				I	NOTE 11B	
204		OPERATION CONSOLE		2014024-011				II	NOTE 11C	FOR DIMENSIONS, SEE DASH 18 VALUES BELOW
203		COMPUTER TEST SET		2014042-011		NAS-9-497				
202		DRAWER ASSY, COMPUTER SIMULATOR		2014048-011		FNP-12775				
201		AUXILIARY CALIBRATION CONSOLE		2014059-011		NAS-9-497				
200		AGC CALIBRATION CONSOLE		2014049-011	NA		B	II	NOTE 11C	
21										
20		NA		NA	NA	NA	A	II	NOTE 11C	2.000
19		NA		NA	NA	NA	A	I	NOTE 11B	2.000
18		NA		NA	NA	NA	B	II	NOTE 11C	4.187
17		NA		NA	NA	NA	B	I	NOTE 11B	4.187
16		NA		NA	NA	NA	B	II	NOTE 11C	2.000
15	R	NA		NA	NA	NA	B	I	NOTE 11B	2.000

DASH NO.	B	C	D	E	F	G	H	J	K	L	M	N	P	R	S	T	U	V	W	Y	Z	AA	AB	AC	AD	AE	AF	AG	AH	AJ	AK	AL	AM	AN	AP	AR
20	1.312	1.687	1.375	.078	.031	.078	.093	.106 .113	.093	1.187	.750	.593	.453	1.015	.062	.187	.078	.875	.718	1.375	.218	1.156	1.843	.048	NA	.875	.305	.078	.312	1.687	.078	NA	.078	.312	.187	1.843
19	1.312	1.687	1.375	.078	.031	.078	.093	NA	NA	1.187	.750	.593	.453	1.015	.062	.187	.078	.875	.718	1.375	.218	NA	NA	.048	.031	.875	.305	.078	.312	1.687	.078	NA	.078	.312	.187	NA
18	1.875	3.469	2.750	.156	.093	.156	.125	.106 .113	.125	1.625	1.032	.844	.656	1.406	.093	.344	.156	1.781	1.531	2.844	.312	1.562	3.875	.062	NA	1.219	.500	.156	.719	3.469	.156	NA	.156	.719	.344	3.875
17	1.875	3.469	2.750	.156	.093	.156	.125	NA	NA	1.625	1.032	.844	.656	1.406	.093	.344	.156	1.781	1.531	2.844	.312	NA	NA	.062	.062	1.219	.500	.156	.719	3.469	.156	NA	.156	.719	.344	NA
16	1.312	1.687	1.375	.078	.031	.078	.093	.106 .113	.093	1.187	.750	.593	.453	1.015	.062	.187	.078	.875	.718	1.375	.218	1.156	1.843	.048	NA	.875	.305	.078	.312	1.687	.078	NA	.078	.312	.187	1.843
15	1.312	1.687	1.375	.078	.031	.078	.093	NA	NA	1.187	.750	.593	.453	1.015	.062	.187	.078	.875	.718	1.375	.218	NA	NA	.048	.031	.875	.305	.078	.312	1.687	.078	NA	.078	.312	.187	NA

NOTES FOR TABLE

STYLE A IS FOR G & N SYSTEM
STYLE B IS FOR GROUND SUPPORT EQUIPMENT
TYPE I IS WITHOUT MOUNTING HOLES
TYPE II IS WITH MOUNTING HOLES

THIS SHEET ADDED

Ⓖ REPLACES REV F WITH CHANGE

RAYTHEON DASH NUMBERS

QTY REQD	PART OR IDENTIFYING NO.	MATERIAL OR NOTES	NOMENCLATURE OR DESCRIPTION	FIND NO.

LIST OF MATERIALS

AS APPLICABLE	
NEXT ASSY	USED ON
APPLICATION	

UNLESS OTHERWISE SPECIFIED
DIMENSIONS ARE IN INCHES
CAPACITOR VALUES ARE IN µf
RESISTOR VALUES ARE IN OHMS
TOLERANCES ON
FRACTIONS ± — DECIMALS ±.005 ANGLES ± —
DO NOT SCALE THIS DRAWING

MATERIAL
SEE NOTE 11

MIT
INSTRUMENTATION LAB
CAMBRIDGE, MASS.

DRAWN R. A. Jones 7-16-65
CHECKED 7-22-65
APPROVED
APPROVED 7/22/65
APPROVED MIT 7/22/65
APPROVED MSC
DATE

MANNED SPACECRAFT CENTER
HOUSTON, TEXAS

NAMEPLATES,
APOLLO GEN-GSE
(STANDARDS)

CODE IDENT NO. 80230
SIZE E
DRAWING NO. 1004260
SCALE NONE
SHEET 3 OF 6

SYM	ZONE	DESCRIPTION	DR	CHK	DATE	APPROVED
G		REPLACES REV F WITH CHANGE PER TDRR 20854.				
H		REVISED PER TDRR 20892				
J		REVISED PER TDRR 20904				
K		REVISED PER TDRR 21379				
L		REVISED PER TDRR 21410				
M		REVISED PER TDRR 21993				
N		REVISED PER TDRR 22621				
P		REVISED PER TDRR 22671				
R		REVISED PER TDRR 22672				
S		REVISED PER TDRR 22750				
T		REVISED PER TDRR 22823				
U		REVISED PER TDRR 23072				
V		REVISED PER TDRR 23521				
W		REVISED PER TDRR 23824	RAJ			
Y		REVISED PER TDRR 24018	RAJ			
Z		REVISED PER TDRR 24040	RAJ			
AA		REVISED PER TDRR 24060	RAJ			
AB		REVISED PER TDRR 24868	RAJ			
AC		REVISED PER TDRR 24973	RAJ			
AD		REVISED PER TDRR 25065	RAJ			
AE		REVISED PER TDRR 25672	RAJ			
AF		REVISED PER TDRR 25671	RAJ			
AG		REVISED PER TDRR 26110	RAJ			
AH		REVISED PER TDRR 26372	"			
AJ		REVISED PER TDRR 26425	"			
AK		REVISED PER TDRR 26743	"			
AL		REVISED PER TDRR 26798	"			
AM		REVISED PER TDRR 27168	"			
AN		REVISED PER TDRR 27235	"			
AP		REVISED PER TDRR 27345	"			
AR		REVISED PER TDRR 27417	"			
AS		REVISED PER TDRR 27442	"			
AT		REVISED PER TDRR 27719	"			
AU		REVISED PER TDRR 27880	"			
AV		REVISED PER TDRR 27896	"			
AW		28110	"			
AY		28173	"			
AZ		28131	"			
BA		28124	"			
BB		REVISED PER TDRR 28511	"			
BC		" " " 28843	"			
BD		" " " 29222	"			
BE		" " " 29235	"			
BF		" " " 29322	"			
BG		" " " 29425	"			
BH		" " " 29449	"			
BJ		" " " 29335	"			
BK		" " " 29619	"			
BL		" " " 29696	"			
BM		REVISION STATUS CHANGED	JSD			
BN		REVISION STATUS CHANGED	JI			
BP		REVISION STATUS CHANGED	JI			
BR		REVISED PER TDRR 30241	JI			
BS		REVISION STATUS CHANGED	GW			
BT		REVISION STATUS CHANGED	GW			
BU		REVISION STATUS CHANGED	EH			
BV		REVISION STATUS CHANGED	WJB			
BW		REVISION STATUS CHANGED	WJB			
BY		REVISION STATUS CHANGED	WJB		10 OCT 66	
BZ		REVISION STATUS CHANGED	WJB		10 OCT 66	
CA		REVISION STATUS CHANGED	WJB		25 OCT 66	
CB		REVISION STATUS CHANGED	REF		66	
CC		REVISION STATUS CHANGED	AF			
CD		REVISION STATUS CHANGED	DR			

DASH NO.	P/C	PART NAME	REMARKS	PART NO.	SER. NO.	CONT. NO.	STYLE	TYPE	MATERIAL	A	B	C	D	E	F	G	H	J	K	L	M	N	P	R	S	T	U	V	W	Y	Z	AA	AB	AC	AD	AE	AF	AG	AH	AJ	AK	AL	AM	AN	AP	AR
199	AC	EYEPIECE STOWAGE UNIT		2021255-011			A	I		FOR DIMENSIONS, SEE DASH 100 VALUES BELOW																																				
198	AC	SIGNAL CONDITIONER ASSY C/M		2007234		NAS 9-497			NOTE 11B																																					
197	AC	SIGNAL CONDITIONER ASSY C/M		2007235																																										
196	AC	SIGNAL CONDITIONER ASSY LEM		6007010																																										
195	AC	PSA & SIGNAL CONDITIONER ASSY		6007009			A	I	NOTE 11B																																					
194	AC	PANEL, MONITOR		2900031-031			B	II	NOTE 11C	FOR DIMENSIONS, SEE DASH 141 VALUES BELOW																																				
193	AC	DISTRIBUTION BOX, GSE		2900024-031																																										
192	AC	ANALYZER, OPTICS-INERTIAL		2900023-031						FOR DIMENSIONS, SEE DASH 144 VALUES BELOW																																				
191	AC	TEST CONTROL		2900027-031						FOR DIMENSIONS, SEE DASH 141 VALUES BELOW																																				
190	AC	PANEL, PWR SUP AND LOAD		2900033-021																																										
189	AC	ADPT MODULE, P.S.A.		6900088-011																																										
188	AC	ADPT MODULE, P.S.A.		2901143-011																																										
187	AC	FIXTURE, MTG, PTA/PEA		2900066-021		NAS 9-497	B	II	NOTE 11C																																					
186	AC	ANNUNCIATOR PANEL AND EYEPIECE STORAGE ASSEMBLY		1021255-021			A	I		FOR DIMENSIONS, SEE DASH 100 VALUES BELOW																																				
185	AC	ANNUNCIATOR PANEL AND EYEPIECE STORAGE ASSEMBLY		1021255-011			A	I																																						
184	AC	FIX., HAND., G AND N HARNESS		1901846-041		NAS-9-497	B	II	NOTE 11C	FOR DIMENSIONS, SEE DASH 144 VALUES BELOW																																				
183	AC	INSTALLING TOOL, ELEC. CONN		1902586-011			B	II	NOTE 11C	FOR DIMENSIONS, SEE DASH 102 VALUES BELOW																																				
182	AC	ADPT MODULE, P.S.A.		6900088-011			B	II	NOTE 11C	FOR DIMENSIONS, SEE DASH 141 VALUES BELOW																																				
181	AC	G & N INDICATOR CONTROL PANEL ASSY		2014578-011			A	I	NOTE 11B	3.000	1.938	2.437	NA	.125	.062	.188	.156	NA	NA	1.750	1.125	.906	.688	1.500	NA	.281	.125	NA	1.094	2.062	.312	NA	2.500	.062	.125	1.312	.469	NA	NA	NA	.156	NA	.125	.469	.344	NA
180	AC	ADPT MODULE, P.S.A.		1902431-031			B	II		FOR DIMENSIONS, SEE DASH 121 VALUES BELOW																																				
179	AC	MOUNTING PLATE, IMU/PTA		6900083-011						FOR DIMENSIONS, SEE DASH 144 VALUES BELOW																																				
178	AC	MOUNTING PLATE, COMPONENT		6900007-021																																										
177	AC	FIX., MOUNTING, SUBSYSTEM		2900070-021																																										
176	AC	FIX., MOUNTING, G AND N		2900067-021																																										
175	AC	CSL, COOL. AND PWR, G AND N		1902134-031																																										
174	AC	FIX., HAND., C/M AND LEM CDU		2900999-011					NOTE 11C	FOR DIMENSIONS, SEE DASH 141 VALUES BELOW																																				
173	AC	FIX., HANDLING, C/M PSA		2900998-011																																										
172	AC	CAGING ELECTRONICS, GYRO		2900029-021																																										
171	AC	DISTRIBUTION BOX, GSE		2900024-021																																										
170	AC	ANALYZER, OPTICS-INERTIAL		2900023-021						FOR DIMENSIONS, SEE DASH 144 VALUES BELOW																																				
169	AC	ADPT, TESTPOINT, P.S.A.		2900037-021						FOR DIMENSIONS, SEE DASH 141 VALUES BELOW																																				
168	AC	TEST SELECTOR		2900028-021																																										
167	AC	TEST CONTROL		2900027-021																																										
166	AC	PANEL, MONITOR		2900031-021																																										
165	AC	TERM. BOARD STORAGE DRAWER		2900927-011																																										
164	AC	INPUT/OUTPUT PANEL		2900926-011																																										
163	AC	CONTROL PANEL		2900896-011																																										
162	AC	CSL. CAL AND TEST, SCM/PSAAM		2900895-011						FOR DIMENSIONS, SEE DASH 144 VALUES BELOW																																				
161	AC	FIX., LIFT AND HAND., IMU		1015462-011						FOR DIMENSIONS, SEE DASH 141 VALUES BELOW																																				
160	AC	FIX., HAND., G AND N HARNESS		1901846-031						FOR DIMENSIONS, SEE DASH 144 VALUES BELOW																																				
159	AC	BATTERY POWER PACK		1900011-031			B	II	NOTE 11C																																					
158	AC	COUPLING DATA UNIT ASSEMBLY C/M		2007222			A	I	NOTE 11B	FOR DIMENSIONS SEE DASH 100 VALUES BELOW																																				
157	AC	COUPLING DATA UNIT ASSEMBLY - LEM		2007222																																										
156	AC	POWER & SERVO ASSEMBLY C/M		2007200						2.125	.968	1.718	NA	.093	.031	.06	.093	NA	NA	.858	.608	.484	.358	.733	.062	.140	.062	NA	.968	1.450	.125	NA	1.720	.046	.03	NA	.210	NA	NA	NA	.070	NA	.046	.32	.16	NA
155	AC	PIPA ELECTRONICS ASSEMBLY		2007201						FOR DIMENSIONS SEE DASH 100 VALUES BELOW																																				
154	AC	PULSE TORQUE ASSEMBLY - LEM		6007000																																										
153	AC	POWER & SERVO ASSEMBLY - LEM		6007200			A	I	NOTE 11B																																					
152	AC	CONT PNL, RSVR CKT TESTER		2900770-011			B	II	NOTE 11C	FOR DIMENSIONS, SEE DASH 141 VALUES BELOW																																				
151	AC	TESTER, RESOLVER CIRCUIT		2900708-011																																										
150	AC	JUNCTION BOX, P.S.A./G.S.E.		1901933-021						FOR DIMENSIONS, SEE DASH 144 VALUES BELOW																																				
149	AC	BATTERY PACK, LIFTING		2900812-011						FOR DIMENSIONS, SEE DASH 141 VALUES BELOW																																				
148	AC	MOUNTING PLATE, COMPONENT		6900007-011						FOR DIMENSIONS, SEE DASH 144 VALUES BELOW																																				
147	AC	MOUNTING PLATE, COMPONENT		2900677-011																																										
146	AC	CART, TRANS, G AND N		1900009-041																																										
145	AC	CONTAINER, SHIPPING, IMU		1900010-021		NAS9-497	B	II	NOTE 11C																																					
144	AC	FIX., MOUNTING, G AND N		1902204-021			B	II	NOTE 11C	4.125	1.812	3.250	NA	.125	.062	.12	.156	.188 .194	.125	1.625	1.140	.890	.640	1.390	.125	.171	.125	1.875	1.687	2.625	.250	1.562	3.843	.093	NA	NA	.359	.125	.437	3.688	NA	3.687	.093	.40	.25	3.875
143	AC	CSL, COOL. AND PWR, G AND N		1902134-021						4.125	1.812	3.250		.125	.062	.12	.156		.125	1.625	1.140	.890	.640	1.390	.125	.171	.125	1.875	1.687	2.625	.250	1.562	3.843	.093			.359	.125	.437	3.688		3.687	.093	.40	.25	3.875
142	AC	ANALYZER, OPTICS-INERTIAL		2900023-011						4.125	1.812	3.250		.125	.062	.12	.156		.125	1.625	1.140	.890	.640	1.390	.125	.171	.125	1.875	1.687	2.625	.250	1.562	3.843	.093			.359	.125	.437	3.688		3.687	.093	.40	.25	3.875
141	AC	CONT. TEMP, PORTABLE		2900060-011						2.125	.968	1.718		.093	.031	.06	.093		.093	.858	.608	.484	.358	.733	.077	.116	.062	.937	.875	1.343	.125	.781	1.892	.046			.209	.093	.250	1.875		1.840	.046	.23	.16	1.938
140	AC	TESTER, CKT, IMU/CDU RSVR		2900286-011						4.125	1.812	3.250		.125	.062	.12	.156		.125	1.625	1.140	.890	.640	1.390	.125	.171	.125	1.875	1.687	2.625	.250	1.562	3.843	.093			.359	.125	.437	3.688		3.687	.093	.40	.25	3.875
139	AC	SIMULATOR, LD/SIG, CDU		2900285-011																																										
138	AC	SIMULATOR, LD/SIG, OPTICS		1902023-021																																										
137	AC	FIX., MOUNTING, IMU/NAV BASE		6900003-011																																										
136	AC	FIXTURE, OPTICS/NAV BASE		2900072-011																																										
135	AC	FIX., MOUNTING, SUB SYSTEM		2900070-011																																										
134	AC	FIX., HAND., G AND N HARNESS		2900069-011																																										
133	AC	CNTR, SHIPPING, NAV BASE		2900068-011																																										
132	AC	FIX., MOUNTING, G AND N		2900067-011																																										
131	AC	SIMULATOR, LD/SIG, IMU/CDU		2900062-011																																										
130	AC	TESTER, GYRO WHEEL		2900061-011																																										
129	AC	COOLANT SUPPLY		1902133-021																																										
128	AC	TABLE, ROTARY		1900926-021						4.125	1.812	3.250		.125	.062	.12	.156		.125	1.625	1.140	.890	.640	1.390	.125	.171	.125	1.875	1.687	2.625	.250	1.562	3.843	.093			.359	.125	.437	3.688		3.687	.093	.40	.25	3.875
127	AC	FIX., HAND., OPTICS		2900074-011						2.125	.968	1.718		.093	.031	.06	.093		.093	.858	.608	.484	.358	.733	.077	.116	.062	.937	.875	1.343	.125	.781	1.892	.046			.209	.093	.250	1.875		1.840	.046	.23	.16	1.938
126	AC	FIXTURE, MTG, PTA/PEA.		2900066-011																																										
125	AC	CONT, TEMP, IMU LIFTING		2900063-011																																										
124	AC	FIXTURE, HANDLING, IMU		2900064-011																																										
123	AC	CONT, OPTICS, REMOTE		1902046-021																																										
122	AC	TEST CONTROL		1902009-021																																										
121	AC	ADPT MODULE, P.S.A.		1902431-021																																										
120	AC	BRIDGE, DECADE ERROR		2900128-011																																										
119	AC	PWR SUP, ELECTRONICS		2900012-011																																										
118	AC	PWR SUP, RELAY AND LAMP		1900049-031																																										
117	AC	CONSOLE, OSCILLOGRAPH		1900000-021																																										
116	AC	ADPT MODULE, P.S.A.		1902431-011																																										
115	AC	ADPT, TEST POINT, PTA/PEA.		2900145-011																																										
114	AC	ADPT, TEST POINT, P.S.A.		2900037-011																																										
113	AC	CONTROL, GIMBAL POSITION		2900036-011																																										
112	AC	SELECTOR, SIGNAL, PRIMARY		2900035-011																																										
111	AC	SEL, SIG, OSCILLOGRAPH		2900034-011																																										
110	AC	PANEL, PWR SUP AND LOAD		2900033-011																																										
109	AC	PANEL, MONITOR		2900031-011																																										
108	AC	PANEL, AUXILIARY INPUT		2900030-011																																										
107	AC	CAGING ELECTRONICS, GYRO		2900029-011																																										
106	AC	TEST SELECTOR		2900028-011																																										
105	AC	TEST CONTROL		2900027-011																																										
104	AC	MONITOR AND CONTROL, TEMP		2900026-011																																										
103	AC	DISTRIBUTION BOX, GSE		2900024-011																																										
102	AC	VOLTMETER, DIGITAL		2900007-011			B	II	NOTE 11C	2.125	.968	1.718	NA	.093	.031	.06	.093	.188 .194	.093	.858	.608	.484	.358	.733	.077	.116	.062	.937	.875	1.343	.125	.781	1.892	.046	NA	NA	.209	.093	.250	1.875	NA	1.840	.046	.23	.16	1.938
101	AC	NAVIGATION BASE ASSEMBLY - LEM		6899950		NAS-9-497	A	I	NOTE 11B	2.000	1.312	1.906	1.375	.078	.048	.078	.093	NA	NA	1.125	.750	.593	.453	1.015	.062	.187	.078	.875	.718	1.375	.218	NA	NA	.048	.031	.875	.305	.078	.531	1.906	.078	NA	.078	.531	.187	NA
100	AC	NAVIGATION BASE ASSEMBLY		2899982		NAS-9-497	A	I	NOTE 11B	2.000	1.312	1.906	1.375	.078	.048	.078	.093	NA	NA	1.125	.750	.593	.453	1.015	.062	.187	.078	.875	.718	1.375	.218	NA	NA	.048	.031	.875	.305	.078	.531	1.906	.078	NA	.078	.531	.187	NA

THIS SHEET ADDED

Ⓖ REPLACES REV F WITH CHANGE

AC ELECTRONICS DASH NUMBERS

NOTES FOR TABLE

STYLE A IS FOR G & N SYSTEM

STYLE B IS FOR GROUND SUPPORT EQUIPMENT

TYPE I IS WITHOUT MOUNTING HOLES

TYPE II IS WITH MOUNTING HOLES

NOTE: AC DASH NO's. CONT. ON SH.6

QTY REQD	PART OR IDENTIFYING NO.	MATERIAL OR NOTES	NOMENCLATURE OR DESCRIPTION	FIND NO.

LIST OF MATERIALS

UNLESS OTHERWISE SPECIFIED
DIMENSIONS ARE IN INCHES
CAPACITOR VALUES ARE IN μf
RESISTOR VALUES ARE IN OHMS
TOLERANCES ON
FRACTIONS DECIMALS ANGLES
± ±.005 ±
DO NOT SCALE THIS DRAWING

MATERIAL
SEE NOTE 11

AS APPLICABLE	
NEXT ASSY	USED ON
APPLICATION	

MIT
INSTRUMENTATION LAB
CAMBRIDGE, MASS.

MANNED SPACECRAFT CENTER
HOUSTON, TEXAS

DRAWN R A Jones 7-16-65
CHECKED 7-22-65
APPROVED
APPROVED
APPROVED MIT
APPROVED MSC
DATE

NAMEPLATES, APOLLO G&N-GSE (STANDARDS)

CODE IDENT NO.	SIZE	DRAWING NO.
80230	E	1004260

SCALE NONE
SHEET 4 OF 6

NOTICE - WHEN GOVERNMENT DRAWINGS, SPECIFICATIONS, OR OTHER DATA ARE USED FOR ANY PURPOSE OTHER THAN IN CONNECTION WITH A DEFINITELY RELATED GOVERNMENT PROCUREMENT OPERATION, THE UNITED STATES GOVERNMENT THEREBY INCURS NO RESPONSIBILITY NOR ANY OBLIGATION WHATSOEVER, AND THE FACT THAT THE GOVERNMENT MAY HAVE FORMULATED, FURNISHED, OR IN ANY WAY SUPPLIED THE SAID DRAWINGS, SPECIFICATIONS OR OTHER DATA IS NOT TO BE REGARDED BY IMPLICATION OR OTHERWISE AS IN ANY MANNER LICENSING THE HOLDER OR ANY OTHER PERSON OR CORPORATION, OR CONVEYING ANY RIGHTS OR PERMISSION TO MANUFACTURE, USE, OR SELL ANY PATENTED INVENTION THAT MAY IN ANY WAY BE RELATED THERETO.

5

REVISIONS 02768

SYM	ZONE	DESCRIPTION	DR	CHK	DATE	APPROVED
G		REPLACES REV F WITH CHANGE PER TDRR 20854	rj		7/26/65	WK
H		REVISED PER TDRR 20892	rj		8/3/65	WK
J		REVISED PER TDRR 20904	rj		8/3/65	WK
K		REVISED PER TDRR 21379	rj		8/6/65	WK
L		REVISED PER TDRR 21410	rj		8/12/65	WK
M		REVISED PER TDRR 21993	rj			
N		REVISED PER TDRR 22621	rj		10/1/65	
P		REVISED PER TDRR 22671	rj			
R		REVISED PER TDRR 22672	rj			
S		REVISED PER TDRR 22750	rj			WK
T		REVISED PER TDRR 22823	rj			
U		REVISED PER TDRR 23072	rj		[illegible]	[illegible]
V		REVISED PER TDRR 23521	rj		10-26-65	WK
W		REVISED PER TDRR 23824	RAJ		11-9-65	WK
Y		REVISED PER TDRR 24018	RAJ		11-16-65	WK
Z		REVISED PER TDRR 24040	RAJ		11-19-65	WK
AA		REVISED PER TDRR 24060	RAJ		11-19-65	WK
AB		REVISED PER TDRR 24868	RAJ		12-22-65	WK
AC		REVISED PER TDRR 24973	RAJ		1-4-66	WK
AD		REVISED PER TDRR 25065	RAJ		1-18-66	WGM
AE		REVISED PER TDRR 25672	RAJ		2-4-66	WK
AF		REVISED PER TDRR 25671	RAJ		2-4-66	WK
AG		REVISED PER TDRR 26110	RAJ		2-15-66	WK
AH		REVISED PER TDRR 26372	"		3-16-66	WGM
AJ		REVISED PER TDRR 26425	"		3-16-66	WGM
AK		REVISED PER TDRR 26743	"		3-16-66	WGM
AL		REVISED PER TDRR 26798	"		3-16-66	WGM
AM		REVISED PER TDRR 27168	"		4-7-66	WGM
AN		REVISED PER TDRR 27235	"		4-7-66	WGM
AP		REVISED PER TDRR 27345	"		4-7-66	WGM
AR		REVISED PER TDRR 27417	"		4-7-66	WGM
AS		REVISED PER TDRR 27442	"		4-7-66	WGM
AT		REVISED PER TDRR 27719	"		4-20-66	WK
AU		REVISED PER TDRR 27880	"		4-20-66	WK
AV		REVISED PER TDRR 27896	"		4-20-66	WK
AW		28110	"		5-16-66	WGM
AY		28173	"			WGM
AZ		28131	"			WGM
BA		28124	"			WGM
BB		REVISED PER TDRR 28511	"		5-16-66	WGM
BC		" " " 28949	"		5-24-66	WGM
BD		" " " 29222	"		6-8-66	WGM
BE		" " " 29235	"		"	WGM
BF		" " " 29322	"		6-24-66	WGM
BG		" " " 29429	"		"	WGM
BH		" " " 29449	"		"	WGM
BJ		" " " 29335	"		"	WGM
BK		" " " 29619	"		"	WGM
BL		" " " 29696	"		6-29-66	WGM
BM		REVISION STATUS CHANGED	JSD		7-29-66	
BN		REVISION STATUS CHANGED	JI	RLW	12 AUG 66	
BP		REVISION STATUS CHANGED	JI	RLW	[illegible]	
BR		REVISION STATUS CHANGED	JI	RLW	[illegible]	
BS		REVISION STATUS CHANGED	GW	RLW	[illegible]	
BT		REVISION STATUS CHANGED	GW	RLW	26 AUG 66	
BU		REVISION STATUS CHANGED	EH	JI	9 SEPT 66	
BV		REVISION STATUS CHANGED	JJB	RLW	30 SEPT 66	
BW		REVISION STATUS CHANGED	JJB	RLW	30 SEPT 66	
BY		REVISION STATUS CHANGED	JJB	RLW	10 OCT 66	
BZ		REVISION STATUS CHANGED	JJB	RLW	10 OCT 66	
CA		REVISION STATUS CHANGED	JJB	[illegible]	25 OCT 66	
CB		REVISION STATUS CHANGED	REF	[illegible]	10 DEC 66	
CC		REVISION STATUS CHANGED	AF	[illegible]	13 JAN 67	
CD		REVISION STATUS CHANGED	DR	[illegible]	[illegible]	

499 M T
498

DASH NO.	P/C	PART NAME	REMARKS	PART NO.	SER. NO.	CONT. NO.	STYLE	TYPE	MATERIAL	A	B	C	D	E	F	G	H	J	K	L	M	N	P	R	S	T	U	V	W	Y	Z	AA	AB	AC	AD	AE	AF	AG	AH	AJ	AK	AL	AM	AN	AP	AR
401	MIT	COMPUTER ASSY		2003100		NAS-9-497	A	I	NOTE 11 B	2.000	1.312	1.906	1.375	.078	.048	.078	.093	NA	NA	1.125	.750	.593	.453	1.015	.062	.187	.078	.875	.718	1.375	.218	NA	NA	.048	.031	.875	.305	.078	.531	1.906	.078	NA	.078	.531	.187	NA
400	MIT	LIFTING SLING-G&N INST. QUAL. FIX. & AZM. REF. FIX.		1021640		NAS-9-4065	B	II	NOTE 11 C	2.000	1.312	1.687	1.375	.078	.048	.078	.093	.086/.081	.093	1.187	.750	.593	.453	1.015	.062	.187	.078	.875	.718	1.375	.218	1.156	1.843	.048	NA	.875	.305	.078	.312	1.687	.110	1.830	.070	.275	.180	1.844

MIT DASH NUMBERS

THIS SHEET ADDED

Ⓖ REPLACES REV F WITH CHANGE

NOTES FOR TABLE

STYLE A IS FOR G&N SYSTEM
STYLE B IS FOR GROUND SUPPORT EQUIPMENT
TYPE I IS WITHOUT MOUNTING HOLES
TYPE II IS WITH MOUNTING HOLES

QTY REQD	PART OR IDENTIFYING NO.	MATERIAL OR NOTES	NOMENCLATURE OR DESCRIPTION	FIND NO

LIST OF MATERIALS

NEXT ASSY	USED ON
AS APPLICABLE	

APPLICATION

UNLESS OTHERWISE SPECIFIED
DIMENSIONS ARE IN INCHES
CAPACITOR VALUES ARE IN µf
RESISTOR VALUES ARE IN OHMS
TOLERANCES ON
FRACTIONS DECIMALS ANGLES
± — ±.005 ± —
DO NOT SCALE THIS DRAWING

MATERIAL
SEE NOTE 11

MIT
INSTRUMENTATION LAB
CAMBRIDGE, MASS.

DRAWN R A Jones 7-16-65
CHECKED [illegible] 7-23-65
APPROVED
APPROVED W Kupfer 22/7/65
APPROVED MIT W Kupfer 22/7/65
APPROVED MSC [illegible] 7/26/65
DATE

MANNED SPACECRAFT CENTER
HOUSTON, TEXAS

NAMEPLATES,
APOLLO G&N-GSE
(STANDARDS)

CODE IDENT NO. 80230
SIZE E
DRAWING NO. 1004260
SCALE NONE
SHEET 5 OF 6

MASTER

NOTICE - WHEN GOVERNMENT DRAWINGS, SPECIFICATIONS, OR OTHER DATA ARE USED FOR ANY PURPOSE OTHER THAN IN CONNECTION WITH A DEFINITELY RELATED GOVERNMENT PROCUREMENT OPERATION, THE UNITED STATES GOVERNMENT THEREBY INCURS NO RESPONSIBILITY NOR ANY OBLIGATION WHATSOEVER; AND THE FACT THAT THE GOVERNMENT MAY HAVE FORMULATED, FURNISHED, OR IN ANY WAY SUPPLIED THE SAID DRAWINGS, SPECIFICATIONS, OR OTHER DATA IS NOT TO BE REGARDED BY IMPLICATION OR OTHERWISE AS IN ANY MANNER LICENSING THE HOLDER OR ANY OTHER PERSON OR CORPORATION, OR CONVEYING ANY RIGHTS OR PERMISSION TO MANUFACTURE, USE, OR SELL ANY PATENTED INVENTION THAT MAY IN ANY WAY BE RELATED THERETO.

REVISIONS 02768

SYM	ZONE	DESCRIPTION	DR	CHK	DATE	APPROVED
AG		CHANGED NUMBER OF SHEETS FROM 5 TO 6 PER TDRR 26110.	RAJ		2-15-66	
AH		REVISED PER TDRR 26372	"		3-16-66	
AJ		REVISED PER TDRR 26425	"		3-16-66	
AK		REVISED PER TDRR 26743	"		3-16-66	
AL		REVISED PER TDRR 26798	"		3-16-66	
AM		REVISED PER TDRR 27168	"		4-7-66	
AN		REVISED PER TDRR 27235	"		4-7-66	
AP		REVISED PER TDRR 27345	"		4-7-66	
AR		REVISED PER TDRR 27417	"		4-7-66	
AS		REVISED PER TDRR 27442	"		4-7-66	
AT		REVISED PER TDRR 27719	"		4-20-66	
AU		REVISED PER TDRR 27880	"		4-20-66	
AV		REVISED PER TDRR 27896	"		4-20-66	
AW		28110	"		5-16-66	
AY		28173	"		5-16-66	
AZ		28131	"		5-16-66	
BA		28124	"		5-16-66	
BB		REVISED PER TDRR 28511	"		5-16-66	
BC		" " " 28949	"		5-24-66	
BD		" " " 29222	"		6-8-66	
BE		" " " 29235	"		"	
BF		" " " 29322	"		6-24-66	
BG		" " " 29429	"		"	
BH		" " " 29449	"		"	
BJ		" " " 29335	"		"	
BK		" " " 29619	"		"	
BL		" " " 29696	"		6-29-66	
BM		REVISION STATUS CHANGED	JSD	N.S.	7-29-66	
BN		REVISED PER TDRR 29974	JI	RLW	22 AUG 66	
BP		REVISION STATUS CHANGED	JI	RLW	22 AUG 66	
BR		REVISION STATUS CHANGED	JI	RLW	23 AUG 66	
BS		REVISED PER TDRR 30530	GW	RLW	26 AUG 66	
BT		REVISED PER TDRR 30543	GW	RLW	26 AUG 66	
BU		REVISED PER TDRR 30898.	EH	JI	9 SEPT 66	
BV		REVISED PER TDRR 31241	JJB	RLW	66	
BW		REVISION STATUS CHANGED	JJB	RLW	30 SEP 66	
BY		REVISED PER TDRR 31341	JJB	RLW	10 OCT 66	
BZ		REVISED PER TDRR 31393	JJB	RLW	10 OCT 66	
CA		REVISED PER TDRR 31593	JJB		25 OCT 66	
CB		REVISED PER TDRR 32187	REF		10 DEC 66	
CC		REVISED PER TDRR 32512	AF	DG	12 JAN 67	
CD		REVISION STATUS CHANGED	DR	N.W.	14 FEB 67	

599 AC

598 AC

AC ELECTRONICS DASH NUMBERS

DASH NO.	P/C	PART NAME	REMARKS	PART NO.	SER NO.	CONT NO.	STYLE	TYPE	MATERIAL	A	B	C	D	E	F	G	H	J	K	L	M	N	P	R	S	T	U	V	W	Y	Z	AA	AB	AC	AD	AE	AF	AG	AH	AJ	AK	AL	AM	AN	AP	AR
548		CAGING ELECTRONICS, GYRO		2900029-031		NAS-9-497	B	II	NOTE 11C	2.125	.968	1.718	NA	.093	.031	.06	.093	.100 .104	.093	.858	.608	.484	.358	.733	.077	.116	.062	.937	.875	1.343	.125	.781	1.892	.046	NA	NA	.209	.093	.250	1.875	NA	1.840	.046	.23	.16	1.938
547		CSL, CAL AND TEST, SCM/PSAAM		2900895-021		NAS-9-497	B	II	NOTE 11C	4.125	1.812	3.250	NA	.125	.062	.12	.156	.100 .104	.125	1.625	1.140	.890	.640	1.390	.125	.171	.125	1.875	1.687	2.625	.250	1.562	3.843	.093	NA	NA	.359	.125	.437	3.688	NA	3.687	.093	.40	.25	3.875
546		FIX, HAND., C/M AND LEM CDU		2900999-021		NAS-9-497	B	II	NOTE 11C	2.125	.968	1.718	NA	.093	.031	.06	.093	.100 .104	.093	.858	.608	.484	.358	.733	.077	.116	.062	.937	.875	1.343	.125	.781	1.892	.046	NA	NA	.209	.093	.250	1.875	NA	1.840	.046	.23	.16	1.938
545	AC	G&N INDICATOR CONTROL PANEL ASSY		2014578-021		NAS-9-497	A	I	NOTE 11B	3.000	1.938	2.437	NA	.125	.062	.188	.156	NA	NA	1.750	1.125	.906	.688	1.500	NA	.281	.125	NA	1.094	2.062	.312	NA	2.500	.062	.125	1.312	.469	NA	NA	NA	.156	NA	.125	.469	.344	NA
544		ADPT MODULE, P.S.A.		1902431-051		NAS-9-497	B	II	NOTE 11C	2.125	.968	1.718	NA	.093	.031	.06	.093	.100 .104	.093	.858	.608	.484	.358	.733	.077	.116	.062	.937	.875	1.343	.125	.781	1.892	.046	NA	NA	.209	.093	.250	1.875	NA	1.840	.046	.23	.16	1.938
541	AC	FIXTURE, MOUNTING, IMU		2900000-021		NAS 9-497	B	II	NOTE 11C	4.125	1.812	3.250	NA	.125	.062	.12	.156	.100 .104	.125	1.625	1.140	.890	.640	1.390	.125	.171	.125	1.875	1.687	2.625	.250	1.562	3.843	.093	NA	NA	.359	.125	.437	3.688	NA	3.687	.093	.40	.25	3.875
543	A	PANEL, MONITOR		2900031-041		NAS9-497	B	II	NOTE 11C	2.125	.968	1.718	NA	.093	.031	.06	.093	.100 .104	.093	.858	.608	.484	.358	.733	.077	.116	.062	.937	.875	1.343	.125	.781	1.892	.046	NA	NA	.209	.093	.250	1.875	NA	1.840	.046	.23	.25	1.938
542	A	BATTERY PACK, LIFTING		2900812-021		NAS9-497	B	II	NOTE 11C	2.125	.968	1.718	NA	.093	.031	.06	.093	.100 .104	.093	.858	.608	.484	.358	.733	.077	.116	.062	.937	.875	1.343	.125	.781	1.892	.046	NA	NA	.209	.093	.250	1.875	NA	1.840	.046	.23	.16	1.938
540	A	ADPT, TEST POINT, P.S.A.		2900037-031		NAS 9-497	B	II	NOTE 11C	2.125	.968	1.718	NA	.093	.031	.06	.093	.100 .104	.093	.858	.608	.484	.358	.733	.077	.116	.062	.937	.875	1.343	.125	.781	1.892	.046	NA	NA	.209	.093	.250	1.875	NA	1.840	.046	.23	.16	1.938
539	AC	ANNUNCIATOR PANEL AND EYEPIECE STORAGE ASSEMBLY		1021255-041			A	I	NOTE 11B	2.000	1.312	1.906	1.375	.078	.048	.078	.093	NA	NA	1.125	.750	.593	.453	1.015	.062	.187	.078	.875	.718	1.375	.218	NA	NA	.048	.031	.875	.305	.078	.531	1.906	.078	NA	.078	.531	.187	NA
538	AC	ANNUNCIATOR PANEL AND EYEPIECE STORAGE ASSEMBLY		1021255-031			A	I	NOTE 11B	2.000	1.312	1.906	1.375	.078	.048	.078	.093	NA	NA	1.125	.750	.593	.453	1.015	.062	.187	.078	.875	.718	1.375	.218	NA	NA	.048	.031	.875	.305	.078	.531	1.906	.078	NA	.078	.531	.187	NA
537	AC	TEST SELECTOR		2900025-031			B	II	NOTE 11C	2.125	.968	1.718	NA	.093	.031	.06	.093	.100 .104	.093	.858	.608	.484	.358	.733	.077	.116	.062	.937	.875	1.343	.125	.781	1.892	.046	NA	NA	.209	.093	.250	1.875	NA	1.840	.046	.23	.16	1.938
536	AC	ANALYZER, OPTICS - INERTIAL		2900023-041			B	II	NOTE 11C	4.125	1.812	3.250	NA	.125	.062	.12	.156	.100 .104	.125	1.625	1.140	.890	.640	1.390	.125	.171	.125	1.875	1.687	2.625	.250	1.562	3.843	.093	NA	NA	.359	.125	.437	3.688	NA	3.687	.093	.40	.25	3.875
535	A	CONT, TEMP, PORTABLE		2900061-021			B	II	NOTE 11C	2.125	.968	1.718	NA	.093	.031	.06	.093	.100 .104	.093	.858	.608	.484	.358	.733	.077	.116	.062	.937	.875	1.343	.125	.781	1.892	.046	NA	NA	.209	.093	.250	1.875	NA	1.840	.046	.23	.16	1.938
534	AC	COMPUTER CONT & RETICLE DIMMER		6014511-021			A	I	NOTE 11B	2.000	1.312	1.906	1.375	.078	.048	.078	.093	NA	NA	1.125	.750	.593	.453	1.015	.062	.187	.078	.875	.718	1.375	.218	NA	NA	.048	.031	.875	.305	.078	.531	1.906	.078	NA	.078	.531	.187	NA
533	AC	ADPT MODULE, P.S.A.		1902431-041			B	II	NOTE 11C	2.125	.968	1.718	NA	.093	.031	.06	.093	.100 .104	.093	.858	.608	.484	.358	.733	.077	.116	.062	.937	.875	1.343	.125	.781	1.892	.046	NA	NA	.209	.093	.250	1.875	NA	1.840	.046	.23	.16	1.938
532	AC	TRAY BREAKOUT, 105 PIN		1900807-021						4.125	1.812	3.250		.125	.062	.12	.156	.100 .104	.125	1.625	1.140	.890	.640	1.390	.125	.171	.125	1.875	1.687	2.625	.250	1.562	3.843	.093			.359	.125	.437	3.688		3.687	.093	.40	.25	3.875
531	AC	TRAY BREAKOUT, 84 PIN		1900806-021						4.125	1.812	3.250		.125	.062	.12	.156	.100 .104	.125	1.625	1.140	.890	.640	1.390	.125	.171	.125	1.875	1.687	2.625	.250	1.562	3.843	.093			.359	.125	.437	3.688		3.687	.093	.40	.25	3.875
530	AC	HEAT SINK - TRAY EXTENDER		1900808-021						2.125	.968	1.718		.093	.031	.06	.093	.100 .104	.093	.858	.608	.484	.358	.733	.077	.116	.062	.937	.875	1.343	.125	.781	1.892	.046			.209	.093	.250	1.875		1.840	.046	.23	.16	1.938
529	AC	TESTER, FAILURE INDICATOR		1900809-021						2.125	.968	1.718	NA	.093	.031	.06	.093	.100 .104	.093	.858	.608	.484	.358	.733	.077	.116	.062	.937	.875	1.343	.125	.781	1.892	.046	NA	NA	.209	.093	.250	1.875	NA	1.840	.046	.23	.16	1.938
527	AC	FIX., MOUNTING, G AND N	(-144)	1902204-021						FOR DIMENSIONS, SEE DASH 500 VALUES BELOW																																				
526	AC	FIX., MOUNTING, G AND N	(-144)	2900067-031																																										
525	AC	PORTABLE TEMP. CONTROLLER		1900496-021			B	II	NOTE 11C	3.000	1.937	2.437	2.312	.125	.031	.125	.156	.125	.125	1.718	1.187	.968	.749	1.452	.093	.295	.090	1.312	1.00	2.000	.250	1.687	2.750	.062	N/A	NA	.463	.125	.562	2.437	.140	2.562	.090	.468	.359	2.750
524	AC	POWER, SERVO AND THERMOCOUPLE ASSEMBLY C/M		2010743			A	I	NOTE 11B	2.125	.968	1.718	NA	.093	.031	.06	.093	NA	NA	.858	.608	.484	.358	.733	.062	.140	.062	NA	.968	1.450	.125	NA	1.720	.046	.03	NA	.210	NA	NA	NA	.070	NA	.046	.32	.16	NA
523	AC	PULSE TORQUE AND THERMOCOUPLE ASSEMBLY - LEM		6010656																																										
522	AC	COUPLING DATA UNIT AND THERMOCOUPLE ASSEMBLY - LEM		2010744						FOR DIMENSIONS, SEE DASH 508 VALUES BELOW																																				
521	AC	COUPLING DATA UNIT AND THERMOCOUPLE ASSEMBLY - C/M		2010744																																										
520	AC	PIPA ELECTRONICS AND THERMOCOUPLE ASSEMBLY		2010745			A	I	NOTE 11B																																					
519	AC	FIXTURE, HANDLING, LEM-PSA	(-141)	6900129-011			B	II	NOTE 11C	FOR DIMENSIONS, SEE DASH 504 VALUES BELOW																																				
518	AC	JUNCTION BOX, GSE-PSA	(-144)	1901933-031			B	II	NOTE 11C	FOR DIMENSIONS, SEE DASH 500 VALUES BELOW																																				
517	AC	FIX., HAND., OPTICS INSTL.	(-141)	2901380-011			B	II	NOTE 11C	FOR DIMENSIONS SEE DASH 502 VALUES BELOW																																				
516	AC	POWER, SERVO AND THERMOCOUPLE ASSEMBLY-LEM		6010655		NAS 9-497	A	I	NOTE 11B	FOR DIMENSIONS SEE DASH 508 VALUES BELOW																																				
514	AC	SIGNAL COND. ASSY LEM OPER.	(-100)	6007013		NAS-9-497	A	I	NOTE 11B	FOR DIMENSIONS, SEE DASH 508 VALUES BELOW																																				
513		JUMPER, BY-PASS	(-141)	1021616			B	II	NOTE 11C	2.125	.968	1.718	NA	.093	.031	.06	.093	.100 .104	.093	.858	.608	.484	.358	.733	.077	.116	.062	.937	.875	1.343	.125	.781	1.892	.046	NA	NA	.209	.093	.250	1.875	NA	1.840	.046	.23	.16	1.938
512		COUPLING DATA UNIT ASSEMBLY C/M	(-100)	2007322-011			A	I	NOTE 11B	FOR DIMENSIONS, SEE DASH 508 VALUES BELOW																																				
511		COUPLING DATA UNIT ASSEMBLY - LEM	(-100)	2007322-021																																										
510		BATTERY POWER PACK	(-144)	1900011-041			B	II	NOTE 11C	FOR DIMENSIONS, SEE DASH 500 VALUES BELOW																																				
509		JUNCTION BOX, P.S.A./G.S.E.	(-144)	1902195-021			B	II	NOTE 11C																																					
508		NAVIGATION BASE ASSEMBLY - LEM	✓ (-101)	6899980			A	I	NOTE 11B	2.000	1.312	1.906	1.375	.078	.048	.078	.093	NA	NA	1.125	.750	.593	.453	1.015	.062	.187	.078	.875	.718	1.375	.218	NA	NA	.048	.031	.875	.305	.078	.531	1.906	.078	NA	.078	.531	.187	NA
507		CSL, COOL, AND PWR, G AND N	(-144)	1902134-041			B	II	NOTE 11C	FOR DIMENSIONS, SEE DASH 500 VALUES BELOW																																				
506		BREAKOUT BOX, CABLE ADAPTER	(-141)	2901011-011																																										
505		MONITOR AND CONTROL, TEMP	(-141)	2900026-021																																										
504		PWR SUP, GUIDANCE SYSTEM	✓ (-141)	1900033-021						2.125	.968	1.718	NA	.093	.031	.06	.093	.100 .104	.093	.858	.608	.484	.358	.733	.077	.116	.062	.937	.875	1.343	.125	.781	1.892	.046	NA	NA	.209	.093	.250	1.875	NA	1.840	.046	.23	.16	1.938
503		CONTROL, GIMBAL POSITION	(-141)	2900036-021																																										
502		ADPT, TEST POINT, PTA/PEA.	(-141)	2900145-021																																										
501		MOUNTING PLATE, COMPONENT	(-144)	6900007-031						FOR DIMENSIONS, SEE DASH 500 VALUES BELOW																																				
500	AC	MOUNTING PLATE, COMPONENT	✓ (-144)	2900677-021		NAS-9-497	B	II	NOTE 11C	4.125	1.812	3.250	NA	.125	.062	.12	.156	.100 .104	.125	1.625	1.140	.890	.640	1.390	.125	.171	.125	1.875	1.687	2.625	.250	1.562	3.842	.093	NA	NA	.359	.125	.437	3.688	NA	3.687	.093	.40	.25	3.875

NOTES FOR TABLE

STYLE A IS FOR G&N SYSTEM

STYLE B IS FOR GROUND SUPPORT EQUIPMENT

TYPE I IS WITHOUT MOUNTING HOLES

TYPE II IS WITH MOUNTING HOLES

Ⓐ THIS SHEET ADDED

MASTER

MASTER

QTY REQD	PART OR IDENTIFYING NO.	MATERIAL OR NOTES	NOMENCLATURE OR DESCRIPTION	FIND NO.

LIST OF MATERIALS

NEXT ASSY	USED ON
AS APPLICABLE	

APPLICATION

UNLESS OTHERWISE SPECIFIED
DIMENSIONS ARE IN INCHES
CAPACITOR VALUES ARE IN μf
RESISTOR VALUES ARE IN OHMS
TOLERANCES ON
FRACTIONS ± — DECIMALS ±.005 ANGLES ± —
DO NOT SCALE THIS DRAWING

MATERIAL
SEE NOTE 11

MIT
INSTRUMENTATION LAB
CAMBRIDGE, MASS.

DRAWN R. A. Jones 2-15-66
CHECKED 2-15-66
APPROVED
APPROVED
APPROVED MIT A. C. METZGER 5-18-66
APPROVED MSC
DATE

MANNED SPACECRAFT CENTER
HOUSTON, TEXAS

NAMEPLATES,
APOLLO G&N-GSE
(STANDARDS)

CODE IDENT NO. 80230
SIZE E
DRAWING NO. 1004260
SCALE NONE
SHEET 6 OF 6

NOTES:

1. INTERPRET DRAWING IN ACCORDANCE WITH STANDARDS PRESCRIBED IN MIL-D-70327.
2. DIMENSIONS ON EACH VIEW APPLY TO ALL VIEWS. (WITH THE EXCEPTION OF MOUNTING HOLES).
3. FORMATS ILLUSTATED WILL BE APPLICABLE TO ALL ITEMS REQUIRING NAMEPLATES BELOW END ITEM DESIGNATION (SYSTEMS, ASSEMBLIES, ETC.)
4. PLATE BACKGROUND TO BE LUSTERLESS BLACK PER FED-STD-595, COLOR 37038. BORDER, MARKING AND LETTERING TO BE NATURAL METAL,(ANODIZED ALUMINUM).
5. MARKING METHOD TO BE DIE STAMPING, ETCHING OR ENGRAVING IN ACCORDANCE WITH MIL P 19834.
6. LETTERING STYLE TO BE GOTHIC,(SANS SERIFS), AND NUMBERS TO BE ARABIC.
7. WHERE LOCATING DIMENSIONS ARE NOT SHOWN, CHARACTERS SHALL BE SYMMETRICALLY POSITIONED.
8. IDENTIFY WITH DRAWING NUMBER PER ND 1002019.
9. WHEN "AUTO MARK" METAL MARKING TYPEWRITER IS USED TO ADD DATA TO BLANK SPACES, TYPE SIZE IS TO BE SELECTED FROM DIMENSIONS U, AC AND AM.
10. NASA SYMBOL IS TO BE PROPORTIONAL TO NAMEPLATE IN RATIO OF 1 TO 5 WITH DIMENSION A VALUE AND IS TO HAVE NATURAL BACKGROUND. NASA SYMBOL LETTERS LETTERING AND FEATHER TO BE BLACK,(OR WHITE FOR SILK SCREENING). WHERE BLACK FEATHER PROTRUDES INTO BLACK BACKGROUND, A MINIMUM OUTLINE OF NATURAL BACKGROUND SHALL EXIST.
11. NAMEPLATES WILL BE APPLIED BY METHODS LISTED BELOW, SHOWN IN ORDER OF PREFERENCE, (I.E., FOR RELIABILITY AND WEIGHT).
    - A - STENCIL OR SILK SCREEN DIRECTLY ON EQUIPMENT USING INK PER SCD 1010920,(WHITE OR BLACK).
    - B - ALUMINUM FOIL,(STYLE A OR B, TYPE I):
      FOIL SHALL BE .0030 ±.0005 THICK PER MIL-A-148.
      FOIL SHALL HAVE NO ADHESIVE BACKING.
      FOIL SHALL BE BONDED PER ND 1002219,(METHOD II).
      FOIL SHALL BE CLEAR ANODIZED PER MIL-A-8625, TYPE II.
    - C - PLATE, (STYLE A OR B, TYPE II):
      MATERIAL: QQ-A-250, TEMPER O OR H14, TYPE 1100, ALUMINUM ALLOY, .032 THICK.
      ANODIZE PER MIL-A-8625, TYPE II.
      ALUMINUM PLATE MUST BE FREE FROM BURRS AND SHARP CORNERS, MOUNTED WITH APPLICABLE SIZE FASTENERS.
12. NAMEPLATES SHALL BE CAPABLE OF MEETING APPLICABLE REQUIREMENTS OF MIL-M-13231.
13. ON DIMENSION TABLES SHOWN ON PAGES 2, 3, 4 AND 5, NA MEANS, "NOT APPLICABLE".

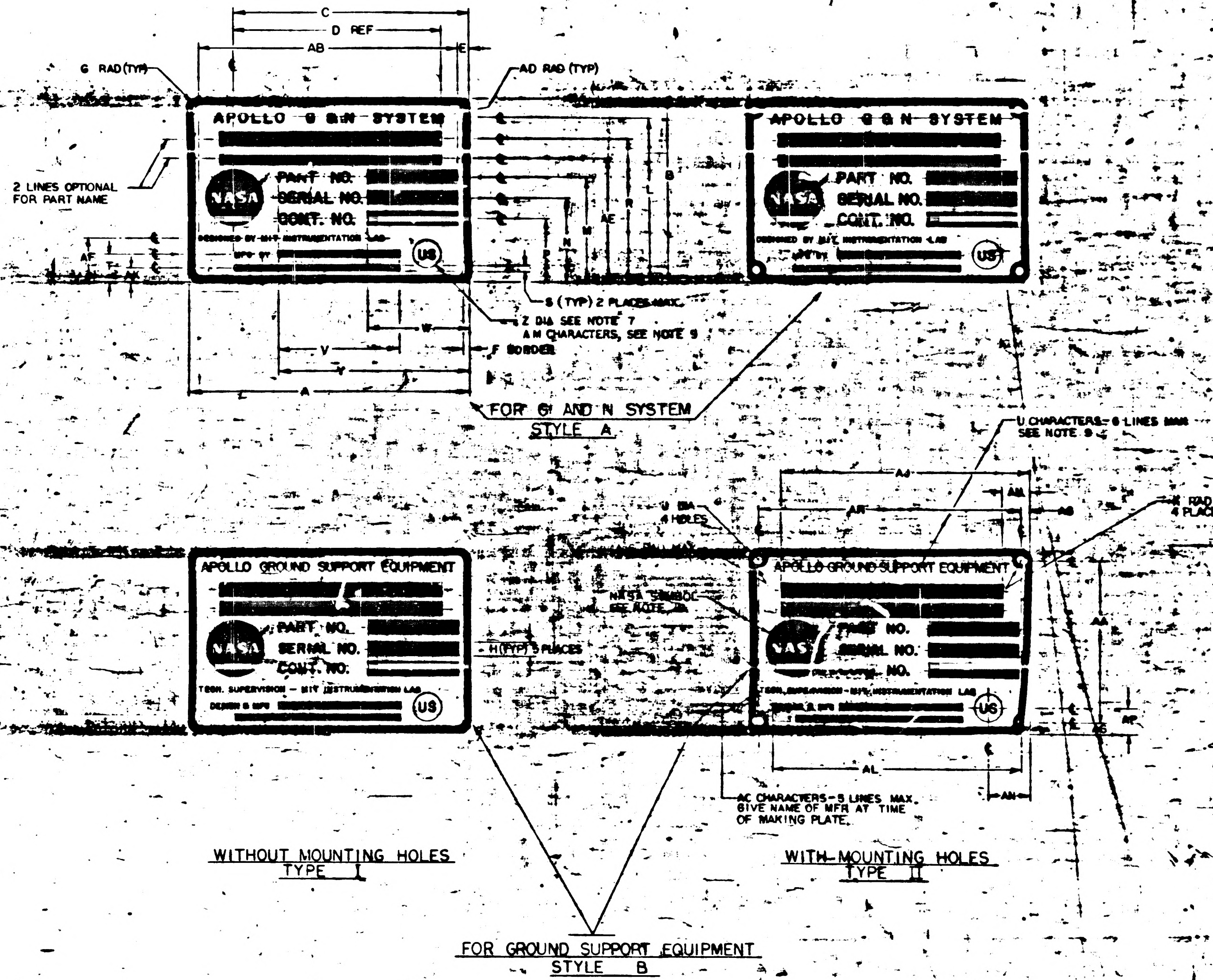
C
D REF
AB
E
G RAD (TYP)
AD RAD (TYP)
2 LINES OPTIONAL FOR PART NAME
APOLLO G & N SYSTEM
PART NO.
SERIAL NO.
CONT. NO.
NASA
DESIGNED BY MIT INSTRUMENTATION LAB
US
AF
T
AK
B
L
R
AE
M
N
P
S (TYP) 2 PLACES MAX.
Z DIA SEE NOTE 7
AM CHARACTERS, SEE NOTE 9
W
V
Y
A
F BORDER
FOR G AND N SYSTEM
STYLE A
U CHARACTERS - 6 LINES MAX SEE NOTE 9
AJ
AH
AR
AG
X RAD 4 PLACES
U DIA 4 HOLES
APOLLO GROUND SUPPORT EQUIPMENT
NASA SYMBOL SEE NOTE 10
H (TYP) 5 PLACES
TECH. SUPERVISION - MIT INSTRUMENTATION LAB
DESIGN & MFG
AA
AP
AS
AL
AN
AC CHARACTERS - 5 LINES MAX. GIVE NAME OF MFR AT TIME OF MAKING PLATE.
WITHOUT MOUNTING HOLES
TYPE I
WITH MOUNTING HOLES
TYPE II
FOR GROUND SUPPORT EQUIPMENT
STYLE B

SYM	ZONE	DESCRIPTION
G		REPLACES REV F WITH CHANGE PER TDRR 20864
H		REVISED PER TDRR 20892
J		REVISED PER TDRR 20904
K		REVISED PER TDRR 21379
L		REVISED PER TDRR 21410
M		REVISED PER TDRR [illegible]
N		REVISED PER TDRR 22621
P		REVISED PER TDRR 22671
R		REVISED PER TDRR 22672
S		REVISED PER TDRR 22750
T		REVISED PER TDRR 22823
U		REVISED PER TDRR 23072
V		REVISED PER TDRR [illegible]
W		REVISED PER TDRR [illegible]
Y		REVISED PER TDRR 2401[illegible]
Z		REVISED PER TDRR 24040
AA		REVISED PER TDRR 24060
AB		REVISED PER TDRR 24868
AC		REVISED PER TDRR 24973
AD		REVISED PER TDRR 25065
AE		REVISED PER TDRR 256[illegible]
AF		REVISED PER TDRR 2567[illegible]
AG		REVISED PER TDRR 26[illegible]
AH		REVISED PER TDRR [illegible]
AJ		REVISED PER TDRR 26425
AK		REVISED PER TDRR 26743
AL		REVISED PER TDRR 267[illegible]
AM		REVISED PER TDRR 27168
AN		REVISED PER TDRR 27235
AP		REVISED PER TDRR 27345
AR		REVISED PER TDRR 27417
AS		REVISED PER TDRR 27442
AT		REVISED PER TDRR 27719
AU		REVISED PER TDRR [illegible]
AV		REVISED PER TDRR 27896
AW		28110
[illegible]		[illegible]
AZ		28131
BA		28124
BB		REVISED PER TDRR 2851[illegible]
BC		28549
[illegible]		[illegible]
BE		29235
BF		29322
BG		29429
BH		29[illegible]
BJ		2933[illegible]
BK		29619
BL		[illegible]
BM		REVISION STATUS CHANGED
BN		REVISION STATUS CHANGED
BP		REVISION STATUS CHANGED
BR		REVISION STATUS CHANGED
BS		REVISION STATUS CHANGED
BT		REVISION STATUS CHANGED
BU		REVISION STATUS CHANGED
BV		REVISION STATUS CHANGED
BW		REVISION STATUS CHANGED
BY		REVISION STATUS CHANGED
BZ		REVISION STATUS CHANGED
CA		REVISION STATUS CHANGED
CB		REVISION STATUS CHANGED
CC		REVISION STATUS CHANGED
CD		REVISION, STATUS CHANGED
CE		REVISION STATUS CHANGED

SUGGESTED PROPORTIONS FOR NAMEPLATE DIMENSIONS.
1. SELECT NAMEPLATE LENGTH, DIMENSION "A", TO FIT DESIGN NEEDS.
2. DIMENSIONS B THRU AS ON LINE 1 BELOW ARE PROPORTIONAL TO "A" BY MULTIPLIERS SHOWN IN LINE 2 BELOW.

1.	A	B	C	D	E	F	G	H	J	K	L	M	N	P	R	S	T	U
2.	1.000 A	.6563 A	.8438 A	.6875 A	.0391 A	.0240 A	.0391 A	.0469 A	.0547 A	.0469 A	.5938 A	.3750 A	.2969 A	.2187 A	.5079 A	.0313 A	.0938 A	.0391 A

1.	V	W	Y	Z	AA	AB	AC	AD	AE	AF	AG	AH	AJ	AK	AL	AM	AN	AP	AR	AS
2.	.4375 A	.3594 A	.6875 A	.1094 A	.5781 A	.9219 A	.0240 A	.0156 A	.4375 A	.1525 A	.0391 A	.1563 A	.8438 A	.0548 A	.8659 A	.0391 A	.1563 A	.0938 A	.9219 A	.0151 A

⑥ REPLACES REV F WITH CHANGE

QTY REQD	PART OR IDENTIFYING NO.	MATERIAL OR NOTES	NOMENCLATURE OR DESCRIPTION

LIST OF MATERIALS

AS APPLICABLE	
NEXT ASSY	USED ON

APPLICATION

UNLESS OTHERWISE SPECIFIED
DIMENSIONS ARE IN INCHES
CAPACITOR VALUES ARE IN µf
RESISTOR VALUES ARE IN OHMS
TOLERANCES ON
FRACTIONS ± — DECIMALS ±.005 ANGLES ± —
DO NOT SCALE THIS DRAWING

MATERIAL
SEE NOTE 11

MIT
INSTRUMENTATION LAB
CAMBRIDGE, MASS.

DRAWN R A [illegible]
CHECKED A. J. [illegible] 7-2[illegible]
APPROVED
APPROVED
APPROVED MIT
APPROVED MSC
DATE

MANNED SPACECRAFT CENTER
HOUSTON, TEXAS

NAMEPLATES
APOLLO G&N - GSE
(STANDARDS)

CODE IDENT NO. 80230
SIZE E
1004250
SCALE NONE
OF 6

SYM	ZONE	DESCRIPTION		
G		REPLACES REV F WITH CHANGE PER TDRR 20854.		
H		REVISED PER TDRR 20892		
J		REVISED PER TDRR 20904		
K		REVISED PER TDRR 21379		
L		REVISED PER TDRR 21410		
M		REVISED PER TDRR 21993		
N		REVISED PER TDRR 22021		
P		REVISED PER TDRR 22671		
R		REVISED PER TDRR 22672		
S		REVISED PER TDRR 22750		
T		REVISED PER TDRR 22823		
U		REVISED PER TDRR 23072		
V		REVISED PER TDRR [illegible]		
W		REVISED PER TDRR [illegible]		
Y		REVISED PER TDRR 24016	RAJ	
Z		REVISED PER TDRR 24040	RAJ	
AA		REVISED PER TDRR 24069	RAJ	
AB		REVISED PER TDRR 24864	RAJ	
AC		REVISED PER TDRR 24973	RAJ	
AD		REVISED PER TDRR 25065	RAJ	
AE		REVISED PER TDRR 25672		
AF		REVISED PER TDRR 25671	RAJ	
AG		REVISED PER TDRR 26110	RAJ	
AH		REVISED PER TDRR 26372		
AJ		REVISED PER TDRR 26429		
AK		REVISED PER TDRR 26743		
AL		REVISED PER TDRR 26798		
AM		REVISED PER TDRR 27160		
AN		REVISED PER TDRR 27235		
AP		REVISED PER TDRR 27345		
AR		REVISED PER TDRR 27417		
AS		REVISED PER TDRR 27446		
AT		REVISED PER TDRR 27719		
AU		REVISED PER TDRR 27[illegible]		
AV		REVISED PER TDRR 27898		
AW		28110		
AY		28173		
AZ		28131		
BA		28124		
BB		REVISED PER TDRR 28517		5-16-66
BC		28949		
BD		29222		
BE		29235		
BF		29322		
BG		29429		
BH		29498		
BJ		29435		
BK		29619		
BL		29696		
BM		REVISION STATUS CHANGED	JSD	
BN		REVISION STATUS CHANGED	JI	
BP		REVISION STATUS CHANGED	JI	
BR		REVISION STATUS CHANGED	JI	
BT		REVISION STATUS CHANGED	GW	
BU		REVISION STATUS CHANGED	EH	
BV		REVISION STATUS CHANGED	JJB	
BW		" " "		
BY		" " "	JJB	
BZ		REVISION STATUS CHANGED	JJB	10 OCT 66
CA		REVISION STATUS CHANGED	JJB	25 OCT 66
CB		REVISION STATUS CHANGED		
CC		REVISION STATUS CHANGED	AE	
CD		REVISION STATUS CHANGED	DR	
CE		REVISION STATUS CHANGED		

DASH NO.	P/C	PART NAME	REMARKS	PART NO.	SER. NO.	CONT. NO.	STYLE	TYPE	MATERIAL	A	B	C	D	E	F	G	H	J	K	L	M	N	P	R	S	T	U	V	W	Y	Z	AA	AB	AC	AD	AE	AF	AG	AH	AJ	AK	AL	AM	AN	AP	AR
399	K																																													
398	K																																													
350	K	ALIGNMENT OPTICAL TELESCOPE (LEM)		NA	NA	NA	A	I	NOTE 11B	4.000	2.625	3.375	2.750	.156	.093	.156	.187	NA	NA	2.312	1.468	1.187	.906	2.031	NA	.375	.156	NA	1.437	2.750	.437	NA	3.688	.062	.062	1.750	.593	NA	.625	3.375	.187	NA	.156	.531	.453	NA
309	K																																													
308	K																																													
307	K						B	I	NOTE 11 B	4.000	2.625	3.375	2.750	.156	.093	.156	.187	NA	NA	2.328	1.468	1.187	.906	2.031	.062	.375	.156	NA	1.437	2.750	.437	NA	3.687	.062	.062	1.750	.593	NA	NA	NA	NA	NA	NA	NA	NA	NA
306	K						B	II	NOTE 11 C	4.000	2.625	3.375	2.750	.156	.093	.156	.187	.125	.156	2.328	1.468	1.187	.906	2.031	.062	.375	.156		1.437	2.750	.437	2.312	3.687	.062	NA	1.750	.593									
305	K						B	I	NOTE 11 B	2.000	1.312	1.687	1.375	.078	.048	.078	.093	NA	NA	1.164	.734	.593	.453	1.015	.048	.171	.078		.718	1.375	.187	NA	NA	.048	.031	.875	.320									
304	K						B	II	NOTE 11 C	2.000	1.312	1.687	1.375	.078	.048	.078	.093	.070	.078	1.164	.734	.593	.453	1.015	.048	.171	.078	NA	.718	1.375	.187	.156	1.843	.048	NA	.875	.320	NA	NA	NA	NA	NA	NA	NA	NA	NA
303	K																																													
302	K																																													
301	K																																													
300	K	OPTICAL UNIT		NA	NA	NA	A	I	NOTE 11 B	2.000	1.312	1.675	NA	NA	.048	.078	NA	NA	NA	1.090	.812	.675	.540	.940	NA	.265	NA	NA	NA	1.375	.218	NA	NA	NA	NA	NA	.375	NA	NA	NA	.180	NA	.078	NA	NA	NA
9	K	2 IN AUTOCOLLIMATOR		1001702			B	II	NOTE 11 C	4.000	2.625	3.812	2.750	.156	.093	.156	.187	.125	.156	2.250	1.500	1.187	.906	2.031	.093	.375	.156	1.750	1.437	2.750	.437	2.312	3.687	.062	NA	1.750	.593	.156	1.062	3.812	.156	NA	.156	1.062	.375	3.687
8	K	5 IN AUTOCOLLIMATOR		1017410			B	II	NOTE 11 C	4.000	2.625	3.812	2.750	.156	.093	.156	.187	.125	.156	2.250	1.500	1.187	.906	2.031	.093	.375	.156	1.750	1.437	2.750	.437	2.312	3.687	.062	NA	1.750	.593	.156	1.062	3.812	.156	NA	.156	1.062	.375	3.687
7	K	2½ IN AUTOCOLLIMATOR (SCT)		1017435			B	II	NOTE 11 C	4.000	2.625	3.812	2.750	.156	.093	.156	.187	.125	.156	2.250	1.500	1.187	.906	2.031	.093	.375	.156	1.750	1.437	2.750	.437	2.312	3.687	.062	NA	1.750	.593	.156	1.062	3.812	.156	NA	.156	1.062	.375	3.687
6	K	2½ IN AUTOCOLLIMATOR (SXT)		1017448			B	II	NOTE 11 C	4.000	2.625	3.812	2.750	.156	.093	.156	.187	.125	.156	2.250	1.500	1.187	.906	2.031	.093	.375	.156	1.750	1.437	2.750	.437	2.312	3.687	.062	NA	1.750	.593	.156	1.062	3.812	.156	NA	.156	1.062	.375	3.687
5	K	RETROREFLECTING PRISM ASSEMBLY		1019840			B	I	NOTE 11 B	4.000	2.625	3.812	2.750	.156	.093	.156	.187	NA	NA	2.250	1.500	1.187	.906	2.031	[illegible]	.375	.156	1.750	1.437	2.750	.437	NA	NA	.062	.062	1.750	.593	.156	1.062	3.812	.156	NA	.156	1.062	.375	NA
4	K	S/H SIMULATOR ASSEMBLY		1019896			B	I	NOTE 11 B	4.000	2.625	3.812	2.750	.156	.093	.156	.187	NA	NA	2.250	1.500	1.187	.906	2.031	.093	.375	.156	1.750	1.437	2.750	.437	NA	NA	.062	.062	1.750	.593	.156	1.062	3.812	.156	NA	.156	1.062	.375	NA
3	K	REFERENCE MIRROR		1001767			B	I	NOTE 11 B	2.000	1.312	1.906	1.375	.078	.048	.078	.093	NA	NA	1.125	.750	.593	.453	1.015	.062	.187	.078	.875	.718	1.375	.218	NA	NA	.048	.031	.875	.305	.078	.531	1.906	.078	NA	.078	.531	.187	NA
2	K	2 IN PLANE READING AUTOCOLLIMATOR		1017413			B	I	NOTE 11 B	2.000	1.312	1.906	1.375	.078	.048	.078	.093	NA	NA	1.125	.750	.593	.453	1.015	.062	.187	.078	.875	.718	1.375	.218	NA	NA	.048	.031	.875	.305	.078	.531	1.906	.078	NA	.078	.531	.187	NA
1	K	2 IN AUTOCOLLIMATOR		1001702 -			B	I	NOTE 11 B	2.000	1.312	1.906	1.375	.078	.048	.078	.093	NA	NA	1.125	.750	.593	.453	1.015	.062	.187	.078	.875	.718	1.375	.218	NA	NA	.048	.031	.875	.305	.078	.531	1.906	.078	NA	.078	.531	.187	NA

© REPLACES REV F WITH CHANGE

KOLLSMAN DASH NUMBERS

NOTES FOR TABLE

STYLE A IS FOR G&N SYSTEM.
STYLE B IS FOR GROUND SUPPORT EQUIPMENT.
TYPE I IS WITHOUT MOUNTING HOLES.
TYPE II IS WITH MOUNTING HOLES.

QTY REQD	PART OR IDENTIFYING NO.	MATERIAL OR NOTES	NOMENCLATURE OR DESCRIPTION

LIST OF MATERIALS

AS APPLICABLE

NEXT ASSY	USED ON

APPLICATION

UNLESS OTHERWISE SPECIFIED
DIMENSIONS ARE IN INCHES
CAPACITOR VALUES ARE IN µf
RESISTOR VALUES ARE IN OHMS
TOLERANCES ON
FRACTIONS ± — DECIMALS ±.005 ANGLES ± —
DO NOT SCALE THIS DRAWING

MATERIAL
SEE NOTE 11

MIT
INSTRUMENTATION LAB
CAMBRIDGE, MASS.

MANNED SPACECRAFT CENTER
HOUSTON, TEXAS

DRAWN R. G. Jones 7-16-65
CHECKED 7-22-65
APPROVED
APPROVED
APPROVED MIT
APPROVED MSC
DATE

NAMEPLATES
APOLLO G&N-GSE
(STANDANDS)

CODE IDENT NO. 80230
SIZE E
1004260
SCALE NONE
2 OF 6

SYM	ZONE	DESCRIPTION	BY	CHK	DATE
G		REPLACES REV F WITH CHANGE PER TDRR 20854			[illegible]
H		REVISED PER TDRR 20892			[illegible]
J		REVISED PER TDRR 20904			[illegible]
K		REVISED PER TDRR 21379			[illegible]
L		REVISED PER TDRR 21410			[illegible]
M		REVISED PER TDRR 21993			[illegible]
N		REVISED PER TDRR 22621			[illegible]
P		REVISED PER TDRR 22671			[illegible]
R		REVISED PER TDRR 22672			[illegible]
S		REVISED PER TDRR 22750			[illegible]
T		REVISED PER TDRR 22823			[illegible]
U		REVISED PER TDRR 23072			[illegible]
V		REVISED PER TDRR [illegible]			[illegible]
W		REVISED PER TDRR [illegible]	RAJ		[illegible]
Y		REVISED PER TDRR [illegible]	RAJ		[illegible]
Z		REVISED PER TDRR 24040	RAJ		[illegible]
AA		REVISED PER TDRR 24080	RAJ		[illegible]
AB		REVISED PER TDRR 24868	RAJ		[illegible]
AC		REVISED PER TDRR 24973	RAJ		[illegible]
AD		REVISED PER TDRR 25065	RAJ		[illegible]
AE		REVISED PER TDRR 25672	RAJ		[illegible]
AF		REVISED PER TDRR 25671	RAJ		[illegible]
AG		REVISED PER TDRR 26110	RAJ		[illegible]
AH		REVISED PER TDRR 26372			[illegible]
AJ		REVISED PER TDRR 26425			[illegible]
AK		REVISED PER TDRR 26742			[illegible]
AL		REVISED PER TDRR 26794			[illegible]
AM		REVISED PER TDRR 27168			[illegible]
AN		REVISED PER TDRR 27235			[illegible]
AP		REVISED PER TDRR 27345			[illegible]
AR		REVISED PER TDRR 27417			[illegible]
AS		REVISED PER TDRR 27442			[illegible]
AT		REVISED PER TDRR 27719			[illegible]
AU		REVISED PER TDRR [illegible]			[illegible]
AV		REVISED PER TDRR 27896			[illegible]
AW		[illegible]			[illegible]
AY		[illegible]			[illegible]
AZ		28131			[illegible]
BA		28124			[illegible]
BB		REVISED PER TDRR 28511			[illegible]
BC		" " " 28949			[illegible]
BD		" " " [illegible]			[illegible]
BE		" " " 29235			[illegible]
BF		" " " 29322			[illegible]
BG		" " " 29425			[illegible]
BH		" " " 29449			[illegible]
BJ		" " " 29335			[illegible]
BK		" " " 29619			[illegible]
BL		" " " 29696			[illegible]
BM		" " " 29802	JSU		[illegible]
BN		REVISION STATUS CHANGED			[illegible]
BP		REVISED PER TDRR [illegible]			[illegible]
BR		REVISION STATUS CHANGED			[illegible]
BS		REVISION STATUS CHANGED			[illegible]
BT		REVISION STATUS CHANGED			[illegible]
BU		REVISION STATUS CHANGED			[illegible]
BV		REVISION STATUS CHANGED	UJB		[illegible]
BW		REVISED PER TDRR 31279	UJB		[illegible]
BY		REVISION STATUS CHANGED	UJB		10 OCT
BZ		REVISION STATUS CHANGED	UJB		10 OCT
CA		REVISION STATUS CHANGED			[illegible]
CB		REVISION STATUS CHANGED			[illegible]
CC		REVISION STATUS CHANGED	AF		[illegible]
CD		REVISED PER TDRR [illegible]			[illegible]
CE		REVISED PER TDRR [illegible]			[illegible]

DASH NO.	P/C	PART NAME	REMARKS	PART NO.	SER. NO.	CONT. NO.	STYLE	TYPE	MATERIAL	A
299	R									
298	R									
285	R	BUFFER CIRCUIT ASSY		2014254-031	NA	NAS9497	B	I	NOTE 11B	FOR DIMENSIONS SEE DASH 15 VALUES BELOW
284	R	LOGIC DRAWER ASSY NO. 2		2014037-041	NA	NAS9-497	B	I	NOTE 11B	FOR DIMENSIONS SEE DASH 17 VALUES BELOW
283	R	DRAWER ASS'Y-PROGRAM & MONITOR		2014041-051	NA	NAS9-497	B	I	NOTE 11B	FOR DIMENSIONS SEE DASH 17 VALUES BELOW
282	R	COMPUTER TEST SET		2014042-061	NA	NAS9-497	B	II	NOTE 11C	FOR DIMENSIONS SEE DASH 18 VALUES BELOW
280	R	COMPUTER TEST SET		2014042-051	NA	NAS9-497	B	II	NOTE 11C	FOR DIMENSIONS SEE DASH 18 VALUES BELOW
279	R	SELF TEST ASSY		2014366-041	NA	NAS9-497	B	I	NOTE 11B	FOR DIMENSIONS SEE DASH 15 VALUES BELOW
278	R	LOGIC DRAWER ASSY NO.1		2014036-041	NA	NAS-9-497	B	I	NOTE 11B	FOR DIMENSIONS SEE DASH 17 VALUES BELOW
277	R	COMPUTER TEST SET		2014042-041	NA	NAS-9-497	B	II	NOTE 11C	FOR DIMENSIONS, SEE DASH 18 VALUES BELOW
276		DRAWER ASSY-PROGRAM & MONITOR		2014041-041				I	NOTE 11B	FOR DIMENSIONS, SEE DASH 17 VALUES BELOW
275		DRAWER ASSY RDC INTERFACE		2014045-031						
274		SELF TEST ASSY		2014366-031						FOR DIMENSIONS, SEE DASH 15 VALUES BELOW
273		LOGIC DRAWER ASSY NO. 2		2014037-031						FOR DIMENSIONS, SEE DASH 17 VALUES BELOW
272		DRAWING ASSY PROGRAMMER & MONITOR		2014041-031						
271		LOGIC DRAWER ASSY NO. 1		2014036-031				I	NOTE 11B	FOR DIMENSIONS, SEE DASH 17 VALUES BELOW
270		COMPUTER TEST SET		2014042-031				II	NOTE 11C	FOR DIMENSIONS, SEE DASH 18 VALUES BELOW
269		POWER CONTROL ASSY		2014044-021				I	NOTE 11B	FOR DIMENSIONS, SEE DASH 17 VALUES BELOW
268		SELF TEST ASSY		2014366-021						
267		[illegible] JUNCTION ASSY		2014341-021						
266		POWER CONTROL ASSY		2014079-021						
265		BUFFER CIRCUIT ASSY		2014254-021						FOR DIMENSIONS, SEE DASH 15 VALUES BELOW
264		DRAWER ASSY X Y INTERFACE		2014040-021						
263		DRAWER ASSY R D C INTERFACE		2014045-021						
262		DRAWER ASSY PROGRAMMER & MONITOR		2014041-021						
261		LOGIC DRAWER ASSY NO. 2		2014037-021						FOR DIMENSIONS, SEE DASH 17 VALUES BELOW
260		LOGIC DRAWER ASSY NO. 1		2014036-021				I	NOTE 11B	
259		OPERATION CONSOLE		2014024-021				II	NOTE 11C	
258		COMPUTER TEST SET		2014042-021						
257		AUXILIARY CALIBRATION CONSOLE		2014059-021						
256		AGC CALIBRATION CONSOLE		2014049-021				II	NOTE 11C	FOR DIMENSIONS, SEE DASH 18 VALUES BELOW
255		AGC HANDLING FIXTURE		2014282-021				I	NOTE 11B	FOR DIMENSIONS, SEE DASH 17 VALUES BELOW
254		DRAWER ASSY COMP. SIMULATOR		2014048-011				II	NOTE 11C	
253		SHIPPING KIT ASSY, NAV DSKY		2016312-011						FOR DIMENSIONS, SEE DASH 18 VALUES BELOW
252		SHIPPING KIT ASSY, UNIVERSAL DSKY		2016316-011						
251		SHIPPING KIT ASSY, MAIN DSKY		2016313-011				II	NOTE 11C	
250		AMPLIFIER, REWORK		2014386				I	NOTE 11B	FOR DIMENSIONS, SEE DASH 15 VALUES BELOW
249		[illegible] MONITOR ASSY		2014313-011					NOTE 11C	FOR DIMENSIONS, SEE DASH 17 VALUES BELOW
248		AGC JUNCTION ASSY		2014341-011					NOTE 11B	
247		AC INPUT PANEL ASSY		2014302-011						FOR DIMENSIONS, SEE DASH 15 VALUES BELOW
246		SELF TEST ASSY		2014392-011						
245		TAPE PUNCH ASSEMBLY		2014039-011						
244	R	TAPE READER ASSEMBLY		2014038-011	NA	NAS-9-497	B	I	NOTE 11B	FOR DIMENSIONS, SEE DASH 15 VALUES BELOW
243										
242										
241	R	APOLLO GUIDANCE COMPUTER GROUP		6003001	NA	NAS-9-497	A	I	NOTE 11B	FOR DIMENSIONS, SEE DASH 19 VALUES BELOW
240		SELF TEST ASSEMBLY		2014366-011	NA		B	I		FOR DIMENSIONS, SEE DASH 15 VALUES BELOW
239		POWER SUPPLY ASSY-115V., 400 CYCLE		2014207-041						FOR DIMENSIONS, SEE DASH 17 VALUES BELOW
238		AC INPUT PANEL ASSY		2014043-011						
237		POWER CONTROL ASSY		2014079-011						
236		DRAWER ASSY-X Y INTERFACE		2014040-011						FOR DIMENSIONS, SEE DASH 15 VALUES BELOW
235		DRAWER ASSY RDC INTERFACE		2014045-011						
234		BUFFER CIRCUIT ASSY		2014254-011						
233		CONTROL & INTERFACE ASSY		2014204-041						
232		POWER CONTROL ASSY		2014044-011						
231		DRAWER ASSY, PROGRAMMER & MONITOR		2014041-011						FOR DIMENSIONS, SEE DASH 17 VALUES BELOW
230		CONNECTOR INTERFACE ASSY		2014272-011						
229		CONNECTOR INTERFACE ASSY		2014047-011						FOR DIMENSIONS, SEE DASH 15 VALUES BELOW
228		ANTENNA TUNING CAPACITOR ASSY		2014209-011						
227		MOUNTING FIXTURE ASSY		2014006-011						FOR DIMENSIONS, SEE DASH 17 VALUES BELOW
226		POWER SUPPLY ASSY 3 VDC		2014234-011						
225		PANEL ASSY - SIGNAL INTERFACE		2014010-011						
224		OSCILLOSCOPE ASSY		2014232-011						
223		AUXILIARY OUTLET ASSY		2014274-011						FOR DIMENSIONS, SEE DASH 15 VALUES BELOW
222		FREQUENCY COUNTER		2014233-011						
221		POWER SUPPLY ASSY 10, 13, 28 VDC		2014235-011						
220		LOGIC DRAWER ASSY NO. 2		2014037-011						
219		LOGIC DRAWER ASSY NO. 1		2014036-011						FOR DIMENSIONS, SEE DASH 17 VALUES BELOW
218		COUNTER, ELECTRICAL ASSY		2014288-011						
217		POWER SUPPLY ASSY		2014279-011						FOR DIMENSIONS, SEE DASH 15 VALUES BELOW
216		TEST MOUNT ASSY		2014257-011						
215		UNIVERSAL DSKY PEDESTAL MOUNT		2014014-011						FOR DIMENSIONS, SEE DASH 17 VALUES BELOW
214		MAIN DSKY PEDESTAL MOUNT		2014343				I	NOTE 11B	
213		SHIPPING CONTAINER, MAIN DSKY		1006229				II	NOTE 11C	
212		NAV DSKY		1006231						
211		AGC		1006230						FOR DIMENSIONS, SEE DASH 18 VALUES BELOW
210		UNIVERSAL DSKY		1006422						
209		SHIPPING CONTAINER, AGC		1006421				II	NOTE 11C	
208		UNIVERSAL DSKY HANDLING FIXTURE		2014013-011				I	NOTE 11B	FOR DIMENSIONS, SEE DASH 15 VALUES BELOW
207		NAV DSKY HANDLING FIXTURE		1014377						
206		MAIN DSKY HANDLING FIXTURE		1014334						FOR DIMENSIONS, SEE DASH 17 VALUES BELOW
205		AGC HANDLING FIXTURE		2014282-011				I	NOTE 11B	
204		OPERATION CONSOLE		2014024-011				II	NOTE 11C	
203		COMPUTER TEST SET		2014042-011		NAS-9-497				
202		DRAWER ASSY, COMPUTER SIMULATOR		2014048-011		FNP-12775				FOR DIMENSIONS, SEE DASH 18 VALUES BELOW
201		AUXILIARY CALIBRATION CONSOLE		2014059-011		NAS-9-497				
200		AGC CALIBRATION CONSOLE		2014049-011	NA		B	II	NOTE 11C	
21										
20		NA		NA	NA	NA	A	II	NOTE 11C	2.000
19		NA		NA	NA	NA	A	I	NOTE 11B	2.000
18		NA		NA	NA	NA	B	II	NOTE 11C	4.187
17		NA		NA	NA	NA	B	I	NOTE 11B	4.187
16		NA		NA	NA	NA	B	II	NOTE 11C	2.000
15	R	NA		NA	NA	NA	B	I	NOTE 11B	2.000

DASH NO.	A	B	C	D	E	F	G	H	J	K	L	M	N	P	R	S	T	U	V	W	Y	Z
20	2.000	1.312	1.687	1.375	.078	.031	.078	.093	.106 .113	.093	1.187	.750	.593	.453	1.015	.062	.187	.078	.875	.718	1.375	.218
19	2.000	1.312	1.687	1.375	.078	.031	.078	.093	NA	NA	1.187	.750	.593	.453	1.015	.062	.187	.078	.875	.718	1.375	.218
18	4.187	1.875	3.469	2.750	.156	.093	.156	.125	.106 .113	.125	1.625	1.032	.844	.656	1.406	.093	.344	.156	1.781	1.531	2.844	.312
17	4.187	1.875	3.469	2.750	.156	.093	.156	.125	NA	NA	1.625	1.032	.844	.656	1.406	.093	.344	.156	1.781	1.531	2.844	.312
16	2.000	1.312	1.687	1.375	.078	.031	.078	.093	.106 .113	.093	1.187	.750	.593	.453	1.015	.062	.187	.078	.875	.718	1.375	.218
15	2.000	1.312	1.687	1.375	.078	.031	.078	.093	NA	NA	1.187	.750	.593	.453	1.015	.062	.187	.078	.875	.718	1.375	.218

DASH NO.	AA	AB	AC	AD	AE	AF	AG	AH	AJ	AK	AL	AM	AN	AP	AR
20	1.156	1.843	.048	NA	.875	.305	.078	.312	1.687	.078	NA	.078	.312	.187	1.843
19	NA	NA	.048	.031	.875	.305	.078	.312	1.687	.078	NA	.078	.312	.187	NA
18	1.562	3.875	.062	NA	1.219	.500	.156	.719	3.469	.156	NA	.156	.719	.344	3.875
17	NA	NA	.062	.062	1.219	.500	.156	.719	3.469	.156	NA	.156	.719	.344	NA
16	1.156	1.843	.048	NA	.875	.305	.078	.312	1.687	.078	NA	.078	.312	.187	1.843
15	NA	NA	.048	.031	.875	.305	.078	.312	1.687	.078	NA	.078	.312	.187	NA

THIS SHEET ADDED

Ⓖ REPLACES REV F WITH CHANGE

RAYTHEON DASH NUMBERS

NOTES FOR TABLE
- STYLE A IS FOR G & N SYSTEM
- STYLE B IS FOR GROUND SUPPORT EQUIPMENT
- TYPE I IS WITHOUT MOUNTING HOLES
- TYPE II IS WITH MOUNTING HOLES

QTY REQD	PART OR IDENTIFYING NO.	MATERIAL OR NOTES	NOMENCLATURE OR DESCRIPTION

LIST OF MATERIALS

NEXT ASSY	USED ON
AS APPLICABLE	

APPLICATION

UNLESS OTHERWISE SPECIFIED
DIMENSIONS ARE IN INCHES
CAPACITOR VALUES ARE IN μf
RESISTOR VALUES ARE IN OHMS
TOLERANCES ON
FRACTIONS ± — DECIMALS ±.005 ANGLES ± —
DO NOT SCALE THIS DRAWING

MATERIAL
SEE NOTE 11

MIT
INSTRUMENTATION LAB
CAMBRIDGE, MASS.

		DATE
DRAWN	R. A. Jones	7-16-65
CHECKED	A. J. [illegible]	7-22-65
APPROVED		
APPROVED	[illegible]	2/4/65
APPROVED MIT	[illegible]	2/4/65
APPROVED MSC	[illegible]	[illegible]

MANNED SPACECRAFT CENTER
HOUSTON, TEXAS

NAMEPLATES
APOLLO G&N-GSE
(STANDARDS)

CODE IDENT NO. 80230 | SIZE E | 1004260

SCALE NONE | SHEET 3 OF 6

DASH NO.	P/C	PART NAME	REMARKS	PART NO.	SER. NO.	CONT. NO.	STYLE	TYPE	MATERIAL	A	B	C	D	E	F	G	H	J	K	L	M	N	P	R	S	T	U	V	W	Y	Z	AA	AB	AC	AD	AE	AF	AG	AH	AJ	AK	AL	AM	AN	AP	AR
199	AC	EYEPIECE STOWAGE UNIT		2021255-011			A	I		FOR DIMENSIONS, SEE DASH 100 VALUES BELOW																																			
198	AC	SIGNAL CONDITIONER ASSY C/M		2007234		NAS 9-497			NOTE 11B																																				
197	AC	SIGNAL CONDITIONER ASSY C/M		2007235																																									
196	AC	SIGNAL CONDITIONER ASSY LEM		6007010																																									
195	AC	PSA & SIGNAL CONDITIONER ASSY		6007009			A	I	NOTE 11B																																				
194	AC	PANEL, MONITOR		2900031-031			B	II	NOTE 11C	FOR DIMENSIONS, SEE DASH 141 VALUES BELOW																																			
193	AC	DISTRIBUTION BOX, GSE		2900024-031																																									
192	AC	ANALYZER, OPTICS-INERTIAL		2900023-031						FOR DIMENSIONS, SEE DASH 144 VALUES BELOW																																			
191	AC	TEST CONTROL		2900027-031						FOR DIMENSIONS, SEE DASH 141 VALUES BELOW																																			
190	AC	PANEL, PWR SUP AND LOAD		2900033-021																																									
189	AC	ADPT MODULE, P.S.A.		6900088-011																																									
188	AC	ADPT MODULE, P.S.A.		2901143-011																																									
187	AC	FIXTURE, MTG, PTA/PEA		2900066-02		NAS 9-497	B	II	NOTE 11C																																				
186	AC	ANNUNCIATOR PANEL AND EYEPIECE STORAGE ASSEMBLY		1021255-021			A	I		FOR DIMENSIONS, SEE DASH 100 VALUES BELOW																																			
185	AC	ANNUNCIATOR PANEL AND EYEPIECE STORAGE ASSEMBLY		1021255-011			A	I																																					
184	AC	FIX., HAND., G AND N HARNESS		1901846-041		NAS 9-497	B	II	NOTE 11C	FOR DIMENSIONS, SEE DASH 144 VALUES BELOW																																			
183	AC	INSTALLING TOOL, ELEC. CONN		1902586-011			B	II	NOTE 11C	FOR DIMENSIONS, SEE DASH 102 VALUES BELOW																																			
182	AC	ADPT MODULE, P.S.A.		6900088-011			B	II	NOTE 11C	FOR DIMENSIONS, SEE DASH 141 VALUES BELOW																																			
181	AC	G & N INDICATOR CONTROL PANEL ASSY		2014578-011			A	I	NOTE 11B	3.000	1.938	2.437	NA	.125	.062	.188	.156	NA	NA	1.750	1.125	.906	.688	1.500	NA	.281	.125	NA	1.094	2.062	.312	NA	2.500	.062	.125	1.312	.469	NA	NA	NA	.156	NA	.125	.469	.344	NA
180	AC	ADPT MODULE, P.S.A.		1902431-031			B	II		FOR DIMENSIONS, SEE DASH 121 VALUES BELOW																																			
179	AC	MOUNTING PLATE, IMU/PTA		6900083-011						FOR DIMENSIONS, SEE DASH 144 VALUES BELOW																																			
178	AC	MOUNTING PLATE, COMPONENT		6900007-021																																									
177	AC	FIX., MOUNTING, SUBSYSTEM		2900070-021																																									
176	AC	FIX., MOUNTING, G AND N		2900067-021																																									
175	AC	CSL, COOL, AND PWR, G AND N		1902134-031																																									
174	AC	FIX., HAND., C/M AND LEM CDU		2900999-011					NOTE 11C	FOR DIMENSIONS, SEE DASH 141 VALUES BELOW																																			
173	AC	FIX., HANDLING, C/M PSA		2900998-011																																									
172	AC	CAGING ELECTRONICS, GYRO		2900029-021																																									
171	AC	DISTRIBUTION BOX, GSE		2900024-021																																									
170	AC	ANALYZER, OPTICS-INERTIAL		2900023-021						FOR DIMENSIONS, SEE DASH 144 VALUES BELOW																																			
169	AC	ADPT, TESTPOINT, P.S.A.		2900037-021						FOR DIMENSIONS, SEE DASH 141 VALUES BELOW																																			
168	AC	TEST SELECTOR		2900028-021																																									
167	AC	TEST CONTROL		2900027-021																																									
166	AC	PANEL, MONITOR		2900031-021																																									
165	AC	TERM. BOARD STORAGE DRAWER		2900927-011																																									
164	AC	INPUT/OUTPUT PANEL		2900926-011																																									
163	AC	CONTROL PANEL		2900896-011																																									
162	AC	CSL, CAL AND TEST, SCM/PSAAM		2900895-011						FOR DIMENSIONS, SEE DASH 144 VALUES BELOW																																			
161	AC	FIX., LIFT AND HAND., IMU		1[illegible]5462-011						FOR DIMENSIONS, SEE DASH 141 VALUES BELOW																																			
160	AC	FIX., HAND., G AND N HARNESS		1901846-031						FOR DIMENSIONS, SEE DASH 144 VALUES BELOW																																			
159	AC	BATTERY POWER PACK		1900011-031			B	II	NOTE 11C																																				
158	AC	COUPLING DATA UNIT ASSEMBLY C/M		2007222			A	I	NOTE 11B	FOR DIMENSIONS SEE DASH 100 VALUES BELOW																																			
157	AC	COUPLING DATA UNIT ASSEMBLY - LEM		2007222																																									
156	AC	POWER & SERVO ASSEMBLY C/M		2007200						2.125	.968	1.718	NA	.093	.031	.06	.093	NA	NA	.858	.608	.484	.358	.733	.062	.140	.062	NA	.968	1.450	.125	NA	1.720	.046	.03	NA	.210	NA	NA	NA	.070	NA	.046	.32	.16	NA
155	AC	PIPA ELECTRONICS ASSEMBLY		2007201						FOR DIMENSIONS SEE DASH 100 VALUES BELOW																																			
154	AC	PULSE TORQUE ASSEMBLY - LEM		6007000																																									
153	AC	POWER & SERVO ASSEMBLY - LEM		6007200			A	I	NOTE 11B																																				
152	AC	CONT PNL RSVR CKT TESTER		2900770-011			B	II	NOTE 11C	FOR DIMENSIONS, SEE DASH 141 VALUES BELOW																																			
[illegible]	AC	TESTER, RESOLVER CIRCUIT		2900708-011																																									
[illegible]	AC	JUNCTION BOX, PSA/GSE		1901933-021						FOR DIMENSIONS, SEE DASH 144 VALUES BELOW																																			
149	AC	BATTERY PACK, LIFTING		2900612-011						FOR DIMENSIONS, SEE DASH 141 VALUES BELOW																																			
[illegible]	AC	MOUNTING PLATE, COMPONENT		6900007-011						FOR DIMENSIONS, SEE DASH 144 VALUES BELOW																																			
[illegible]	AC	MOUNTING PLATE, COMPONENT		2900677-011																																									
146	AC	CART, TRANS, G AND N		1900089-041																																									
[illegible]	AC	CONTAINER, SHIPPING, IMU		1900040-021		NAS 9-497	B	II	NOTE 11C																																				
144	AC	FIX., MOUNTING, G AND N		1902204-021			B	II	NOTE 11C	4.125	1.812	3.250	NA	.125	.062	.12	.156	[illegible]	.125	1.625	1.140	.890	.640	1.390	.125	.171	.125	1.875	1.687	2.625	.250	1.562	3.843	.093	NA	NA	.359	.125	.437	3.688	NA	3.687	.093	.40	.25	3.875
143	AC	CSL, COOL AND PWR, G AND N		1902134-021						4.125	1.812	3.250		.125	.062	.12	.156		.125	1.625	1.140	.890	.640	1.390	.125	.171	.125	1.875	1.687	2.625	.250	1.562	3.843	.093			.359	.125	.437	3.688		3.687	.093	.40	.25	3.875
142	AC	ANALYZER, OPTICS-INERTIAL		2900023-011						4.125	1.812	3.250		.125	.062	.12	.156		.125	1.625	1.140	.890	.640	1.390	.125	.171	.125	1.875	1.687	2.625	.250	1.562	3.843	.093			.359	.125	.437	3.688		3.687	.093	.40	.25	3.875
141	AC	CONT, TEMP, PORTABLE		2900060-011						2.125	.968	1.718		.093	.031	.06	.093		.093	.858	.608	.484	.358	.733	.077	.116	.062	.937	.875	1.343	.125	.781	1.892	.046			.209	.093	.250	1.875		1.840	.046	.23	.16	1.938
140	AC	TESTER, CKT, IMU/CDU RSVR		2900286-011						4.125	1.812	3.250		.125	.062	.12	.156		.125	1.625	1.140	.890	.640	1.390	.125	.171	.125	1.875	1.687	2.625	.250	1.562	3.843	.093			.359	.125	.437	3.688		3.687	.093	.40	.25	3.875
139	AC	SIMULATOR, LD/SIG, CDU		2900285-011																																									
[illegible]	AC	SIMULATOR, LD/SIG, OPTICS		1902023-021																																									
137	AC	FIX., MOUNTING, IMU/NAV BASE		6900003-011																																									
136	AC	FIXTURE, OPTICS/NAV BASE		2900072-011																																									
135	AC	FIX., MOUNTING, SUB SYSTEM		2900070-011																																									
134	AC	FIX., HAND., G AND N HARNESS		2900069-011																																									
133	AC	CNTR, SHIPPING, NAV BASE		2900068-011																																									
132	AC	FIX., MOUNTING, G AND N		2900067-011																																									
131	AC	SIMULATOR, LD/SIG, IMU/CDU		2900062-011																																									
130	AC	TESTER, GYRO WHEEL		2900061-011																																									
129	AC	COOLANT SUPPLY		1902133-021																																									
128	AC	TABLE, ROTARY		1900926-021						4.125	1.812	3.250		.125	.062	.12	.156		.125	1.625	1.140	.890	.640	1.390	.125	.171	.125	1.875	1.687	2.625	.250	1.562	3.843	.093			.359	.125	.437	3.688		3.687	.093	.40	.25	3.875
127	AC	FIX., HAND., OPTICS		2900074-011						2.125	.968	1.718		.093	.031	.06	.093		.093	.858	.608	.484	.358	.733	.077	.116	.062	.937	.875	1.343	.125	.781	1.892	.046			.209	.093	.250	1.875		1.840	.046	.23	.16	1.938
126	AC	FIXTURE, MTG, PTA/PEA.		2900066-011																																									
125	AC	CONT, TEMP, IMU LIFTING		2900063-011																																									
124	AC	FIXTURE, HANDLING, IMU		2900064-011																																									
123	AC	CONT, OPTICS, REMOTE		1902046-021																																									
122	AC	TEST CONTROL		1902009-021																																									
121	AC	ADPT MODULE, P.S.A.		1902431-021																																									
120	AC	BRIDGE, DECADE ERROR		2900128-011																																									
119	AC	PWR SUP, ELECTRONICS		2900012-011																																									
118	AC	PWR SUP, RELAY AND LAMP		1900049-031																																									
117	AC	CONSOLE, OSCILLOGRAPH		1900000-021																																									
116	AC	ADPT MODULE, P.S.A.		1902431-011																																									
115	AC	ADPT, TEST POINT, PTA/PEA.		2900145-011																																									
114	AC	ADPT, TEST POINT, P.S.A.		2900037-011																																									
113	AC	CONTROL, GIMBAL POSITION		2900036-011																																									
112	AC	SELECTOR, SIGNAL, PRIMARY		2900035-011																																									
111	AC	SEL, SIG, OSCILLOGRAPH		2900034-011																																									
110	AC	PANEL, PWR SUP AND LOAD		2900033-011																																									
109	AC	PANEL, MONITOR		2900031-011																																									
108	AC	PANEL, AUXILIARY INPUT		2900030-011																																									
107	AC	CAGING ELECTRONICS, GYRO		2900029-011																																									
106	AC	TEST SELECTOR		2900028-011																																									
105	AC	TEST CONTROL		2900027-011																																									
104	AC	MONITOR AND CONTROL, TEMP		2900026-011																																									
103	AC	DISTRIBUTION BOX, GSE		2900024-011																																									
102	AC	VOLTMETER, DIGITAL		2900007-011			B	II	NOTE 11C	2.125	.968	1.718	NA	.093	.031	.06	.093	[illegible]	.093	.858	.608	.484	.358	.733	.077	.116	.062	.937	.875	1.343	.125	.781	1.892	.046	NA	NA	.209	.093	.250	1.875	NA	1.840	.046	.23	.16	1.938
101	AC	NAVIGATION BASE ASSEMBLY - LEM		6899950		NAS-9-497	A	I	NOTE 11B	2.000	1.312	1.906	1.375	.078	.048	.078	.093	NA	NA	1.125	.750	.593	.453	1.015	.062	.187	.078	.875	.718	1.375	.218	NA	NA	.048	.031	.875	.305	.078	.531	1.906	.078	NA	.078	.531	.187	NA
100	AC	NAVIGATION BASE ASSEMBLY		2899982		NAS-9-497	A	I	NOTE 11B	2.000	1.312	1.906	1.375	.078	.048	.078	.093	NA	NA	1.125	.750	.593	.453	1.015	.062	.187	.078	.875	.718	1.375	.218	NA	NA	.048	.031	.875	.305	.078	.531	1.906	.078	NA	.078	.531	.187	NA

NOTES FOR TABLE

STYLE A IS FOR G & N SYSTEM
STYLE B IS FOR GROUND SUPPORT EQUIPMENT
TYPE I IS WITHOUT MOUNTING HOLES
TYPE II IS WITH MOUNTING HOLES

NOTE: AC DASH NO's. CONT. ON SH. 6

THIS SHEET ADDED

Ⓖ REPLACES REV F WITH CHANGE

AC ELECTRONICS DASH NUMBERS

REVISIONS

SYM	ZONE	DESCRIPTION	DR	CHK	DATE
G		REPLACES REV F WITH CHANGE PER TDRR 20854.			
H		REVISED PER TDRR 20892			
J		REVISED PER TDRR 20904			
K		REVISED PER TDRR 21379			
L		REVISED PER TDRR 21410			
M		REVISED PER TDRR 21993			
N		REVISED PER TDRR 22621			
P		REVISED PER TDRR 22671			
R		REVISED PER TDRR 22672			
S		REVISED PER TDRR 22750			
T		REVISED PER TDRR 22823			
U		REVISED PER TDRR 23072			
V		REVISED PER TDRR [illegible]			
W		REVISED PER TDRR 23824	RAJ		
Y		REVISED PER TDRR 24010	RAJ		
Z		REVISED PER TDRR 24040	RAJ		
AA		REVISED PER TDRR 24060	RAJ		
AB		REVISED PER TDRR 24868	RAJ		2-2-66
AC		REVISED PER TDRR 24973	RAJ		1-4-66
AD		REVISED PER TDRR 25065	RAJ		
AE		REVISED PER TDRR 25627	RAJ		
AF		REVISED PER TDRR 25671	RAJ		2-4-66
AG		REVISED PER TDRR 26110	RAJ		
AH		REVISED PER TDRR 26372	"		3-16-66
AJ		REVISED PER TDRR 26425	"		3-16-66
AK		REVISED PER TDRR 26743	"		3-16-66
AL		REVISED PER TDRR 26798	"		3-16-66
AM		REVISED PER TDRR 27168	"		4-8-66
AN		REVISED PER TDRR 27235	"		4-8-66
AP		REVISED PER TDRR 27345	"		4-8-66
AR		REVISED PER TDRR 27417	"		4-8-66
AS		REVISED PER TDRR 27442	"		4-8-66
AT		REVISED PER TDRR 27719	"		4-21-66
AU		REVISED PER TDRR 27880	"		4-21-66
AV		REVISED PER TDRR 27896	"		4-21-66
AW		28110	"		5-16-66
AY		28173	"		
AZ		28131	"		
BA		28124	"		
BB		REVISED PER TDRR 28511	"		5-16-66
BC		" " " 28949			
BD		" " " 29222	"		
BE		" " " 29235	"		
BF		" " " 29322			
BG		" " " 29429			
BH		" " " 29449			
BJ		" " " 29335			
BK		" " " 29619			
BL		" " " 29696			
BM		REVISION STATUS CHANGED	JSD	RS	
BN		REVISION STATUS CHANGED			
BP		REVISION STATUS CHANGED			
BR		REVISED PER TDRR 30241			
BS		REVISION STATUS CHANGED			
BT		REVISION STATUS CHANGED			
BU		REVISION STATUS CHANGED			
BV		REVISION STATUS CHANGED	JJB		
BW		REVISION STATUS CHANGED	JJB		
BY		REVISION STATUS CHANGED	JJB		
BZ		REVISION STATUS CHANGED	JJB		
CA		REVISION STATUS CHANGED	JJB		
CB		REVISION STATUS CHANGED			
CC		REVISION STATUS CHANGED			
CD		REVISION STATUS CHANGED			
CE		REVISION STATUS CHANGED			

QTY REQD	PART OR IDENTIFYING NO.	MATERIAL OR NOTES	NOMENCLATURE OR DESCRIPTION

LIST OF MATERIALS

AS APPLICABLE
NEXT ASSY | USED ON
APPLICATION

UNLESS OTHERWISE SPECIFIED
DIMENSIONS ARE IN INCHES
CAPACITOR VALUES ARE IN µf
RESISTOR VALUES ARE IN OHMS
TOLERANCES ON
FRACTIONS ± — DECIMALS ±.005 ANGLES ± —
DO NOT SCALE THIS DRAWING

MATERIAL
SEE NOTE 11

MIT
INSTRUMENTATION LAB
CAMBRIDGE MASS

MANNED SPACECRAFT CENTER
HOUSTON, TEXAS

DRAWN R. A. Jorge 7-16-65
CHECKED
APPROVED
APPROVED
APPROVED MIT
APPROVED MSC
DATE

NAMEPLATES
APOLLO G&N-GSE
(STANDARDS)

CODE IDENT NO. 80230
SIZE E
1004260
SCALE NONE
SHEET 4 OF 6

REVISIONS

SYM	ZONE	DESCRIPTION	DR	DATE
G	•	REPLACES REV F WITH [illegible] PER TDRR 20894		
H		REVISED PER TDRR [illegible]		
J		REVISED PER TDRR 20904		
K		REVISED PER TDRR 2138[illegible]		
L		REVISED PER TDRR 21410		
M		REVISED PER TDRR 21995		
N		REVISED PER TDRR 22621		
P		REVISED PER TDRR 22671		
R		REVISED PER TDRR 22672		
S		REVISED PER TDRR 22750		
T		REVISED PER TDRR [illegible]		
U		REVISED PER TDRR 23072		
V		REVISED PER TDRR [illegible]		
W		REVISED PER TDRR [illegible]		
Y		REVISED PER TDRR 24010	RAJ	
Z		REVISED PER TDRR 24040	RAJ	
AA		REVISED PER TDRR 24060	RAJ	
AB		REVISED PER TDRR 24888	RAJ	
AC		REVISED PER TDRR 24923	RAJ	
AD		REVISED PER TDRR 25055	RAJ	
AE		REVISED PER TDRR 25672		
AF		REVISED PER TDRR 25671	RAJ	
AG		REVISED PER TDRR 26110		
AH		REVISED PER TDRR 26372		
AJ		REVISED PER TDRR 26425		
AK		REVISED PER TDRR 26743		
AL		REVISED PER TDRR [illegible]		
AM		REVISED PER TDRR 2716[illegible]		4-7-6[illegible]
AN		REVISED PER TDRR 27235		4-7-6[illegible]
AP		REVISED PER TDRR 27345		
AR		REVISED PER TDRR 27412		4-7-6[illegible]
AS		REVISED PER TDRR 27442		4-7-66
AT		REVISED PER TDRR 27719		4-20-66
AU		REVISED PER TDRR [illegible]		
AV		REVISED PER TDRR 27896		4-20-66
AW		28110		
AY		[illegible]		
AZ		28131		
BA		28124		
BB		REVISED PER TDRR 28511		
BC		28543		
BD		[illegible]		
BE		29235		
BF		29322		
BG		29429		
BH		29449		
BJ		29335		
BK		2961[illegible]		
BL		29696		
BM		REVISION STATUS CHANGED		
BN		REVISION STATUS CHANGED		
BP		REVISION STATUS CHANGED		
BR		REVISION STATUS CHANGED		
BS		REVISION STATUS CHANGED		
BT		REVISION STATUS CHANGED		
BU		REVISION STATUS CHANGED		
BV		REVISION STATUS CHANGED		
BW		REVISION STATUS CHANGED		
BY		REVISION STATUS CHANGED		
BZ		REVISION STATUS CHANGED	JG	
CA		REVISION STATUS CHANGED		
CB		REVISION STATUS CHANGED		
CC		REVISION STATUS CHANGED		
CD		REVISION STATUS CHANGED		
[illegible]		REVISION STATUS CHANGED		

SH NO.	P/C	PART NAME	REMARKS	PART NO.	SER. NO.	CONT. NO.	STYLE	TYPE	MATERIAL	A	B	C	D	E	F	G	H
499	MIT																
498																	
01	MIT	COMPUTER ASSY		2003100		NAS-9-497	A	I	NOTE 11 B	2.000	1.312	1.906	1.375	.078	.048	.078	.093
00	MIT	LIFTING SLING-G&N INST. QUAL. FIX. & AZM. REF. FIX.		1021640		NAS-9-4065	B	II	NOTE 11 C	2.000	1.312	1.687	1.375	.078	.048	.078	.093

SH NO.	J	K	L	M	N	P	R	S	T	U	V	W	Y	Z
01	NA	NA	1.125	.750	.593	.453	1.015	.062	.187	.078	.875	.718	1.375	.218
00	[illegible]	.093	1.187	.750	.593	.453	1.015	.062	.187	.078	.875	.718	1.375	.218

SH NO.	AA	AB	AC	AD	AE	AF	AG	AH	AJ	AK	AL	AM	AN	AP	AR
01	NA	NA	.048	.031	.875	.305	.078	.531	1.906	.078	NA	.078	.531	.187	NA
00	1.156	1.843	.048	NA	.875	.305	.078	.312	1.687	.110	1.830	.070	.275	.180	1.844

MIT DASH NUMBERS

THIS SHEET ADDED

Ⓖ REPLACES REV F WITH [illegible]

NOTES FOR TABLE
STYLE A IS FOR G&N SYSTEM
STYLE B IS FOR GROUND SUPPORT EQUIPMENT
TYPE I IS WITHOUT MOUNTING HOLES
TYPE II IS WITH MOUNTING HOLES

QTY REQD	PART OR IDENTIFYING NO.	MATERIAL OR NOTES	NOMENCLATURE OR DESCRIPTION

LIST OF MATERIALS

AS APPLICABLE	
NEXT ASSY	USED ON
APPLICATION	

UNLESS OTHERWISE SPECIFIED
DIMENSIONS ARE IN INCHES
CAPACITOR VALUES ARE IN μf
RESISTOR VALUES ARE IN OHMS
TOLERANCES ON
FRACTIONS ± — DECIMALS ±.005 ANGLES ± —
DO NOT SCALE THIS DRAWING

MATERIAL
SEE NOTE 11

MIT
INSTRUMENTATION LAB
CAMBRIDGE, MASS.

MANNED SPACECRAFT CENTER
HOUSTON, TEXAS

DRAWN R A Jones 7-16-65
CHECKED
APPROVED
APPROVED
APPROVED MIT
APPROVED MSC
DATE

NAMEPLATES
APOLLO G & N - GSE
(STANDARDS)

CODE IDENT NO. 80230
SIZE E
1004260
SCALE NONE
SHEET 5 OF 6

NOTICE - WHEN GOVERNMENT DRAWINGS, SPECIFICATIONS, OR OTHER DATA ARE USED FOR ANY PURPOSE OTHER THAN IN CONNECTION WITH A DEFINITELY RELATED GOVERNMENT PROCUREMENT OPERATION, THE UNITED STATES GOVERNMENT THEREBY INCURS NO RESPONSIBILITY NOR ANY OBLIGATION WHATSOEVER; AND THE FACT THAT THE GOVERNMENT MAY HAVE FORMULATED, FURNISHED, OR IN ANY WAY SUPPLIED THE SAID DRAWINGS, SPECIFICATIONS, OR OTHER DATA IS NOT TO BE REGARDED BY IMPLICATION OR OTHERWISE AS IN ANY MANNER LICENSING THE HOLDER OR ANY OTHER PERSON OR CORPORATION, OR CONVEYING ANY RIGHTS OR PERMISSION TO MANUFACTURE, USE, OR SELL ANY PATENTED INVENTION THAT MAY IN ANY WAY BE RELATED THERETO

599	AC
598	AC

REVISIONS

SYM	ZONE	DESCRIPTION	[illegible]	[illegible]	[illegible]
AG		CHANGED NUMBER OF SHEETS FROM 5 TO 6 PER TDRR 26110			
AH		REVISED PER TDRR 26372			
AJ		REVISED PER TDRR 26426	"		3-16-[illegible]
AK		REVISED PER TDRR 26743			3-16-[illegible]
AL		REVISED PER TDRR 26798	"		3-16-66
AM		REVISED PER TDRR 27168	"		4-7-66
AN		REVISED PER TDRR 27235	"		4-7-[illegible]
AP		REVISED PER TDRR 27345	"		4-7-66
AR		REVISED PER TDRR 27417	"		4-7-66
AS		REVISED PER TDRR 27442	"		4-7-66
AT		REVISED PER TDRR 27719	"		4-20-66
AU		REVISED PER TDRR 27880	"		4-20-66
AV		REVISED PER TDRR 27896	"		4-20-66
AW			28110	"	5-16-66
AY			28173	"	5-16-[illegible]
AZ			28131	"	[illegible]
BA			28184	"	5-16-66
BB		REVISED PER TDRR 28511	"		5-16-66
BC		" " " 28949	"		6-2-66
BD		" " " 29222	"		6-[illegible]-66
BE		" " " 29235			
BF		" " " 29322			
BG		" " " 29423			
BH		" " " 29449			
BJ		" " " 29325			
BK		" " " 29619	"		
BL		" " " 29696	"		5-20-66
BM		REVISION STATUS CHANGED	JSD		7-25-66
BN		REVISED PER TDRR 29974	JL		
BP		REVISION STATUS CHANGED	JL		
BR		REVISION STATUS CHANGED	JL		
BS		REVISED PER TDRR 30530	GW		
BT		REVISED PER TDRR 30543	GW		
BU		REVISED PER TDRR 30898	EH	JL	
BV		REVISED PER TDRR 31241			
BW		REVISION STATUS CHANGED	JOB		
BY		REVISED PER TDRR 31341	JJB		10 OCT
BZ		REVISED PER TDRR 31383	JJB		20 OCT 66
CA		REVISED PER TDRR 31593	JJB		25 OCT
CB		REVISED PER TDRR 32187			16 DEC 66
CC		REVISED PER TDRR 32512	AF		
CD		REVISION STATUS CHANGED	OR		
CE		REVISION STATUS CHANGED			

DASH NO.	P/C	PART NAME	REMARKS	PART NO.	SER NO.	-CONT NO.	STYLE	TYPE	MATERIAL	A	B	C	D	E	F	G	H	J	K	L	M	N	P	R	S	T	U	V	W	Y	Z	AA	AB	AC	AD	AE	AF	AG	AH	AJ	AK	AL	AM	AN	AP	AR
548		CAGING ELECTRONICS, GYRO		2900029-031		NAS-9-497	B	II	NOTE 11C	2.125	.968	1.718	NA	.093	.031	.06	.093	.100 .104	.093	.858	.608	.484	.358	.733	.077	.116	.062	.937	.875	1.343	.125	.781	1.892	.046	NA	NA	.209	.093	.250	1.875	NA	1.840	.046	.23	.16	1.938
547		CSL, CAL AND TEST, SCM/PSAAM		2900895-021		NAS-9-497	B	II	NOTE 11C	4.125	1.812	3.250	NA	.125	.062	.12	.156	.100 .104	.125	1.625	1.140	.890	.640	1.390	.125	.171	.125	1.875	1.687	2.625	.250	1.562	3.843	.093	NA	NA	.359	.125	.437	3.688	NA	3.687	.093	.40	.25	3.875
546		FIX, HAND., C/M AND LEM CDU		2900999-021		NAS-9-497	B	II	NOTE 11C	2.125	.968	1.718	NA	.093	.031	.06	.093	.100 .104	.093	.858	.608	.484	.358	.733	.077	.116	.062	.937	.875	1.343	.125	.781	1.892	.046	NA	NA	.209	.093	.250	1.875	NA	1.840	.046	.23	.16	1.938
545	AC	G&N INDICATOR CONTROL PANEL ASSY		2014578-021		NAS-9-497	A	I	NOTE 11B	3.000	1.938	2.437	NA	.125	.062	.188	.156	NA	NA	1.750	1.125	.906	.688	1.500	NA	.281	.125	NA	1.094	2.062	.312	NA	2.500	.062	.125	1.312	.469	NA	NA	NA	.156	NA	.125	.469	.344	NA
544		ADPT MODULE, P.S.A.		1902431-051		NAS-9-497	B	II	NOTE 11C	2.125	.968	1.718	NA	.093	.031	.06	.093	.100 .104	.093	.858	.608	.484	.358	.733	.077	.116	.062	.937	.875	1.343	.125	.781	1.892	.046	NA	NA	.209	.093	.250	1.875	NA	1.840	.046	.23	.16	1.938
[illegible]		FIXTURE, MOUNTING, IMU		2900000-021		NAS 9-497	B	II	NOTE 11C	4.125	1.812	3.250	NA	.125	.062	.12	.156	.100 .104	.125	1.625	1.140	.890	.640	1.390	.125	.171	.125	1.875	1.687	2.625	.250	1.562	3.843	.093	NA	NA	.359	.125	.437	3.688	NA	3.687	.093	.40	.25	3.875
[illegible]		PANEL, MONITOR		2900031-041		NAS 9-497	B	II	NOTE 11C	2.125	.968	1.718	NA	.093	.031	.06	.093	.100 .104	.093	.858	.608	.484	.358	.733	.077	.116	.062	.937	.875	1.343	.125	.781	1.892	.046	NA	NA	.209	.093	.250	1.875	NA	1.840	.046	.23	.25	1.938
541		BATTERY PACK, LIFTING		2900812-021		NAS 9-497	B	II	NOTE 11C	2.125	.968	1.718	NA	.093	.031	.06	.093	.100 .104	.093	.858	.608	.484	.358	.733	.077	.116	.062	.937	.875	1.343	.125	.781	1.892	.046	NA	NA	.209	.093	.250	1.875	NA	1.840	.046	.23	.16	1.938
540		ADPT, TEST POINT, P.S.A.		2900037-031		NAS 9-497	B	II	NOTE 11C	2.125	.968	1.718	NA	.093	.031	.06	.093	.100 .104	.093	.858	.608	.484	.358	.733	.077	.116	.062	.937	.875	1.343	.125	.781	1.892	.046	NA	NA	.209	.093	.250	1.875	NA	1.840	.046	.23	.16	1.938
539		INDICATOR PANEL AND EYEPIECE STORAGE ASSEMBLY		1021285-041			A	I	NOTE 11B	2.000	1.312	1.906	1.375	.078	.048	.078	.093	NA	NA	1.125	.750	.593	.453	1.015	.062	.187	.078	.875	.718	1.375	.218	NA	NA	.048	.031	.875	.305	.078	.531	1.906	.078	NA	.078	.531	.187	NA
538		INDICATOR PANEL AND EYEPIECE STORAGE ASSEMBLY		1021285-031			A	I	NOTE 11B	2.000	1.312	1.906	1.375	.078	.048	.078	.093	NA	NA	1.125	.750	.593	.453	1.015	.062	.187	.078	.875	.718	1.375	.218	NA	NA	.048	.031	.875	.305	.078	.531	1.906	.078	NA	.078	.531	.187	NA
537	AC	TEST SELECTOR		2900028-081			B	II	NOTE 11C	2.125	.968	1.718	NA	.093	.031	.06	.093	.100 .104	.093	.858	.608	.484	.358	.733	.077	.116	.062	.937	.875	1.343	.125	.781	1.892	.046	NA	NA	.209	.093	.250	1.875	NA	1.840	.046	.23	.16	1.938
536	AC	ANALYZER, OPTICS-INERTIAL		2900023-041			B	II	NOTE 11C	4.125	1.812	3.250	NA	.125	.062	.12	.156	.100 .104	.125	1.625	1.140	.890	.640	1.390	.125	.171	.125	1.875	1.687	2.625	.250	1.562	3.843	.093	NA	NA	.359	.125	.437	3.688	NA	3.687	.093	.40	.25	3.875
535	AC	CONT, TEMP, PORTABLE		[illegible]-021			B	II	NOTE 11C	2.125	.968	1.718	NA	.093	.031	.06	.093	.100 .104	.093	.858	.608	.484	.358	.733	.077	.116	.062	.937	.875	1.343	.125	.781	1.892	.046	NA	NA	.209	.093	.250	1.875	NA	1.840	.046	.23	.16	1.938
534	AC	COMPUTER CONT & RETICLE DIMMER		6014512-021			A	I	NOTE 11B	2.000	1.312	1.906	1.375	.078	.048	.078	.093	NA	NA	1.125	.750	.593	.453	1.015	.062	.187	.078	.875	.718	1.375	.218	NA	NA	.048	.031	.875	.305	.078	.531	1.906	.078	NA	.078	.531	.187	NA
533	AC	ADPT MODULE, P.S.A.		1902431-041			B	II	NOTE 11C	2.125	.968	1.718	NA	.093	.031	.06	.093	.100 .104	.093	.858	.608	.484	.358	.733	.077	.116	.062	.937	.875	1.343	.125	.781	1.892	.046	NA	NA	.209	.093	.250	1.875	NA	1.840	.046	.23	.16	1.938
532	AC	TRAY BREAKOUT, 105 PIN		1900807-021						4.125	1.812	3.250		.125	.062	.12	.156	.100 .104	.125	1.625	1.140	.890	.640	1.390	.125	.171	.125	1.875	1.687	2.625	.250	1.562	3.843	.093			.359	.125	.437	3.688		3.687	.093	.40	.25	3.875
531	AC	TRAY BREAKOUT, 84 PIN		1900806-021						4.125	1.812	3.250		.125	.062	.12	.156	.100 .104	.125	1.625	1.140	.890	.640	1.390	.125	.171	.125	1.875	1.687	2.625	.250	1.562	3.843	.093			.359	.125	.437	3.688		3.687	.093	.40	.25	3.875
530	AC	HEAT SINK - TRAY EXTENDER		1900808-021						2.125	.968	1.718		.093	.031	.06	.093	.100 .104	.093	.858	.608	.484	.358	.733	.077	.116	.062	.937	.875	1.343	.125	.781	1.892	.046			.209	.093	.250	1.875		1.840	.046	.23	.16	1.938
529	AC	TESTER, FAILURE INDICATOR		1900809-021						2.125	.968	1.718	NA	.093	.031	.06	.093	.100 .104	.093	.858	.608	.484	.358	.733	.077	.116	.062	.937	.875	1.343	.125	.781	1.892	.046	NA	NA	.209	.093	.250	1.875	NA	1.840	.046	.23	.16	1.938
527	AC	FIX, MOUNTING, G AND N	(-144)	1902204-021						FOR DIMENSIONS, SEE DASH 500 VALUES BELOW																																				
526	AC	FIX, MOUNTING, G AND N	(-144)	2900067-031																																										
525	AC	PORTABLE TEMP. CONTROLLER		1900496-021			B	II	NOTE 11C	3.000	1.937	2.437	2.312	.125	.031	.125	.156	.125	.125	1.718	1.187	.968	.749	1.452	.093	.295	.090	1.312	1.00	2.000	.250	1.687	2.750	.062	N/A	NA	.463	.125	.562	2.437	.140	2.562	.090	.468	.359	2.750
524	AC	POWER, SERVO AND THERMOCOUPLE ASSEMBLY C/M		2010743			A	I	NOTE 11B	2.125	.968	1.718	NA	.093	.031	.06	.093	NA	NA	.858	.608	.484	.358	.733	.062	.140	.062	NA	.968	1.450	.125	NA	1.720	.046	.03	NA	.210	NA	NA	NA	.070	NA	.046	.32	.16	NA
523	AC	PULSE TORQUE AND THERMOCOUPLE ASSEMBLY-LEM		6010656						FOR DIMENSIONS, SEE DASH 508 VALUES BELOW																																				
522	AC	COUPLING DATA UNIT AND THERMOCOUPLE ASSEMBLY - LEM		2010744																																										
521	AC	COUPLING DATA UNIT AND THERMOCOUPLE ASSEMBLY - C/M		2010744																																										
520	AC	PIPA ELECTRONICS AND THERMOCOUPLE ASSEMBLY		2010745			A	I	NOTE 11B																																					
519	AC	FIXTURE, HANDLING, LEM-PSA	(-141)	6900129-011			B	II	NOTE 11C	FOR DIMENSIONS, SEE DASH 504 VALUES BELOW																																				
518	AC	JUNCTION BOX, GSE-PSA	(-144)	1901933-031			B	II	NOTE 11C	FOR DIMENSIONS, SEE DASH 500 VALUES BELOW																																				
517	AC	FIX, HAND., OPTICS INSTL.	(-141)	2901380-011			B	II	NOTE 11C	FOR DIMENSIONS SEE DASH 502 VALUES BELOW																																				
516	AC	POWER, SERVO AND THERMOCOUPLE ASSEMBLY-LEM		6010655		NAS 9-497	A	I	NOTE 11B	FOR DIMENSIONS SEE DASH 508 VALUES BELOW																																				
514	AC	SIGNAL COND. ASSY LEM OPER.	(-100)	6007013		NAS-9-497	A	I	NOTE 11B	FOR DIMENSIONS, SEE DASH 508 VALUES BELOW																																				
513		JUMPER, BY-PASS	(-141)	1021616			B	II	NOTE 11C	2.125	.968	1.718	NA	.093	.031	.06	.093	.100 .104	.093	.858	.608	.484	.358	.733	.077	.116	.062	.937	.875	1.343	.125	.781	1.892	.046	NA	NA	.209	.093	.250	1.875	NA	1.840	.046	.23	.16	1.938
512		COUPLING DATA UNIT ASSEMBLY C/M	(-100)	2007322-011			A	I	NOTE 11B	FOR DIMENSIONS, SEE DASH 508 VALUES BELOW																																				
511		COUPLING DATA UNIT ASSEMBLY-LEM	(-100)	2007322-021																																										
510		BATTERY POWER PACK	(-144)	1900011-041			B	II	NOTE 11C	FOR DIMENSIONS, SEE DASH 500 VALUES BELOW																																				
509		JUNCTION BOX, P.S.A/G.S.E.	(-144)	1902195-021			B	II	NOTE 11C																																					
508		NAVIGATION BASE ASSEMBLY - LEM	✓ (-101)	6899980			A	I	NOTE 11B	2.000	1.312	1.906	1.375	.078	.048	.078	.093	NA	NA	1.125	.750	.593	.453	1.015	.062	.187	.078	.875	.718	1.375	.218	NA	NA	.048	.031	.875	.305	.078	.531	1.906	.078	NA	.078	.531	.187	NA
507		CSL, COOL, AND PWR, G AND N	(-144)	1902134-041			B	II	NOTE 11C	FOR DIMENSIONS, SEE DASH 500 VALUES BELOW																																				
506		BREAKOUT BOX, CABLE ADAPTER	(-141)	2901011-011						2.125	.968	1.718	NA	.093	.031	.06	.093	.100 .104	.093	.858	.608	.484	.358	.733	.077	.116	.062	.937	.875	1.343	.125	.781	1.892	.046	NA	NA	.209	.093	.250	1.875	NA	1.840	.046	.23	.16	1.938
505		MONITOR AND CONTROL, TEMP	(-141)	2900026-021																																										
504		PWR SUP, GUIDANCE SYSTEM	✓ (-141)	1900033-021																																										
503		CONTROL, GIMBAL POSITION	(-141)	2900036-021																																										
502		ADPT, TEST POINT, PTA/PEA.	(-141)	2900145-021																																											
501		MOUNTING PLATE, COMPONENT	(-144)	6900007-031		NAS-9-497	B	II	NOTE 11C	FOR DIMENSIONS, SEE DASH 500 VALUES BELOW																																				
500	AC	MOUNTING PLATE, COMPONENT	✓ (-144)	2900677-021						4.125	1.812	3.250	NA	.125	.062	.12	.156	.100 .104	.25	1.625	1.140	.890	.640	1.390	.125	.171	.25	1.875	1.687	2.625	.250	1.562	3.843	.093	NA	NA	.359	.125	.437	3.688	NA	3.687	.093	.40	.25	3.875

A C ELECTRONICS DASH NUMBERS

Ⓐ THIS SHEET ADDED

- NOTES FOR TABLE

STYLE A IS FOR G&N SYSTEM
STYLE B IS FOR GROUND SUPPORT EQUIPMENT
TYPE I IS WITHOUT MOUNTING HOLES
TYPE II IS WITH MOUNTING HOLES

QTY REQD	PART OR IDENTIFYING NO.	MATERIAL OR NOTES	NOMENCLATURE OR DESCRIPTION

LIST OF MATERIALS

AS APPLICABLE	
NEXT ASSY	USED ON
APPLICATION	

UNLESS OTHERWISE SPECIFIED
DIMENSIONS ARE IN INCHES
CAPACITOR VALUES ARE IN µf
RESISTOR VALUES ARE IN OHMS
TOLERANCES ON
FRACTIONS ± — DECIMALS ±.005 ANGLES ± —
DO NOT SCALE THIS DRAWING

MATERIAL
SEE NOTE 11

MIT
INSTRUMENTATION LAB
CAMBRIDGE, MASS

DRAWN E. A. Jones 2-15-66
CHECKED 2-15-66
APPROVED
APPROVED
APPROVED MIT 6-15-66
A C [illegible]
APPROVED MSC
DATE

MANNED SPACECRAFT CENTER
HOUSTON, TEXAS

NAMEPLATES
APOLLO G&N-GSE
(STANDARDS)

CODE IDENT NO. 80230
SIZE E
1004260
SCALE NONE
SHEET 6 OF 6

NOTICE - WHEN GOVERNMENT DRAWINGS, SPECIFICATIONS, OR OTHER DATA ARE USED FOR ANY PURPOSE OTHER THAN IN CONNECTION WITH A DEFINITELY RELATED GOVERNMENT PROCUREMENT OPERATION, THE UNITED STATES GOVERNMENT THEREBY INCURS NO RESPONSIBILITY NOR ANY OBLIGATION WHATSOEVER; AND THE FACT THAT THE GOVERNMENT MAY HAVE FORMULATED, FURNISHED, OR IN ANY WAY SUPPLIED THE SAID DRAWINGS, SPECIFICATIONS, OR OTHER DATA IS NOT TO BE REGARDED BY IMPLICATION OR OTHERWISE AS IN ANY MANNER LICENSING THE HOLDER OR ANY OTHER PERSON OR CORPORATION, OR CONVEYING ANY RIGHTS OR PERMISSION TO MANUFACTURE, USE, OR SELL ANY PATENTED INVENTION THAT MAY IN ANY WAY BE RELATED THERETO.

NOTES:

1. INTERPRET DRAWING IN ACCORDANCE WITH STANDARDS PRESCRIBED IN MIL-D-70327.
2. DIMENSIONS ON EACH VIEW APPLY TO ALL VIEWS. (WITH THE EXCEPTION OF MOUNTING HOLES).
3. FORMATS ILLUSTATED WILL BE APPLICABLE TO ALL ITEMS REQUIRING NAMEPLATES BELOW END ITEM DESIGNATION (SYSTEMS, ASSEMBLIES, ETC.)
4. PLATE BACKGROUND TO BE LUSTERLESS BLACK PER FED-STD-595, COLOR 37038. BORDER, MARKING AND LETTERING TO BE NATURAL METAL,(ANODIZED ALUMINUM).
5. MARKING METHOD TO BE DIE STAMPING, ETCHING OR ENGRAVING IN ACCORDANCE WITH MIL P 19834.
6. LETTERING STYLE TO BE GOTHIC,(SANS SERIFS), AND NUMBERS TO BE ARABIC.
7. WHERE LOCATING DIMENSIONS ARE NOT SHOWN,CHARACTERS SHALL BE SYMMETRICALLY POSITIONED.
8. IDENTIFY WITH DRAWING NUMBER PER ND1002019.
9. WHEN "AUTO MARK" METAL MARKING TYPEWRITER IS USED TO ADD DATA TO BLANK SPACES, TYPE SIZE IS TO BE SELECTED FROM DIMENSIONS U, AC AND AM.
10. NASA SYMBOL IS TO BE PROPORTIONAL TO NAMEPLATE IN RATIO OF 1 TO 5 WITH DIMENSION A VALUE AND IS TO HAVE NATURAL BACKGROUND. NASA SYMBOL LETTERS LETTERING AND FEATHER TO BE BLACK,(OR WHITE FOR SILK SCREENING). WHERE BLACK FEATHER PROTRUDES INTO BLACK BACKGROUND, A MINIMUM OUTLINE OF NATURAL BACKGROUND SHALL EXIST.
11. NAMEPLATES WILL BE APPLIED BY METHODS LISTED BELOW, SHOWN IN ORDER OF PREFERENCE, (I.E., FOR RELIABILITY AND WEIGHT).
    - A - STENCIL OR SILK SCREEN DIRECTLY ON EQUIPMENT USING INK PER SCD 1010920,(WHITE OR BLACK).
    - B - ALUMINUM FOIL,(STYLE A OR B, TYPE I):
      FOIL SHALL BE .0030 ± .0005 THICK PER MIL-A-148.
      FOIL SHALL HAVE NO ADHESIVE BACKING.
      FOIL SHALL BE BONDED PER ND 1002219,(METHOD II).
      FOIL SHALL BE CLEAR ANODIZED PER MIL-A-8625, TYPE II.
    - C - PLATE, (STYLE A OR B, TYPE II):
      MATERIAL: QQ-A-250, TEMPER O OR H14, TYPE 1100,ALUMINUM ALLOY, .032 THICK.
      ANODIZE PER MIL-A-8625, TYPE II.
      ALUMINUM PLATE MUST BE FREE FROM BURRS AND SHARP CORNERS, MOUNTED WITH APPLICABLE SIZE FASTENERS.
12. NAMEPLATES SHALL BE CAPABLE OF MEETING APPLICABLE REQUIREMENTS OF MIL-M-13231.
13. ON DIMENSION TABLES SHOWN ON PAGES 2,3,4 AND 5, NA MEANS, "NOT APPLICABLE".

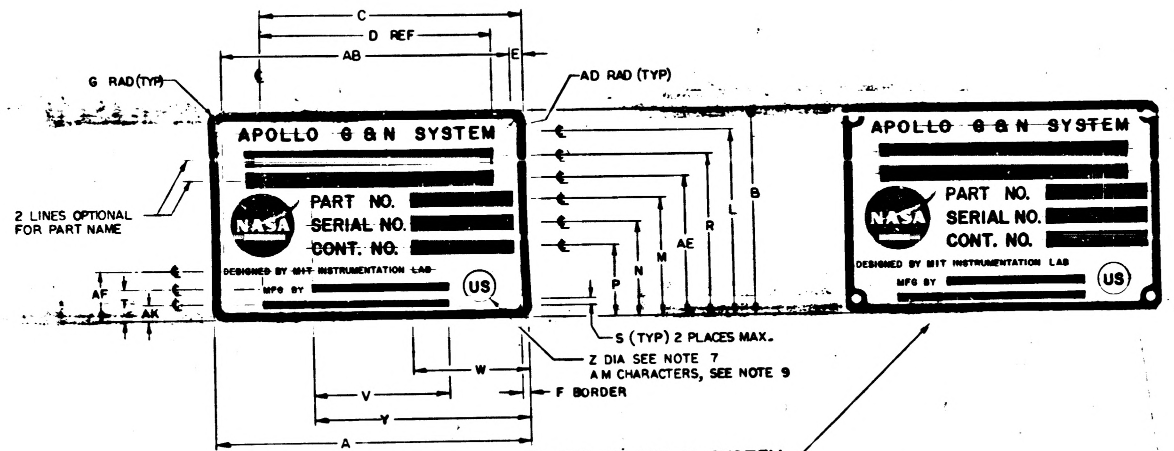

FOR G AND N SYSTEM
STYLE A

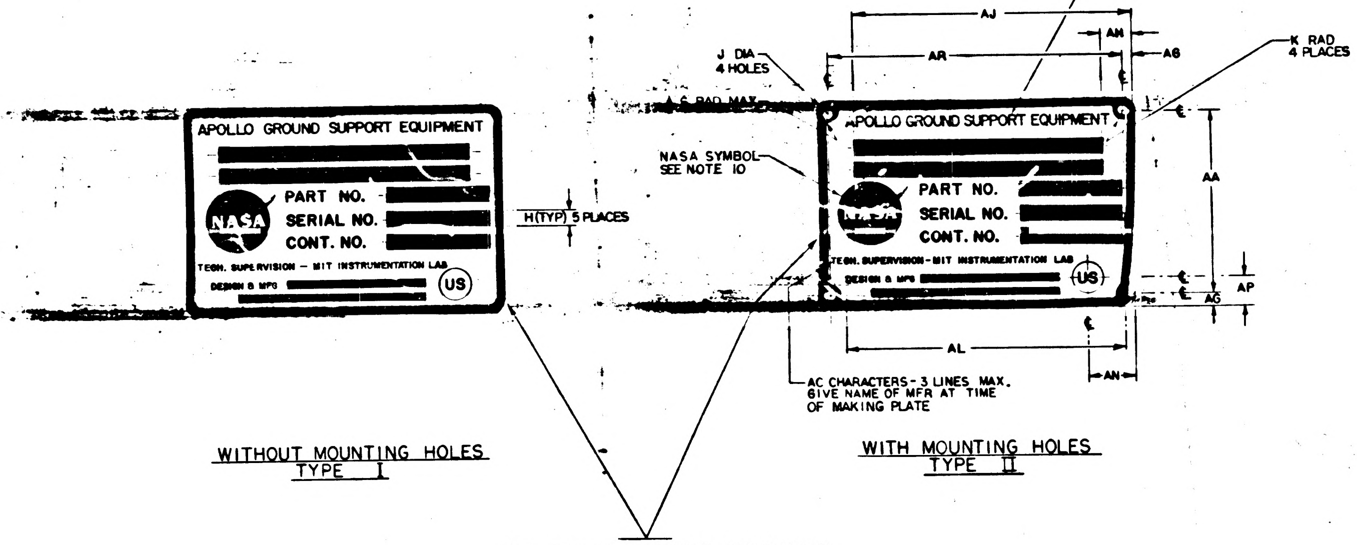
U CHARACTERS-6 LINES MAX SEE NOTE 9
AJ
AH
AR
AG
K RAD 4 PLACES
J DIA 4 HOLES
AC RAD MAX
APOLLO GROUND SUPPORT EQUIPMENT
PART NO.
SERIAL NO.
CONT. NO.
TECH. SUPERVISION - MIT INSTRUMENTATION LAB
DESIGN & MFG
US
NASA SYMBOL SEE NOTE 10
H(TYP) 5 PLACES
AA
AP
AG
AL
AN
AC CHARACTERS-3 LINES MAX. GIVE NAME OF MFR AT TIME OF MAKING PLATE

WITHOUT MOUNTING HOLES
TYPE I

WITH MOUNTING HOLES
TYPE II

FOR GROUND SUPPORT EQUIPMENT
STYLE B

G2768

REVISIONS

SYM	ZONE	DESCRIPTION	DR	CHK	DATE	APPROVED
G		REPLACES REV F WITH CHANGE PER TDRR 20854			7/16/65	WK
H		REVISED PER TDRR 20892			8/3/65	WK
J		REVISED PER TDRR 20904			8/3/65	WK
K		REVISED PER TDRR 21379			8/16/65	WK
L		REVISED PER TDRR 21410			8/23/65	WK
M		REVISED PER TDRR 21993			[illegible]	
N		REVISED PER TDRR 22621			[illegible]	
P		REVISED PER TDRR 22671			[illegible]	
R		REVISED PER TDRR 22672			[illegible]	[illegible]
S		REVISED PER TDRR 22750			[illegible]	[illegible]
T		REVISED PER TDRR 22823				
U		REVISED PER TDRR 23072			[illegible]	[illegible]
V		REVISED PER TDRR 23521			10-27-65	[illegible]
W		REVISED PER TDRR 23824	RAJ		11-9-65	[illegible]
Y		REVISED PER TDRR 24018	RAJ		11-16-65	WK
Z		REVISED PER TDRR 24040	RAJ		11-19-65	WK
AA		REVISED PER TDRR 24060	RAJ		11-19-65	WK
AB		REVISED PER TDRR 24868	RAJ		12-22-65	WK
AC		REVISED PER TDRR 24973	RAJ		1-4-66	WK
AD		REVISED PER TDRR 25065	RAJ		1-18-66	[illegible]
AE		REVISED PER TDRR 25672	RAJ		2-4-66	WK
AF		REVISED PER TDRR 25671	RAJ		2-4-66	WK
AG		REVISED PER TDRR 26110	RAJ		2-15-66	WK
AH		REVISED PER TDRR 26372	"		3-16-66	[illegible]
AJ		REVISED PER TDRR 26425	"		3-16-66	[illegible]
AK		REVISED PER TDRR 26743	"		3-16-66	[illegible]
AL		REVISED PER TDRR 26798	"		3-16-66	[illegible]
AM		REVISED PER TDRR 27168	"		4-7-66	[illegible]
AN		REVISED PER TDRR 27235	"		4-7-66	[illegible]
AP		REVISED PER TDRR 27345	"		4-7-66	[illegible]
AR		REVISED PER TDRR 27417	"		4-7-66	[illegible]
AS		REVISED PER TDRR 27442	"		4-7-66	[illegible]
AT		REVISED PER TDRR 27719	"		4-20-66	WK
AU		REVISED PER TDRR 27880	"		4-20-66	[illegible]
AV		REVISED PER TDRR 27896	"		4-20-66	[illegible]
AW		28110	"		5-16-66	[illegible]
AY		28173	"			[illegible]
AZ		28131	"			[illegible]
BA		28124	"			[illegible]
BB		REVISED PER TDRR 28511	"		5-16-66	[illegible]
BC		" " " 28949	"		5-24-66	[illegible]
BD		" " " 29222	"		6-8-66	[illegible]
BE		" " " 29235	"		[illegible]	[illegible]
BF		" " " 29322	"		8-30-66	[illegible]
BG		" " " 29429	"		"	[illegible]
BH		" " " 29449	"		"	[illegible]
BJ		" " " 29335	"		"	[illegible]
BK		" " " 29619	"		"	[illegible]
BL		" " " 29696	"		"	[illegible]
BM		REVISION STATUS CHANGED	JSD	NS	7-29-66	
BN		REVISION STATUS CHANGED	JI	RW	22 AUG 66	
BP		REVISION STATUS CHANGED	JI	RW	[illegible]	
BR		REVISION STATUS CHANGED	JI	RLW	[illegible]	
BS		REVISION STATUS CHANGED	GW	RLW	26 AUG 66	
BT		REVISION STATUS CHANGED	GW	RLW	26 AUG 66	
BU		REVISION STATUS CHANGED	EH	JI	[illegible]	
BV		REVISION STATUS CHANGED	JJB	RLW	30 SEP 66	
BW		REVISION STATUS CHANGED	JJB	RLW	30 SEP 66	
BY		REVISION STATUS CHANGED	JJB	RLW	10 OCT 66	
BZ		REVISION STATUS CHANGED	JJB	RLW	10 OCT 66	
CA		REVISION STATUS CHANGED	JJB	[illegible]	25 OCT 66	
CB		REVISION STATUS CHANGED	REF	[illegible]	10 DEC 66	
CC		REVISION STATUS CHANGED	AF	[illegible]	13 JAN 67	
CD		REVISION STATUS CHANGED	[illegible]	[illegible]	[illegible] FEB	
CE		REVISION STATUS CHANGED	[illegible]	[illegible]	19 APR 67	
CF		REVISION STATUS CHANGED	[illegible]	[illegible]	19 APR 67	

SUGGESTED PROPORTIONS FOR NAMEPLATE DIMENSIONS.
1. SELECT NAMEPLATE LENGTH, DIMENSION "A", TO FIT DESIGN NEEDS.
2. DIMENSIONS B THRU AS ON LINE 1 BELOW ARE PROPORTIONAL TO "A" BY MULTIPLIERS SHOWN IN LINE 2 BELOW.

1.	A	B	C	D	E	F	G	H	J	K	L	M	N	P	R	S	T	U
2.	1.000 A	.6563 A	.8438 A	.6875 A	.0391 A	.0240 A	.0391 A	.0469 A	.0547 A	.0469 A	.5938 A	.3750 A	.2969 A	.2187 A	.5079 A	.0313 A	.0938 A	.0391 A

1.	V	W	Y	Z	AA	AB	AC	AD	AE	AF	AG	AH	AJ	AK	AL	AM	AN	AP
2.	.4375 A	.3594 A	.6875 A	.1094 A	.5781 A	.9219 A	.0240 A	.0156 A	.4375 A	.1525 A	.0391 A	.1563 A	.8438 A	.0548 A	.8659 A	.0391 A	.1563 A	.0938 A

1.	AR	AS
2.	.9219 A	.0151 A

Ⓖ REPLACES REV F WITH CHANGE

QTY REQD	PART OR IDENTIFYING NO.	MATERIAL OR NOTES	NOMENCLATURE OR DESCRIPTION

LIST OF MATERIALS

AS APPLICABLE
NEXT ASSY | USED ON
APPLICATION

UNLESS OTHERWISE SPECIFIED
DIMENSIONS ARE IN INCHES
CAPACITOR VALUES ARE IN μf
RESISTOR VALUES ARE IN OHMS
TOLERANCES ON
FRACTIONS ± — DECIMALS ± .005 ANGLES ± —
DO NOT SCALE THIS DRAWING

MATERIAL
SEE NOTE 11

MIT
INSTRUMENTATION LAB
CAMBRIDGE, MASS

DRAWN R A Jones 7/16/65
CHECKED [illegible] 7-22-65
APPROVED
APPROVED [illegible] 7/22/65
APPROVED MIT [illegible] 7/22/65
APPROVED MSC [illegible] [illegible]
DATE

MANNED SPACECRAFT CENTER
HOUSTON, TEXAS

NAMEPLATES,
APPOLLO G&N—GSE
(STANDARDS)

CODE IDENT NO. 80230
SIZE E
DRAWING NO. 1004260
SCALE NONE
SHEET 1 OF 6

NOTICE - WHEN GOVERNMENT DRAWINGS, SPECIFICATIONS, OR OTHER DATA ARE USED FOR ANY PURPOSE OTHER THAN IN CONNECTION WITH A DEFINITELY RELATED GOVERNMENT PROCUREMENT OPERATION, THE UNITED STATES GOVERNMENT THEREBY INCURS NO RESPONSIBILITY NOR ANY OBLIGATION WHATSOEVER; AND THE FACT THAT THE GOVERNMENT MAY HAVE FORMULATED, FURNISHED, OR IN ANY WAY SUPPLIED THE SAID DRAWINGS, SPECIFICATIONS, OR OTHER DATA IS NOT TO BE REGARDED BY IMPLICATION OR OTHERWISE AS IN ANY MANNER LICENSING THE HOLDER OR ANY OTHER PERSON OR CORPORATION, OR CONVEYING ANY RIGHTS OR PERMISSION TO MANUFACTURE, USE, OR SELL ANY PATENTED INVENTION THAT MAY IN ANY WAY BE RELATED THERETO.

REVISIONS 02758

SYM	ZONE	DESCRIPTION	DR	CHK	DATE	APPROVED
G		REPLACES REV F WITH CHANGE PER TDRR 20854.			[illegible]	
H		REVISED PER TDRR 20892			[illegible]	
J		REVISED PER TDRR 20904			[illegible]	
K		REVISED PER TDRR 21379			[illegible]	
L		REVISED PER TDRR 21410			[illegible]	
M		REVISED PER TDRR 21993				
N		REVISED PER TDRR 22621				
P		REVISED PER TDRR 22671				
R		REVISED PER TDRR 22672				
S		REVISED PER TDRR 22750				
T		REVISED PER TDRR 22823				
U		REVISED PER TDRR 23072			[illegible]	
V		REVISED PER TDRR 23521			10-27-65	
W		REVISED PER TDRR 23824	RAJ		11-9-65	
Y		REVISED PER TDRR 24018	RAJ		11-16-65	
Z		REVISED PER TDRR 24040	RAJ		11-19-65	
AA		REVISED PER TDRR 24060	RAJ		11-19-65	
AB		REVISED PER TDRR 24868	RAJ		12-22-65	
AC		REVISED PER TDRR 24973	RAJ		1-4-66	
AD		REVISED PER TDRR 25065	RAJ		1-18-66	
AE		REVISED PER TDRR 25672	RAJ		2-4-66	
AF		REVISED PER TDRR 25671	RAJ		2-4-66	
AG		REVISED PER TDRR 26110	RAJ		2-15-66	
AH		REVISED PER TDRR 26372	"		3-16-66	
AJ		REVISED PER TDRR 26425	"		3-16-66	
AK		REVISED PER TDRR 26743	"		3-16-66	
AL		REVISED PER TDRR 26798	"		3-16-66	
AM		REVISED PER TDRR 27168	"		4-8-66	
AN		REVISED PER TDRR 27235	"		4-8-66	
AP		REVISED PER TDRR 27345	"		4-8-66	
AR		REVISED PER TDRR 27417	"		4-8-66	
AS		REVISED PER TDRR 27442	"		4-8-66	
AT		REVISED PER TDRR 27719	"		4-21-66	
AU		REVISED PER TDRR 27880	"		4-21-66	
A.		REVISED PER TDRR 27896	"		4-21-66	
AW		28110	"		5-16-66	
AY		28173	"			
AZ		[illegible]				
BA		28124	"			
BB		REVISED PER TDRR 28511	"		5-16-66	
BC		" " " 28949	"		5-24-66	
BD		" " " 29222	"		6-8-66	
BE		" " " 29235	"		"	
BF		" " " 29322	"		6-30-66	
BG		" " " 29429	"		"	
BH		" " " 29449	"		"	
BJ		" " " 29335	"		"	
BK		" " " 29619	"		"	
BL		" " " 29696	"		"	
BM		REVISION STATUS CHANGED	JSD	N.S.	7-29-66	
BN		REVISION STATUS CHANGED	JI	RLW	[illegible]	
BP		REVISION STATUS CHANGED	JI	RLW	[illegible]	
BR		REVISION STATUS CHANGED	JI	RLW	[illegible]	
BS		REVISION STATUS CHANGED	GW	RLW	[illegible] AUG 66	
BT		REVISION STATUS CHANGED	GW	RLW	22 AUG 66	
BU		REVISION STATUS CHANGED	EH	JI	9 SEP	
BV		REVISION STATUS CHANGED	JJB	RLW	30 SEP 66	
BW		" " "	JJB	RLW	30 SEP 66	
BY		" " "	JJB	RLW	10 OCT 66	
BZ		REVISION STATUS CHANGED	JJB	RLW	10 OCT 66	
CA		REVISION STATUS CHANGED	JJB		25 OCT 66	
CB		REVISION STATUS CHANGED	REF		10 DEC 66	
CC		REVISION STATUS CHANGED	AF	AW	[illegible]	
CD		REVISION STATUS CHANGED	DR	R.L.	[illegible]	
CE		REVISION STATUS CHANGED	[illegible]		19 APR 67	
CF		REVISION STATUS CHANGED	[illegible]		19 APR 67	

DASH NO.	P/C	PART NAME	REMARKS	PART NO.	SER. NO.	CONT. NO.	STYLE	TYPE	MATERIAL	A	B	C	D	E	F	G	H	J	K	L	M	N	P	R	S	T	U	V	W	Y	Z	AA	AB	AC	AD	AE	AF	AG	AH	AJ	AK	AL	AM	AN	AP	AR
350	K	ALIGNMENT OPTICAL TELESCOPE (LEM)		NA	NA	NA	A	I	NOTE 11 B	4.000	2.625	3.375	2.750	.156	.093	.156	.187	NA	NA	2.312	1.468	1.187	.906	2.031	NA	.375	.156	NA	1.437	2.750	.437	NA	3.688	.062	.062	1.750	.593	NA	.625	3.375	.187	NA	.156	.531	.453	NA
309	K																																													
308	K																																													
307	K						B	I	NOTE 11 B	4.000	2.625	3.375	2.750	.156	.093	.156	.187	NA	NA	2.328	1.468	1.187	.906	2.031	.062	.375	.156	NA	1.437	2.750	.437	NA	3.687	.062	.062	1.750	.593	NA	NA	NA	NA	NA	NA	NA	NA	NA
306	K						B	II	NOTE 11 C	4.000	2.625	3.375	2.750	.156	.093	.156	.187	.125	.156	2.328	1.468	1.187	.906	2.031	.062	.375	.156		1.437	2.750	.437	2.312	3.687	.062	NA	1.750	.593									
305	K						B	I	NOTE 11 B	2.000	1.312	1.687	1.375	.078	.048	.078	.093	NA	NA	1.164	.734	.593	.453	1.015	.048	.171	.078		.718	1.375	.187	NA	NA	.048	.031	.875	.320									
304	K						B	II	NOTE 11 C	2.000	1.312	1.687	1.375	.078	.048	.078	.093	.070	.078	1.164	.734	.593	.453	1.015	.048	.171	.078	NA	.718	1.375	.187	.156	1.843	.048	NA	.875	.320	NA	NA	NA	NA	NA	NA	NA	NA	NA
303	K																																													
302	K																																													
301	K																																													
300	K	OPTICAL UNIT		NA	NA	NA	A	I	NOTE 11 B	2.000	1.312	1.675	NA	NA	.048	.078	NA	NA	NA	1.090	.812	.675	.540	.940	NA	.265	NA	NA	NA	1.375	.218	NA	NA	NA	NA	NA	.375	NA	NA	NA	.180	NA	.078	NA	NA	NA
9	K	2 IN AUTOCOLLIMATOR		1001702			B	II	NOTE 11 C	4.000	2.625	3.812	2.750	.156	.093	.156	.187	.125	.156	2.250	1.500	1.187	.906	2.031	.093	.375	.156	1.750	1.437	2.750	.437	2.312	3.687	.062	NA	1.750	.593	.156	1.062	3.812	.156	NA	.156	1.062	.375	3.687
8	K	5 IN AUTOCOLLIMATOR		1017410			B	II	NOTE 11 C	4.000	2.625	3.812	2.750	.156	.093	.156	.187	.125	.156	2.250	1.500	1.187	.906	2.031	.093	.375	.156	1.750	1.437	2.750	.437	2.312	3.687	.062	NA	1.750	.593	.156	1.062	3.812	.156	NA	.156	1.062	.375	3.687
7	K	2½ IN AUTOCOLLIMATOR (SCT)		1017435			B	II	NOTE 11 C	4.000	2.625	3.812	2.750	.156	.093	.156	.187	.125	.156	2.250	1.500	1.187	.906	2.031	.093	.375	.156	1.750	1.437	2.750	.437	2.312	3.687	.062	NA	1.750	.593	.156	1.062	3.812	.156	NA	.156	1.062	.375	3.687
6	K	2½ IN AUTOCOLLIMATOR (SXT)		1017448			B	II	NOTE 11 C	4.000	2.625	3.812	2.750	.156	.093	.156	.187	.125	.156	2.250	1.500	1.187	.906	2.031	.093	.375	.156	1.750	1.437	2.750	.437	2.312	3.687	.062	NA	1.750	.593	.156	1.062	3.812	.156	NA	.156	1.062	.375	3.687
5	K	RETROREFLECTING PRISM ASSEMBLY		1019840			B	I	NOTE 11 B	4.000	2.625	3.812	2.750	.156	.093	.156	.187	NA	NA	2.250	1.500	1.187	.906	2.031	.093	.375	.156	1.750	1.437	2.750	.437	NA	NA	.062	.062	1.750	.593	.156	1.062	3.812	.156	NA	.156	1.062	.375	NA
4	K	S/M SIMULATOR ASSEMBLY		1019896			B	I	NOTE 11 B	4.000	2.625	3.812	2.750	.156	.093	.156	.187	NA	NA	2.250	1.500	1.187	.906	2.031	.093	.375	.156	1.750	1.437	2.750	.437	NA	NA	.062	.062	1.750	.593	.156	1.062	3.812	.156	NA	.156	1.062	.375	NA
3	K	REFERENCE MIRROR		1001767			B	I	NOTE 11 B	2.000	1.312	1.906	1.375	.078	.048	.078	.093	NA	NA	1.125	.750	.593	.453	1.015	.062	.187	.078	.875	.718	1.375	.218	NA	NA	.048	.031	.875	.305	.078	.531	1.906	.078	NA	.078	.531	.187	NA
2	K	2 IN PLANE READING AUTOCOLLIMATOR		1017413			B	I	NOTE 11 B	2.000	1.312	1.906	1.375	.078	.048	.078	.093	NA	NA	1.125	.750	.593	.453	1.015	.062	.187	.078	.875	.718	1.375	.218	NA	NA	.048	.031	.875	.305	.078	.531	1.906	.078	NA	.078	.531	.187	NA
1	K	2 IN AUTOCOLLIMATOR		1001702			B	I	NOTE 11 B	2.000	1.312	1.906	1.375	.078	.048	.078	.093	NA	NA	1.125	.750	.593	.453	1.015	.062	.187	.078	.875	.718	1.375	.218	NA	NA	.048	.031	.875	.305	.078	.531	1.906	.078	NA	.078	.531	.187	NA

KOLLSMAN DASH NUMBERS

Ⓖ REPLACES REV F WITH CHANGE

NOTES FOR TABLE

STYLE A IS FOR G&N SYSTEM.
STYLE B IS FOR GROUND SUPPORT EQUIPMENT.
TYPE I IS WITHOUT MOUNTING HOLES.
TYPE II IS WITH MOUNTING HOLES.

QTY REQD	PART OR IDENTIFYING NO.	MATERIAL OR NOTES	NOMENCLATURE OR DESCRIPTION	FIND NO

LIST OF MATERIALS

AS APPLICABLE
NEXT ASSY | USED ON
APPLICATION

UNLESS OTHERWISE SPECIFIED
DIMENSIONS ARE IN INCHES
CAPACITOR VALUES ARE IN µf
RESISTOR VALUES ARE IN OHMS
TOLERANCES ON
FRACTIONS ± — DECIMALS ±.005 ANGLES ± —
DO NOT SCALE THIS DRAWING

MATERIAL
SEE NOTE 11

MIT
INSTRUMENTATION LAB
CAMBRIDGE, MASS.

DRAWN R. A. Jones [illegible]-10 66
CHECKED 7-22-[illegible]
APPROVED
APPROVED W. Kupfer
APPROVED MIT W. Kupfer
APPROVED MSC
DATE

MANNED SPACECRAFT CENTER
HOUSTON, TEXAS

NAMEPLATES,
APOLLO G&N-GSE
(STANDANDS)

CODE IDENT NO 80230
SIZE E
DRAWING NO. 1004260
SCALE NONE
SHEET 2 OF 6

NOTICE - WHEN GOVERNMENT DRAWINGS, SPECIFICATIONS, OR OTHER DATA ARE USED FOR ANY PURPOSE OTHER THAN IN CONNECTION WITH A DEFINITELY RELATED GOVERNMENT PROCUREMENT OPERATION, THE UNITED STATES GOVERNMENT THEREBY INCURS NO RESPONSIBILITY NOR ANY OBLIGATION WHATSOEVER; AND THE FACT THAT THE GOVERNMENT MAY HAVE FORMULATED, FURNISHED, OR IN ANY WAY SUPPLIED THE SAID DRAWINGS, SPECIFICATIONS, OR OTHER DATA IS NOT TO BE REGARDED BY IMPLICATION OR OTHERWISE AS IN ANY MANNER LICENSING THE HOLDER OR ANY OTHER PERSON OR CORPORATION, OR CONVEYING ANY RIGHTS OR PERMISSION TO MANUFACTURE, USE, OR SELL ANY PATENTED INVENTION THAT MAY IN ANY WAY BE RELATED THERETO.

REVISIONS						02768
SYM	ZONE	DESCRIPTION	DR	CHK	DATE	APPROVED
G		REPLACES REV F WITH CHANGE PER TDRR 20854			[illegible]	WK
H		REVISED PER TDRR 20892			[illegible]	WK
J		REVISED PER TDRR 20904			[illegible]	WK
K		REVISED PER TDRR 21379			[illegible]	WK
L		REVISED PER TDRR 21410			[illegible]	WK
M		REVISED PER TDRR 21993				
N		REVISED PER TDRR 22621			[illegible]	
P		REVISED PER TDRR 22671				
R		REVISED PER TDRR 22672			[illegible]	
S		REVISED PER TDRR 22750				
T		REVISED PER TDRR 22823			[illegible]	WK
U		REVISED PER TDRR 23072			10-21-65	[illegible]
V		REVISED PER TDRR 23521			10-26-65	WK
W		REVISED PER TDRR 23824	RAJ		11-9-65	WK
Y		REVISED PER TDRR 24018	RAJ		11-16-65	WK
Z		REVISED PER TDRR 24040	RAJ		11-19-65	WK
AA		REVISED PER TDRR 24060	RAJ		11-19-65	WK
AB		REVISED PER TDRR 24868	RAJ		12-22-65	WK
AC		REVISED PER TDRR 24973	RAJ		1-4-66	WK
AD		REVISED PER TDRR 25065	RAJ		1-18-66	[illegible]
AE		REVISED PER TDRR 25672	RAJ		2-4-66	WK
AF		REVISED PER TDRR 25671	RAJ		2-4-66	WK
AG		REVISED PER TDRR 26110	RAJ		2-15-66	WK
AH		REVISED PER TDRR 26372	"		3-16-66	[illegible]
AJ		REVISED PER TDRR 26425	"		3-16-66	[illegible]
AK		REVISED PER TDRR 26743	"		3-6-66	[illegible]
AL		REVISED PER TDRR 26798	"		3-16-66	[illegible]
AM		REVISED PER TDRR 27168	"		4-8-66	[illegible]
AN		REVISED PER TDRR 27235	"		4-8-66	[illegible]
AP		REVISED PER TDRR 27345	"		4-8-66	[illegible]
AR		REVISED PER TDRR 27417	"		4-8-66	[illegible]
AS		REVISED PER TDRR 27442	"		4-8-66	[illegible]
AT		REVISED PER TDRR 27719	"		4-20-66	WK
AU		REVISED PER TDRR 27880	"		4-20-66	WK
AV		REVISED PER TDRR 27896	"		4-20-66	WK
AW		28110	"		5-16-66	[illegible]
AY		28173	"		5-16-66	[illegible]
AZ		28131	"		5-16-66	[illegible]
BA		28124	"		5-16-66	[illegible]
BB		REVISED PER TDRR 28511	"		5-16-66	[illegible]
BC		" " " 28949	"		5-24-66	[illegible]
BD		" " " 29222	"		6-8-66	[illegible]
BE		" " " 29235	"		"	[illegible]
BF		" " " 29322	"		6-29-66	[illegible]
BG		" " " 29429	"		"	[illegible]
BH		" " " 29449	"		"	[illegible]
BJ		" " " 29335	"		"	[illegible]
BK		" " " 29619	"		"	[illegible]
BL		" " " 29696	"		"	[illegible]
BM		" " " 29802	JSD	N.S.	7-29-66	
BN		REVISION STATUS CHANGED	JI	RW	[illegible] AUG 66	
BP		REVISED PER TDRR 30168	JI	RW	[illegible] AUG 66	
BR		REVISION STATUS CHANGED	JI	RW	[illegible] AUG 66	
BS		REVISION STATUS CHANGED	GW	RW	26 AUG 66	
BT		REVISION STATUS CHANGED	GW	RW	[illegible] 66	
BU		REVISION STATUS CHANGED	EH	JI	[illegible] SEP 66	
BV		REVISION STATUS CHANGED	JJB	RW	30 SEP 66	
BW		REVISED PER TDRR 31279	JJB	RW	30 SEP 66	
BY		REVISION STATUS CHANGED	JJB	RW	10 OCT 66	
BZ		REVISION STATUS CHANGED	JJB	RW	10 OCT 66	
CA		REVISION STATUS CHANGED	JJB	RW	25 OCT 66	
CB		REVISION STATUS CHANGED	REF	[illegible]	10 DEC 66	
CC		REVISION STATUS CHANGED	AF	RW	12 JAN 67	
CD		REVISED PER TDRR 32640	DR	RW	14 FEB 67	
CE		REVISED PER TDRR 33447	[illegible]	[illegible]	19 APR 67	
CF		REVISION STATUS CHANGED	[illegible]	[illegible]	19 APR 67	

DASH NO.	P/C	PART NAME	REMARKS	PART NO.	SER. NO.	CONT. NO.	STYLE	TYPE	MATERIAL	A
299	R									
298	R									
285	R	BUFFER CIRCUIT ASSY		2014254-031	NA	NAS9-497	B	I	NOTE IIB	FOR DIMENSIONS SEE DASH 15 VALUES BELOW
284	R	LOGIC DRAWER ASSY NO. 2		2014037-041	NA	NAS9-497	B	I	NOTE IIB	FOR DIMENSIONS SEE DASH 17 VALUES BELOW
283	R	DRAWER ASS'Y-PROGRAM & MONITOR		2014041-051	NA	NAS9-497	B	I	NOTE IIB	FOR DIMENSIONS SEE DASH 17 VALUES BELOW
282	R	COMPUTER TEST SET		2014042-061	NA	NAS9-497	B	II	NOTE IIC	FOR DIMENSIONS SEE DASH 18 VALUES BELOW
280	R	COMPUTER TEST SET		2014042-051	NA	NAS9-497	B	II	NOTE IIC	FOR DIMENSIONS SEE DASH 18 VALUES BELOW
279	R	SELF TEST ASSY		2014366-041	NA	NAS9-497	B	I	NOTE IIB	FOR DIMENSIONS SEE DASH- 15 VALUES BELOW
278	R	LOGIC DRAWER ASSY NO.1		2014036-041	NA	NAS-9-497	B	I	NOTE IIB	FOR DIMENSIONS SEE DASH 17 VALUES BELOW
277	R	COMPUTER TEST SET		2014042-041	NA	NAS-9-497	B	II	NOTE IIC	FOR DIMENSIONS, SEE DASH 18 VALUES BELOW
276		DRAWER ASSY - PROGRAM & MONITOR		2014041-041				I	NOTE II B	FOR DIMENSIONS, SEE DASH 17 VALUES BELOW
275		DRAWER ASSY RDC INTERFACE		2014045-031						FOR DIMENSIONS, SEE DASH 15 VALUES BELOW
274		SELF TEST ASSY		2014366-031						
273		LOGIC DRAWER ASSY NO. 2		2014037-031						FOR DIMENSIONS, SEE DASH 17 VALUES BELOW
272		DRAWING ASSY PROGRAMMER & MONITOR		2014041-031						FOR DIMENSIONS, SEE DASH 17 VALUES BELOW
271		LOGIC DRAWER ASSY NO. 1		2014036-031				I	NOTE II B	
270		COMPUTER TEST SET		2014042-031				II	NOTE IIC	FOR DIMENSIONS, SEE DASH 18 VALUES BELOW
269		POWER CONTROL ASSY		2014044-021				I	NOTE II B	FOR DIMENSIONS, SEE DASH 17 VALUES BELOW
268		SELF TEST ASSY		2014366-021						FOR DIMENSIONS, SEE DASH 15 VALUES BELOW
267		AGC JUNCTION ASSY		2014341-021						
266		POWER CONTROL ASSY		2014079-021						
265		BUFFER CIRCUIT ASSY		2014254-021						
264		DRAWER ASSY X Y INTERFACE		2014040-021						
263		DRAWER ASSY R D C INTERFACE		2014045-021						
262		DRAWER ASSY PROGRAMMER & MONITOR		2014041-021						FOR DIMENSIONS, SEE DASH 17 VALUES BELOW
261		LOGIC DRAWER ASSY NO. 2		2014037-021						
260		LOGIC DRAWER ASSY NO. 1		2014036-021				I	NOTE II B	
259		OPERATION CONSOLE		2014024-021				II	NOTE II C	FOR DIMENSIONS, SEE DASH 18 VALUES BELOW
258		COMPUTER TEST SET		2014042-021						
257		AUXILIARY CALIBRATION CONSOLE		2014059-021						
256		AGC CALIBRATION CONSOLE		2014049-021				II	NOTE II C	
255		AGC HANDLING FIXTURE		2014282-021				I	NOTE II B	FOR DIMENSIONS, SEE DASH 17 VALUES BELOW
254		DRAWER ASSY COMP. SIMULATOR		2014048-011				II	NOTE II C	FOR DIMENSIONS, SEE DASH 18 VALUES BELOW
253		SHIPPING KIT ASSY, NAV DSKY		2016312-011						
252		SHIPPING KIT ASSY, UNIVERSAL DSKY		2016316-011						
251		SHIPPING KIT ASSY, MAIN DSKY		2016313-011				II	NOTE II C	
250		AMPLIFIER, REWORK		2014386				I	NOTE II B	FOR DIMENSIONS, SEE DASH 15 VALUES BELOW
249		TEMP MONITOR ASSY		2014313-011					NOTE II C	FOR DIMENSIONS, SEE DASH 17 VALUES BELOW
248		AGC JUNCTION ASSY		2014341-011					NOTE II B	FOR DIMENSIONS, SEE DASH 15 VALUES BELOW
247		AC INPUT PANEL ASSY		2014302-011						
246		SELF TEST ASSY		2014332 011						
245		TAPE PUNCH ASSEMBLY		2014039-011						FOR DIMENSIONS, SEE DASH 15 VALUES BELOW
244	R	TAPE READER ASSEMBLY		2014038-011	NA	NAS-9-497	B	I	NOTE II B	
243										
242										
241	R	APOLLO GUIDANCE COMPUTER GROUP		6003001	NA	NAS-9-497	A	I	NOTE II B	FOR DIMENSIONS, SEE DASH 19 VALUES BELOW
240		SELF TEST ASSEMBLY		2014366-011	NA		B	I		FOR DIMENSIONS, SEE DASH 15 VALUES BELOW
239		POWER SUPPLY ASSY-115V., 400 CYCLE		2014207-011						FOR DIMENSIONS, SEE DASH 17 VALUES BELOW
238		AC INPUT PANEL ASSY		2014043-011						
237		POWER CONTROL ASSY		2014079-011						FOR DIMENSIONS, SEE DASH 15 VALUES BELOW
236		DRAWER ASSY-X Y INTERFACE		2014040-011						
235		DRAWER ASSY RDC INTERFACE		2014045-011						
234		BUFFER CIRCUIT ASSY		2014254-011						
233		CONTROL & INTERFACE ASSY		2014204-011						
232		POWER CONTROL ASSY		2014044-011						FOR DIMENSIONS, SEE-DASH 17 VALUES BELOW
231		DRAWER ASSY, PROGRAMMER & MONITOR		2014041-011						
230		CONNECTOR INTERFACE ASSY		2014272-011						FOR DIMENSIONS, SEE DASH 15 VALUES BELOW
229		CONNECTOR INTERFACE ASSY		2014047-011						
228		ANTENNA, TUNING CAPACITOR ASSY		2014209-011						
227		MOUNTING FIXTURE ASSY		2014006-011						FOR DIMENSIONS, SEE DASH 17 VALUES BELOW
226		POWER SUPPLY ASSY 3 VDC		2014234-011						FOR DIMENSIONS, SEE DASH 15 VALUES BELOW
225		PANEL ASSY – SIGNAL INTERFACE		2014010-011						
224		OSCILLOSCOPE ASSY		2014232-011						
223		AUXILIARY OUTLET ASSY		2014274-011						
222		FREQUENCY COUNTER		2014233-011						
221		POWER SUPPLY ASSY 10, 13, 28 VDC		2014235-011						
220		LOGIC DRAWER ASSY NO. 2		2014037-011						FOR DIMENSIONS, SEE DASH 17 VALUES BELOW
219		LOGIC DRAWER ASSY NO. 1		2014036-011						
218		COUNTER, ELECTRICAL ASSY		2014288-011						FOR DIMENSIONS, SEE DASH 15 VALUES BELOW
217		POWER SUPPLY ASSY		2014279-011						
216		TEST MOUNT ASSY		2014257-011						
215		UNIVERSAL DSKY PEDESTAL MOUNT		2014014-011						FOR DIMENSIONS, SEE DASH 17 VALUES BELOW
214		MAIN DSKY PEDESTAL MOUNT		2014343				I	NOTE IIB	
213		SHIPPING CONTAINER, MAIN DSKY		1006229				II	NOTE IIC	FOR DIMENSIONS, SEE DASH 18 VALUES BELOW
212		NAV DSKY		1006231						
211		AGC		1006230						
210		UNIVERSAL DSKY		1006422						
209		SHIPPING CONTAINER, AGC		1006421				II	NOTE IIC	
208		UNIVERSAL DSKY HANDLING FIXTURE		2014013-011				I	NOTE IIB	FOR DIMENSIONS, SEE DASH 15 VALUES BELOW
207		NAV DSKY HANDLING FIXTURE		1014377						FOR DIMENSIONS, SEE DASH 17 VALUES BELOW
206		MAIN DSKY HANDLING FIXTURE		1014334						
205		AGC HANDLING FIXTURE		2014282-011				I	NOTE IIB	
204		OPERATION CONSOLE		2014024-011				II	NOTE IIC	FOR DIMENSIONS, SEE DASH 18 VALUES BELOW
203		COMPUTER TEST SET		2014042-011		NAS-9-497				
202		DRAWER ASSY, COMPUTER SIMULATOR		2014048-011		FNP12775				
201		AUXILIARY CALIBRATION CONSOLE		2014059-011		NAS-9-497				
200		AGC CALIBRATION CONSOLE		2014049-011	NA		B	II	NOTE IIC	
21										
20		NA		NA	NA	NA	A	II	NOTE II C	2.000
19		NA		NA	NA	NA	A	I	NOTE II B	2.000
18		NA		NA	NA	NA	B	II	NOTE II C	4.187
17		NA		NA	NA	NA	B	I	NOTE II B	4.187
16		NA		NA	NA	NA	B	II	NOTE II C	2.000
15	R	NA		NA	NA	NA	B	I	NOTE II B	2.000

DASH NO.	B	C	D	E	F	G	H	J	K	L	M	N	P	R	S	T	U	V	W	Y	Z	AA	AB	AC	AD	AE	AF	AG	AH	AJ	AK	AL	AM	AN	AP	AR
20	1.312	1.687	1.375	.078	.031	.078	.093	.06 .13	.093	1.187	.750	.593	.453	1.015	.062	.187	.078	.875	.718	1.375	.218	1.156	1.843	.048	NA	.875	.305	.078	.312	1.687	.078	NA	.078	.312	.187	1.843
19	1.312	1.687	1.375	.078	.031	.078	.093	NA	NA	1.187	.750	.593	.453	1.015	.062	.187	.078	.875	.718	1.375	.218	NA	NA	.048	.031	.875	.305	.078	.312	1.687	.078	NA	.078	.312	.187	NA
18	1.875	3.469	2.750	.156	.093	.156	.125	.06 .13	.125	1.625	1.032	.844	.656	1.406	.093	.344	.156	1.781	1.531	2.844	.312	1.562	3.875	.062	NA	1.219	.500	.156	.719	3.469	.156	NA	.156	.719	.344	3.875
17	1.875	3.469	2.750	.156	.093	.156	.125	NA	NA	1.625	1.032	.844	.656	1.406	.093	.344	.156	1.781	1.531	2.844	.312	NA	NA	.062	.062	1.219	.500	.156	.719	3.469	.156	NA	.156	.719	.344	NA
16	1.312	1.687	1.375	.078	.031	.078	.093	.06 .13	.093	1.187	.750	.593	.453	1.015	.062	.187	.078	.875	.718	1.375	.218	1.156	1.843	.048	NA	.875	.305	.078	.312	1.687	.078	NA	.078	.312	.187	1.843
15	1.312	1.687	1.375	.078	.031	.078	.093	NA	NA	1.187	.750	.593	.453	1.015	.062	.187	.078	.875	.718	1.375	.218	NA	NA	.048	.031	.875	.305	.078	.312	1.687	.078	NA	.078	.312	.187	NA

THIS SHEET ADDED

Ⓖ REPLACES REV F WITH CHANGE

RAYTHEON DASH NUMBERS

NOTES FOR TABLE

STYLE A IS FOR G & N SYSTEM
STYLE B IS FOR GROUND SUPPORT EQUIPMENT
TYPE I IS WITHOUT MOUNTING HOLES
TYPE II IS WITH MOUNTING HOLES

QTY REQD	PART OR IDENTIFYING NO.	MATERIAL OR NOTES	NOMENCLATURE OR DESCRIPTION	FIND NO.

LIST OF MATERIALS

NEXT ASSY	USED ON
AS APPLICABLE	

APPLICATION

UNLESS OTHERWISE SPECIFIED
DIMENSIONS ARE IN INCHES.
CAPACITOR VALUES ARE IN µf
RESISTOR VALUES ARE IN OHMS
TOLERANCES ON
FRACTIONS ± — DECIMALS ±.005 ANGLES ± —
DO NOT SCALE THIS DRAWING

MATERIAL
SEE NOTE 11

MIT
INSTRUMENTATION LAB
CAMBRIDGE, MASS.

		DATE
DRAWN	R. Q. Jones	7-16-65
CHECKED	A. J. [illegible]	7-22-65
APPROVED		
APPROVED	W Kupfer	[illegible]
APPROVED MIT	W Kupfer	[illegible]
APPROVED MSC	[illegible]	[illegible]

MANNED SPACECRAFT CENTER
HOUSTON, TEXAS

NAMEPLATES,
APOLLO GEN-GSE
(STANDARDS)

CODE IDENT NO.	SIZE	DRAWING NO.
80230	E	1004260

SCALE NONE   SHEET 3 OF 6

SYM	ZONE	DESCRIPTION	DR	CHK	DATE	APPROVED
G		REPLACES REV F WITH CHANGE PER TDRR 20854.			7/22/65	WK
H		REVISED PER TDRR 20892				
J		REVISED PER TDRR 20904				
K		REVISED PER TDRR 21379				
L		REVISED PER TDRR 21410			8/23/65	
M		REVISED PER TDRR 21993				
N		REVISED PER TDRR 22621				
P		REVISED PER TDRR 22671				
R		REVISED PER TDRR 22672				
S		REVISED PER TDRR 22750				
T		REVISED PER TDRR 22823				
U		REVISED PER TDRR 23072				
V		REVISED PER TDRR 23521			10-26-65	
W		REVISED PER TDRR 23824	RAJ		11-9-65	
Y		REVISED PER TDRR 24018	RAJ		11-16-65	
Z		REVISED PER TDRR 24040	RAJ		11-19-65	
AA		REVISED PER TDRR 24060	RAJ		11-19-65	
AB		REVISED PER TDRR 24868	RAJ		2-22-65	
AC		REVISED PER TDRR 24973	RAJ		1-4-66	
AD		REVISED PER TDRR 25065	RAJ		1-18-66	
AE		REVISED PER TDRR 25672	RAJ		2-4-66	
AF		REVISED PER TDRR 25671	RAJ		2-4-66	
AG		REVISED PER TDRR 26110	RAJ		2-15-66	
AH		REVISED PER TDRR 26372	"		3-16-66	
AJ		REVISED PER TDRR 26425	"		3-16-66	
AK		REVISED PER TDRR 26743	"		3-16-66	
AL		REVISED PER TDRR 26798	"		3-16-66	
AM		REVISED PER TDRR 27168			4-8-66	
AN		REVISED PER TDRR 27235	"		4-8-66	
AP		REVISED PER TDRR 27345	"		4-8-66	
AR		REVISED PER TDRR 27417	"		4-8-66	
AS		REVISED PER TDRR 27442	"		4-8-66	
AT		REVISED PER TDRR 27719	"		4-21-66	
AU		REVISED PER TDRR 27880	"		4-21-66	
AV		REVISED PER TDRR 27896	"			
AW		28110	"		5-16-66	
AY		28173	"			
AZ		28131				
BA		28124	"			
BB		REVISED PER TDRR 28511	"		5-16-66	
BC		" " " 28943	"		5-24-66	
BD		" " " 29222	"		6-8-66	
BE		" " " 29135				
BF		" " " 29322	"		6-24-66	
BG		" " " 29429	"			
BH		" " " 29449	"			
BJ		" " " 29335	"			
BK		" " " 29619	"			
BL		" " " 29696	"		6-29-66	
BM		REVISION STATUS CHANGED	JSD	HS	7-29-66	
BN		REVISION STATUS CHANGED	JI			
BP		REVISION STATUS CHANGED	JI			
BR		REVISED PER TDRR 30241	JI			
BS		REVISION STATUS CHANGED	GW			
BT		REVISION STATUS CHANGED	GW			
BU		REVISION STATUS CHANGED				
BV		REVISION STATUS CHANGED	WB			
BW		REVISION STATUS CHANGED	WB			
BY		REVISION STATUS CHANGED	WB		10 OCT 66	
BZ		REVISION STATUS CHANGED	WB			
CA		REVISION STATUS CHANGED	WB		25 OCT	
CB		REVISION STATUS CHANGED	REF			
CC		REVISION STATUS CHANGED	AF			
CD		REVISION STATUS CHANGED	DR			
CE		REVISION STATUS CHANGED				
CF		REVISION STATUS CHANGED				

A C ELECTRONICS DASH NUMBERS

DASH NO.	P/C	PART NAME	REMARKS	PART NO.	SER. NO.	CONT. NO.	STYLE	TYPE	MATERIAL	A	B	C	D	E	F	G	H	J	K	L	M	N	P	R	S	T	U	V	W	Y	Z	AA	AB	AC	AD	AE	AF	AG	AH	AJ	AK	AL	AM	AN	AP	AR
199	AC	EYEPIECE STOWAGE UNIT		2021255-011			A	I																																						
198	AC	SIGNAL CONDITIONER ASSY C/M		2007234		NAS 9-497	↕	↕	NOTE 11B	FOR DIMENSIONS, SEE DASH 100 VALUES BELOW																																				
197	AC	SIGNAL CONDITIONER ASSY C/M		2007235		↕	↕	↕	↕																																					
196	AC	SIGNAL CONDITIONER ASSY LEM		6007010		↕	↕	↕	↕																																					
195	AC	PSA & SIGNAL CONDITIONER ASSY		6007009		↕	A	I	NOTE 11B																																					
194	AC	PANEL, MONITOR		2900031-031		↕	B	II	NOTE 11C	FOR DIMENSIONS, SEE DASH 141 VALUES BELOW																																				
193	AC	DISTRIBUTION BOX, GSE		2900024-031		↕	↕	↕	↕																																					
192	AC	ANALYZER, OPTICS-INERTIAL		2900023-031		↕	↕	↕	↕	FOR DIMENSIONS, SEE DASH 144 VALUES BELOW																																				
191	AC	TEST CONTROL		2900027-031		↕	↕	↕	↕	FOR DIMENSIONS, SEE DASH 141 VALUES BELOW																																				
190	AC	PANEL, PWR SUP AND LOAD		2900033-021		↕	↕	↕	↕																																					
189	AC	ADPT MODULE, P. S. A.		6900088-011		↕	↕	↕	↕																																					
188	AC	ADPT MODULE, P. S. A.		2901143-011		↕	↕	↕	↕																																					
187	AC	FIXTURE, MTG, PTA/PEA		2900066-021		NAS 9-497	B	II	NOTE 11C																																					
186	AC	ANNUNCIATOR PANEL AND EYEPIECE STORAGE ASSEMBLY		1021255-021			A	I		FOR DIMENSIONS, SEE DASH 100 VALUES BELOW																																				
185	AC	ANNUNCIATOR PANEL AND EYEPIECE STORAGE ASSEMBLY		1021255-011			A	I																																						
184	AC	FIX., HAND., G AND N HARNESS		1901846-041		NAS-9-497	B	II	NOTE 11C	FOR DIMENSIONS, SEE DASH 144 VALUES BELOW																																				
183	AC	INSTALLING TOOL, ELEC. CONN		1902586-011		↕	B	II	NOTE 11C	FOR DIMENSIONS, SEE DASH 102 VALUES BELOW																																				
182	AC	ADPT MODULE, P.S.A.		6900088-011		↕	B	II	NOTE 11C	FOR DIMENSIONS, SEE DASH 141 VALUES BELOW																																				
181	AC	G&N INDICATOR CONTROL PANEL ASSY		2014578-011		↕	A	I	NOTE 11B	3.000	1.938	2.437	NA	.125	.062	.188	.156	NA	NA	1.750	1.125	.906	.688	1.500	NA	.281	.125	NA	1.094	2.062	.312	NA	2.500	.062	.125	1.312	.469	NA	NA	NA	.156	NA	.125	.469	.344	NA
180	AC	ADPT MODULE, P.S.A.		1902431-031		↕	B	II		FOR DIMENSIONS, SEE DASH 121 VALUES BELOW																																				
179	AC	MOUNTING PLATE, IMU/PTA		6900083-011		↕	↕	↕		FOR DIMENSIONS, SEE DASH 144 VALUES BELOW																																				
178	AC	MOUNTING PLATE, COMPONENT		6900007-021		↕	↕	↕																																						
177	AC	FIX., MOUNTING, SUBSYSTEM		2900070-021		↕	↕	↕																																						
176	AC	FIX., MOUNTING, G AND N		2900067-021		↕	↕	↕																																						
175	AC	CSL, COOL. AND PWR, G AND N		1902134-031		↕	↕	↕																																						
174	AC	FIX., HAND., C/M AND LEM CDU		2900999-011		↕	↕	↕	NOTE 11C	FOR DIMENSIONS, SEE DASH 141 VALUES BELOW																																				
173	AC	FIX., HANDLING, C/M PSA		2900998-011		↕	↕	↕	↕																																					
172	AC	CAGING ELECTRONICS, GYRO		2900029-021		↕	↕	↕	↕																																					
171	AC	DISTRIBUTION BOX, GSE		2900024-021		↕	↕	↕	↕																																					
170	AC	ANALYZER, OPTICS-INERTIAL		2900023-021		↕	↕	↕	↕	FOR DIMENSIONS, SEE DASH 144 VALUES BELOW																																				
169	AC	ADPT, TESTPOINT, P.S.A.		2900037-021		↕	↕	↕	↕	FOR DIMENSIONS, SEE DASH 141 VALUES BELOW																																				
168	AC	TEST SELECTOR		2900028-021		↕	↕	↕	↕																																					
167	AC	TEST CONTROL		2900027-021		↕	↕	↕	↕																																					
166	AC	PANEL, MONITOR		2900031-021		↕	↕	↕	↕																																					
165	AC	TERM. BOARD STORAGE DRAWER		2900927-011		↕	↕	↕	↕																																					
164	AC	INPUT/OUTPUT PANEL		2900926-011		↕	↕	↕	↕																																					
163	AC	CONTROL PANEL		2900896-011		↕	↕	↕	↕																																					
162	AC	CSL. CAL AND TEST, SCM/PSAAM		2900895-011		↕	↕	↕	↕	FOR DIMENSIONS, SEE DASH 144 VALUES BELOW																																				
161	AC	FIX., LIFT AND HAND., IMU		1015462-011		↕	↕	↕	↕	FOR DIMENSIONS, SEE DASH 141 VALUES BELOW																																				
160	AC	FIX., HAND., G AND N HARNESS		1901846-031		↕	↕	↕	↕	FOR DIMENSIONS, SEE DASH 144 VALUES BELOW																																				
159	AC	BATTERY POWER PACK		1900011-031		↕	B	II	NOTE 11C																																					
158	AC	COUPLING DATA UNIT ASSEMBLY C/M		2007222		↕	A	I	NOTE 11B	FOR DIMENSIONS SEE DASH 100 VALUES BELOW																																				
157	AC	COUPLING DATA UNIT ASSEMBLY - LEM		2007222		↕	↕	↕	↕																																					
156	AC	POWER & SERVO ASSEMBLY C/M		2007200		↕	↕	↕	↕	2.125	.968	1.718	NA	.093	.031	.06	.093	NA	NA	.858	.608	.484	.358	.733	.062	.140	.062	NA	.968	1.450	.125	NA	1.720	.046	.03	NA	.210	NA	NA	NA	.070	NA	.046	.32	.16	NA
155	AC	PIPA ELECTRONICS ASSEMBLY		2007201		↕	↕	↕	↕	FOR DIMENSIONS SEE DASH 100 VALUES BELOW																																				
154	AC	PULSE TORQUE ASSEMBLY - LEM		6007000		↕	↕	↕	↕																																					
153	AC	POWER & SERVO ASSEMBLY - LEM		6007200		↕	A	I	NOTE 11B																																					
152	AC	CONT PNL, RSVR CKT TESTER		2900770-011		↕	B	II	NOTE 11C	FOR DIMENSIONS, SEE DASH 141 VALUES BELOW																																				
151	AC	TESTER, RESOLVER CIRCUIT		2900708-011		↕	↕	↕	↕																																					
150	AC	JUNCTION BOX, P.S.A./G.S.E.		1901933-021		↕	↕	↕	↕	FOR DIMENSIONS, SEE DASH 144 VALUES BELOW																																				
149	AC	BATTERY PACK, LIFTING		2900812-011		↕	↕	↕	↕	FOR DIMENSIONS, SEE DASH 141 VALUES BELOW																																				
148	AC	MOUNTING PLATE, COMPONENT		6900007-011		↕	↕	↕	↕	FOR DIMENSIONS, SEE DASH 144 VALUES BELOW																																				
147	AC	MOUNTING PLATE, COMPONENT		2900677-011		↕	↕	↕	↕																																					
146	AC	CART, TRANS, G AND N		1900009-041		↕	↕	↕	↕																																					
145	AC	CONTAINER, SHIPPING, IMU		1900010-021		NAS-9-497	B	II	NOTE 11C																																					
144	AC	FIX., MOUNTING, G AND N		1902204-021			B	II	NOTE 11C	4.125	1.812	3.250	NA	.125	.062	.12	.156	.188 .104	.125	1.625	1.140	.890	.640	1.390	.125	.171	.125	1.875	1.687	2.625	.250	1.562	3.843	.093	NA	NA	.359	.125	.437	3.688	NA	3.687	.093	.40	.25	3.875
143	AC	CSL, COOL. AND PWR, G AND N		1902134-021			↕	↕	↕	4.125	1.812	3.250	↕	.125	.062	.12	.156	↕	.125	1.625	1.140	.890	.640	1.390	.125	.171	.125	1.875	1.687	2.625	.250	1.562	3.843	.093	↕	↕	.359	.125	.437	3.688	↕	3.687	.093	.40	.25	3.875
142	AC	ANALYZER, OPTICS-INERTIAL		2900023-011			↕	↕	↕	4.125	1.812	3.250	↕	.125	.062	.12	.156	↕	.125	1.625	1.140	.890	.640	1.390	.125	.171	.125	1.875	1.687	2.625	.250	1.562	3.843	.093	↕	↕	.359	.125	.437	3.688	↕	3.687	.093	.40	.25	3.875
141	AC	CONT., TEMP, PORTABLE		2900060-011			↕	↕	↕	2.125	.968	1.718	↕	.093	.031	.06	.093	↕	.093	.858	.608	.484	.358	.733	.077	.116	.062	.937	.875	1.343	.125	.781	1.892	.046	↕	↕	.209	.093	.250	1.875	↕	1.840	.046	.23	.16	1.938
140	AC	TESTER, CKT, IMU/CDU RSVR		2900286-011			↕	↕	↕	4.125	1.812	3.250	↕	.125	.062	.12	.156	↕	.125	1.625	1.140	.890	.640	1.390	.125	.171	.125	1.875	1.687	2.625	.250	1.562	3.843	.093	↕	↕	.359	.125	.437	3.688	↕	3.687	.093	.40	.25	3.875
139	AC	SIMULATOR, LD/SIG, CDU		2900285-011			↕	↕	↕	↕	↕	↕	↕	↕	↕	↕	↕	↕	↕	↕	↕	↕	↕	↕	↕	↕	↕	↕	↕	↕	↕	↕	↕	↕	↕	↕	↕	↕	↕	↕	↕	↕	↕	↕	↕	↕
138	AC	SIMULATOR, LD/SIG, OPTICS		1902023-021			↕	↕	↕	↕	↕	↕	↕	↕	↕	↕	↕	↕	↕	↕	↕	↕	↕	↕	↕	↕	↕	↕	↕	↕	↕	↕	↕	↕	↕	↕	↕	↕	↕	↕	↕	↕	↕	↕	↕	↕
137	AC	FIX., MOUNTING, IMU/NAV BASE		6900003-011			↕	↕	↕	↕	↕	↕	↕	↕	↕	↕	↕	↕	↕	↕	↕	↕	↕	↕	↕	↕	↕	↕	↕	↕	↕	↕	↕	↕	↕	↕	↕	↕	↕	↕	↕	↕	↕	↕	↕	↕
136	AC	FIXTURE, OPTICS/NAV BASE		2900072-011			↕	↕	↕	↕	↕	↕	↕	↕	↕	↕	↕	↕	↕	↕	↕	↕	↕	↕	↕	↕	↕	↕	↕	↕	↕	↕	↕	↕	↕	↕	↕	↕	↕	↕	↕	↕	↕	↕	↕	↕
135	AC	FIX., MOUNTING, SUB SYSTEM		2900070-011			↕	↕	↕	↕	↕	↕	↕	↕	↕	↕	↕	↕	↕	↕	↕	↕	↕	↕	↕	↕	↕	↕	↕	↕	↕	↕	↕	↕	↕	↕	↕	↕	↕	↕	↕	↕	↕	↕	↕	↕
134	AC	FIX., HAND., G AND N HARNESS		2900069-011			↕	↕	↕	↕	↕	↕	↕	↕	↕	↕	↕	↕	↕	↕	↕	↕	↕	↕	↕	↕	↕	↕	↕	↕	↕	↕	↕	↕	↕	↕	↕	↕	↕	↕	↕	↕	↕	↕	↕	↕
133	AC	CNTR, SHIPPING, NAV BASE		2900068-011			↕	↕	↕	↕	↕	↕	↕	↕	↕	↕	↕	↕	↕	↕	↕	↕	↕	↕	↕	↕	↕	↕	↕	↕	↕	↕	↕	↕	↕	↕	↕	↕	↕	↕	↕	↕	↕	↕	↕	↕
132	AC	FIX., MOUNTING, G AND N		2900067-011			↕	↕	↕	↕	↕	↕	↕	↕	↕	↕	↕	↕	↕	↕	↕	↕	↕	↕	↕	↕	↕	↕	↕	↕	↕	↕	↕	↕	↕	↕	↕	↕	↕	↕	↕	↕	↕	↕	↕	↕
131	AC	SIMULATOR, LD/SIG, IMU/CDU		2900062-011			↕	↕	↕	↕	↕	↕	↕	↕	↕	↕	↕	↕	↕	↕	↕	↕	↕	↕	↕	↕	↕	↕	↕	↕	↕	↕	↕	↕	↕	↕	↕	↕	↕	↕	↕	↕	↕	↕	↕	↕
130	AC	TESTER, GYRO WHEEL		2900061-011			↕	↕	↕	↕	↕	↕	↕	↕	↕	↕	↕	↕	↕	↕	↕	↕	↕	↕	↕	↕	↕	↕	↕	↕	↕	↕	↕	↕	↕	↕	↕	↕	↕	↕	↕	↕	↕	↕	↕	↕
129	AC	COOLANT SUPPLY		1902133-021			↕	↕	↕	↕	↕	↕	↕	↕	↕	↕	↕	↕	↕	↕	↕	↕	↕	↕	↕	↕	↕	↕	↕	↕	↕	↕	↕	↕	↕	↕	↕	↕	↕	↕	↕	↕	↕	↕	↕	↕
128	AC	TABLE, ROTARY		1900926-021			↕	↕	↕	4.125	1.812	3.250	↕	.125	.062	.12	.156	↕	.125	1.625	1.140	.890	.640	1.390	.125	.171	.125	1.875	1.687	2.625	.250	1.562	3.843	.093	↕	↕	.359	.125	.437	3.688	↕	3.687	.093	.40	.25	3.875
127	AC	FIX., HAND., OPTICS		2900074-011			↕	↕	↕	2.125	.968	1.718	↕	.093	.031	.06	.093	↕	.093	.858	.608	.484	.358	.733	.077	.116	.062	.937	.875	1.343	.125	.781	1.892	.046	↕	↕	.209	.093	.250	1.875	↕	1.840	.046	.23	.16	1.938
126	AC	FIXTURE, MTG, PTA/PEA.		2900066-011			↕	↕	↕	↕	↕	↕	↕	↕	↕	↕	↕	↕	↕	↕	↕	↕	↕	↕	↕	↕	↕	↕	↕	↕	↕	↕	↕	↕	↕	↕	↕	↕	↕	↕	↕	↕	↕	↕	↕	↕
125	AC	CONT, TEMP, IMU LIFTING		2900063-011			↕	↕	↕	↕	↕	↕	↕	↕	↕	↕	↕	↕	↕	↕	↕	↕	↕	↕	↕	↕	↕	↕	↕	↕	↕	↕	↕	↕	↕	↕	↕	↕	↕	↕	↕	↕	↕	↕	↕	↕
124	AC	FIXTURE, HANDLING, IMU		2900064-011			↕	↕	↕	↕	↕	↕	↕	↕	↕	↕	↕	↕	↕	↕	↕	↕	↕	↕	↕	↕	↕	↕	↕	↕	↕	↕	↕	↕	↕	↕	↕	↕	↕	↕	↕	↕	↕	↕	↕	↕
123	AC	CONT, OPTICS, REMOTE		1902046-021			↕	↕	↕	↕	↕	↕	↕	↕	↕	↕	↕	↕	↕	↕	↕	↕	↕	↕	↕	↕	↕	↕	↕	↕	↕	↕	↕	↕	↕	↕	↕	↕	↕	↕	↕	↕	↕	↕	↕	↕
122	AC	TEST CONTROL		1902009-021			↕	↕	↕	↕	↕	↕	↕	↕	↕	↕	↕	↕	↕	↕	↕	↕	↕	↕	↕	↕	↕	↕	↕	↕	↕	↕	↕	↕	↕	↕	↕	↕	↕	↕	↕	↕	↕	↕	↕	↕
121	AC	ADPT MODULE, P.S.A.		1902431-021			↕	↕	↕	↕	↕	↕	↕	↕	↕	↕	↕	↕	↕	↕	↕	↕	↕	↕	↕	↕	↕	↕	↕	↕	↕	↕	↕	↕	↕	↕	↕	↕	↕	↕	↕	↕	↕	↕	↕	↕
120	AC	BRIDGE, DECADE ERROR		2900128-011			↕	↕	↕	↕	↕	↕	↕	↕	↕	↕	↕	↕	↕	↕	↕	↕	↕	↕	↕	↕	↕	↕	↕	↕	↕	↕	↕	↕	↕	↕	↕	↕	↕	↕	↕	↕	↕	↕	↕	↕
119	AC	PWR SUP, ELECTRONICS		2900012-011			↕	↕	↕	↕	↕	↕	↕	↕	↕	↕	↕	↕	↕	↕	↕	↕	↕	↕	↕	↕	↕	↕	↕	↕	↕	↕	↕	↕	↕	↕	↕	↕	↕	↕	↕	↕	↕	↕	↕	↕
118	AC	PWR SUP, RELAY AND LAMP		1900049-031			↕	↕	↕	↕	↕	↕	↕	↕	↕	↕	↕	↕	↕	↕	↕	↕	↕	↕	↕	↕	↕	↕	↕	↕	↕	↕	↕	↕	↕	↕	↕	↕	↕	↕	↕	↕	↕	↕	↕	↕
117	AC	CONSOLE, OSCILLOGRAPH		1900000-021			↕	↕	↕	↕	↕	↕	↕	↕	↕	↕	↕	↕	↕	↕	↕	↕	↕	↕	↕	↕	↕	↕	↕	↕	↕	↕	↕	↕	↕	↕	↕	↕	↕	↕	↕	↕	↕	↕	↕	↕
116	AC	ADPT MODULE, P.S.A.		1902431-011			↕	↕	↕	↕	↕	↕	↕	↕	↕	↕	↕	↕	↕	↕	↕	↕	↕	↕	↕	↕	↕	↕	↕	↕	↕	↕	↕	↕	↕	↕	↕	↕	↕	↕	↕	↕	↕	↕	↕	↕
115	AC	ADPT, TEST POINT, PTA/PEA.		2900145-011			↕	↕	↕	↕	↕	↕	↕	↕	↕	↕	↕	↕	↕	↕	↕	↕	↕	↕	↕	↕	↕	↕	↕	↕	↕	↕	↕	↕	↕	↕	↕	↕	↕	↕	↕	↕	↕	↕	↕	↕
114	AC	ADPT, TEST POINT, P.S.A.		2900037-011			↕	↕	↕	↕	↕	↕	↕	↕	↕	↕	↕	↕	↕	↕	↕	↕	↕	↕	↕	↕	↕	↕	↕	↕	↕	↕	↕	↕	↕	↕	↕	↕	↕	↕	↕	↕	↕	↕	↕	↕
113	AC	CONTROL, GIMBAL POSITION		2900036-011			↕	↕	↕	↕	↕	↕	↕	↕	↕	↕	↕	↕	↕	↕	↕	↕	↕	↕	↕	↕	↕	↕	↕	↕	↕	↕	↕	↕	↕	↕	↕	↕	↕	↕	↕	↕	↕	↕	↕	↕
112	AC	SELECTOR, SIGNAL, PRIMARY		2900035-011			↕	↕	↕	↕	↕	↕	↕	↕	↕	↕	↕	↕	↕	↕	↕	↕	↕	↕	↕	↕	↕	↕	↕	↕	↕	↕	↕	↕	↕	↕	↕	↕	↕	↕	↕	↕	↕	↕	↕	↕
111	AC	SEL, SIG, OSCILLOGRAPH		2900034-011			↕	↕	↕	↕	↕	↕	↕	↕	↕	↕	↕	↕	↕	↕	↕	↕	↕	↕	↕	↕	↕	↕	↕	↕	↕	↕	↕	↕	↕	↕	↕	↕	↕	↕	↕	↕	↕	↕	↕	↕
110	AC	PANEL, PWR SUP AND LOAD		2900033-011			↕	↕	↕	↕	↕	↕	↕	↕	↕	↕	↕	↕	↕	↕	↕	↕	↕	↕	↕	↕	↕	↕	↕	↕	↕	↕	↕	↕	↕	↕	↕	↕	↕	↕	↕	↕	↕	↕	↕	↕
109	AC	PANEL, MONITOR		2900031-011			↕	↕	↕	↕	↕	↕	↕	↕	↕	↕	↕	↕	↕	↕	↕	↕	↕	↕	↕	↕	↕	↕	↕	↕	↕	↕	↕	↕	↕	↕	↕	↕	↕	↕	↕	↕	↕	↕	↕	↕
108	AC	PANEL, AUXILIARY INPUT		2900030-011			↕	↕	↕	↕	↕	↕	↕	↕	↕	↕	↕	↕	↕	↕	↕	↕	↕	↕	↕	↕	↕	↕	↕	↕	↕	↕	↕	↕	↕	↕	↕	↕	↕	↕	↕	↕	↕	↕	↕	↕
107	AC	CAGING ELECTRONICS, GYRO		2900029-011			↕	↕	↕	↕	↕	↕	↕	↕	↕	↕	↕	↕	↕	↕	↕	↕	↕	↕	↕	↕	↕	↕	↕	↕	↕	↕	↕	↕	↕	↕	↕	↕	↕	↕	↕	↕	↕	↕	↕	↕
106	AC	TEST SELECTOR		2900028-011			↕	↕	↕	↕	↕	↕	↕	↕	↕	↕	↕	↕	↕	↕	↕	↕	↕	↕	↕	↕	↕	↕	↕	↕	↕	↕	↕	↕	↕	↕	↕	↕	↕	↕	↕	↕	↕	↕	↕	↕
105	AC	TEST CONTROL		2900027-011			↕	↕	↕	↕	↕	↕	↕	↕	↕	↕	↕	↕	↕	↕	↕	↕	↕	↕	↕	↕	↕	↕	↕	↕	↕	↕	↕	↕	↕	↕	↕	↕	↕	↕	↕	↕	↕	↕	↕	↕
104	AC	MONITOR AND CONTROL, TEMP		2900026-011			↕	↕	↕	↕	↕	↕	↕	↕	↕	↕	↕	↕	↕	↕	↕	↕	↕	↕	↕	↕	↕	↕	↕	↕	↕	↕	↕	↕	↕	↕	↕	↕	↕	↕	↕	↕	↕	↕	↕	↕
103	AC	DISTRIBUTION BOX, GSE		2900024-011			↕	↕	↕	↕	↕	↕	↕	↕	↕	↕	↕	↕	↕	↕	↕	↕	↕	↕	↕	↕	↕	↕	↕	↕	↕	↕	↕	↕	↕	↕	↕	↕	↕	↕	↕	↕	↕	↕	↕	↕
102	AC	VOLTMETER, DIGITAL		2900007-011			B	II	NOTE 11C	2.125	.968	1.718	NA	.093	.031	.06	.093	.188 .104	.093	.858	.608	.484	.358	.733	.077	.116	.062	.937	.875	1.343	.125	.781	1.892	.046	NA	NA	.209	.093	.250	1.875	NA	1.840	.046	.23	.16	1.938
101	AC	NAVIGATION BASE ASSEMBLY - LEM		6899950		NAS-9-497	A	I	NOTE 11B	2.000	1.312	1.906	1.375	.078	.048	.078	.093	NA	NA	1.125	.750	.593	.453	1.015	.062	.187	.078	.875	.718	1.375	.218	NA	NA	.048	.031	.875	.305	.078	.531	1.906	.078	NA	.078	.531	.187	NA
100	AC	NAVIGATION BASE ASSEMBLY		2899982		NAS-9-497	A	I	NOTE 11B	2.000	1.312	1.906	1.375	.078	.048	.078	.093	NA	NA	1.125	.750	.593	.453	1.015	.062	.187	.078	.875	.718	1.375	.218	NA	NA	.048	.031	.875	.305	.078	.531	1.906	.078	NA	.078	.531	.187	NA

THIS SHEET ADDED

(G) REPLACES REV F. WITH CHANGE

NOTES FOR TABLE

STYLE A IS FOR G&N SYSTEM
STYLE B IS FOR GROUND SUPPORT EQUIPMENT
TYPE I IS WITHOUT MOUNTING HOLES
TYPE II IS WITH MOUNTING HOLES

NOTE: AC DASH NO's. CONT. ON SH.6

QTY REQD	PART OR IDENTIFYING NO.	MATERIAL OR NOTES	NOMENCLATURE OR DESCRIPTION	FIND NO.

LIST OF MATERIALS

AS APPLICABLE	
NEXT ASSY	USED ON
APPLICATION	

UNLESS OTHERWISE SPECIFIED
DIMENSIONS ARE IN INCHES
CAPACITOR VALUES ARE IN μf
RESISTOR VALUES ARE IN OHMS
TOLERANCES ON
FRACTIONS DECIMALS ANGLES
± ±.005 ±
DO NOT SCALE THIS DRAWING

MATERIAL
SEE NOTE 11

MIT
INSTRUMENTATION LAB
CAMBRIDGE, MASS.

DRAWN R A Jones 7-15-66
CHECKED
APPROVED
APPROVED
APPROVED MIT
APPROVED MSC

MANNED SPACECRAFT CENTER
HOUSTON, TEXAS

NAMEPLATES,
APOLLO G&N-GSE
(STANDARDS)

CODE IDENT NO.	SIZE	DRAWING NO.
80230	E	1004260

SCALE NONE

SHEET 4 OF

[illegible] GOVERNMENT DRAWINGS, SPECIFICATIONS, OR OTHER DATA [illegible] ANY PURPOSE OTHER THAN IN CONNECTION WITH A DEFINITELY [illegible] GOVERNMENT PROCUREMENT OPERATION, THE UNITED STATES GOVERNMENT THEREBY INCURS NO RESPONSIBILITY NOR ANY OBLIGATION WHATSOEVER; AND THE FACT THAT THE GOVERNMENT MAY HAVE FORMULATED, [illegible] OR IN ANY WAY SUPPLIED THE SAID DRAWINGS, SPECIFICATIONS, OR OTHER DATA IS NOT TO BE REGARDED BY IMPLICATION OR OTHERWISE AS IN ANY MANNER LICENSING THE HOLDER OR ANY OTHER PERSON OR CORPORATION, OR CONVEYING ANY RIGHTS OR PERMISSION TO MANUFACTURE, USE, OR SELL ANY PATENTED INVENTION THAT MAY IN ANY WAY BE RELATED THERETO.

REVISIONS 02768

SYM	ZONE	DESCRIPTION	DR	CHK	DATE	APPROVED
G		REPLACES REV F WITH CHANGE PER TDRR 20854	rj		7/26/65	WK
H		REVISED PER TDRR 20892	rj		[illegible]	WK
J		REVISED PER TDRR 20904	rj		[illegible]	WK
K		REVISED PER TDRR 21379	rj		[illegible]	WK
L		REVISED PER TDRR 21410	rj		[illegible]	WK
M		REVISED PER TDRR 21993	rj			
N		REVISED PER TDRR 22621	rj		[illegible]	
P		REVISED PER TDRR 22671	rj		[illegible]	
R		REVISED PER TDRR 22672	rj			
S		REVISED PER TDRR 22750	rj		[illegible]	WK
T		REVISED PER TDRR 22823	rj			
U		REVISED PER TDRR 23072	rj		[illegible]-65	[illegible]
V		REVISED PER TDRR 23521	rj		10-26-65	WK
W		REVISED PER TDRR 23824	RAJ		11-9-65	WK
Y		REVISED PER TDRR 24018	RAJ		11-16-65	WK
Z		REVISED PER TDRR 24040	RAJ		11-15-65	WK
AA		REVISED PER TDRR 24060	RAJ		11-19-65	WK
AB		REVISED PER TDRR 24868	RAJ		12-22-65	WK
AC		REVISED PER TDRR 24973	RAJ		1-4-66	WK
AD		REVISED PER TDRR 25065	RAJ		1-18-66	[illegible]
AE		REVISED PER TDRR 25672	RAJ		2-4-66	WK
AF		REVISED PER TDRR 25671	RAJ		2-4-66	WK
AG		REVISED PER TDRR 26110	RAJ		2-15-66	WK
AH		REVISED PER TDRR 26372	"		3-16-66	[illegible]
AJ		REVISED PER TDRR 26425	"		3-16-66	[illegible]
AK		REVISED PER TDRR 26743	"		3-16-66	[illegible]
AL		REVISED PER TDRR 26798	"		3-16-66	[illegible]
AM		REVISED PER TDRR 27168	"		4-7-66	[illegible]
AN		REVISED PER TDRR 27235	"		4-7-66	[illegible]
AP		REVISED PER TDRR 27345	"		4-7-66	[illegible]
AR		REVISED PER TDRR 27417	"		4-7-66	[illegible]
AS		REVISED PER TDRR 27442	"		4-7-66	[illegible]
AT		REVISED PER TDRR 27719	"		4-20-66	WK
AU		REVISED PER TDRR 27880	"		4-20-66	WK
AV		REVISED PER TDRR 27896	"		4-20-66	WK
AW			28110	"		5-16-66	[illegible]
AY		28[illegible]73	"			[illegible]
AZ		28131	"			[illegible]
BA		28124	"			[illegible]
BB		REVISED PER TDRP 28511	"		5-16-66	[illegible]
BC		" " " 28949	"		5-24-66	[illegible]
BD		" " " 29222	"		6-8-[illegible]	[illegible]
BE		" " " 29235	"		"	[illegible]
BF		" " " 29322	"		6-24-66	[illegible]
BG		" " " 29429	"		"	[illegible]
BH		" " " 29449	"		"	[illegible]
BJ		" " " 29335	"		"	[illegible]
BK		" " " 29619	"		"	[illegible]
BL		" " " 29696	"		6-29-66	[illegible]
BM		REVISION STATUS CHANGED	JSD		7-29-66	
BN		REVISION STATUS CHANGED	JI	RLW	[illegible] 66	
BP		REVISION STATUS CHANGED	JI	RLW	[illegible] 66	
BR		REVISION STATUS CHANGED	JI	RLW	[illegible] 66	
BS		REVISION STATUS CHANGED	GW	RLW	[illegible] 66	
BT		REVISION STATUS CHANGED	GW	RLW	[illegible]	
BU		REVISION STATUS CHANGED	EH	JI	[illegible]	
BV		REVISION STATUS CHANGED	JJB	RLW	[illegible]	
BW		REVISION STATUS CHANGED	JJB	RLW	[illegible] 66	
BY		REVISION STATUS CHANGED	JJB	RLW	10 OCT 66	
BZ		REVISION STATUS CHANGED	JJB	RLW	10 OCT 66	
CA		REVISION STATUS CHANGED	JJB	[illegible]	23 OCT 66	
CB		REVISION STATUS CHANGED	REF	[illegible]	19 DEC 66	
CC		REVISION STATUS CHANGED	AF	[illegible]	13 [illegible]	
CD		REVISION STATUS CHANGED	DR	[illegible]	[illegible]	
CE		REVISION STATUS CHANGED	[illegible]	[illegible]	19 APR 67	
CF		REVISION STATUS CHANGED	[illegible]	[illegible]	19 APR 67	

DASH NO.	P/C	PART NAME	REMARKS	PART NO.	SER. NO.	CONT. NO.	STYLE	TYPE	MATERIAL	A	B	C	D	E	F	G	H	J	K	L	M	N	P	R	S
499	MIT																								
498																									
-40[illegible]	MIT	COMPUTER ASSY		2003100		NAS-9-497	A	I	NOTE 11 B	2.000	1.312	1.906	1.375	.078	.048	.078	.093	NA	NA	1.125	.750	.593	.453	1.015	.062
-400	MIT	LIFTING SLING-G&N INST. QUAL. FIX. & AZM. REF. FIX.		1021640		NAS-9-4066	B	II	NOTE 11 C	2.000	1.312	1.687	1.375	.078	.048	.078	.093	[illegible]	.093	1.187	.750	.593	.453	1.015	.062

DASH NO.	T	U	V	W	Y	Z	AA	AB	AC	AD	AE	AF	AG	AH	AJ	AK	AL	AM	AN	AP	AR
-40[illegible]	.187	.078	.875	.718	1.375	.218	NA	NA	.048	.031	.875	.305	.078	.531	1.906	.078	NA	.078	.531	.187	NA
-400	.187	.078	.875	.718	1.375	.218	1.156	1.843	.048	NA	.875	.305	.078	.312	1.687	.110	1.830	.070	.275	.180	1.844

MIT DASH NUMBERS

THIS SHEET ADDED

Ⓖ REPLACES REV F WITH CHANGE

NOTES FOR TABLE

STYLE A IS FOR G&N SYSTEM
STYLE B IS FOR GROUND SUPPORT EQUIPMENT
TYPE I IS WITHOUT MOUNTING HOLES
TYPE II IS WITH MOUNTING HOLES

QTY REQD	PART OR IDENTIFYING NO.	MATERIAL OR NOTES	NOMENCLATURE OR DESCRIPTION	FIND NO.

LIST OF MATERIALS

NEXT ASSY	USED ON
AS APPLICABLE	

APPLICATION

UNLESS OTHERWISE SPECIFIED
DIMENSIONS ARE IN INCHES
CAPACITOR VALUES ARE IN μf
RESISTOR VALUES ARE IN OHMS
TOLERANCES ON
FRACTIONS ± — DECIMALS ±.005 ANGLES ± —
DO NOT SCALE THIS DRAWING

MATERIAL
SEE NOTE 11

MIT
INSTRUMENTATION LAB
CAMBRIDGE, MASS.

DRAWN R A Jones 7-16-65
CHECKED [illegible] 7-23-65
APPROVED
APPROVED W Kupfer [illegible]
APPROVED MIT W Kupfer [illegible]
APPROVED MSC [illegible] 7/21/65
DATE

MANNED SPACECRAFT CENTER
HOUSTON, TEXAS

NAMEPLATES,
APOLLO G&N-GSE
(STANDARDS)

CODE IDENT NO. 80230
SIZE E
DRAWING NO. 1004260
SCALE NONE
SHEET 5

NOTICE - WHEN GOVERNMENT DRAWINGS, SPECIFICATIONS, OR OTHER DATA ARE USED FOR ANY PURPOSE OTHER THAN IN CONNECTION WITH A DEFINITELY RELATED GOVERNMENT PROCUREMENT OPERATION, THE UNITED STATES GOVERNMENT THEREBY INCURS NO RESPONSIBILITY NOR ANY OBLIGATION WHATSOEVER; AND THE FACT THAT THE GOVERNMENT MAY HAVE FORMULATED, FURNISHED, OR IN ANY WAY SUPPLIED THE SAID DRAWINGS, SPECIFICATIONS OR OTHER DATA IS NOT TO BE REGARDED BY IMPLICATION OR OTHERWISE AS IN ANY MANNER LICENSING THE HOLDER OR ANY OTHER PERSON OR CORPORATION, OR CONVEYING ANY RIGHTS OR PERMISSION TO MANUFACTURE, USE OR SELL ANY PATENTED INVENTION THAT MAY IN ANY WAY BE RELATED THERETO.

REVISIONS 02768

SYM	ZONE	DESCRIPTION	DR	CHK	DATE	APPROVED
AG		CHANGED NUMBER OF SHEETS FROM 5 TO 6 PER TDRR 26110	RAJ		2-15-66	
AH		REVISED PER TDRR 26372	"		3-16-66	
AJ		REVISED PER TDRR 26425	"		3-16-66	
AK		REVISED PER TDRR 26743	"		3-16-66	
AL		REVISED PER TDRR 26798	"		3-16-66	
AM		REVISED PER TDRR 27168	"		4-7-66	
AN		REVISED PER TDRR 27235	"		4-7-66	
AP		REVISED PER TDRR 27345	"		4-7-66	
AR		REVISED PER TDRR 27417	"		4-7-66	
AS		REVISED PER TDRR 27442	"		4-7-66	
AT		REVISED PER TDRR 27719	"		4-20-66	
AU		REVISED PER TDRR 27880	"		4-20-66	
AV		REVISED PER TDRR 27896	"		4-20-66	
AW		28110	"		5-16-66	
AY		28173	"		5-16-66	
AZ		28131	"		5-16-66	
BA		28124	"		5-16-66	
BB		REVISED PER TDRR 28511	"		5-16-66	
BC		" " " 28949	"		5-24-66	
BD		" " " 29222	"		6-8-66	
BE		" " " 29235	"		"	
BF		" " " 29322	"		6-24-66	
BG		" " " 29429	"		"	
BH		" " " 29449	"		"	
BJ		" " " 29335	"		"	
BK		" " " 29619	"		"	
BL		" " " 29696	"		6-29-66	
BM		REVISION STATUS CHANGED	JSD	N.S.	7-29-66	
BN		REVISED PER TDRR 29974	JL	RLW	22 AUG 66	
BP		REVISION STATUS CHANGED	JL	RLW	22 AUG 66	
BR		REVISION STATUS CHANGED	JL	RLW	[illegible]	
BS		REVISED PER TDRR 30530	GW	RLW	26 AUG 66	
BT		REVISED PER TDRR 30543	GW		26 AUG 66	
BU		REVISED PER TDRR 30898	EH	JL	9 SEP	
BV		REVISED PER TDRR 31241	JJB		[illegible]	
BW		REVISION STATUS CHANGED	JJB	RLW	30 SEP 66	
BY		REVISED PER TDRR 31341	JJB	RLW	10 OCT 66	
BZ		REVISED PER TDRR 31383	JJB	RLW	10 OCT 66	
CA		REVISED PER TDRR 31593	JJB		25 OCT 66	
CB		REVISED PER TDRR 32187	REF		10 DEC 66	
CC		REVISED PER TDRR 32512	AF		12 JAN 67	
CD		REVISION STATUS CHANGED	DR	N.W.	14 FEB 67	
CE		REVISION STATUS CHANGED	EWTH		19 APR 67	
CF		REVISED PER TDRR 33558	EWTH		19 APR 67	

DASH NO.	P/C	PART NAME	REMARKS	PART NO.	SER NO.	CONT NO.	STYLE	TYPE	MATERIAL	A	B	C	D	E	F	G	H	J	K	L	M	N	P	R	S	T	U	V	W	Y	Z	AA	AB	AC	AD	AE	AF	AG	AH	AJ	AK	AL	AM	AN	AP	AR
599	AC																																													
598	AC																																													
559		CSL, CAL AND TEST, SCM/PSAAM		2900895-031		FOR OTHER DATA SEE DASH 547																																								
558		PSA ADAPTER MODULE (LEM)		6900088-021		FOR OTHER DATA SEE DASH 189																																								
557		FIX., HANDLING, C/M PSA		2900998-021		NAS 9-497	B	II	NOTE 11C	FOR DIMENSIONS SEE DASH 141 VALUES																																				
556		FIX., MOUNTING G&N	(-144)	2900067-041		NAS9-497	B	II	NOTE 11C	FOR DIMENSIONS SEE DASH 500 VALUES																																				
548		CAGING ELECTRONICS, GYRO		2900029-031		NAS-9-497	B	II	NOTE 11C	2.125	.968	1.718	NA	.093	.031	.06	.093	.100/.104	.093	.858	.608	.484	.358	.733	.077	.116	.062	.937	.875	1.343	.125	.781	1.892	.046	NA	NA	.209	.093	.250	1.875	NA	1.840	.046	.23	.16	1.938
547		CSL, CAL AND TEST, SCM/PSAAM		2900895-021		NAS-9-497	B	II	NOTE 11C	4.125	1.812	3.250	NA	.125	.062	.12	.156	.100/.104	.125	1.625	1.140	.890	.640	1.390	.125	.171	.125	1.875	1.687	2.625	.250	1.562	3.843	.093	NA	NA	.359	.125	.437	3.688	NA	3.687	.093	.40	.25	3.875
546		FIX., HAND., C/M AND LEM CDU		2900999-021		NAS-9-497	B	II	NOTE 11C	2.125	.968	1.718	NA	.093	.031	.06	.093	.100/.104	.093	.858	.608	.484	.358	.733	.077	.116	.062	.937	.875	1.343	.125	.781	1.892	.046	NA	NA	.209	.093	.250	1.875	NA	1.840	.046	.23	.16	1.938
545	AC	G&N INDICATOR CONTROL PANEL ASSY		2014578-021		NAS-9-497	A	I	NOTE 11B	3.000	1.938	2.437	NA	.125	.062	.188	.156	NA	NA	1.750	1.125	.906	.688	1.500	NA	.281	.125	NA	1.094	2.062	.312	NA	2.500	.062	.125	1.312	.469	NA	NA	NA	.156	NA	.125	.469	.344	NA
544		ADPT MODULE, P.S.A.		190243-051		NAS-9-497	B	II	NOTE 11C	2.125	.968	1.718	NA	.093	.031	.06	.093	.100/.104	.093	.858	.608	.484	.358	.733	.077	.116	.062	.937	.875	1.343	.125	.781	1.892	.046	NA	NA	.209	.093	.250	1.875	NA	1.840	.046	.23	.16	1.938
541	AC	FIXTURE, MOUNTING, IMU		2900000-021		NAS 9-497	B	II	NOTE 11C	4.125	1.812	3.250	NA	.125	.062	.12	.156	.100/.104	.125	.625	1.140	.890	.640	1.390	.125	.171	.125	1.875	1.687	2.625	.250	1.562	3.843	.093	NA	NA	.359	.125	.437	3.688	NA	3.687	.093	.40	.25	3.875
543	AC	PANEL, MONITOR		2900031-041		NAS9-497	B	II	NOTE 11C	2.125	.968	1.718	NA	.093	.031	.06	.093	.100/.104	.093	.858	.608	.484	.358	.733	.077	.116	.062	.937	.875	1.343	.125	.781	1.892	.046	NA	NA	.209	.093	.250	1.875	NA	1.840	.046	.23	.25	1.938
542	AC	BATTERY PACK, LIFTING		2900812-021		NAS9-497	B	II	NOTE 11C	2.125	.968	1.718	NA	.093	.031	.06	.093	.100/.104	.093	.858	.608	.484	.358	.733	.077	.116	.062	.937	.875	1.343	.125	.781	1.892	.046	NA	NA	.209	.093	.250	1.875	NA	1.840	.046	.23	.16	1.938
540	AC	ADPT, TEST POINT, P.S.A.		2900037-031		NAS 9-497	B	II	NOTE 11C	2.125	.968	1.718	NA	.093	.031	.06	.093	.100/.104	.093	.858	.608	.484	.358	.733	.077	.116	.062	.937	.875	1.343	.125	.781	1.892	.046	NA	NA	.209	.093	.250	1.875	NA	1.840	.046	.23	.16	1.938
539	AC	ANNUNCIATOR PANEL AND EYEPIECE STORAGE ASSEMBLY		1021266-041		↕	A	I	NOTE 11B	2.000	1.312	1.906	1.375	.078	.048	.078	.093	NA	NA	1.125	.750	.593	.453	1.015	.062	.187	.078	.875	.718	1.375	.218	NA	NA	.048	.031	.875	.305	.078	.531	1.906	.078	NA	.078	.531	.187	NA
538	AC	~~ANNUNCIATOR PANEL AND EYEPIECE STORAGE ASSEMBLY~~		1021255-031		↕	A	I	NOTE 11B	2.000	1.312	1.906	1.375	.078	.048	.078	.093	NA	NA	1.125	.750	.593	.453	1.015	.062	.187	.078	.875	.718	1.375	.218	NA	NA	.048	.031	.875	.305	.078	.531	1.906	.078	NA	.078	.531	.187	NA
537	AC	TEST SELECTOR		2900028-031		↕	B	II	NOTE 11C	2.125	.968	1.718	NA	.093	.031	.06	.093	.100/.104	.093	.858	.608	.484	.358	.733	.077	.116	.062	.937	.875	1.343	.125	.781	1.892	.046	NA	NA	.209	.093	.250	1.875	NA	1.840	.046	.23	.16	1.938
536	AC	ANALYZER, OPTICS-INERTIAL		2900023-041		↕	B	II	NOTE 11C	4.125	1.812	3.250	NA	.125	.062	.12	.156	.100/.104	.125	1.625	1.140	.890	.640	1.390	.125	.171	.125	1.875	1.687	2.625	.250	1.562	3.843	.093	NA	NA	.359	.125	.437	3.688	NA	3.687	.093	.40	.25	3.875
535	AC	CONT. TEMP. PORTABLE		2900060-021		↕	B	II	NOTE 11C	2.125	.968	1.718	NA	.093	.031	.06	.093	.100/.104	.093	.858	.608	.484	.358	.733	.077	.116	.062	.937	.875	1.343	.125	.781	1.892	.046	NA	NA	.209	.093	.250	1.875	NA	1.840	.046	.23	.16	1.938
534	AC	COMPUTER CONT & RETICLE DIMMER		6014512-021		↕	A	I	NOTE 11B	2.000	1.312	1.906	1.375	.078	.048	.078	.093	NA	NA	1.125	.750	.593	.453	1.015	.062	.187	.078	.875	.718	1.375	.218	NA	NA	.048	.031	.875	.305	.078	.531	1.906	.078	NA	.078	.531	.187	NA
533	AC	ADPT MODULE, P.S.A.		190243-041		↕	B	II	NOTE 11C	2.125	.968	1.718	NA	.093	.031	.06	.093	.100/.104	.093	.858	.608	.484	.358	.733	.077	.116	.062	.937	.875	1.343	.125	.781	1.892	.046	NA	NA	.209	.093	.250	1.875	NA	1.840	.046	.23	.16	1.938
532	AC	TRAY BREAKOUT, 105 PIN		1900807-021		↕	↕	↕	↕	4.125	1.812	3.250	↕	.125	.062	.12	.156	.100/.104	.125	1.625	1.140	.890	.640	1.390	.125	.171	.125	1.875	1.687	2.625	.250	1.562	3.843	.093	↕	↕	.359	.125	.437	3.688	↕	3.687	.093	.40	.25	3.875
531	AC	TRAY BREAKOUT, 84 PIN		1900806-021		↕	↕	↕	↕	4.125	1.812	3.250	↕	.125	.062	.12	.156	.100/.104	.125	1.625	1.140	.890	.640	1.390	.125	.171	.125	1.875	1.687	2.625	.250	1.562	3.843	.093	↕	↕	.359	.125	.437	3.688	↕	3.687	.093	.40	.25	3.875
530	AC	HEAT SINK - TRAY EXTENDER		1900808-021		↕	↕	↕	↕	2.125	.968	1.718	↕	.093	.031	.06	.093	.100/.104	.093	.858	.608	.484	.358	.733	.077	.116	.062	.937	.875	1.343	.125	.781	1.892	.046	↕	↕	.209	.093	.250	1.875	↕	1.840	.046	.23	.16	1.938
529	AC	TESTER, FAILURE INDICATOR		1900809-021		↕	↕	↕	↕	2.125	.968	1.718	NA	.093	.031	.06	.093	.100/.104	.093	.858	.608	.484	.358	.733	.077	.116	.062	.937	.875	1.343	.125	.781	1.892	.046	NA	NA	.209	.093	.250	1.875	NA	1.840	.046	.23	.16	1.938
527	AC	FIX., MOUNTING, G AND N	(-144)	1902204-021		↕	↕	↕	↕	FOR DIMENSIONS, SEE DASH 500 VALUES BELOW																																				
526	AC	FIX., MOUNTING, G AND N	(-144)	2900067-031		↕	↕	↕	↕																																					
525	AC	PORTABLE TEMP. CONTROLLER		1900496-021		↕	B	II	NOTE 11C	3.000	1.937	2.437	2.312	.125	.031	.125	.156	.125	.125	1.718	1.187	.968	.749	1.452	.093	.295	.090	1.312	1.00	2.000	.250	1.687	2.750	.062	N/A	N/A	.463	.125	.562	2.437	.140	2.562	.090	.468	.359	2.750
524	AC	POWER, SERVO AND THERMOCOUPLE ASSEMBLY C/M		2010743		↕	A	I	NOTE 11B	2.125	.968	1.718	NA	.093	.031	.06	.093	NA	NA	.858	.608	.484	.358	.733	.062	.140	.062	NA	.968	1.450	.125	NA	1.720	.046	.03	NA	.210	NA	NA	NA	.070	NA	.046	.32	.16	NA
523	AC	PULSE TORQUE AND THERMOCOUPLE ASSEMBLY - LEM		6010656		↕	↕	↕	↕	FOR DIMENSIONS, SEE DASH 508 VALUES BELOW																																				
522	AC	COUPLING DATA UNIT AND THERMOCOUPLE ASSEMBLY - LEM		2010744		↕	↕	↕	↕																																					
521	AC	COUPLING DATA UNIT AND THERMOCOUPLE ASSEMBLY - C/M		2010744		↕	↕	↕	↕																																					
520	AC	PIPA ELECTRONICS AND THERMOCOUPLE ASSEMBLY		2010745		↕	A	I	NOTE 11B																																					
519	AC	FIXTURE, HANDLING, LEM-PSA	(-141)	6900129-011		↕	B	II	NOTE 11C	FOR DIMENSIONS, SEE DASH 504 VALUES BELOW																																				
518	AC	JUNCTION BOX, GSE-PSA	(-144)	1901933-031		↕	B	II	NOTE 11C	FOR DIMENSIONS, SEE DASH 500 VALUES BELOW																																				
517	AC	FIX., HAND., OPTICS INSTL.	(-141)	2901380-011		↕	B	II	NOTE 11C	FOR DIMENSIONS SEE DASH 502 VALUES BELOW																																				
516	AC	POWER, SERVO AND THERMOCOUPLE ASSEMBLY-LEM		6010655		NAS 9-497	A	I	NOTE 11B	FOR DIMENSIONS SEE DASH 508 VALUES BELOW																																				
514	AC	SIGNAL COND. ASSY LEM OPER.	(-100)	6007013		NAS-9-497	A	I	NOTE 11B	FOR DIMENSIONS, SEE DASH 508 VALUES BELOW																																				
513		JUMPER, BY-PASS	(-141)	1021616		↕	B	II	NOTE 11C	2.125	.968	1.718	NA	.093	.031	.06	.093	.100/.104	.093	.858	.608	.484	.358	.733	.077	.116	.062	.937	.875	1.343	.125	.781	1.892	.046	NA	NA	.209	.093	.250	1.875	NA	1.840	.046	.23	.16	1.938
512		COUPLING DATA UNIT ASSEMBLY C/M	(-100)	2007322-011		↕	A	I	NOTE 11B	FOR DIMENSIONS, SEE DASH 508 VALUES BELOW																																				
511		COUPLING DATA UNIT ASSEMBLY - LEM	(-100)	2007322-021		↕																																								
510		BATTERY POWER PACK	(-144)	1900011-041		↕	B	II	NOTE 11C	FOR DIMENSIONS, SEE DASH 500 VALUES BELOW																																				
509		JUNCTION BOX, P.S.A./G.S.E.	(-144)	1902195-021		↕	B	II	NOTE-11C																																					
508		NAVIGATION BASE ASSEMBLY - LEM	✓ (-101)	6899980		↕	A	I	NOTE 11B	2.000	1.312	1.906	1.375	.078	.048	.078	.093	NA	NA	1.125	.750	.593	.453	1.015	.062	.187	.078	.875	.718	1.375	.218	NA	NA	.048	.031	.875	.305	.078	.531	1.906	.078	NA	.078	.531	.187	NA
507		CSL, COOL. AND PWR., G AND N	(-144)	1902134-041		↕	B	II	NOTE 11C	FOR DIMENSIONS, SEE DASH 500 VALUES BELOW																																				
506		BREAKOUT BOX, CABLE ADAPTER	(-141)	2901011-011		↕	↕	↕	↕																																					
505		MONITOR AND CONTROL, TEMP	(-141)	2900026-021		↕	↕	↕	↕																																					
504		PWR SUP, GUIDANCE SYSTEM	✓ (-141)	1900033-021		↕	↕	↕	↕	2.125	.968	1.718	NA	.093	.031	.06	.093	.100/.104	.093	.858	.608	.484	.358	.733	.077	.116	.062	.937	.875	1.343	.125	.781	1.892	.046	NA	NA	.209	.093	.250	1.875	NA	1.840	.046	.23	.16	1.938
503		CONTROL, GIMBAL POSITION	(-141)	2900036-021		↕	↕	↕	↕																																					
502		ADPT, TEST POINT, PTA/PEA,	(-141)	2900145-021		↕	↕	↕	↕																																					
501		MOUNTING PLATE, COMPONENT	(-144)	6900007-031		↕	↕	↕	↕	FOR DIMENSIONS SEE DASH 500 VALUES BELOW																																				
500	AC	MOUNTING PLATE, COMPONENT	✓ (-144)	2900677-021		NAS-9-497	B	II	NOTE 11C	4.125	1.812	3.250	NA	.125	.062	.12	.156	.100/.104	.125	1.625	1.140	.890	.640	1.390	.125	.171	.125	1.875	1.687	2.625	.250	1.562	3.843	.093	NA	NA	.359	.125	.437	3.688	NA	3.687	.093	.40	.25	3.875

AC ELECTRONICS DASH NUMBERS

Ⓐⓖ THIS SHEET ADDED

NOTES FOR TABLE
STYLE A IS FOR G&N SYSTEM
STYLE B IS FOR GROUND SUPPORT EQUIPMENT
TYPE I IS WITHOUT MOUNTING HOLES
TYPE II IS WITH MOUNTING HOLES

QTY REQD	PART OR IDENTIFYING NO.	MATERIAL OR NOTES	NOMENCLATURE OR DESCRIPTION	FIND NO.

LIST OF MATERIALS

NEXT ASSY	USED ON
AS APPLICABLE	

APPLICATION

UNLESS OTHERWISE SPECIFIED
DIMENSIONS ARE IN INCHES
CAPACITOR VALUES ARE IN µf
RESISTOR VALUES ARE IN OHMS
TOLERANCES ON
FRACTIONS ± — DECIMALS ±.005 ANGLES ± —
DO NOT SCALE THIS DRAWING

MATERIAL
SEE NOTE 11

MIT
INSTRUMENTATION LAB
CAMBRIDGE MASS

DRAWN R. A. Jones 2-15-66
CHECKED 2-15-66
APPROVED
APPROVED
APPROVED MIT A. C. METZGER 5-18-66
APPROVED MSC
DATE

MANNED SPACECRAFT CENTER
HOUSTON, TEXAS

NAMEPLATES,
APOLLO G&N-GSE
(STANDARDS)

CODE IDENT NO. 80230
SIZE E
DRAWING NO. 1004260
SCALE NONE
SHEET 6 OF 6

[illegible]

NOTES:

1. INTERPRET DRAWING IN ACCORDANCE WITH STANDARDS PRESCRIBED IN MIL-D-70327.
2. DIMENSIONS ON EACH VIEW APPLY TO ALL VIEWS. (WITH THE EXCEPTION OF MOUNTING HOLES).
3. FORMATS ILLUSTATED WILL BE APPLICABLE TO ALL ITEMS REQUIRING NAMEPLATES BELOW END ITEM DESIGNATION (SYSTEMS, ASSEMBLIES, ETC.)
4. PLATE BACKGROUND TO BE LUSTERLESS BLACK PER FED-STD-595, COLOR 37038. BORDER, MARKING AND LETTERING TO BE NATURAL METAL,(ANODIZED ALUMINUM).
5. MARKING METHOD TO BE DIE STAMPING, ETCHING OR ENGRAVING IN ACCORDANCE WITH MIL P 19834.
6. LETTERING STYLE TO BE GOTHIC,(SANS SERIFS), AND NUMBERS TO BE ARABIC.
7. WHERE LOCATING DIMENSIONS ARE NOT SHOWN, CHARACTERS SHALL BE SYMMETRICALLY POSITIONED.
8. IDENTIFY WITH DRAWING NUMBER PER ND1002019.
9. WHEN "AUTO MARK" METAL MARKING TYPEWRITER IS USED TO ADD DATA TO BLANK SPACES, TYPE SIZE IS TO BE SELECTED FROM DIMENSIONS U, AC AND AM.
10. NASA SYMBOL IS TO BE PROPORTIONAL TO NAMEPLATE IN RATIO OF 1 TO 5 WITH DIMENSION A VALUE AND IS TO HAVE NATURAL BACKGROUND. NASA SYMBOL LETTERS LETTERING AND FEATHER TO BE BLACK,(OR WHITE FOR SILK SCREENING). WHERE BLACK FEATHER PROTRUDES INTO BLACK BACKGROUND, A MINIMUM OUTLINE OF NATURAL BACKGROUND SHALL EXIST.
11. NAMEPLATES WILL BE APPLIED BY METHODS LISTED BELOW, SHOWN IN ORDER OF PREFERENCE, (I.E., FOR RELIABILITY AND WEIGHT).
    - A - STENCIL OR SILK SCREEN DIRECTLY ON EQUIPMENT USING INK PER SCD 1010920,(WHITE OR BLACK).
    - B - ALUMINUM FOIL,(STYLE A OR B, TYPE I): FOIL SHALL BE .0030 ±.0005 THICK PER MIL-A-148. FOIL SHALL HAVE NO ADHESIVE BACKING. FOIL SHALL BE BONDED PER ND 1002219,(METHOD II). FOIL SHALL BE CLEAR ANODIZED PER MIL-A-8625, TYPE II.
    - C - PLATE, (STYLE A OR B, TYPE II): MATERIAL: QQ-A-250, TEMPER O OR H14, TYPE 1100, ALUMINUM ALLOY, .032 THICK. ANODIZE PER MIL-A-8625, TYPE II. ALUMINUM PLATE MUST BE FREE FROM BURRS AND SHARP CORNERS, MOUNTED WITH APPLICABLE SIZE FASTENERS.
12. NAMEPLATES SHALL BE CAPABLE OF MEETING APPLICABLE REQUIREMENTS OF MIL-M-13231.
13. ON DIMENSION TABLES SHOWN ON PAGES 2, 3, 4 AND 5, NA MEANS, "NOT APPLICABLE".

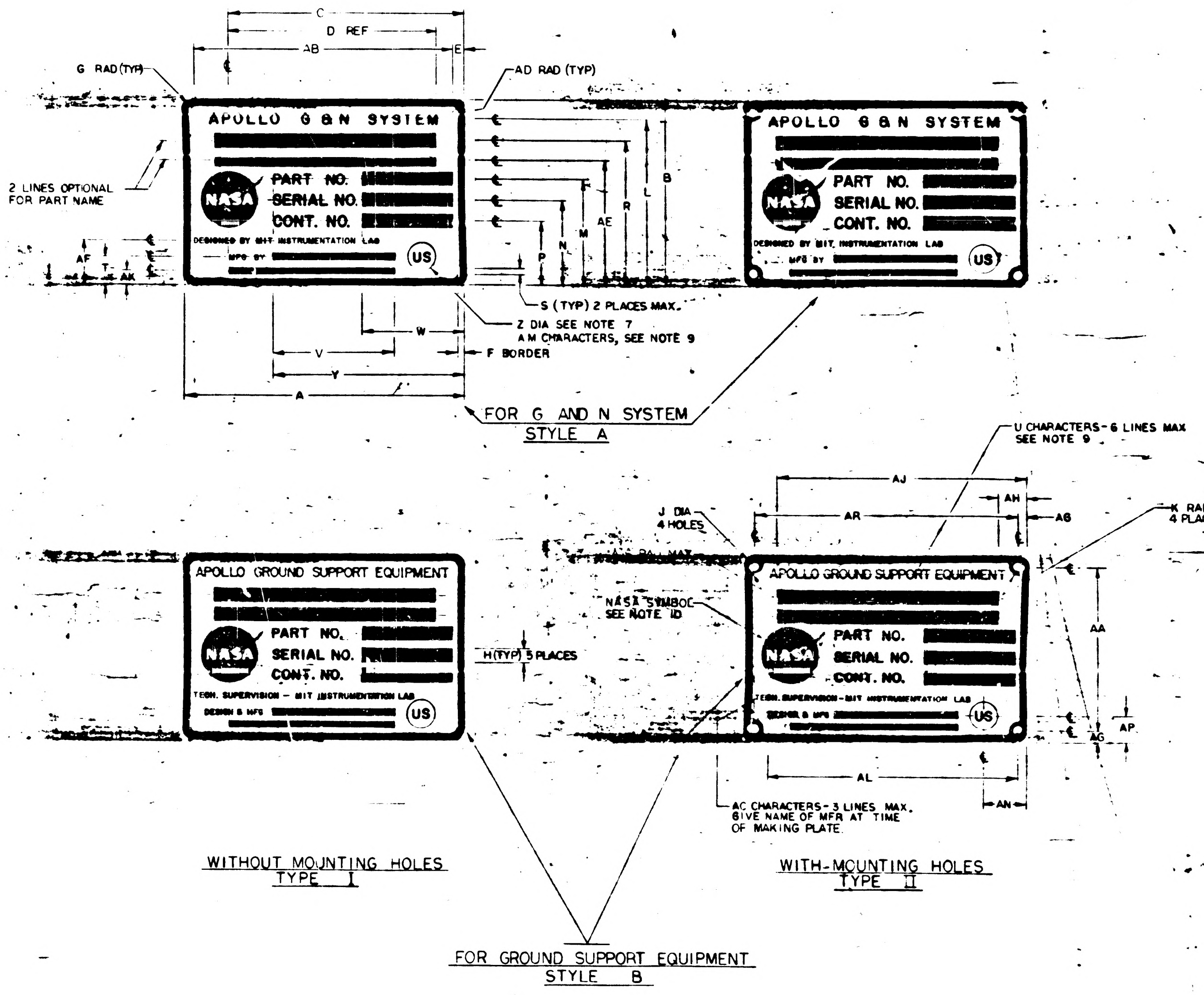

C
D REF
AB
E
G RAD (TYP)
AD RAD (TYP)
APOLLO G & N SYSTEM
PART NO.
SERIAL NO.
CONT. NO.
NASA
DESIGNED BY MIT INSTRUMENTATION LAB
MFG BY
US
2 LINES OPTIONAL FOR PART NAME
AF
T
AK
P
N
M
AE
R
L
B
S (TYP) 2 PLACES MAX.
Z DIA SEE NOTE 7
AM CHARACTERS, SEE NOTE 9
F BORDER
W
V
Y
A
FOR G AND N SYSTEM
STYLE A
U CHARACTERS-6 LINES MAX
SEE NOTE 9
AJ
AH
AR
AG
J DIA
4 HOLES
K RAD
4 PLACES
APOLLO GROUND SUPPORT EQUIPMENT
TECH. SUPERVISION - MIT INSTRUMENTATION LAB
DESIGN & MFG
NASA SYMBOL
SEE NOTE 10
H (TYP) 5 PLACES
AA
AP
AL
AN
AC CHARACTERS-3 LINES MAX.
GIVE NAME OF MFR AT TIME
OF MAKING PLATE.
WITHOUT MOUNTING HOLES
TYPE I
WITH-MOUNTING HOLES
TYPE II
FOR GROUND SUPPORT EQUIPMENT
STYLE B

SYM	ZONE	DESCRIPTION	BY	CHK	DATE	APPROVED
G		REPLACES REV F WITH CHANGE PER TDRR 20854				
H		REVISED PER TDRR 20892				
J		REVISED PER TDRR 20904				
K		REVISED PER TDRR 21379				
L		REVISED PER TDRR 21410				
M		REVISED PER TDRR 21993				
N		REVISED PER TDRR 22621				
P		REVISED PER TDRR 22671				
R		REVISED PER TDRR 22672				
S		REVISED PER TDRR 22750				
T		REVISED PER TDRR 22823				
U		REVISED PER TDRR 23072				
V		REVISED PER TDRR 23527				
W		REVISED PER TDRR 23824	RAJ			
Y		REVISED PER TDRR 24018	RAJ		11-15-65	
Z		REVISED PER TDRR 24040	RAJ		11-19-65	
AA		REVISED PER TDRR 24060	RAJ		11-19-65	
AB		REVISED PER TDRR 24868	RAJ		2-22-66	
AC		REVISED PER TDRR 24973	RAJ		1-4-66	
AD		REVISED PER TDRR 25065	RAJ			
AE		REVISED PER TDRR 25672	RAJ			
AF		REVISED PER TDRR 25671	RAJ		2-4-66	
AG		REVISED PER TDRR 26110	RAJ		2-15-66	
AH		REVISED PER TDRR 26372	"			
AJ		REVISED PER TDRR 26425	"			
AK		REVISED PER TDRR 26743	"		3-16-66	
AL		REVISED PER TDRR 26798	"		3-16-66	
AM		REVISED PER TDRR 27168	"		4-7-66	
AN		REVISED PER TDRR 27236	"		4-7-66	
AP		REVISED PER TDRR 27345	"		4-7-66	
AR		REVISED PER TDRR 27417	"		4-7-66	
AS		REVISED PER TDRR 27442	"		4-7-66	
AT		REVISED PER TDRR 27719	"		4-20-66	
AU		REVISED PER TDRR 27880	"			
AV		REVISED PER TDRR 27896	"		4-20-66	
AW		28110	"		5-16-66	
AY		26173	"			
AZ		28131	"			
BA		28124	"			
BB		REVISED PER TDRR 28511	"		5-16-66	
BC		" " " 28949	"			
BD		" " " 29222	"			
BE		" " " 29235	"			
BF		" " " 29322				
BG		" " " 29429				
BH		" " " 29445				
BJ		" " " 29335				
BK		" " " 296 9				
BL		" " " 29696				
BM		REVISION STATUS CHANGED	JSD	NS	7-29-66	
BN		REVISION STATUS CHANGED	JI			
BP		REVISION STATUS CHANGED	JI	RLW		
BR		REVISION STATUS CHANGED	JI	RLW		
BS		REVISION STATUS CHANGED	GW	RLW		
BT		REVISION STATUS CHANGED	GW	RLW		
BU		REVISION STATUS CHANGED	EH			
BV		REVISION STATUS CHANGED	JJB	RLW		
BW		REVISION STATUS CHANGED	JJB			
BY		REVISION STATUS CHANGED	JJB	RLW	10 OCT 66	
BZ		REVISION STATUS CHANGED	JJB	RLW	10 OCT 66	
CA		REVISION STATUS CHANGED	JJB		25 OCT 66	
CB		REVISION STATUS CHANGED	REF			
CC		REVISION STATUS CHANGED	AF			
CD		REVISION STATUS CHANGED				
CE		REVISION STATUS CHANGED			19 APR	
CF		REVISION STATUS CHANGED				
CG		REVISION STATUS CHANGED				

SUGGESTED PROPORTIONS FOR NAMEPLATE DIMENSIONS.

1. SELECT NAMEPLATE LENGTH, DIMENSION "A", TO FIT DESIGN NEEDS.
2. DIMENSIONS B THRU AS ON LINE 1 BELOW ARE PROPORTIONAL TO "A" BY MULTIPLIERS SHOWN IN LINE 2 BELOW.

1.	A	B	C	D	E	F	G	H	J	K	L	M	N	P	R	S	T	U	V
2.	1.000 A	.6563 A	.6438 A	.6875 A	.0391 A	.0240 A	.0391 A	.0469 A	.0547 A	.0469 A	.5938 A	.3750 A	.2969 A	.2187 A	.5079 A	.0313 A	.0938 A	.0391 A	.4375 A

1.	W	Y	Z	AA	AB	AC	AD	AE	AF	AG	AH	AJ	AK	AL	AM	AN	AP	AR	AS
2.	.3594 A	.6875 A	.1094 A	.5781 A	.9219 A	.0240 A	.0156 A	.4375 A	.1525 A	.0391 A	.1563 A	.8438 A	.0548 A	.8659 A	.0391 A	.1563 A	.0938 A	.9219 A	.0151 A

Ⓖ REPLACES REV F WITH CHANGE

QTY REQD	PART OR IDENTIFYING NO.	MATERIAL OR NOTES	NOMENCLATURE OR DESCRIPTION

LIST OF MATERIALS

AS APPLICABLE	
NEXT ASSY	USED ON

APPLICATION

UNLESS OTHERWISE SPECIFIED
DIMENSIONS ARE IN INCHES
CAPACITOR VALUES ARE IN µf
RESISTOR VALUES ARE IN OHMS
TOLERANCES ON
FRACTIONS ± — DECIMALS ±.005 ANGLES ± —
DO NOT SCALE THIS DRAWING

MATERIAL
SEE NOTE 11

MIT
INSTRUMENTATION LAB
CAMBRIDGE, MASS.

DRAWN R A Jones 7/16/65
CHECKED A J 7-22-65
APPROVED
APPROVED
APPROVED MIT
APPROVED MSC
DATE

MANNED SPACECRAFT CENTER
HOUSTON, TEXAS

NAMEPLATES,
APOLLO G&N-GSE
(STANDARDS)

CODE IDENT NO 80230
SIZE E
DRAWING NO 1004260
SCALE NONE
SHEET

SYM	ZONE	DESCRIPTION	DR	CHK	DATE	APPROVED
G		REPLACES REV F WITH CHANGE PER TDRR 20854.			[illegible]	
H		REVISED PER TDRR 20892			[illegible]	
J		REVISED PER TDRR 20904			[illegible]	
K		REVISED PER TDRR 21379			[illegible]	
L		REVISED PER TDRR 21410			[illegible]	
M		REVISED PER TDRR 21993				
N		REVISED PER TDRR 22621				
P		REVISED PER TDRR 22671				
R		REVISED PER TDRR 22672				
S		REVISED PER TDRR 22750				
T		REVISED PER TDRR 22823				
U		REVISED PER TDRR 23072			10-13-65	
V		REVISED PER TDRR 23521			10-27-65	
W		REVISED PER TDRR 23824	RAJ		11-9-65	
Y		REVISED PER TDRR 24018	RAJ		11-16-65	
Z		REVISED PER TDRR 24040	RAJ		11-19-65	
AA		REVISED PER TDRR 24060	RAJ		11-19-65	
AB		REVISED PER TDRR 24668	RAJ		12-22-65	
AC		REVISED PER TDRR 24973	RAJ		1-4-66	
AD		REVISED PER TDRR 25065	RAJ		1-18-66	
AE		REVISED PER TDRR 25672	RAJ		2-4-66	
AF		REVISED PER TDRR 25671	RAJ		2-4-66	
AG		REVISED PER TDRR 26110	RAJ		2-15-66	
AH		REVISED PER TDRR 26372	"		3-6-66	
AJ		REVISED PER TDRR 26425	"		3-6-66	
AK		REVISED PER TDRR 26743	"		3-16-66	
AL		REVISED PER TDRR 26798	"		3-16-66	
AM		REVISED PER TDRR 27168	"		4-8-66	
AN		REVISED PER TDRR 27235	"		4-8-66	
AP		REVISED PER TDRR 27345	"		4-8-66	
AR		REVISED PER TDRR 27417	"		4-8-66	
AS		REVISED PER TDRR 27442	"		4-8-66	
AT		REVISED PER TDRR 27719	"		4-21-66	
AU		REVISED PER TDRR 27880			4-21-66	
AV		REVISED PER TDRR 27896	"		4-21-66	
AW		28110	"		5-16-66	
AY		[illegible]	"			
AZ		28131	"			
BA		28124	"			
BB		REVISED PER TDRR 28911	"		5-16-66	
BC		" " " 28949			5-24-66	
BD		" " " 29222	"		6-8-66	
BE		" " " 29235	"		"	
BF		" " " 29322			6-30-66	
BG		" " " 29429	"		"	
BH		" " " 29449	"		"	
BJ		" " " 29335	"		"	
BK		" " " 29619	"		"	
BL		" " " 29696	"		"	
BM		REVISION STATUS CHANGED	JSD	N.S.	7-29-66	
BN		REVISION STATUS CHANGED	JI		[illegible]	
BP		REVISION STATUS CHANGED	JI		[illegible]	
BR		REVISION STATUS CHANGED	JI		[illegible]	
BS		REVISION STATUS CHANGED	GW		[illegible] AUG 66	
BT		REVISION STATUS CHANGED	GW		26 AUG 66	
BU		REVISION STATUS CHANGED	EH		9 [illegible] 66	
BV		REVISION STATUS CHANGED	JJB		30 SEP 66	
BW			JJB		30 SEP 66	
BY		" " "	JJB		10 OCT 66	
BZ		REVISION STATUS CHANGED	JJB		[illegible]	
CA		REVISION STATUS CHANGED	JJB		25 OCT 66	
CB		REVISION STATUS CHANGED	REF		10 DEC 66	
CC		REVISION STATUS CHANGED	AF		13 [illegible]	
CD		REVISION STATUS CHANGED	DR		[illegible]	
CE		REVISION STATUS CHANGED	[illegible]		19 APR 67	
CF		REVISION STATUS CHANGED	[illegible]		19 APR 67	
CG		REVISION STATUS CHANGED	A.N.		10 AUG 67	

DASH NO.	P/C	PART NAME	REMARKS	PART NO.	SER. NO.	CONT. NO.	STYLE	TYPE	MATERIAL	A	B	C	D	E	F	G	H	J	K	L	M	N	P	R	S	T	U	V	W	Y	Z	AA	AB	AC	AD	AE	AF	AG	AH	AJ	AK	AL	AM	AN	AP	AR
350	K	ALIGNMENT OPTICAL TELESCOPE (LEN)		NA	NA	NA	A	I	NOTE 11B	4.000	2.625	3.375	2.750	.156	.093	.156	.187	NA	NA	2.312	1.468	1.187	.906	2.031	NA	.375	.156	NA	1.437	2.750	.437	NA	3.688	.062	.062	1.750	.593	NA	.625	3.375	.187	NA	.156	.531	.453	NA
309	K																																													
308	K																																													
307	K						B	I	NOTE 11 B	4.000	2.625	3.375	2.750	.156	.093	.156	.187	NA	NA	2.328	1.468	.187	.906	2.031	.062	.375	.156	NA	1.437	2.750	.437	NA	3.687	.062	.062	1.750	.593	NA	NA	NA	NA	NA	NA	NA	NA	NA
306	K						B	II	NOTE 11 C	4.000	2.625	3.375	2.750	.156	.093	.156	.187	.125	.156	2.328	.468	.187	.906	2.031	.062	.375	.156		1.437	2.750	.437	2.312	3.687	.062	NA	1.750	.593									
305	K						B	I	NOTE 11 B	2.000	1.312	1.687	.375	.078	.048	.078	.093	NA	NA	1.164	.734	.593	.453	1.015	.048	.71	.078		.718	1.375	.187	NA	NA	.048	.031	.875	.320									
304	K						B	II	NOTE 11 C	2.000	1.312	1.687	1.375	.078	.048	.078	.093	.070	.078	1.164	.734	.593	.453	1.015	.048	.171	.078	NA	.718	1.375	.187	.156	.843	.048	NA	.875	.320	NA	NA	NA	NA	NA	NA	NA	NA	NA
303	K																																													
302	K																																													
301	K																																													
300	K	OPTICAL UNIT		NA	NA	NA	A	I	NOTE 11 B	2.000	1.312	.675	NA	NA	.048	.078	NA	NA	NA	1.090	.812	.675	.540	.940	NA	.265	NA	NA	NA	1.375	[illegible]	NA	NA	NA	NA	NA	.375	NA	NA	NA	.160	NA	.078	NA	NA	NA
9	K	2 IN AUTOCOLLIMATOR		1001702			B	II	NOTE 11 C	4.000	2.625	3.812	2.750	.156	.093	.156	.187	.125	.156	2.250	1.500	1.187	.906	2.031	.093	.375	.156	1.750	1.437	2.750	.437	2.312	3.687	.062	NA	1.750	.593	.156	1.062	3.812	.156	NA	.156	1.062	.375	3.687
8	K	[illegible] IN AUTOCOLLIMATOR		1017410			B	II	NOTE 11 C	4.000	2.625	3.812	2.750	.156	.093	.156	.187	.125	.156	2.250	1.500	1.187	.906	2.031	.093	.375	.156	1.750	1.437	2.750	.437	2.312	3.687	.062	NA	1.750	.593	.156	1.062	3.812	.156	NA	.156	1.062	.375	3.687
7	K	2½ IN AUTOCOLLIMATOR (SCT)		1017435			B	II	NOTE 11 C	4.000	2.625	3.812	2.750	.156	.093	.156	.187	.125	.156	2.250	1.500	1.187	.906	2.031	.093	.375	.156	1.750	1.437	2.750	.437	2.312	3.687	.062	NA	1.750	.593	.156	1.062	3.812	.156	NA	.156	1.062	.375	3.687
6	K	2½ IN AUTOCOLLIMATOR (SXT)		1017448			B	II	NOTE 11 C	4.000	2.625	3.812	2.750	.156	.093	.156	.187	.125	.156	2.250	1.500	1.187	.906	2.031	.093	.375	.156	1.750	1.437	2.750	.437	2.312	3.687	.062	NA	1.750	.593	.156	1.062	3.812	.156	NA	.156	1.062	.375	3.687
5	K	RETROREFLECTING PRISM ASSEMBLY		1019840			B	I	NOTE 11 B	4.000	2.625	3.812	2.750	.156	.093	.156	.187	NA	NA	2.250	1.500	1.187	.906	2.031	.093	.375	.156	1.750	1.437	2.750	.437	NA	NA	.062	.062	1.750	.593	.156	1.062	3.812	.156	NA	.156	1.062	.375	NA
4	K	S/H SIMULATOR ASSEMBLY		1019896			B	I	NOTE 11 B	4.000	2.625	3.812	2.750	.156	.093	.156	.187	NA	NA	2.250	1.500	1.187	.906	2.031	.093	.375	.156	1.750	1.437	2.750	.437	NA	NA	.062	.062	1.750	.593	.156	1.062	3.812	.156	NA	.156	1.062	.375	NA
3	K	REFERENCE MIRROR		1001767			B	I	NOTE 11 B	2.000	1.312	1.906	1.375	.078	.048	.078	[illegible]	NA	NA	1.125	.750	.593	.453	1.015	.062	.187	.078	.875	.718	1.375	.218	NA	NA	.048	.031	.875	.305	.078	.531	1.906	.078	NA	.078	.531	.187	NA
2	K	2 IN PLANE READING AUTOCOLLIMATOR		1017413			B	I	NOTE 11 B	2.000	1.312	1.906	1.375	.078	.048	.078	.093	NA	NA	1.125	.750	.593	.453	1.015	.062	.187	.078	.875	.718	1.375	.218	NA	NA	.048	.031	.875	.305	.078	.531	1.906	.078	NA	.078	.531	.187	NA
1	K	2 IN AUTOCOLLIMATOR		1001702			B	I	NOTE 11 B	2.000	1.312	1.906	1.375	.078	.048	.078	.093	NA	NA	1.125	.750	.593	.453	1.015	.062	.187	.078	.875	.718	1.375	.218	NA	NA	.048	.031	.875	.305	.078	.531	1.906	.078	NA	.078	.531	.187	NA

NOTES FOR TABLE

STYLE A IS FOR G&N SYSTEM
STYLE B IS FOR GROUND SUPPORT EQUIPMENT
TYPE I IS WITHOUT MOUNTING HOLES
TYPE II IS WITH MOUNTING HOLES.

Ⓖ REPLACES REV F WITH CHANGE

KOLLSMAN DASH NUMBERS

QTY REQD	PART OR IDENTIFYING NO	MATERIAL OR NOTES	NOMENCLATURE OR DESCRIPTION	FIND NO.

LIST OF MATERIALS

NEXT ASSY	USED ON
AS APPLICABLE	

APPLICATION

UNLESS OTHERWISE SPECIFIED
DIMENSIONS ARE IN INCHES
CAPACITOR VALUES ARE IN µf
RESISTOR VALUES ARE IN OHMS
TOLERANCES ON
FRACTIONS ± — DECIMALS ±.005 ANGLES ± —
DO NOT SCALE THIS DRAWING

MATERIAL
SEE NOTE 11

MIT
INSTRUMENTATION LAB
CAMBRIDGE MASS

MANNED SPACECRAFT CENTER
HOUSTON, TEXAS

DRAWN E. A. Jones 7-16-65
CHECKED 7-22-65
APPROVED
APPROVED
APPROVED MIT
APPROVED MSC
DATE

NAMEPLATES,
APOLLO G&N-GSE
(STANDANDS)

CODE IDENT NO 80230
SIZE E
DRAWING NO. 1004260
SCALE NONE
SHEET 2

NOTICE - WHEN GOVERNMENT DRAWINGS, SPECIFICATIONS, OR OTHER DATA ARE USED FOR ANY PURPOSE OTHER THAN IN CONNECTION WITH A DEFINITELY RELATED GOVERNMENT PROCUREMENT OPERATION, THE UNITED STATES GOVERNMENT THEREBY INCURS NO RESPONSIBILITY NOR ANY OBLIGATION WHATSOEVER; AND THE FACT THAT THE GOVERNMENT MAY HAVE FORMULATED, FURNISHED, OR IN ANY WAY SUPPLIED THE SAID DRAWINGS, SPECIFICATIONS, OR OTHER DATA IS NOT TO BE REGARDED BY IMPLICATION OR OTHERWISE AS IN ANY MANNER LICENSING THE HOLDER OR ANY OTHER PERSON OR CORPORATION, OR CONVEYING ANY RIGHTS OR PERMISSION TO MANUFACTURE, USE, OR SELL ANY PATENTED INVENTION THAT MAY IN ANY WAY BE RELATED THERETO.

SYM	ZONE	DESCRIPTION	DR	CHK	DATE	APPROVED
		REVISIONS 52768				
G		REPLACES REV F WITH CHANGE PER TDRR 20854				
H		REVISED PER TDRR 20892				
J		REVISED PER TDRR 20904				
K		REVISED PER TDRR 21379				
L		REVISED PER TDRR 21410				
M		REVISED PER TDRR 21993				
N		REVISED PER TDRR 22621				
P		REVISED PER TDRR 22671				
R		REVISED PER TDRR 22672				
S		REVISED PER TDRR 22750				
T		REVISED PER TDRR 22823				
U		REVISED PER TDRR 23072				
V		REVISED PER TDRR 23521				
W		REVISED PER TDRR 23824	RAJ			
Y		REVISED PER TDRR 24018	RAJ		11-16-65	
Z		REVISED PER TDRR 24040	RAJ		11-19-65	
AA		REVISED PER TDRR 24060	RAJ		11-19-65	
AB		REVISED PER TDRR 24868	RAJ		12-22-65	
AC		REVISED PER TDRR 24973	RAJ		1-4-66	
AD		REVISED PER TDRR 25065	RAJ		1-18-66	
AE		REVISED PER TDRR 25672	RAJ		2-4-66	
AF		REVISED PER TDRR 25671	RAJ		2-4-66	
AG		REVISED PER TDRR 26110	RAJ		2-15-66	
AH		REVISED PER TDRR 26372	"		3-16-66	
AJ		REVISED PER TDRR 26425	"		3-16-66	
AK		REVISED PER TDRR 26743	"		3-16-66	
AL		REVISED PER TDRR 26798	"		3-16-66	
AM		REVISED PER TDRR 27168	"		4-8-66	
AN		REVISED PER TDRR 27235	"		4-8-66	
AP		REVISED PER TDRR 27345	"		4-8-66	
AR		REVISED PER TDRR 27417	"		4-8-66	
AS		REVISED PER TDRR 27442	"		4-8-66	
AT		REVISED PER TDRR 27719	"		4-20-66	
AU		REVISED PER TDRR 27880			4-20-66	
AV		REVISED PER TDRR 27896	"		4-20-66	
AW		28110	"		5-16-66	
AY		28173	"		5-16-66	
AZ		28131	"		5-16-66	
BA		28124	"		5-16-66	
BB		REVISED PER TDRR 28511	"		5-16-66	
BC		" " " 28949	"		5-24-66	
BD		" " " 29222	"		6-8-66	
BE		" " " 29235	"		"	
BF		" " " 29322	"		6-23-66	
BG		" " " 29429	"		"	
BH		" " " 29449	"		"	
BJ		" " " 29335	"		"	
BK		" " " 29619	"		"	
BL		" " " 29696	"			
BM		" " " 29802	JSD	N.S.		
BN		REVISION STATUS CHANGED	JI			
BP		REVISED PER TDRR 30168	JI			
BR		REVISION STATUS CHANGED	JI			
BS		REVISION STATUS CHANGED	GW			
BT		REVISION STATUS CHANGED	GW			
BU		REVISION STATUS CHANGED	EH	JI		
BV		REVISION STATUS CHANGED	JJB			
BW		REVISED PER TDRR 31279	JJB			
BY		REVISION STATUS CHANGED	JJB		10 OCT 66	
BZ		REVISION STATUS CHANGED	JJB		10 OCT 66	
CA		REVISION STATUS CHANGED	JJB		25 OCT 66	
CB		REVISION STATUS CHANGED				
CC		REVISION STATUS CHANGED	AF			
CD		REVISED PER TDRR 32[illegible]40	DR			
CE		REVISED PER TDRR 33447				
CF		REVISION STATUS CHANGED				
CG		REVISION STATUS CHANGED				

DASH NO.	P/C	PART NAME	REMARKS	PART NO.	SER. NO.	CONT. NO.	STYLE	TYPE	MATERIAL	
299	R									
298	R									
285	R	BUFFER CIRCUIT ASSY		2014254-031	NA	NAS9497	B	I	NOTE 11B	FOR DIMENSIONS SEE DASH 15 VALUES BELOW
284	R	LOGIC DRAWER ASSY NO. 2		2014037-041	NA	NAS9-497	B	I	NOTE 11B	FOR DIMENSIONS SEE DASH 17 VALUES BELOW
283	R	DRAWER ASS'Y-PROGRAM & MONITOR		2014041-051	NA	NAS9-497	B	I	NOTE 11B	FOR DIMENSIONS SEE DASH 17 VALUES BELOW
282	R	COMPUTER TEST SET		2014042-061	NA	NAS9-497	B	II	NOTE 11C	FOR DIMENSIONS SEE DASH 18 VALUES BELOW
280	R	COMPUTER TEST SET		2014042-051	NA	NAS9 497	B	II	NOTE 11C	FOR DIMENSIONS SEE DASH 18 VALUES BELOW
279	R	SELF TEST ASSY		2014366-041	NA	NAS9-497	B	I	NOTE 11B	FOR DIMENSIONS SEE DASH- 15 VALUES BELOW
278	R	LOGIC DRAWER ASSY NO.1		2014036-041	NA	NAS9-497	B	I	NOTE 11B	FOR DIMENSIONS SEE DASH 17 VALUES BELOW
277	R	COMPUTER TEST SET		2014042-041	NA	NAS-9-497	B	II	NOTE 11C	FOR DIMENSIONS, SEE DASH 18 VALUES BELOW
276		DRAWER ASSY - PROGRAM & MONITOR		2014041-041				I	NOTE 11B	FOR DIMENSIONS, SEE DASH 17 VALUES BELOW
275		DRAWER ASSY RDC INTERFACE		2014045-031						
274		SELF TEST ASSY		2014366-031						FOR DIMENSIONS, SEE DASH 15 VALUES BELOW
273		LOGIC DRAWER ASSY NO. 2		2014037-031						FOR DIMENSIONS, SEE DASH 17 VALUES BELOW
272		DRAWING ASSY PROGRAMMER & MONITOR		2014041-031						FOR DIMENSIONS, SEE DASH 17 VALUES BELOW
271		LOGIC DRAWER ASSY NO. 1		2014036-031				I	NOTE 11B	
270		COMPUTER TEST SET		2014042-031				II	NOTE 11C	FOR DIMENSIONS, SEE DASH 18 VALUES BELOW
269		POWER CONTROL ASSY		2014044-021				I	NOTE 11B	FOR DIMENSIONS, SEE DASH 17 VALUES BELOW
268		SELF TEST ASSY		2014366-021						
267		AGC JUNCTION ASSY		2014341-021						
266		POWER CONTROL ASSY		2014079-021						
265		BUFFER CIRCUIT ASSY		2014254-021						FOR DIMENSIONS, SEE DASH 15 VALUES BELOW
264		DRAWER ASSY X Y INTERFACE		2014040-021						
263		DRAWER ASSY R D C INTERFACE		2014045-021						
262		DRAWER ASSY PROGRAMMER & MONITOR		201404[illegible]-021						
261		LOGIC DRAWER ASSY NO. 2		2014037-021						FOR DIMENSIONS, SEE DASH 17 VALUES BELOW
260		LOGIC DRAWER ASSY NO. 1		2014036-021				I	NOTE 11B	
259		OPERATION CONSOLE		2014024-021				II	NOTE 11C	
258		COMPUTER TEST SET		2014042-021						
257		AUXILIARY CALIBRATION CONSOLE		2014059-021						
256		AGC CALIBRATION CONSOLE		2014049-021				II	NOTE 11C	FOR DIMENSIONS, SEE DASH 18 VALUES BELOW
255		AGC HANDLING FIXTURE		2014262-021				I	NOTE 11B	FOR DIMENSIONS, SEE DASH 17 VALUES BELOW
254		DRAWER ASSY COMP. SIMULATOR		2014048-011				II	NOTE 11C	
253		SHIPPING KIT ASSY, [illegible] DSKY		20163[illegible]2-011						FOR DIMENSIONS, SEE DASH 18 VALUES BELOW
252		SHIPPING KIT ASSY, UNIVERSAL DSKY		2016316-011						
251		SHIPPING KIT ASSY, MAIN DSKY		2016313-011				II	NOTE 11C	
250		AMPLIFIER REWORK		2014386				I	NOTE 11B	FOR DIMENSIONS, SEE DASH 15 VALUES BELOW
249		TEMP MONITOR ASSY		2014313-011					NOTE 11C	FOR DIMENSIONS, SEE DASH 17 VALUES BELOW
248		AGC JUNCTION ASSY		201434[illegible]-011					NOTE 11B	
247		AC INPUT PANEL ASSY		2014302-011						FOR. DIMENSIONS, SEE DASH 15 VALUES BELOW
246		SELF TEST ASSY		2014392-011						
245		TAPE PUNCH ASSEMBLY		2014039-011						FOR DIMENSIONS,SEE DASH 15 VALUES BELOW
244	R	TAPE READER ASSEMBLY		2014038-011	NA	NAS-9-497	B	I	NOTE 11B	
243										
242										
241	R	APOLLO GUIDANCE COMPUTER GROUP		6003001	NA	NAS-9-497	A	I	NOTE 11B	FOR DIMENSIONS, SEE DASH 19 VALUES BELOW
240		SELF TEST ASSEMBLY		2014366-011	NA		B	I		FOR DIMENSIONS, SEE DASH 15 VALUES BELOW
239		POWER SUPPLY ASSY-115V., 400 CYCLE		2014207-041						FOR DIMENSIONS, SEE DASH 17 VALUES BELOW
238		AC INPUT PANEL ASSY		2014043-011						
237		POWER CONTROL ASSY		2014079-011						
236		DRAWER ASSY-X Y INTERFACE		2014040-011						
235		DRAWER ASSY RDC INTERFACE		2014045-011						FOR DIMENSIONS, SEE DASH 15 VALUES BELOW
234		BUFFER CIRCUIT ASSY		2014254-011						
233		CONTROL INTERFACE ASSY		2014204-041						
232		POWER CONTROL ASSY		2014044-011						
231		DRAWER ASSY, PROGRAMMER & MONITOR		2014041-011						FOR DIMENSIONS, SEE DASH 17 VALUES BELOW
230		CONNECTOR INTERFACE ASSY		2014272-011						
229		CONNECTOR INTERFACE ASSY		2014047-011						FOR DIMENSIONS, SEE DASH 15 VALUES BELOW
228		ANTENNA TUNING CAPACITOR ASSY		2014209-011						
227		MOUNTING FIXTURE ASSY		2014006-011						FOR DIMENSIONS, SEE DASH 17 VALUES BELOW
226		POWER SUPPLY ASSY 3 VDC		2014234-011						
225		PANEL ASSY - SIGNAL INTERFACE		2014010-011						
224		OSCILLOSCOPE ASSY		2014232-011						
223		AUXILIARY OUTLET ASSY		2014274-011						FOR DIMENSIONS, SEE DASH 15 VALUES BELOW
222		FREQUENCY COUNTER		2014233-011						
221		POWER SUPPLY ASSY 10,13, 28 VDC		2014235-011						
220		LOGIC DRAWER ASSY NO. 2		2014037-011						
219		LOGIC DRAWER ASSY NO. 1		2014036-011						FOR DIMENSIONS, SEE DASH 17 VALUES BELOW
218		COUNTER, ELECTRICAL ASSY		2014288-011						
217		POWER SUPPLY ASSY		2014279-011						FOR DIMENSIONS, SEE DASH 15 VALUES BELOW
216		TEST MOUNT ASSY		2014257-011						
215		UNIVERSAL DSKY PEDESTAL MOUNT		2014014-011						
214		MAIN DSKY PEDESTAL MOUNT		2014343				I	NOTE 11B	FOR DIMENSIONS, SEE DASH 17 VALUES BELOW
213		SHIPPING CONTAINER, MAIN DSKY		1006229				II	NOTE 11C	
212		NAV DSKY		1006231						
211		AGC		1006230						FOR DIMENSIONS, SEE DASH 18 VALUES BELOW
210		UNIVERSAL DSKY		1006422						
209		SHIPPING CONTAINER, AGC		1006421				II	NOTE 11C	
208		UNIVERSAL DSKY HANDLING FIXTURE		20140[illegible]3-011				I	NOTE 11B	FOR DIMENSIONS, SEE DASH 15 VALUES BELOW
207		NAV DSKY HANDLING FIXTURE		1014377						
206		MAIN DSKY HANDLING FIXTURE		1014334						FOR DIMENSIONS, SEE DASH 17 VALUES BELOW
205		AGC HANDLING FIXTURE		2014282-011				I	NOTE 11B	
204		OPERATION CONSOLE		2014024-011				II	NOTE 11C	
203		COMPUTER TEST SET		2014042-011		NAS-9-497				
202		DRAWER ASSY, COMPUTER SIMULATOR		2014048-011		[illegible]				FOR DIMENSIONS, SEE DASH 18 VALUES BELOW
201		AUXILIARY CALIBRATION CONSOLE		2014059-011		[illegible]				
200		AGC CALIBRATION CONSOLE		2014049-011	NA		B	II	NOTE 11C	

DASH NO.	P/C	PART NAME	REMARKS	PART NO.	SER. NO.	CONT. NO.	STYLE	TYPE	MATERIAL	A	B	C-	D	E	F	G	H	J	K	L	M	N
21																						
20		NA		NA	NA	NA	A	II	NOTE 11C	2.000	1.312	1.687	1.375	.078	.031	.078	.093	[illegible]	.093	1.187	.750	.593
19		NA		NA	NA	NA	A	I	NOTE 11B	2.000	1.312	1.687	1.375	.078	.031	.078	.093	NA	NA	1.187	.750	.593
18		NA		NA	NA	NA	B	II	NOTE 11C	4.187	.875	3.469	2.750	.156	.093	.156	.125	[illegible]	.125	1.625	1.032	.844
17		NA		NA	NA	NA	B	I	NOTE 11B	4.187	1.875	3.469	2.750	.156	.093	.156	.125	NA	NA	1.625	1.032	.844
16		NA		NA	NA	NA	B	II	NOTE 11C	2.000	1.312	1.687	1.375	.078	.031	.078	.093	[illegible]	.093	1.187	.750	.593
15	R	NA		NA	NA	NA	B	I	NOTE 11B	2.000	1.312	1.687	1.375	.078	.031	.078	.093	NA	NA	1.187	.750	.593

DASH NO.	P	R	S	T	U	V	W	Y	Z	AA	AB	AC	AD	AE	AF	AG	AH	AJ	AK	AL	AM	AN	AP	AR
21																								
20	.453	1.015	.062	.187	.078	.875	.718	1.375	.218	1.156	1.843	.048	NA	.875	.305	.078	.312	1.687	.078	NA	.078	.312	.187	1.843
19	.453	1.015	.062	.187	.078	.875	.718	1.375	.218	NA	NA	.048	.031	.875	.305	.078	.312	1.687	.078	NA	.078	.312	.187	NA
18	.656	1.406	.093	.344	.156	1.781	1.531	2.844	.312	1.562	3.875	.062	NA	1.219	.500	.156	.719	3.469	.156	NA	.156	.719	.344	3.875
17	.656	1.406	.093	.344	.156	1.781	1.531	2.844	.312	NA	NA	.062	.062	1.219	.500	.156	.719	3.469	.156	NA	.156	.719	.344	NA
16	.453	1.015	.062	.187	.078	.875	.718	1.375	.218	1.156	1.843	.048	NA	.875	.305	.078	.312	1.687	.078	NA	.078	.312	.187	1.843
15	.453	1.015	.062	.187	.078	.875	.718	1.375	.218	NA	NA	.048	.031	.875	.305	.078	.312	1.687	.078	NA	.078	.312	.187	NA

NOTES FOR TABLE

STYLE A IS FOR G & N SYSTEM
STYLE B IS FOR GROUND SUPPORT EQUIPMENT
TYPE I IS WITHOUT MOUNTING HOLES
TYPE II IS WITH MOUNTING HOLES

THIS SHEET ADDED

Ⓖ REPLACES REV F WITH CHANGE

RAYTHEON DASH NUMBERS

QTY REQD	PART OR IDENTIFYING NO	MATERIAL OR NOTES	NOMENCLATURE OR DESCRIPTION	ITEM NO

LIST OF MATERIALS

NEXT ASSY	USED ON
AS APPLICABLE	

APPLICATION

UNLESS OTHERWISE SPECIFIED
DIMENSIONS ARE IN INCHES
CAPACITOR VALUES ARE IN µf
RESISTOR VALUES ARE IN OHMS
TOLERANCES ON
FRACTIONS ± — DECIMALS ±.005 ANGLES ± —
DO NOT SCALE THIS DRAWING

MATERIAL
SEE NOTE 11

MIT
INSTRUMENTATION LAB
CAMBRIDGE MASS

		DATE
DRAWN	R A Jones	7-16-65
CHECKED		7-22-65
APPROVED		
APPROVED		
APPROVED MIT		
APPROVED MSC		

MANNED SPACECRAFT CENTER
HOUSTON, TEXAS

NAMEPLATES,
APOLLO GEN-GSE
(STANDARDS)

CODE IDENT NO. 80230
SIZE E
DRAWING NO. 1004260
SCALE NONE
SHEET

D-SH NO.	P/C	PART NAME	REMARKS	PART NO.	SER. NO.	CONT. NO.	STYLE	TYPE	MATERIAL
199	AC	EYEPIECE STORAGE [illegible]		2021255-011					
198	AC	SIGNAL CONDITIONER ASSY C/M		2007234		[illegible]			NOTE 11B
197	AC	SIGNAL CONDITIONER ASSY C/M		2007235					
196	AC	SIGNAL CONDITIONER ASSY LEM		6007010					
195	AC	PSA & SIGNAL CONDITIONER ASSY		6007009					NOTE 11B
194	AC	PANEL, MONITOR		2900031-031			B	II	NOTE 11C
193	AC	DISTRIBUTION BOX, GSE		2900024-031					
192	AC	ANALYZER, OPTICS-INERTIAL		2900023-031					
191	AC	TEST CONTROL		2900027-031					
190	AC	PANEL, PWR SUP AND LOAD		2900033-031					
189	AC	ADPT MODULE, P.S.A.		6900088-011					
188	AC	ADPT MODULE, P.S.A.		290[illegible]143-[illegible]					
187	AC	FIXTURE, MTG, PTA/PSA		2900066-021		NAS 9-497	[illegible]	I	NOTE 11C
186	AC	ANNUNCIATOR PANEL AND EYEPIECE STORAGE ASSEMBLY		1021255-021					
185	AC	ANNUNCIATOR PANEL AND EYEPIECE STORAGE ASSEMBLY		1021255-011			A		
184	AC	FIX., HAND., G AND N HARNESS		1901846-041		NAS9-497	[illegible]	[illegible]	NOTE 11C
183	AC	INSTALLING TOOL, ELEC. CONN		1902586-011			B	II	NOTE 11C
182	AC	ADPT MODULE, P.S.A.		6900088-011			B	II	NOTE 11C
181	AC	G&N INDICATOR CONTROL PANEL ASSY		2014578-011			A	I	NOTE 11B
180	AC	ADPT MODULE, P.S.A.		1902431-031			B	II	
179	AC	MOUNTING PLATE, IMU/PTA		6900083-011					
178	AC	MOUNTING PLATE, COMPONENT		6900007-021					
177	AC	FIX., MOUNTING, SUBSYSTEM		2900070-021					
176	AC	FIX., MOUNTING, G AND N		2900067-021					
175	AC	CSL., COOL. AND PWR, G AND N		1902134-031					
174	AC	FIX., HAND., C/M AND LEM CDU		29009[illegible]9-0[illegible]					NOTE 11C
173	AC	FIX., HANDLING, C/M PSA		2900998-011					
172	AC	CAGING ELECTRONICS, GYRO		2900029-021					
171	AC	DISTRIBUTION BOX, GSE		2900024-021					
[illegible]	AC	ANALYZER, OPTICS-INERTIAL		2900023-021					
169	AC	ADPT, TEST [illegible]		2900037-021					
168	AC	TEST SELECTOR		2900028-021					
167	AC	TEST CONTROL		2900027-021					
166	AC	PANEL, MONITOR		2900031-021					
165	AC	TERM. BOARD STORAGE DRAWER		2900927-011					
164	AC	INPUT/OUTPUT PANEL		2900926-011					
163	AC	CONTROL PANEL		2900896-011					
162	AC	CSL. CAL AND TEST, SCM/PSAAM		2900895-011					
161	AC	FIX., LIFT AND HAND., IMU		[illegible]472-011					
160	AC	FIX., HAND., G AND N HARNESS		1901846-031					
159	AC	BATTERY POWER PACK		1900011-031			B	II	NOTE 11C
158	AC	COUPLING DATA UNIT ASSEMBLY C/M		2007222			A	I	NOTE 11B
157	AC	COUPLING DATA UNIT ASSEMBLY - LEM		2007222					
156	AC	POWER & SERVO ASSEMBLY C/M		2007200					
155	AC	PIPA ELECTRONICS ASSEMBLY		2007201					
154	AC	PULSE TORQUE ASSEMBLY - LEM		6007000					
153	AC	POWER & SERVO ASSEMBLY - LEM		6007200			A	I	NOTE 11B
152	AC	CONT PNL, RSVR CKT TESTER		2900770-011			B	II	NOTE 11C
151	AC	TESTER, RESOLVER CIRCUIT		2900708-011					
150	AC	JUNCTION BOX, P.S.A./G.S.E.		1901933-021					
149	AC	BATTERY PACK, LIFTING		2900[illegible]-011					
148	AC	MOUNTING PLATE, COMPONENT		6900007-011					
147	AC	MOUNTING PLATE, COMPONENT		2900677-011					
146	AC	CART, TRANS., G AND N		1900009-041					
145	AC	CONTAINER, SHIPPING, IMU		1900010-021		NAS9-497	B	II	NOTE 11C
144	AC	FIX., MOUNTING, G AND N		1902204-021			B	II	NOTE 11C
143	AC	CSL, COOL. AND PWR, G AND N		1902134-021					
142	AC	ANALYZER, OPTICS-INERTIAL		2900023-011					
141	AC	CONT, TEMP, PORTABLE		2900060-011					
140	AC	TESTER, CKT, IMU/CDU RSVR		2900286-011					
139	AC	SIMULATOR, LD/SIG, CDU		2900285-011					
138	AC	SIMULATOR, LD/SIG, OPTICS		1902023-021					
137	AC	FIX., MOUNTING, IMU/NAV BASE		6900003-011					
136	AC	FIXTURE, [illegible] BASE		2900072-011					
135	AC	FIX., MOUNTING, SUB SYSTEM		2900070-011					
134	AC	FIX., HAND., G AND N HARNESS		2900069-011					
133	AC	CNTR, SHIPPING, NAV BASE		2900068-011					
132	AC	FIX., MOUNTING, G AND N		2900067-011					
131	AC	SIMULATOR, LD/SIG, IMU/CDU		2900062-011					
130	AC	TESTER, GYRO WHEEL		2900061-011					
129	AC	COOLANT SUPPLY		1902133-021					
128	AC	TABLE, ROTARY		1900926-021					
127	AC	FIX., HAND., OPTICS		2900074-011					
126	AC	FIXTURE, [illegible]		2900066-011					
125	AC	CONT, TEMP, IMU LIFTING		2900063-011					
124	AC	FIXTURE, [illegible]		2900064-011					
123	AC	CONT, OPTICS, REMOTE		1902046-021					
122	AC	TEST CONTROL		1902009-021					
121	AC	ADPT MODULE, P.S.A.		1902431-021					
120	AC	BRIDGE, DECADE ERROR		2900128-011					
119	AC	PWR SUP, ELECTRONICS		[illegible]900012-011					
118	AC	PWR SUP, RELAY AND LAMP		1900049-031					
117	AC	CONSOLE, OSCILLOGRAPH		1900000-021					
116	AC	ADPT MODULE, P.S.A.		1902431-011					
115	AC	ADPT, TEST POINT, PTA/PEA.		2900145-011					
114	AC	ADPT, TEST POINT, P.S.A.		2900037-011					
113	AC	CONTROL, GIMBAL POSITION		2900036-011					
112	AC	SELECTOR, SIGNAL, PRIMARY		2900035-011					
111	AC	SEL, SIG, OSCILLOGRAPH		2900034-011					
110	AC	PANEL, PWR SUP AND LOAD		2900033-011					
109	AC	PANEL, MONITOR		2900031-011					
108	AC	PANEL, AUXILIARY INPUT		2900030-011					
107	AC	CAGING ELECTRONICS, GYRO		2900029-011					
106	AC	TEST SELECTOR		2900028-011					
105	AC	TEST CONTROL		2900027-011					
104	AC	MONITOR AND CONTROL, TEMP		2900026-011					
103	AC	DISTRIBUTION BOX, GSE		2900024-011					
102	AC	VOLTMETER, DIGITAL		2900007-011			B	II	NOTE 11C
101	AC	NAVIGATION BASE ASSEMBLY - LEM		[illegible]899950		NAS-9-497	A	I	NOTE 11B
100	AC	NAVIGATION BASE ASSEMBLY		2899982		NAS-9-497	A	I	NOTE 11B

D-SH NO.	A	B	C	D	E	F	G	H	J	K	L	M	N	P	R	S	T	U	V	W	Y	Z	AA	AB	AC	AD	AE	AF	AG	AH	AJ	AK	AL	AM	AN	AP	AR
198	FOR DIMENSIONS, SEE DASH 100 VALUES BELOW																																				
194	FOR DIMENSIONS, SEE DASH 141 VALUES BELOW																																				
192	FOR DIMENSIONS, SEE DASH 144 VALUES BELOW																																				
191	FOR DIMENSIONS, SEE DASH 141 VALUES BELOW																																				
186	FOR DIMENSIONS, SEE DASH 100 VALUES BELOW																																				
184	FOR DIMENSIONS, SEE DASH 144 VALUES BELOW																																				
183	FOR DIMENSIONS, SEE DASH 102 VALUES BELOW																																				
182	FOR DIMENSIONS, SEE DASH 141 VALUES BELOW																																				
181	3.000	1.938	2.437	NA	.125	.062	.186	.156	NA	NA	1.750	.125	.906	.688	.500	NA	.281	.125	NA	1.094	2.062	.312	NA	2.500	.062	.125	1.312	.469	NA	NA	NA	.156	NA	.125	.469	.344	NA
180	FOR DIMENSIONS, SEE DASH 121 VALUES BELOW																																				
179	FOR DIMENSIONS, SEE DASH 144 VALUES BELOW																																				
174	FOR DIMENSIONS, SEE DASH 141 VALUES BELOW																																				
[illegible]	FOR DIMENSIONS, SEE DASH 144 VALUES BELOW																																				
169	FOR DIMENSIONS, SEE DASH 141 VALUES BELOW																																				
162	FOR DIMENSIONS, SEE DASH 144 VALUES BELOW																																				
161	FOR DIMENSIONS, SEE DASH 141 VALUES BELOW																																				
160	FOR DIMENSIONS, SEE DASH 144 VALUES BELOW																																				
158	FOR DIMENSIONS SEE DASH 100 VALUES BELOW																																				
156	[illegible]	.968	1.718	NA	.093	.031	.06	.093	NA	NA	.858	.608	.484	.358	.733	.062	.140	.062	NA	.968	1.450	.125	NA	1.720	.046	.03	NA	.210	NA	NA	NA	.070	NA	.046	.32	.16	NA
155	FOR DIMENSIONS SEE DASH 100 VALUES BELOW																																				
152	FOR DIMENSIONS, SEE DASH 141 VALUES BELOW																																				
150	FOR DIMENSIONS, SEE DASH 144 VALUES BELOW																																				
149	FOR DIMENSIONS, SEE DASH 141 VALUES BELOW																																				
148	FOR DIMENSIONS, SEE DASH 144 VALUES BELOW																																				
144	4.125	1.812	3.250	NA	.125	.062	.12	.156	.188 .194	.125	1.625	1.140	.890	.640	.390	.125	.171	.125	1.875	1.687	2.625	.250	1.562	3.843	.093	NA	NA	.359	.125	.437	3.688	NA	3.687	.093	.40	.25	3.875
143	4.125	1.812	3.250	↓	.125	.062	.12	.156	↓	.125	1.625	1.140	.890	.640	.390	.125	.171	.125	1.875	1.687	2.625	.250	1.562	3.843	.093	↓	↓	.359	.125	.437	3.688	↓	3.687	.093	.40	.25	3.875
142	4.125	1.812	3.250		.125	.062	.12	.156		.125	1.625	1.140	.890	.640	.390	.125	.171	.125	1.875	1.687	2.625	.250	1.562	3.843	.093			.359	.125	.437	3.688		3.687	.093	.40	.25	3.875
141	2.125	.968	.718		.093	.031	.06	.093		.093	.858	.608	.484	.358	.733	.077	.116	.062	.937	.875	1.343	.125	.781	1.892	.046			.209	.093	.250	1.875		1.840	.046	.23	.16	1.938
140	4.125	.812	3.250		.125	.062	.12	.156		.125	1.625	1.140	.890	.640	.390	.125	.171	.125	1.875	1.687	2.625	.250	1.562	3.843	.093			.359	.125	.437	3.688		3.687	.093	.40	.25	3.875
128	4.125	.812	3.250		.125	.062	.12	.156		.125	1.625	1.140	.890	.640	.390	.125	.171	.125	1.875	1.687	2.625	.250	1.562	3.843	.093			.359	.125	.437	3.688		3.687	.093	.40	.25	3.875
127	2.125	.968	1.718		.093	.031	.06	.093		.093	.858	.608	.484	.358	.733	.077	.116	.062	.937	.875	1.343	.125	.781	1.892	.046			.209	.093	.250	1.875		1.840	.046	.23	.16	1.938
102	2.125	.968	1.718	NA	.093	.031	.06	.093	.188 .194	.093	.858	.608	.484	.358	.733	.077	.116	.062	.937	.875	1.343	.125	.781	1.892	.046	NA	NA	.209	.093	.250	1.875	NA	1.840	.046	.23	.16	1.938
101	2.000	1.312	1.906	1.375	.078	.048	.078	.093	NA	NA	1.125	.750	.593	.453	1.015	.062	.187	.078	.875	.718	1.375	.218	NA	NA	.048	.031	.875	.305	.078	.531	1.906	.078	NA	.078	.531	.187	NA
100	2.000	.312	1.906	1.375	.078	.048	.078	.093	NA	NA	1.125	.750	.593	.453	1.015	.062	.187	.078	.875	.718	1.375	.218	NA	NA	.048	.031	.875	.305	.078	.531	1.906	.078	NA	.078	.531	.187	NA

AC ELECTRONICS DASH NUMBERS

THIS SHEET ADDED

Ⓖ REPLACES REV F WITH CHANGE

NOTES FOR TABLE

STYLE A IS FOR G&N SYSTEM
STYLE B IS FOR GROUND SUPPORT EQUIPMENT
TYPE I IS WITHOUT MOUNTING HOLES
TYPE II IS WITH MOUNTING HOLES

NOTE: AC DASH NO'S. CONT. ON SH.6

REVISIONS

SYM	ZONE	DESCRIPTION	DR	CHK	DATE	APPROVED
G		REPLACES REV F WITH CHANGE PER TDRR 20854.			[illegible]	
H		REVISED PER TDRR 20592			[illegible]	
J		REVISED PER TDRR 20904			[illegible]	
K		REVISED PER TDRR 21379			[illegible]	
L		REVISED PER TDRR 21410			8/23/65	
M		REVISED PER TDRR 21993				
N		REVISED PER TDRR 22621				
P		REVISED PER TDRR 22671				
R		REVISED PER TDRR 22672				
S		REVISED PER TDRR 22750				
T		REVISED PER TDRR 22823				
U		REVISED PER TDRR 23072			[illegible]	
V		REVISED PER TDRR 23521			10-26-65	
W		REVISED PER TDRR 23824	RAJ		11-9-65	
Y		REVISED PER TDRR 24018	RAJ		11-16-65	
Z		REVISED PER TDRR 24040	RAJ		11-19-65	
AA		REVISED PER TDRR 24060	RAJ		[illegible]-19-65	
AB		REVISED PER TDRR 24868	RAJ		12-22-65	
AC		REVISED PER TDRR 24973	RAJ		1-4-66	
AD		REVISED PER TDRR 25065	RAJ		1-18-66	
AE		REVISED PER TDRR 25672	RAJ		2-4-66	
AF		REVISED PER TDRR 25671	RAJ		2-4-66	
AG		REVISED PER TDRR 26110	RAJ		2-15-66	
AH		REVISED PER TDRR 26372	"		3-16-66	
AJ		REVISED PER TDRR 26425	"		3-16-66	
AK		REVISED PER TDRR 26743	"		3-16-66	
AL		REVISED PER TDRR 26798	"		3-16-66	
AM		REVISED PER TDRR 27168			4-8-66	
AN		REVISED PER TDRR 27235	"		4-8-66	
AP		REVISED PER TDRR 27345	"		4-8-66	
AR		REVISED PER TDRR 27417	"		4-8-66	
AS		REVISED PER TDRR 27442	"		4-8-66	
AT		REVISED PER TDRR 27719	"		4-21-66	
AU		REVISED PER TDRR 27880	"		4-21-66	
AV		REVISED PER TDRR 27896			4-21-66	
AW		28110	"		5-16-66	
AY		28173	"			
AZ		28131	"			
BA		28124	"			
BB		REVISED PER TDRR 28511			5-16-66	
BC		" " " 28949	"		5-24-66	
BD		" " " 29222	"		6-8-66	
BE		" " " 29235	"		"	
BF		" " " 29322	"		6-24-66	
BG		" " " 29429	"		"	
BH		" " " 29449	"		"	
BJ		" " " 29335			"	
BK		" " " 29619	"		"	
BL		" " " 29696	"		6-29-66	
BM		REVISION STATUS CHANGED	JSD	NS	7-29-66	
BN		REVISION STATUS CHANGED	JI	RLW	[illegible]	
BP		REVISION STATUS CHANGED	JI	RLW	[illegible] AUG 66	
BR		REVISED PER TDRR 30241	JI	RLW	[illegible] AUG 66	
BS		REVISION STATUS CHANGED	GW	RLW	[illegible] AUG 66	
BT		REVISION STATUS CHANGED	GW	RLW	[illegible] AUG 66	
BU		REVISION STATUS CHANGED	EH	JI	[illegible]	
BV		REVISION STATUS CHANGED	JJB	RLW	30 SEP 66	
BW		REVISION STATUS CHANGED	JJB	RLW	30 SEP 66	
BY		REVISION STATUS CHANGED	JJB	RLW	10 OCT 66	
BZ		REVISION STATUS CHANGED	JJB	RLW	10 OCT 66	
CA		REVISION STATUS CHANGED	JJB		29 OCT 66	
CB		REVISION STATUS CHANGED	REF		10 DEC 66	
CC		REVISION STATUS CHANGED	AF	BW	12 JAN 67	
CD		REVISION STATUS CHANGED	DR		14 FEB 67	
CE		REVISION STATUS CHANGED	[illegible]		19 APR 67	
CF		REVISION STATUS CHANGED	[illegible]		19 APR 67	
CG		REVISION STATUS CHANGED	A.N.		[illegible]	

QTY REQD	PART OR IDENTIFYING NO.	MATERIAL OR NOTES	NOMENCLATURE OR DESCRIPTION	FIND NO.

LIST OF MATERIALS

AS APPLICABLE	
NEXT ASSY	USED ON

APPLICATION

UNLESS OTHERWISE SPECIFIED
DIMENSIONS ARE IN INCHES
CAPACITOR VALUES ARE IN µf
RESISTOR VALUES ARE IN OHMS
TOLERANCES ON
FRACTIONS ± — DECIMALS ±.005 ANGLES ± —
DO NOT SCALE THIS DRAWING

MATERIAL
SEE NOTE 11

MIT
INSTRUMENTATION LAB
CAMBRIDGE MASS

DRAWN R. A. Jones 7-16-65
CHECKED A. J. [illegible] 7-22-65
APPROVED
APPROVED [illegible]
APPROVED MIT [illegible]
APPROVED MSC [illegible]
DATE

MANNED SPACECRAFT CENTER
HOUSTON, TEXAS

NAMEPLATES,
APOLLO G&N-GSE
(STANDARDS)

CODE IDENT NO 80230
SIZE E
DRAWING NO. 1004260
SCALE NONE

-499	MIT
-98	

REVISIONS

SYM	ZONE	DESCRIPTION	DR	CHK	DATE	APPROVED
G		REPLACES REV F WITH CHANGE PER TDRR 20854				
H		REVISED PER TDRR [illegible]				
J		REVISED PER TDRR 20904				
K		REVISED PER TDRR 21379				
L		REVISED PER TDRR 21410				
M		REVISED PER TDRR 21993				
N		REVISED PER TDRR 22621				
P		REVISED PER TDRR 22671				
R		REVISED PER TDRR 22672				
S		REVISED PER TDRR 22750				
T		REVISED PER TDRR 22823				
U		REVISED PER TDRR 23072				
V		REVISED PER TDRR [illegible]				
W		REVISED PER TDRR 23624	RAJ			
Y		REVISED PER TDRR 24018	RAJ		1-16-66	
Z		REVISED PER TDRR 24040	RAJ			
AA		REVISED PER TDRR 24060	RAJ			
AB		REVISED PER TDRR 24868	RAJ			
AC		REVISED PER TDRR 24973	RAJ			
AD		REVISED PER TDRR 25065	RAJ		1-18-66	
AE		REVISED PER TDRR 25672	RAJ		2-4-66	
AF		REVISED PER TDRR 25671	RAJ		2-4-66	
AG		REVISED PER TDRR 26110	RAJ		2-15-66	
AH		REVISED PER TDRR 26372	"		3-16-66	
AJ		REVISED PER TDRR 26425	"		3-16-66	
AK		REVISED PER TDRR 26743	"		3-16-66	
AL		REVISED PER TDRR 26798	"		3-16-66	
AM		REVISED PER TDRR 27168	"		4-7-66	
AN		REVISED PER TDRR 27235	"		4-7-66	
AP		REVISED PER TDRR 27345	"		4-7-66	
AR		REVISED PER TDRR 27417	"		4-7-66	
AS		REVISED PER TDRR 27442	"		4-7-66	
AT		REVISED PER TDRR 27719	"		4-20-66	
AU		REVISED PER TDRR 27880	"		4-20-66	
AV		REVISED PER TDRR 27896	"		4-20-66	
AW		28110	"		5-16-66	
AY		28173	"			
AZ		28131	"			
BA		28124	"			
BB		REVISED PER TDRR 28511	"		5-16-66	
BC		" " " 28949	"			
BD		" " " 29222	"		6-8-66	
BE		" " " 29235	"		"	
BF		" " " 29322	"		6-24-66	
BG		" " " 29429	"		"	
BH		" " " 29449	"		"	
BJ		" " " 29335	"		"	
BK		" " " 29619	"		"	
BL		" " " 29696	"		6-29-66	
BM		REVISION STATUS CHANGED	JSD		7-29-66	
BN		REVISION STATUS CHANGED				
BP		REVISION STATUS CHANGED				
BR		REVISION STATUS CHANGED				
BS		REVISION STATUS CHANGED				
BT		REVISION STATUS CHANGED	GW			
BU		REVISION STATUS CHANGED				
BV		REVISION STATUS CHANGED				
BW		REVISION STATUS CHANGED	JJB			
BY		REVISION STATUS CHANGED	JJB			
BZ		REVISION STATUS CHANGED	JJB		OCT 66	
CA		REVISION STATUS CHANGED	JJB		25 OCT 66	
CB		REVISION STATUS CHANGED				
CC		REVISION STATUS CHANGED				
CD		REVISION STATUS CHANGED				
CE		REVISION STATUS CHANGED				
CF		REVISION STATUS CHANGED				
CG		REVISION STATUS CHANGED				

THIS SHEET ADDED

Ⓖ REPLACES REV F WITH CHANGE

DASH NO.	P/C	PART NAME	REMARKS	PART NO.	SER. NO.	CONT. NO.	STYLE	TYPE	MATERIAL	A	B	C	D	E	F	G	H	J	K	L	M	N	P	R	S	T	U	V	W	Y	Z	AA	AB	AC	AD	AE	AF	AG	AH	AJ	AK	AL	AM	AN	AP	AR
401	MIT	COMPUTER ASSY		2003100		NAS-9-497	A	I	NOTE 11 B	2.000	1.312	1.906	1.375	.078	.048	.078	.093	NA	NA	1.125	.750	.593	.453	1.015	.062	.187	.078	.875	.718	.375	.218	NA	NA	.048	.031	.875	.305	.078	.531	1.906	.078	NA	.078	.531	.187	NA
400	MIT	LIFTING SLING - G&N INST. QUAL. F.X. & AZM REF. FIX.		1021640		NAS-9-4065	B	II	NOTE 11 C	2.000	.312	1.687	1.375	.078	.048	.078	.093	[illegible]	.093	1.187	.750	.593	.453	1.015	.062	.187	.078	.875	.718	1.375	.218	1.156	1.843	.048	NA	.875	.305	.078	.312	1.687	.110	1.830	.070	.275	.180	[illegible]

MIT DASH NUMBERS

NOTES FOR TABLE

STYLE A IS FOR G&N SYSTEM

STYLE B IS FOR GROUND SUPPORT EQUIPMENT

TYPE I IS WITHOUT MOUNTING HOLES

TYPE II IS WITH MOUNTING HOLES

QTY REQD	PART OR IDENTIFYING NO.	MATERIAL OR NOTES	NOMENCLATURE OR DESCRIPTION

LIST OF MATERIALS

AS APPLICABLE

NEXT ASSY | USED ON

APPLICATION

UNLESS OTHERWISE SPECIFIED
DIMENSIONS ARE IN INCHES
CAPACITOR VALUES ARE IN µf
RESISTOR VALUES ARE IN OHMS
TOLERANCES ON
FRACTIONS ± — DECIMALS ±.005 ANGLES ± —
DO NOT SCALE THIS DRAWING

MATERIAL
SEE NOTE 11

MIT
INSTRUMENTATION LAB
CAMBRIDGE, MASS

MANNED SPACECRAFT CENTER
HOUSTON, TEXAS

DRAWN R A Jones 7-16-65
CHECKED
APPROVED
APPROVED
APPROVED MIT
APPROVED MSC
DATE

NAMEPLATES,
APOLLO G&N-GSE
(STANDARDS)

CODE IDENT NO 80230
SIZE E
DRAWING NO. 1004260
SCALE NONE
SHEET OF

NOTICE – [illegible]

REVISIONS						
SYM	ZONE	DESCRIPTION	BY	CHK	DATE	APPROVED
AG		CHANGED NUMBER OF SHEETS FROM 5 TO 6 PER TDRR 26110.	RAJ		2-15-66	
AH		REVISED PER TDRR 26372	"		3-16-66	
AJ		REVISED PER TDRR 26425	"		3-16-66	
AK		REVISED PER TDRR 26743	"		3-16-66	
AL		REVISED PER TDRR 26796	"		3-16-66	
AM		REVISED PER TDRR 27[illegible]68	"		4-7-66	
AN		REVISED PER TDRR 27235	"		4-7-66	
AP		REVISED PER TDRR 27345	"		4-7-66	
AR		REVISED PER TDRR 27417	"		4-7-66	
AS		REVISED PER TDRR 27442	"		4-7-66	
AT		REVISED PER TDRR 27719	"		4-20-66	
AU		REVISED PER TDRR 27880	"		4-20-66	
AV		REVISED PER TDRR 27896	"		4-20-66	
AW		↕ 28110	"		5-16-66	
AY		↕ 28173	"		5-16-66	
AZ		↕ 28131	"		5-16-66	
BA		↕ 28124	"		5-16-66	
BB		REVISED PER TDRR 28511	"		5-16-66	
BC		" " " 28949	"		5-24-66	
BD		" " " 29222	"		6-8-66	
BE		" " " 29235	"		"	
BF		" " 29322	"		6-20-66	
BG		" " " 29429	"		"	
BH		" " 29449	"		"	
BJ		" " " 29335	"		"	
BK		" " " 29619	"		"	
BL		" " " 29696	"		6-23-66	
BM		REVISION STATUS CHANGED	USD	N.S.	7-29-66	
BN		REVISED PER TDRR 29974	JL	RLW	22 AUG 66	
BP		REVISION STATUS CHANGED	JL	RLW	22 AUG 66	
BR		REVISION STATUS CHANGED	JL	RLW	[illegible]	
BS		REVISED PER TDRR 30530	GW	RLW	26 AUG 66	
BT		REVISED PER TDRR 30543	GW	[illegible]	26 AUG 66	
BU		REVISED PER TDRR 30898	EH	JL	[illegible] SEP	
BV		REVISED PER TDRR 31241	JJB	[illegible]	[illegible]	
BW		REVISION STATUS CHANGED	JJB	RLW	30 SEP 66	
BY		REVISED PER TDRR 31341	JJB	RLW	10 OCT 66	
BZ		REVISED PER TDRR 31393	JJB	RLW	10 OCT 66	
CA		REVISED PER TDRR 31593	JJB	[illegible]	25 OCT 66	
CB		REVISED PER TDRR 32187	REF	[illegible]	16 DEC 66	
CC		REVISED PER TDRR 32512	AF	[illegible]	[illegible] 67	
CD		REVISION STATUS CHANGED	DR	N.W.	[illegible] FEB 67	
CE		REVISION STATUS CHANGED	[illegible]	[illegible]	19 APR 67	
CF		REVISED PER TDRR 33558	[illegible]	[illegible]	[illegible]	
CG		REVISED PER TDRR 33968	A.N.	[illegible]	[illegible] 67	

DASH NO.	P/C	PART NAME	REMARKS	PART NO.	SER NO.	CONT NO.	STYLE	TYPE	MATERIAL	A	B	C	D	E	F	G	H	J	K	L	M	N	P	R	S	T	U	V	W	Y	Z	AA	AB	AC	AD	AE	AF	AG	AH	AJ	AK	AL	AM	AN	AP	AR
599	AC																																													
598	AC																																													
559		CSL, CAL AND TEST, SCM/PSAAM		2900895-031		FOR OTHER DATA SEE DASH 547																																								
558		PSA ADAPTER MODULE (LEM)		6900088-021		FOR OTHER DATA SEE DASH 189																																								
557		FIX., HANDLING, C/M PSA		2900998-021		NAS 9-497	B	II	NOTE IIC	FOR DIMENSIONS SEE DASH 141 VALUES																																				
556		FIX., MOUNTING G&N	(-144)	2900067-041		NAS9-497	B	II	NOTE IIC	FOR DIMENSIONS SEE DASH 500 VALUES																																				
555	AC	OPTICAL UNIT ASSEMBLY		1021368-061		NAS 9-497	A	I	NOTE IIB	2.000	1.312	1.687	1.375	.078	.048	.078	.093	NA	NA	1.125	.750	.593	.453	1.015	.062	.187	.078	.875	.718	1.375	.218	NA	NA	.048	.031	.875	.305	NA	.468	1.531	NA	NA	.078	.312	.187	NA
554	AC	OPTICAL UNIT ASSEMBLY		1021368-051		NAS 9-497	A	I	NOTE IIB	2.000	1.312	1.687	1.375	.078	.048	.078	.093	NA	NA	1.125	.750	.593	.453	1.015	.062	.187	.078	.875	.718	1.375	.218	NA	NA	.048	.031	.875	.305	NA	.468	1.531	NA	NA	.078	.312	.187	NA
553	AC	OPTICAL UNIT AND BELLOWS ASS'Y		2010790-111		NAS 9-497	A	I	NOTE IIB	2.000	1.312	1.687	1.375	.078	.048	.078	.093	NA	NA	1.125	.750	.593	.453	1.015	.062	.187	.078	.875	.718	1.375	.218	NA	NA	.048	.031	.875	.305	NA	.468	1.531	NA	NA	.078	.312	.187	NA
552	AC	OPTICAL UNIT AND BELLOWS ASS'Y		2010730-081		NAS9-497	A	I	NOTE IIB	2.000	1.312	1.687	1.375	.078	.048	.078	.093	NA	NA	1.125	.750	.593	.453	1.015	.062	.187	.078	.875	.718	1.375	.218	NA	NA	.048	.031	.875	.305	NA	.468	1.531	NA	NA	.078	.312	.187	NA
551	AC	OPTICAL UNIT AND BELLOWS ASS'Y		2010790-071		NAS9-497	A	I	NOTE IIB	2.000	1.312	1.687	1.375	.078	.048	.078	.093	NA	NA	1.125	.750	.593	.453	1.015	.062	.187	.078	.875	.718	1.375	.218	NA	NA	.048	.031	.875	.305	NA	.468	1.531	NA	NA	.078	.312	.187	NA
550	AC	OPTICAL UNIT AND BELLOWS ASS'Y		2010790-081		NAS9-497	A	I	NOTE IIB	2.000	1.312	1.687	1.375	.078	.048	.078	.093	NA	NA	1.125	.750	.593	.453	1.015	.062	.187	.078	.875	.718	1.375	.218	NA	NA	.048	.031	.875	.305	NA	.468	1.531	NA	NA	.078	.312	.187	NA
548		CAGING ELECTRONICS, GYRO		2900029-031		NAS-9-497	B	II	NOTE IIC	2.125	.968	1.718	NA	.093	.031	.06	.093	.100/.104	.093	.858	.608	.484	.358	.733	.077	.116	.062	.937	.875	1.343	.125	.781	1.892	.046	NA	NA	.209	.093	.250	1.875	NA	1.840	.046	.23	.16	1.938
547		CSL, CAL AND TEST, SCM/PSAAM		2900895-021		NAS-9-497	B	II	NOTE II C	4.125	1.812	3.250	NA	.125	.062	.12	.156	.100/.104	.125	1.625	1.140	.890	.640	1.390	.125	.171	.125	1.875	1.687	2.625	.250	1.562	3.843	.093	NA	NA	.359	.125	.437	3.688	NA	3.687	.093	.40	.25	3.875
546		FIX., HAND., C/M AND LEM CDU		2900999-021		NAS-9-497	B	II	NOTE II C	2.125	.968	1.718	NA	.093	.031	.06	.093	.100/.104	.093	.858	.608	.484	.358	.733	.077	.116	.062	.937	.875	1.343	.125	.781	1.892	.046	NA	NA	.209	.093	.250	1.875	NA	1.840	.046	.23	.16	1.938
545	AC	G&N INDICATOR CONTROL PANEL ASSY		2014578-021		NAS-9-497	A	I	NOTE II B	3.000	1.938	2.437	NA	.125	.062	.188	.156	NA	NA	1.750	1.125	.906	.688	1.500	NA	.281	.125	NA	1.094	2.062	.312	NA	2.500	.062	.125	1.312	.469	NA	NA	NA	.156	NA	.125	.469	.344	NA
544		ADPT MODULE, P.S.A.		1902431-051		NAS-9-497	B	II	NOTE II C	2.125	.968	1.718	NA	.093	.031	.06	.093	.100/.104	.093	.858	.608	.484	.358	.733	.077	.116	.062	.937	.875	1.343	.125	.781	1.892	.046	NA	NA	.209	.093	.250	1.875	NA	1.840	.046	.23	.16	1.938
[illegible]																																														
[illegible]																																														
[illegible]	AC	FIXTURE, MOUNTING, IMU		2900000-021		NAS 9-497	B	II	NOTE IIC	4.125	1.812	3.250	NA	.125	.062	.12	.156	.100/.104	.125	1.625	1.140	.890	.640	1.390	.125	.171	.125	1.875	1.687	2.625	.250	1.562	3.843	.093	NA	NA	.359	.125	.437	3.688	NA	3.687	.093	.40	.25	3.875
[illegible]	AC	PANEL, MONITOR		2900031-041		NAS9-497	B	II	NOTE IIC	2.125	.968	1.718	NA	.093	.031	.06	.093	.100/.104	.093	.858	.608	.484	.358	.733	.077	.116	.062	.937	.875	1.343	.125	.781	1.892	.046	NA	NA	.209	.093	.250	1.875	NA	1.840	.046	.23	.25	1.938
542	AC	BATTERY PACK, LIFTING		2900812-021		NAS9-497	B	II	NOTE IIC	2.125	.968	1.718	NA	.093	.031	.06	.093	.100/.104	.093	.858	.608	.484	.358	.733	.077	.116	.062	.937	.875	1.343	.125	.781	1.892	.046	NA	NA	.209	.093	.250	1.875	NA	1.840	.046	.23	.16	1.938
540	[illegible]	ADPT, TEST POINT, P.S.A.		2900037-031		NAS 9-497	B	II	NOTE IIC	2.125	.968	1.718	NA	.093	.031	.06	.093	.100/.104	.093	[illegible]	[illegible]	.484	.358	.733	.077	.116	.062	.937	.875	1.343	.125	.781	1.892	.046	NA	NA	.209	.093	.250	1.875	NA	[illegible]	.046	.23	.16	1.938
539	AC	ANNUNCIATOR PANEL AND EYEPIECE STORAGE ASSEMBLY		1021255-041		↕	A	I	NOTE IIB	2.000	1.312	1.906	1.375	.078	.048	.078	.093	NA	NA	1.125	.750	.593	.453	1.015	.062	.187	.078	.875	.718	1.375	.218	NA	NA	.048	.031	.875	.305	.078	.531	1.906	.078	NA	.078	.531	.187	NA
538	AC	ANNUNCIATOR PANEL AND EYEPIECE STORAGE ASSEMBLY		1021255-031		↕	A	I	NOTE IIB	2.000	1.312	1.906	1.375	.078	.048	.078	.093	NA	NA	1.125	.750	.593	.453	1.015	.062	.187	.078	.875	.718	1.375	.218	NA	NA	.048	.031	.875	.305	.078	.531	1.906	.078	NA	.078	.531	.187	NA
537	AC	TEST SELECTOR		2900028-031		↕	B	II	NOTE IIC	2.125	.968	1.718	NA	.093	.031	.06	.093	.100/.104	.093	.858	.608	.484	.358	.733	.077	.116	.062	.937	.875	1.343	.125	.781	1.892	.046	NA	NA	.209	.093	.250	1.875	NA	1.840	.046	.23	.16	1.938
536	AC	ANALYZER, OPTICS-INERTIAL		2900023-041		↕	B	II	NOTE IIC	4.125	1.812	3.250	NA	.125	.062	.12	.156	.100/.104	.125	1.625	1.140	.890	.640	1.390	.125	.171	.125	1.875	1.687	2.625	.250	1.562	3.843	.093	NA	NA	.359	.125	.437	3.688	NA	3.687	.093	.40	.25	3.875
535	AC	CONT, TEMP, PORTABLE		2900060-021		↕	B	II	NOTE IIC	2.125	.968	1.718	NA	.093	.031	.06	.093	.100/.104	.093	.858	.608	.484	.358	.733	.077	.116	.062	.937	.875	1.343	.125	.781	1.892	.046	NA	NA	.209	.093	.250	1.875	NA	1.840	.046	.23	.16	1.938
534	AC	COMPUTER CONT & RETICLE DIMMER		6014512-021		↕	A	I	NOTE IIB	2.000	1.312	1.906	.375	.078	.048	.078	.093	NA	NA	1.125	.750	.593	.453	1.015	.062	.187	.078	.875	.718	1.375	.218	NA	NA	.048	.031	.875	.305	.078	.531	1.906	.078	NA	.078	.531	.187	NA
533	AC	ADPT MODULE, P.S.A.		1902431-041		↕	B	II	NOTE IIC	2.125	.968	1.718	NA	.093	.031	.06	.093	.100/.104	.093	.858	.608	.484	.358	.733	.077	.116	.062	.937	.875	1.343	.125	.781	1.892	.046	NA	NA	.209	.093	.250	1.875	NA	1.840	.046	.23	.16	1.938
532	AC	TRAY BREAKOUT, 105 PIN		1900807-021		↕	↕	↕	↕	4.125	1.812	3.250	↕	.125	.062	.12	.156	.100/.103	.125	1.625	1.140	.890	.640	1.390	.125	.171	.125	1.875	1.687	2.625	.250	1.562	3.843	.093	↕	↕	.359	.125	.437	3.688	↕	3.687	.093	.40	.25	3.875
531	AC	TRAY BREAKOUT, 84 PIN		1900806-021		↕	↕	↕	↕	4.125	1.812	3.250	↕	.125	.062	.12	.156	.100/.104	.125	1.625	1.140	.890	.640	1.390	.125	.171	.125	1.875	1.687	2.625	.250	1.562	3.843	.093	↕	↕	.359	.125	.437	3.688	↕	3.687	.093	.40	.25	3.875
530	AC	HEAT SINK - TRAY EXTENDER		1900808-021		↕	↕	↕	↕	2.125	.968	1.718	↕	.093	.031	.06	.093	.100/.104	.093	.858	.608	.484	.358	.733	.077	.116	.062	.937	.875	1.343	.125	.781	1.892	.046	↕	↕	.209	.093	.250	1.875	↕	1.840	.046	.23	.16	1.938
529	AC	TESTER, FAILURE INDICATOR		1900809-021		↕	↕	↕	↕	2.125	.968	1.718	NA	.093	.031	.06	.093	.100/.104	.093	.858	.608	.484	.358	.733	.077	.116	.062	.937	.875	1.343	.125	.781	1.892	.046	NA	NA	.209	.093	.250	1.875	NA	1.840	.046	.23	.16	1.938
						↕	↕	↕																																						
527	AC	FIX., MOUNTING, G AND N	(-144)	1902204-021		↕	↕	↕		FOR DIMENSIONS, SEE DASH 500 VALUES BELOW																																				
526	AC	FIX., MOUNTING, G AND N	(-144)	2900067-031		↕	↕	↕																																						
525	AC	PORTABLE TEMP., CONTROLLER		1900496-021		↕	B	II	NOTE IIC	3.000	1.937	2.437	2.312	.125	.031	.125	.156	.125	.125	1.718	1.187	.968	.749	1.452	.093	.295	[illegible]	1.312	1.00	2.000	.250	1.687	2.750	.062	N/A	N/A	.463	.125	[illegible]	[illegible]	.140	2.562	.090	.468	.359	2.750
524	AC	POWER, SERVO AND THERMOCOUPLE ASSEMBLY C/M		2010743		↕	A	I	NOTE IIB	2.125	.968	1.718	NA	.093	.031	.06	.093	NA	NA	.858	.608	.484	.358	.733	.062	.140	.062	NA	.968	1.450	.125	NA	1.720	.046	.03	NA	.210	NA	NA	NA	.070	NA	.046	[illegible]	.16	NA
523	AC	PULSE TORQUE AND THERMOCOUPLE ASSEMBLY - LEM		6010656		↕	↕	↕	↕																																					
522	AC	COUPLING DATA UNIT AND THERMOCOUPLE ASSEMBLY - LEM		2010744		↕	↕	↕	↕	FOR DIMENSIONS, SEE DASH 508 VALUES BELOW																																				
521	AC	COUPLING DATA UNIT AND THERMOCOUPLE ASSEMBLY - C/M		2010744		↕	↕	↕	↕																																					
520	AC	PIPA ELECTRONICS AND THERMOCOUPLE ASSEMBLY		2010745		↕	A	I	NOTE IIB																																					
519	AC	FIXTURE, HANDLING, LEM-PSA	(-141)	6900129-011		↕	B	II	NOTE IIC	FOR DIMENSIONS, SEE DASH 508 VALUES BELOW																																				
518	AC	JUNCTION BOX, GSE-PSA	(-144)	1901933-031		↕	B	II	NOTE IIC	FOR DIMENSIONS, SEE DASH 500 VALUES BELOW																																				
517	AC	FIX., HAND., OPTICS INSTL.	(-141)	[illegible]1380-011		↕	B	II	NOTE IIC	FOR DIMENSIONS SEE DASH 502 VALUES BELOW																																				
516	AC	POWER, SERVO AND THERMOCOUPLE ASSEMBLY-LEM		6010655		NAS 9-497	A	I	NOTE IIB	FOR DIMENSIONS SEE DASH 508 VALUES BELOW																																				
514	AC	SIGNAL COND. ASSY LEM OPER.	(-100)	6007013		NAS-9-497	A	I	NOTE IIB	FOR DIMENSIONS, SEE DASH 508 VALUES BELOW																																				
513	↕	JUMPER, BY-PASS	(-141)	1021616		↕	B	II	NOTE IIC	2.125	.968	1.718	NA	.093	.031	.06	.093	.100/.104	.093	.858	.608	.484	.358	.733	.077	.116	.062	.937	.875	1.343	.125	.781	1.892	.046	NA	NA	.209	.093	.250	1.875	NA	1.840	.046	.23	.16	1.938
512	↕	COUPLING DATA UNIT ASSEMBLY C/M	(-100)	2007322-011		↕																																								
511	↕	COUPLING DATA UNIT ASSEMBLY - LEM	(-100)	2007322-021		↕	A	I	NOTE IIB	FOR DIMENSIONS, SEE DASH 508 VALUES BELOW																																				
510	↕	BATTERY POWER PACK	(-144)	1900011-041		↕	B	II	NOTE IIC	FOR DIMENSIONS, SEE DASH 500 VALUES BELOW																																				
509	↕	JUNCTION BOX, P.S.A./G.S.E.	(-144)	1902195-021		↕	B	II	NOTE IIC																																					
508	↕	NAVIGATION BASE ASSEMBLY - LEM	(-100)	6899480		↕	A	I	NOTE IIB	2.000	1.312	1.906	1.375	.078	.048	.078	.093	NA	NA	1.125	.750	.593	.453	1.015	.062	.187	.078	.875	.718	1.375	.218	NA	NA	.048	.031	.875	.305	.078	.531	1.906	.078	NA	.078	[illegible]	.187	NA
507	↕	CSL, COOL. AND PWR., G AND N	(-144)	1902134-041		↕	B	II	NOTE IIC	FOR DIMENSIONS, SEE DASH 500 VALUE BELOW																																				
506	↕	BREAKOUT BOX, CABLE ADAPTER	(-141)	2901011-011		↕	↕	↕	↕																																					
505	↕	MONITOR AND CONTROL, TEMP	(-141)	2900026-021		↕	↕	↕	↕																																					
504	↕	PWR SUP, GUIDANCE SYSTEM	(-141)	1900033-021		↕	↕	↕	↕	2.125	.968	1.718	NA	.093	.031	.06	.093	.100/.104	.093	.858	.608	.484	.358	.733	.077	.116	.062	.937	.875	1.343	.125	.781	1.892	.046	NA	NA	.209	.093	.250	1.875	NA	1.840	.046	.23	.16	1.938
503	↕	CONTROL, GIMBAL POSITION	(-141)	2900036-021		↕	↕	↕	↕																																					
502	↕	ADPT, TEST POINT, PTA/PEA.	(-141)	2900145-021		↕	↕	↕	↕																																					
501	↕	MOUNTING PLATE, COMPONENT	(-144)	[illegible]00067-031		NAS 9-497	B	II	NOTE IIC	FOR DIMENSIONS SEE DASH 500 VALUES BELOW																																				
500	AC	MOUNTING PLATE, COMPONENT	(-144)	[illegible]00677-02						4.125	1.812	3.250	NA	.125	.062	.12	.156	.100/.104	.25	1.625	1.140	.890	.640	1.390	.125	.171	.25	1.875	.687	2.625	.250	1.562	3.843	.093	NA	NA	.359	.125	.437	3.688	NA	3.687	.093	.40	.25	3.875

Ⓐ THIS SHEET ADDED

A C ELECTRONICS DASH NUMBERS

NOTES FOR TABLE
STYLE A IS FOR G&N SYSTEM
STYLE B IS FOR GROUND SUPPORT EQUIPMENT
TYPE I IS WITHOUT MOUNTING HOLES
TYPE II IS WITH MOUNTING HOLES

QTY REQD	PART OR IDENTIFYING NO.	MATERIAL OR NOTES	NOMENCLATURE OR DESCRIPTION	ITEM NO.

LIST OF MATERIALS

NEXT ASSY	USED ON
NOT APPLICABLE	

APPLICATION

UNLESS OTHERWISE SPECIFIED
DIMENSIONS ARE IN INCHES
CAPACITOR VALUES ARE IN μf
RESISTOR VALUES ARE IN OHMS
TOLERANCES ON
FRACTIONS ± — DECIMALS ±.005 ANGLES ± —
DO NOT SCALE THIS DRAWING

MATERIAL
SEE NOTE 11

MIT
INSTRUMENTATION LAB
CAMBRIDGE, MASS.

DRAWN E. A. Jones 2-15-66
CHECKED 2-15-66
APPROVED
APPROVED
APPROVED MIT
APPROVED MSC
DATE

MANNED SPACECRAFT CENTER
HOUSTON, TEXAS

NAMEPLATES,
APOLLO G&N-GSE
(STANDARDS)

CODE IDENT NO 80230
SIZE E
DRAWING NO. 1004260
SCALE NONE
SHEET 6 OF 6

NOTES:

1. INTERPRET DRAWING IN ACCORDANCE WITH STANDARDS PRESCRIBED IN MIL-D-70327.
2. DIMENSIONS ON EACH VIEW APPLY TO ALL VIEWS. (WITH THE EXCEPTION OF MOUNTING HOLES).
3. FORMATS ILLUSTATED WILL BE APPLICABLE TO ALL ITEMS REQUIRING NAMEPLATES BELOW END ITEM DESIGNATION (SYSTEMS, ASSEMBLIES, ETC.)
4. PLATE BACKGROUND TO BE LUSTERLESS BLACK PER FED-STD-595, COLOR 37038. BORDER, MARKING AND LETTERING TO BE NATURAL METAL,(ANODIZED ALUMINUM).
5. MARKING METHOD TO BE DIE STAMPING, ETCHING OR ENGRAVING IN ACCORDANCE WITH MIL P 19834.
6. LETTERING STYLE TO BE GOTHIC,(SANS SERIFS), AND NUMBERS TO BE ARABIC.
7. WHERE LOCATING DIMENSIONS ARE NOT SHOWN,CHARACTERS SHALL BE SYMMETRICALLY POSITIONED.
8. IDENTIFY WITH DRAWING NUMBER PER ND1002019.
9. WHEN "AUTO MARK" METAL MARKING TYPEWRITER IS USED TO ADD DATA TO BLANK SPACES, TYPE SIZE IS TO BE SELECTED FROM DIMENSIONS U, AC AND AM.
10. NASA SYMBOL IS TO BE PROPORTIONAL TO NAMEPLATE IN RATIO OF 1 TO 5 WITH DIMENSION A VALUE AND IS TO HAVE NATURAL BACKGROUND. NASA SYMBOL LETTERS LETTERING AND FEATHER TO BE BLACK,(OR WHITE FOR SILK SCREENING). WHERE BLACK FEATHER PROTRUDES INTO BLACK BACKGROUND, A MINIMUM OUTLINE OF NATURAL BACKGROUND SHALL EXIST.
11. NAMEPLATES WILL BE APPLIED BY METHODS LISTED BELOW, SHOWN IN ORDER OF PREFERENCE,(IE., FOR RELIABILITY AND WEIGHT).
    - A - STENCIL OR SILK SCREEN DIRECTLY ON EQUIPMENT USING INK PER SCD 1010920,(WHITE OR BLACK).
    - B - ALUMINUM FOIL,(STYLE A OR B, TYPE I):
      FOIL SHALL BE .0030 ±.0005 THICK PER MIL-A-148.
      FOIL SHALL HAVE NO ADHESIVE BACKING.
      FOIL SHALL BE BONDED PER ND 1002219,(METHOD II).
      FOIL SHALL BE CLEAR ANODIZED PER MIL-A-8625, TYPE II.
    - C - PLATE, (STYLE A OR B, TYPE II):
      MATERIAL: QQ-A-250, TEMPER O OR H14, TYPE 1100,ALUMINUM ALLOY, .032 THICK.
      ANODIZE PER MIL-A-8625, TYPE II.
      ALUMINUM PLATE MUST BE FREE FROM BURRS AND SHARP CORNERS, MOUNTED WITH APPLICABLE SIZE FASTENERS.
12. NAMEPLATES SHALL BE CAPABLE OF MEETING APPLICABLE REQUIREMENTS OF MIL-M-13231.
13. ON DIMENSION TABLES SHOWN ON PAGES 2, 3, 4 AND 5, NA MEANS, "NOT APPLICABLE".

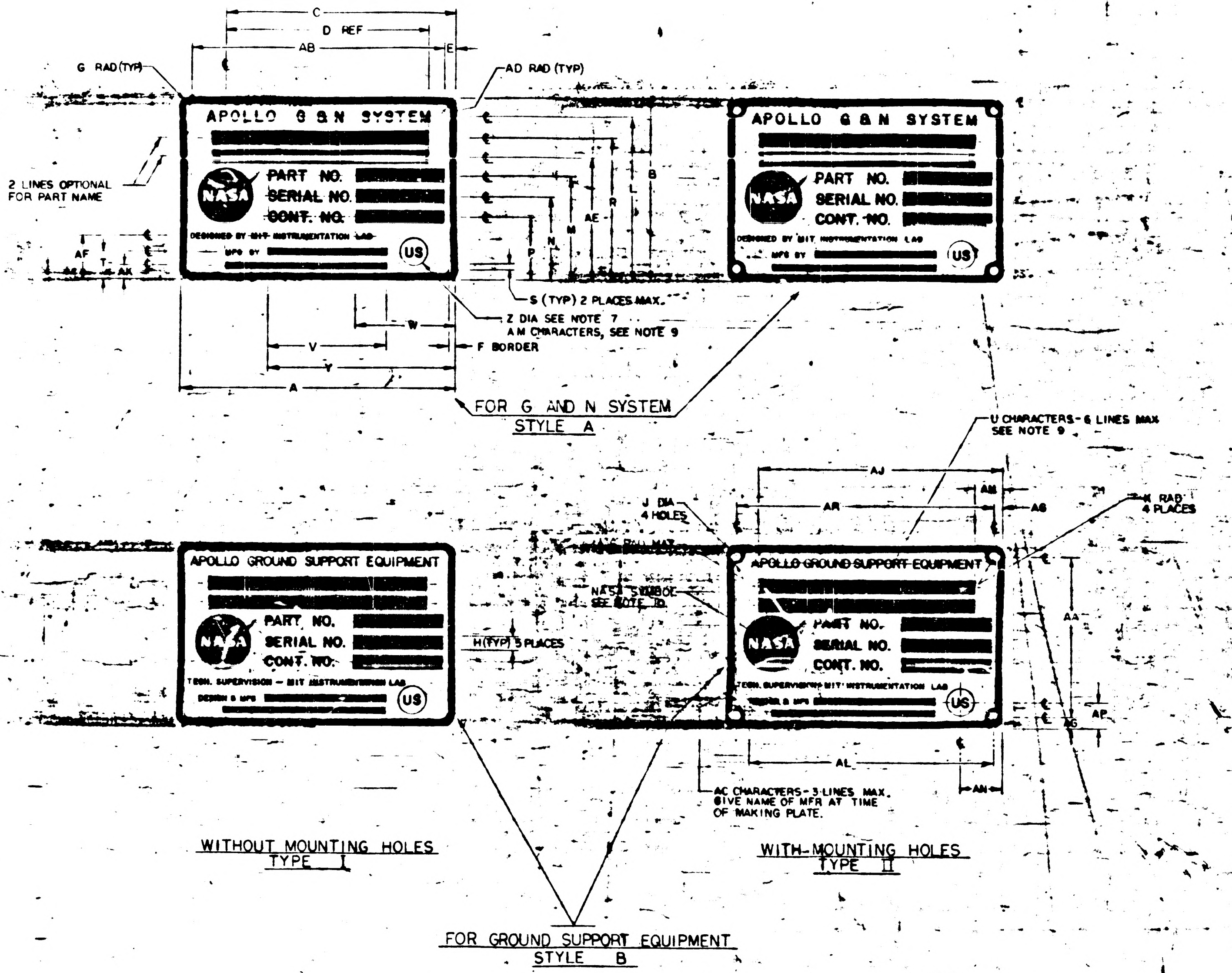

C
D REF
AB
E
G RAD(TYP)
AD RAD (TYP)
APOLLO G & N SYSTEM
PART NO.
SERIAL NO.
CONT. NO.
NASA
DESIGNED BY MIT INSTRUMENTATION LAB
MFG BY
US
2 LINES OPTIONAL FOR PART NAME
AF
T
AK
B
R
L
AE
M
N
P
S (TYP) 2 PLACES MAX.
Z DIA SEE NOTE 7
AM CHARACTERS, SEE NOTE 9
F BORDER
V
Y
W
A
APOLLO GROUND SUPPORT EQUIPMENT
TECH. SUPERVISION - MIT INSTRUMENTATION LAB
DESIGN & MFG
H(TYP) 5 PLACES
J DIA 4 HOLES
NASA SYMBOL SEE NOTE 10
U CHARACTERS - 6 LINES MAX SEE NOTE 9
AJ
AR
AM
AG
K RAD 4 PLACES
AA
AP
AL
AN
AC CHARACTERS - 3 LINES MAX. GIVE NAME OF MFR AT TIME OF MAKING PLATE.

FOR G AND N SYSTEM
STYLE A

WITHOUT MOUNTING HOLES
TYPE I

WITH MOUNTING HOLES
TYPE II

FOR GROUND SUPPORT EQUIPMENT
STYLE B

SUGGESTED PROPORTIONS FOR NAMEPLATE DIMENSIONS.
1. SELECT NAMEPLATE LENGTH, DIMENSION "A", TO FIT DESIGN NEEDS.
2. DIMENSIONS B THRU AS ON LINE 1 BELOW ARE PROPORTIONAL TO "A" BY MULTIPLIERS SHOWN IN LINE 2 BELOW.

1.	A	B	C	D	E	F	G	H	J	K	L	M	N	P	R	S	T	U
2.	1.000 A	.6563A	.8438A	.6875A	.0391A	.0240A	.0391 A	.0469A	.0547A	.0469 A	.5938 A	.3750 A	.2969A	.2187 A	.5079A	.0313 A	.0938A	.0391 A

1.	V	W	Y	Z	AA	AB	AC	AD	AE	AF	AG	AH	AJ	AK	AL	AM	AN	AP	AR	AS
2.	.4375 A	.3594 A	.6875 A	.1094 A	.5781 A	.9219 A	.0240A	.0156 A	.4375 A	.1525 A	.0391 A	.1563 A	.8438 A	.0548A	.8659 A	.0391 A	.1563 A	.0938A	.9219 A	.0151 A

REVISIONS

SYM	ZONE	DESCRIPTION				
G		REPLACES REV F WITH CHANGE PER TDRR 20854				
H		REVISED PER TDRR 20892				
J		REVISED PER TDRR 20904				
K		REVISED PER TDRR 21379				
L		REVISED PER TDRR 21410				
M		REVISED PER TDRR 21998				
N		REVISED PER TDRR 22621				
P		REVISED PER TDRR 22671				
R		REVISED PER TDRR 22672				
S		REVISED PER TDRR 22750				
T		REVISED PER TDRR 22823				
U		REVISED PER TDRR 23072				
V		REVISED PER TDRR 23521				
W		REVISED PER TDRR [illegible]	RAJ			
Y		REVISED PER TDRR 24019	RAJ			
Z		REVISED PER TDRR 24040	RAJ			
AA		REVISED PER TDRR 24060	RAJ			
AB		REVISED PER TDRR 24868	RAJ			
AC		REVISED PER TDRR 24973	RAJ		1-9-66	
AD		REVISED PER TDRR 25065	RAJ		1-18-66	
AE		REVISED PER TDRR 25672	RAJ		2-4-66	
AF		REVISED PER TDRR 25671	RAJ		2-4-66	
AG		REVISED PER TDRR 26110	RAJ		2-15-66	
AH		REVISED PER TDRR 26372	"		3-4-66	
AJ		REVISED PER TDRR 26425	"		3-16-66	
AK		REVISED PER TDRR 26743	"		3-16-66	
AL		REVISED PER TDRR 26798	"		3-16-66	
AM		REVISED PER TDRR 27168	"		4-7-66	
AN		REVISED PER TDRR 27235	"		4-7-66	
AP		REVISED PER TDRR 27345	"		4-7-66	
AR		REVISED PER TDRR 27417	"		4-7-66	
AS		REVISED PER TDRR 27442	"		4-7-66	
AT		REVISED PER TDRR 27719	"		4-20-66	
AU		REVISED PER TDRR 27880	"		4-20-66	
AV		REVISED PER TDRR 27896	"		4-20-66	
AW		28110	"		5-16-66	
AY		28173	"			
AZ		28131	"			
BA		28124	"			
BB		REVISED PER TDRR 28511	"		5-16-66	
BC		" " " 28949	"		5-24-66	
BD		" " " 29222	"			
BE		" " " 29235	"			
BF		" " " 29322	"			
BG		" " " 29429	"			
BH		" " " 29449	"			
BJ		" " " 29335	"			
BK		" " " 29619	"			
BL		" " " 29696	"			
BM		REVISION STATUS CHANGED	JSD	HS	7-29-66	
BN		REVISION STATUS CHANGED	JI			
BP		REVISION STATUS CHANGED	JI			
BR		REVISION STATUS CHANGED	JI			
BS		REVISION STATUS CHANGED	GW			
BT		REVISION STATUS CHANGED	GW			
BU		REVISION STATUS CHANGED	EH	JI		
BV		REVISION STATUS CHANGED	JJB			
BW		REVISION STATUS CHANGED	JJB			
BY		REVISION STATUS CHANGED	JJB		OCT 66	
BZ		REVISION STATUS CHANGED	JJB		10 OCT 66	
CA		REVISION STATUS CHANGED	JJB		25 OCT 66	
CB		REVISION STATUS CHANGED	REF		DEC 66	
CC		REVISION STATUS CHANGED	AF			
CD		REVISION STATUS CHANGED				
CE		REVISION STATUS CHANGED			APR	
CF		REVISION STATUS CHANGED				
CG		REVISION STATUS CHANGED	AR		10 AUG	
CH		REVISION STATUS CHANGED			21 AUG	

Ⓖ REPLACES REV F WITH CHANGE

QTY REQD	PART OR IDENTIFYING NO.	MATERIAL OR NOTES	NOMENCLATURE OR DESCRIPTION

LIST OF MATERIALS

AS APPLICABLE

NEXT ASSY	USED ON

APPLICATION

UNLESS OTHERWISE SPECIFIED
DIMENSIONS ARE IN INCHES
CAPACITOR VALUES ARE IN µf
RESISTOR VALUES ARE IN OHMS
TOLERANCES ON
FRACTIONS ± — DECIMALS ±.005 ANGLES ± —
DO NOT SCALE THIS DRAWING

MATERIAL
SEE NOTE 11

MIT
INSTRUMENTATION LAB
CAMBRIDGE, MASS.

DRAWN R A Jones 7/16/65
CHECKED 7-22-65
APPROVED
APPROVED
APPROVED MIT
APPROVED MSC
DATE

MANNED SPACECRAFT CENTER
HOUSTON, TEXAS

NAMEPLATES
APOLLO G&N - GSE
(STANDARD)

CODE IDENT NO. 80230
SIZE E
DRAWING NO. 1004260
SCALE NONE
SHEET 1 OF

DASH NO.	P/C	PART NAME	REMARKS	PART NO.	SER. NO.	CONT. NO.	STYLE	TYPE	MATERIAL	A	B	C	D	E	F	G	H	J	K	L	M	N	P	R	S	T	U	V	W	Y	Z	AA	AB	AC	AD	AE	AF	AG	AH	AJ	AK	AL	AM	AN	AP	AR
[illegible]	K	ALIGNMENT OPTICAL TELESCOPE (LEM)		NA	NA	NA	A	I	NOTE 11B	4.000	2.625	3.375	2.750	.156	.093	.156	.187	NA	NA	2.312	1.468	1.187	.906	2.031	NA	.375	.156	NA	1.437	2.750	.437	NA	3.688	.062	.062	1.750	.593	NA	.625	3.375	.187	NA	.156	.531	.453	NA
309	K																																													
308	K																																													
307	K						B	I	NOTE 11 B	4.000	2.625	3.375	2.750	.156	.093	.156	.187	NA	NA	2.328	1.468	1.187	.906	2.031	.062	.375	.156	NA	1.437	2.750	.437	NA	3.687	.062	.062	1.750	.593	NA	NA	NA	NA	NA	NA	NA	NA	NA
306	K						B	II	NOTE 11 C	4.000	2.625	3.375	2.750	.156	.093	.156	.187	.125	.156	2.328	1.468	1.187	.906	2.031	.062	.375	.156		1.437	2.750	.437	2.312	3.687	.062	NA	1.750	.593									
305	K						B	I	NOTE 11 B	2.000	1.312	1.687	1.375	.078	.048	.078	.093	NA	NA	1.164	.734	.593	.453	1.015	.048	.171	.078		.718	1.375	.187	NA	NA	.048	.031	.875	.320									
304	K						B	II	NOTE 11 C	2.000	1.312	1.687	1.375	.078	.048	.078	.093	.070	.078	1.164	.734	.593	.453	1.015	.048	.171	.078	NA	.718	1.375	.187	.156	1.843	.048	NA	.875	.320	NA	NA	NA	NA	NA	NA	NA	NA	NA
303	K																																													
302	K																																													
301	K																																													
300	K	OPTICAL UNIT		NA	NA	NA	A	I	NOTE 11 B	2.000	1.312	1.675	NA	NA	.048	.078	NA	NA	NA	1.090	.812	.675	.540	.940	NA	.265	NA	NA	NA	1.375	.218	NA	NA	NA	NA	NA	.375	NA	NA	NA	.180	NA	.078	NA	NA	NA
9	K	2 IN AUTOCOLLIMATOR		1001702			B	II	NOTE 11 C	4.000	2.625	3.812	2.750	.156	.093	.156	.187	.125	.156	2.250	1.500	1.187	.906	2.031	.093	.375	.156	1.750	1.437	2.750	.437	2.312	3.687	.062	NA	1.750	.593	.156	1.062	3.812	.156	NA	.156	1.062	.375	3.687
8	K	5 IN AUTOCOLLIMATOR		1017410			B	II	NOTE 11 C	4.000	2.625	3.812	2.750	.156	.093	.156	.187	.125	.156	2.250	1.500	1.187	.906	2.031	.093	.375	.156	1.750	1.437	2.750	.437	2.312	3.687	.062	NA	1.750	.593	.156	1.062	3.812	.156	NA	.156	1.062	.375	3.687
7	K	2½ IN AUTOCOLLIMATOR (SCT)		1017435			B	II	NOTE 11 C	4.000	2.625	3.812	2.750	.156	.093	.156	.187	.125	.156	2.250	1.500	1.187	.906	2.031	.093	.375	.156	1.750	1.437	2.750	.437	2.312	3.687	.062	NA	1.750	.593	.156	1.062	3.812	.156	NA	.156	1.062	.375	3.687
6	K	2½ IN AUTOCOLLIMATOR (SXT)		1017448			B	II	NOTE 11 C	4.000	2.625	3.812	2.750	.156	.093	.156	.187	.125	.156	2.250	1.500	1.187	.906	2.031	.093	.375	.156	1.750	1.437	2.750	.437	2.312	3.687	.062	NA	1.750	.593	.156	1.062	3.812	.156	NA	.156	1.062	.375	3.687
5	K	RETROREFLECTING PRISM ASSEMBLY		1019840			B	I	NOTE 11 B	4.000	2.625	3.812	2.750	.156	.093	.156	.187	NA	NA	2.250	1.500	1.187	.906	2.031	.093	.375	.156	1.750	1.437	2.750	.437	2.312	3.687	.062	NA	1.750	.593	.156	1.062	3.812	.156	NA	.156	1.062	.375	3.687
4	K	S/H SIMULATOR ASSEMBLY		1019896			B	I	NOTE 11 B	4.000	2.625	3.812	2.750	.156	.093	.156	.187	NA	NA	2.250	1.500	1.187	.906	2.031	[illegible]	.375	.156	1.750	1.437	2.750	.437	NA	NA	.062	.062	1.750	.593	.156	1.062	3.812	.156	NA	.156	1.062	.375	NA
3	K	REFERENCE MIRROR		1001767			B	I	NOTE 11 B	2.000	1.312	1.906	1.375	.078	.048	.078	.093	NA	NA	1.125	.750	.593	.453	1.015	[illegible]	[illegible]	.078	[illegible]	.718	1.375	.218	NA	NA	.048	.031	.875	.305	.078	.531	1.906	.078	NA	.078	.531	.187	NA
2	K	2 IN PLANE READING AUTOCOLLIMATOR		1017413			B	I	NOTE 11 B	2.000	1.312	1.906	1.375	.078	.048	.078	.093	NA	NA	1.125	.750	.593	.453	1.015	.062	.187	.078	.875	.718	1.375	.218	NA	NA	.048	.031	.875	.305	.078	.531	1.906	.078	NA	.078	.531	.187	NA
1	K	2 IN AUTOCOLLIMATOR		1001702 -			B	I	NOTE 11 B	2.000	1.312	1.906	1.375	.078	.048	.078	.093	NA	NA	1.125	.750	.593	.453	1.015	.062	.187	.078	.875	.718	1.375	.218	NA	NA	.048	.031	.875	.305	.078	.531	1.906	.078	NA	.078	.531	.187	NA

KOLLSMAN DASH NUMBERS

NOTES FOR TABLE
STYLE A IS FOR G&N SYSTEM.
STYLE B IS FOR GROUND SUPPORT EQUIPMENT.
TYPE I IS WITHOUT MOUNTING HOLES.
TYPE II IS WITH MOUNTING HOLES.

REVISIONS

SYM	ZONE	DESCRIPTION			DATE
G		REPLACES REV F WITH CHANGE PER TDRR 20854.			
H		REVISED PER TDRR 20892			
J		REVISED PER TDRR 20906			
K		REVISED PER TDRR 21375			
L		REVISED PER TDRR 21410			
M		REVISED PER TDRR 21553			
N		REVISED PER TDRR 22621			
P		REVISED PER TDRR 22671			
R		REVISED PER TDRR 22672			
S		REVISED PER TDRR 22750			
T		REVISED PER TDRR 22823			
U		REVISED PER TDRR 23072			
V		REVISED PER TDRR 23521			
W		REVISED PER TDRR 23834			
Y		REVISED PER TDRR 24018	RAJ		
Z		REVISED PER TDRR 24040	RAJ		
AA		REVISED PER TDRR 24060	RAJ		11-19-65
AB		REVISED PER TDRR 24868	RAJ		12-22-65
AC		REVISED PER TDRR 24973	RAJ		1-4-66
AD		REVISED PER TDRR 25065	RAJ		1-18-66
AE		REVISED PER TDRR 25672	RAJ		
AF		REVISED PER TDRR 25671	RAJ		2-4-66
AG		REVISED PER TDRR 26110	RAJ		
AH		REVISED PER TDRR 26372	"		3-16-66
AJ		REVISED PER TDRR 26425			3-16-66
AK		REVISED PER TDRR 26743	"		3-16-66
AL		REVISED PER TDRR 26798	"		3-16-66
AM		REVISED PER TDRR 27168	"		4-8-66
AN		REVISED PER TDRR 27235			4-8-66
AP		REVISED PER TDRR 27345			4-8-66
AR		REVISED PER TDRR 27417			4-8-66
AS		REVISED PER TDRR 27442	"		4-8-66
AT		REVISED PER TDRR 27719			
AU		REVISED PER TDRR 27880	"		
AV		REVISED PER TDRR 27896	"		4-21-66
AW					
AY		28173	"		
AZ		28131	"		
BA		28124	"		
BB		REVISED PER TDRR 28511	"		
BC		" " " 28949	"		
BD		" " " 29222	"		6-8-66
BE		" " " 29235	"		"
BF		" " " 29322	"		6-30-66
BG		" " " 29429			"
BH		" " " 29449			"
BJ		" " " 29335			"
BK		" " " 29619	"		"
BL		" " " 29696	"		"
BM		REVISION STATUS CHANGED	JSD	NLS	7-25-66
BN		REVISION STATUS CHANGED	JI		
BP		REVISION STATUS CHANGED	JI		
BR		REVISION STATUS CHANGED	JI		
BS		REVISION STATUS CHANGED	GW		
BT		REVISION STATUS CHANGED	GW		
BU		REVISION STATUS CHANGED	EH		
BV		REVISION STATUS CHANGED	JJB		
BW		" " " "	JJB		
BY		" " " "	JJB		10 OCT 66
BZ		REVISION STATUS CHANGED	JJB		10 OCT 66
CA		REVISION STATUS CHANGED	JJB		25 OCT 66
CB		REVISION STATUS CHANGED			15 DEC 66
CC		REVISION STATUS CHANGED	AF		
CD		REVISION STATUS CHANGED	DR		
CE		REVISION STATUS CHANGED			19 AUG 67
CF		REVISION STATUS CHANGED			19 AUG 67
CG		REVISION STATUS CHANGED	A.H.		10 AUG 67
CH		REVISION STATUS CHANGED			

Ⓖ REPLACES REV F WITH CHANGE

QTY REQD	PART OR IDENTIFYING NO.	MATERIAL OR NOTES	NOMENCLATURE OR DESCRIPTION	

LIST OF MATERIALS

NEXT ASSY	USED ON
AS APPLICABLE	

APPLICATION

UNLESS OTHERWISE SPECIFIED
DIMENSIONS ARE IN INCHES
CAPACITOR VALUES ARE IN μf
RESISTOR VALUES ARE IN OHMS
TOLERANCES ON
FRACTIONS ± — DECIMALS ±.005 ANGLES ± —
DO NOT SCALE THIS DRAWING

MATERIAL
SEE NOTE 11

MIT
INSTRUMENTATION LAB
CAMBRIDGE, MASS.

MANNED SPACECRAFT CENTER
HOUSTON, TEXAS

DRAWN 7-16-65
CHECKED 7-22-65
APPROVED
APPROVED W. Kupfer
APPROVED MIT W. Kupfer
APPROVED MSC
DATE

NAMEPLATES, APOLLO G&N-GSE (STANDARDS)

CODE IDENT NO. 80230
SIZE E
1004260
SCALE NONE

DASH NO.	P/C	PART NAME	REMARKS	PART NO.	SER. NO.	CONT. NO.	STYLE	TYPE	MATERIAL	A
299	R									
298	R									
285	R	BUFFER CIRCUIT ASSY		2014254-031	NA	NAS9-497	B	I	NOTE 11B	FOR DIMENSIONS SEE DASH 15 VALUES BELOW
284	R	LOGIC DRAWER ASSY NO. 2		2014037-041	NA	NAS9-497	B	I	NOTE 11B	FOR DIMENSIONS SEE DASH 17 VALUES BELOW
283	R	DRAWER ASS'Y-PROGRAM & MONITOR		2014041-051	NA	NAS9-497	B	I	NOTE 11B	FOR DIMENSIONS SEE DASH 17 VALUES BELOW
282	R	COMPUTER TEST SET		2014042-061	NA	NAS9-497	B	II	NOTE 11C	FOR DIMENSIONS SEE DASH 18 VALUES BELOW
280	R	COMPUTER TEST SET		2014042-051	NA	NAS9-497	B	II	NOTE 11C	FOR DIMENSIONS SEE DASH 18 VALUES BELOW
279	R	SELF TEST ASSY		2014366-041	NA	NAS9-497	B	I	NOTE 11B	FOR DIMENSIONS SEE DASH 15 VALUES BELOW
278	R	LOGIC DRAWER ASSY NO.1		2014036-041	NA	NAS-9-497	B	I	NOTE 11B	FOR DIMENSIONS SEE DASH 17 VALUES BELOW
277	R	COMPUTER TEST SET		2014042-041	NA	NAS-9-497	B	II	NOTE 11C	FOR DIMENSIONS, SEE DASH 18 VALUES BELOW
276		DRAWER ASSY - PROGRAM & MONITOR		2014041-041				I	NOTE 11B	FOR DIMENSIONS, SEE DASH 17 VALUES BELOW
275		DRAWER ASSY RDC INTERFACE		2014045-031						
274		SELF TEST ASSY		2014366-031						FOR DIMENSIONS, SEE DASH 15 VALUES BELOW
273		LOGIC DRAWER ASSY NO. 2		2014037-031						FOR DIMENSIONS, SEE DASH 17 VALUES BELOW
272		DRAWING ASSY PROGRAMMER & MONITOR		2014041-031						FOR DIMENSIONS, SEE DASH 17 VALUES BELOW
271		LOGIC DRAWER ASSY NO. 1		2014036-031				I	NOTE 11B	
270		COMPUTER TEST SET		2014042-031				II	NOTE 11C	FOR DIMENSIONS, SEE DASH 18 VALUES BELOW
269		POWER CONTROL ASSY		2014044-021				I	NOTE 11B	FOR DIMENSIONS, SEE DASH 17 VALUES BELOW
268		SELF TEST ASSY		2014366-021						
267		AGC JUNCTION ASSY		2014341-021						
266		POWER CONTROL ASSY		2014079-021						
265		BUFFER CIRCUIT ASSY		2014254-021						FOR DIMENSIONS, SEE DASH 15 VALUES BELOW
264		DRAWER ASSY X Y INTERFACE		2014040-021						
263		DRAWER ASSY RDC INTERFACE		2014045-021						
262		DRAWER ASSY PROGRAMMER & MONITOR		2014041-021						
261		LOGIC DRAWER ASSY NO. 2		2014037-021						FOR DIMENSIONS, SEE DASH 17 VALUES BELOW
260		LOGIC DRAWER ASSY NO. 1		2014036-021				I	NOTE 11B	
259		OPERATION CONSOLE		2014024-021				II	NOTE 11C	
258		COMPUTER TEST SET		2014042-021						
257		AUXILIARY CALIBRATION CONSOLE		2014059-021						
256		AGC CALIBRATION CONSOLE		2014049-021				II	NOTE 11C	FOR DIMENSIONS, SEE DASH 18 VALUES BELOW
255		AGC HANDLING FIXTURE		2014282-021				I	NOTE 11B	FOR DIMENSIONS, SEE DASH 17 VALUES BELOW
254		DRAWER ASSY COMP. SIMULATOR		2014048-011				II	NOTE 11C	
253		SHIPPING KIT ASSY, NAV DSKY		2016312-011						FOR DIMENSIONS, SEE DASH 18 VALUES BELOW
252		SHIPPING KIT ASSY, UNIVERSAL DSKY		2016316-011						
251		SHIPPING KIT ASSY, MAIN DSKY		2016313-011				II	NOTE 11C	
250		AMPLIFIER REWORK		2014386				I	NOTE 11B	FOR DIMENSIONS, SEE DASH 15 VALUES BELOW
249		TEMP MONITOR ASSY		2014313-011					NOTE 11C	FOR DIMENSIONS, SEE DASH 17 VALUES BELOW
248		AGC JUNCTION ASSY		2014341-011					NOTE 11B	
247		AC INPUT PANEL ASSY		2014302-011						FOR DIMENSIONS, SEE DASH 15 VALUES BELOW
246		SELF TEST ASSY		2014392-011						
245		TAPE PUNCH ASSEMBLY		2014039-011						
244	R	TAPE READER ASSEMBLY		2014038-011	NA	NAS-9-497	B	I	NOTE 11B	FOR DIMENSIONS, SEE DASH 15 VALUES BELOW
243										
242										
241	R	APOLLO GUIDANCE COMPUTER GROUP		6003001	NA	NAS-9-497	A	I	NOTE 11B	FOR DIMENSIONS, SEE DASH 19 VALUES BELOW
240		SELF TEST ASSEMBLY		2014366-011	NA		B			FOR DIMENSIONS, SEE DASH 15 VALUES BELOW
239		POWER SUPPLY ASSY-115V., 400 CYCLE		2014207-041						FOR DIMENSIONS, SEE DASH 17 VALUES BELOW
238		AC INPUT PANEL ASSY		2014043-011						
237		POWER CONTROL ASSY		2014079-011						
236		DRAWER ASSY-XY INTERFACE		2014040-011						
235		DRAWER ASSY RDC INTERFACE		2014045-011						FOR DIMENSIONS, SEE DASH 15 VALUES BELOW
234		BUFFER CIRCUIT ASSY		2014254-011						
233		CONTROL & INTERFACE ASSY		2014204-041						
232		POWER CONTROL ASSY		2014044-011						
231		DRAWER ASSY, PROGRAMMER & MONITOR		2014041-011						FOR DIMENSIONS, SEE DASH 17 VALUES BELOW
230		CONNECTOR INTERFACE ASSY		2014272-011						
229		CONNECTOR INTERFACE ASSY		2014047-011						FOR DIMENSIONS, SEE DASH 15 VALUES BELOW
228		ANTENNA TUNING CAPACITOR ASSY		2014209-011						
227		MOUNTING FIXTURE ASSY		2014006-011						FOR DIMENSIONS, SEE DASH 17 VALUES BELOW
226		POWER SUPPLY ASSY 3 VDC		2014234-011						
225		PANEL ASSY - SIGNAL INTERFACE		2014010-011						
224		OSCILLOSCOPE ASSY		2014232-011						
223		AUXILIARY OUTLET ASSY		2014274-011						FOR DIMENSIONS, SEE DASH 15 VALUES BELOW
222		FREQUENCY COUNTER		2014233-011						
221		POWER SUPPLY ASSY 10,13, 28 VDC		2014235-011						
220		LOGIC DRAWER ASSY NO. 2		2014037-011						
219		LOGIC DRAWER ASSY NO. 1		2014036-011						FOR DIMENSIONS, SEE DASH 17 VALUES BELOW
218		COUNTER, ELECTRICAL ASSY		2014288-011						
217		POWER SUPPLY ASSY		2014279-011						FOR DIMENSIONS, SEE DASH 15 VALUES BELOW
216		TEST MOUNT ASSY		2014257-011						
215		UNIVERSAL DSKY PEDESTAL MOUNT		2014014-011						
214		MAIN DSKY PEDESTAL MOUNT		2014343				I	NOTE 11B	FOR DIMENSIONS, SEE DASH 17 VALUES BELOW
213		SHIPPING CONTAINER, MAIN DSKY		1006229				II	NOTE 11C	
212		NAV DSKY		1006231						
211		AGC		1006230						FOR DIMENSIONS, SEE DASH 18 VALUES BELOW
210		UNIVERSAL DSKY		1006422						
209		SHIPPING CONTAINER, AGC		1006421				II	NOTE 11C	
208		UNIVERSAL DSKY HANDLING FIXTURE		2014013-011				I	NOTE 11B	FOR DIMENSIONS, SEE DASH 15 VALUES BELOW
207		NAV DSKY HANDLING FIXTURE		1014377						
206		MAIN DSKY HANDLING FIXTURE		1014334						FOR DIMENSIONS, SEE DASH 17 VALUES BELOW
205		AGC HANDLING FIXTURE		2014282-011				I	NOTE 11B	
204		OPERATION CONSOLE		2014024-011				II	NOTE 11C	
203		COMPUTER TEST SET		2014042-011		NAS-9-497				
202		DRAWER ASSY, COMPUTER SIMULATOR		2014048-011		FNP-2775				FOR DIMENSIONS, SEE DASH 18 VALUES BELOW
201		AUXILIARY CALIBRATION CONSOLE		2014059-011		NAS-9-497				
200		AGC CALIBRATION CONSOLE		2014049-011	NA		B	II	NOTE 11C	
21										
20		NA		NA	NA	NA	A	II	NOTE 11C	2.000
19		NA		NA	NA	NA	A	I	NOTE 11B	2.000
18		NA		NA	NA	NA	B	II	NOTE 11C	4.187
17		NA		NA	NA	NA	B	I	NOTE 11B	4.187
16		NA		NA	NA	NA	B	II	NOTE 11C	2.000
15	R	NA		NA	NA	NA	B	I	NOTE 11B	2.000

DASH NO.	A	B	C	D	E	F	G	H	J	K	L	M	N	P	R	S	T	U	V	W	Y	Z	AA	AB	AC	AD	AE	AF	AG	AH	AJ	AK	AL	AM	AN	AP	AR
20	2.000	1.312	1.687	1.375	.078	.031	.076	.093	.106 .113	.093	1.187	.750	.593	.453	1.015	.062	.187	.078	.875	.718	1.375	.218	1.156	1.843	.048	NA	.875	.305	.078	.312	1.687	.078	NA	.078	.312	.187	1.843
19	2.000	1.312	1.687	1.375	.078	.031	.079	.093	NA	NA	1.187	.750	.593	.453	1.015	.062	.187	.078	.875	.718	1.375	.218	NA	NA	.048	.031	.875	.305	.078	.312	1.687	.078	NA	.078	.312	.187	NA
18	4.187	1.875	3.469	2.750	.156	.093	.156	.125	.106 .113	.125	1.625	1.032	.844	.656	1.406	.093	.344	.156	1.781	1.531	2.844	.312	1.562	3.875	.062	NA	1.219	.500	.156	.719	3.469	.156	NA	.156	.719	.344	3.875
17	4.187	1.875	3.469	2.750	.156	.093	.156	.125	NA	NA	1.625	1.032	.844	.656	1.406	.093	.344	.156	1.781	1.531	2.844	.312	NA	NA	.062	.062	1.219	.500	.156	.719	3.469	.156	NA	.156	.719	.344	NA
16	2.000	1.312	1.687	1.375	.078	.031	.078	.093	.106 .113	.093	1.187	.750	.593	.453	1.015	.062	.187	.078	.875	.718	1.375	.218	1.156	1.843	.048	NA	.875	.305	.078	.312	1.687	.078	NA	.078	.312	.187	1.843
15	2.000	1.312	1.687	1.375	.078	.031	.078	.093	NA	NA	1.187	.750	.593	.453	1.015	.062	.187	.078	.875	.718	1.375	.218	NA	NA	.048	.031	.875	.305	.078	.312	1.687	.078	NA	.078	.312	.187	NA

NOTES FOR TABLE

STYLE A IS FOR G & N SYSTEM

STYLE B IS FOR GROUND SUPPORT EQUIPMENT

TYPE I IS WITHOUT MOUNTING HOLES

TYPE II IS WITH MOUNTING HOLES

REVISIONS

SYM	ZONE	DESCRIPTION			DATE	APPROVED
G		REPLACES REV F WITH CHANGE PER TDRR 20854				
H		REVISED PER TDRR 20892				
J		REVISED PER TDRR 20904				
K		REVISED PER TDRR 21379				
L		REVISED PER TDRR 21410				
M		REVISED PER TDRR 21993				
N		REVISED PER TDRR 22621				
P		REVISED PER TDRR 22671				
R		REVISED PER TDRR 22672				
S		REVISED PER TDRR 22750				
T		REVISED PER TDRR 22823				
U		REVISED PER TDRR 23072				
V		REVISED PER TDRR 23521				
W		REVISED PER TDRR 23824	RAJ			
Y		REVISED PER TDRR 24018	RAJ			
Z		REVISED PER TDRR 24040	RAJ			
AA		REVISED PER TDRR 24060	RAJ			
AB		REVISED PER TDRR 24868	RAJ		12-22-65	
AC		REVISED PER TDRR 24973	RAJ		1-4-66	
AD		REVISED PER TDRR 25065	RAJ		1-10-66	
AE		REVISED PER TDRR 25672	RAJ		2-4-66	
AF		REVISED PER TDRR 25671	RAJ		2-4-66	
AG		REVISED PER TDRR 26110	RAJ		2-15-66	
AH		REVISED PER TDRR 26372			3-16-66	
AJ		REVISED PER TDRR 26425	"		3-16-66	
AK		REVISED PER TDRR 26743	"			
AL		REVISED PER TDRR 26798	"		3-16-66	
AM		REVISED PER TDRR 27168	"		4-8-66	
AN		REVISED PER TDRR 27235	"		4-8-66	
AP		REVISED PER TDRR 27345	"			
AR		REVISED PER TDRR 27417	"		4-8-66	
AS		REVISED PER TDRR 27442	"		4-8-66	
AT		REVISED PER TDRR 27719	"		4-20-66	
AU		REVISED PER TDRR 27860	"			
AV		REVISED PER TDRR 27896	"		4-20-66	
AW		28110	"		5-16-66	
AY		28173				
AZ		28131			5-16-66	
BA		28124	"		5-16-66	
BB		REVISED PER TDRR 28511	"		5-16-66	
BC		" " " 28949	"			
BD		" " " 29222	"		6-8-66	
BE		" " " 29235	"		"	
BF		" " " 29322	"		6-23-66	
BG		" " " 29429	"		"	
BH		" " " 29449	"		"	
BJ		" " " 29335	"		"	
BK		" " " 29619	"		"	
BL		" " " 29696	"			
BM		" " " 29802	JSD	N.S.		
BN		REVISION STATUS CHANGED				
BP		REVISED PER TDRR 30168				
BR		REVISION STATUS CHANGED				
BS		REVISION STATUS CHANGED	GW			
BT		REVISION STATUS CHANGED	GW			
BU		REVISION STATUS CHANGED	EH			
BV		REVISION STATUS CHANGED	JJB			
BW		REVISED PER TDRR 31279	JJB			
BY		REVISION STATUS CHANGED	JJB		10 OCT 66	
BZ		REVISION STATUS CHANGED	JJB		10 OCT 66	
CA		REVISION STATUS CHANGED	JJB		25 OCT 66	
CB		REVISION STATUS CHANGED	REF		10 DEC 66	
CC		REVISION STATUS CHANGED	AF			
CD		REVISED PER TDRR 32640	DR			
CE		REVISED PER TDRR 33447				
CF		REVISION STATUS CHANGED				
CG		REVISION STATUS CHANGED	AH			
CH		REVISION STATUS CHANGED				

THIS SHEET ADDED

Ⓖ REPLACES REV F WITH CHANGE

RAYTHEON DASH NUMBERS

QTY REQD	PART OR IDENTIFYING NO.	MATERIAL OR NOTES	NOMENCLATURE OR DESCRIPTION

LIST OF MATERIALS

NEXT ASSY	USED ON
AS APPLICABLE	

APPLICATION

UNLESS OTHERWISE SPECIFIED
DIMENSIONS ARE IN INCHES
CAPACITOR VALUES ARE IN µf
RESISTOR VALUES ARE IN OHMS
TOLERANCES ON
FRACTIONS DECIMALS ANGLES
± — ±.005 ± —
DO NOT SCALE THIS DRAWING

MATERIAL
SEE NOTE 11

MIT
INSTRUMENTATION LAB
CAMBRIDGE, MASS.

DRAWN 7-16-6
CHECKED
APPROVED
APPROVED
APPROVED MIT
APPROVED MSC
DATE

MANNED SPACECRAFT CENTER
HOUSTON, TEXAS

NAMEPLATES,
APOLLO GEN-GSE
(STANDARDS)

CODE IDENT NO. 80230 SIZE E DRAWING NO. 100[illegible]

SCALE NONE

D-SH NO.	P/C	PART NAME	REMARKS	PART NO.	SER. NO.	CONT. NO.	STYLE	TYPE	MATERIAL	A	B	C	D	E	F	G	H	J	K	L	M	N	P	R	S	T	U	V	W	Y	Z	AA	AB	AC	AD	AE	AF	AG	AH	AJ	AK	AL	AM	AN	AP	AR
199	AC	EYEPIECE STOWAGE UNIT		2021255-0[illegible]			A	I																																						
198	AC	SIGNAL CONDITIONER ASSY C/M		2007234		NAS 9-497			NOTE 11B																																					
197	AC	SIGNAL CONDITIONER ASSY C/M		2007235						FOR DIMENSIONS, SEE DASH 100 VALUES BELOW																																				
196	AC	SIGNAL CONDITIONER ASSY LEM		6007010																																										
195	AC	PSA & SIGNAL CONDITIONER ASSY		6007009			A	I	NOTE 11B																																					
194	AC	PANEL, MONITOR		2900031-031			B	II	NOTE 11C																																					
193	AC	DISTRIBUTION BOX, GSE		2900024-031						FOR DIMENSIONS, SEE DASH 141 VALUES BELOW																																				
192	AC	ANALYZER, OPTICS-INERTIAL		2900023-031						FOR DIMENSIONS, SEE DASH 144 VALUES BELOW																																				
191	AC	TEST CONTROL		2900027-031																																										
190	AC	PANEL, PWR SUP AND LOAD		2900033-021																																										
189	AC	ADPT MODULE, P.S.A.		6900088-011						FOR DIMENSIONS, SEE DASH 141 VALUES BELOW																																				
188	AC	ADPT MODULE, P.S.A.		2901143-011																																										
187	AC	FIXTURE, MTG, PTA/PSA		2900066-02[illegible]		NAS 9-497	B	II	NOTE 11C																																					
186	AC	ANNUNCIATOR PANEL AND EYEPIECE STORAGE ASSEMBLY		1021255-021			A	I		FOR DIMENSIONS, SEE DASH 100 VALUES BELOW																																				
185	AC	ANNUNCIATOR PANEL AND EYEPIECE STORAGE ASSEMBLY		1021255-011			A	I																																						
184	AC	FIX., HAND., G AND N HARNESS		1901846-041		NAS-9-497	B	II	NOTE 11C	FOR DIMENSIONS, SEE DASH 144 VALUES BELOW																																				
183	AC	INSTALLING TOOL, ELEC. CONN		1902586-011			B	II	NOTE 11C	FOR DIMENSIONS, SEE DASH 102 VALUES BELOW																																				
182	AC	ADPT MODULE, P.S.A.		6900088-011			B	II	NOTE 11C	FOR DIMENSIONS, SEE DASH 141 VALUES BELOW																																		
181	AC	G&N INDICATOR CONTROL PANEL ASSY		2014578-011			A	I	NOTE 11B	3.000	1.938	2.437	NA	.125	.062	.188	.156	NA	NA	1.750	.125	.906	.688	1.500	NA	.281	.125	NA	1.094	2.062	.312	NA	2.500	.062	.125	1.312	.469	NA	NA	NA	.156	NA	.125	.469	.344	NA
180	AC	ADPT MODULE, P.S.A.		1902431-031			B	II		FOR DIMENSIONS, SEE DASH 121 VALUES BELOW																																				
179	AC	MOUNTING PLATE, IMU/PTA		6900083-011																																										
178	AC	MOUNTING PLATE, COMPONENT		6900007-021																																										
177	AC	FIX., MOUNTING, SUBSYSTEM		2900070-021						FOR DIMENSIONS, SEE DASH 144 VALUES BELOW																																				
176	AC	FIX., MOUNTING, G AND N		2900067-021																																										
175	AC	CSL, COOL. AND PWR, G AND N		1902134-031																																										
174	AC	FIX., HAND., CM AND LEM CDU		2900999-011					NOTE 11C																																					
173	AC	FIX., HANDLING, CM PSA		2900998-011						FOR DIMENSIONS, SEE DASH 141 VALUES BELOW																																				
172	AC	CAGING ELECTRONICS, GYRO		2900029-021																																										
171	AC	DISTRIBUTION BOX, GSE		2900024-021																																										
170	AC	ANALYZER, OPTICS-INERTIAL		2900023-021						FOR DIMENSIONS, SEE DASH 144 VALUES BELOW																																				
169	AC	ADPT, TESTPOINT, P.S.A.		2900037-021																																										
168	AC	TEST SELECTOR		2900028-021																																										
167	AC	TEST CONTROL		2900027-021																																										
166	AC	PANEL, MONITOR		2900031-021																																										
165	AC	TERM BOARD STORAGE DRAWER		2900927-011																																										
164	AC	INPUT/OUTPUT PANEL		2900926-011						FOR DIMENSIONS, SEE DASH 141 VALUES BELOW																																				
163	AC	CONTROL PANEL		2900896-011																																										
162	AC	CSL. CAL AND TEST, SCM/PSAAM		2900895-011						FOR DIMENSIONS, SEE DASH 144 VALUES BELOW																																				
161	AC	FIX., LIFT AND HAND., IMU		[illegible]1462-011						FOR DIMENSIONS, SEE DASH 141 VALUES BELOW																																				
160	AC	FIX., HAND., G AND N HARNESS		1901846-031						FOR DIMENSIONS, SEE DASH 144 VALUES BELOW																																				
159	AC	BATTERY POWER PACK		1900011-031			B	II	NOTE 11C																																					
158	AC	COUPLING DATA UNIT ASSEMBLY C/M		2007222			A	I	NOTE 11B	FOR DIMENSIONS SEE DASH 100 VALUES BELOW																																				
157	AC	COUPLING DATA UNIT ASSEMBLY - LEM		2007222																																										
156	AC	POWER & SERVO ASSEMBLY C/M		2007200						2.125	.968	.718	NA	.093	.031	.06	.093	NA	NA	.858	.608	.484	.358	.733	.062	.140	.062	NA	.968	1.450	.125	NA	1.720	.046	.03	NA	.210	NA	NA	NA	.070	NA	.046	.32	.16	NA
155	AC	PIPA ELECTRONICS ASSEMBLY		200720[illegible]																																										
154	AC	PULSE-TORQUE ASSEMBLY - LEM		6007000						FOR DIMENSIONS SEE DASH 100 VALUES BELOW																																				
153	AC	POWER & SERVO ASSEMBLY - LEM		6007200			A	I	NOTE 11B																																					
152	AC	CONT PNL, RSVR CKT TESTER		2900770-011			B	II	NOTE 11C	FOR DIMENSIONS, SEE DASH 141 VALUES BELOW																																				
151	AC	TESTER, RESOLVER CIRCUIT		2900708-011																																										
150	AC	JUNCTION BOX, P.S.A./G.S.E.		1901933-021						FOR DIMENSIONS, SEE DASH 144 VALUES BELOW																																				
149	AC	BATTERY PACK, LIFTING		29006[illegible]-011						FOR DIMENSIONS, SEE DASH 141 VALUES BELOW																																				
148	AC	MOUNTING PLATE, COMPONENT		6900007-011						FOR DIMENSIONS, SEE DASH 144 VALUES BELOW																																				
147	AC	MOUNTING PLATE, COMPONENT		2900677-011																																										
146	AC	CART, TRANS, G AND N		1900009-041																																										
145	AC	CONTAINER, SHIPPING, IMU		1900010-021		NAS-9-497	B	II	NOTE 11C																																					
144	AC	FIX., MOUNTING, G AND N		1902204-021			B	II	NOTE 11C	4.125	1.812	3.250	NA	.125	.062	.12	.156	[illegible]	.125	1.625	1.140	.890	.640	1.390	.125	.171	.125	1.875	1.687	2.625	.250	1.562	3.843	.093	NA	NA	.359	.125	.437	3.563	NA	3.687	.093	.40	.25	3.875
143	AC	CSL, COOL. AND PWR, G AND N		1902134-021						4.125	1.812	3.250		.125	.062	.12	.156		.125	1.625	1.140	.890	.640	1.390	.125	.171	.125	1.875	1.687	2.625	.250	1.562	3.843	.093			.359	.125	.437	3.688		3.687	.093	.40	.25	3.875
142	AC	ANALYZER, OPTICS-INERTIAL		2900023-011						4.125	1.812	3.250		.125	.062	.12	.156		.125	1.625	1.140	.890	.640	1.390	.125	.171	.125	1.875	1.687	2.625	.250	1.562	3.843	.093			.359	.125	.437	3.688		3.587	.093	.40	.25	3.875
141	AC	CONT, TEMP, PORTABLE		2900060-011						2.125	.968	.718		.093	.031	.06	.093		.093	.858	.608	.484	.358	.733	.077	.116	.062	.937	.875	1.343	.125	.781	1.892	.046			.209	.093	.250	1.875		1.840	.046	.23	.16	1.938
140	AC	TESTER, CKT, IMU/CDU RSVR		2900286-011						4.125	1.812	3.250		.125	.062	.12	.156		.125	1.625	1.140	.890	.640	1.390	.125	.171	.125	1.875	1.687	2.625	.250	1.562	3.843	.093			.359	.125	.437	3.688		3.687	.093	.40	.25	3.875
139	AC	SIMULATOR, LD/SIG, CDU		2900285-011																																										
138	AC	SIMULATOR, LD/SIG, OPTICS		1902023-021																																										
137	AC	FIX., MOUNTING, IMU/NAV BASE		6900003-011																																										
136	AC	FIXTURE, OPTICS NAV BASE		2900072-011																																										
135	AC	FIX., MOUNTING, SUB SYSTEM		2900070-011																																										
134	AC	FIX., HAND., G AND N HARNESS		2900069-011																																										
133	AC	CNTR, SHIPPING, NAV BASE		2900068-011																																										
132	AC	FIX., MOUNTING, G AND N		2900067-011																																										
131	AC	SIMULATOR, LD/SIG, IMU/CDU		2900062-011																																										
130	AC	TESTER, GYRO WHEEL		2900061-011																																										
129	AC	COOLANT SUPPLY		1902133-021																																										
128	AC	TABLE, ROTARY		1900926-021						4.125	1.812	3.250		.125	.062	.12	.156		.125	1.625	1.140	.890	.640	1.390	.125	.171	.125	1.875	1.687	2.625	.250	1.562	3.843	.093			.359	.125	.437	3.688		3.687	.093	.40	.25	3.875
127	AC	FIX., HAND., OPTICS		2900074-011						2.125	.968	.718		.093	.031	.06	.093		.093	.858	.608	.484	.358	.733	.077	.116	.062	.937	.875	1.343	.125	.781	1.892	.046			.209	.093	.250	1.875		1.840	.046	.23	.16	1.938
126	AC	FIXTURE, MTG, PTA/PEA.		2900066-011																																										
125	AC	CONT, TEMP, IMU LIFTING		2900063-011																																										
124	AC	FIXTURE, HANDLING, IMU		2900064-011																																										
123	AC	CONT, OPTICS, REMOTE		1902046-021																																										
122	AC	TEST CONTROL		1902009-021																																										
121	AC	ADPT MODULE, P.S.A		1902431-021																																										
120	AC	BRIDGE, DECADE ERROR		2900128-011																																										
119	AC	PWR SUP, ELECTRONICS		2900012-011																																										
118	AC	PWR SUP, RELAY AND LAMP		1900049-031																																										
117	AC	CONSOLE, OSCILLOGRAPH		1900000-021																																										
116	AC	ADPT MODULE, P.S.A.		1902431-011																																										
115	AC	ADPT, TEST POINT, PTA/PEA.		2900145-011																																										
114	AC	ADPT, TEST POINT, P.S.A.		2900037-011																																										
113	AC	CONTROL, GIMBAL POSITION		2900036-011																																										
112	AC	SELECTOR, SIGNAL, PRIMARY		2900035-011																																										
111	AC	SEL, SIG, OSCILLOGRAPH		2900034-011																																										
110	AC	PANEL, PWR SUP AND LOAD		2900033-011																																										
109	AC	PANEL, MONITOR		2900031-011																																										
108	AC	PANEL, AUXILIARY INPUT		2900030-011																																										
107	AC	CAGING ELECTRONICS, GYRO		2900029-011																																										
106	AC	TEST SELECTOR		2900028-011																																										
105	AC	TEST CONTROL		2900027-011																																										
104	AC	MONITOR AND CONTROL, TEMP		2900026-011																																										
103	AC	DISTRIBUTION BOX, GSE		2900024-011																																										
102	AC	VOLTMETER, DIGITAL		2900007-011			B	II	NOTE 11C	2.125	.968	.718	NA	.093	.031	.06	.093	[illegible]	.093	.858	.608	.484	.358	.733	.077	.116	.062	.937	.875	1.343	.125	.781	1.892	.046	NA	NA	.209	.093	.250	1.875	NA	1.840	.046	.23	.16	1.938
101	AC	NAVIGATION BASE ASSEMBLY - LEM		6899950		NAS-9-497	A	I	NOTE 11B	2.000	1.312	1.906	1.375	.076	.048	.078	.093	NA	NA	1.125	.750	.593	.453	1.015	.062	.187	.078	.875	.718	1.375	.218	NA	NA	.048	.031	.875	.305	.078	.531	1.906	.078	NA	.078	.531	.187	NA
100	AC	NAVIGATION BASE ASSEMBLY		2899982		NAS-9-497	A	I	NOTE 11B	2.000	.312	1.906	1.375	.078	.048	.078	.093	NA	NA	1.125	.750	.593	.453	1.015	.062	.187	.078	.875	.718	1.375	.218	NA	NA	.048	.031	.875	.305	.078	.531	1.906	.078	NA	.078	.531	.187	NA

NOTES FOR TABLE
STYLE A IS FOR G&N SYSTEM
STYLE B IS FOR GROUND SUPPORT EQUIPMENT
TYPE I IS WITHOUT MOUNTING HOLES
TYPE II IS WITH MOUNTING HOLES

NOTE: AC DASH NO'S. CONT. ON SH.6

THIS SHEET ADDED
Ⓖ REPLACES REV F WITH CHANGE

AC ELECTRONICS DASH NUMBERS

REVISIONS

SYM	DESCRIPTION	BY	CHK
G	REPLACES REV F WITH CHANGE PER TDRR 20834.		
H	REVISED PER TDRR 20892		
J	REVISED PER TDRR 20904		
K	REVISED PER TDRR [illegible]		
L	REVISED PER TDRR 21410		
M	REVISED PER TDRR 21993		
N	REVISED PER TDRR 22621		
P	REVISED PER TDRR 22671		
R	REVISED PER TDRR 22612		
S	REVISED PER TDRR 22750		
T	REVISED PER TDRR 22823		
U	REVISED PER TDRR 23072		
V	REVISED PER TDRR 2352[illegible]		
W	REVISED PER TDRR [illegible]	RAJ	
Y	REVISED PER TDRR 24018	RAJ	
Z	REVISED PER TDRR 24040	RAJ	
AA	REVISED PER TDRR 24060	RAJ	
AB	REVISED PER TDRR 24868	RAJ	
AC	REVISED PER TDRR 24973	RAJ	
AD	REVISED PER TDRR 25065	RAJ	
AE	REVISED PER TDRR 25422	RAJ	
AF	REVISED PER TDRR 25671	RAJ	
AG	REVISED PER TDRR 26110	RAJ	
AH	REVISED PER TDRR 26372	"	
AJ	REVISED PER TDRR 26425	"	
AK	REVISED PER TDRR 26743	"	
AL	REVISED PER TDRR 26798	"	
AM	REVISED PER TDRR 27168	"	
AN	REVISED PER TDRR 27235	"	
AP	REVISED PER TDRR 27345	"	
AR	REVISED PER TDRR 27417	"	
AS	REVISED PER TDRR 27442	"	
AT	REVISED PER TDRR 27719	"	
AU	REVISED PER TDRR 27880	"	
AV	REVISED PER TDRR 27896	"	
AW	28110	"	
AY	28173	"	
AZ	28131	"	
BA	28124	"	
BB	REVISED PER TDRR 28511	"	
BC	" " " 28943	"	
BD	" " " 29222	"	
BE	" " " 29235	"	
BF	" " " 29322	"	
BG	" " " 29429	"	
BH	" " " 29449	"	
BJ	" " " 29335	"	
BK	" " " 29619	"	
BL	" " " 29696	"	
BM	REVISION STATUS CHANGED	LSD	HS
BN	REVISION STATUS CHANGED	JI	
BP	REVISION STATUS CHANGED	JI	
BR	REVISED PER TDRR 30241	JI	
BS	REVISION STATUS CHANGED	GW	
BT	REVISION STATUS CHANGED	GW	
BU	REVISION STATUS CHANGED	EH	JI
BV	REVISION STATUS CHANGED	JJB	
BW	REVISION STATUS CHANGED	JJB	
BY	REVISION STATUS CHANGED	JJB	
BZ	REVISION STATUS CHANGED	WB	
CA	REVISION STATUS CHANGED	WB	
CB	REVISION STATUS CHANGED	REF	
CC	REVISION STATUS CHANGED	AF	
CD	REVISION STATUS CHANGED	TR	
CE	REVISION STATUS CHANGED		
CF	~~REVISION~~ STATUS CHANGED		
CG	REVISION STATUS CHANGED	A.N.	
CH	REVISION STATUS CHANGED		

QTY REQD	PART OR IDENTIFYING NO.	MATERIAL OR NOTES	NOMENCLATURE OR DESCRIPTION	ITEM NO.

LIST OF MATERIALS

NEXT ASSY	USED ON
AS APPLICABLE	

APPLICATION

UNLESS OTHERWISE SPECIFIED
DIMENSIONS ARE IN INCHES
CAPACITOR VALUES ARE IN μf
RESISTOR VALUES ARE IN OHMS
TOLERANCES ON
FRACTIONS ± — DECIMALS ±.005 ANGLES ± —
DO NOT SCALE THIS DRAWING

MATERIAL
SEE NOTE 11

MIT
INSTRUMENTATION LAB
CAMBRIDGE, MASS

MANNED SPACECRAFT CENTER
HOUSTON, TEXAS

DRAWN R.U. [illegible] 7-6-65
CHECKED A.J. [illegible] 7-22-65
APPROVED
APPROVED [illegible]
APPROVED MIT [illegible]
APPROVED MSC [illegible]
DATE

NAMEPLATES
APOLLO G&N-GSE
(STANDARDS)

CODE IDENT NO. 80230
SIZE E
DRAWING NO. 1004260
SCALE NONE

REV	DESCRIPTION	DATE
G	REPLACES REV F WITH CHANGE PER TDRR 20898	[illegible]
H	REVISED PER TDRR 20[illegible]	[illegible]
J	REVISED PER TDRR 20904	[illegible]
K	REVISED PER TDRR 2137[illegible]	[illegible]
L	REVISED PER TDRR 21410	[illegible]
M	REVISED PER TDRR 21933	[illegible]
N	REVISED PER TDRR 22621	[illegible]
P	REVISED PER TDRR 22671	[illegible]
R	REVISED PER TDRR 22672	[illegible]
S	REVISED PER TDRR 22750	[illegible]
T	REVISED PER TDRR 22123	[illegible]
U	REVISED PER TDRR 23072	[illegible]
V	REVISED PER TDRR [illegible]	[illegible]
W	REVISED PER TDRR 23[illegible]	[illegible]
Y	REVISED PER TDRR 24010	[illegible]
Z	REVISED PER TDRR 240[illegible]	[illegible]
AA	REVISED PER TDRR 24[illegible]	[illegible]
AB	REVISED PER TDRR 24[illegible]	[illegible]
AC	REVISED PER TDRR 24[illegible]	[illegible]
AD	REVISED PER TDRR 25065	1-18-66
AE	REVISED PER TDRR 25672	2-4-66
AF	REVISED PER TDRR 25671	2-4-66
AG	REVISED PER TDRR 26110	2-18-66
AH	REVISED PER TDRR 26372	3-16-66
AJ	REVISED PER TDRR 26425	3-16-66
AK	REVISED PER TDRR 26743	3-16-66
AL	REVISED PER TDRR 267[illegible]	3-16-66
AM	REVISED PER TDRR 27168	4-7-66
AN	REVISED PER TDRR 27235	4-7-66
AP	REVISED PER TDRR 27345	4-7-66
AR	REVISED PER TDRR 27417	4-7-66
AS	REVISED PER TDRR 27442	4-7-66
AT	REVISED PER TDRR 277[illegible]	4-20-66
AU	REVISED PER TDRR 27880	4-20-66
AV	REVISED PER TDRR 27896	4-20-66
AW	28110	5-16-66
AY	28173	[illegible]
AZ	28131	[illegible]
BA	28124	[illegible]
BB	REVISED PER TDRR 285[illegible]	5-16-66
BC	" " " 28949	[illegible]
BD	" " " 29222	6-8-66
BE	" " " 29235	"
BF	" " " 29322	6-21-66
BG	" " " 29429	"
BH	" " " 29449	"
BJ	" " " 29335	"
BK	" " " 29619	"
BL	" " " 29696	6-23-66
BM	REVISION STATUS CHANGED	[illegible]
BN	REVISION STATUS CHANGED	[illegible]
BP	REVISION STATUS CHANGED	[illegible]
BR	REVISION STATUS CHANGED	[illegible]
BS	REVISION STATUS CHANGED	[illegible]
BT	REVISION STATUS CHANGED	[illegible]
BU	REVISION STATUS CHANGED	[illegible]
BV	REVISION STATUS CHANGED	[illegible]
BW	REVISION STATUS CHANGED	[illegible]
BY	REVISION STATUS CHANGED	OCT
BZ	REVISION STATUS CHANGED	10 OCT 66
CA	REVISION STATUS CHANGED	25 OCT
CB	REVISION STATUS CHANGED	[illegible]
CC	REVISION STATUS CHANGED	[illegible]
CD	REVISION STATUS CHANGED	[illegible]
CE	REVISION STATUS CHANGED	[illegible]
CF	REVISION STATUS CHANGED	[illegible]
CG	REVISION STATUS CHANGED	[illegible]
CH	REVISION STATUS CHANGED	[illegible]

499 MIT
498

DASH NO.	P/C	PART NAME	REMARKS	PART NO.	SER. NO.	CONT. NO.	STYLE	TYPE	MATERIAL	A	B	C	D	E	F	G	H	J	K	L	M	N	P	R	S	T	U	V	W	Y	Z	AA	AB	AC	AD	AE	AF	AG	AH	AJ	AK	AL	AM	AN	AP	AR
401	MIT	COMPUTER ASSY		2003100		NAS-9-497	A	I	NOTE 11 B	2.000	1.312	1.906	1.375	.078	.048	.078	.093	NA	NA	1.125	.750	.593	.453	1.015	.062	.187	.078	.875	.718	1.375	.218	NA	NA	.048	.031	.875	.305	.078	.531	1.906	.078	NA	.078	.531	.187	NA
400	MIT	LIFTING SLING - G&N INST. QUAL. FIX. & AZM. REF. FIX.		1021640		NAS-9-4065	B	II	NOTE 11 C	2.000	1.312	1.687	1.375	.078	.048	.078	.093	[illegible]	.093	1.187	.750	.593	.453	1.015	.062	.187	.078	.875	.718	1.375	.218	1.156	1.843	.048	NA	.875	.305	.078	.312	1.687	.110	1.830	.070	.275	.180	1.844

MIT DASH NUMBERS

THIS SHEET ADDED
Ⓖ REPLACES REV F WITH CHANGE

NOTES FOR TABLE
STYLE A IS FOR G & N SYSTEM
STYLE B IS FOR GROUND SUPPORT EQUIPMENT
TYPE I IS WITHOUT MOUNTING HOLES
TYPE II IS WITH MOUNTING HOLES

QTY REQD	PART OR IDENTIFYING NO.	MATERIAL OR NOTES	NOMENCLATURE OR DESCRIPTION

LIST OF MATERIALS

AS APPLICABLE

NEXT ASSY	USED ON

APPLICATION

UNLESS OTHERWISE SPECIFIED
DIMENSIONS ARE IN INCHES
CAPACITOR VALUES ARE IN μf
RESISTOR VALUES ARE IN OHMS
TOLERANCES ON
FRACTIONS ± — DECIMALS ±.005 ANGLES ± —
DO NOT SCALE THIS DRAWING

MATERIAL
SEE NOTE 11

MIT
INSTRUMENTATION LAB
CAMBRIDGE, MASS.

DRAWN R. G. Jones 7-16-65
CHECKED [illegible]
APPROVED
APPROVED W. Kupfer
APPROVED MIT W. Kupfer
APPROVED NASA [illegible]
DATE

MANNED SPACECRAFT CENTER
HOUSTON, TEXAS

NAMEPLATES,
APOLLO G & N - GSE
(STANDARDS)

CODE IDENT NO. 80230
SIZE E
DRAWING NO. 1004260
SCALE NONE
SHEET [illegible]

SYM	ZONE	DESCRIPTION	BY	CHKD	DATE	APPROVED
AG		CHANGED NUMBER OF SHEETS FROM 5 TO 6 PER TDRR 26110.	RAJ			
AH		REVISED PER TDRR 26372				
AJ		REVISED PER TDRR 26426				
AK		REVISED PER TDRR 26743				
AL		REVISED PER TDRR 26798				
AM		REVISED PER TDRR 27168			4-7-66	
AN		REVISED PER TDRR 27235			4-7-66	
AP		REVISED PER TDRR 27345			4-7-66	
AR		REVISED PER TDRR 27417			4-7-66	
AS		REVISED PER TDRR 27442			4-7-66	
AT		REVISED PER TDRR 27719				
AU		REVISED PER TDRR 27880				
AV		REVISED PER TDRR 27896				
AW		28110				
AY		28173				
AZ		28131				
BA		28124				
BB		REVISED PER TDRR 28511				
BC		" " " 28949				
BD		" " " 29222				
BE		" " " 29235				
BF		" " " 29322				
BG		" " " 29429				
BH		" " " 29449				
BJ		" " " 29535				
BK		" " " 29619				
BL		" " " 29696			6-29-66	
BM		REVISION STATUS CHANGED	JSD	N.S.	7-29-66	
BN		REVISED PER TDRR 29974	JL			
BP		REVISION STATUS CHANGED	JL			
BR		REVISION STATUS CHANGED	JL			
BS		REVISED PER TDRR 30530	GW			
BT		REVISED PER TDRR 30543	GW			
BU		REVISED PER TDRR 30898	EH	JL		
BV		REVISED PER TDRR 31241	WP			
BW		REVISION STATUS CHANGED	JJB	RLW		
BY		REVISED PER TDRR 31341	JJB	RLW	10 OCT 66	
BZ		REVISED PER TDRR 31383	JJB	RLW	10 OCT 66	
CA		REVISED PER TDRR 31593	JJB		25 OCT 66	
CB		REVISED PER TDRR 32187	REF		10 DEC 66	
CC		REVISED PER TDRR 32512	AF			
CD		REVISION STATUS CHANGED	DR	M.W.		
CE		REVISION STATUS CHANGED				
CF		REVISED PER TDRR 33558				
CG		REVISED PER TDRR 33968	A.N.			
CH		REVISED PER TDRR 34010				

DASH NO.	P/C	PART NAME	REMARKS	PART NO.	SER NO.	CONT NO.	STYLE	TYPE	MATERIAL	A	B	C	D	E	F	G	H	J	K	L	M	N	P	R	S	T	U	V	W	Y	Z	AA	AB	AC	AD	AE	AF	AG	AH	AJ	AK	AL	AM	AN	AP	AR
599	AC																																													
598	AC																																													
560		ADPT. MODULE, PSA		2901143-021		NAS9-497	B	II	NOTE IIC	FOR DIMENSIONS SEE DASH 141 VALUES																																				
559		CSL, CAL AND TEST, SCM/PSAAM		2900895-031		FOR OTHER DATA SEE DASH 547																																								
558		PSA ADAPTER MODULE (LEM)		6900088-021		FOR OTHER DATA SEE DASH 189																																								
557		FIX., HANDLING, C/M PSA		2900998-021		NAS 9-497	B	II	NOTE IIC	FOR DIMENSIONS SEE DASH 141 VALUES																																				
556		FIX., MOUNTING G&N	(-144)	2900067-041		NAS9-497	B	II	NOTE IIC	FOR DIMENSIONS SEE DASH 500 VALUES																																				
555	AC	OPTICAL UNIT ASSEMBLY		1021368-061		NAS 9-497	A	I	NOTE IIB	2.000	1.312	1.687	1.375	.078	.048	.078	.093	NA	NA	1.125	.750	.593	.453	1.015	.062	.187	.078	.875	.718	1.375	.218	NA	NA	.048	.031	.875	.305	NA	.468	1.531	NA	NA	.078	.312	.187	NA
554	AC	OPTICAL UNIT ASSEMBLY		1021368-051		NAS 9-497	A	I	NOTE IIB	2.000	1.312	1.687	1.375	.078	.048	.078	.093	NA	NA	1.125	.750	.593	.453	1.015	.062	.187	.078	.875	.718	1.375	.218	NA	NA	.048	.031	.875	.305	NA	.468	1.531	NA	NA	.078	.312	.187	NA
553	AC	OPTICAL UNIT AND BELLOWS ASS'Y		2010790-111		NAS 9-497	A	I	NOTE IIB	2.000	1.312	1.687	1.375	.078	.048	.078	.093	NA	NA	1.125	.750	.593	.453	1.015	.062	.187	.078	.875	.718	1.375	.218	NA	NA	.048	.031	.875	.305	NA	.468	1.531	NA	NA	.078	.312	.187	NA
552	AC	OPTICAL UNIT AND BELLOWS ASS'Y		2010790-081		NAS 9-497	A	I	NOTE IIB	2.000	1.312	1.687	1.375	.078	.048	.078	.093	NA	NA	1.125	.750	.593	.453	1.015	.062	.187	.078	.875	.718	1.375	.218	NA	NA	.048	.031	.875	.305	NA	.468	1.531	NA	NA	.078	.312	.187	NA
551	AC	OPTICAL UNIT AND BELLOWS ASS'Y		2010790-071		NAS 9-497	A	I	NOTE IIB	2.000	1.312	1.687	1.375	.078	.048	.078	.093	NA	NA	1.125	.750	.593	.453	1.015	.062	.187	.078	.875	.718	1.375	.218	NA	NA	.048	.031	.875	.305	NA	.468	1.531	NA	NA	.078	.312	.187	NA
550	AC	OPTICAL UNIT AND BELLOWS ASS'Y		2010790-061		NAS 9-497	A	I	NOTE IIB	2.000	1.312	1.687	1.375	.078	.048	.078	.093	NA	NA	1.125	.750	.593	.453	1.015	.062	.187	.078	.875	.718	1.375	.218	NA	NA	.048	.031	.875	.305	NA	.468	1.531	NA	NA	.078	.312	.187	NA
548		CAGING ELECTRONICS, GYRO		2900029-031		NAS 9-497	B	II	NOTE IIC	2.125	.968	1.718	NA	.093	.031	.06	.093	.100 .104	.093	.858	.608	.484	.358	.733	.077	.116	.062	.937	.875	1.343	.125	.781	1.892	.046	NA	NA	.209	.093	.250	1.875	NA	1.840	.046	.23	.16	1.938
547		CSL, CAL AND TEST, SCM/PSAAM		2900895-021		NAS-9-497	B	II	NOTE II C	4.125	1.812	3.250	NA	.125	.062	.12	.156	.100 .104	.125	1.625	1.140	.890	.640	1.390	.125	.171	.125	1.875	1.687	2.625	.250	1.562	3.843	.093	NA	NA	.359	.125	.437	3.688	NA	3.687	.093	.40	.25	3.875
546		FIX. HAND., C/M AND LEM CDU		2900999-021		NAS-9-497	B	II	NOTE II C	2.125	.968	1.718	NA	.093	.031	.06	.093	.100 .104	.093	.858	.608	.484	.358	.733	.077	.116	.062	.937	.875	1.343	.125	.781	1.892	.046	NA	NA	.209	.093	.250	1.875	NA	1.840	.046	.23	.16	1.938
545	AC	G&N INDICATOR CONTROL PANEL ASSY		2014578-021		NAS-9-497	A	I	NOTE II B	3.000	1.938	2.437	NA	.125	.062	.188	.156	NA	NA	1.750	1.125	.906	.688	1.500	NA	.281	.125	NA	1.094	2.062	.312	NA	2.500	.062	.125	1.312	.469	NA	NA	NA	.156	NA	.125	.469	.344	NA
[illegible]		ADPT MODULE, P.S.A.		1902431-051		NAS-9-497	B	II	NOTE II C	2.125	.968	1.718	NA	.093	.031	.06	.093	.100 .104	.093	.858	.608	.484	.358	.733	.077	.116	.062	.937	.875	1.343	.125	.781	1.892	.046	NA	NA	.209	.093	.250	1.875	NA	1.840	.046	.23	.16	1.938
[illegible]	[illegible]	FIXTURE, MOUNTING, IMU		2900000-021		NAS 9-437	B	II	NOTE IIC	4.125	1.812	3.250	NA	.125	.062	.12	.156	.100 .104	.125	1.625	1.140	.890	.640	1.390	.125	.171	.125	1.875	1.687	2.625	.250	1.562	3.843	.093	NA	NA	.359	.125	.437	3.688	NA	3.687	.093	.40	.25	3.875
[illegible]	AC	PANEL, MONITOR		2900031-041		NAS9-497	B	II	NOTE IIC	2.125	.968	1.718	NA	.093	.031	.06	.093	.100 .104	.093	.858	.608	.484	.358	.733	.077	.116	.062	.937	.875	1.343	.125	.781	1.892	.046	NA	NA	.209	.093	.250	1.875	NA	1.840	.046	.23	.25	1.938
542	[illegible]	BATTERY PACK, LIFTING		2900812-021		NAS 9-497	B	II	NOTE IIC	2.125	.968	1.718	NA	.093	.031	.06	.093	.100 .104	.093	.858	.608	.484	.358	.733	.077	.116	.062	.937	.875	1.343	.125	.781	1.892	.046	NA	NA	.209	.093	.250	1.875	NA	1.840	.046	.23	.16	1.938
540	[illegible]	ADPT, TEST POINT, P.S.A.		2900037-031		NAS 9-497	B	II	NOTE IIC	2.125	.968	1.718	NA	.093	.031	.06	.093	.100 .104	.093	.858	.608	.484	.358	.733	.077	.116	.062	.937	.875	1.343	.125	.781	1.892	.046	NA	NA	.209	.093	.250	1.875	NA	1.840	.046	.23	.16	1.938
539	AC	ANNUNCIATOR PANEL AND EYEPIECE STORAGE ASSEMBLY		1021255-041			A	I	NOTE IIB	2.000	1.312	1.906	1.375	.078	.048	.078	.093	NA	NA	1.125	.750	.593	.453	1.015	.062	.187	.078	.875	.718	1.375	.218	NA	NA	.048	.031	.875	.305	.078	.531	1.906	.078	NA	.078	.531	.187	NA
538	AC	ANNUNCIATOR PANEL AND EYEPIECE STORAGE ASSEMBLY		1021255-031			A	I	NOTE IIB	2.000	1.312	1.906	1.375	.078	.048	.078	.093	NA	NA	1.125	.750	.593	.453	1.015	.062	.187	.078	.875	.718	1.375	.218	NA	NA	.048	.031	.875	.305	.078	.531	1.906	.078	NA	.078	.531	.187	NA
[illegible]	[illegible]	[illegible]		2900028-031			B	II	NOTE IIC	2.125	.968	1.718	NA	.093	.031	.06	.093	.100 .104	.093	.858	.608	.484	.358	.733	.077	.116	.062	.937	.875	1.343	.125	.781	1.892	.046	NA	NA	.209	.093	.250	1.875	NA	1.840	.046	.23	.16	1.938
536	AC	ANALYZER, OPTICS - INERTIAL		2900023-041			B	II	NOTE IIC	4.25	1.812	3.250	NA	.125	.062	.12	.156	.100 .104	.125	1.625	1.140	.890	.640	1.390	.125	.171	.125	1.875	1.687	2.625	.250	1.562	3.843	.093	NA	NA	.359	.125	.437	3.688	NA	3.687	.093	.40	.25	3.875
535	AC	CONT, TEMP, PORTABLE		2900060-021			B	II	NOTE IIC	2.125	.968	1.718	NA	.093	.031	.06	.093	.100 .104	.093	.858	.608	.484	.358	.733	.077	.116	.062	.937	.875	1.343	.125	.781	1.892	.046	NA	NA	.209	.093	.250	1.875	NA	1.840	.046	.23	.16	1.938
534	AC	COMPUTER CONT & RETICLE DIMMER		6014512-021			A	I	NOTE IIB	2.000	1.312	1.906	1.375	.078	.048	.078	.093	NA	NA	1.125	.750	.593	.453	1.015	.062	.187	.078	.875	.718	1.375	.218	NA	NA	.048	.031	.875	.305	.078	.531	1.906	.078	NA	.078	.531	.187	NA
533	AC	ADPT MODULE, P.S.A.		1902431-041			B	II	NOTE IIC	2.125	.968	1.718	NA	.093	.031	.06	.093	.100 .104	.093	.858	.608	.484	.358	.733	.077	.116	.062	.937	.875	1.343	.125	.781	1.892	.046	NA	NA	.209	.093	.250	1.875	NA	1.840	.046	.23	.16	1.938
532	AC	TRAY BREAKOUT, 105 PIN		1900807-021						4.125	1.812	3.250		.125	.062	.12	.156	.100 .104	.125	1.625	1.140	.890	.640	1.390	.125	.171	.125	1.875	1.687	2.625	.250	1.562	3.843	.093			.359	.125	.437	3.688		3.687	.093	.40	.25	3.875
531	AC	TRAY BREAKOUT, 84 PIN		1900806-021						4.125	1.812	3.250		.125	.062	.12	.156	.100 .104	.125	1.625	1.140	.890	.640	1.390	.125	.171	.125	1.875	1.687	2.625	.250	1.562	3.843	.093			.359	.125	.437	3.688		3.687	.093	.40	.25	3.875
530	AC	HEAT SINK - TRAY EXTENDER		1900808-021						2.125	.968	1.718		.093	.031	.06	.093	.100 .104	.093	.858	.608	.484	.358	.733	.077	.116	.062	.937	.875	1.343	.125	.781	1.892	.046			.209	.093	.250	1.875		1.840	.046	.23	.16	1.938
529	AC	TESTER, FAILURE INDICATOR		1900809-021						2.125	.968	1.718	NA	.093	.031	.06	.093	.100 .104	.093	.858	.608	.484	.358	.733	.077	.116	.062	.937	.875	1.343	.125	.781	1.892	.046	NA	NA	.209	.093	.250	1.875	NA	1.840	.046	.23	.16	1.938
527	AC	FIX., MOUNTING, G AND N	(-144)	1902204-021						FOR DIMENSIONS, SEE DASH 500 VALUES BELOW																																				
526	AC	FIX., MOUNTING, G AND N	(-144)	2900067-031																																										
525	AC	PORTABLE TEMP. CONTROLLER		1900496-021			B	II	NOTE IIC	3.000	1.937	2.437	2.312	.125	.031	.125	.156	.125	.125	1.718	1.187	.968	.749	1.452	.093	.295	.090	1.312	1.00	2.000	.250	1.687	2.750	.062	N/A	NA	.463	.125	.562	2.437	.140	2.562	.090	.468	.359	2.750
524	AC	POWER, SERVO AND THERMOCOUPLE ASSEMBLY C/M		2010743			A	I	NOTE IIB	2.125	.968	1.718	NA	.093	.031	.06	.093	NA	NA	.858	.608	.484	.358	.733	.062	.140	.062	NA	.968	1.450	.125	NA	1.720	.046	.03	NA	.210	NA	NA	NA	.070	NA	.046	.12	.16	NA
523	AC	PULSE TORQUE AND THERMOCOUPLE ASSEMBLY - LEM		6010656						FOR DIMENSIONS, SEE DASH 508 VALUES BELOW																																				
522	AC	COUPLING DATA UNIT AND THERMOCOUPLE ASSEMBLY - LEM		2010744																																										
521	AC	COUPLING DATA UNIT AND THERMOCOUPLE ASSEMBLY - C/M		2010744																																										
520	AC	PIPA ELECTRONICS AND THERMOCOUPLE ASSEMBLY		2010745			A	I	NOTE IIB																																					
519	AC	FIXTURE, HANDLING, LEM-PSA	(-141)	6900129-011			B	II	NOTE IIC	FOR DIMENSIONS, SEE DASH 504 VALUES BELOW																																				
518	AC	JUNCTION BOX, GSE-PSA	(-144)	1901933-031			B	II	NOTE IIC	FOR DIMENSIONS, SEE DASH 500 VALUES BELOW																																				
517	AC	FIX. HAND., OPTICS INSTL.	(-141)	2901380-011			B	II	NOTE IIC	FOR DIMENSIONS SEE DASH 502 VALUES BELOW																																				
516	AC	POWER, SERVO AND THERMOCOUPLE ASSEMBLY-LEM		6010655		NAS 9 497	A	I	NOTE IIB	FOR DIMENSIONS SEE DASH 508 VALUES BELOW																																				
514	AC	SIGNAL COND. ASSY LEM OPER.	(-100)	6007013		NAS-9-497	A	I	NOTE IIB	FOR DIMENSIONS, SEE DASH 508 VALUES BELOW																																				
513		JUMPER, BY-PASS	(-141)	1021616			B	II	NOTE IIC	2.125	.968	1.718	NA	.093	.031	.06	.093	.100 .104	.093	.858	.608	.484	.358	.733	.077	.116	.062	.937	.875	1.343	.125	.781	1.892	.046	NA	NA	.209	.093	.250	1.875	NA	1.840	.046	.23	.16	1.938
512		COUPLING DATA UNIT ASSEMBLY C/M	(-100)	2007322-011			A	I	NOTE IIB	FOR DIMENSIONS, SEE DASH 508 VALUES BELOW																																				
511		COUPLING DATA UNIT ASSEMBLY-LEM	(-100)	2007322-021																																										
510		BATTERY POWER PACK	(-144)	1900011-041			B	II	NOTE IIC	FOR DIMENSIONS, SEE DASH 500 VALUE BELOW																																				
509		JUNCTION BOX, P.S.A./G.S.E.	(-144)	1902[illegible]95-021			B	II	NOTE IIC																																					
508		NAVIGATION BASE ASSEMBLY - LEM	✓ (-101)	6899980			A	I	NOTE IIB	2.000	1.312	1.906	1.375	.078	.048	.078	.093	NA	NA	1.125	.750	.593	.453	1.015	.062	.187	.078	.875	.718	1.375	.218	NA	NA	.048	.031	.875	.305	.078	.531	1.906	.078	NA	.078	.531	.187	NA
507		CSL, COOL. AND PWR., G AND N	(-144)	1902134-041			B	II	NOTE IIC	FOR DIMENSIONS, SEE DASH 500 VALUES BELOW																																				
506		BREAKOUT BOX, CABLE ADAPTER	(-141)	2901011-011						2.125	.968	1.718	NA	.093	.031	.06	.093	.100 .104	.093	.858	.608	.484	.358	.733	.077	.116	.062	.937	.875	1.343	.125	.781	1.892	.046	NA	NA	.209	.093	.250	1.875	NA	1.840	.046	.23	.16	1.938
505		MONITOR AND CONTROL, TEMP	(-141)	2900026-021																																										
504		PWR SUP, GUIDANCE SYSTEM	✓ (-141)	1900033-021																																										
503		CONTROL, GIMBAL POSITION	(-141)	2900036-021																																										
502		ADPT, TEST POINT, PTA/PEA,	(-141)	2900145-021																																										
501		MOUNTING PLATE, COMPONENT	(-144)	6900007-031		NAS 9-497	B	II	NOTE IIC	FOR DIMENSIONS, SEE DASH 500 VALUES BELOW																																				
500	AC	MOUNTING PLATE, COMPONENT	✓ (-144)	2900677-021						4.125	1.812	3.250	NA	.125	.062	.12	.156	.100 .104	.25	1.625	1.140	.890	.640	1.390	.125	.171	.25	1.875	1.687	2.625	.250	1.562	3.843	.093	NA	NA	.359	.125	.437	3.688	NA	3.687	.093	.40	.25	3.875

AC ELECTRONICS DASH NUMBERS

(AG) THIS SHEET ADDED

NOTES FOR TABLE
STYLE A IS FOR G&N SYSTEM
STYLE B IS FOR GROUND SUPPORT EQUIPMENT
TYPE I IS WITHOUT MOUNTING HOLES
TYPE II IS WITH MOUNTING HOLES

QTY REQD	PART OR IDENTIFYING NO.	MATERIAL OR NOTES	NOMENCLATURE OR DESCRIPTION

LIST OF MATERIALS

NEXT ASSY	USED ON
AS APPLICABLE	

APPLICATION

UNLESS OTHERWISE SPECIFIED
DIMENSIONS ARE IN INCHES
CAPACITOR VALUES ARE IN µf
RESISTOR VALUES ARE IN OHMS
TOLERANCES ON
FRACTIONS ± — DECIMALS ±.005 ANGLES ± —
DO NOT SCALE THIS DRAWING

MATERIAL
SEE NOTE II

MIT
INSTRUMENTATION LAB
CAMBRIDGE, MASS

MANNED SPACECRAFT CENTER
HOUSTON, TEXAS

DRAWN 2-15-66
CHECKED 2-15-66
APPROVED
APPROVED
APPROVED MIT
APPROVED MSC
DATE

NAMEPLATES
APOLLO G&N-GSE
(STANDARDS)

CODE IDENT NO 80230
SIZE E
DRAWING NO. 1004260
SCALE NONE
SHEET OF

SYM	ZONE	DESCRIPTION	BY		DATE
G		REPLACES REV F WITH CHANGE PER TDRR 20834.			
H		REVISED PER TDRR 20892			
J		REVISED PER TDRR 20904			
K		REVISED PER TDRR 21373			
L		REVISED PER TDRR 21410			
M		REVISED PER TDRR 21[illegible]			
N		REVISED PER TDRR 22621			
P		REVISED PER TDRR 22671			
R		REVISED PER TDRR 22672			
S		REVISED PER TDRR 22750			
T		REVISED PER TDRR 22823			
U		REVISED PER TDRR 23072			
V		REVISED PER TDRR 23521			
W		REVISED PER TDRR [illegible]			
Y		REVISED PER TDRR 24018			
Z		REVISED PER TDRR 24040	RAJ		11-19-65
AA		REVISED PER TDRR 24060	RAJ		11-19-65
AB		REVISED PER TDRR 24868	RAJ		12-22-65
AC		REVISED PER TDRR 24973	RAJ		
AD		REVISED PER TDRR 25065	RAJ		1-18-66
AE		REVISED PER TDRR 25672			
AF		REVISED PER TDRR 25671	RAJ		2-4-66
AG		REVISED PER TDRR 26110	RAJ		
AH		REVISED PER TDRR 26372			3-16-66
AJ		REVISED PER TDRR 26425			3-16-66
AK		REVISED PER TDRR 26743			3-18-66
AL		REVISED PER TDRR 26798			3-16-66
AM		REVISED PER TDRR 27168			4-8-66
AN		REVISED PER TDRR 27235			4-8-66
AP		REVISED PER TDRR 27345			4-8-66
AR		REVISED PER TDRR 27417			
AS		REVISED PER TDRR 27442			4-8-66
AT		REVISED PER TDRR 27719			
AU		REVISED PER TDRR 27880			
AV		REVISED PER TDRR 27896			
AW			28110		5-16-66
AY			28173		
AZ			28131		
BA			28124		
BB		REVISED PER TDRR 28511			5-16-66
BC		" " " 28949			5-24-66
BD		" " " 29222			6-8-66
BE		" " " 29235			
BF		" " " 29322			
BG		" " " 29423			
BH		" " " 29443			
BJ		" " " 29335			
BK		" " " 29619			
BL		" " " 29696			
BM		REVISION STATUS CHANGED	JSD	N.S.	7-28-66
BN		REVISION STATUS CHANGED	JI		
BP		REVISION STATUS CHANGED	JI		
BR		REVISION STATUS CHANGED	JI		
BS		REVISION STATUS CHANGED	GW		
BT		REVISION STATUS CHANGED	GW		
BU		REVISION STATUS CHANGED	EH		
BV		REVISION STATUS CHANGED	JJB		
BW		" " "	JJB		
BY		" " "	JJB		
BZ		REVISION STATUS CHANGED	JJB		
CA		REVISION STATUS CHANGED	JJB		
CB		REVISION STATUS CHANGED			
CC		REVISION STATUS CHANGED	AF		
CD		REVISION STATUS CHANGED	DR		
CE		REVISION STATUS CHANGED			
CF		REVISION STATUS CHANGED			
CG		REVISION STATUS CHANGED	A.N.		
CH		REVISION STATUS CHANGED			
CJ		REVISION STATUS CHANGED			

DASH NO.	P/C	PART NAME	REMARKS	PART NO.	SER. NO.	CONT. NO.	STYLE	TYPE	MATERIAL	A	B	C	D	E	F	G	H	J	K	L	M	N	P	R	S	T	U	V	W	Y	Z	AA	AB	AC	AD	AE	AF	AG	AH	AJ	AK	AL	AM	AN	AP	AR
350	K	ALIGNMENT OPTICAL TELESCOPE (LEM)		NA	NA	NA	A	I	NOTE 11B	4.000	2.625	3.375	2.750	.156	.093	.156	.187	NA	NA	2.312	1.468	1.187	.906	2.031	NA	.375	.156	NA	1.437	2.750	.437	NA	3.688	.062	.062	1.750	.593	NA	.625	3.375	.187	NA	.156	.531	.453	NA
309	K																																													
308	K																																													
307	K						B	I	NOTE 11 B	4.000	2.625	3.375	2.750	.156	.093	.156	.187	NA	NA	2.328	1.468	.187	.906	2.031	.062	.375	.156	NA	1.437	2.750	.437	NA	3.687	.062	.062	1.750	.593	NA	NA	NA	NA	NA	NA	NA	NA	NA
306	K						B	II	NOTE 11 C	4.000	2.625	3.375	2.750	.156	.093	.156	.187	.125	.156	2.328	1.468	1.187	.906	2.031	.062	.375	.156		1.437	2.750	.437	2.312	3.687	.062	NA	1.750	.593									
305	K						B	I	NOTE 11 B	2.000	1.312	1.687	.375	.078	.048	.078	.093	NA	NA	1.164	.734	.593	.453	1.015	.048	.71	.078		.718	1.375	.187	NA	NA	.048	.031	.875	.320									
304	K						B	II	NOTE 11 C	2.000	1.312	1.687	1.375	.078	.048	.078	.093	.070	.078	1.164	.734	.593	.453	1.015	.048	.171	.078	NA	.718	1.375	.187	.156	.843	.048	NA	.875	.320	NA	NA	NA	NA	NA	NA	NA	NA	NA
303	K																																													
302	K																																													
301	K																																													
300	K	OPTICAL UNIT		NA	NA	NA	A		NOTE 11 B	2.000	1.312	.675	NA	NA	.048	.078	NA	NA	NA	1.090	.812	.675	.540	.940	NA	.265	NA	NA	NA	1.375	[illegible]	NA	NA	NA	NA	NA	.375	NA	NA	NA	.180	NA	.078	NA	NA	NA
9	K	2 IN AUTOCOLLIMATOR		1001702			B	II	NOTE 11 C	4.000	2.625	3.812	2.750	.156	.093	.156	.187	.125	.156	2.250	1.500	1.187	.906	2.031	.093	.375	.156	1.750	1.437	2.750	.437	2.312	3.687	.062	NA	1.750	.593	.156	1.062	3.812	.156	NA	.156	1.062	.375	3.687
8	K	5 IN AUTOCOLLIMATOR		1017410			B	II	NOTE 11 C	4.000	2.625	3.812	2.750	.156	.093	.156	.187	.125	.156	2.250	1.500	1.187	.906	2.031	.093	.375	.156	1.750	1.437	2.750	.437	2.312	3.687	.062	NA	1.750	.593	.156	1.062	3.812	.156	NA	.156	1.062	.375	3.687
7	K	2½ IN AUTOCOLLIMATOR (SCT)		1017435			B	II	NOTE 11 C	4.000	2.625	3.812	2.750	.156	.093	.156	.187	.125	.156	2.250	1.500	1.187	.906	2.031	.093	.375	.156	1.750	1.437	2.750	.437	2.312	3.687	.062	NA	1.750	.593	.156	1.062	3.812	.156	NA	.156	1.062	.375	3.687
6	K	2½ IN AUTOCOLLIMATOR (SXT)		1017448			B	II	NOTE 11 C	4.000	2.625	3.812	2.750	.156	.093	.156	.187	.125	.156	2.250	1.500	1.187	.906	2.031	.093	.375	.156	1.750	1.437	2.750	.437	2.312	3.687	.062	NA	1.750	.593	.156	1.062	3.812	.156	NA	.156	1.062	.375	3.687
5	K	RETROREFLECTING PRISM ASSEMBLY		1019840			B	I	NOTE 11 B	4.000	2.625	3.812	2.750	.156	.093	.156	.187	NA	NA	2.250	1.500	1.187	.906	2.031	.093	.375	.156	1.750	1.437	2.750	.437	NA	NA	.062	.062	1.750	.593	.156	1.062	3.812	.156	NA	.156	1.062	.375	NA
4	K	S/H SIMULATOR ASSEMBLY		1019896			B	I	NOTE 11 B	4.000	2.625	3.812	2.750	.156	.093	.156	.187	NA	NA	2.250	1.500	1.187	.906	2.031	.093	.375	.156	1.750	1.437	2.750	.437	NA	NA	.062	.062	1.750	.593	.156	1.062	3.812	.156	NA	.156	1.062	.375	NA
3	K	REFERENCE MIRROR		1001767			B	I	NOTE 11 B	2.000	1.312	1.906	1.375	.078	.048	.078	.093	NA	NA	1.125	.750	.593	.453	1.015	.062	.187	.078	.875	.718	1.375	.218	NA	NA	.048	.031	.875	.305	.078	.531	1.906	.078	NA	.078	.531	.187	NA
2	K	2 IN PLANE READING AUTOCOLLIMATOR		1017413			B	I	NOTE 11 B	2.000	1.312	1.906	1.375	.078	.048	.078	.093	NA	NA	1.125	.750	.593	.453	1.015	.062	.187	.078	.875	.716	1.375	.218	NA	NA	.048	.031	.875	.305	.078	.531	1.906	.078	NA	.078	.531	.187	NA
1	K	2 IN AUTOCOLLIMATOR		1001702			B	I	NOTE 11 B	2.000	1.312	1.906	1.375	.078	.046	.078	.093	NA	NA	1.125	.750	.593	.453	1.015	.062	.187	.078	.875	.718	1.375	.218	NA	NA	.048	.031	.875	.305	.078	.531	1.906	.078	NA	.078	.531	.187	NA

Ⓖ REPLACES REV F WITH CHANGE

KOLLSMAN DASH NUMBERS

NOTES FOR TABLE

STYLE A IS FOR G&N SYSTEM.
STYLE B IS FOR GROUND SUPPORT EQUIPMENT.
TYPE I IS WITHOUT MOUNTING HOLES.
TYPE II IS WITH MOUNTING HOLES.

QTY REQD	PART OR IDENTIFYING NO.	MATERIAL OR NOTES	NOMENCLATURE OR DESCRIPTION

LIST OF MATERIALS

AS APPLICABLE

NEXT ASSY	USED ON

APPLICATION

UNLESS OTHERWISE SPECIFIED
DIMENSIONS ARE IN INCHES
CAPACITOR VALUES ARE IN µf
RESISTOR VALUES ARE IN OHMS
TOLERANCES ON
FRACTIONS ± — DECIMALS ±.005 ANGLES ± —
DO NOT SCALE THIS DRAWING

MATERIAL
SEE NOTE 11

MIT
INSTRUMENTATION LAB
CAMBRIDGE MASS

MANNED SPACECRAFT CENTER
HOUSTON TEXAS

DRAWN 7-16-65
CHECKED 7-22-65
APPROVED
APPROVED
APPROVED MIT
APPROVED MSC
DATE

NAMEPLATES,
APOLLO G&N-GSE
(STANDARDS)

CODE IDENT NO. 80230
SIZE E
DRAWING NO. 1004260
SCALE NONE

DASH NO.	P/C	PART NAME	REMARKS	PART NO.	SER. NO.	CONT. NO.	STYLE	TYPE	MATERIAL	A
299	R									
298	R									
285	R	BUFFER CIRCUIT ASSY		2014254-031	NA	NAS9497	B	I	NOTE 11B	FOR DIMENSIONS SEE DASH 15 VALUES BELOW
284	R	LOGIC DRAWER ASSY NO. 2		2014037-041	NA	NAS9-497	B	I	NOTE 11B	FOR DIMENSIONS SEE DASH 17 VALUES BELOW
283	R	DRAWER ASS'Y-PROGRAM & MONITOR		2014041-051	NA	NAS9-497	B	I	NOTE 11B	FOR DIMENSIONS SEE DASH 17 VALUES BELOW
282	R	COMPUTER TEST SET		2014042-061	NA	NAS9-497	B	II	NOTE 11C	FOR DIMENSIONS SEE DASH 18 VALUES BELOW
280	R	COMPUTER TEST SET		2014042-051	NA	NAS9-497	B	II	NOTE 11C	FOR DIMENSIONS SEE DASH 18 VALUES BELOW
279	R	SELF TEST ASSY		2014366-041	NA	NAS9-497	B	I	NOTE 11B	FOR DIMENSIONS SEE DASH 15 VALUES BELOW
278	R	LOGIC DRAWER ASSY NO.1		2014036-041	NA	NAS-9-497	B	I	NOTE 11B	FOR DIMENSIONS SEE DASH 17 VALUES BELOW
277	R	COMPUTER TEST SET		2014042-041	NA	NAS-9-497	B	II	NOTE 11C	FOR DIMENSIONS, SEE DASH 18 VALUES BELOW
276		DRAWER ASSY - PROGRAM & MONITOR		2014041-041				I	NOTE 11 B	FOR DIMENSIONS, SEE DASH 17 VALUES BELOW
275		DRAWER ASSY RDC INTERFACE		2014045-031						
274		SELF TEST ASSY		2014366-031						FOR DIMENSIONS, SEE DASH 15 VALUES BELOW
273		LOGIC DRAWER ASSY NO. 2		2014037-031						FOR DIMENSIONS, SEE DASH 17 VALUES BELOW
272		DRAWING ASSY PROGRAMMER & MONITOR		2014041-031						FOR DIMENSIONS, SEE DASH 17 VALUES BELOW
271		LOGIC DRAWER ASSY NO. 1		2014036-031				I	NOTE 11 B	
270		COMPUTER TEST SET		2014042-031				II	NOTE 11C	FOR DIMENSIONS, SEE DASH 18 VALUES BELOW
269		POWER CONTROL ASSY		2014044-021				I	NOTE 11 B	FOR DIMENSIONS, SEE DASH 17 VALUES BELOW
268		SELF TEST ASSY		2014366-021						FOR DIMENSIONS, SEE DASH 15 VALUES BELOW
267		AGC JUNCTION ASSY		2014434-021						
266		POWER CONTROL ASSY		2014079-021						
265		BUFFER CIRCUIT ASSY		2014254-021						
264		DRAWER ASSY X Y INTERFACE		2014040-021						
263		DRAWER ASSY R D C INTERFACE		2014045-021						
262		DRAWER ASSY PROGRAMMER & MONITOR		201404[illegible]-021						
261		LOGIC DRAWER ASSY NO. 2		2014037-021						FOR DIMENSIONS, SEE DASH 17 VALUES BELOW
260		LOGIC DRAWER ASSY NO. 1		2014036-021				I	NOTE 11B	
259		OPERATION CONSOLE		2014024-021				II	NOTE 11C	FOR DIMENSIONS, SEE DASH 18 VALUES BELOW
258		COMPUTER TEST SET		2014042-021						
257		AUXILIARY CALIBRATION CONSOLE		2014059-021						
256		AGC CALIBRATION CONSOLE		2014049-021				II	NOTE 11C	
255		AGC HANDLING FIXTURE		2014282-021				I	NOTE 11B	FOR DIMENSIONS, SEE DASH 17 VALUES BELOW
254		DRAWER ASSY COMP. SIMULATOR		2014048-011				II	NOTE 11C	FOR DIMENSIONS, SEE DASH 18 VALUES BELOW
253		SHIPPING KIT ASSY, NAV DSKY		20163[illegible]2-011						
252		SHIPPING KIT ASSY, UNIVERSAL DSKY		2016316-011						
251		SHIPPING KIT ASSY, MAIN DSKY		2016313-011				II	NOTE 11C	
250		AMPLIFIER, REWORK		2014386				I	NOTE 11B	FOR DIMENSIONS, SEE DASH 15 VALUES BELOW
249		TEMP MONITOR ASSY		2014313-011					NOTE 11C	FOR DIMENSIONS, SEE DASH 17 VALUES BELOW
248		AGC JUNCTION ASSY		2014434-011					NOTE 11B	FOR DIMENSIONS, SEE DASH 15 VALUES BELOW
247		AC INPUT PANEL ASSY		2014302-011						
246		SELF TEST ASSY		2014392-011						
245		TAPE PUNCH ASSEMBLY		2014039-011						FOR DIMENSIONS, SEE DASH 15 VALUES BELOW
244	R	TAPE READER ASSEMBLY		2014038-011	NA	NAS-9-497	B	I	NOTE 11B	
243										
242										
241	R	APOLLO GUIDANCE COMPUTER GROUP		6003001	NA	NAS-9-497	A	I	NOTE 11B	FOR DIMENSIONS, SEE DASH 19 VALUES BELOW
240		SELF TEST ASSEMBLY		2014366-011	NA		B	I		FOR DIMENSIONS, SEE DASH 15 VALUES BELOW
239		POWER SUPPLY ASSY-115V., 400 CYCLE		2014207-041						FOR DIMENSIONS, SEE DASH 17 VALUES BELOW
238		AC INPUT PANEL ASSY		2014043-011						
237		POWER CONTROL ASSY		2014079-011						FOR DIMENSIONS, SEE DASH 15 VALUES BELOW
236		DRAWER ASSY-X Y INTERFACE		2014040-011						
235		DRAWER ASSY RDC INTERFACE		2014045-011						
234		BUFFER CIRCUIT ASSY		2014254-011						
233		CONTROL & INTERFACE ASSY		2014204-041						
232		POWER CONTROL ASSY		2014044-011						FOR DIMENSIONS, SEE DASH 17 VALUES BELOW
231		DRAWER ASSY, PROGRAMMER & MONITOR		2014041-011						
230		CONNECTOR INTERFACE ASSY		2014272-011						FOR DIMENSIONS, SEE DASH 15 VALUES BELOW
229		CONNECTOR INTERFACE ASSY		2014047-011						
228		ANTENNA TUNING CAPACITOR ASSY		2014209-011						
227		MOUNTING FIXTURE ASSY		2014006-011						FOR DIMENSIONS, SEE DASH 17 VALUES BELOW
226		POWER SUPPLY ASSY 3 VDC		2014234-011						FOR DIMENSIONS, SEE DASH 15 VALUES BELOW
225		PANEL ASSY - SIGNAL INTERFACE		2014010-011						
224		OSCILLOSCOPE ASSY		2014232-011						
223		AUXILIARY OUTLET ASSY		2014274-011						
222		FREQUENCY COUNTER		2014233-011						
221		POWER SUPPLY ASSY 10, 13, 28 VDC		2014235-011						
220		LOGIC DRAWER ASSY NO. 2		2014037-011						FOR DIMENSIONS, SEE DASH 17 VALUES BELOW
219		LOGIC DRAWER ASSY NO. 1		2014036-011						
218		COUNTER, ELECTRICAL ASSY		2014288-011						FOR DIMENSIONS, SEE DASH 15 VALUES BELOW
217		POWER SUPPLY ASSY		2014279-011						
216		TEST MOUNT ASSY		2014257-011						
215		UNIVERSAL DSKY PEDESTAL MOUNT		20140[illegible]4-011						FOR DIMENSIONS, SEE DASH 17 VALUES BELOW
214		MAIN DSKY PEDESTAL MOUNT		2014343				I	NOTE 11B	
213		SHIPPING CONTAINER, MAIN DSKY		1006229				II	NOTE 11C	FOR DIMENSIONS. SEE DASH 16 VALUES BELOW
212		NAV DSKY		1006231						
211		AGC		1006230						
210		UNIVERSAL DSKY		1006[illegible]22						
209		SHIPPING CONTAINER, AGC		1006421				II	NOTE 11C	
208		UNIVERSAL DSKY HANDLING FIXTURE		2014[illegible]3-011				I	NOTE 11B	FOR DIMENSIONS, SEE DASH 15 VALUES BELOW
207		NAV DSKY HANDLING FIXTURE		1014377						FOR DIMENSIONS, SEE DASH 17 VALUES BELOW
206		MAIN DSKY HANDLING FIXTURE		1014334						
205		AGC HANDLING FIXTURE		2014282-011				I	NOTE 11B	
204		OPERATION CONSOLE		2014024-011				II	NOTE 11C	FOR DIMENSIONS, SEE DASH 18 VALUES BELOW
203		COMPUTER TEST SET		2014042-011		NAS 9-497				
202		DRAWER ASSY, COMPUTER SIMULATOR		2014048-011		ENP [illegible]				
201		AUXILIARY CALIBRATION CONSOLE		2014059-011		NAS 9-497				
200		AGC CALIBRATION CONSOLE		2014049-011	NA		B	II	NOTE 11C	
21										
20		NA		NA	NA	NA	A	II	NOTE 11C	2.000
19		NA		NA	NA	NA	A	I	NOTE 11B	2.000
18		NA		NA	NA	NA	B	II	NOTE 11C	4.187
17		NA		NA	NA	NA	B	I	NOTE 11B	4.187
16		NA		NA	NA	NA	B	II	NOTE 11C	2.000
15	R	NA		NA	NA	NA	B	I	NOTE 11B	2.000

DASH NO.	B	C	D	E	F	G	H	J	K	L	M	N	P	R	S	T	U	V
20	1.312	1.687	1.375	.078	.031	.078	.093	[illegible]	.093	1.187	.750	.593	.453	1.015	.062	.187	.078	.875
19	1.312	1.687	1.375	.078	.031	.078	.093	NA	NA	1.187	.750	.593	.453	1.015	.062	.187	.078	.875
18	1.875	3.469	2.750	.156	.093	.156	.125	[illegible]	.125	1.625	1.032	.844	.656	1.406	.093	.344	.156	1.781
17	1.875	3.469	2.750	.156	.093	.156	.125	NA	NA	1.625	1.032	.844	.656	1.406	.093	.344	.156	1.781
16	1.312	1.687	1.375	.078	.031	.078	.093	[illegible]	.093	1.187	.750	.593	.453	1.015	.062	.187	.078	.875
15	1.312	1.687	1.375	.078	.031	.078	.093	NA	NA	1.187	.750	.593	.453	1.015	.062	.187	.078	.875

DASH NO.	W	Y	Z	AA	AB	AC	AD	AE	AF	AG	AH	AJ	AK	AL	AM	AN	AP	AR
20	.718	1.375	.218	1.156	1.843	.048	NA	.875	.305	.078	.312	1.687	.078	NA	.078	.312	.187	1.843
19	.718	1.375	.218	NA	NA	.048	.031	.875	.305	.078	.312	1.687	.078	NA	.078	.312	.187	NA
18	1.531	2.844	.312	1.562	3.875	.062	NA	1.219	.500	.156	.719	3.469	.156	NA	.156	.719	.344	3.875
17	1.531	2.844	.312	NA	NA	.062	.062	1.219	.500	.156	.719	3.469	.156	NA	.156	.719	.344	NA
16	.718	1.375	.218	1.156	1.843	.048	NA	.875	.305	.078	.312	1.687	.078	NA	.078	.312	.187	1.843
15	.718	1.375	.218	NA	NA	.048	.031	.875	.305	.078	.312	1.687	.078	NA	.078	.312	.187	NA

NOTES FOR TABLE

STYLE A IS FOR G & N SYSTEM

STYLE B IS FOR GROUND SUPPORT EQUIPMENT

TYPE I IS WITHOUT MOUNTING HOLES

TYPE II IS WITH MOUNTING HOLES

REVISIONS

SYM	ZONE	DESCRIPTION	
G		REPLACES REV F WITH CHANGE PER TDRR 20854	
H		REVISED PER TDRR 20892	
J		REVISED PER TDRR 20904	
K		REVISED PER TDRR 21379	
L		REVISED PER TDRR 21410	
M		REVISED PER TDRR 21993	
N		REVISED PER TDRR 22621	
P		REVISED PER TDRR 22671	
R		REVISED PER TDRR 22672	
S		REVISED PER TDRR 22750	
T		REVISED PER TDRR 22823	
U		REVISED PER TDRR 23072	
V		REVISED PER TDRR 23521	
W		REVISED PER TDRR [illegible]	
Y		REVISED PER TDRR 24018	RAJ
Z		REVISED PER TDRR 24040	RAJ
AA		REVISED PER TDRR 24060	RAJ
AB		REVISED PER TDRR 24868	RAJ
AC		REVISED PER TDRR 24973	RAJ
AD		REVISED PER TDRR 25065	RAJ
AE		REVISED PER TDRR 25672	RAJ
AF		REVISED PER TDRR 25671	RAJ
AG		REVISED PER TDRR 26110	RAJ
AH		REVISED PER TDRR 26372	
AJ		REVISED PER TDRR 26425	
AK		REVISED PER TDRR 26742	
AL		REVISED PER TDRR 26798	
AM		REVISED PER TDRR 2716[illegible]	
AN		REVISED PER TDRR 27235	
AP		REVISED PER TDRR 27345	
AR		REVISED PER TDRR 27417	
AS		REVISED PER TDRR 27442	
AT		REVISED PER TDRR 27719	
AU		REVISED PER TDRR 27880	
AV		REVISED PER TDRR 27896	
AW		28110	
AY		28173	
AZ		28131	
BA		2812[illegible]	
BB		REVISED PER TDRR 28511	
BC		" " " 28949	
BD		" " " 29222	
BE		" " " 29235	
BF		" " " 29322	
BG		" " " 29429	
BH		" " " 29449	
BJ		" " " 29335	
BK		" " " 29619	
BL		" " " 29696	
BM		" " " 29802	JSD
BN		REVISION STATUS CHANGED	
BP		REVISED PER TDRR 30168	
BR		REVISION STATUS CHANGED	
BS		REVISION STATUS CHANGED	GW
BT		REVISION STATUS CHANGED	
BU		REVISION STATUS CHANGED	
BV		REVISION STATUS CHANGED	WB
BW		REVISED PER TDRR 31279	WB
BY		REVISION STATUS CHANGED	WB
BZ		REVISION STATUS CHANGED	WB
CA		REVISION STATUS CHANGED	WB
CB		REVISION STATUS CHANGED	
CC		REVISION STATUS CHANGED	AF
CD		REVISED PER TDRR 3264[illegible]	DR
CE		REVISED PER TDRR 33447	
CF		REVISION STATUS CHANGED	
CG		REVISION STATUS CHANGED	
CH		REVISION STATUS CHANGED	
CI		REVISION STATUS CHANGED	

THIS SHEET ADDED

Ⓖ REPLACES REV F WITH CHANGE

RAYTHEON DASH NUMBERS

QTY REQD	PART OR IDENTIFYING NO.	MATERIAL OR NOTES	NOMENCLATURE OR DESCRIPTION

LIST OF MATERIALS

AS APPLICABLE	
NEXT ASSY	USED ON

APPLICATION

UNLESS OTHERWISE SPECIFIED
DIMENSIONS ARE IN INCHES
CAPACITOR VALUES ARE IN µf
RESISTOR VALUES ARE IN OHMS
TOLERANCES ON
FRACTIONS ± — DECIMALS ±.005 ANGLES ± —
DO NOT SCALE THIS DRAWING

MATERIAL
SEE NOTE 11

MIT
INSTRUMENTATION LAB
CAMBRIDGE MASS

MANNED SPACECRAFT CENTER
HOUSTON, TEXAS

DRAWN	A. a. Jones	7-1-65
CHECKED	A. J.	7-22-65
APPROVED		
APPROVED		
APPROVED MIT		
APPROVED MSC		
		DATE

NAMEPLATES,
APOLLO GEN-GSE
(STANDARDS)

CODE IDENT NO. 80230 SIZE E DRAWING NO. 1004260

SCALE NONE

SYM	ZONE	DESCRIPTION
G		REPLACES REV F WITH CHANGE PER TDRR 20854.
H		REVISED PER TDRR 2089[illegible]
J		REVISED PER TDRR 20904
K		REVISED PER TDRR [illegible]
L		REVISED PER TDRR 21410
M		REVISED PER TDRR 21593
N		REVISED PER TDRR 22621
P		REVISED PER TDRR 22631
R		REVISED PER TDRR 22672
S		REVISED PER TDRR 22750
T		REVISED PER TDRR 22823
U		REVISED PER TDRR 23072
V		REVISED PER TDRR 23524
W		REVISED PER TDRR 23824
Y		REVISED PER TDRR 24018
Z		REVISED PER TDRR 24040
AA		REVISED PER TDRR 24060
AB		REVISED PER TDRR 24868
AC		REVISED PER TDRR 24993
AD		REVISED PER TDRR 25043
AE		REVISED PER TDRR [illegible]
AF		REVISED PER TDRR 25671
AG		REVISED PER TDRR [illegible]
AH		REVISED PER TDRR 26372
AJ		REVISED PER TDRR 26425
AK		REVISED PER TDRR 26745
AL		REVISED PER TDRR 26798
AM		REVISED PER TDRR 27169
AN		REVISED PER TDRR 27235
AP		REVISED PER TDRR 27345
AR		REVISED PER TDRR 27417
AS		REVISED PER TDRR 27442
AT		REVISED PER TDRR 27719
AU		REVISED PER TDRR 27880
AV		REVISED PER TDRR [illegible]
AW		28110
AY		28173
AZ		28131
BA		28124
BB		REVISED PER TDRR 28511
BC		" " " 28849
BD		" " " 29222
BE		" " " 29235
BF		" " " 29322
BG		" " " 29429
BH		" " " 29449
BJ		" " " 29335
BK		" " " 29619
BL		" " " 29696
BM		REVISION STATUS CHANGED
BN		REVISION STATUS CHANGED
BP		REVISION STATUS CHANGED
BR		REVISED PER TDRR 30241
BS		REVISION STATUS CHANGED
BT		REVISION STATUS CHANGED
BU		REVISION STATUS CHANGED
BV		REVISION STATUS CHANGED
BW		REVISION STATUS CHANGED
BY		REVISION STATUS CHANGED
BZ		REVISION STATUS CHANGED
CA		REVISION STATUS CHANGED
CB		REVISION STATUS CHANGED
CC		REVISION STATUS CHANGED
CD		REVISION STATUS CHANGED
CE		REVISION STATUS CHANGED
CF		REVISION STATUS CHANGED
CG		REVISION STATUS CHANGED
CH		REVISION STATUS CHANGED
CJ		REVISION STATUS CHANGED

DASH NO.	P/C	PART NAME	REMARKS	PART NO.	SER. NO.	CONT. NO.	STYLE	TYPE	MATERIAL	A – AR
199	AC	EYEPIECE STORAGE UNIT		2021255-011						FOR DIMENSIONS, SEE DASH 100 VALUES BELOW
198	AC	SIGNAL CONDITIONER ASSY C/M		2007234		NAS 9-497			NOTE 11B	
197	AC	SIGNAL CONDITIONER ASSY C/M		2007235						
196	AC	SIGNAL CONDITIONER ASSY LEM		6007010						
195	AC	PSA & SIGNAL CONDITIONER ASSY		6007009			A	I	NOTE 11B	
194	AC	PANEL, MONITOR		2900031-031			B	II	NOTE 11C	FOR DIMENSIONS, SEE DASH 141 VALUES BELOW
193	AC	DISTRIBUTION BOX, GSE		2900024-031						
192	AC	ANALYZER, OPTICS-INERTIAL		2900023-031						FOR DIMENSIONS, SEE DASH 144 VALUES BELOW
191	AC	TEST CONTROL		2900027-031						FOR DIMENSIONS, SEE DASH 141 VALUES BELOW
190	AC	PANEL, PWR SUP AND LOAD		2900033-031						
189	AC	ADPT MODULE, P.S.A.		6900086-011						
188	AC	ADPT MODULE, P.S.A.		2901143-011						
187	AC	FIXTURE, MTG, PTA/PEA		2900066-0[illegible]		NAS 9-497	B	II	NOTE 11C	
186	AC	ANNUNCIATOR PANEL AND EYEPIECE STORAGE ASSEMBLY		1021255-021						FOR DIMENSIONS, SEE DASH 100 VALUES BELOW
185	AC	ANNUNCIATOR PANEL AND EYEPIECE STORAGE ASSEMBLY		1021255-011			A			
184	AC	FIX., HAND., G AND N HARNESS		1901846-041		NAS9 497	B	II	NOTE 11C	FOR DIMENSIONS, SEE DASH 144 VALUES BELOW
183	AC	INSTALLING TOOL, ELEC. CONN.		1902586-011			B	II	NOTE 11C	FOR DIMENSIONS, SEE DASH 102 VALUES BELOW
182	AC	ADPT MODULE, P.S.A.		6900086-011			B	II	NOTE 11C	FOR DIMENSIONS, SEE DASH 141 VALUES BELOW
181	AC	G&N INDICATOR CONTROL PANEL ASSY		2014578-011			A	I	NOTE 11B	(values below)
180	AC	ADPT MODULE, P.S.A.		1902431-031			B	II		FOR DIMENSIONS, SEE DASH 121 VALUES BELOW
179	AC	MOUNTING PLATE, IMU/PTA		6900083-011						FOR DIMENSIONS, SEE DASH 144 VALUES BELOW
178	AC	MOUNTING PLATE, COMPONENT		[illegible]-021						
177	AC	FIX., MOUNTING, SUBSYSTEM		2900070-021						
176	AC	FIX., MOUNTING, G AND N		2900067-021						
175	AC	CSL, COOL. AND PWR, G AND N		1902134-031						
174	AC	FIX., HAND., C/M AND LEM CDU		2900999-011					NOTE 11C	FOR DIMENSIONS, SEE DASH 141 VALUES BELOW
173	AC	FIX., HANDLING, C/M PSA		2900998-011						
172	AC	CAGING ELECTRONICS, GYRO		2900029-021						
171	AC	DISTRIBUTION BOX, GSE		2900024-021						
170	AC	ANALYZER, OPTICS-INERTIAL		2900023-021						FOR DIMENSIONS, SEE DASH 144 VALUES BELOW
169	AC	ADPT, TESTPOINT, P.S.A.		2900037-021						FOR DIMENSIONS, SEE DASH 141 VALUES BELOW
168	AC	TEST SELECTOR		2900028-021						
167	AC	TEST CONTROL		2900027-021						
166	AC	PANEL, MONITOR		2900031-021						
165	AC	TERM. BOARD STORAGE DRAWER		2900927-011						
164	AC	INPUT/OUTPUT PANEL		2900926-011						
163	AC	CONTROL PANEL		2900896-011						
162	AC	CSL. CAL AND TEST, SCM/PSAAM		2900895-011						FOR DIMENSIONS, SEE DASH 144 VALUES BELOW
161	AC	FIX., LIFT AND HAND., IMU		[illegible]-011						FOR DIMENSIONS, SEE DASH 141 VALUES BELOW
160	AC	FIX., HAND., G AND N HARNESS		1901846-031						FOR DIMENSIONS, SEE DASH 144 VALUES BELOW
159	AC	BATTERY POWER PACK		1900011-031			B	II	NOTE 11C	
158	AC	COUPLING DATA UNIT ASSEMBLY C/M		2007222			A	I	NOTE 11B	FOR DIMENSIONS SEE DASH 100 VALUES BELOW
157	AC	COUPLING DATA UNIT ASSEMBLY - LEM		2007222						
156	AC	POWER & SERVO ASSEMBLY C/M		2007200						(values below)
155	AC	PIPA ELECTRONICS ASSEMBLY		2007201						FOR DIMENSIONS SEE DASH 100 VALUES BELOW
154	AC	PULSE TORQUE ASSEMBLY - LEM		6007000						
153	AC	POWER & SERVO ASSEMBLY - LEM		6007200			A	I	NOTE 11B	
152	AC	CONT PNL, RSVR CKT TESTER		2900770-011			B	II	NOTE 11C	FOR DIMENSIONS, SEE DASH 141 VALUES BELOW
151	AC	TESTER, RESOLVER CIRCUIT		2900708-011						
150	AC	JUNCTION BOX, PSA/GSE		1901933-021						FOR DIMENSIONS, SEE DASH 144 VALUES BELOW
149	AC	BATTERY PACK, LIFTING		2900614-011						FOR DIMENSIONS, SEE DASH 141 VALUES BELOW
148	AC	MOUNTING PLATE, COMPONENT		6900007-011						FOR DIMENSIONS, SEE DASH 144 VALUES BELOW
147	AC	MOUNTING PLATE, COMPONENT		2900677-011						
146	AC	CART, TRANS, G AND N		1900089-041						
145	AC	CONTAINER, SHIPPING, IMU		1900010-021		NAS9-497	B	II	NOTE 11C	
144	AC	FIX., MOUNTING, G AND N		1902204-021			B	II	NOTE 11C	(values below)
143	AC	CSL, COOL AND PWR, G AND N		1902134-021						(values below)
142	AC	ANALYZER, OPTICS-INERTIAL		2900023-011						(values below)
141	AC	CONT, TEMP, PORTABLE		2900060-011						(values below)
140	AC	TESTER, CKT, IMU/CDU - RSVR		2900286-011						(values below)
139	AC	SIMULATOR, LD/SIG, CDU		2900285-011						
138	AC	SIMULATOR, LD/SIG, OPTICS		1902023-021						
137	AC	FIX., MOUNTING, IMU/NAV BASE		6900003-011						
136	AC	FIXTURE, OPTICS/NAV. BASE		2900072-011						
135	AC	FIX. MOUNTING, SUB SYSTEM		2900070-011						
134	AC	FIX., HAND., G AND N HARNESS		2900069-011						
133	AC	CNTR, SHIPPING, NAV BASE		2900068-011						
132	AC	FIX., MOUNTING, G AND N		2900067-011						
131	AC	SIMULATOR, LD/SIG, IMU/CDU		2900062-011						
130	AC	TESTER, GYRO WHEEL		2900061-011						
129	AC	COOLANT SUPPLY		1902133-021						
128	AC	TABLE, ROTARY		1900926-021						(values below)
127	AC	FIX., HAND., OPTICS		[illegible]						(values below)
126	AC	FIXTURE, MTG, PTA/PEA.		2900066-011						
125	AC	CONT, TEMP, IMU LIFTING		2900063-011						
124	AC	FIXTURE, HANDLING, IMU		2900064-011						
123	AC	CONT, OPTICS, REMOTE		1902046-021						
122	AC	TEST CONTROL		1902009-021						
121	AC	ADPT MODULE, P.S.A		1902431-021						
120	AC	BRIDGE, DECADE ERROR		2900128-0[illegible]						
119	AC	PWR SUP, ELECTRONICS		1900012-011						
118	AC	PWR SUP, RELAY AND LAMP		1900049-031						
117	AC	CONSOLE, OSCILLOGRAPH		1900000-021						
116	AC	ADPT MODULE, P.S.A.		1902431-011						
115	AC	ADPT, TEST POINT, PTA/PEA.		2900145-0[illegible]						
114	AC	ADPT, TEST POINT, P.S.A.		2900037-011						
113	AC	CONTROL, GIMBAL POSITION		2900036-011						
112	AC	SELECTOR, SIGNAL, PRIMARY		2900035-011						
111	AC	SEL, SIG, OSCILLOGRAPH		2900034-011						
110	AC	PANEL, PWR SUP AND LOAD		2900033-011						
109	AC	PANEL, MONITOR		2900031-011						
108	AC	PANEL, AUXILIARY INPUT		2900030-011						
107	AC	CAGING ELECTRONICS, GYRO		2900029-011						
106	AC	TEST SELECTOR		2900028-011						
105	AC	TEST CONTROL		2900027-011						
104	AC	MONITOR AND CONTROL, TEMP		2900026-011						
103	AC	DISTRIBUTION BOX, GSE		2900024-011						
102	AC	VOLTMETER, DIGITAL		2900007-011			B	II	NOTE 11C	(values below)
101	AC	NAVIGATION BASE ASSEMBLY - LEM		6899950		NAS-9-497	A	I	NOTE 11B	(values below)
100	AC	NAVIGATION BASE ASSEMBLY		2899982		NAS-9-497	A	I	NOTE 11B	(values below)

DASH NO.	A	B	C	D	E	F	G	H	J	K	L	M	N	P	R	S	T	U	V	W	Y	Z	AA	AB	AC	AD	AE	AF	AG	AH	AJ	AK	AL	AM	AN	AP	AR
181	3.000	1.938	2.437	NA	.125	.062	.188	.50	NA	NA	1.750	.125	.906	.688	1.500	NA	.281	.125	NA	1.094	2.062	.312	NA	2.500	.062	.125	1.312	.469	NA	NA	NA	.156	NA	.125	.469	.344	NA
156	2.125	.968	[illegible]	NA	.093	.031	.06	.093	NA	NA	.858	.608	.484	.358	.733	.062	.140	.062	NA	.968	1.450	.125	NA	1.720	.046	.03	NA	.210	NA	NA	NA	.070	NA	.046	.32	.16	NA
144	4.25	1.812	3.250	NA	.125	.062	.12	.156	[illegible]	.125	1.625	1.140	.890	.640	1.390	.125	.171	.125	1.875	1.687	2.625	.250	1.562	3.843	.093	NA	NA	.359	.125	.437	3.688	NA	3.687	.093	.40	.25	3.875
143	4.25	1.812	3.250		.125	.062	.12	.156		.125	1.625	1.140	.890	.640	1.390	.125	.171	.125	1.875	1.687	2.625	.250	1.562	3.843	.093			.359	.125	.437	3.688		3.687	.093	.40	.25	3.875
142	4.125	1.812	3.250		.125	.062	.12	.156		.125	1.625	1.140	.890	.640	1.390	.125	.171	.125	1.875	1.687	2.625	.250	1.562	3.843	.093			.359	.125	.437	3.688		3.687	.093	.40	.25	3.875
141	2.125	.968	1.718		.093	.031	.06	.093		.093	.858	.608	.484	.358	.733	.077	.116	.062	.937	.875	1.343	.125	.781	1.892	.046			.209	.093	.250	1.875		1.840	.046	.23	.16	1.938
140	4.125	[illegible]	3.250		.125	.062	.12	.156		.125	1.625	1.140	.890	.640	1.390	.125	.171	.125	1.875	1.687	2.625	.250	1.562	3.843	.093			.359	.125	.437	3.688		3.687	.093	.40	.25	3.875
128	4.125	.812	3.250		.125	.062	.12	.156		.125	1.625	1.140	.890	.640	1.390	.125	.171	.125	1.875	1.687	2.625	.250	1.562	3.843	.093			.359	.125	.437	3.688		3.687	.093	.40	.25	3.875
127	2.125	.968	1.718		.093	.031	.06	.093		.093	.858	.608	.484	.358	.733	.077	.116	.062	.937	.875	1.343	.125	.781	1.892	.046			.209	.093	.250	1.875		1.840	.046	.23	.16	1.938
102	[illegible]	[illegible]	[illegible]	NA	.093	.031	.06	.093	[illegible]	.093	.858	.608	.484	.358	.733	.077	.116	.062	.937	.875	1.343	.125	.781	1.892	.046	NA	NA	.209	.093	.250	1.875	NA	1.840	.046	.23	.16	1.938
101	2.000	1.312	1.906	1.375	.078	.048	.078	.093	NA	NA	1.125	.750	.593	.453	1.015	.062	.187	.078	.875	.718	1.375	.218	NA	NA	.048	.031	.875	.305	.078	.531	1.906	.078	NA	.078	.531	.187	NA
100	2.000	1.312	1.906	1.375	.078	.048	.078	.093	NA	NA	1.125	.750	.593	.453	1.015	.062	.187	.078	.875	.718	1.375	.218	NA	NA	.048	.031	.875	.305	.078	.531	1.906	.078	NA	.078	.531	.187	NA

THIS SHEET ADDED

Ⓖ REPLACES REV F WITH CHANGE

A C ELECTRONICS DASH NUMBERS

NOTES FOR TABLE

STYLE A IS FOR G&N SYSTEM
STYLE B IS FOR GROUND SUPPORT EQUIPMENT
TYPE I IS WITHOUT MOUNTING HOLES
TYPE II IS WITH MOUNTING HOLES

NOTE: AC DASH NO'S. CONT. ON SH.6

QTY REQD	PART OR IDENTIFYING NO.	MATERIAL OR NOTES	NOMENCLATURE OR DESCRIPTION

LIST OF MATERIALS

AS APPLICABLE	
NEXT ASSY	USED ON
APPLICATION	

UNLESS OTHERWISE SPECIFIED
DIMENSIONS ARE IN INCHES
CAPACITOR VALUES ARE IN μf
RESISTOR VALUES ARE IN OHMS
TOLERANCES ON
FRACTIONS - DECIMALS - ANGLES
± — ±.005 ± —
DO NOT SCALE THIS DRAWING

MATERIAL
SEE NOTE 11

MIT
INSTRUMENTATION LAB
CAMBRIDGE MASS

DRAWN R O Jones 7 16 65
CHECKED
APPROVED
APPROVED
APPROVED MIT
APPROVED MSC
DATE

MANNED SPACECRAFT CENTER
HOUSTON, TEXAS

NAMEPLATES,
APOLLO G&N-GSE
(STANDARDS)

CODE IDENT NO 80230
SIZE E
DRAWING NO. 1004260
SCALE NONE

SYM	DESCRIPTION	DATE
G	REPLACES REV F WITH CHANGE PER TDRR [illegible]	
H	REVISED PER TDRR [illegible]	
J	REVISED PER TDRR 20904	
K	REVISED PER TDRR [illegible]	
L	REVISED PER TDRR 21410	
M	REVISED PER TDRR 21993	
N	REVISED PER TDRR [illegible]	
P	REVISED PER TDRR 22671	
R	REVISED PER TDRR 22672	
S	REVISED PER TDRR 22750	
T	REVISED PER TDRR [illegible]	
U	REVISED PER TDRR 23072	
V	REVISED PER TDRR [illegible]	
W	REVISED PER TDRR [illegible]	
Y	REVISED PER TDRR [illegible]	
Z	REVISED PER TDRR 24040	
AA	REVISED PER TDRR [illegible]	
AB	REVISED PER TDRR 24868	
AC	REVISED PER TDRR 24923	
AD	REVISED PER TDRR 25065	
AE	REVISED PER TDRR 25672	
AF	REVISED PER TDRR 25471	
AG	REVISED PER TDRR 26110	
AH	REVISED PER TDRR 26372	
AJ	REVISED PER TDRR 26425	
AK	REVISED PER TDRR 26743	3-16-66
AL	REVISED PER TDRR 26798	3-16-66
AM	REVISED PER TDRR 27169	
AN	REVISED PER TDRR 27235	
AP	REVISED PER TDRR 27345	4-7-66
AR	REVISED PER TDRR 27417	
AS	REVISED PER TDRR 27442	
AT	REVISED PER TDRR 27718	4-20-66
AU	REVISED PER TDRR 27880	
AV	REVISED PER TDRR 27836	
AW	28110	5-16-66
AY	28173	
AZ	[illegible]	
BA	28124	
BB	REVISED PER TDRR 285[illegible]	
BC	" " " 28949	
BD	" " " 29222	6-8-66
BE	" " " [illegible]	
BF	" " " 29322	
BG	" " " 29429	
BH	" " " 29449	
BJ	" " " 29335	
BK	" " " 29619	
BL	" " " 29695	
BM	REVISION STATUS CHANGED	
BN	REVISION STATUS CHANGED	
BP	REVISION STATUS CHANGED	
BR	REVISION STATUS CHANGED	
BS	REVISION STATUS CHANGED	
BT	REVISION STATUS CHANGED	
BU	REVISION STATUS CHANGED	
BV	REVISION STATUS CHANGED	
BW	REVISION STATUS CHANGED	
BY	REVISION STATUS CHANGED	
BZ	REVISION STATUS CHANGED	
CA	REVISION STATUS CHANGED	
CB	REVISION STATUS CHANGED	
CC	REVISION STATUS CHANGED	
CD	REVISION STATUS CHANGED	
CE	REVISION STATUS CHANGED	
CF	REVISION STATUS CHANGED	
CG	REVISION STATUS CHANGED	
CH	REVISION STATUS CHANGED	
CJ	REVISION STATUS CHANGED	

499	MIT
498	

DASH NO.	P/C	PART NAME	REMARKS	PART NO.	SER. NO.	CONT. NO.	STYLE	TYPE	MATERIAL	A	B	C	D	E	F	G	H	J	K	L	M	N	P	R	S	T	U	V	W	Y	Z	AA	AB	AC	AD	AE	AF	AG	AH	AJ	AK	AL	AM	AN	AP	AR
401	MIT	COMPUTER ASSY		2003100		NAS-9-497	A	I	NOTE 11 B	2.000	1.312	.906	1.375	.078	.048	.078	.093	NA	NA	[illegible].125	.750	.593	.453	1.015	.062	.187	.078	.875	.718	.375	.218	NA	NA	.048	.031	.875	.305	.078	.531	1.906	.078	NA	.078	.531	.187	NA
400	MIT	LIFTING SLING-G&N INST. QUAL. FIX. & AZM REF. FIX.		102640		NAS-9-4065	B	II	NOTE 11 C	2.000	1.312	1.687	1.375	.078	.048	.078	.093	[illegible]	.093	1.187	.750	.593	.453	1.015	.062	.187	.078	.875	.718	1.375	.218	1.156	.843	.048	NA	.875	.305	.078	.312	1.687	.10	1.830	.070	.275	.180	[illegible]

MIT DASH NUMBERS

THIS SHEET ADDED

Ⓖ REPLACES REV F WITH CHANGE

NOTES FOR TABLE

STYLE A IS FOR G&N SYSTEM

STYLE B IS FOR GROUND SUPPORT EQUIPMENT

TYPE I IS WITHOUT MOUNTING HOLES

TYPE II IS WITH MOUNTING HOLES

QTY REQD	PART OR IDENTIFYING NO	MATERIAL OR NOTES	NOMENCLATURE OR DESCRIPTION	FIND NO

LIST OF MATERIALS

AS APPLICABLE	
NEXT ASSY	USED ON
APPLICATION	

UNLESS OTHERWISE SPECIFIED
DIMENSIONS ARE IN INCHES
CAPACITOR VALUES ARE IN μf
RESISTOR VALUES ARE IN OHMS
TOLERANCES ON
FRACTIONS ± — DECIMALS ±.005 ANGLES ± —
DO NOT SCALE THIS DRAWING

MATERIAL
SEE NOTE 11

MIT
INSTRUMENTATION LAB
CAMBRIDGE, MASS.

MANNED SPACECRAFT CENTER
HOUSTON, TEXAS

DRAWN R A Jones 7-15-65
CHECKED
APPROVED
APPROVED
APPROVED MIT
APPROVED MSC
DATE

NAMEPLATES,
APOLLO G&N - GSE
(STANDARDS)

CODE IDENT NO 80230
SIZE E
DRAWING NO. 1004260
SCALE NONE
SHEET

SYM	ZONE	DESCRIPTION	BY	CHK	DATE	APPROVED
AG		CHANGED NUMBER OF SHEETS FROM 5 TO 6 PER TDRR 25110				
AH		REVISED PER TDRR 26372				
AJ		REVISED PER TDRR 26425				
AK		REVISED PER TDRR 26743				
AL		REVISED PER TDRR 26798				
AM		REVISED PER TDRR 27168				
AN		REVISED PER TDRR 27239				
AP		REVISED PER TDRR 27345				
AR		REVISED PER TDRR 27417				
AS		REVISED PER TDRR 27442				
AT		REVISED PER TDRR 27719				
AU		REVISED PER TDRR 27880				
AV		REVISED PER TDRR 27896				
AW		28110				
AY		28173				
AZ		28131				
BA		28124				
BB		REVISED PER TDRR 28511				
BC		" " " 28949				
BD		" " " 29222				
BE		" " " 29235				
BF		" " " 29322				
BG		" " " 29429				
BH		" " " 29419				
BJ		" " " 29335				
BK		" " " 29619				
BL		" " " 29696				
BM		REVISION STATUS CHANGED	JSD			
BN		REVISED PER TDRR 29974	JI			
BP		REVISION STATUS CHANGED				
BR		REVISION STATUS CHANGED				
BS		REVISED PER TDRR 30530	GW			
BT		REVISED PER TDRR 30543	GW			
BU		REVISED PER TDRR 30898	EH			
BV		REVISED PER TDRR 31241	JJR			
BW		REVISION STATUS CHANGED	JJB			
BY		REVISED PER TDRR 31341	JJB		10 OCT 66	
BZ		REVISED PER TDRR 31383	JJB		10 OCT 66	
CA		REVISED PER TDRR 31593	JJB		25 OCT 66	
CB		REVISED PER TDRR 32189	REF		10 DEC 66	
CC		REVISED PER TDRR 32512	AF			
CD		REVISION STATUS CHANGED	DR			
CE		REVISION STATUS CHANGED			19 APR 67	
CF		REVISED PER TDRR 33558				
CG		REVISED PER TDRR 33968	A.N.			
CH		REVISED PER TDRR 34010				
CJ		REVISED PER TDRR 34057				

DASH NO.	P/C	PART NAME	REMARKS	PART NO.	SER NO.	CONT NO.	STYLE	TYPE	MATERIAL	A	B	C	D	E	F	G	H
699	AC																
598	AC																
562	AC	COMPUTER CONT & RETICLE DIMMER		6014512-041		NAS9-497	A	I	NOTE 11B	FOR DIMENSIONS SEE DASH 534 VALUES							
561	AC	G&N INDICATOR CONTROL PANEL ASSY		2014578-031		NAS9-497	A	I	NOTE 11B	FOR DIMENSIONS SEE DASH 181 VALUES							
560		ADPT. MODULE, PSA		2901143-021		NAS9-497	B	II	NOTE 11C	FOR DIMENSIONS SEE DASH 141 VALUES							
559		CSL, CAL AND TEST, SCM/PSAAM		2900895-031		FOR OTHER DATA SEE DASH 547											
558		PSA ADAPTER MODULE (LEM)		6900088-021		FOR OTHER DATA SEE DASH 189											
557		FIX., HANDLING, C/M PSA		2900998-021		NAS 9-497	B	II	NOTE 11C	FOR DIMENSIONS SEE DASH 141 VALUES							
556		FIX., MOUNTING G&N	(-144)	2900067-041		NAS9-497	B	II	NOTE 11C	FOR DIMENSIONS SEE DASH 500 VALUES							
555	AC	OPTICAL UNIT ASSEMBLY		1021368-061		NAS9-497	A	I	NOTE 11B	2.000	1.312	1.687	1.375	.078	.048	.078	.093
554	AC	OPTICAL UNIT ASSEMBLY		1021368-051		NAS9-497	A	I	NOTE 11B	2.000	1.312	1.687	1.375	.078	.048	.078	.093
553	AC	OPTICAL UNIT AND BELLOWS ASS'Y		2010790-111		NAS9-497	A	I	NOTE 11B	2.000	1.312	1.687	1.375	.078	.048	.078	.093
552	AC	OPTICAL UNIT AND BELLOWS ASS'Y		2010790-081		NAS9-497	A	I	NOTE 11B	2.000	1.312	1.687	1.375	.078	.048	.078	.093
551	AC	OPTICAL UNIT AND BELLOWS ASS'Y		2010790-071		NAS9-497	A	I	NOTE 11B	2.000	1.312	1.687	1.375	.078	.048	.078	.093
550	AC	OPTICAL UNIT AND BELLOWS ASS'Y		2010790-061		NAS9-497	A	I	NOTE 11B	2.000	1.312	1.687	1.375	.078	.048	.078	.093
548		CAGING ELECTRONICS, GYRO		2900029-031		NAS-9-497	B	II	NOTE 11C	2.125	.968	1.718	NA	.093	.031	.06	.093
547		CSL, CAL AND TEST, SCM/PSAAM		2900895-021		NAS-9-497	B	II	NOTE 11C	4.125	1.812	3.250	NA	.125	.062	.12	.156
546		FIX., HAND., C/M AND LEM CDU		2900999-021		NAS-9-497	B	II	NOTE 11C	2.125	.968	1.718	NA	.093	.031	.06	.093
545	AC	G&N INDICATOR CONTROL PANEL ASSY		2014578-021		NAS-9-497	A	I	NOTE 11B	3.000	1.938	2.437	NA	.125	.062	.188	.156
544		ADPT. MODULE, P.S.A.		1902431-051		NAS-9-497	B	II	NOTE 11C	2.125	.968	1.718	NA	.093	.031	.06	.093
543		FIXTURE, MOUNTING, IMU		2900000-021		NAS 9-497	B	II	NOTE 11C	4.125	1.812	3.250	NA	.125	.062	.12	.156
542		PANEL, MONITOR		2900031-041		NAS9-497	B	II	NOTE 11C	2.125	.968	1.718	NA	.093	.031	.06	.093
541		BATTERY PACK, LIFTING		2900812-021		NAS9-497	B	II	NOTE 11C	2.125	.968	1.718	NA	.093	.031	.06	.093
540	AC	ADPT. TEST POINT, PSA		2900037-031		NAS 9-497	B	II	NOTE 11C	2.125	.968	1.718	NA	.093	.031	.06	.093
539	AC	G&N INDICATOR PANEL AND EYEPIECE STORAGE ASSEMBLY		1021255-041			A	I	NOTE 11B	2.000	1.312	1.906	1.375	.078	.048	.078	.093
538	AC	G&N INDICATOR PANEL AND EYEPIECE STORAGE ASSEMBLY		1021255-031			A	I	NOTE 11B	2.000	1.312	1.906	1.375	.078	.048	.078	.093
537	AC	TEST SELECTOR		2900028-031			B	II	NOTE 11C	2.125	.968	1.718	NA	.093	.031	.06	.093
536	AC	ANALYZER, OPTICS- INERTIAL		2900023-041			B	II	NOTE 11C	4.125	1.812	3.250	NA	.125	.062	.12	.156
535	AC	CONT. TEMP. PORTABLE		2900060-021			B	II	NOTE 11C	2.125	.968	1.718	NA	.093	.031	.06	.093
534	AC	COMPUTER CONT & RETICLE DIMMER		6014512-021			A	I	NOTE 11B	2.000	1.312	1.906	1.375	.078	.048	.078	.093
533	AC	ADPT. MODULE, P.S.A.		1902431-041			B	II	NOTE 11C	2.125	.968	1.718	NA	.093	.031	.06	.093
532	AC	TRAY BREAKOUT, 105 PIN		1900807-021						4.125	1.812	3.250		.125	.062	.12	.156
531	AC	TRAY BREAKOUT, 84 PIN		1900806-021						4.125	1.812	3.250		.125	.062	.12	.156
530	AC	HEAT SINK - TRAY EXTENDER		1900808-021						2.125	.968	1.718		.093	.031	.06	.093
529	AC	TESTER, FAILURE INDICATOR		1900809-021						2.125	.968	1.718	NA	.093	.031	.06	.093
527	AC	FIX., MOUNTING, G AND N	(-144)	1902204-021						FOR DIMENSIONS, SEE DASH 500 VALUES BELOW							
526	AC	FIX., MOUNTING, G AND N	(-144)	2900067-031													
525	AC	PORTABLE TEMP. CONTROLLER		1900496-021			B	II	NOTE 11C	3.000	1.937	2.437	2.312	.125	.031	.125	.156
524	AC	POWER, SERVO AND THERMOCOUPLE ASSEMBLY C/M		2010743			A	I	NOTE 11B	2.125	.968	1.718	NA	.093	.031	.06	.093
523	AC	PULSE TORQUE AND THERMOCOUPLE ASSEMBLY - LEM		6010656													
522	AC	COUPLING DATA UNIT AND THERMOCOUPLE ASSEMBLY - LEM		2010744						FOR DIMENSIONS, SEE DASH 508 VALUES BELOW							
521	AC	COUPLING DATA UNIT AND THERMOCOUPLE ASSEMBLY - C/M		2010744													
520	AC	PIPA ELECTRONICS AND THERMOCOUPLE ASSEMBLY		2010745			A	I	NOTE 11B								
519	AC	FIXTURE, HANDLING, LEM-PSA	(-141)	6900129-011			B	II	NOTE 11C	FOR DIMENSIONS, SEE DASH 504 VALUES BELOW							
518	AC	JUNCTION BOX, GSE-PSA	(-144)	1901933-031			B	II	NOTE 11C	FOR DIMENSIONS, SEE DASH 500 VALUES BELOW							
517	AC	FIX., HAND., OPTICS INSTL.	(-141)	[illegible]380-011			B	II	NOTE 11C	FOR DIMENSIONS, SEE DASH 502 VALUES BELOW							
516	AC	POWER, SERVO AND THERMOCOUPLE ASSEMBLY-LEM		6010655		NAS 9-497	A	I	NOTE 11B	FOR DIMENSIONS, SEE DASH 508 VALUES BELOW							
514	AC	SIGNAL COND. ASSY LEM OPER.	(-100)	6007013		NAS-9-497	A	I	NOTE 11B	FOR DIMENSIONS, SEE DASH 508 VALUES BELOW							
513		JUMPER, BY-PASS	(-141)	1021616			B	II	NOTE 11C	2.125	.968	1.718	NA	.093	.031	.06	.093
512		COUPLING DATA UNIT ASSEMBLY C/M	(-100)	2007322-011			A	I	NOTE 11B	FOR DIMENSIONS, SEE DASH 508 VALUES BELOW							
511		COUPLING DATA UNIT ASSEMBLY-LEM	(-100)	2007322-021													
510		BATTERY POWER PACK	(-144)	1900011-041			B	II	NOTE 11C	FOR DIMENSIONS, SEE DASH 500 VALUES BELOW							
509		JUNCTION BOX, P.S.A/G.S.E.	(-144)	[illegible]			B	II	NOTE 11C								
508		NAVIGATION BASE ASSEMBLY - LEM	[illegible]	[illegible]			A	I	NOTE 11B	2.000	1.312	1.906	1.375	.078	.048	.078	.093
507		CSL, COOL. AND PWR., G AND N	(-144)	[illegible]-041			B	II	NOTE 11C	FOR DIMENSIONS, SEE DASH 500 VALUES BELOW							
506		BREAKOUT BOX, CABLE ADAPTER	(-141)	2901011-011													
505		MONITOR AND CONTROL, TEMP	(-141)	2900026-021													
504		PWR SUP, GUIDANCE SYSTEM	(-141)	1900033-021						2.125	.968	1.718	NA	.093	.031	.06	.093
503		CONTROL, GIMBAL POSITION	(-141)	[illegible]													
502		ADPT, TEST POINT, PTA/PEA.	(-141)	2900145-021													
501		MOUNTING PLATE, COMPONENT	(-144)	[illegible]						FOR DIMENSIONS, SEE DASH [illegible] VALUES BELOW							
500	AC	MOUNTING PLATE, COMPONENT	(-144)	[illegible]						4.125	1.812	3.250	NA	.25	.062	.12	.156

DASH NO.	J	K	L	M	N	P	R	S	T	U	V	W	Y	Z	AA	AB	AC	AD	AE	AF	AG	AH	AJ	AK	AL	AM	AN	AP	AR
555	NA	NA	1.125	.750	.593	.453	1.015	.062	.187	.078	.875	.718	1.375	.218	NA	NA	.048	.031	.875	.305	NA	.468	1.531	NA	NA	.078	.312	.187	NA
554	NA	NA	1.125	.750	.593	.453	1.015	.062	.187	.078	.875	.718	1.375	.218	NA	NA	.048	.031	.875	.305	NA	.468	1.531	NA	NA	.078	.312	.187	NA
553	NA	NA	1.125	.750	.593	.453	1.015	.062	.187	.078	.875	.718	1.375	.218	NA	NA	.048	.031	.875	.305	NA	.468	1.531	NA	NA	.078	.312	.187	NA
552	NA	NA	1.125	.750	.593	.453	1.015	.062	.187	.078	.875	.718	1.375	.218	NA	NA	.048	.031	.875	.305	NA	.468	1.531	NA	NA	.078	.312	.187	NA
551	NA	NA	1.125	.750	.593	.453	1.015	.062	.187	.078	.875	.718	1.375	.218	NA	NA	.048	.031	.875	.305	NA	.468	1.531	NA	NA	.078	.312	.187	NA
550	NA	NA	1.128	.750	.593	.453	1.015	.062	.187	.078	.875	.718	1.375	.218	NA	NA	.048	.031	.875	.305	NA	.468	1.531	NA	NA	.078	.312	.187	NA
548	100 104	.093	.858	.608	.484	.358	.733	.077	.116	.062	.937	.875	1.343	.125	.781	1.892	.046	NA	NA	.209	.093	.250	1.875	NA	1.840	.046	.23	.16	1.938
547	100 104	.125	1.625	1.140	.890	.640	1.390	.125	.171	.125	1.875	1.687	2.625	.250	1.562	3.843	.093	NA	NA	.359	.125	.437	3.688	NA	3.687	.093	.40	.25	3.875
546	100 104	.093	.858	.608	.484	.358	.733	.077	.116	.062	.937	.875	1.343	.125	.781	1.892	.046	NA	NA	.209	.093	.250	1.875	NA	1.840	.046	.23	.16	1.938
545	NA	NA	1.750	1.125	.906	.688	1.500	NA	.281	.125	NA	1.094	2.062	.312	NA	2.500	.062	.125	1.312	.469	NA	NA	NA	.156	NA	.125	.469	.344	NA
544	100 104	.093	.858	.608	.484	.358	.733	.077	.116	.062	.937	.875	1.343	.125	.781	1.892	.046	NA	NA	.209	.093	.250	1.875	NA	1.840	.046	.23	.16	1.938
543	100 104	.125	1.625	1.140	.890	.640	1.390	.125	.171	.125	1.875	1.687	2.625	.250	1.562	3.843	.093	NA	NA	.359	.125	.437	3.688	NA	3.687	.093	.40	.25	3.875
542	100 104	.093	.858	.608	.484	.358	.733	.077	.116	.062	.937	.875	1.343	.125	.781	1.892	.046	NA	NA	.209	.093	.250	1.875	NA	1.840	.046	.23	.25	1.938
541	100 104	.093	.858	.608	.484	.358	.783	.077	.116	.062	.937	.875	1.343	.125	.781	1.892	.046	NA	NA	.209	.093	.250	1.875	NA	1.840	.046	.23	.16	1.938
540	100 104	.093	.858	.608	.484	.358	.733	.077	.116	.062	.937	.875	1.343	.125	.781	1.892	.046	NA	NA	.209	.093	.250	1.875	NA	1.840	.046	.23	.16	1.938
539	NA	NA	1.125	.750	.593	.453	1.015	.062	.187	.078	.875	.718	1.375	.218	NA	NA	.048	.031	.875	.305	.078	.531	1.906	.078	NA	.078	.531	.187	NA
538	NA	NA	1.125	.750	.593	.453	1.015	.062	.187	.078	.875	.718	1.375	.218	NA	NA	.048	.031	.875	.305	.078	.531	1.906	.078	NA	.078	.531	.187	NA
537	100 104	.093	.858	.608	.484	.358	.733	.077	.116	.062	.937	.875	1.343	.125	.781	1.892	.046	NA	NA	.209	.093	.250	1.875	NA	1.840	.046	.23	.16	1.938
536	100 104	.125	1.625	1.140	.890	.640	1.390	.125	.171	.125	1.875	1.687	2.625	.250	1.562	3.843	.093	NA	NA	.359	.125	.437	3.688	NA	3.687	.093	.40	.25	3.875
535	100 104	.093	.858	.608	.484	.358	.733	.077	.116	.062	.937	.875	1.343	.125	.781	1.892	.046	NA	NA	.209	.093	.250	1.875	NA	1.840	.046	.23	.16	1.938
534	NA	NA	1.125	.750	.593	.453	1.015	.062	.187	.078	.875	.718	1.375	.218	NA	NA	.048	.031	.875	.305	.078	.531	1.906	.078	NA	.078	.531	.187	NA
533	100 104	.093	.858	.608	.484	.358	.733	.077	.116	.062	.937	.875	1.343	.125	.781	1.892	.046	NA	NA	.209	.093	.250	1.875	NA	1.840	.046	.23	.16	1.938
532	100 104	.125	1.625	1.140	.890	.640	1.390	.125	.171	.125	1.875	1.687	2.625	.250	1.562	3.843	.093			.359	.125	.437	3.688		3.687	.093	.40	.25	3.875
531	100 104	.125	1.625	1.140	.890	.640	1.390	.125	.171	.125	1.875	1.687	2.625	.250	1.562	3.843	.093			.359	.125	.437	3.688		3.687	.093	.40	.25	3.875
530	100 104	.093	.858	.608	.484	.358	.733	.077	.116	.062	.937	.875	1.343	.125	.781	1.892	.046			.209	.093	.250	1.875		1.840	.046	.23	.16	1.938
529	100 104	.093	.858	.608	.484	.358	.733	.077	.116	.062	.937	.875	1.343	.125	.781	1.892	.046	NA	NA	.209	.093	.250	1.875	NA	1.840	.046	.23	.16	1.938
525	.125	.125	1.718	1.187	.968	.749	1.452	.093	.295	[illegible]	1.312	1.00	2.000	.250	1.687	2.750	.062	N/A	N/A	.463	.125	.562	2.437	.140	2.562	.090	.468	.359	2.750
524	NA	NA	.858	.608	.484	.358	.733	.062	.140	.062	NA	.968	1.450	.125	NA	1.720	.046	.03	NA	.210	NA	NA	NA	.070	NA	.046	[illegible]	.16	NA
513	100 104	.093	.858	.608	.484	.358	.733	.077	.116	.062	.937	.875	1.343	.125	.781	1.892	.046	NA	NA	.209	.093	.250	1.875	NA	1.840	.046	.23	.16	1.938
508	NA	NA	1.125	.750	.593	.453	1.015	.062	.187	.078	.875	.718	1.375	.218	NA	NA	.048	.03	.875	.305	.078	.531	1.906	.078	NA	[illegible]	[illegible]	.187	NA
504	100 104	.093	.858	.608	.484	.358	.733	.077	.116	.062	.937	.875	1.343	.125	.781	1.892	.046	NA	NA	.209	.093	.250	1.875	NA	1.840	.046	.23	.16	1.938
500	100 104	.25	1.625	1.140	.890	.640	1.390	.125	.171	.125	1.875	1.687	2.625	.250	1.562	3.843	.093	NA	NA	.359	.125	.437	3.688	NA	3.687	.093	.40	.25	3.875

AC ELECTRONICS DASH NUMBERS

Ⓐⓖ THIS SHEET ADDED

NOTES FOR TABLE

STYLE A IS FOR G&N SYSTEM
STYLE B IS FOR GROUND SUPPORT EQUIPMENT
TYPE I IS WITHOUT MOUNTING HOLES
TYPE II IS WITH MOUNTING HOLES

QTY REQD	PART OR IDENTIFYING NO	MATERIAL OR NOTES	NOMENCLATURE OR DESCRIPTION	ITEM NO.

LIST OF MATERIALS

NEXT ASSY	USED ON
APPLICATION	

UNLESS OTHERWISE SPECIFIED
DIMENSIONS ARE IN INCHES
CAPACITOR VALUES ARE IN µf
RESISTOR VALUES ARE IN OHMS
TOLERANCES ON
FRACTIONS ± — DECIMALS ±.005 ANGLES ± —
DO NOT SCALE THIS DRAWING

MATERIAL
SEE NOTE 11

MIT
INSTRUMENTATION LAB
CAMBRIDGE MASS

DRAWN R. A. Jones 2-15-66
CHECKED W. Chandler 2-15-66
APPROVED
APPROVED
APPROVED MIT
APPROVED MSC
DATE

MANNED SPACECRAFT CENTER
HOUSTON, TEXAS

NAMEPLATES
APOLLO G&N-GSE
(STANDARDS)

CODE IDENT NO. 80230
SIZE E
DRAWING NO. 1004260
SCALE NONE
SHEET OF

NOTICE - WHEN GOVERNMENT DRAWINGS, SPECIFICATIONS, OR OTHER DATA ARE USED FOR ANY PURPOSE OTHER THAN IN CONNECTION WITH A DEFINITELY RELATED GOVERNMENT PROCUREMENT OPERATION, THE UNITED STATES GOVERNMENT THEREBY INCURS NO RESPONSIBILITY NOR ANY OBLIGATION WHATSOEVER; AND THE FACT THAT THE GOVERNMENT MAY HAVE FORMULATED, FURNISHED, OR IN ANY WAY SUPPLIED THE SAID DRAWINGS, SPECIFICATIONS, OR OTHER DATA IS NOT TO BE REGARDED BY IMPLICATION OR OTHERWISE AS IN ANY MANNER LICENSING THE HOLDER OR ANY OTHER PERSON OR CORPORATION, OR CONVEYING ANY RIGHTS OR PERMISSION TO MANUFACTURE, USE, OR SELL ANY PATENTED INVENTION THAT MAY IN ANY WAY BE RELATED THERETO.

NOTES:

1. INTERPRET DRAWING IN ACCORDANCE WITH STANDARDS PRESCRIBED IN MIL-D-70327.
2. DIMENSIONS ON EACH VIEW APPLY TO ALL VIEWS. (WITH THE EXCEPTION OF MOUNTING HOLES).
3. FORMATS ILLUSTRATED WILL BE APPLICABLE TO ALL ITEMS REQUIRING NAMEPLATES BELOW END ITEM DESIGNATION (SYSTEMS ASSEMBLIES, ETC.)
4. PLATE BACKGROUND TO BE LUSTERLESS BLACK PER FED-STD-595. COLOR 37038. BORDER, MARKING AND LETTERING TO BE NATURAL METAL,(ANODIZED ALUMINUM).
5. MARKING METHOD TO BE DIE STAMPING, ETCHING OR ENGRAVING IN ACCORDANCE WITH MIL P 19834.
6. LETTERING STYLE TO BE GOTHIC,(SANS SERIFS), AND NUMBERS TO BE ARABIC.
7. WHERE LOCATING DIMENSIONS ARE NOT SHOWN, CHARACTERS SHALL BE SYMMETRICALLY POSITIONED.
8. IDENTIFY WITH DRAWING NUMBER PER ND1002019.
9. WHEN "AUTO MARK" METAL MARKING TYPEWRITER IS USED TO ADD DATA TO BLANK SPACES, TYPE SIZE IS TO BE SELECTED FROM DIMENSIONS U, AC AND AM.
10. NASA SYMBOL IS TO BE PROPORTIONAL TO NAMEPLATE IN RATIO OF 1 TO 5 WITH DIMENSION A VALUE AND IS TO HAVE NATURAL BACKGROUND. NASA SYMBOL LETTER LETTERING AND FEATHER TO BE BLACK,(OR WHITE FOR SILK SCREENING). WHERE BLACK FEATHER PROTRUDES INTO BLACK BACKGROUND, A MINIMUM OUTLINE OF NATURAL BACKGROUND SHALL EXIST.
11. NAMEPLATES WILL BE APPLIED BY METHODS LISTED BELOW, SHOWN IN ORDER OF PREFERENCE, (I.E., FOR RELIABILITY AND WEIGHT).
    - A - STENCIL OR SILK SCREEN DIRECTLY ON EQUIPMENT USING INK PER SCD 1010920,(WHITE OR BLACK).
    - B - ALUMINUM FOIL,(STYLE A OR B, TYPE I):
      FOIL SHALL BE .0030 ±.0005 THICK PER MIL-A-148.
      FOIL SHALL HAVE NO ADHESIVE BACKING.
      FOIL SHALL BE BONDED PER ND 1002219,(METHOD II).
      FOIL SHALL BE CLEAR ANODIZED PER MIL-A-8625, TYPE II.
    - C - PLATE, (STYLE A OR B, TYPE II):
      MATERIAL: QQ-A-250, TEMPER O OR H14, TYPE 1100, ALUMINUM ALLOY, .032 THICK.
      ANODIZE PER MIL-A-8625, TYPE II.
      ALUMINUM PLATE MUST BE FREE FROM BURRS AND SHARP CORNERS, MOUNTED WITH APPLICABLE SIZE FASTENERS.
12. NAMEPLATES SHALL BE CAPABLE OF MEETING APPLICABLE REQUIREMENTS OF MIL-M-13231.
13. ON DIMENSION TABLES SHOWN ON PAGES 2, 3, 4 AND 5, NA MEANS, "NOT APPLICABLE".

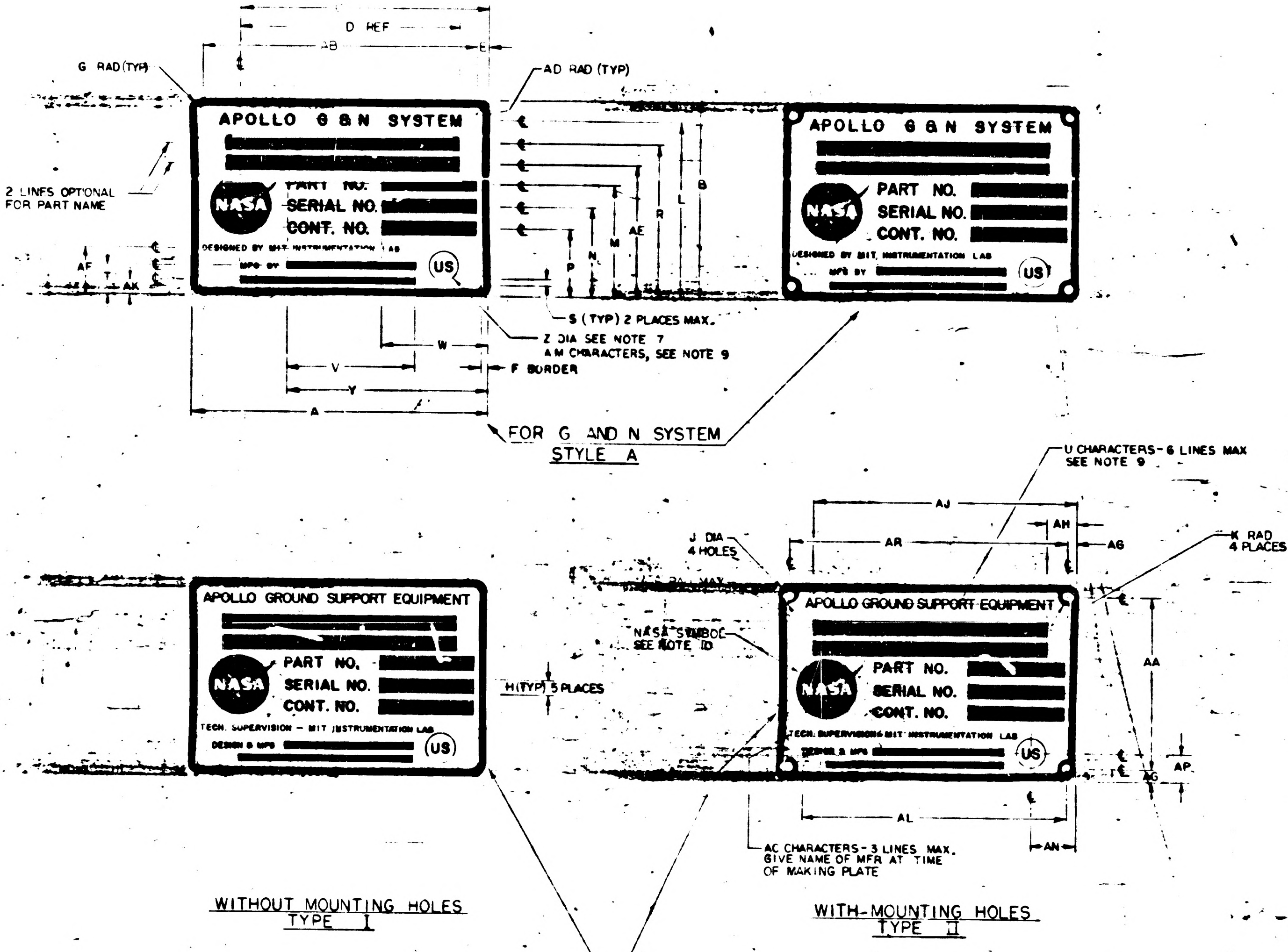

D REF
AB
E
G RAD (TYP)
AD RAD (TYP)
2 LINES OPTIONAL FOR PART NAME
APOLLO G & N SYSTEM
PART NO.
SERIAL NO.
CONT. NO.
NASA
DESIGNED BY MIT INSTRUMENTATION LAB
MFG BY
US
AF
T
AK
B
L
R
AE
M
N
P
S (TYP) 2 PLACES MAX.
Z DIA SEE NOTE 7
AM CHARACTERS, SEE NOTE 9
W
V
Y
A
F BORDER
U CHARACTERS - 6 LINES MAX SEE NOTE 9
AJ
AH
AR
AG
J DIA 4 HOLES
K RAD 4 PLACES
APOLLO GROUND SUPPORT EQUIPMENT
TECH. SUPERVISION - MIT INSTRUMENTATION LAB
DESIGN & MFG
H (TYP) 5 PLACES
NASA SYMBOL SEE NOTE 10
AA
AP
AG
AL
AN
AC CHARACTERS - 3 LINES MAX. GIVE NAME OF MFR AT TIME OF MAKING PLATE

FOR G AND N SYSTEM
STYLE A

WITHOUT MOUNTING HOLES
TYPE I

WITH-MOUNTING HOLES
TYPE II

FOR GROUND SUPPORT EQUIPMENT
STYLE B

REVISIONS

SYM	ZONE	DESCRIPTION	DR	CHK	DATE	APPROVED
G		REPLACES REV F WITH CHANGE PER TDRR 20854				
H		REVISED PER TDRR 20892				
J		REVISED PER TDRR 20904				
K		REVISED PER TDRR 21373				
L		REVISED PER TDRR 21410				
M		REVISED PER TDRR 21993				
N		REVISED PER TDRR 22621				
P		REVISED PER TDRR 22671				
R		REVISED PER TDRR 22672				
S		REVISED PER TDRR 22750				
T		REVISED PER TDRR 22823				
U		REVISED PER TDRR 23072			[illegible]	
V		REVISED PER TDRR 23527			10-27-65	
W		REVISED PER TDRR 23824	RAJ		11-9-65	
Y		REVISED PER TDRR 24018	RAJ		11-16-65	
Z		REVISED PER TDRR 24040	RAJ		11-19-65	
AA		REVISED PER TDRR 24060	RAJ		11-19-65	
AB		REVISED PER TDRR 24868	RAJ		[illegible]	
AC		REVISED PER TDRR 24973	RAJ		1-4-66	
AD		REVISED PER TDRR 25065	RAJ		1-18-66	
AE		REVISED PER TDRR 25672	RAJ		2-4-66	
AF		REVISED PER TDRR 25671	RAJ		2-4-66	
AG		REVISED PER TDRR 26110	RAJ		2-15-66	
AH		REVISED PER TDRR 26372	"		3-6-66	
AJ		REVISED PER TDRR 26425	"		[illegible]	
AK		REVISED PER TDRR 26743	"		3-16-66	
AL		REVISED PER TDRR 26798	"		3-16-66	
AM		REVISED PER TDRR 27168			4-7-66	
AN		REVISED PER TDRR 27236			4-7-66	
AP		REVISED PER TDRR 27345			4-7-66	
AR		REVISED PER TDRR 27417			4-7-66	
AS		REVISED PER TDRR 27442	"		4-7-66	
AT		REVISED PER TDRR 27719	"		4-20-66	
AU		REVISED PER TDRR 27880	"		4-20-66	
AV		REVISED PER TDRR 27896	"		[illegible]	
AW		28110	"		5-16-66	
AY		28173	"			
AZ		28131				
BA		28124	"			
BB		REVISED PER TDRR 28511	"		5-16-66	
BC		" " " 28949	"		5-24-66	
BD		" " " 29222	"		6-8-66	
BE		" " " 23235	"		6-8-66	
BF		" " " 29322			[illegible]	
BG		" " " 29429				
BH		" " " 29449				
BJ		" " " 29335				
BK		" " " 296 9				
BL		" " " 29696				
BM		REVISION STATUS CHANGED	JSD	NS	7-29-66	
BN		REVISION STATUS CHANGED	JI		[illegible]	
BP		REVISION STATUS CHANGED	JI	RLW	[illegible]	
BR		REVISION STATUS CHANGED	JI	RLW	[illegible]	
BS		REVISION STATUS CHANGED	GW	RLW	[illegible]	
BT		REVISION STATUS CHANGED	GW	RLW	26 AUG 66	
BU		REVISION STATUS CHANGED	EH	JI	[illegible]	
BV		REVISION STATUS CHANGED	JJB	RLW	30 SEP	
BW		REVISION STATUS CHANGED	JJB	RLW	30 SEP	
BY		REVISION STATUS CHANGED	JJB	RLW	[illegible] OCT 66	
BZ		REVISION STATUS CHANGED	JE	RLW	10 OCT 66	
CA		REVISION STATUS CHANGED	JJB	[illegible]	25 OCT 66	
CB		REVISION STATUS CHANGED	REF	[illegible]	[illegible] DEC 66	
CC		REVISION STATUS CHANGED	AF	[illegible]	[illegible] 67	
CD		REVISION STATUS CHANGED	[illegible]	[illegible]	[illegible]	
CE		REVISION STATUS CHANGED	[illegible]	[illegible]	19 APR	
CF		REVISION STATUS CHANGED	[illegible]	[illegible]	[illegible]	
CG		REVISION STATUS CHANGED	AR	[illegible]	10 AUG 67	
CH		REVISION STATUS CHANGED	[illegible]	[illegible]	21 AUG	
CJ		REVISION STATUS CHANGED	[illegible]	[illegible]	24 AUG	
CK		REVISION STATUS CHANGED	DG	[illegible]	1 SEPT 67	

SUGGESTED PROPORTIONS FOR NAMEPLATE DIMENSIONS.
1. SELECT NAMEPLATE LENGTH, DIMENSION "A", TO FIT DESIGN NEEDS.
2. DIMENSIONS B THRU AS ON LINE 1 BELOW ARE PROPORTIONAL TO "A" BY MULTIPLIERS SHOWN IN LINE 2 BELOW.

1.	A	B	C	D	E	F	G	H	J	K	L	M	N	P	R	S	T	U
2.	1.000 A	.6563 A	.8438 A	.6875 A	.0391 A	.0240 A	.0391 A	.0469 A	.0547 A	.0469 A	.5938 A	.3750 A	.2969 A	.2187 A	.5079 A	.0313 A	.0938 A	.0391 A

1.	V	W	Y	Z	AA	AB	AC	AD	AE	AF	AG	AH	AJ	AK	AL	AM	AN	AP	AR	AS
2.	.4375 A	.3594 A	.6875 A	.1094 A	.5781 A	.9219 A	.0240 A	.0156 A	.4375 A	.1525 A	.0391 A	.1563 A	.8438 A	.0548 A	.8659 A	.0391 A	.1563 A	.0938 A	.9219 A	.0151 A

Ⓖ REPLACES REV F WITH CHANGE

QTY REQD	PART OR IDENTIFYING NO	MATERIAL OR NOTES	NOMENCLATURE OR DESCRIPTION

LIST OF MATERIALS

AS APPLICABLE	
NEXT ASSY	USED ON

APPLICATION

UNLESS OTHERWISE SPECIFIED
DIMENSIONS ARE IN INCHES
CAPACITOR VALUES ARE IN µf
RESISTOR VALUES ARE IN OHMS
TOLERANCES ON
FRACTIONS ± — DECIMALS ±.005 ANGLES ± —
DO NOT SCALE THIS DRAWING

MATERIAL
SEE NOTE 11

MIT
INSTRUMENTATION LAB
CAMBRIDGE, MASS.

MANNED SPACECRAFT CENTER
HOUSTON, TEXAS

DRAWN	[illegible]	7/16/65
CHECKED	A. J. [illegible]	7-22-65
APPROVED		
APPROVED	[illegible]	[illegible]
APPROVED MIT	[illegible]	[illegible]
APPROVED MSC	[illegible]	[illegible]
		DATE

NAMEPLATES,
APOLLO G&N-GSE
(STANDARDS)

CODE IDENT NO 80230
SIZE E
DRAWING NO. 1004260
SCALE NONE
SHEET 1 OF [illegible]

NOTICE – WHEN GOVERNMENT DRAWINGS, SPECIFICATIONS, OR OTHER DATA ARE USED FOR ANY PURPOSE OTHER THAN IN CONNECTION WITH A DEFINITELY RELATED GOVERNMENT PROCUREMENT OPERATION, THE UNITED STATES GOVERNMENT THEREBY INCURS NO RESPONSIBILITY NOR ANY OBLIGATION WHATSOEVER; AND THE FACT THAT THE GOVERNMENT MAY HAVE FORMULATED, FURNISHED, OR IN ANY WAY SUPPLIED THE SAID DRAWINGS, SPECIFICATIONS, OR OTHER DATA IS NOT TO BE REGARDED BY IMPLICATION OR OTHERWISE AS IN ANY MANNER LICENSING THE HOLDER OR ANY OTHER PERSON OR CORPORATION, OR CONVEYING ANY RIGHTS OR PERMISSION TO MANUFACTURE, USE, OR SELL ANY PATENTED INVENTION THAT MAY IN ANY WAY BE RELATED THERETO

REVISIONS

SYM	ZONE	DESCRIPTION	DR	CHK	DATE	APPROVED
G		REPLACES REV F WITH CHANGE PER TDRR 20854.			[illegible]	
H		REVISED PER TDRR 20892			[illegible]	
J		REVISED PER TDRR 20904			[illegible]	
K		REVISED PER TDRR 21379			[illegible]	
L		REVISED PER TDRR 21410			[illegible]	
M		REVISED PER TDRR 21593	"			
N		REVISED PER TDRR 22621	"			
P		REVISED PER TDRR 22671	"			
R		REVISED PER TDRR 22672	"			
S		REVISED PER TDRR 22750	"			
T		REVISED PER TDRR 22823	"			
U		REVISED PER TDRR 23072	"		10-12-65	
V		REVISED PER TDRR 23521	"		10-27-65	
W		REVISED PER TDRR 23824	RAJ		11-9-65	
Y		REVISED PER TDRR 24018	RAJ		11-16-65	
Z		REVISED PER TDRR 24040	RAJ		11-19-65	
AA		REVISED PER TDRR 24060	RAJ		11-19-65	
AB		REVISED PER TDRR 24868	RAJ		12-22-65	
AC		REVISED PER TDRR 24973	RAJ		1-4-66	
AD		REVISED PER TDRR 25065	RAJ		1-18-66	
AE		REVISED PER TDRR 25672	RAJ		2-4-66	
AF		REVISED PER TDRR 25671	RAJ		2-4-66	
AG		REVISED PER TDRR 2610	RAJ		2-15-66	
AH		REVISED PER TDRR 26372	"		3-16-66	
AJ		REVISED PER TDRR 26425	"		3-16-66	
AK		REVISED PER TDRR 26743	"		3-16-66	
AL		REVISED PER TDRR 26798	"		3-16-66	
AM		REVISED PER TDRR 27168	"		4-8-66	
AN		REVISED PER TDRR 27235	"		4-8-66	
AP		REVISED PER TDRR 27345	"		4-8-66	
AR		REVISED PER TDRR 27417	"		4-8-66	
AS		REVISED PER TDRR 27442	"		4-8-66	
AT		REVISED PER TDRR 27719	"		4-21-66	
AU		REVISED PER TDRR 27880	"		4-21-66	
AV		REVISED PER TDRR 27896	"		4-21-66	
AW		28110	"		5-16-66	
AY		28173	"			
AZ		28151	"			
BA		28124	"			
BB		REVISED PER TDRR 28511	"		5-16-66	
BC		" " " 28949	"		5-24-66	
BD		" " " 29222	"		6-8-66	
BE		" " " 29235	"		"	
BF		" " " 29322	"		6-30-66	
BG		" " " 29429	"			
BH		" " " 29449	"			
BJ		" " " 29335	"			
BK		" " " 29619	"			
BL		" " " 29696	"			
BM		REVISION STATUS CHANGED	JSD	N.S.	7-29-66	
BN		REVISION STATUS CHANGED	JI		[illegible]	
BP		REVISION STATUS CHANGED	JI		[illegible]	
BR		REVISION STATUS CHANGED	JI		[illegible]	
BS		REVISION STATUS CHANGED	GW		[illegible]	
BT		REVISION STATUS CHANGED	GW		[illegible]	
BU		REVISION STATUS CHANGED	EH		[illegible]	
BV		REVISION STATUS CHANGED	JJB		30 SEP 66	
BW		" "	JJB		30 SEP 66	
BY		" "	JJB		10 OCT 66	
BZ		REVISION STATUS CHANGED	JJB		[illegible]	
CA		REVISION STATUS CHANGED	JJB		25 OCT 66	
CB		REVISION STATUS CHANGED	REF		10 DEC 66	
CC		REVISION STATUS CHANGED	AF		[illegible]	
CD		REVISION STATUS CHANGED	DR	R.L	[illegible]	
CE		REVISION STATUS CHANGED	[illegible]		19 APR 67	
CF		REVISION STATUS CHANGED	[illegible]		19 APR 67	
CG		REVISION STATUS CHANGED	A.N		10 AUG 67	
CH		REVISION STATUS CHANGED	[illegible]		21 AUG 67	
CJ		REVISION STATUS CHANGED	[illegible]		21 AUG 67	
CK		REVISION STATUS CHANGED	DG		1 SEPT 67	

DASH NO.	P/C	PART NAME	REMARKS	PART NO.	SER. NO.	CONT. NO.	STYLE	TYPE	MATERIAL	A	B	C	D	E	F	G	H	J	K	L	M	N	P	R	S	T	U	V	W	Y	Z	AA	AB	AC	AD	AE	AF	AG	AH	AJ	AK	AL	AM	AN	AP	AR
329	K																																													
328	K																																													
350	K	ALIGNMENT OPTICAL TELESCOPE (LEM)		NA	NA	NA	A	I	NOTE 11B	4.000	2.625	3.375	2.750	.156	.093	.156	.187	NA	NA	2.312	1.468	1.187	.906	2.031	NA	.375	.156	NA	1.437	2.750	.437	NA	3.688	.062	.062	1.750	.593	NA	.625	3.375	.187	NA	.156	.531	.453	NA
309	K																																													
308	K																																													
307	K						B	I	NOTE 11 B	4.000	2.625	3.375	2.750	.156	.093	.156	.187	NA	NA	2.328	1.468	1.187	.906	2.031	.062	.375	.156	NA	1.437	2.750	.437	NA	3.687	.062	.062	1.750	.593	NA	NA	NA	NA	NA	NA	NA	NA	NA
306	K						B	II	NOTE 11 C	4.000	2.625	3.375	2.750	.156	.093	.156	.187	.125	.156	2.328	1.468	1.187	.906	2.031	.062	.375	.156	↕	1.437	2.750	.437	2.312	3.687	.062	NA	1.750	.593	↕	↕	↕	↕	↕	↕	↕	↕	↕
305	K						B	I	NOTE 11 B	2.000	1.312	1.687	1.375	.078	.048	.078	.093	NA	NA	1.164	.734	.593	.453	1.015	.048	.171	.078	↕	.718	1.375	.187	NA	NA	.048	.031	.875	.320	↕	↕	↕	↕	↕	↕	↕	↕	↕
304	K						B	II	NOTE 11 C	2.000	1.312	1.687	1.375	.078	.048	.078	.093	.070	.078	1.164	.734	.593	.453	1.015	.048	.171	.078	NA	.718	1.375	.187	.156	.843	.048	NA	.875	.320	NA	NA	NA	NA	NA	NA	NA	NA	NA
303	K																																													
302	K																																													
301	K																																													
300	K	OPTICAL UNIT		NA	NA	NA	A	I	NOTE 11 B	2.000	1.312	.675	NA	NA	.048	.078	NA	NA	NA	1.090	.812	.675	.540	.940	NA	.265	NA	NA	NA	1.375	[illegible]	NA	NA	NA	NA	NA	.375	NA	NA	NA	.180	NA	.078	NA	NA	NA
9	K	2 IN AUTOCOLLIMATOR		1001702			B	II	NOTE 11 C	4.000	2.625	3.812	2.750	.156	.093	.156	.187	.125	.156	2.250	1.500	1.187	.906	2.031	.093	.375	.56	1.750	1.437	2.750	.437	2.312	3.687	.062	NA	1.750	.593	.156	1.062	3.812	.156	NA	.156	1.062	.375	3.687
8	K	5 IN AUTOCOLLIMATOR		1017410			B	II	NOTE 11 C	4.000	2.625	3.812	2.750	.156	.093	.156	.187	.125	.156	2.250	1.500	1.187	.906	2.031	.093	.375	.156	1.750	1.437	2.750	.437	2.312	3.687	.062	NA	1.750	.593	.156	1.062	3.812	.156	NA	.156	1.062	.375	3.687
7	K	2½ IN AUTOCOLLIMATOR (SCT)		1017435			B	II	NOTE 11 C	4.000	2.625	3.812	2.750	.156	.093	.156	.187	.125	.156	2.250	1.500	1.187	.906	2.031	.093	.375	.156	1.750	1.437	2.750	.437	2.312	3.687	.062	NA	1.750	.593	.156	1.062	3.812	.156	NA	.156	1.062	.375	3.687
6	K	2½ IN AUTOCOLLIMATOR (SXT)		1017448			B	II	NOTE 11 C	4.000	2.625	3.812	2.750	.156	.093	.156	.187	.125	.156	2.250	1.500	1.187	.906	2.031	.093	.375	.156	1.750	1.437	2.750	.437	2.312	3.687	.062	NA	1.750	.593	.156	1.062	3.812	.156	NA	.156	1.062	.375	3.687
5	K	RETROREFLECTING PRISM ASSEMBLY		1019840			B	I	NOTE 11 B	4.000	2.625	3.812	2.750	.156	.093	.156	.187	NA	NA	2.250	1.500	1.187	.906	2.031	.093	.375	.156	1.750	1.437	2.750	.437	NA	NA	.062	.062	1.750	.593	.156	1.062	3.812	.156	NA	.156	1.062	.375	NA
4	K	S/H SIMULATOR ASSEMBLY		1019896			B	I	NOTE 11 B	4.000	2.625	3.812	2.750	.156	.093	.156	.187	NA	NA	2.250	1.500	1.187	.906	2.031	.093	.375	.156	1.750	1.437	2.750	.437	NA	NA	.062	.062	1.750	.593	.156	1.062	3.812	.156	NA	.156	1.062	.375	NA
3	K	REFERENCE MIRROR		1001767			B	I	NOTE 11 B	2.000	1.312	1.906	1.375	.078	.048	.078	.093	NA	NA	1.125	.750	.593	.453	1.015	.062	.187	.078	.875	.718	1.375	.218	NA	NA	.048	.031	.875	.305	.078	.531	1.906	.078	NA	.078	.531	.187	NA
2	K	2 IN PLANE READING AUTOCOLLIMATOR		1017413			B	I	NOTE 11 B	2.000	1.312	1.906	1.375	.078	.048	.078	.093	NA	NA	1.125	.750	.593	.453	1.015	.062	.187	.078	.875	.718	1.375	.218	NA	NA	.048	.031	.875	.305	.078	.531	1.906	.078	NA	.078	.531	.187	NA
1	K	2 IN AUTOCOLLIMATOR		1001702			B	I	NOTE 11 B	2.000	1.312	1.906	1.375	.078	.048	.078	.093	NA	NA	1.125	.750	.593	.453	1.015	.062	.187	.078	.875	.718	1.375	.218	NA	NA	.048	.031	.875	.305	.078	.531	1.906	.078	NA	.078	.531	.187	NA

NOTES FOR TABLE

STYLE A IS FOR G&N SYSTEM
STYLE B IS FOR GROUND SUPPORT EQUIPMENT
TYPE I IS WITHOUT MOUNTING HOLES
TYPE II IS WITH MOUNTING HOLES.

Ⓖ REPLACES REV F WITH CHANGE

KOLLSMAN DASH NUMBERS

QTY REQD	PART OR IDENTIFYING NO.	MATERIAL OR NOTES	NOMENCLATURE OR DESCRIPTION	FIND NO.

LIST OF MATERIALS

NEXT ASSY	USED ON
AS APPLICABLE	

APPLICATION

UNLESS OTHERWISE SPECIFIED
DIMENSIONS ARE IN INCHES
CAPACITOR VALUES ARE IN µf
RESISTOR VALUES ARE IN OHMS
TOLERANCES ON
FRACTIONS ± — DECIMALS ±.005 ANGLES ± —
DO NOT SCALE THIS DRAWING

MATERIAL
SEE NOTE 11

MIT
INSTRUMENTATION LAB
CAMBRIDGE, MASS.

DRAWN R. A. Jones 7-16-65
CHECKED 7-22-65
APPROVED
APPROVED
APPROVED MIT
APPROVED MSC
DATE

MANNED SPACECRAFT CENTER
HOUSTON, TEXAS

NAMEPLATES,
APOLLO G&N-GSE
(STANDANDS)

CODE IDENT NO. 80230
SIZE E
DRAWING NO. 1004260
SCALE NONE
SHEET 2

NOTICE - WHEN GOVERNMENT DRAWINGS, SPECIFICATIONS OR OTHER DATA ARE USED FOR ANY PURPOSE OTHER THAN IN CONNECTION WITH A DEFINITELY RELATED GOVERNMENT PROCUREMENT OPERATION, THE UNITED STATES GOVERNMENT THEREBY INCURS NO RESPONSIBILITY NOR ANY OBLIGATION WHATSOEVER; AND THE FACT THAT THE GOVERNMENT MAY HAVE FORMULATED, FURNISHED, OR IN ANY WAY SUPPLIED THE SAID DRAWINGS, SPECIFICATIONS OR OTHER DATA IS NOT TO BE REGARDED BY IMPLICATION OR OTHERWISE AS IN ANY MANNER LICENSING THE HOLDER OR ANY OTHER PERSON OR CORPORATION, OR CONVEYING ANY RIGHTS OR PERMISSION TO MANUFACTURE, USE OR SELL ANY PATENTED INVENTION THAT MAY IN ANY WAY BE RELATED THERETO.

SYM	ZONE	DESCRIPTION	DR	CHK	DATE	APPROVED
G		REPLACES REV F WITH CHANGE PER TDRR 20854			7/21/65	
H		REVISED PER TDRR 20892			[illegible]	
J		REVISED PER TDRR 20904			[illegible]	
K		REVISED PER TDRR 21379			[illegible]	
L		REVISED PER TDRR 21410			[illegible]	
M		REVISED PER TDRR 21992				
N		REVISED PER TDRR 22621				
P		REVISED PER TDRR 22671				
R		REVISED PER TDRR 22672				
S		REVISED PER TDRR 22750				
T		REVISED PER TDRR 22823				
U		REVISED PER TDRR 23072			10-[illegible]-65	
V		REVISED PER TDRR 23521			10 26 65	
W		REVISED PER TDRR 23824	RAJ		11-9-65	
Y		REVISED PER TDRR 24018	RAJ		11-16-65	
Z		REVISED PER TDRR 24040	RAJ		11-19-65	
AA		REVISED PER TDRR 24060	RAJ		11-19-65	
AB		REVISED PER TDRR 24868	RAJ		12-22-65	
AC		REVISED PER TDRR 24973	RAJ		1-4-66	
AD		REVISED PER TDRR 25065	RAJ		1-18-66	
AE		REVISED PER TDRR 25672	RAJ		2-4-66	
AF		REVISED PER TDRR 25671	RAJ		2-4-66	
AG		REVISED PER TDRR 26110	RAJ		2-15-66	
AH		REVISED PER TDRR 26372	"		3-16-66	
AJ		REVISED PER TDRR 26425	"		3-16-66	
AK		REVISED PER TDRR 26743	"		3-16-66	
AL		REVISED PER TDRR 26798	"		3-16-66	
AM		REVISED PER TDRR 27168	"		4-8-66	
AN		REVISED PER TDRR 27245	"		4-8-66	
AP		REVISED PER TDRR 27345	"		4-8-66	
AR		REVISED PER TDRR 27417	"		4-8-66	
AS		REVISED PER TDRR 27442	"		4-8-66	
AT		REVISED PER TDRR 27[illegible]9	"		4-20-66	
AU		REVISED PER TDRR 27860	"		4-20-66	
AV		REVISED PER TDRR 27896	"		4-20-66	
AW		28110	"		5-16-66	
AY		28173	"		5-16-66	
AZ		28131	"		5-16-66	
BA		28124	"		5-16-66	
BB		REVISED PER TDRR 2851[illegible]	"		5-16-66	
BC		" " " 28949	"		5-24-66	
BD		" " " 29222	"		6-8-66	
BE		" " " 29235	"		"	
BF		" " " 29322	"		6-29-66	
BG		" " " 29429	"		"	
BH		" " " 29449	"		"	
BJ		" " " 29335	"		"	
BK		" " " 29619	"		"	
BL		" " " 29696	"		"	
BM		" " " 29802	JSD	N.S.	7-29-66	
BN		REVISION STATUS CHANGED	JI	RLW	[illegible] 66	
BP		REVISED PER TDRR 30168	JI	RLW	[illegible] AUG 66	
BR		REVISION STATUS CHANGED	JI	RLW	31 AUG 66	
BS		REVISION STATUS CHANGED	GW	RLW	26 AUG 66	
BT		REVISION STATUS CHANGED	GW	RLW	[illegible] AUG 66	
BU		REVISION STATUS CHANGED	EH	JI	[illegible]	
BV		REVISION STATUS CHANGED	JJB	RLW	[illegible] SEP 66	
BW		REVISED PER TDRR 31279	JJB	RLW	30 SEP	
BY		REVISION STATUS CHANGED	JJB	RLW	10 OCT 66	
BZ		REVISION STATUS CHANGED	JJB	RLW	10 OCT 66	
CA		REVISION STATUS CHANGED	JJB		25 OCT 66	
CB		REVISION STATUS CHANGED	REF		10 DEC 66	
CC		REVISION STATUS CHANGED	AF		12 JAN 67	
CD		REVISED PER TDRR 32640	DR		1 FEB 67	
CE		REVISED PER TDRR 33447	[illegible]		[illegible] APR 67	
CF		REVISION STATUS CHANGED	[illegible]		19 APR 67	
CG		REVISION STATUS CHANGED	A.N.		10 [illegible] 67	
CH		REVISION STATUS CHANGED	[illegible]		[illegible] AUG 67	
CJ		REVISION STATUS CHANGED	[illegible]		[illegible] AUG 67	
CK		REVISED PER TDRR 34228	DG		1 SEP 67	

DASH NO.	P/C	PART NAME	REMARKS	PART NO.	SER. NO.	CONT. NO.	STYLE	TYPE	MATERIAL	A
299	R									
298	R									
285	R	BUFFER CIRCUIT ASSY		2014254-031	NA	NAS9497	B	I	NOTE 11B	FOR DIMENSIONS SEE DASH 15 VALUES BELOW
284	R	LOGIC DRAWER ASSY NO. 2		2014037-041	NA	NAS9-497	B	I	NOTE 11B	FOR DIMENSIONS SEE DASH 17 VALUES BELOW
283	R	DRAWER ASS'Y-PROGRAM & MONITOR		2014041-051	NA	NAS9-497	B	I	NOTE 11B	FOR DIMENSIONS SEE DASH 17 VALUES BELOW
282	R	COMPUTER TEST SET		2014042-061	NA	NAS9-497	B	II	NOTE 11C	FOR DIMENSIONS SEE DASH 18 VALUES BELOW
281	R	AGC HANDLING FIXTURE		2014282-051	NA	NAS9-497	B	I	NOTE 11B	FOR DIMENSIONS SEE DASH 17 VALUES BELOW
280	R	COMPUTER TEST SET		2014042-051	NA	NAS9 497	B	II	NOTE 11C	FOR DIMENSIONS SEE DASH 18 VALUES BELOW
279	R	SELF TEST ASSY		2014366-041	NA	NAS9-497	B	I	NOTE 11B	FOR DIMENSIONS SEE DASH 15 VALUES BELOW
278	R	LOGIC DRAWER ASSY NO.1		2014036-041	NA	NAS 9-497	B	I	NOTE 11B	FOR DIMENSIONS SEE DASH 17 VALUES BELOW
277	R	COMPUTER TEST SET		2014042-041	NA	NAS-9-497	B	II	NOTE 11C	FOR DIMENSIONS, SEE DASH 18 VALUES BELOW
276		DRAWER ASSY - PROGRAM & MONITOR		2014041-041				I	NOTE 11 B	FOR DIMENSIONS, SEE DASH 17 VALUES BELOW
275		DRAWER ASSY RDC INTERFACE		2014045-031						
274		SELF TEST ASSY		2014366-031						FOR DIMENSIONS, SEE DASH 15 VALUES BELOW
273		LOGIC DRAWER ASSY NO. 2		2014037-031						FOR DIMENSIONS, SEE DASH 17 VALUES BELOW
272		DRAWING ASSY PROGRAMMER & MONITOR		2014041-031						
271		LOGIC DRAWER ASSY NO. 1		2014036-031				I	NOTE 11 B	FOR DIMENSIONS, SEE DASH 17 VALUES BELOW
270		COMPUTER TEST SET		2014042-031				II	NOTE 11C	FOR DIMENSIONS, SEE DASH 18 VALUES BELOW
269		POWER CONTROL ASSY		2014044-021				I	NOTE 11 B	FOR DIMENSIONS, SEE DASH 17 VALUES BELOW
268		SELF TEST ASSY		2014366-021						
267		AGC JUNCTION ASSY		[illegible]						
266		POWER CONTROL ASSY		2014079-021						
265		BUFFER CIRCUIT ASSY		2014254-021						FOR DIMENSIONS, SEE DASH 15 VALUES BELOW
264		DRAWER ASSY XY INTERFACE		2014040-021						
263		DRAWER ASSY RDC INTERFACE		2014045-021						
262		DRAWER ASSY PROGRAMMER & MONITOR		[illegible]						
261		LOGIC DRAWER ASSY NO. 2		2014037-021						FOR DIMENSIONS, SEE DASH 17 VALUES BELOW
260		LOGIC DRAWER ASSY NO. 1		2014036-021				I	NOTE 11B	
259		OPERATION CONSOLE		2014024-021				II	NOTE 11C	
258		COMPUTER TEST SET		2014042-021						
257		AUXILIARY CALIBRATION CONSOLE		2014059-021						
256		AGC CALIBRATION CONSOLE		2014049-021				II	NOTE 11C	FOR DIMENSIONS, SEE DASH 18 VALUES BELOW
255		AGC HANDLING FIXTURE		2014282-021				I	NOTE 11B	FOR DIMENSIONS, SEE DASH 17 VALUES BELOW
254		DRAWER ASSY COMP. SIMULATOR		2014048-011				II	NOTE 11C	
253		SHIPPING KIT ASSY, [illegible] DSKY		2016312-011						
252		SHIPPING KIT ASSY, UNIVERSAL DSKY		2016316-011						FOR DIMENSIONS, SEE DASH 18 VALUES BELOW
251		SHIPPING KIT ASSY, MAIN DSKY		2016313-011				II	NOTE 11C	
250		AMPLIFIER, REWORK		2014386				I	NOTE 11B	FOR DIMENSIONS, SEE DASH 15 VALUES BELOW
249		TEMP MONITOR ASSY		2014313-011					NOTE 11C	FOR DIMENSIONS, SEE DASH 17 VALUES BELOW
248		AGC JUNCTION ASSY		201434[illegible]-011					NOTE 11B	
247		AC INPUT PANEL ASSY		2014302-011						
246		SELF TEST ASSY		2014392-011						FOR DIMENSIONS, SEE DASH 15 VALUES BELOW
245	T	TAPE PUNCH ASSEMBLY		2014039-011						
244	R	TAPE READER ASSEMBLY		2014038-011	NA	NAS-9-497	B	I	NOTE 11B	FOR DIMENSIONS, SEE DASH 15 VALUES BELOW
243										
242										
241	R	APOLLO GUIDANCE COMPUTER GROUP		6003001	NA	NAS-9-497	A	I	NOTE 11B	FOR DIMENSIONS, SEE DASH 19 VALUES BELOW
240	R	SELF TEST ASSEMBLY		2014366-011	NA		B	I		FOR DIMENSIONS, SEE DASH 15 VALUES BELOW
239		POWER SUPPLY ASSY-115V., 400 CYCLE		2014207-011						
238		AC INPUT PANEL ASSY		2014043-011						FOR DIMENSIONS, SEE DASH 17 VALUES BELOW
237		POWER CONTROL ASSY		2014079-011						
236		DRAWER ASSY-XY INTERFACE		2014040-011						
235		DRAWER ASSY RDC INTERFACE		2014045-011						FOR DIMENSIONS, SEE DASH 15 VALUES BELOW
234		BUFFER CIRCUIT ASSY		2014254-011						
233		CONTROL & INTERFACE ASSY		2014204-011						
232		POWER CONTROL ASSY		2014044-011						
231		DRAWER ASSY, PROGRAMMER & MONITOR		2014041-011						FOR DIMENSIONS, SEE DASH 17 VALUES BELOW
230		CONNECTOR INTERFACE ASSY		2014272-011						
229		CONNECTOR INTERFACE ASSY		2014047-011						FOR DIMENSIONS, SEE DASH 15 VALUES BELOW
228		ANTENNA, TUNING CAPACITOR ASSY		2014209-011						
227		MOUNTING FIXTURE ASSY		2014006-011						FOR DIMENSIONS, SEE DASH 17 VALUES BELOW
226		POWER SUPPLY ASSY 3 VDC		2014234-011						
225		PANEL ASSY - SIGNAL INTERFACE		2014010-011						
224		OSCILLOSCOPE ASSY		2014232-011						
223		AUXILIARY OUTLET ASSY		2014274-011						FOR DIMENSIONS, SEE DASH 15 VALUES BELOW
222		FREQUENCY COUNTER		2014233-011						
221		POWER SUPPLY ASSY 10, 13, 28 VDC		2014235-011						
220		LOGIC DRAWER ASSY NO. 2		2014037-011						
219		LOGIC DRAWER ASSY NO. 1		2014036-011						FOR DIMENSIONS, SEE DASH 17 VALUES BELOW
218		COUNTER, ELECTRICAL ASSY		2014288-011						
217		POWER SUPPLY ASSY		2014279-011						FOR DIMENSIONS, SEE DASH 15 VALUES BELOW
216		TEST MOUNT ASSY		2014257-011						
215		UNIVERSAL DSKY PEDESTAL MOUNT		2014014-011						
214		MAIN DSKY PEDESTAL MOUNT		2014343				I	NOTE 11B	FOR DIMENSIONS, SEE DASH 17 VALUES BELOW
213		SHIPPING CONTAINER, MAIN DSKY		1006229				II	NOTE 11C	
212		NAV DSKY		1006231						
211		AGC		1006230						FOR DIMENSIONS, SEE DASH 18 VALUES BELOW
210		UNIVERSAL DSKY		1006422						
209		SHIPPING CONTAINER, AGC		1006421				II	NOTE 11C	
208		UNIVERSAL DSKY HANDLING FIXTURE		[illegible]				I	NOTE 11B	FOR DIMENSIONS, SEE DASH 15 VALUES BELOW
207		NAV DSKY HANDLING FIXTURE		1014377						
206		MAIN DSKY HANDLING FIXTURE		1014334						FOR DIMENSIONS, SEE DASH 17 VALUES BELOW
205		AGC HANDLING FIXTURE		2014282-011				I	NOTE 11B	
204		OPERATION CONSOLE		2014024-011				II	NOTE 11C	
203		COMPUTER TEST SET		2014042-011		NAS-9-497				
202		DRAWER ASSY, COMPUTER SIMULATOR		2014048-011		FNP-2775				FOR DIMENSIONS, SEE DASH 18 VALUES BELOW
201		AUXILIARY CALIBRATION CONSOLE		2014059-011		[illegible]				
200		AGC CALIBRATION CONSOLE		2014049-011	NA		B	II	NOTE 11C	
21										
20		NA		NA	NA	NA	A	II	NOTE 11C	2.000
19		NA		NA	NA	NA	A	I	NOTE 11B	2.000
18		NA		NA	NA	NA	B	II	NOTE 11C	4.187
17		NA		NA	NA	NA	B	I	NOTE 11B	4.187
16		NA		NA	NA	NA	B	II	NOTE 11C	2.000
15	R	NA		NA	NA	NA	B	I	NOTE 11B	2.000

DASH NO.	B	C	D	E	F	G	H	J	K	L	M	N	P	R	S	T	U	V	W	Y	Z	AA	AB	AC	AD	AE	AF	AG	AH	AJ	AK	AL	AM	AN	AP	AR
21																																				
20	1.312	1.687	1.375	.078	.031	.078	.093	[illegible]	.093	1.187	.750	.593	.453	1.015	.062	.187	.078	.875	.718	1.375	.218	1.156	1.843	.048	NA	.875	.305	.078	.312	1.687	.078	NA	.078	.312	.187	1.843
19	1.312	1.687	1.375	.078	.031	.078	.093	NA	NA	1.187	.750	.593	.453	1.015	.062	.187	.078	.875	.718	1.375	.218	NA	NA	.048	.031	.875	.305	.078	.312	1.687	.078	NA	.078	.312	.187	NA
18	1.875	3.469	2.750	.156	.093	.156	.125	[illegible]	.125	1.625	1.032	.844	.656	1.406	.093	.344	.156	1.781	1.531	2.844	.312	1.562	3.875	.062	NA	1.219	.500	.156	.719	3.469	.156	NA	.156	.719	.344	3.875
17	1.875	3.469	2.750	.156	.093	.156	.125	NA	NA	1.625	1.032	.844	.656	1.406	.093	.344	.156	1.781	1.531	2.844	.312	NA	NA	.062	.062	1.219	.500	.156	.719	3.469	.156	NA	.156	.719	.344	NA
16	1.312	1.687	1.375	.078	.031	.078	.093	[illegible]	.093	1.187	.750	.593	.453	1.015	.062	.187	.078	.875	.718	1.375	.218	1.156	1.843	.048	NA	.875	.305	.078	.312	1.687	.078	NA	.078	.312	.187	1.843
15	1.312	1.687	1.375	.078	.031	.078	.093	NA	NA	1.187	.750	.593	.453	1.015	.062	.187	.078	.875	.718	1.375	.218	NA	NA	.048	.031	.875	.305	.078	.312	1.687	.078	NA	.078	.312	.187	NA

NOTES FOR TABLE

STYLE A IS FOR G & N SYSTEM
STYLE B IS FOR GROUND SUPPORT EQUIPMENT
TYPE I IS WITHOUT MOUNTING HOLES
TYPE II IS WITH MOUNTING HOLES

THIS SHEET ADDED

Ⓖ REPLACES REV F WITH CHANGE

RAYTHEON DASH NUMBERS

QTY REQD	PART OR IDENTIFYING NO	MATERIAL OR NOTES	NOMENCLATURE OR DESCRIPTION	FIND NO

LIST OF MATERIALS

NEXT ASSY	USED ON
AS APPLICABLE	

APPLICATION

UNLESS OTHERWISE SPECIFIED
DIMENSIONS ARE IN INCHES
CAPACITOR VALUES ARE IN μf
RESISTOR VALUES ARE IN OHMS
TOLERANCES ON
FRACTIONS ± — DECIMALS ±.005 ANGLES ± —
DO NOT SCALE THIS DRAWING

MATERIAL
SEE NOTE 11

MIT
INSTRUMENTATION LAB
CAMBRIDGE MASS

MANNED SPACECRAFT CENTER
HOUSTON, TEXAS

		DATE
DRAWN	R. G. Jones	7-16-65
CHECKED	A. J. [illegible]	7-22-65
APPROVED		
APPROVED		
APPROVED MIT		
APPROVED MSC		

NAMEPLATES,
APOLLO GEN-GSE
(STANDARDS)

CODE IDENT NO	SIZE	DRAWING NO.
80230	E	1004260

SCALE NONE SHEET 2 OF

SYM	ZONE	DESCRIPTION	DR	CHK	DATE	APPROVED
G		REPLACES REV F WITH CHANGE PER TDRR 20854.				
H		REVISED PER TDRR 20592				
J		REVISED PER TDRR 20904				
K		REVISED PER TDRR 21379				
L		REVISED PER TDRR 21410				
M		REVISED PER TDRR 21993				
N		REVISED PER TDRR 22621				
P		REVISED PER TDRR 22671				
R		REVISED PER TDRR 22672				
S		REVISED PER TDRR 22750				
T		REVISED PER TDRR 22823				
U		REVISED PER TDRR 23C72				
V		REVISED PER TDRR 23521			10-26-65	
W		REVISED PER TDRR 23824	RAJ		11-9-65	
Y		REVISED PER TDRR 24018	RAJ		11-16-65	
Z		REVISED PER TDRR 24040	RAJ		11-19-65	
AA		REVISED PER TDRR 24060	RAJ		11-19-65	
AB		REVISED PER TDRR 24868	RAJ		2-2-65	
AC		REVISED PER TDRR 24973	RAJ		1-4-66	
AD		REVISED PER TDRR 25065	RAJ		1-18-66	
AE		REVISED PER TDRR 25672	RAJ		2-4-66	
AF		REVISED PER TDRR 25671	RAJ		2-4-66	
AG		REVISED PER TDRR 26110	RAJ		2-15-66	
AH		REVISED PER TDRR 26372	"		3-16-66	
AJ		REVISED PER TDRR 26425	"		3-16-66	
AK		REVISED PER TDRR 26743	"		3-16-66	
AL		REVISED PER TDRR 26798	"		3-16-66	
AM		REVISED PER TDRR 27168	"		4-8-66	
AN		REVISED PER TDRR 27235	"		4-8-66	
AP		REVISED PER TDRR 27345	"		4-8-66	
AR		REVISED PER TDRR 27417	"		4-8-	
AS		REVISED PER TDRR 27442	"		4-8-66	
AT		REVISED PER TDRR 27719	"		4-21-66	
AU		REVISED PER TDRR 27880	"		4-21-66	
AV		REVISED PER TDRR 27896			4-21-66	
AW		28110	"		5-16-66	
AY		28173	"			
AZ		28131	"			
BA		28124	"			
BB		REVISED PER TDRR 28511	"		5-16-66	
BC		" " " 28949	"		5-24-66	
BD		" " " 29222	"		6-8-66	
BE		" " " 29235	"		"	
BF		" " " 29322	"		6-24-66	
BG		" " " 29429	"		"	
BH		" " " 29449	"		"	
BJ		" " " 29335			"	
BK		" " " 29619			"	
BL		" " " 29696			6-29-66	
BM		REVISION STATUS CHANGED	JSD	RS	7-29-66	
BN		REVISION STATUS CHANGED	JI		AUG 66	
BP		REVISION STATUS CHANGED	JI		11 AUG 66	
BR		REVISED PER TDRR 30241	JI		11 AUG 66	
BS		REVISION STATUS CHANGED	GW		26 AUG 66	
BT		REVISION STATUS CHANGED	GW		26 AUG 66	
BU		REVISION STATUS CHANGED	EH	JI		
BV		REVISION STATUS CHANGED	JJB		30 SEP 66	
BW		REVISION STATUS CHANGED	JJB		30 SEP 66	
BY		REVISION STATUS CHANGED	JJB		10 OCT 66	
BZ		REVISION STATUS CHANGED	JJB		10 OCT 66	
CA		REVISION STATUS CHANGED	JJB		25 OCT 66	
CB		REVISION STATUS CHANGED	REF		66	
CC		REVISION STATUS CHANGED	AF			
CD		REVISION STATUS CHANGED	DR			
CE		REVISION STATUS CHANGED				
CF		REVISION STATUS CHANGED				
CG		REVISION STATUS CHANGED	A.N.			
CH		REVISION STATUS CHANGED				
CJ		REVISION STATUS CHANGED				
CK		REVISION STATUS CHANGED	DG			

DASH NO.	P/C	PART NAME	REMARKS	PART NO.	SER. NO.	CONT. NO.	STYLE	TYPE	MATERIAL	A
199	AC	EYEPIECE STORAGE UNIT		2021255-011			A	I		
198	AC	SIGNAL CONDITIONER ASSY C/M		2007234		NAS 9-497			NOTE 13	
197	AC	SIGNAL CONDITIONER ASSY C/M		2007235						FOR DIMENSIONS, SEE DASH 100 VALUES BELOW
196	AC	SIGNAL CONDITIONER ASSY LEM		6007010						
195	AC	PSA & SIGNAL CONDITIONER ASSY		6007009						
194	AC	PANEL, MONITOR		2900031-031					NOTE 11B	
193	AC	DISTRIBUTION BOX, GSE		2900024-031			B	II	NOTE 11C	FOR DIMENSIONS, SEE DASH 141 VALUES BELOW
192	AC	ANALYZER, OPTICS-INERTIAL		2900023-031						FOR DIMENSIONS, SEE DASH 144 VALUES BELOW
191	AC	TEST CONTROL		2900027-031						
190	AC	PANEL, PWR SUP AND LOAD		2900033-031						
189	AC	ADPT MODULE, P.S.A.		2900088-011						FOR DIMENSIONS, SEE DASH 141 VALUES BELOW
188	AC	ADPT MODULE, P.S.A.		2900145-011						
187	AC	FIXTURE, MT, PTA/PEA		[illegible]		NAS 9-497		I	NOTE 11C	
186	AC	ANNUNCIATOR PANEL AND EYEPIECE STORAGE ASSEMBLY		1021255-021						
185	AC	ANNUNCIATOR PANEL AND EYEPIECE STORAGE ASSEMBLY		1021255-011						FOR DIMENSIONS, SEE DASH 100 VALUES BELOW
184	AC	FIX., HAND., G AND N HARNESS		1901846-041		NAS9-497			NOTE 11C	FOR DIMENSIONS, SEE DASH 144 VALUES BELOW
183	AC	INSTALLING TOOL, ELEC. CONN		1902586-011			B	II	NOTE 11C	FOR DIMENSIONS, SEE DASH 102 VALUES BELOW
182	AC	ADPT MODULE, P.S.A.		2900068-011			B	II	NOTE 11C	FOR DIMENSIONS, SEE DASH 141 VALUES BELOW
181	AC	G & N INDICATOR CONTROL PANEL ASSY		2014578-011			A	I	NOTE 11B	3.000
180	AC	ADPT MODULE, P.S.A.		1902431-031			B	II		FOR DIMENSIONS, SEE DASH 121 VALUES BELOW
179	AC	MOUNTING PLATE, IMU/PTA		6900083-011						
178	AC	MOUNTING PLATE, COMPONENT		6900007-021						
177	AC	FIX., MOUNTING, SUBSYSTEM		2900070-021						FOR DIMENSIONS, SEE DASH 144 VALUES BELOW
176	AC	FIX., MOUNTING, G AND N		2900067-021						
175	AC	CSL., COOL. AND PWR, G AND N		1902134-031						
174	AC	FIX., HAND., C/M AND LEM CDU		2900999-011					NOTE 11C	
173	AC	FIX., HAND., [illegible], PSA		2900998-011						
172	AC	CAGING ELECTRONICS, GYRO		2900029-021						FOR DIMENSIONS, SEE DASH 141 VALUES BELOW
171	AC	DISTRIBUTION BOX, GSE		2900024-021						
170	AC	ANALYZER, OPTICS-INERTIAL		2900023-021						FOR DIMENSIONS, SEE DASH 44 VALUES BELOW
169	AC	ADPT, TESTPOINT, P.S.A.		2900037-021						
168	AC	TEST SELECTOR		2900028-021						
167	AC	TEST CONTROL		2900027-021						
166	AC	PANEL, MONITOR		2900031-021						
165	AC	TERM. BOARD STORAGE DRAWER		2900927-011						
164	AC	INPUT OUTPUT PANEL		2900926-011						FOR DIMENSIONS, SEE DASH 141 VALUES BELOW
163	AC	CONTROL PANEL		2900896-011						
162	AC	CSL. CAL AND TEST, SCM/PSAAM		2900895-011						FOR DIMENSIONS, SEE DASH 144 VALUES BELOW
161	AC	FIX., LIFT AND HAND., IMU		[illegible]						FOR DIMENSIONS, SEE DASH 141 VALUES BELOW
160	AC	FIX., HAND., G AND N HARNESS		1901846-031						
159	AC	BATTERY POWER PACK		1900011-031						FOR DIMENSIONS, SEE DASH 144 VALUES BELOW
158	AC	COUPLING DATA UNIT ASSEMBLY C/M		2007222			B	II	NOTE 11C	
157	AC	COUPLING DATA UNIT ASSEMBLY - LEM		2007222			A	I	NOTE 11B	FOR DIMENSIONS SEE DASH 100 VALUES BELOW
156	AC	POWER & SERVO ASSEMBLY C/M		2007200						2.125
155	AC	PIPA ELECTRONICS ASSEMBLY		2007201						
154	AC	PULSE TORQUE ASSEMBLY - LEM		6007000						FOR DIMENSIONS SEE DASH 100 VALUES BELOW
153	AC	POWER & SERVO ASSEMBLY - LEM		6007200			A	I	NOTE 11B	
152	AC	CONT PNL, RSVR CKT TESTER		2900770-011			B	II	NOTE 11C	
151	AC	TESTER, RESOLVER CIRCUIT		2900708-011						FOR DIMENSIONS, SEE DASH 141 VALUES BELOW
150	AC	JUNCTION BOX, PSA/GSE.		1901933-021						FOR DIMENSIONS, SEE DASH 144 VALUES BELOW
149	AC	BATTERY PACK, LIFTING		2900814-011						FOR DIMENSIONS, SEE DASH 141 VALUES BELOW
148	AC	MOUNTING PLATE, COMPONENT		6900007-011						
147	AC	MOUNTING PLATE, COMPONENT		2900677-011						FOR DIMENSIONS, SEE DASH 144 VALUES BELOW
146	AC	CART, TRANS, G AND N		1900089-041						
145	AC	CONTAINER, SHIPPING, IMU		1900010-021		NAS-9-497	B	II	NOTE 11C	
144	AC	FIX., MOUNTING, G AND N		1902204-021			B	II	NOTE 11C	4.125
143	AC	CSL, COOL. AND PWR, G AND N		1902134-021						4.25
142	AC	ANALYZER, OPTICS-INERTIAL		2900023-011						4.125
141	AC	CONT. TEMP, PORTABLE		2900060-011						2.125
140	AC	TESTER, CKT, IMU/CDU RSVR		2900286-011						4.125
139	AC	SIMULATOR, LD/SIG, CDU		2900285-011						
138	AC	SIMULATOR, LD/SIG, OPTICS		1902023-021						
137	AC	FIX., MOUNTING, IMU/NAV BASE		6900003-011						
136	AC	FIXTURE, OPTICS NAV BASE		2900072-011						
135	AC	FIX., MOUNTING, SUB SYSTEM		2900070-011						
134	AC	FIX., HAND., G AND N HARNESS		2900069-011						
133	AC	CNTR, SHIPPING, NAV BASE		2900068-011						
132	AC	FIX., MOUNTING, G AND N		2900067-011						
131	AC	SIMULATOR, LD/SIG, IMU/CDU		2900062-011						
130	AC	TESTER, GYRO WHEEL		2900061-011						
129	AC	COOLANT SUPPLY		1902133-021						
128	AC	TABLE, ROTARY		1900926-021						4.125
127	AC	FIX., HAND., OPTICS		2900074-011						2.125
126	AC	FIXTURE, MT, PTA PEA.		2900066-011						
125	AC	CONT, TEMP, IMU LIFTING		2900063-011						
124	AC	FIXTURE, [illegible], IMU		2900064-011						
123	AC	CONT, OPTICS, REMOTE		1902046-021						
122	AC	TEST CONTROL		1902009-021						
121	AC	ADPT MODULE, P.S.A.		1902431-021						
120	AC	BRIDGE, DECADE ERROR		2900128-011						
119	AC	PWR SUP, ELECTRONICS		2900012-011						
118	AC	PWR SUP, RELAY AND LAMP		1900049-031						
117	AC	CONSOLE, OSCILLOGRAPH		1900000-021						
116	AC	ADPT MODULE, P.S.A.		1902431-011						
115	AC	ADPT, TEST POINT, PTA/PEA.		2900145-011						
114	AC	ADPT, TEST POINT, P.S.A.		2900037-011						
113	AC	CONTROL, GIMBAL POSITION		2900036-011						
112	AC	SELECTOR, SIGNAL, PRIMARY		2900035-011						
111	AC	SEL, SIG, OSCILLOGRAPH		2900034-011						
110	AC	PANEL, PWR SUP AND LOAD		2900033-011						
109	AC	PANEL, MONITOR		2900031-011						
108	AC	PANEL, AUXILIARY INPUT		2900030-011						
107	AC	CAGING ELECTRONICS, GYRO		2900029-011						
106	AC	TEST SELECTOR		2900028-011						
105	AC	TEST CONTROL		2900027-011						
104	AC	MONITOR AND CONTROL, TEMP		2900026-011						
103	AC	DISTRIBUTION BOX, GSE		2900024-011						
102	AC	VOLTMETER, DIGITAL		2900007-011			B	II	NOTE 11C	2.125
101	AC	NAVIGATION BASE ASSEMBLY - LEM		6899950		NAS-9-497	A	I	NOTE 11B	2.000
100	AC	NAVIGATION BASE ASSEMBLY		2899982		NAS-9-497	A	I	NOTE 11B	2.000

DASH NO.	A	B	C	D	E	F	G	H	J	K	L	M	N	P	R	S	T	U	V	W	Y	Z	AA	AB	AC	AD	AE	AF	AG	AH	AJ	AK	AL	AM	AN	AP	AR
181	3.000	1.938	2.437	NA	.125	.062	.188	.156	NA	NA	1.750	.125	.906	.688	.500	NA	.281	.125	NA	1.094	2.062	.312	NA	2.500	.062	.125	1.312	.469	NA	NA	NA	.156	NA	.125	.469	.344	NA
156	2.125	.968	1.718	NA	.093	.031	.06	.093	NA	NA	.858	.608	.484	.358	.733	.062	.140	.062	NA	.968	1.450	.125	NA	1.720	.046	.03	NA	.210	NA	NA	NA	.070	NA	.046	.32	.16	NA
144	4.125	1.812	3.250	NA	.125	.062	.12	.156	.188 .194	.125	1.625	1.140	.890	.640	.390	.125	.171	.125	1.875	1.687	2.625	.250	1.562	3.843	.093	NA	NA	.359	.125	.437	3.688	NA	3.687	.093	.40	.25	3.875
143	4.25	1.812	3.250		.125	.062	.12	.156		.125	1.625	1.140	.890	.640	.390	.125	.171	.125	1.875	1.687	2.625	.250	1.562	3.843	.093			.359	.125	.437	3.688		3.687	.093	.40	.25	3.875
142	4.125	1.812	3.250		.125	.062	.12	.156		.125	1.625	1.140	.890	.640	.390	.125	.171	.125	1.875	1.687	2.625	.250	1.562	3.843	.093			.359	.125	.437	3.688		3.687	.093	.40	.25	3.875
141	2.125	.968	1.718		.093	.031	.06	.093		.093	.858	.608	.484	.358	.733	.077	.116	.062	.937	.875	1.343	.125	.781	1.892	.046			.209	.093	.250	1.875		1.840	.046	.23	.16	1.938
140	4.125	1.812	3.250		.125	.062	.12	.156		.125	1.625	1.140	.890	.640	.390	.125	.171	.125	1.875	1.687	2.625	.250	1.562	3.843	.093			.359	.125	.437	3.688		3.687	.093	.40	.25	3.875
128	4.125	1.812	3.250		.125	.062	.12	.156		.125	1.625	1.140	.890	.640	.390	.125	.171	.125	1.875	1.687	2.625	.250	1.562	3.843	.093			.359	.125	.437	3.688		3.687	.093	.40	.25	3.875
127	2.125	.968	1.718		.093	.031	.06	.093		.093	.858	.608	.484	.358	.733	.077	.116	.062	.937	.875	1.343	.125	.781	1.892	.046			.209	.093	.250	1.875		1.840	.046	.23	.16	1.938
102	2.125	.968	1.718	NA	.093	.031	.06	.093	.188 .194	.093	.858	.608	.484	.358	.733	.077	.116	.062	.937	.875	1.343	.125	.781	1.892	.046	NA	NA	.209	.093	.250	1.875	NA	1.840	.046	.23	.16	1.938
101	2.000	1.312	1.906	1.375	.078	.048	.078	.093	NA	NA	1.125	.750	.593	.453	1.015	.062	.187	.078	.875	.718	.375	.218	NA	NA	.048	.031	.875	.305	.078	.531	.906	.078	NA	.078	.531	.187	NA
100	2.000	.312	1.906	1.375	.078	.048	.078	.093	NA	NA	1.125	.750	.593	.453	1.015	.062	.187	.078	.875	.718	1.375	.218	NA	NA	.048	.031	.875	.305	.078	.531	1.906	.078	NA	.078	.531	.187	NA

THIS SHEET ADDED

Ⓖ REPLACES REV F WITH CHANGE

AC ELECTRONICS DASH NUMBERS

NOTES FOR TABLE
- STYLE A IS FOR G & N SYSTEM
- STYLE B IS FOR GROUND SUPPORT EQUIPMENT
- TYPE I IS WITHOUT MOUNTING HOLES
- TYPE II IS WITH MOUNTING HOLES

NOTE: AC DASH NO's. CONT. ON SH.6

QTY REQD	PART OR IDENTIFYING NO.	MATERIAL OR NOTES	NOMENCLATURE OR DESCRIPTION	FIND NO.

LIST OF MATERIALS

NEXT ASSY	USED ON
AS APPLICABLE	

APPLICATION

UNLESS OTHERWISE SPECIFIED
DIMENSIONS ARE IN INCHES
CAPACITOR VALUES ARE IN μf
RESISTOR VALUES ARE IN OHMS
TOLERANCES ON
FRACTIONS ± — DECIMALS ±.005 ANGLES ± —
DO NOT SCALE THIS DRAWING

MATERIAL
SEE NOTE 11

MIT
INSTRUMENTATION LAB
CAMBRIDGE MASS

MANNED SPACECRAFT CENTER
HOUSTON, TEXAS

DRAWN R. U. Jones 7-6-65
CHECKED A. J. 7-22-65
APPROVED
APPROVED
APPROVED MIT
APPROVED MSC
DATE

NAMEPLATES,
APOLLO G&N-GSE
(STANDARDS)
7

CODE IDENT NO. 80230
SIZE E
DRAWING NO. 1004260
SCALE NONE
SHEET 4 OF 6

NOTICE - WHEN GOVERNMENT DRAWINGS, SPECIFICATIONS, OR OTHER DATA ARE USED FOR ANY PURPOSE OTHER THAN IN CONNECTION WITH A DEFINITELY RELATED GOVERNMENT PROCUREMENT OPERATION, THE UNITED STATES GOVERNMENT THEREBY INCURS NO RESPONSIBILITY NOR ANY OBLIGATION WHATSOEVER; AND THE FACT THAT THE GOVERNMENT MAY HAVE FORMULATED, FURNISHED, OR IN ANY WAY SUPPLIED THE SAID DRAWINGS, SPECIFICATIONS, OR OTHER DATA IS NOT TO BE REGARDED BY IMPLICATION OR OTHERWISE AS IN ANY MANNER LICENSING THE HOLDER OR ANY OTHER PERSON OR CORPORATION, OR CONVEYING ANY RIGHTS OR PERMISSION TO MANUFACTURE, USE, OR SELL ANY PATENTED INVENTION THAT MAY IN ANY WAY BE RELATED THERETO.

REVISIONS 02768

SYM	ZONE	DESCRIPTION	DR	CHK	DATE	APPROVED
G		REPLACES REV F WITH CHANGE PER TDRR 20854				
H		REVISED PER TDRR 20892				
J		REVISED PER TDRR 20904				
K		REVISED PER TDRR 21379				
L		REVISED PER TDRR 21410				
M		REVISED PER TDRR 21993				
N		REVISED PER TDRR 22621				
P		REVISED PER TDRR 22671				
R		REVISED PER TDRR 22672				
S		REVISED PER TDRR 22750				
T		REVISED PER TDRR 22823				
U		REVISED PER TDRR 23072				
V		REVISED PER TDRR 23521			10-27-65	WK
W		REVISED PER TDRR 23624	RAJ		11-9-65	
Y		REVISED PER TDRR 24018	RAJ		11-16-65	
Z		REVISED PER TDRR 24040	RAJ		11-15-65	
AA		REVISED PER TDRR 24060	RAJ		11-19-65	
AB		REVISED PER TDRR 24868	RAJ		12-22-65	
AC		REVISED PER TDRR 24973	RAJ		1-4-66	
AD		REVISED PER TDRR 25065	RAJ		1-18-66	
AE		REVISED PER TDRR 25672	RAJ		2-4-66	
AF		REVISED PER TDRR 25671	RAJ		2-4-66	
AG		REVISED PER TDRR 26110	RAJ		2-15-66	
AH		REVISED PER TDRR 26372	"		3-16-66	
AJ		REVISED PER TDRR 26425	"		3-16-66	
AK		REVISED PER TDRR 26743	"		3-16-66	
AL		REVISED PER TDRR 26798	"		3-16-66	
AM		REVISED PER TDRR 27168	"		4-7-66	
AN		REVISED PER TDRR 27235	"		4-7-66	
AP		REVISED PER TDRR 27345	"		4-7-66	
AR		REVISED PER TDRR 27417	"		4-7-66	
AS		REVISED PER TDRR 27442	"		4-7-66	
AT		REVISED PER TDRR 27719	"		4-20-66	
AU		REVISED PER TDRR [illegible]	"			
AV		REVISED PER TDRR 27896	"		4-20-66	WK
AW		28110	"		5-16-66	
AY		[illegible]				
AZ		28131				
BA		28124				
BB		REVISED PER TDRR 285[illegible]			5-16-66	
BC		" " " 28949	"		5-24-66	
BD		" " " 29222	"		6-8-66	
BE		" " " 29235	"		"	
BF		" " " 29322	"		6-24-66	
BG		" " " 29429			"	
BH		" " " 29449	"		"	
BJ		" " " 29335	"		"	
BK		" " " 29619			"	
BL		" " " 29696	"		6-29-66	
BM		REVISION STATUS CHANGED	JSD		7-29-66	
BN		REVISION STATUS CHANGED				
BP		REVISION STATUS CHANGED	JI	RW		
BR		REVISION STATUS CHANGED	JI	RLW		
BS		REVISION STATUS CHANGED	GW			
BT		REVISION STATUS CHANGED	GW		26 AUG	
BU		REVISION STATUS CHANGED		JI		
BV		REVISION STATUS CHANGED	JJB			
BW		REVISION STATUS CHANGED	JJB			
BY		REVISION STATUS CHANGED	JJB	RLW	10 OCT 66	
BZ		REVISION STATUS CHANGED	JJB	RLW	10 OCT 66	
CA		REVISION STATUS CHANGED	JJB		25 OCT 66	
CB		REVISION STATUS CHANGED	REF			
CC		REVISION STATUS CHANGED	AF			
CD		REVISION STATUS CHANGED	DR			
CE		REVISION STATUS CHANGED				
CF		REVISION STATUS CHANGED				
CG		REVISION STATUS CHANGED	AN			
CH		REVISION STATUS CHANGED				
CJ		REVISION STATUS CHANGED				
CK		REVISION STATUS CHANGED	DS		1 SEPT 67	

DASH NO.	P/C	PART NAME	REMARKS	PART NO.	SER. NO.	CONT. NO.	STYLE	TYPE	MATERIAL	A	B	C	D	E	F	G	H	J
-59	MIT																	
-98																		
-40	MIT	COMPUTER ASSY		2003100		NAS-9-497	A	I	NOTE 11 B	2.000	1.312	.906	1.375	.078	.048	.078	.093	NA
-00	MIT	LIFTING SLING - G&N INST. QUAL. FIX. & AZM REF. FIX.		1021640		NAS-9-4065	B	II	NOTE 11 C	2.000	.312	.687	1.375	.078	.048	.078	.093	[illegible]

DASH NO.	K	L	M	N	P	R	S	T	U	V	W	Y	Z	AA	AB	AC	AD	AE	AF	AG	AH	AJ	AK	AL	AM	AN	AP	AR
-59																												
-98																												
-40	NA	1.125	.750	.593	.453	1.015	.062	.187	.078	.875	.718	.375	.218	[illegible]	NA	.048	.031	.875	.305	.078	.531	1.906	.078	NA	.078	.531	.187	NA
-00	.093	1.187	.750	.593	.453	1.015	.062	.187	.078	.875	.718	1.375	.219	1.156	.843	.048	NA	.875	.305	.078	.312	[illegible]	[illegible]	[illegible]	[illegible]	[illegible]	[illegible]	[illegible]

MIT DASH NUMBERS

THIS SHEET ADDED

© REPLACES REV F WITH CHANGE

NOTES FOR TABLE

STYLE A IS FOR G&N SYSTEM
STYLE B IS FOR GROUND SUPPORT EQUIPMENT
TYPE I IS WITHOUT MOUNTING HOLES
TYPE II IS WITH MOUNTING HOLES

QTY REQD	PART OR IDENTIFYING NO	MATERIAL OR NOTES	NOMENCLATURE OR DESCRIPTION

LIST OF MATERIALS

NEXT ASSY	USED ON
AS APPLICABLE	

APPLICATION

UNLESS OTHERWISE SPECIFIED
DIMENSIONS ARE IN INCHES
CAPACITOR VALUES ARE IN µf
RESISTOR VALUES ARE IN OHMS
TOLERANCES ON
FRACTIONS ± — DECIMALS ±.005 ANGLES ± —
DO NOT SCALE THIS DRAWING

MATERIAL
SEE NOTE 11

MIT
INSTRUMENTATION LAB
CAMBRIDGE MASS

MANNED SPACECRAFT CENTER
HOUSTON, TEXAS

DRAWN E A Jones 6-65
CHECKED A J Camp 7-22-65
APPROVED
APPROVED W Wempe
APPROVED MIT W Wempe
APPROVED MSC
DATE

NAMEPLATES,
APOLLO G&N-GSE
(STANDARDS)

CODE IDENT NO 80230
SIZE E
DRAWING NO. 1004260
SCALE NONE
SHEET OF

SYM	ZONE	DESCRIPTION	DR	CHK	DATE	APPROVED
AG		CHANGED NUMBER OF SHEETS FROM 5 TO 6 PER TDRR 26110	RAJ		2-15-66	
AH		REVISED PER TDRR 26372	"		3-16-66	
AJ		REVISED PER TDRR 26425	"		3-16-66	
AK		REVISED PER TDRR 26743	"		3-16-66	
AL		REVISED PER TDRR 26798	"		3-16-66	
AM		REVISED PER TDRR 2[illegible]68	"		4-7-66	
AN		REVISED PER TDRR 27235	"		4-7-66	
AP		REVISED PER TDRR 27345	"		4-7-66	
AR		REVISED PER TDRR 27417	"		4-7-66	
AS		REVISED PER TDRR 27442	"		4-7-66	
AT		REVISED PER TDRR 27719	"		4-20-66	
AU		REVISED PER TDRR 27880	"		4-20-66	
AV		REVISED PER TDRR 27896	"		4-20-66	
AW		↕	28110	"	5-16-66	
AY		↕	28173	"	5-16-66	
AZ		↕	28131	"	5-16-66	
BA		↕	28124	"	5-16-66	
BB		REVISED PER TDRR 28511	"		5-16-66	
BC		" " " 28949	"		5-24-66	
BD		" " " 29222	"		6-8-66	
BE		" " " 29235	"		"	
BF		" " " 29322	"		6-24-66	
BG		" " " 29429	"		"	
BH		" " " 29449	"		"	
BJ		" " " 29335	"		"	
BK		" " " 29619	"		"	
BL		" " " 29696	"		6-29-66	
BM		REVISION STATUS CHANGED	JSD	N.S.	7-29-66	
BN		REVISED PER TDRR 29974	JL	RLW	22 AUG 66	
BP		REVISION STATUS CHANGED	JL	RLW	22 AUG 66	
BR		REVISION STATUS CHANGED	JL	RLW	23 AUG 66	
BS		REVISED PER TDRR 30530	GW	RLW	26 AUG 66	
BT		REVISED PER TDRR 30543	GW		26 AUG 66	
BU		REVISED PER TDRR 30898	EH	JL	9 SEP 66	
BV		REVISED PER TDRR 31241	JJB	RLW	66	
BW		REVISION STATUS CHANGED	JJB	RLW	30 SEP 66	
BY		REVISED PER TDRR 31341	JJB	RLW	10 OCT 66	
BZ		REVISED PER TDRR 31393	JJB	RLW	10 OCT 66	
CA		REVISED PER TDRR 31593	JJB		25 OCT 66	
CB		REVISED PER TDRR 32187	REF		10 DEC 66	
CC		REVISED PER TDRR 32512	AF		12 [illegible] 67	
CD		REVISION STATUS CHANGED	DR	N.W.	[illegible] 67	
CE		REVISION STATUS CHANGED			19 APR 67	
CF		REVISED PER TDRR 33558			19 APR 67	
CG		REVISED PER TDRR 33968	A.N.		10 AUG 67	
CH		REVISED PER TDRR 34010			21 AUG 67	
CJ		REVISED PER TDRR 34057			24 AUG 67	
CK		REVISION STATUS CHANGED	DG		1 SEPT 67	

DASH NO.	P/C	PART NAME	REMARKS	PART NO.	SER NO.	CONT NO.	STYLE	TYPE	MATERIAL	A	B	C	D	E	F	G	H	J	K	L	M	N	P	R	S	T	U	V	W	Y	Z	AA	AB	AC	AD	AE	AF	AG	AH	AJ	AK	AL	AM	AN	AP	AR
596	AC																																													
595	AC																																													
562	AC	COMPUTER CONT & RETICLE DIMMER		6014512-041		NAS9-497	A	I	NOTE 11B	FOR DIMENSIONS SEE DASH 534 VALUES																																				
561	AC	G&N INDICATOR CONTROL PANEL ASSY		2014578-031		NAS9-497	A	I	NOTE 11B	FOR DIMENSIONS SEE DASH 181 VALUES																																				
560		ADPT. MODULE, PSA		2901143-021		NAS9-497	B	II	NOTE 11C	FOR DIMENSIONS SEE DASH 141 VALUES																																				
559		CSL, CAL AND TEST, SCM/PSAAM		2900895-031		FOR OTHER DATA SEE DASH 547																																								
558		PSA ADAPTER MODULE (LEM)		6900088-021		FOR OTHER DATA SEE DASH 189																																								
557		FIX., HANDLING, C/M PSA		2900998-021		NAS9-497	B	II	NOTE 11C	FOR DIMENSIONS SEE DASH 141 VALUES																																				
556		FIX., MOUNTING G&N	(-144)	2900067-041		NAS9-497	B	II	NOTE 11C	FOR DIMENSIONS SEE DASH 500 VALUES																																				
555	AC	OPTICAL UNIT ASSEMBLY		1021368-061		NAS9-497	A	I	NOTE 11B	2.000	1.312	1.687	1.375	.078	.048	.078	.093	NA	NA	1.125	.750	.593	.453	1.015	.062	.187	.078	.875	.718	1.375	.218	NA	NA	.048	.031	.875	.305	NA	.468	1.531	NA	NA	.078	.312	.187	NA
554	AC	OPTICAL UNIT ASSEMBLY		1021368-051		NAS9-497	A	I	NOTE 11B	2.000	1.312	1.687	1.375	.078	.048	.078	.093	NA	NA	1.125	.750	.593	.453	1.015	.062	.187	.078	.875	.718	1.375	.218	NA	NA	.048	.031	.875	.305	NA	.468	1.531	NA	NA	.078	.312	.187	NA
553	AC	OPTICAL UNIT AND BELLOWS ASS'Y		2010790-111		NAS9-497	A	I	NOTE 11B	2.000	1.312	1.687	1.375	.078	.048	.078	.093	NA	NA	1.125	.750	.593	.453	1.015	.062	.187	.078	.875	.718	1.375	.218	NA	NA	.048	.031	.875	.305	NA	.468	1.531	NA	NA	.078	.312	.187	NA
552	AC	OPTICAL UNIT AND BELLOWS ASS'Y		2010790-081		NAS9-497	A	I	NOTE 11B	2.000	1.312	1.687	1.375	.078	.048	.078	.093	NA	NA	1.125	.750	.593	.453	1.015	.062	.187	.078	.875	.718	1.375	.218	NA	NA	.048	.031	.875	.305	NA	.468	1.531	NA	NA	.078	.312	.187	NA
551	AC	OPTICAL UNIT AND BELLOWS ASS'Y		2010790-071		NAS9-497	A	I	NOTE 11B	2.000	1.312	1.687	1.375	.078	.048	.078	.093	NA	NA	1.125	.750	.593	.453	1.015	.062	.187	.078	.875	.718	1.375	.218	NA	NA	.048	.031	.875	.305	NA	.468	1.531	NA	NA	.078	.312	.187	NA
550	AC	OPTICAL UNIT AND BELLOWS ASS'Y		2010790-061		NAS9-497	A	I	NOTE 11B	2.000	1.312	1.687	1.375	.078	.048	.078	.093	NA	NA	1.125	.750	.593	.453	1.015	.062	.187	.078	.875	.718	1.375	.218	NA	NA	.048	.031	.875	.305	NA	.468	1.531	NA	NA	.078	.312	.187	NA
548		CAGING-ELECTRONICS, GYRO		2900029-031		NAS-9-497	B	II	NOTE 11C	2.125	.968	1.718	NA	.093	.031	.06	.093	.100 .104	.093	.858	.608	.484	.358	.733	.077	.116	.062	.937	.875	1.343	.125	.781	1.892	.046	NA	NA	.209	.093	.250	1.875	NA	1.840	.046	.23	.16	1.938
547		CSL, CAL AND TEST, SCM/PSAAM		2900895-021		NAS-9-497	B	II	NOTE 11C	4.125	1.812	3.250	NA	.125	.062	.12	.156	.100 .104	.125	1.625	1.140	.890	.640	1.390	.125	.171	.125	1.875	1.687	2.625	.250	1.562	3.843	.093	NA	NA	.359	.125	.437	3.688	NA	3.687	.093	.40	.25	3.875
546		FIX, HAND., C/M AND LEM CDU		2900999-021		NAS-9-497	B	II	NOTE 11C	2.125	.968	1.718	NA	.093	.031	.06	.093	.100 .104	.093	.858	.608	.484	.358	.733	.077	.116	.062	.937	.875	1.343	.125	.781	1.892	.046	NA	NA	.209	.093	.250	1.875	NA	1.840	.046	.23	.16	1.938
545	AC	G&N INDICATOR CONTROL PANEL ASSY		2014578-021		NAS-9-497	A	I	NOTE 11B	3.000	1.938	2.437	NA	.125	.062	.188	.156	NA	NA	1.750	1.125	.906	.688	1.500	NA	.281	.125	NA	1.094	2.062	.312	NA	2.500	.062	.125	1.312	.469	NA	NA	NA	.156	NA	.125	.469	.344	NA
544		ADPT MODULE, P.S.A.		1902431-051		NAS-9-497	B	II	NOTE 11C	2.125	.968	1.718	NA	.093	.031	.06	.093	.100 .104	.093	.858	.608	.484	.358	.733	.077	.116	.062	.937	.875	1.343	.125	.781	1.892	.046	NA	NA	.209	.093	.250	1.875	NA	1.840	.046	.23	.16	1.938
[illegible]	AC	FIXTURE, MOUNTING, IMU		2900000-021		NAS 9-497	B	II	NOTE 11C	4.125	1.812	3.250	NA	.125	.062	.12	.156	.100 .104	.125	1.625	1.140	.890	.640	1.390	.125	.171	.125	1.875	1.687	2.625	.250	1.562	3.843	.093	NA	NA	.359	.125	.437	3.688	NA	3.687	.093	.40	.25	3.875
543	AC	PANEL, MONITOR		2900031-041		NAS9-497	B	II	NOTE 11C	2.125	.968	1.718	NA	.093	.031	.06	.093	.100 .104	.093	.858	.608	.484	.358	.733	.077	.116	.062	.937	.875	1.343	.125	.781	1.892	.046	NA	NA	.209	.093	.250	1.879	NA	1.840	.046	.23	.25	1.938
542	AC	BATTERY PACK, LIFTING		2900812-021		NAS9-497	B	II	NOTE 11C	2.125	.968	1.718	NA	.093	.031	.06	.093	.100 .104	.093	.858	.608	.484	.358	.733	.077	.116	.062	.937	.875	1.343	.125	.781	1.892	.046	NA	NA	.209	.093	.250	1.875	NA	1.840	.046	.23	.16	1.938
540	AC	ADPT, TEST POINT, P.S.A.		2900037-031		NAS 9-497	B	II	NOTE 11C	2.125	.968	1.718	NA	.093	.031	.06	.093	.100 .104	.093	.858	.608	.484	.358	.733	.077	.116	.062	.937	.875	1.343	.125	.781	1.892	.046	NA	NA	.209	.093	.250	1.875	NA	1.840	.046	.23	.16	1.938
539	AC	ANNUNCIATOR PANEL AND EYEPIECE STORAGE ASSEMBLY		1021285-041		↕	A	I	NOTE 11B	2.000	1.312	1.906	1.375	.078	.048	.078	.093	NA	NA	1.125	.750	.593	.453	1.015	.062	.187	.078	.875	.718	1.375	.218	NA	NA	.048	.031	.875	.305	.078	.531	1.906	.078	NA	.078	.531	.187	NA
538	AC	ANNUNCIATOR PANEL AND EYEPIECE STORAGE ASSEMBLY		1021285-031		↕	A	I	NOTE 11B	2.000	1.312	1.906	1.375	.078	.048	.078	.093	NA	NA	1.125	.750	.593	.453	1.015	.062	.187	.078	.875	.718	1.375	.218	NA	NA	.048	.031	.875	.305	.078	.531	1.906	.078	NA	.078	.531	.187	NA
537	AC	TEST SELECTOR		2900028-031		↕	B	II	NOTE 11C	2.125	.968	1.718	NA	.093	.031	.06	.093	.100 .104	.093	.858	.608	.484	.358	.733	.077	.116	.062	.937	.875	1.343	.125	.781	1.892	.046	NA	NA	.209	.093	.250	1.875	NA	1.840	.046	.23	.16	1.938
536	AC	ANALYZER, OPTICS-INERTIAL		2900023-041		↕	B	II	NOTE 11C	4.125	1.812	3.250	NA	.125	.062	.12	.156	.100 .104	.125	1.625	1.140	.890	.640	1.390	.125	.171	.125	1.875	1.687	2.625	.250	1.562	3.843	.093	NA	NA	.359	.125	.437	3.688	NA	3.687	.093	.40	.25	3.875
535	AC	CONT, TEMP, PORTABLE		2900060-021		↕	B	II	NOTE 11C	2.125	.968	1.718	NA	.093	.031	.06	.093	.100 .104	.093	.858	.608	.484	.358	.733	.077	.116	.062	.937	.875	1.343	.125	.781	1.892	.046	NA	NA	.209	.093	.250	1.875	NA	1.840	.046	.23	.16	1.938
534	AC	COMPUTER CONT & RETICLE DIMMER		6014512-021		↕	A	I	NOTE 11B	2.000	1.312	1.906	1.375	.078	.048	.078	.093	NA	NA	1.125	.750	.593	.453	1.015	.062	.187	.078	.875	.718	1.375	.218	NA	NA	.048	.031	.875	.305	.078	.531	1.906	.078	NA	.078	.531	.187	NA
533	AC	ADPT MODULE, P.S.A.		1902431-041		↕	B	II	NOTE 11C	2.125	.968	1.718	NA	.093	.031	.06	.093	.100 .104	.093	.858	.608	.484	.358	.733	.077	.116	.062	.937	.875	1.343	.125	.781	1.892	.046	NA	NA	.209	.093	.250	1.875	NA	1.840	.046	.23	.16	1.938
532	AC	TRAY BREAKOUT, 105 PIN		1900807-021		↕	↕	↕	↕	4.125	1.812	3.250	↕	.125	.062	.12	.156	.100 .104	.125	1.625	1.140	.890	.640	1.390	.125	.171	.125	1.875	1.687	2.625	.250	1.562	3.843	.093	↕	↕	.359	.125	.437	3.688	↕	3.687	.093	.40	.25	3.875
531	AC	TRAY BREAKOUT, 84 PIN		1900806-021		↕	↕	↕	↕	4.125	1.812	3.250	↕	.125	.062	.12	.156	.100 .104	.125	1.625	1.140	.890	.640	1.390	.125	.171	.125	1.875	1.687	2.625	.250	1.562	3.843	.093	↕	↕	.359	.125	.437	3.688	↕	3.687	.093	.40	.25	3.875
530	AC	HEAT SINK - TRAY EXTENDER		1900808-021		↕	↕	↕	↕	2.125	.968	1.718	↕	.093	.031	.06	.093	.100 .104	.093	.858	.608	.484	.358	.733	.077	.116	.062	.937	.875	1.343	.125	.781	1.892	.046	↕	↕	.209	.093	.250	1.875	↕	1.840	.046	.23	.16	1.938
529	AC	TESTER, FAILURE INDICATOR		1900809-021		↕	↕	↕	↕	2.125	.968	1.718	NA	.093	.031	.06	.093	.100 .104	.093	.858	.608	.484	.358	.733	.077	.116	.062	.937	.875	1.343	.125	.781	1.892	.046	NA	NA	.209	.093	.250	1.875	NA	1.840	.046	.23	.16	1.938
						↕	↕	↕	↕																																					
527	AC	FIX., MOUNTING, G AND N	(-144)	1902204-021		↕	↕	↕	↕	FOR DIMENSIONS, SEE DASH 500 VALUES BELOW																																				
526	AC	FIX., MOUNTING, G AND N	(-144)	2900067-031		↕	↕	↕	↕																																					
525	AC	PORTABLE TEMP. CONTROLLER		1900496-021		↕	B	II	NOTE 11C	3.000	1.937	2.437	2.312	.125	.031	.125	.156	.125	.125	1.718	1.187	.968	.749	1.452	.093	.295	.030	1.312	1.00	2.000	.250	1.687	2.750	.062	N/A	NA	.463	.125	.562	2.437	.140	2.562	.090	.468	.359	2.750
524	AC	POWER, SERVO AND THERMOCOUPLE ASSEMBLY C/M		2010743		↕	A	I	NOTE 11B	2.125	.968	1.718	NA	.093	.031	.06	.093	NA	NA	.858	.608	.484	.358	.733	.062	.140	.062	NA	.968	1.450	.125	NA	1.720	.046	.03	NA	.210	NA	NA	NA	.070	NA	.046	.32	.16	NA
523	AC	PULSE TORQUE AND THERMOCOUPLE ASSEMBLY-LEM		6010656		↕	↕	↕	↕																																					
522	AC	COUPLING DATA UNIT AND THERMOCOUPLE ASSEMBLY - LEM		2010744		↕	↕	↕	↕	FOR DIMENSIONS, SEE DASH 508 VALUES BELOW																																				
521	AC	COUPLING DATA UNIT AND THERMOCOUPLE ASSEMBLY - C/M		2010744		↕	↕	↕	↕																																					
520	AC	PIPA ELECTRONICS AND THERMOCOUPLE ASSEMBLY		2010745		↕	A	I	NOTE 11B																																					
519	AC	FIXTURE, HANDLING, LEM-PSA	(-141)	6900129-011		↕	B	II	NOTE 11C	FOR DIMENSIONS, SEE DASH 504 VALUES BELOW																																				
518	AC	JUNCTION BOX, GSE-PSA	(-144)	1901933-031		↕	B	II	NOTE 11C	FOR DIMENSIONS, SEE DASH 500 VALUES BELOW																																				
517	AC	FIX, HAND., OPTICS INSTL.	(-141)	2901380-011		↕	B	II	NOTE 11C	FOR DIMENSIONS, SEE DASH 502 VALUES BELOW																																				
516	AC	POWER, SERVO AND THERMOCOUPLE ASSEMBLY-LEM		6010655		NAS 9-497	A	I	NOTE 11B	FOR DIMENSIONS SEE DASH 508 VALUES BELOW																																				
514	AC	SIGNAL COND. ASSY LEM OPER.	(-100)	6007013		NAS-9-497	A	I	NOTE 11B	FOR DIMENSIONS, SEE DASH 508 VALUES BELOW																																				
513	↕	JUMPER, BY-PASS	(-141)	1021616		↕	B	II	NOTE 11C	2.125	.968	1.718	NA	.093	.031	.06	.093	.100 .104	.093	.858	.608	.484	.358	.733	.077	.116	.062	.937	.875	1.343	.125	.781	1.892	.046	NA	NA	.209	.093	.250	1.875	NA	1.840	.046	.23	.16	1.938
512	↕	COUPLING DATA UNIT ASSEMBLY C/M	(-100)	2007322-011		↕																																								
511	↕	COUPLING DATA UNIT ASSEMBLY - LEM	(-100)	2007322-021		↕	A	I	NOTE 11B	FOR DIMENSIONS, SEE DASH 508 VALUES BELOW																																				
510	↕	BATTERY POWER PACK	(-144)	1900011-041		↕	B	II	NOTE 11C	FOR DIMENSIONS, SEE DASH 500 VALUES BELOW																																				
509	↕	JUNCTION BOX, PSA/GSE.	(-144)	1902195-021		↕	B	II	NOTE 11C																																					
508	↕	NAVIGATION BASE ASSEMBLY - LEM	✓ (-100)	6699980		↕	A	I	NOTE 11B	2.000	1.312	1.906	1.375	.078	.048	.078	.093	NA	NA	1.125	.750	.593	.453	1.015	.062	.187	.078	.875	.718	1.375	.218	NA	NA	.048	.031	.875	.305	.078	.531	1.906	.078	NA	.078	.531	.187	NA
507	↕	CSL, COOL, AND PAR, G AND N	(-144)	1902134-041		↕	B	II	NOTE 11C	FOR DIMENSIONS, SEE DASH 500 VALUES BELOW																																				
506	↕	BREAKOUT BOX, CABLE ADAPTER	(-141)	2901011-011		↕	↕	↕	↕																																					
505	↕	MONITOR AND CONTROL, TEMP	(-141)	2900026-021		↕	↕	↕	↕																																					
504	↕	PAR SUP, GUIDANCE SYSTEM	✓ (-141)	1900033-021		↕	↕	↕	↕	2.125	.968	1.718	NA	.093	.031	.06	.093	.100 .104	.093	.858	.608	.484	.358	.733	.077	.116	.062	.937	.875	1.343	.125	.781	1.892	.046	NA	NA	.209	.093	.250	1.875	NA	1.840	.046	.23	.16	1.938
503	↕	CONTROL, GIMBAL POSITION	(-141)	2900036-021		↕	↕	↕	↕																																					
502	↕	ADPT, TEST POINT, PTA/PEA.	(-141)	2900145-021		↕	↕	↕	↕																																					
501	↕	MOUNTING PLATE, COMPONENT	(-144)	6900007-031		↕	↕	↕	↕	FOR DIMENSIONS, SEE DASH 500 VALUES BELOW																																				
500	AC	MOUNTING PLATE, COMPONENT	✓ (-144)	1900677-021		NAS 9-497	B	I	NOTE 11C	4.125	1.812	3.250	NA	.125	.062	.12	.156	.100 .104	.25	1.625	1.140	.890	.640	1.390	.125	.171	.25	1.875	1.687	2.625	.250	1.562	3.843	.093	NA	NA	.359	.125	.437	3.688	NA	3.687	.093	.40	.25	3.875

A C ELECTRONICS DASH NUMBERS

Ⓐⓖ THIS SHEET ADDED

NOTES FOR TABLE
STYLE A IS FOR G&N SYSTEM
STYLE B IS FOR GROUND SUPPORT EQUIPMENT
TYPE I IS WITHOUT MOUNTING HOLES
TYPE II IS WITH MOUNTING HOLES

QTY REQD	PART OR IDENTIFYING NO.	MATERIAL OR NOTES	NOMENCLATURE OR DESCRIPTION	ITEM NO.

LIST OF MATERIALS

NEXT ASSY	USED ON
APPLICATION	

UNLESS OTHERWISE SPECIFIED
DIMENSIONS ARE IN INCHES
CAPACITOR VALUES ARE IN µf
RESISTOR VALUES ARE IN OHMS
TOLERANCES ON
FRACTIONS ± — DECIMALS ±.005 ANGLES ± —
DO NOT SCALE THIS DRAWING

MATERIAL
SEE NOTE 11

MIT
INSTRUMENTATION LAB
CAMBRIDGE MASS

DRAWN E. A. Jones 2-15-66
CHECKED 2-15-66
APPROVED
APPROVED
APPROVED MIT
APPROVED MSC
DATE

MANNED SPACECRAFT CENTER
HOUSTON, TEXAS

NAMEPLATES,
APOLLO G&N-GSE
(STANDARDS)

CODE IDENT NO 80230
SIZE E
DRAWING NO. 1004260
SCALE NONE
SHEET 6 OF 6

NOTES:

1. INTERPRET DRAWING IN ACCORDANCE WITH STANDARDS PRESCRIBED BY MIL-D-70327.
2. DIMENSIONS ON EACH VIEW APPLY TO ALL VIEWS (WITH THE EXCEPTION OF MOUNTING HOLES).
3. FORMATS ILLUSTRATED WILL BE APPLICABLE TO ALL ITEMS REQUIRING NAMEPLATES BELOW END ITEM DESIGNATION (SYSTEMS, ASSEMBLIES, ETC.)
4. PLATE BACKGROUND TO BE LUSTERLESS BLACK PER FED-STD-595, COLOR 37038. BORDER, MARKING AND LETTERING TO BE NATURAL METAL, (ANODIZED ALUMINUM).
5. MARKING METHOD TO BE DIE STAMPING, ETCHING OR ENGRAVING IN ACCORDANCE WITH MIL-P-19834.
6. LETTERING STYLE TO BE GOTHIC, (SANS SERIFS), AND NUMBERS TO BE ARABIC.
7. WHERE LOCATING DIMENSIONS ARE NOT SHOWN, CHARACTERS SHALL BE SYMMETRICALLY POSITIONED.
8. IDENTIFY WITH DRAWING NUMBER PER ND 1002019.
9. WHEN "AUTO MARK" METAL MARKING TYPEWRITER IS USED TO ADD DATA TO BLANK SPACES, TYPE SIZE IS TO BE SELECTED FROM DIMENSIONS U, AC, AND AM.
10. NASA SYMBOL IS TO BE PROPORTIONAL TO NAMEPLATE IN RATIO OF 1 TO 5 WITH DIMENSION A VALUE AND IS TO HAVE NATURAL BACKGROUND. NASA SYMBOL LETTERS LETTERING AND FEATHER TO BE BLACK, (OR WHITE FOR SILK SCREENING). WHERE BLACK FEATHER PROTRUDES INTO BLACK BACKGROUND, A MINIMUM OUTLINE OF NATURAL BACKGROUND SHALL EXIST.
11. NAMEPLATES WILL BE APPLIED BY METHODS LISTED BELOW, SHOWN IN ORDER OF PREFERENCE, (I.E., FOR RELIABILITY AND WEIGHT).
    A - STENCIL OR SILK SCREEN DIRECTLY ON EQUIPMENT USING INK PER SCD 1010920, (WHITE OR BLACK).
    B - ALUMINUM FOIL, (STYLE A OR B, TYPE I):
    FOIL SHALL BE .0030 ± .0005 THICK PER MIL-A-148.
    FOIL SHALL HAVE NO ADHESIVE BACKING.
    FOIL SHALL BE BONDED PER ND 1002219, (METHOD II).
    FOIL SHALL BE CLEAR ANODIZED PER MIL-A-8625, TYPE II.
    C - PLATE, (STYLE A OR B, TYPE II):
    MATERIAL: QQ-A-250, TEMPER O OR H14, TYPE 1100, ALUMINUM ALLOY, .032 THICK. ANODIZE PER MIL-A-8625, TYPE II.
    ALUMINUM PLATE MUST BE FREE FROM BURRS AND SHARP CORNERS, MOUNTED WITH APPLICABLE SIZE FASTENERS.
12. NAMEPLATES SHALL BE CAPABLE OF MEETING APPLICABLE REQUIREMENTS OF MIL-M-13231.
13. ON DIMENSION TABLES SHOWN ON PAGES 2, 3, 4, 5, AND 6, NA MEANS, "NOT APPLICABLE".

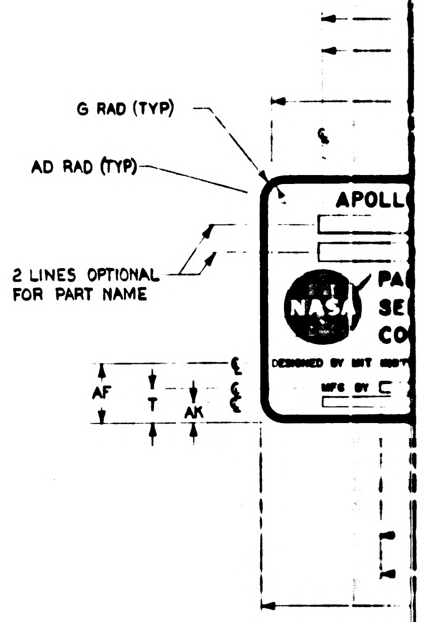

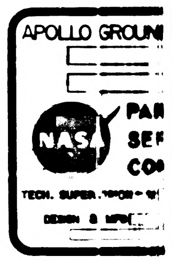

WITH

SUGGESTED PROPORTIONS FOR NAMEPLATE DIMENSIONS.
1. SELECT NAMEPLATE LENGTH, DIMENSION "A", TO FIT DESIGN NEEDS.
2. DIMENSIONS B THRU AS ON LINE 1 BELOW ARE PROPORTIONAL TO "A" BY MULTIPLIERS SHOWN IN LINE 2 BELOW.

1.	A	B	C	D	E	F	G	H	J	K	L	M	N	P	R	S	T	U
2.	1.000A	.6563A	.8438A	.6875A	.0391A	.0240A	.0391A	.0469A	.0547A	.0469A	.5938A	.3750A	.2969A	.2187A	.5079A	.0313A	.0938A	.0391A

1.	V	W	Y	Z	AA	AB	AC	AD	AE	AF	AG	AH	AJ	AK	AL	AM	AN	AP	AR	AS
2.	.4375A	.3594A	.6875A	.1094A	.5781A	.9219A	.0240A	.0156A	.4375A	.1525A	.0391A	.1563A	.8438A	.0548A	.8659A	.0391A	.1563A	.0938A	.9219A	.0151A

1004260	CL	SHT 1

1/1004260

REVISIONS					
SYM	ZONE	DESCRIPTION	CHG NO	DATE	APPD
CL		REPLACES REV CK WITHOUT CHANGE PER TDRR 34365		4/28/67	JWL RWH

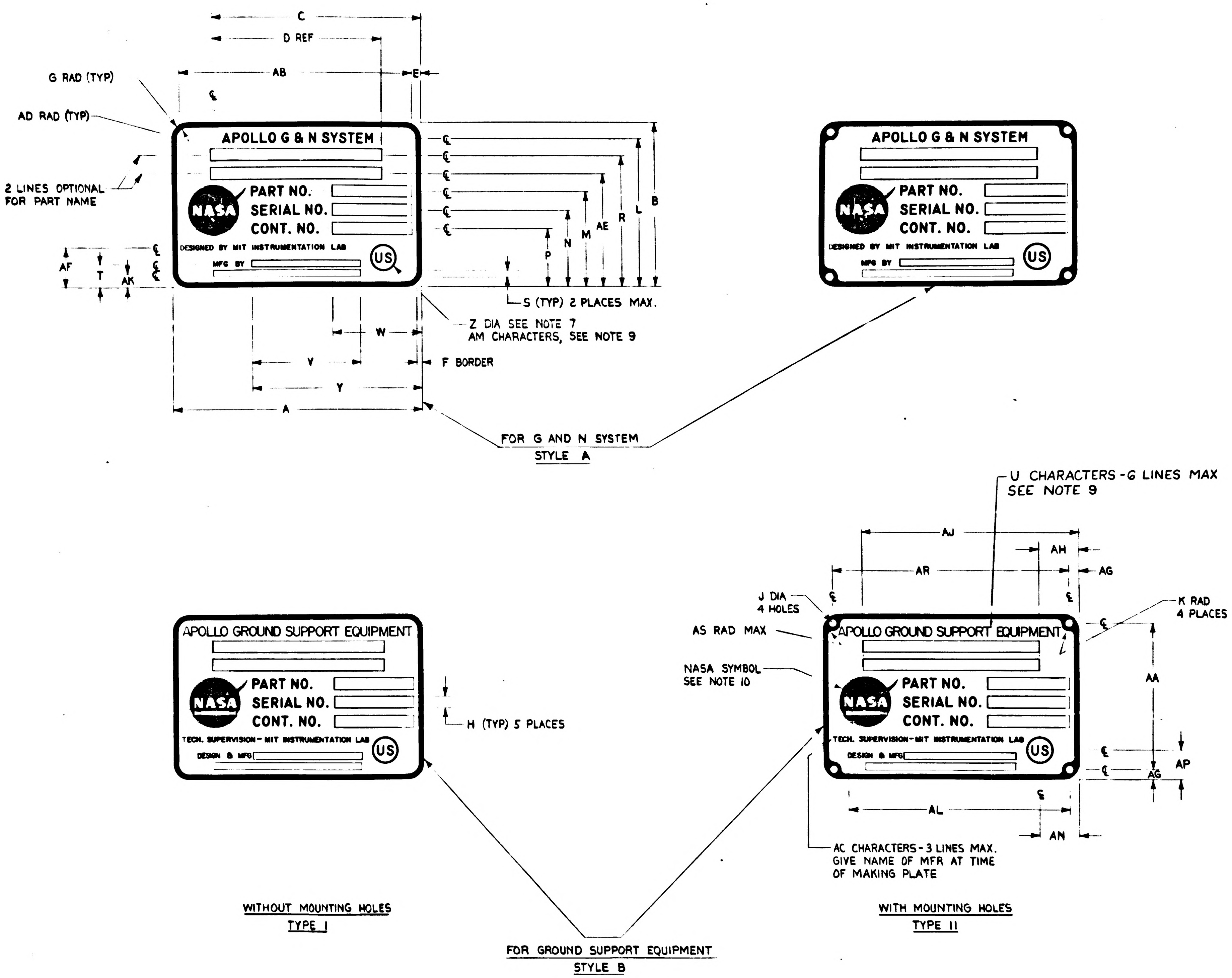

C
D REF
AB
E
G RAD (TYP)
AD RAD (TYP)
2 LINES OPTIONAL FOR PART NAME
APOLLO G & N SYSTEM
PART NO.
SERIAL NO.
CONT. NO.
NASA
DESIGNED BY MIT INSTRUMENTATION LAB
MFG BY
US
AF
T
AK
B
L
R
AE
M
N
P
S (TYP) 2 PLACES MAX.
Z DIA SEE NOTE 7
AM CHARACTERS, SEE NOTE 9
W
V
Y
F BORDER
A
FOR G AND N SYSTEM
STYLE A
U CHARACTERS - 6 LINES MAX
SEE NOTE 9
AJ
AH
AR
AG
J DIA
4 HOLES
K RAD
4 PLACES
AS RAD MAX
NASA SYMBOL
SEE NOTE 10
APOLLO GROUND SUPPORT EQUIPMENT
TECH. SUPERVISION - MIT INSTRUMENTATION LAB
DESIGN & MFG
H (TYP) 5 PLACES
AA
AP
AG
AL
AN
AC CHARACTERS - 3 LINES MAX.
GIVE NAME OF MFR AT TIME
OF MAKING PLATE
WITHOUT MOUNTING HOLES
TYPE I
WITH MOUNTING HOLES
TYPE II
FOR GROUND SUPPORT EQUIPMENT
STYLE B

AS APPLICABLE	UNLESS OTHERWISE SPECIFIED DIMENSIONS ARE IN INCHES TOLERANCES ON 2 PLACE DECIMALS ± 3 PLACE DECIMALS ± .005 ANGLES ±	M I T INSTRUMENTATION LAB CAMBRIDGE, MASS	MANNED SPACECRAFT CENTER HOUSTON, TEXAS	
NEXT ASSY / USED ON	DO NOT SCALE THIS DRAWING	DRAWN R. A. JONES DATE 16 JUL 65	NAMEPLATES, APOLLO GδN - GSE (STANDARDS)	
APPLICATION	MATERIAL SEE NOTE 11	CHECKED W. KUPFER 22 JUL 65 APPROVAL	SIZE J2	CODE IDENT NO. 80230
	APPROVAL	CONTRACT T. MICHAELS 22 JUL 65 NASA APPROVAL W. KUPFER 22 JUL 65 MIT APPROVAL	1004260	
			SCALE NONE	SHEET 1 OF 6

1004260 CL SHT 1

1004260 CL

27 1004260

NOTICE: [illegible]

DASH NO.	P/C	PART NAME	REMARKS	PART NUMBER	SER. NO.	CONT. NO.	STYLE	TYPE	MATERIAL	A	B	C	D	E	F	G	H	J	K	L	M	N	P
399	K																						
398	K																						
350	K	ALIGNMENT OPTICAL TELESCOPE (LEM)		NA	NA	NA	A	I	NOTE 11B	4.000	2.625	3.375	2.750	.156	.093	.156	.187	NA	NA	2.312	1.468	1.187	[illegible]
309	K																						
308	K																						
307	K						B	I	NOTE 11B	4.000	2.625	3.375	2.750	.156	.093	.156	.187	NA	NA	2.328	1.468	1.187	[illegible]
306	K						B	II	NOTE 11C	4.000	2.625	3.375	2.750	.156	.093	.156	.187	.125	.156	2.328	1.468	1.187	[illegible]
305	K						B	I	NOTE 11B	2.000	1.312	1.687	1.375	.078	.048	.078	.093	NA	NA	1.164	.734	.593	[illegible]
304	K						B	II	NOTE 11C	2.000	1.312	1.687	1.375	.078	.048	.078	.093	.070	.078	1.164	.734	.593	[illegible]
303	K																						
302	K																						
301	K																						
300	K	OPTICAL UNIT		NA	NA	NA	A	I	NOTE 11B	2.000	1.312	1.675	NA	NA	.048	.078	NA	NA	NA	1.090	.812	.675	[illegible]
9	K	2 IN AUTOCOLLIMATOR		1001702			B	II	NOTE 11C	4.000	2.625	3.812	2.750	.156	.093	.156	.187	.125	.156	2.250	1.500	1.187	[illegible]
8	K	5 IN AUTOCOLLIMATOR		1017410			B	II	NOTE 11C	4.000	2.625	3.812	2.750	.156	.093	.156	.187	.125	.156	2.250	1.500	1.187	[illegible]
7	K	2-1/2 IN AUTOCOLLIMATOR (SCT)		1017435			B	II	NOTE 11C	4.000	2.625	3.812	2.750	.156	.093	.156	.187	.125	.156	2.250	1.500	1.187	[illegible]
6	K	2-1/2 IN AUTOCOLLIMATOR (SXT)		1017448			B	II	NOTE 11C	4.000	2.625	3.812	2.750	.156	.093	.156	.187	.125	.156	2.250	1.500	1.187	[illegible]
5	K	RETROREFLECTING PRISM ASSEMBLY		1019840			B	I	NOTE 11B	4.000	2.625	3.812	2.750	.156	.093	.156	.187	NA	NA	2.250	1.500	1.187	[illegible]
4	K	S/H SIMULATOR ASSEMBLY		1019896			B	I	NOTE 11B	4.000	2.625	3.812	2.750	.156	.093	.156	.187	NA	NA	2.250	1.500	1.187	[illegible]
3	K	REFERENCE MIRROR		1001767			B	I	NOTE 11B	2.000	1.312	1.906	1.375	.078	.048	.078	.093	NA	NA	1.125	.750	.593	[illegible]
2	K	2 IN PLANE READING AUTOCOLLIMATOR		1017413			B	I	NOTE 11B	2.000	1.312	1.906	1.375	.078	.048	.078	.093	NA	NA	1.125	.750	.593	[illegible]
1	K	2 IN AUTOCOLLIMATOR		1001702			B	I	NOTE 11B	2.000	1.312	1.906	1.375	.078	.048	.078	.093	NA	NA	1.125	.750	.593	[illegible]

NOTES FOR TABLE

STYLE A IS FOR G & N SYSTEM
STYLE B IS FOR GROUND SUPPORT EQUIPMENT
TYPE I IS WITHOUT MOUNTING HOLES
TYPE II IS WITH MOUNTING HOLES

1004260	CL	SHT 2

REVISIONS					
SYM	ZONE	DESCRIPTION	CHG NO	DATE	APPD
CL		REPLACES REV CK WITHOUT CHANGE PER TDRR 34365		9/28/67	JWL RWH

E	F	G	H	J	K	L	M	N	P	R	S	T	U	V	W	Y	Z	AA	AB	AC	AD	AE	AF	AG	AH	AJ	AK	AL	AM	AN	AP	AR
.156	.093	.156	.187	NA	NA	2.312	1.468	1.187	.906	2.031	NA	.375	.156	NA	1.437	2.750	.437	NA	3.688	.062	.062	1.750	.593	NA	.625	3.375	.187	NA	.156	.531	.453	NA
.156	.093	.156	.187	NA	NA	2.328	1.468	1.187	.906	2.031	.062	.375	.156	NA	1.437	2.750	.437	NA	3.687	.062	.062	1.750	.593	NA	NA	NA	NA	NA	NA	NA	NA	NA
.156	.093	.156	.187	.125	.156	2.328	1.468	1.187	.906	2.031	.062	.375	.156	NA	1.437	2.750	.437	2.312	3.687	.062	NA	1.750	.593	NA	NA	NA	NA	NA	NA	NA	NA	NA
.078	.048	.078	.093	NA	NA	1.164	.734	.593	.453	1.015	.048	.171	.078	NA	.718	1.375	.187	NA	NA	.048	.031	.875	.320	NA	NA	NA	NA	NA	NA	NA	NA	NA
.078	.048	.078	.093	.070	.078	1.164	.734	.593	.453	1.015	.048	.171	.078	NA	.718	1.375	.187	.156	1.843	.048	NA	.875	.320	NA	NA	NA	NA	NA	NA	NA	NA	NA
NA	.048	.078	NA	NA	NA	1.090	.812	.675	.540	.940	NA	.265	NA	NA	NA	1.375	.218	NA	NA	NA	NA	NA	.375	NA	NA	NA	.180	NA	.078	NA	NA	NA
.156	.093	.156	.187	.125	.156	2.250	1.500	1.187	.906	2.031	.093	.375	.156	1.750	1.437	2.750	.437	2.312	3.687	.062	NA	1.750	.593	.156	1.062	3.812	.156	NA	.156	1.062	.375	3.687
.156	.093	.156	.187	.125	.156	2.250	1.500	1.187	.906	2.031	.093	.375	.156	1.750	1.437	2.750	.437	2.312	3.687	.062	NA	1.750	.593	.156	1.062	3.812	.156	NA	.156	1.062	.375	3.687
.156	.093	.156	.187	.125	.156	2.250	1.500	1.187	.906	2.031	.093	.375	.156	1.750	1.437	2.750	.437	2.312	3.687	.062	NA	1.750	.593	.156	1.062	3.812	.156	NA	.156	1.062	.375	3.687
.156	.093	.156	.187	.125	.156	2.250	1.500	1.187	.906	2.031	.093	.375	.156	1.750	1.437	2.750	.437	2.312	3.687	.062	NA	1.750	.593	.156	1.062	3.812	.156	NA	.156	1.062	.375	3.687
.156	.093	.156	.187	NA	NA	2.250	1.500	1.187	.906	2.031	.093	.375	.156	1.750	1.437	2.750	.437	NA	NA	.062	.062	1.750	.593	.156	1.062	3.812	.156	NA	.156	1.062	.375	NA
.156	.093	.156	.187	NA	NA	2.250	1.500	1.187	.906	2.031	.093	.375	.156	1.750	1.437	2.750	.437	NA	NA	.062	.062	1.750	.593	.156	1.062	3.812	.156	NA	.156	1.062	.375	NA
.078	.048	.078	.093	NA	NA	1.125	.750	.593	.453	1.015	.062	.187	.078	.875	.718	1.375	.218	NA	NA	.048	.031	.875	.305	.078	.531	1.906	.078	NA	.078	.531	.187	NA
.078	.048	.078	.093	NA	NA	1.125	.750	.593	.453	1.015	.062	.187	.078	.875	.718	1.375	.218	NA	NA	.048	.031	.875	.305	.078	.531	1.906	.078	NA	.078	.531	.187	NA
.078	.048	.078	.093	NA	NA	1.125	.750	.593	.453	1.015	.062	.187	.078	.875	.718	1.375	.218	NA	NA	.048	.031	.875	.305	.078	.531	1.906	.078	NA	.078	.531	.187	NA

KOLLSMAN DASH NUMBERS

UNLESS OTHERWISE SPECIFIED DIMENSIONS ARE IN INCHES TOLERANCES ON 2 PLACE DECIMALS ± 3 PLACE DECIMALS ± .005 ANGLES ±	INSTRUMENTATION LAB Cambridge Mass	MANNED SPACECRAFT CENTER HOUSTON TEXAS	
DO NOT SCALE THIS DRAWING	DRAWN R A JONES DATE 16 JUL 65 CHECKED APPROVAL W KUPFER 22 JUL 65 CONTRACT	NAMEPLATES, APOLLO G&N - GSE (STANDARDS)	
MATERIAL SEE NOTE 11	NASA APPROVAL T MICHAELS 22 JUL 65	SIZE J2	CODE IDENT NO. 80230 — 1004260
APPROVAL	MIT APPROVAL W KUPFER 22 JUL 65	SCALE NONE	SHEET 2 OF 6
AS APPLICABLE NEXT ASSY — USED ON APPLICATION			

1004260 CL SHT 2

1004260 SHEET 2 of 6

DASH NO.	P/C	PART NAME	REMARKS	PART NUMBER	SER. NO.	CONT. NO.	STYLE	TYPE	MATERIAL	A	B	C	D	E	F	G	H	J	K	L	M	N	P
299	R																						
298	R																						
285	R	BUFFER CIRCUIT ASSY		2014254-031	NA	NAS-9-497	B	I	NOTE 11B	FOR DIMENSIONS SEE DASH 15 VALUES BELOW													
284	R	LOGIC DRAWER ASSY NO. 2		2014037-041	NA	NAS-9-497	B	I	NOTE 11B	FOR DIMENSIONS SEE DASH 17 VALUES BELOW													
283	R	DRAWER ASSY-PROGRAM & MONITOR		2014041-051	NA	NAS-9-497	B	I	NOTE 11B	FOR DIMENSIONS SEE DASH 17 VALUES BELOW													
282	R	COMPUTER TEST SET		2014042-061	NA	NAS-9-497	B	II	NOTE 11C	FOR DIMENSIONS SEE DASH 18 VALUES BELOW													
281	R	AGC HANDLING FIXTURE		2014282-031	NA	NAS-9-497	B	I	NOTE 11B	FOR DIMENSIONS SEE DASH 17 VALUES BELOW													
280	R	COMPUTER TEST SET		2014042-051	NA	NAS-9-497	B	II	NOTE 11C	FOR DIMENSIONS SEE DASH 18 VALUES BELOW													
279	R	SELF TEST ASSY		2014366-041	NA	NAS-9-497	B	I	NOTE 11B	FOR DIMENSIONS SEE DASH 15 VALUES BELOW													
278	R	LOGIC DRAWER ASSY NO. 1		2014036-041	NA	NAS-9-497	B	I	NOTE 11B	FOR DIMENSIONS SEE DASH 17 VALUES BELOW													
277	R	COMPUTER TEST SET		2014042-041	NA	NAS-9-497	B	II	NOTE 11C	FOR DIMENSIONS SEE DASH 18 VALUES BELOW													
276	R	DRAWER ASSY-PROGRAM & MONITOR		2014041-041	NA	NAS-9-497	B	I	NOTE 11B	FOR DIMENSIONS SEE DASH 17 VALUES BELOW													
275	R	DRAWER ASSY RDC INTERFACE		2014045-031	NA	NAS-9-497	B	I	NOTE 11B	FOR DIMENSIONS SEE DASH 15 VALUES BELOW													
274	R	SELF TEST ASSY		2014366-031	NA	NAS-9-497	B	I	NOTE 11B	FOR DIMENSIONS SEE DASH 15 VALUES BELOW													
273	R	LOGIC DRAWER ASSY NO. 2		2014037-031	NA	NAS-9-497	B	I	NOTE 11B	FOR DIMENSIONS SEE DASH 17 VALUES BELOW													
272	R	DRAWING ASSY PROGRAMMER & MONITOR		2014041-031	NA	NAS-9-497	B	I	NOTE 11B	FOR DIMENSIONS SEE DASH 17 VALUES BELOW													
271	R	LOGIC DRAWER ASSY NO. 1		2014036-031	NA	NAS-9-497	B	I	NOTE 11B	FOR DIMENSIONS SEE DASH 17 VALUES BELOW													
270	R	COMPUTER TEST SET		2014042-031	NA	NAS-9-497	B	II	NOTE 11C	FOR DIMENSIONS SEE DASH 18 VALUES BELOW													
269	R	POWER CONTROL ASSY		2014044-021	NA	NAS-9-497	B	I	NOTE 11B	FOR DIMENSIONS SEE DASH 17 VALUES BELOW													
268	R	SELF TEST ASSY		2014366-021	NA	NAS-9-497	B	I	NOTE 11B	FOR DIMENSIONS SEE DASH 15 VALUES BELOW													
267	R	AGC JUNCTION ASSY		2014341-021	NA	NAS-9-497	B	I	NOTE 11B	FOR DIMENSIONS SEE DASH 15 VALUES BELOW													
266	R	POWER CONTROL ASSY		2014079-021	NA	NAS-9-497	B	I	NOTE 11B	FOR DIMENSIONS SEE DASH 15 VALUES BELOW													
265	R	BUFFER CIRCUIT ASSY		2014254-021	NA	NAS-9-497	B	I	NOTE 11B	FOR DIMENSIONS SEE DASH 15 VALUES BELOW													
264	R	DRAWER ASSY X Y INTERFACE		2014040-021	NA	NAS-9-497	B	I	NOTE 11B	FOR DIMENSIONS SEE DASH 15 VALUES BELOW													
263	R	DRAWER ASSY RDC INTERFACE		2014045-021	NA	NAS-9-497	B	I	NOTE 11B	FOR DIMENSIONS SEE DASH 15 VALUES BELOW													
262	R	DRAWER ASSY PROGRAMMER & MONITOR		2014041-021	NA	NAS-9-497	B	I	NOTE 11B	FOR DIMENSIONS SEE DASH 17 VALUES BELOW													
261	R	LOGIC DRAWER ASSY NO. 2		2014037-021	NA	NAS-9-497	B	I	NOTE 11B	FOR DIMENSIONS SEE DASH 17 VALUES BELOW													
260	R	LOGIC DRAWER ASSY NO. 1		2014036-021	NA	NAS-9-497	B	I	NOTE 11B	FOR DIMENSIONS SEE DASH 17 VALUES BELOW													
259	R	OPERATION CONSOLE		2014024-021	NA	NAS-9-497	B	II	NOTE 11C	FOR DIMENSIONS SEE DASH 18 VALUES BELOW													
258	R	COMPUTER TEST SET		2014042-021	NA	NAS-9-497	B	II	NOTE 11C	FOR DIMENSIONS SEE DASH 18 VALUES BELOW													
257	R	AUXILIARY CALIBRATION CONSOLE		2014059-021	NA	NAS-9-497	B	II	NOTE 11C	FOR DIMENSIONS SEE DASH 18 VALUES BELOW													
256	R	AGC CALIBRATION CONSOLE		2014049-021	NA	NAS-9-497	B	II	NOTE 11C	FOR DIMENSIONS SEE DASH 18 VALUES BELOW													
255	R	AGC HANDLING FIXTURE		2014282-021	NA	NAS-9-497	B	I	NOTE 11B	FOR DIMENSIONS SEE DASH 17 VALUES BELOW													
254	R	DRAWER ASSY COMP. SIMULATOR		2014048-011	NA	NAS-9-497	B	II	NOTE 11C	FOR DIMENSIONS SEE DASH 18 VALUES BELOW													
253	R	SHIPPING KIT ASSY, NAV DSKY		2016312-011	NA	NAS-9-497	B	II	NOTE 11C	FOR DIMENSIONS SEE DASH 18 VALUES BELOW													
252	R	SHIPPING KIT ASSY, UNIVERSAL DSKY		2016316-011	NA	NAS-9-497	B	II	NOTE 11C	FOR DIMENSIONS SEE DASH 18 VALUES BELOW													
251	R	SHIPPING KIT ASSY, MAIN DSKY		2016313-011	NA	NAS-9-497	B	II	NOTE 11C	FOR DIMENSIONS SEE DASH 18 VALUES BELOW													
250	R	AMPLIFIER, REWORK		2014386	NA	NAS-9-497	B	I	NOTE 11B	FOR DIMENSIONS SEE DASH 15 VALUES BELOW													
249	R	TEMP MONITOR ASSY		2014313-011	NA	NAS-9-497	B	I	NOTE 11C	FOR DIMENSIONS SEE DASH 17 VALUES BELOW													
248	R	AGC JUNCTION ASSY		2014341-011	NA	NAS-9-497	B	I	NOTE 11B	FOR DIMENSIONS SEE DASH 15 VALUES BELOW													
247	R	AC INPUT PANEL ASSY		2014302-011	NA	NAS-9-497	B	I	NOTE 11B	FOR DIMENSIONS SEE DASH 15 VALUES BELOW													
246	R	SELF TEST ASSY		2014392-011	NA	NAS-9-497	B	I	NOTE 11B	FOR DIMENSIONS SEE DASH 15 VALUES BELOW													
245	R	TAPE PUNCH ASSEMBLY		2014039-011	NA	NAS-9-497	B	I	NOTE 11B	FOR DIMENSIONS SEE DASH 15 VALUES BELOW													
244	R	TAPE READER ASSEMBLY		2014038-011	NA	NAS-9-497	B	I	NOTE 11B	FOR DIMENSIONS SEE DASH 15 VALUES BELOW													
243																							
242																							
241	R	APOLLO GUIDANCE COMPUTER GROUP		6003001	NA	NAS-9-497	A	I	NOTE 11B	FOR DIMENSIONS SEE DASH 19 VALUES BELOW													
240	R	SELF TEST ASSEMBLY		2014366-011	NA	NAS-9-497	B	I	NOTE 11B	FOR DIMENSIONS SEE DASH 15 VALUES BELOW													
239	R	POWER SUPPLY ASSY-115V., 400 CYCLE		2014207-011	NA	NAS-9-497	B	I	NOTE 11B	FOR DIMENSIONS SEE DASH 17 VALUES BELOW													
238	R	AC INPUT PANEL ASSY		2014043-011	NA	NAS-9-497	B	I	NOTE 11B	FOR DIMENSIONS SEE DASH 17 VALUES BELOW													
237	R	POWER CONTROL ASSY		2014079-011	NA	NAS-9-497	B	I	NOTE 11B	FOR DIMENSIONS SEE DASH 15 VALUES BELOW													
236	R	DRAWER ASSY-X Y INTERFACE		2014040-011	NA	NAS-9-497	B	I	NOTE 11B	FOR DIMENSIONS SEE DASH 15 VALUES BELOW													
235	R	DRAWER ASSY RDC INTERFACE		2014045-011	NA	NAS-9-497	B	I	NOTE 11B	FOR DIMENSIONS SEE DASH 15 VALUES BELOW													
234	R	BUFFER CIRCUIT ASSY		2014254-011	NA	NAS-9-497	B	I	NOTE 11B	FOR DIMENSIONS SEE DASH 15 VALUES BELOW													
233	R	CONTROL & INTERFACE ASSY		2014204-011	NA	NAS-9-497	B	I	NOTE 11B	FOR DIMENSIONS SEE DASH 15 VALUES BELOW													
232	R	POWER CONTROL ASSY		2014044-011	NA	NAS-9-497	B	I	NOTE 11B	FOR DIMENSIONS SEE DASH 17 VALUES BELOW													
231	R	DRAWER ASSY, PROGRAMMER & MONITOR		2014041-011	NA	NAS-9-497	B	I	NOTE 11B	FOR DIMENSIONS SEE DASH 17 VALUES BELOW													
230	R	CONNECTOR INTERFACE ASSY		2014272-011	NA	NAS-9-497	B	I	NOTE 11B	FOR DIMENSIONS SEE DASH 15 VALUES BELOW													
229	R	CONNECTOR INTERFACE ASSY		2014047-011	NA	NAS-9-497	B	I	NOTE 11B	FOR DIMENSIONS SEE DASH 15 VALUES BELOW													
228	R	ANTENNA, TUNING CAPACITOR ASSY		2014209-011	NA	NAS-9-497	B	I	NOTE 11B	FOR DIMENSIONS SEE DASH 15 VALUES BELOW													
227	R	MOUNTING FIXTURE ASSY		2014006-011	NA	NAS-9-497	B	I	NOTE 11B	FOR DIMENSIONS SEE DASH 17 VALUES BELOW													
226	R	POWER SUPPLY ASSY 3 VDC		2014234-011	NA	NAS-9-497	B	I	NOTE 11B	FOR DIMENSIONS SEE DASH 15 VALUES BELOW													
225	R	PANEL ASSY—SIGNAL INTERFACE		2014010-011	NA	NAS-9-497	B	I	NOTE 11B	FOR DIMENSIONS SEE DASH 15 VALUES BELOW													
224	R	OSCILLOSCOPE ASSY		2014232-011	NA	NAS-9-497	B	I	NOTE 11B	FOR DIMENSIONS SEE DASH 15 VALUES BELOW													
223	R	AUXILIARY OUTLET ASSY		2014274-011	NA	NAS-9-497	B	I	NOTE 11B	FOR DIMENSIONS SEE DASH 15 VALUES BELOW													
222	R	FREQUENCY COUNTER		2014233-011	NA	NAS-9-497	B	I	NOTE 11B	FOR DIMENSIONS SEE DASH 15 VALUES BELOW													
221	R	POWER SUPPLY ASSY 10, 13, 28 VDC		2014235-011	NA	NAS-9-497	B	I	NOTE 11B	FOR DIMENSIONS SEE DASH 15 VALUES BELOW													
220	R	LOGIC DRAWER ASSY NO. 2		2014037-011	NA	NAS-9-497	B	I	NOTE 11B	FOR DIMENSIONS SEE DASH 17 VALUES BELOW													
219	R	LOGIC DRAWER ASSY NO. 1		2014036-011	NA	NAS-9-497	B	I	NOTE 11B	FOR DIMENSIONS SEE DASH 17 VALUES BELOW													
218	R	COUNTER, ELECTRICAL ASSY		2014288-011	NA	NAS-9-497	B	I	NOTE 11B	FOR DIMENSIONS SEE DASH 15 VALUES BELOW													
217	R	POWER SUPPLY ASSY		2014279-011	NA	NAS-9-497	B	I	NOTE 11B	FOR DIMENSIONS SEE DASH 15 VALUES BELOW													
216	R	TEST MOUNT ASSY		2014257-011	NA	NAS-9-497	B	I	NOTE 11B	FOR DIMENSIONS SEE DASH 15 VALUES BELOW													
215	R	UNIVERSAL DSKY PEDESTAL MOUNT		2014014-011	NA	NAS-9-497	B	I	NOTE 11B	FOR DIMENSIONS SEE DASH 17 VALUES BELOW													
214	R	MAIN DSKY PEDESTAL MOUNT		2014343	NA	NAS-9-497	B	I	NOTE 11B	FOR DIMENSIONS SEE DASH 17 VALUES BELOW													
213	R	SHIPPING CONTAINER, MAIN DSKY		1006229	NA	NAS-9-497	B	II	NOTE 11C	FOR DIMENSIONS SEE DASH 18 VALUES BELOW													
212	R	SHIPPING CONTAINER, NAV DSKY		1006231	NA	NAS-9-497	B	II	NOTE 11C	FOR DIMENSIONS SEE DASH 18 VALUES BELOW													
211	R	SHIPPING CONTAINER, AGC		1006230	NA	NAS-9-497	B	II	NOTE 11C	FOR DIMENSIONS SEE DASH 18 VALUES BELOW													
210	R	SHIPPING CONTAINER, UNIVERSAL DSKY		1006422	NA	NAS-9-497	B	II	NOTE 11C	FOR DIMENSIONS SEE DASH 18 VALUES BELOW													
209	R	SHIPPING CONTAINER, AGC		1006421	NA	NAS-9-497	B	II	NOTE 11C	FOR DIMENSIONS SEE DASH 18 VALUES BELOW													
208	R	UNIVERSAL DSKY HANDLING FIXTURE		2014013-011	NA	NAS-9-497	B	I	NOTE 11B	FOR DIMENSIONS SEE DASH 15 VALUES BELOW													
207	R	NAV DSKY HANDLING FIXTURE		1014377	NA	NAS-9-497	B	I	NOTE 11B	FOR DIMENSIONS SEE DASH 17 VALUES BELOW													
206	R	MAIN DSKY HANDLING FIXTURE		1014334	NA	NAS-9-497	B	I	NOTE 11B	FOR DIMENSIONS SEE DASH 17 VALUES BELOW													
205	R	AGC HANDLING FIXTURE		2014282-011	NA	NAS-9-497	B	I	NOTE 11B	FOR DIMENSIONS SEE DASH 17 VALUES BELOW													
204	R	OPERATION CONSOLE		2014024-011	NA	NAS-9-497	B	II	NOTE 11C	FOR DIMENSIONS SEE DASH 18 VALUES BELOW													
203	R	COMPUTER TEST SET		2014042-011	NA	NAS-9-497	B	II	NOTE 11C	FOR DIMENSIONS SEE DASH 18 VALUES BELOW													
202	R	DRAWER ASSY, COMPUTER SIMULATOR		2014048-011	NA	FNP-12775	B	II	NOTE 11C	FOR DIMENSIONS SEE DASH 18 VALUES BELOW													
201	R	AUXILIARY CALIBRATION CONSOLE		2014059-011	NA	NAS-9-497	B	II	NOTE 11C	FOR DIMENSIONS SEE DASH 18 VALUES BELOW													
200	R	AGC CALIBRATION CONSOLE		2014049-011	NA	NAS-9-497	B	II	NOTE 11C	FOR DIMENSIONS SEE DASH 18 VALUES BELOW													
21	R																						
20	R	NA		NA	NA	NA	A	II	NOTE 11C	2.000	1.312	1.687	1.375	.078	.031	.078	.093	[illegible]	.093	1.187	.750	.593	.453
19	R	NA		NA	NA	NA	A	I	NOTE 11B	2.000	1.312	1.687	1.375	.078	.031	.078	.093	NA	NA	1.187	.750	.593	.453
18	R	NA		NA	NA	NA	B	II	NOTE 11C	4.187	1.875	3.469	2.750	.156	.093	.156	.125	[illegible]	.125	1.625	1.032	.844	.656
17	R	NA		NA	NA	NA	B	I	NOTE 11B	4.187	1.875	3.469	2.750	.156	.093	.156	.125	NA	NA	1.625	1.032	.844	.656
16	R	NA		NA	NA	NA	B	II	NOTE 11C	2.000	1.312	1.687	1.375	.078	.031	.078	.093	[illegible]	.093	1.187	.750	.593	.453
15	R	NA		NA	NA	NA	B	I	NOTE 11B	2.000	1.312	1.687	1.375	.078	.031	.078	.093	NA	NA	1.187	.750	.593	.453

NOTES FOR TABLE

STYLE A IS FOR G & N SYSTEM
STYLE B IS FOR GROUND SUPPORT EQUIPMENT
TYPE I IS WITHOUT MOUNTING HOLES
TYPE II IS WITH MOUNTING HOLES

1004260	CL	SHT 3

REVISIONS					
SYM	ZONE	DESCRIPTION	CHG NO	DATE	APPD
CL		REPLACES REV CK WITHOUT CHANGE PER TDRR 34365		[illegible]/28/67	JWL [illegible]

VALUES BELOW																															
VALUES BELOW																															
VALUES BELOW																															
VALUES BELOW																															
VALUES BELOW																															
VALUES BELOW																															
VALUES BELOW																															
VALUES BELOW																															
VALUES BELOW																															
VALUES BELOW																															
VALUES BELOW																															
VALUES BELOW																															
VALUES BELOW																															
VALUES BELOW																															
VALUES BELOW																															
VALUES BELOW																															
VALUES BELOW																															
VALUES BELOW																															
VALUES BELOW																															
VALUES BELOW																															
VALUES BELOW																															
VALUES BELOW																															
VALUES BELOW																															
VALUES BELOW																															
VALUES BELOW																															
VALUES BELOW																															
VALUES BELOW																															
VALUES BELOW																															
VALUES BELOW																															
VALUES BELOW																															
VALUES BELOW																															
VALUES BELOW																															
VALUES BELOW																															
VALUES BELOW																															
VALUES BELOW																															
VALUES BELOW																															
VALUES BELOW																															
VALUES BELOW																															
VALUES BELOW																															
VALUES BELOW																															
VALUES BELOW																															
VALUES BELOW																															
VALUES BELOW																															
VALUES BELOW																															
VALUES BELOW																															
VALUES BELOW																															
VALUES BELOW																															
VALUES BELOW																															
VALUES BELOW																															
VALUES BELOW																															
VALUES BELOW																															
VALUES BELOW																															
VALUES BELOW																															
VALUES BELOW																															
VALUES BELOW																															
VALUES BELOW																															
VALUES BELOW																															
VALUES BELOW																															
VALUES BELOW																															
VALUES BELOW																															
VALUES BELOW																															
VALUES BELOW																															
VALUES BELOW																															
VALUES BELOW																															
VALUES BELOW																															
VALUES BELOW																															
VALUES BELOW																															
VALUES BELOW																															
VALUES BELOW																															
VALUES BELOW																															
VALUES BELOW																															
VALUES BELOW																															
VALUES BELOW																															
VALUES BELOW																															
VALUES BELOW																															
VALUES BELOW																															
VALUES BELOW																															
VALUES BELOW																															
VALUES BELOW																															
VALUES BELOW																															
VALUES BELOW																															
VALUES BELOW																															
VALUES BELOW																															
VALUES BELOW																															
.031	.078	.093	[illegible]	.093	1.187	.750	.593	.453	1.015	.062	.187	.078	.875	.718	1.375	.218	1.156	1.843	.048	NA	.875	.305	.078	.312	1.687	.078	NA	.078	.312	.187	1.843
.031	.078	.093	NA	NA	1.187	.750	.593	.453	1.015	.062	.187	.078	.875	.718	1.375	.219	NA	NA	.048	.031	.875	.305	.078	.312	1.687	.078	NA	.078	.312	.187	NA
.093	.156	.125	[illegible]	.125	1.625	1.032	.844	.656	1.406	.093	.344	.156	1.781	1.531	2.844	.312	1.562	3.875	.062	NA	1.219	.500	.156	.719	3.469	.156	NA	.156	.719	.344	3.875
.093	.156	.125	NA	NA	1.625	1.032	.844	.656	1.406	.093	.344	.156	1.781	1.531	2.844	.312	NA	NA	.062	.062	1.219	.500	.156	.719	3.469	.156	NA	.156	.719	.344	NA
.031	.078	.093	[illegible]	.093	1.187	.750	.593	.453	1.015	.062	.187	.078	.875	.718	1.375	.218	1.156	1.843	.048	NA	.875	.305	.078	.312	1.687	.078	NA	.078	.312	.187	1.843
.031	.078	.093	NA	NA	1.187	.750	.593	.453	1.015	.062	.187	.078	.875	.718	1.375	.218	NA	NA	.048	.031	.875	.305	.078	.312	1.687	.078	NA	.078	.312	.187	NA
F	G	H	J	K	L	M	N	P	R	S	T	U	V	W	Y	Z	AA	AB	AC	AD	AE	AF	AG	AH	AJ	AK	AL	AM	AN	AP	AR

RAYTHEON DASH NUMBERS

AS APPLICABLE	UNLESS OTHERWISE SPECIFIED DIMENSIONS ARE IN INCHES TOLERANCES ON 2 PLACE DECIMALS ± 3 PLACE DECIMALS ± .005 ANGLES ±	M I T INSTRUMENTATION LAB Cambridge Mass	MANNED SPACECRAFT CENTER HOUSTON, TEXAS	
NEXT ASSY / USED ON	DO NOT SCALE THIS DRAWING	DRAWN R. A. JONES DATE 16 JUL 65	NAMEPLATES, APOLLO GEN - GSE (STANDARDS)	
APPLICATION	MATERIAL SEE NOTE II	CHECKED W KUPFER 22 JUL 65 APPROVAL		
	APPROVAL	CONTRACT	SIZE J2	CODE IDENT NO. 80230
		T. MICHAELS 22 JUL 65 NASA APPROVAL	1004260	
		W KUPFER 22 JUL 65 MIT APPROVAL	SCALE NONE	SHEET 3 OF 6

1004260 CL

1004260

1004260 CL SHT 3

27/1004260

AC DASH NUMBERS CONTINUED ON SHEET 6

DASH NO.	P/C	PART NAME	REMARKS	PART NUMBER	SER. NO.	CONT. NO.	STYLE	TYPE	MATERIAL	A	B	C	D	E	F	G	H	J	K	L	M	N
199	AC	EYEPIECE STOWAGE UNIT		2021255-011			A	I		FOR DIMENSIONS SEE DASH 100 VALUES BELOW												
198	AC	SIGNAL CONDITIONER ASSY C/M		2007234		NAS-9-497	A	I	NOTE 11B	FOR DIMENSIONS SEE DASH 100 VALUES BELOW												
197	AC	SIGNAL CONDITIONER ASSY C/M		2007235		NAS-9-497	A	I	NOTE 11B	FOR DIMENSIONS SEE DASH 100 VALUES BELOW												
196	AC	SIGNAL CONDITIONER ASSY LEM		6007010		NAS-9-497	A	I	NOTE 11B	FOR DIMENSIONS SEE DASH 100 VALUES BELOW												
195	AC	PSA & SIGNAL CONDITIONER ASSY		6007009		NAS-9-497	A	I	NOTE 11B	FOR DIMENSIONS SEE DASH 100 VALUES BELOW												
194	AC	PANEL, MONITOR		2900031-031		NAS-9-497	B	II	NOTE 11C	FOR DIMENSIONS SEE DASH 141 VALUES BELOW												
193	AC	DISTRIBUTION BOX, GSE		2900024-031		NAS-9-497	B	II	NOTE 11C	FOR DIMENSIONS SEE DASH 141 VALUES BELOW												
192	AC	ANALYZER, OPTICS-INERTIAL		2900023-031		NAS-9-497	B	II	NOTE 11C	FOR DIMENSIONS SEE DASH 144 VALUES BELOW												
191	AC	TEST CONTROL		2900027-031		NAS-9-497	B	II	NOTE 11C	FOR DIMENSIONS SEE DASH 141 VALUES BELOW												
190	AC	PANEL, PWR SUP AND LOAD		2900033-021		NAS-9-497	B	II	NOTE 11C	FOR DIMENSIONS SEE DASH 141 VALUES BELOW												
189	AC	ADPT MODULE, P.S.A.		6900088-011		NAS-9-497	B	II	NOTE 11C	FOR DIMENSIONS SEE DASH 141 VALUES BELOW												
188	AC	ADPT MODULE, P.S.A.		2901143-011		NAS-9-497	B	II	NOTE 11C	FOR DIMENSIONS SEE DASH 141 VALUES BELOW												
187	AC	FIXTURE, MTG, PTA/PEA		2900066-021		NAS-9-497	B	II	NOTE 11C	FOR DIMENSIONS SEE DASH 141 VALUES BELOW												
186	AC	ANNUNCIATOR PANEL & EYEPIECE STORAGE ASSEMBLY		1021255-021			A	I		FOR DIMENSIONS SEE DASH 100 VALUES BELOW												
185	AC	ANNUNCIATOR PANEL & EYEPIECE STORAGE ASSEMBLY		1021255-011			A	I		FOR DIMENSIONS SEE DASH 100 VALUES BELOW												
184	AC	FIX., HAND., G AND N HARNESS		1901846-041		NAS-9-497	B	II	NOTE 11C	FOR DIMENSIONS SEE DASH 144 VALUES BELOW												
183	AC	INSTALLING TOOL, ELEC, CONN		1902586-011		NAS-9-497	B	II	NOTE 11C	FOR DIMENSIONS SEE DASH 102 VALUES BELOW												
182	AC	ADPT MODULE, P.S.A.		6900088-011		NAS-9-497	B	II	NOTE 11C	FOR DIMENSIONS SEE DASH 141 VALUES BELOW												
181	AC	G & N INDICATOR CONTROL PANEL ASSY		2014578-011		NAS-9-497	A	I	NOTE 11B	3.000	1.938	2.437	NA	.125	.062	.188	.156	NA	NA	1.750	1.125	.306
180	AC	ADPT MODULE, P.S.A.		1902431-031		NAS-9-497	B	II		FOR DIMENSIONS SEE DASH 121 VALUES BELOW												
179	AC	MOUNTING PLATE, IMU/PTA		6900083-011		NAS-9-497	B	II		FOR DIMENSIONS SEE DASH 144 VALUES BELOW												
178	AC	MOUNTING PLATE, COMPONENT		6900007-021		NAS-9-497	B	II		FOR DIMENSIONS SEE DASH 144 VALUES BELOW												
177	AC	FIX., MOUNTING, SUBSYSTEM		2900070-021		NAS-9-497	B	II		FOR DIMENSIONS SEE DASH 144 VALUES BELOW												
176	AC	FIX., MOUNTING, G & N		2900067-021		NAS-9-497	B	II		FOR DIMENSIONS SEE DASH 144 VALUES BELOW												
175	AC	CSL, COOL. AND PWR, G & N		1902134-031		NAS-9-497	B	II		FOR DIMENSIONS SEE DASH 144 VALUES BELOW												
174	AC	FIX., HAND., C/M AND LEM CDU		2900999-011		NAS-9-497	B	II	NOTE 11C	FOR DIMENSIONS SEE DASH 141 VALUES BELOW												
173	AC	FIX., HANDLING, C/M PSA		2900998-011		NAS-9-497	B	II	NOTE 11C	FOR DIMENSIONS SEE DASH 141 VALUES BELOW												
172	AC	CAGING ELECTRONICS, GYRO		2900029-021		NAS-9-497	B	II	NOTE 11C	FOR DIMENSIONS SEE DASH 141 VALUES BELOW												
171	AC	DISTRIBUTION BOX, GSE		2900024-021		NAS-9-497	B	II	NOTE 11C	FOR DIMENSIONS SEE DASH 141 VALUES BELOW												
170	AC	ANALYZER, OPTICS-INERTIAL		2900023-021		NAS-9-497	B	II	NOTE 11C	FOR DIMENSIONS SEE DASH 144 VALUES BELOW												
169	AC	ADPT, TESTPOINT, P.S.A.		2900037-021		NAS-9-497	B	II	NOTE 11C	FOR DIMENSIONS SEE DASH 141 VALUES BELOW												
168	AC	TEST SELECTOR		2900028-021		NAS-9-497	B	II	NOTE 11C	FOR DIMENSIONS SEE DASH 141 VALUES BELOW												
167	AC	TEST CONTROL		2900027-021		NAS-9-497	B	II	NOTE 11C	FOR DIMENSIONS SEE DASH 141 VALUES BELOW												
166	AC	PANEL, MONITOR		2900031-021		NAS-9-497	B	II	NOTE 11C	FOR DIMENSIONS SEE DASH 141 VALUES BELOW												
165	AC	TERM. BOARD STORAGE DRAWER		2900927-011		NAS-9-497	B	II	NOTE 11C	FOR DIMENSIONS SEE DASH 141 VALUES BELOW												
164	AC	INPUT/OUTPUT PANEL		2900926-011		NAS-9-497	B	II	NOTE 11C	FOR DIMENSIONS SEE DASH 141 VALUES BELOW												
163	AC	CONTROL PANEL		2900896-011		NAS-9-497	B	II	NOTE 11C	FOR DIMENSIONS SEE DASH 141 VALUES BELOW												
162	AC	CSL, CAL AND TEST, SCM/PSAAM		2900895-011		NAS-9-497	B	II	NOTE 11C	FOR DIMENSIONS SEE DASH 144 VALUES BELOW												
161	AC	FIX., LIFT AND HAND., IMU		1015462-011		NAS-9-497	B	II	NOTE 11C	FOR DIMENSIONS SEE DASH 141 VALUES BELOW												
160	AC	FIX., HAND., G & N HARNESS		1901846-031		NAS-9-497	B	II	NOTE 11C	FOR DIMENSIONS SEE DASH 144 VALUES BELOW												
159	AC	BATTERY POWER PACK		1900011-031		NAS-9-497	B	II	NOTE 11C	FOR DIMENSIONS SEE DASH 144 VALUES BELOW												
158	AC	COUPLING DATA UNIT ASSEMBLY C/M		2007222		NAS-9-497	A	I	NOTE 11B	FOR DIMENSIONS SEE DASH 100 VALUES BELOW												
157	AC	COUPLING DATA UNIT ASSEMBLY - LEM		2007222		NAS-9-497	A	I	NOTE 11B	FOR DIMENSIONS SEE DASH 100 VALUES BELOW												
156	AC	POWER & SERVO ASSEMBLY C/M		2007200		NAS-9-497	A	I	NOTE 11B	2.125	.968	1.718	NA	.093	.031	.06	.093	NA	NA	.858	.608	.484
155	AC	PIPA ELECTRONICS ASSEMBLY		2007201		NAS-9-497	A	I	NOTE 11B	FOR DIMENSIONS SEE DASH 100 VALUES BELOW												
154	AC	PULSE TORQUE ASSEMBLY-LEM		6007000		NAS-9-497	A	I	NOTE 11B	FOR DIMENSIONS SEE DASH 100 VALUES BELOW												
153	AC	POWER & SERVO ASSEMBLY-LEM		6007200		NAS-9-497	A	I	NOTE 11B	FOR DIMENSIONS SEE DASH 100 VALUES BELOW												
152	AC	CONT PNL, RSVR CKT TESTER		2900770-011		NAS-9-497	B	II	NOTE 11C	FOR DIMENSIONS SEE DASH 141 VALUES BELOW												
151	AC	TESTER, RESOLVER CIRCUIT		2900708-011		NAS-9-497	B	II	NOTE 11C	FOR DIMENSIONS SEE DASH 141 VALUES BELOW												
150	AC	JUNCTION BOX, P.S.A./G.S.E.		1901933-021		NAS-9-497	B	II	NOTE 11C	FOR DIMENSIONS SEE DASH 144 VALUES BELOW												
149	AC	BATTERY PACK, LIFTING		2900812-011		NAS-9-497	B	II	NOTE 11C	FOR DIMENSIONS SEE DASH 141 VALUES BELOW												
148	AC	MOUNTING PLATE, COMPONENT		6900007-011		NAS-9-497	B	II	NOTE 11C	FOR DIMENSIONS SEE DASH 144 VALUES BELOW												
147	AC	MOUNTING PLATE, COMPONENT		2900677-011		NAS-9-497	B	II	NOTE 11C	FOR DIMENSIONS SEE DASH 144 VALUES BELOW												
146	AC	CART, TRANS, G & N		1900009-041		NAS-9-497	B	II	NOTE 11C	FOR DIMENSIONS SEE DASH 144 VALUES BELOW												
145	AC	CONTAINER, SHIPPING, IMU		1900010-021		NAS-9-497	B	II	NOTE 11C	FOR DIMENSIONS SEE DASH 144 VALUES BELOW												
144	AC	FIX., MOUNTING, G & N		1902204-021			B	II	NOTE 11C	4.125	1.812	3.250	NA	.125	.062	.12	.156		.125	1.625	1.140	890
143	AC	CSL, COOL, AND PWR, G & N		1902134-021			B	II	NOTE 11C	4.125	1.812	3.250	NA	.125	.062	.12	.156		.125	1.625	1.140	890
142	AC	ANALYZER, OPTICS-INERTIAL		2900023-011			B	II	NOTE 11C	4.125	1.812	3.250	NA	.125	.062	.12	.156		.125	1.625	1.140	890
141	AC	CONT, TEMP, PORTABLE		2900060-011			B	II	NOTE 11C	2.125	.968	1.718	NA	.093	.031	.06	.093		.093	.858	.608	484
140	AC	TESTER, CKT, IMU/CDU RSVR		2900286-011			B	II	NOTE 11C	4.125	1.812	3.250	NA	.125	.062	.12	.156		.125	1.625	1.140	890
139	AC	SIMULATOR, LD/SIG, CDU		2900285-011			B	II	NOTE 11C	4.125	1.812	3.250	NA	.125	.062	.12	.156		.125	1.625	1.140	890
138	AC	SIMULATOR, LD/SIG, OPTICS		1902023-021			B	II	NOTE 11C	4.125	1.812	3.250	NA	.125	.062	.12	.156		.125	1.625	1.140	890
137	AC	FIX., MOUNTING, IMU/NAV BASE		6900003-011			B	II	NOTE 11C	4.125	1.812	3.250	NA	.125	.062	.12	.156		.125	1.625	1.140	890
136	AC	FIXTURE, OPTICS/NAV BASE		2900072-011			B	II	NOTE 11C	4.125	1.812	3.250	NA	.125	.062	.12	.156		.125	1.625	1.140	.890
135	AC	FIX., MOUNTING, SUB SYSTEM		2900070-011			B	II	NOTE 11C	4.125	1.812	3.250	NA	.125	.062	.12	.156		.125	1.625	1.140	.890
134	AC	FIX., HAND., G & N HARNESS		2900069-011			B	II	NOTE 11C	4.125	1.812	3.250	NA	.125	.062	.12	.156		.125	1.625	1.140	890
133	AC	CNTR, SHIPPING, NAV BASE		2900068-011			B	II	NOTE 11C	4.125	1.812	3.250	NA	.125	.062	.12	.156		.125	1.625	1.140	890
132	AC	FIX., MOUNTING, G & N		2900067-011			B	II	NOTE 11C	4.125	1.812	3.250	NA	.125	.062	.12	.156		.125	1.625	1.140	.890
131	AC	SIMULATOR, LD/SIG, IMU/CDU		2900062-011			B	II	NOTE 11C	4.125	1.812	3.250	NA	.125	.062	.12	.156		.125	1.625	1.140	890
130	AC	TESTER, GYRO WHEEL		2900061-011			B	II	NOTE 11C	4.125	1.812	3.250	NA	.125	.062	.12	.156		.125	1.625	1.140	890
129	AC	COOLANT SUPPLY		1902133-021			B	II	NOTE 11C	4.125	1.812	3.250	NA	.125	.062	.12	.156		.125	1.625	1.140	890
128	AC	TABLE, ROTARY		1900926-021			B	II	NOTE 11C	4.125	1.812	3.250	NA	.125	.062	.12	.156		.125	1.625	1.140	890
127	AC	FIX., HAND., OPTICS		2900074-011			B	II	NOTE 11C	2.125	.968	1.718	NA	.093	.031	.06	.093		.093	.858	.608	484
126	AC	FIXTURE, MTG, PTA/PEA.		2900066-011			B	II	NOTE 11C	2.125	.968	1.718	NA	.093	.031	.06	.093		.093	.858	.608	484
125	AC	CONT, TEMP, IMU LIFTING		2900063-011			B	II	NOTE 11C	2.125	.968	1.718	NA	.093	.031	.06	.093		.093	.858	.608	484
124	AC	FIXTURE, HANDLING, IMU		2900064-011			B	II	NOTE 11C	2.125	.968	1.718	NA	.093	.031	.06	.093		.093	.858	.608	484
123	AC	CONT, OPTICS, REMOTE		1902046-021			B	II	NOTE 11C	2.125	.968	1.718	NA	.093	.031	.06	.093		.093	.858	.608	484
122	AC	TEST CONTROL		1902009-021			B	II	NOTE 11C	2.125	.968	1.718	NA	.093	.031	.06	.093		.093	.858	.608	484
121	AC	ADPT MODULE, P.S.A.		1902431-021			B	II	NOTE 11C	2.125	.968	1.718	NA	.093	.031	.06	.093		.093	.858	.608	484
120	AC	BRIDGE, DECADE ERROR		2900128-011			B	II	NOTE 11C	2.125	.968	1.718	NA	.093	.031	.06	.093		.093	.858	.608	484
119	AC	PWR SUP, ELECTRONICS		2900012-011			B	II	NOTE 11C	2.125	.968	1.718	NA	.093	.031	.06	.093		.093	.858	.608	484
118	AC	PWR SUP, RELAY AND LAMP		1900049-031			B	II	NOTE 11C	2.125	.968	1.718	NA	.093	.031	.06	.093		.093	.858	.608	484
117	AC	CONSOLE, OSCILLOGRAPH		1900000-021			B	II	NOTE 11C	2.125	.968	1.718	NA	.093	.031	.06	.093		.093	.858	.608	484
116	AC	ADPT MODULE, P.S.A.		1902431-011			B	II	NOTE 11C	2.125	.968	1.718	NA	.093	.031	.06	.093		.093	.858	.608	484
115	AC	ADPT, TEST POINT, PTA/PEA.		2900145-011			B	II	NOTE 11C	2.125	.968	1.718	NA	.093	.031	.06	.093		.093	.858	.608	484
114	AC	ADPT, TEST POINT, P.S.A.		2900037-011			B	II	NOTE 11C	2.125	.968	1.718	NA	.093	.031	.06	.093		.093	.858	.608	484
113	AC	CONTROL, GIMBAL POSITION		2900036-011			B	II	NOTE 11C	2.125	.968	1.718	NA	.093	.031	.06	.093		.093	.858	.608	484
112	AC	SELECTOR, SIGNAL, PRIMARY		2900035-011			B	II	NOTE 11C	2.125	.968	1.718	NA	.093	.031	.06	.093		.093	.858	.608	484
111	AC	SEL, SIG, OSCILLOGRAPH		2900034-011			B	II	NOTE 11C	2.125	.968	1.718	NA	.093	.031	.06	.093		.093	.858	.608	484
110	AC	PANEL, PWR SUP AND LOAD		2900033-011			B	II	NOTE 11C	2.125	.968	1.718	NA	.093	.031	.06	.093		.093	.858	.608	484
109	AC	PANEL, MONITOR		2900031-011			B	II	NOTE 11C	2.125	.968	1.718	NA	.093	.031	.06	.093		.093	.858	.608	484
108	AC	PANEL, AUXILIARY INPUT		2900030-011			B	II	NOTE 11C	2.125	.969	1.718	NA	.093	.031	.06	.093		.093	.858	.608	484
107	AC	CAGING ELECTRONICS, GYRO		2900029-011			B	II	NOTE 11C	2.125	.968	1.718	NA	.093	.031	.06	.093		.093	.858	.608	484
106	AC	TEST SELECTOR		2900028-011			B	II	NOTE 11C	2.125	.968	1.718	NA	.093	.031	.06	.093		.093	.858	.608	484
105	AC	TEST CONTROL		2900027-011			B	II	NOTE 11C	2.125	.968	1.718	NA	.093	.031	.06	.093		.093	.858	.608	484
104	AC	MONITOR AND CONTROL, TEMP		2900026-011			B	II	NOTE 11C	2.125	.968	1.718	NA	.093	.031	.06	.093		.093	.858	.608	484
103	AC	DISTRIBUTION BOX, GSE		2900024-011			B	II	NOTE 11C	2.125	.968	1.718	NA	.093	.031	.06	.093		.093	.858	.608	484
102	AC	VOLTMETER, DIGITAL		2900007-011			B	II	NOTE 11C	2.125	.968	1.718	NA	.093	.031	.06	.093		.093	.858	.608	484
101	AC	NAVIGATION BASE ASSEMBLY-LEM		6899950		NAS-9-497	A	I	NOTE 11B	2.000	1.312	1.906	1.375	.078	.048	.078	.093	NA	NA	1.125	.750	.593
100	AC	NAVIGATION BASE ASSEMBLY		2899982		NAS-9-497	A	I	NOTE 11B	2.000	1.312	1.906	1.375	.078	.048	.078	.093	NA	NA	1.125	.750	.593

NOTES FOR TABLE

STYLE A IS FOR G & N SYSTEM
STYLE B IS FOR GROUND SUPPORT EQUIPMENT
TYPE I IS WITHOUT MOUNTING HOLES
TYPE II IS WITH MOUNTING HOLES

1004260	CL	SHT 4

REVISIONS					
SYM	ZONE	DESCRIPTION	CHG NO	DATE	APPD
CL		REPLACES REV CK WITHOUT CHANGE PER TDRR 34365		9/28/65	JWL RWH

E	F	G	H	J	K	L	M	N	P	R	S	T	U	V	W	Y	Z	AA	AB	AC	AD	AE	AF	AG	AH	AJ	AK	AL	AM	AN	AP	AR
100 VALUES BELOW																																
100 VALUES BELOW																																
100 VALUES BELOW																																
100 VALUES BELOW																																
100 VALUES BELOW																																
141 VALUES BELOW																																
141 VALUES BELOW																																
144 VALUES BELOW																																
141 VALUES BELOW																																
141 VALUES BELOW																																
141 VALUES BELOW																																
141 VALUES BELOW																																
141 VALUES BELOW																																
100 VALUES BELOW																																
100 VALUES BELOW																																
144 VALUES BELOW																																
102 VALUES BELOW																																
141 VALUES BELOW																																
.125	.062	.188	.156	NA	NA	1.750	1.125	.906	.688	1.500	NA	.281	.125	NA	1.094	2.062	.312	NA	2.500	.062	.125	1.312	.469	NA	NA	NA	.156	NA	.125	.469	.344	NA
121 VALUES BELOW																																
144 VALUES BELOW																																
144 VALUES BELOW																																
144 VALUES BELOW																																
144 VALUES BELOW																																
144 VALUES BELOW																																
141 VALUES BELOW																																
141 VALUES BELOW																																
141 VALUES BELOW																																
141 VALUES BELOW																																
144 VALUES BELOW																																
141 VALUES BELOW																																
141 VALUES BELOW																																
141 VALUES BELOW																																
141 VALUES BELOW																																
141 VALUES BELOW																																
141 VALUES BELOW																																
141 VALUES BELOW																																
144 VALUES BELOW																																
141 VALUES BELOW																																
144 VALUES BELOW																																
144 VALUES BELOW																																
100 VALUES BELOW																																
100 VALUES BELOW																																
.093	.031	.06	.093	NA	NA	.858	.608	.484	.358	.733	.062	.140	.062	NA	.968	1.450	.125	NA	1.720	.046	.03	NA	.210	NA	NA	NA	.070	NA	.046	.32	.16	NA
100 VALUES BELOW																																
100 VALUES BELOW																																
100 VALUES BELOW																																
141 VALUES BELOW																																
141 VALUES BELOW																																
144 VALUES BELOW																																
141 VALUES BELOW																																
144 VALUES BELOW																																
144 VALUES BELOW																																
144 VALUES BELOW																																
144 VALUES BELOW																																
.125	.062	.12	.156	[illegible]	.125	1.625	1.140	.890	.640	1.390	.125	.171	.125	1.875	1.687	2.625	.250	1.562	3.843	.093	NA	NA	.359	.125	.437	3.688	NA	3.687	.093	.40	.25	3.875
.125	.062	.12	.156		.125	1.625	1.140	.890	.640	1.390	.125	.171	.125	1.875	1.687	2.625	.250	1.562	3.843	.093	NA	NA	.359	.125	.437	3.688	NA	3.687	.093	.40	.25	3.875
.125	.062	.12	.156		.125	1.625	1.140	.890	.640	1.390	.125	.171	.125	1.875	1.687	2.625	.250	1.562	3.843	.093	NA	NA	.359	.125	.437	3.688	NA	3.687	.093	.40	.25	3.875
.093	.031	.06	.093		.093	.858	.608	.484	.358	.733	.077	.116	.062	.937	.875	1.343	.125	.781	1.892	.046	NA	NA	.209	.093	.250	1.875	NA	1.840	.046	.23	.16	1.938
.125	.062	.12	.156		.125	1.625	1.140	.890	.640	1.390	.125	.171	.125	1.875	1.687	2.625	.250	1.562	3.843	.093	NA	NA	.359	.125	.437	3.688	NA	3.687	.093	.40	.25	3.875
.125	.062	.12	.156		.125	1.625	1.140	.890	.640	1.390	.125	.171	.125	1.875	1.687	2.625	.250	1.562	3.843	.093	NA	NA	.359	.125	.437	3.688	NA	3.687	.093	.40	.25	3.875
.125	.062	.12	.156		.125	1.625	1.140	.890	.640	1.390	.125	.171	.125	1.875	1.687	2.625	.250	1.562	3.843	.093	NA	NA	.359	.125	.437	3.688	NA	3.687	.093	.40	.25	3.875
.125	.062	.12	.156		.125	1.625	1.140	.890	.640	1.390	.125	.171	.125	1.875	1.687	2.625	.250	1.562	3.843	.093	NA	NA	.359	.125	.437	3.688	NA	3.687	.093	.40	.25	3.875
.125	.062	.12	.156		.125	1.625	1.140	.890	.640	1.390	.125	.171	.125	1.875	1.687	2.625	.250	1.562	3.643	.093	NA	NA	.359	.125	.437	3.688	NA	3.687	.093	.40	.25	3.875
.125	.062	.12	.156		.125	1.625	1.140	.890	.640	1.390	.125	.171	.125	1.875	1.687	2.625	.250	1.562	3.643	.093	NA	NA	.359	.125	.437	3.688	NA	3.687	.093	.40	.25	3.875
.125	.062	.12	.156		.125	1.625	1.140	.890	.640	1.390	.125	.171	.125	1.875	1.687	2.625	.250	1.562	3.843	.093	NA	NA	.359	.125	.437	3.688	NA	3.687	.093	.40	.25	3.875
.125	.062	.12	.156		.125	1.625	1.140	.890	.640	1.390	.125	.171	.125	1.875	1.687	2.625	.250	1.562	3.843	.093	NA	NA	.359	.125	.437	3.688	NA	3.687	.093	.40	.25	3.875
.125	.062	.12	.156		.125	1.625	1.140	.890	.640	1.390	.125	.171	.125	1.875	1.687	2.625	.250	1.562	3.843	.093	NA	NA	.359	.125	.437	3.688	NA	3.687	.093	.40	.25	3.875
.125	.062	.12	.156		.125	1.625	1.140	.890	.640	1.390	.125	.171	.125	1.875	1.687	2.625	.250	1.562	3.843	.093	NA	NA	.359	.125	.437	3.688	NA	3.687	.093	.40	.25	3.875
.125	.062	.12	.156		.125	1.625	1.140	.890	.640	1.390	.125	.171	.125	1.875	1.687	2.625	.250	1.562	3.843	.093	NA	NA	.359	.125	.437	3.686	NA	3.687	.093	.40	.25	3.875
.125	.062	.12	.156		.125	1.625	1.140	.890	.640	1.390	.125	.171	.125	1.875	1.687	2.625	.250	1.562	3.843	.093	NA	NA	.359	.125	.437	3.688	NA	3.687	.093	.40	.25	3.875
.125	.062	.12	.156		.125	1.625	1.140	.890	.640	1.390	.125	.171	.125	1.875	1.687	2.625	.250	1.562	3.843	.093	NA	NA	.359	.125	.437	3.688	NA	3.687	.093	.40	.25	3.875
.093	.031	.06	.093		.093	.858	.608	.484	.358	.733	.077	.116	.062	.937	.875	1.343	.125	.781	1.892	.046	NA	NA	.209	.093	.250	1.875	NA	1.840	.046	.23	.16	1.938
.093	.031	.06	.093		.093	.858	.608	.484	.358	.733	.077	.116	.062	.937	.875	1.343	.125	.781	1.892	.046	NA	NA	.209	.093	.250	1.875	NA	1.840	.046	.23	.16	1.938
.093	.031	.06	.093		.093	.858	.608	.484	.358	.733	.077	.116	.062	.937	.875	1.343	.125	.781	1.892	.046	NA	NA	.209	.093	.250	1.875	NA	1.840	.046	.23	.16	1.938
.093	.031	.06	.093		.093	.858	.608	.484	.358	.733	.077	.116	.062	.937	.875	1.343	.125	.781	1.892	.046	NA	NA	.209	.093	.250	1.875	NA	1.840	.046	.23	.16	1.938
.093	.031	.06	.093		.093	.858	.608	.484	.358	.733	.077	.116	.062	.937	.875	1.343	.125	.781	1.892	.046	NA	NA	.209	.093	.250	1.875	NA	1.840	.046	.23	.16	1.938
.093	.031	.06	.093		.093	.858	.608	.484	.358	.733	.077	.116	.062	.937	.875	1.343	.125	.781	1.892	.046	NA	NA	.209	.093	.250	1.875	NA	1.840	.046	.23	.16	1.938
.093	.031	.06	.093		.093	.858	.608	.484	.358	.733	.077	.116	.062	.937	.875	1.343	.125	.781	1.892	.046	NA	NA	.209	.093	.250	1.875	NA	1.840	.046	.23	.16	1.938
.093	.031	.06	.093		.093	.858	.608	.484	.358	.733	.077	.116	.062	.937	.875	1.343	.125	.781	1.892	.046	NA	NA	.209	.093	.250	1.875	NA	1.840	.046	.23	.16	1.938
.093	.031	.06	.093		.093	.858	.608	.484	.358	.733	.077	.116	.062	.937	.875	1.343	.125	.781	1.892	.046	NA	NA	.209	.093	.250	1.875	NA	1.840	.046	.23	.16	1.938
.093	.031	.06	.093		.093	.858	.608	.484	.358	.733	.077	.116	.062	.937	.875	1.343	.125	.781	1.892	.046	NA	NA	.209	.093	.250	1.875	NA	1.840	.046	.23	.16	1.938
.093	.031	.06	.093		.093	.858	.608	.484	.358	.733	.077	.116	.062	.937	.875	1.343	.125	.781	1.892	.046	NA	NA	.209	.093	.250	1.875	NA	1.840	.046	.23	.16	1.938
.093	.031	.06	.093		.093	.858	.608	.484	.358	.733	.077	.116	.062	.937	.875	1.343	.125	.781	1.892	.046	NA	NA	.209	.093	.250	1.875	NA	1.840	.046	.23	.16	1.938
.093	.031	.06	.093		.093	.858	.608	.484	.358	.733	.077	.116	.062	.937	.875	1.343	.125	.781	1.892	.046	NA	NA	.209	.093	.250	1.875	NA	1.840	.046	.23	.16	1.938
.093	.031	.06	.093		.093	.858	.608	.484	.358	.733	.077	.116	.062	.937	.875	1.343	.125	.781	1.892	.046	NA	NA	.209	.093	.250	1.875	NA	1.840	.046	.23	.16	1.938
.093	.031	.06	.093		.093	.858	.608	.484	.358	.733	.077	.116	.062	.937	.875	1.343	.125	.781	1.892	.046	NA	NA	.209	.093	.250	1.875	NA	1.840	.046	.23	.16	1.938
.093	.031	.06	.093		.093	.858	.608	.484	.358	.733	.077	.116	.062	.937	.875	1.343	.125	.781	1.892	.046	NA	NA	.209	.093	.250	1.875	NA	1.840	.046	.23	.16	1.938
.093	.031	.06	.093		.093	.858	.608	.484	.358	.733	.077	.116	.062	.937	.875	1.343	.125	.781	1.892	.046	NA	NA	.209	.093	.250	1.875	NA	1.840	.046	.23	.16	1.938
.093	.031	.06	.093		.093	.858	.608	.484	.358	.733	.077	.116	.062	.937	.875	1.343	.125	.781	1.892	.046	NA	NA	.209	.093	.250	1.875	NA	1.840	.046	.23	.16	1.938
.093	.031	.06	.093		.093	.858	.608	.484	.358	.733	.077	.116	.062	.937	.875	1.343	.125	.781	1.892	.046	NA	NA	.209	.093	.250	1.875	NA	1.840	.046	.23	.16	1.938
.093	.031	.06	.093		.093	.858	.608	.484	.358	.733	.077	.116	.062	.937	.875	1.343	.125	.781	1.892	.046	NA	NA	.209	.093	.250	1.875	NA	1.840	.046	.23	.16	1.938
.093	.031	.06	.093		.093	.858	.608	.484	.358	.733	.077	.116	.062	.937	.875	1.343	.125	.781	1.892	.046	NA	NA	.209	.093	.250	1.875	NA	1.840	.046	.23	.16	1.938
.093	.031	.06	.093		.093	.858	.608	.484	.358	.733	.077	.116	.062	.937	.875	1.343	.125	.781	1.892	.046	NA	NA	.209	.093	.250	1.875	NA	1.840	.046	.23	.16	1.938
.093	.031	.06	.093		.093	.858	.608	.484	.358	.733	.077	.116	.062	.937	.875	1.343	.125	.781	1.892	.046	NA	NA	.209	.093	.250	1.875	NA	1.840	.046	.23	.16	1.938
.093	.031	.06	.093		.093	.858	.608	.484	.358	.733	.077	.116	.062	.937	.875	1.343	.125	.781	1.892	.046	NA	NA	.209	.093	.250	1.875	NA	1.840	.046	.23	.16	1.938
.093	.031	.06	.093		.093	.858	.608	.484	.358	.733	.077	.116	.062	.937	.875	1.343	.125	.781	1.892	.046	NA	NA	.209	.093	.250	1.875	NA	1.840	.046	.23	.16	1.938
.093	.031	.06	.093		.093	.858	.608	.484	.358	.733	.077	.116	.062	.937	.875	1.343	.125	.781	1.892	.046	NA	NA	.209	.093	.250	1.875	NA	1.840	.046	.23	.16	1.938
.093	.031	.06	.093		.093	.858	.608	.484	.358	.733	.077	.116	.062	.937	.875	1.343	.125	.781	1.892	.046	NA	NA	.209	.093	.250	1.875	NA	1.840	.046	.23	.16	1.938
.093	.031	.06	.093	[illegible]	.093	.858	.608	.484	.358	.733	.077	.116	.062	.937	.875	1.343	.125	.781	1.892	.046	NA	NA	.209	.093	.250	1.875	NA	1.840	.046	.23	.16	1.938
.078	.048	.078	.093	NA	NA	1.125	.750	.593	.453	1.015	.062	.187	.078	.875	.718	1.375	.218	NA	NA	.048	.031	.875	.305	.078	.531	1.906	.078	NA	.078	.531	.187	NA
.078	.048	.078	.093	NA	NA	1.125	.750	.593	.453	1.015	.062	.187	.078	.875	.718	1.375	.218	NA	NA	.048	.031	.875	.305	.078	.531	1.906	.078	NA	.078	.531	.187	NA

AC ELECTRONICS DASH NUMBERS

AS APPLICABLE	
NEXT ASSY	USED ON
APPLICATION	

UNLESS OTHERWISE SPECIFIED
DIMENSIONS ARE IN INCHES
TOLERANCES ON
2 PLACE DECIMALS ± —
3 PLACE DECIMALS ± .005
ANGLES ± —
DO NOT SCALE THIS DRAWING
MATERIAL
SEE NOTE 11
APPROVAL

MIT
INSTRUMENTATION LAB
CAMBRIDGE, MASS
DRAWN R. A. JONES DATE 16 JUL 65
CHECKED
W KUPFER 22 JUL 65
APPROVAL
CONTRACT
T. MICHAELS 22 JUL 65
NASA APPROVAL
W KUPFER 22 JUL 65
MIT APPROVAL

MANNED
SPACECRAFT CENTER
HOUSTON, TEXAS

NAMEPLATES,
APPOLLO GEN - GSE
(STANDARDS)

SIZE J2
CODE IDENT NO. 80230
1004260
SCALE NONE
SHEET 4 OF 6

1004260 CL SHT 4

1004260 CL

1004260

0854001

27 1004260

NOTICE [illegible]

401	MIT	COMPUTER ASSY		2003100		NAS-9-497	A	I	NOTE 11B	2,000	1,312	1,906	1,375	,078	,048	,078	,093	NA	NA	1,125	,750	,59
400	MIT	LIFTING SLING-G&N INST, QUAL, FIX, & AZM, REF, FIX,		1021640		NAS-9-4065	B	II	NOTE 11C	2,000	1,312	1,687	1,375	,078	,048	,078	,093	[illegible]	,093	1,187	,750	,59
DASH NO.	P/C	PART NAME	REMARKS	PART NUMBER	SER. NO.	CONT. NO.	STYLE	TYPE	MATERIAL	A	B	C	D	E	F	G	H	J	K	L	M	N

NOTES FOR TABLE
STYLE A IS FOR G & N SYSTEM
STYLE B IS FOR GROUND SUPPORT EQUIPMENT
TYPE I IS WITHOUT MOUNTING HOLES
TYPE II IS WITH MOUNTING HOLES

1004260	CL	SHT 5

1/1004260

REVISIONS					
SYM	ZONE	DESCRIPTION	CHG NO	DATE	APPD
CL		REPLACES REV CK WITHOUT CHANGE PER TDRR 34365		1/20/67	JWL RWH

1004260 CL

.078	.048	.078	093	NA	NA	1.125	.750	.593	.453	1.015	.062	.187	.078	.875	.718	1.375	.218	NA	NA	.048	.031	.875	.305	.078	.531	1.906	.078	NA	.078	.531	.187	NA
.078	.048	.078	093	[illegible]	.093	1.187	.750	.593	.453	1.015	.062	.187	.078	.875	.718	1.375	.218	1.156	1.843	.048	NA	.875	.305	.078	.312	1.687	.110	1.830	.070	.275	.180	1.844
E	F	G	H	J	K	L	M	N	P	R	S	T	U	V	W	Y	Z	AA	AB	AC	AD	AE	AF	AG	AH	AJ	AK	AL	AM	AN	AP	AR

MIT DASH NUMBERS

AS APPLICABLE	UNLESS OTHERWISE SPECIFIED DIMENSIONS ARE IN INCHES TOLERANCES ON 2 PLACE DECIMALS ± 3 PLACE DECIMALS ± .005 ANGLES ±	MIT INSTRUMENTATION LAB Cambridge Mass	MANNED SPACECRAFT CENTER HOUSTON, TEXAS
NEXT ASSY / USED ON	DO NOT SCALE THIS DRAWING	DRAWN R.A. JONES DATE 16 JUL 65	NAMEPLATES, APOLLO G&N - GSE (STANDARDS)
APPLICATION	MATERIAL SEE NOTE 11	CHECKED W. KUPFER APPROVAL 22 JUL 65	SIZE J2 CODE IDENT NO. 80230 1004260
	APPROVAL	CONTRACT	SCALE NONE SHEET 5 OF 6
		T. MICHAELS 22 JUL 65 NASA APPROVAL	
		W. KUPFER 22 JUL 65 MIT APPROVAL	

1004260 CL SHT 5

1004260

1004260 SHEET 5 OF 6

2Y/1004260

DASH NO.	P/C	PART NAME	REMARKS	PART NUMBER	SER. NO.	CONT. NO.	STYLE	TYPE	MATERIAL	A	B	C	D	E	F	G	H	J	K	L	
599	AC																				
598	AC																				
570	AC	OPTICAL UNIT & BELLOWS ASSY				NAS-9-497	A	I	NOTE 11B	FOR DIMENSIONS SEE DASH 550 VALUES											
562	AC	COMPUTER CONT & RETICLE DIMMER		6014512-041		NAS-9-497	A	I	NOTE 11B	FOR DIMENSIONS SEE DASH 534 VALUES											
561	AC	G & N INDICATOR CONTROL PANEL ASSY		2014578-031		NAS-9-497	A	I	NOTE 11B	FOR DIMENSIONS SEE DASH 181 VALUES											
560		ADPT. MODULE, PSA		2901143-021		NAS-9-497	B	II	NOTE 11C	FOR DIMENSIONS SEE DASH 141 VALUES											
559		CSL, CAL AND TEST, SCM/PSAAM		2900895-031		FOR OTHER DATA SEE DASH 547															
558		PSA ADAPTER MODULE (LEM)		6900088-021		FOR OTHER DATA SEE DASH 189															
557		FIX., HANDLING, C/M PSA		2900998-021		NAS-9-497	B	II	NOTE 11C	FOR DIMENSIONS SEE DASH 141 VALUES											
556		FIX., MOUNTING G & N	(-144)	2900067-041		NAS-9-497	B	II	NOTE 11C	FOR DIMENSIONS SEE DASH 500 VALUES											
555	AC	OPTICAL UNIT ASSEMBLY		1021368-061		NAS-9-497	A	I	NOTE 11B	2.000	1.312	1.687	1.375	.078	.048	.078	.093	NA	NA	1.125	.750
554	AC	OPTICAL UNIT ASSEMBLY		1021368-041		NAS-9-497	A	I	NOTE 11B	2.000	1.312	1.687	1.375	.078	.048	.078	.093	NA	NA	1.125	.750
553	AC	OPTICAL UNIT AND BELLOWS ASSEMBLY		2010790-111		NAS-9-497	A	I	NOTE 11B	2.000	1.312	1.687	1.375	.078	.048	.078	.093	NA	NA	1.125	.750
552	AC	OPTICAL UNIT AND BELLOWS ASSEMBLY		2010790-081		NAS-9-497	A	I	NOTE 11B	2.000	1.312	1.687	1.375	.078	.048	.078	.093	NA	NA	1.125	.750
551	AC	OPTICAL UNIT AND BELLOWS ASSEMBLY		2010790-071		NAS-9-497	A	I	NOTE 11B	2.000	1.312	1.687	1.375	.078	.048	.078	.093	NA	NA	1.125	.750
550	AC	OPTICAL UNIT AND BELLOWS ASSEMBLY		2010790-061		NAS-9-497	A	I	NOTE 11B	2.000	1.312	1.687	1.375	.078	.048	.078	.093	NA	NA	1.125	.750
548		CAGING ELECTRONICS, GYRO		2900029-031		NAS-9-497	B	II	NOTE 11C	2.125	.968	1.718	NA	.093	.031	.06	.093		.093	.858	.608
547		CSL, CAL AND TEST, SCM/PSAAM		2900895-021		NAS-9-497	B	II	NOTE 11C	4.125	1.812	3.250	NA	.125	.062	.12	.156		.125	1.625	1.140
546		FIX., HAND., C/M AND LEM CDU		2900999-021		NAS-9-497	B	II	NOTE 11C	2.125	.968	1.718	NA	.093	.031	.06	.093		.093	.858	.608
545	AC	G & N INDICATOR CONTROL PANEL ASSY		2014578-021		NAS-9-497	A	I	NOTE 11B	3.000	1.938	2.437	NA	.125	.062	.188	.156	NA	NA	1.750	1.12
544		ADPT MODULE, P.S.A.		1902431-051		NAS-9-497	B	II	NOTE 11C	2.125	.968	1.718	NA	.093	.031	.06	.093		.093	.858	.608
543	AC	PANEL, MONITOR		2900031-041		NAS-9-497	B	II	NOTE 11C	2.125	.968	1.718	NA	.093	.031	.06	.093		.093	.858	.608
542	AC	BATTERY PACK, LIFTING		2900812-021		NAS-9-497	B	II	NOTE 11C	2.125	.968	1.718	NA	.093	.031	.06	.093		.093	.858	.608
541	AC	FIXTURE, MOUNTING, IMU		2900000-021		NAS-9-497	B	II	NOTE 11C	4.125	1.812	3.250	NA	.125	.062	.12	.156		.125	1.625	1.140
540	AC	ADPT, TEST POINT, P.S.A.		2900037-031		NAS-9-497	B	II	NOTE 11C	2.125	.968	1.718	NA	.093	.031	.06	.093		.093	.858	.608
539	AC	ANNUNCIATOR PANEL & EYEPIECE STORAGE ASSEMBLY		1021255-041		NAS-9-497	A	I	NOTE 11B	2.000	1.312	1.906	1.375	.078	.048	.078	.093	NA	NA	1.125	.750
538	AC	ANNUNCIATOR PANEL & EYEPIECE STORAGE ASSEMBLY		1021255-031		NAS-9-497	A	I	NOTE 11B	2.000	1.312	1.906	1.375	.078	.048	.078	.093	NA	NA	1.125	.750
537	AC	TEST SELECTOR		2900028-031		NAS-9-497	B	II	NOTE 11C	2.125	.968	1.718	NA	.093	.031	.06	.093		.093	.858	.608
536	AC	ANALYZER, OPTICS-INERTIAL		2900023-041		NAS-9-497	B	II	NOTE 11C	4.125	1.812	3.250	NA	.125	.062	.12	.156		.125	1.625	1.140
535	AC	CONT, TEMP, PORTABLE		2900060-021		NAS-9-497	B	II	NOTE 11C	2.125	.968	1.718	NA	.093	.031	.06	.093		.093	.858	.608
534	AC	COMPUTER CONT & RETICLE DIMMER		6014512-021		NAS-9-497	A	I	NOTE 11B	2.000	1.312	1.906	1.375	.078	.048	.078	.093	NA	NA	1.125	.750
533	AC	ADPT MODULE, P.S.A.		1902431-041		NAS-9-497	B	II	NOTE 11C	2.125	.968	1.718	NA	.093	.031	.06	.093		.093	.858	.608
532	AC	TRAY BREAKOUT, 105 PIN		1900807-021		NAS-9-497	B	II	NOTE 11C	4.125	1.812	3.250	NA	.125	.062	.12	.156		.125	1.625	1.140
531	AC	TRAY BREAKOUT, 84 PIN		1900806-021		NAS-9-497	B	II	NOTE 11C	4.125	1.812	3.250	NA	.125	.062	.12	.156		.125	1.625	1.140
530	AC	HEAT SINK-TRAY EXTENDER		1900808-021		NAS-9-497	B	II	NOTE 11C	2.125	.968	1.718	NA	.093	.031	.06	.093		.093	.858	.608
529	AC	TESTER, FAILURE INDICATOR		1900809-021		NAS-9-497	B	II	NOTE 11C	2.125	.968	1.718	NA	.093	.031	.06	.093		.093	.858	.608
527	AC	FIX., MOUNTING, G & N	(-144)	1902204-021		NAS-9-497	B	II	NOTE 11C	FOR DIMENSIONS SEE DASH 500 VALUES BELOW											
526	AC	FIX., MOUNTING, G & N	(-144)	2900067-031		NAS-9-497	B	II	NOTE 11C	FOR DIMENSIONS SEE DASH 500 VALUES BELOW											
525	AC	PORTABLE TEMP. CONTROLLER		1900496-021		NAS-9-497	B	II	NOTE 11C	3.000	1.937	2.437	2.312	.125	.031	.125	.156	.125	.125	1.718	1.18
524	AC	POWER, SERVO & THERMOCOUPLE ASSEMBLY C/M		2010743		NAS-9-497	A	I	NOTE 11B	2.125	.968	1.718	NA	.093	.031	.06	.093	NA	NA	.858	.60
523	AC	PULSE TORQUE AND THERMOCOUPLE ASSEMBLY-LEM		6010656		NAS-9-497	A	I	NOTE 11B	FOR DIMENSIONS SEE DASH 508 VALUES BELOW											
522	AC	COUPLING DATA UNIT & THERMOCOUPLE ASSEMBLY-LEM		2010744		NAS-9-497	A	I	NOTE 11B	FOR DIMENSIONS SEE DASH 508 VALUES BELOW											
521	AC	COUPLING DATA UNIT & THERMOCOUPLE ASSEMBLY-C/M		2010744		NAS-9-497	A	I	NOTE 11B	FOR DIMENSIONS SEE DASH 508 VALUES BELOW											
520	AC	PIPA ELECTRONICS AND THERMOCOUPLE ASSEMBLY		2010745		NAS-9-497	A	I	NOTE 11B	FOR DIMENSIONS SEE DASH 508 VALUES BELOW											
519	AC	FIXTURE, HANDLING, LEM-PSA	(-141)	6900129-011		NAS-9-497	B	II	NOTE 11C	FOR DIMENSIONS SEE DASH 504 VALUES BELOW											
518	AC	JUNCTION BOX, GSE-PSA	(-144)	1901933-031		NAS-9-497	B	II	NOTE 11C	FOR DIMENSIONS SEE DASH 500 VALUES BELOW											
517	AC	FIX., HAND., OPTICS INSTL.	(-141)	2901380-011		NAS-9-497	B	II	NOTE 11C	FOR DIMENSIONS SEE DASH 502 VALUES BELOW											
516	AC	POWER, SERVO AND THERMOCOUPLE ASSEMBLY-LEM		6010655		NAS-9-497	A	I	NOTE 11B	FOR DIMENSIONS SEE DASH 508 VALUES BELOW											
514	AC	SIGNAL COND. ASSY LEM OPER.	(-100)	6007013		NAS-9-497	A	I	NOTE 11B	FOR DIMENSIONS SEE DASH 508 VALUES BELOW											
513	AC	JUMPER, BY-PASS	(-141)	1021616		NAS-9-497	B	II	NOTE 11C	2.125	.968	1.718	NA	.093	.031	.06	.093		.093	.858	.6
512	AC	COUPLING DATA UNIT ASSEMBLY C/M	(-100)	2007322-011		NAS-9-497	A	I	NOTE 11B	FOR DIMENSIONS SEE DASH 508 VALUES BELOW											
511	AC	COUPLING DATA UNIT ASSEMBLY-LEM	(-100)	2007322-021		NAS-9-497	A	I	NOTE 11B	FOR DIMENSIONS SEE DASH 508 VALUES BELOW											
510	AC	BATTERY POWER PACK	(-144)	1900011-041		NAS-9-497	B	II	NOTE 11C	FOR DIMENSIONS SEE DASH 500 VALUES BELOW											
509	AC	JUNCTION BOX, P.S.A./G.S.E.	(-144)	1902195-021		NAS-9-497	B	II	NOTE 11C	FOR DIMENSIONS SEE DASH 500 VALUES BELOW											
508	AC	NAVIGATION BASE ASSEMBLY-LEM	(-101)	6899980		NAS-9-497	A	I	NOTE 11B	2.000	1.312	1.906	1.375	.078	.048	.078	.093	NA	NA	1.125	.7
507	AC	CSL, COOL, AND PWR, G AND N	(-144)	1902134-041		NAS-9-497	B	II	NOTE 11C	FOR DIMENSIONS SEE DASH 500 VALUES BELOW											
506	AC	BREAKOUT BOX, CABLE ADAPTER	(-141)	2901011-011		NAS-9-497	B	II	NOTE 11C	2.125	.968	1.718	NA	.093	.031	.06	.093		.093	.858	.6
505	AC	MONITOR AND CONTROL, TEMP	(-141)	2900026-021		NAS-9-497	B	II	NOTE 11C	2.125	.968	1.718	NA	.093	.031	.06	.093		.093	.858	.6
504	AC	PWR SUP, GUIDANCE SYSTEM	(-141)	1900033-021		NAS-9-497	B	II	NOTE 11C	2.125	.968	1.718	NA	.093	.031	.06	.093		.093	.858	.6
503	AC	CONTROL, GIMBAL POSITION	(-141)	2900036-021		NAS-9-497	B	II	NOTE 11C	2.125	.968	1.718	NA	.093	.031	.06	.093		.093	.858	.6
502	AC	ADPT, TEST POINT, PTA/PEA.	(-141)	2900145-021		NAS-9-497	B	II	NOTE 11C	2.125	.968	1.718	NA	.093	.031	.06	.093		.093	.858	.6
501	AC	MOUNTING PLATE, COMPONENT	(-144)	6900007-031		NAS 9-497	B	II	NOTE 11C	FOR DIMENSIONS SEE DASH 500 VALUES BELOW											
500	AC	MOUNTING PLATE, COMPONENT	(-144)	2900677-021		NAS-9-497	B	II	NOTE 11C	4.125	1.812	3.250	NA	.125	.062	.12	.156		.125	1.625	1.

NOTES FOR TABLE

STYLE A IS FOR G & N SYSTEM
STYLE B IS FOR GROUND SUPPORT EQUIPMENT
TYPE I IS WITHOUT MOUNTING HOLES
TYPE II IS WITH MOUNTING HOLES

1004260	CL	SHT 6

1/1004260

REVISIONS					
SYM	ZONE	DESCRIPTION	CHG NO	DATE	APPD
CL		REPLACES REV CK WITH CHANGE PER TDRR 34365		9/28/67	JL RWH

D	E	F	G	H	J	K	L	M	N	P	R	S	T	U	V	W	Y	Z	AA	AB	AC	AD	AE	AF	AG	AH	AJ	AK	AL	AM	AN	AP	AR
DASH 550 VALUES																																	
DASH 534 VALUES																																	
DASH 181 VALUES																																	
DASH 141 VALUES																																	
DASH 141 VALUES																																	
DASH 500 VALUES																																	
	.078	.048	.078	.093	NA	NA	1.125	.750	.593	.453	1.015	.062	.187	.078	.875	.718	1.375	.218	NA	NA	.048	.031	.875	.305	NA	.468	1.531	NA	NA	.078	.312	.187	NA
	.078	.048	.078	.093	NA	NA	1.125	.750	.593	.453	1.015	.062	.187	.078	.875	.718	1.375	.218	NA	NA	.048	.031	.875	.305	NA	.468	1.531	NA	NA	.078	.312	.187	NA
	.078	.048	.078	.093	NA	NA	1.125	.750	.593	.453	1.015	.062	.187	.078	.875	.718	1.375	.218	NA	NA	.048	.031	.875	.305	NA	.468	1.531	NA	NA	.078	.312	.187	NA
	.078	.048	.078	.093	NA	NA	1.125	.750	.593	.453	1.015	.062	.187	.078	.875	.718	1.375	.218	NA	NA	.048	.031	.875	.305	NA	.468	1.531	NA	NA	.078	.312	.187	NA
	.078	.048	.078	.093	NA	NA	1.125	.750	.593	.453	1.015	.062	.187	.078	.875	.718	1.375	.218	NA	NA	.048	.031	.875	.305	NA	.468	1.531	NA	NA	.078	.312	.187	NA
	.078	.048	.078	.093	NA	NA	1.125	.750	.593	.453	1.015	.062	.187	.078	.875	.718	1.375	.218	NA	NA	.048	.031	.875	.305	NA	.468	1.531	NA	NA	.078	.312	.187	NA
	.093	.031	.06	.093	[illegible]	.093	.858	.608	.484	.358	.733	.077	.116	.062	.937	.875	1.343	.125	.781	1.892	.046	NA	NA	.209	.093	.250	1.875	NA	1.840	.046	.23	.16	1.938
	.125	.062	.12	.156		.125	1.625	1.140	.890	.640	1.390	.125	.171	.125	1.875	1.687	2.625	.250	1.562	3.843	.093	NA	NA	.359	.125	.437	3.688	NA	3.687	.093	.40	.25	3.875
	.093	.031	.06	.093	[illegible]	.093	.858	.608	.484	.358	.733	.077	.116	.062	.937	.875	1.343	.125	.781	1.892	.046	NA	NA	.209	.093	.250	1.875	NA	1.840	.046	.23	.16	1.938
	.125	.062	.188	.156	NA	NA	1.750	1.125	.906	.688	1.500	NA	.281	.125	NA	1.094	2.062	.312	NA	2.500	.062	.125	1.312	.469	NA	NA	NA	.156	NA	.125	.469	.344	NA
	.093	.031	.06	.093	[illegible]	.093	.858	.608	.484	.358	.733	.077	.116	.062	.937	.875	1.343	.125	.781	1.892	.046	NA	NA	.209	.093	.250	1.875	NA	1.840	.046	.23	.16	1.938
	.093	.031	.06	.093		.093	.858	.608	.484	.358	.733	.077	.116	.062	.937	.875	1.343	.125	.781	1.892	.046	NA	NA	.209	.093	.250	1.875	NA	1.840	.046	.23	.25	1.938
	.093	.031	.06	.093		.093	.858	.608	.484	.358	.733	.077	.116	.062	.937	.875	1.343	.125	.781	1.892	.046	NA	NA	.209	.093	.250	1.875	NA	1.840	.046	.23	.16	1.938
	.125	.062	.12	.156		.125	1.625	1.140	.890	.640	1.390	.125	.171	.125	1.875	1.687	2.625	.250	1.562	3.843	.093	NA	NA	.359	.125	.437	3.688	NA	3.687	.093	.40	.25	3.875
	.093	.031	.06	.093	[illegible]	.093	[illegible]	.608	.484	.358	.733	.077	.116	.062	.937	.875	1.343	.125	.781	1.892	.046	NA	NA	.209	.093	.250	1.875	NA	1.840	.046	.23	.16	1.938
	.078	.048	.078	.093	NA	NA	1.125	.750	.593	.453	1.015	.062	.187	.078	.875	.718	1.375	.218	NA	NA	.048	.031	.875	.305	.078	.531	1.906	.078	NA	.078	.531	.187	NA
	.078	.048	.078	.093	NA	NA	1.125	.750	.593	.453	1.015	.062	.187	.078	.875	.718	1.375	.218	NA	NA	.048	.031	.875	.305	.078	.531	1.906	.078	NA	.078	.531	.187	NA
	.093	.031	.06	.093	[illegible]	.093	.858	.608	.484	.358	.733	.077	.116	.062	.937	.875	1.343	.125	.781	1.892	.046	NA	NA	.209	.093	.250	1.875	NA	1.840	.046	.23	.16	1.938
	.125	.062	.12	.156		.125	1.625	1.140	.890	.640	1.390	.125	.171	.125	1.875	1.687	2.625	.250	1.562	3.843	.093	NA	NA	.359	.125	.437	3.688	NA	3.687	.093	.40	.25	3.875
	.093	.031	.06	.093	[illegible]	.093	.858	.608	.484	.358	.733	.077	.116	.062	.937	.875	1.343	.125	.781	1.892	.046	NA	NA	.209	.093	.250	1.875	NA	1.840	.046	.23	.16	1.938
	.078	.048	.078	.093	NA	NA	1.125	.750	.593	.453	1.015	.062	.187	.078	.875	.718	1.375	.218	NA	NA	.048	.031	.875	.305	.078	.531	1.906	.078	NA	.078	.531	.187	NA
	.093	.031	.06	.093	[illegible]	.093	.858	.608	.484	.358	.733	.077	.116	.062	.937	.875	1.343	.125	.781	1.892	.046	NA	NA	.209	.093	.250	1.875	NA	1.840	.046	.23	.16	1.938
	.125	.062	.12	.156		.125	1.625	1.140	.890	.640	1.390	.125	.171	.125	1.875	1.687	2.625	.250	1.562	3.843	.093	NA	NA	.359	.125	.437	3.688	NA	3.687	.093	.40	.25	3.875
	.125	.062	.12	.156		.125	1.625	1.140	.890	.640	1.390	.125	.171	.125	1.875	1.687	2.625	.250	1.562	3.843	.093	NA	NA	.359	.125	.437	3.688	NA	3.687	.093	.40	.25	3.875
	.093	.031	.06	.093		.093	.858	.608	.484	.358	.733	.077	.116	.062	.937	.875	1.343	.125	.781	1.892	.046	NA	NA	.209	.093	.250	1.875	NA	1.840	.046	.23	.16	1.938
	.093	.031	.06	.093	[illegible]	.093	.858	.608	.484	.358	.733	.077	.116	.062	.937	.875	1.343	.125	.781	1.892	.046	NA	NA	.209	.093	.250	1.875	NA	1.840	.046	.23	.16	1.938
DASH 500 VALUES BELOW																																	
DASH 500 VALUES BELOW																																	
	.125	.031	.125	.156	.125	.125	1.718	1.187	.968	.749	1.452	.093	.295	.090	1.312	1.00	2.000	.250	1.687	2.750	.062	NA	NA	.463	.125	.562	2.437	.140	2.562	.090	.468	.359	2.750
	.093	.031	.06	.093	NA	NA	.858	.608	.484	.358	.733	.062	.140	.062	NA	.968	1.450	.125	NA	1.720	.046	.03	NA	.210	NA	NA	NA	.070	NA	.046	.32	.16	NA
DASH 508 VALUES BELOW																																	
DASH 508 VALUES BELOW																																	
DASH 508 VALUES BELOW																																	
DASH 508 VALUES BELOW																																	
DASH 504 VALUES BELOW																																	
DASH 500 VALUES BELOW																																	
DASH 502 VALUES BELOW																																	
DASH 508 VALUES BELOW																																	
DASH 508 VALUES BELOW																																	
	.093	.031	.06	.093	[illegible]	.093	.858	.608	.484	.358	.733	.077	.116	.062	.937	.875	1.343	.125	.781	1.892	.046	NA	NA	.209	.093	.250	1.875	NA	1.840	.046	.23	.16	1.938
DASH 508 VALUES BELOW																																	
DASH 508 VALUES BELOW																																	
DASH 500 VALUES BELOW																																	
DASH 500 VALUES BELOW																																	
	.078	.048	.078	.093	NA	NA	1.125	.750	.593	.453	1.015	.062	.187	.078	.875	.718	1.375	.218	NA	NA	.048	.031	.875	.305	.078	.531	1.906	.078	NA	.078	.531	.187	NA
DASH 500 VALUES BELOW																																	
	.093	.031	.06	.093	[illegible]	.093	.858	.608	.484	.358	.733	.077	.116	.062	.937	.875	1.343	.125	.781	1.892	.046	NA	NA	.209	.093	.250	1.875	NA	1.840	.046	.23	.16	1.938
	.093	.031	.06	.093		.093	.858	.608	.484	.358	.733	.077	.116	.062	.937	.875	1.343	.125	.781	1.892	.046	NA	NA	.209	.093	.250	1.875	NA	1.840	.046	.23	.16	1.938
	.093	.031	.06	.093		.093	.858	.608	.484	.358	.733	.077	.116	.062	.937	.875	1.343	.125	.781	1.892	.046	NA	NA	.209	.093	.250	1.875	NA	1.840	.046	.23	.16	1.938
	.093	.031	.06	.093		.093	.858	.608	.484	.358	.733	.077	.116	.062	.937	.875	1.343	.125	.781	1.892	.046	NA	NA	.209	.093	.250	1.875	NA	1.840	.046	.23	.16	1.938
	.093	.031	.06	.093	[illegible]	.093	.858	.608	.484	.358	.733	.077	.116	.062	.937	.875	1.343	.125	.781	1.892	.046	NA	NA	.209	.093	.250	1.875	NA	1.840	.046	.23	.16	1.938
DASH 500 VALUES BELOW																																	
	.125	.062	.12	.156	[illegible]	.125	1.625	1.140	.890	.640	1.390	.125	.171	.125	1.875	1.687	2.625	.250	1.562	3.843	.093	NA	NA	.359	.125	.437	3.688	NA	3.687	.093	.40	.25	3.875

AC ELECTRONICS DASH NUMBERS

UNLESS OTHERWISE SPECIFIED
DIMENSIONS ARE IN INCHES
TOLERANCES ON
2 PLACE DECIMALS ± 3 PLACE DECIMALS ± .005 ANGLES ±
DO NOT SCALE THIS DRAWING
MATERIAL SEE NOTE II
APPROVAL

AS APPLICABLE
NEXT ASSY | USED ON
APPLICATION

MIT INSTRUMENTATION LAB
CAMBRIDGE MASS
DRAWN R A JONES DATE 16 JUL 65
CHECKED
APPROVAL W KUPFER 22 JUL 65
CONTRACT
NASA APPROVAL T. MICHAELS 22 JUL 65
MIT APPROVAL W KUPFER 22 JUL 65

MANNED
SPACECRAFT CENTER
HOUSTON, TEXAS

NAMEPLATES,
APOLLO G&N - GSE
(STANDARDS)

SIZE J2
CODE IDENT NO 80230
1004260
SCALE NONE
SHEET 6 OF 6

1004260 CL SHT 6

2/1004260

NOTES:

1. INTERPRET DRAWING IN ACCORDANCE WITH STANDARDS PRESCRIBED BY MIL-D-70327.
2. DIMENSIONS ON EACH VIEW APPLY TO ALL VIEWS (WITH THE EXCEPTION OF MOUNTING HOLES).
3. FORMATS ILLUSTRATED WILL BE APPLICABLE TO ALL ITEMS REQUIRING NAMEPLATES BELOW END ITEM DESIGNATION (SYSTEMS, ASSEMBLIES, ETC.)
4. PLATE BACKGROUND TO BE LUSTERLESS BLACK PER FED-STD-595, COLOR 37038. BORDER, MARKING AND LETTERING TO BE NATURAL METAL, (ANODIZED ALUMINUM).
5. MARKING METHOD TO BE DIE STAMPING, ETCHING OR ENGRAVING IN ACCORDANCE WITH MIL-P-19834.
6. LETTERING STYLE TO BE GOTHIC, (SANS SERIFS), AND NUMBERS TO BE ARABIC.
7. WHERE LOCATING DIMENSIONS ARE NOT SHOWN, CHARACTERS SHALL BE SYMMETRICALLY POSITIONED.
8. IDENTIFY WITH DRAWING NUMBER PER ND 1002019.
9. WHEN "AUTO MARK" METAL MARKING TYPEWRITER IS USED TO ADD DATA TO BLANK SPACES, TYPE SIZE IS TO BE SELECTED FROM DIMENSIONS U, AC, AND AM.
10. NASA SYMBOL IS TO BE PROPORTIONAL TO NAMEPLATE IN RATIO OF 1 TO 5 WITH DIMENSION A VALUE AND IS TO HAVE NATURAL BACKGROUND. NASA SYMBOL LETTERS LETTERING AND FEATHER TO BE BLACK, (OR WHITE FOR SILK SCREENING). WHERE BLACK FEATHER PROTRUDES INTO BLACK BACKGROUND, A MINIMUM OUTLINE OF NATURAL BACKGROUND SHALL EXIST.
11. NAMEPLATES WILL BE APPLIED BY METHODS LISTED BELOW, SHOWN IN ORDER OF PREFERENCE, (I.E., FOR RELIABILITY AND WEIGHT).
    - A - STENCIL OR SILK SCREEN DIRECTLY ON EQUIPMENT USING INK PER SCD 1010920, (WHITE OR BLACK).
    - B - ALUMINUM FOIL, (STYLE A OR B, TYPE I):
      FOIL SHALL BE .0030 ± .0005 THICK PER MIL-A-148.
      FOIL SHALL HAVE NO ADHESIVE BACKING.
      FOIL SHALL BE BONDED PER ND 1002219, (METHOD II).
      FOIL SHALL BE CLEAR ANODIZED PER MIL-A-8625, TYPE II.
    - C - PLATE, (STYLE A OR B, TYPE II):
      MATERIAL: QQ-A-250, TEMPER 0 OR H14, TYPE 1100, ALUMINUM ALLOY, .032 THICK. ANODIZE PER MIL-A-8625, TYPE II.
      ALUMINUM PLATE MUST BE FREE FROM BURRS AND SHARP CORNERS, MOUNTED WITH APPLICABLE SIZE FASTENERS.
12. NAMEPLATES SHALL BE CAPABLE OF MEETING APPLICABLE REQUIREMENTS OF MIL-M-13231.
13. ON DIMENSION TABLES SHOWN ON PAGES 2, 3, 4, 5, AND 6, NA MEANS, "NOT APPLICABLE".

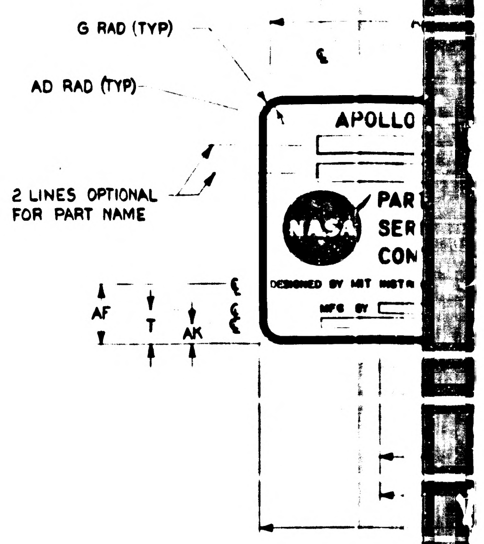

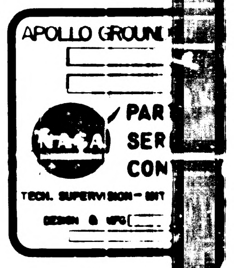

WITHO

SUGGESTED PROPORTIONS FOR NAMEPLATE DIMENSIONS.
1. SELECT NAMEPLATE LENGTH, DIMENSION "A", TO FIT DESIGN NEEDS.
2. DIMENSIONS B THRU AS ON LINE 1 BELOW ARE PROPORTIONAL TO "A" BY MULTIPLIERS SHOWN IN LINE 2 BELOW.

1. A	B	C	D	E	F	G	H	J	K	L	M	N	P	R	S	T	U	V	W	Y	Z	AA	AB	AC	AD	AE	AF	AG	AH	AJ	AK	AL	AM	AN	AP	AR	AS
2. 1.000A	.6563A	.8438A	.6875A	.0391A	.0240A	.0391A	.0469A	.0547A	.0469A	.5938A	.3750A	.2969A	.2187A	.5079A	.0313A	.0938A	.0391A	.4375A	.3594A	.6875A	.1094A	.5781A	.9219A	.0240A	.0156A	.4375A	.1525A	.0391A	.1563A	.8438A	.0548A	.8659A	.0391A	.1563A	.0938A	.9219A	.0151A

1004260	CM	SHT 1

REVISIONS					
SYM	ZONE	DESCRIPTION	CHG NO	DATE	APPD
CL		REPLACES REV CK WITHOUT CHANGE PER TDRR 34365		4/28/67	JWL RWH
CM		REVISION STATUS CHANGED		18 OCT 67	RAW

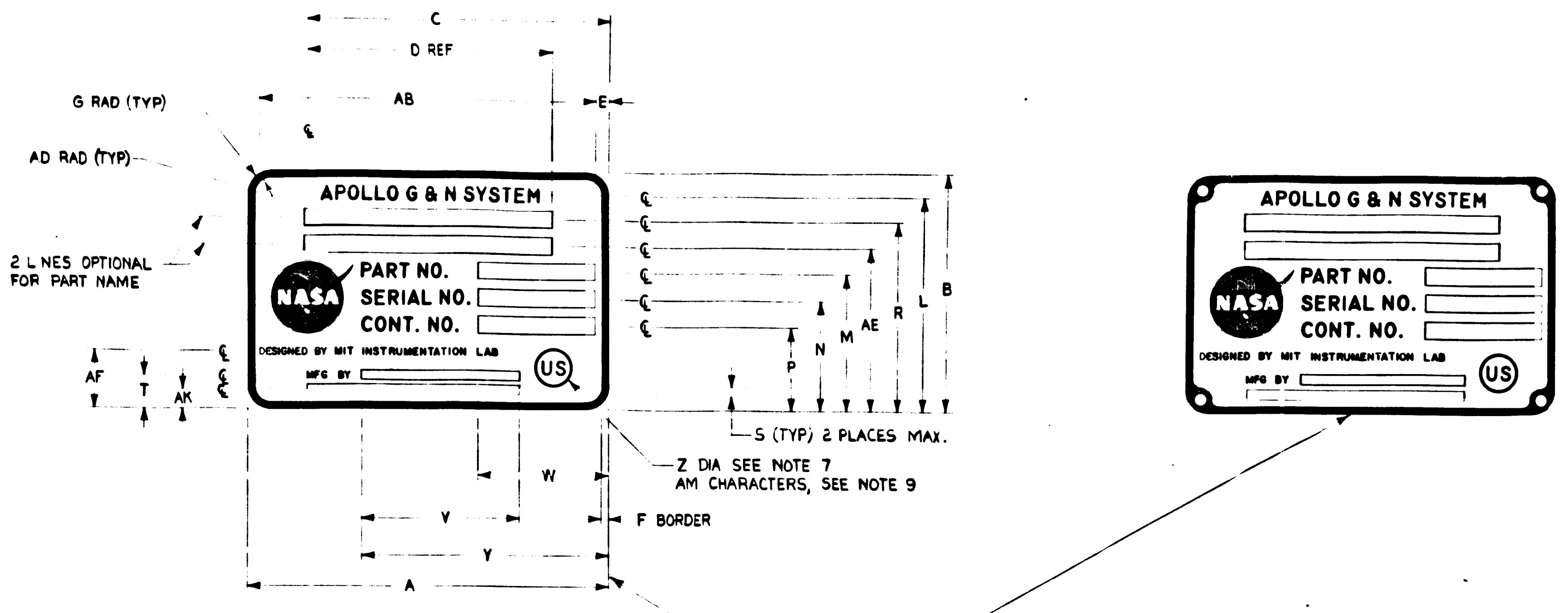

C
D REF
AB
E
G RAD (TYP)
AD RAD (TYP)
2 LINES OPTIONAL FOR PART NAME
APOLLO G & N SYSTEM
NASA
PART NO.
SERIAL NO.
CONT. NO.
DESIGNED BY MIT INSTRUMENTATION LAB
MFG BY
US
AF
T
AK
P
N
M
AE
R
L
B
S (TYP) 2 PLACES MAX.
Z DIA SEE NOTE 7
AM CHARACTERS, SEE NOTE 9
W
V
Y
F BORDER
A

FOR G AND N SYSTEM
STYLE A

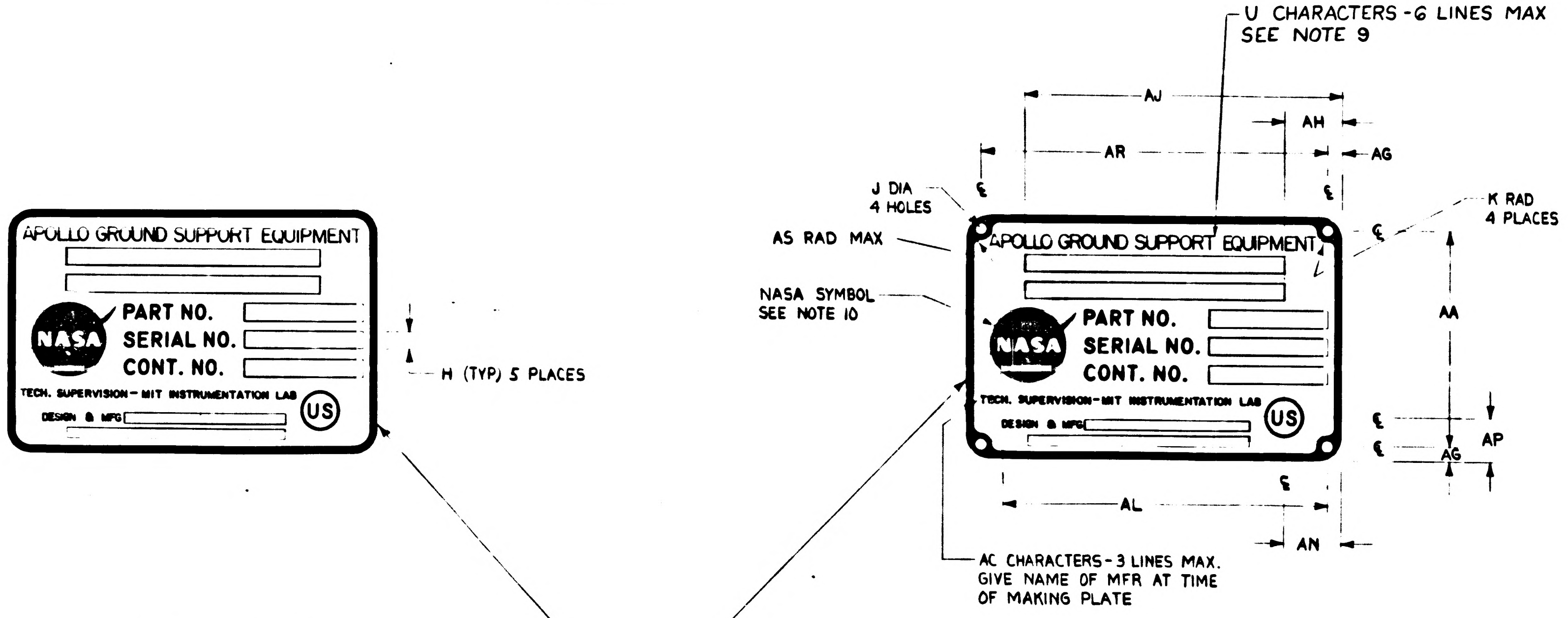

U CHARACTERS - 6 LINES MAX
SEE NOTE 9
AJ
AH
AR
AG
J DIA
4 HOLES
K RAD
4 PLACES
AS RAD MAX
NASA SYMBOL
SEE NOTE 10
APOLLO GROUND SUPPORT EQUIPMENT
NASA
PART NO.
SERIAL NO.
CONT. NO.
TECH. SUPERVISION - MIT INSTRUMENTATION LAB
DESIGN & MFG
US
H (TYP) 5 PLACES
AA
AP
AG
AL
AN
AC CHARACTERS - 3 LINES MAX.
GIVE NAME OF MFR AT TIME
OF MAKING PLATE

WITHOUT MOUNTING HOLES
TYPE I

WITH MOUNTING HOLES
TYPE II

FOR GROUND SUPPORT EQUIPMENT
STYLE B

UNLESS OTHERWISE SPECIFIED DIMENSIONS ARE IN INCHES TOLERANCES ON 2 PLACE DECIMALS ± 3 PLACE DECIMALS ± .005 ANGLES ±	M I T INSTRUMENTATION LAB CAMBRIDGE, MASS	MANNED SPACECRAFT CENTER HOUSTON, TEXAS	
	DRAWN R. A. JONES DATE 16 JUL 65	NAMEPLATES, APOLLO G&N - GSE (STANDARDS)	
	CHECKED W. KUPFER APPROVAL 22 JUL 65		
DO NOT SCALE THIS DRAWING	CONTRACT		
MATERIAL SEE NOTE II	T. MICHAELS 22 JUL 65 NASA APPROVAL	SIZE J2	CODE IDENT NO. 80230	1004260
APPROVAL	W. KUPFER 22 JUL 65 MIT APPROVAL	SCALE NONE	SHEET 1 OF 6

AS APPLICABLE	
NEXT ASSY	USED ON
APPLICATION	

1004260 CM SHT 1

1004260 CM

1004260

SHEET 1 OF 6
1004260

2/1004260

NOTICE [illegible]

DASH NO.	P/C	PART NAME	REMARKS	PART NUMBER	SER. NO.	CONT. NO.	STYLE	TYPE	MATERIAL	A	B	C	D	E	F	G	H	J	K	L	M	N
399	K																					
398	K																					
350	K	ALIGNMENT OPTICAL TELESCOPE (LEM)		NA	NA	NA	A	I	NOTE 11B	4.000	2.625	3.375	2.750	.156	.093	.156	.187	NA	NA	2.312	1.468	1.187
309	K																					
308	K																					
307	K						B	I	NOTE 11B	4.000	2.625	3.375	2.750	.156	.093	.156	.187	NA	NA	2.328	1.468	1.1
306	K						B	II	NOTE 11C	4.000	2.625	3.375	2.750	.156	.093	.156	.187	.125	.156	2.328	1.468	1.
305	K						B	I	NOTE 11B	2.000	1.312	1.687	1.375	.078	.048	.078	.093	NA	NA	1.164	.734	.
304	K						B	II	NOTE 11C	2.000	1.312	1.687	1.375	.078	.048	.078	.093	.070	.078	1.164	.734	.
303	K																					
302	K																					
301	K																					
300	K	OPTICAL UNIT		NA	NA	NA	A	I	NOTE 11B	2.000	1.312	1.675	NA	NA	.048	.078	NA	NA	NA	1.090	.812	.
9	K	2 IN AUTOCOLLIMATOR		1001702			B	II	NOTE 11C	4.000	2.625	3.812	2.750	.156	.093	.156	.187	.125	.156	2.250	1.500	1.
8	K	5 IN AUTOCOLLIMATOR		1017410			B	II	NOTE 11C	4.000	2.625	3.812	2.750	.156	.093	.156	.187	.125	.156	2.250	1.500	1.
7	K	2-1/2 IN AUTOCOLLIMATOR (SCT)		1017435			B	II	NOTE 11C	4.000	2.625	3.812	2.750	.156	.093	.156	.187	.125	.156	2.250	1.500	1.
6	K	2-1/2 IN AUTOCOLLIMATOR (SXT)		1017448			B	II	NOTE 11C	4.000	2.625	3.812	2.750	.156	.093	.156	.187	.125	.156	2.250	1.500	1.
5	K	RETROREFLECTING PRISM ASSEMBLY		1019840			B	I	NOTE 11B	4.000	2.625	3.812	2.750	.156	.093	.156	.187	NA	NA	2.250	1.500	1.
4	K	S/H SIMULATOR ASSEMBLY		1019896			B	I	NOTE 11B	4.000	2.625	3.812	2.750	.156	.093	.156	.187	NA	NA	2.250	1.500	1.
3	K	REFERENCE MIRROR		1001767			B	I	NOTE 11B	2.000	1.312	1.906	1.375	.078	.048	.078	.093	NA	NA	1.125	.750	.
2	K	2 IN PLANE READING AUTOCOLLIMATOR		1017413			B	I	NOTE 11B	2.000	1.312	1.906	1.375	.078	.048	.078	.093	NA	NA	1.125	.750	.
1	K	2 IN AUTOCOLLIMATOR		1001702			B	I	NOTE 11B	2.000	1.312	1.906	1.375	.078	.048	.078	.093	NA	NA	1.125	.750	.

NOTES FOR TABLE

STYLE A IS FOR G & N SYSTEM
STYLE B IS FOR GROUND SUPPORT EQUIPMENT
TYPE I IS WITHOUT MOUNTING HOLES
TYPE II IS WITH MOUNTING HOLES

REVISIONS					
SYM	ZONE	DESCRIPTION	CHG NO	DATE	APPD
CL		REPLACES REV CK WITHOUT CHANGE PER TDRR 34365		9/28/67	JWL RWH
CM		REVISION STATUS CHANGED		18 OCT 67	R.A.W.

E	F	G	H	J	K	L	M	N	P	R	S	T	U	V	W	Y	Z	AA	AB	AC	AD	AE	AF	AG	AH	AJ	AK	AL	AM	AN	AP	AR
.156	.093	.156	.187	NA	NA	2.312	1.468	1.187	.906	2.031	NA	.375	.156	NA	1.437	2.750	.437	NA	3.688	.062	.062	1.750	.593	NA	.625	3.375	.187	NA	.156	.531	.453	NA
.156	.093	.156	.187	NA	NA	2.328	1.468	1.187	.906	2.031	.062	.375	.156	NA	1.437	2.750	.437	NA	3.687	.062	.062	1.750	.593	NA	NA	NA	NA	NA	NA	NA	NA	NA
.156	.093	.156	.187	.125	.156	2.328	1.468	1.187	.906	2.031	.062	.375	.156	NA	1.437	2.750	.437	2.312	3.687	.062	NA	1.750	.593	NA	NA	NA	NA	NA	NA	NA	NA	NA
.078	.048	.078	.093	NA	NA	1.164	.734	.593	.453	1.015	.048	.171	.078	NA	.718	1.375	.187	NA	NA	.048	.031	.875	.320	NA	NA	NA	NA	NA	NA	NA	NA	NA
.078	.048	.078	.093	.070	.078	1.164	.734	.593	.453	1.015	.048	.171	.078	NA	.718	1.375	.187	.156	1.843	.048	NA	.875	.320	NA	NA	NA	NA	NA	NA	NA	NA	NA
NA	.048	.078	NA	NA	NA	1.090	.812	.675	.540	.940	NA	.265	NA	NA	NA	1.375	.218	NA	NA	NA	NA	NA	.375	NA	NA	NA	.180	NA	.078	NA	NA	NA
.156	.093	.156	.187	.125	.156	2.250	1.500	1.187	.906	2.031	.093	.375	.156	1.750	1.437	2.750	.437	2.312	3.687	.062	NA	1.750	.593	.156	1.062	3.812	.156	NA	.156	1.062	.375	3.687
.156	.093	.156	.187	.125	.156	2.250	1.500	1.187	.906	2.031	.093	.375	.156	1.750	1.437	2.750	.437	2.312	3.687	.062	NA	1.750	.593	.156	1.062	3.812	.156	NA	.156	1.062	.375	3.687
.156	.093	.156	.187	.125	.156	2.250	1.500	1.187	.906	2.031	.093	.375	.156	1.750	1.437	2.750	.437	2.312	3.687	.062	NA	1.750	.593	.156	1.062	3.812	.156	NA	.156	1.062	.375	3.687
.156	.093	.156	.187	.125	.156	2.250	1.500	1.187	.906	2.031	.093	.375	.156	1.750	1.437	2.750	.437	2.312	3.687	.062	NA	1.750	.593	.156	1.062	3.812	.156	NA	.156	1.062	.375	3.687
.156	.093	.156	.187	NA	NA	2.250	1.500	1.187	.906	2.031	.093	.375	.156	1.750	1.437	2.750	.437	NA	NA	.062	.062	1.750	.593	.156	1.062	3.812	.156	NA	.156	1.062	.375	NA
.156	.093	.156	.187	NA	NA	2.250	1.500	1.187	.906	2.031	.093	.375	.156	1.750	1.437	2.750	.437	NA	NA	.062	.062	1.750	.593	.156	1.062	3.812	.156	NA	.156	1.062	.375	NA
.078	.048	.078	.093	NA	NA	1.125	.750	.593	.453	1.015	.062	.187	.078	.875	.718	1.375	.218	NA	NA	.048	.031	.875	.305	.078	.531	1.906	.078	NA	.078	.531	.187	NA
.078	.048	.078	.093	NA	NA	1.125	.750	.593	.453	1.015	.062	.187	.078	.875	.718	1.375	.218	NA	NA	.048	.031	.875	.305	.078	.531	1.906	.078	NA	.078	.531	.187	NA
.078	.048	.078	.093	NA	NA	1.125	.750	.593	.453	1.015	.062	.187	.078	.875	.718	1.375	.218	NA	NA	.048	.031	.875	.305	.078	.531	1.906	.078	NA	.078	.531	.187	NA

KOLLSMAN DASH NUMBERS

UNLESS OTHERWISE SPECIFIED DIMENSIONS ARE IN INCHES TOLERANCES ON 2 PLACE DECIMALS ± 3 PLACE DECIMALS ± .005 ANGLES ±	M I T INSTRUMENTATION LAB CAMBRIDGE MASS	MANNED SPACECRAFT CENTER HOUSTON, TEXAS	
DO NOT SCALE THIS DRAWING	DRAWN R. A. JONES DATE 16 JUL 65	NAMEPLATES, APOLLO G&N - GSE (STANDARDS)	
MATERIAL SEE NOTE 11	CHECKED W. KUPFER 22 JUL 65	SIZE J2	CODE IDENT NO 80230
APPROVAL	APPROVAL		1004260
	CONTRACT	SCALE NONE	SHEET 2 OF 6
	NASA APPROVAL T. MICHAELS 22 JUL 65		
	MIT APPROVAL W. KUPFER 22 JUL 65		

NEXT ASSY	USED ON
AS APPLICABLE	
APPLICATION	

1004260 CM SHT 2

1004260 CM

1004260

2/1004260

DASH NO.	P/C	PART NAME	REMARKS	PART NUMBER	SER. NO.	CONT. NO.	STYLE	TYPE	MATERIAL	A	B	C	D	E	F	G	H	J	K	L	M	N	P	R
299	R																							
298	R																							
285	R	BUFFER CIRCUIT ASSY		2014254-031	NA	NAS-9-497	B	I	NOTE 11B	FOR DIMENSIONS SEE DASH 15 VALUES BELOW														
284	R	LOGIC DRAWER ASSY NO. 2		2014037-041	NA	NAS-9-497	B	I	NOTE 11B	FOR DIMENSIONS SEE DASH 17 VALUES BELOW														
283	R	DRAWER ASSY-PROGRAM & MONITOR		2014041-051	NA	NAS-9-497	B	I	NOTE 11B	FOR DIMENSIONS SEE DASH 17 VALUES BELOW														
282	R	COMPUTER TEST SET		2014042-061	NA	NAS-9-497	B	II	NOTE 11C	FOR DIMENSIONS SEE DASH 18 VALUES BELOW														
281	R	AGC HANDLING FIXTURE		2014282-031	NA	NAS-9-497	B	I	NOTE 11B	FOR DIMENSIONS SEE DASH 17 VALUES BELOW														
280	R	COMPUTER TEST SET		2014042-051	NA	NAS-9-497	B	II	NOTE 11C	FOR DIMENSIONS SEE DASH 18 VALUES BELOW														
279	R	SELF TEST ASSY		2014366-041	NA	NAS-9-497	B	I	NOTE 11B	FOR DIMENSIONS SEE DASH 15 VALUES BELOW														
278	R	LOGIC DRAWER ASSY NO. 1		2014036-041	NA	NAS-9-497	B	I	NOTE 11B	FOR DIMENSIONS SEE DASH 17 VALUES BELOW														
277	R	COMPUTER TEST SET		2014042-041	NA	NAS-9-497	B	II	NOTE 11C	FOR DIMENSIONS SEE DASH 18 VALUES BELOW														
276	R	DRAWER ASSY-PROGRAM & MONITOR		2014041-041	NA	NAS-9-497	B	I	NOTE 11B	FOR DIMENSIONS SEE DASH 17 VALUES BELOW														
275	R	DRAWER ASSY RDC INTERFACE		2014045-031	NA	NAS-9-497	B	I	NOTE 11B	FOR DIMENSIONS SEE DASH 15 VALUES BELOW														
274	R	SELF TEST ASSY		2014366-031	NA	NAS-9-497	B	I	NOTE 11B	FOR DIMENSIONS SEE DASH 15 VALUES BELOW														
273	R	LOGIC DRAWER ASSY NO. 2		2014037-031	NA	NAS-9-497	B	I	NOTE 11B	FOR DIMENSIONS SEE DASH 17 VALUES BELOW														
272	R	DRAWING ASSY PROGRAMMER & MONITOR		2014041-031	NA	NAS-9-497	B	I	NOTE 11B	FOR DIMENSIONS SEE DASH 17 VALUES BELOW														
271	R	LOGIC DRAWER ASSY NO. 1		2014036-031	NA	NAS-9-497	B	I	NOTE 11B	FOR DIMENSIONS SEE DASH 17 VALUES BELOW														
270	R	COMPUTER TEST SET		2014042-031	NA	NAS-9-497	B	II	NOTE 11C	FOR DIMENSIONS SEE DASH 18 VALUES BELOW														
269	R	POWER CONTROL ASSY		2014044-021	NA	NAS-9-497	B	I	NOTE 11B	FOR DIMENSIONS SEE DASH 17 VALUES BELOW														
268	R	SELF TEST ASSY		2014366-021	NA	NAS-9-497	B	I	NOTE 11B	FOR DIMENSIONS SEE DASH 15 VALUES BELOW														
267	R	AGC JUNCTION ASSY		2014341-021	NA	NAS-9-497	B	I	NOTE 11B	FOR DIMENSIONS SEE DASH 15 VALUES BELOW														
266	R	POWER CONTROL ASSY		2014079-021	NA	NAS-9-497	B	I	NOTE 11B	FOR DIMENSIONS SEE DASH 15 VALUES BELOW														
265	R	BUFFER CIRCUIT ASSY		2014254-021	NA	NAS-9-497	B	I	NOTE 11B	FOR DIMENSIONS SEE DASH 15 VALUES BELOW														
264	R	DRAWER ASSY X Y INTERFACE		2014040-021	NA	NAS-9-497	B	I	NOTE 11B	FOR DIMENSIONS SEE DASH 15 VALUES BELOW														
263	R	DRAWER ASSY RDC INTERFACE		2014045-021	NA	NAS-9-497	B	I	NOTE 11B	FOR DIMENSIONS SEE DASH 15 VALUES BELOW														
262	R	DRAWER ASSY PROGRAMMER & MONITOR		2014041-021	NA	NAS-9-497	B	I	NOTE 11B	FOR DIMENSIONS SEE DASH 17 VALUES BELOW														
261	R	LOGIC DRAWER ASSY NO. 2		2014037-021	NA	NAS-9-497	B	I	NOTE 11B	FOR DIMENSIONS SEE DASH 17 VALUES BELOW														
260	R	LOGIC DRAWER ASSY NO. 1		2014036-021	NA	NAS-9-497	B	I	NOTE 11B	FOR DIMENSIONS SEE DASH 17 VALUES BELOW														
259	R	OPERATION CONSOLE		2014024-021	NA	NAS-9-497	B	II	NOTE 11C	FOR DIMENSIONS SEE DASH 18 VALUES BELOW														
258	R	COMPUTER TEST SET		2014042-021	NA	NAS-9-497	B	II	NOTE 11C	FOR DIMENSIONS SEE DASH 18 VALUES BELOW														
257	R	AUXILIARY CALIBRATION CONSOLE		2014059-021	NA	NAS-9-497	B	II	NOTE 11C	FOR DIMENSIONS SEE DASH 18 VALUES BELOW														
256	R	AGC CALIBRATION CONSOLE		2014049-021	NA	NAS-9-497	B	II	NOTE 11C	FOR DIMENSIONS SEE DASH 18 VALUES BELOW														
255	R	AGC HANDLING FIXTURE		2014282-021	NA	NAS-9-497	B	I	NOTE 11B	FOR DIMENSIONS SEE DASH 17 VALUES BELOW														
254	R	DRAWER ASSY COMP. SIMULATOR		2014048-011	NA	NAS-9-497	B	II	NOTE 11C	FOR DIMENSIONS SEE DASH 18 VALUES BELOW														
253	R	SHIPPING KIT ASSY, NAV DSKY		2016312-011	NA	NAS-9-497	B	II	NOTE 11C	FOR DIMENSIONS SEE DASH 18 VALUES BELOW														
252	R	SHIPPING KIT ASSY, UNIVERSAL DSKY		2016316-011	NA	NAS-9-497	B	II	NOTE 11C	FOR DIMENSIONS SEE DASH 18 VALUES BELOW														
251	R	SHIPPING KIT ASSY, MAIN DSKY		2016313-011	NA	NAS-9-497	B	II	NOTE 11C	FOR DIMENSIONS SEE DASH 18 VALUES BELOW														
250	R	AMPLIFIER, REWORK		2014386	NA	NAS-9-497	B	I	NOTE 11B	FOR DIMENSIONS SEE DASH 15 VALUES BELOW														
249	R	TEMP MONITOR ASSY		2014313-011	NA	NAS-9-497	B	I	NOTE 11C	FOR DIMENSIONS SEE DASH 17 VALUES BELOW														
248	R	AGC JUNCTION ASSY		2014341-011	NA	NAS-9-497	B	I	NOTE 11B	FOR DIMENSIONS SEE DASH 17 VALUES BELOW														
247	R	AC INPUT PANEL ASSY		2014302-011	NA	NAS-9-497	B	I	NOTE 11B	FOR DIMENSIONS SEE DASH 15 VALUES BELOW														
246	R	SELF TEST ASSY		2014392-011	NA	NAS-9-497	B	I	NOTE 11B	FOR DIMENSIONS SEE DASH 15 VALUES BELOW														
245	R	TAPE PUNCH ASSEMBLY		2014039-011	NA	NAS-9-497	B	I	NOTE 11B	FOR DIMENSIONS SEE DASH 15 VALUES BELOW														
244	R	TAPE READER ASSEMBLY		2014038-011	NA	NAS-9-497	B	I	NOTE 11B	FOR DIMENSIONS SEE DASH 15 VALUES BELOW														
243																								
242																								
241	R	APOLLO GUIDANCE COMPUTER GROUP		6003001	NA	NAS-9-497	A	I	NOTE 11B	FOR DIMENSIONS SEE DASH 19 VALUES BELOW														
240	R	SELF TEST ASSEMBLY		2014366-011	NA	NAS-9-497	B	I	NOTE 11B	FOR DIMENSIONS SEE DASH 15 VALUES BELOW														
239	R	POWER SUPPLY ASSY-115V., 400 CYCLE		2014207-011	NA	NAS-9-497	B	I	NOTE 11B	FOR DIMENSIONS SEE DASH 17 VALUES BELOW														
238	R	AC INPUT PANEL ASSY		2014043-011	NA	NAS-9-497	B	I	NOTE 11B	FOR DIMENSIONS SEE DASH 17 VALUES BELOW														
237	R	POWER CONTROL ASSY		2014079-011	NA	NAS-9-497	B	I	NOTE 11B	FOR DIMENSIONS SEE DASH 15 VALUES BELOW														
236	R	DRAWER ASSY-X Y INTERFACE		2014040-011	NA	NAS-9-497	B	I	NOTE 11B	FOR DIMENSIONS SEE DASH 15 VALUES BELOW														
235	R	DRAWER ASSY RDC INTERFACE		2014045-011	NA	NAS-9-497	B	I	NOTE 11B	FOR DIMENSIONS SEE DASH 15 VALUES BELOW														
234	R	BUFFER CIRCUIT ASSY		2014254-011	NA	NAS-9-497	B	I	NOTE 11B	FOR DIMENSIONS SEE DASH 15 VALUES BELOW														
233	R	CONTROL & INTERFACE ASSY		2014204-011	NA	NAS-9-497	B	I	NOTE 11B	FOR DIMENSIONS SEE DASH 15 VALUES BELOW														
232	R	POWER CONTROL ASSY		2014044-011	NA	NAS-9-497	B	I	NOTE 11B	FOR DIMENSIONS SEE DASH 17 VALUES BELOW														
231	R	DRAWER ASSY, PROGRAMMER & MONITOR		2014041-011	NA	NAS-9-497	B	I	NOTE 11B	FOR DIMENSIONS SEE DASH 17 VALUES BELOW														
230	R	CONNECTOR INTERFACE ASSY		2014272-011	NA	NAS-9-497	B	I	NOTE 11B	FOR DIMENSIONS SEE DASH 15 VALUES BELOW														
229	R	CONNECTOR INTERFACE ASSY		2014047-011	NA	NAS-9-497	B	I	NOTE 11B	FOR DIMENSIONS SEE DASH 15 VALUES BELOW														
228	R	ANTENNA, TUNING CAPACITOR ASSY		2014209-011	NA	NAS-9-497	B	I	NOTE 11B	FOR DIMENSIONS SEE DASH 15 VALUES BELOW														
227	R	MOUNTING FIXTURE ASSY		2014006-011	NA	NAS-9-497	B	I	NOTE 11B	FOR DIMENSIONS SEE DASH 15 VALUES BELOW														
226	R	POWER SUPPLY ASSY 3 VDC		2014234-011	NA	NAS-9-497	B	I	NOTE 11B	FOR DIMENSIONS SEE DASH 17 VALUES BELOW														
225	R	PANEL ASSY—SIGNAL INTERFACE		2014010-011	NA	NAS-9-497	B	I	NOTE 11B	FOR DIMENSIONS SEE DASH 15 VALUES BELOW														
224	R	OSCILLOSCOPE ASSY		2014232-011	NA	NAS-9-497	B	I	NOTE 11B	FOR DIMENSIONS SEE DASH 15 VALUES BELOW														
223	R	AUXILIARY OUTLET ASSY		2014274-011	NA	NAS-9-497	B	I	NOTE 11B	FOR DIMENSIONS SEE DASH 15 VALUES BELOW														
222	R	FREQUENCY COUNTER		2014233-011	NA	NAS-9-497	B	I	NOTE 11B	FOR DIMENSIONS SEE DASH 15 VALUES BELOW														
221	R	POWER SUPPLY ASSY 10, 13, 28 VDC		2014235-011	NA	NAS-9-497	B	I	NOTE 11B	FOR DIMENSIONS SEE DASH 15 VALUES BELOW														
220	R	LOGIC DRAWER ASSY NO. 2		2014037-011	NA	NAS-9-497	B	I	NOTE 11B	FOR DIMENSIONS SEE DASH 17 VALUES BELOW														
219	R	LOGIC DRAWER ASSY NO. 1		2014036-011	NA	NAS-3-497	B	I	NOTE 11B	FOR DIMENSIONS SEE DASH 17 VALUES BELOW														
218	R	COUNTER, ELECTRICAL ASSY		2014288-011	NA	NAS-9-497	B	I	NOTE 11B	FOR DIMENSIONS SEE DASH 15 VALUES BELOW														
217	R	POWER SUPPLY ASSY		2014279-011	NA	NAS-9-497	B	I	NOTE 11B	FOR DIMENSIONS SEE DASH 15 VALUES BELOW														
216	R	TEST MOUNT ASSY		2014257-011	NA	NAS-9-497	B	I	NOTE 11B	FOR DIMENSIONS SEE DASH 15 VALUES BELOW														
215	R	UNIVERSAL DSKY PEDESTAL MOUNT		2014014-011	NA	NAS-9-497	B	I	NOTE 11B	FOR DIMENSIONS SEE DASH 17 VALUES BELOW														
214	R	MAIN DSKY PEDESTAL MOUNT		2014343	NA	NAS-9-497	B	I	NOTE 11B	FOR DIMENSIONS SEE DASH 17 VALUES BELOW														
213	R	SHIPPING CONTAINER, MAIN DSKY		1006229	NA	NAS-9-497	B	II	NOTE 11C	FOR DIMENSIONS SEE DASH 18 VALUES BELOW														
212	R	SHIPPING CONTAINER, NAV DSKY		1006231	NA	NAS-9-497	B	II	NOTE 11C	FOR DIMENSIONS SEE DASH 18 VALUES BELOW														
211	R	SHIPPING CONTAINER, AGC		1006230	NA	NAS-9-497	B	II	NOTE 11C	FOR DIMENSIONS SEE DASH 18 VALUES BELOW														
210	R	SHIPPING CONTAINER, UNIVERSAL DSKY		1006422	NA	NAS-9-497	B	II	NOTE 11C	FOR DIMENSIONS SEE DASH 18 VALUES BELOW														
209	R	SHIPPING CONTAINER, AGC		1006421	NA	NAS-9-497	B	II	NOTE 11C	FOR DIMENSIONS SEE DASH 18 VALUES BELOW														
208	R	UNIVERSAL DSKY HANDLING FIXTURE		2014013-011	NA	NAS-9-497	B	I	NOTE 11B	FOR DIMENSIONS SEE DASH 15 VALUES BELOW														
207	R	NAV DSKY HANDLING FIXTURE		1014377	NA	NAS-9-497	B	I	NOTE 11B	FOR DIMENSIONS SEE DASH 17 VALUES BELOW														
206	R	MAIN DSKY HANDLING FIXTURE		1014334	NA	NAS-9-497	B	I	NOTE 11B	FOR DIMENSIONS SEE DASH 17 VALUES BELOW														
205	R	AGC HANDLING FIXTURE		2014282-011	NA	NAS-9-497	B	I	NOTE 11B	FOR DIMENSIONS SEE DASH 17 VALUES BELOW														
204	R	OPERATION CONSOLE		2014024-011	NA	NAS-9-497	B	II	NOTE 11C	FOR DIMENSIONS SEE DASH 18 VALUES BELOW														
203	R	COMPUTER TEST SET		2014042-011	NA	NAS-9-497	B	II	NOTE 11C	FOR DIMENSIONS SEE DASH 18 VALUES BELOW														
202	R	DRAWER ASSY, COMPUTER SIMULATOR		2014048-011	NA	FNP-12775	B	II	NOTE 11C	FOR DIMENSIONS SEE DASH 18 VALUES BELOW														
201	R	AUXILIARY CALIBRATION CONSOLE		2014059-011	NA	NAS-9-497	B	II	NOTE 11C	FOR DIMENSIONS SEE DASH 18 VALUES BELOW														
200	R	AGC CALIBRATION CONSOLE		2014049-011	NA	NAS-9-497	B	II	NOTE 11C	FOR DIMENSIONS SEE DASH 18 VALUES BELOW														
21	R																							
20	R	NA		NA	NA	NA	A	II	NOTE 11C	2.000	1.312	1.687	1.375	.078	.031	.078	.093	[illegible]	.093	1.187	.750	.593	.453	T.
19	R	NA		NA	NA	NA	A	I	NOTE 11B	2.000	1.312	1.687	1.375	.078	.031	.078	.093	NA	NA	1.187	.750	.593	.453	T.
18	R	NA		NA	NA	NA	B	II	NOTE 11C	4.187	1.875	3.469	2.750	.156	.093	.156	.125	[illegible]	.125	1.625	1.032	.844	.556	T.
17	R	NA		NA	NA	NA	B	I	NOTE 11B	4.187	1.875	3.469	2.750	.156	.093	.156	.125	NA	NA	1.625	1.032	.844	.556	T.
16	R	NA		NA	NA	NA	B	II	NOTE 11C	2.000	1.312	1.687	1.375	.078	.031	.078	.093	[illegible]	.093	1.187	.750	.593	.453	T.
15	R	NA		NA	NA	NA	B	I	NOTE 11B	2.000	1.312	1.687	1.375	.078	.031	.078	.093	NA	NA	1.187	.750	.593	.453	T.

NOTES FOR TABLE

STYLE A IS FOR G & N SYSTEM
STYLE B IS FOR GROUND SUPPORT EQUIPMENT
TYPE I IS WITHOUT MOUNTING HOLES
TYPE II IS WITH MOUNTING HOLES

1004260	CM	SHT 3

REVISIONS					
SYM	ZONE	DESCRIPTION	CHG NO	DATE	APPD
CL		REPLACES REV CK WITHOUT CHANGE PER TDRR 34365		9/28/67	JWL RWM
CM		REVISION STATUS CHANGED		18 OCT 67	RAW

VALUES BELOW
VALUES BELOW
VALUES BELOW
VALUES BELOW
VALUES BELOW
VALUES BELOW
VALUES BELOW
VALUES BELOW
VALUES BELOW
VALUES BELOW
VALUES BELOW
VALUES BELOW
VALUES BELOW
VALUES BELOW
VALUES BELOW
VALUES BELOW
VALUES BELOW
VALUES BELOW
VALUES BELOW
VALUES BELOW
VALUES BELOW
VALUES BELOW
VALUES BELOW
VALUES BELOW
VALUES BELOW
VALUES BELOW
VALUES BELOW
VALUES BELOW
VALUES BELOW
VALUES BELOW
VALUES BELOW
VALUES BELOW
VALUES BELOW
VALUES BELOW
VALUES BELOW
VALUES BELOW
VALUES BELOW
VALUES BELOW
VALUES BELOW
VALUES BELOW
VALUES BELOW
VALUES BELOW

VALUES BELOW
VALUES BELOW
VALUES BELOW
VALUES BELOW
VALUES BELOW
VALUES BELOW
VALUES BELOW
VALUES BELOW
VALUES BELOW
VALUES BELOW
VALUES BELOW
VALUES BELOW
VALUES BELOW
VALUES BELOW
VALUES BELOW
VALUES BELOW
VALUES BELOW
VALUES BELOW
VALUES BELOW
VALUES BELOW
VALUES BELOW
VALUES BELOW
VALUES BELOW
VALUES BELOW
VALUES BELOW
VALUES BELOW
VALUES BELOW
VALUES BELOW
VALUES BELOW
VALUES BELOW
VALUES BELOW
VALUES BELOW
VALUES BELOW
VALUES BELOW
VALUES BELOW
VALUES BELOW
VALUES BELOW
VALUES BELOW
VALUES BELOW
VALUES BELOW
VALUES BELOW
VALUES BELOW

	F	G	H	J	K	L	M	N	P	R	S	T	U	V	W	Y	Z	AA	AB	AC	AD	AE	AF	AG	AH	AJ	AK	AL	AM	AN	AP	AR
[illegible]	.031	.078	.093	[illegible]	.093	1.187	.750	.593	.453	1.015	.062	.187	.078	.875	.718	1.375	.218	1.156	1.843	.048	NA	.875	.305	.078	.312	1.687	.078	NA	.078	.312	.187	1.843
[illegible]	.031	.078	.093	NA	NA	1.187	.750	.593	.453	1.015	.062	.187	.078	.875	.718	1.375	.218	NA	NA	.048	.031	.875	.305	.078	.312	1.687	.078	NA	.078	.312	.187	NA
[illegible]	.093	.156	.125	[illegible]	.125	1.625	1.032	.844	.656	1.406	.093	.344	.156	1.781	1.531	2.844	.312	1.562	3.875	.062	NA	1.219	.500	.156	.719	3.469	.156	NA	.156	.719	.344	3.875
[illegible]	.093	.156	.125	NA	NA	1.625	1.032	.844	.656	1.406	.093	.344	.156	1.781	1.531	2.844	.312	NA	NA	.062	.062	1.219	.500	.156	.719	3.469	.156	NA	.156	.719	.344	NA
[illegible]	.031	.078	.093	[illegible]	.093	1.187	.750	.593	.453	1.015	.062	.187	.078	.875	.718	1.375	.218	1.156	1.843	.048	NA	.875	.305	.078	.312	1.687	.078	NA	.078	.312	.187	1.843
[illegible]	.031	.078	.093	NA	NA	1.187	.750	.593	.453	1.015	.062	.187	.078	.875	.718	1.375	.218	NA	NA	.048	.031	.875	.305	.078	.312	1.687	.078	NA	.078	.312	.187	NA

RAYTHEON DASH NUMBERS

AS APPLICABLE		UNLESS OTHERWISE SPECIFIED DIMENSIONS ARE IN INCHES TOLERANCES ON 2 PLACE DECIMALS ± / 3 PLACE DECIMALS ± .005 / ANGLES ±	M I T INSTRUMENTATION LAB Cambridge, Mass R. A. JONES DRAWN 16 JUL 65 DATE CHECKED W. KUPFER APPROVAL 22 JUL 65 CONTRACT	MANNED SPACECRAFT CENTER HOUSTON, TEXAS NAMEPLATES, APOLLO GEN - GSE (STANDARDS)
NEXT ASSY	USED ON	DO NOT SCALE THIS DRAWING MATERIAL SEE NOTE 11	T. MICHAELS 22 JUL 65 NASA APPROVAL W. KUPFER 22 JUL 65 MIT APPROVAL	SIZE J2 | CODE IDENT NO 80230 | 1004260
APPLICATION		APPROVAL		SCALE NONE | SHEET 3 OF 6

1004260 CM SHT 3

1004260 CM

1004260

1004260 SHEET 3 OF

2/1004260

AC DASH NUMBERS CONTINUED ON SHEET 6

DASH NO.	P/C	PART NAME	REMARKS	PART NUMBER	SER. NO.	CONT. NO.	STYLE	TYPE	MATERIAL	A	B	C	D	E	F	G	H	J	K	L	M	
199	AC	EYEPIECE STOWAGE UNIT		2021255-011			A	I		FOR DIMENSIONS SEE DASH 100 VALUES BELOW												
198	AC	SIGNAL CONDITIONER ASSY C/M		2007234		NAS-9-497	A	I	NOTE 11B	FOR DIMENSIONS SEE DASH 100 VALUES BELOW												
197	AC	SIGNAL CONDITIONER ASSY C/M		2007235		NAS-9-497	A	I	NOTE 11B	FOR DIMENSIONS SEE DASH 100 VALUES BELOW												
196	AC	SIGNAL CONDITIONER ASSY LEM		6007010		NAS-9-497	A	I	NOTE 11B	FOR DIMENSIONS SEE DASH 100 VALUES BELOW												
195	AC	PSA & SIGNAL CONDITIONER ASSY		6007009		NAS-9-497	A	I	NOTE 11B	FOR DIMENSIONS SEE DASH 100 VALUES BELOW												
194	AC	PANEL, MONITOR		2900031-031		NAS-9-497	B	II	NOTE 11C	FOR DIMENSIONS SEE DASH 141 VALUES BELOW												
193	AC	DISTRIBUTION BOX, GSE		2900024-031		NAS-9-497	B	II	NOTE 11C	FOR DIMENSIONS SEE DASH 141 VALUES BELOW												
192	AC	ANALYZER, OPTICS-INERTIAL		2900023-031		NAS-9-497	B	II	NOTE 11C	FOR DIMENSIONS SEE DASH 144 VALUES BELOW												
191	AC	TEST CONTROL		2900027-031		NAS-9-497	B	II	NOTE 11C	FOR DIMENSIONS SEE DASH 141 VALUES BELOW												
190	AC	PANEL, PWR SUP AND LOAD		2900033-021		NAS-9-497	B	II	NOTE 11C	FOR DIMENSIONS SEE DASH 141 VALUES BELOW												
189	AC	ADPT MODULE, P.S.A.		6900088-011		NAS-9-497	B	II	NOTE 11C	FOR DIMENSIONS SEE DASH 141 VALUES BELOW												
188	AC	ADPT MODULE, P.S.A.		2901143-011		NAS-9-497	B	II	NOTE 11C	FOR DIMENSIONS SEE DASH 141 VALUES BELOW												
187	AC	FIXTURE, MTG, PTA/PEA		2900066-021		NAS-9-497	B	II	NOTE 11C	FOR DIMENSIONS SEE DASH 141 VALUES BELOW												
186	AC	ANNUNCIATOR PANEL & EYEPIECE STORAGE ASSEMBLY		1021255-021			A	I		FOR DIMENSIONS SEE DASH 100 VALUES BELOW												
185	AC	ANNUNCIATOR PANEL & EYEPIECE STORAGE ASSEMBLY		1021255-011			A	I		FOR DIMENSIONS SEE DASH 100 VALUES BELOW												
184	AC	FIX., HAND., G AND N HARNESS		1901846-041		NAS-9-497	B	II	NOTE 11C	FOR DIMENSIONS SEE DASH 144 VALUES BELOW												
183	AC	INSTALLING TOOL, ELEC. CONN		1902586-011		NAS-9-497	B	II	NOTE 11C	FOR DIMENSIONS SEE DASH 102 VALUES BELOW												
182	AC	ADPT MODULE, P.S.A.		6900088-011		NAS-9-497	B	II	NOTE 11C	FOR DIMENSIONS SEE DASH 141 VALUES BELOW												
181	AC	G & N INDICATOR CONTROL PANEL ASSY		2014578-011		NAS-9-497	A	I	NOTE 11B	3.000	1.938	2.437	NA	.125	.062	.188	.156	NA	NA	1.750	1.125	.906
180	AC	ADPT MODULE, P.S.A.		1902431-031		NAS-9-497	B	II		FOR DIMENSIONS SEE DASH 121 VALUES BELOW												
179	AC	MOUNTING PLATE, IMU/PTA		6900083-011		NAS-9-497	B	II		FOR DIMENSIONS SEE DASH 144 VALUES BELOW												
178	AC	MOUNTING PLATE, COMPONENT		6900007-021		NAS-9-497	B	II		FOR DIMENSIONS SEE DASH 144 VALUES BELOW												
177	AC	FIX., MOUNTING, SUBSYSTEM		2900070-021		NAS-9-497	B	II		FOR DIMENSIONS SEE DASH 144 VALUES BELOW												
176	AC	FIX., MOUNTING, G & N		2900067-021		NAS-9-497	B	II		FOR DIMENSIONS SEE DASH 144 VALUES BELOW												
175	AC	CSL, COOL. AND PWR, G & N		1902134-031		NAS-9-497	B	II		FOR DIMENSIONS SEE DASH 144 VALUES BELOW												
174	AC	FIX., HAND., C/M AND LEM CDU		2900999-011		NAS-9-497	B	II	NOTE 11C	FOR DIMENSIONS SEE DASH 141 VALUES BELOW												
173	AC	FIX., HANDLING, C/M PSA		2900998-011		NAS-9-497	B	II	NOTE 11C	FOR DIMENSIONS SEE DASH 141 VALUES BELOW												
172	AC	CAGING ELECTRONICS, GYRO		2900029-021		NAS-9-497	B	II	NOTE 11C	FOR DIMENSIONS SEE DASH 141 VALUES BELOW												
171	AC	DISTRIBUTION BOX, GSE		2900024-021		NAS-9-497	B	II	NOTE 11C	FOR DIMENSIONS SEE DASH 141 VALUES BELOW												
170	AC	ANALYZER, OPTICS-INERTIAL		2900023-021		NAS-9-497	B	II	NOTE 11C	FOR DIMENSIONS SEE DASH 144 VALUES BELOW												
169	AC	ADPT, TESTPOINT, P.S.A.		2900037-021		NAS-9-497	B	II	NOTE 11C	FOR DIMENSIONS SEE DASH 141 VALUES BELOW												
168	AC	TEST SELECTOR		2900028-021		NAS-9-497	B	II	NOTE 11C	FOR DIMENSIONS SEE DASH 141 VALUES BELOW												
167	AC	TEST CONTROL		2900027-021		NAS-9-497	B	II	NOTE 11C	FOR DIMENSIONS SEE DASH 141 VALUES BELOW												
166	AC	PANEL, MONITOR		2900031-021		NAS-9-497	B	II	NOTE 11C	FOR DIMENSIONS SEE DASH 141 VALUES BELOW												
165	AC	TERM. BOARD STORAGE DRAWER		2900927-011		NAS-9-497	B	II	NOTE 11C	FOR DIMENSIONS SEE DASH 141 VALUES BELOW												
164	AC	INPUT/OUTPUT PANEL		2900926-011		NAS-9-497	B	II	NOTE 11C	FOR DIMENSIONS SEE DASH 141 VALUES BELOW												
163	AC	CONTROL PANEL		2900896-011		NAS-9-497	B	II	NOTE 11C	FOR DIMENSIONS SEE DASH 141 VALUES BELOW												
162	AC	CSL, CAL AND TEST, SCM/PSAAM		2900895-011		NAS-9-497	B	II	NOTE 11C	FOR DIMENSIONS SEE DASH 144 VALUES BELOW												
161	AC	FIX., LIFT AND HAND., IMU		1015462-011		NAS-9-497	B	II	NOTE 11C	FOR DIMENSIONS SEE DASH 141 VALUES BELOW												
160	AC	FIX., HAND., G & N HARNESS		1901846-031		NAS-9-497	B	II	NOTE 11C	FOR DIMENSIONS SEE DASH 144 VALUES BELOW												
159	AC	BATTERY POWER PACK		1900011-031		NAS-9-497	B	II	NOTE 11C	FOR DIMENSIONS SEE DASH 144 VALUES BELOW												
158	AC	COUPLING DATA UNIT ASSEMBLY C/M		2007222		NAS-9-497	A	I	NOTE 11B	FOR DIMENSIONS SEE DASH 100 VALUES BELOW												
157	AC	COUPLING DATA UNIT ASSEMBLY - LEM		2007222		NAS-9-497	A	I	NOTE 11B	FOR DIMENSIONS SEE DASH 100 VALUES BELOW												
156	AC	POWER & SERVO ASSEMBLY C/M		2007200		NAS-9-497	A	I	NOTE 11B	2.125	.968	1.718	NA	.093	.031	.06	.093	NA	NA	.858	.608	.48
155	AC	PIPA ELECTRONICS ASSEMBLY		2007201		NAS-9-497	A	I	NOTE 11B	FOR DIMENSIONS SEE DASH 100 VALUES BELOW												
154	AC	PULSE TORQUE ASSEMBLY-LEM		6007000		NAS-9-497	A	I	NOTE 11B	FOR DIMENSIONS SEE DASH 100 VALUES BELOW												
153	AC	POWER & SERVO ASSEMBLY-LEM		6007200		NAS-9-497	A	I	NOTE 11B	FOR DIMENSIONS SEE DASH 100 VALUES BELOW												
152	AC	CONT PNL, RSVR CKT TESTER		2900770-011		NAS-9-497	B	II	NOTE 11C	FOR DIMENSIONS SEE DASH 141 VALUES BELOW												
151	AC	TESTER, RESOLVER CIRCUIT		2900708-011		NAS-9-497	B	II	NOTE 11C	FOR DIMENSIONS SEE DASH 141 VALUES BELOW												
150	AC	JUNCTION BOX, P.S.A./G.S.E.		1901933-021		NAS-9-497	B	II	NOTE 11C	FOR DIMENSIONS SEE DASH 144 VALUES BELOW												
149	AC	BATTERY PACK, LIFTING		2900812-011		NAS-9-497	B	II	NOTE 11C	FOR DIMENSIONS SEE DASH 141 VALUES BELOW												
148	AC	MOUNTING PLATE, COMPONENT		6900007-011		NAS-9-497	B	II	NOTE 11C	FOR DIMENSIONS SEE DASH 144 VALUES BELOW												
147	AC	MOUNTING PLATE, COMPONENT		2900677-011		NAS-9-497	B	II	NOTE 11C	FOR DIMENSIONS SEE DASH 144 VALUES BELOW												
146	AC	CART, TRANS, G & N		1900009-041		NAS-9-497	B	II	NOTE 11C	FOR DIMENSIONS SEE DASH 144 VALUES BELOW												
145	AC	CONTAINER, SHIPPING, IMU		1900010-021		NAS-9-497	B	II	NOTE 11C	FOR DIMENSIONS SEE DASH 144 VALUES BELOW												
144	AC	FIX., MOUNTING, G & N		1902204-021			B	II	NOTE 11C	4.125	1.812	3.250	NA	.125	.062	.12	.156		.125	1.625	1.140	
143	AC	CSL, COOL, AND PWR, G & N		1902134-021			B	II	NOTE 11C	4.125	1.812	3.250	NA	.125	.062	.12	.156		.125	1.625	1.140	
142	AC	ANALYZER, OPTICS-INERTIAL		2900023-011			B	II	NOTE 11C	4.125	1.812	3.250	NA	.125	.062	.12	.156		.125	1.625	1.140	
141	AC	CONT, TEMP, PORTABLE		2900060-011			B	II	NOTE 11C	2.125	.968	1.718	NA	.093	.031	.06	.093		.093	.858	.608	
140	AC	TESTER, CKT, IMU/CDU RSVR		2900286-011			B	II	NOTE 11C	4.125	1.812	3.250	NA	.125	.062	.12	.156		.125	1.625	1.140	
139	AC	SIMULATOR, LD/SIG, CDU		2900285-011			B	II	NOTE 11C	4.125	1.812	3.250	NA	.125	.062	.12	.156		.125	1.625	1.140	
138	AC	SIMULATOR, LD/SIG, OPTICS		1902023-021			B	II	NOTE 11C	4.125	1.812	3.250	NA	.125	.062	.12	.156		.125	1.625	1.140	
137	AC	FIX., MOUNTING, IMU/NAV BASE		6900003-011			B	II	NOTE 11C	4.125	1.812	3.250	NA	.125	.062	.12	.156		.125	1.625	1.140	
136	AC	FIXTURE, OPTICS/NAV BASE		2900072-011			B	II	NOTE 11C	4.125	1.812	3.250	NA	.125	.062	.12	.156		.125	1.625	1.140	
135	AC	FIX., MOUNTING, SUB SYSTEM		2900070-011			B	II	NOTE 11C	4.125	1.812	3.250	NA	.125	.062	.12	.156		.125	1.625	1.140	
134	AC	FIX., HAND., G & N HARNESS		2900069-011			B	II	NOTE 11C	4.125	1.812	3.250	NA	.125	.062	.12	.156		.125	1.625	1.140	
133	AC	CNTR, SHIPPING, NAV BASE		2900068-011			B	II	NOTE 11C	4.125	1.812	3.250	NA	.125	.062	.12	.156		.125	1.625	1.140	
132	AC	FIX., MOUNTING, G & N		2900067-011			B	II	NOTE 11C	4.125	1.812	3.250	NA	.125	.062	.12	.156		.125	1.625	1.140	
131	AC	SIMULATOR, LD/SIG, IMU/CDU		2900062-011			B	II	NOTE 11C	4.125	1.812	3.250	NA	.125	.062	.12	.156		.125	1.625	1.140	
130	AC	TESTER, GYRO WHEEL		2900061-011			B	II	NOTE 11C	4.125	1.812	3.250	NA	.125	.062	.12	.156		.125	1.625	1.140	
129	AC	COOLANT SUPPLY		1902133-021			B	II	NOTE 11C	4.125	1.812	3.250	NA	.125	.062	.12	.156		.125	1.625	1.140	
128	AC	TABLE, ROTARY		1900926-021			B	II	NOTE 11C	4.125	1.812	3.250	NA	.125	.062	.12	.156		.125	1.625	1.140	
127	AC	FIX., HAND., OPTICS		2900074-011			B	II	NOTE 11C	2.125	.968	1.718	NA	.093	.031	.06	.093		.093	.858	.608	
126	AC	FIXTURE, MTG, PTA/PEA.		2900066-011			B	II	NOTE 11C	2.125	.968	1.718	NA	.093	.031	.06	.093		.093	.858	.608	
125	AC	CONT, TEMP, IMU LIFTING		2900063-011			B	II	NOTE 11C	2.125	.968	1.718	NA	.093	.031	.06	.093		.093	.858	.608	
124	AC	FIXTURE, HANDLING, IMU		2900064-011			B	II	NOTE 11C	2.125	.968	1.718	NA	.093	.031	.06	.093		.093	.858	.608	
123	AC	CONT, OPTICS, REMOTE		1902046-021			B	II	NOTE 11C	2.125	.968	1.718	NA	.093	.031	.06	.093		.093	.858	.608	
122	AC	TEST CONTROL		1902009-021			B	II	NOTE 11C	2.125	.968	1.718	NA	.093	.031	.06	.093		.093	.858	.608	
121	AC	ADPT MODULE, P.S.A.		1902431-021			B	II	NOTE 11C	2.125	.968	1.718	NA	.093	.031	.06	.093		.093	.858	.608	
120	AC	BRIDGE, DECADE ERROR		2900128-011			B	II	NOTE 11C	2.125	.968	1.718	NA	.093	.031	.06	.093		.093	.858	.608	
119	AC	PWR SUP, ELECTRONICS		2900012-011			B	II	NOTE 11C	2.125	.968	1.718	NA	.093	.031	.06	.093		.093	.858	.608	
118	AC	PWR SUP, RELAY AND LAMP		1900049-031			B	II	NOTE 11C	2.125	.968	1.718	NA	.093	.031	.06	.093		.093	.858	.608	
117	AC	CONSOLE, OSCILLOGRAPH		1900000-021			B	II	NOTE 11C	2.125	.968	1.718	NA	.093	.031	.06	.093		.093	.858	.608	
116	AC	ADPT MODULE, P.S.A.		1902431-011			B	II	NOTE 11C	2.125	.968	1.718	NA	.093	.031	.06	.093		.093	.858	.608	
115	AC	ADPT, TEST POINT, PTA/PEA.		2900145-011			B	II	NOTE 11C	2.125	.968	1.718	NA	.093	.031	.06	.093		.093	.858	.608	
114	AC	ADPT, TEST POINT, P.S.A.		2900037-011			B	II	NOTE 11C	2.125	.968	1.718	NA	.093	.031	.06	.093		.093	.858	.608	
113	AC	CONTROL, GIMBAL POSITION		2900036-011			B	II	NOTE 11C	2.125	.968	1.718	NA	.093	.031	.06	.093		.093	.858	.608	
112	AC	SELECTOR, SIGNAL, PRIMARY		2900035-011			B	II	NOTE 11C	2.125	.968	1.718	NA	.093	.031	.06	.093		.093	.858	.608	
111	AC	SEL, SIG, OSCILLOGRAPH		2900034-011			B	II	NOTE 11C	2.125	.968	1.718	NA	.093	.031	.06	.093		.093	.858	.608	
110	AC	PANEL, PWR SUP AND LOAD		2900033-011			B	II	NOTE 11C	2.125	.968	1.718	NA	.093	.031	.06	.093		.093	.858	.608	
109	AC	PANEL, MONITOR		2900031-011			B	II	NOTE 11C	2.125	.968	1.718	NA	.093	.031	.06	.093		.093	.858	.608	
108	AC	PANEL, AUXILIARY INPUT		2900030-011			B	II	NOTE 11C	2.125	.969	1.718	NA	.093	.031	.06	.093		.093	.858	.608	
107	AC	CAGING ELECTRONICS, GYRO		2900029-011			B	II	NOTE 11C	2.125	.968	1.718	NA	.093	.031	.06	.093		.093	.858	.608	
106	AC	TEST SELECTOR		2900028-011			B	II	NOTE 11C	2.125	.968	1.718	NA	.093	.031	.06	.093		.093	.858	.608	
105	AC	TEST CONTROL		2900027-011			B	II	NOTE 11C	2.125	.968	1.718	NA	.093	.031	.06	.093		.093	.858	.608	
104	AC	MONITOR AND CONTROL, TEMP		2900026-011			B	II	NOTE 11C	2.125	.968	1.718	NA	.093	.031	.06	.093		.093	.858	.608	
103	AC	DISTRIBUTION BOX, GSE		2900024-011			B	II	NOTE 11C	2.125	.968	1.718	NA	.093	.031	.06	.093		.093	.858	.608	
102	AC	VOLTMETER, DIGITAL		2900007-011			B	II	NOTE 11C	2.125	.968	1.718	NA	.093	.031	.06	.093		.093	.858	.608	
101	AC	NAVIGATION BASE ASSEMBLY-LEM		6899950		NAS-9-497	A	I	NOTE 11B	2.000	1.312	1.906	1.375	.078	.048	.078	.093	NA	NA	1.125	.750	
100	AC	NAVIGATION BASE ASSEMBLY		2899982		NAS-9-497	A	I	NOTE 11B	2.000	1.312	1.906	1.375	.078	.048	.078	.093	NA	NA	1.125	.750	

NOTES FOR TABLE

STYLE A IS FOR G & N SYSTEM
STYLE B IS FOR GROUND SUPPORT EQUIPMENT
TYPE I IS WITHOUT MOUNTING HOLES
TYPE II IS WITH MOUNTING HOLES

1004260	CM	SHT 4

REVISIONS					
SYM	ZONE	DESCRIPTION	CHG NO	DATE	APPD
CL		REPLACES REV CK WITHOUT CHANGE PER TORR 34365		11/28/67	JWL RWH
CM		REVISION STATUS CHANGED		18 OCT. 67	R.A.W.

A	F	G	H	J	K	L	M	N	P	R	S	T	U	V	W	Y	Z	AA	AB	AC	AD	AE	AF	AG	AH	AJ	AK	AL	AM	AN	AP	AR
DASH 100 VALUES BELOW																																
DASH 100 VALUES BELOW																																
DASH 100 VALUES BELOW																																
DASH 100 VALUES BELOW																																
DASH 100 VALUES BELOW																																
DASH 141 VALUES BELOW																																
DASH 141 VALUES BELOW																																
DASH 144 VALUES BELOW																																
DASH 141 VALUES BELOW																																
DASH 141 VALUES BELOW																																
DASH 141 VALUES BELOW																																
DASH 141 VALUES BELOW																																
DASH 141 VALUES BELOW																																
DASH 100 VALUES BELOW																																
DASH 100 VALUES BELOW																																
DASH 144 VALUES BELOW																																
DASH 102 VALUES BELOW																																
DASH 141 VALUES BELOW																																
.125	.062	.188	.156	NA	NA	1.750	1.125	.906	.688	1.500	NA	.281	.125	NA	1.094	2.062	.312	NA	2.500	.062	.125	1.312	.469	NA	NA	NA	.156	NA	.125	.469	.344	NA
DASH 121 VALUES BELOW																																
DASH 144 VALUES BELOW																																
DASH 144 VALUES BELOW																																
DASH 144 VALUES BELOW																																
DASH 144 VALUES BELOW																																
DASH 144 VALUES BELOW																																
DASH 141 VALUES BELOW																																
DASH 141 VALUES BELOW																																
DASH 141 VALUES BELOW																																
DASH 141 VALUES BELOW																																
DASH 144 VALUES BELOW																																
DASH 141 VALUES BELOW																																
DASH 141 VALUES BELOW																																
DASH 141 VALUES BELOW																																
DASH 141 VALUES BELOW																																
DASH 141 VALUES BELOW																																
DASH 141 VALUES BELOW																																
DASH 141 VALUES BELOW																																
DASH 144 VALUES BELOW																																
DASH 141 VALUES BELOW																																
DASH 144 VALUES BELOW																																
DASH 144 VALUES BELOW																																
DASH 100 VALUES BELOW																																
DASH 100 VALUES BELOW																																
.093	.031	.06	.093	NA	NA	.858	.608	.484	.358	.733	.062	.140	.062	NA	.968	1.450	.125	NA	1.720	.046	.03	NA	.210	NA	NA	NA	.070	NA	.046	.32	.16	NA
DASH 100 VALUES BELOW																																
DASH 100 VALUES BELOW																																
DASH 100 VALUES BELOW																																
DASH 141 VALUES BELOW																																
DASH 141 VALUES BELOW																																
DASH 144 VALUES BELOW																																
DASH 141 VALUES BELOW																																
DASH 144 VALUES BELOW																																
DASH 144 VALUES BELOW																																
DASH 144 VALUES BELOW																																
DASH 144 VALUES BELOW																																
.125	.062	.12	.156	188	.125	1.625	1.140	.890	.640	1.390	.125	.171	.125	1.875	1.687	2.625	.250	1.562	3.843	.093	NA	NA	.359	.125	.437	3.688	NA	3.687	.093	.40	.25	3.875
.125	.062	.12	.156		.125	1.625	1.140	.890	.640	1.390	.125	.171	.125	1.875	1.687	2.625	.250	1.562	3.843	.093	NA	NA	.359	.125	.437	3.688	NA	3.687	.093	.40	.25	3.875
.125	.062	.12	.156		.125	1.625	1.140	.890	.640	1.390	.125	.171	.125	1.875	1.687	2.625	.250	1.562	3.843	.093	NA	NA	.359	.125	.437	3.688	NA	3.687	.093	.40	.25	3.875
.093	.031	.06	.093		.093	.858	.608	.484	.358	.733	.077	.116	.062	.937	.875	1.343	.125	.781	1.892	.046	NA	NA	.209	.093	.250	1.875	NA	1.840	.046	.23	.16	1.938
.125	.062	.12	.156		.125	1.625	1.140	.890	.640	1.390	.125	.171	.125	1.875	1.687	2.625	.250	1.562	3.843	.093	NA	NA	.359	.125	.437	3.688	NA	3.687	.093	.40	.25	3.875
.125	.062	.12	.156		.125	1.625	1.140	.890	.640	1.390	.125	.171	.125	1.875	1.687	2.625	.250	1.562	3.843	.093	NA	NA	.359	.125	.437	3.688	NA	3.687	.093	.40	.25	3.875
.125	.062	.12	.156		.125	1.625	1.140	.890	.640	1.390	.125	.171	.125	1.875	1.687	2.625	.250	1.562	3.843	.093	NA	NA	.359	.125	.437	3.688	NA	3.687	.093	.40	.25	3.875
.125	.062	.12	.156		.125	1.625	1.140	.890	.640	1.390	.125	.171	.125	1.875	1.687	2.625	.250	1.562	3.843	.093	NA	NA	.359	.125	.437	3.688	NA	3.687	.093	.40	.25	3.875
.125	.062	.12	.156		.125	1.625	1.140	.890	.640	1.390	.125	.171	.125	1.875	1.687	2.625	.250	1.562	3.843	.093	NA	NA	.359	.125	.437	3.688	NA	3.687	.093	.40	.25	3.875
.125	.062	.12	.156		.125	1.625	1.140	.890	.640	1.390	.125	.171	.125	1.875	1.687	2.625	.250	1.562	3.843	.093	NA	NA	.359	.125	.437	3.688	NA	3.687	.093	.40	.25	3.875
.125	.062	.12	.156		.125	1.625	1.140	.890	.640	1.390	.125	.171	.125	1.875	1.687	2.625	.250	1.562	3.843	.093	NA	NA	.359	.125	.437	3.688	NA	3.687	.093	.40	.25	3.875
.125	.062	.12	.156		.125	1.625	1.140	.890	.640	1.390	.125	.171	.125	1.875	1.687	2.625	.250	1.562	3.843	.093	NA	NA	.359	.125	.437	3.688	NA	3.687	.093	.40	.25	3.875
.125	.062	.12	.156		.125	1.625	1.140	.890	.640	1.390	.125	.171	.125	1.875	1.687	2.625	.250	1.562	3.843	.093	NA	NA	.359	.125	.437	3.688	NA	3.687	.093	.40	.25	3.875
.125	.062	.12	.156		.125	1.625	1.140	.890	.640	1.390	.125	.171	.125	1.875	1.687	2.625	.250	1.562	3.843	.093	NA	NA	.359	.125	.437	3.688	NA	3.687	.093	.40	.25	3.875
.125	.062	.12	.156		.125	1.625	1.140	.890	.640	1.390	.125	.171	.125	1.875	1.687	2.625	.250	1.562	3.843	.093	NA	NA	.359	.125	.437	3.688	NA	3.687	.093	.40	.25	3.875
.125	.062	.12	.156		.125	1.625	1.140	.890	.640	1.390	.125	.171	.125	1.875	1.687	2.625	.250	1.562	3.843	.093	NA	NA	.359	.125	.437	3.688	NA	3.687	.093	.40	.25	3.875
.125	.062	.12	.156		.125	1.625	1.140	.890	.640	1.390	.125	.171	.125	1.875	1.687	2.625	.250	1.562	3.843	.093	NA	NA	.359	.125	.437	3.688	NA	3.687	.093	.40	.25	3.875
.093	.031	.06	.093		.093	.858	.608	.484	.358	.733	.077	.116	.062	.937	.875	1.343	.125	.781	1.892	.046	NA	NA	.209	.093	.250	1.875	NA	1.840	.046	.23	.16	1.938
.093	.031	.06	.093		.093	.858	.608	.484	.358	.733	.077	.116	.062	.937	.875	1.343	.125	.781	1.892	.046	NA	NA	.209	.093	.250	1.875	NA	1.840	.046	.23	.16	1.938
.093	.031	.06	.093		.093	.858	.608	.484	.358	.733	.077	.116	.062	.937	.875	1.343	.125	.781	1.892	.046	NA	NA	.209	.093	.250	1.875	NA	1.840	.046	.23	.16	1.938
.093	.031	.06	.093		.093	.858	.608	.484	.358	.733	.077	.116	.062	.937	.875	1.343	.125	.781	1.892	.046	NA	NA	.209	.093	.250	1.875	NA	1.840	.046	.23	.16	1.938
.093	.031	.06	.093		.093	.858	.608	.484	.358	.733	.077	.116	.062	.937	.875	1.343	.125	.781	1.892	.046	NA	NA	.209	.093	.250	1.875	NA	1.840	.046	.23	.16	1.938
.093	.031	.06	.093		.093	.858	.608	.484	.358	.733	.077	.116	.062	.937	.875	1.343	.125	.781	1.892	.046	NA	NA	.209	.093	.250	1.875	NA	1.840	.046	.23	.16	1.938
.093	.031	.06	.093		.093	.858	.608	.484	.358	.733	.077	.116	.062	.937	.875	1.343	.125	.781	1.892	.046	NA	NA	.209	.093	.250	1.875	NA	1.840	.046	.23	.16	1.938
.093	.031	.06	.093		.093	.858	.608	.484	.358	.733	.077	.116	.062	.937	.875	1.343	.125	.781	1.892	.046	NA	NA	.209	.093	.250	1.875	NA	1.840	.046	.23	.16	1.938
.093	.031	.06	.093		.093	.858	.608	.484	.358	.733	.077	.116	.062	.937	.875	1.343	.125	.781	1.892	.046	NA	NA	.209	.093	.250	1.875	NA	1.840	.046	.23	.16	1.938
.093	.031	.06	.093		.093	.858	.608	.484	.358	.733	.077	.116	.062	.937	.875	1.343	.125	.781	1.892	.046	NA	NA	.209	.093	.250	1.875	NA	1.840	.046	.23	.16	1.938
.093	.031	.06	.093		.093	.858	.608	.484	.358	.733	.077	.116	.062	.937	.875	1.343	.125	.781	1.892	.046	NA	NA	.209	.093	.250	1.875	NA	1.840	.046	.23	.16	1.938
.093	.031	.06	.093		.093	.858	.608	.484	.358	.733	.077	.116	.062	.937	.875	1.343	.125	.781	1.892	.046	NA	NA	.209	.093	.250	1.875	NA	1.840	.046	.23	.16	1.938
.093	.031	.06	.093		.093	.858	.608	.484	.358	.733	.077	.116	.062	.937	.875	1.343	.125	.781	1.892	.046	NA	NA	.209	.093	.250	1.875	NA	1.840	.046	.23	.16	1.938
.093	.031	.06	.093		.093	.858	.608	.484	.358	.733	.077	.116	.062	.937	.875	1.343	.125	.781	1.892	.046	NA	NA	.209	.093	.250	1.875	NA	1.840	.046	.23	.16	1.938
.093	.031	.06	.093		.093	.858	.608	.484	.358	.733	.077	.116	.062	.937	.875	1.343	.125	.781	1.892	.046	NA	NA	.209	.093	.250	1.875	NA	1.840	.046	.23	.16	1.938
.093	.031	.06	.093		.093	.858	.608	.484	.358	.733	.077	.116	.062	.937	.875	1.343	.125	.781	1.892	.046	NA	NA	.209	.093	.250	1.875	NA	1.840	.046	.23	.16	1.938
.093	.031	.06	.093		.093	.858	.608	.484	.358	.733	.077	.116	.062	.937	.875	1.343	.125	.781	1.892	.046	NA	NA	.209	.093	.250	1.875	NA	1.840	.046	.23	.16	1.938
.093	.031	.06	.093		.093	.858	.608	.484	.358	.733	.077	.116	.062	.937	.875	1.343	.125	.781	1.892	.046	NA	NA	.209	.093	.250	1.875	NA	1.840	.046	.23	.16	1.938
.093	.031	.06	.093		.093	.858	.608	.484	.358	.733	.077	.116	.062	.937	.875	1.343	.125	.781	1.892	.046	NA	NA	.209	.093	.250	1.875	NA	1.840	.046	.23	.16	1.938
.093	.031	.06	.093		.093	.858	.608	.484	.358	.733	.077	.116	.062	.937	.875	1.343	.125	.781	1.892	.046	NA	NA	.209	.093	.250	1.875	NA	1.840	.046	.23	.16	1.938
.093	.031	.06	.093		.093	.858	.608	.484	.358	.733	.077	.116	.062	.937	.875	1.343	.125	.781	1.892	.046	NA	NA	.209	.093	.250	1.875	NA	1.840	.046	.23	.16	1.938
.093	.031	.06	.093		.093	.858	.608	.484	.358	.733	.077	.116	.062	.937	.875	1.343	.125	.781	1.892	.046	NA	NA	.209	.093	.250	1.875	NA	1.840	.046	.23	.16	1.938
.093	.031	.06	.093		.093	.858	.608	.484	.358	.733	.077	.116	.062	.937	.875	1.343	.125	.781	1.892	.046	NA	NA	.209	.093	.250	1.875	NA	1.840	.046	.23	.16	1.938
.093	.031	.06	.093		.093	.858	.608	.484	.358	.733	.077	.116	.062	.937	.875	1.343	.125	.781	1.892	.046	NA	NA	.209	.093	.250	1.875	NA	1.840	.046	.23	.16	1.938
.093	.031	.06	.093		.093	.858	.608	.484	.358	.733	.077	.116	.062	.937	.875	1.343	.125	.781	1.892	.046	NA	NA	.209	.093	.250	1.875	NA	1.840	.046	.23	.16	1.938
.093	.031	.06	.093		.093	.858	.608	.484	.358	.733	.077	.116	.062	.937	.875	1.343	.125	.781	1.892	.046	NA	NA	.209	.093	.250	1.875	NA	1.840	.046	.23	.16	1.938
.093	.031	.06	.093	188	.093	.858	.608	.484	.358	.733	.077	.116	.062	.937	.875	1.343	.125	.781	1.892	.046	NA	NA	.209	.093	.250	1.875	NA	1.840	.046	.23	.16	1.938
.078	.048	.078	.093	NA	NA	1.125	.750	.593	.453	1.015	.062	.187	.078	.875	.718	1.375	.218	NA	NA	.048	.031	.875	.305	.078	.531	1.906	.078	NA	.078	.531	.187	NA
.078	.048	.078	.093	NA	NA	1.125	.750	.593	.453	1.015	.062	.187	.078	.875	.718	1.375	.218	NA	NA	.048	.031	.875	.305	.078	.531	1.906	.078	NA	.078	.531	.187	NA

AC ELECTRONICS DASH NUMBERS

AS APPLICABLE	UNLESS OTHERWISE SPECIFIED DIMENSIONS ARE IN INCHES TOLERANCES ON 2 PLACE DECIMALS ± — 3 PLACE DECIMALS ± .005 ANGLES ± —	M I T INSTRUMENTATION LAB Cambridge Mass	MANNED SPACECRAFT CENTER HOUSTON, TEXAS	
NEXT ASSY	USED ON	DRAWN R. A. JONES DATE 16 JUL 65	NAMEPLATES, APOLLO GEN - GSE (STANDARDS)	
APPLICATION	DO NOT SCALE THIS DRAWING	CHECKED W KUPFER 22 JUL 65 APPROVAL	SIZE J2	CODE IDENT NO 80230
	MATERIAL SEE NOTE II	CONTRACT	1004260	
	APPROVAL	T. MICHAELS 22 JUL 65 NASA APPROVAL W KUPFER 22 JUL 65 MIT APPROVAL	SCALE NONE	SHEET 4 OF 6

1004260 CM SHT 4

1004260 CM

1004260

1004260 SHEET 4 OF 6

2710042 60

DASH NO.	P/C	PART NAME	REMARKS	PART NUMBER	SER. NO.	CONT. NO.	STYLE	TYPE	MATERIAL	A	B	C	D	E	F	G	H	J	K	L	
401	MIT	COMPUTER ASSY		2003100		NAS-9-497	A	I	NOTE 11B	2.000	1.312	1.906	1.375	.078	.048	.078	.093	NA	NA	1.125	.
400	MIT	LIFTING SLING-G&N INST.QUAL.FIX. & AZM.REF.FIX.		1021640		NAS-9-4065	B	II	NOTE 11C	2.000	1.312	1.687	1.375	.078	.048	.078	.093	[illegible]	.093	1.187	.

NOTES FOR TABLE

STYLE A IS FOR G & N SYSTEM
STYLE B IS FOR GROUND SUPPORT EQUIPMENT
TYPE I IS WITHOUT MOUNTING HOLES
TYPE II IS WITH MOUNTING HOLES

1004260	CM	SHT 5

REVISIONS					
SYM	ZONE	DESCRIPTION	CHG NO	DATE	APPD
CL		REPLACES REV CK WITHOUT CHANGE PER TDRR 34365		9/20/67	JWL RWH
CM		REVISION STATUS CHANGED		18 OCT 67	RAW

.078	.048	.078	.093	NA	NA	1.125	.750	.593	.453	1.015	.062	.187	.078	.875	.718	1.375	.218	NA	NA	.048	.031	.875	.305	.078	.531	1.906	.078	NA	.078	.531	.187	NA
.078	.048	.078	.093	[illegible]	.093	1.187	.750	.593	.453	1.015	.062	.187	.078	.875	.718	1.375	.218	1.156	1.843	.048	NA	.875	.305	.078	.312	1.687	.110	1.830	.070	.275	.180	1.844
E	F	G	H	J	K	L	M	N	P	R	S	T	U	V	W	Y	Z	AA	AB	AC	AD	AE	AF	AG	AH	AJ	AK	AL	AM	AN	AP	AR

MIT DASH NUMBERS

UNLESS OTHERWISE SPECIFIED
DIMENSIONS ARE IN INCHES
TOLERANCES ON
2 PLACE DECIMALS ±
3 PLACE DECIMALS ±.005
ANGLES ±
DO NOT SCALE THIS DRAWING
MATERIAL SEE NOTE 11
APPROVAL

AS APPLICABLE
NEXT ASSY
USED ON
APPLICATION

MIT INSTRUMENTATION LAB
CAMBRIDGE, MASS.
DRAWN R. A. JONES DATE 16 JUL 65
CHECKED
APPROVAL W. KUPFER 22 JUL 65
CONTRACT
NASA APPROVAL T. MICHAELS 22 JUL 65
MIT APPROVAL W. KUPFER 22 JUL 65

MANNED SPACECRAFT CENTER
HOUSTON, TEXAS

NAMEPLATES, APOLLO G&N - GSE (STANDARDS)

SIZE J2
CODE IDENT NO. 80230
1004260
SCALE NONE
SHEET 5 OF 6

1004260 CM SHT 5

1004260 CM

1004260

1004260
SHEET 5 OF 6

27 1004260

DASH NO.	P/C	PART NAME	REMARKS	PART NUMBER	SER. NO.	CONT. NO.	STYLE	TYPE	MATERIAL	A	B	C	D	E	F	G	H	J	K	L	M	
599	AC																					
598	AC																					
570	AC	OPTICAL UNIT & BELLOWS ASSY				NAS-9-497	A	I	NOTE 11B	FOR DIMENSIONS SEE DASH 550 VALUES												
565		BATTERY PACK,AUXILIARY		1901492-031		NAS-9-497	B	II	NOTE 11C	FOR DIMENSIONS SEE DASH 500												
564		BATTERY POWER PACK		1900011-051		NAS-9-497	B	II	NOTE 11C	FOR DIMENSIONS SEE DASH 500												
563		ADAPTER MODULE P.S.A.(LEM)		6900088-031		NAS-9-497	B	II	NOTE 11C	FOR DIMENSIONS SEE DASH 141 VALUES												
562	AC	COMPUTER CONT & RETICLE DIMMER		6014512-041		NAS-9-497	A	I	NOTE 11B	FOR DIMENSIONS SEE DASH 534 VALUES												
561	AC	G & N INDICATOR CONTROL PANEL ASSY		2014578-031		NAS-9-497	A	I	NOTE 11B	FOR DIMENSIONS SEE DASH 181 VALUES												
560		ADPT. MODULE, PSA		2901143-021		NAS-9-497	B	II	NOTE 11C	FOR DIMENSIONS SEE DASH 141 VALUES												
559		CSL. CAL AND TEST, SCM/PSAAM		2900895-031		FOR OTHER DATA SEE DASH 547																
558		PSA ADAPTER MODULE (LEM)		6900088-021		FOR OTHER DATA SEE DASH 189																
557		FIX., HANDLING, C/M PSA		2900998-021		NAS-9-497	B	II	NOTE 11C	FOR DIMENSIONS SEE DASH 141 VALUES												
556		FIX., MOUNTING G & N	(-144)	2900067-041		NAS-9-497	B	II	NOTE 11C	FOR DIMENSIONS SEE DASH 500 VALUES												
555	AC	OPTICAL UNIT ASSEMBLY		1021368-061		NAS-9-497	A	I	NOTE 11B	2.000	1.312	1.687	1.375	.078	.048	.078	.093	NA	NA	1.125	.750	.593
554	AC	OPTICAL UNIT ASSEMBLY		1021368-041		NAS-9-497	A	I	NOTE 11B	2.000	1.312	1.687	1.375	.078	.048	.078	.093	NA	NA	1.125	.750	.593
553	AC	OPTICAL UNIT AND BELLOWS ASSEMBLY		2010790-111		NAS-9-497	A	I	NOTE 11B	2.000	1.312	1.687	1.375	.078	.048	.078	.093	NA	NA	1.125	.750	.593
552	AC	OPTICAL UNIT AND BELLOWS ASSEMBLY		2010790-081		NAS-9-497	A	I	NOTE 11B	2.000	1.312	1.687	1.375	.078	.048	.078	.093	NA	NA	1.125	.750	.593
551	AC	OPTICAL UNIT AND BELLOWS ASSEMBLY		2010790-071		NAS-9-497	A	I	NOTE 11B	2.000	1.312	1.687	1.375	.078	.048	.078	.093	NA	NA	1.125	.750	.593
550	AC	OPTICAL UNIT AND BELLOWS ASSEMBLY		2010790-061		NAS-9-497	A	I	NOTE 11B	2.000	1.312	1.687	1.375	.078	.048	.078	.093	NA	NA	1.125	.750	.593
548		CAGING ELECTRONICS, GYRO		2900029-031		NAS-9-497	B	II	NOTE 11C	2.125	.968	1.718	NA	.093	.031	.06	.093		.093	.858	.608	.484
547		CSL, CAL AND TEST, SCM/PSAAM		2900895-021		NAS-9-497	B	II	NOTE 11C	4.125	1.812	3.250	NA	.125	.062	.12	.156		.125	1.625	1.140	.890
546		FIX., HAND., C/M AND LEM CDU		2900999-021		NAS-9-497	B	II	NOTE 11C	2.125	.968	1.718	NA	.093	.031	.06	.093		.093	.858	.608	.484
545	AC	G & N INDICATOR CONTROL PANEL ASSY		2014578-021		NAS-9-497	A	I	NOTE 11B	3.000	1.938	2.437	NA	.125	.062	.188	.156	NA	NA	1.750	1.125	.906
544		ADPT MODULE, P.S.A.		1902431-051		NAS-9-497	B	II	NOTE 11C	2.125	.968	1.718	NA	.093	.031	.06	.093		.093	.858	.608	.484
543	AC	PANEL, MONITOR		2900031-041		NAS-9-497	B	II	NOTE 11C	2.125	.968	1.718	NA	.093	.031	.06	.093		.093	.858	.608	.434
542	AC	BATTERY PACK, LIFTING		2900812-021		NAS-9-497	B	II	NOTE 11C	2.125	.968	1.718	NA	.093	.031	.06	.093		.093	.858	.608	.484
541	AC	FIXTURE, MOUNTING, IMU		2900000-021		NAS-9-497	B	II	NOTE 11C	4.125	1.812	3.250	NA	.125	.062	.12	.156		.125	1.625	1.140	.890
540	AC	ADPT, TEST POINT, P.S.A.		2900037-031		NAS-9-497	B	II	NOTE 11C	2.125	.968	1.718	NA	.093	.031	.06	.093		.093	.858	.608	.484
539	AC	ANNUNCIATOR PANEL & EYEPIECE STORAGE ASSEMBLY		1021255-041		NAS-9-497	A	I	NOTE 11B	2.000	1.312	1.906	1.375	.078	.048	.078	.093	NA	NA	1.125	.750	.593
538	AC	ANNUNCIATOR PANEL & EYEPIECE STORAGE ASSEMBLY		1021255-031		NAS-9-497	A	I	NOTE 11B	2.000	1.312	1.906	1.375	.078	.048	.078	.093	NA	NA	1.125	.750	.593
537	AC	TEST SELECTOR		2900028-031		NAS-9-497	B	II	NOTE 11C	2.125	.968	1.718	NA	.093	.031	.06	.093		.093	.858	.608	[illegible]
536	AC	ANALYZER, OPTICS-INERTIAL		2900023-041		NAS-9-497	B	II	NOTE 11C	4.125	1.812	3.250	NA	.125	.062	.12	.156		.125	1.625	1.140	.890
535	AC	CONT, TEMP, PORTABLE		2900[illegible]0-021		NAS-9-497	B	II	NOTE 11C	2.125	.968	1.718	NA	.093	.031	.06	.093		.093	.858	.608	.484
534	AC	COMPUTER CONT & RETICLE DIMMER		6014512-021		NAS-9-497	A	I	NOTE 11B	2.000	1.312	1.906	1.375	.078	.048	.078	.093	NA	NA	1.125	.750	.593
533	AC	ADPT MODULE, P.S.A.		1902431-041		NAS-9-497	B	II	NOTE 11C	2.125	.968	1.718	NA	.093	.031	.06	.093		.093	.858	.608	.484
532	AC	TRAY BREAKOUT, 105 PIN		1900807-021		NAS-9-497	B	II	NOTE 11C	4.125	1.812	3.250	NA	.125	.062	.12	.156		.125	1.625	1.140	.890
531	AC	TRAY BREAKOUT, 84 PIN		1900806-021		NAS-9-497	B	II	NOTE 11C	4.125	1.812	3.250	NA	.125	.062	.12	.156		.125	1.625	1.140	.890
530	AC	HEAT SINK-TRAY EXTENDER		1900808-021		NAS-9-49[illegible]	B	II	NOTE 11C	2.125	.968	1.718	NA	.093	.031	.06	.093		.093	.858	.608	.484
529	AC	TESTER, FAILURE INDICATOR		1900809-021		NAS-9-497	B	II	NOTE 11C	2.125	.968	1.718	NA	.093	.031	.06	.093		.093	.858	.608	.484
527	AC	FIX., MOUNTING, G & N	(-144)	1902204-021		NAS-9-497	B	II	NOTE 11C	FOR DIMENSIONS SEE DASH 500 VALUES BELOW												
526	AC	FIX., MOUNTING, G & N	(-144)	2900067-031		NAS-9-497	B	II	NOTE 11C	FOR DIMENSIONS SEE DASH 500 VALUES BELOW												
525	AC	PORTABLE TEMP. CONTROLLER		1900496-021		NAS-9-497	B	II	NOTE 11C	3.000	1.937	2.437	2.312	.125	.031	.125	.156	.125	.125	1.718	1.187	.96
524	AC	POWER, SERVO & THERMOCOUPLE ASSEMBLY C/M		2010743		NAS-9-497	A	I	NOTE 11B	2.125	.968	1.718	NA	.093	.031	.06	.093	NA	NA	.858	.608	.48
523	AC	PULSE TORQUE AND THERMOCOUPLE ASSEMBLY-LEM		6010656		NAS-9-497	A	I	NOTE 11B	FOR DIMENSIONS SEE DASH 508 VALUES BELOW												
522	AC	COUPLING DATA UNIT & THERMOCOUPLE ASSEMBLY-LEM		2010744		NAS-9-497	A	I	NOTE 11B	FOR DIMENSIONS SEE DASH 508 VALUES BELOW												
521	AC	COUPLING DATA UNIT & THERMOCOUPLE ASSEMBLY-C/M		2010744		NAS-9-497	A	I	NOTE 11B	FOR DIMENSIONS SEE DASH 508 VALUES BELOW												
520	AC	PIPA ELECTRONICS AND THERMOCOUPLE ASSEMBLY		2010745		NAS-9-497	A	I	NOTE 11B	FOR DIMENSIONS SEE DASH 508 VALUES BELOW												
519	AC	FIXTURE, HANDLING, LEM-PSA	(-141)	6900129-011		NAS-9-497	B	II	NOTE 11C	FOR DIMENSIONS SEE DASH 504 VALUES BELOW												
518	AC	JUNCTION BOX, GSE-PSA	(-144)	1901933-031		NAS-9-497	B	II	NOTE 11C	FOR DIMENSIONS SEE DASH 500 VALUES BELOW												
517	AC	FIX., HAND., OPTICS INSTL.	(-141)	2901380-011		NAS-9-497	B	II	NOTE 11C	FOR DIMENSIONS SEE DASH 502 VALUES BELOW												
516	AC	POWER, SERVO AND THERMOCOUPLE ASSEMBLY-LEM		6010655		NAS-9-497	A	I	NOTE 11B	FOR DIMENSIONS SEE DASH 508 VALUES BELOW												
514	AC	SIGNAL COND. ASSY LEM OPER.	(-100)	6007013		NAS-9-497	A	I	NOTE 11B	FOR DIMENSIONS SEE DASH 508 VALUES BELOW												
513	AC	JUMPER, BY-PASS	(-141)	1021616		NAS-9-497	B	II	NOTE 11C	2.125	.968	1.718	NA	.093	.031	.06	.093		.093	.858	.608	.4
512	AC	COUPLING DATA UNIT ASSEMBLY C/M	(-100)	2007322-011		NAS-9-497	A	I	NOTE 11B	FOR DIMENSIONS SEE DASH 508 VALUES BELOW												
511	AC	COUPLING DATA UNIT ASSEMBLY-LEM	(-100)	2007322-021		NAS-9-497	A	I	NOTE 11B	FOR DIMENSIONS SEE DASH 508 VALUES BELOW												
510	AC	BATTERY POWER PACK	(-144)	1900011-041		NAS-9-497	B	II	NOTE 11C	FOR DIMENSIONS SEE DASH 500 VALUES BELOW												
509	AC	JUNCTION BOX, P.S.A./G.S.E.	(-144)	1902195-021		NAS-9-497	B	II	NOTE 11C	FOR DIMENSIONS SEE DASH 500 VALUES BELOW												
508	AC	NAVIGATION BASE ASSEMBLY-LEM	(-101)	6899980		NAS-9-497	A	I	NOTE 11B	2.000	1.312	1.906	1.375	.078	.048	.078	.093	NA	NA	1.125	.750	.
507	AC	CSL, COOL. AND PWR, G AND N	(-144)	1902134-041		NAS-9-497	B	II	NOTE 11C	FOR DIMENSIONS SEE DASH 500 VALUES BELOW												
506	AC	BREAKOUT BOX, CABLE ADAPTER	(-141)	2901011-011		NAS-9-497	B	II	NOTE 11C	2.125	.968	1.718	NA	.093	.031	.06	.093		.093	.858	.608	.
505	AC	MONITOR AND CONTROL, TEMP	(-141)	2900026-021		NAS-9-497	B	II	NOTE 11C	2.125	.968	1.718	NA	.093	.031	.06	.093		.093	.858	.608	.
504	AC	PWR SUP, GUIDANCE SYSTEM	(-141)	1900033-021		NAS-9-497	B	II	NOTE 11C	2.125	.968	1.718	NA	.093	.031	.06	.093		.093	.858	.608	.
503	AC	CONTROL, GIMBAL POSITION	(-141)	2900036-021		NAS-9-497	B	II	NOTE 11C	2.125	.968	1.718	NA	.093	.031	.06	.093		.093	.858	.608	.
502	AC	ADPT, TEST POINT, PTA/PEA.	(-141)	2900145-021		NAS-9-497	B	II	NOTE 11C	2.125	.968	1.718	NA	.093	.031	.06	.093		.093	.858	.608	.
501	AC	MOUNTING PLATE, COMPONENT	(-144)	6900007-031		NAS-9-497	B	II	NOTE 11C	FOR DIMENSIONS SEE DASH 500 VALUES BELOW												
500	AC	MOUNTING PLATE, COMPONENT	(-144)	2900677-021		NAS-9-497	B	II	NOTE 11C	4.125	1.812	3.250	NA	.125	.062	.12	.156		.125	1.625	1.140	.

NOTES FOR TABLE

STYLE A IS FOR G & N SYSTEM
STYLE B IS FOR GROUND SUPPORT EQUIPMENT
TYPE I IS WITHOUT MOUNTING HOLES
TYPE II IS WITH MOUNTING HOLES

1/1004260

REVISIONS					
SYM	ZONE	DESCRIPTION	CHG NO	DATE	APPD
CL		REPLACES REV CK WITH CHANGE PER TDRR 34365		9/28/67	JUL RWH
CM		REVISED PER TDRR 34395		17 OCT. 67	R.A.W.

E	F	G	H	J	K	L	M	N	P	R	S	T	U	V	W	Y	Z	AA	AB	AC	AD	AE	AF	AG	AH	AJ	AK	AL	AM	AN	AP	AR
DASH 550 VALUES																																
DASH 500																																
DASH 500																																
DASH 141 VALUES																																
DASH 534 VALUES																																
DASH 181 VALUES																																
DASH 141 VALUES																																
DASH 141 VALUES																																
DASH 500 VALUES																																
.078	.048	.078	.093	NA	NA	1.125	.750	.593	.453	1.015	.062	.187	.078	.875	.718	1.375	.218	NA	NA	.048	.031	.875	.305	NA	.468	1.531	NA	NA	.078	.312	.187	NA
.078	.048	.078	.093	NA	NA	1.125	.750	.593	.453	1.015	.062	.187	.076	.875	.718	1.375	.218	NA	NA	.048	.031	.875	.305	NA	.468	1.531	NA	NA	.078	.312	.187	NA
.078	.048	.078	.093	NA	NA	1.125	.750	.593	.453	1.015	.062	.187	.078	.875	.718	1.375	.218	NA	NA	.048	.031	.875	.305	NA	.468	1.531	NA	NA	.078	.312	.187	NA
.078	.048	.078	.093	NA	NA	1.125	.750	.593	.453	1.015	.062	.187	.078	.875	.718	1.375	.218	NA	NA	.048	.031	.875	.305	NA	.468	1.531	NA	NA	.078	.312	.187	NA
.078	.048	.078	.093	NA	NA	1.125	.750	.593	.453	1.015	.062	.187	.078	.875	.718	1.375	.218	NA	NA	.048	.031	.875	.305	NA	.468	1.531	NA	NA	.078	.312	.187	NA
.078	.048	.078	.093	NA	NA	1.125	.750	.593	.453	1.015	.062	.187	.078	.875	.718	1.375	.218	NA	NA	.048	.031	.875	.305	NA	.468	1.531	NA	NA	.078	.312	.187	NA
.093	.031	.06	.093		.093	.858	.608	.484	.358	.733	.077	.116	.062	.937	.875	1.343	.125	.781	1.892	.046	NA	NA	.209	.093	.250	1.875	NA	1.840	.046	.23	.16	1.938
.125	.062	.12	.156		.125	1.625	1.140	.890	.640	1.390	.125	.171	.125	1.875	1.687	2.625	.250	1.562	3.843	.093	NA	NA	.359	.125	.437	3.688	NA	3.687	.093	.40	.25	3.875
.093	.031	.06	.093		.093	.858	.608	.484	.358	.733	.077	.116	.062	.937	.875	1.343	.125	.781	1.892	.046	NA	NA	.209	.093	.250	1.875	NA	1.840	.046	.23	.16	1.938
.125	.062	.188	.156	NA	NA	1.750	1.125	.906	.688	1.500	NA	.281	.125	NA	1.094	2.062	.312	NA	2.500	.062	.125	1.312	.469	NA	NA	NA	.156	NA	.125	.469	.344	NA
.093	.031	.06	.093		.093	.858	.608	.484	.358	.733	.077	.116	.062	.937	.875	1.343	.125	.781	1.892	.046	NA	NA	.209	.093	.250	1.875	NA	1.840	.046	.23	.16	1.938
.093	.031	.06	.093		.093	.858	.608	.484	.358	.733	.077	.116	.062	.937	.875	1.343	.125	.781	1.892	.046	NA	NA	.209	.093	.250	1.875	NA	1.840	.046	.23	.25	1.938
.093	.031	.06	.093		.093	.858	.608	.484	.358	.733	.077	.116	.062	.937	.875	1.343	.125	.781	1.892	.046	NA	NA	.209	.093	.250	1.875	NA	1.840	.046	.23	.16	1.938
.125	.062	.12	.156		.125	1.625	1.140	.890	.640	1.390	.125	.171	.125	1.875	1.687	2.625	.250	1.562	3.843	.093	NA	NA	.359	.125	.437	3.688	NA	3.687	.093	.40	.25	3.875
.093	.031	.06	.093		.093	.858	.608	.484	.358	.733	.077	.116	.062	.937	.875	1.343	.125	.781	1.892	.046	NA	NA	.209	.093	.250	1.875	NA	1.840	.046	.23	.16	1.938
.078	.048	.078	.093	NA	NA	1.125	.750	.593	.453	1.015	.062	.187	.078	.875	.718	1.375	.218	NA	NA	.048	.031	.875	.305	.078	.531	1.906	.078	NA	.078	.531	.187	NA
.078	.048	.078	.093	NA	NA	1.125	.750	.593	.453	1.015	.062	.187	.078	.875	.718	1.375	.218	NA	NA	.048	.031	.875	.305	.078	.531	1.906	.078	NA	.078	.531	.187	NA
.093	.031	.06	.093		.093	.858	.608	.484	.358	.733	.077	.116	.062	.937	.875	1.343	.125	.781	1.892	.046	NA	NA	.209	.093	.250	1.875	NA	1.840	.046	.23	.16	1.938
.125	.062	.12	.156		.125	1.625	1.140	.890	.640	1.390	.125	.171	.125	1.875	1.687	2.625	.250	1.562	3.843	.093	NA	NA	.359	.125	.437	3.688	NA	3.687	.093	.40	.25	3.875
.093	.031	.06	.093		.093	.858	.608	.484	.358	.733	.077	.116	.062	.937	.875	1.343	.125	.781	1.892	.046	NA	NA	.209	.093	.250	1.875	NA	1.840	.046	.23	.16	1.938
.078	.048	.078	.093	NA	NA	1.125	.750	.593	.453	1.015	.062	.187	.078	.875	.718	1.375	.218	NA	NA	.048	.031	.875	.305	.078	.531	1.906	.078	NA	.078	.531	.187	NA
.093	.031	.06	.093		.093	.858	.608	.484	.358	.733	.077	.116	.062	.937	.875	1.343	.125	.781	1.892	.046	NA	NA	.209	.093	.250	1.875	NA	1.840	.046	.23	.16	1.938
.125	.062	.12	.156		.125	1.625	1.140	.890	.640	1.390	.125	.171	.125	1.875	1.687	2.625	.250	1.562	3.843	.093	NA	NA	.359	.125	.437	3.688	NA	3.687	.093	.40	.25	3.875
.125	.062	.12	.156		.125	1.625	1.140	.890	.640	1.390	.125	.171	.125	1.875	1.687	2.625	.250	1.562	3.843	.093	NA	NA	.359	.125	.437	3.688	NA	3.687	.093	.40	.25	3.875
.093	.031	.06	.093		.093	.858	.608	.484	.358	.733	.077	.116	.062	.937	.875	1.343	.125	.781	1.892	.046	NA	NA	.209	.093	.250	1.875	NA	1.840	.046	.23	.16	1.938
.093	.031	.06	.093		.093	.858	.608	.484	.358	.733	.077	.116	.062	.937	.875	1.343	.125	.781	1.892	.046	NA	NA	.209	.093	.250	1.875	NA	1.840	.046	.23	.16	1.938
DASH 500 VALUES BELOW																																
DASH 500 VALUES BELOW																																
.125	.031	.125	.156	.125	.125	1.718	1.187	.968	.749	1.452	.093	.295	.090	1.312	1.00	2.000	.250	1.687	2.750	.062	NA	NA	.463	.125	.562	2.437	.140	2.562	.090	.468	.359	2.750
.093	.031	.06	.093	NA	NA	.858	.608	.484	.358	.733	.062	.140	.062	NA	.968	1.450	.125	NA	1.720	.046	.03	NA	.210	NA	NA	NA	.070	NA	.046	.32	.16	NA
DASH 508 VALUES BELOW																																
DASH 508 VALUES BELOW																																
DASH 508 VALUES BELOW																																
DASH 508 VALUES BELOW																																
DASH 504 VALUES BELOW																																
DASH 500 VALUES BELOW																																
DASH 502 VALUES BELOW																																
DASH 508 VALUES BELOW																																
DASH 508 VALUES BELOW																																
.093	.031	.06	.093		.093	.858	.608	.484	.358	.733	.077	.116	.062	.937	.875	1.343	.125	.781	1.892	.046	NA	NA	.209	.093	.250	1.875	NA	1.840	.046	.23	.16	1.938
DASH 508 VALUES BELOW																																
DASH 508 VALUES BELOW																																
DASH 500 VALUES BELOW																																
DASH 500 VALUES BELOW																																
.078	.048	.078	.093	NA	NA	1.125	.750	.593	.453	1.015	.062	.187	.078	.875	.718	1.375	.218	NA	NA	.048	.031	.875	.305	.078	.531	1.906	.078	NA	.078	.531	.187	NA
DASH 500 VALUES BELOW																																
.093	.031	.06	.093		.093	.858	.608	.484	.358	.733	.077	.116	.062	.937	.875	1.343	.125	.781	1.892	.046	NA	NA	.209	.093	.250	1.875	NA	1.840	.046	.23	.16	1.938
.093	.031	.06	.093		.093	.858	.608	.484	.358	.733	.077	.116	.062	.937	.875	1.343	.125	.781	1.892	.046	NA	NA	.209	.093	.250	1.875	NA	1.840	.046	.23	.16	1.938
.093	.031	.06	.093		.093	.858	.608	.484	.358	.733	.077	.116	.062	.937	.875	1.343	.125	.781	1.892	.046	NA	NA	.209	.093	.250	1.875	NA	1.840	.046	.23	.16	1.938
.093	.031	.06	.093		.093	.858	.608	.464	.358	.733	.077	.116	.062	.937	.875	1.343	.125	.781	1.892	.046	NA	NA	.209	.093	.250	1.875	NA	1.840	.046	.23	.16	1.938
.093	.031	.06	.093		.093	.858	.608	.484	.358	.733	.077	.116	.062	.937	.875	1.343	.125	.781	1.892	.046	NA	NA	.209	.093	.250	1.875	NA	1.840	.046	.23	.16	1.938
DASH 500 VALUES BELOW																																
.125	.062	.12	.156		.125	1.625	1.140	.890	.640	1.390	.125	.171	.125	1.875	1.687	2.625	.250	1.562	3.843	.093	NA	NA	.359	.125	.437	3.688	NA	3.687	.093	.40	.25	3.875

AC ELECTRONICS DASH NUMBERS

AS APPLICABLE	UNLESS OTHERWISE SPECIFIED DIMENSIONS ARE IN INCHES TOLERANCES ON 2 PLACE DECIMALS ± 3 PLACE DECIMALS ± .005 ANGLES ±	MIT INSTRUMENTATION LAB Cambridge, Mass	MANNED SPACECRAFT CENTER HOUSTON, TEXAS	
NEXT ASSY / USED ON	DO NOT SCALE THIS DRAWING	DRAWN R. A. JONES DATE 16 JUL 65 CHECKED W. KUPFER 22 JUL 65 APPROVAL CONTRACT	NAMEPLATES, APOLLO GEN - GSE (STANDARDS)	
APPLICATION	MATERIAL SEE NOTE 11 APPROVAL	T. MICHAELS 22 JUL 65 NASA APPROVAL W. KUPFER 22 JUL 65 MIT APPROVAL	SIZE J2	CODE IDENT NO 80230
			SCALE NONE	1004260 SHEET 6 OF 6

1004260 CM SHT 6

1004260 CM

2/1004260

NOTES:

1. INTERPRET DRAWING IN ACCORDANCE WITH STANDARDS PRESCRIBED BY MIL-D-70327.
2. DIMENSIONS ON EACH VIEW APPLY TO ALL VIEWS (WITH THE EXCEPTION OF MOUNTING HOLES).
3. FORMATS ILLUSTRATED WILL BE APPLICABLE TO ALL ITEMS REQUIRING NAMEPLATES BELOW END ITEM DESIGNATION (SYSTEMS, ASSEMBLIES, ETC.)
4. PLATE BACKGROUND TO BE LUSTERLESS BLACK PER FED-STD-595, COLOR 37038. BORDER, MARKING AND LETTERING TO BE NATURAL METAL, (ANODIZED ALUMINUM).
5. MARKING METHOD TO BE DIE STAMPING, ETCHING OR ENGRAVING IN ACCORDANCE WITH MIL-P-19834.
6. LETTERING STYLE TO BE GOTHIC, (SANS SERIFS), AND NUMBERS TO BE ARABIC.
7. WHERE LOCATING DIMENSIONS ARE NOT SHOWN, CHARACTERS SHALL BE SYMMETRICALLY POSITIONED.
8. IDENTIFY WITH DRAWING NUMBER PER ND 1002019.
9. WHEN "AUTO MARK" METAL MARKING TYPEWRITER IS USED TO ADD DATA TO BLANK SPACES, TYPE SIZE IS TO BE SELECTED FROM DIMENSIONS U, AC, AND AM.
10. NASA SYMBOL IS TO BE PROPORTIONAL TO NAMEPLATE IN RATIO OF 1 TO 5 WITH DIMENSION A VALUE AND IS TO HAVE NATURAL BACKGROUND. NASA SYMBOL LETTERS LETTERING AND FEATHER TO BE BLACK, (OR WHITE FOR SILK SCREENING). WHERE BLACK FEATHER PROTRUDES INTO BLACK BACKGROUND, A MINIMUM OUTLINE OF NATURAL BACKGROUND SHALL EXIST.
11. NAMEPLATES WILL BE APPLIED BY METHODS LISTED BELOW, SHOWN IN ORDER OF PREFERENCE, (I.E., FOR RELIABILITY AND WEIGHT).
    - A - STENCIL OR SILK SCREEN DIRECTLY ON EQUIPMENT USING INK PER SCD 1010920, (WHITE OR BLACK).
    - B - ALUMINUM FOIL, (STYLE A OR B, TYPE I):
      FOIL SHALL BE .0030 ± .0005 THICK PER MIL-A-148.
      FOIL SHALL HAVE NO ADHESIVE BACKING.
      FOIL SHALL BE BONDED PER ND 1002219, (METHOD II).
      FOIL SHALL BE CLEAR ANODIZED PER MIL-A-8625, TYPE II.
    - C - PLATE, (STYLE A OR B, TYPE II):
      MATERIAL: QQ-A-250, TEMPER O OR H14, TYPE 1100, ALUMINUM ALLOY, .032 THICK. ANODIZE PER MIL-A-8625, TYPE II.
      ALUMINUM PLATE MUST BE FREE FROM BURRS AND SHARP CORNERS, MOUNTED WITH APPLICABLE SIZE FASTENERS.
12. NAMEPLATES SHALL BE CAPABLE OF MEETING APPLICABLE REQUIREMENTS OF MIL-M-13231.
13. ON DIMENSION TABLES SHOWN ON PAGES 2, 3, 4, 5, AND 6, NA MEANS, "NOT APPLICABLE".

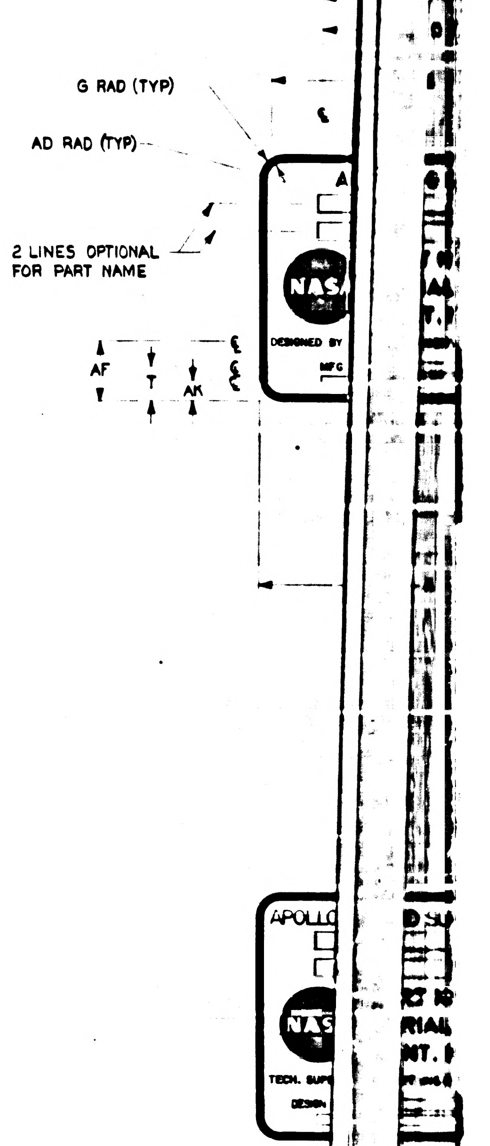

SUGGESTED PROPORTIONS FOR NAMEPLATE DIMENSIONS.
1. SELECT NAMEPLATE LENGTH, DIMENSION "A", TO FIT DESIGN NEEDS.
2. DIMENSIONS B THRU AS ON LINE 1 BELOW ARE PROPORTIONAL TO "A" BY MULTIPLIERS SHOWN IN LINE 2 BELOW.

1.	A	B	C	D	E	F	G	H	J	K	L	M	N	P	R	S	T	U	V	W	Y
2.	1.000A	.6563A	.8438A	.6875A	.0391A	.0240A	.0391A	.0469A	.0547A	.0469A	.5938A	.3750A	.2969A	.2187A	.5079A	.0313A	.0938A	.0391A	.4375A	.3594A	.6875A

1.	Z	AA	AB	AC	AD	AE	AF	AG	AH	AJ	AK	AL	AM	AN	AP	AR	AS
2.	.1094A	.5781A	.9219A	.0240A	.0156A	.4375A	.1525A	.0391A	.1563A	.8438A	.0548A	.8659A	.0391A	.1563A	.0938A	.9219A	.0151A

SYM	ZONE	DESCRIPTION	CHG NO	DATE	APPD
CL		REPLACES REV C- WITHOUT CHANGE PER TDRR 34365		9/28/67	JWL RWH
CM		REVISION STATUS CHANGED		18 OCT 67	R.A.W.
CN		REVISION STATUS CHANGED		31 OCT 67	JRK

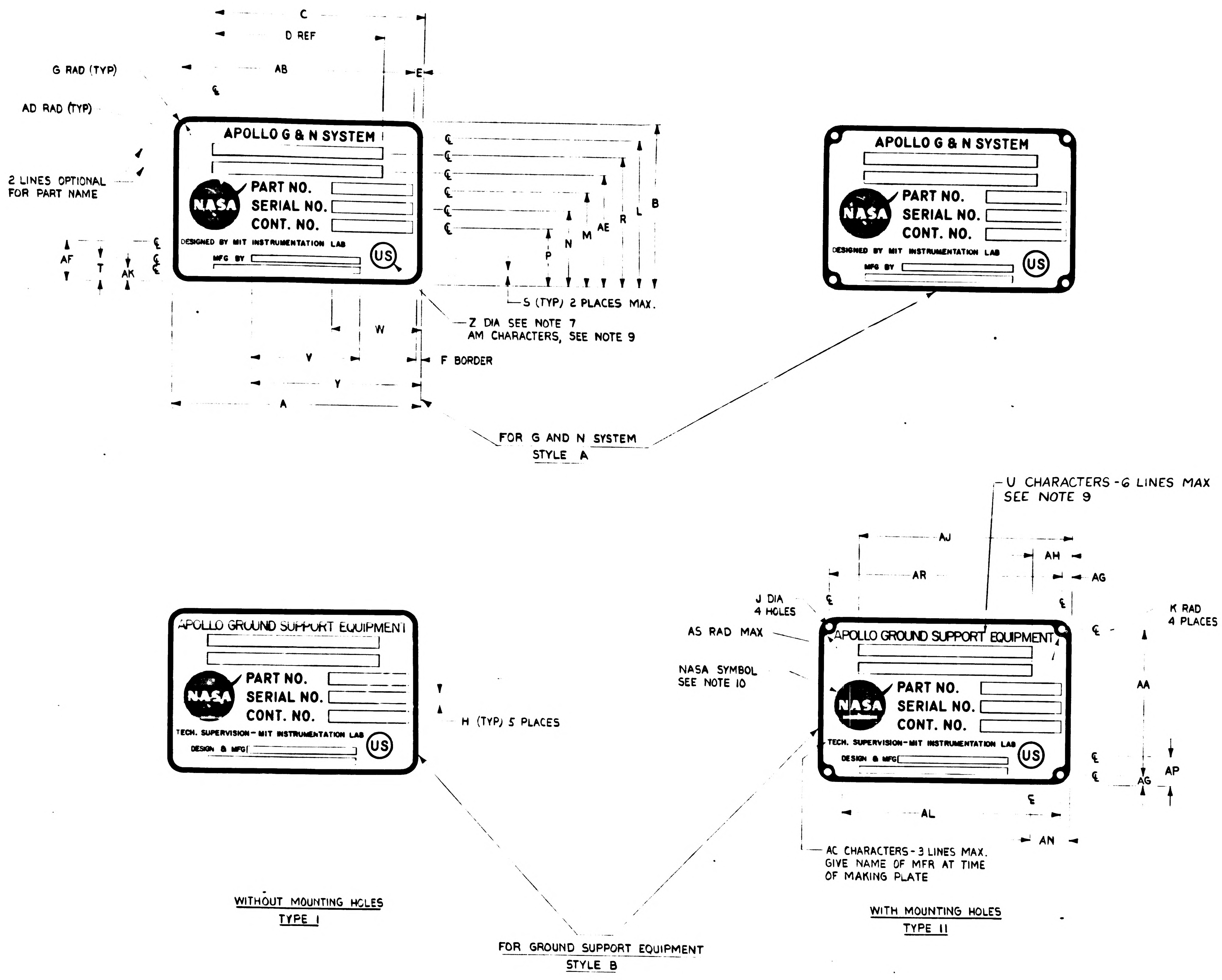

C
D REF
G RAD (TYP)
AB
E
AD RAD (TYP)
APOLLO G & N SYSTEM
2 LINES OPTIONAL FOR PART NAME
NASA
PART NO.
SERIAL NO.
CONT. NO.
DESIGNED BY MIT INSTRUMENTATION LAB
MFG BY
US
B
L
R
AE
M
N
P
AF
T
AK
S (TYP) 2 PLACES MAX.
Z DIA SEE NOTE 7
AM CHARACTERS, SEE NOTE 9
W
V
F BORDER
Y
A
FOR G AND N SYSTEM
STYLE A
U CHARACTERS - 6 LINES MAX
SEE NOTE 9
AJ
AH
AR
AG
J DIA
4 HOLES
K RAD
4 PLACES
AS RAD MAX
NASA SYMBOL
SEE NOTE 10
APOLLO GROUND SUPPORT EQUIPMENT
TECH. SUPERVISION - MIT INSTRUMENTATION LAB
DESIGN & MFG
H (TYP) 5 PLACES
AA
AP
AG
AL
AN
AC CHARACTERS - 3 LINES MAX.
GIVE NAME OF MFR AT TIME
OF MAKING PLATE
WITHOUT MOUNTING HOLES
TYPE I
WITH MOUNTING HOLES
TYPE II
FOR GROUND SUPPORT EQUIPMENT
STYLE B

AS APPLICABLE	
NEXT ASSY	USED ON
APPLICATION	

UNLESS OTHERWISE SPECIFIED
DIMENSIONS ARE IN INCHES
TOLERANCES ON
2 PLACE DECIMALS ± | 3 PLACE DECIMALS ±.005 | ANGLES ± —
DO NOT SCALE THIS DRAWING
MATERIAL SEE NOTE 11
APPROVAL

M I T
INSTRUMENTATION LAB
DRAWN R. A. JONES DATE 16 JUL 65
CHECKED
APPROVAL W. KUPFER 22 JUL 65
CONTRACT
NASA APPROVAL T. MICHAELS 22 JUL 65
MIT APPROVAL W. KUPFER 22 JUL 65

MANNED
SPACECRAFT CENTER
HOUSTON, TEXAS

NAMEPLATES, APOLLO G&N - GSE (STANDARDS)

SIZE J2 | CODE IDENT NO. 80230 | 1004260
SCALE NONE | SHEET 1 OF 6

1004260 CN SHT 1

1004260 CN

1004260

1004580 SHEET 1 OF 6

2/1004260

DASH NO.	P/C	PART NAME	REMARKS	PART NUMBER	SER. NO.	CONT. NO.	STYLE	TYPE	MATERIAL	A	B	C	D	E	F	G	H	J	K	L	M
399	K																				
398	K																				
350	K	ALIGNMENT OPTICAL TELESCOPE (LEM)		NA	NA	NA	A	I	NOTE 11B	4.000	2.625	3.375	2.750	.156	.093	.156	.187	NA	NA	2.312	1.468
309	K																				
308	K																				
307	K						B	I	NOTE 11B	4.000	2.625	3.375	2.750	.156	.093	.156	.187	NA	NA	2.328	1.468
306	K						B	II	NOTE 11C	4.000	2.625	3.375	2.750	.156	.093	.156	.187	.125	.156	2.328	1.468
305	K						B	I	NOTE 11B	2.000	1.312	1.687	1.375	.078	.048	.078	.093	NA	NA	1.164	.734
304	K						B	II	NOTE 11C	2.000	1.312	1.687	1.375	.078	.048	.078	.093	.070	.078	1.164	.734
303	K																				
302	K																				
301	K																				
300	K	OPTICAL UNIT		NA	NA	NA	A	I	NOTE 11B	2.000	1.312	1.675	NA	NA	.048	.078	NA	NA	NA	1.090	.812
9	K	2 IN AUTOCOLLIMATOR		1001702			B	II	NOTE 11C	4.000	2.625	3.812	2.750	.156	.093	.156	.187	.125	.156	2.250	1.500
8	K	5 IN AUTOCOLLIMATOR		1017410			B	II	NOTE 11C	4.000	2.625	3.812	2.750	.156	.093	.156	.187	.125	.156	2.250	1.500
7	K	2-1/2 IN AUTOCOLLIMATOR (SCT)		1017435			B	II	NOTE 11C	4.000	2.625	3.812	2.750	.156	.093	.156	.187	.125	.156	2.250	1.500
6	K	2-1/2 IN AUTOCOLLIMATOR (SXT)		1017448			B	II	NOTE 11C	4.000	2.625	3.812	2.750	.156	.093	.156	.187	.125	.156	2.250	1.500
5	K	RETROREFLECTING PRISM ASSEMBLY		1019840			B	I	NOTE 11B	4.000	2.625	3.812	2.750	.156	.093	.156	.187	NA	NA	2.250	1.500
4	K	S/H SIMULATOR ASSEMBLY		1019896			B	I	NOTE 11B	4.000	2.625	3.812	2.750	.156	.093	.156	.187	NA	NA	2.250	1.500
3	K	REFERENCE MIRROR		1001767			B	I	NOTE 11B	2.000	1.312	1.906	1.375	.078	.048	.078	.093	NA	NA	1.125	.750
2	K	2 IN PLANE READING AUTOCOLLIMATOR		1017413			B	I	NOTE 11B	2.000	1.312	1.906	1.375	.078	.048	.078	.093	NA	NA	1.125	.750
1	K	2 IN AUTOCOLLIMATOR		1001702			B	I	NOTE 11B	2.000	1.312	1.906	1.375	.078	.048	.078	.093	NA	NA	1.125	.750

NOTES FOR TABLE

STYLE A IS FOR G & N SYSTEM
STYLE B IS FOR GROUND SUPPORT EQUIPMENT
TYPE I IS WITHOUT MOUNTING HOLES
TYPE II IS WITH MOUNTING HOLES

1004260 CN SHT 2

SYM	ZONE	REVISIONS DESCRIPTION	CHG NO	DATE	APPD
CL		REPLACES REV CK WITHOUT CHANGE PER TDRR 34365		9/28/67	JWL RWH
CM		REVISION STATUS CHANGED		18 OCT 67	RAW
CN		REVISION STATUS CHANGED		31 OCT 67	JRK

.156	.093	.156	.187	NA	NA	2.312	1.468	1.187	.906	2.031	NA	.375	.156	NA	1.437	2.750	.437	NA	3.688	.062	.062	1.750	.593	NA	.625	3.375	.187	NA	.156	.531	.453	NA
.156	.093	.156	.187	NA	NA	2.328	1.468	1.187	.906	2.031	.062	.375	.156	NA	1.437	2.750	.437	NA	3.687	.062	.062	1.750	.593	NA	NA	NA	NA	NA	NA	NA	NA	NA
.156	.093	.156	.187	.125	.156	2.328	1.468	1.187	.906	2.031	.062	.375	.156	NA	1.437	2.750	.437	2.312	3.687	.062	NA	1.750	.593	NA	NA	NA	NA	NA	NA	NA	NA	NA
.078	.048	.078	.093	NA	NA	1.164	.734	.593	.453	1.015	.048	.171	.078	NA	.718	1.375	.187	NA	NA	.048	.031	.875	.320	NA	NA	NA	NA	NA	NA	NA	NA	NA
.078	.048	.078	.093	.070	.078	1.164	.734	.593	.453	1.015	.048	.171	.078	NA	.718	1.375	.187	.156	1.843	.048	NA	.875	.320	NA	NA	NA	NA	NA	NA	NA	NA	NA
NA	.048	.078	NA	NA	NA	1.090	.812	.675	.540	.940	NA	.265	NA	NA	NA	1.375	.218	NA	NA	NA	NA	NA	.375	NA	NA	NA	.180	NA	.078	NA	NA	NA
.156	.093	.156	.187	.125	.156	2.250	1.500	1.187	.906	2.031	.093	.375	.156	1.750	1.437	2.750	.437	2.312	3.687	.062	NA	1.750	.593	.156	1.062	3.812	.156	NA	.156	1.062	.375	3.687
.156	.093	.156	.187	.125	.156	2.250	1.500	1.187	.906	2.031	.093	.375	.156	1.750	1.437	2.750	.437	2.312	3.687	.062	NA	1.750	.593	.156	1.062	3.812	.156	NA	.156	1.062	.375	3.687
.156	.093	.156	.187	.125	.156	2.250	1.500	1.187	.906	2.031	.093	.375	.156	1.750	1.437	2.750	.437	2.312	3.687	.062	NA	1.750	.593	.156	1.062	3.812	.156	NA	.156	1.062	.375	3.687
.156	.093	.156	.187	.125	.156	2.250	1.500	1.187	.906	2.031	.093	.375	.156	1.750	1.437	2.750	.437	2.312	3.687	.062	NA	1.750	.593	.156	1.062	3.812	.156	NA	.156	1.062	.375	3.687
.156	.093	.156	.187	NA	NA	2.250	1.500	1.187	.906	2.031	.093	.375	.156	1.750	1.437	2.750	.437	NA	NA	.062	.062	1.750	.593	.156	1.062	3.812	.156	NA	.156	1.062	.375	NA
.156	.093	.156	.187	NA	NA	2.250	1.500	1.187	.906	2.031	.093	.375	.156	1.750	1.437	2.750	.437	NA	NA	.062	.062	1.750	.593	.156	1.062	3.812	.156	NA	.156	1.062	.375	NA
.078	.048	.078	.093	NA	NA	1.125	.750	.593	.453	1.015	.062	.187	.078	.875	.718	1.375	.218	NA	NA	.048	.031	.875	.305	.078	.531	1.906	.078	NA	.078	.531	.187	NA
.078	.048	.078	.093	NA	NA	1.125	.750	.593	.453	1.015	.062	.187	.078	.875	.718	1.375	.218	NA	NA	.048	.031	.875	.305	.078	.531	1.906	.078	NA	.078	.531	.187	NA
.078	.048	.078	.093	NA	NA	1.125	.750	.593	.453	1.015	.062	.187	.078	.875	.718	1.375	.218	NA	NA	.048	.031	.875	.305	.078	.531	1.906	.078	NA	.078	.531	.187	NA
E	F	G	H	J	K	L	M	N	P	R	S	T	U	V	W	Y	Z	AA	AB	AC	AD	AE	AF	AG	AH	AJ	AK	AL	AM	AN	AP	AR

KOLLSMAN DASH NUMBERS

AS APPLICABLE NEXT ASSY / USED ON APPLICATION	UNLESS OTHERWISE SPECIFIED DIMENSIONS ARE IN INCHES TOLERANCES ON 2 PLACE DECIMALS ± / 3 PLACE DECIMALS ± .005 / ANGLES ± DO NOT SCALE THIS DRAWING MATERIAL SEE NOTE 11 APPROVAL	M I T INSTRUMENTATION LAB CAMBRIDGE MASS DRAWN R A JONES DATE 16 JUL 65 CHECKED APPROVAL W KUPFER 22 JUL 65 CONTRACT NASA APPROVAL T. MICHAELS 22 JUL 65 MIT APPROVAL W KUPFER 22 JUL 65	MANNED SPACECRAFT CENTER HOUSTON TEXAS NAMEPLATES, APOLLO GEN - GSE (STANDARDS) SIZE J2 CODE IDENT NO 80230 1004260 SCALE NONE SHEET 2 OF 6

1004260 CN SHT 2

1004260 CN

1004260

SHEET 2 of 6
1004260

2/1004260

DASH NO.	P/C	PART NAME	REMARKS	PART NUMBER	SER. NO.	CONT. NO.	STYLE	TYPE	MATERIAL	A	B	C	D	E	F	G	H	J	K	L	M	N	P
299	R																						
298	R																						
285	R	BUFFER CIRCUIT ASSY		2014254-031	NA	NAS-9-497	B	I	NOTE 11B	FOR DIMENSIONS SEE DASH 15 VALUES BELOW													
284	R	LOGIC DRAWER ASSY NO. 2		2014037-041	NA	NAS-9-497	B	I	NOTE 11B	FOR DIMENSIONS SEE DASH 17 VALUES BELOW													
283	R	DRAWER ASSY-PROGRAM & MONITOR		2014041-051	NA	NAS-9-497	B	I	NOTE 11B	FOR DIMENSIONS SEE DASH 17 VALUES BELOW													
282	R	COMPUTER TEST SET		2014042-061	NA	NAS-9-497	B	II	NOTE 11C	FOR DIMENSIONS SEE DASH 18 VALUES BELOW													
281	R	AGC HANDLING FIXTURE		2014282-031	NA	NAS-9-497	B	I	NOTE 11B	FOR DIMENSIONS SEE DASH 17 VALUES BELOW													
280	R	COMPUTER TEST SET		2014042-051	NA	NAS-9-497	B	II	NOTE 11C	FOR DIMENSIONS SEE DASH 18 VALUES BELOW													
279	R	SELF TEST ASSY		2014366-041	NA	NAS-9-497	B	I	NOTE 11B	FOR DIMENSIONS SEE DASH 15 VALUES BELOW													
278	R	LOGIC DRAWER ASSY NO. 1		2014036-041	NA	NAS-9-497	B	I	NOTE 11B	FOR DIMENSIONS SEE DASH 17 VALUES BELOW													
277	R	COMPUTER TEST SET		2014042-041	NA	NAS-9-497	B	II	NOTE 11C	FOR DIMENSIONS SEE DASH 18 VALUES BELOW													
276	R	DRAWER ASSY-PROGRAM & MONITOR		2014041-041	NA	NAS-9-497	B	I	NOTE 11B	FOR DIMENSIONS SEE DASH 17 VALUES BELOW													
275	R	DRAWER ASSY RDC INTERFACE		2014045-031	NA	NAS-9-497	B	I	NOTE 11B	FOR DIMENSIONS SEE DASH 15 VALUES BELOW													
274	R	SELF TEST ASSY		2014366-031	NA	NAS-9-497	B	I	NOTE 11B	FOR DIMENSIONS SEE DASH 15 VALUES BELOW													
273	R	LOGIC DRAWER ASSY NO. 2		2014037-031	NA	NAS-9-497	B	I	NOTE 11B	FOR DIMENSIONS SEE DASH 17 VALUES BELOW													
272	R	DRAWING ASSY PROGRAMMER & MONITOR		2014041-031	NA	NAS-9-497	B	I	NOTE 11B	FOR DIMENSIONS SEE DASH 17 VALUES BELOW													
271	R	LOGIC DRAWER ASSY NO. 1		2014036-031	NA	NAS-9-497	B	I	NOTE 11B	FOR DIMENSIONS SEE DASH 17 VALUES BELOW													
270	R	COMPUTER TEST SET		2014042-031	NA	NAS-9-497	B	II	NOTE 11C	FOR DIMENSIONS SEE DASH 18 VALUES BELOW													
269	R	POWER CONTROL ASSY		2014044-021	NA	NAS-9-497	B	I	NOTE 11B	FOR DIMENSIONS SEE DASH 17 VALUES BELOW													
268	R	SELF TEST ASSY		2014366-021	NA	NAS-9-497	B	I	NOTE 11B	FOR DIMENSIONS SEE DASH 15 VALUES BELOW													
267	R	AGC JUNCTION ASSY		2014341-021	NA	NAS-9-497	B	I	NOTE 11B	FOR DIMENSIONS SEE DASH 15 VALUES BELOW													
266	R	POWER CONTROL ASSY		2014079-021	NA	NAS-9-497	B	I	NOTE 11B	FOR DIMENSIONS SEE DASH 15 VALUES BELOW													
265	R	BUFFER CIRCUIT ASSY		2014254-021	NA	NAS-9-497	B	I	NOTE 11B	FOR DIMENSIONS SEE DASH 15 VALUES BELOW													
264	R	DRAWER ASSY X Y INTERFACE		2014040-021	NA	NAS-9-497	B	I	NOTE 11B	FOR DIMENSIONS SEE DASH 15 VALUES BELOW													
263	R	DRAWER ASSY RDC INTERFACE		2014045-021	NA	NAS-9-497	B	I	NOTE 11B	FOR DIMENSIONS SEE DASH 15 VALUES BELOW													
262	R	DRAWER ASSY PROGRAMMER & MONITOR		2014041-021	NA	NAS-9-497	B	I	NOTE 11B	FOR DIMENSIONS SEE DASH 17 VALUES BELOW													
261	R	LOGIC DRAWER ASSY NO. 2		2014037-021	NA	NAS-9-497	B	I	NOTE 11B	FOR DIMENSIONS SEE DASH 17 VALUES BELOW													
260	R	LOGIC DRAWER ASSY NO. 1		2014036-021	NA	NAS-9-497	B	I	NOTE 11B	FOR DIMENSIONS SEE DASH 17 VALUES BELOW													
259	R	OPERATION CONSOLE		2014024-021	NA	NAS-9-497	B	II	NOTE 11C	FOR DIMENSIONS SEE DASH 18 VALUES BELOW													
258	R	COMPUTER TEST SET		2014042-021	NA	NAS-9-497	B	II	NOTE 11C	FOR DIMENSIONS SEE DASH 18 VALUES BELOW													
257	R	AUXILIARY CALIBRATION CONSOLE		2014059-021	NA	NAS-9-497	B	II	NOTE 11C	FOR DIMENSIONS SEE DASH 18 VALUES BELOW													
256	R	AGC CALIBRATION CONSOLE		2014049-021	NA	NAS-9-497	B	II	NOTE 11C	FOR DIMENSIONS SEE DASH 18 VALUES BELOW													
255	R	AGC HANDLING FIXTURE		2014282-021	NA	NAS-9-497	B	I	NOTE 11B	FOR DIMENSIONS SEE DASH 17 VALUES BELOW													
254	R	DRAWER ASSY COMP. SIMULATOR		2014048-011	NA	NAS-9-497	B	II	NOTE 11C	FOR DIMENSIONS SEE DASH 18 VALUES BELOW													
253	R	SHIPPING KIT ASSY, NAV DSKY		2016312-011	NA	NAS-9-497	B	II	NOTE 11C	FOR DIMENSIONS SEE DASH 18 VALUES BELOW													
252	R	SHIPPING KIT ASSY, UNIVERSAL DSKY		2016316-011	NA	NAS-9-497	B	II	NOTE 11C	FOR DIMENSIONS SEE DASH 18 VALUES BELOW													
251	R	SHIPPING KIT ASSY, MAIN DSKY		2016313-011	NA	NAS-9-497	B	II	NOTE 11C	FOR DIMENSIONS SEE DASH 18 VALUES BELOW													
250	R	AMPLIFIER, REWORK		2014386	NA	NAS-9-497	B	I	NOTE 11B	FOR DIMENSIONS SEE DASH 15 VALUES BELOW													
249	R	TEMP MONITOR ASSY		2014313-011	NA	NAS-9-497	B	I	NOTE 11C	FOR DIMENSIONS SEE DASH 17 VALUES BELOW													
248	R	AGC JUNCTION ASSY		2014341-011	NA	NAS-9-497	B	I	NOTE 11B	FOR DIMENSIONS SEE DASH 15 VALUES BELOW													
247	R	AC INPUT PANEL ASSY		2014302-011	NA	NAS-9-497	B	I	NOTE 11B	FOR DIMENSIONS SEE DASH 15 VALUES BELOW													
246	R	SELF TEST ASSY		2014392-011	NA	NAS-9-497	B	I	NOTE 11B	FOR DIMENSIONS SEE DASH 15 VALUES BELOW													
245	R	TAPE PUNCH ASSEMBLY		2014039-011	NA	NAS-9-497	B	I	NOTE 11B	FOR DIMENSIONS SEE DASH 15 VALUES BELOW													
244	R	TAPE READER ASSEMBLY		2014038-011	NA	NAS-9-497	B	I	NOTE 11B	FOR DIMENSIONS SEE DASH 15 VALUES BELOW													
243																							
242																							
241	R	APOLLO GUIDANCE COMPUTER GROUP		6003001	NA	NAS-9-497	A	I	NOTE 11B	FOR DIMENSIONS SEE DASH 19 VALUES BELOW													
240	R	SELF TEST ASSEMBLY		2014366-011	NA	NAS-9-497	B	I	NOTE 11B	FOR DIMENSIONS SEE DASH 15 VALUES BELOW													
239	R	POWER SUPPLY ASSY-115V., 400 CYCLE		2014207-011	NA	NAS-9-497	B	I	NOTE 11B	FOR DIMENSIONS SEE DASH 17 VALUES BELOW													
238	R	AC INPUT PANEL ASSY		2014043-011	NA	NAS-9-497	B	I	NOTE 11B	FOR DIMENSIONS SEE DASH 17 VALUES BELOW													
237	R	POWER CONTROL ASSY		2014079-011	NA	NAS-9-497	B	I	NOTE 11B	FOR DIMENSIONS SEE DASH 15 VALUES BELOW													
236	R	DRAWER ASSY-X Y INTERFACE		2014040-011	NA	NAS-9-497	B	I	NOTE 11B	FOR DIMENSIONS SEE DASH 15 VALUES BELOW													
235	R	DRAWER ASSY RDC INTERFACE		2014045-011	NA	NAS-9-497	B	I	NOTE 11B	FOR DIMENSIONS SEE DASH 15 VALUES BELOW													
234	R	BUFFER CIRCUIT ASSY		2014254-011	NA	NAS-9-497	B	I	NOTE 11B	FOR DIMENSIONS SEE DASH 15 VALUES BELOW													
233	R	CONTROL & INTERFACE ASSY		2014204-011	NA	NAS-9-497	B	I	NOTE 11B	FOR DIMENSIONS SEE DASH 15 VALUES BELOW													
232	R	POWER CONTROL ASSY		2014044-011	NA	NAS-9-497	B	I	NOTE 11B	FOR DIMENSIONS SEE DASH 17 VALUES BELOW													
231	R	DRAWER ASSY, PROGRAMMER & MONITOR		2014041-011	NA	NAS-9-497	B	I	NOTE 11B	FOR DIMENSIONS SEE DASH 17 VALUES BELOW													
230	R	CONNECTOR INTERFACE ASSY		2014272-011	NA	NAS-9-497	B	I	NOTE 11B	FOR DIMENSIONS SEE DASH 15 VALUES BELOW													
229	R	CONNECTOR INTERFACE ASSY		2014047-011	NA	NAS-9-497	B	I	NOTE 11B	FOR DIMENSIONS SEE DASH 15 VALUES BELOW													
228	R	ANTENNA, TUNING CAPACITOR ASSY		2014209-011	NA	NAS-9-497	B	I	NOTE 11B	FOR DIMENSIONS SEE DASH 15 VALUES BELOW													
227	R	MOUNTING FIXTURE ASSY		2014006-011	NA	NAS-9-497	B	I	NOTE 11B	FOR DIMENSIONS SEE DASH 17 VALUES BELOW													
226	R	POWER SUPPLY ASSY 3 VDC		2014234-011	NA	NAS-9-497	B	I	NOTE 11B	FOR DIMENSIONS SEE DASH 15 VALUES BELOW													
225	R	PANEL ASSY—SIGNAL INTERFACE		2014010-011	NA	NAS-9-497	B	I	NOTE 11B	FOR DIMENSIONS SEE DASH 15 VALUES BELOW													
224	R	OSCILLOSCOPE ASSY		2014232-011	NA	NAS-9-497	B	I	NOTE 11B	FOR DIMENSIONS SEE DASH 15 VALUES BELOW													
223	R	AUXILIARY OUTLET ASSY		2014274-011	NA	NAS-9-497	B	I	NOTE 11B	FOR DIMENSIONS SEE DASH 15 VALUES BELOW													
222	R	FREQUENCY COUNTER		2014233-011	NA	NAS-9-497	B	I	NOTE 11B	FOR DIMENSIONS SEE DASH 15 VALUES BELOW													
221	R	POWER SUPPLY ASSY 10, 13, 28 VDC		2014235-011	NA	NAS-9-497	B	I	NOTE 11B	FOR DIMENSIONS SEE DASH 15 VALUES BELOW													
220	R	LOGIC DRAWER ASSY NO. 2		2014037-011	NA	NAS-9-497	B	I	NOTE 11B	FOR DIMENSIONS SEE DASH 17 VALUES BELOW													
219	R	LOGIC DRAWER ASSY NO. 1		2014036-011	NA	NAS-9-497	B	I	NOTE 11B	FOR DIMENSIONS SEE DASH 17 VALUES BELOW													
218	R	COUNTER, ELECTRICAL ASSY		2014288-011	NA	NAS-9-497	B	I	NOTE 11B	FOR DIMENSIONS SEE DASH 15 VALUES BELOW													
217	R	POWER SUPPLY ASSY		2014279-011	NA	NAS-9-497	B	I	NOTE 11B	FOR DIMENSIONS SEE DASH 15 VALUES BELOW													
216	R	TEST MOUNT ASSY		2014257-011	NA	NAS-9-497	B	I	NOTE 11B	FOR DIMENSIONS SEE DASH 15 VALUES BELOW													
215	R	UNIVERSAL DSKY PEDESTAL MOUNT		2014014-011	NA	NAS-9-497	B	I	NOTE 11B	FOR DIMENSIONS SEE DASH 17 VALUES BELOW													
214	R	MAIN DSKY PEDESTAL MOUNT		2014343	NA	NAS-9-497	B	I	NOTE 11B	FOR DIMENSIONS SEE DASH 17 VALUES BELOW													
213	R	SHIPPING CONTAINER, MAIN DSKY		1006229	NA	NAS-9-497	B	II	NOTE 11C	FOR DIMENSIONS SEE DASH 18 VALUES BELOW													
212	R	SHIPPING CONTAINER, NAV DSKY		1006231	NA	NAS-9-497	B	II	NOTE 11C	FOR DIMENSIONS SEE DASH 18 VALUES BELOW													
211	R	SHIPPING CONTAINER, AGC		1006230	NA	NAS-9-497	B	II	NOTE 11C	FOR DIMENSIONS SEE DASH 18 VALUES BELOW													
210	R	SHIPPING CONTAINER, UNIVERSAL DSKY		1006422	NA	NAS-9-497	B	II	NOTE 11C	FOR DIMENSIONS SEE DASH 18 VALUES BELOW													
209	R	SHIPPING CONTAINER, AGC		1006421	NA	NAS-9-497	B	II	NOTE 11C	FOR DIMENSIONS SEE DASH 18 VALUES BELOW													
208	R	UNIVERSAL DSKY HANDLING FIXTURE		2014013-011	NA	NAS-9-497	B	I	NOTE 11B	FOR DIMENSIONS SEE DASH 15 VALUES BELOW													
207	R	NAV DSKY HANDLING FIXTURE		1014377	NA	NAS-9-497	B	I	NOTE 11B	FOR DIMENSIONS SEE DASH 17 VALUES BELOW													
206	R	MAIN DSKY HANDLING FIXTURE		1014334	NA	NAS-9-497	B	I	NOTE 11B	FOR DIMENSIONS SEE DASH 17 VALUES BELOW													
205	R	AGC HANDLING FIXTURE		2014282-011	NA	NAS-9-497	B	I	NOTE 11B	FOR DIMENSIONS SEE DASH 17 VALUES BELOW													
204	R	OPERATION CONSOLE		2014024-011	NA	NAS-9-497	B	II	NOTE 11C	FOR DIMENSIONS SEE DASH 18 VALUES BELOW													
203	R	COMPUTER TEST SET		2014042-011	NA	NAS-9-497	B	II	NOTE 11C	FOR DIMENSIONS SEE DASH 18 VALUES BELOW													
202	R	DRAWER ASSY, COMPUTER SIMULATOR		2014048-011	NA	FNP-12775	B	II	NOTE 11C	FOR DIMENSIONS SEE DASH 18 VALUES BELOW													
201	R	AUXILIARY CALIBRATION CONSOLE		2014059-011	NA	NAS-9-497	B	II	NOTE 11C	FOR DIMENSIONS SEE DASH 18 VALUES BELOW													
200	R	AGC CALIBRATION CONSOLE		2014049-011	NA	NAS-9-497	B	II	NOTE 11C	FOR DIMENSIONS SEE DASH 18 VALUES BELOW													
21	R																						
20	R	NA		NA	NA	NA	A	II	NOTE 11C	2.000	1.312	1.687	1.375	.078	.031	.078	.093	[illegible]	.093	1.187	.750	.593	.453
19	R	NA		NA	NA	NA	A	I	NOTE 11B	2.000	1.312	1.687	1.375	.078	.031	.078	.093	NA	NA	1.187	.750	.593	.453
18	R	NA		NA	NA	NA	B	II	NOTE 11C	4.187	1.875	3.469	2.750	.156	.093	.156	.125	[illegible]	.125	1.625	1.032	.844	.656
17	R	NA		NA	NA	NA	B	I	NOTE 11B	4.187	1.875	3.469	2.750	.156	.093	.156	.125	NA	NA	1.625	1.032	.844	.656
16	R	NA		NA	NA	NA	B	II	NOTE 11C	2.000	1.312	1.687	1.375	.078	.031	.078	.093	[illegible]	.093	1.187	.750	.593	.453
15	R	NA		NA	NA	NA	B	I	NOTE 11B	2.000	1.312	1.687	1.375	.078	.031	.078	.093	NA	NA	1.187	.750	.593	.453

NOTES FOR TABLE

STYLE A IS FOR G & N SYSTEM
STYLE B IS FOR GROUND SUPPORT EQUIPMENT
TYPE I IS WITHOUT MOUNTING HOLES
TYPE II IS WITH MOUNTING HOLES

1004260 CN SHT 3

REVISIONS					
SYM	ZONE	DESCRIPTION	CHG NO	DATE	APPD
CL		REPLACES REV CK WITHOUT CHANGE PER TDRR 34365		9/20/67	JWL RWM
CM		REVISION STATUS CHANGED		18 OCT 67	RAW
CN		*REVISION STATUS CHANGED*		31 OCT 67	JRK

ASH 15 VALUES BELOW
ASH 17 VALUES BELOW
ASH 17 VALUES BELOW
ASH 18 VALUES BELOW
ASH 17 VALUES BELOW
ASH 18 VALUES BELOW
ASH 15 VALUES BELOW
ASH 17 VALUES BELOW
ASH 18 VALUES BELOW
ASH 17 VALUES BELOW
ASH 15 VALUES BELOW
ASH 15 VALUES BELOW
ASH 17 VALUES BELOW
ASH 17 VALUES BELOW
ASH 17 VALUES BELOW
ASH 18 VALUES BELOW
ASH 17 VALUES BELOW
ASH 18 VALUES BELOW
ASH 15 VALUES BELOW
ASH 15 VALUES BELOW
[illegible] VALUES BELOW
ASH 18 VALUES BELOW
ASH 15 VALUES BELOW
ASH 17 VALUES BELOW
ASH 17 VALUES BELOW
[illegible] VALUES BELOW
18 VALUES BELOW
18 VALUES BELOW
18 VALUES BELOW
18 VALUES BELOW
17 VALUES BELOW
18 VALUES BELOW
18 VALUES BELOW
18 VALUES BELOW
18 VALUES BELOW
15 VALUES BELOW
17 VALUES BELOW
15 VALUES BELOW
[illegible] VALUES BELOW
15 VALUES BELOW
15 VALUES BELOW
15 VALUES BELOW

18 VALUES BELOW
15 VALUES BELOW
17 VALUES BELOW
17 VALUES BELOW
[illegible] VALUES BELOW
15 VALUES BELOW
17 VALUES BELOW
15 VALUES BELOW
15 VALUES BELOW
17 VALUES BELOW
17 VALUES BELOW
15 VALUES BELOW
18 VALUES BELOW
[illegible] VALUES BELOW
17 VALUES BELOW
13 VALUES BELOW
15 VALUES BELOW
15 VALUES BELOW
15 VALUES BELOW
15 VALUES BELOW
15 VALUES BELOW
17 VALUES BELOW
17 VALUES BELOW
15 VALUES BELOW
15 VALUES BELOW
15 VALUES BELOW
17 VALUES BELOW
17 VALUES BELOW
18 VALUES BELOW
18 VALUES BELOW
18 VALUES BELOW
18 VALUES BELOW
18 VALUES BELOW
15 VALUES BELOW
17 VALUES BELOW
17 VALUES BELOW
17 VALUES BELOW
18 VALUES BELOW
18 VALUES BELOW
18 VALUES BELOW
18 VALUES BELOW
18 VALUES BELOW

F	G	H	J	K	L	M	N	P	R	S	T	U	V	W	Y	Z	AA	AB	AC	AD	AE	AF	AG	AH	AJ	AK	AL	AM	AN	AP	AR
.031	.078	.093	[illegible]	.093	1.187	.750	.593	.453	1.015	.062	.187	.078	.875	.718	1.375	.218	1.156	1.843	.048	NA	.875	.305	.078	.312	1.687	.078	NA	.078	.312	.187	1.843
.031	.078	.093	NA	NA	1.187	.750	.593	.453	1.015	.062	.187	.078	.875	.718	1.375	.218	NA	NA	.048	.031	.875	.305	.078	.312	1.687	.078	NA	.078	.312	.187	NA
.093	.156	.125	[illegible]	.125	1.625	1.032	.844	.656	1.406	.093	.344	.156	1.781	1.531	2.844	.312	1.562	3.875	.062	NA	1.219	.500	.156	.719	3.469	.156	NA	.156	.719	.344	3.875
.093	.156	.125	NA	NA	1.625	1.032	.844	.656	1.406	.093	.344	.156	1.781	1.531	2.844	.312	NA	NA	.062	.062	1.219	.500	.156	.719	3.469	.156	NA	.156	.719	.344	NA
[illegible]	.078	.093	[illegible]	.093	1.187	.750	.593	.453	1.015	.062	.187	.078	.875	.718	1.375	.218	1.156	1.843	.048	NA	.875	.305	.078	.312	1.687	.078	NA	.078	.312	.187	1.843
.031	.078	.093	NA	NA	1.187	.750	.593	.453	1.015	.062	.187	.078	.875	.718	1.375	.218	NA	NA	.048	.031	.875	.305	.078	.312	1.687	.078	NA	.078	.312	.187	NA

RAYTHEON DASH NUMBERS

AS APPLICABLE	
NEXT ASSY	USED ON
APPLICATION	

UNLESS OTHERWISE SPECIFIED
DIMENSIONS ARE IN INCHES
TOLERANCES ON
2 PLACE DECIMALS ± —
3 PLACE DECIMALS ± .005
ANGLES ± —
DO NOT SCALE THIS DRAWING
MATERIAL SEE NOTE 11
APPROVAL

M I T INSTRUMENTATION LAB
DRAWN R A JONES DATE 16 JUL 65
CHECKED
APPROVAL W KUPFER 22 JUL 65
CONTRACT
NASA APPROVAL T. MICHAELS 22 JUL 65
MIT APPROVAL W. KUPFER 22 JUL 65

MANNED SPACECRAFT CENTER
HOUSTON TEXAS

NAMEPLATES, APOLLO GSN - GSE (STANDARDS)

SIZE J2
CODE IDENT NO 80230
1004260
SCALE NONE
SHEET 3 OF 6

1004260 CN SHT 3

1004260 CN

1004260

1004260
SHEET 3 OF 6

27/1004260

AC DASH NUMBERS CONTINUED ON SHEET 6

DASH NO.	P/C	PART NAME	REMARKS	PART NUMBER	SER. NO.	CONT. NO.	STYLE	TYPE	MATERIAL	A	B	C	D	E	F	G	H	J	K	L	M	N
199	AC	EYEPIECE STOWAGE UNIT		2021255-011			A	I		FOR DIMENSIONS SEE DASH 100 VALUES BELOW												
198	AC	SIGNAL CONDITIONER ASSY C/M		2007234		NAS-9-497	A	I	NOTE 11B	FOR DIMENSIONS SEE DASH 100 VALUES BELOW												
197	AC	SIGNAL CONDITIONER ASSY C/M		2007235		NAS-9-497	A	I	NOTE 11B	FOR DIMENSIONS SEE DASH 100 VALUES BELOW												
196	AC	SIGNAL CONDITIONER ASSY LEM		6007010		NAS-9-497	A	I	NOTE 11B	FOR DIMENSIONS SEE DASH 100 VALUES BELOW												
195	AC	PSA & SIGNAL CONDITIONER ASSY		6007009		NAS-9-497	A	I	NOTE 11B	FOR DIMENSIONS SEE DASH 100 VALUES BELOW												
194	AC	PANEL, MONITOR		2900031-031		NAS-9-497	B	II	NOTE 11C	FOR DIMENSIONS SEE DASH 141 VALUES BELOW												
193	AC	DISTRIBUTION BOX, GSE		2900024-031		NAS-9-497	B	II	NOTE 11C	FOR DIMENSIONS SEE DASH 141 VALUES BELOW												
192	AC	ANALYZER, OPTICS-INERTIAL		2900023-031		NAS-9-497	B	II	NOTE 11C	FOR DIMENSIONS SEE DASH 144 VALUES BELOW												
191	AC	TEST CONTROL		2900027-031		NAS-9-497	B	II	NOTE 11C	FOR DIMENSIONS SEE DASH 141 VALUES BELOW												
190	AC	PANEL, PWR SUP AND LOAD		2900033-021		NAS-9-497	B	II	NOTE 11C	FOR DIMENSIONS SEE DASH 141 VALUES BELOW												
189	AC	ADPT MODULE, P.S.A.		6900088-011		NAS-9-497	B	II	NOTE 11C	FOR DIMENSIONS SEE DASH 141 VALUES BELOW												
188	AC	ADPT MODULE, P.S.A.		2901143-011		NAS-9-497	B	II	NOTE 11C	FOR DIMENSIONS SEE DASH 141 VALUES BELOW												
187	AC	FIXTURE, MTG, PTA/PEA		2900066-021		NAS-9-497	B	II	NOTE 11C	FOR DIMENSIONS SEE DASH 141 VALUES BELOW												
186	AC	ANNUNCIATOR PANEL & EYEPIECE STORAGE ASSEMBLY		1021255-021			A	I		FOR DIMENSIONS SEE DASH 100 VALUES BELOW												
185	AC	ANNUNCIATOR PANEL & EYEPIECE STORAGE ASSEMBLY		1021255-011			A	I		FOR DIMENSIONS SEE DASH 100 VALUES BELOW												
184	AC	FIX., HAND., G AND N HARNESS		1901846-041		NAS-9-497	B	II	NOTE 11C	FOR DIMENSIONS SEE DASH 144 VALUES BELOW												
183	AC	INSTALLING TOOL, ELEC. CONN		1902586-011		NAS-9-497	B	II	NOTE 11C	FOR DIMENSIONS SEE DASH 102 VALUES BELOW												
182	AC	ADPT MODULE, P.S.A.		6900088-011		NAS-9-497	B	II	NOTE 11C	FOR DIMENSIONS SEE DASH 141 VALUES BELOW												
181	AC	G & N INDICATOR CONTROL PANEL ASSY		2014578-011		NAS-9-497	A	I	NOTE 11B	3,000	1,938	2,437	NA	.125	.062	.188	.156	NA	NA	1,750	1,125	,906
180	AC	ADPT MODULE, P.S.A.		1902431-031		NAS-9-497	B	II		FOR DIMENSIONS SEE DASH 121 VALUES BELOW												
179	AC	MOUNTING PLATE, IMU/PTA		6900083-011		NAS-9-497	B	II		FOR DIMENSIONS SEE DASH 144 VALUES BELOW												
178	AC	MOUNTING PLATE, COMPONENT		6900007-021		NAS-9-497	B	II		FOR DIMENSIONS SEE DASH 144 VALUES BELOW												
177	AC	FIX., MOUNTING, SUBSYSTEM		2900070-021		NAS-9-497	B	II		FOR DIMENSIONS SEE DASH 144 VALUES BELOW												
176	AC	FIX., MOUNTING, G & N		2900067-021		NAS-9-497	B	II		FOR DIMENSIONS SEE DASH 144 VALUES BELOW												
175	AC	CSL, COOL. AND PWR, G & N		1902134-031		NAS-9-497	B	II		FOR DIMENSIONS SEE DASH 144 VALUES BELOW												
174	AC	FIX., HAND., C/M AND LEM CDU		2900999-011		NAS-9-497	B	II	NOTE 11C	FOR DIMENSIONS SEE DASH 141 VALUES BELOW												
173	AC	FIX., HANDLING, C/M PSA		2900998-011		NAS-9-497	B	II	NOTE 11C	FOR DIMENSIONS SEE DASH 141 VALUES BELOW												
172	AC	CAGING ELECTRONICS, GYRO		2900029-021		NAS-9-497	B	II	NOTE 11C	FOR DIMENSIONS SEE DASH 141 VALUES BELOW												
171	AC	DISTRIBUTION BOX, GSE		2900024-021		NAS-9-497	B	II	NOTE 11C	FOR DIMENSIONS SEE DASH 141 VALUES BELOW												
170	AC	ANALYZER, OPTICS-INERTIAL		2900023-021		NAS-9-497	B	II	NOTE 11C	FOR DIMENSIONS SEE DASH 144 VALUES BELOW												
169	AC	ADPT, TESTPOINT, P.S.A.		2900037-021		NAS-9-497	B	II	NOTE 11C	FOR DIMENSIONS SEE DASH 141 VALUES BELOW												
168	AC	TEST SELECTOR		2900028-021		NAS-9-497	B	II	NOTE 11C	FOR DIMENSIONS SEE DASH 141 VALUES BELOW												
167	AC	TEST CONTROL		2900027-021		NAS-9-497	B	II	NOTE 11C	FOR DIMENSIONS SEE DASH 141 VALUES BELOW												
166	AC	PANEL, MONITOR		2900031-021		NAS-9-497	B	II	NOTE 11C	FOR DIMENSIONS SEE DASH 141 VALUES BELOW												
165	AC	TERM. BOARD STORAGE DRAWER		2900927-011		NAS-9-497	B	II	NOTE 11C	FOR DIMENSIONS SEE DASH 141 VALUES BELOW												
164	AC	INPUT/OUTPUT PANEL		2900926-011		NAS-9-497	B	II	NOTE 11C	FOR DIMENSIONS SEE DASH 141 VALUES BELOW												
163	AC	CONTROL PANEL		2900896-011		NAS-9-497	B	II	NOTE 11C	FOR DIMENSIONS SEE DASH 141 VALUES BELOW												
162	AC	CSL, CAL AND TEST, SCM/PSAAM		2900895-011		NAS-9-497	B	II	NOTE 11C	FOR DIMENSIONS SEE DASH 144 VALUES BELOW												
161	AC	FIX., LIFT AND HAND., IMU		1015462-011		NAS-9-497	B	II	NOTE 11C	FOR DIMENSIONS SEE DASH 141 VALUES BELOW												
160	AC	FIX., HAND., G & N HARNESS		1901846-031		NAS-9-497	B	II	NOTE 11C	FOR DIMENSIONS SEE DASH 144 VALUES BELOW												
159	AC	BATTERY POWER PACK		1900011-031		NAS-9-497	B	II	NOTE 11C	FOR DIMENSIONS SEE DASH 144 VALUES BELOW												
158	AC	COUPLING DATA UNIT ASSEMBLY C/M		2007222		NAS-9-497	A	I	NOTE 11B	FOR DIMENSIONS SEE DASH 100 VALUES BELOW												
157	AC	COUPLING DATA UNIT ASSEMBLY - LEM		2007222		NAS-9-497	A	I	NOTE 11B	FOR DIMENSIONS SEE DASH 100 VALUES BELOW												
156	AC	POWER & SERVO ASSEMBLY C/M		2007200		NAS-9-497	A	I	NOTE 11B	2,125	.968	1.718	NA	.093	.031	.06	.093	NA	NA	.858	.608	.484
155	AC	PIPA ELECTRONICS ASSEMBLY		2007201		NAS-9-497	A	I	NOTE 11B	FOR DIMENSIONS SEE DASH 100 VALUES BELOW												
154	AC	PULSE TORQUE ASSEMBLY-LEM		6007000		NAS-9-497	A	I	NOTE 11B	FOR DIMENSIONS SEE DASH 100 VALUES BELOW												
153	AC	POWER & SERVO ASSEMBLY-LEM		6007200		NAS-9-497	A	I	NOTE 11B	FOR DIMENSIONS SEE DASH 100 VALUES BELOW												
152	AC	CONT PNL, RSVR CKT TESTER		2900770-011		NAS-9-497	B	II	NOTE 11C	FOR DIMENSIONS SEE DASH 141 VALUES BELOW												
151	AC	TESTER, RESOLVER CIRCUIT		2900708-011		NAS-9-497	B	II	NOTE 11C	FOR DIMENSIONS SEE DASH 141 VALUES BELOW												
150	AC	JUNCTION BOX, P.S.A./G.S.E.		1901933-021		NAS-9-497	B	II	NOTE 11C	FOR DIMENSIONS SEE DASH 144 VALUES BELOW												
149	AC	BATTERY PACK, LIFTING		2900812-011		NAS-9-497	B	II	NOTE 11C	FOR DIMENSIONS SEE DASH 141 VALUES BELOW												
148	AC	MOUNTING PLATE, COMPONENT		6900007-011		NAS-9-497	B	II	NOTE 11C	FOR DIMENSIONS SEE DASH 144 VALUES BELOW												
147	AC	MOUNTING PLATE, COMPONENT		2900677-011		NAS-9-497	B	II	NOTE 11C	FOR DIMENSIONS SEE DASH 144 VALUES BELOW												
146	AC	CART, TRANS, G & N		1900009-041		NAS-9-497	B	II	NOTE 11C	FOR DIMENSIONS SEE DASH 144 VALUES BELOW												
145	AC	CONTAINER, SHIPPING, IMU		1900010-021		NAS-9-497	B	II	NOTE 11C	FOR DIMENSIONS SEE DASH 144 VALUES BELOW												
144	AC	FIX., MOUNTING, G & N		1902204-021			B	II	NOTE 11C	4.125	1.812	3.250	NA	.125	.062	.12	.156		.125	1.625	1.140	.890
143	AC	CSL, COOL. AND PWR, G & N		1902134-021			B	II	NOTE 11C	4.125	1.812	3.250	NA	.125	.062	.12	.156		.125	1.625	1.140	.890
142	AC	ANALYZER, OPTICS-INERTIAL		2900023-011			B	II	NOTE 11C	4.125	1.812	3.250	NA	.125	.062	.12	.156		.125	1.625	1.140	.890
141	AC	CONT, TEMP, PORTABLE		2900060-011			B	II	NOTE 11C	2.125	.968	1.718	NA	.093	.031	.06	.093		.093	.858	.608	.484
140	AC	TESTER, CKT, IMU/CDU RSVR		2900286-011			B	II	NOTE 11C	4.125	1.812	3.250	NA	.125	.062	.12	.156		.125	1.625	1.140	.890
139	AC	SIMULATOR, LD/SIG, CDU		2900285-011			B	II	NOTE 11C	4.125	1.812	3.250	NA	.125	.062	.12	.156		.125	1.625	1.140	.890
138	AC	SIMULATOR, LD/SIG, OPTICS		1902023-021			B	II	NOTE 11C	4.125	1.812	3.250	NA	.125	.062	.12	.156		.125	1.625	1.140	.890
137	AC	FIX., MOUNTING, IMU/NAV BASE		6900003-011			B	II	NOTE 11C	4.125	1.812	3.250	NA	.125	.062	.12	.156		.125	1.625	1.140	.890
136	AC	FIXTURE, OPTICS/NAV BASE		2900072-011			B	II	NOTE 11C	4.125	1.812	3.250	NA	.125	.062	.12	.156		.125	1.625	1.140	.890
135	AC	FIX., MOUNTING, SUB SYSTEM		2900070-011			B	II	NOTE 11C	4.125	1.812	3.250	NA	.125	.062	.12	.156		.125	1.625	1.140	.890
134	AC	FIX., HAND., G & N HARNESS		2900069-011			B	II	NOTE 11C	4.125	1.812	3.250	NA	.125	.062	.12	.156		.125	1.625	1.140	.890
133	AC	CNTR, SHIPPING, NAV BASE		2900068-011			B	II	NOTE 11C	4.125	1.812	3.250	NA	.125	.062	.12	.156		.125	1.625	1.140	.890
132	AC	FIX., MOUNTING, G & N		2900067-011			B	II	NOTE 11C	4.125	1.812	3.250	NA	.125	.062	.12	.156		.125	1.625	1.140	.890
131	AC	SIMULATOR, LD/SIG, IMU/CDU		2900062-011			B	II	NOTE 11C	4.125	1.812	3.250	NA	.125	.062	.12	.156		.125	1.625	1.140	.890
130	AC	TESTER, GYRO WHEEL		2900061-011			B	II	NOTE 11C	4.125	1.812	3.250	NA	.125	.062	.12	.156		.125	1.625	1.140	.890
129	AC	COOLANT SUPPLY		1902133-021			B	II	NOTE 11C	4.125	1.812	3.250	NA	.125	.062	.12	.156		.125	1.625	1.140	.890
128	AC	TABLE, ROTARY		1900926-021			B	II	NOTE 11C	4.125	1.812	3.250	NA	.125	.062	.12	.156		.125	1.625	1.140	.890
127	AC	FIX., HAND., OPTICS		2900074-011			B	II	NOTE 11C	2.125	.968	1.718	NA	.093	.031	.06	.093		.093	.858	.608	.484
126	AC	FIXTURE, MTG, PTA/PEA.		2900066-011			B	II	NOTE 11C	2.125	.968	1.718	NA	.093	.031	.06	.093		.093	.858	.608	.484
125	AC	CONT, TEMP, IMU LIFTING		2900063-011			B	II	NOTE 11C	2.125	.968	1.718	NA	.093	.031	.06	.093		.093	.858	.608	.484
124	AC	FIXTURE, HANDLING, IMU		2900064-011			B	II	NOTE 11C	2.125	.968	1.718	NA	.093	.031	.06	.093		.093	.858	.608	.484
123	AC	CONT, OPTICS, REMOTE		1902046-021			B	II	NOTE 11C	2.125	.968	1.718	NA	.093	.031	.06	.093		.093	.858	.608	.484
122	AC	TEST CONTROL		1902009-021			B	II	NOTE 11C	2.125	.968	1.718	NA	.093	.031	.06	.093		.093	.858	.608	.484
121	AC	ADPT MODULE, P.S.A.		1902431-021			B	II	NOTE 11C	2.125	.968	1.718	NA	.093	.031	.06	.093		.093	.858	.608	.484
120	AC	BRIDGE, DECADE ERROR		2900128-011			B	II	NOTE 11C	2.125	.968	1.718	NA	.093	.031	.06	.093		.093	.858	.608	.484
119	AC	PWR SUP, ELECTRONICS		2900012-011			B	II	NOTE 11C	2.125	.968	1.718	NA	.093	.031	.06	.093		.093	.858	.608	.484
118	AC	PWR SUP, RELAY AND LAMP		1900049-031			B	II	NOTE 11C	2.125	.968	1.718	NA	.093	.031	.06	.093		.093	.858	.608	.484
117	AC	CONSOLE, OSCILLOGRAPH		1900000-021			B	II	NOTE 11C	2.125	.968	1.718	NA	.093	.031	.06	.093		.093	.858	.608	.484
116	AC	ADPT MODULE, P.S.A.		1902431-011			B	II	NOTE 11C	2.125	.968	1.718	NA	.093	.031	.06	.093		.093	.858	.608	.484
115	AC	ADPT, TEST POINT, PTA/PEA.		2900145-011			B	II	NOTE 11C	2.125	.968	1.718	NA	.093	.031	.06	.093		.093	.858	.608	.484
114	AC	ADPT, TEST POINT, P.S.A.		2900037-011			B	II	NOTE 11C	2.125	.968	1.718	NA	.093	.031	.06	.093		.093	.858	.608	.484
113	AC	CONTROL, GIMBAL POSITION		2900036-011			B	II	NOTE 11C	2.125	.968	1.718	NA	.093	.031	.06	.093		.093	.858	.608	.484
112	AC	SELECTOR, SIGNAL, PRIMARY		2900035-011			B	II	NOTE 11C	2.125	.968	1.718	NA	.093	.031	.06	.093		.093	.858	.608	.484
111	AC	SEL, SIG, OSCILLOGRAPH		2900034-011			B	II	NOTE 11C	2.125	.968	1.718	NA	.093	.031	.06	.093		.093	.858	.608	.484
110	AC	PANEL, PWR SUP AND LOAD		2900033-011			B	II	NOTE 11C	2.125	.968	1.718	NA	.093	.031	.06	.093		.093	.858	.608	.484
109	AC	PANEL, MONITOR		2900031-011			B	II	NOTE 11C	2.125	.968	1.718	NA	.093	.031	.06	.093		.093	.858	.608	.484
108	AC	PANEL, AUXILIARY INPUT		2900030-011			B	II	NOTE 11C	2.125	.968	1.718	NA	.093	.031	.06	.093		.093	.858	.608	.484
107	AC	CAGING ELECTRONICS, GYRO		2900029-011			B	II	NOTE 11C	2.125	.968	1.718	NA	.093	.031	.06	.093		.093	.858	.608	.484
106	AC	TEST SELECTOR		2900028-011			B	II	NOTE 11C	2.125	.968	1.718	NA	.093	.031	.06	.093		.093	.858	.608	.484
105	AC	TEST CONTROL		2900027-011			B	II	NOTE 11C	2.125	.968	1.718	NA	.093	.031	.06	.093		.093	.858	.608	.484
104	AC	MONITOR AND CONTROL, TEMP		2900026-011			B	II	NOTE 11C	2.125	.968	1.718	NA	.093	.031	.06	.093		.093	.858	.608	.484
103	AC	DISTRIBUTION BOX, GSE		2900024-011			B	II	NOTE 11C	2.125	.968	1.718	NA	.093	.031	.06	.093		.093	.858	.608	.484
102	AC	VOLTMETER, DIGITAL		2900007-011			B	II	NOTE 11C	2.125	.968	1.718	NA	.093	.031	.06	.093		.093	.858	.608	.484
101	AC	NAVIGATION BASE ASSEMBLY-LEM		6899350		NAS-9-497	A	I	NOTE 11B	2.000	1.312	1.906	1.375	.078	.048	.078	.093	NA	NA	1.125	.750	.593
100	AC	NAVIGATION BASE ASSEMBLY		2899982		NAS-9-497	A	I	NOTE 11B	2.000	1.312	1.906	1.375	.078	.048	.078	.093	NA	NA	1.125	.750	.593

NOTES FOR TABLE

STYLE A IS FOR G & N SYSTEM
STYLE B IS FOR GROUND SUPPORT EQUIPMENT
TYPE I IS WITHOUT MOUNTING HOLES
TYPE II IS WITH MOUNTING HOLES

1004260 CN SHT 4

REVISIONS					
SYM	ZONE	DESCRIPTION	CHG NO	DATE	APPD
CL		REPLACES REV CK WITHOUT CHANGE PER TDRR 34365		9/28/67	JWL RWH
CM		REVISION STATUS CHANGED		18 OCT. 67	R.A.W.
CN		REVISION STATUS CHANGE		31 OCT 67	JRK

	F	G	H	J	K	L	M	N	P	R	S	T	U	V	W	Y	Z	AA	AB	AC	AD	AE	AF	AG	AH	AJ	AK	AL	AM	AN	AP	AR
DASH 100 VALUES BELOW																																
DASH 100 VALUES BELOW																																
DASH 100 VALUES BELOW																																
DASH 100 VALUES BELOW																																
DASH 100 VALUES BELOW																																
DASH 141 VALUES BELOW																																
DASH 141 VALUES BELOW																																
DASH 144 VALUES BELOW																																
DASH 141 VALUES BELOW																																
DASH 141 VALUES BELOW																																
DASH 141 VALUES BELOW																																
DASH 141 VALUES BELOW																																
DASH 141 VALUES BELOW																																
DASH 100 VALUES BELOW																																
DASH 100 VALUES BELOW																																
DASH 144 VALUES BELOW																																
DASH 102 VALUES BELOW																																
DASH 141 VALUES BELOW																																
.125	.062	.188	.156	NA	NA	1.750	1.125	.906	.688	1.500	NA	.281	.125	NA	1.094	2.062	.312	NA	2.500	.062	.125	1.312	.469	NA	NA	NA	.156	NA	.125	.469	.344	NA
DASH 121 VALUES BELOW																																
DASH 144 VALUES BELOW																																
DASH 144 VALUES BELOW																																
DASH 144 VALUES BELOW																																
DASH 144 VALUES BELOW																																
DASH 144 VALUES BELOW																																
DASH 141 VALUES BELOW																																
DASH 141 VALUES BELOW																																
DASH 141 VALUES BELOW																																
DASH 141 VALUES BELOW																																
DASH 144 VALUES BELOW																																
DASH 141 VALUES BELOW																																
DASH 141 VALUES BELOW																																
DASH 141 VALUES BELOW																																
DASH 141 VALUES BELOW																																
DASH 141 VALUES BELOW																																
DASH 141 VALUES BELOW																																
DASH 141 VALUES BELOW																																
DASH 144 VALUES BELOW																																
DASH 141 VALUES BELOW																																
DASH 144 VALUES BELOW																																
DASH 144 VALUES BELOW																																
DASH 100 VALUES BELOW																																
DASH 100 VALUES BELOW																																
.093	.031	.06	.093	NA	NA	.858	.608	.484	.358	.733	.062	.140	.062	NA	.968	1.450	.125	NA	1.720	.046	.03	NA	.210	NA	NA	NA	.070	NA	.046	.32	.16	NA
DASH 100 VALUES BELOW																																
DASH 100 VALUES BELOW																																
DASH 100 VALUES BELOW																																
DASH 141 VALUES BELOW																																
DASH 141 VALUES BELOW																																
DASH 144 VALUES BELOW																																
DASH 141 VALUES BELOW																																
DASH 144 VALUES BELOW																																
DASH 144 VALUES BELOW																																
DASH 144 VALUES BELOW																																
DASH 144 VALUES BELOW																																
.125	.062	.12	.156	[illegible]	.125	1.625	1.140	.890	.640	1.390	.125	.171	.125	1.875	1.687	2.625	.250	1.562	3.843	.093	NA	NA	.359	.125	.437	3.688	NA	3.687	.093	.40	.25	3.875
.125	.062	.12	.156		.125	1.625	1.140	.890	.640	1.390	.125	.171	.125	1.875	1.687	2.625	.250	1.562	3.843	.093	NA	NA	.359	.125	.437	3.688	NA	3.687	.093	.40	.25	3.875
.125	.062	.12	.156		.125	1.625	1.140	.890	.640	1.390	.125	.171	.125	1.875	1.687	2.625	.250	1.562	3.843	.093	NA	NA	.359	.125	.437	3.688	NA	3.687	.093	.40	.25	3.875
.093	.031	.06	.093		.093	.858	.608	.484	.358	.733	.077	.116	.062	.937	.875	1.343	.125	.781	1.892	.046	NA	NA	.209	.093	.250	1.875	NA	1.840	.046	.23	.16	1.938
.125	.062	.12	.156		.125	1.625	1.140	.890	.640	1.390	.125	.171	.125	1.875	1.687	2.625	.250	1.562	3.843	.093	NA	NA	.359	.125	.437	3.688	NA	3.687	.093	.40	.25	3.875
.125	.062	.12	.156		.125	1.625	1.140	.890	.640	1.390	.125	.171	.125	1.875	1.687	2.625	.250	1.562	3.843	.093	NA	NA	.359	.125	.437	3.688	NA	3.687	.093	.40	.25	3.875
.125	.062	.12	.156		.125	1.625	1.140	.890	.640	1.390	.125	.171	.125	1.875	1.687	2.625	.250	1.562	3.843	.093	NA	NA	.359	.125	.437	3.688	NA	3.687	.093	.40	.25	3.875
.125	.062	.12	.156		.125	1.625	1.140	.890	.640	1.390	.125	.171	.125	1.875	1.687	2.625	.250	1.562	3.843	.093	NA	NA	.359	.125	.437	3.688	NA	3.687	.093	.40	.25	3.875
.125	.062	.12	.156		.125	1.625	1.140	.890	.640	1.390	.125	.171	.125	1.875	1.687	2.625	.250	1.562	3.843	.093	NA	NA	.359	.125	.437	3.688	NA	3.687	.093	.40	.25	3.875
.125	.062	.12	.156		.125	1.625	1.140	.890	.640	1.390	.125	.171	.125	1.875	1.687	2.625	.250	1.562	3.843	.093	NA	NA	.359	.125	.437	3.688	NA	3.687	.093	.40	.25	3.875
.125	.062	.12	.156		.125	1.625	1.140	.890	.640	1.390	.125	.171	.125	1.875	1.687	2.625	.250	1.562	3.843	.093	NA	NA	.359	.125	.437	3.688	NA	3.687	.093	.40	.25	3.875
.125	.062	.12	.156		.125	1.625	1.140	.890	.640	1.390	.125	.171	.125	1.875	1.687	2.625	.250	1.562	3.843	.093	NA	NA	.359	.125	.437	3.688	NA	3.687	.093	.40	.25	3.875
.125	.062	.12	.156		.125	1.625	1.140	.890	.640	1.390	.125	.171	.125	1.875	1.687	2.625	.250	1.562	3.843	.093	NA	NA	.359	.125	.437	3.688	NA	3.687	.093	.40	.25	3.875
.125	.062	.12	.156		.125	1.625	1.140	.890	.640	1.390	.125	.171	.125	1.875	1.687	2.625	.250	1.562	3.843	.093	NA	NA	.359	.125	.437	3.688	NA	3.687	.093	.40	.25	3.875
.125	.062	.12	.156		.125	1.625	1.140	.890	.640	1.390	.125	.171	.125	1.875	1.687	2.625	.250	1.562	3.843	.093	NA	NA	.359	.125	.437	3.688	NA	3.687	.093	.40	.25	3.875
.125	.062	.12	.156		.125	1.625	1.140	.890	.640	1.390	.125	.171	.125	1.875	1.687	2.625	.250	1.562	3.843	.093	NA	NA	.359	.125	.437	3.688	NA	3.687	.093	.40	.25	3.875
.125	.062	.12	.156		.125	1.625	1.140	.890	.640	1.390	.125	.171	.125	1.875	1.687	2.625	.250	1.562	3.843	.093	NA	NA	.359	.125	.437	3.688	NA	3.687	.093	.40	.25	3.875
.093	.031	.06	.093		.093	.858	.608	.484	.358	.733	.077	.116	.062	.937	.875	1.343	.125	.781	1.892	.046	NA	NA	.209	.093	.250	1.875	NA	1.840	.046	.23	.16	1.938
.093	.031	.06	.093		.093	.858	.608	.484	.358	.733	.077	.116	.062	.937	.875	1.343	.125	.781	1.892	.046	NA	NA	.209	.093	.250	1.875	NA	1.840	.046	.23	.16	1.938
.093	.031	.06	.093		.093	.858	.608	.484	.358	.733	.077	.116	.062	.937	.875	1.343	[illegible]	.781	1.892	.046	NA	NA	.209	.093	.250	1.875	NA	1.840	.046	.23	.16	1.938
.093	.031	.06	.093		.093	.858	.608	.484	.358	.733	.077	.116	.062	.937	.875	1.343	.125	.781	1.892	.046	NA	NA	.209	.093	.250	1.875	NA	1.840	.046	.23	.16	1.938
.093	.031	.06	.093		.093	.858	.608	.484	.358	.733	.077	.116	.062	.937	.875	1.343	.125	.781	1.892	.046	NA	NA	.209	.093	.250	1.875	NA	1.840	.046	.23	.16	1.938
.093	.031	.06	.093		.093	.858	.608	.484	.358	.733	.077	.116	.062	.937	.875	1.343	.125	.781	1.892	.046	NA	NA	.209	.093	.250	1.875	NA	1.840	.046	.23	.16	1.938
.093	.031	.06	.093		.093	.858	.608	.484	.358	.733	.077	.116	.062	.937	.875	1.343	.125	.781	1.892	.046	NA	NA	.209	.093	.250	1.875	NA	1.840	.046	.23	.16	1.938
.093	.031	.06	.093		.093	.858	.608	.484	.358	.733	.077	.116	.062	.937	.875	1.343	.125	.781	1.892	.046	NA	NA	.209	.093	.250	1.875	NA	1.840	.046	.23	.16	1.938
.093	.031	.06	.093		.093	.858	.608	.484	.358	.733	.077	.116	.062	.937	.875	1.343	.125	.781	1.892	.046	NA	NA	.209	.093	.250	1.875	NA	1.840	.046	.23	.16	1.938
.093	.031	.06	.093		.093	.858	.608	.484	.358	.733	.077	.116	.062	.937	.875	1.343	.125	.781	1.892	.046	NA	NA	.209	.093	.250	1.875	NA	1.840	.046	.23	.16	1.938
.093	.031	.06	.093		.093	.858	.608	.484	.358	.733	.077	.116	.062	.937	.875	1.343	.125	.781	1.892	.046	NA	NA	.209	.093	.250	1.875	NA	1.840	.046	.23	.16	1.938
.093	.031	.06	.093		.093	.858	.608	.484	.358	.733	.077	.116	.062	.937	.875	1.343	.125	.781	1.892	.046	NA	NA	.209	.093	.250	1.875	NA	1.840	.046	.23	.16	1.938
.093	.031	.06	.093		.093	.858	.608	.484	.358	.733	.077	.116	.062	.937	.875	1.343	.125	.781	1.892	.046	NA	NA	.209	.093	.250	1.875	NA	1.840	.046	.23	.16	1.938
.093	.031	.06	.093		.093	.858	.608	.484	.358	.733	.077	.116	.062	.937	.875	1.343	.125	.781	1.892	.046	NA	NA	.209	.093	.250	1.875	NA	1.840	.046	.23	.16	1.938
.093	.031	.06	.093		.093	.858	.608	.484	.358	.733	.077	.116	.062	.937	.875	1.343	.125	.781	1.892	.046	NA	NA	.209	.093	.250	1.875	NA	1.840	.046	.23	.16	1.938
.093	.031	.06	.093		.093	.858	.608	.484	.358	.733	.077	.116	.062	.937	.875	1.343	.125	.781	1.892	.046	NA	NA	.209	.093	.250	1.875	NA	1.840	.046	.23	.16	1.938
.093	.031	.06	.093		.093	.858	.608	.484	.358	.733	.077	.116	.062	.937	.875	1.343	.125	.781	1.892	.046	NA	NA	.209	.093	.250	1.875	NA	1.840	.046	.23	.16	1.938
.093	.031	.06	.093		.093	.858	.608	.484	.358	.733	.077	.116	.062	.937	.875	1.343	.125	.781	1.892	.046	NA	NA	.209	.093	.250	1.875	NA	1.840	.046	.23	.16	1.938
.093	.031	.06	.093		.093	.858	.608	.484	.358	.733	.077	.116	.062	.937	.875	1.343	.125	.781	1.892	.046	NA	NA	.209	.093	.250	1.875	NA	1.840	.046	.23	.16	1.938
.093	.031	.06	.093		.093	.858	.608	.484	.358	.733	.077	.116	.062	.937	.875	1.343	.125	.781	1.892	.046	NA	NA	.209	.093	.250	1.875	NA	1.840	.046	.23	.16	1.938
.093	.031	.06	.093		.093	.858	.608	.484	.358	.733	.077	.116	.062	.937	.875	1.343	.125	.781	1.892	.046	NA	NA	.209	.093	.250	1.875	NA	1.840	.046	.23	.16	1.938
.093	.031	.06	.093		.093	.858	.608	.484	.358	.733	.077	.116	.062	.937	.875	1.343	.125	.781	1.892	.046	NA	NA	.209	.093	.250	1.875	NA	1.840	.046	.23	.16	1.938
.093	.031	.06	.093		.093	.858	.608	.484	.358	.733	.077	.116	.062	.937	.875	1.343	.125	.781	1.892	.046	NA	NA	.209	.093	.250	1.875	NA	1.840	.046	.23	.16	1.938
.093	.031	.06	.093		.093	.858	.608	.484	.358	.733	.077	.116	.062	.937	.875	1.343	.125	.781	1.892	.046	NA	NA	.209	.093	.250	1.875	NA	1.840	.046	.23	.16	1.938
.093	.031	.06	.093		.093	.858	.608	.484	.358	.733	.077	.116	.062	.937	.875	1.343	.125	.781	1.892	.046	NA	NA	.209	.093	.250	1.875	NA	1.840	.046	.23	.16	1.938
.093	.031	.06	.093		.093	.858	.608	.484	.358	.733	.077	.116	.062	.937	.875	1.343	.125	.781	1.892	.046	NA	NA	.209	.093	.250	1.875	NA	1.840	.046	.23	.16	1.938
.093	.031	.06	.093	188 184	.093	.858	.608	.484	.358	.733	.077	.116	.062	.937	.875	1.343	.125	.781	1.892	.046	NA	NA	.209	.093	.250	1.875	NA	1.840	.046	.23	.16	1.938
.078	.048	.078	.093	NA	NA	1.125	.750	.593	.453	1.015	.062	.187	.078	.875	.718	1.375	.218	NA	NA	.048	.031	.875	.305	.078	.531	1.906	.078	NA	.078	.531	.187	NA
.078	.048	.078	.093	NA	NA	1.125	.750	.593	.453	1.015	.062	.187	.078	.875	.718	1.375	.218	NA	NA	.048	.031	.875	.305	.078	.531	1.906	.078	NA	.078	.531	.187	NA

AC ELECTRONICS DASH NUMBERS

AS APPLICABLE	
NEXT ASSY	USED ON
APPLICATION	

UNLESS OTHERWISE SPECIFIED
DIMENSIONS ARE IN INCHES
TOLERANCES ON
2 PLACE DECIMALS ± 3 PLACE DECIMALS ± .005 ANGLES ± —
DO NOT SCALE THIS DRAWING
MATERIAL SEE NOTE 11
APPROVAL

MIT
INSTRUMENTATION LAB
CAMBRIDGE MASS
DRAWN R. A. JONES DATE 16 JUL 65
CHECKED
W KUPFER 22 JUL 65
APPROVAL
CONTRACT
T. MICHAELS 22 JUL 65
NASA APPROVAL
W KUPFER 22 JUL 65
MIT APPROVAL

MANNED
SPACECRAFT CENTER
HOUSTON TEXAS

NAMEPLATES,
APOLLO G&N - GSE
(STANDARDS)

SIZE J2 CODE IDENT NO 80230 1004260
SCALE NONE SHEET 4 OF 6

1004260 CN SHT 4

1004260

1004260

SHEET 4 OF 6 1004260

27/1004260

[illegible]

DASH NO.	P/C	PART NAME	REMARKS	PART NUMBER	SER. NO.	CONT. NO.	STYLE	TYPE	MATERIAL	A	B	C	D	E	F	G	H	J	K	L	M	N
401	MIT	COMPUTER ASSY		2003100		NAS-9-497	A	I	NOTE 11B	2.000	1.312	1.906	1.375	.078	.048	.078	.093	NA	NA	1.125	.750	.5
400	MIT	LIFTING SLING-G&N INST.QUAL.FIX. & AZM.REF.FIX.		1021640		NAS-9-4065	B	II	NOTE 11C	2.000	1.312	1.687	1.375	.078	.048	.078	.093	[illegible]	.093	1.187	.750	.5

NOTES FOR TABLE
STYLE A IS FOR G & N SYSTEM
STYLE B IS FOR GROUND SUPPORT EQUIPMENT
TYPE I IS WITHOUT MOUNTING HOLES
TYPE II IS WITH MOUNTING HOLES

REVISIONS					
SYM	ZONE	DESCRIPTION	CHG NO	DATE	APPD
CL		REPLACES REV CK WITHOUT CHANGE PER TURR 34365		N 28 67	JWL RWH
CM		REVISION STATUS CHANGED		18 OCT 67	RAW
CN		REVISION STATUS CHANGED		31 OCT 67	JRK

[illegible]	.048	.078	.093	NA	NA	1.125	.750	.593	.453	1.015	.062	.187	.078	.875	.718	1.375	.218	NA	NA	.048	.031	.875	.305	.078	.531	1.906	.078	NA	.078	.531	.187	NA
[illegible]	.048	.078	.093	[illegible]	.093	1.187	.750	.593	.453	1.015	.062	.187	.078	.875	.718	1.375	.218	1.156	1.843	.048	NA	.875	.305	.078	.312	1.687	.110	1.830	.070	.275	.180	1.844
E	F	G	H	J	K	L	M	N	P	R	S	T	U	V	W	Y	Z	AA	AB	AC	AD	AE	AF	AG	AH	AJ	AK	AL	AM	AN	AP	AR

MIT DASH NUMBERS

1004260 CN

1004260

UNLESS OTHERWISE SPECIFIED
DIMENSIONS ARE IN INCHES
TOLERANCES ON
2 PLACE DECIMALS ±
3 PLACE DECIMALS ± .005
ANGLES ±
DO NOT SCALE THIS DRAWING
MATERIAL SEE NOTE 11
APPROVAL

AS APPLICABLE
NEXT ASSY | USED ON
APPLICATION

MIT INSTRUMENTATION LAB
CAMBRIDGE, MASS.
DRAWN R. A. JONES DATE 16 JUL 65
CHECKED
APPROVAL W. KUPFER 22 JUL 65
CONTRACT
NASA APPROVAL T. MICHAELS 22 JUL 65
MIT APPROVAL W. KUPFER 22 JUL 65

MANNED SPACECRAFT CENTER
HOUSTON, TEXAS

NAMEPLATES,
APOLLO G&N - GSE
(STANDARDS)

SIZE J2
CODE IDENT NO 80230
1004260
SCALE NONE
SHEET 5 OF 6

1004260 | CN | SHT 5

1004260

2/1004260

DASH NO.	P/C	PART NAME	REMARKS	PART NUMBER	SER. NO.	CONT. NO.	STYLE	TYPE	MATERIAL	A	B	C	D	E	F	G	H	J	K	L	M
599	AC																				
598	AC																				
570	AC	OPTICAL UNIT & BELLOWS ASSY				NAS-9-497	A	I	NOTE 11B	FOR DIMENSIONS SEE DASH 550 VALUES											
569	AC	G & N INDICATOR CONTROL PANEL ASSY		2021323-011		NAS-9-497	A	I	NOTE 11B	FOR DIMENSIONS SEE DASH 181											
568	AC	G & N INDICATOR CONTROL PANEL ASSY		2021290-021		NAS-9-497	A	I	NOTE 11B	FOR DIMENSIONS SEE DASH 181											
567	AC	G & N INDICATOR CONTROL PANEL ASSY		2021290-011		NAS-9-497	A	I	NOTE 11B	FOR DIMENSIONS SEE DASH 181											
566	AC	COMPUTER CONT & RETICLE DIMMER		6014512-061		NAS-9-497	A	I	NOTE 11B	FOR DIMENSIONS SEE DASH 534											
565		BATTERY PACK, AUXILIARY		1901492-031		NAS-9-497	B	II	NOTE 11C	FOR DIMENSIONS SEE DASH 500											
564		BATTERY POWER PACK		1900011-051		NAS-9-497	B	II	NOTE 11C	FOR DIMENSIONS SEE DASH 500											
563		ADAPTER MODULE P.S.A (LEM)		6900088-031		NAS-9-497	B	II	NOTE 11C	FOR DIMENSIONS SEE DASH 141 VALUES											
562	AC	COMPUTER CONT & RETICLE DIMMER		6014512-041		NAS-9-497	A	I	NOTE 11B	FOR DIMENSIONS SEE DASH 534 VALUES											
561	AC	G & N INDICATOR CONTROL PANEL ASSY		2014578-031		NAS-9-497	A	I	NOTE 11B	FOR DIMENSIONS SEE DASH 181 VALUES											
560		ADPT. MODULE, PSA		2901143-021		NAS-9-497	B	II	NOTE 11C	FOR DIMENSIONS SEE DASH 141 VALUES											
559		CSL, CAL AND TEST, SCM/PSAAM		2900895-031		FOR OTHER DATA SEE DASH 547															
558		PSA ADAPTER MODULE (LEM)		6900088-021		FOR OTHER DATA SEE DASH 189															
557		FIX., HANDLING, C/M PSA		2900998-021		NAS-9-497	B	II	NOTE 11C	FOR DIMENSIONS SEE DASH 141 VALUES											
556		FIX., MOUNTING G & N	(-144)	2900067-041		NAS-9-497	B	II	NOTE 11C	FOR DIMENSIONS SEE DASH 500 VALUES											
555	AC	OPTICAL UNIT ASSEMBLY		1021368-061		NAS-9-497	A	I	NOTE 11B	2.000	1.312	1.687	1.375	.078	.048	.078	.093	NA	NA	1.125	.75
554	AC	OPTICAL UNIT ASSEMBLY		1021368-041		NAS-9-497	A	I	NOTE 11B	2.000	1.312	1.687	1.375	.078	.048	.078	.093	NA	NA	1.125	.75
553	AC	OPTICAL UNIT AND BELLOWS ASSEMBLY		2010790-111		NAS-9-497	A	I	NOTE 11B	2.000	1.312	1.687	1.375	.078	.048	.078	.093	NA	NA	1.125	.75
552	AC	OPTICAL UNIT AND BELLOWS ASSEMBLY		2010790-081		NAS-9-497	A	I	NOTE 11B	2.000	1.312	1.687	1.375	.078	.048	.078	.093	NA	NA	1.125	.75
551	AC	OPTICAL UNIT AND BELLOWS ASSEMBLY		2010790-071		NAS-9-497	A	I	NOTE 11B	2.000	1.312	1.687	1.375	.078	.048	.078	.093	NA	NA	1.125	.75
550	AC	OPTICAL UNIT AND BELLOWS ASSEMBLY		2010790-061		NAS-9-497	A	I	NOTE 11B	2.000	1.312	1.687	1.375	.078	.048	.078	.093	NA	NA	1.125	.750
548		CAGING ELECTRONICS, GYRO		2900029-031		NAS-9-497	B	II	NOTE 11C	2.125	.968	1.718	NA	.093	.031	.06	.093	[illegible]	.093	.858	.608
547		CSL, CAL AND TEST, SCM/PSAAM		2900895-021		NAS-9-497	B	II	NOTE 11C	4.125	1.812	3.250	NA	.125	.062	.12	.156		.125	1.625	1.14
546		FIX., HAND., C/M AND LEM CDU		2900999-021		NAS-9-497	B	II	NOTE 11C	2.125	.968	1.718	NA	.093	.031	.06	.093	[illegible]	.093	.858	.608
545	AC	G & N INDICATOR CONTROL PANEL ASSY		2014578-021		NAS-9-497	A	I	NOTE 11B	3.000	1.938	2.437	NA	.125	.062	.188	.156	NA	NA	1.750	1.12
544		ADPT MODULE, P.S.A.		1902431-051		NAS-9-497	B	II	NOTE 11C	2.125	.968	1.718	NA	.093	.031	.06	.093	[illegible]	.093	.858	.608
543	AC	PANEL, MONITOR		2900031-041		NAS-9-497	B	II	NOTE 11C	2.125	.968	1.718	NA	.093	.031	.06	.093		.093	.858	.60
542	AC	BATTERY PACK, LIFTING		2900812-021		NAS-9-497	B	II	NOTE 11C	2.125	.968	1.718	NA	.093	.031	.06	.093		.093	.858	.60
541	AC	FIXTURE, MOUNTING, IMU		2900000-021		NAS-9-497	B	II	NOTE 11C	4.125	1.812	3.250	NA	.125	.062	.12	.156		.125	1.625	1.14
540	AC	ADPT, TEST POINT, P.S.A.		2900037-031		NAS-9-497	B	II	NOTE 11C	2.125	.968	1.718	NA	.093	.031	.06	.093	[illegible]	.093	.858	.60
539	AC	ANNUNCIATOR PANEL & EYEPIECE STORAGE ASSEMBLY		1021255-041		NAS-9-497	A	I	NOTE 11B	2.000	1.312	1.906	1.375	.078	.048	.078	.093	NA	NA	1.125	.750
538	AC	ANNUNCIATOR PANEL & EYEPIECE STORAGE ASSEMBLY		1021255-031		NAS-9-497	A	I	NOTE 11B	2.000	1.312	1.906	1.375	.078	.048	.078	.093	NA	NA	1.125	.750
537	AC	TEST SELECTOR		2900028-031		NAS-9-497	B	II	NOTE 11C	2.125	.968	1.718	NA	.093	.031	.06	.093	[illegible]	.093	.858	.60
536	AC	ANALYZER, OPTICS-INERTIAL		2900023-041		NAS-9-497	B	II	NOTE 11C	4.125	1.812	3.250	NA	.125	.062	.12	.156		.125	1.625	1.140
535	AC	CONT, TEMP, PORTABLE		2900060-021		NAS-9-497	B	II	NOTE 11C	2.125	.968	1.718	NA	.093	.031	.06	.093	[illegible]	.093	.858	.608
534	AC	COMPUTER CONT & RETICLE DIMMER		6014512-021		NAS-9-497	A	I	NOTE 11B	2.000	1.312	1.906	1.375	.078	.048	.078	.093	NA	NA	1.125	.750
533	AC	ADPT MODULE, P.S.A.		1902431-041		NAS-9-497	B	II	NOTE 11C	2.125	.968	1.718	NA	.093	.031	.06	.093	[illegible]	.093	.858	.608
532	AC	TRAY BREAKOUT, 105 PIN		1900807-021		NAS-9-497	B	II	NOTE 11C	4.125	1.812	3.250	NA	.125	.062	.12	.156		.125	1.625	1.140
531	AC	TRAY BREAKOUT, 84 PIN		1900806-021		NAS-9-497	B	II	NOTE 11C	4.125	1.812	3.250	NA	.125	.062	.12	.156		.125	1.625	1.140
530	AC	HEAT SINK-TRAY EXTENDER		1900808-021		NAS-9-497	B	II	NOTE 11C	2.125	.968	1.718	NA	.093	.031	.06	.093		.093	.858	.608
529	AC	TESTER, FAILURE INDICATOR		1900809-021		NAS-9-497	B	II	NOTE 11C	2.125	.968	1.718	NA	.093	.031	.06	.093	[illegible]	.093	.858	.608
527	AC	FIX., MOUNTING, G & N	(-144)	1902204-021		NAS-9-497	B	II	NOTE 11C	FOR DIMENSIONS SEE DASH 500 VALUES BELOW											
526	AC	FIX., MOUNTING, G & N	(-144)	2900067-031		NAS-9-497	B	II	NOTE 11C	FOR DIMENSIONS SEE DASH 500 VALUES BELOW											
525	AC	PORTABLE TEMP. CONTROLLER		1900496-021		NAS-9-497	B	II	NOTE 11C	3.000	1.937	2.437	2.312	.125	.031	.125	.156	.125	.125	1.718	1.18
524	AC	POWER, SERVO & THERMOCOUPLE ASSEMBLY C/M		2010743		NAS-9-497	A	I	NOTE 11B	2.125	.968	1.718	NA	.093	.031	.06	.093	NA	NA	.858	.60
523	AC	PULSE TORQUE AND THERMOCOUPLE ASSEMBLY-LEM		6010656		NAS-9-497	A	I	NOTE 11B	FOR DIMENSIONS SEE DASH 508 VALUES BELOW											
522	AC	COUPLING DATA UNIT & THERMOCOUPLE ASSEMBLY-LEM		2010744		NAS-9-497	A	I	NOTE 11B	FOR DIMENSIONS SEE DASH 508 VALUES BELOW											
521	AC	COUPLING DATA UNIT & THERMOCOUPLE ASSEMBLY-C/M		2010744		NAS-9-497	A	I	NOTE 11B	FOR DIMENSIONS SEE DASH 508 VALUES BELOW											
520	AC	PIPA ELECTRONICS AND THERMOCOUPLE ASSEMBLY		2010745		NAS-9-497	A	I	NOTE 11B	FOR DIMENSIONS SEE DASH 508 VALUES BELOW											
519	AC	FIXTURE, HANDLING, LEM-PSA	(-141)	6900129-011		NAS-9-497	B	II	NOTE 11C	FOR DIMENSIONS SEE DASH 504 VALUES BELOW											
518	AC	JUNCTION BOX, GSE-PSA	(-144)	1901933-031		NAS-9-497	B	II	NOTE 11C	FOR DIMENSIONS SEE DASH 500 VALUES BELOW											
517	AC	FIX., HAND., OPTICS INSTL.	(-141)	2901380-011		NAS-9-497	B	II	NOTE 11C	FOR DIMENSIONS SEE DASH 502 VALUES BELOW											
516	AC	POWER, SERVO AND THERMOCOUPLE ASSEMBLY-LEM		6[illegible]55		NAS-9-497	A	I	NOTE 11B	FOR DIMENSIONS SEE DASH 508 VALUES BELOW											
514	AC	SIGNAL COND. ASSY LEM OPER.	(-100)	6007013		NAS-9-497	A	I	NOTE 11B	FOR DIMENSIONS SEE DASH 508 VALUES BELOW											
513	AC	JUMPER, BY-PASS	(-141)	1021616		NAS-9-497	B	II	NOTE 11C	2.125	.968	1.718	NA	.093	.031	.06	.093	[illegible]	.093	.858	.60
512	AC	COUPLING DATA UNIT ASSEMBLY C/M	(-100)	2007322-011		NAS-9-497	A	I	NOTE 11B	FOR DIMENSIONS SEE DASH 508 VALUES BELOW											
511	AC	COUPLING DATA UNIT ASSEMBLY-LEM	(-100)	2007322-021		NAS-9-497	A	I	NOTE 11B	FOR DIMENSIONS SEE DASH 508 VALUES BELOW											
510	AC	BATTERY POWER PACK	(-144)	1900011-041		NAS-9-497	B	II	NOTE 11C	FOR DIMENSIONS SEE DASH 500 VALUES BELOW											
509	AC	JUNCTION BOX, P.S.A./G.S.E.	(-144)	1902195-021		NAS-9-497	B	II	NOTE 11C	FOR DIMENSIONS SEE DASH 500 VALUES BELOW											
508	AC	NAVIGATION BASE ASSEMBLY-LEM	(-101)	6899980		NAS-9-497	A	I	NOTE 11B	2.000	1.312	1.906	1.375	.078	.048	.078	.093	NA	NA	1.125	.75
507	AC	CSL, COOL. AND PWR, G AND N	(-144)	1902134-041		NAS-9-497	B	II	NOTE 11C	FOR DIMENSIONS SEE DASH 500 VALUES BELOW											
506	AC	BREAKOUT BOX, CABLE ADAPTER	(-141)	2901011-011		NAS-9-497	B	II	NOTE 11C	2.125	.968	1.718	NA	.093	.031	.06	.093	[illegible]	.093	.858	.60
505	AC	MONITOR AND CONTROL, TEMP	(-141)	2900026-021		NAS-9-497	B	II	NOTE 11C	2.125	.968	1.718	NA	.093	.031	.06	.093		.093	.858	.60
504	AC	PWR SUP, GUIDANCE SYSTEM	(-141)	1900033-021		NAS-9-497	B	II	NOTE 11C	2.125	.968	1.718	NA	.093	.031	.06	.093		.093	.858	.60
503	AC	CONTROL, GIMBAL POSITION	(-141)	2900036-021		NAS-9-497	B	II	NOTE 11C	2.125	.968	1.718	NA	.093	.031	.06	.093		.093	.858	.60
502	AC	ADPT, TEST POINT, PTA/PEA.	(-141)	2900145-021		NAS-9-497	B	II	NOTE 11C	2.125	.968	1.718	NA	.093	.031	.06	.093	[illegible]	.093	.858	.60
501	AC	MOUNTING PLATE, COMPONENT	(-144)	6900007-031		NAS-9-497	B	II	NOTE 11C	FOR DIMENSIONS SEE DASH 500 VALUES BELOW											
500	AC	MOUNTING PLATE, COMPONENT	(-144)	2900677-021		NAS-9-497	B	II	NOTE 11C	4.125	1.812	3.250	NA	.125	.062	.12	.156	[illegible]	.125	1.625	1.14

NOTES FOR TABLE

STYLE A IS FOR G & N SYSTEM
STYLE B IS FOR GROUND SUPPORT EQUIPMENT
TYPE I IS WITHOUT MOUNTING HOLES
TYPE II IS WITH MOUNTING HOLES

1004260	CN	SHT 6

SYM	ZONE	DESCRIPTION	CHG NO	DATE	APPD
REVISIONS					
CL		REPLACES REV CK WITH CHANGE PER TDRR 34365		9/28/67	JL RWH
CM		REVISED PER TDRR 34395		17 OCT. 67	R.A.W.
CN		REVISED PER TDRR 34467		31 OCT 67	JRK

D	E	F	G	H	J	K	L	M	N	P	R	S	T	U	V	W	Y	Z	AA	AB	AC	AD	AE	AF	AG	AH	AJ	AK	AL	AM	AN	AP	AR
DASH 550 VALUES																																	
DASH 181																																	
DASH 181																																	
DASH 181																																	
DASH 534																																	
DASH 500																																	
DASH 500																																	
DASH 141 VALUES																																	
DASH 534 VALUES																																	
DASH 181 VALUES																																	
DASH 141 VALUES																																	
DASH 141 VALUES																																	
DASH 500 VALUES																																	
[illegible]	.078	.048	.078	.093	NA	NA	1.125	.750	.593	.453	1.015	.062	.187	.078	.875	.718	1.375	.218	NA	NA	.048	.031	.875	.305	NA	.468	1.531	NA	NA	.078	.312	.187	NA
[illegible]	.078	.048	.078	.093	NA	NA	1.125	.750	.593	.453	1.015	.062	.187	.078	.875	.718	1.375	.218	NA	NA	.048	.031	.875	.305	NA	.468	1.531	NA	NA	.078	.312	.187	NA
[illegible]	.078	.048	.078	.093	NA	NA	1.125	.750	.593	.453	1.015	.062	.187	.078	.875	.718	1.375	.218	NA	NA	.048	.031	.875	.305	NA	.469	1.531	NA	NA	.078	.312	.187	NA
[illegible]	.078	.048	.078	.093	NA	NA	1.125	.750	.593	.453	1.015	.062	.187	.078	.875	.718	1.375	.218	NA	NA	.048	.031	.875	.305	NA	.468	1.531	NA	NA	.078	.312	.187	NA
[illegible]	.078	.048	.078	.093	NA	NA	1.125	.750	.593	.453	1.015	.062	.187	.078	.875	.718	1.375	.218	NA	NA	.048	.031	.875	.305	NA	.468	1.531	NA	NA	.078	.312	.187	NA
[illegible]	.078	.048	.078	.093	NA	NA	1.125	.750	.593	.453	1.015	.062	.187	.078	.875	.718	1.375	.218	NA	NA	.048	.031	.875	.305	NA	.468	1.531	NA	NA	.078	.312	.187	NA
[illegible]	.093	.031	.06	.093	[illegible]	.093	.858	.608	.484	.358	.733	.077	.116	.062	.937	.875	1.343	.125	.781	1.892	.046	NA	NA	.209	.093	.250	1.875	NA	1.840	.046	.23	.16	1.938
[illegible]	.125	.062	.12	.156		.125	1.625	1.140	.890	.640	1.390	.125	.171	.125	1.875	1.687	2.625	.250	1.562	3.843	.093	NA	NA	.359	.125	.437	3.688	NA	3.687	.093	.40	.25	3.875
[illegible]	.093	.031	.06	.093	[illegible]	.093	.858	.608	.484	.358	.733	.077	.116	.062	.937	.875	1.343	.125	.781	1.892	.046	NA	NA	.209	.093	.250	1.875	NA	1.840	.046	.23	.16	1.938
[illegible]	.125	.062	.188	.156	NA	NA	1.750	1.125	.906	.688	1.500	NA	.281	.125	NA	1.094	2.062	.312	NA	2.500	.062	.125	1.312	.469	NA	NA	NA	.156	NA	.125	.469	.344	NA
[illegible]	.093	.031	.06	.093	[illegible]	.093	.858	.608	.484	.358	.733	.077	.116	.062	.937	.875	1.343	.125	.781	1.892	.046	NA	NA	.209	.093	.250	1.875	NA	1.840	.046	.23	.16	1.938
[illegible]	.093	.031	.06	.093		.093	.858	.608	.484	.358	.733	.077	.116	.062	.937	.875	1.343	.125	.781	1.892	.046	NA	NA	.209	.093	.250	1.875	NA	1.840	.046	.23	.25	1.938
[illegible]	.093	.031	.06	.093		.093	.858	.608	.484	.358	.733	.077	.116	.062	.937	.875	1.343	.125	.781	1.892	.046	NA	NA	.209	.093	.250	1.875	NA	1.840	.046	.23	.16	1.938
[illegible]	.125	.062	.12	.156		.125	1.625	1.140	.890	.640	1.390	.125	.171	.125	1.875	1.687	2.625	.250	1.562	3.843	.093	NA	NA	.359	.125	.437	3.688	NA	3.687	.093	.40	.25	3.875
[illegible]	.093	.031	.06	.093	[illegible]	.093	.858	.608	.484	.358	.733	.077	.116	.062	.937	.875	1.343	.125	.781	1.892	.046	NA	NA	.209	.093	.250	1.875	NA	1.840	.046	.23	.16	1.938
[illegible]	.078	.048	.078	.093	NA	NA	1.125	.750	.593	.453	1.015	.062	.187	.078	.875	.718	1.375	.218	NA	NA	.048	.031	.875	.305	.078	.531	1.906	.078	NA	.078	.531	.137	NA
[illegible]	.078	.048	.078	.093	NA	NA	1.125	.750	.593	.453	1.015	.062	.187	.078	.875	.718	1.375	.218	NA	NA	.048	.031	.875	.305	.078	.531	1.906	.078	NA	.078	.531	.187	NA
[illegible]	.093	.031	.06	.093	[illegible]	.093	.858	.608	.484	.358	.733	.077	.116	.062	.937	.875	1.343	.125	.781	1.892	.046	NA	NA	.209	.093	.250	1.875	NA	1.840	.046	.23	.16	1.938
[illegible]	.125	.062	.12	.156		.125	1.625	1.140	.890	.640	1.390	.125	.171	.125	1.875	1.687	2.625	.250	1.562	3.843	.093	NA	NA	.359	.125	.437	3.688	NA	3.687	.093	.40	.25	3.875
[illegible]	.093	.031	.06	.093	[illegible]	.093	.858	.608	.484	.358	.733	.077	.116	.062	.937	.875	1.343	.125	.781	1.892	.046	NA	NA	.209	.093	.250	1.875	NA	1.840	.046	.23	.16	1.938
[illegible]	.078	.048	.078	.093	NA	NA	1.125	.750	.593	.453	1.015	.062	.187	.078	.875	.718	1.375	.218	NA	NA	.048	.031	.875	.305	.078	.531	1.906	.078	NA	.078	.531	.187	NA
[illegible]	.093	.031	.06	.093	[illegible]	.093	.858	.608	.484	.358	.733	.077	.116	.062	.937	.875	1.343	.125	.781	1.892	.046	NA	NA	.209	.093	.250	1.875	NA	1.840	.046	.23	.16	1.938
[illegible]	.125	.062	.12	.156		.125	1.625	1.140	.890	.640	1.390	.125	.171	.125	1.875	1.687	2.625	.250	1.562	3.843	.093	NA	NA	.359	.125	.437	3.688	NA	3.687	.093	.40	.25	3.875
[illegible]	.125	.062	.12	.156		.125	1.625	1.140	.890	.640	1.390	.125	.171	.125	1.875	1.687	2.625	.250	1.562	3.843	.093	NA	NA	.359	.125	.437	3.688	NA	3.687	.093	.40	.25	3.875
[illegible]	.093	.031	.06	.093		.093	.858	.608	.484	.358	.733	.077	.116	.062	.937	.875	1.343	.125	.781	1.892	.046	NA	NA	.209	.093	.250	1.875	NA	1.840	.046	.23	.16	1.938
[illegible]	.093	.031	.06	.093	[illegible]	.093	.858	.608	.484	.358	.733	.077	.116	.062	.937	.875	1.343	.125	.781	1.892	.046	NA	NA	.209	.093	.250	1.875	NA	1.840	.046	.23	.16	1.938
DASH 500 VALUES BELOW																																	
DASH 500 VALUES BELOW																																	
[illegible]	.125	.031	.125	.156	.125	.125	1.718	1.187	.968	.749	1.452	.093	.295	.090	1.312	1.00	2.000	.250	1.687	2.750	.062	NA	NA	.463	.125	.562	2.437	.140	2.562	.090	.468	.359	2.750
[illegible]	.093	.031	.06	.093	NA	NA	.858	.608	.484	.358	.733	.062	.140	.062	NA	.968	1.450	.125	NA	1.720	.046	.03	NA	.210	NA	NA	NA	.070	NA	.046	.32	.16	NA
DASH 508 VALUES BELOW																																	
DASH 508 VALUES BELOW																																	
DASH 508 VALUES BELOW																																	
DASH 508 VALUES BELOW																																	
DASH 504 VALUES BELOW																																	
DASH 500 VALUES BELOW																																	
DASH 502 VALUES BELOW																																	
DASH 508 VALUES BELOW																																	
DASH 508 VALUES BELOW																																	
[illegible]	.093	.031	.06	.093	[illegible]	.093	.858	.608	.484	.358	.733	.077	.116	.062	.937	.875	1.343	.125	.781	1.892	.046	NA	NA	.209	.093	.250	1.875	NA	1.840	.046	.23	.16	1.938
DASH 508 VALUES BELOW																																	
DASH 508 VALUES BELOW																																	
DASH 500 VALUES BELOW																																	
DASH 500 VALUES BELOW																																	
[illegible]	.078	.048	.078	.093	NA	NA	1.125	.750	.593	.453	1.015	.062	.187	.078	.875	.718	1.375	.218	NA	NA	.048	.031	.875	.305	.078	.531	1.906	.078	NA	.078	.531	.187	NA
DASH 500 VALUES BELOW																																	
[illegible]	.093	.031	.06	.093	[illegible]	.093	.858	.608	.484	.358	.733	.077	.116	.062	.937	.875	1.343	.125	.781	1.892	.046	NA	NA	.209	.093	.250	1.875	NA	1.840	.046	.23	.16	1.938
[illegible]	.093	.031	.06	.093		.093	.858	.608	.484	.358	.733	.077	.116	.062	.937	.875	1.343	.125	.781	1.892	.046	NA	NA	.209	.093	.250	1.875	NA	1.840	.046	.23	.16	1.938
[illegible]	.093	.031	.06	.093		.093	.858	.608	.484	.358	.733	.077	.116	.062	.937	.875	1.343	.125	.781	1.892	.046	NA	NA	.209	.093	.250	1.875	NA	1.840	.046	.23	.16	1.938
[illegible]	.093	.031	.06	.093		.093	.858	.608	.484	.358	.733	.077	.116	.062	.937	.875	1.343	.125	.781	1.892	.046	NA	NA	.209	.093	.250	1.875	NA	1.840	.046	.23	.16	1.938
[illegible]	.093	.031	.06	.093	[illegible]	.093	.858	.608	.484	.358	.733	.077	.116	.062	.937	.875	1.343	.125	.781	1.892	.046	NA	NA	.209	.093	.250	1.875	NA	1.840	.046	.23	.16	1.938
DASH 500 VALUES BELOW																																	
[illegible]	.125	.062	.12	.156	[illegible]	.125	1.625	1.140	.890	.640	1.390	.125	.171	.125	1.875	1.687	2.625	.250	1.562	3.843	.093	NA	NA	.359	.125	.437	3.688	NA	3.687	.093	.40	.25	3.875

AC ELECTRONICS DASH NUMBERS

UNLESS OTHERWISE SPECIFIED
DIMENSIONS ARE IN INCHES
TOLERANCES ON
2 PLACE DECIMALS ± 3 PLACE DECIMALS ± .005 ANGLES ±
DO NOT SCALE THIS DRAWING
MATERIAL SEE NOTE 11
APPROVAL

AS APPLICABLE
NEXT ASSY | USED ON
APPLICATION

MIT
INSTRUMENTATION LAB
Cambridge, Mass
DRAWN R. A. JONES DATE 16 JUL 65
CHECKED
APPROVAL W. KUPFER 22 JUL 65
CONTRACT
NASA APPROVAL T. MICHAELS 22 JUL 65
MIT APPROVAL W. KUPFER 22 JUL 65

MANNED
SPACECRAFT CENTER
HOUSTON TEXAS

NAMEPLATES,
APOLLO G&N - GSE
(STANDARDS)

SIZE J2 CODE IDENT NO 80230 1004260
SCALE NONE SHEET 6 OF 6

1004260 CN SHT 6

SHEET 6 of 6
1004260

1004260 CN

2/1004260

NOTES:

1. INTERPRET DRAWING IN ACCORDANCE WITH STANDARDS PRESCRIBED BY MIL-D-70327.
2. DIMENSIONS ON EACH VIEW APPLY TO ALL VIEWS (WITH THE EXCEPTION OF MOUNTING HOLES).
3. FORMATS ILLUSTRATED WILL BE APPLICABLE TO ALL ITEMS REQUIRING NAMEPLATES BELOW END ITEM DESIGNATION (SYSTEMS, ASSEMBLIES, ETC.)
4. PLATE BACKGROUND TO BE LUSTERLESS BLACK PER FED-STD-595, COLOR 37038. BORDER, MARKING AND LETTERING TO BE NATURAL METAL, (ANODIZED ALUMINUM).
5. MARKING METHOD TO BE DIE STAMPING, ETCHING OR ENGRAVING IN ACCORDANCE WITH MIL-P-19834.
6. LETTERING STYLE TO BE GOTHIC, (SANS SERIFS), AND NUMBERS TO BE ARABIC.
7. WHERE LOCATING DIMENSIONS ARE NOT SHOWN, CHARACTERS SHALL BE SYMMETRICALLY POSITIONED.
8. IDENTIFY WITH DRAWING NUMBER PER ND 1002019.
9. WHEN "AUTO MARK" METAL MARKING TYPEWRITER IS USED TO ADD DATA TO BLANK SPACES, TYPE SIZE IS TO BE SELECTED FROM DIMENSIONS U, AC, AND AM.
10. NASA SYMBOL IS TO BE PROPORTIONAL TO NAMEPLATE IN RATIO OF 1 TO 5 WITH DIMENSION A VALUE AND IS TO HAVE NATURAL BACKGROUND. NASA SYMBOL LETTERS LETTERING AND FEATHER TO BE BLACK, (OR WHITE FOR SILK SCREENING). WHERE BLACK FEATHER PROTRUDES INTO BLACK BACKGROUND, A MINIMUM OUTLINE OF NATURAL BACKGROUND SHALL EXIST.
11. NAMEPLATES WILL BE APPLIED BY METHODS LISTED BELOW, SHOWN IN ORDER OF PREFERENCE, (I.E., FOR RELIABILITY AND WEIGHT).
    - A - STENCIL OR SILK SCREEN DIRECTLY ON EQUIPMENT USING INK PER SCD 1010920, (WHITE OR BLACK).
    - B - ALUMINUM FOIL, (STYLE A OR B, TYPE I):
      FOIL SHALL BE .0030 ± .0005 THICK PER MIL-A-148.
      FOIL SHALL HAVE NO ADHESIVE BACKING.
      FOIL SHALL BE BONDED PER ND 1002219, (METHOD II).
      FOIL SHALL BE CLEAR ANODIZED PER MIL-A-8625, TYPE II.
    - C - PLATE, (STYLE A OR B, TYPE II):
      MATERIAL: QQ-A-250, TEMPER O OR H14, TYPE 1100, ALUMINUM ALLOY, .032 THICK. ANODIZE PER MIL-A-8625, TYPE II.
      ALUMINUM PLATE MUST BE FREE FROM BURRS AND SHARP CORNERS, MOUNTED WITH APPLICABLE SIZE FASTENERS.
12. NAMEPLATES SHALL BE CAPABLE OF MEETING APPLICABLE REQUIREMENTS OF MIL-N-13231.
13. ON DIMENSION TABLES SHOWN ON PAGES 2, 3, 4, 5, AND 6, NA MEANS, "NOT APPLICABLE".

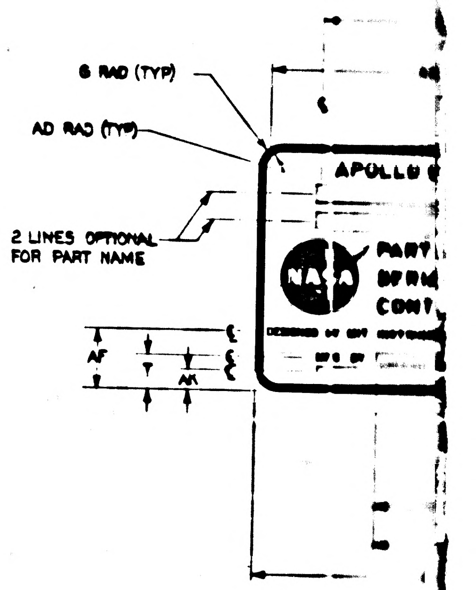

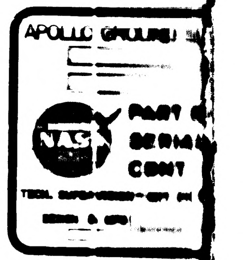

WITHOUT

SUGGESTED PROPORTIONS FOR NAMEPLATE DIMENSIONS.
1. SELECT NAMEPLATE LENGTH, DIMENSION "A", TO FIT DESIGN NEEDS.
2. DIMENSIONS B THRU AS ON LINE 1 BELOW ARE PROPORTIONAL TO "A" BY MULTIPLIERS SHOWN IN LINE 2 BELOW.

1.	A	B	C	D	E	F	G	H	J	K	L	M	N	P	R	S	T	U	V	W	Y	Z
2.	1.000A	.6563A	.8438A	.6875A	.0391A	.0240A	.0391A	.0469A	.0547A	.0469A	.5938A	.3750A	.2969A	.2187A	.5079A	.0313A	.0938A	.0391A	.4375A	.3594A	.6875A	.1094A

1.	AA	AB	AC	AD	AE	AF	AG	AH	AJ	AK	AL	AM	AN	AP	AR	AS
2.	.5781A	.9219A	.0240A	.0156A	.4375A	.1525A	.0801A	.1563A	.8438A	.0548A	.8659A	.0391A	.1563A	.0938A	.9219A	.0151A

1004260	CP	SHT 1

REVISIONS					
SYM	ZONE	DESCRIPTION	CHG NO	DATE	APPD
CL		REPLACES REV CK WITHOUT CHANGE PER TDRR 34365		67	JWL
CM		REVISION STATUS CHANGED		18 OCT 67	RAW
CN		REVISION STATUS CHANGED		31 OCT 67	JRK
CP		REVISION STATUS CHANGED		6 NOV 67	

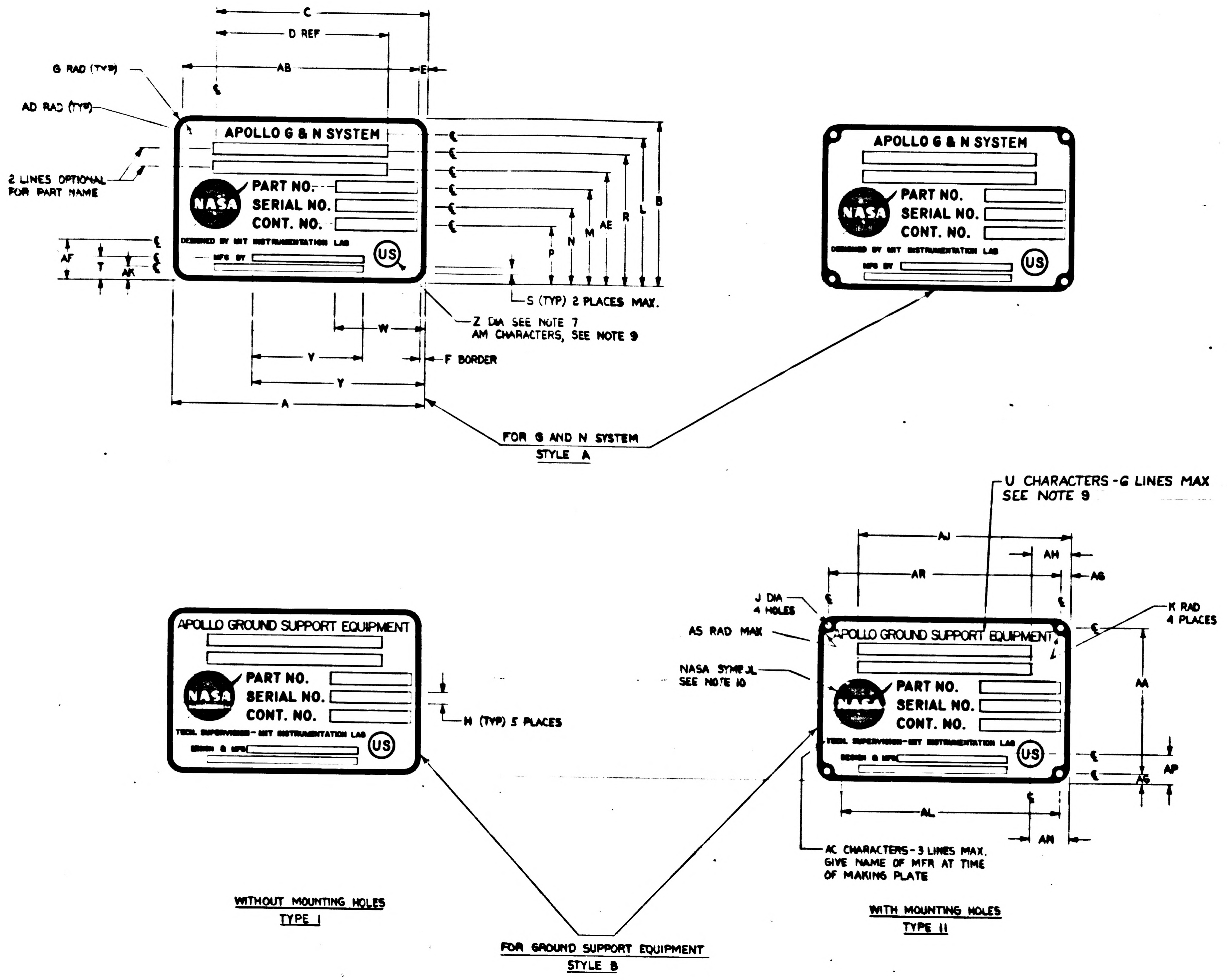

C
D REF
AB
E
G RAD (TYP)
AD RAD (TYP)
2 LINES OPTIONAL FOR PART NAME
APOLLO G & N SYSTEM
NASA
PART NO.
SERIAL NO.
CONT. NO.
DESIGNED BY MIT INSTRUMENTATION LAB
MFD BY
US
AF
T
AK
P
N
M
AE
R
L
B
S (TYP) 2 PLACES MAX.
Z DIA SEE NOTE 7
AM CHARACTERS, SEE NOTE 9
W
V
Y
F BORDER
A
FOR G AND N SYSTEM
STYLE A
U CHARACTERS - 6 LINES MAX
SEE NOTE 9
AJ
AH
AR
AG
J DIA 4 HOLES
AS RAD MAX
K RAD 4 PLACES
NASA SYMBOL SEE NOTE 10
APOLLO GROUND SUPPORT EQUIPMENT
TECH. SUPERVISION - MIT INSTRUMENTATION LAB
DESIGN & MFG
H (TYP) 5 PLACES
AA
AP
AG
AL
AN
AC CHARACTERS - 3 LINES MAX. GIVE NAME OF MFR AT TIME OF MAKING PLATE
WITHOUT MOUNTING HOLES
TYPE I
WITH MOUNTING HOLES
TYPE II
FOR GROUND SUPPORT EQUIPMENT
STYLE B

UNLESS OTHERWISE SPECIFIED
DIMENSIONS ARE IN INCHES
TOLERANCES ON
2 PLACE DECIMALS ± 3 PLACE DECIMALS ±.005 ANGLES ±
DO NOT SCALE THIS DRAWING
MATERIAL SEE NOTE 11

AS APPLICABLE
NEXT ASSY | USED ON
APPLICATION

MIT INSTRUMENTATION LAB
DRAWN R A JONES 15 JUL 65
CHECKED W KUPFER 22 JUL 65
APPROVAL
CONTRACT
T. MICHAELS 22 JUL 65
NASA APPROVAL
W KUPFER 22 JUL 65
MIT APPROVAL

MANNED SPACECRAFT CENTER
HOUSTON, TEXAS

NAMEPLATES,
APOLLO G&N - GSE
(STANDARDS)

SIZE J2 CODE IDENT NO. 80230 1004260
SCALE NONE SHEET 1 OF 6

FH14260 CP SHEET 1

1004260 CP

1004260

2/1004260

[illegible]

DASH NO.	P/C	PART NAME	REMARKS	PART NUMBER	SER. NO.	CONT. NO.	STYLE	TYPE	MATERIAL	A	B	C	D	E	F	G	H	J	K	L	M	
399	K																					
398	K																					
350	K	ALIGNMENT OPTICAL TELESCOPE (LEM)		NA	NA	NA	A	I	NOTE 11B	4.000	2.625	3.375	2.750	.156	.093	.156	.187	NA	NA	2.312	1.468	1.187
309	K																					
308	K																					
307	K																					
306	K						B	I	NOTE 11B	4.000	2.625	3.375	2.750	.156	.093	.156	.187	NA	NA	2.328	1.468	1.
305	K						B	II	NOTE 11C	4.000	2.625	3.375	2.750	.156	.093	.156	.187	.125	.156	2.328	1.468	1.
304	K						B	I	NOTE 11B	2.000	1.312	1.687	1.375	.078	.048	.078	.093	NA	NA	1.164	.734	.
303	K						B	II	NOTE 11C	2.000	1.312	1.687	1.375	.078	.048	.078	.093	.070	.078	1.164	.734	.
302	K																					
301	K																					
300	K	OPTICAL UNIT		NA	NA	NA	A	I	NOTE 11B	2.000	1.312	1.675	NA	NA	.048	.078	NA	NA	NA	1.090	.812	.
9	K	2 IN AUTOCOLLIMATOR		1001702			B	II	NOTE 11C	4.000	2.625	3.812	2.750	.156	.093	.156	.187	.125	.156	2.250	1.500	1.
8	K	5 IN AUTOCOLLIMATOR		1017410			B	II	NOTE 11C	4.000	2.625	3.812	2.750	.156	.093	.156	.187	.125	.156	2.250	1.500	1.
7	K	2-1/2 IN AUTOCOLLIMATOR (SCT)		1017435			B	II	NOTE 11C	4.000	2.625	3.812	2.750	.156	.093	.156	.187	.125	.156	2.250	1.500	1.
6	K	2-1/2 IN AUTOCOLLIMATOR (SXT)		1017448			B	II	NOTE 11C	4.000	2.625	3.812	2.750	.156	.093	.156	.187	.125	.156	2.250	1.500	1.
5	K	RETROREFLECTING PRISM ASSEMBLY		1019840			B	I	NOTE 11B	4.000	2.625	3.812	2.750	.156	.093	.156	.187	NA	NA	2.250	1.500	1.
4	K	S/H SIMULATOR ASSEMBLY		1019896			B	I	NOTE 11B	4.000	2.625	3.812	2.750	.156	.093	.156	.187	NA	NA	2.250	1.500	1.
3	K	REFERENCE MIRROR		1001767			B	I	NOTE 11B	2.000	1.312	1.906	1.375	.078	.048	.078	.093	NA	NA	1.125	.750	.
2	K	2 IN PLANE READING AUTOCOLLIMATOR		1017413			B	I	NOTE 11B	2.000	1.312	1.906	1.375	.078	.048	.078	.093	NA	NA	1.125	.750	.
1	K	2 IN AUTOCOLLIMATOR		1001702			B	I	NOTE 11B	2.000	1.312	1.906	1.375	.078	.048	.078	.093	NA	NA	1.125	.750	.

NOTES FOR TABLE

STYLE A IS FOR G & N SYSTEM
STYLE B IS FOR GROUND SUPPORT EQUIPMENT
TYPE I IS WITHOUT MOUNTING HOLES
TYPE II IS WITH MOUNTING HOLES

1004260	CP	SHT 2

REVISIONS					
SYM	ZONE	DESCRIPTION	CHG NO	DATE	APPD
CL		REPLACES REV CK WITHOUT CHANGE PER TDRR 34365		[illegible]	JWL
CM		REVISION STATUS CHANGED		18 OCT 67	R.A.L.
CN		REVISION STATUS CHANGED		31 OCT 67	JRK
CP		REVISION STATUS CHANGED		6 NOV 67	EWS

.156	.093	.156	.187	NA	NA	2.312	1.468	1.187	.906	2.031	NA	.375	.156	NA	1.437	2.750	.437	NA	3.688	.062	.062	1.750	.593	NA	.625	3.375	.187	NA	.156	.531	.453	NA
[illegible]	.093	.156	.187	NA	NA	2.328	1.468	1.187	.906	2.031	.062	.375	.156	NA	1.437	2.750	.437	NA	3.687	.062	.062	1.750	.593	NA	NA	NA	NA	NA	NA	NA	NA	NA
[illegible]	.093	.156	.187	.125	.156	2.328	1.468	1.187	.906	2.031	.062	.375	.156	NA	1.437	2.750	.437	2.312	3.687	.062	NA	1.750	.593	NA	NA	NA	NA	NA	NA	NA	NA	NA
[illegible]	.048	.078	.093	NA	NA	1.164	.734	.593	.453	1.015	.048	.171	.078	NA	.718	1.375	.187	NA	NA	.048	.031	.875	.320	NA	NA	NA	NA	NA	NA	NA	NA	NA
[illegible]	.048	.078	.093	.070	.078	1.164	.734	.593	.453	1.015	.048	.171	.078	NA	.718	1.375	.187	.156	1.843	.048	NA	.875	.320	NA	NA	NA	NA	NA	NA	NA	NA	NA
NA	.048	.078	NA	NA	NA	1.090	.812	.675	.540	.940	NA	.265	NA	NA	NA	1.375	.218	NA	NA	NA	NA	NA	.375	NA	NA	NA	.180	NA	.078	NA	NA	NA
[illegible]	.093	.156	.187	.125	.156	2.250	1.500	1.187	.906	2.031	.093	.375	.156	1.750	1.437	2.750	.437	2.312	3.687	.062	NA	1.750	.593	.156	1.062	3.812	.156	NA	.156	1.062	.375	3.687
[illegible]	.093	.156	.187	.125	.156	2.250	1.500	1.187	.906	2.031	.093	.375	.156	1.750	1.437	2.750	.437	2.312	3.687	.062	NA	1.750	.593	.156	1.062	3.812	.156	NA	.156	1.062	.375	3.687
[illegible]	.093	.156	.187	.125	.156	2.250	1.500	1.187	.906	2.031	.093	.375	.156	1.750	1.437	2.750	.437	2.312	3.687	.062	NA	1.750	.593	.156	1.062	3.812	.156	NA	.156	1.062	.375	3.687
[illegible]	.093	.156	.187	.125	.156	2.250	1.500	1.187	.906	2.031	.093	.375	.156	1.750	1.437	2.750	.437	2.312	3.687	.062	NA	1.750	.593	.156	1.062	3.812	.156	NA	.156	1.062	.375	3.687
[illegible]	.093	.156	.187	NA	NA	2.250	1.500	1.187	.906	2.031	.093	.375	.156	1.750	1.437	2.750	.437	NA	NA	.062	.062	1.750	.593	.156	1.062	3.812	.156	NA	.156	1.062	.375	NA
[illegible]	.093	.156	.187	NA	NA	2.250	1.500	1.187	.906	2.031	.093	.375	.156	1.750	1.437	2.750	.437	NA	NA	.062	.062	1.750	.593	.156	1.062	3.812	.156	NA	.156	1.062	.375	NA
[illegible]	.048	.078	.093	NA	NA	1.125	.750	.593	.453	1.015	.062	.187	.078	.875	.718	1.375	.218	NA	NA	.048	.031	.875	.305	.078	.531	1.906	.078	NA	.078	.531	.187	NA
[illegible]	.048	.078	.093	NA	NA	1.125	.750	.593	.453	1.015	.062	.187	.078	.875	.718	1.375	.218	NA	NA	.048	.031	.875	.305	.078	.531	1.906	.078	NA	.078	.531	.187	NA
[illegible]	.048	.078	.093	NA	NA	1.125	.750	.593	.453	1.015	.062	.187	.078	.875	.718	1.375	.218	NA	NA	.048	.031	.875	.305	.078	.531	1.906	.078	NA	.078	.531	.187	NA
E	F	G	H	J	K	L	M	N	P	R	S	T	U	V	W	Y	Z	AA	AB	AC	AD	AE	AF	AG	AH	AJ	AK	AL	AM	AN	AP	AR

KOLLSMAN DASH NUMBERS

AS APPLICABLE	NEXT ASSY	USED ON	APPLICATION
UNLESS OTHERWISE SPECIFIED DIMENSIONS ARE IN INCHES TOLERANCES ON 2 PLACE DECIMALS + − 3 PLACE DECIMALS + − .005 ANGLES + −	DO NOT SCALE THIS DRAWING	MATERIAL SEE NOTE H	APPROVAL
M I T INSTRUMENTATION LAB CAMBRIDGE MASS	DRAWN R A JONES DATE 15 JUL 65	CHECKED W HUFFER APPROVAL 22 JUL 65	CONTRACT
T. MICHAELS 22 JUL 65 NASA APPROVAL	W. HUFFER 22 JUL 65 MIT APPROVAL		
MANNED SPACECRAFT CENTER HOUSTON, TEXAS	NAMEPLATES, APOLLO GEN - GSE (STANDARDS)		
SIZE J2	CODE IDENT NO. 80230	1004260	
SCALE NONE		SHEET 2 OF 6	

1004260 CP

1004260

1004 2110 CP SHT 2

2/1004260

DASH NO.	P/C	PART NAME	REMARKS	PART NUMBER	SER. NO.	CONT. NO.	STYLE	TYPE	MATERIAL	A	B	C	D	E	F	G	H	J	K	L	M	N
299	R																					
298	R																					
285	R	BUFFER CIRCUIT ASSY		2014254-031	NA	NAS-9-497	B	I	NOTE 11B	FOR DIMENSIONS SEE DASH 15 VALUES BELOW												
284	R	LOGIC DRAWER ASSY NO. 2		2014037-041	NA	NAS-9-497	B	I	NOTE 11B	FOR DIMENSIONS SEE DASH 17 VALUES BELOW												
283	R	DRAWER ASSY-PROGRAM & MONITOR		2014041-051	NA	NAS-9-497	B	I	NOTE 11B	FOR DIMENSIONS SEE DASH 17 VALUES BELOW												
282	R	COMPUTER TEST SET		2014042-061	NA	NAS-9-497	B	II	NOTE 11C	FOR DIMENSIONS SEE DASH 18 VALUES BELOW												
281	R	AGC HANDLING FIXTURE		2014282-031	NA	NAS-9-497	B	I	NOTE 11B	FOR DIMENSIONS SEE DASH 17 VALUES BELOW												
280	R	COMPUTER TEST SET		2014042-051	NA	NAS-9-497	B	II	NOTE 11C	FOR DIMENSIONS SEE DASH 18 VALUES BELOW												
279	R	SELF TEST ASSY		2014366-041	NA	NAS-9-497	B	I	NOTE 11B	FOR DIMENSIONS SEE DASH 15 VALUES BELOW												
278	R	LOGIC DRAWER ASSY NO. 1		2014036-041	NA	NAS-9-497	B	I	NOTE 11B	FOR DIMENSIONS SEE DASH 17 VALUES BELOW												
277	R	COMPUTER TEST SET		2014042-041	NA	NAS-9-497	B	II	NOTE 11C	FOR DIMENSIONS SEE DASH 18 VALUES BELOW												
276	R	DRAWER ASSY-PROGRAM & MONITOR		2014041-041	NA	NAS-9-497	B	I	NOTE 11B	FOR DIMENSIONS SEE DASH 17 VALUES BELOW												
275	R	DRAWER ASSY RDC INTERFACE		2014045-031	NA	NAS-9-497	B	I	NOTE 11B	FOR DIMENSIONS SEE DASH 15 VALUES BELOW												
274	R	SELF TEST ASSY		2014366-031	NA	NAS-9-497	B	I	NOTE 11B	FOR DIMENSIONS SEE DASH 15 VALUES BELOW												
273	R	LOGIC DRAWER ASSY NO. 2		2014037-031	NA	NAS-9-497	B	I	NOTE 11B	FOR DIMENSIONS SEE DASH 17 VALUES BELOW												
272	R	DRAWING ASSY PROGRAMMER & MONITOR		2014041-031	NA	NAS-9-497	B	I	NOTE 11B	FOR DIMENSIONS SEE DASH 17 VALUES BELOW												
271	R	LOGIC DRAWER ASSY NO. 1		2014036-031	NA	NAS-9-497	B	I	NOTE 11B	FOR DIMENSIONS SEE DASH 17 VALUES BELOW												
270	R	COMPUTER TEST SET		2014042-031	NA	NAS-9-497	B	II	NOTE 11C	FOR DIMENSIONS SEE DASH 18 VALUES BELOW												
269	R	POWER CONTROL ASSY		2014044-021	NA	NAS-9-497	B	I	NOTE 11B	FOR DIMENSIONS SEE DASH 17 VALUES BELOW												
268	R	SELF TEST ASSY		2014366-021	NA	NAS-9-497	B	I	NOTE 11B	FOR DIMENSIONS SEE DASH 15 VALUES BELOW												
267	R	AGC JUNCTION ASSY		2014341-021	NA	NAS-9-497	B	I	NOTE 11B	FOR DIMENSIONS SEE DASH 15 VALUES BELOW												
266	R	POWER CONTROL ASSY		2014079-021	NA	NAS-9-497	B	I	NOTE 11B	FOR DIMENSIONS SEE DASH 15 VALUES BELOW												
265	R	BUFFER CIRCUIT ASSY		2014254-021	NA	NAS-9-497	B	I	NOTE 11B	FOR DIMENSIONS SEE DASH 15 VALUES BELOW												
264	R	DRAWER ASSY X Y INTERFACE		2014040-021	NA	NAS-9-497	B	I	NOTE 11B	FOR DIMENSIONS SEE DASH 15 VALUES BELOW												
263	R	DRAWER ASSY RDC INTERFACE		2014045-021	NA	NAS-9-497	B	I	NOTE 11B	FOR DIMENSIONS SEE DASH 15 VALUES BELOW												
262	R	DRAWER ASSY PROGRAMMER & MONITOR		2014041-021	NA	NAS-9-497	B	I	NOTE 11B	FOR DIMENSIONS SEE DASH 17 VALUES BELOW												
261	R	LOGIC DRAWER ASSY NO. 2		2014037-021	NA	NAS-9-497	B	I	NOTE 11B	FOR DIMENSIONS SEE DASH 17 VALUES BELOW												
260	R	LOGIC DRAWER ASSY NO. 1		2014036-021	NA	NAS-9-497	B	I	NOTE 11B	FOR DIMENSIONS SEE DASH 17 VALUES BELOW												
259	R	OPERATION CONSOLE		2014024-021	NA	NAS-9-497	B	II	NOTE 11C	FOR DIMENSIONS SEE DASH 18 VALUES BELOW												
258	R	COMPUTER TEST SET		2014042-021	NA	NAS-9-497	B	II	NOTE 11C	FOR DIMENSIONS SEE DASH 18 VALUES BELOW												
257	R	AUXILIARY CALIBRATION CONSOLE		2014059-021	NA	NAS-9-497	B	II	NOTE 11C	FOR DIMENSIONS SEE DASH 18 VALUES BELOW												
256	R	AGC CALIBRATION CONSOLE		2014049-021	NA	NAS-9-497	B	II	NOTE 11C	FOR DIMENSIONS SEE DASH 18 VALUES BELOW												
255	R	AGC HANDLING FIXTURE		2014282-021	NA	NAS-9-497	B	I	NOTE 11B	FOR DIMENSIONS SEE DASH 17 VALUES BELOW												
254	R	DRAWER ASSY COMP. SIMULATOR		2014048-011	NA	NAS-9-497	B	II	NOTE 11C	FOR DIMENSIONS SEE DASH 18 VALUES BELOW												
253	R	SHIPPING KIT ASSY, NAV DSKY		2016312-011	NA	NAS-9-497	B	II	NOTE 11C	FOR DIMENSIONS SEE DASH 18 VALUES BELOW												
252	R	SHIPPING KIT ASSY, UNIVERSAL DSKY		2016316-011	NA	NAS-9-497	B	II	NOTE 11C	FOR DIMENSIONS SEE DASH 18 VALUES BELOW												
251	R	SHIPPING KIT ASSY, MAIN DSKY		2016313-011	NA	NAS-9-497	B	II	NOTE 11C	FOR DIMENSIONS SEE DASH 18 VALUES BELOW												
250	R	AMPLIFIER, REWORK		2014386	NA	NAS-9-497	B	I	NOTE 11B	FOR DIMENSIONS SEE DASH 15 VALUES BELOW												
249	R	TEMP MONITOR ASSY		2014313-011	NA	NAS-9-497	B	I	NOTE 11C	FOR DIMENSIONS SEE DASH 17 VALUES BELOW												
248	R	AGC JUNCTION ASSY		2014341-011	NA	NAS-9-497	B	I	NOTE 11B	FOR DIMENSIONS SEE DASH 15 VALUES BELOW												
247	R	AC INPUT PANEL ASSY		2014302-011	NA	NAS-9-497	B	I	NOTE 11B	FOR DIMENSIONS SEE DASH 15 VALUES BELOW												
246	R	SELF TEST ASSY		2014392-011	NA	NAS-9-497	B	I	NOTE 11B	FOR DIMENSIONS SEE DASH 15 VALUES BELOW												
245	R	TAPE PUNCH ASSEMBLY		2014039-011	NA	NAS-9-497	B	I	NOTE 11B	FOR DIMENSIONS SEE DASH 15 VALUES BELOW												
244	R	TAPE READER ASSEMBLY		2014038-011	NA	NAS-9-497	B	I	NOTE 11B	FOR DIMENSIONS SEE DASH 15 VALUES BELOW												
243																						
242																						
241	R	APOLLO GUIDANCE COMPUTER GROUP		6003001	NA	NAS-9-497	A	I	NOTE 11B	FOR DIMENSIONS SEE DASH 19 VALUES BELOW												
240	R	SELF TEST ASSEMBLY		2014366-011	NA	NAS-9-497	B	I	NOTE 11B	FOR DIMENSIONS SEE DASH 15 VALUES BELOW												
239	R	POWER SUPPLY ASSY-115V., 400 CYCLE		2014207-011	NA	NAS-9-497	B	I	NOTE 11B	FOR DIMENSIONS SEE DASH 17 VALUES BELOW												
238	R	AC INPUT PANEL ASSY		2014043-011	NA	NAS-9-497	B	I	NOTE 11B	FOR DIMENSIONS SEE DASH 17 VALUES BELOW												
237	R	POWER CONTROL ASSY		2014079-011	NA	NAS-9-497	B	I	NOTE 11B	FOR DIMENSIONS SEE DASH 15 VALUES BELOW												
236	R	DRAWER ASSY-X Y INTERFACE		2014040-011	NA	NAS-9-497	B	I	NOTE 11B	FOR DIMENSIONS SEE DASH 15 VALUES BELOW												
235	R	DRAWER ASSY RDC INTERFACE		2014045-011	NA	NAS-9-497	B	I	NOTE 11B	FOR DIMENSIONS SEE DASH 15 VALUES BELOW												
234	R	BUFFER CIRCUIT ASSY		2014254-011	NA	NAS-9-497	B	I	NOTE 11B	FOR DIMENSIONS SEE DASH 15 VALUES BELOW												
233	R	CONTROL & INTERFACE ASSY		2014204-011	NA	NAS-9-497	B	I	NOTE 11B	FOR DIMENSIONS SEE DASH 15 VALUES BELOW												
232	R	POWER CONTROL ASSY		2014044-011	NA	NAS-9-497	B	I	NOTE 11B	FOR DIMENSIONS SEE DASH 17 VALUES BELOW												
231	R	DRAWER ASSY, PROGRAMMER & MONITOR		2014041-011	NA	NAS-9-497	B	I	NOTE 11B	FOR DIMENSIONS SEE DASH 17 VALUES BELOW												
230	R	CONNECTOR INTERFACE ASSY		2014272-011	NA	NAS-9-497	B	I	NOTE 11B	FOR DIMENSIONS SEE DASH 15 VALUES BELOW												
229	R	CONNECTOR INTERFACE ASSY		2014047-011	NA	NAS-9-497	B	I	NOTE 11B	FOR DIMENSIONS SEE DASH 15 VALUES BELOW												
228	R	ANTENNA, TUNING CAPACITOR ASSY		2014209-011	NA	NAS-9-497	B	I	NOTE 11B	FOR DIMENSIONS SEE DASH 15 VALUES BELOW												
227	R	MOUNTING FIXTURE ASSY		2014006-011	NA	NAS-9-497	B	I	NOTE 11B	FOR DIMENSIONS SEE DASH 17 VALUES BELOW												
226	R	POWER SUPPLY ASSY 3 VDC		2014234-011	NA	NAS-9-497	B	I	NOTE 11B	FOR DIMENSIONS SEE DASH 15 VALUES BELOW												
225	R	PANEL ASSY—SIGNAL INTERFACE		2014010-011	NA	NAS-9-497	B	I	NOTE 11B	FOR DIMENSIONS SEE DASH 15 VALUES BELOW												
224	R	OSCILLOSCOPE ASSY		2014232-011	NA	NAS-9-497	B	I	NOTE 11B	FOR DIMENSIONS SEE DASH 15 VALUES BELOW												
223	R	AUXILIARY OUTLET ASSY		2014274-011	NA	NAS-9-497	B	I	NOTE 11B	FOR DIMENSIONS SEE DASH 15 VALUES BELOW												
222	R	FREQUENCY COUNTER		2014233-011	NA	NAS-9-497	B	I	NOTE 11B	FOR DIMENSIONS SEE DASH 15 VALUES BELOW												
221	R	POWER SUPPLY ASSY 10, 13, 28 VDC		2014235-011	NA	NAS-9-497	B	I	NOTE 11B	FOR DIMENSIONS SEE DASH 15 VALUES BELOW												
220	R	LOGIC DRAWER ASSY NO. 2		2014037-011	NA	NAS-9-497	B	I	NOTE 11B	FOR DIMENSIONS SEE DASH 17 VALUES BELOW												
219	R	LOGIC DRAWER ASSY NO. 1		2014036-011	NA	NAS-9-497	B	I	NOTE 11B	FOR DIMENSIONS SEE DASH 17 VALUES BELOW												
218	R	COUNTER, ELECTRICAL ASSY		2014288-011	NA	NAS-9-497	B	I	NOTE 11B	FOR DIMENSIONS SEE DASH 15 VALUES BELOW												
217	R	POWER SUPPLY ASSY		2014279-011	NA	NAS-9-497	B	I	NOTE 11B	FOR DIMENSIONS SEE DASH 15 VALUES BELOW												
216	R	TEST MOUNT ASSY		2014257-011	NA	NAS-9-497	B	I	NOTE 11B	FOR DIMENSIONS SEE DASH 15 VALUES BELOW												
215	R	UNIVERSAL DSKY PEDESTAL MOUNT		2014014-011	NA	NAS-9-497	B	I	NOTE 11B	FOR DIMENSIONS SEE DASH 17 VALUES BELOW												
214	R	MAIN DSKY PEDESTAL MOUNT		2014343	NA	NAS-9-497	B	I	NOTE 11B	FOR DIMENSIONS SEE DASH 17 VALUES BELOW												
213	R	SHIPPING CONTAINER, MAIN DSKY		1006229	NA	NAS-9-497	B	II	NOTE 11C	FOR DIMENSIONS SEE DASH 18 VALUES BELOW												
212	R	SHIPPING CONTAINER, NAV DSKY		1006231	NA	NAS-9-497	B	II	NOTE 11C	FOR DIMENSIONS SEE DASH 18 VALUES BELOW												
211	R	SHIPPING CONTAINER, AGC		1006230	NA	NAS-9-497	B	II	NOTE 11C	FOR DIMENSIONS SEE DASH 18 VALUES BELOW												
210	R	SHIPPING CONTAINER, UNIVERSAL DSKY		1006422	NA	NAS-9-497	B	II	NOTE 11C	FOR DIMENSIONS SEE DASH 18 VALUES BELOW												
209	R	SHIPPING CONTAINER, AGC		1006421	NA	NAS-9-497	B	II	NOTE 11C	FOR DIMENSIONS SEE DASH 18 VALUES BELOW												
208	R	UNIVERSAL DSKY HANDLING FIXTURE		2014013-011	NA	NAS-9-497	B	I	NOTE 11B	FOR DIMENSIONS SEE DASH 15 VALUES BELOW												
207	R	NAV DSKY HANDLING FIXTURE		1014377	NA	NAS-9-497	B	I	NOTE 11B	FOR DIMENSIONS SEE DASH 17 VALUES BELOW												
206	R	MAIN DSKY HANDLING FIXTURE		1014334	NA	NAS-9-497	B	I	NOTE 11B	FOR DIMENSIONS SEE DASH 17 VALUES BELOW												
205	R	AGC HANDLING FIXTURE		2014282-011	NA	NAS-9-497	B	I	NOTE 11B	FOR DIMENSIONS SEE DASH 17 VALUES BELOW												
204	R	OPERATION CONSOLE		2014024-011	NA	NAS-9-497	B	II	NOTE 11C	FOR DIMENSIONS SEE DASH 18 VALUES BELOW												
203	R	COMPUTER TEST SET		2014042-011	NA	NAS-9-497	B	II	NOTE 11C	FOR DIMENSIONS SEE DASH 18 VALUES BELOW												
202	R	DRAWER ASSY, COMPUTER SIMULATOR		2014048-011	NA	FNP-12775	B	II	NOTE 11C	FOR DIMENSIONS SEE DASH 18 VALUES BELOW												
201	R	AUXILIARY CALIBRATION CONSOLE		2014059-011	NA	NAS-9-497	B	II	NOTE 11C	FOR DIMENSIONS SEE DASH 18 VALUES BELOW												
200	R	AGC CALIBRATION CONSOLE		2014049-011	NA	NAS-9-497	B	II	NOTE 11C	FOR DIMENSIONS SEE DASH 18 VALUES BELOW												
21	R																					
20	R	NA		NA	NA	NA	A	II	NOTE 11C	2.000	1.312	1.687	1.375	.078	.031	.078	.093	[illegible]	.093	1.187	.750	.593
19	R	NA		NA	NA	NA	A	I	NOTE 11B	2.000	1.312	1.687	1.375	.078	.031	.078	.093	NA	NA	1.187	.750	.593
18	R	NA		NA	NA	NA	B	II	NOTE 11C	4.187	1.875	3.469	2.750	.156	.093	.156	.125	[illegible]	.125	1.625	1.032	.844
17	R	NA		NA	NA	NA	B	I	NOTE 11B	4.187	1.875	3.469	2.750	.156	.093	.156	.125	NA	NA	1.525	1.032	.844
16	R	NA		NA	NA	NA	B	II	NOTE 11C	2.000	1.312	1.687	1.375	.078	.031	.078	.093	[illegible]	.093	1.187	.750	.593
15	R	NA		NA	NA	NA	B	I	NOTE 11B	2.000	1.312	1.687	1.375	.078	.031	.078	.093	NA	NA	1.187	.750	.593

NOTES FOR TABLE

STYLE A IS FOR G & N SYSTEM
STYLE B IS FOR GROUND SUPPORT EQUIPMENT
TYPE I IS WITHOUT MOUNTING HOLES
TYPE II IS WITH MOUNTING HOLES

1004260 CP SHT 3

REVISIONS					
SYM	ZONE	DESCRIPTION	CHG NO	DATE	APPD
CL		REPLACES REV CK WITHOUT CHANGE PER TDRR 34365		[illegible]	JML
CM		REVISION STATUS CHANGED		18 OCT 67	RAH
CN		REVISION STATUS CHANGED		31 OCT 67	JRK
CP		REVISION STATUS CHANGED		6 NOV 67	END

	F	G	H	J	K	L	M	N	P	R	S	T	U	V	W	Y	Z	AA	AB	AC	AD	AE	AF	AG	AH	AJ	AK	AL	AM	AN	AP	AR
	15 VALUES BELOW																															
	17 VALUES BELOW																															
	17 VALUES BELOW																															
	18 VALUES BELOW																															
	17 VALUES BELOW																															
	18 VALUES BELOW																															
	15 VALUES BELOW																															
	17 VALUES BELOW																															
	18 VALUES BELOW																															
	17 VALUES BELOW																															
	15 VALUES BELOW																															
	15 VALUES BELOW																															
	17 VALUES BELOW																															
	17 VALUES BELOW																															
	17 VALUES BELOW																															
	18 VALUES BELOW																															
	17 VALUES BELOW																															
	18 VALUES BELOW																															
	19 VALUES BELOW																															
	15 VALUES BELOW																															
	15 VALUES BELOW																															
	15 VALUES BELOW																															
	15 VALUES BELOW																															
	17 VALUES BELOW																															
	17 VALUES BELOW																															
	17 VALUES BELOW																															
	18 VALUES BELOW																															
	18 VALUES BELOW																															
	18 VALUES BELOW																															
	18 VALUES BELOW																															
	17 VALUES BELOW																															
	18 VALUES BELOW																															
	18 VALUES BELOW																															
	18 VALUES BELOW																															
	18 VALUES BELOW																															
	19 VALUES BELOW																															
	17 VALUES BELOW																															
	15 VALUES BELOW																															
	15 VALUES BELOW																															
	15 VALUES BELOW																															
	15 VALUES BELOW																															
	15 VALUES BELOW																															
	19 VALUES BELOW																															
	15 VALUES BELOW																															
	17 VALUES BELOW																															
	17 VALUES BELOW																															
	15 VALUES BELOW																															
	15 VALUES BELOW																															
	15 VALUES BELOW																															
	15 VALUES BELOW																															
	15 VALUES BELOW																															
	17 VALUES BELOW																															
	17 VALUES BELOW																															
	15 VALUES BELOW																															
	15 VALUES BELOW																															
	15 VALUES BELOW																															
	17 VALUES BELOW																															
	15 VALUES BELOW																															
	15 VALUES BELOW																															
	15 VALUES BELOW																															
	15 VALUES BELOW																															
	15 VALUES BELOW																															
	18 VALUES BELOW																															
	17 VALUES BELOW																															
	17 VALUES BELOW																															
	15 VALUES BELOW																															
	15 VALUES BELOW																															
	15 VALUES BELOW																															
	17 VALUES BELOW																															
	17 VALUES BELOW																															
	18 VALUES BELOW																															
	18 VALUES BELOW																															
	18 VALUES BELOW																															
	18 VALUES BELOW																															
	18 VALUES BELOW																															
	18 VALUES BELOW																															
	17 VALUES BELOW																															
	17 VALUES BELOW																															
	17 VALUES BELOW																															
	18 VALUES BELOW																															
	18 VALUES BELOW																															
	18 VALUES BELOW																															
	18 VALUES BELOW																															
	18 VALUES BELOW																															
	[illegible]	.078	.093	[illegible]	.093	1.187	.750	.593	.453	1.015	.062	.187	.078	.875	.718	1.375	.218	1.156	1.843	.048	NA	.875	.305	.078	.312	1.687	.078	NA	.078	.312	.187	1.843
	[illegible]	.078	.093	NA	NA	1.187	.750	.593	.453	1.015	.062	.187	.078	.875	.718	1.375	.218	NA	NA	.048	.031	.875	.305	.078	.312	1.687	.078	NA	.078	.312	.187	NA
	[illegible]	.156	.125	[illegible]	.125	1.625	1.032	.844	.656	1.406	.093	.344	.156	1.781	1.531	2.844	.312	1.562	3.875	.062	NA	1.219	.500	.156	.719	3.469	.156	NA	.156	.719	.344	3.875
	.093	.156	.125	NA	NA	1.625	1.032	.844	.656	1.406	.093	.344	.156	1.781	1.531	2.844	.312	NA	NA	.062	.062	1.219	.500	.156	.719	3.469	.156	NA	.156	.719	.344	NA
	.031	.078	.093	[illegible]	.093	1.187	.750	.593	.453	1.015	.062	.187	.078	.875	.718	1.375	.218	1.156	1.843	.048	NA	.875	.305	.078	.312	1.687	.078	NA	.078	.312	.187	1.843
	[illegible]	.078	.093	NA	NA	1.187	.750	.593	.453	1.015	.062	.187	.078	.875	.718	1.375	.218	NA	NA	.048	.031	.875	.305	.078	.312	1.687	.078	NA	.078	.312	.187	NA

RAYTHEON DASH NUMBERS

AS APPLICABLE	
NEXT ASSY	USED ON
APPLICATION	

UNLESS OTHERWISE SPECIFIED
DIMENSIONS ARE IN INCHES
TOLERANCES ON
2 PLACE DECIMALS ± 3 PLACE DECIMALS ± .005 ANGLES ±
DO NOT SCALE THIS DRAWING
MATERIAL
SEE NOTE H
APPROVAL

MIT
INSTRUMENTATION LAB
CAMBRIDGE MASS
DRAWN R. A. JONES DATE 15 JUL 65
CHECKED
W. KUPFER 22 JUL 65
APPROVAL
CONTRACT
T. MICHAELS 22 JUL 65
NASA APPROVAL
W. KUPFER 22 JUL 65
MIT APPROVAL

MANNED
SPACECRAFT CENTER
HOUSTON, TEXAS

NAMEPLATES,
APOLLO GEN - GSE
(STANDARDS)

SIZE J2
CODE IDENT NO 80230
1004260
SCALE NONE
SHEET 3 OF 6

1004260 CP

1004260

1004260 CP SHT 3

2/1004260

AC DASH NUMBERS CONTINUED ON SHEET 6

DASH NO.	P/C	PART NAME	REMARKS	PART NUMBER	SER. NO.	CONT. NO.	STYLE	TYPE	MATERIAL	A	B	C	D	E	F	G	H	J	K	L	M
199	AC	EYEPIECE STOWAGE UNIT		2021255-011			A	I		FOR DIMENSIONS SEE DASH 100 VALUES BELOW											
198	AC	SIGNAL CONDITIONER ASSY C/M		2007234		NAS-9-497	A	I	NOTE 11B	FOR DIMENSIONS SEE DASH 100 VALUES BELOW											
197	AC	SIGNAL CONDITIONER ASSY C/M		2007235		NAS-9-497	A	I	NOTE 11B	FOR DIMENSIONS SEE DASH 100 VALUES BELOW											
196	AC	SIGNAL CONDITIONER ASSY LEM		6007010		NAS-9-497	A	I	NOTE 11B	FOR DIMENSIONS SEE DASH 100 VALUES BELOW											
195	AC	PSA & SIGNAL CONDITIONER ASSY		6007009		NAS-9-497	A	I	NOTE 11B	FOR DIMENSIONS SEE DASH 100 VALUES BELOW											
194	AC	PANEL, MONITOR		2900031-031		NAS-9-497	B	II	NOTE 11C	FOR DIMENSIONS SEE DASH 141 VALUES BELOW											
193	AC	DISTRIBUTION BOX, GSE		2900024-031		NAS-9-497	B	II	NOTE 11C	FOR DIMENSIONS SEE DASH 141 VALUES BELOW											
192	AC	ANALYZER, OPTICS-INERTIAL		2900023-031		NAS-9-497	B	II	NOTE 11C	FOR DIMENSIONS SEE DASH 144 VALUES BELOW											
191	AC	TEST CONTROL		2900027-031		NAS-9-497	B	II	NOTE 11C	FOR DIMENSIONS SEE DASH 141 VALUES BELOW											
190	AC	PANEL, PWR SUP AND LOAD		2900033-021		NAS-9-497	B	II	NOTE 11C	FOR DIMENSIONS SEE DASH 141 VALUES BELOW											
189	AC	ADPT MODULE, P.S.A.		6900088-011		NAS-9-497	B	II	NOTE 11C	FOR DIMENSIONS SEE DASH 141 VALUES BELOW											
188	AC	ADPT MODULE, P.S.A.		2901143-011		NAS-9-497	B	II	NOTE 11C	FOR DIMENSIONS SEE DASH 141 VALUES BELOW											
187	AC	FIXTURE, MTG, PTA/PEA		2900066-021		NAS-9-497	B	II	NOTE 11C	FOR DIMENSIONS SEE DASH 141 VALUES BELOW											
186	AC	ANNUNCIATOR PANEL & EYEPIECE STORAGE ASSEMBLY		1021255-021			A	I		FOR DIMENSIONS SEE DASH 100 VALUES BELOW											
185	AC	ANNUNCIATOR PANEL & EYEPIECE STORAGE ASSEMBLY		1021255-011			A	I		FOR DIMENSIONS SEE DASH 100 VALUES BELOW											
184	AC	FIX., HAND., G AND N HARNESS		1901846-041		NAS-9-497	B	II	NOTE 11C	FOR DIMENSIONS SEE DASH 144 VALUES BELOW											
183	AC	INSTALLING TOOL, ELEC. CONN		1902586-011		NAS-9-497	B	II	NOTE 11C	FOR DIMENSIONS SEE DASH 102 VALUES BELOW											
182	AC	ADPT MODULE, P.S.A.		6900088-011		NAS-9-497	B	II	NOTE 11C	FOR DIMENSIONS SEE DASH 141 VALUES BELOW											
181	AC	G & N INDICATOR CONTROL PANEL ASSY		2014578-011		NAS-9-497	A	I	NOTE 11B	3.000	1.938	2.437	NA	.125	.062	.188	.156	NA	NA	1.750	1.125
180	AC	ADPT MODULE, P.S.A.		1902431-031		NAS-9-497	B	II		FOR DIMENSIONS SEE DASH 121 VALUES BELOW											
179	AC	MOUNTING PLATE, IMU/PTA		6900083-011		NAS-9-497	B	II		FOR DIMENSIONS SEE DASH 144 VALUES BELOW											
178	AC	MOUNTING PLATE, COMPONENT		6900007-021		NAS-9-497	B	II		FOR DIMENSIONS SEE DASH 144 VALUES BELOW											
177	AC	FIX., MOUNTING, SUBSYSTEM		2900070-021		NAS-9-497	B	II		FOR DIMENSIONS SEE DASH 144 VALUES BELOW											
176	AC	FIX., MOUNTING, G & N		2900067-021		NAS-9-497	B	II		FOR DIMENSIONS SEE DASH 144 VALUES BELOW											
175	AC	CSL, COOL, AND PWR, G & N		1902134-031		NAS-9-497	B	II		FOR DIMENSIONS SEE DASH 144 VALUES BELOW											
174	AC	FIX., HAND., C/M AND LEM CDU		2900999-011		NAS-9-497	B	II	NOTE 11C	FOR DIMENSIONS SEE DASH 141 VALUES BELOW											
173	AC	FIX., HANDLING, C/M PSA		2900998-011		NAS-9-497	B	II	NOTE 11C	FOR DIMENSIONS SEE DASH 141 VALUES BELOW											
172	AC	CAGING ELECTRONICS, GYRO		2900029-021		NAS-9-497	B	II	NOTE 11C	FOR DIMENSIONS SEE DASH 141 VALUES BELOW											
171	AC	DISTRIBUTION BOX, GSE		2900024-021		NAS-9-497	B	II	NOTE 11C	FOR DIMENSIONS SEE DASH 141 VALUES BELOW											
170	AC	ANALYZER, OPTICS-INERTIAL		2900023-021		NAS-9-497	B	II	NOTE 11C	FOR DIMENSIONS SEE DASH 144 VALUES BELOW											
169	AC	ADPT, TESTPOINT, P.S.A.		2900037-021		NAS-9-497	B	II	NOTE 11C	FOR DIMENSIONS SEE DASH 141 VALUES BELOW											
168	AC	TEST SELECTOR		2900028-021		NAS-9-497	B	II	NOTE 11C	FOR DIMENSIONS SEE DASH 141 VALUES BELOW											
167	AC	TEST CONTROL		2900027-021		NAS-9-497	B	II	NOTE 11C	FOR DIMENSIONS SEE DASH 141 VALUES BELOW											
166	AC	PANEL, MONITOR		2900031-021		NAS-9-497	B	II	NOTE 11C	FOR DIMENSIONS SEE DASH 141 VALUES BELOW											
165	AC	TERM. BOARD STORAGE DRAWER		2900927-011		NAS-9-497	B	II	NOTE 11C	FOR DIMENSIONS SEE DASH 141 VALUES BELOW											
164	AC	INPUT/OUTPUT PANEL		2900926-011		NAS-9-497	B	II	NOTE 11C	FOR DIMENSIONS SEE DASH 141 VALUES BELOW											
163	AC	CONTROL PANEL		2900896-011		NAS-9 497	B	II	NOTE 11C	FOR DIMENSIONS SEE DASH 141 VALUES BELOW											
162	AC	CSL, CAL AND TEST, SCM/PSAAM		2900895-011		NAS-9-497	B	II	NOTE 11C	FOR DIMENSIONS SEE DASH 144 VALUES BELOW											
161	AC	FIX., LIFT AND HAND., IMU		1015462-011		NAS-9-497	B	II	NOTE 11C	FOR DIMENSIONS SEE DASH 141 VALUES BELOW											
160	AC	FIX., HAND., G & N HARNESS		1901846-031		NAS-9-497	B	II	NOTE 11C	FOR DIMENSIONS SEE DASH 144 VALUES BELOW											
159	AC	BATTERY POWER PACK		1900011-031		NAS-9-497	B	II	NOTE 11C	FOR DIMENSIONS SEE DASH 144 VALUES BELOW											
158	AC	COUPLING DATA UNIT ASSEMBLY C/M		2007222		NAS-9-497	A	I	NOTE 11B	FOR DIMENSIONS SEE DASH 100 VALUES BELOW											
157	AC	COUPLING DATA UNIT ASSEMBLY - LEM		2007222		NAS-9-497	A	I	NOTE 11B	FOR DIMENSIONS SEE DASH 100 VALUES BELOW											
156	AC	POWER & SERVO ASSEMBLY C/M		2007200		NAS-9-497	A	I	NOTE 11B	2.125	.968	1.718	NA	.093	.031	.06	.093	NA	NA	.858	.608
155	AC	PIPA ELECTRONICS ASSEMBLY		2007201		NAS-9-497	A	I	NOTE 11B	FOR DIMENSIONS SEE DASH 100 VALUES BELOW											
154	AC	PULSE TORQUE ASSEMBLY-LEM		6007000		NAS-9-497	A	I	NOTE 11B	FOR DIMENSIONS SEE DASH 100 VALUES BELOW											
153	AC	POWER & SERVO ASSEMBLY-LEM		6007200		NAS-9-497	A	I	NOTE 11B	FOR DIMENSIONS SEE DASH 100 VALUES BELOW											
152	AC	CONT PNL, RSVR CKT TESTER		2900770-011		NAS-9-497	B	II	NOTE 11C	FOR DIMENSIONS SEE DASH 141 VALUES BELOW											
151	AC	TESTER, RESOLVER CIRCUIT		2900708-011		NAS-9-497	B	II	NOTE 11C	FOR DIMENSIONS SEE DASH 141 VALUES BELOW											
150	AC	JUNCTION BOX, P.S.A./G.S.E.		1901933-021		NAS-9 497	B	II	NOTE 11C	FOR DIMENSIONS SEE DASH 144 VALUES BELOW											
149	AC	BATTERY PACK, LIFTING		2900812-011		NAS-9-497	B	II	NOTE 11C	FOR DIMENSIONS SEE DASH 141 VALUES BELOW											
148	AC	MOUNTING PLATE, COMPONENT		6900007-011		NAS-9-497	B	II	NOTE 11C	FOR DIMENSIONS SEE DASH 144 VALUES BELOW											
147	AC	MOUNTING PLATE, COMPONENT		2900677-011		NAS-9-497	B	II	NOTE 11C	FOR DIMENSIONS SEE DASH 144 VALUES BELOW											
146	AC	CART, TRANS, G & N		1900009-041		NAS-9-497	B	II	NOTE 11C	FOR DIMENSIONS SEE DASH 144 VALUES BELOW											
145	AC	CONTAINER, SHIPPING, IMU		1900010-021		NAS-9-497	B	II	NOTE 11C	FOR DIMENSIONS SEE DASH 144 VALUES BELOW											
144	AC	FIX., MOUNTING, G & N		1902204-021			B	II	NOTE 11C	4.125	1.812	3.250	NA	.125	.062	.12	.156	NA	.125	1.625	1.140
143	AC	CSL, COOL, AND PWR, G & N		1902134-021			B	II	NOTE 11C	4.125	1.812	3.250	NA	.125	.062	.12	.156		.125	1.625	1.140
142	AC	ANALYZER, OPTICS-INERTIAL		2900023-011			B	II	NOTE 11C	4.125	1.812	3.250	NA	.125	.062	.12	.156		.125	1.625	1.140
141	AC	CONT, TEMP, PORTABLE		2900060-011			B	II	NOTE 11C	2.125	.968	1.718	NA	.093	.031	.06	.093		.093	.858	.608
140	AC	TESTER, CKT, IMU/CDU RSVR		2900286-011			B	II	NOTE 11C	4.125	1.812	3.250	NA	.125	.062	.12	.156		.125	1.625	1.140
139	AC	SIMULATOR, LD/SIG, CDU		2900285-011			B	II	NOTE 11C	4.125	1.812	3.250	NA	.125	.062	.12	.156		.125	1.625	1.140
138	AC	SIMULATOR, LD/SIG, OPTICS		1902023-021			B	II	NOTE 11C	4.125	1.812	3.250	NA	.125	.062	.12	.156		.125	1.625	1.140
137	AC	FIX., MOUNTING, IMU/NAV BASE		6900003-011			B	II	NOTE 11C	4.125	1.812	3.250	NA	.125	.062	.12	.156		.125	1.625	1.140
136	AC	FIXTURE, OPTICS/NAV BASE		2900072-011			B	II	NOTE 11C	4.125	1.812	3.250	NA	.125	.062	.12	.156		.125	1.625	1.140
135	AC	FIX., MOUNTING, SUB SYSTEM		2900070-011			B	II	NOTE 11C	4.125	1.812	3.250	NA	.125	.062	.12	.156		.125	1.625	1.140
134	AC	FIX., HAND., G & N HARNESS		2900069-011			B	II	NOTE 11C	4.125	1.812	3.250	NA	.125	.062	.12	.156		.125	1.625	1.140
133	AC	CNTR, SHIPPING, NAV BASE		2900068-011			B	II	NOTE 11C	4.125	1.812	3.250	NA	.125	.062	.12	.156		.125	1.625	1.140
132	AC	FIX., MOUNTING, G & N		2900067-011			B	II	NOTE 11C	4.125	1.812	3.250	NA	.125	.062	.12	.156		.125	1.625	1.140
131	AC	SIMULATOR, LD/SIG, IMU/CDU		2900062-011			B	II	NOTE 11C	4.125	1.812	3.250	NA	.125	.062	.12	.156		.125	1.625	1.140
130	AC	TESTER, GYRO WHEEL		2900061-011			B	II	NOTE 11C	4.125	1.812	3.250	NA	.125	.062	.12	.156		.125	1.625	1.140
129	AC	COOLANT SUPPLY		1902133-021			B	II	NOTE 11C	4.125	1.812	3.250	NA	.125	.062	.12	.156		.125	1.625	1.140
128	AC	TABLE, ROTARY		1900926-021			B	II	NOTE 11C	4.125	1.812	3.250	NA	.125	.062	.12	.156		.125	1.625	1.140
127	AC	FIX., HAND., OPTICS		2900074-011			B	II	NOTE 11C	2.125	.968	1.718	NA	.093	.031	.06	.093		.093	.858	.608
126	AC	FIXTURE, MTG, PTA/PEA.		2900066-011			B	II	NOTE 11C	2.125	.968	1.718	NA	.093	.031	.06	.093		.093	.858	.608
125	AC	CONT, TEMP, IMU LIFTING		2900063-011			B	II	NOTE 11C	2.125	.968	1.718	NA	.093	.031	.06	.093		.093	.858	.608
124	AC	FIXTURE, HANDLING, IMU		2900064-011			B	II	NOTE 11C	2.125	.968	1.718	NA	.093	.031	.06	.093		.093	.858	.608
123	AC	CONT, OPTICS, REMOTE		1902046-021			B	II	NOTE 11C	2.125	.968	1.718	NA	.093	.031	.06	.093		.093	.858	.608
122	AC	TEST CONTROL		1902009-021			B	II	NOTE 11C	2.125	.968	1.718	NA	.093	.031	.06	.093		.093	.858	.608
121	AC	ADPT MODULE, P.S.A.		1902431-021			B	II	NOTE 11C	2.125	.968	1.718	NA	.093	.031	.06	.093		.093	.858	.608
120	AC	BRIDGE, DECADE ERROR		2900128-011			B	II	NOTE 11C	2.125	.968	1.718	NA	.093	.031	.06	.093		.093	.858	.608
119	AC	PWR SUP, ELECTRONICS		2900012-011			B	II	NOTE 11C	2.125	.968	1.718	NA	.093	.031	.06	.093		.093	.858	.608
118	AC	PWR SUP, RELAY AND LAMP		1900049-031			B	II	NOTE 11C	2.125	.968	1.718	NA	.093	.031	.06	.093		.093	.858	.608
117	AC	CONSOLE, OSCILLOGRAPH		1900000-021			B	II	NOTE 11C	2.125	.968	1.718	NA	.093	.031	.06	.093		.093	.858	.608
116	AC	ADPT MODULE, P.S.A.		1902431-011			B	II	NOTE 11C	2.125	.968	1.718	NA	.093	.031	.06	.093		.093	.858	.608
115	AC	ADPT, TEST POINT, PTA/PEA.		2900145-011			B	II	NOTE 11C	2.125	.968	1.718	NA	.093	.031	.06	.093		.093	.858	.608
114	AC	ADPT, TEST POINT, P.S.A.		2900037-011			B	II	NOTE 11C	2.125	.968	1.718	NA	.093	.031	.06	.093		.093	.858	.608
113	AC	CONTROL, GIMBAL POSITION		2900036-011			B	II	NOTE 11C	2.125	.968	1.718	NA	.093	.031	.06	.093		.093	.858	.608
112	AC	SELECTOR, SIGNAL, PRIMARY		2900035-011			B	II	NOTE 11C	2.125	.968	1.718	NA	.093	.031	.06	.093		.093	.858	.608
111	AC	SEL, SIG, OSCILLOGRAPH		2900034-011			B	II	NOTE 11C	2.125	.968	1.718	NA	.093	.031	.06	.093		.093	.858	.608
110	AC	PANEL, PWR SUP AND LOAD		2900033-011			B	II	NOTE 11C	2.125	.968	1.718	NA	.093	.031	.06	.093		.093	.858	.608
109	AC	PANEL, MONITOR		2900031-011			B	II	NOTE 11C	2.125	.968	1.718	NA	.093	.031	.06	.093		.093	.858	.608
108	AC	PANEL, AUXILIARY INPUT		2900030-011			B	II	NOTE 11C	2.125	.968	1.718	NA	.093	.031	.06	.093		.093	.858	.608
107	AC	CAGING ELECTRONICS, GYRO		2900029-011			B	II	NOTE 11C	2.125	.968	1.718	NA	.093	.031	.06	.093		.093	.858	.608
106	AC	TEST SELECTOR		2900028-011			B	II	NOTE 11C	2.125	.968	1.718	NA	.093	.031	.06	.093		.093	.858	.608
105	AC	TEST CONTROL		2900027-011			B	II	NOTE 11C	2.125	.968	1.718	NA	.093	.031	.06	.093		.093	.858	.608
104	AC	MONITOR AND CONTROL, TEMP		2900026-011			B	II	NOTE 11C	2.125	.968	1.718	NA	.093	.031	.06	.093		.093	.858	.608
103	AC	DISTRIBUTION BOX, GSE		2900024-011			B	II	NOTE 11C	2.125	.968	1.718	NA	.093	.031	.06	.093		.093	.858	.608
102	AC	VOLTMETER, DIGITAL		2900007-011			B	II	NOTE 11C	2.125	.968	1.718	NA	.093	.031	.06	.093	NA	.093	.858	.608
101	AC	NAVIGATION BASE ASSEMBLY-LEM		6899950		NAS-9-497	A	I	NOTE 11B	2.000	1.312	1.906	.375	.078	.048	.078	.093	NA	NA	1.125	.750
100	AC	NAVIGATION BASE ASSEMBLY		2899982		NAS-9-497	A	I	NOTE 11B	2.000	1.312	1.906	.375	.078	.048	.078	.093	NA	NA	1.125	.750

NOTES FOR TABLE

STYLE A IS FOR G & N SYSTEM
STYLE B IS FOR GROUND SUPPORT EQUIPMENT
TYPE I IS WITHOUT MOUNTING HOLES
TYPE II IS WITH MOUNTING HOLES

SYM	ZONE	REVISIONS DESCRIPTION	CHG NO	DATE	APPD
CL		REPLACES REV CK WITHOUT CHANGE PER TDRR 34565		[illegible]	JWL
CM		REVISION STATUS CHANGED		18 OCT 67	RA
CN		REVISION STATUS CHANGE		31 OCT 67	JRK
CP		REVISION STATUS CHANGE		6 NOV 67	ENS

DASH 100 VALUES BELOW																																
DASH 100 VALUES BELOW																																
DASH 100 VALUES BELOW																																
DASH 100 VALUES BELOW																																
DASH 100 VALUES BELOW																																
DASH 141 VALUES BELOW																																
DASH 141 VALUES BELOW																																
DASH 144 VALUES BELOW																																
DASH 141 VALUES BELOW																																
DASH 141 VALUES BELOW																																
DASH 141 VALUES BELOW																																
DASH 141 VALUES BELOW																																
DASH 141 VALUES BELOW																																
DASH 100 VALUES BELOW																																
DASH 100 VALUES BELOW																																
DASH 144 VALUES BELOW																																
DASH 102 VALUES BELOW																																
DASH 141 VALUES BELOW																																
.125	.062	.188	.156	NA	NA	1.750	1.125	.906	.688	1.500	NA	.281	.125	NA	1.094	2.062	.312	NA	2.500	.062	.125	1.312	.469	NA	NA	NA	.156	NA	.125	.469	.344	NA
DASH 121 VALUES BELOW																																
DASH 144 VALUES BELOW																																
DASH 144 VALUES BELOW																																
DASH 144 VALUES BELOW																																
DASH 144 VALUES BELOW																																
DASH 144 VALUES BELOW																																
DASH 141 VALUES BELOW																																
DASH 141 VALUES BELOW																																
DASH 141 VALUES BELOW																																
DASH 141 VALUES BELOW																																
DASH 144 VALUES BELOW																																
DASH 141 VALUES BELOW																																
DASH 141 VALUES BELOW																																
DASH 141 VALUES BELOW																																
DASH 141 VALUES BELOW																																
DASH 141 VALUES BELOW																																
DASH 141 VALUES BELOW																																
DASH 141 VALUES BELOW																																
DASH 144 VALUES BELOW																																
DASH 141 VALUES BELOW																																
DASH 144 VALUES BELOW																																
DASH 144 VALUES BELOW																																
DASH 100 VALUES BELOW																																
DASH 100 VALUES BELOW																																
.093	.031	.06	.093	NA	NA	.858	.608	.484	.358	.733	.062	.140	.062	NA	.968	1.450	.125	NA	1.720	.046	.03	NA	.210	NA	NA	NA	.070	NA	.046	.32	.16	NA
DASH 100 VALUES BELOW																																
DASH 100 VALUES BELOW																																
DASH 100 VALUES BELOW																																
DASH 141 VALUES BELOW																																
DASH 141 VALUES BELOW																																
DASH 144 VALUES BELOW																																
DASH 141 VALUES BELOW																																
DASH 144 VALUES BELOW																																
DASH 144 VALUES BELOW																																
DASH 144 VALUES BELOW																																
DASH 144 VALUES BELOW																																
.125	.062	.12	.156	■	.125	1.625	1.140	.890	.640	1.390	.125	.171	.125	1.875	1.687	2.625	.250	1.562	3.843	.093	NA	NA	.359	.125	.437	3.688	NA	3.687	.093	.40	.25	3.875
.125	.062	.12	.156		.125	1.625	1.140	.890	.640	1.390	.125	.171	.125	1.875	1.687	2.625	.250	1.562	3.843	.093	NA	NA	.359	.125	.437	3.688	NA	3.687	.093	.40	.25	3.875
.125	.062	.12	.156		.125	1.625	1.140	.890	.640	1.390	.125	.171	.125	1.875	1.687	2.625	.250	1.562	3.843	.093	NA	NA	.359	.125	.437	3.688	NA	3.687	.093	.40	.25	3.875
.093	.031	.06	.093		.093	.858	.608	.484	.358	.733	.077	.116	.062	.937	.875	1.343	.125	.781	1.892	.046	NA	NA	.209	.093	.250	1.875	NA	1.940	.046	.23	.16	1.938
.125	.062	.12	.156		.125	1.625	1.140	.890	.640	1.390	.125	.171	.125	1.875	1.687	2.625	.250	1.562	3.843	.093	NA	NA	.359	.125	.437	3.688	NA	3.687	.093	.40	.25	3.875
.125	.062	.12	.156		.125	1.625	1.140	.890	.640	1.390	.125	.171	.125	1.875	1.687	2.625	.250	1.562	3.843	.093	NA	NA	.359	.125	.437	3.688	NA	3.687	.093	.40	.25	3.875
.125	.062	.12	.156		.125	1.625	1.140	.890	.640	1.390	.125	.171	.125	1.875	1.687	2.625	.250	1.562	3.843	.093	NA	NA	.359	.125	.437	3.688	NA	3.687	.093	.40	.25	3.875
.125	.062	.12	.156		.125	1.625	1.140	.890	.640	1.390	.125	.171	.125	1.875	1.687	2.625	.250	1.562	3.843	.093	NA	NA	.359	.125	.437	3.688	NA	3.687	.093	.40	.25	3.875
.125	.062	.12	.156		.125	1.625	1.140	.890	.640	1.390	.125	.171	.125	1.875	1.687	2.625	.250	1.562	3.843	.093	NA	NA	.359	.125	.437	3.688	NA	3.687	.093	.40	.25	3.875
.125	.062	.12	.156		.125	1.625	1.140	.890	.640	1.390	.125	.171	.125	1.875	1.687	2.625	.250	1.562	3.843	.093	NA	NA	.359	.125	.437	3.688	NA	3.687	.093	.40	.25	3.875
.125	.062	.12	.156		.125	1.625	1.140	.890	.640	1.390	.125	.171	.125	1.875	1.687	2.625	.250	1.562	3.843	.093	NA	NA	.359	.125	.437	3.688	NA	3.687	.093	.40	.25	3.875
.125	.062	.12	.156		.125	1.625	1.140	.890	.640	1.390	.125	.171	.125	1.875	1.687	2.625	.250	1.562	3.843	.093	NA	NA	.359	.125	.437	3.688	NA	3.687	.093	.40	.25	3.875
.125	.062	.12	.156		.125	1.625	1.140	.890	.640	1.390	.125	.171	.125	1.875	1.687	2.625	.250	1.562	3.843	.093	NA	NA	.359	.125	.437	3.688	NA	3.687	.093	.40	.25	3.875
.125	.062	.12	.156		.125	1.625	1.140	.890	.640	1.390	.125	.171	.125	1.875	1.687	2.625	.250	1.562	3.843	.093	NA	NA	.359	.125	.437	3.688	NA	3.687	.093	.40	.25	3.875
.125	.062	.12	.156		.125	1.625	1.140	.890	.640	1.390	.125	.171	.125	1.875	1.687	2.625	.250	1.562	3.843	.093	NA	NA	.359	.125	.437	3.688	NA	3.687	.093	.40	.25	3.875
.125	.062	.12	.156		.125	1.625	1.140	.890	.640	1.390	.125	.171	.125	1.875	1.687	2.625	.250	1.562	3.843	.093	NA	NA	.359	.125	.437	3.688	NA	3.687	.093	.40	.25	3.875
.125	.062	.12	.156		.125	1.625	1.140	.890	.640	1.390	.125	.171	.125	1.875	1.687	2.625	.250	1.562	3.843	.093	NA	NA	.359	.125	.437	3.688	NA	3.687	.093	.40	.25	3.875
.093	.031	.06	.093		.093	.858	.608	.484	.358	.733	.077	.116	.062	.937	.875	1.343	.125	.781	1.892	.046	NA	NA	.209	.093	.250	1.875	NA	1.840	.046	.23	.16	1.938
.093	.031	.06	.093		.093	.858	.608	.484	.358	.733	.077	.116	.062	.937	.875	1.343	.125	.781	1.892	.046	NA	NA	.209	.093	.250	1.875	NA	1.840	.046	.23	.16	1.938
.093	.031	.06	.093		.093	.858	.608	.484	.358	.733	.077	.116	.062	.937	.875	1.343	.125	.781	1.892	.046	NA	NA	.209	.093	.250	1.875	NA	1.840	.046	.23	.16	1.938
.093	.031	.06	.093		.093	.858	.608	.484	.358	.733	.077	.116	.062	.937	.875	1.343	.125	.781	1.892	.046	NA	NA	.209	.093	.250	1.875	NA	1.840	.046	.23	.16	1.938
.093	.031	.06	.093		.093	.858	.608	.484	.358	.733	.077	.116	.062	.937	.875	1.343	.125	.781	1.892	.046	NA	NA	.209	.093	.250	1.875	NA	1.840	.046	.23	.16	1.938
.093	.031	.06	.093		.093	.858	.608	.484	.358	.733	.077	.116	.062	.937	.875	1.343	.125	.781	1.892	.046	NA	NA	.209	.093	.250	1.875	NA	1.840	.046	.23	.16	1.938
.093	.031	.06	.093		.093	.858	.608	.484	.358	.733	.077	.116	.062	.937	.875	1.343	.125	.781	1.892	.046	NA	NA	.209	.093	.250	1.875	NA	1.840	.046	.23	.16	1.938
.093	.031	.06	.093		.093	.858	.608	.484	.358	.733	.077	.116	.062	.937	.875	1.343	.125	.781	1.892	.046	NA	NA	.209	.093	.250	1.875	NA	1.840	.046	.23	.16	1.938
.093	.031	.06	.093		.093	.858	.608	.484	.358	.733	.077	.116	.062	.937	.875	1.343	.125	.781	1.892	.046	NA	NA	.209	.093	.250	1.875	NA	1.840	.046	.23	.16	1.938
.093	.031	.06	.093		.093	.858	.608	.484	.358	.733	.077	.116	.062	.937	.875	1.343	.125	.781	1.892	.046	NA	NA	.209	.093	.250	1.875	NA	1.840	.046	.23	.16	1.938
.093	.031	.06	.093		.093	.858	.608	.484	.358	.733	.077	.116	.062	.937	.875	1.343	.125	.781	1.892	.046	NA	NA	.209	.093	.250	1.875	NA	1.840	.046	.23	.16	1.938
.093	.031	.06	.093		.093	.858	.608	.484	.358	.733	.077	.116	.062	.937	.875	1.343	.125	.781	1.892	.046	NA	NA	.209	.093	.250	1.875	NA	1.840	.046	.23	.16	1.938
.093	.031	.06	.093		.093	.858	.608	.484	.358	.733	.077	.116	.062	.937	.875	1.343	.125	.781	1.892	.046	NA	NA	.209	.093	.250	1.875	NA	1.840	.046	.23	.16	1.938
.093	.031	.06	.093		.093	.858	.608	.484	.358	.733	.077	.116	.062	.937	.875	1.343	.125	.781	1.892	.046	NA	NA	.209	.093	.250	1.875	NA	1.840	.046	.23	.16	1.938
.093	.031	.06	.093		.093	.858	.608	.484	.358	.733	.077	.116	.062	.937	.875	1.343	.125	.781	1.892	.046	NA	NA	.209	.093	.250	1.875	NA	1.840	.046	.23	.16	1.938
.093	.031	.06	.093		.093	.858	.608	.484	.358	.733	.077	.116	.062	.937	.875	1.343	.125	.781	1.892	.046	NA	NA	.209	.093	.250	1.875	NA	1.840	.046	.23	.16	1.938
.093	.031	.06	.093		.093	.858	.608	.484	.358	.733	.077	.116	.062	.937	.875	1.343	.125	.781	1.892	.046	NA	NA	.209	.093	.250	1.875	NA	1.840	.046	.23	.16	1.938
.093	.031	.06	.093		.093	.858	.608	.484	.358	.733	.077	.116	.062	.937	.875	1.343	.125	.781	1.892	.046	NA	NA	.209	.093	.250	1.875	NA	1.840	.046	.23	.16	1.938
.093	.031	.06	.093		.093	.858	.608	.484	.358	.733	.077	.116	.062	.937	.875	1.343	.125	.781	1.892	.046	NA	NA	.209	.093	.250	1.875	NA	1.840	.046	.23	.16	1.938
.093	.031	.06	.093		.093	.858	.608	.484	.358	.733	.077	.116	.062	.937	.875	1.343	.125	.781	1.892	.046	NA	NA	.209	.093	.250	1.875	NA	1.840	.046	.23	.16	1.938
.093	.031	.06	.093		.093	.858	.608	.484	.358	.733	.077	.116	.062	.937	.875	1.343	.125	.781	1.892	.046	NA	NA	.209	.093	.250	1.875	NA	1.840	.046	.23	.16	1.938
.093	.031	.06	.093		.093	.858	.608	.484	.358	.733	.077	.116	.062	.937	.875	1.343	.125	.781	1.892	.046	NA	NA	.209	.093	.250	1.875	NA	1.840	.046	.23	.16	1.938
.093	.031	.06	.093		.093	.858	.608	.484	.358	.733	.077	.116	.062	.937	.875	1.343	.125	.781	1.892	.046	NA	NA	.209	.093	.250	1.875	NA	1.840	.046	.23	.16	1.938
.093	.031	.06	.093		.093	.858	.608	.484	.358	.733	.077	.116	.062	.937	.875	1.343	.125	.781	1.892	.046	NA	NA	.209	.093	.250	1.875	NA	1.840	.046	.23	.16	1.938
.093	.031	.06	.093		.093	.858	.608	.484	.358	.733	.077	.116	.062	.937	.875	1.343	.125	.781	1.892	.046	NA	NA	.209	.093	.250	1.875	NA	1.840	.046	.23	.16	1.938
.093	.031	.06	.093		.093	.858	.608	.484	.358	.733	.077	.116	.062	.937	.875	1.343	.125	.781	1.892	.046	NA	NA	.209	.093	.250	1.875	NA	1.840	.046	.23	.16	1.938
.093	.031	.06	.093		.093	.858	.608	.484	.358	.733	.077	.116	.062	.937	.875	1.343	.125	.781	1.892	.046	NA	NA	.209	.093	.250	1.875	NA	1.840	.046	.23	.16	1.938
.093	.031	.06	.093	[illegible]	.093	.858	.608	.484	.358	.733	.077	.116	.062	.937	.875	1.343	.125	.781	1.892	.046	NA	NA	.209	.093	.250	1.875	NA	1.840	.046	.23	.16	1.938
.078	.048	.078	.093	NA	NA	1.125	.750	.593	.453	1.015	.062	.187	.078	.875	.718	1.375	.218	NA	NA	.048	.031	.875	.305	.078	.531	1.906	.078	NA	.078	.531	.187	NA
.078	.048	.078	.093	NA	NA	1.125	.750	.593	.453	1.015	.062	.187	.078	.875	.718	1.375	.218	NA	NA	.048	.031	.875	.305	.078	.531	1.906	.078	NA	.078	.531	.187	NA
E	F	G	H	J	K	L	M	N	P	R	S	T	U	V	W	Y	Z	AA	AB	AC	AD	AE	AF	AG	AH	AJ	AK	AL	AM	AN	AP	AR

AC ELECTRONICS DASH NUMBERS

AS APPLICABLE	
NEXT ASSY	USED ON
APPLICATION	

UNLESS OTHERWISE SPECIFIED
DIMENSIONS ARE IN INCHES
TOLERANCES ON
2 PLACE DECIMALS ± 3 PLACE DECIMALS ± .005 ANGLES ±
DO NOT SCALE THIS DRAWING
MATERIAL SEE NOTE 11
APPROVAL

MIT INSTRUMENTATION LAB
CAMBRIDGE MASS.
DRAWN R.A. JONES DATE 15 JUL 65
CHECKED
W. HUFFER 22 JUL 65
APPROVAL
CONTRACT
T. MICHAELS 22 JUL 66
NASA APPROVAL
W. HUFFER 22 JUL 65
MIT APPROVAL

MANNED SPACECRAFT CENTER
HOUSTON, TEXAS

NAMEPLATES, APOLLO GEN - GSE (STANDARDS)

SIZE J2 CODE IDENT NO. 80230 1004260
SCALE NONE SHEET 4 OF 6

DASH NO.	℅	PART NAME	REMARKS	PART NUMBER	SER. NO.	CONT. NO.	STYLE	TYPE	MATERIAL	A	B	C	D	E	F	G	H	J	K	L	M	P
401	MIT	COMPUTER ASSY		2003100		NAS-9-497	A	I	NOTE 11B	2,000	1,312	1,906	1,375	.078	.048	.078	.093	NA	NA	1,125	.7	.463
400	MIT	LIFTING SLING-G&N INST, QUAL, FIX, & AZM, REF, FIX,		1021640		NAS-9-4065	B	II	NOTE 11C	2,000	1,312	1,687	1,375	.078	.048	.078	.093	[illegible]	.093	1,187	.7	.453

NOTES FOR TABLE
STYLE A IS FOR G & N SYSTEM
STYLE B IS FOR GROUND SUPPORT EQUIPMENT
TYPE I IS WITHOUT MOUNTING HOLES
TYPE II IS WITH MOUNTING HOLES

1004260	CP	SHT 5

1/1004260

REVISIONS					
SYM	ZONE	DESCRIPTION	CHG NO	DATE	APPD
CL		REPLACES REV CK WITHOUT CHANGE PER TDRR 34365		[illegible] 67	JUL RWK
CM		REVISION STATUS CHANGED		18 OCT 67	R.A.K.
CN		REVISION STATUS CHANGED		31 OCT 67	JRK
CP		REVISION STATUS CHANGED		6 NOV 67	ENS

.078	.048	.078	.093	NA	NA	1.125	.750	.593	.453	1.015	.062	.187	.078	.875	.718	1.375	.218	NA	NA	.048	.031	.875	.305	.078	.531	1.906	.078	NA	.078	.531	.187	NA
.078	.046	.078	.093	[illegible]	.093	1.187	.750	.593	.453	1.015	.062	.187	.078	.875	.718	1.375	.218	1.156	1.843	.048	NA	.875	.305	.078	.312	1.687	.110	1.830	.070	.275	.180	1.844
E	F	G	H	J	K	L	M	N	P	R	S	T	U	V	W	Y	Z	AA	AB	AC	AD	AE	AF	AG	AH	AJ	AK	AL	AM	AN	AP	AR

MIT DASH NUMBERS

UNLESS OTHERWISE SPECIFIED
DIMENSIONS ARE IN INCHES
TOLERANCES ON
2 PLACE DECIMALS ± 3 PLACE DECIMALS ± .005 ANGLES ±
DO NOT SCALE THIS DRAWING
MATERIAL SEE NOTE 11
APPROVAL

AS APPLICABLE
NEXT ASSY | USED ON
APPLICATION

M I T
INSTRUMENTATION LAB
CAMBRIDGE MASS
DRAWN R.A. JONES DATE 15 JUL 65
CHECKED
APPROVAL W KUPFER 22 JUL 65
CONTRACT
NASA APPROVAL T. MICHAELS 22 JUL 65
MIT APPROVAL W KUPFER 22 JUL 65

MANNED SPACECRAFT CENTER
HOUSTON, TEXAS

NAMEPLATES,
APOLLO G&N - GSE
(STANDARDS)

SIZE J2 CODE IDENT NO. 80230 1004260
SCALE NONE SHEET 3 OF 6

1004260 CP

1004260

1004260 CP SHT 3

2/1004260

DASH NO.	P/C	PART NAME	REMARKS	PART NUMBER	SER. NO.	CONT. NO.	STYLE	TYPE	MATERIAL	A	B	C	D	E	F	G	H	J	K	L	M	N
599	AC																					
598	AC																					
574		CONT., TEMP. PORTABLE		2900060-031		NAS-9-497	B	II	NOTE 11C	FOR DIMENSIONS SEE DASH 535 VALUES												
573		BATTERY PACK LIFTING		2900812-031		NAS-9-497	B	II	NOTE 11C	FOR DIMENSIONS SEE DASH 542 VALUES												
572		FIX., MOUNTING G&N	(-144)	2900067-081		NAS-9-497	B	II	NOTE 11C	FOR DIMENSIONS SEE DASH 500 VALUES												
570	AC	OPTICAL UNIT & BELLOWS ASSY				NAS-9-497	A	I	NOTE 11B	FOR DIMENSIONS SEE DASH 550 VALUES												
569	AC	G & N INDICATOR CONTROL PANEL ASSY		2021323-011		NAS-9-497	A	I	NOTE 11B	FOR DIMENSIONS SEE DASH 181												
568	AC	G & N INDICATOR CONTROL PANEL ASSY		2021290-021		NAS-9-497	A	I	NOTE 11B	FOR DIMENSIONS SEE DASH 181												
567	AC	G & N INDICATOR CONTROL PANEL ASSY		2021290011		NAS-9-497	A	I	NOTE 11B	FOR DIMENSIONS SEE DASH 181												
566	AC	COMPUTER CONT & RETICLE DIMMER		6014512-061		NAS-9-497	A	I	NOTE 11B	FOR DIMENSIONS SEE DASH 534												
565		BATTERY PACK, AUXILIARY		1901492-031		NAS-9-497	B	II	NOTE 11C	FOR DIMENSIONS SEE DASH 500												
564		BATTERY POWER PACK		1900011-051		NAS-9-497	B	II	NOTE 11C	FOR DIMENSIONS SEE DASH 500												
563		ADAPTER MODULE P.S.A.(LEM)		6900088-031		NAS-9-497	B	II	NOTE 11C	FOR DIMENSIONS SEE DASH 141 VALUES												
562	AC	COMPUTER CONT & RETICLE DIMMER		6014512-041		NAS-9-497	A	I	NOTE 11B	FOR DIMENSIONS SEE DASH 534 VALUES												
561	AC	G & N INDICATOR CONTROL PANEL ASSY		2014578-031		NAS-9-497	A	I	NOTE 11B	FOR DIMENSIONS SEE DASH 181 VALUES												
560		ADPT. MODULE, PSA		2901143-021		NAS-9-497	B	II	NOTE 11C	FOR DIMENSIONS SEE DASH 141 VALUES												
559		CSL., CAL AND TEST, SCM/PSAAM		2900895-031		FOR OTHER DATA SEE DASH 547																
558		PSA ADAPTER MODULE (LEM)		6900088-021		FOR OTHER DATA SEE DASH 189																
557		FIX., HANDLING, C/M PSA		2900998-021		NAS-9-497	B	II	NOTE 11C	FOR DIMENSIONS SEE DASH 141 VALUES												
556		FIX., MOUNTING G & N	(-144)	2900067-041		NAS-9-497	B	II	NOTE 11C	FOR DIMENSIONS SEE DASH 500 VALUES												
555	AC	OPTICAL UNIT ASSEMBLY		1021368-061		NAS-9-497	A	I	NOTE 11B	2.000	1.312	1.687	1.375	.078	.048	.078	.093	NA	NA	1.125	.750	.593
554	AC	OPTICAL UNIT ASSEMBLY		1021368-041		NAS-9-497	A	I	NOTE 11B	2.000	1.312	1.687	1.375	.078	.048	.078	.093	NA	NA	1.125	.750	.593
553	AC	OPTICAL UNIT AND BELLOWS ASSEMBLY		2010790-111		NAS-9-497	A	I	NOTE 11B	2.000	1.312	1.687	1.375	.078	.048	.078	.093	NA	NA	1.125	.750	.593
552	AC	OPTICAL UNIT AND BELLOWS ASSEMBLY		2010790-081		NAS-9-497	A	I	NOTE 11B	2.000	1.312	1.687	1.375	.078	.048	.078	.093	NA	NA	1.125	.750	.593
551	AC	OPTICAL UNIT AND BELLOWS ASSEMBLY		2010790-071		NAS-9-497	A	I	NOTE 11B	2.000	1.312	1.687	1.375	.078	.048	.078	.093	NA	NA	1.125	.750	.593
550	AC	OPTICAL UNIT AND BELLOWS ASSEMBLY		2010790-061		NAS-9-497	A	I	NOTE 11B	2.000	1.312	1.687	1.375	.078	.048	.078	.093	NA	NA	1.125	.750	.593
548		CAGING ELECTRONICS, GYRO		2900029-031		NAS-9-497	B	II	NOTE 11C	2.125	.968	1.718	NA	.093	.031	.06	.093	[illegible]	.093	.858	.608	.484
547		CSL, CAL AND TEST, SCM/PSAAM		2900895-021		NAS-9-497	B	II	NOTE 11C	4.125	1.812	3.250	NA	.125	.062	.12	.156		.125	1.625	1.140	.890
546		FIX., HAND., C/M AND LEM CDU		2900999-021		NAS-9-497	B	II	NOTE 11C	2.125	.968	1.718	NA	.093	.031	.06	.093	[illegible]	.093	.858	.608	.464
545	AC	G & N INDICATOR CONTROL PANEL ASSY		2014578-021		NAS-9-497	A	I	NOTE 11B	3.000	1.938	2.437	NA	.125	.062	.188	.156	NA	NA	1.750	1.125	.906
544		ADPT MODULE, P.S.A.		1902431-051		NAS-9-497	B	II	NOTE 11C	2.125	.968	1.718	NA	.093	.031	.06	.093	[illegible]	.093	.858	.608	.484
543	AC	PANEL, MONITOR		2900031-041		NAS-9-497	B	II	NOTE 11C	2.125	.968	1.718	NA	.093	.031	.06	.093		.093	.858	.608	.484
542	AC	BATTERY PACK, LIFTING		2900812-021		NAS-9-497	B	II	NOTE 11C	2.125	.968	1.718	NA	.093	.031	.06	.093		.093	.858	.608	.484
541	AC	FIXTURE, MOUNTING, IMU		2900000-021		NAS-9-497	B	II	NOTE 11C	4.125	1.812	3.250	NA	.125	.062	.12	.156		.125	1.625	1.140	.890
540	AC	ADPT, TEST POINT, P.S.A.		2900037-031		NAS-9-497	B	II	NOTE 11C	2.125	.968	1.718	NA	.093	.031	.06	.093	[illegible]	.093	.858	.608	.484
539	AC	ANNUNCIATOR PANEL & EYEPIECE STORAGE ASSEMBLY		1021255-041		NAS-9-497	A	I	NOTE 11B	2.000	1.312	1.906	1.375	.078	.048	.078	.093	NA	NA	1.125	.750	.593
538	AC	ANNUNCIATOR PANEL & EYEPIECE STORAGE ASSEMBLY		1021255-031		NAS-9-497	A	I	NOTE 11B	2.000	1.312	1.906	1.375	.078	.048	.078	.093	NA	NA	1.125	.750	.593
537	AC	TEST SELECTOR		2900028-031		NAS-9-497	B	II	NOTE 11C	2.125	.968	1.718	NA	.093	.031	.06	.093	[illegible]	.093	.858	.608	.484
536	AC	ANALYZER, OPTICS-INERTIAL		2900023-041		NAS-9-497	B	II	NOTE 11C	4.125	1.812	3.250	NA	.125	.062	.12	.156		.125	1.625	1.140	.890
535	AC	CONT, TEMP, PORTABLE		2900060-021		NAS-9-497	B	II	NOTE 11C	2.125	.968	1.718	NA	.093	.031	.06	.093	[illegible]	.093	.858	.608	.484
534	AC	COMPUTER CONT & RETICLE DIMMER		6014512-021		NAS-9-497	A	I	NOTE 11B	2.000	1.312	1.906	1.375	.078	.048	.078	.093	NA	NA	1.125	.750	.593
533	AC	ADPT MODULE, P.S.A.		1902431-041		NAS-9-497	B	II	NOTE 11C	2.125	.968	1.718	NA	.093	.031	.06	.093	[illegible]	.093	.858	.608	.484
532	AC	TRAY BREAKOUT, 105 PIN		1900807-021		NAS-9-497	B	II	NOTE 11C	4.125	1.812	3.250	NA	.125	.062	.12	.156		.125	1.625	1.140	.890
531	AC	TRAY BREAKOUT, 84 PIN		1900806-021		NAS-9-497	B	II	NOTE 11C	4.125	1.812	3.250	NA	.125	.062	.12	.156		.125	1.625	1.140	.890
530	AC	HEAT SINK-TRAY EXTENDER		1900808-021		NAS-9-497	B	II	NOTE 11C	2.125	.968	1.718	NA	.093	.031	.06	.093		.093	.858	.608	.484
529	AC	TESTER, FAILURE INDICATOR		1900809-021		NAS-9-497	B	II	NOTE 11C	2.125	.968	1.718	NA	.093	.031	.06	.093	[illegible]	.093	.858	.608	.484
527	AC	FIX., MOUNTING, G & N	(-144)	1902204-021		NAS-9-497	B	II	NOTE 11C	FOR DIMENSIONS SEE DASH 500 VALUES BELOW												
526	AC	FIX., MOUNTING, G & N	(-144)	2900067-031		NAS-9-497	B	II	NOTE 11C	FOR DIMENSIONS SEE DASH 500 VALUES BELOW												
525	AC	PORTABLE TEMP. CONTROLLER		1900496-021		NAS-9-497	B	II	NOTE 11C	3.000	1.937	2.437	2.312	.125	.031	.125	.156	.125	.125	1.718	1.187	.968
524	AC	POWER, SERVO & THERMOCOUPLE ASSEMBLY C/M		2010743		NAS-9-497	A	I	NOTE 11B	2.125	.968	1.718	NA	.093	.031	.06	.093	NA	NA	.858	.608	.484
523	AC	PULSE TORQUE AND THERMOCOUPLE ASSEMBLY-LEM		6010656		NAS-9-497	A	I	NOTE 11B	FOR DIMENSIONS SEE DASH 508 VALUES BELOW												
522	AC	COUPLING DATA UNIT & THERMOCOUPLE ASSEMBLY-LEM		2010744		NAS-9-497	A	I	NOTE 11B	FOR DIMENSIONS SEE DASH 508 VALUES BELOW												
521	AC	COUPLING DATA UNIT & THERMOCOUPLE ASSEMBLY-C/M		2010744		NAS-9-497	A	I	NOTE 11B	FOR DIMENSIONS SEE DASH 508 VALUES BELOW												
520	AC	PIPA ELECTRONICS AND THERMOCOUPLE ASSEMBLY		2010745		NAS-9-497	A	I	NOTE 11B	FOR DIMENSIONS SEE DASH 508 VALUES BELOW												
519	AC	FIXTURE, HANDLING, LEM-PSA	(-141)	6900129-011		NAS-9-497	B	II	NOTE 11C	FOR DIMENSIONS SEE DASH 504 VALUES BELOW												
518	AC	JUNCTION BOX, GSE-PSA	(-144)	1901933-031		NAS-9-497	B	II	NOTE 11C	FOR DIMENSIONS SEE DASH 500 VALUES BELOW												
517	AC	FIX., HAND., OPTICS INSTL.	(-141)	2901380-011		NAS-9-497	B	II	NOTE 11C	FOR DIMENSIONS SEE DASH 502 VALUES BELOW												
516	AC	POWER, SERVO AND THERMOCOUPLE ASSEMBLY-LEM		6010655		NAS-9-497	A	I	NOTE 11B	FOR DIMENSIONS SEE DASH 508 VALUES BELOW												
514	AC	SIGNAL COND. ASSY LEM OPER.	(-100)	6007013		NAS-9-497	A	I	NOTE 11B	FOR DIMENSIONS SEE DASH 508 VALUES BELOW												
513	AC	JUMPER, BY-PASS	(-141)	1021616		NAS-9-497	B	II	NOTE 11C	2.125	.968	1.718	NA	.093	.031	.06	.093	[illegible]	.093	.858	.608	.484
512	AC	COUPLING DATA UNIT ASSEMBLY C/M	(-100)	2007322-011		NAS-9-497	A	I	NOTE 11B	FOR DIMENSIONS SEE DASH 508 VALUES BELOW												
511	AC	COUPLING DATA UNIT ASSEMBLY-LEM	(-100)	2007322-021		NAS-9-497	A	I	NOTE 11B	FOR DIMENSIONS SEE DASH 508 VALUES BELOW												
510	AC	BATTERY POWER PACK	(-144)	1900011-041		NAS-9-497	B	II	NOTE 11C	FOR DIMENSIONS SEE DASH 500 VALUES BELOW												
509	AC	JUNCTION BOX, P.S.A./G.S.E.	(-144)	1902195-021		NAS-9-497	B	II	NOTE 11C	FOR DIMENSIONS SEE DASH 500 VALUES BELOW												
508	AC	NAVIGATION BASE ASSEMBLY-LEM	(-101)	6899980		NAS-9-497	A	I	NOTE 11B	2.000	1.312	1.906	1.375	.078	.048	.078	.093	NA	NA	1.125	.750	.593
507	AC	CSL, COOL, AND PWR, G AND N	(-144)	1902134-041		NAS-9-497	B	II	NOTE 11C	FOR DIMENSIONS SEE DASH 500 VALUES BELOW												
506	AC	BREAKOUT BOX, CABLE ADAPTER	(-141)	2901011-011		NAS-9-497	B	II	NOTE 11C	2.125	.968	1.718	NA	.093	.031	.06	.093	[illegible]	.093	.858	.608	.484
505	AC	MONITOR AND CONTROL, TEMP	(-141)	2900026-021		NAS-9-497	B	II	NOTE 11C	2.125	.968	1.718	NA	.093	.031	.06	.093		.093	.858	.608	.484
504	AC	PWR SUP, GUIDANCE SYSTEM	(-141)	1900033-021		NAS-9-497	B	II	NOTE 11C	2.125	.968	1.718	NA	.093	.031	.06	.093		.093	.858	.608	.484
503	AC	CONTROL, GIMBAL POSITION	(-141)	2900036-021		NAS-9-497	B	II	NOTE 11C	2.125	.968	1.718	NA	.093	.031	.06	.093		.093	.858	.608	.484
502	AC	ADPT. TEST POINT, PTA/PEA.	(-141)	2900145-021		NAS-9-497	B	II	NOTE 11C	2.125	.968	1.718	NA	.093	.031	.06	.093	[illegible]	.093	.858	.608	.484
501	AC	MOUNTING PLATE, COMPONENT	(-144)	6900007-031		NAS-9-497	B	II	NOTE 11C	FOR DIMENSIONS SEE DASH 500 VALUES BELOW												
500	AC	MOUNTING PLATE, COMPONENT	(-144)	2900677-021		NAS-9-497	B	II	NOTE 11C	4.125	1.812	3.250	NA	.125	.062	.12	.156	[illegible]	.125	1.625	1.140	.890

NOTES FOR TABLE

STYLE A IS FOR G & N SYSTEM
STYLE B IS FOR GROUND SUPPORT EQUIPMENT
TYPE I IS WITHOUT MOUNTING HOLES
TYPE II IS WITH MOUNTING HOLES

1004260	CP	SHT 6

REVISIONS					
SYM	ZONE	DESCRIPTION	CHG NO	DATE	APPD
CL		REPLACES REV CK WITH CHANGE PER TDRR 34365		9/28/67	JWL
CM		REVISED PER TDRR 34396		17 OCT. 67	RAIL
CN		REVISED PER TDRR 34667		31 OCT 67	JRK
CP		REVISED PER TDRR 34885		6 NOV 67	

[illegible]	DASH 538 VALUES																																
[illegible]	DASH 512 VALUES																																
[illegible]	DASH 500 VALUES																																
[illegible]	DASH 550 VALUES																																
[illegible]	DASH 181																																
[illegible]	DASH 181																																
[illegible]	DASH 181																																
[illegible]	DASH 534																																
[illegible]	SH 50C																																
[illegible]	DASH 50C																																
[illegible]	[illegible] VALUES																																
[illegible]	DASH 534 VALUES																																
[illegible]	DASH 181 VALUES																																
[illegible]	DASH 141 VALUES																																
[illegible]	DASH 141 VALUES																																
[illegible]	DASH 500 VALUES																																
[illegible]	.078	.048	.078	.093	NA	NA	1.125	.750	.593	.453	1.015	.062	.187	.078	.875	.718	1.375	.218	NA	NA	.048	.031	.875	.305	NA	.468	1.531	NA	NA	.078	.312	.187	NA
[illegible]	.078	.048	.078	.093	NA	NA	1.125	.750	.593	.453	1.015	.062	.187	.078	.875	.718	1.375	.218	NA	NA	.048	.031	.875	.305	NA	.468	1.531	NA	NA	.078	.312	.187	NA
[illegible]	.078	.048	.078	.093	NA	NA	1.125	.750	.593	.453	1.015	.062	.187	.078	.875	.718	1.375	.218	NA	NA	.048	.031	.875	.305	NA	.468	1.531	NA	NA	.078	.312	.187	NA
[illegible]	.078	.048	.078	.093	NA	NA	1.125	.750	.593	.453	1.015	.062	.187	.078	.875	.718	1.375	.218	NA	NA	.048	.031	.875	.305	NA	.468	1.531	NA	NA	.078	.312	.187	NA
[illegible]	.078	.048	.078	.093	NA	NA	1.125	.750	.593	.453	1.015	.062	.187	.078	.875	.718	1.375	.218	NA	NA	.048	.031	.875	.305	NA	.468	1.531	NA	NA	.078	.312	.187	NA
[illegible]	.078	.048	.078	.093	NA	NA	1.125	.750	.593	.453	1.015	.062	.187	.078	.875	.718	1.375	.218	NA	NA	.048	.031	.875	.305	NA	.468	1.531	NA	NA	.078	.312	.187	NA
[illegible]	.093	.031	.06	.093	[illegible]	.093	.858	.608	.484	.358	.733	.077	.116	.062	.937	.875	1.343	.125	.781	1.892	.046	NA	NA	.209	.093	.250	1.875	NA	1.840	.046	.23	.16	1.938
[illegible]	.125	.062	.12	.156		.125	1.625	1.140	.890	.640	1.390	.125	.171	.125	1.875	1.687	2.625	.250	1.562	3.843	.093	NA	NA	.359	.125	.437	3.688	NA	3.687	.093	.40	.25	3.875
[illegible]	.093	.031	.06	.093	[illegible]	.093	.858	.608	.484	.358	.733	.077	.116	.062	.937	.875	1.343	.125	.781	1.892	.046	NA	NA	.209	.093	.250	1.875	NA	1.840	.046	.23	.16	1.938
[illegible]	.125	.062	.188	.156	NA	NA	1.750	1.125	.906	.688	1.500	NA	.281	.125	NA	1.094	2.062	.312	NA	2.500	.062	.125	1.312	.469	NA	NA	NA	.156	NA	.125	.469	.344	NA
[illegible]	.093	.031	.06	.093	[illegible]	.093	.858	.608	.484	.358	.733	.077	.116	.062	.937	.875	1.343	.125	.781	1.892	.046	NA	NA	.209	.093	.250	1.875	NA	1.840	.046	.23	.16	1.938
[illegible]	.093	.031	.06	.093		.093	.858	.608	.484	.358	.733	.077	.116	.062	.937	.875	1.343	.125	.781	1.892	.046	NA	NA	.209	.093	.250	1.875	NA	1.840	.046	.23	.25	1.938
[illegible]	.093	.031	.06	.093		.093	.858	.608	.484	.358	.733	.077	.116	.062	.937	.875	1.343	.125	.781	1.892	.046	NA	NA	.209	.093	.250	1.875	NA	1.840	.046	.23	.16	1.938
[illegible]	.125	.062	.12	.156		.125	1.625	1.140	.890	.640	1.390	.125	.171	.125	1.875	1.687	2.625	.250	1.562	3.843	.093	NA	NA	.359	.125	.437	3.688	NA	3.687	.093	.40	.25	3.875
[illegible]	.093	.031	.06	.093	[illegible]	.093	.858	.608	.484	.358	.733	.077	.116	.062	.937	.875	1.343	.125	.781	1.892	.046	NA	NA	.209	.093	.250	1.875	NA	1.840	.046	.23	.16	1.938
[illegible]	.078	.048	.078	.093	NA	NA	1.125	.750	.593	.453	1.015	.062	.187	.078	.875	.718	1.375	.218	NA	NA	.048	.031	.875	.305	.078	.531	1.906	.078	NA	.078	.531	.187	NA
[illegible]	.078	.048	.078	.093	NA	NA	1.125	.750	.593	.453	1.015	.062	.187	.078	.875	.718	1.375	.218	NA	NA	.048	.031	.875	.305	.078	.531	1.906	.078	NA	.078	.531	.187	NA
[illegible]	.093	.031	.06	.093	[illegible]	.093	.858	.608	.484	.358	.733	.077	.116	.062	.937	.875	1.343	.125	.781	1.892	.046	NA	NA	.209	.093	.250	1.875	NA	1.840	.046	.23	.16	1.938
[illegible]	.125	.062	.12	.156		.125	1.625	1.140	.890	.640	1.390	.125	.171	.125	1.875	1.687	2.625	.250	1.562	3.843	.093	NA	NA	.359	.125	.437	3.688	NA	3.687	.093	.40	.25	3.875
[illegible]	.093	.031	.06	.093	[illegible]	.093	.858	.608	.484	.358	.733	.077	.116	.062	.937	.875	1.343	.125	.781	1.892	.046	NA	NA	.209	.093	.250	1.875	NA	1.840	.046	.23	.16	1.938
[illegible]	.078	.048	.078	.093	NA	NA	1.125	.750	.593	.453	1.015	.062	.187	.078	.875	.718	1.375	.218	NA	NA	.048	.031	.875	.305	.078	.531	1.906	.078	NA	.078	.531	.187	NA
[illegible]	.093	.031	.06	.093	[illegible]	.093	.858	.608	.484	.358	.733	.077	.116	.062	.937	.875	1.343	.125	.781	1.892	.046	NA	NA	.209	.093	.250	1.875	NA	1.840	.046	.23	.16	1.938
[illegible]	.125	.062	.12	.156		.125	1.625	1.140	.890	.640	1.390	.125	.171	.125	1.875	1.687	2.625	.250	1.562	3.843	.093	NA	NA	.359	.125	.437	3.688	NA	3.687	.093	.40	.25	3.875
[illegible]	.125	.062	.12	.156		.125	1.625	1.140	.890	.640	1.390	.125	.171	.125	1.875	1.687	2.625	.250	1.562	3.843	.093	NA	NA	.359	.125	.437	3.688	NA	3.687	.093	.40	.25	3.875
[illegible]	.093	.031	.06	.093		.093	.858	.608	.484	.358	.733	.077	.116	.062	.937	.875	1.343	.125	.781	1.892	.046	NA	NA	.209	.093	.250	1.875	NA	1.840	.046	.23	.16	1.938
[illegible]	.093	.031	.06	.093	[illegible]	.093	.858	.608	.484	.358	.733	.077	.116	.062	.937	.875	1.343	.125	.781	1.892	.046	NA	NA	.209	.093	.250	1.875	NA	1.840	.046	.23	.16	1.938
[illegible]	DASH 500 VALUES BELOW																																
[illegible]	DASH 500 VALUES BELOW																																
[illegible]	.125	.331	.125	.156	.125	.125	1.718	1.187	.968	.749	1.452	.093	.295	.090	1.312	1.00	2.000	.250	1.687	2.750	.062	NA	NA	.463	.125	.562	2.437	.140	2.562	.090	.468	.359	2.750
[illegible]	.093	.031	.06	.093	NA	NA	.858	.608	.484	.358	.733	.062	.140	.062	NA	.968	1.450	.125	NA	1.720	.046	.03	NA	.210	NA	NA	NA	.070	NA	.046	.32	.16	NA
[illegible]	DASH 508 VALUES BELOW																																
[illegible]	DASH 508 VALUES BELOW																																
[illegible]	DASH 508 VALUES BELOW																																
[illegible]	DASH 508 VALUES BELOW																																
[illegible]	DASH 504 VALUES BELOW																																
[illegible]	DASH 500 VALUES BELOW																																
[illegible]	DASH 502 VALUES BELOW																																
[illegible]	DASH 508 VALUES BELOW																																
[illegible]	DASH 508 VALUES BELOW																																
[illegible]	.093	.031	.06	.093	[illegible]	.093	.858	.608	.484	.358	.733	.077	.116	.062	.937	.875	1.343	.125	.781	1.892	.046	NA	NA	.209	.093	.250	1.875	NA	1.840	.046	.23	.16	1.938
[illegible]	DASH 508 VALUES BELOW																																
[illegible]	DASH 508 VALUES BELOW																																
[illegible]	DASH 500 VALUES BELOW																																
[illegible]	DASH 500 VALUES BELOW																																
[illegible]	.078	.048	.078	.093	NA	NA	1.125	.750	.593	.453	1.015	.062	.187	.078	.875	.718	1.375	.218	NA	NA	.048	.031	.875	.305	.078	.531	1.906	.078	NA	.078	.531	.187	NA
[illegible]	DASH 500 VALUES BELOW																																
[illegible]	.093	.031	.06	.093	[illegible]	.093	.858	.608	.484	.358	.733	.077	.116	.062	.937	.875	1.343	.125	.781	1.892	.046	NA	NA	.209	.093	.250	1.875	NA	1.840	.046	.23	.16	1.938
[illegible]	.093	.031	.06	.093		.093	.858	.608	.484	.358	.733	.077	.116	.062	.937	.875	1.343	.125	.781	1.892	.046	NA	NA	.209	.093	.250	1.875	NA	1.840	.046	.23	.16	1.938
[illegible]	.093	.031	.06	.093		.093	.858	.608	.484	.358	.733	.077	.116	.062	.937	.875	1.343	.125	.781	1.892	.046	NA	NA	.209	.093	.250	1.875	NA	1.840	.046	.23	.16	1.938
[illegible]	.093	.031	.06	.093		.093	.858	.608	.484	.358	.733	.077	.116	.062	.937	.875	1.343	.125	.781	1.892	.046	NA	NA	.209	.093	.250	1.875	NA	1.840	.046	.23	.16	1.938
[illegible]	.093	.031	.06	.093	[illegible]	.093	.858	.608	.484	.358	.733	.077	.116	.062	.937	.875	1.343	.125	.781	1.892	.046	NA	NA	.209	.093	.250	1.875	NA	1.840	.046	.23	.16	1.938
[illegible]	DASH 500 VALUES BELOW																																
[illegible]	.125	.062	.12	.156	[illegible]	.125	1.625	1.140	.890	.640	1.390	.125	.171	.125	1.875	1.687	2.625	.250	1.562	3.843	.093	NA	NA	.359	.125	.437	3.688	NA	3.687	.093	.40	.25	3.875
D	E	F	G	H	J	K	L	M	N	P	R	S	T	U	V	W	Y	Z	AA	AB	AC	AD	AE	AF	AG	AH	AJ	AK	AL	AM	AN	AP	AR

AC ELECTRONICS DASH NUMBERS

UNLESS OTHERWISE SPECIFIED DIMENSIONS ARE IN INCHES TOLERANCES ON 2 PLACE DECIMALS ± 3 PLACE DECIMALS ± .005 ANGLES ±	MIT INSTRUMENTATION LAB Cambridge Mass DRAWN R. A. JONES DATE 15 JUL 65 CHECKED W. RIPPER 22 JUL 65 APPROVAL	MANNED SPACECRAFT CENTER HOUSTON, TEXAS	NAMEPLATES, APOLLO GEN - GSE (STANDARDS)
DO NOT SCALE THIS DRAWING	CONTRACT		
MATERIAL SEE NOTE H	T. MICHAELS 22 JUL 65 NASA APPROVAL	SIZE J2	CODE IDENT NO. 80230
APPROVAL	W. RIPPER 22 JUL 65 MIT APPROVAL	SCALE NONE	1004260 SHEET 6 OF 6
AS APPLICABLE NEXT ASSY | USED ON APPLICATION			

1004260 CP

1004260

NOTES:

1. INTERPRET DRAWING IN ACCORDANCE WITH STANDARDS PRESCRIBED BY MIL-D-70327.
2. DIMENSIONS ON EACH VIEW APPLY TO ALL VIEWS (WITH THE EXCEPTION OF MOUNTING HOLES).
3. FORMATS ILLUSTRATED WILL BE APPLICABLE TO ALL ITEMS REQUIRING NAMEPLATES BELOW END ITEM DESIGNATION (SYSTEMS, ASSEMBLIES, ETC.)
4. PLATE BACKGROUND TO BE LUSTERLESS BLACK PER FED-STD-595, COLOR 37038. BORDER, MARKING AND LETTERING TO BE NATURAL METAL, (ANODIZED ALUMINUM).
5. MARKING METHOD TO BE DIE STAMPING, ETCHING OR ENGRAVING IN ACCORDANCE WITH MIL-P-19834.
6. LETTERING STYLE TO BE GOTHIC, (SANS SERIFS), AND NUMBERS TO BE ARABIC.
7. WHERE LOCATING DIMENSIONS ARE NOT SHOWN, CHARACTERS SHALL BE SYMMETRICALLY POSITIONED.
8. IDENTIFY WITH DRAWING NUMBER PER ND 1002019.
9. WHEN "AUTO MARK" METAL MARKING TYPEWRITER IS USED TO ADD DATA TO BLANK SPACES, TYPE SIZE IS TO BE SELECTED FROM DIMENSIONS U, AC, AND AM.
10. NASA SYMBOL IS TO BE PROPORTIONAL TO NAMEPLATE IN RATIO OF 1 TO 5 WITH DIMENSION A VALUE AND IS TO HAVE NATURAL BACKGROUND. NASA SYMBOL LETTERS LETTERING AND FEATHER TO BE BLACK, (OR WHITE FOR SILK SCREENING). WHERE BLACK FEATHER PROTRUDES INTO BLACK BACKGROUND, A MINIMUM OUTLINE OF NATURAL BACKGROUND SHALL EXIST.
11. NAMEPLATES WILL BE APPLIED BY METHODS LISTED BELOW, SHOWN IN ORDER OF PREFERENCE, (I.E., FOR RELIABILITY AND WEIGHT).
    A - STENCIL OR SILK SCREEN DIRECTLY ON EQUIPMENT USING INK PER SCD 1010920, (WHITE OR BLACK).
    B - ALUMINUM FOIL, (STYLE A OR B, TYPE I):
    FOIL SHALL BE .0030 ± .0005 THICK PER MIL-A-148.
    FOIL SHALL HAVE NO ADHESIVE BACKING.
    FOIL SHALL BE BONDED PER ND 1002219, (METHOD II).
    FOIL SHALL BE CLEAR ANODIZED PER MIL-A-8625, TYPE II.
    C - PLATE, (STYLE A OR B, TYPE II):
    MATERIAL: QQ-A-250, TEMPER 0 OR H14, TYPE 1100, ALUMINUM ALLOY, .032 THICK. ANODIZE PER MIL-A-8625, TYPE II.
    ALUMINUM PLATE MUST BE FREE FROM BURRS AND SHARP CORNERS, MOUNTED WITH APPLICABLE SIZE FASTENERS.
12. NAMEPLATES SHALL BE CAPABLE OF MEETING APPLICABLE REQUIREMENTS OF MIL-M-13231.
13. ON DIMENSION TABLES SHOWN ON PAGES 2, 3, 4, 5, AND 6, NA MEANS, "NOT APPLICABLE".

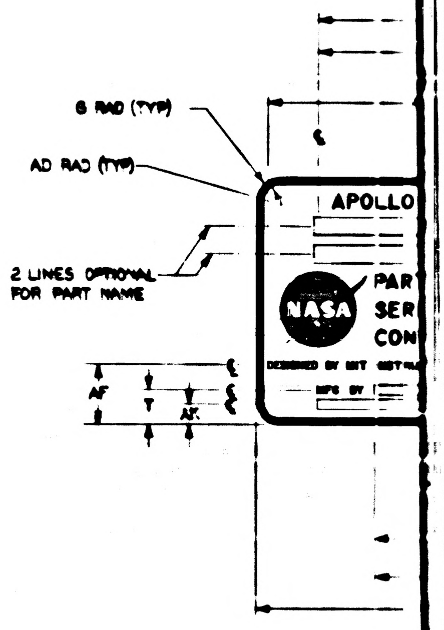

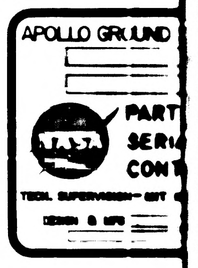

WTHOU

SUGGESTED PROPORTIONS FOR NAMEPLATE DIMENSIONS.
1. SELECT NAMEPLATE LENGTH, DIMENSION "A", TO FIT DESIGN NEEDS.
2. DIMENSIONS B THRU AS ON LINE 1 BELOW ARE PROPORTIONAL TO "A" BY MULTIPLIERS SHOWN IN LINE 2 BELOW.

1.	A	B	C	D	E	F	G	H	J	K	L	M	N	P	R	S	T	U	V	W	Y	Z	AA	AB	AC	AD	AE	AF	AG	AH	AJ	AK	AL	AM	AN	AP	AR	AS
2.	1.000A	.6563A	.8438A	.6875A	.0391A	.0240A	.0391A	.0469A	.0547A	.0469A	.5938A	.3750A	.2969A	.2187A	.9879A	.0313A	.0938A	.0391A	.4375A	.3594A	.6875A	.1094A	.5781A	.9219A	.0240A	.0156A	.4375A	.1525A	.8301A	.1563A	.8438A	.0548A	.8659A	.0391A	.1563A	.0938A	.9219A	.0151A

1004260 | CR | SHT 1

1/1004260

REVISIONS

SYM	ZONE	DESCRIPTION	CHG NO	DATE	APPD
CL		REPLACES REV CK WITHOUT CHANGE PER TDRR 34365		1/20/67	JWL
CM		REVISION STATUS CHANGED		18 OCT 67	RAW
CN		REVISION STATUS CHANGED		31 OCT 67	JRK
CP		REVISION STATUS CHANGED		6 NOV 67	[illegible]
CR		REVISION STATUS CHANGED		[illegible]	[illegible]

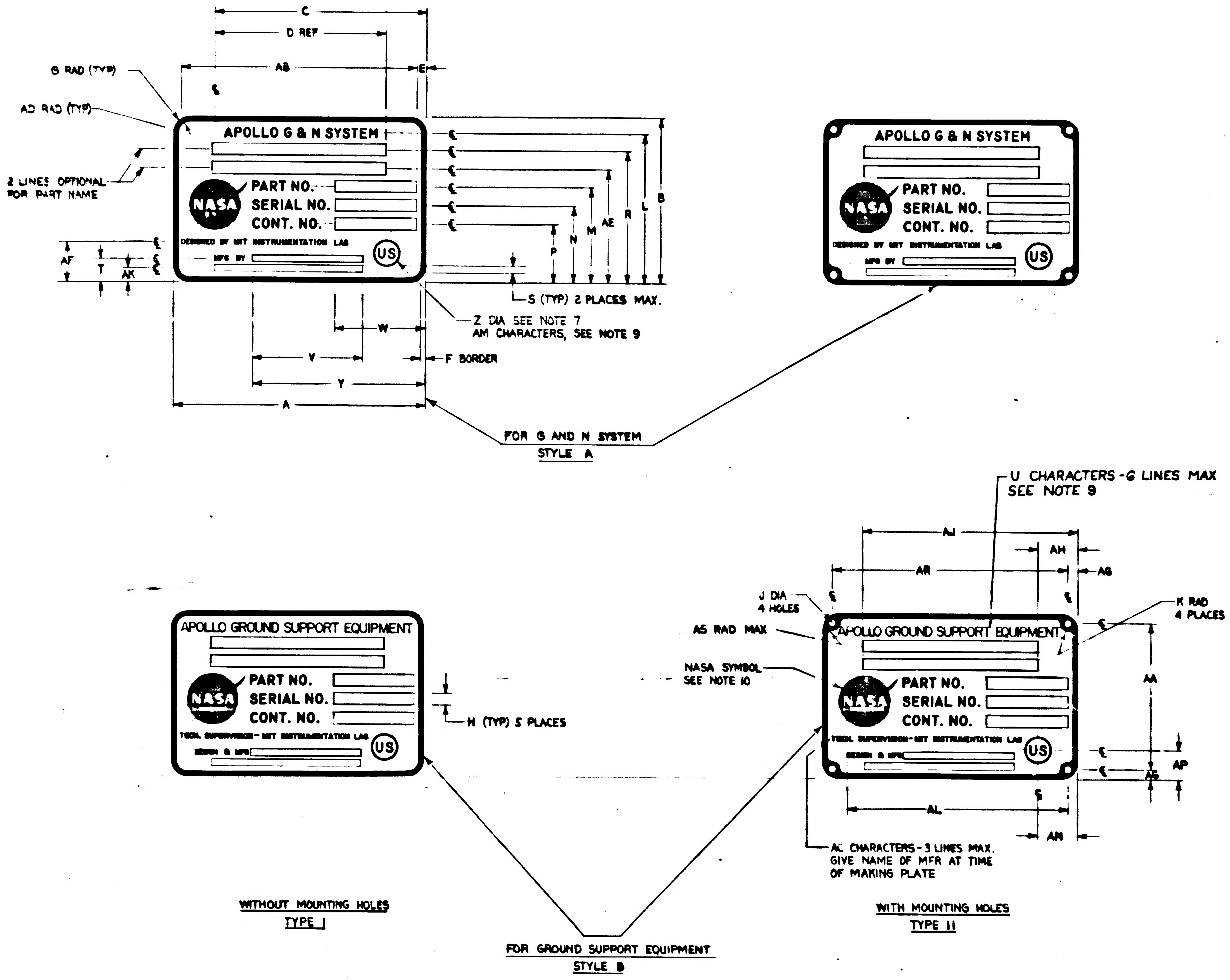
C
D REF
AB
E
G RAD (TYP)
AD RAD (TYP)
2 LINES OPTIONAL FOR PART NAME
APOLLO G & N SYSTEM
PART NO.
SERIAL NO.
CONT. NO.
NASA
DESIGNED BY MIT INSTRUMENTATION LAB
MFG BY
US
AF
T
AK
P
N
M
AE
R
L
B
S (TYP) 2 PLACES MAX.
Z DIA SEE NOTE 7
AM CHARACTERS, SEE NOTE 9
W
V
F BORDER
Y
A
FOR G AND N SYSTEM
STYLE A
U CHARACTERS - 6 LINES MAX
SEE NOTE 9
AJ
AH
AR
AG
J DIA
4 HOLES
AS RAD MAX
K RAD
4 PLACES
NASA SYMBOL
SEE NOTE 10
APOLLO GROUND SUPPORT EQUIPMENT
TECH. SUPERVISION - MIT INSTRUMENTATION LAB
DESIGN & MFG
H (TYP) 5 PLACES
AA
AP
AG
AL
AN
AC CHARACTERS - 3 LINES MAX.
GIVE NAME OF MFR AT TIME
OF MAKING PLATE
WITHOUT MOUNTING HOLES
TYPE I
WITH MOUNTING HOLES
TYPE II
FOR GROUND SUPPORT EQUIPMENT
STYLE B

AS APPLICABLE	UNLESS OTHERWISE SPECIFIED DIMENSIONS ARE IN INCHES TOLERANCES ON 2 PLACE DECIMALS ± 3 PLACE DECIMALS ±.005 ANGLES ±	MIT INSTRUMENTATION LAB CAMBRIDGE MASS	MANNED SPACECRAFT CENTER HOUSTON, TEXAS	
NEXT ASSY / USED ON	DO NOT SCALE THIS DRAWING	DRAWN R. A. JONES DATE 15 JUL 65 CHECKED APPROVAL W. HUPFER 22 JUL 65	NAMEPLATES, APOLLO G&N - GSE (STANDARDS)	
APPLICATION	MATERIAL SEE NOTE 11	CONTRACT NASA APPROVAL T. MICHAELS 22 JUL 65 MIT APPROVAL W. HUPFER 22 JUL 65	SIZE J2	CODE IDENT NO. 80230 — 1004260
	APPROVAL		SCALE NONE	SHEET 1 OF 6

1004260 CR SHEET 1

[illegible]

DASH NO.	P/C	PART NAME	REMARKS	PART NUMBER	SER. NO.	CONT. NO.	STYLE	TYPE	MATERIAL	A	B	C	D	E	F	G	H	J	K	L	M	N
399	K																					
398	K																					
350	K	ALIGNMENT OPTICAL TELESCOPE (LEM)		NA	NA	NA	A	I	NOTE 11B	4.000	2.625	3.375	2.750	.156	.093	.156	.187	NA	NA	2.312	1.468	1.187
309	K																					
308	K																					
307	K						B	I	NOTE 11B	4.000	2.625	3.375	2.750	.156	.093	.156	.187	NA	NA	2.328	1.468	1.187
306	K						B	II	NOTE 11C	4.000	2.625	3.375	2.750	.156	.093	.156	.187	.125	.156	2.328	1.468	1.187
305	K						B	I	NOTE 11B	2.000	1.312	1.687	1.375	.078	.048	.078	.093	NA	NA	1.164	.734	.593
304	K						B	II	NOTE 11C	2.000	1.312	1.687	1.375	.078	.048	.078	.093	.070	.078	1.164	.734	.593
303	K																					
302	K																					
301	K																					
300	K	OPTICAL UNIT		NA	NA	NA	A	I	NOTE 11B	2.000	1.312	1.675	NA	NA	.048	.078	NA	NA	NA	1.090	.812	.675
9	K	2 IN AUTOCOLLIMATOR		1001702			B	II	NOTE 11C	4.000	2.625	3.812	2.750	.156	.093	.156	.187	.125	.156	2.250	1.500	1.187
8	K	5 IN AUTOCOLLIMATOR		1017410			B	II	NOTE 11C	4.000	2.625	3.812	2.750	.156	.093	.156	.187	.125	.156	2.250	1.500	1.187
7	K	2-1/2 IN AUTOCOLLIMATOR (SCT)		1017435			B	II	NOTE 11C	4.000	2.625	3.812	2.750	.156	.093	.156	.187	.125	.156	2.250	1.500	1.187
6	K	2-1/2 IN AUTOCOLLIMATOR (SXT)		1017448			B	II	NOTE 11C	4.000	2.625	3.812	2.750	.156	.093	.156	.187	.125	.156	2.250	1.500	1.187
5	K	RETROREFLECTING PRISM ASSEMBLY		1019840			B	I	NOTE 11B	4.000	2.625	3.812	2.750	.156	.093	.156	.187	NA	NA	2.250	1.500	1.187
4	K	S/H SIMULATOR ASSEMBLY		1019896			B	I	NOTE 11B	4.000	2.625	3.812	2.750	.156	.093	.156	.187	NA	NA	2.250	1.500	1.187
3	K	REFERENCE MIRROR		1001767			B	I	NOTE 11B	2.000	1.312	1.906	1.375	.078	.048	.078	.093	NA	NA	1.125	.750	.593
2	K	2 IN PLANE READING AUTOCOLLIMATOR		1017413			B	I	NOTE 11B	2.000	1.312	1.906	1.375	.078	.048	.078	.093	NA	NA	1.125	.750	.593
1	K	2 IN AUTOCOLLIMATOR		1001702			B	I	NOTE 11B	2.000	1.312	1.906	1.375	.078	.048	.078	.093	NA	NA	1.125	.750	.593

NOTES FOR TABLE

STYLE A IS FOR G & N SYSTEM
STYLE B IS FOR GROUND SUPPORT EQUIPMENT
TYPE I IS WITHOUT MOUNTING HOLES
TYPE II IS WITH MOUNTING HOLES

1004260	CR	SHT 2

SYM	ZONE	REVISIONS DESCRIPTION	CHG NO	DATE	APPD
CL		REPLACES REV CK WITHOUT CHANGE PER TDRR 34365		[illegible]	JWL
CM		REVISION STATUS CHANGED		18 OCT 67	R.A.K.
CN		REVISION STATUS CHANGED		3 OCT 67	JRK
CP		REVISION STATUS CHANGED		6 NOV 67	ENS
CR		REVISION STATUS CHANGED		4 DEC 67	[illegible]

	F	G	H	J	K	L	M	N	P	R	S	T	U	V	W	Y	Z	AA	AB	AC	AD	AE	AF	AG	AH	AJ	AK	AL	AM	AN	AP	AR
[illegible]	.093	.156	.187	NA	NA	2.312	1.468	1.187	.906	2.031	NA	.375	.156	NA	1.437	2.750	.437	NA	3.688	.062	.062	1.750	.593	NA	.625	3.375	.187	NA	.156	.531	.453	NA
[illegible]	.093	.156	.187	NA	NA	2.328	1.468	1.187	.906	2.031	.062	.375	.156	NA	1.437	2.750	.437	NA	3.687	.062	.062	1.750	.593	NA	NA	NA	NA	NA	NA	NA	NA	NA
[illegible]	.093	.156	.187	.125	.156	2.328	1.468	1.187	.906	2.031	.062	.375	.156	NA	1.437	2.750	.437	2.312	3.687	.062	NA	1.750	.593	NA	NA	NA	NA	NA	NA	NA	NA	NA
[illegible]	.048	.078	.093	NA	NA	1.164	.734	.593	.453	1.015	.048	.171	.078	NA	.718	1.375	.187	NA	NA	.048	.031	.875	.320	NA	NA	NA	NA	NA	NA	NA	NA	NA
[illegible]	.048	.078	.093	.070	.078	1.164	.734	.593	.453	1.015	.048	.171	.078	NA	.718	1.375	.187	.156	1.843	.048	NA	.875	.320	NA	NA	NA	NA	NA	NA	NA	NA	NA
NA	.048	.078	NA	NA	NA	1.090	.812	.675	.540	.940	NA	.265	NA	NA	NA	1.375	.218	NA	NA	NA	NA	NA	.375	NA	NA	NA	.180	NA	.078	NA	NA	NA
[illegible]	.093	.156	.187	.125	.156	2.250	1.500	1.187	.906	2.031	.093	.375	.156	1.750	1.437	2.750	.437	2.312	3.687	.062	NA	1.750	.593	.156	1.062	3.812	.156	NA	.156	1.062	.375	3.687
[illegible]	.093	.156	.187	.125	.156	2.250	1.500	1.187	.906	2.031	.093	.375	.156	1.750	1.437	2.750	.437	2.312	3.687	.062	NA	1.750	.593	.156	1.062	3.812	.156	NA	.156	1.062	.375	3.687
[illegible]	.093	.156	.187	.125	.156	2.250	1.500	1.187	.906	2.031	.093	.375	.156	1.750	1.437	2.750	.437	2.312	3.687	.062	NA	1.750	.593	.156	1.062	3.812	.156	NA	.156	1.062	.375	3.687
[illegible]	.093	.156	.187	.125	.156	2.250	1.500	1.187	.906	2.031	.093	.375	.156	1.750	1.437	2.750	.437	2.312	3.687	.062	NA	1.750	.593	.156	1.062	3.812	.156	NA	.156	1.062	.375	3.687
[illegible]	.093	.156	.187	NA	NA	2.250	1.500	1.187	.906	2.031	.093	.375	.156	1.750	1.437	2.750	.437	NA	NA	.062	.062	1.750	.593	.156	1.062	3.812	.156	NA	.156	1.062	.375	NA
[illegible]	.093	.156	.187	NA	NA	2.250	1.500	1.187	.906	2.031	.093	.375	.156	1.750	1.437	2.750	.437	NA	NA	.062	.062	1.750	.593	.156	1.062	3.812	.156	NA	.156	1.062	.375	NA
[illegible]	.048	.078	.093	NA	NA	1.125	.750	.593	.453	1.015	.062	.187	.078	.875	.718	1.375	.218	NA	NA	.048	.031	.875	.305	.078	.531	1.906	.078	NA	.078	.531	.187	NA
[illegible]	.048	.078	.093	NA	NA	1.125	.750	.593	.453	1.015	.062	.187	.078	.875	.718	1.375	.218	NA	NA	.048	.031	.875	.305	.078	.531	1.906	.078	NA	.078	.531	.187	NA
[illegible]	.048	.078	.093	NA	NA	1.125	.750	.593	.453	1.015	.062	.187	.078	.875	.718	1.375	.218	NA	NA	.048	.031	.875	.305	.078	.531	1.906	.078	NA	.078	.531	.187	NA

KOLLSMAN DASH NUMBERS

UNLESS OTHERWISE SPECIFIED DIMENSIONS ARE IN INCHES TOLERANCES ON 2 PLACE DECIMALS ± 3 PLACE DECIMALS ±.005 ANGLES ±	MIT INSTRUMENTATION LAB CAMBRIDGE MASS	MANNED SPACECRAFT CENTER HOUSTON, TEXAS	
	DRAWN R. A. JONES DATE 16 JUL 65	NAMEPLATES, APOLLO GEN - GSE (STANDARDS)	
	CHECKED		
	APPROVAL W KUPFER 22 JUL 65		
DO NOT SCALE THIS DRAWING	CONTRACT		
MATERIAL SEE NOTE H	NASA APPROVAL T. MICHAELS 22 JUL 65	SIZE J2	CODE IDENT NO 80230 · 1004260
APPROVAL	MIT APPROVAL W KUPFER 22 JUL 65	SCALE NONE	SHEET 2 OF 6

AS APPLICABLE	
NEXT ASSY	USED ON
APPLICATION	

1004260 CR

1004260

1004260 CP SHT 2

2710042 60

DASH NO.	P/C	PART NAME	REMARKS	PART NUMBER	SER. NO.	CONT. NO.	STYLE	TYPE	MATERIAL	A	B	C	D	E	F	G	H	J	K	L	M	N	P
239	R																						
298	R																						
285	R	BUFFER CIRCUIT ASSY		2014254-031	NA	NAS-9-497	B	I	NOTE 11B	FOR DIMENSIONS SEE DASH 15 VALUES BELOW													
284	R	LOGIC DRAWER ASSY NO. 2		2014037-041	NA	NAS-9-497	B	I	NOTE 11B	FOR DIMENSIONS SEE DASH 17 VALUES BELOW													
283	R	DRAWER ASSY-PROGRAM & MONITOR		2014041-051	NA	NAS-9-497	B	I	NOTE 11B	FOR DIMENSIONS SEE DASH 17 VALUES BELOW													
282	R	COMPUTER TEST SET		2014042-061	NA	NAS-9-497	B	II	NOTE 11C	FOR DIMENSIONS SEE DASH 18 VALUES BELOW													
281	R	AGC HANDLING FIXTURE		2014282-031	NA	NAS-9-497	B	I	NOTE 11B	FOR DIMENSIONS SEE DASH 17 VALUES BELOW													
280	R	COMPUTER TEST SET		2014042-051	NA	NAS-9-497	B	II	NOTE 11C	FOR DIMENSIONS SEE DASH 18 VALUES BELOW													
279	R	SELF TEST ASSY		2014366-041	NA	NAS-9-497	B	I	NOTE 11B	FOR DIMENSIONS SEE DASH 15 VALUES BELOW													
278	R	LOGIC DRAWER ASSY NO. 1		2014036-041	NA	NAS-9-497	B	I	NOTE 11B	FOR DIMENSIONS SEE DASH 17 VALUES BELOW													
277	R	COMPUTER TEST SET		2014042-041	NA	NAS-9-497	B	II	NOTE 11C	FOR DIMENSIONS SEE DASH 18 VALUES BELOW													
276	R	DRAWER ASSY-PROGRAM & MONITOR		2014041-041	NA	NAS-9-497	B	I	NOTE 11B	FOR DIMENSIONS SEE DASH 17 VALUES BELOW													
275	R	DRAWER ASSY RDC INTERFACE		2014045-031	NA	NAS-9-497	B	I	NOTE 11B	FOR DIMENSIONS SEE DASH 15 VALUES BELOW													
274	R	SELF TEST ASSY		2014366-031	NA	NAS-9-497	B	I	NOTE 11B	FOR DIMENSIONS SEE DASH 15 VALUES BELOW													
273	R	LOGIC DRAWER ASSY NO. 2		2014037-031	NA	NAS-9-497	B	I	NOTE 11B	FOR DIMENSIONS SEE DASH 17 VALUES BELOW													
272	R	DRAWING ASSY PROGRAMMER & MONITOR		2014041-031	NA	NAS-9-497	B	I	NOTE 11B	FOR DIMENSIONS SEE DASH 17 VALUES BELOW													
271	R	LOGIC DRAWER ASSY NO. 1		2014036-031	NA	NAS-9-497	B	I	NOTE 11B	FOR DIMENSIONS SEE DASH 17 VALUES BELOW													
270	R	COMPUTER TEST SET		2014042-031	NA	NAS-9-497	B	II	NOTE 11C	FOR DIMENSIONS SEE DASH 18 VALUES BELOW													
269	R	POWER CONTROL ASSY		2014044-021	NA	NAS-9-497	B	I	NOTE 11B	FOR DIMENSIONS SEE DASH 17 VALUES BELOW													
268	R	SELF TEST ASSY		2014366-021	NA	NAS-9-497	B	I	NOTE 11B	FOR DIMENSIONS SEE DASH 15 VALUES BELOW													
267	R	AGC JUNCTION ASSY		2014341-021	NA	NAS-9-497	B	I	NOTE 11B	FOR DIMENSIONS SEE DASH 15 VALUES BELOW													
266	R	POWER CONTROL ASSY		2014079-021	NA	NAS-9-497	B	I	NOTE 11B	FOR DIMENSIONS SEE DASH 15 VALUES BELOW													
265	R	BUFFER CIRCUIT ASSY		2014254-021	NA	NAS-9-497	B	I	NOTE 11B	FOR DIMENSIONS SEE DASH 15 VALUES BELOW													
264	R	DRAWER ASSY X Y INTERFACE		2014040-021	NA	NAS-9-497	B	I	NOTE 11B	FOR DIMENSIONS SEE DASH 15 VALUES BELOW													
263	R	DRAWER ASSY RDC INTERFACE		2014045-021	NA	NAS-9-497	B	I	NOTE 11B	FOR DIMENSIONS SEE DASH 15 VALUES BELOW													
262	R	DRAWER ASSY PROGRAMMER & MONITOR		2014041-021	NA	NAS-9-497	B	I	NOTE 11B	FOR DIMENSIONS SEE DASH 17 VALUES BELOW													
261	R	LOGIC DRAWER ASSY NO. 2		2014037-021	NA	NAS-9-497	B	I	NOTE 11B	FOR DIMENSIONS SEE DASH 17 VALUES BELOW													
260	R	LOGIC DRAWER ASSY NO. 1		2014036-021	NA	NAS-9-497	B	I	NOTE 11B	FOR DIMENSIONS SEE DASH 17 VALUES BELOW													
259	R	OPERATION CONSOLE		2014024-021	NA	NAS-9-497	B	II	NOTE 11C	FOR DIMENSIONS SEE DASH 18 VALUES BELOW													
258	R	COMPUTER TEST SET		2014042-021	NA	NAS-9-497	B	II	NOTE 11C	FOR DIMENSIONS SEE DASH 18 VALUES BELOW													
257	R	AUXILIARY CALIBRATION CONSOLE		2014059-021	NA	NAS-9-497	B	II	NOTE 11C	FOR DIMENSIONS SEE DASH 18 VALUES BELOW													
256	R	AGC CALIBRATION CONSOLE		2014049-021	NA	NAS-9-497	B	II	NOTE 11C	FOR DIMENSIONS SEE DASH 18 VALUES BELOW													
255	R	AGC HANDLING FIXTURE		2014282-021	NA	NAS-9-497	B	I	NOTE 11B	FOR DIMENSIONS SEE DASH 17 VALUES BELOW													
254	R	DRAWER ASSY COMP. SIMULATOR		2014048-011	NA	NAS-9-497	B	II	NOTE 11C	FOR DIMENSIONS SEE DASH 18 VALUES BELOW													
253	R	SHIPPING KIT ASSY, NAV DSKY		2016312-011	NA	NAS-9-497	B	II	NOTE 11C	FOR DIMENSIONS SEE DASH 18 VALUES BELOW													
252	R	SHIPPING KIT ASSY, UNIVERSAL DSKY		2016316-011	NA	NAS-9-497	B	II	NOTE 11C	FOR DIMENSIONS SEE DASH 18 VALUES BELOW													
251	R	SHIPPING KIT ASSY, MAIN DSKY		2016313-011	NA	NAS-9-497	B	II	NOTE 11C	FOR DIMENSIONS SEE DASH 18 VALUES BELOW													
250	R	AMPLIFIER, REWORK		2014386	NA	NAS-9-497	B	I	NOTE 11B	FOR DIMENSIONS SEE DASH 15 VALUES BELOW													
249	R	TEMP MONITOR ASSY		2014313-011	NA	NAS-9-497	B	I	NOTE 11C	FOR DIMENSIONS SEE DASH 17 VALUES BELOW													
248	R	AGC JUNCTION ASSY		2014341-011	NA	NAS-9-497	B	I	NOTE 11B	FOR DIMENSIONS SEE DASH 15 VALUES BELOW													
247	R	AC INPUT PANEL ASSY		2014302-011	NA	NAS-9-497	B	I	NOTE 11B	FOR DIMENSIONS SEE DASH 15 VALUES BELOW													
246	R	SELF TEST ASSY		2014392-011	NA	NAS-9-497	B	I	NOTE 11B	FOR DIMENSIONS SEE DASH 15 VALUES BELOW													
245	R	TAPE PUNCH ASSEMBLY		2014039-011	NA	NAS-9-497	B	I	NOTE 11B	FOR DIMENSIONS SEE DASH 15 VALUES BELOW													
244	R	TAPE READER ASSEMBLY		2014038-011	NA	NAS-9-497	B	I	NOTE 11B	FOR DIMENSIONS SEE DASH 15 VALUES BELOW													
243																							
242																							
241	R	APOLLO GUIDANCE COMPUTER GROUP		6003001	NA	NAS-9-497	A	I	NOTE 11B	FOR DIMENSIONS SEE DASH 19 VALUES BELOW													
240	R	SELF TEST ASSEMBLY		2014366-011	NA	NAS-9-497	B	I	NOTE 11B	FOR DIMENSIONS SEE DASH 15 VALUES BELOW													
239	R	POWER SUPPLY ASSY-115V., 400 CYCLE		2014207-011	NA	NAS-9-497	B	I	NOTE 11B	FOR DIMENSIONS SEE DASH 17 VALUES BELOW													
238	R	AC INPUT PANEL ASSY		2014043-011	NA	NAS-9-497	B	I	NOTE 11B	FOR DIMENSIONS SEE DASH 17 VALUES BELOW													
237	R	POWER CONTROL ASSY		2014079-011	NA	NAS-9-497	B	I	NOTE 11B	FOR DIMENSIONS SEE DASH 15 VALUES BELOW													
236	R	DRAWER ASSY-X Y INTERFACE		2014040-011	NA	NAS-9-497	B	I	NOTE 11B	FOR DIMENSIONS SEE DASH 15 VALUES BELOW													
235	R	DRAWER ASSY RDC INTERFACE		2014045-011	NA	NAS-9-497	B	I	NOTE 11B	FOR DIMENSIONS SEE DASH 15 VALUES BELOW													
234	R	BUFFER CIRCUIT ASSY		2014254-011	NA	NAS-9-497	B	I	NOTE 11B	FOR DIMENSIONS SEE DASH 15 VALUES BELOW													
233	R	CONTROL & INTERFACE ASSY		2014204-011	NA	NAS-9-497	B	I	NOTE 11B	FOR DIMENSIONS SEE DASH 15 VALUES BELOW													
232	R	POWER CONTROL ASSY		2014044-011	NA	NAS-9-497	B	I	NOTE 11B	FOR DIMENSIONS SEE DASH 17 VALUES BELOW													
231	R	DRAWER ASSY, PROGRAMMER & MONITOR		2014041-011	NA	NAS-9-497	B	I	NOTE 11B	FOR DIMENSIONS SEE DASH 17 VALUES BELOW													
230	R	CONNECTOR INTERFACE ASSY		2014272-011	NA	NAS-9-497	B	I	NOTE 11B	FOR DIMENSIONS SEE DASH 15 VALUES BELOW													
229	R	CONNECTOR INTERFACE ASSY		2014047-011	NA	NAS-9-497	B	I	NOTE 11B	FOR DIMENSIONS SEE DASH 15 VALUES BELOW													
228	R	ANTENNA, TUNING CAPACITOR ASSY		2014209-011	NA	NAS-9-497	B	I	NOTE 11B	FOR DIMENSIONS SEE DASH 15 VALUES BELOW													
227	R	MOUNTING FIXTURE ASSY		2014006-011	NA	NAS-9-497	B	I	NOTE 11B	FOR DIMENSIONS SEE DASH 17 VALUES BELOW													
226	R	POWER SUPPLY ASSY 3 VDC		2014234-011	NA	NAS-9-497	B	I	NOTE 11B	FOR DIMENSIONS SEE DASH 15 VALUES BELOW													
225	R	PANEL ASSY—SIGNAL INTERFACE		2014010-011	NA	NAS-9-497	B	I	NOTE 11B	FOR DIMENSIONS SEE DASH 15 VALUES BELOW													
224	R	OSCILLOSCOPE ASSY		2014232-011	NA	NAS-9-497	B	I	NOTE 11B	FOR DIMENSIONS SEE DASH 15 VALUES BELOW													
223	R	AUXILIARY OUTLET ASSY		2014274-011	NA	NAS-9-497	B	I	NOTE 11B	FOR DIMENSIONS SEE DASH 15 VALUES BELOW													
222	R	FREQUENCY COUNTER		2014233-011	NA	NAS-9-497	B	I	NOTE 11B	FOR DIMENSIONS SEE DASH 15 VALUES BELOW													
221	R	POWER SUPPLY ASSY 10, 13, 28 VDC		2014235-011	NA	NAS-9-497	B	I	NOTE 11B	FOR DIMENSIONS SEE DASH 15 VALUES BELOW													
220	R	LOGIC DRAWER ASSY NO. 2		2014037-011	NA	NAS-9-497	B	I	NOTE 11B	FOR DIMENSIONS SEE DASH 17 VALUES BELOW													
219	R	LOGIC DRAWER ASSY NO. 1		2014036-011	NA	NAS-9-497	B	I	NOTE 11B	FOR DIMENSIONS SEE DASH 17 VALUES BELOW													
218	R	COUNTER, ELECTRICAL ASSY		2014288-011	NA	NAS-9-497	B	I	NOTE 11B	FOR DIMENSIONS SEE DASH 15 VALUES BELOW													
217	R	POWER SUPPLY ASSY		2014279-011	NA	NAS-9-497	B	I	NOTE 11B	FOR DIMENSIONS SEE DASH 15 VALUES BELOW													
216	R	TEST MOUNT ASSY		2014257-011	NA	NAS-9-497	B	I	NOTE 11B	FOR DIMENSIONS SEE DASH 15 VALUES BELOW													
215	R	UNIVERSAL DSKY PEDESTAL MOUNT		2014014-011	NA	NAS-9-497	B	I	NOTE 11B	FOR DIMENSIONS SEE DASH 17 VALUES BELOW													
214	R	MAIN DSKY PEDESTAL MOUNT		2014343	NA	NAS-9-497	B	I	NOTE 11B	FOR DIMENSIONS SEE DASH 17 VALUES BELOW													
213	R	SHIPPING CONTAINER, MAIN DSKY		1006229	NA	NAS-9-497	B	II	NOTE 11C	FOR DIMENSIONS SEE DASH 18 VALUES BELOW													
212	R	SHIPPING CONTAINER, NAV DSKY		1006231	NA	NAS-9-497	B	II	NOTE 11C	FOR DIMENSIONS SEE DASH 18 VALUES BELOW													
211	R	SHIPPING CONTAINER, AGC		1006230	NA	NAS-9-497	B	II	NOTE 11C	FOR DIMENSIONS SEE DASH 18 VALUES BELOW													
210	R	SHIPPING CONTAINER, UNIVERSAL DSKY		1006422	NA	NAS-9-497	B	II	NOTE 11C	FOR DIMENSIONS SEE DASH 18 VALUES BELOW													
209	R	SHIPPING CONTAINER, AGC		1006421	NA	NAS-9-497	B	II	NOTE 11C	FOR DIMENSIONS SEE DASH 18 VALUES BELOW													
208	R	UNIVERSAL DSKY HANDLING FIXTURE		2014013-011	NA	NAS-9-497	B	I	NOTE 11B	FOR DIMENSIONS SEE DASH 15 VALUES BELOW													
207	R	NAV DSKY HANDLING FIXTURE		1014377	NA	NAS-9-497	B	I	NOTE 11B	FOR DIMENSIONS SEE DASH 17 VALUES BELOW													
206	R	MAIN DSKY HANDLING FIXTURE		1014334	NA	NAS-9-497	B	I	NOTE 11B	FOR DIMENSIONS SEE DASH 17 VALUES BELOW													
205	R	AGC HANDLING FIXTURE		2014282-011	NA	NAS-9-497	B	I	NOTE 11B	FOR DIMENSIONS SEE DASH 17 VALUES BELOW													
204	R	OPERATION CONSOLE		2014024-011	NA	NAS-9-497	B	II	NOTE 11C	FOR DIMENSIONS SEE DASH 18 VALUES BELOW													
203	R	COMPUTER TEST SET		2014042-011	NA	NAS-9-497	B	II	NOTE 11C	FOR DIMENSIONS SEE DASH 18 VALUES BELOW													
202	R	DRAWER ASSY, COMPUTER SIMULATOR		2014048-011	NA	FNP-12775	B	II	NOTE 11C	FOR DIMENSIONS SEE DASH 18 VALUES BELOW													
201	R	AUXILIARY CALIBRATION CONSOLE		2014059-011	NA	NAS-9-497	B	II	NOTE 11C	FOR DIMENSIONS SEE DASH 18 VALUES BELOW													
200	R	AGC CALIBRATION CONSOLE		2014049-011	NA	NAS-9-497	B	II	NOTE 11C	FOR DIMENSIONS SEE DASH 18 VALUES BELOW													
21	R																						
20	R	NA		NA	NA	NA	A	II	NOTE 11C	2.000	1.312	1.687	1.375	.078	.031	.078	.093	[illegible]	.093	1.187	.750	.593	.45
19	R	NA		NA	NA	NA	A	I	NOTE 11B	2.000	1.312	1.687	1.375	.078	.031	.078	.093	NA	NA	1.187	.750	.593	.45
18	R	NA		NA	NA	NA	B	II	NOTE 11C	4.187	1.875	3.469	2.750	.156	.093	.156	.125	[illegible]	.125	1.625	1.032	.844	.65
17	R	NA		NA	NA	NA	B	I	NOTE 11B	4.187	1.875	3.469	2.750	.156	.093	.156	.125	NA	NA	1.625	1.032	.844	.65
16	R	NA		NA	NA	NA	B	II	NOTE 11C	2.000	1.312	1.687	1.375	.078	.031	.078	.093	[illegible]	.093	1.187	.750	.593	.45
15	R	NA		NA	NA	NA	B	I	NOTE 11B	2.000	1.312	1.687	1.375	.078	.031	.078	.093	NA	NA	1.187	.750	.593	.45

NOTES FOR TABLE

STYLE A IS FOR G & N SYSTEM
STYLE B IS FOR GROUND SUPPORT EQUIPMENT
TYPE I IS WITHOUT MOUNTING HOLES
TYPE II IS WITH MOUNTING HOLES

1004260	CR	SHT 3

REVISIONS					
SYM	ZONE	DESCRIPTION	CHG NO	DATE	APPD
CL		REPLACES REV CK WITHOUT CHANGE PER TDRR 34365		9/28/67	JWL
CM		REVISION STATUS CHANGED		18 OCT 67	RAW
CN		REVISION STATUS CHANGED		31 OCT 67	JRK
CP		REVISION STATUS CHANGED		6 NOV 67	EMS
CR		REVISION STATUS CHANGED		7 DEC 67	RWH

F	G	H	J	K	L	M	N	P	R	S	T	U	V	W	Y	Z	AA	AB	AC	AD	AE	AF	AG	AH	AJ	AK	AL	AM	AN	AP	AR
[illegible]	.078	.093	[illegible]	.093	1.187	.750	.593	.453	1.015	.062	.187	.078	.875	.718	1.375	.218	1.156	1.843	.048	NA	.875	.305	.078	.312	1.687	.078	NA	.078	.312	.187	1.843
[illegible]	.078	.093	NA	NA	1.187	.750	.593	.453	1.015	.062	.187	.078	.875	.718	1.375	.218	NA	NA	.048	.031	.875	.305	.078	.312	1.687	.078	NA	.078	.312	.187	NA
[illegible]	.156	.125	[illegible]	.125	1.625	1.032	.844	.656	1.406	.093	.344	.156	1.781	1.531	2.844	.312	1.562	3.875	.062	NA	1.219	.500	.156	.719	3.469	.156	NA	.156	.719	.344	3.875
[illegible]	.156	.125	NA	NA	1.625	1.032	.844	.656	1.406	.093	.344	.156	1.781	1.531	2.844	.312	NA	NA	.062	.062	1.219	.500	.156	.719	3.469	.156	NA	.156	.719	.344	NA
[illegible]	.078	.093	[illegible]	.093	1.187	.750	.593	.453	1.015	.062	.187	.078	.875	.718	1.375	.218	1.156	1.843	.048	NA	.875	.305	.078	.312	1.687	.078	NA	.078	.312	.187	1.843
[illegible]	.078	.093	NA	NA	1.187	.750	.593	.453	1.015	.062	.187	.078	.875	.718	1.375	.218	NA	NA	.048	.031	.875	.305	.078	.312	1.687	.078	NA	.078	.312	.187	NA

RAYTHEON DASH NUMBERS

AS APPLICABLE	
NEXT ASSY	USED ON
APPLICATION	

UNLESS OTHERWISE SPECIFIED
DIMENSIONS ARE IN INCHES
TOLERANCES ON
2 PLACE DECIMALS ± 3 PLACE DECIMALS ± .005 ANGLES ± —
DO NOT SCALE THIS DRAWING
MATERIAL SEE NOTE H
APPROVAL

MIT INSTRUMENTATION LAB
Cambridge Mass
DRAWN R. A. JONES DATE 16 JUL 65
CHECKED
W. KUPFER 22 JUL 65 APPROVAL
CONTRACT
T. MICHAELS 22 JUL 65 NASA APPROVAL
W. KUPFER 22 JUL 65 MIT APPROVAL

MANNED SPACECRAFT CENTER
HOUSTON, TEXAS

NAMEPLATES, APOLLO GEN - GSE (STANDARDS)

SIZE J2 CODE IDENT NO 80230 1004260
SCALE NONE SHEET 3 OF 6

AC DASH NUMBERS CONTINUED ON SHEET 6

DASH NO.	P/C	PART NAME	REMARKS	PART NUMBER	SER. NO.	CONT. NO.	STYLE	TYPE	MATERIAL	A	B	C	D	E	F	G	H	J	K	L	M	N	P
199	AC	EYEPIECE STOWAGE UNIT		2021255-011			A	I		FOR DIMENSIONS SEE DASH 100 VALUES BELOW													
198	AC	SIGNAL CONDITIONER ASSY C/M		2007234		NAS-9-497	A	I	NOTE 11B	FOR DIMENSIONS SEE DASH 100 VALUES BELOW													
197	AC	SIGNAL CONDITIONER ASSY C/M		2007235		NAS-9-497	A	I	NOTE 11B	FOR DIMENSIONS SEE DASH 100 VALUES BELOW													
196	AC	SIGNAL CONDITIONER ASSY LEM		6007010		NAS-9-497	A	I	NOTE 11B	FOR DIMENSIONS SEE DASH 100 VALUES BELOW													
195	AC	PSA & SIGNAL CONDITIONER ASSY		6007009		NAS-9-497	A	I	NOTE 11B	FOR DIMENSIONS SEE DASH 100 VALUES BELOW													
194	AC	PANEL, MONITOR		2900031-031		NAS-9-497	B	II	NOTE 11C	FOR DIMENSIONS SEE DASH 141 VALUES BELOW													
193	AC	DISTRIBUTION BOX, GSE		2900024-031		NAS-9-497	B	II	NOTE 11C	FOR DIMENSIONS SEE DASH 141 VALUES BELOW													
192	AC	ANALYZER, OPTICS-INERTIAL		2900023-031		NAS-9-497	B	II	NOTE 11C	FOR DIMENSIONS SEE DASH 144 VALUES BELOW													
191	AC	TEST CONTROL		2900027-031		NAS-9-497	B	II	NOTE 11C	FOR DIMENSIONS SEE DASH 141 VALUES BELOW													
190	AC	PANEL, PWR SUP AND LOAD		2900033-021		NAS-9-497	B	II	NOTE 11C	FOR DIMENSIONS SEE DASH 141 VALUES BELOW													
189	AC	ADPT MODULE, P.S.A.		6900088-011		NAS-9-497	B	II	NOTE 11C	FOR DIMENSIONS SEE DASH 141 VALUES BELOW													
188	AC	ADPT MODULE, P.S.A.		2901143-011		NAS-9-497	B	II	NOTE 11C	FOR DIMENSIONS SEE DASH 141 VALUES BELOW													
187	AC	FIXTURE, MTG, PTA/PEA		2900066-021		NAS-9-497	B	II	NOTE 11C	FOR DIMENSIONS SEE DASH 141 VALUES BELOW													
186	AC	ANNUNCIATOR PANEL & EYEPIECE STORAGE ASSEMBLY		1021255-021			A	I		FOR DIMENSIONS SEE DASH 100 VALUES BELOW													
185	AC	ANNUNCIATOR PANEL & EYEPIECE STORAGE ASSEMBLY		1021255-011			A	I		FOR DIMENSIONS SEE DASH 100 VALUES BELOW													
184	AC	FIX., HAND., G AND N HARNESS		1901846-041		NAS-9-497	B	II	NOTE 11C	FOR DIMENSIONS SEE DASH 144 VALUES BELOW													
183	AC	INSTALLING TOOL, ELEC. CONN		1902586-011		NAS-9-497	B	II	NOTE 11C	FOR DIMENSIONS SEE DASH 102 VALUES BELOW													
182	AC	ADPT MODULE, P.S.A.		6900088-011		NAS-9-497	B	II	NOTE 11C	FOR DIMENSIONS SEE DASH 141 VALUES BELOW													
181	AC	G & N INDICATOR CONTROL PANEL ASSY		2014578-011		NAS-9-497	A	I	NOTE 11B	3.000	1.938	2.437	NA	.125	.062	.188	.156	NA	NA	1.750	1.125	.906	.688
180	AC	ADPT MODULE, P.S.A.		1902431-031		NAS-9-497	B	II		FOR DIMENSIONS SEE DASH 121 VALUES BELOW													
179	AC	MOUNTING PLATE, IMU/PTA		6900083-011		NAS-9-497	B	II		FOR DIMENSIONS SEE DASH 144 VALUES BELOW													
178	AC	MOUNTING PLATE, COMPONENT		6900007-021		NAS-9-497	B	II		FOR DIMENSIONS SEE DASH 144 VALUES BELOW													
177	AC	FIX., MOUNTING, SUBSYSTEM		2900070-021		NAS-9-497	B	II		FOR DIMENSIONS SEE DASH 144 VALUES BELOW													
176	AC	FIX., MOUNTING, G & N		2900067-021		NAS-9-497	B	II		FOR DIMENSIONS SEE DASH 144 VALUES BELOW													
175	AC	CSL, COOL. AND PWR, G & N		1902134-031		NAS-9-497	B	II		FOR DIMENSIONS SEE DASH 144 VALUES BELOW													
174	AC	FIX., HAND., C/M AND LEM CDU		2900999-011		NAS-9-497	B	II	NOTE 11C	FOR DIMENSIONS SEE DASH 141 VALUES BELOW													
173	AC	FIX., HANDLING, C/M PSA		2900998-011		NAS-9-497	B	II	NOTE 11C	FOR DIMENSIONS SEE DASH 141 VALUES BELOW													
172	AC	CAGING ELECTRONICS, GYRO		2900029-021		NAS-9-497	B	II	NOTE 11C	FOR DIMENSIONS SEE DASH 141 VALUES BELOW													
171	AC	DISTRIBUTION BOX, GSE		2900024-021		NAS-9-497	B	II	NOTE 11C	FOR DIMENSIONS SEE DASH 141 VALUES BELOW													
170	AC	ANALYZER, OPTICS-INERTIAL		2900023-021		NAS-9-497	B	II	NOTE 11C	FOR DIMENSIONS SEE DASH 144 VALUES BELOW													
169	AC	ADPT, TESTPOINT, P.S.A.		2900037-021		NAS-9-497	B	II	NOTE 11C	FOR DIMENSIONS SEE DASH 141 VALUES BELOW													
168	AC	TEST SELECTOR		2900028-021		NAS-9-497	B	II	NOTE 11C	FOR DIMENSIONS SEE DASH 141 VALUES BELOW													
167	AC	TEST CONTROL		2900027-021		NAS-9-497	B	II	NOTE 11C	FOR DIMENSIONS SEE DASH 141 VALUES BELOW													
166	AC	PANEL, MONITOR		2900031-021		NAS-9-497	B	II	NOTE 11C	FOR DIMENSIONS SEE DASH 141 VALUES BELOW													
165	AC	TERM. BOARD STORAGE DRAWER		2900927-011		NAS-9-497	B	II	NOTE 11C	FOR DIMENSIONS SEE DASH 141 VALUES BELOW													
164	AC	INPUT/OUTPUT PANEL		2900926-011		NAS-9-497	B	II	NOTE 11C	FOR DIMENSIONS SEE DASH 141 VALUES BELOW													
163	AC	CONTROL PANEL		2900896-011		NAS-9-497	B	II	NOTE 11C	FOR DIMENSIONS SEE DASH 141 VALUES BELOW													
162	AC	CSL, CAL AND TEST, SCM/PSAAM		2900895-011		NAS-9-497	B	II	NOTE 11C	FOR DIMENSIONS SEE DASH 144 VALUES BELOW													
161	AC	FIX., LIFT AND HAND., IMU		1015462-011		NAS-9-497	B	II	NOTE 11C	FOR DIMENSIONS SEE DASH 141 VALUES BELOW													
160	AC	FIX., HAND., G & N HARNESS		1901846-031		NAS-9-497	B	II	NOTE 11C	FOR DIMENSIONS SEE DASH 144 VALUES BELOW													
159	AC	BATTERY POWER PACK		1900011-031		NAS-9-497	B	II	NOTE 11C	FOR DIMENSIONS SEE DASH 144 VALUES BELOW													
158	AC	COUPLING DATA UNIT ASSEMBLY C/M		2007222		NAS-9-497	A	I	NOTE 11B	FOR DIMENSIONS SEE DASH 100 VALUES BELOW													
157	AC	COUPLING DATA UNIT ASSEMBLY - LEM		2007222		NAS-9-497	A	I	NOTE 11B	FOR DIMENSIONS SEE DASH 100 VALUES BELOW													
156	AC	POWER & SERVO ASSEMBLY C/M		2007200		NAS-9-497	A	I	NOTE 11B	2.125	.968	1.718	NA	.093	.031	.06	.093	NA	NA	.858	.608	.484	.358
155	AC	PIPA ELECTRONICS ASSEMBLY		2007201		NAS-9-497	A	I	NOTE 11B	FOR DIMENSIONS SEE DASH 100 VALUES BELOW													
154	AC	PULSE TORQUE ASSEMBLY-LEM		6007000		NAS-9-497	A	I	NOTE 11B	FOR DIMENSIONS SEE DASH 100 VALUES BELOW													
153	AC	POWER & SERVO ASSEMBLY-LEM		6007200		NAS-9-497	A	I	NOTE 11B	FOR DIMENSIONS SEE DASH 100 VALUES BELOW													
152	AC	CONT PNL, RSVR CKT TESTER		2900770-011		NAS-9 497	B	II	NOTE 11C	FOR DIMENSIONS SEE DASH 141 VALUES BELOW													
151	AC	TESTER, RESOLVER CIRCUIT		2900708-011		NAS-9-497	B	II	NOTE 11C	FOR DIMENSIONS SEE DASH 141 VALUES BELOW													
150	AC	JUNCTION BOX, P.S.A./G.S.E.		1901933-021		NAS-9-497	B	II	NOTE 11C	FOR DIMENSIONS SEE DASH 144 VALUES BELOW													
149	AC	BATTERY PACK, LIFTING		2900812-011		NAS-9-497	B	II	NOTE 11C	FOR DIMENSIONS SEE DASH 141 VALUES BELOW													
148	AC	MOUNTING PLATE, COMPONENT		6900007-011		NAS-9-497	B	II	NOTE 11C	FOR DIMENSIONS SEE DASH 144 VALUES BELOW													
147	AC	MOUNTING PLATE, COMPONENT		2900677-011		NAS-9-497	B	II	NOTE 11C	FOR DIMENSIONS SEE DASH 144 VALUES BELOW													
146	AC	CART, TRANS, G & N		1900009-041		NAS-9-497	B	II	NOTE 11C	FOR DIMENSIONS SEE DASH 144 VALUES BELOW													
145	AC	CONTAINER, SHIPPING, IMU		1900010-021		NAS-9-497	B	II	NOTE 11C	FOR DIMENSIONS SEE DASH 144 VALUES BELOW													
144	AC	FIX., MOUNTING, G & N		1902204-021			B	II	NOTE 11C	4.125	1.812	3.250	NA	.125	.062	.12	.156		.125	1.625	1.140	.891	.640
143	AC	CSL, COOL. AND PWR, G & N		1902134-021			B	II	NOTE 11C	4.125	1.812	3.250	NA	.125	.062	.12	.156		.125	1.625	1.140	.891	.640
142	AC	ANALYZER, OPTICS-INERTIAL		2900023-011			B	II	NOTE 11C	4.125	1.812	3.250	NA	.125	.062	.12	.156		.125	1.625	1.140	.891	.640
141	AC	CONT, TEMP, PORTABLE		2900060-011			B	II	NOTE 11C	2.125	.968	1.718	NA	.093	.031	.06	.093		.093	.858	.608	.484	.358
140	AC	TESTER, CKT, IMU/CDU RSVR		2900286-011			B	II	NOTE 11C	4.125	1.812	3.250	NA	.125	.062	.12	.156		.125	1.625	1.140	.891	.640
139	AC	SIMULATOR, LD/SIG, CDU		2900285-011			B	II	NOTE 11C	4.125	1.812	3.250	NA	.125	.062	.12	.156		.125	1.625	1.140	.891	.640
138	AC	SIMULATOR, LD/SIG, OPTICS		1902023-021			B	II	NOTE 11C	4.125	1.812	3.250	NA	.125	.062	.12	.156		.125	1.625	1.140	.891	.640
137	AC	FIX., MOUNTING, IMU/NAV BASE		6900003-011			B	II	NOTE 11C	4.125	1.812	3.250	NA	.125	.062	.12	.156		.125	1.625	1.140	.891	.640
136	AC	FIXTURE, OPTICS/NAV BASE		2900072-011			B	II	NOTE 11C	4.125	1.812	3.250	NA	.125	.062	.12	.156		.125	1.625	1.140	.891	.640
135	AC	FIX., MOUNTING, SUB SYSTEM		2900070-011			B	II	NOTE 11C	4.125	1.812	3.250	NA	.125	.062	.12	.156		.125	1.625	1.140	.891	.640
134	AC	FIX., HAND., G & N HARNESS		2900069-011			B	II	NOTE 11C	4.125	1.812	3.250	NA	.125	.062	.12	.156		.125	1.625	1.140	.891	.640
133	AC	CNTR, SHIPPING, NAV BASE		2900068-011			B	II	NOTE 11C	4.125	1.812	3.250	NA	.125	.062	.12	.156		.125	1.625	1.140	.891	.640
132	AC	FIX., MOUNTING, G & N		2900067-011			B	II	NOTE 11C	4.125	1.812	3.250	NA	.125	.062	.12	.156		.125	1.625	1.140	.891	.640
131	AC	SIMULATOR, LD/SIG, IMU/CDU		2900062-011			B	II	NOTE 11C	4.125	1.812	3.250	NA	.125	.062	.12	.156		.125	1.625	1.140	.891	.640
130	AC	TESTER, GYRO WHEEL		2900061-011			B	II	NOTE 11C	4.125	1.812	3.250	NA	.125	.062	.12	.156		.125	1.625	1.140	.891	.640
129	AC	COOLANT SUPPLY		1902133-021			B	II	NOTE 11C	4.125	1.812	3.250	NA	.125	.062	.12	.156		.125	1.625	1.140	.891	.640
128	AC	TABLE, ROTARY		1900926-021			B	II	NOTE 11C	4.125	1.812	3.250	NA	.125	.062	.12	.156		.125	1.625	1.140	.891	.640
127	AC	FIX., HAND., OPTICS		2900074-011			B	II	NOTE 11C	2.125	.968	1.718	NA	.093	.031	.06	.093		.093	.858	.608	.484	.358
126	AC	FIXTURE, MTG, PTA/PEA.		2900066-011			B	II	NOTE 11C	2.125	.968	1.718	NA	.093	.031	.06	.093		.093	.858	.608	.484	.358
125	AC	CONT, TEMP, IMU LIFTING		2900063-011			B	II	NOTE 11C	2.125	.968	1.718	NA	.093	.031	.06	.093		.093	.858	.608	.484	.358
124	AC	FIXTURE, HANDLING, IMU		2900064-011			B	II	NOTE 11C	2.125	.968	1.718	NA	.093	.031	.06	.093		.093	.858	.608	.484	.358
123	AC	CONT, OPTICS, REMOTE		1902046-021			B	II	NOTE 11C	2.125	.968	1.718	NA	.093	.031	.06	.093		.093	.858	.608	.484	.358
122	AC	TEST CONTROL		1902009-021			B	II	NOTE 11C	2.125	.968	1.718	NA	.093	.031	.06	.093		.093	.858	.608	.484	.358
121	AC	ADPT MODULE, P.S.A.		1902431-021			B	II	NOTE 11C	2.125	.968	1.718	NA	.093	.031	.06	.093		.093	.858	.608	.484	.358
120	AC	BRIDGE, DECADE ERROR		2900128-011			B	II	NOTE 11C	2.125	.968	1.718	NA	.093	.031	.06	.093		.093	.858	.608	.484	.358
119	AC	PWR SUP, ELECTRONICS		2900012-011			B	II	NOTE 11C	2.125	.968	1.718	NA	.093	.031	.06	.093		.093	.858	.608	.484	.358
118	AC	PWR SUP, RELAY AND LAMP		1900049-031			B	II	NOTE 11C	2.125	.968	1.718	NA	.093	.031	.06	.093		.093	.858	.608	.484	.358
117	AC	CONSOLE, OSCILLOGRAPH		1900000-021			B	II	NOTE 11C	2.125	.968	1.718	NA	.093	.031	.06	.093		.093	.858	.608	.484	.358
116	AC	ADPT MODULE, P.S.A.		1902431-011			B	II	NOTE 11C	2.125	.968	1.718	NA	.093	.031	.06	.093		.093	.858	.608	.484	.358
115	AC	ADPT, TEST POINT, PTA/PEA.		2900145-011			B	II	NOTE 11C	2.125	.968	1.718	NA	.093	.031	.06	.093		.093	.858	.608	.484	.358
114	AC	ADPT, TEST POINT, P.S.A.		2900037-011			B	II	NOTE 11C	2.125	.968	1.718	NA	.093	.031	.06	.093		.093	.858	.608	.484	.358
113	AC	CONTROL, GIMBAL POSITION		2900036-011			B	II	NOTE 11C	2.125	.968	1.718	NA	.093	.031	.06	.093		.093	.858	.608	.484	.358
112	AC	SELECTOR, SIGNAL, PRIMARY		2900035-011			B	II	NOTE 11C	2.125	.968	1.718	NA	.093	.031	.06	.093		.093	.858	.608	.484	.358
111	AC	SEL, SIG, OSCILLOGRAPH		2900034-011			B	II	NOTE 11C	2.125	.968	1.718	NA	.093	.031	.06	.093		.093	.858	.608	.484	.358
110	AC	PANEL, PWR SUP AND LOAD		2900033-011			B	II	NOTE 11C	2.125	.968	1.718	NA	.093	.031	.06	.093		.093	.858	.608	.484	.358
109	AC	PANEL, MONITOR		2900031-011			B	II	NOTE 11C	2.125	.968	1.718	NA	.093	.031	.06	.093		.093	.858	.608	.484	.358
108	AC	PANEL, AUXILIARY INPUT		2900030-011			B	II	NOTE 11C	2.125	.968	1.718	NA	.093	.031	.06	.093		.093	.858	.608	.484	.358
107	AC	CAGING ELECTRONICS, GYRO		2900029-011			B	II	NOTE 11C	2.125	.968	1.718	NA	.093	.031	.06	.093		.093	.858	.608	.484	.358
106	AC	TEST SELECTOR		2900028-011			B	II	NOTE 11C	2.125	.968	1.718	NA	.093	.031	.06	.093		.093	.858	.608	.484	.358
105	AC	TEST CONTROL		2900027-011			B	II	NOTE 11C	2.125	.968	1.718	NA	.093	.031	.06	.093		.093	.858	.608	.484	.358
104	AC	MONITOR AND CONTROL, TEMP		2900026-011			B	II	NOTE 11C	2.125	.968	1.718	NA	.093	.031	.06	.093		.093	.858	.608	.484	.358
103	AC	DISTRIBUTION BOX, GSE		2900024-011			B	II	NOTE 11C	2.125	.968	1.718	NA	.093	.031	.06	.093		.093	.858	.608	.484	.358
102	AC	VOLTMETER, DIGITAL		2900007-011			B	II	NOTE 11C	2.125	.968	1.718	NA	.093	.031	.06	.093		.093	.858	.608	.484	.358
101	AC	NAVIGATION BASE ASSEMBLY-LEM		6899950		NAS-9-497	A	I	NOTE 11B	2.000	1.312	1.906	1.375	.078	.048	.078	.093	NA	NA	1.125	.750	.591	.453
100	AC	NAVIGATION BASE ASSEMBLY		2899982		NAS-9-497	A	I	NOTE 11B	2.000	1.312	1.906	1.375	.078	.048	.078	.093	NA	NA	1.125	.750	.593	.453

NOTES FOR TABLE

STYLE A IS FOR G & N SYSTEM
STYLE B IS FOR GROUND SUPPORT EQUIPMENT
TYPE I IS WITHOUT MOUNTING HOLES
TYPE II IS WITH MOUNTING HOLES

1004260	CR	SHT 4

1-41004260

SYM	ZONE	REVISIONS DESCRIPTION	CHG NO	DATE	APPD
CL		REPLACES REV CK WITHOUT CHANGE PER TDRR 34361			
CM		REVISION STATUS CHANGED		18 OCT 67	
CN		REVISION STATUS CHANGE		3 OCT 67	
CP		REVISION STATUS CHANGE		6 NOV 67	
CR		REVISION STATUS CHANGED			

E	F	G	H	J	K	L	M	N	P	R	S	T	U	V	W	Y	Z	AA	AB	AC	AD	AE	AF	AG	AH	AJ	AK	AL	AM	AN	AP	AR
100 VALUES BELOW																																
100 VALUES BELOW																																
100 VALUES BELOW																																
100 VALUES BELOW																																
100 VALUES BELOW																																
141 VALUES BELOW																																
141 VALUES BELOW																																
144 VALUES BELOW																																
141 VALUES BELOW																																
141 VALUES BELOW																																
141 VALUES BELOW																																
141 VALUES BELOW																																
141 VALUES BELOW																																
100 VALUES BELOW																																
100 VALUES BELOW																																
144 VALUES BELOW																																
102 VALUES BELOW																																
141 VALUES BELOW																																
125	.062	.188	.156	NA	NA	1.750	1.125	.906	.688	1.500	NA	.281	.125	NA	1.094	2.062	.312	NA	2.500	.062	.125	1.312	.469	NA	NA	NA	.156	NA	.125	.469	.344	NA
121 VALUES BELOW																																
144 VALUES BELOW																																
144 VALUES BELOW																																
144 VALUES BELOW																																
144 VALUES BELOW																																
144 VALUES BELOW																																
141 VALUES BELOW																																
141 VALUES BELOW																																
141 VALUES BELOW																																
141 VALUES BELOW																																
144 VALUES BELOW																																
141 VALUES BELOW																																
141 VALUES BELOW																																
141 VALUES BELOW																																
141 VALUES BELOW																																
141 VALUES BELOW																																
141 VALUES BELOW																																
141 VALUES BELOW																																
144 VALUES BELOW																																
141 VALUES BELOW																																
144 VALUES BELOW																																
144 VALUES BELOW																																
100 VALUES BELOW																																
100 VALUES BELOW																																
093	.031	.06	.093	NA	NA	.858	.608	.484	.358	.733	.062	.140	.062	NA	.968	1.450	.125	NA	1.720	.046	.03	NA	.210	NA	NA	NA	.070	NA	.046	.32	.16	NA
100 VALUES BELOW																																
100 VALUES BELOW																																
100 VALUES BELOW																																
141 VALUES BELOW																																
141 VALUES BELOW																																
144 VALUES BELOW																																
141 VALUES BELOW																																
144 VALUES BELOW																																
144 VALUES BELOW																																
144 VALUES BELOW																																
144 VALUES BELOW																																
125	.062	.12	.156	NA	.125	1.625	1.140	.890	.640	1.390	.125	.171	.125	1.875	1.687	2.625	.250	1.562	3.843	.093	NA	NA	.359	.125	.437	3.688	NA	3.687	.093	.40	.25	3.875
125	.062	.12	.156		.125	1.625	1.140	.890	.640	1.390	.125	.171	.125	1.875	1.687	2.625	.250	1.562	3.843	.093	NA	NA	.359	.125	.437	3.688	NA	3.687	.093	.40	.25	3.875
125	.062	.12	.156		.125	1.625	1.140	.890	.640	1.390	.125	.171	.125	1.875	1.687	2.625	.250	1.562	3.843	.093	NA	NA	.359	.125	.437	3.688	NA	3.687	.093	.40	.25	3.875
093	.031	.06	.093		.093	.858	.608	.484	.358	.733	.077	.116	.062	.937	.875	1.343	.125	.781	1.892	.046	NA	NA	.209	.093	.250	1.875	NA	1.840	.046	.23	.16	1.938
125	.062	.12	.156		.125	1.625	1.140	.890	.640	1.390	.125	.171	.125	1.875	1.687	2.625	.250	1.562	3.843	.093	NA	NA	.359	.125	.437	3.688	NA	3.687	.093	.40	.25	3.875
125	.062	.12	.156		.125	1.625	1.140	.890	.640	1.390	.125	.171	.125	1.875	1.687	2.625	.250	1.562	3.843	.093	NA	NA	.359	.125	.437	3.688	NA	3.687	.093	.40	.25	3.875
125	.062	.12	.156		.125	1.625	1.140	.890	.640	1.390	.125	.171	.125	1.875	1.687	2.625	.250	1.562	3.843	.093	NA	NA	.359	.125	.437	3.688	NA	3.687	.093	.40	.25	3.875
125	.062	.12	.156		.125	1.625	1.140	.890	.640	1.390	.125	.171	.125	1.875	1.687	2.625	.250	1.562	3.843	.093	NA	NA	.359	.125	.437	3.688	NA	3.687	.093	.40	.25	3.875
125	.062	.12	.156		.125	1.625	1.140	.890	.640	1.390	.125	.171	.125	1.875	1.687	2.625	.250	1.562	3.843	.093	NA	NA	.359	.125	.437	3.688	NA	3.687	.093	.40	.25	3.875
125	.062	.12	.156		.125	1.625	1.140	.890	.640	1.390	.125	.171	.125	1.875	1.687	2.625	.250	1.562	3.843	.093	NA	NA	.359	.125	.437	3.688	NA	3.687	.093	.40	.25	3.875
125	.062	.12	.156		.125	1.625	1.140	.890	.640	1.390	.125	.171	.125	1.875	1.687	2.625	.250	1.562	3.843	.093	NA	NA	.359	.125	.437	3.688	NA	3.687	.093	.40	.25	3.875
125	.062	.12	.156		.125	1.625	1.140	.890	.640	1.390	.125	.171	.125	1.875	1.687	2.625	.250	1.562	3.843	.093	NA	NA	.359	.125	.437	3.688	NA	3.687	.093	.40	.25	3.875
125	.062	.12	.156		.125	1.625	1.140	.890	.640	1.390	.125	.171	.125	1.875	1.687	2.625	.250	1.562	3.843	.093	NA	NA	.359	.125	.437	3.688	NA	3.687	.093	.40	.25	3.875
125	.062	.12	.156		.125	1.625	1.140	.890	.640	1.390	.125	.171	.125	1.875	1.687	2.625	.250	1.562	3.843	.093	NA	NA	.359	.125	.437	3.688	NA	3.687	.093	.40	.25	3.875
125	.062	.12	.156		.125	1.625	1.140	.890	.640	1.390	.125	.171	.125	1.875	1.687	2.625	.250	1.562	3.843	.093	NA	NA	.359	.125	.437	3.688	NA	3.687	.093	.40	.25	3.875
125	.062	.12	.156		.125	1.625	1.140	.890	.640	1.390	.125	.171	.125	1.875	1.687	2.625	.250	1.562	3.843	.093	NA	NA	.359	.125	.437	3.688	NA	3.687	.093	.40	.25	3.875
125	.062	.12	.156		.125	1.625	1.140	.890	.640	1.390	.125	.171	.125	1.875	1.687	2.625	.250	1.562	3.843	.093	NA	NA	.359	.125	.437	3.688	NA	3.687	.093	.40	.25	3.875
093	.031	.06	.093		.093	.858	.608	.484	.358	.733	.077	.116	.062	.937	.875	1.343	.125	.781	1.892	.046	NA	NA	.209	.093	.250	1.875	NA	1.840	.046	.23	.16	1.938
093	.031	.06	.093		.093	.858	.608	.484	.358	.733	.077	.116	.062	.937	.875	1.343	.125	.781	1.892	.046	NA	NA	.209	.093	.250	1.875	NA	1.840	.046	.23	.16	1.938
093	.031	.06	.093		.093	.858	.608	.484	.358	.733	.077	.116	.062	.937	.875	1.343	.125	.781	1.892	.046	NA	NA	.209	.093	.250	1.875	NA	1.840	.046	.23	.16	1.938
093	.031	.06	.093		.093	.858	.608	.484	.358	.733	.077	.116	.062	.937	.875	1.343	.125	.781	1.892	.046	NA	NA	.209	.093	.250	1.875	NA	1.840	.046	.23	.16	1.938
093	.031	.06	.093		.093	.858	.608	.484	.358	.733	.077	.116	.062	.937	.875	1.343	.125	.781	1.892	.046	NA	NA	.209	.093	.250	1.875	NA	1.840	.046	.23	.16	1.938
093	.031	.06	.093		.093	.858	.608	.484	.358	.733	.077	.116	.062	.937	.875	1.343	.125	.781	1.892	.046	NA	NA	.209	.093	.250	1.875	NA	1.840	.046	.23	.16	1.938
093	.031	.06	.093		.093	.858	.608	.484	.358	.733	.077	.116	.062	.937	.875	1.343	.125	.781	1.892	.046	NA	NA	.209	.093	.250	1.875	NA	1.840	.046	.23	.16	1.938
093	.031	.06	.093		.093	.858	.608	.484	.358	.733	.077	.116	.062	.937	.875	1.343	.125	.781	1.892	.046	NA	NA	.209	.093	.250	1.875	NA	1.840	.046	.23	.16	1.938
093	.031	.06	.093		.093	.858	.608	.484	.358	.733	.077	.116	.062	.937	.875	1.343	.125	.781	1.892	.046	NA	NA	.209	.093	.250	1.875	NA	1.840	.046	.23	.16	1.938
093	.031	.06	.093		.093	.858	.608	.484	.358	.733	.077	.116	.062	.937	.875	1.343	.125	.781	1.892	.046	NA	NA	.209	.093	.250	1.875	NA	1.840	.046	.23	.16	1.938
093	.031	.06	.093		.093	.858	.608	.484	.358	.733	.077	.116	.062	.937	.875	1.343	.125	.781	1.892	.046	NA	NA	.209	.093	.250	1.875	NA	1.840	.046	.23	.16	1.938
093	.031	.06	.093		.093	.858	.608	.484	.358	.733	.077	.116	.062	.937	.875	1.343	.125	.781	1.892	.046	NA	NA	.209	.093	.250	1.875	NA	1.840	.046	.23	.16	1.938
093	.031	.06	.093		.093	.858	.608	.484	.358	.733	.077	.116	.062	.937	.875	1.343	.125	.781	1.892	.046	NA	NA	.209	.093	.250	1.875	NA	1.840	.046	.23	.16	1.938
093	.031	.06	.093		.093	.858	.608	.484	.358	.733	.077	.116	.062	.937	.875	1.343	.125	.781	1.892	.046	NA	NA	.209	.093	.250	1.875	NA	1.840	.046	.23	.16	1.938
093	.031	.06	.093		.093	.858	.608	.484	.358	.733	.077	.116	.062	.937	.875	1.343	.125	.781	1.892	.046	NA	NA	.209	.093	.250	1.875	NA	1.840	.046	.23	.16	1.938
093	.031	.06	.093		.093	.858	.608	.484	.358	.733	.077	.116	.062	.937	.875	1.343	.125	.781	1.892	.046	NA	NA	.209	.093	.250	1.875	NA	1.840	.046	.23	.16	1.938
093	.031	.06	.093		.093	.858	.608	.484	.358	.733	.077	.116	.062	.937	.875	1.343	.125	.781	1.892	.046	NA	NA	.209	.093	.250	1.875	NA	1.840	.046	.23	.16	1.938
093	.031	.06	.093		.093	.858	.608	.484	.358	.733	.077	.116	.062	.937	.875	1.343	.125	.781	1.892	.046	NA	NA	.209	.093	.250	1.875	NA	1.840	.046	.23	.16	1.938
093	.031	.06	.093		.093	.858	.608	.484	.358	.733	.077	.116	.062	.937	.875	1.343	.125	.781	1.892	.046	NA	NA	.209	.093	.250	1.875	NA	1.840	.046	.23	.16	1.938
093	.031	.06	.093		.093	.858	.608	.484	.358	.733	.077	.116	.062	.937	.875	1.343	.125	.781	1.892	.046	NA	NA	.209	.093	.250	1.875	NA	1.840	.046	.23	.16	1.938
093	.031	.06	.093		.093	.858	.608	.484	.358	.733	.077	.116	.062	.937	.875	1.343	.125	.781	1.892	.046	NA	NA	.209	.093	.250	1.875	NA	1.840	.046	.23	.16	1.938
093	.031	.06	.093		.093	.858	.608	.484	.358	.733	.077	.116	.062	.937	.875	1.343	.125	.781	1.892	.046	NA	NA	.209	.093	.250	1.875	NA	1.840	.046	.23	.16	1.938
093	.031	.06	.093		.093	.858	.608	.484	.358	.733	.077	.116	.062	.937	.875	1.343	.125	.781	1.892	.046	NA	NA	.209	.093	.250	1.875	NA	1.840	.046	.23	.16	1.938
093	.031	.06	.093		.093	.858	.608	.484	.358	.733	.077	.116	.062	.937	.875	1.343	.125	.781	1.892	.046	NA	NA	.209	.093	.250	1.875	NA	1.840	.046	.23	.16	1.938
093	.031	.06	.093		.093	.858	.608	.484	.358	.733	.077	.116	.062	.937	.875	1.343	.125	.781	1.892	.046	NA	NA	.209	.093	.250	1.875	NA	1.840	.046	.23	.16	1.938
093	.031	.06	.093		.093	.858	.608	.484	.358	.733	.077	.116	.062	.937	.875	1.343	.125	.781	1.892	.046	NA	NA	.209	.093	.250	1.875	NA	1.840	.046	.23	.16	1.938
093	.031	.06	.093	NA	.093	.858	.608	.484	.358	.733	.077	.116	.062	.937	.875	1.343	.125	.781	1.892	.046	NA	NA	.209	.093	.250	1.875	NA	1.840	.046	.23	.16	1.938
078	.048	.078	.093	NA	NA	1.125	.750	.593	.453	1.015	.062	.187	.078	.875	.718	1.375	.218	NA	NA	.048	.031	.875	.305	.078	.531	1.906	.078	NA	.078	.531	.187	NA
078	.048	.078	.093	NA	NA	1.125	.750	.593	.453	1.015	.062	.187	.078	.875	.718	1.375	.218	NA	NA	.048	.031	.875	.305	.078	.531	1.906	.078	NA	.078	.531	.187	NA

AC ELECTRONICS DASH NUMBERS

UNLESS OTHERWISE SPECIFIED DIMENSIONS ARE IN INCHES
TOLERANCES ON
2 PLACE DECIMALS ± | 3 PLACE DECIMALS ± .005 | ANGLES ±
DO NOT SCALE THIS DRAWING
MATERIAL SEE NOTE H

NEXT ASSY	USED ON
AS APPLICABLE	
APPLICATION	

M I T INSTRUMENTATION LAB
CAMBRIDGE, MASS
DRAWN R. A. JONES 15 JUL 65
CHECKED W. RUFFER 22 JUL 65
APPROVAL
CONTRACT
T. MICHAELS 22 JUL 65
NASA APPROVAL
W. RUFFER 22 JUL 65
MIT APPROVAL

MANNED SPACECRAFT CENTER
HOUSTON, TEXAS

NAMEPLATES, APOLLO GEN - GSE (STANDARDS)

SIZE J2 | CODE IDENT NO 80230 | 1004260
SCALE NONE | SHEET 4 OF 6

1004260 CP SHT 4

[illegible]

DASH NO.	%c	PART NAME	REMARKS	PART NUMBER	SER. NO.	CONT. NO.	STYLE	TYPE	MATERIAL	A	B	C	D	E	F	G	H	J	K	L	M	N
401	MIT	COMPUTER ASSY		2003100		NAS-9-497	A	I	NOTE 11B	2.000	1.312	1.906	1.375	.078	.048	.078	.093	NA	NA	1.125	.750	.593
400	MIT	LIFTING SLING-G&N INST,QUAL,FIX, & AZM,REF,FIX,		1021640		NAS-9-4065	B	II	NOTE 11C	2.000	1.312	1.687	1.375	.078	.048	.078	.093	[illegible]	.093	1.187	.750	.593

NOTES FOR TABLE

STYLE A IS FOR G & N SYSTEM
STYLE B IS FOR GROUND SUPPORT EQUIPMENT
TYPE I IS WITHOUT MOUNTING HOLES
TYPE II IS WITH MOUNTING HOLES

1004260	CR	SHT 5

REVISIONS					
SYM	ZONE	DESCRIPTION	CHG NO	DATE	APPD
CL		REPLACES REV CK WITHOUT CHANGE PER TDRR 34365		9/20/67	JWL RWH
CM		REVISION STATUS CHANGED		8 OCT 67	R.A.W.
CN		REVISION STATUS CHANGED		5 OCT 67	JRK
CP		REVISION STATUS CHANGED		6 NOV 67	DWS
CR		REVISION STATUS CHANGED		7 DEC 67	RWH

.078	.048	.078	.093	NA	NA	1.125	.750	.593	.453	1.015	.062	.187	.078	.875	.718	1.375	.218	NA	NA	.048	.031	.875	.305	.078	.531	1.906	.078	NA	.078	.531	.187	NA
.078	.048	.078	.093	.187	.093	1.187	.750	.593	.453	1.015	.062	.187	.078	.875	.718	1.375	.218	1.156	1.843	.048	NA	.875	.305	.078	.312	1.687	.110	1.830	.070	.275	.180	1.844
E	F	G	H	J	K	L	M	N	P	R	S	T	U	V	W	Y	Z	AA	AB	AC	AD	AE	AF	AG	AH	AJ	AK	AL	AM	AN	AP	AR

1004260 CR

1004260

MIT DASH NUMBERS

	UNLESS OTHERWISE SPECIFIED DIMENSIONS ARE IN INCHES TOLERANCES ON 2 PLACE DECIMALS ± 3 PLACE DECIMALS ± .005 ANGLES ±	MIT INSTRUMENTATION LAB CAMBRIDGE MASS	MANNED SPACECRAFT CENTER HOUSTON, TEXAS	
		DRAWN R. A. JONES DATE 16 JUL 65	NAMEPLATES, APOLLO GEN - GSE (STANDARDS)	
		CHECKED W. KUPFER 22 JUL 65 APPROVAL		
	DO NOT SCALE THIS DRAWING	CONTRACT		
AS APPLICABLE	MATERIAL SEE NOTE H	T. MICHAELS 22 JUL 65 NASA APPROVAL	SIZE J2	CODE IDENT NO. 80230	1004260
NEXT ASSY / USED ON		W. KUPFER 22 JUL 65 MIT APPROVAL	SCALE NONE	SHEET 5 OF 6
APPLICATION	APPROVAL			

1004260 CF SHT 5

2/1004260

[illegible]

DASH NO.	P/C	PART NAME	REMARKS	PART NUMBER	SER. NO.	CONT. NO.	STYLE	TYPE	MATERIAL	A	B	C	D	E	F	G	H	J	K	L	M	P
599	AC																					
598	AC																					
574		CONT. TEMP PORTABLE		2900060-031		NAS-9-497	B	II	NOTE 11C	FOR DIMENSIONS SEE DASH 535 VALUES												
573		BATTERY PACK LIFTING		2900812-031		NAS-9-497	B	II	NOTE 11C	FOR DIMENSIONS SEE DASH 542 VALUES												
572		FIX., MOUNTING G&N	(-144)	2900067-051		NAS-9-497	B	II	NOTE 11C	FOR DIMENSIONS SEE DASH 500 VALUES												
570	AC	OPTICAL UNIT & BELLOWS ASSY				NAS 9 497	A	I	NOTE 11B	FOR DIMENSIONS SEE DASH 550 VALUES												
569	AC	G & N INDICATOR CONTROL PANEL ASSY		2021323-011		NAS-9-497	A	I	NOTE 11B	FOR DIMENSIONS SEE DASH 181												
568	AC	G & N INDICATOR CONTROL PANEL ASSY		2021290-021		NAS-9-497	A	I	NOTE 11B	FOR DIMENSIONS SEE DASH 181												
567	AC	G & N INDICATOR CONTROL PANEL ASSY		2021290-011		NAS-9-497	A	I	NOTE 11B	FOR DIMENSIONS SEE DASH 181												
566	AC	COMPUTER CONT & RETICLE DIMMER		6014512-061		NAS-9-497	A	I	NOTE 11B	FOR DIMENSIONS SEE DASH 534												
565		AUXILIARY BATTERY PACK		1901492-031		NAS-9-497	B	II	NOTE 11C	FOR DIMENSIONS SEE DASH 500												
564		BATTERY POWER PACK		1900011-051		NAS-9-497	B	II	NOTE 11C	FOR DIMENSIONS SEE DASH 500												
563		PSA ADAPTER MODULE (LEM)		6900088-031		NAS-9-497	B	II	NOTE 11C	FOR DIMENSIONS SEE DASH 141 VALUES												
562	AC	COMPUTER CONT & RETICLE DIMMER		6014512-041		NAS-9-497	A	I	NOTE 11B	FOR DIMENSIONS SEE DASH 534 VALUES												
561	AC	G & N INDICATOR CONTROL PANEL ASSY		2014578-031		NAS-9-497	A	I	NOTE 11B	FOR DIMENSIONS SEE DASH 181 VALUES												
560		ADPT. MODULE, PSA		2901143-021		NAS-9-497	B	II	NOTE 11C	FOR DIMENSIONS SEE DASH 141 VALUES												
559		CSL. CAL AND TEST. SCM/PSAAM		2900895-031		FOR OTHER DATA SEE DASH 547																
558		PSA ADAPTER MODULE (LEM)		6900088-021		FOR OTHER DATA SEE DASH 189																
557		FIX., HANDLING, C/M PSA		2900398-021		NAS 9 497	B	II	NOTE 11C	FOR DIMENSIONS SEE DASH 141 VALUES												
556		FIX., MOUNTING G & N	(-144)	2900067-041		NAS-9-497	B	II	NOTE 11C	FOR DIMENSIONS SEE DASH 500 VALUES												
555	AC	OPTICAL UNIT ASSEMBLY		1021368-061		NAS-9-497	A	I	NOTE 11B	2.000	1.312	1.687	1.375	.078	.048	.078	.093	NA	NA	1.125	.750	[illegible]
554	AC	OPTICAL UNIT ASSEMBLY		1021368-041		NAS-9-497	A	I	NOTE 11B	2.000	1.312	1.687	1.375	.078	.048	.078	.093	NA	NA	1.125	.750	[illegible]
553	AC	OPTICAL UNIT AND BELLOWS ASSEMBLY		2010790-111		NAS-9-497	A	I	NOTE 11B	2.000	1.312	1.687	1.375	.078	.048	.078	.093	NA	NA	1.125	.750	[illegible]
552	AC	OPTICAL UNIT AND BELLOWS ASSEMBLY		2010790-081		NAS-9-497	A	I	NOTE 11B	2.000	1.312	1.687	1.375	.078	.048	.078	.093	NA	NA	1.125	.750	[illegible]
551	AC	OPTICAL UNIT AND BELLOWS ASSEMBLY		2010790-071		NAS-9-497	A	I	NOTE 11B	2.000	1.312	1.687	1.375	.078	.048	.078	.093	NA	NA	1.125	.750	[illegible]
550	AC	OPTICAL UNIT AND BELLOWS ASSEMBLY		2010790-061		NAS-9-497	A	I	NOTE 11B	2.000	1.312	1.687	1.375	.078	.048	.078	.093	NA	NA	1.125	.750	[illegible]
548		CAGING ELECTRONICS, GYRO		2900029-031		NAS-9-497	B	II	NOTE 11C	2.125	.968	1.718	NA	.093	.031	.06	.093		.093	.858	.608	[illegible]
547		CSL, CAL AND TEST, SCM/PSAAM		2900895-021		NAS-9-497	B	II	NOTE 11C	4.125	1.812	3.250	NA	.125	.062	.12	.156		.125	1.625	1.140	[illegible]
546		FIX., HAND., C/M AND LEM CDU		2900999-021		NAS-9-497	B	II	NOTE 11C	2.125	.968	1.718	NA	.093	.031	.06	.093		.093	.858	.608	[illegible]
545	AC	G & N INDICATOR CONTROL PANEL ASSY		2014578-021		NAS 9-497	A	I	NOTE 11B	3.000	1.938	2.437	NA	.125	.062	.188	.156	NA	NA	1.750	1.125	[illegible]
544		ADPT MODULE, P.S.A.		1902431-051		NAS-9-497	B	II	NOTE 11C	2.125	.968	1.718	NA	.093	.031	.06	.093		.093	.858	.608	[illegible]
543	AC	PANEL, MONITOR		2900031-041		NAS-9-497	B	II	NOTE 11C	2.125	.968	1.718	NA	.093	.031	.06	.093		.093	.858	.608	[illegible]
542	AC	BATTERY PACK, LIFTING		2900812-021		NAS-9-497	B	II	NOTE 11C	2.125	.968	1.718	NA	.093	.031	.06	.093		.093	.858	.608	[illegible]
541	AC	FIXTURE, MOUNTING, IMU		2900000-021		NAS-9-497	B	II	NOTE 11C	4.125	1.812	3.250	NA	.125	.062	.12	.156		.125	1.625	1.140	[illegible]
540	AC	ADPT, TEST POINT, P.S.A.		2900037-031		NAS-9-497	B	II	NOTE 11C	2.125	.968	1.718	NA	.093	.031	.06	.093		.093	.858	.608	[illegible]
539	AC	ANNUNCIATOR PANEL & EYEPIECE STORAGE ASSEMBLY		1021255-041		NAS-9-497	A	I	NOTE 11B	2.000	1.312	1.906	1.375	.078	.048	.078	.093	NA	NA	1.125	.750	[illegible]
538	AC	ANNUNCIATOR PANEL & EYEPIECE STORAGE ASSEMBLY		1021255-031		NAS-9-497	A	I	NOTE 11B	2.000	1.312	1.906	1.375	.078	.048	.078	.093	NA	NA	1.125	.750	[illegible]
537	AC	TEST SELECTOR		2900028-031		NAS-9-497	B	II	NOTE 11C	2.125	.968	1.718	NA	.093	.031	.06	.093		.093	.858	.608	[illegible]
536	AC	ANALYZER, OPTICS-INERTIAL		2900023-041		NAS-9-497	B	II	NOTE 11C	4.125	1.812	3.250	NA	.125	.062	.12	.156		.125	1.625	1.140	[illegible]
535	AC	CONT, TEMP, PORTABLE		2900060-021		NAS-9-497	B	II	NOTE 11C	2.125	.968	1.718	NA	.093	.031	.06	.093		.093	.858	.608	[illegible]
534	AC	COMPUTER CONT & RETICLE DIMMER		6014512-021		NAS-9-497	A	I	NOTE 11B	2.000	1.312	1.906	1.375	.078	.048	.078	.093	NA	NA	1.125	.750	[illegible]
533	AC	ADPT MODULE, P.S.A.		1902431-041		NAS-9-497	B	II	NOTE 11C	2.125	.968	1.718	NA	.093	.031	.06	.093		.093	.858	.608	[illegible]
532	AC	TRAY BREAKOUT, 105 PIN		1900807-021		NAS-9-497	B	II	NOTE 11C	4.125	1.812	3.250	NA	.125	.062	.12	.156		.125	1.625	1.140	[illegible]
531	AC	TRAY BREAKOUT, 84 PIN		1900806-021		NAS-9-497	B	II	NOTE 11C	4.125	1.812	3.250	NA	.125	.062	.12	.156		.125	1.625	1.140	[illegible]
530	AC	HEAT SINK-TRAY EXTENDER		1900808-021		NAS-9-497	B	II	NOTE 11C	2.125	.968	1.718	NA	.093	.031	.06	.093		.093	.858	.608	[illegible]
529	AC	TESTER, FAILURE INDICATOR		1900809-021		NAS-9-497	B	II	NOTE 11C	2.125	.968	1.718	NA	.093	.031	.06	.093		.093	.858	.60	[illegible]
527	AC	FIX., MOUNTING, G & N	(-144)	1902204-021		NAS-9-497	B	II	NOTE 11C	FOR DIMENSIONS SEE DASH 500 VALUES BELOW												
526	AC	FIX., MOUNTING, G & N	(-144)	2900067-031		NAS-9-497	B	II	NOTE 11C	FOR DIMENSIONS SEE DASH 500 VALUES BELOW												
525	AC	PORTABLE TEMP. CONTROLLER		1900496-021		NAS-9-497	B	II	NOTE 11C	3.000	1.937	2.437	2.312	.125	.031	.125	.156	.125	.125	1.718	1.18	[illegible]
524	AC	POWER, SERVO & THERMOCOUPLE ASSEMBLY C/M		2010743		NAS-9-497	A	I	NOTE 11B	2.125	.968	1.718	NA	.093	.031	.06	.093	NA	NA	.858	.60	[illegible]
523	AC	PULSE TORQUE AND THERMOCOUPLE ASSEMBLY-LEM		6010656		NAS-9-497	A	I	NOTE 11B	FOR DIMENSIONS SEE DASH 508 VALUES BELOW												
522	AC	COUPLING DATA UNIT & THERMOCOUPLE ASSEMBLY-LEM		2010744		NAS-9-497	A	I	NOTE 11B	FOR DIMENSIONS SEE DASH 508 VALUES BELOW												
521	AC	COUPLING DATA UNIT & THERMOCOUPLE ASSEMBLY-C/M		2010744		NAS-9-497	A	I	NOTE 11B	FOR DIMENSIONS SEE DASH 508 VALUES BELOW												
520	AC	PIPA ELECTRONICS AND THERMOCOUPLE ASSEMBLY		2010745		NAS-9-497	A	I	NOTE 11B	FOR DIMENSIONS SEE DASH 508 VALUES BELOW												
519	AC	FIXTURE, HANDLING, LEM-PSA	(-141)	6900129-011		NAS-9-497	B	II	NOTE 11C	FOR DIMENSIONS SEE DASH 504 VALUES BELOW												
518	AC	JUNCTION BOX, GSE-PSA	(-144)	1901933-031		NAS-9-497	B	II	NOTE 11C	FOR DIMENSIONS SEE DASH 500 VALUES BELOW												
517	AC	FIX., HAND., OPTICS INSTL.	(-141)	2901380-011		NAS-9-497	B	II	NOTE 11C	FOR DIMENSIONS SEE DASH 502 VALUES BELOW												
516	AC	POWER, SERVO AND THERMOCOUPLE ASSEMBLY-LEM		6010655		NAS-9-497	A	I	NOTE 11B	FOR DIMENSIONS SEE DASH 508 VALUES BELOW												
514	AC	SIGNAL COND. ASSY LEM OPER.	(-100)	6007013		NAS-9-497	A	I	NOTE 11B	FOR DIMENSIONS SEE DASH 508 VALUES BELOW												
513	AC	JUMPER, BY-PASS	(-141)	1021616		NAS-9-497	B	II	NOTE 11C	2.125	.968	1.718	NA	.093	.031	.06	.093		.093	.858	.60	[illegible]
512	AC	COUPLING DATA UNIT ASSEMBLY C/M	(-100)	2007322-011		NAS-9-497	A	I	NOTE 11B	FOR DIMENSIONS SEE DASH 508 VALUES BELOW												
511	AC	COUPLING DATA UNIT ASSEMBLY-LEM	(-100)	2007322-021		NAS-9-497	A	I	NOTE 11B	FOR DIMENSIONS SEE DASH 508 VALUES BELOW												
510	AC	BATTERY POWER PACK	(-144)	1900011-041		NAS-9-497	B	II	NOTE 11C	FOR DIMENSIONS SEE DASH 500 VALUES BELOW												
509	AC	JUNCTION BOX, P.S.A./G.S.E.	(-144)	1902195-021		NAS-9-497	B	II	NOTE 11C	FOR DIMENSIONS SEE DASH 500 VALUES BELOW												
508	AC	NAVIGATION BASE ASSEMBLY-LEM	(-101)	6899980		NAS-9-497	A	I	NOTE 11B	2.000	1.312	1.906	1.375	.078	.048	.078	.093	NA	NA	1.125	.75	[illegible]
507	AC	CSL, COOL, AND PWR, G AND N	(-144)	1902134-041		NAS-9-497	B	II	NOTE 11C	FOR DIMENSIONS SEE DASH 500 VALUES BELOW												
506	AC	BREAKOUT BOX, CABLE ADAPTER	(-141)	2901011-011		NAS-9-497	B	II	NOTE 11C	2.125	.968	1.718	NA	.093	.031	.06	.093		.093	.858	.60	[illegible]
505	AC	MONITOR AND CONTROL, TEMP	(-141)	2900026-021		NAS-9-497	B	II	NOTE 11C	2.125	.968	1.718	NA	.093	.031	.06	.093		.093	.858	.60	[illegible]
504	AC	PWR SUP, GUIDANCE SYSTEM	(-141)	1900033-021		NAS 9 497	B	II	NOTE 11C	2.125	.968	1.718	NA	.093	.031	.06	.093		.093	.858	.60	[illegible]
503	AC	CONTROL, GIMBAL POSITION	(-141)	2900036-021		NAS-9-497	B	II	NOTE 11C	2.125	.968	1.718	NA	.093	.031	.06	.093		.093	.858	.60	[illegible]
502	AC	ADPT, TEST POINT, PTA/PEA.	(-141)	2900145-021		NAS-9-497	B	II	NOTE 11C	2.125	.968	1.718	NA	.093	.031	.06	.093		.093	.858	.60	[illegible]
501	AC	MOUNTING PLATE, COMPONENT	(-144)	6900007-031		NAS-9-497	B	II	NOTE 11C	FOR DIMENSIONS SEE DASH 500 VALUES BELOW												
500	AC	MOUNTING PLATE, COMPONENT	(-144)	2900677-021		NAS-9-497	B	II	NOTE 11C	4.125	1.812	3.250	NA	.125	.062	.12	.156		.125	1.625	1.1	[illegible]

NOTES FOR TABLE

STYLE A IS FOR G & N SYSTEM
STYLE B IS FOR GROUND SUPPORT EQUIPMENT
TYPE I IS WITHOUT MOUNTING HOLES
TYPE II IS WITH MOUNTING HOLES

1004260	CR	SHT 6

REVISIONS SYM	ZONE	DESCRIPTION	CHG NO	DATE	APPD
CL		REPLACES REV CK WITH CHANGE PER TDRR 34365		9/28/67	JUR
CM		REVISED PER TDRR 34396		17 OCT 67	RAK
CN		REVISED PER TDRR 34467		31 OCT 67	JRK
CP		REVISED PER TDRR 34855		6 NOV 67	EHS
CR		REVISED PER TDRR 35164		7 DEC 67	DWD

E	F	G	H	J	K	L	M	N	P	R	S	T	U	V	W	Y	Z	AA	AB	AC	AD	AE	AF	AG	AH	AJ	AK	AL	AM	AN	AP	AR
DASH [illegible] VALUES																																
DASH 542 VALUES																																
DASH 500 VALUES																																
DASH 500 VALUES																																
DASH 181																																
DASH 181																																
DASH 181																																
DASH 534																																
[illegible]																																
DASH 500																																
[illegible] VALUES																																
DASH 534 VALUES																																
DASH 181 VALUES																																
DASH 141 VALUES																																
DASH 141 VALUES																																
DASH 500 VALUES																																
.078	.048	.078	.093	NA	NA	1.125	.750	.593	.453	1.015	.062	.187	.078	.875	.718	1.375	.218	NA	NA	.048	.031	.875	.305	NA	.468	1.531	NA	NA	.078	.312	.187	NA
.078	.048	.078	.093	NA	NA	1.125	.750	.593	.453	1.015	.062	.187	.078	.875	.718	1.375	.218	NA	NA	.048	.031	.875	.305	NA	.468	1.531	NA	NA	.078	.312	.187	NA
.078	.048	.078	.093	NA	NA	1.125	.750	.593	.453	1.015	.062	.187	.078	.875	.718	1.375	.218	NA	NA	.048	.031	.875	.305	NA	.468	1.531	NA	NA	.078	.312	.187	NA
.078	.048	.078	.093	NA	NA	1.125	.750	.593	.453	1.015	.062	.187	.078	.875	.718	1.375	.218	NA	NA	.048	.031	.875	.305	NA	.468	1.531	NA	NA	.078	.312	.187	NA
.078	.048	.078	.093	NA	NA	1.125	.750	.593	.453	1.015	.062	.187	.078	.875	.718	1.375	.218	NA	NA	.048	.031	.875	.305	NA	.468	1.531	NA	NA	.078	.312	.187	NA
.078	.048	.078	.093	NA	NA	1.125	.750	.593	.453	1.015	.062	.187	.078	.875	.718	1.375	.218	NA	NA	.048	.031	.875	.305	NA	.468	1.531	NA	NA	.078	.312	.187	NA
.093	.031	.06	.093	[illegible]	.093	.858	.608	.484	.358	.733	.077	.116	.062	.937	.875	1.343	.125	.781	1.892	.046	NA	NA	.209	.093	.250	1.875	NA	1.840	.046	.23	.16	1.938
.125	.062	.12	.156		.125	1.625	1.140	.890	.640	1.390	.125	.171	.125	1.875	1.687	2.625	.250	1.562	3.843	.093	NA	NA	.359	.125	.437	3.688	NA	3.687	.093	.40	.25	3.875
.093	.031	.06	.093	[illegible]	.093	.858	.608	.484	.358	.733	.077	.116	.062	.937	.875	1.343	.125	.781	1.892	.046	NA	NA	.209	.093	.250	1.875	NA	1.840	.046	.23	.16	1.938
.125	.062	.188	.156	NA	NA	1.750	1.125	.906	.688	1.500	NA	.281	.125	NA	1.094	2.062	.312	NA	2.500	.062	.125	1.312	.469	NA	NA	NA	.156	NA	.125	.469	.344	NA
.093	.031	.06	.093	[illegible]	.093	.858	.608	.484	.358	.733	.077	.116	.062	.937	.875	1.343	.125	.781	1.892	.046	NA	NA	.209	.093	.250	1.875	NA	1.840	.046	.23	.16	1.938
.093	.031	.06	.093		.093	.858	.608	.484	.358	.733	.077	.116	.062	.937	.875	1.343	.125	.781	1.892	.046	NA	NA	.209	.093	.250	1.875	NA	1.840	.046	.23	.25	1.938
.093	.031	.06	.093		.093	.858	.608	.484	.358	.733	.077	.116	.062	.937	.875	1.343	.125	.781	1.892	.046	NA	NA	.209	.093	.250	1.875	NA	1.840	.046	.23	.16	1.938
.125	.062	.12	.156		.125	1.625	1.140	.890	.640	1.390	.125	.171	.125	1.875	1.687	2.625	.250	1.562	3.843	.093	NA	NA	.359	.125	.437	3.688	NA	3.687	.093	.40	.25	3.875
.093	.031	.06	.093	[illegible]	.093	.858	.608	.484	.358	.733	.077	.116	.062	.937	.875	1.343	.125	.781	1.892	.046	NA	NA	.209	.093	.250	1.875	NA	1.840	.046	.23	.16	1.938
[illegible]	.048	.078	.093	NA	NA	1.125	.750	.593	.453	1.015	.062	.187	.078	.875	.718	1.375	.218	NA	NA	.048	.031	.875	.305	.078	.531	1.906	.078	NA	.078	.531	.187	NA
.078	.048	.078	.093	NA	NA	1.125	.750	.593	.453	1.015	.062	.187	.078	.875	.718	1.375	.218	NA	NA	.048	.031	.875	.305	.078	.531	1.906	.078	NA	.078	.531	.187	NA
[illegible]	.031	.06	.093	[illegible]	.093	.858	.608	.484	.358	.733	.077	.116	.062	.937	.875	1.343	.125	.781	1.892	.046	NA	NA	.209	.093	.250	1.875	NA	1.840	.046	.23	.16	1.938
.125	.062	.12	.156		.125	1.625	1.140	.890	.640	1.390	.125	.171	.125	1.875	1.687	2.625	.250	1.562	3.843	.093	NA	NA	.359	.125	.437	3.688	NA	3.687	.093	.40	.25	3.875
.093	.031	.06	.093	[illegible]	.093	.858	.608	.484	.358	.733	.077	.116	.062	.937	.875	1.343	.125	.781	1.892	.046	NA	NA	.209	.093	.250	1.875	NA	1.840	.046	.23	.16	1.938
.078	.048	.078	.093	NA	NA	1.125	.750	.593	.453	1.015	.062	.187	.078	.875	.718	1.375	.218	NA	NA	.048	.031	.875	.305	.078	.531	1.906	.078	NA	.078	.531	.187	NA
.093	.031	.06	.093	[illegible]	.093	.858	.608	.484	.358	.733	.077	.116	.062	.937	.875	1.343	.125	.781	1.892	.046	NA	NA	.209	.093	.250	1.875	NA	1.840	.046	.23	.16	1.938
.125	.062	.12	.156		.125	1.625	1.140	.890	.640	1.390	.125	.171	.125	1.875	1.687	2.625	.250	1.562	3.843	.093	NA	NA	.359	.125	.437	3.688	NA	3.687	.093	.40	.25	3.875
.125	.062	.12	.156		.125	1.625	1.140	.890	.640	1.390	.125	.171	.125	1.875	1.687	2.625	.250	1.562	3.843	.093	NA	NA	.359	.125	.437	3.668	NA	3.687	.093	.40	.25	3.875
.093	.031	.06	.093		.093	.858	.608	.484	.358	.733	.077	.116	.062	.937	.875	1.343	.125	.781	1.892	.046	NA	NA	.209	.093	.250	1.875	NA	1.840	.046	.23	.16	1.938
.093	.031	.06	.093	[illegible]	.093	.858	.608	.484	.358	.733	.077	.116	.062	.937	.875	1.343	.125	.781	1.892	.046	NA	NA	.209	.093	.250	1.875	NA	1.840	.046	.23	.16	1.938
DASH 500 VALUES BELOW																																
DASH 500 VALUES BELOW																																
.125	.031	.125	.156	.125	.125	1.718	1.187	.968	.749	1.452	.093	.295	.090	1.312	1.00	2.000	.250	1.687	2.750	.062	NA	NA	.463	.125	.562	2.437	.140	2.562	.090	.468	.359	2.750
.093	.031	.06	.093	NA	NA	.858	.608	.484	.358	.733	.062	.140	.062	NA	.968	1.450	.125	NA	1.720	.046	.03	NA	.210	NA	NA	NA	.070	NA	.046	.32	.16	NA
DASH 508 VALUES BELOW																																
DASH 508 VALUES BELOW																																
DASH 508 VALUES BELOW																																
DASH 508 VALUES BELOW																																
DASH 504 VALUES BELOW																																
DASH 500 VALUES BELOW																																
DASH 502 VALUES BELOW																																
DASH 508 VALUES BELOW																																
DASH 508 VALUES BELOW																																
.093	.031	.06	.093	[illegible]	.093	.858	.608	.484	.358	.733	.077	.116	.062	.937	.875	1.343	.125	.781	1.892	.046	NA	NA	.209	.093	.250	1.875	NA	1.840	.046	.23	.16	1.938
DASH 508 VALUES BELOW																																
DASH 508 VALUES BELOW																																
DASH 500 VALUES BELOW																																
DASH 500 VALUES BELOW																																
.078	.048	.078	.093	NA	NA	1.125	.750	.593	.453	1.015	.062	.187	.078	.875	.718	1.375	.218	NA	NA	.048	.031	.875	.305	.078	.531	1.906	.078	NA	.078	.531	.187	NA
DASH 500 VALUES BELOW																																
.093	.031	.06	.093	[illegible]	.093	.858	.608	.484	.358	.733	.077	.116	.062	.937	.875	1.343	.125	.781	1.892	.046	NA	NA	.209	.093	.250	1.875	NA	1.840	.046	.23	.16	1.938
.093	.031	.06	.093		.093	.858	.608	.484	.358	.733	.077	.116	.062	.937	.875	1.343	.125	.781	1.892	.046	NA	NA	.209	.093	.250	1.875	NA	1.840	.046	.23	.16	1.938
.093	.031	.06	.093		.093	.858	.608	.484	.358	.733	.077	.116	.062	.937	.875	1.343	.125	.781	1.892	.046	NA	NA	.209	.093	.250	1.875	NA	1.840	.046	.23	.16	1.938
[illegible]	.031	.06	.093		.093	.858	.608	.484	.358	.733	.077	.116	.062	.937	.875	1.343	.125	.781	1.892	.046	NA	NA	.209	.093	.250	1.875	NA	1.840	.046	.23	.16	1.938
.093	.031	.06	.093	[illegible]	.093	.858	.608	.484	.358	.733	.077	.116	.062	.937	.875	1.343	.125	.781	1.892	.046	NA	NA	.209	.093	.250	1.875	NA	1.840	.046	.23	.16	1.938
DASH 500 VALUES BELOW																																
.125	.062	.12	.156	[illegible]	.125	1.625	1.140	.890	.640	1.390	.125	.171	.125	1.875	1.687	2.625	.250	1.562	3.843	.093	NA	NA	.359	.125	.437	3.688	NA	3.687	.093	.40	.25	3.875

AC ELECTRONICS DASH NUMBERS

UNLESS OTHERWISE SPECIFIED
DIMENSIONS ARE IN INCHES
TOLERANCES ON
2 PLACE DECIMALS ±
3 PLACE DECIMALS ± .005
ANGLES ±
DO NOT SCALE THIS DRAWING

MATERIAL
SEE NOTE 11

AS APPLICABLE
NEXT ASSY
USED ON
APPLICATION
APPROVAL

MIT
INSTRUMENTATION LAB
CAMBRIDGE MASS

DRAWN R A JONES 16 JUL 65
CHECKED
APPROVAL W KUPFER 22 JUL 65
CONTRACT
T MICHAELS 22 JUL 65
NASA APPROVAL
W KUPFER 22 JUL 65
MIT APPROVAL

MANNED
SPACECRAFT CENTER
HOUSTON, TEXAS

NAMEPLATES,
APOLLO GEN - GSE
(STANDARDS)

SIZE J2
CODE IDENT NO. 80230
1004260
SCALE NONE
SHEET 6 OF 6

NOTES:

1. INTERPRET DRAWING IN ACCORDANCE WITH STANDARDS PRESCRIBED BY MIL-D-70327.
2. DIMENSIONS ON EACH VIEW APPLY TO ALL VIEWS (WITH THE EXCEPTION OF MOUNTING HOLES).
3. FORMATS ILLUSTRATED WILL BE APPLICABLE TO ALL ITEMS REQUIRING NAMEPLATES BELOW END ITEM DESIGNATION (SYSTEMS, ASSEMBLIES, ETC.)
4. PLATE BACKGROUND TO BE LUSTERLESS BLACK PER FED-STD-595, COLOR 37038. BORDER, MARKING AND LETTERING TO BE NATURAL METAL, (ANODIZED ALUMINUM).
5. MARKING METHOD TO BE DIE STAMPING, ETCHING OR ENGRAVING IN ACCORDANCE WITH MIL-P-19834.
6. LETTERING STYLE TO BE GOTHIC, (SANS SERIFS), AND NUMBERS TO BE ARABIC.
7. WHERE LOCATING DIMENSIONS ARE NOT SHOWN, CHARACTERS SHALL BE SYMMETRICALLY POSITIONED.
8. IDENTIFY WITH DRAWING NUMBER PER ND 1002019.
9. WHEN "AUTO MARK" METAL MARKING TYPEWRITER IS USED TO ADD DATA TO BLANK SPACES, TYPE SIZE IS TO BE SELECTED FROM DIMENSIONS U, AC, AND AM.
10. NASA SYMBOL IS TO BE PROPORTIONAL TO NAMEPLATE IN RATIO OF 1 TO 5 WITH DIMENSION A VALUE AND IS TO HAVE NATURAL BACKGROUND. NASA SYMBOL LETTERS LETTERING AND FEATHER TO BE BLACK, (OR WHITE FOR SILK SCREENING). WHERE BLACK FEATHER PROTRUDES INTO BLACK BACKGROUND, A MINIMUM OUTLINE OF NATURAL BACKGROUND SHALL EXIST.
11. NAMEPLATES WILL BE APPLIED BY METHODS LISTED BELOW, SHOWN IN ORDER OF PREFERENCE, (I.E., FOR RELIABILITY AND WEIGHT).
    - A - STENCIL OR SILK SCREEN DIRECTLY ON EQUIPMENT USING INK PER SCD 1010920, (WHITE OR BLACK).
    - B - ALUMINUM FOIL, (STYLE A OR B, TYPE I):
      FOIL SHALL BE .0030 ± .0005 THICK PER MIL-A-148.
      FOIL SHALL HAVE NO ADHESIVE BACKING.
      FOIL SHALL BE BONDED PER ND 1002219, (METHOD II).
      FOIL SHALL BE CLEAR ANODIZED PER MIL-A-8625, TYPE II.
    - C - PLATE, (STYLE A OR B, TYPE II):
      MATERIAL: QQ-A-250, TEMPER 0 OR H14, TYPE 1100, ALUMINUM ALLOY, .032 THICK. ANODIZE PER MIL-A-8625, TYPE II.
      ALUMINUM PLATE MUST BE FREE FROM BURRS AND SHARP CORNERS, MOUNTED WITH APPLICABLE SIZE FASTENERS.
12. NAMEPLATES SHALL BE CAPABLE OF MEETING APPLICABLE REQUIREMENTS OF MIL-M-13231.
13. ON DIMENSION TABLES SHOWN ON PAGES 2, 3, 4, 5, AND 6, NA MEANS, "NOT APPLICABLE".

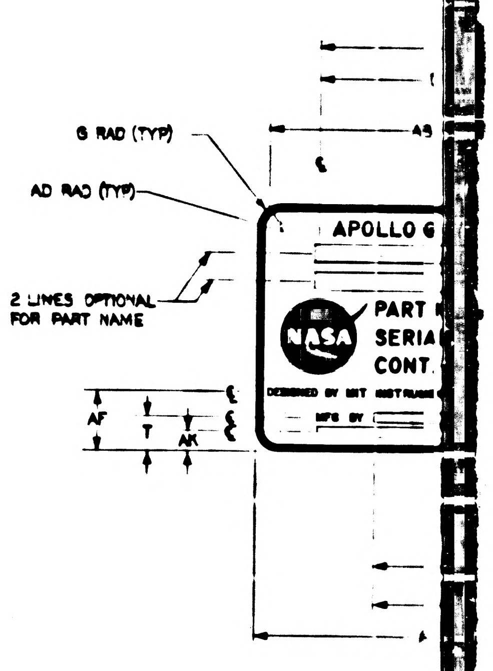

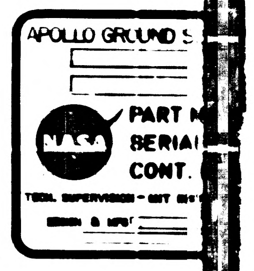

WITHOUT

SUGGESTED PROPORTIONS FOR NAMEPLATE DIMENSIONS.
1. SELECT NAMEPLATE LENGTH, DIMENSION "A", TO FIT DESIGN NEEDS.
2. DIMENSIONS B THRU AS ON LINE 1 BELOW ARE PROPORTIONAL TO "A" BY MULTIPLIERS SHOWN IN LINE 2 BELOW.

1.	A	B	C	D	E	F	G	H	J	K	L	M	N	P	R	S	T	U	V	W
2.	1.000A	.6563A	.8438A	.6875A	.0391A	.0240A	.0391A	.0469A	.0547A	.0469A	.5938A	.3750A	.2969A	.2187A	.5079A	.0313A	.0938A	.0391A	.4375A	.3594A

1.	Y	Z	AA	AB	AC	AD	AE	AF	AG	AH	AJ	AK	AL	AM	AN	AP	AR	AS
2.	.6875A	.1094A	.5781A	.9219A	.0240A	.0156A	.4375A	.1525A	[illegible]	.1563A	.8438A	.0548A	.8659A	.0391A	.1563A	.0938A	.9219A	.0151A

REVISIONS

SYM	ZONE	DESCRIPTION	CHG NO	DATE	APPD
CL		REPLACES REV CK WITHOUT CHANGE PER TDRR 34365		[illegible]/67	JWL RWH
CM		REVISION STATUS CHANGED		18 OCT 67	RAW
CN		REVISION STATUS CHANGED		31 OCT 67	JRK
CP		REVISION STATUS CHANGED		6 NOV 67	[illegible]
CR		REVISION STATUS CHANGED		7 [illegible] 67	AKD RWH
S		REVISION STATUS CHANGED		5 JUN 68	JW EHK

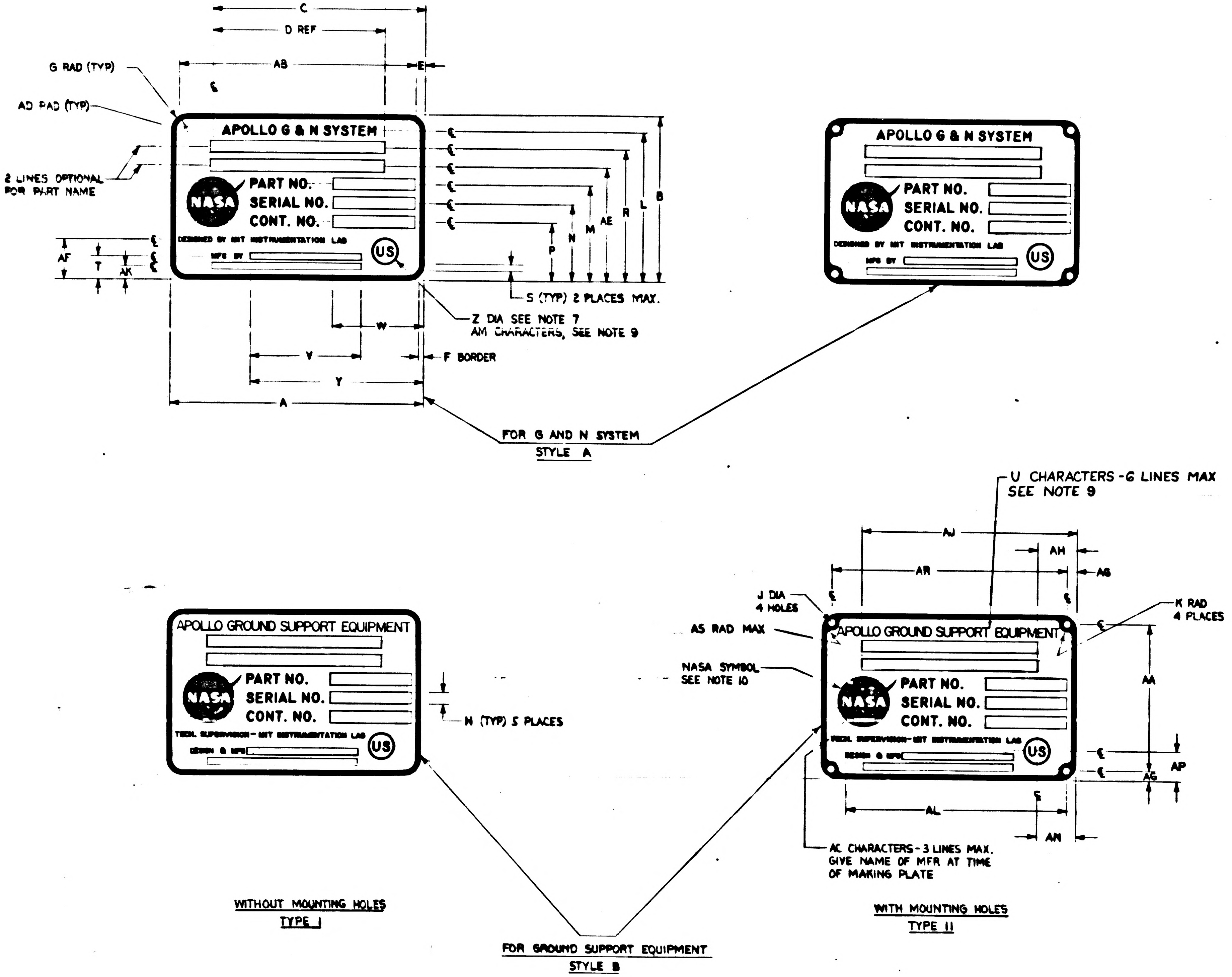
C
D REF
AB
E
G RAD (TYP)
AD RAD (TYP)
2 LINES OPTIONAL FOR PART NAME
APOLLO G & N SYSTEM
PART NO.
SERIAL NO.
CONT. NO.
NASA
DESIGNED BY MIT INSTRUMENTATION LAB
MFG BY
US
AF
T
AK
P
N
M
AE
R
L
B
S (TYP) 2 PLACES MAX.
Z DIA SEE NOTE 7
AM CHARACTERS, SEE NOTE 9
W
V
Y
F BORDER
A
FOR G AND N SYSTEM
STYLE A
U CHARACTERS - 6 LINES MAX
SEE NOTE 9
AJ
AH
AR
AG
J DIA
4 HOLES
K RAD
4 PLACES
AS RAD MAX
NASA SYMBOL
SEE NOTE 10
APOLLO GROUND SUPPORT EQUIPMENT
TECH. SUPERVISION - MIT INSTRUMENTATION LAB
DESIGN & MFG
H (TYP) 5 PLACES
AA
AP
AL
AN
AC CHARACTERS - 3 LINES MAX.
GIVE NAME OF MFR AT TIME
OF MAKING PLATE
WITHOUT MOUNTING HOLES
TYPE I
WITH MOUNTING HOLES
TYPE II
FOR GROUND SUPPORT EQUIPMENT
STYLE B

UNLESS OTHERWISE SPECIFIED
DIMENSIONS ARE IN INCHES
TOLERANCES ON
2 PLACE DECIMALS ± 3 PLACE DECIMALS ± .005 ANGLES ±
DO NOT SCALE THIS DRAWING
MATERIAL SEE NOTE 11
APPROVAL

AS APPLICABLE
NEXT ASSY | USED ON
APPLICATION

MIT INSTRUMENTATION LAB
CAMBRIDGE, MASS.
DRAWN R.A. JONES DATE 16 JUL 65
CHECKED
APPROVAL W. KUPFER 22 JUL 65
CONTRACT
NASA APPROVAL T. MICHAELS 22 JUL 65
MIT APPROVAL W. KUPFER 22 JUL 65

MANNED SPACECRAFT CENTER
HOUSTON, TEXAS

NAMEPLATES,
APOLLO G&N - GSE
(STANDARDS)

SIZE J2 CODE IDENT NO. 80230 1004260
SCALE NONE SHEET 1 OF 6

1004260 CS SHT 1

1004260 CS

1004260

0850001

27/1004260

NOTICE [illegible]

DASH NO.	P/C	PART NAME	REMARKS	PART NUMBER	SER. NO.	CONT. NO.	STYLE	TYPE	MATERIAL	A	B	C	D	E	F	G	H	J	K	L	M	N	P
399	K																						
398	K																						
350	K	ALIGNMENT OPTICAL TELESCOPE (LEM)		NA	NA	NA	A	I	NOTE 11B	4.000	2.625	3.375	2.750	.156	.093	.156	.187	NA	NA	2.312	1.468	1.187	.906
309	K																						
308	K																						
307	K																						
306	K						B	I	NOTE 11B	4.000	2.625	3.375	2.750	.156	.093	.156	.187	NA	NA	2.328	1.468	1.187	.906
305	K						B	II	NOTE 11C	4.000	2.625	3.375	2.750	.156	.093	.156	.187	.125	.156	2.328	1.468	1.187	.906
304	K						B	I	NOTE 11B	2.000	1.312	1.687	1.375	.078	.048	.078	.093	NA	NA	1.164	.734	.593	.453
303	K						B	II	NOTE 11C	2.000	1.312	1.687	1.375	.078	.048	.078	.093	.070	.078	1.164	.734	.593	.453
302	K																						
301	K																						
300	K	OPTICAL UNIT		NA	NA	NA	A	I	NOTE 11B	2.000	1.312	1.675	NA	NA	.048	.078	NA	NA	NA	1.090	.812	.675	.540
9	K	2 IN AUTOCOLLIMATOR		1001702			B	II	NOTE 11C	4.000	2.625	3.812	2.750	.156	.093	.156	.187	.125	.156	2.250	1.500	1.187	.906
8	K	5 IN AUTOCOLLIMATOR		1017410			B	II	NOTE 11C	4.000	2.625	3.812	2.750	.156	.093	.156	.187	.125	.156	2.250	1.500	1.187	.906
7	K	2-1/2 IN AUTOCOLLIMATOR (SCT)		1017435			B	II	NOTE 11C	4.000	2.625	3.812	2.750	.156	.093	.156	.187	.125	.156	2.250	1.500	1.187	.906
6	K	2-1/2 IN AUTOCOLLIMATOR (SXT)		1017448			B	II	NOTE 11C	4.000	2.625	3.812	2.750	.156	.093	.156	.187	.125	.156	2.250	1.500	1.187	.906
5	K	RETROREFLECTING PRISM ASSEMBLY		1019840			B	I	NOTE 11B	4.000	2.625	3.812	2.750	.156	.093	.156	.187	NA	NA	2.250	1.500	1.187	.906
4	K	S/H SIMULATOR ASSEMBLY		1019896			B	I	NOTE 11B	4.000	2.625	3.812	2.750	.156	.093	.156	.187	NA	NA	2.250	1.500	1.187	.906
3	K	REFERENCE MIRROR		1001767			B	I	NOTE 11B	2.000	1.312	1.906	1.375	.078	.048	.078	.093	NA	NA	1.125	.750	.593	.453
2	K	2 IN PLANE READING AUTOCOLLIMATOR		1017413			B	I	NOTE 11B	2.000	1.312	1.906	1.375	.078	.048	.078	.093	NA	NA	1.125	.750	.593	.453
1	K	2 IN AUTOCOLLIMATOR		1001702			B	I	NOTE 11B	2.000	1.312	1.906	1.375	.078	.048	.078	.093	NA	NA	1.125	.750	.593	.453

NOTES FOR TABLE
STYLE A IS FOR G & N SYSTEM
STYLE B IS FOR GROUND SUPPORT EQUIPMENT
TYPE I IS WITHOUT MOUNTING HOLES
TYPE II IS WITH MOUNTING HOLES

1/1,004260

REVISIONS						
SYM	ZONE	DESCRIPTION	CHG NO	DATE	APPD	
CL		REPLACES REV CK WITHOUT CHANGE PER TDRR 34365				
CM		REVISION STATUS CHANGED		16 OCT 67	R.A.W.	
CN		REVISION STATUS CHANGED		3 OCT 67	JRK	
CP		REVISION STATUS CHANGED		6 NOV 67		
CR		REVISION STATUS CHANGED		DEC 67		
CS		REVISION STATUS CHANGED		3 JAN 68		

[illegible]	.093	.156	.187	NA	NA	2.312	1.468	1.187	.906	2.031	NA	.375	.156	NA	1.437	2.750	.437	NA	3.688	.062	.062	1.750	.593	NA	.625	3.375	.187	NA	.156	.531	.453	NA
[illegible]	.093	.156	.187	NA	NA	2.328	1.468	1.187	.906	2.031	.062	.375	.156	NA	1.437	2.750	.437	NA	3.687	.062	.062	1.750	.593	NA	NA	NA	NA	NA	NA	NA	NA	NA
[illegible]	.093	.156	.187	.125	.156	2.328	1.468	1.187	.906	2.031	.062	.375	.156	NA	1.437	2.750	.437	2.312	3.687	.062	NA	1.750	.593	NA	NA	NA	NA	NA	NA	NA	NA	NA
[illegible]	.048	[illegible]	.093	NA	NA	1.164	.734	.593	.453	1.015	.048	.171	.078	NA	.718	1.375	.187	NA	NA	.048	.031	.875	.320	NA	NA	NA	NA	NA	NA	NA	NA	NA
[illegible]	.048	.078	.093	.070	.078	1.164	.734	.593	.453	1.015	.048	.171	.078	NA	.718	1.375	.187	.156	1.843	.048	NA	.875	.320	NA	NA	NA	NA	NA	NA	NA	NA	NA
[illegible]	.048	.078	NA	NA	NA	1.090	.812	.675	.540	.940	NA	.265	NA	NA	NA	1.375	.218	NA	NA	NA	NA	NA	.375	NA	NA	NA	.180	NA	.078	NA	NA	NA
[illegible]	.093	.156	.187	.125	.156	2.250	1.500	1.187	.906	2.031	.093	.375	.156	1.750	1.437	2.750	.437	2.312	3.687	.062	NA	1.750	.593	.156	1.062	3.812	.156	NA	.156	1.062	.375	3.687
[illegible]	.093	.156	.187	.125	.156	2.250	1.500	1.187	.906	2.031	.093	.375	.156	1.750	1.437	2.750	.437	2.312	3.687	.062	NA	1.750	.593	.156	1.062	3.812	.156	NA	.156	1.062	.375	3.687
[illegible]	.093	.156	.187	.125	.156	2.250	1.500	1.187	.906	2.031	.093	.375	.156	1.750	1.437	2.750	.437	2.312	3.687	.062	NA	1.750	.593	.156	1.062	3.812	.156	NA	.156	1.062	.375	3.687
[illegible]	.093	.156	.187	.125	.156	2.250	1.500	1.187	.906	2.031	.093	.375	.156	1.750	1.437	2.750	.437	2.312	3.687	.062	NA	1.750	.593	.156	1.062	3.812	.156	NA	.156	1.062	.375	3.687
[illegible]	.093	.156	.187	NA	NA	2.250	1.500	1.187	.906	2.031	.093	.375	.156	1.750	1.437	2.750	.437	NA	NA	.062	.062	1.750	.593	.156	1.062	3.812	.156	NA	.156	1.062	.375	NA
[illegible]	.093	.156	.187	NA	NA	2.250	1.500	1.187	.906	2.031	.093	.375	.156	1.750	1.437	2.750	.437	NA	NA	.062	.062	1.750	.593	.156	1.062	3.812	.156	NA	.156	1.062	.375	NA
[illegible]	.048	.078	.093	NA	NA	1.125	.750	.593	.453	1.015	.062	.187	.078	.875	.718	1.375	.218	NA	NA	.048	.031	.875	.305	.078	.531	1.906	.078	NA	.078	.531	.187	NA
[illegible]	.048	.078	.093	NA	NA	1.125	.750	.593	.453	1.015	.062	.187	.078	.875	.718	1.375	.218	NA	NA	.048	.031	.875	.305	.078	.531	1.906	.078	NA	.078	.531	.187	NA
[illegible]	.048	.078	.093	NA	NA	1.125	.750	.593	.453	1.015	.062	.187	.078	.875	.718	1.375	.218	NA	NA	.048	.031	.875	.305	.078	.531	1.906	.078	NA	.078	.531	.187	NA
E	F	G	H	J	K	L	M	N	P	R	S	T	U	V	W	Y	Z	AA	AB	AC	AD	AE	AF	AG	AH	AJ	AK	AL	AM	AN	AP	AR

KOLLSMAN DASH NUMBERS

UNLESS OTHERWISE SPECIFIED DIMENSIONS ARE IN INCHES TOLERANCES ON 2 PLACE DECIMALS ± 3 PLACE DECIMALS ± .005 ANGLES ±	MIT INSTRUMENTATION LAB Cambridge Mass DRAWN R.A. JONES DATE 16 JUL 65 CHECKED APPROVAL W KUPFER 22 JUL 65 CONTRACT	MANNED SPACECRAFT CENTER HOUSTON, TEXAS	
DO NOT SCALE THIS DRAWING		NAMEPLATES, APOLLO GEN - GSE (STANDARDS)	
MATERIAL SEE NOTE 11	NASA APPROVAL T MICHAELS 22 JUL 65	SIZE J2	CODE IDENT NO. 80230
APPROVAL	MIT APPROVAL W KUPFER 22 JUL 65	SCALE NONE	SHEET 2 OF 6

AS APPLICABLE
NEXT ASSY | USED ON
APPLICATION

1004260

1004260 CS SHT 2

1004260 CS

1004260

2710004260

DASH NO.	P/C	PART NAME	REMARKS	PART NUMBER	SER. NO.	CONT. NO.	STYLE	TYPE	MATERIAL	A	B	C	D	E	F	G	H	J	K	L	M	N	P	R
299	R																							
298	R																							
285	R	BUFFER CIRCUIT ASSY		2014254-031	NA	NAS-9-497	B	I	NOTE 11B	FOR DIMENSIONS SEE DASH 15 VALUES BELOW														
284	R	LOGIC DRAWER ASSY NO. 2		2014037-041	NA	NAS-9-497	B	I	NOTE 11B	FOR DIMENSIONS SEE DASH 17 VALUES BELOW														
283	R	DRAWER ASSY-PROGRAM & MONITOR		2014041-051	NA	NAS-9-497	B	I	NOTE 11B	FOR DIMENSIONS SEE DASH 17 VALUES BELOW														
282	R	COMPUTER TEST SET		2014042-061	NA	NAS-9-497	B	II	NOTE 11C	FOR DIMENSIONS SEE DASH 18 VALUES BELOW														
281	R	AGC HANDLING FIXTURE		2014282-031	NA	NAS-9-497	B	I	NOTE 11B	FOR DIMENSIONS SEE DASH 17 VALUES BELOW														
280	R	COMPUTER TEST SET		2014042-051	NA	NAS-9-497	B	II	NOTE 11C	FOR DIMENSIONS SEE DASH 18 VALUES BELOW														
279	R	SELF TEST ASSY		2014366-041	NA	NAS-9-497	B	I	NOTE 11B	FOR DIMENSIONS SEE DASH 15 VALUES BELOW														
278	R	LOGIC DRAWER ASSY NO. 1		2014036-041	NA	NAS-9-497	B	I	NOTE 11B	FOR DIMENSIONS SEE DASH 17 VALUES BELOW														
277	R	COMPUTER TEST SET		2014042-041	NA	NAS-9-497	B	II	NOTE 11C	FOR DIMENSIONS SEE DASH 18 VALUES BELOW														
276	R	DRAWER ASSY-PROGRAM & MONITOR		2014041-041	NA	NAS-9-497	B	I	NOTE 11B	FOR DIMENSIONS SEE DASH 17 VALUES BELOW														
275	R	DRAWER ASSY RDC INTERFACE		2014045-031	NA	NAS-9-497	B	I	NOTE 11B	FOR DIMENSIONS SEE DASH 15 VALUES BELOW														
274	R	SELF TEST ASSY		2014366-031	NA	NAS-9-497	B	I	NOTE 11B	FOR DIMENSIONS SEE DASH 15 VALUES BELOW														
273	R	LOGIC DRAWER ASSY NO. 2		2014037-031	NA	NAS-9-497	B	I	NOTE 11B	FOR DIMENSIONS SEE DASH 17 VALUES BELOW														
272	R	DRAWING ASSY PROGRAMMER & MONITOR		2014041-031	NA	NAS-9-497	B	I	NOTE 11B	FOR DIMENSIONS SEE DASH 17 VALUES BELOW														
271	R	LOGIC DRAWER ASSY NO. 1		2014036-031	NA	NAS-9-497	B	I	NOTE 11B	FOR DIMENSIONS SEE DASH 17 VALUES BELOW														
270	R	COMPUTER TEST SET		2014042-031	NA	NAS-9-497	B	II	NOTE 11C	FOR DIMENSIONS SEE DASH 18 VALUES BELOW														
269	R	POWER CONTROL ASSY		2014044-021	NA	NAS-9-497	B	I	NOTE 11B	FOR DIMENSIONS SEE DASH 17 VALUES BELOW														
268	R	SELF TEST ASSY		2014366-021	NA	NAS-9-497	B	I	NOTE 11B	FOR DIMENSIONS SEE DASH 15 VALUES BELOW														
267	R	AGC JUNCTION ASSY		2014341-021	NA	NAS-9-497	B	I	NOTE 11B	FOR DIMENSIONS SEE DASH 15 VALUES BELOW														
266	R	POWER CONTROL ASSY		2014079-021	NA	NAS-9-497	B	I	NOTE 11B	FOR DIMENSIONS SEE DASH 15 VALUES BELOW														
265	R	BUFFER CIRCUIT ASSY		2014254-021	NA	NAS-9-497	B	I	NOTE 11B	FOR DIMENSIONS SEE DASH 15 VALUES BELOW														
264	R	DRAWER ASSY X Y INTERFACE		2014040-021	NA	NAS-9-497	B	I	NOTE 11B	FOR DIMENSIONS SEE DASH 15 VALUES BELOW														
263	R	DRAWER ASSY RDC INTERFACE		2014045-021	NA	NAS-9-497	B	I	NOTE 11B	FOR DIMENSIONS SEE DASH 15 VALUES BELOW														
262	R	DRAWER ASSY PROGRAMMER & MONITOR		2014041-021	NA	NAS 9-497	B	I	NOTE 11B	FOR DIMENSIONS SEE DASH 17 VALUES BELOW														
261	R	LOGIC DRAWER ASSY NO. 2		2014037-021	NA	NAS-9-497	B	I	NOTE 11B	FOR DIMENSIONS SEE DASH 17 VALUES BELOW														
260	R	LOGIC DRAWER ASSY NO. 1		2014036-021	NA	NAS-9-497	B	I	NOTE 11B	FOR DIMENSIONS SEE DASH 17 VALUES BELOW														
259	R	OPERATION CONSOLE		2014024-021	NA	NAS-9-497	B	II	NOTE 11C	FOR DIMENSIONS SEE DASH 18 VALUES BELOW														
258	R	COMPUTER TEST SET		2014042-021	NA	NAS-9-497	B	II	NOTE 11C	FOR DIMENSIONS SEE DASH 18 VALUES BELOW														
257	R	AUXILIARY CALIBRATION CONSOLE		2014059-021	NA	NAS-9-497	B	II	NOTE 11C	FOR DIMENSIONS SEE DASH 18 VALUES BELOW														
256	R	AGC CALIBRATION CONSOLE		2014049-021	NA	NAS-9-497	B	II	NOTE 11C	FOR DIMENSIONS SEE DASH 18 VALUES BELOW														
255	R	AGC HANDLING FIXTURE		2014282-021	NA	NAS-9-497	B	I	NOTE 11B	FOR DIMENSIONS SEE DASH 17 VALUES BELOW														
254	R	DRAWER ASSY COMP. SIMULATOR		2014048-011	NA	NAS-9-497	B	II	NOTE 11C	FOR DIMENSIONS SEE DASH 18 VALUES BELOW														
253	R	SHIPPING KIT ASSY, NAV DSKY		2016312-011	NA	NAS-9-497	B	II	NOTE 11C	FOR DIMENSIONS SEE DASH 18 VALUES BELOW														
252	R	SHIPPING KIT ASSY, UNIVERSAL DSKY		2016316-011	NA	NAS-9-497	B	II	NOTE 11C	FOR DIMENSIONS SEE DASH 18 VALUES BELOW														
251	R	SHIPPING KIT ASSY, MAIN DSKY		2016313-011	NA	NAS-9-497	B	II	NOTE 11C	FOR DIMENSIONS SEE DASH 18 VALUES BELOW														
250	R	AMPLIFIER, REWORK		2014386	NA	NAS-9-497	B	I	NOTE 11B	FOR DIMENSIONS SEE DASH 15 VALUES BELOW														
249	R	TEMP MONITOR ASSY		2014313-011	NA	NAS-9-497	B	I	NOTE 11C	FOR DIMENSIONS SEE DASH 17 VALUES BELOW														
248	R	AGC JUNCTION ASSY		2014341-011	NA	NAS-9-497	B	I	NOTE 11B	FOR DIMENSIONS SEE DASH 15 VALUES BELOW														
247	R	AC INPUT PANEL ASSY		2014302-011	NA	NAS-9-497	B	I	NOTE 11B	FOR DIMENSIONS SEE DASH 15 VALUES BELOW														
246	R	SELF TEST ASSY		2014392-011	NA	NAS-9-497	B	I	NOTE 11B	FOR DIMENSIONS SEE DASH 15 VALUES BELOW														
245	R	TAPE PUNCH ASSEMBLY		2014039-011	NA	NAS-9-497	B	I	NOTE 11B	FOR DIMENSIONS SEE DASH 15 VALUES BELOW														
244	R	TAPE READER ASSEMBLY		2014038-011	NA	NAS-9-497	B	I	NOTE 11B	FOR DIMENSIONS SEE DASH 15 VALUES BELOW														
243																								
242																								
241	R	APOLLO GUIDANCE COMPUTER GROUP		6003001	NA	NAS-9-497	A	I	NOTE 11B	FOR DIMENSIONS SEE DASH 19 VALUES BELOW														
240	R	SELF TEST ASSEMBLY		2014366-011	NA	NAS-9-497	B	I	NOTE 11B	FOR DIMENSIONS SEE DASH 15 VALUES BELOW														
239	R	POWER SUPPLY ASSY-115V., 400 CYCLE		2014207-011	NA	NAS-9-497	B	I	NOTE 11B	FOR DIMENSIONS SEE DASH 17 VALUES BELOW														
238	R	AC INPUT PANEL ASSY		2014043-011	NA	NAS-9-497	B	I	NOTE 11B	FOR DIMENSIONS SEE DASH 17 VALUES BELOW														
237	R	POWER CONTROL ASSY		2014079-011	NA	NAS-9-497	B	I	NOTE 11B	FOR DIMENSIONS SEE DASH 15 VALUES BELOW														
236	R	DRAWER ASSY-X Y INTERFACE		2014040-011	NA	NAS-9-497	B	I	NOTE 11B	FOR DIMENSIONS SEE DASH 15 VALUES BELOW														
235	R	DRAWER ASSY RDC INTERFACE		2014045-011	NA	NAS-9-497	B	I	NOTE 11B	FOR DIMENSIONS SEE DASH 15 VALUES BELOW														
234	R	BUFFER CIRCUIT ASSY		2014254-011	NA	NAS-9-497	B	I	NOTE 11B	FOR DIMENSIONS SEE DASH 15 VALUES BELOW														
233	R	CONTROL & INTERFACE ASSY		2014204-011	NA	NAS-9-497	B	I	NOTE 11B	FOR DIMENSIONS SEE DASH 15 VALUES BELOW														
232	R	POWER CONTROL ASSY		2014044-011	NA	NAS-9-497	B	I	NOTE 11B	FOR DIMENSIONS SEE DASH 17 VALUES BELOW														
231	R	DRAWER ASSY, PROGRAMMER & MONITOR		2014041-011	NA	NAS-9-497	B	I	NOTE 11B	FOR DIMENSIONS SEE DASH 17 VALUES BELOW														
230	R	CONNECTOR INTERFACE ASSY		2014272-011	NA	NAS-9-497	B	I	NOTE 11B	FOR DIMENSIONS SEE DASH 15 VALUES BELOW														
229	R	CONNECTOR INTERFACE ASSY		2014047-011	NA	NAS-9-497	B	I	NOTE 11B	FOR DIMENSIONS SEE DASH 15 VALUES BELOW														
228	R	ANTENNA, TUNING CAPACITOR ASSY		2014209-011	NA	NAS-9-497	B	I	NOTE 11B	FOR DIMENSIONS SEE DASH 15 VALUES BELOW														
227	R	MOUNTING FIXTURE ASSY		2014006-011	NA	NAS-9-497	B	I	NOTE 11B	FOR DIMENSIONS SEE DASH 17 VALUES BELOW														
226	R	POWER SUPPLY ASSY 3 VDC		2014234-011	NA	NAS-9-497	B	I	NOTE 11B	FOR DIMENSIONS SEE DASH 15 VALUES BELOW														
225	R	PANEL ASSY—SIGNAL INTERFACE		2014010-011	NA	NAS-9-497	B	I	NOTE 11B	FOR DIMENSIONS SEE DASH 15 VALUES BELOW														
224	R	OSCILLOSCOPE ASSY		2014232-011	NA	NAS-9-497	B	I	NOTE 11B	FOR DIMENSIONS SEE DASH 15 VALUES BELOW														
223	R	AUXILIARY OUTLET ASSY		2014274-011	NA	NAS-9-497	B	I	NOTE 11B	FOR DIMENSIONS SEE DASH 15 VALUES BELOW														
222	R	FREQUENCY COUNTER		2014233-011	NA	NAS-9-497	B	I	NOTE 11B	FOR DIMENSIONS SEE DASH 15 VALUES BELOW														
221	R	POWER SUPPLY ASSY 10, 13, 28 VDC		2014235-011	NA	NAS-9-497	B	I	NOTE 11B	FOR DIMENSIONS SEE DASH 15 VALUES BELOW														
220	R	LOGIC DRAWER ASSY NO. 2		2014037-011	NA	NAS-9-497	B	I	NOTE 11B	FOR DIMENSIONS SEE DASH 17 VALUES BELOW														
219	R	LOGIC DRAWER ASSY NO. 1		2014036-011	NA	NAS-9-497	B	I	NOTE 11B	FOR DIMENSIONS SEE DASH 17 VALUES BELOW														
218	R	COUNTER, ELECTRICAL ASSY		2014288-011	NA	NAS-9-497	B	I	NOTE 11B	FOR DIMENSIONS SEE DASH 15 VALUES BELOW														
217	R	POWER SUPPLY ASSY		2014279-011	NA	NAS-9-497	B	I	NOTE 11B	FOR DIMENSIONS SEE DASH 15 VALUES BELOW														
216	R	TEST MOUNT ASSY		2014257-011	NA	NAS-9-497	B	I	NOTE 11B	FOR DIMENSIONS SEE DASH 15 VALUES BELOW														
215	R	UNIVERSAL DSKY PEDESTAL MOUNT		2014014-011	NA	NAS-9-497	B	I	NOTE 11B	FOR DIMENSIONS SEE DASH 17 VALUES BELOW														
214	R	MAIN DSKY PEDESTAL MOUNT		2014343	NA	NAS-9-497	B	I	NOTE 11B	FOR DIMENSIONS SEE DASH 17 VALUES BELOW														
213	R	SHIPPING CONTAINER, MAIN DSKY		1006229	NA	NAS-9-497	B	II	NOTE 11C	FOR DIMENSIONS SEE DASH 18 VALUES BELOW														
212	R	SHIPPING CONTAINER, NAV DSKY		1006231	NA	NAS-9-497	B	II	NOTE 11C	FOR DIMENSIONS SEE DASH 18 VALUES BELOW														
211	R	SHIPPING CONTAINER, AGC		1006230	NA	NAS-9-497	B	II	NOTE 11C	FOR DIMENSION: SEE DASH 18 VALUES BELOW														
210	R	SHIPPING CONTAINER, UNIVERSAL DSKY		1006422	NA	NAS-9-497	B	II	NOTE 11C	FOR DIMENSIONS SEE DASH 18 VALUES BELOW														
209	R	SHIPPING CONTAINER, AGC		1006421	NA	NAS-9-497	B	II	NOTE 11C	FOR DIMENSIONS SEE DASH 18 VALUES BELOW														
208	R	UNIVERSAL DSKY HANDLING FIXTURE		2014013-011	NA	NAS-9-497	B	I	NOTE 11B	FOR DIMENSIONS SEE DASH 15 VALUES BELOW														
207	R	NAV DSKY HANDLING FIXTURE		1014377	NA	NAS-9-497	B	I	NOTE 11B	FOR DIMENSIONS SEE DASH 17 VALUES BELOW														
206	R	MAIN DSKY HANDLING FIXTURE		1014334	NA	NAS-9-497	B	I	NOTE 11B	FOR DIMENSIONS SEE DASH 17 VALUES BELOW														
205	R	AGC HANDLING FIXTURE		2014282-011	NA	NAS-9-497	B	I	NOTE 11B	FOR DIMENSIONS SEE DASH 17 VALUES BELOW														
204	R	OPERATION CONSOLE		2014024-011	NA	NAS-9-497	B	II	NOTE 11C	FOR DIMENSIONS SEE DASH 18 VALUES BELOW														
203	R	COMPUTER TEST SET		2014042-011	NA	NAS-9-497	B	II	NOTE 11C	FOR DIMENSIONS SEE DASH 18 VALUES BELOW														
202	R	DRAWER ASSY, COMPUTER SIMULATOR		2014048-011	NA	FNP-12775	B	II	NOTE 11C	FOR DIMENSIONS SEE DASH 18 VALUES BELOW														
201	R	AUXILIARY CALIBRATION CONSOLE		2014059-011	NA	NAS-9-497	B	II	NOTE 11C	FOR DIMENSIONS SEE DASH 18 VALUES BELOW														
200	R	AGC CALIBRATION CONSOLE		2014049-011	NA	NAS-9-497	B	II	NOTE 11C	FOR DIMENSIONS SEE DASH 18 VALUES BELOW														
21	R																							
20	R	NA		NA	NA	NA	A	II	NOTE 11C	2.000	1.312	1.687	1.375	.078	.031	.078	.093	[illegible]	.093	1.187	.750	.593	.453	1.0
19	R	NA		NA	NA	NA	A	I	NOTE 11B	2.000	1.312	1.687	1.375	.078	.031	.078	.093	NA	NA	1.187	.750	.593	.453	1.
18	R	NA		NA	NA	NA	B	II	NOTE 11C	4.187	1.875	3.469	2.750	.156	.093	.156	.125	[illegible]	.125	1.625	1.032	.844	.656	1.4
17	R	NA		NA	NA	NA	B	I	NOTE 11B	4.187	1.875	3.469	2.750	.156	.093	.156	.125	NA	NA	1.625	1.032	.844	.656	1.4
16	R	NA		NA	NA	NA	B	II	NOTE 11C	2.000	1.312	1.687	1.375	.078	.031	.078	.093	[illegible]	.093	1.187	.750	.593	.453	1.0
15	R	NA		NA	NA	NA	B	I	NOTE 11B	2.000	1.312	1.687	1.375	.078	.031	.078	.093	NA	NA	1.187	.750	.593	.453	1.0

NOTES FOR TABLE

STYLE A IS FOR G & N SYSTEM
STYLE B IS FOR GROUND SUPPORT EQUIPMENT
TYPE I IS WITHOUT MOUNTING HOLES
TYPE II IS WITH MOUNTING HOLES

1004260	CS	SHT 3

1/1004260

REVISIONS

SYM	ZONE	DESCRIPTION	CHG NO	DATE	APPD
CL		REPLACES REV CK WITHOUT CHANGE PER TDRR 34365		[illegible] 67	JWL
CM		REVISION STATUS CHANGED		18 OCT 67	RAW
CN		REVISION STATUS CHANGED		31 OCT 67	JRK
CP		REVISION STATUS CHANGED		6 NOV 67	EHS
CR		REVISION STATUS CHANGED		7 DEC 67	EHH
CS		REVISION STATUS CHANGED		3 JAN 68	JW EHW

VALUES BELOW
VALUES BELOW
VALUES BELOW
VALUES BELOW
VALUES BELOW
VALUES BELOW
VALUES BELOW
VALUES BELOW
VALUES BELOW
VALUES BELOW
VALUES BELOW
VALUES BELOW
VALUES BELOW
VALUES BELOW
VALUES BELOW
VALUES BELOW
VALUES BELOW
VALUES BELOW
VALUES BELOW
VALUES BELOW
VALUES BELOW
VALUES BELOW
VALUES BELOW
VALUES BELOW
VALUES BELOW
VALUES BELOW
VALUES BELOW
VALUES BELOW
VALUES BELOW
VALUES BELOW
VALUES BELOW
VALUES BELOW
VALUES BELOW
VALUES BELOW
VALUES BELOW
VALUES BELOW
VALUES BELOW
VALUES BELOW
VALUES BELOW
VALUES BELOW
VALUES BELOW
VALUES BELOW

VALUES BELOW
VALUES BELOW
VALUES BELOW
VALUES BELOW
VALUES BELOW
VALUES BELOW
VALUES BELOW
VALUES BELOW
VALUES BELOW
VALUES BELOW
VALUES BELOW
VALUES BELOW
VALUES BELOW
VALUES BELOW
VALUES BELOW
VALUES BELOW
VALUES BELOW
VALUES BELOW
VALUES BELOW
VALUES BELOW
VALUES BELOW
VALUES BELOW
VALUES BELOW
VALUES BELOW
VALUES BELOW
VALUES BELOW
VALUES BELOW
VALUES BELOW
VALUES BELOW
VALUES BELOW
VALUES BELOW
VALUES BELOW
VALUES BELOW
VALUES BELOW
VALUES BELOW
VALUES BELOW
VALUES BELOW
VALUES BELOW
VALUES BELOW
VALUES BELOW
VALUES BELOW
VALUES BELOW

F	G	H	J	K	L	M	N	P	R	S	T	U	V	W	Y	Z	AA	AB	AC	AD	AE	AF	AG	AH	AJ	AK	AL	AM	AN	AP	AR
031	.078	.193	[illegible]	.093	1.187	.750	.593	.453	1.015	.062	.187	.078	.875	.718	1.375	.218	1.156	1.843	.048	NA	.875	.305	.078	.312	1.687	.078	NA	.078	.312	.187	1.843
031	.078	.193	NA	NA	1.187	.750	.593	.453	1.015	.062	.187	.078	.875	.718	1.375	.218	NA	NA	.048	.031	.875	.305	.078	.312	1.687	.078	NA	.078	.312	.187	NA
093	.156	.125	[illegible]	.125	1.625	1.032	.844	.656	1.406	.093	.344	.156	1.781	1.531	2.844	.312	1.562	3.875	.062	NA	1.219	.500	.156	.719	3.469	.156	NA	.156	.719	.344	3.875
093	.156	.125	NA	NA	1.625	1.032	.844	.656	1.406	.093	.344	.156	1.781	1.531	2.844	.312	NA	NA	.062	.062	1.219	.500	.156	.719	3.469	.156	NA	.156	.719	.344	NA
031	.078	.193	[illegible]	.093	1.187	.750	.593	.453	1.015	.062	.187	.078	.875	.718	1.375	.218	1.156	1.843	.048	NA	.875	.305	.078	.312	1.687	.078	NA	.078	.312	.187	1.843
031	.078	.193	NA	NA	1.187	.750	.593	.453	1.015	.062	.187	.078	.875	.718	1.375	.218	NA	NA	.048	.031	.875	.305	.078	.312	1.687	.078	NA	.078	.312	.187	NA

RAYTHEON DASH NUMBERS

AS APPLICABLE	
NEXT ASSY	USED ON
APPLICATION	

UNLESS OTHERWISE SPECIFIED
DIMENSIONS ARE IN INCHES
TOLERANCES ON
2 PLACE DECIMALS ± 3 PLACE DECIMALS ± .005 ANGLES ±
DO NOT SCALE THIS DRAWING
MATERIAL SEE NOTE 11
APPROVAL

MIT INSTRUMENTATION LAB
Cambridge Mass
DRAWN R A JONES DATE 16 JUL 65
CHECKED
APPROVAL W KUPFER 22 JUL 65
CONTRACT
NASA APPROVAL T. MICHAELS 22 JUL 65
MIT APPROVAL W. KUPFER 22 JUL 65

MANNED SPACECRAFT CENTER
HOUSTON, TEXAS

NAMEPLATES,
APOLLO GEN - GSE
(STANDARDS)

SIZE J2 CODE IDENT NO 80230 1004260
SCALE NONE SHEET 3 OF 6

1004260 CS SHT 3

1004260 CS

1004260 SHEET 3 OF 6

27 1004260

AC DASH NUMBERS CONTINUED ON SHEET 6

DASH NO.	P/C	PART NAME	REMARKS	PART NUMBER	SER. NO.	CONT. NO.	STYLE	TYPE	MATERIAL	A	B	C	D	E	F	G	H	J	K	L	M	N	P
199	AC	EYEPIECE STOWAGE UNIT		2021255-011			A	I		FOR DIMENSIONS SEE DASH 100 VALUES BELOW													
198	AC	SIGNAL CONDITIONER ASSY C/M		2007234		NAS-9-497	A	I	NOTE 11B	FOR DIMENSIONS SEE DASH 100 VALUES BELOW													
197	AC	SIGNAL CONDITIONER ASSY C/M		2007235		NAS-9-497	A	I	NOTE 11B	FOR DIMENSIONS SEE DASH 100 VALUES BELOW													
196	AC	SIGNAL CONDITIONER ASSY LEM		6007010		NAS-9-497	A	I	NOTE 11B	FOR DIMENSIONS SEE DASH 100 VALUES BELOW													
195	AC	PSA & SIGNAL CONDITIONER ASSY		6007009		NAS-9-497	A	I	NOTE 11B	FOR DIMENSIONS SEE DASH 100 VALUES BELOW													
194	AC	PANEL, MONITOR		2900031-031		NAS-9-497	B	II	NOTE 11C	FOR DIMENSIONS SEE DASH 141 VALUES BELOW													
193	AC	DISTRIBUTION BOX, GSE		2900024-031		NAS-9-497	B	II	NOTE 11C	FOR DIMENSIONS SEE DASH 141 VALUES BELOW													
192	AC	ANALYZER, OPTICS-INERTIAL		2900023-031		NAS-9-497	B	II	NOTE 11C	FOR DIMENSIONS SEE DASH 144 VALUES BELOW													
191	AC	TEST CONTROL		2900027-031		NAS-9-497	B	II	NOTE 11C	FOR DIMENSIONS SEE DASH 141 VALUES BELOW													
190	AC	PANEL, PWR SUP AND LOAD		2900033-021		NAS-9-497	B	II	NOTE 11C	FOR DIMENSIONS SEE DASH 141 VALUES BELOW													
189	AC	ADPT MODULE, P.S.A.		6900088-011		NAS-9-497	B	II	NOTE 11C	FOR DIMENSIONS SEE DASH 141 VALUES BELOW													
188	AC	ADPT MODULE, P.S.A.		2901143-011		NAS-9-497	B	II	NOTE 11C	FOR DIMENSIONS SEE DASH 141 VALUES BELOW													
187	AC	FIXTURE, MTG, PTA/PEA		2900066-021		NAS-9-497	B	II	NOTE 11C	FOR DIMENSIONS SEE DASH 141 VALUES BELOW													
186	AC	ANNUNCIATOR PANEL & EYEPIECE STORAGE ASSEMBLY		1021255-021			A	I		FOR DIMENSIONS SEE DASH 100 VALUES BELOW													
185	AC	ANNUNCIATOR PANEL & EYEPIECE STORAGE ASSEMBLY		1021255-011			A	I		FOR DIMENSIONS SEE DASH 100 VALUES BELOW													
184	AC	FIX., HAND., G AND N HARNESS		1901846-041		NAS-9-497	B	II	NOTE 11C	FOR DIMENSIONS SEE DASH 144 VALUES BELOW													
183	AC	INSTALLING TOOL, ELEC, CONN		1902586-011		NAS-9-497	B	II	NOTE 11C	FOR DIMENSIONS SEE DASH 102 VALUES BELOW													
182	AC	ADPT MODULE, P.S.A.		6900088-011		NAS-9-497	B	II	NOTE 11C	FOR DIMENSIONS SEE DASH 141 VALUES BELOW													
181	AC	G & N INDICATOR CONTROL PANEL ASSY		2014578-011		NAS-9-497	A	I	NOTE 11B	3.000	1.938	2.437	NA	.125	.062	.188	.156	NA	NA	1.750	1.125	.906	[illegible]
180	AC	ADPT MODULE, P.S.A.		1902431-031		NAS-9-497	B	II		FOR DIMENSIONS SEE DASH 121 VALUES BELOW													
179	AC	MOUNTING PLATE, IMU/PTA		6900083-011		NAS-9-497	B	II		FOR DIMENSIONS SEE DASH 144 VALUES BELOW													
178	AC	MOUNTING PLATE, COMPONENT		6900007-021		NAS-9-497	B	II		FOR DIMENSIONS SEE DASH 144 VALUES BELOW													
177	AC	FIX., MOUNTING, SUBSYSTEM		2900070-021		NAS-9-497	B	II		FOR DIMENSIONS SEE DASH 144 VALUES BELOW													
176	AC	FIX., MOUNTING, G & N		2900067-021		NAS-9-497	B	II		FOR DIMENSIONS SEE DASH 144 VALUES BELOW													
175	AC	CSL, COOL. AND PWR, G & N		1902134-031		NAS-9-497	B	II		FOR DIMENSIONS SEE DASH 144 VALUES BELOW													
174	AC	FIX., HAND., C/M AND LEM CDU		2900999-011		NAS-9-497	B	II	NOTE 11C	FOR DIMENSIONS SEE DASH 141 VALUES BELOW													
173	AC	FIX., HANDLING, C/M PSA		2900998-011		NAS-9-497	B	II	NOTE 11C	FOR DIMENSIONS SEE DASH 141 VALUES BELOW													
172	AC	CAGING ELECTRONICS, GYRO		2900029-021		NAS-9-497	B	II	NOTE 11C	FOR DIMENSIONS SEE DASH 141 VALUES BELOW													
171	AC	DISTRIBUTION BOX, GSE		2900024-021		NAS-9-497	B	II	NOTE 11C	FOR DIMENSIONS SEE DASH 141 VALUES BELOW													
170	AC	ANALYZER, OPTICS-INERTIAL		2900023-021		NAS-9-497	B	II	NOTE 11C	FOR DIMENSIONS SEE DASH 144 VALUES BELOW													
169	AC	ADPT, TESTPOINT, P.S.A.		2900037-021		NAS-9-497	B	II	NOTE 11C	FOR DIMENSIONS SEE DASH 141 VALUES BELOW													
168	AC	TEST SELECTOR		2900028-021		NAS-9-497	B	II	NOTE 11C	FOR DIMENSIONS SEE DASH 141 VALUES BELOW													
167	AC	TEST CONTROL		2900027-021		NAS-9-497	B	II	NOTE 11C	FOR DIMENSIONS SEE DASH 141 VALUES BELOW													
166	AC	PANEL, MONITOR		2900031-021		NAS-9-497	B	II	NOTE 11C	FOR DIMENSIONS SEE DASH 141 VALUES BELOW													
165	AC	TERM. BOARD STORAGE DRAWER		2900927-011		NAS-9-497	B	II	NOTE 11C	FOR DIMENSIONS SEE DASH 141 VALUES BELOW													
164	AC	INPUT/OUTPUT PANEL		2900926-011		NAS-9-497	B	II	NOTE 11C	FOR DIMENSIONS SEE DASH 141 VALUES BELOW													
163	AC	CONTROL PANEL		2900896-011		NAS-9-497	B	II	NOTE 11C	FOR DIMENSIONS SEE DASH 141 VALUES BELOW													
162	AC	CSL, CAL AND TEST, SCM/PSAAM		2900895-011		NAS-9-497	B	II	NOTE 11C	FOR DIMENSIONS SEE DASH 144 VALUES BELOW													
161	AC	FIX., LIFT AND HAND., IMU		1015462-011		NAS-9-497	B	II	NOTE 11C	FOR DIMENSIONS SEE DASH 141 VALUES BELOW													
160	AC	FIX., HAND., G & N HARNESS		1901846-031		NAS-9-497	B	II	NOTE 11C	FOR DIMENSIONS SEE DASH 144 VALUES BELOW													
159	AC	BATTERY POWER PACK		1900011-031		NAS-9-497	B	II	NOTE 11C	FOR DIMENSIONS SEE DASH 144 VALUES BELOW													
158	AC	COUPLING DATA UNIT ASSEMBLY C/M		2007222		NAS-9-497	A	I	NOTE 11B	FOR DIMENSIONS SEE DASH 100 VALUES BELOW													
157	AC	COUPLING DATA UNIT ASSEMBLY - LEM		2007222		NAS-9-497	A	I	NOTE 11B	FOR DIMENSIONS SEE DASH 100 VALUES BELOW													
156	AC	POWER & SERVO ASSEMBLY C/M		2007200		NAS-9-497	A	I	NOTE 11B	2.125	.968	1.718	NA	.093	.031	.06	.093	NA	NA	.858	.608	.484	.358
155	AC	PIPA ELECTRONICS ASSEMBLY		2007201		NAS-9-497	A	I	NOTE 11B	FOR DIMENSIONS SEE DASH 100 VALUES BELOW													
154	AC	PULSE TORQUE ASSEMBLY-LEM		6007000		NAS-9-497	A	I	NOTE 11B	FOR DIMENSIONS SEE DASH 100 VALUES BELOW													
153	AC	POWER & SERVO ASSEMBLY-LEM		6007200		NAS-9-497	A	I	NOTE 11B	FOR DIMENSIONS SEE DASH 100 VALUES BELOW													
152	AC	CONT PNL, RSVR CKT TESTER		2900770-011		NAS-9-497	B	II	NOTE 11C	FOR DIMENSIONS SEE DASH 141 VALUES BELOW													
151	AC	TESTER, RESOLVER CIRCUIT		2900708-011		NAS-9-497	B	II	NOTE 11C	FOR DIMENSIONS SEE DASH 141 VALUES BELOW													
150	AC	JUNCTION BOX, P.S.A./G.S.E.		1901933-021		NAS-9-497	B	II	NOTE 11C	FOR DIMENSIONS SEE DASH 144 VALUES BELOW													
149	AC	BATTERY PACK, LIFTING		2900812-011		NAS-9-497	B	II	NOTE 11C	FOR DIMENSIONS SEE DASH 141 VALUES BELOW													
148	AC	MOUNTING PLATE, COMPONENT		6900007-011		NAS-9-497	B	II	NOTE 11C	FOR DIMENSIONS SEE DASH 144 VALUES BELOW													
147	AC	MOUNTING PLATE, COMPONENT		2900677-011		NAS-9-497	B	II	NOTE 11C	FOR DIMENSIONS SEE DASH 144 VALUES BELOW													
146	AC	CART, TRANS, G & N		1900009-041		NAS-9-497	B	II	NOTE 11C	FOR DIMENSIONS SEE DASH 144 VALUES BELOW													
145	AC	CONTAINER, SHIPPING, IMU		1900010-021		NAS-9-497	B	II	NOTE 11C	FOR DIMENSIONS SEE DASH 144 VALUES BELOW													
144	AC	FIX., MOUNTING, G & N		1902204-021			B	II	NOTE 11C	4.125	1.812	3.250	NA	.125	.062	.12	.156		.125	1.625	1.140	.890	.640
143	AC	CSL, COOL, AND PWR, G & N		1902134-021			B	II	NOTE 11C	4.125	1.812	3.250	NA	.125	.062	.12	.156		.125	1.625	1.140	.890	.640
142	AC	ANALYZER, OPTICS-INERTIAL		2900023-011			B	II	NOTE 11C	4.125	1.812	3.250	NA	.125	.062	.12	.156		.125	1.625	1.140	.890	.640
141	AC	CONT, TEMP, PORTABLE		2900060-011			B	II	NOTE 11C	2.125	.968	1.718	NA	.093	.031	.06	.093		.093	.858	.608	.484	.358
140	AC	TESTER, CKT, IMU/CDU RSVR		2900286-011			B	II	NOTE 11C	4.125	1.812	3.250	NA	.125	.062	.12	.156		.125	1.625	1.140	.890	.640
139	AC	SIMULATOR, LD/SIG, CDU		2300285-011			B	II	NOTE 11C	4.125	1.812	3.250	NA	.125	.062	.12	.156		.125	1.625	1.140	.890	.640
138	AC	SIMULATOR, LD/SIG, OPTICS		1902023-021			B	II	NOTE 11C	4.125	1.812	3.250	NA	.125	.062	.12	.156		.125	1.625	1.140	.890	.640
137	AC	FIX., MOUNTING, IMU/NAV BASE		6900003-011			B	II	NOTE 11C	4.125	1.812	3.250	NA	.125	.062	.12	.156		.125	1.625	1.140	.890	.640
136	AC	FIXTURE, OPTICS/NAV BASE		2900072-011			B	II	NOTE 11C	4.125	1.812	3.250	NA	.125	.062	.12	.156		.125	1.625	1.140	.890	.640
135	AC	FIX., MOUNTING, SUB SYSTEM		2900070-011			B	II	NOTE 11C	4.125	1.812	3.250	NA	.125	.062	.12	.156		.125	1.625	1.140	.890	.640
134	AC	FIX., HAND., G & N HARNESS		2900069-011			B	II	NOTE 11C	4.125	1.812	3.250	NA	.125	.062	.12	.156		.125	1.625	1.140	.890	.640
133	AC	CNTR, SHIPPING, NAV BASE		2900068-011			B	II	NOTE 11C	4.125	1.812	3.250	NA	.125	.062	.12	.156		.125	1.625	1.140	.890	.640
132	AC	FIX., MOUNTING, G & N		2900067-011			B	II	NOTE 11C	4.125	1.812	3.250	NA	.125	.062	.12	.156		.125	1.625	1.140	.890	.640
131	AC	SIMULATOR, LD/SIG, IMU/CDU		2900062-011			B	II	NOTE 11C	4.125	1.812	3.250	NA	.125	.062	.12	.156		.125	1.625	1.140	.890	.640
130	AC	TESTER, GYRO WHEEL		2900061-011			B	II	NOTE 11C	4.125	1.812	3.250	NA	.125	.062	.12	.156		.125	1.625	1.140	.890	.640
129	AC	COOLANT SUPPLY		1902133-021			B	II	NOTE 11C	4.125	1.812	3.250	NA	.125	.062	.12	.156		.125	1.625	1.140	.890	.640
128	AC	TABLE, ROTARY		1900926-021			B	II	NOTE 11C	4.125	1.812	3.250	NA	.125	.062	.12	.156		.125	1.625	1.140	.890	.640
127	AC	FIX., HAND., OPTICS		2900074-011			B	II	NOTE 11C	2.125	.968	1.718	NA	.093	.031	.06	.093		.093	.858	.608	.484	.358
126	AC	FIXTURE, MTG, PTA/PEA.		2900066-011			B	II	NOTE 11C	2.125	.968	1.718	NA	.093	.031	.06	.093		.093	.858	.608	.484	.358
125	AC	CONT, TEMP, IMU LIFTING		2900063-011			B	II	NOTE 11C	2.125	.968	1.718	NA	.093	.031	.06	.093		.093	.858	.608	.484	.358
124	AC	FIXTURE, HANDLING, IMU		2900064-011			B	II	NOTE 11C	2.125	.968	1.718	NA	.093	.031	.06	.093		.093	.858	.608	.484	.358
123	AC	CONT, OPTICS, REMOTE		1902046-021			B	II	NOTE 11C	2.125	.968	1.718	NA	.093	.031	.06	.093		.093	.858	.608	.484	.358
122	AC	TEST CONTROL		1902009-021			B	II	NOTE 11C	2.125	.968	1.718	NA	.093	.031	.06	.093		.093	.858	.608	.484	.358
121	AC	ADPT MODULE, P.S.A.		1902431-021			B	II	NOTE 11C	2.125	.968	1.718	NA	.093	.031	.06	.093		.093	.858	.608	.484	.358
120	AC	BRIDGE, DECADE ERROR		2900128-011			B	II	NOTE 11C	2.125	.968	1.718	NA	.093	.031	.06	.093		.093	.858	.608	.484	.358
119	AC	PWR SUP, ELECTRONICS		2900012-011			B	II	NOTE 11C	2.125	.968	1.718	NA	.093	.031	.06	.093		.093	.858	.608	.484	.358
118	AC	PWR SUP, RELAY AND LAMP		1900049-031			B	II	NOTE 11C	2.125	.968	1.718	NA	.093	.031	.06	.093		.093	.858	.608	.484	.358
117	AC	CONSOLE, OSCILLOGRAPH		1900000-021			B	II	NOTE 11C	2.125	.968	1.718	NA	.093	.031	.06	.093		.093	.858	.608	.484	.358
116	AC	ADPT MODULE, P.S.A.		1902431-011			B	II	NOTE 11C	2.125	.968	1.718	NA	.093	.031	.06	.093		.093	.858	.608	.484	.358
115	AC	ADPT, TEST POINT, PTA/PEA.		2900145-011			B	II	NOTE 11C	2.125	.968	1.718	NA	.093	.031	.06	.093		.093	.858	.608	.484	.358
114	AC	ADPT, TEST POINT, P.S.A.		2900037-011			B	II	NOTE 11C	2.125	.968	1.718	NA	.093	.031	.06	.093		.093	.858	.608	.484	.358
113	AC	CONTROL, GIMBAL POSITION		2900036-011			B	II	NOTE 11C	2.125	.968	1.718	NA	.093	.031	.06	.093		.093	.858	.608	.484	.358
112	AC	SELECTOR, SIGNAL, PRIMARY		2900035-011			B	II	NOTE 11C	2.125	.968	1.718	NA	.093	.031	.06	.093		.093	.858	.608	.484	.358
111	AC	SEL, SIG, OSCILLOGRAPH		2900034-011			B	II	NOTE 11C	2.125	.968	1.718	NA	.093	.031	.06	.093		.093	.858	.608	.484	.358
110	AC	PANEL, PWR SUP AND LOAD		2900033-011			B	II	NOTE 11C	2.125	.968	1.718	NA	.093	.031	.06	.093		.093	.858	.608	.484	.358
109	AC	PANEL, MONITOR		2900031-011			B	II	NOTE 11C	2.125	.968	1.718	NA	.093	.031	.06	.093		.093	.858	.608	.484	.358
108	AC	PANEL, AUXILIARY INPUT		2900030-011			B	II	NOTE 11C	2.125	.968	1.718	NA	.093	.031	.06	.093		.093	.858	.608	.484	.358
107	AC	CAGING ELECTRONICS, GYRO		2900029-011			B	II	NOTE 11C	2.125	.968	1.718	NA	.093	.031	.06	.093		.093	.858	.608	.484	.358
106	AC	TEST SELECTOR		2900028-011			B	II	NOTE 11C	2.125	.968	1.718	NA	.093	.031	.06	.093		.093	.858	.608	.484	.358
105	AC	TEST CONTROL		2900027-011			B	II	NOTE 11C	2.125	.968	1.718	NA	.093	.031	.06	.093		.093	.858	.608	.484	.358
104	AC	MONITOR AND CONTROL, TEMP		2900026-011			B	II	NOTE 11C	2.125	.968	1.718	NA	.093	.031	.06	.093		.093	.858	.608	.484	.358
103	AC	DISTRIBUTION BOX, GSE		2900024-011			B	II	NOTE 11C	2.125	.968	1.718	NA	.093	.031	.06	.093		.093	.858	.608	.484	.358
102	AC	VOLTMETER, DIGITAL		2900007-011			B	II	NOTE 11C	2.125	.968	1.718	NA	.093	.031	.06	.093		.093	.858	.608	.484	.358
101	AC	NAVIGATION BASE ASSEMBLY-LEM		6899950		NAS-9-497	A	I	NOTE 11B	2.000	1.312	1.906	1.375	.078	.048	.078	.093	NA	NA	1.125	.750	.593	.453
100	AC	NAVIGATION BASE ASSEMBLY		2899982		NAS-9-497	A	I	NOTE 11B	2.000	1.312	1.906	1.375	.078	.048	.078	.093	NA	NA	1.125	.750	.593	.453

NOTES FOR TABLE

STYLE A IS FOR G & N SYSTEM
STYLE B IS FOR GROUND SUPPORT EQUIPMENT
TYPE I IS WITHOUT MOUNTING HOLES
TYPE II IS WITH MOUNTING HOLES

1004260	CS	SHT 4

REVISIONS					
SYM	ZONE	DESCRIPTION	CHG NO	DATE	APPD
CL		REPLACES REV CK WITHOUT CHANGE PER TDRR 34368		[illegible]	JWL
CM		REVISION STATUS CHANGED		18 OCT 67	R.A.W.
CN		REVISION STATUS CHANGE		31 OCT 67	JRK
CP		REVISION STATUS CHANGE		6 NOV 67	ENS
CR		REVISION STATUS CHANGED		9 NOV 67	AVD RWH
CS		REVISION STATUS CHANGED		3 JAN 68	RHW

DASH 100 VALUES BELOW																																
DASH 100 VALUES BELOW																																
DASH 100 VALUES BELOW																																
DASH 100 VALUES BELOW																																
DASH 100 VALUES BELOW																																
DASH 141 VALUES BELOW																																
DASH 141 VALUES BELOW																																
DASH 144 VALUES BELOW																																
DASH 141 VALUES BELOW																																
DASH 141 VALUES BELOW																																
DASH 141 VALUES BELOW																																
DASH 141 VALUES BELOW																																
DASH 141 VALUES BELOW																																
DASH 100 VALUES BELOW																																
DASH 100 VALUES BELOW																																
DASH 144 VALUES BELOW																																
DASH 102 VALUES BELOW																																
DASH 141 VALUES BELOW																																
125	.062	.188	.156	NA	NA	1.750	1.125	.906	.688	1.500	NA	.281	.125	NA	1.094	2.062	.312	NA	2.500	.062	.125	1.312	.469	NA	NA	NA	.156	NA	.125	.469	.344	NA
DASH 121 VALUES BELOW																																
DASH 144 VALUES BELOW																																
DASH 144 VALUES BELOW																																
DASH 144 VALUES BELOW																																
DASH 144 VALUES BELOW																																
DASH 144 VALUES BELOW																																
DASH 141 VALUES BELOW																																
DASH 141 VALUES BELOW																																
DASH 141 VALUES BELOW																																
DASH 141 VALUES BELOW																																
DASH 144 VALUES BELOW																																
DASH 141 VALUES BELOW																																
DASH 141 VALUES BELOW																																
DASH 141 VALUES BELOW																																
DASH 141 VALUES BELOW																																
DASH 141 VALUES BELOW																																
DASH 141 VALUES BELOW																																
DASH 141 VALUES BELOW																																
DASH 144 VALUES BELOW																																
DASH 141 VALUES BELOW																																
DASH 144 VALUES BELOW																																
DASH 144 VALUES BELOW																																
DASH 100 VALUES BELOW																																
DASH 100 VALUES BELOW																																
093	.031	.06	.093	NA	NA	.858	.608	.484	.358	.733	.062	.140	.062	NA	.968	1.450	.125	NA	1.720	.046	.03	NA	.210	NA	NA	NA	.070	NA	.046	.32	.16	NA
DASH 100 VALUES BELOW																																
DASH 100 VALUES BELOW																																
DASH 100 VALUES BELOW																																
DASH 141 VALUES BELOW																																
DASH 141 VALUES BELOW																																
DASH 144 VALUES BELOW																																
DASH 141 VALUES BELOW																																
DASH 144 VALUES BELOW																																
DASH 144 VALUES BELOW																																
DASH 144 VALUES BELOW																																
DASH 144 VALUES BELOW																																
125	.062	.12	.156		.125	1.625	1.140	.890	.640	1.390	.125	.171	.125	1.875	1.687	2.625	.250	1.562	3.843	.093	NA	NA	.359	.125	.437	3.688	NA	3.687	.093	.40	.25	3.875
125	.062	.12	.156		.125	1.625	1.140	.890	.640	1.390	.125	.171	.125	1.875	1.687	2.625	.250	1.562	3.843	.093	NA	NA	.359	.125	.437	3.688	NA	3.687	.093	.40	.25	3.875
125	.062	.12	.156		.125	1.625	1.140	.890	.640	1.390	.125	.171	.125	1.875	1.687	2.625	.250	1.562	3.843	.093	NA	NA	.359	.125	.437	3.688	NA	3.687	.093	.40	.25	3.875
093	.031	.06	.093		.093	.858	.608	.484	.358	.733	.077	.116	.062	.937	.875	1.343	.125	.781	1.892	.046	NA	NA	.209	.093	.250	1.875	NA	1.840	.046	.23	.16	1.938
125	.062	.12	.156		.125	1.625	1.140	.890	.640	1.390	.125	.171	.125	1.875	1.687	2.625	.250	1.562	3.843	.093	NA	NA	.359	.125	.437	3.688	NA	3.687	.093	.40	.25	3.875
125	.062	.12	.156		.125	1.625	1.140	.890	.640	1.390	.125	.171	.125	1.875	1.687	2.625	.250	1.562	3.843	.093	NA	NA	.359	.125	.437	3.688	NA	3.687	.093	.40	.25	3.875
125	.062	.12	.156		.125	1.625	1.140	.890	.640	1.390	.125	.171	.125	1.875	1.687	2.625	.250	1.562	3.843	.093	NA	NA	.359	.125	.437	3.688	NA	3.687	.093	.40	.25	3.875
125	.062	.12	.156		.125	1.625	1.140	.890	.640	1.390	.125	.171	.125	1.875	1.687	2.625	.250	1.562	3.843	.093	NA	NA	.359	.125	.437	3.688	NA	3.687	.093	.40	.25	3.875
125	.062	.12	.156		.125	1.625	1.140	.890	.640	1.390	.125	.171	.125	1.875	1.687	2.625	.250	1.562	3.843	.093	NA	NA	.359	.125	.437	3.688	NA	3.687	.093	.40	.25	3.875
125	.062	.12	.156		.125	1.625	1.140	.890	.640	1.390	.125	.171	.125	1.875	1.687	2.625	.250	1.562	3.843	.093	NA	NA	.359	.125	.437	3.688	NA	3.687	.093	.40	.25	3.875
125	.062	.12	.156		.125	1.625	1.140	.890	.640	1.390	.125	.171	.125	1.875	1.687	2.625	.250	1.562	3.843	.093	NA	NA	.359	.125	.437	3.688	NA	3.687	.093	.40	.25	3.875
125	.062	.12	.156		.125	1.625	1.140	.890	.640	1.390	.125	.171	.125	1.875	1.687	2.625	.250	1.562	3.843	.093	NA	NA	.359	.125	.437	3.688	NA	3.687	.093	.40	.25	3.875
125	.062	.12	.156		.125	1.625	1.140	.890	.640	1.390	.125	.171	.125	1.875	1.687	2.625	.250	1.562	3.843	.093	NA	NA	.359	.125	.437	3.688	NA	3.687	.093	.40	.25	3.875
125	.062	.12	.156		.125	1.625	1.140	.890	.640	1.390	.125	.171	.125	1.875	1.687	2.625	.250	1.562	3.843	.093	NA	NA	.359	.125	.437	3.688	NA	3.687	.093	.40	.25	3.875
125	.062	.12	.156		.125	1.625	1.140	.890	.640	1.390	.125	.171	.125	1.875	1.687	2.625	.250	1.562	3.843	.093	NA	NA	.359	.125	.437	3.688	NA	3.687	.093	.40	.25	3.875
125	.062	.12	.156		.125	1.625	1.140	.890	.640	1.390	.125	.171	.125	1.875	1.687	2.625	.250	1.562	3.843	.093	NA	NA	.359	.125	.437	3.688	NA	3.687	.093	.40	.25	3.875
125	.062	.12	.156		.125	1.625	1.140	.890	.640	1.390	.125	.171	.125	1.875	1.687	2.625	.250	1.562	3.843	.093	NA	NA	.359	.125	.437	3.688	NA	3.687	.093	.40	.25	3.875
093	.031	.06	.093		.093	.858	.608	.484	.358	.733	.077	.116	.062	.937	.875	1.343	.125	.781	1.892	.046	NA	NA	.209	.093	.250	1.875	NA	1.840	.046	.23	.16	1.938
093	.031	.06	.093		.093	.858	.608	.484	.358	.733	.077	.116	.062	.937	.875	1.343	.125	.781	1.892	.046	NA	NA	.209	.093	.250	1.875	NA	1.840	.046	.23	.16	1.938
093	.031	.06	.093		.093	.858	.608	.484	.358	.733	.077	.116	.062	.937	.875	1.343	.125	.781	1.892	.046	NA	NA	.209	.093	.250	1.875	NA	1.840	.046	.23	.16	1.938
093	.031	.06	.093		.093	.858	.608	.484	.358	.733	.077	.116	.062	.937	.875	1.343	.125	.781	1.892	.046	NA	NA	.209	.093	.250	1.875	NA	1.840	.046	.23	.16	1.938
093	.031	.06	.093		.093	.858	.608	.484	.358	.733	.077	.116	.062	.937	.875	1.343	.125	.781	1.892	.046	NA	NA	.209	.093	.250	1.875	NA	1.840	.046	.23	.16	1.938
093	.031	.06	.093		.093	.858	.608	.484	.358	.733	.077	.116	.062	.937	.875	1.343	.125	.781	1.892	.046	NA	NA	.209	.093	.250	1.875	NA	1.840	.046	.23	.16	1.938
093	.031	.06	.093		.093	.858	.608	.484	.358	.733	.077	.116	.062	.937	.875	1.343	.125	.781	1.892	.046	NA	NA	.209	.093	.250	1.875	NA	1.840	.046	.23	.16	1.938
093	.031	.06	.093		.093	.858	.608	.484	.358	.733	.077	.116	.062	.937	.875	1.343	.125	.781	1.892	.046	NA	NA	.209	.093	.250	1.875	NA	1.840	.046	.23	.16	1.938
093	.031	.06	.093		.093	.858	.608	.484	.358	.733	.077	.116	.062	.937	.875	1.343	.125	.781	1.892	.046	NA	NA	.209	.093	.250	1.875	NA	1.840	.046	.23	.16	1.938
093	.031	.06	.093		.093	.858	.608	.484	.358	.733	.077	.116	.062	.937	.875	1.343	.125	.781	1.892	.046	NA	NA	.209	.093	.250	1.875	NA	1.840	.046	.23	.16	1.938
093	.031	.06	.093		.093	.858	.608	.484	.358	.733	.077	.116	.062	.937	.875	1.343	.125	.781	1.892	.046	NA	NA	.209	.093	.250	1.875	NA	1.840	.046	.23	.16	1.938
093	.031	.06	.093		.093	.858	.608	.484	.358	.733	.077	.116	.062	.937	.875	1.343	.125	.781	1.892	.046	NA	NA	.209	.093	.250	1.875	NA	1.840	.046	.23	.16	1.938
093	.031	.06	.093		.093	.858	.608	.484	.358	.733	.077	.116	.062	.937	.875	1.343	.125	.781	1.892	.046	NA	NA	.209	.093	.250	1.875	NA	1.840	.046	.23	.16	1.938
093	.031	.06	.093		.093	.858	.608	.484	.358	.733	.077	.116	.062	.937	.875	1.343	.125	.781	1.892	.046	NA	NA	.209	.093	.250	1.875	NA	1.840	.046	.23	.16	1.938
093	.031	.06	.093		.093	.858	.608	.484	.358	.733	.077	.116	.062	.937	.875	1.343	.125	.781	1.892	.046	NA	NA	.209	.093	.250	1.875	NA	1.840	.046	.23	.16	1.938
093	.031	.06	.093		.093	.858	.608	.484	.358	.733	.077	.116	.062	.937	.875	1.343	.125	.781	1.892	.046	NA	NA	.209	.093	.250	1.875	NA	1.840	.046	.23	.16	1.938
093	.031	.06	.093		.093	.858	.608	.484	.358	.733	.077	.116	.062	.937	.875	1.343	.125	.781	1.892	.046	NA	NA	.209	.093	.250	1.875	NA	1.840	.046	.23	.16	1.938
093	.031	.06	.093		.093	.858	.608	.484	.358	.733	.077	.116	.062	.937	.875	1.343	.125	.781	1.892	.046	NA	NA	.209	.093	.250	1.875	NA	1.840	.046	.23	.16	1.938
093	.031	.06	.093		.093	.858	.608	.484	.358	.733	.077	.116	.062	.937	.875	1.343	.125	.781	1.892	.046	NA	NA	.209	.093	.250	1.875	NA	1.840	.046	.23	.16	1.938
093	.031	.06	.093		.093	.858	.608	.484	.358	.733	.077	.116	.062	.937	.875	1.343	.125	.781	1.892	.046	NA	NA	.209	.093	.250	1.875	NA	1.840	.046	.23	.16	1.938
093	.031	.06	.093		.093	.858	.608	.484	.358	.733	.077	.116	.062	.937	.875	1.343	.125	.781	1.892	.046	NA	NA	.209	.093	.250	1.875	NA	1.840	.046	.23	.16	1.938
093	.031	.06	.093		.093	.858	.608	.484	.358	.733	.077	.116	.062	.937	.875	1.343	.125	.781	1.892	.046	NA	NA	.209	.093	.250	1.875	NA	1.840	.046	.23	.16	1.938
093	.031	.06	.093		.093	.858	.608	.484	.358	.733	.077	.116	.062	.937	.875	1.343	.125	.781	1.892	.046	NA	NA	.209	.093	.250	1.875	NA	1.840	.046	.23	.16	1.938
093	.031	.06	.093		.093	.858	.608	.484	.358	.733	.077	.116	.062	.937	.875	1.343	.125	.781	1.892	.046	NA	NA	.209	.093	.250	1.875	NA	1.840	.046	.23	.16	1.938
093	.031	.06	.093		.093	.858	.608	.484	.358	.733	.077	.116	.062	.937	.875	1.343	.125	.781	1.892	.046	NA	NA	.209	.093	.250	1.875	NA	1.840	.046	.23	.16	1.938
093	.031	.06	.093		.093	.858	.608	.484	.358	.733	.077	.116	.062	.937	.875	1.343	.125	.781	1.892	.046	NA	NA	.209	.093	.250	1.875	NA	1.840	.046	.23	.16	1.938
093	.031	.06	.093		.093	.858	.608	.484	.358	.733	.077	.116	.062	.937	.875	1.343	.125	.781	1.892	.046	NA	NA	.209	.093	.250	1.875	NA	1.840	.046	.23	.16	1.938
078	.048	.78	.093	NA	NA	1.125	.750	.593	.453	1.015	.062	.187	.078	.875	.718	1.375	.218	NA	NA	.048	.031	.875	.305	.078	.531	1.906	.078	NA	.078	.531	.187	NA
078	.048	.78	.093	NA	NA	1.125	.750	.593	.453	1.015	.062	.187	.078	.875	.718	1.375	.218	NA	NA	.048	.031	.875	.305	.078	.531	1.906	.078	NA	.078	.531	.187	NA
E	F	G	H	J	K	L	M	N	P	R	S	T	U	V	W	Y	Z	AA	AB	AC	AD	AE	AF	AG	AH	AJ	AK	AL	AM	AN	AP	AR

AC ELECTRONICS DASH NUMBERS

UNLESS OTHERWISE SPECIFIED DIMENSIONS ARE IN INCHES TOLERANCES ON 2 PLACE DECIMALS ± 3 PLACE DECIMALS ± .005 ANGLES ±	M I T INSTRUMENTATION LAB CAMBRIDGE MASS	MANNED SPACECRAFT CENTER HOUSTON, TEXAS	
DO NOT SCALE THIS DRAWING	DRAWN R. A. JONES DATE 16 JUL 65 CHECKED APPROVAL W. RUPFER 22 JUL 65 CONTRACT	NAMEPLATES, APOLLO GEN - GSE (STANDARDS)	
MATERIAL SEE NOTE H	T. MICHAELS 22 JUL 65 NASA APPROVAL W. RUPFER 22 JUL 65 MIT APPROVAL	SIZE J2	CODE IDENT NO. 80230 — 1004260
APPROVAL		SCALE NONE	SHEET 4 OF 6

AS APPLICABLE	
NEXT ASSY	USED ON
APPLICATION	

1004260 | CS | SHT 4

27/1004260

DASH NO.	P/C	PART NAME	REMARKS	PART NUMBER	SER. NO.	CONT. NO.	STYLE	TYPE	MATERIAL	A	B	C	D	E	F	G	H	J	K	L	M	N	P
401	MIT	COMPUTER ASSY		2003100		NAS-9-497	A	I	NOTE 11B	2.000	1.312	1.906	1.375	.078	.048	.078	.093	NA	NA	1.125	.750	.59[illegible]	.453
400	MIT	LIFTING SLING-G&N INST, QUAL, FIX, & AZM, REF, FIX.		1021640		NAS-9-4065	B	II	NOTE 11C	2.000	1.312	1.687	1.375	.078	.048	.078	.093	[illegible]	.093	1.187	.750	.59[illegible]	.453

NOTES FOR TABLE
STYLE A IS FOR G & N SYSTEM
STYLE B IS FOR GROUND SUPPORT EQUIPMENT
TYPE I IS WITHOUT MOUNTING HOLES
TYPE II IS WITH MOUNTING HOLES

REVISIONS					
SYM	ZONE	DESCRIPTION	CHG NO	DATE	APPD
CL		REPLACES REV CK WITHOUT CHANGE PER TDRR 34365		1 JUL 67	RWH
CM		REVISION STATUS CHANGED		18 OCT 67	RAW
CN		REVISION STATUS CHANGED		31 OCT 67	JRK
CP		REVISION STATUS CHANGED		6 NOV 67	
CR		REVISION STATUS CHANGED		7 DEC 67	RWH
CS		REVISION STATUS CHANGED		3 JAN 68	EWA

.048	.178	.093	NA	NA	1.125	.750	.593	.453	1.015	.062	.187	.078	.875	.718	1.375	.218	NA	NA	.048	.031	.875	.305	.078	.531	1.906	.078	NA	.078	.531	.187	NA
.048	.178	.093	[illegible]	.093	1.187	.750	.593	.453	1.015	.062	.187	.078	.875	.718	1.375	.218	1.156	1.843	.048	NA	.875	.305	.078	.312	1.687	.110	1.890	.070	.275	.150	1.844
F	G	H	J	K	L	M	N	P	R	S	T	U	V	W	Y	Z	AA	AB	AC	AD	AE	AF	AG	AH	AJ	AK	AL	AM	AN	AP	AR

MIT DASH NUMBERS

UNLESS OTHERWISE SPECIFIED DIMENSIONS ARE IN INCHES TOLERANCES ON 2 PLACE DECIMALS ± 3 PLACE DECIMALS ± .005 ANGLES ±	
DO NOT SCALE THIS DRAWING	
MATERIAL SEE NOTE H	
APPROVAL	
AS APPLICABLE	
NEXT ASSY	USED ON
APPLICATION	

M I T INSTRUMENTATION LAB CAMBRIDGE MASS

DRAWN	R. A. JONES	16 JUL 65
CHECKED		
APPROVAL	W. KUPFER	22 JUL 65
CONTRACT		
NASA APPROVAL	T. MICHAELS	22 JUL 65
MIT APPROVAL	W. KUPFER	22 JUL 65

MANNED SPACECRAFT CENTER
HOUSTON, TEXAS

NAMEPLATES,
APOLLO G&N - GSE
(STANDARDS)

SIZE	CODE IDENT NO.	
J2	80230	1004260
SCALE NONE		SHEET 5 OF 6

1004260 CS

1004260	CS	SHT 5

2710004260

[illegible]

DASH NO.	P/C	PART NAME	REMARKS	PART NUMBER	SER. NO.	CONT. NO.	STYLE	TYPE	MATERIAL	A	B	C	D	E	F	G	H	J	K	L	M	N	P
599	AC																						
598	AC																						
575		CSL, CAL AND TEST, SCM/PSAAM		2900895-041		FOR DATA SEE DASH 559																	
574		CONT., TEMP PORTABLE		2900060-031		NAS-9-497	B	II	NOTE 11C	FOR DIMENSIONS SEE DASH 535 VALUES													
573		BATTERY PACK LIFTING		2900812-031		NAS-9-497	B	II	NOTE 11C	FOR DIMENSIONS SEE DASH 542 VALUES													
572		FIX., MOUNTING G&N	(-144)	2900067-051		NAS-9-497	B	II	NOTE 11C	FOR DIMENSIONS SEE DASH 500 VALUES													
570	AC	OPTICAL UNIT & BELLOWS ASSY				NAS-9-497	A	I	NOTE 11B	FOR DIMENSIONS SEE DASH 550 VALUES													
569	AC	G & N INDICATOR CONTROL PANEL ASSY		2021323-011		NAS-9-497	A	I	NOTE 11B	FOR DIMENSIONS SEE DASH 181													
568	AC	G & N INDICATOR CONTROL PANEL ASSY		2021290-021		NAS-9-497	A	I	NOTE 11B	FOR DIMENSIONS SEE DASH 181													
567	AC	G & N INDICATOR CONTROL PANEL ASSY		2021290-011		NAS-9-497	A	I	NOTE 11B	FOR DIMENSIONS SEE DASH 181													
566	AC	COMPUTER CONT & RETICLE DIMMER		6014512-061		NAS-9-497	A	I	NOTE 11B	FOR DIMENSIONS SEE DASH 534													
565		AUXILIARY BATTERY PACK		1901492-031		NAS-9-497	B	II	NOTE 11C	FOR DIMENSIONS SEE DASH 500													
564		BATTERY POWER PACK		1900011-051		NAS-9-497	B	II	NOTE 11C	FOR DIMENSIONS SEE DASH 500													
563		PSA ADAPTER MODULE (LEM)		6900088-031		NAS-9-497	B	II	NOTE 11C	FOR DIMENSIONS SEE DASH 141 VALUES													
562	AC	COMPUTER CONT & RETICLE DIMMER		6014512-041		NAS-9-497	A	I	NOTE 11B	FOR DIMENSIONS SEE DASH 534 VALUES													
561	AC	G & N INDICATOR CONTROL PANEL ASSY		2014578-031		NAS-9-497	A	I	NOTE 11B	FOR DIMENSIONS SEE DASH 181 VALUES													
560		ADPT. MODULE, PSA		2901143-021		NAS-9-497	B	II	NOTE 11C	FOR DIMENSIONS SEE DASH 141 VALUES													
559		CSL, CAL AND TEST, SCM/PSAAM		2900895-031		FOR OTHER DATA SEE DASH 547																	
558		PSA ADAPTER MODULE (LEM)		6900088-021		FOR OTHER DATA SEE DASH 189																	
557		FIX., HANDLING, C/M PSA		2900998-021		NAS-9-497	B	II	NOTE 11C	FOR DIMENSIONS SEE DASH 141 VALUES													
556		FIX., MOUNTING G & N	(-144)	2900067-041		NAS-9-497	B	II	NOTE 11C	FOR DIMENSIONS SEE DASH 500 VALUES													
555	AC	OPTICAL UNIT ASSEMBLY		1021368-061		NAS-9-497	A	I	NOTE 11B	2.000	1.312	1.687	1.375	.078	.048	.078	.093	NA	NA	1.125	.750	.593	.4
554	AC	OPTICAL UNIT ASSEMBLY		1021368-041		NAS-9-497	A	I	NOTE 11B	2.000	1.312	1.687	1.375	.078	.048	.078	.093	NA	NA	1.125	.750	.593	.4
553	AC	OPTICAL UNIT AND BELLOWS ASSEMBLY		2010790-111		NAS-9-497	A	I	NOTE 11B	2.000	1.312	1.687	1.375	.078	.048	.078	.093	NA	NA	1.125	.750	.593	.4
552	AC	OPTICAL UNIT AND BELLOWS ASSEMBLY		2010790-081		NAS-9-497	A	I	NOTE 11B	2.000	1.312	1.687	1.375	.078	.048	.078	.093	NA	NA	1.125	.750	.593	.4
551	AC	OPTICAL UNIT AND BELLOWS ASSEMBLY		2010790-071		NAS-9-497	A	I	NOTE 11B	2.000	1.312	1.687	1.375	.078	.048	.078	.093	NA	NA	1.125	.750	.593	.4
550	AC	OPTICAL UNIT AND BELLOWS ASSEMBLY		2010790-061		NAS-9-497	A	I	NOTE 11B	2.000	1.312	1.687	1.375	.078	.048	.078	.093	NA	NA	1.125	.750	.593	.4
548		CAGING ELECTRONICS, GYRO		2900029-031		NAS-9-497	B	II	NOTE 11C	2.125	.968	1.718	NA	.093	.031	.06	.093		.093	.858	.608	.484	.3
547		CSL, CAL AND TEST, SCM/PSAAM		2900895-021		NAS-9-497	B	II	NOTE 11C	4.125	1.812	3.250	NA	.125	.062	.12	.156		.125	1.625	1.140	.890	.64
546		FIX., HAND., C/M AND LEM CDU		2900999-021		NAS-9-497	B	II	NOTE 11C	2.125	.968	1.718	NA	.093	.031	.06	.093		.093	.858	.608	.484	.3
545	AC	G & N INDICATOR CONTROL PANEL ASSY		2014578-021		NAS-9-497	A	I	NOTE 11B	3.000	1.938	2.437	NA	.125	.062	.188	.156	NA	NA	1.750	1.125	.906	.6
544		ADPT MODULE, P.S.A.		1902431-051		NAS-9-497	B	II	NOTE 11C	2.125	.968	1.718	NA	.093	.031	.06	.093		.093	.858	.608	.484	.3
543	AC	PANEL, MONITOR		2900031-041		NAS-9-497	B	II	NOTE 11C	2.125	.968	1.718	NA	.093	.031	.06	.093		.093	.858	.608	.484	.3
542	AC	BATTERY PACK, LIFTING		2900812-021		NAS-9-497	B	II	NOTE 11C	2.125	.968	1.718	NA	.093	.031	.06	.093		.093	.858	.608	.484	.3
541	AC	FIXTURE, MOUNTING, IMU		2900000-021		NAS-9-497	B	II	NOTE 11C	4.125	1.812	3.250	NA	.125	.062	.12	.156		.125	1.625	1.140	.890	.64
540	AC	ADPT, TEST POINT, P.S.A.		2900037-031		NAS-9-497	B	II	NOTE 11C	2.125	.968	1.718	NA	.093	.031	.06	.093		.093	.858	.608	.484	.3
539	AC	ANNUNCIATOR PANEL & EYEPIECE STORAGE ASSEMBLY		1021255-041		NAS-9-497	A	I	NOTE 11B	2.000	1.312	1.906	1.375	.078	.048	.078	.093	NA	NA	1.125	.750	.593	.4
538	AC	ANNUNCIATOR PANEL & EYEPIECE STORAGE ASSEMBLY		1021255-031		NAS-9-497	A	I	NOTE 11B	2.000	1.312	1.906	1.375	.078	.048	.078	.093	NA	NA	1.125	.750	.593	.4
537	AC	TEST SELECTOR		2900028-031		NAS-9-497	B	II	NOTE 11C	2.125	.968	1.718	NA	.093	.031	.06	.093		.093	.858	.608	.484	.3
536	AC	ANALYZER, OPTICS-INERTIAL		2900023-041		NAS-9-497	B	II	NOTE 11C	4.125	1.812	3.250	NA	.125	.062	.12	.156		.125	1.625	1.140	.890	.64
535	AC	CONT, TEMP, PORTABLE		2900060-021		NAS-9-497	B	II	NOTE 11C	2.125	.968	1.718	NA	.093	.031	.06	.093		.093	.858	.608	.484	.3
534	AC	COMPUTER CONT & RETICLE DIMMER		6014512-021		NAS-9-497	A	I	NOTE 11B	2.000	1.312	1.906	1.375	.078	.048	.078	.093	NA	NA	1.125	.750	.593	.4
533	AC	ADPT MODULE, P.S.A.		1902431-041		NAS-9-497	B	II	NOTE 11C	2.125	.968	1.718	NA	.093	.031	.06	.093		.093	.858	.608	.484	.3
532	AC	TRAY BREAKOUT, 105 PIN		1900807-021		NAS-9-497	B	II	NOTE 11C	4.125	1.812	3.250	NA	.125	.062	.12	.156		.125	1.625	1.140	.890	.64
531	AC	TRAY BREAKOUT, 84 PIN		1900806-021		NAS-9-497	B	II	NOTE 11C	4.125	1.812	3.250	NA	.125	.062	.12	.156		.125	1.625	1.140	.890	.64
530	AC	HEAT SINK-TRAY EXTENDER		1900808-021		NAS-9-497	B	II	NOTE 11C	2.125	.968	1.718	NA	.093	.031	.06	.093		.093	.858	.608	.484	.35
529	AC	TESTER, FAILURE INDICATOR		1900809-021		NAS-9-497	B	II	NOTE 11C	2.125	.968	1.718	NA	.093	.031	.06	.093		.093	.858	.608	.484	.35
527	AC	FIX., MOUNTING, G & N	(-144)	1902204-021		NAS-9-497	B	II	NOTE 11C	FOR DIMENSIONS SEE DASH 500 VALUES BELOW													
526	AC	FIX., MOUNTING, G & N	(-144)	2900067-031		NAS-9-497	B	II	NOTE 11C	FOR DIMENSIONS SEE DASH 500 VALUES BELOW													
525	AC	PORTABLE TEMP. CONTROLLER		1900496-021		NAS-9-497	B	II	NOTE 11C	3,000	1.937	2.437	2.312	.125	.031	.125	.156	.125	.125	1.718	1.187	.968	.74
524	AC	POWER, SERVO & THERMOCOUPLE ASSEMBLY C/M		2010743		NAS-9-497	A	I	NOTE 11B	2.125	.968	1.716	NA	.093	.031	.06	.093	NA	NA	.858	.608	.484	.358
523	AC	PULSE TORQUE AND THERMOCOUPLE ASSEMBLY-LEM		6010656		NAS-9-497	A	I	NOTE 11B	FOR DIMENSIONS SEE DASH 508 VALUES BELOW													
522	AC	COUPLING DATA UNIT & THERMOCOUPLE ASSEMBLY-LEM		2010744		NAS-9-497	A	I	NOTE 11B	FOR DIMENSIONS SEE DASH 508 VALUES BELOW													
521	AC	COUPLING DATA UNIT & THERMOCOUPLE ASSEMBLY-C/M		2010744		NAS-9-497	A	I	NOTE 11B	FOR DIMENSIONS SEE DASH 508 VALUES BELOW													
520	AC	PIPA ELECTRONICS AND THERMOCOUPLE ASSEMBLY		2010745		NAS-9-497	A	I	NOTE 11B	FOR DIMENSIONS SEE DASH 508 VALUES BELOW													
519	AC	FIXTURE, HANDLING, LEM-PSA	(-141)	6900129-011		NAS-9-497	B	II	NOTE 11C	FOR DIMENSIONS SEE DASH 504 VALUES BELOW													
518	AC	JUNCTION BOX, GSE-PSA	(-144)	1901933-031		NAS-9-497	B	II	NOTE 11C	FOR DIMENSIONS SEE DASH 500 VALUES BELOW													
517	AC	FIX., HAND., OPTICS INSTL.	(-141)	2901380-011		NAS-9-497	B	II	NOTE 11C	FOR DIMENSIONS SEE DASH 502 VALUES BELOW													
516	AC	POWER, SERVO AND THERMOCOUPLE ASSEMBLY-LEM		6010655		NAS-9-497	A	I	NOTE 11B	FOR DIMENSIONS SEE DASH 508 VALUES BELOW													
514	AC	SIGNAL COND. ASSY LEM OPER.	(-100)	6007013		NAS-9-497	A	I	NOTE 11B	FOR DIMENSIONS SEE DASH 508 VALUES BELOW													
513	AC	JUMPER, BY-PASS	(-141)	1021616		NAS-9-497	B	II	NOTE 11C	2.125	.968	1.718	NA	.093	.031	.06	.093		.093	.858	.608	.484	.358
512	AC	COUPLING DATA UNIT ASSEMBLY C/M	(-100)	2007322-011		NAS-9-497	A	I	NOTE 11B	FOR DIMENSIONS SEE DASH 508 VALUES BELOW													
511	AC	COUPLING DATA UNIT ASSEMBLY-LEM	(-100)	2007322-021		NAS-9-497	A	I	NOTE 11B	FOR DIMENSIONS SEE DASH 508 VALUES BELOW													
510	AC	BATTERY POWER PACK	(-144)	1900011-041		NAS-9-497	B	II	NOTE 11C	FOR DIMENSIONS SEE DASH 500 VALUES BELOW													
509	AC	JUNCTION BOX, P.S.A./G.S.E.	(-144)	1902195-021		NAS-9-497	B	II	NOTE 11C	FOR DIMENSIONS SEE DASH 500 VALUES BELOW													
508	AC	NAVIGATION BASE ASSEMBLY-LEM	(-101)	6899980		NAS-9-497	A	I	NOTE 11B	2.000	1.312	1.906	1.375	.078	.048	.078	.093	NA	NA	1.125	.750	.593	.45
507	AC	CSL, COOL, AND PWR, G AND N	(-144)	1902134-041		NAS-9-497	B	II	NOTE 11C	FOR DIMENSIONS SEE DASH 500 VALUES BELOW													
506	AC	BREAKOUT BOX, CABLE ADAPTER	(-141)	2901011-011		NAS-9-497	B	II	NOTE 11C	2.125	.968	1.718	NA	.093	.031	.06	.093		.093	.858	.608	.484	.35
505	AC	MONITOR AND CONTROL, TEMP	(-141)	2900026-021		NAS-9-497	B	II	NOTE 11C	2.125	.968	1.718	NA	.093	.031	.06	.093		.093	.858	.608	.484	.35
504	AC	PWR SUP, GUIDANCE SYSTEM	(-141)	1900033-021		NAS-9-497	B	II	NOTE 11C	2.125	.968	1.718	NA	.093	.031	.06	.093		.093	.858	.608	.484	.35
503	AC	CONTROL, GIMBAL POSITION	(-141)	2900036-021		NAS-9-497	B	II	NOTE 11C	2.125	.968	1.718	NA	.093	.031	.06	.093		.093	.858	.608	.484	.35
502	AC	ADPT, TEST POINT, PTA/PEA.	(-141)	2900145-021		NAS-9-497	B	II	NOTE 11C	2.125	.968	1.718	NA	.093	.031	.06	.093		.093	.858	.608	.484	.3
501	AC	MOUNTING PLATE, COMPONENT	(-144)	6900007-031		NAS-9-497	B	II	NOTE 11C	FOR DIMENSIONS SEE DASH 500 VALUES BELOW													
500	AC	MOUNTING PLATE, COMPONENT	(-144)	2900677-021		NAS-9-497	B	II	NOTE 11C	4.125	1.812	3.250	NA	.125	.062	.12	.156		.125	1.625	1.140	.890	.64

NOTES FOR TABLE

STYLE A IS FOR G & N SYSTEM
STYLE B IS FOR GROUND SUPPORT EQUIPMENT
TYPE I IS WITHOUT MOUNTING HOLES
TYPE II IS WITH MOUNTING HOLES

1004260	CS	SHT 6

Sym	Zone	Description	Chg No	Date	Appd
REVISIONS					
CL		REPLACES REV CK WITH CHANGE PER TDRR 34365		9/28/67	
CM		REVISED PER TDRR 34896		17 OCT. 67	RAR
CN		REVISED PER TDRR 34467		31 OCT 67	JRK
CP		REVISED PER TDRR 34885		6 NOV 67	
CR		REVISED PER TDRR 35164		7 DEC 67	
CS		REVISED PER TDRR 35307		3 JAN 68	

B	E	F	G	H	J	K	L	M	N	P	R	S	T	U	V	W	Y	Z	AA	AB	AC	AD	AE	AF	AG	AH	AJ	AK	AL	AM	AN	AP	AR
	DASH 535 VALUES																																
	DASH 542 VALUES																																
	DASH 500 VALUES																																
	DASH 550 VALUES																																
	DASH 181																																
	DASH 181																																
	DASH 181																																
	DASH 534																																
	DASH 500																																
	DASH 500																																
	DASH 141 VALUES																																
	DASH 534 VALUES																																
	DASH 181 VALUES																																
	DASH 141 VALUES																																
	DASH 141 VALUES																																
	DASH 500 VALUES																																
	.078	.048	.078	.093	NA	NA	1.125	.750	.593	.453	1.015	.062	.187	.078	.875	.718	1.375	.218	NA	NA	.048	.031	.875	.305	NA	.468	1.531	NA	NA	.078	.312	.187	NA
	.078	.048	.078	.093	NA	NA	1.125	.750	.593	.453	1.015	.062	.187	.078	.875	.718	1.375	.218	NA	NA	.048	.031	.875	.305	NA	.468	1.531	NA	NA	.078	.312	.187	NA
	.078	.048	.078	.093	NA	NA	1.125	.750	.593	.453	1.015	.062	.187	.078	.875	.718	1.375	.218	NA	NA	.048	.031	.875	.305	NA	.468	1.531	NA	NA	.078	.312	.187	NA
	.078	.048	.078	.093	NA	NA	1.125	.750	.593	.453	1.015	.062	.187	.078	.875	.718	1.375	.218	NA	NA	.048	.031	.875	.305	NA	.468	1.531	NA	NA	.078	.312	.187	NA
	.078	.048	.078	.093	NA	NA	1.125	.750	.593	.453	1.015	.062	.187	.078	.875	.718	1.375	.218	NA	NA	.048	.031	.875	.305	NA	.468	1.531	NA	NA	.078	.312	.187	NA
	.078	.048	.078	.093	NA	NA	1.125	.750	.593	.453	1.015	.062	.187	.078	.875	.718	1.375	.218	NA	NA	.048	.031	.875	.305	NA	.468	1.531	NA	NA	.078	.312	.187	NA
	.093	.031	.06	.093	[illegible]	.093	.858	.608	.484	.358	.733	.077	.116	.062	.937	.875	1.343	.125	.781	1.892	.046	NA	NA	.209	.093	.250	1.875	NA	1.840	.046	.23	.16	1.938
	.125	.062	.12	.156		.125	1.625	1.140	.890	.640	1.390	.125	.171	.125	1.875	1.687	2.625	.250	1.562	3.843	.093	NA	NA	.359	.125	.437	3.688	NA	3.687	.093	.40	.25	3.875
	.093	.031	.06	.093	[illegible]	.093	.858	.608	.484	.358	.733	.077	.116	.062	.937	.875	1.343	.125	.781	1.892	.046	NA	NA	.209	.093	.250	1.875	NA	1.840	.046	.23	.16	1.938
	.125	.062	.188	.156	NA	NA	1.750	1.125	.906	.688	1.500	NA	.281	.125	NA	1.094	2.062	.312	NA	2.500	.062	.125	1.312	.469	NA	NA	NA	.156	NA	.125	.469	.344	NA
	.093	.031	.06	.093	[illegible]	.093	.858	.608	.484	.358	.733	.077	.116	.062	.937	.875	1.343	.125	.781	1.892	.046	NA	NA	.209	.093	.250	1.875	NA	1.840	.046	.23	.16	1.938
	.093	.031	.06	.093		.093	.858	.608	.484	.358	.733	.077	.116	.062	.937	.875	1.343	.125	.781	1.892	.046	NA	NA	.209	.093	.250	1.875	NA	1.840	.046	.23	.25	1.938
	.093	.031	.06	.093		.093	.858	.608	.484	.358	.733	.077	.116	.062	.937	.875	1.343	.125	.781	1.892	.046	NA	NA	.209	.093	.250	1.875	NA	1.840	.046	.23	.16	1.938
	.125	.062	.12	.156		.125	1.625	1.140	.890	.640	1.390	.125	.171	.125	1.875	1.687	2.625	.250	1.562	3.843	.093	NA	NA	.359	.125	.437	3.688	NA	3.687	.093	.40	.25	3.875
	.093	.031	.06	.093	[illegible]	.093	.858	.608	.484	.358	.733	.077	.116	.062	.937	.875	1.343	.125	.781	1.892	.046	NA	NA	.209	.093	.250	1.875	NA	1.840	.046	.23	.16	1.938
	.078	.048	.078	.093	NA	NA	1.125	.750	.593	.453	1.015	.062	.187	.078	.875	.718	1.375	.218	NA	NA	.048	.031	.875	.305	.078	.531	1.906	.078	NA	.078	.531	.187	NA
	.078	.048	.078	.093	NA	NA	1.125	.750	.593	.453	1.015	.062	.187	.078	.875	.718	1.375	.218	NA	NA	.048	.031	.875	.305	.078	.531	1.906	.078	NA	.078	.531	.187	NA
	.093	.031	.06	.093	[illegible]	.093	.858	.608	.484	.358	.733	.077	.116	.062	.937	.875	1.343	.125	.781	1.892	.046	NA	NA	.209	.093	.250	1.875	NA	1.840	.046	.23	.16	1.938
	.125	.062	.12	.156		.125	1.625	1.140	.890	.640	1.390	.125	.171	.125	1.875	1.687	2.625	.250	1.562	3.843	.093	NA	NA	.359	.125	.437	3.688	NA	3.687	.093	.40	.25	3.875
	.093	.031	.06	.093	[illegible]	.093	.858	.608	.484	.358	.733	.077	.116	.062	.937	.875	1.343	.125	.781	1.892	.046	NA	NA	.209	.093	.250	1.875	NA	1.840	.046	.23	.16	1.938
	.078	.048	.078	.093	NA	NA	1.125	.750	.593	.453	1.015	.062	.187	.078	.875	.718	1.375	.218	NA	NA	.048	.031	.875	.305	.078	.531	1.906	.078	NA	.078	.531	.187	NA
	.093	.031	.06	.093	[illegible]	.093	.858	.608	.484	.358	.733	.077	.116	.062	.937	.875	1.343	.125	.781	1.892	.046	NA	NA	.209	.093	.250	1.875	NA	1.840	.046	.23	.16	1.938
	.125	.062	.12	.156		.125	1.625	1.140	.890	.640	1.390	.125	.171	.125	1.875	1.687	2.625	.250	1.562	3.843	.093	NA	NA	.359	.125	.437	3.688	NA	3.687	.093	.40	.25	3.875
	.125	.062	.12	.156		.125	1.625	1.140	.890	.640	1.390	.125	.171	.125	1.875	1.687	2.625	.250	1.562	3.843	.093	NA	NA	.359	.125	.437	3.688	NA	3.687	.093	.40	.25	3.875
	.093	.031	.06	.093		.093	.858	.608	.484	.358	.733	.077	.116	.062	.937	.875	1.343	.125	.781	1.892	.046	NA	NA	.209	.093	.250	1.875	NA	1.840	.046	.23	.16	1.938
	.093	.031	.06	.093	[illegible]	.093	.858	.608	.484	.358	.733	.077	.116	.062	.937	.875	1.343	.125	.781	1.892	.046	NA	NA	.209	.093	.250	1.875	NA	1.840	.046	.23	.16	1.938
	DASH 500 VALUES BELOW																																
	DASH 500 VALUES BELOW																																
	.125	.031	.125	.156	.125	.125	1.718	1.187	.968	.749	1.452	.093	.295	.090	1.312	1.00	2.000	.250	1.687	2.750	.062	NA	NA	.463	.125	.562	2.437	.140	2.562	.090	.468	.359	2.750
	.093	.031	.06	.093	NA	NA	.858	.608	.484	.358	.733	.062	.140	.062	NA	.968	1.450	.125	NA	1.720	.046	.03	NA	.210	NA	NA	NA	.070	NA	.046	.32	.16	NA
	DASH 508 VALUES BELOW																																
	DASH 508 VALUES BELOW																																
	DASH 508 VALUES BELOW																																
	DASH 508 VALUES BELOW																																
	DASH 504 VALUES BELOW																																
	DASH 500 VALUES BELOW																																
	DASH 502 VALUES BELOW																																
	DASH 508 VALUES BELOW																																
	DASH 508 VALUES BELOW																																
	.093	.031	.06	.093	[illegible]	.093	.858	.608	.484	.358	.733	.077	.116	.062	.937	.875	1.343	.125	.781	1.892	.046	NA	NA	.209	.093	.250	1.875	NA	1.840	.046	.23	.16	1.938
	DASH 508 VALUES BELOW																																
	DASH 508 VALUES BELOW																																
	DASH 500 VALUES BELOW																																
	DASH 500 VALUES BELOW																																
	.078	.048	.078	.093	NA	NA	1.125	.750	.593	.453	1.015	.062	.187	.078	.875	.718	1.375	.218	NA	NA	.048	.031	.875	.305	.078	.531	1.906	.078	NA	.078	.531	.187	NA
	DASH 500 VALUES BELOW																																
	.093	.031	.06	.093	[illegible]	.093	.858	.608	.484	.358	.733	.077	.116	.062	.937	.875	1.343	.125	.781	1.892	.046	NA	NA	.209	.093	.250	1.875	NA	1.840	.046	.23	.16	1.938
	.093	.031	.06	.093		.093	.858	.608	.484	.358	.733	.077	.116	.062	.937	.875	1.343	.125	.781	1.892	.046	NA	NA	.209	.093	.250	1.875	NA	1.840	.046	.23	.16	1.938
	.093	.031	.06	.093		.093	.858	.608	.484	.358	.733	.077	.116	.062	.937	.875	1.343	.125	.781	1.892	.046	NA	NA	.209	.093	.250	1.875	NA	1.840	.046	.23	.16	1.938
	.093	.031	.06	.093		.093	.858	.608	.484	.358	.733	.077	.116	.062	.937	.875	1.343	.125	.781	1.892	.046	NA	NA	.209	.093	.250	1.875	NA	1.840	.046	.23	.16	1.938
	.093	.031	.06	.093	[illegible]	.093	.858	.608	.484	.358	.733	.077	.116	.062	.937	.875	1.343	.125	.781	1.892	.046	NA	NA	.209	.093	.250	1.875	NA	1.840	.046	.23	.16	1.938
	DASH 500 VALUES BELOW																																
	.125	.062	.12	.156	[illegible]	.125	1.625	1.140	.890	.640	1.390	.125	.171	.125	1.875	1.687	2.625	.250	1.562	3.843	.093	NA	NA	.359	.125	.437	3.688	NA	3.687	.093	.40	.25	3.875

AC ELECTRONICS DASH NUMBERS

AS APPLICABLE	
NEXT ASSY	USED ON
APPLICATION	

UNLESS OTHERWISE SPECIFIED
DIMENSIONS ARE IN INCHES
TOLERANCES ON
2 PLACE DECIMALS ± 3 PLACE DECIMALS ± .005 ANGLES ±
DO NOT SCALE THIS DRAWING
MATERIAL SEE NOTE 11
APPROVAL

MIT
INSTRUMENTATION LAB
CAMBRIDGE MASS
DRAWN R. A. JONES DATE 16 JUL 65
CHECKED W. KUPFER 22 JUL 65
APPROVAL
CONTRACT
T. MICHAELS 22 JUL 65
NASA APPROVAL
W. KUPFER 22 JUL 65
MIT APPROVAL

MANNED
SPACECRAFT CENTER
HOUSTON, TEXAS

NAMEPLATES, APOLLO GEN - GSE (STANDARDS)

SIZE J2
CODE IDENT NO 80230
1004260
SCALE NONE
SHEET 6 OF 6

NOTES:

1. INTERPRET DRAWING IN ACCORDANCE WITH STANDARDS PRESCRIBED BY MIL-D-70327.
2. DIMENSIONS ON EACH VIEW APPLY TO ALL VIEWS (WITH THE EXCEPTION OF MOUNTING HOLES).
3. FORMATS ILLUSTRATED WILL BE APPLICABLE TO ALL ITEMS REQUIRING NAMEPLATES BELOW END ITEM DESIGNATION (SYSTEMS, ASSEMBLIES, ETC.)
4. PLATE BACKGROUND TO BE LUSTERLESS BLACK PER FED-STD-595, COLOR 37038. BORDER, MARKING AND LETTERING TO BE NATURAL METAL, (ANODIZED ALUMINUM).
5. MARKING METHOD TO BE DIE STAMPING, ETCHING OR ENGRAVING IN ACCORDANCE WITH MIL-P-19834.
6. LETTERING STYLE TO BE GOTHIC, (SANS SERIFS), AND NUMBERS TO BE ARABIC.
7. WHERE LOCATING DIMENSIONS ARE NOT SHOWN, CHARACTERS SHALL BE SYMMETRICALLY POSITIONED.
8. IDENTIFY WITH DRAWING NUMBER PER ND 1002019.
9. WHEN "AUTO MARK" METAL MARKING TYPEWRITER IS USED TO ADD DATA TO BLANK SPACES, TYPE SIZE IS TO BE SELECTED FROM DIMENSIONS U, AC, AND AM.
10. NASA SYMBOL IS TO BE PROPORTIONAL TO NAMEPLATE IN RATIO OF 1 TO 5 WITH DIMENSION A VALUE AND IS TO HAVE NATURAL BACKGROUND. NASA SYMBOL LETTERS LETTERING AND FEATHER TO BE BLACK, (OR WHITE FOR SILK SCREENING). WHERE BLACK FEATHER PROTRUDES INTO BLACK BACKGROUND, A MINIMUM OUTLINE OF NATURAL BACKGROUND SHALL EXIST.
11. NAMEPLATES WILL BE APPLIED BY METHODS LISTED BELOW, SHOWN IN ORDER OF PREFERENCE, (I.E., FOR RELIABILITY AND WEIGHT).
    - A - STENCIL OR SILK SCREEN DIRECTLY ON EQUIPMENT USING INK PER SCD 1010920, (WHITE OR BLACK).
    - B - ALUMINUM FOIL, (STYLE A OR B, TYPE I):
      FOIL SHALL BE .0030 ± .0005 THICK PER MIL-A-148.
      FOIL SHALL HAVE NO ADHESIVE BACKING.
      FOIL SHALL BE BONDED PER ND 1002219, (METHOD II).
      FOIL SHALL BE CLEAR ANODIZED PER MIL-A-8625, TYPE II.
    - C - PLATE, (STYLE A OR B, TYPE II):
      MATERIAL: QQ-A-250, TEMPER O OR H14, TYPE 1100, ALUMINUM ALLOY, .032 THICK. ANODIZE PER MIL-A-8625, TYPE II.
      ALUMINUM PLATE MUST BE FREE FROM BURRS AND SHARP CORNERS, MOUNTED WITH APPLICABLE SIZE FASTENERS.
12. NAMEPLATES SHALL BE CAPABLE OF MEETING APPLICABLE REQUIREMENTS OF MIL-M-13231.
13. ON DIMENSION TABLES SHOWN ON PAGES 2, 3, 4, 5, AND 6, NA MEANS, "NOT APPLICABLE".

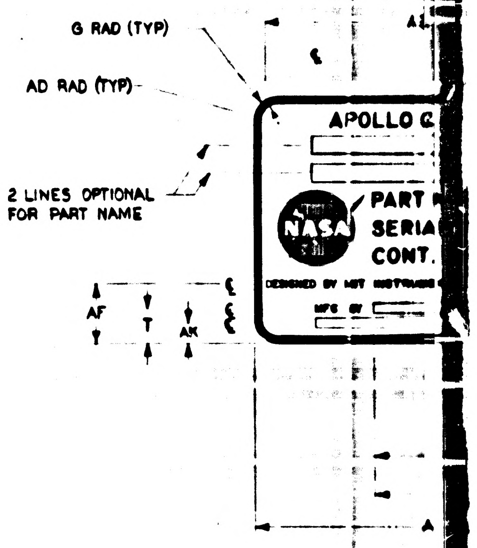

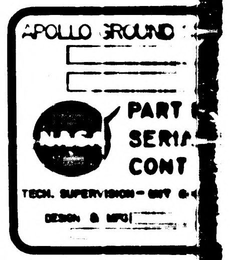

WITHOU

SUGGESTED PROPORTIONS FOR NAMEPLATE DIMENSIONS.
1. SELECT NAMEPLATE LENGTH, DIMENSION "A", TO FIT DESIGN NEEDS.
2. DIMENSIONS B THRU AS ON LINE 1 BELOW ARE PROPORTIONAL TO "A" BY MULTIPLIERS SHOWN IN LINE 2 BELOW.

1.	A	B	C	D	E	F	G	H	J	K	L	M	N	P	R	S	T
2.	1.000A	.6563A	.8438A	.6875A	.0391A	.0240A	.0391A	.0469A	.0547A	.0469A	.5938A	.3750A	.2969A	.2187A	.5079A	.0313A	.0938A

1.	U	V	W	Y	Z	AA	AB	AC	AD	AE	AF	AG	AH	AJ	AK	AL	AM	AN	AP	AR	AS
2.	.0391A	.4375A	.3594A	.6875A	.1094A	.5781A	.9219A	.0240A	.0156A	.4375A	.1525A	.0391A	.1563A	.8438A	.0548A	.8659A	.0391A	.1563A	.0938A	.9219A	.0151A

1004260 | CT | SHT 1

REVISIONS					
SYM	ZONE	DESCRIPTION	CHG NO	DATE	APPD
CL		REPLACES REV CK WITHOUT CHANGE PER TDRR 34365		1/28/67	JWL RWH
CM		REVISION STATUS CHANGED		18 OCT 67	RAW
CN		REVISION STATUS CHANGED		31 OCT 67	JRK
CP		REVISION STATUS CHANGED		6 NOV 67	[illegible]
CR		REVISION STATUS CHANGED		7 DEC 67	RWH
S		REVISION STATUS CHANGED		[illegible] 68	EHW
CT		REVISION STATUS CHANGED		FEB 68	RWH

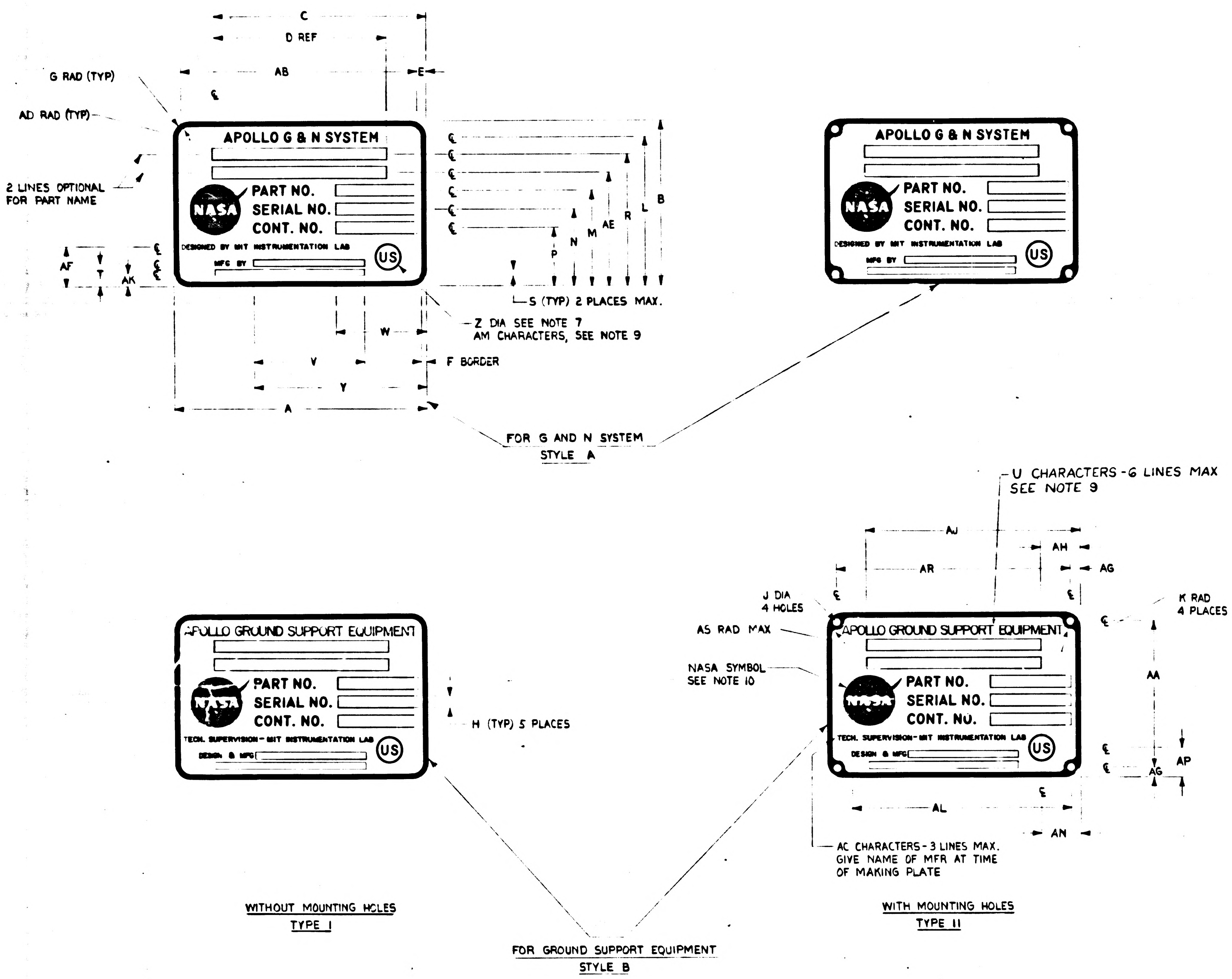

C
D REF
AB
E
G RAD (TYP)
AD RAD (TYP)
2 LINES OPTIONAL FOR PART NAME
APOLLO G & N SYSTEM
NASA
PART NO.
SERIAL NO.
CONT. NO.
DESIGNED BY MIT INSTRUMENTATION LAB
MFG BY
US
AF
T
AK
B
L
R
AE
M
N
P
S (TYP) 2 PLACES MAX.
Z DIA SEE NOTE 7
AM CHARACTERS, SEE NOTE 9
W
V
F BORDER
Y
A
FOR G AND N SYSTEM
STYLE A
U CHARACTERS - 6 LINES MAX
SEE NOTE 9
AJ
AH
AR
AG
J DIA
4 HOLES
K RAD
4 PLACES
AS RAD MAX
NASA SYMBOL
SEE NOTE 10
APOLLO GROUND SUPPORT EQUIPMENT
TECH. SUPERVISION - MIT INSTRUMENTATION LAB
DESIGN & MFG
AA
AP
AL
AN
H (TYP) 5 PLACES
AC CHARACTERS - 3 LINES MAX.
GIVE NAME OF MFR AT TIME
OF MAKING PLATE
WITHOUT MOUNTING HOLES
TYPE I
WITH MOUNTING HOLES
TYPE II
FOR GROUND SUPPORT EQUIPMENT
STYLE B

	UNLESS OTHERWISE SPECIFIED DIMENSIONS ARE IN INCHES TOLERANCES ON 2 PLACE DECIMALS ± · 3 PLACE DECIMALS ± .005 · ANGLES ±	MIT INSTRUMENTATION LAB CAMBR. MASS	MANNED SPACECRAFT CENTER HOUSTON, TEXAS	
	DO NOT SCALE THIS DRAWING	DRAWN R A JONES DATE 16 JUL 65 CHECKED APPROVAL W KUPFER 22 JUL 65 CONTRACT	NAMEPLATES, APOLLO G&N - GSE (STANDARDS)	
AS APPLICABLE	MATERIAL SEE NOTE 11	T MICHAELS 22 JUL 65 NASA APPROVAL	SIZE J2	CODE IDENT NO 80230 · 1004260
NEXT ASSY · USED ON		W KUPFER 22 JUL 65 MIT APPROVAL	SCALE NONE	SHEET 1 OF 6
APPLICATION	APPROVAL			

1004260 CT SHEET 1

1004260 CT

1004260

2/1004260

DASH NO.	P/C	PART NAME	REMARKS	PART NUMBER	SER. NO.	CONT. NO.	STYLE	TYPE	MATERIAL	A	B	C	D	E	F	G	H	J	K	L	M	N	P
399	K																						
398	K																						
350	K	ALIGNMENT OPTICAL TELESCOPE (LEM)		NA	NA	NA	A	I	NOTE 11B	4.000	2.625	3.375	2.750	.156	.093	.156	.187	NA	NA	2.312	1.468	1.[illegible]87	[illegible]
309	K																						
308	K																						
307	K						B	I	NOTE 11B	4.000	2.625	3.375	2.750	.156	.093	.156	.187	NA	NA	2.328	1.468	1.187	.906
306	K						B	II	NOTE 11C	4.000	2.625	3.375	2.750	.156	.093	.156	.187	.125	.156	2.328	1.468	1.187	.906
305	K						B	I	NOTE 11B	2.000	1.312	1.687	1.375	.078	.048	.078	.093	NA	NA	1.164	.734	.593	.453
304	K						B	II	NOTE 11C	2.000	1.312	1.687	1.375	.078	.048	.078	.093	.070	.078	1.164	.734	.593	.453
303	K																						
302	K																						
301	K																						
300	K	OPTICAL UNIT		NA	NA	NA	A	I	NOTE 11B	2.000	1.312	1.675	NA	NA	.048	.078	NA	NA	NA	1.090	.812	.675	.540
9	K	2 IN AUTOCOLLIMATOR		1001702			B	II	NOTE 11C	4.000	2.625	3.812	2.750	.156	.093	.156	.187	.125	.156	2.250	1.500	1.187	.906
8	K	5 IN AUTOCOLLIMATOR		1017410			B	II	NOTE 11C	4.000	2.625	3.812	2.750	.156	.093	.156	.187	.125	.156	2.250	1.500	1.187	.906
7	K	2-1/2 IN AUTOCOLLIMATOR (SCT)		1017435			B	II	NOTE 11C	4.000	2.625	3.812	2.750	.156	.093	.156	.187	.125	.156	2.250	1.500	1.187	.906
6	K	2-1/2 IN AUTOCOLLIMATOR (SXT)		1017448			B	II	NOTE 11C	4.000	2.625	3.812	2.750	.156	.093	.156	.187	.125	.156	2.250	1.500	1.187	.906
5	K	RETROREFLECTING PRISM ASSEMBLY		1019840			B	I	NOTE 11B	4.000	2.625	3.812	2.750	.156	.093	.156	.187	NA	NA	2.250	1.500	1.187	.906
4	K	S/H SIMULATOR ASSEMBLY		1019896			B	I	NOTE 11B	4.000	2.625	3.812	2.750	.156	.093	.156	.187	NA	NA	2.250	1.500	1.187	.906
3	K	REFERENCE MIRROR		1001767			B	I	NOTE 11B	2.000	1.312	1.906	1.375	.078	.048	.078	.093	NA	NA	1.125	.750	.593	.453
2	K	2 IN PLANE READING AUTOCOLLIMATOR		1017413			B	I	NOTE 11B	2.000	1.312	1.906	1.375	.078	.048	.078	.093	NA	NA	1.125	.750	.593	.453
1	K	2 IN AUTOCOLLIMATOR		1001702			B	I	NOTE 11B	2.000	1.312	1.906	1.375	.078	.048	.078	.093	NA	NA	1.125	.750	.593	.453

NOTES FOR TABLE

STYLE A IS FOR G & N SYSTEM
STYLE B IS FOR GROUND SUPPORT EQUIPMENT
TYPE I IS WITHOUT MOUNTING HOLES
TYPE II IS WITH MOUNTING HOLES

1004260 CT SHT 2

REVISIONS					
SYM	ZONE	DESCRIPTION	CHG NO	DATE	APPD
CL		REPLACES REV CK WITHOUT CHANGE PER TDRR 34365		11/28/67	JWL RWH
CM		REVISION STATUS CHANGED		18 OCT 67	R.A.W.
CN		REVISION STATUS CHANGED		31 OCT 67	JRK
CP		REVISION STATUS CHANGED		6 NOV 67	EWS
CR		REVISION STATUS CHANGED		7 DEC 67	RWH
CS		REVISION STATUS CHANGED		3 JAN 68	J.W. EHW
CT		REVISION STATUS CHANGED		7 FEB 68	LK RWK

E	F	G	H	J	K	L	M	N	P	R	S	T	U	V	W	Y	Z	AA	AB	AC	AD	AE	AF	AG	AH	AJ	AK	AL	AM	AN	AP	AR
.156	.093	.156	.187	NA	NA	2.312	1.468	1.187	.906	2.031	NA	.375	.156	NA	1.437	2.750	.437	NA	3.688	.062	.062	1.750	.593	NA	.625	3.375	.187	NA	.156	.531	.453	NA
.156	.093	.156	.187	NA	NA	2.328	1.468	1.187	.906	2.031	.062	.375	.156	NA	1.437	2.750	.437	NA	3.687	.062	.062	1.750	.593	NA	NA	NA	NA	NA	NA	NA	NA	NA
.156	.093	.156	.187	.125	.156	2.328	1.468	1.187	.906	2.031	.062	.375	.156	NA	1.437	2.750	.437	2.312	3.687	.062	NA	1.750	.593	NA	NA	NA	NA	NA	NA	NA	NA	NA
.078	.048	.078	.093	NA	NA	1.164	.734	.593	.453	1.015	.048	.171	.078	NA	.718	1.375	.187	NA	NA	.048	.031	.875	.320	NA	NA	NA	NA	NA	NA	NA	NA	NA
.078	.048	.078	.093	.070	.078	1.164	.734	.593	.453	1.015	.048	.171	.078	NA	.718	1.375	.187	.156	1.843	.048	NA	.875	.320	NA	NA	NA	NA	NA	NA	NA	NA	NA
NA	.048	.078	NA	NA	NA	1.093	.812	.675	.540	.940	NA	.265	NA	NA	NA	1.375	.218	NA	NA	NA	NA	NA	.375	NA	NA	NA	.180	NA	.078	NA	NA	NA
.156	.093	.156	.187	.125	.156	2.250	1.500	1.187	.906	2.031	.093	.375	.156	1.750	1.437	2.750	.437	2.312	3.687	.062	NA	1.750	.593	.156	1.062	3.812	.156	NA	.156	1.062	.375	3.687
.156	.093	.156	.187	.125	.156	2.250	1.500	1.187	.906	2.031	.093	.375	.156	1.750	1.437	2.750	.437	2.312	3.687	.062	NA	1.750	.593	.156	1.062	3.812	.156	NA	.156	1.062	.375	3.687
.156	.093	.156	.187	.125	.156	2.250	1.500	1.187	.906	2.031	.093	.375	.156	1.750	1.437	2.750	.437	2.312	3.687	.062	NA	1.750	.593	.156	1.062	3.812	.156	NA	.156	1.062	.375	3.687
[illegible]	.093	.156	.187	.125	.156	2.250	1.500	1.187	.906	2.031	.093	.375	.156	1.750	1.437	2.750	.437	2.312	3.687	.062	NA	1.750	.593	.156	1.062	3.812	.156	NA	.156	1.062	.375	3.687
.156	.093	.156	.187	NA	NA	2.250	1.500	1.187	.906	2.031	.093	.375	.156	1.750	1.437	2.750	.437	NA	NA	.062	.062	1.750	.593	.156	1.062	3.812	.156	NA	.156	1.062	.375	NA
.156	.093	.156	.187	NA	NA	2.250	1.500	1.187	.906	2.031	.093	.375	.156	1.750	1.437	2.750	.437	NA	NA	.062	.062	1.750	.593	.156	1.062	3.812	.156	NA	.156	1.062	.375	NA
.078	.048	.078	.093	NA	NA	1.125	.750	.593	.453	1.015	.062	.187	.078	.875	.718	1.375	.218	NA	NA	.048	.031	.875	.305	.078	.531	1.906	.078	NA	.078	.531	.187	NA
.078	.048	.078	.093	NA	NA	1.125	.750	.593	.453	1.015	.062	.187	.078	.875	.718	1.375	.218	NA	NA	.048	.031	.875	.305	.078	.531	1.906	.078	NA	.078	.531	.187	NA
.078	.048	.078	.093	NA	NA	1.125	.750	.593	.453	1.015	.062	.187	.078	.875	.718	1.375	.218	NA	NA	.048	.031	.875	.305	.078	.531	1.906	.078	NA	.078	.531	.187	NA

KOLLSMAN DASH NUMBERS

UNLESS OTHERWISE SPECIFIED DIMENSIONS ARE IN INCHES TOLERANCES ON 2 PLACE DECIMALS ± 3 PLACE DECIMALS ± .005 ANGLES ±	INSTRUMENTATION LAB CAMBRIDGE MASS	MANNED SPACECRAFT CENTER HOUSTON TEXAS	
	DRAWN R A JONES DATE 16 JUL 65	NAMEPLATES, APOLLO GEN - GSE (STANDARDS)	
DO NOT SCALE THIS DRAWING	CHECKED APPROVAL W KUPFER 22 JUL 65		
	CONTRACT		
MATERIAL SEE NOTE 11	NASA APPROVAL T. MICHAELS 22 JUL 65	SIZE J2	CODE IDENT NO 80230
APPROVAL	MIT APPROVAL W KUPFER 22 JUL 65	SCALE NONE	SHEET 2 OF 6

1004260

AS APPLICABLE

NEXT ASSY	USED ON
APPLICATION	

1004260 CT

1004260

1004260 CT SHT 2

27 1004260

DASH NO.	P/C	PART NAME	REMARKS	PART NUMBER	SER. NO.	CONT. NO.	STYLE	TYPE	MATERIAL	A	B	C	D	E	F	G	H	J	K	L	M	N	P	
299	R																							
298	R																							
291	R	BUFFER CIRCUIT ASSY		2014254-041	NA	NAS-9-497	B	I	NOTE 11B	FOR DIMENSIONS SEE DASH 15 VALUES BELOW														
290	R	LOGIC DRAWER ASSY NO 2		2014037-051	NA	NAS-9 497	B	I	NOTE 11B	FOR DIMENSIONS SEE DASH 17 VALUES BELOW														
289	R	SELF TEST ASSY		2014392-021	NA	NAS-9 497	B	I	NOTE 11B	FOR DIMENSIONS SEE DASH 15 VALUES BELOW														
288	P	LOGIC DRAWER ASSY NO.1		2014036-051	NA	NAS-9 497	B	I	NOTE 11B	FOR DIMENSIONS SEE DASH 17 VALUES BELOW														
287	R	COMPUTER TEST SET		2014042-071	NA	NAS-9 497	B	II	NOTE 11C	FOR DIMENSIONS SEE DASH 18 VALUES BELOW														
286	R	DRAWER ASSY PROGRAM & MONITOR		2014041-061	NA	NAS-9-497	B	I	NOTE 11B	FOR DIMENSIONS SEE DASH 17 VALUES BELOW														
285	R	BUFFER CIRCUIT ASSY		2014254-031	NA	NAS-9-497	B	I	NOTE 11B	FOR DIMENSIONS SEE DASH 15 VALUES BELOW														
284	R	LOGIC DRAWER ASSY NO. 2		2014037-041	NA	NAS-9-497	B	I	NOTE 11B	FOR DIMENSIONS SEE DASH 17 VALUES BELOW														
283	R	DRAWER ASSY-PROGRAM & MONITOR		2014041-051	NA	NAS-9-497	B	I	NOTE 11B	FOR DIMENSIONS SEE DASH 17 VALUES BELOW														
282	R	COMPUTER TEST SET		2014042-061	NA	NAS-9-497	B	II	NOTE 11C	FOR DIMENSIONS SEE DASH 18 VALUES BELOW														
281	R	AGC HANDLING FIXTURE		2014282-031	NA	NAS-9-497	B	I	NOTE 11B	FOR DIMENSIONS SEE DASH 17 VALUES BELOW														
280	R	COMPUTER TEST SET		2014042-051	NA	NAS-9-497	B	II	NOTE 11C	FOR DIMENSIONS SEE DASH 18 VALUES BELOW														
279	R	SELF TEST ASSY		2014366-041	NA	NAS-9-497	B	I	NOTE 11B	FOR DIMENSIONS SEE DASH 15 VALUES BELOW														
278	R	LOGIC DRAWER ASSY NO. 1		2014036-041	NA	NAS-9-497	B	I	NOTE 11B	FOR DIMENSIONS SEE DASH 17 VALUES BELOW														
277	R	COMPUTER TEST SET		2014042-041	NA	NAS-9-497	B	II	NOTE 11C	FOR DIMENSIONS SEE DASH 18 VALUES BELOW														
276	R	DRAWER ASSY-PROGRAM & MONITOR		2014041-041	NA	NAS-9-497	B	I	NOTE 11B	FOR DIMENSIONS SEE DASH 17 VALUES BELOW														
275	R	DRAWER ASSY RDC INTERFACE		2014045-031	NA	NAS-9-497	B	I	NOTE 11B	FOR DIMENSIONS SEE DASH 15 VALUES BELOW														
274	R	SELF TEST ASSY		2014366-031	NA	NAS-9-497	B	I	NOTE 11B	FOR DIMENSIONS SEE DASH 15 VALUES BELOW														
273	R	LOGIC DRAWER ASSY NO. 2		2014037-031	NA	NAS-9-497	B	I	NOTE 11B	FOR DIMENSIONS SEE DASH 17 VALUES BELOW														
272	R	DRAWING ASSY PROGRAMMER & MONITOR		2014041-031	NA	NAS-9-497	B	I	NOTE 11B	FOR DIMENSIONS SEE DASH 17 VALUES BELOW														
271	R	LOGIC DRAWER ASSY NO. 1		2014036-031	NA	NAS-9-497	B	I	NOTE 11B	FOR DIMENSIONS SEE DASH 17 VALUES BELOW														
270	R	COMPUTER TEST SET		2014042-031	NA	NAS-9-497	B	II	NOTE 11C	FOR DIMENSIONS SEE DASH 18 VALUES BELOW														
269	R	POWER CONTROL ASSY		2014044-021	NA	NAS-9-497	B	I	NOTE 11B	FOR DIMENSIONS SEE DASH 17 VALUES BELOW														
268	R	SELF TEST ASSY		2014366-021	NA	NAS-9-497	B	I	NOTE 11B	FOR DIMENSIONS SEE DASH 15 VALUES BELOW														
267	R	AGC JUNCTION ASSY		2014341-021	NA	NAS-9-497	B	I	NOTE 11B	FOR DIMENSIONS SEE DASH 15 VALUES BELOW														
266	R	POWER CONTROL ASSY		2014079-021	NA	NAS-9-497	B	I	NOTE 11B	FOR DIMENSIONS SEE DASH 15 VALUES BELOW														
265	R	BUFFER CIRCUIT ASSY		2014254-021	NA	NAS-9-497	B	I	NOTE 11B	FOR DIMENSIONS SEE DASH 15 VALUES BELOW														
264	R	DRAWER ASSY X Y INTERFACE		2014040-021	NA	NAS-9-497	B	I	NOTE 11B	FOR DIMENSIONS SEE DASH 15 VALUES BELOW														
263	R	DRAWER ASSY RDC INTERFACE		2014045-021	NA	NAS-9-497	B	I	NOTE 11B	FOR DIMENSIONS SEE DASH 15 VALUES BELOW														
262	R	DRAWER ASSY PROGRAMMER & MONITOR		2014041-021	NA	NAS-9-497	B	I	NOTE 11B	FOR DIMENSIONS SEE DASH 17 VALUES BELOW														
261	R	LOGIC DRAWER ASSY NO. 2		2014037-021	NA	NAS-9-497	B	I	NOTE 11B	FOR DIMENSIONS SEE DASH 17 VALUES BELOW														
260	R	LOGIC DRAWER ASSY NO. 1		2014036-021	NA	NAS-9-497	B	I	NOTE 11B	FOR DIMENSIONS SEE DASH 17 VALUES BELOW														
259	R	OPERATION CONSOLE		2014024-021	NA	NAS-9-497	B	II	NOTE 11C	FOR DIMENSIONS SEE DASH 18 VALUES BELOW														
258	R	COMPUTER TEST SET		2014042-021	NA	NAS-9-497	B	II	NOTE 11C	FOR DIMENSIONS SEE DASH 18 VALUES BELOW														
257	R	AUXILIARY CALIBRATION CONSOLE		2014059-021	NA	NAS-9-497	B	II	NOTE 11C	FOR DIMENSIONS SEE DASH 18 VALUES BELOW														
256	R	AGC CALIBRATION CONSOLE		2014049-021	NA	NAS-9-497	B	II	NOTE 11C	FOR DIMENSIONS SEE DASH 18 VALUES BELOW														
255	R	AGC HANDLING FIXTURE		2014282-021	NA	NAS-9-497	B	I	NOTE 11B	FOR DIMENSIONS SEE DASH 17 VALUES BELOW														
254	R	DRAWER ASSY COMP. SIMULATOR		2014048-011	NA	NAS-9-497	B	II	NOTE 11C	FOR DIMENSIONS SEE DASH 18 VALUES BELOW														
253	R	SHIPPING KIT ASSY, NAV DSKY		2016312-011	NA	NAS-9-497	B	II	NOTE 11C	FOR DIMENSIONS SEE DASH 18 VALUES BELOW														
252	R	SHIPPING KIT ASSY, UNIVERSAL DSKY		2016316-011	NA	NAS-9-497	B	II	NOTE 11C	FOR DIMENSIONS SEE DASH 18 VALUES BELOW														
251	R	SHIPPING KIT ASSY, MAIN DSKY		2016313-011	NA	NAS-9-497	B	II	NOTE 11C	FOR DIMENSIONS SEE DASH 18 VALUES BELOW														
250	R	AMPLIFIER, REWORK		2014386	NA	NAS-9-497	B	I	NOTE 11B	FOR DIMENSIONS SEE DASH 15 VALUES BELOW														
249	R	TEMP MONITOR ASSY		2014313-011	NA	NAS-9-497	B	I	NOTE 11C	FOR DIMENSIONS SEE DASH 17 VALUES BELOW														
248	R	AGC JUNCTION ASSY		2014341-011	NA	NAS-9-497	B	I	NOTE 11B	FOR DIMENSIONS SEE DASH 15 VALUES BELOW														
247	R	AC INPUT PANEL ASSY		2014302-011	NA	NAS-9-497	B	I	NOTE 11B	FOR DIMENSIONS SEE DASH 15 VALUES BELOW														
246	R	SELF TEST ASSY		2014392-011	NA	NAS-9-497	B	I	NOTE 11B	FOR DIMENSIONS SEE DASH 15 VALUES BELOW														
245	R	TAPE PUNCH ASSEMBLY		2014039-011	NA	NAS-9-497	B	I	NOTE 11B	FOR DIMENSIONS SEE DASH 15 VALUES BELOW														
244	R	TAPE READER ASSEMBLY		2014038-011	NA	NAS-9-497	B	I	NOTE 11B	FOR DIMENSIONS SEE DASH 15 VALUES BELOW														
243																								
242																								
241	R	APOLLO GUIDANCE COMPUTER GROUP		6003001	NA	NAS-9-497	A	I	NOTE 11B	FOR DIMENSIONS SEE DASH 19 VALUES BELOW														
240	R	SELF TEST ASSEMBLY		2014366-011	NA	NAS-9-497	B	I	NOTE 11B	FOR DIMENSIONS SEE DASH 15 VALUES BELOW														
239	R	POWER SUPPLY ASSY-115V., 400 CYCLE		2014207-011	NA	NAS-9-497	B	I	NOTE 11B	FOR DIMENSIONS SEE DASH 17 VALUES BELOW														
238	R	AC INPUT PANEL ASSY		2014043-011	NA	NAS-9-497	B	I	NOTE 11B	FOR DIMENSIONS SEE DASH 17 VALUES BELOW														
237	R	POWER CONTROL ASSY		2014079-011	NA	NAS-9-497	B	I	NOTE 11B	FOR DIMENSIONS SEE DASH 15 VALUES BELOW														
236	R	DRAWER ASSY-X Y INTERFACE		2014040-011	NA	NAS-9-497	B	I	NOTE 11B	FOR DIMENSIONS SEE DASH 15 VALUES BELOW														
235	R	DRAWER ASSY RDC INTERFACE		2014045-011	NA	NAS-9-497	B	I	NOTE 11B	FOR DIMENSIONS SEE DASH 15 VALUES BELOW														
234	R	BUFFER CIRCUIT ASSY		2014254-011	NA	NAS-9-497	B	I	NOTE 11B	FOR DIMENSIONS SEE DASH 15 VALUES BELOW														
233	R	CONTROL & INTERFACE ASSY		2014204-011	NA	NAS-9-497	B	I	NOTE 11B	FOR DIMENSIONS SEE DASH 15 VALUES BELOW														
232	R	POWER CONTROL ASSY		2014044-011	NA	NAS-9-497	B	I	NOTE 11B	FOR DIMENSIONS SEE DASH 17 VALUES BELOW														
231	R	DRAWER ASSY, PROGRAMMER & MONITOR		2014041-011	NA	NAS-9-497	B	I	NOTE 11B	FOR DIMENSIONS SEE DASH 17 VALUES BELOW														
230	R	CONNECTOR INTERFACE ASSY		2014272-011	NA	NAS-9-497	B	I	NOTE 11B	FOR DIMENSIONS SEE DASH 15 VALUES BELOW														
229	R	CONNECTOR INTERFACE ASSY		2014047-011	NA	NAS-9-497	B	I	NOTE 11B	FOR DIMENSIONS SEE DASH 15 VALUES BELOW														
228	R	ANTENNA, TUNING CAPACITOR ASSY		2014209-011	NA	NAS-9-497	B	I	NOTE 11B	FOR DIMENSIONS SEE DASH 15 VALUES BELOW														
227	R	MOUNTING FIXTURE ASSY		2014006-011	NA	NAS-9-497	B	I	NOTE 11B	FOR DIMENSIONS SEE DASH 17 VALUES BELOW														
226	R	POWER SUPPLY ASSY 3 VDC		2014234-011	NA	NAS-9-497	B	I	NOTE 11B	FOR DIMENSIONS SEE DASH 15 VALUES BELOW														
225	R	PANEL ASSY—SIGNAL INTERFACE		2014010-011	NA	NAS-9-497	B	I	NOTE 11B	FOR DIMENSIONS SEE DASH 15 VALUES BELOW														
224	R	OSCILLOSCOPE ASSY		2014232-011	NA	NAS-9-497	B	I	NOTE 11B	FOR DIMENSIONS SEE DASH 15 VALUES BELOW														
223	R	AUXILIARY OUTLET ASSY		2014274-011	NA	NAS-9-497	B	I	NOTE 11B	FOR DIMENSIONS SEE DASH 15 VALUES BELOW														
222	R	FREQUENCY COUNTER		2014233-011	NA	NAS-9-497	B	I	NOTE 11B	FOR DIMENSIONS SEE DASH 15 VALUES BELOW														
221	R	POWER SUPPLY ASSY 10, 13, 28 VDC		2014235-011	NA	NAS-9-497	B	I	NOTE 11B	FOR DIMENSIONS SEE DASH 15 VALUES BELOW														
220	R	LOGIC DRAWER ASSY NO. 2		2014037-011	NA	NAS-9-497	B	I	NOTE 11B	FOR DIMENSIONS SEE DASH 17 VALUES BELOW														
219	R	LOGIC DRAWER ASSY NO. 1		2014036-011	NA	NAS-9-497	B	I	NOTE 11B	FOR DIMENSIONS SEE DASH 17 VALUES BELOW														
218	R	COUNTER, ELECTRICAL ASSY		2014288-011	NA	NAS-9-497	B	I	NOTE 11B	FOR DIMENSIONS SEE DASH 15 VALUES BELOW														
217	R	POWER SUPPLY ASSY		2014279-011	NA	NAS-9-497	B	I	NOTE 11B	FOR DIMENSIONS SEE DASH 15 VALUES BELOW														
216	R	TEST MOUNT ASSY		2014257-011	NA	NAS-9-497	B	I	NOTE 11B	FOR DIMENSIONS SEE DASH 15 VALUES BELOW														
215	R	UNIVERSAL DSKY PEDESTAL MOUNT		2014014-011	NA	NAS-9-497	B	I	NOTE 11B	FOR DIMENSIONS SEE DASH 17 VALUES BELOW														
214	R	MAIN DSKY PEDESTAL MOUNT		2014343	NA	NAS-9-497	B	I	NOTE 11B	FOR DIMENSIONS SEE DASH 17 VALUES BELOW														
213	R	SHIPPING CONTAINER, MAIN DSKY		1006229	NA	NAS-9-497	B	II	NOTE 11C	FOR DIMENSIONS SEE DASH 18 VALUES BELOW														
212	R	SHIPPING CONTAINER, NAV DSKY		1006231	NA	NAS-9-497	B	II	NOTE 11C	FOR DIMENSIONS SEE DASH 18 VALUES BELOW														
211	R	SHIPPING CONTAINER, AGC		1006230	NA	NAS-9-497	B	II	NOTE 11C	FOR DIMENSIONS SEE DASH 18 VALUES BELOW														
210	R	SHIPPING CONTAINER, UNIVERSAL DSKY		1006422	NA	NAS-9-497	B	II	NOTE 11C	FOR DIMENSIONS SEE DASH 18 VALUES BELOW														
209	R	SHIPPING CONTAINER, AGC		1006421	NA	NAS-9-497	B	II	NOTE 11C	FOR DIMENSIONS SEE DASH 18 VALUES BELOW														
208	R	UNIVERSAL DSKY HANDLING FIXTURE		2014013-011	NA	NAS-9-497	B	I	NOTE 11B	FOR DIMENSIONS SEE DASH 15 VALUES BELOW														
207	R	NAV DSKY HANDLING FIXTURE		1014377	NA	NAS-9-497	B	I	NOTE 11B	FOR DIMENSIONS SEE DASH 17 VALUES BELOW														
206	R	MAIN DSKY HANDLING FIXTURE		1014334	NA	NAS-9-497	B	I	NOTE 11B	FOR DIMENSIONS SEE DASH 17 VALUES BELOW														
205	R	AGC HANDLING FIXTURE		2014282-011	NA	NAS-9-497	B	I	NOTE 11B	FOR DIMENSIONS SEE DASH 17 VALUES BELOW														
204	R	OPERATION CONSOLE		2014024-011	NA	NAS-9-497	B	II	NOTE 11C	FOR DIMENSIONS SEE DASH 18 VALUES BELOW														
203	R	COMPUTER TEST SET		2014042-011	NA	NAS-9-497	B	II	NOTE 11C	FOR DIMENSIONS SEE DASH 18 VALUES BELOW														
202	R	DRAWER ASSY, COMPUTER SIMULATOR		2014048-011	NA	FNP-12775	B	II	NOTE 11C	FOR DIMENSIONS SEE DASH 18 VALUES BELOW														
201	R	AUXILIARY CALIBRATION CONSOLE		2014059-011	NA	NAS-9-497	B	II	NOTE 11C	FOR DIMENSIONS SEE DASH 18 VALUES BELOW														
200	R	AGC CALIBRATION CONSOLE		2014049-011	NA	NAS-9-497	B	II	NOTE 11C	FOR DIMENSIONS SEE DASH 18 VALUES BELOW														
21	R																							
20	R	NA		NA	NA	NA	A	II	NOTE 11C	2.000	1.312	1.687	1.375	.078	.031	.078	.093	[illegible]	.093	1.187	.750	.593	.453	T.
19	R	NA		NA	NA	NA	A	I	NOTE 11B	2.000	1.312	1.687	1.375	.078	.031	.078	.093	NA	NA	1.187	.750	.593	.453	T.
18	R	NA		NA	NA	NA	B	II	NOTE 11C	4.187	1.875	3.469	2.750	.156	.093	.156	.125	[illegible]	.125	1.625	1.032	.844	.656	T.
17	R	NA		NA	NA	NA	B	I	NOTE 11B	4.187	1.875	3.469	2.750	.156	.093	.156	.125	NA	NA	1.625	1.032	.844	.656	T.
16	R	NA		NA	NA	NA	B	II	NOTE 11C	2.000	1.312	1.687	1.375	.078	.031	.078	.093	[illegible]	.093	1.187	.750	.593	.453	T.
15	R	NA		NA	NA	NA	B	I	NOTE 11B	2.000	1.312	1.687	1.375	.078	.031	.078	.093	NA	NA	1.187	.750	.593	.453	T.

NOTES FOR TABLE

STYLE A IS FOR G & N SYSTEM
STYLE B IS FOR GROUND SUPPORT EQUIPMENT
TYPE I IS WITHOUT MOUNTING HOLES
TYPE II IS WITH MOUNTING HOLES

REVISIONS

SYM	ZONE	DESCRIPTION	CHG NO	DATE	APPD
CL		REPLACES REV CK WITHOUT CHANGE PER TDRR 34365		7/10/67	JWL RWM
CM		REVISION STATUS CHANGED		18 OCT 67	RAN
CN		REVISION STATUS CHANGED		31 OCT 67	JRK
CP		REVISION STATUS CHANGED		6 NOV 67	EMS
CR		REVISION STATUS CHANGED		7 DEC 67	RWM
CS		REVISION STATUS CHANGED		3 JAN 68	JW EHW
C		REVISED PER TDRR 35526		7 FEB 68	

VALUES BELOW																																
VALUES BELOW																																
VALUES BELOW																																
VALUES BELOW																																
VALUES BELOW																																
VALUES BELOW																																
VALUES BELOW																																
VALUES BELOW																																
VALUES BELOW																																
VALUES BELOW																																
VALUES BELOW																																
VALUES BELOW																																
VALUES BELOW																																
VALUES BELOW																																
VALUES BELOW																																
VALUES BELOW																																
VALUES BELOW																																
VALUES BELOW																																
VALUES BELOW																																
VALUES BELOW																																
VALUES BELOW																																
VALUES BELOW																																
VALUES BELOW																																
VALUES BELOW																																
VALUES BELOW																																
VALUES BELOW																																
VALUES BELOW																																
VALUES BELOW																																
VALUES BELOW																																
VALUES BELOW																																
VALUES BELOW																																
VALUES BELOW																																
VALUES BELOW																																
VALUES BELOW																																
VALUES BELOW																																
VALUES BELOW																																
VALUES BELOW																																
VALUES BELOW																																
VALUES BELOW																																
VALUES BELOW																																
VALUES BELOW																																
VALUES BELOW																																
VALUES BELOW																																
VALUES BELOW																																
VALUES BELOW																																
VALUES BELOW																																
VALUES BELOW																																
VALUES BELOW																																
VALUES BELOW																																
VALUES BELOW																																
VALUES BELOW																																
VALUES BELOW																																
VALUES BELOW																																
VALUES BELOW																																
VALUES BELOW																																
VALUES BELOW																																
VALUES BELOW																																
VALUES BELOW																																
VALUES BELOW																																
VALUES BELOW																																
VALUES BELOW																																
VALUES BELOW																																
VALUES BELOW																																
VALUES BELOW																																
VALUES BELOW																																
VALUES BELOW																																
VALUES BELOW																																
VALUES BELOW																																
VALUES BELOW																																
VALUES BELOW																																
VALUES BELOW																																
VALUES BELOW																																
VALUES BELOW																																
VALUES BELOW																																
VALUES BELOW																																
VALUES BELOW																																
VALUES BELOW																																
VALUES BELOW																																
VALUES BELOW																																
VALUES BELOW																																
VALUES BELOW																																
VALUES BELOW																																
VALUES BELOW																																
VALUES BELOW																																
VALUES BELOW																																
VALUES BELOW																																
VALUES BELOW																																
VALUES BELOW																																
VALUES BELOW																																
VALUES BELOW																																
	.031	.078	.093	[illegible]	.093	1.187	.750	.593	.453	1.015	.062	.187	.078	.875	.718	1.375	.218	1.156	1.843	.048	NA	.875	.305	.078	.312	1.687	.078	NA	.078	.312	.187	1.843
	.031	.078	.093	NA	NA	1.187	.750	.593	.453	1.015	.062	.187	.078	.875	.718	1.375	.218	NA	NA	.048	.031	.875	.305	.078	.312	1.687	.078	NA	.078	.312	.187	NA
	.093	.156	.125	[illegible]	.125	1.625	1.032	.844	.656	1.406	.093	.344	.156	1.781	1.531	2.844	.312	1.562	3.875	.062	NA	1.219	.500	.156	.719	3.469	.156	NA	.156	.719	.344	3.875
	[illegible]	.156	.125	NA	NA	1.625	1.032	.844	.656	1.406	.093	.344	.156	1.781	1.531	2.844	.312	NA	NA	.062	.062	1.219	.500	.156	.719	3.469	.156	NA	.156	.719	.344	NA
	.031	.078	.093	[illegible]	.093	1.187	.750	.593	.453	1.015	.062	.187	.078	.875	.718	1.375	.218	1.156	1.843	.048	NA	.875	.305	.078	.312	1.687	.078	NA	.078	.312	.187	1.843
	.031	.078	.093	NA	NA	1.187	.750	.593	.453	1.015	.062	.187	.078	.875	.718	1.375	.218	NA	NA	.048	.031	.875	.305	.078	.312	1.687	.078	NA	.078	.312	.187	NA
	F	G	H	J	K	L	M	N	P	R	S	T	U	V	W	Y	Z	AA	AB	AC	AD	AE	AF	AG	AH	AJ	AK	AL	AM	AN	AP	AR

RAYTHEON DASH NUMBERS

AS APPLICABLE	
NEXT ASSY	USED ON
APPLICATION	

UNLESS OTHERWISE SPECIFIED
DIMENSIONS ARE IN INCHES
TOLERANCES ON
2 PLACE DECIMALS ± —
3 PLACE DECIMALS ± .005
ANGLES ± —
DO NOT SCALE THIS DRAWING
MATERIAL SEE NOTE 11
APPROVAL

M I T
INSTRUMENTATION LAB
CAMBRIDGE MASS
DRAWN R A JONES DATE 16 JUL 65
CHECKED
APPROVAL W KUPFER 22 JUL 65
CONTRACT
NASA APPROVAL T MICHAELS 22 JUL 65
MIT APPROVAL W KUPFER 22 JUL 65

MANNED
SPACECRAFT CENTER
HOUSTON TEXAS

NAMEPLATES,
APOLLO GEN - GSE
(STANDARDS)

SIZE J2
CODE IDENT NO 80230
1004260
SCALE NONE
SHEET 3 OF 6

1004260 CT SHT 3

1004260 CT

AC DASH NUMBERS CONTINUED ON SHEET 6

DASH NO.	P/C	PART NAME	REMARKS	PART NUMBER	SER. NO.	CONT. NO.	STYLE	TYPE	MATERIAL	A	B	C	D	E	F	G	H	J	K	L	M	N	P
199	AC	EYEPIECE STOWAGE UNIT		2021255-011			A	I		FOR DIMENSIONS SEE DASH 100 VALUES BELOW													
198	AC	SIGNAL CONDITIONER ASSY C/M		2007234		NAS-9-497	A	I	NOTE 11B	FOR DIMENSIONS SEE DASH 100 VALUES BELOW													
197	AC	SIGNAL CONDITIONER ASSY C/M		2007235		NAS-9-497	A	I	NOTE 11B	FOR DIMENSIONS SEE DASH 100 VALUES BELOW													
196	AC	SIGNAL CONDITIONER ASSY LEM		6007010		NAS-9-497	A	I	NOTE 11B	FOR DIMENSIONS SEE DASH 100 VALUES BELOW													
195	AC	PSA & SIGNAL CONDITIONER ASSY		6007009		NAS-9-497	A	I	NOTE 11B	FOR DIMENSIONS SEE DASH 100 VALUES BELOW													
194	AC	PANEL, MONITOR		2900031-031		NAS-9-497	B	II	NOTE 11C	FOR DIMENSIONS SEE DASH 141 VALUES BELOW													
193	AC	DISTRIBUTION BOX, GSE		2900024-031		NAS-9-497	B	II	NOTE 11C	FOR DIMENSIONS SEE DASH 141 VALUES BELOW													
192	AC	ANALYZER, OPTICS-INERTIAL		2900023-031		NAS-9-497	B	II	NOTE 11C	FOR DIMENSIONS SEE DASH 144 VALUES BELOW													
191	AC	TEST CONTROL		2900027-031		NAS-9-497	B	II	NOTE 11C	FOR DIMENSIONS SEE DASH 141 VALUES BELOW													
190	AC	PANEL, PWR SUP AND LOAD		2900033-021		NAS-9-497	B	II	NOTE 11C	FOR DIMENSIONS SEE DASH 141 VALUES BELOW													
189	AC	ADPT MODULE, P.S.A.		6900088-011		NAS-9-497	B	II	NOTE 11C	FOR DIMENSIONS SEE DASH 141 VALUES BELOW													
188	AC	ADPT MODULE, P.S.A.		2901143-011		NAS-9-497	B	II	NOTE 11C	FOR DIMENSIONS SEE DASH 141 VALUES BELOW													
187	AC	FIXTURE, MTG, PTA/PEA		2900066-021		NAS-9-497	B	II	NOTE 11C	FOR DIMENSIONS SEE DASH 141 VALUES BELOW													
186	AC	ANNUNCIATOR PANEL & EYEPIECE STORAGE ASSEMBLY		1021255-021			A	I		FOR DIMENSIONS SEE DASH 100 VALUES BELOW													
185	AC	ANNUNCIATOR PANEL & EYEPIECE STORAGE ASSEMBLY		1021255-011			A	I		FOR DIMENSIONS SEE DASH 100 VALUES BELOW													
184	AC	FIX., HAND., G AND N HARNESS		1901846-041		NAS-9-497	B	II	NOTE 11C	FOR DIMENSIONS SEE DASH 144 VALUES BELOW													
183	AC	INSTALLING TOOL, ELEC. CONN		1902586-011		NAS-9-497	B	II	NOTE 11C	FOR DIMENSIONS SEE DASH 102 VALUES BELOW													
182	AC	ADPT MODULE, P.S.A.		6900088-011		NAS-9-497	B	II	NOTE 11C	FOR DIMENSIONS SEE DASH 141 VALUES BELOW													
181	AC	G & N INDICATOR CONTROL PANEL ASSY		2014578-011		NAS-9-497	A	I	NOTE 11B	3,000	1,938	2,437	NA	.125	.062	.188	.156	NA	NA	1,750	1,125	.906	[illegible]
180	AC	ADPT MODULE, P.S.A.		1902431-031		NAS-9-497	B	II		FOR DIMENSIONS SEE DASH 121 VALUES BELOW													
179	AC	MOUNTING PLATE, IMU/PTA		6900083-011		NAS-9-497	B	II		FOR DIMENSIONS SEE DASH 144 VALUES BELOW													
178	AC	MOUNTING PLATE, COMPONENT		6900007-021		NAS-9-497	B	II		FOR DIMENSIONS SEE DASH 144 VALUES BELOW													
177	AC	FIX., MOUNTING, SUBSYSTEM		2900070-021		NAS-9-497	B	II		FOR DIMENSIONS SEE DASH 144 VALUES BELOW													
176	AC	FIX., MOUNTING, G & N		2900067-021		NAS-9-497	B	II		FOR DIMENSIONS SEE DASH 144 VALUES BELOW													
175	AC	CSL, COOL. AND PWR, G & N		1902134-031		NAS-9-497	B	II		FOR DIMENSIONS SEE DASH 144 VALUES BELOW													
174	AC	FIX., HAND., C/M AND LEM CDU		2900999-011		NAS-9-497	B	II	NOTE 11C	FOR DIMENSIONS SEE DASH 141 VALUES BELOW													
173	AC	FIX., HANDLING, C/M PSA		2900998-011		NAS-9-497	B	II	NOTE 11C	FOR DIMENSIONS SEE DASH 141 VALUES BELOW													
172	AC	CAGING ELECTRONICS, GYRO		2900029-021		NAS-9-497	B	II	NOTE 11C	FOR DIMENSIONS SEE DASH 141 VALUES BELOW													
171	AC	DISTRIBUTION BOX, GSE		2900024-021		NAS-9-497	B	II	NOTE 11C	FOR DIMENSIONS SEE DASH 141 VALUES BELOW													
170	AC	ANALYZER, OPTICS-INERTIAL		2900023-021		NAS-9-497	B	II	NOTE 11C	FOR DIMENSIONS SEE DASH 144 VALUES BELOW													
169	AC	ADPT, TESTPOINT, P.S.A.		2900037-021		NAS-9-497	B	II	NOTE 11C	FOR DIMENSIONS SEE DASH 141 VALUES BELOW													
168	AC	TEST SELECTOR		2900028-021		NAS-9-497	B	II	NOTE 11C	FOR DIMENSIONS SEE DASH 141 VALUES BELOW													
167	AC	TEST CONTROL		2900027-021		NAS-9-497	B	II	NOTE 11C	FOR DIMENSIONS SEE DASH 141 VALUES BELOW													
166	AC	PANEL, MONITOR		2900031-021		NAS-9-497	B	II	NOTE 11C	FOR DIMENSIONS SEE DASH 141 VALUES BELOW													
165	AC	TERM. BOARD STORAGE DRAWER		2900927-011		NAS-9-497	B	II	NOTE 11C	FOR DIMENSIONS SEE DASH 141 VALUES BELOW													
164	AC	INPUT/OUTPUT PANEL		2900926-011		NAS-9-497	B	II	NOTE 11C	FOR DIMENSIONS SEE DASH 141 VALUES BELOW													
163	AC	CONTROL PANEL		2900896-011		NAS-9-497	B	II	NOTE 11C	FOR DIMENSIONS SEE DASH 141 VALUES BELOW													
162	AC	CSL, CAL AND TEST, SCM/PSAAM		2900895-011		NAS-9-497	B	II	NOTE 11C	FOR DIMENSIONS SEE DASH 144 VALUES BELOW													
161	AC	FIX., LIFT AND HAND., IMU		1015462-011		NAS-9-497	B	II	NOTE 11C	FOR DIMENSIONS SEE DASH 141 VALUES BELOW													
160	AC	FIX., HAND., G & N HARNESS		1901846-031		NAS-9-497	B	II	NOTE 11C	FOR DIMENSIONS SEE DASH 144 VALUES BELOW													
159	AC	BATTERY POWER PACK		1900011-031		NAS-9-497	B	II	NOTE 11C	FOR DIMENSIONS SEE DASH 144 VALUES BELOW													
158	AC	COUPLING DATA UNIT ASSEMBLY C/M		2007222		NAS-9-497	A	I	NOTE 11B	FOR DIMENSIONS SEE DASH 100 VALUES BELOW													
157	AC	COUPLING DATA UNIT ASSEMBLY - LEM		2007222		NAS-9-497	A	I	NOTE 11B	FOR DIMENSIONS SEE DASH 100 VALUES BELOW													
156	AC	POWER & SERVO ASSEMBLY C/M		2007200		NAS-9-497	A	I	NOTE 11B	2,125	.968	1,718	NA	.093	.031	.06	.093	NA	NA	.858	.608	.484	[illegible]
155	AC	PIPA ELECTRONICS ASSEMBLY		2007201		NAS-9-497	A	I	NOTE 11B	FOR DIMENSIONS SEE DASH 100 VALUES BELOW													
154	AC	PULSE TORQUE ASSEMBLY-LEM		6007000		NAS-9-497	A	I	NOTE 11B	FOR DIMENSIONS SEE DASH 100 VALUES BELOW													
153	AC	POWER & SERVO ASSEMBLY-LEM		6007200		NAS-9-497	A	I	NOTE 11B	FOR DIMENSIONS SEE DASH 100 VALUES BELOW													
152	AC	CONT PNL, RSVR CKT TESTER		2900770-011		NAS-9-497	B	II	NOTE 11C	FOR DIMENSIONS SEE DASH 141 VALUES BELOW													
151	AC	TESTER, RESOLVER CIRCUIT		2900708-011		NAS-9-497	B	II	NOTE 11C	FOR DIMENSIONS SEE DASH 141 VALUES BELOW													
150	AC	JUNCTION BOX, P.S.A./G.S.E.		1901933-021		NAS-9-497	B	II	NOTE 11C	FOR DIMENSIONS SEE DASH 144 VALUES BELOW													
149	AC	BATTERY PACK, LIFTING		2900812-011		NAS-9-497	B	II	NOTE 11C	FOR DIMENSIONS SEE DASH 141 VALUES BELOW													
148	AC	MOUNTING PLATE, COMPONENT		6900007-011		NAS-9-497	B	II	NOTE 11C	FOR DIMENSIONS SEE DASH 144 VALUES BELOW													
147	AC	MOUNTING PLATE, COMPONENT		2900677-011		NAS-9-497	B	II	NOTE 11C	FOR DIMENSIONS SEE DASH 144 VALUES BELOW													
146	AC	CART, TRANS, G & N		1900009-041		NAS-9-497	B	II	NOTE 11C	FOR DIMENSIONS SEE DASH 144 VALUES BELOW													
145	AC	CONTAINER, SHIPPING, IMU		1900010-021		NAS-9-497	B	II	NOTE 11C	FOR DIMENSIONS SEE DASH 144 VALUES BELOW													
144	AC	FIX., MOUNTING, G & N		1902204-021			B	II	NOTE 11C	4.125	1.812	3.250	NA	.125	.062	.12	.156		.125	1.625	1.140	.890	.640
143	AC	CSL, COOL, AND PWR, G & N		1902134-021			B	II	NOTE 11C	4.125	1.812	3.250	NA	.125	.062	.12	.156		.125	1.625	1.140	.890	.640
142	AC	ANALYZER, OPTICS-INERTIAL		2900023-011			B	II	NOTE 11C	4.125	1.812	3.250	NA	.125	.062	.12	.156		.125	1.625	1.140	.890	.640
141	AC	CONT, TEMP, PORTABLE		2900060-011			B	II	NOTE 11C	2.125	.968	1.718	NA	.093	.031	.06	.093		.093	.858	.608	.484	.358
140	AC	TESTER, CKT, IMU/CDU RSVR		2900286-011			B	II	NOTE 11C	4.125	1.812	3.250	NA	.125	.062	.12	.156		.125	1.625	1.140	.890	.640
139	AC	SIMULATOR, LD/SIG, CDU		2900285-011			B	II	NOTE 11C	4.125	1.812	3.250	NA	.125	.062	.12	.156		.125	1.625	1.140	.890	.640
138	AC	SIMULATOR, LD/SIG, OPTICS		1902023-021			B	II	NOTE 11C	4.125	1.812	3.250	NA	.125	.062	.12	.156		.125	1.625	1.140	.890	.640
137	AC	FIX., MOUNTING, IMU/NAV BASE		6900003-011			B	II	NOTE 11C	4.125	1.812	3.250	NA	.125	.062	.12	.156		.125	1.625	1.140	.890	.640
136	AC	FIXTURE, OPTICS/NAV BASE		2900072-011			B	II	NOTE 11C	4.125	1.812	3.250	NA	.125	.062	.12	.156		.125	1.625	1.140	.890	.640
135	AC	FIX., MOUNTING, SUB SYSTEM		2900070-011			B	II	NOTE 11C	4.125	1.812	3.250	NA	.125	.062	.12	.156		.125	1.625	1.140	.890	.640
134	AC	FIX., HAND., G & N HARNESS		2900069-011			B	II	NOTE 11C	4.125	1.812	3.250	NA	.125	.062	.12	.156		.125	1.625	1.140	.890	.640
133	AC	CNTR, SHIPPING, NAV BASE		2900068-011			B	II	NOTE 11C	4.125	1.812	3.250	NA	.125	.062	.12	.156		.125	1.625	1.140	.890	.640
132	AC	FIX., MOUNTING, G & N		2900067-011			B	II	NOTE 11C	4.125	1.812	3.250	NA	.125	.062	.12	.156		.125	1.625	1.140	.890	.640
131	AC	SIMULATOR, LD/SIG, IMU/CDU		2900062-011			B	II	NOTE 11C	4.125	1.812	3.250	NA	.125	.062	.12	.156		.125	1.625	1.140	.890	.640
130	AC	TESTER, GYRO WHEEL		2900061-011			B	II	NOTE 11C	4.125	1.812	3.250	NA	.125	.062	.12	.156		.125	1.625	1.140	.890	.640
129	AC	COOLANT SUPPLY		1902133-021			B	II	NOTE 11C	4.125	1.812	3.250	NA	.125	.062	.12	.156		.125	1.625	1.140	.890	.640
128	AC	TABLE, ROTARY		1900926-021			B	II	NOTE 11C	4.125	1.812	3.250	NA	.125	.062	.12	.156		.125	1.625	1.140	.890	.640
127	AC	FIX., HAND., OPTICS		2900074-011			B	II	NOTE 11C	2.125	.968	1.718	NA	.093	.031	.06	.093		.093	.858	.608	.484	.358
126	AC	FIXTURE, MTG, PTA/PEA.		2900066-011			B	II	NOTE 11C	2.125	.968	1.718	NA	.093	.031	.06	.093		.093	.858	.608	.484	.358
125	AC	CONT, TEMP, IMU LIFTING		2900063-011			B	II	NOTE 11C	2.125	.968	1.718	NA	.093	.031	.06	.093		.093	.858	.608	.484	.358
124	AC	FIXTURE, HANDLING, IMU		2900064-011			B	II	NOTE 11C	2.125	.968	1.718	NA	.093	.031	.06	.093		.093	.858	.608	.484	.358
123	AC	CONT, OPTICS, REMOTE		1902046-021			B	II	NOTE 11C	2.125	.968	1.718	NA	.093	.031	.06	.093		.093	.858	.608	.484	.358
122	AC	TEST CONTROL		1902009-021			B	II	NOTE 11C	2.125	.968	1.718	NA	.093	.031	.06	.093		.093	.858	.608	.484	.358
121	AC	ADPT MODULE, P.S.A.		1902431-021			B	II	NOTE 11C	2.125	.968	1.718	NA	.093	.031	.06	.093		.093	.858	.608	.484	.358
120	AC	BRIDGE, DECADE ERROR		2900128-011			B	II	NOTE 11C	2.125	.968	1.718	NA	.093	.031	.06	.093		.093	.858	.608	.484	.358
119	AC	PWR SUP, ELECTRONICS		2900012-011			B	II	NOTE 11C	2.125	.968	1.718	NA	.093	.031	.06	.093		.093	.858	.608	.484	.358
118	AC	PWR SUP, RELAY AND LAMP		1900049-031			B	II	NOTE 11C	2.125	.968	1.718	NA	.093	.031	.06	.093		.093	.858	.608	.484	.358
117	AC	CONSOLE, OSCILLOGRAPH		1900000-021			B	II	NOTE 11C	2.125	.968	1.718	NA	.093	.031	.06	.093		.093	.858	.608	.484	.358
116	AC	ADPT MODULE, P.S.A.		1902431-011			B	II	NOTE 11C	2.125	.968	1.718	NA	.093	.031	.06	.093		.093	.858	.608	.484	.358
115	AC	ADPT, TEST POINT, PTA/PEA.		2900145-011			B	II	NOTE 11C	2.125	.968	1.718	NA	.093	.031	.06	.093		.093	.858	.608	.484	.358
114	AC	ADPT, TEST POINT, P.S.A.		2900037-011			B	II	NOTE 11C	2.125	.968	1.718	NA	.093	.031	.06	.093		.093	.858	.608	.484	.358
113	AC	CONTROL, GIMBAL POSITION		2900036-011			B	II	NOTE 11C	2.125	.968	1.718	NA	.093	.031	.06	.093		.093	.858	.608	.484	.358
112	AC	SELECTOR, SIGNAL, PRIMARY		2900035-011			B	II	NOTE 11C	2.125	.968	1.718	NA	.093	.031	.06	.093		.093	.858	.608	.484	.358
111	AC	SEL, SIG, OSCILLOGRAPH		2900034-011			B	II	NOTE 11C	2.125	.968	1.718	NA	.093	.031	.06	.093		.093	.858	.608	.484	.358
110	AC	PANEL, PWR SUP AND LOAD		2900033-011			B	II	NOTE 11C	2.125	.968	1.718	NA	.093	.031	.06	.093		.093	.858	.608	.484	.358
109	AC	PANEL, MONITOR		2900031-011			B	II	NOTE 11C	2.125	.968	1.718	NA	.093	.031	.06	.093		.093	.858	.608	.484	.358
108	AC	PANEL, AUXILIARY INPUT		2900030-011			B	II	NOTE 11C	2.125	.969	1.718	NA	.093	.031	.06	.093		.093	.858	.608	.484	.358
107	AC	CAGING ELECTRONICS, GYRO		2900029-011			B	II	NOTE 11C	2.125	.968	1.718	NA	.093	.031	.06	.093		.093	.858	.608	.484	.358
106	AC	TEST SELECTOR		2900028-011			B	II	NOTE 11C	2.125	.968	1.718	NA	.093	.031	.06	.093		.093	.858	.608	.484	.358
105	AC	TEST CONTROL		2900027-011			B	II	NOTE 11C	2.125	.968	1.718	NA	.093	.031	.06	.093		.093	.858	.608	.484	.358
104	AC	MONITOR AND CONTROL, TEMP		2900026-011			B	II	NOTE 11C	2.125	.968	1.718	NA	.093	.031	.06	.093		.093	.858	.608	.484	.358
103	AC	DISTRIBUTION BOX, GSE		2900024-011			B	II	NOTE 11C	2.125	.968	1.718	NA	.093	.031	.06	.093		.093	.858	.608	.484	.358
102	AC	VOLTMETER, DIGITAL		2900007-011			B	II	NOTE 11C	2.125	.968	1.718	NA	.093	.031	.06	.093		.093	.858	.608	.484	.358
101	AC	NAVIGATION BASE ASSEMBLY-LEM		6899950		NAS-9-497	A	I	NOTE 11B	2.000	1.312	1.906	1.375	.078	.048	.078	.093	NA	NA	1.125	.750	.593	.453
100	AC	NAVIGATION BASE ASSEMBLY		2899982		NAS-9-497	A	I	NOTE 11B	2.000	1.312	1.906	1.375	.078	.048	.078	.093	NA	NA	1.125	.750	.593	.453

NOTES FOR TABLE

STYLE A IS FOR G & N SYSTEM
STYLE B IS FOR GROUND SUPPORT EQUIPMENT
TYPE I IS WITHOUT MOUNTING HOLES
TYPE II IS WITH MOUNTING HOLES

REVISIONS					
SYM	ZONE	DESCRIPTION	CHG NO	DATE	APPD
CL		REPLACES REV CK WITHOUT CHANGE PER TDRR 34365		11-28-66	JWL RWH
CM		REVISION STATUS CHANGED		10 OCT 67	RAW
CN		REVISION STATUS CHANGE		31 OCT 67	JRK
CP		REVISION STATUS CHANGE		6 NOV 67	
CR		REVISION STATUS CHANGED		9 NOV 67	RWH
CS		REVISION STATUS CHANGED		5 JAN 68	RWH
CT		REVISION STATUS CHANGED		7 FEB 68	

DASH 100 VALUES BELOW																																
DASH 100 VALUES BELOW																																
DASH 100 VALUES BELOW																																
DASH 100 VALUES BELOW																																
DASH 100 VALUES BELOW																																
DASH 141 VALUES BELOW																																
DASH 141 VALUES BELOW																																
DASH 144 VALUES BELOW																																
DASH 141 VALUES BELOW																																
DASH 141 VALUES BELOW																																
DASH 141 VALUES BELOW																																
DASH 141 VALUES BELOW																																
DASH 141 VALUES BELOW																																
DASH 100 VALUES BELOW																																
DASH 100 VALUES BELOW																																
DASH 144 VALUES BELOW																																
DASH 102 VALUES BELOW																																
DASH 141 VALUES BELOW																																
.125	.062	.188	.156	NA	NA	1.750	1.125	.906	.688	1.500	NA	.281	.125	NA	1.094	2.062	.312	NA	2.500	.062	.125	1.312	.469	NA	NA	NA	.156	NA	.125	.469	.344	NA
DASH 121 VALUES BELOW																																
DASH 144 VALUES BELOW																																
DASH 144 VALUES BELOW																																
DASH 144 VALUES BELOW																																
DASH 144 VALUES BELOW																																
DASH 144 VALUES BELOW																																
DASH 141 VALUES BELOW																																
DASH 141 VALUES BELOW																																
DASH 141 VALUES BELOW																																
DASH 141 VALUES BELOW																																
DASH 144 VALUES BELOW																																
DASH 141 VALUES BELOW																																
DASH 141 VALUES BELOW																																
DASH 141 VALUES BELOW																																
DASH 141 VALUES BELOW																																
DASH 141 VALUES BELOW																																
DASH 141 VALUES BELOW																																
DASH 141 VALUES BELOW																																
DASH 144 VALUES BELOW																																
DASH 141 VALUES BELOW																																
DASH 144 VALUES BELOW																																
DASH 144 VALUES BELOW																																
DASH 100 VALUES BELOW																																
DASH 100 VALUES BELOW																																
.093	.031	.06	.093	NA	NA	.858	.608	.484	.358	.733	.062	.140	.062	NA	.968	1.450	.125	NA	1.720	.046	.03	NA	.210	NA	NA	NA	.070	NA	.046	.32	.16	NA
DASH 100 VALUES BELOW																																
DASH 100 VALUES BELOW																																
DASH 100 VALUES BELOW																																
DASH 141 VALUES BELOW																																
DASH 141 VALUES BELOW																																
DASH 144 VALUES BELOW																																
DASH 141 VALUES BELOW																																
DASH 144 VALUES BELOW																																
DASH 144 VALUES BELOW																																
DASH 144 VALUES BELOW																																
DASH 144 VALUES BELOW																																
.125	.062	.12	.156	[illegible]	.125	1.625	1.140	.890	.640	1.390	.125	.171	.125	1.875	1.687	2.625	.250	1.562	3.843	.093	NA	NA	.359	.125	.437	3.688	NA	3.687	.093	.40	.25	3.875
.125	.062	.12	.156		.125	1.625	1.140	.890	.640	1.390	.125	.171	.125	1.875	1.687	2.625	.250	1.562	3.843	.093	NA	NA	.359	.125	.437	3.688	NA	3.687	.093	.40	.25	3.875
.125	.062	.12	.156		.125	1.625	1.140	.890	.640	1.390	.125	.171	.125	1.875	1.687	2.625	.250	1.562	3.843	.093	NA	NA	.359	.125	.437	3.688	NA	3.687	.093	.40	.25	3.875
.093	.031	.06	.093		.093	.858	.608	.484	.358	.733	.077	.116	.062	.937	.875	1.343	.125	.781	1.892	.046	NA	NA	.209	.093	.250	1.875	NA	1.840	.046	.23	.16	1.938
.125	.062	.12	.156		.125	1.625	1.140	.890	.640	1.390	.125	.171	.125	1.875	1.687	2.625	.250	1.562	3.843	.093	NA	NA	.359	.125	.437	3.688	NA	3.687	.093	.40	.25	3.875
.125	.062	.12	.156		.125	1.625	1.140	.890	.640	1.390	.125	.171	.125	1.875	1.687	2.625	.250	1.562	3.843	.093	NA	NA	.359	.125	.437	3.688	NA	3.687	.093	.40	.25	3.875
.125	.062	.12	.156		.125	1.625	1.140	.890	.640	1.390	.125	.171	.125	1.875	1.687	2.625	.250	1.562	3.843	.093	NA	NA	.359	.125	.437	3.688	NA	3.687	.093	.40	.25	3.875
.125	.062	.12	.156		.125	1.625	1.140	.890	.640	1.390	.125	.171	.125	1.875	1.687	2.625	.250	1.562	3.843	.093	NA	NA	.359	.125	.437	3.688	NA	3.687	.093	.40	.25	3.875
.125	.062	.12	.156		.125	1.625	1.140	.890	.640	1.390	.125	.171	.125	1.875	1.687	2.625	.250	1.562	3.843	.093	NA	NA	.359	.125	.437	3.688	NA	3.687	.093	.40	.25	3.875
.125	.062	.12	.156		.125	1.625	1.140	.890	.640	1.390	.125	.171	.125	1.875	1.687	2.625	.250	1.562	3.843	.093	NA	NA	.359	.125	.437	3.688	NA	3.687	.093	.40	.25	3.875
.125	.062	.12	.156		.125	1.625	1.140	.890	.640	1.390	.125	.171	.125	1.875	1.687	2.625	.250	1.562	3.843	.093	NA	NA	.359	.125	.437	3.688	NA	3.687	.093	.40	.25	3.875
.125	.062	.12	.156		.125	1.625	1.140	.890	.640	1.390	.125	.171	.125	1.875	1.687	2.625	.250	1.562	3.843	.093	NA	NA	.359	.125	.437	3.688	NA	3.687	.093	.40	.25	3.875
.125	.062	.12	.156		.125	1.625	1.140	.890	.640	1.390	.125	.171	.125	1.875	1.687	2.625	.250	1.562	3.843	.093	NA	NA	.359	.125	.437	3.688	NA	3.687	.093	.40	.25	3.875
.125	.062	.12	.156		.125	1.625	1.140	.890	.640	1.390	.125	.171	.125	1.875	1.687	2.625	.250	1.562	3.843	.093	NA	NA	.359	.125	.437	3.688	NA	3.687	.093	.40	.25	3.875
.125	.062	.12	.156		.125	1.625	1.140	.890	.640	1.390	.125	.171	.125	1.875	1.687	2.625	.250	1.562	3.843	.093	NA	NA	.359	.125	.437	3.688	NA	3.687	.093	.40	.25	3.875
.125	.062	.12	.156		.125	1.625	1.140	.890	.640	1.390	.125	.171	.125	1.875	1.687	2.625	.250	1.562	3.843	.093	NA	NA	.359	.125	.437	3.688	NA	3.687	.093	.40	.25	3.875
.125	.062	.12	.156		.125	1.625	1.140	.890	.640	1.390	.125	.171	.125	1.875	1.687	2.625	.250	1.562	3.843	.093	NA	NA	.359	.125	.437	3.688	NA	3.687	.093	.40	.25	3.875
.093	.031	.06	.093		.093	.858	.608	.484	.358	.733	.077	.116	.062	.937	.875	1.343	.125	.781	1.892	.046	NA	NA	.209	.093	.250	1.875	NA	1.840	.046	.23	.16	1.938
.093	.031	.06	.093		.093	.858	.608	.484	.358	.733	.077	.116	.062	.937	.875	1.343	.125	.781	1.892	.046	NA	NA	.209	.093	.250	1.875	NA	1.840	.046	.23	.16	1.938
.093	.031	.06	.093		.093	.858	.608	.484	.358	.733	.077	.116	.062	.937	.875	1.343	.125	.781	1.892	.046	NA	NA	.209	.093	.250	1.875	NA	1.840	.046	.23	.16	1.938
.093	.031	.06	.093		.093	.858	.608	.484	.358	.733	.077	.116	.062	.937	.875	1.343	.125	.781	1.892	.046	NA	NA	.209	.093	.250	1.875	NA	1.840	.046	.23	.16	1.938
.093	.031	.06	.093		.093	.858	.608	.484	.358	.733	.077	.116	.062	.937	.875	1.343	.125	.781	1.892	.046	NA	NA	.209	.093	.250	1.875	NA	1.840	.046	.23	.16	1.938
.093	.031	.06	.093		.093	.858	.608	.484	.358	.733	.077	.116	.062	.937	.875	1.343	.125	.781	1.892	.046	NA	NA	.209	.093	.250	1.875	NA	1.840	.046	.23	.16	1.938
.093	.031	.06	.093		.093	.858	.608	.484	.358	.733	.077	.116	.062	.937	.875	1.343	.125	.781	1.892	.046	NA	NA	.209	.093	.250	1.875	NA	1.840	.046	.23	.16	1.938
.093	.031	.06	.093		.093	.858	.608	.484	.358	.733	.077	.116	.062	.937	.875	1.343	.125	.781	1.892	.046	NA	NA	.209	.093	.250	1.875	NA	1.840	.046	.23	.16	1.938
.093	.031	.06	.093		.093	.858	.608	.484	.358	.733	.077	.116	.062	.937	.875	1.343	.125	.781	1.892	.046	NA	NA	.209	.093	.250	1.875	NA	1.840	.046	.23	.16	1.938
.093	.031	.06	.093		.093	.858	.608	.484	.358	.733	.077	.116	.062	.937	.875	1.343	.125	.781	1.892	.046	NA	NA	.209	.093	.250	1.875	NA	1.840	.046	.23	.16	1.938
.093	.031	.06	.093		.093	.858	.608	.484	.358	.733	.077	.116	.062	.937	.875	1.343	.125	.781	1.892	.046	NA	NA	.209	.093	.250	1.875	NA	1.840	.046	.23	.16	1.938
.093	.031	.06	.093		.093	.858	.608	.484	.358	.733	.077	.116	.062	.937	.875	1.343	.125	.781	1.892	.046	NA	NA	.209	.093	.250	1.875	NA	1.840	.046	.23	.16	1.938
.093	.031	.06	.093		.093	.858	.608	.484	.358	.733	.077	.116	.062	.937	.875	1.343	.125	.781	1.892	.046	NA	NA	.209	.093	.250	1.875	NA	1.840	.046	.23	.16	1.938
.093	.031	.06	.093		.093	.858	.608	.484	.358	.733	.077	.116	.062	.937	.875	1.343	.125	.781	1.892	.046	NA	NA	.209	.093	.250	1.875	NA	1.840	.046	.23	.16	1.938
	.031	.06	.093		.093	.858	.608	.484	.358	.733	.077	.116	.062	.937	.875	1.343	.125	.781	1.892	.046	NA	NA	.209	.093	.250	1.875	NA	1.840	.046	.23	.16	1.938
.093	.031	.06	.093		.093	.858	.608	.484	.358	.733	.077	.116	.062	.937	.875	1.343	.125	.781	1.892	.046	NA	NA	.209	.093	.250	1.875	NA	1.840	.046	.23	.16	1.938
.093	.031	.06	.093		.093	.858	.608	.484	.358	.733	.077	.116	.062	.937	.875	1.343	.125	.781	1.892	.046	NA	NA	.209	.093	.250	1.875	NA	1.840	.046	.23	.16	1.938
.093	.031	.06	.093		.093	.858	.608	.484	.358	.733	.077	.116	.062	.937	.875	1.343	.125	.781	1.892	.046	NA	NA	.209	.093	.250	1.875	NA	1.840	.046	.23	.16	1.938
.093	.031	.06	.093		.093	.858	.608	.484	.358	.733	.077	.116	.062	.937	.875	1.343	.125	.781	1.892	.046	NA	NA	.209	.093	.250	1.875	NA	1.840	.046	.23	.16	1.938
.093	.031	.06	.093		.093	.858	.608	.484	.358	.733	.077	.116	.062	.937	.875	1.343	.125	.781	1.892	.046	NA	NA	.209	.093	.250	1.875	NA	1.840	.046	.23	.16	1.938
.093	.031	.06	.093		.093	.858	.608	.484	.358	.733	.077	.116	.062	.937	.875	1.343	.125	.781	1.892	.046	NA	NA	.209	.093	.250	1.875	NA	1.840	.046	.23	.16	1.938
.093	.031	.06	.093		.093	.858	.608	.484	.358	.733	.077	.116	.062	.937	.875	1.343	.125	.781	1.892	.046	NA	NA	.209	.093	.250	1.875	NA	1.840	.046	.23	.16	1.938
.093	.031	.06	.093		.093	.858	.608	.484	.358	.733	.077	.116	.062	.937	.875	1.343	.125	.781	1.892	.046	NA	NA	.209	.093	.250	1.875	NA	1.840	.046	.23	.16	1.938
.093	.031	.06	.093		.093	.858	.608	.484	.358	.733	.077	.116	.062	.937	.875	1.343	.125	.781	1.892	.046	NA	NA	.209	.093	.250	1.875	NA	1.840	.046	.23	.16	1.938
.093	.031	.06	.093		.093	.858	.608	.484	.358	.733	.077	.116	.062	.937	.875	1.343	.125	.781	1.892	.046	NA	NA	.209	.093	.250	1.875	NA	1.840	.046	.23	.16	1.938
.093	.031	.06	.093	[illegible]	.093	.858	.608	.484	.358	.733	.077	.116	.062	.937	.875	1.343	.125	.781	1.892	.046	NA	NA	.209	.093	.250	1.875	NA	1.840	.046	.23	.16	1.938
.078	.048	.078	.093	NA	NA	1.125	.750	.593	.453	1.015	.062	.187	.078	.875	.718	1.375	.218	NA	NA	.048	.031	.875	.305	.078	.531	1.906	.078	NA	.078	.531	.187	NA
.078	.048	.078	.093	NA	NA	1.125	.750	.593	.453	1.015	.062	.187	.078	.875	.718	1.375	.218	NA	NA	.048	.031	.875	.305	.078	.531	1.906	.078	NA	.078	.531	.187	NA
E	F	G	H	J	K	L	M	N	P	R	S	T	U	V	W	Y	Z	AA	AB	AC	AD	AE	AF	AG	AH	AJ	AK	AL	AM	AN	AP	AR

AC ELECTRONICS DASH NUMBERS

NEXT ASSY	USED ON
AS APPLICABLE	
APPLICATION	

UNLESS OTHERWISE SPECIFIED
DIMENSIONS ARE IN INCHES
TOLERANCES ON
2 PLACE DECIMALS ± 3 PLACE DECIMALS ± .005 ANGLES ±
DO NOT SCALE THIS DRAWING
MATERIAL SEE NOTE 11
APPROVAL

MIT INSTRUMENTATION LAB
CAMBRIDGE MASS
DRAWN R A JONES DATE 16 JUL 65
CHECKED
APPROVAL W KUPFER 22 JUL 65
CONTRACT
NASA APPROVAL T MICHAELS 22 JUL 65
MIT APPROVAL W KUPFER 22 JUL 65

MANNED
SPACECRAFT CENTER
HOUSTON TEXAS

NAMEPLATES,
APOLLO GEN - GSE
(STANDARDS)

SIZE J2
CODE IDENT NO 80230
1004260
SCALE NONE
SHEET 4 OF 6

1004260 CT SHT 4

1004260 CT

1004260

3/1004260

[illegible]

DASH NO.	℅	PART NAME	REMARKS	PART NUMBER	SER. NO.	CONT. NO.	STYLE	TYPE	MATERIAL	A	B	C	D	E	F	G	H	J	K	L	M	N	P
401	MIT	COMPUTER ASSY		2003100		NAS-9-497	A	I	NOTE 11B	2.000	1.312	1.906	1.375	.078	.048	.078	.093	NA	NA	1.125	.750	.593	.453
400	MIT	LIFTING SLING-G&N INST.QUAL.FIX. & AZM.REF.FIX.		1021640		NAS-9-4065	B	II	NOTE 11C	2.000	1.312	1.687	1.375	.078	.048	.078	.093	[illegible]	.093	1.187	.750	.593	.453

NOTES FOR TABLE
STYLE A IS FOR G & N SYSTEM
STYLE B IS FOR GROUND SUPPORT EQUIPMENT
TYPE I IS WITHOUT MOUNTING HOLES
TYPE II IS WITH MOUNTING HOLES

1004260	CT	SHT 5

1/1004260

REVISIONS					
SYM	ZONE	DESCRIPTION	CHG NO	DATE	APPD
CL		REPLACES REV CK WITHOUT CHANGE PER TURR 3<365		[illegible]	JWL RWH
CM		REVISION STATUS CHANGED		10 OCT 67	RAW
CN		REVISION STATUS CHANGED		31 OCT 67	JRK
CP		REVISION STATUS CHANGED		6 NOV 67	EHS
CR		REVISION STATUS CHANGED		7 DEC 67	DWT RWH
CS		REVISION STATUS CHANGED		9 JAN 68	EHN
CT		REVISION STATUS CHANGED		7 FEB 69	LT RWH

.078	.048	.078	.093	NA	NA	1.125	.750	.593	.453	1.015	.062	.187	.078	.875	.718	1.375	.218	NA	NA	.048	.031	.875	.305	.078	.531	1.906	.078	NA	.078	.531	.187	NA
.078	.048	.078	.093	[illegible]	.093	1.187	.750	.593	.453	1.015	.062	.187	.078	.875	.718	1.375	.218	1.156	1.843	.048	NA	.875	.305	.078	.312	1.687	.110	1.830	.070	.275	.180	1.844
E	F	G	H	J	K	L	M	N	P	R	S	T	U	V	W	Y	Z	AA	AB	AC	AD	AE	AF	AG	AH	AJ	AK	AL	AM	AN	AP	AR

MIT DASH NUMBERS

AS APPLICABLE
NEXT ASSY | USED ON
APPLICATION

UNLESS OTHERWISE SPECIFIED
DIMENSIONS ARE IN INCHES
TOLERANCES ON
2 PLACE DECIMALS ± | 3 PLACE DECIMALS ± .005 | ANGLES ±
DO NOT SCALE THIS DRAWING
MATERIAL SEE NOTE 11
APPROVAL

MIT INSTRUMENTATION LAB
CAMBRIDGE MASS
DRAWN R A JONES DATE 16 JUL 65
CHECKED
APPROVAL W KUPFER 22 JUL 65
CONTRACT
NASA APPROVAL T. MICHAELS 22 JUL 65
MIT APPROVAL W KUPFER 22 JUL 65

MANNED SPACECRAFT CENTER
HOUSTON TEXAS

NAMEPLATES,
APOLLO G&N - GSE
(STANDARDS)

SIZE J2 | CODE IDENT NO 80230 | 1004260
SCALE NONE | SHEET 5 OF 6

1004260 CT SHT 5

1004260 CT

1004260

DASH NO.	P/C	PART NAME	REMARKS	PART NUMBER	SER. NO.	CONT. NO.	STYLE	TYPE	MATERIAL	A	B	C	D	E	F	G	H	J	K	L	M	N	P
599	AC																						
598	AC																						
575		CSL, CAL AND TEST, SCM/PSAAM		2900895-041		FOR DATA SEE DASH 559																	
574		CONT., TEMP PORTABLE		2900060-031		NAS-9-497	B	II	NOTE 11C	FOR DIMENSIONS SEE DASH 535 VALUES													
573		BATTERY PACK LIFTING		2900812-031		NAS-9-497	B	II	NOTE 11C	FOR DIMENSIONS SEE DASH 542 VALUES													
572		FIX., MOUNTING G&N	(-144)	2900067-051		NAS-9-497	B	II	NOTE 11C	FOR DIMENSIONS SEE DASH 500 VALUES													
570	AC	OPTICAL UNIT & BELLOWS ASSY				NAS-9-497	A	I	NOTE 11B	FOR DIMENSIONS SEE DASH 550 VALUES													
569	AC	G & N INDICATOR CONTROL PANEL ASSY		2021323-011		NAS-9-497	A	I	NOTE 11B	FOR DIMENSIONS SEE DASH 181													
568	AC	G & N INDICATOR CONTROL PANEL ASSY		2021290-021		NAS-9-497	A	I	NOTE 11B	FOR DIMENSIONS SEE DASH 181													
567	AC	G & N INDICATOR CONTROL PANEL ASSY		2021290-011		NAS-9-497	A	I	NOTE 11B	FOR DIMENSIONS SEE DASH 181													
566	AC	COMPUTER CONT & RETICLE DIMMER		6014512-061		NAS-9-497	A	I	NOTE 11B	FOR DIMENSIONS SEE DASH 534													
565		AUXILIARY BATTERY PACK		1901492-031		NAS-9-497	B	II	NOTE 11C	FOR DIMENSIONS SEE DASH 500													
564		BATTERY POWER PACK		1900011-051		NAS-9-497	B	II	NOTE 11C	FOR DIMENSIONS SEE DASH 500													
563		PSA ADAPTER MODULE (LEM)		6900088-031		NAS-9-497	B	II	NOTE 11C	FOR DIMENSIONS SEE DASH 141 VALUES													
562	AC	COMPUTER CONT & RETICLE DIMMER		6014512-041		NAS-9-497	A	I	NOTE 11B	FOR DIMENSIONS SEE DASH 534 VALUES													
561	AC	G & N INDICATOR CONTROL PANEL ASSY		2014578-031		NAS-9-497	A	I	NOTE 11B	FOR DIMENSIONS SEE DASH 181 VALUES													
560		ADPT. MODULE, PSA		2901143-021		NAS-9-497	B	II	NOTE 11C	FOR DIMENSIONS SEE DASH 141 VALUES													
559		CSL. CAL AND TEST, SCM/PSAAM		2900895-031		FOR OTHER DATA SEE DASH 547																	
558		PSA ADAPTER MODULE (LEM)		6300088-021		FOR OTHER DATA SEE DASH 189																	
557		FIX., HANDLING, C/M PSA		2900998-021		NAS-9-497	B	II	NOTE 11C	FOR DIMENSIONS SEE DASH 141 VALUES													
556		FIX., MOUNTING G & N	(-144)	2900067-041		NAS-9-497	B	II	NOTE 11C	FOR DIMENSIONS SEE DASH 500 VALUES													
555	AC	OPTICAL UNIT ASSEMBLY		1021368-061		NAS-9-497	A	I	NOTE 11B	2.000	1.312	1.687	1.375	.078	.048	.078	.093	NA	NA	1.125	.750	.593	
554	AC	OPTICAL UNIT ASSEMBLY		1021368-041		NAS-9-497	A	I	NOTE 11B	2.000	1.312	1.687	1.375	.078	.048	.078	.093	NA	NA	1.125	.750	.593	
553	AC	OPTICAL UNIT AND BELLOWS ASSEMBLY		2010790-111		NAS-9-497	A	I	NOTE 11B	2.000	1.312	1.687	1.375	.078	.048	.078	.093	NA	NA	1.125	.750	.593	
552	AC	OPTICAL UNIT AND BELLOWS ASSEMBLY		2010790-081		NAS-9-497	A	I	NOTE 11B	2.000	1.312	1.687	1.375	.078	.048	.078	.093	NA	NA	1.125	.750	.593	
551	AC	OPTICAL UNIT AND BELLOWS ASSEMBLY		2010790-071		NAS-9-497	A	I	NOTE 11B	2.000	1.312	1.687	1.375	.078	.048	.078	.093	NA	NA	1.125	.750	.593	
550	AC	OPTICAL UNIT AND BELLOWS ASSEMBLY		2010790-061		NAS-9-497	A	I	NOTE 11B	2.000	1.312	1.687	1.375	.078	.048	.078	.093	NA	NA	1.125	.750	.593	
548		CAGING ELECTRONICS, GYRO		2900029-031		NAS-9-497	B	II	NOTE 11C	2.125	.968	1.718	NA	.093	.031	.06	.093	⊠	.093	.858	.608	.484	
547		CSL, CAL AND TEST, SCM/PSAAM		2900895-021		NAS-9-497	B	II	NOTE 11C	4.125	1.812	3.250	NA	.125	.062	.12	.156		.125	1.625	1.140	.890	
546		FIX., HAND., C/M AND LEM CDU		2900999-021		NAS-9-497	B	II	NOTE 11C	2.125	.968	1.718	NA	.093	.031	.06	.093	⊠	.093	.858	.608	.484	
545	AC	G & N INDICATOR CONTROL PANEL ASSY		2014578-021		NAS-9-497	A	I	NOTE 11B	3.000	1.938	2.437	NA	.125	.062	.188	.156	NA	NA	1.750	1.125	.906	
544		ADPT MODULE, P.S.A.		1902431-051		NAS-9-497	B	II	NOTE 11C	2.125	.968	1.718	NA	.093	.031	.06	.093	⊠	.093	.858	.608	.484	
543	AC	PANEL, MONITOR		2900031-041		NAS-9-497	B	II	NOTE 11C	2.125	.968	1.718	NA	.093	.031	.06	.093		.093	.858	.608	.484	
542	AC	BATTERY PACK, LIFTING		2900812-021		NAS-9-497	B	II	NOTE 11C	2.125	.968	1.718	NA	.093	.031	.06	.093		.093	.858	.608	.484	
541	AC	FIXTURE, MOUNTING, IMU		2900000-021		NAS-9-497	B	II	NOTE 11C	4.125	1.812	3.250	NA	.125	.062	.12	.156		.125	1.625	1.140	.890	
540	AC	ADPT, TEST POINT, P.S.A.		2900037-031		NAS-9-497	B	II	NOTE 11C	2.125	.968	1.718	NA	.093	.031	.06	.093	⊠	.093	.858	.608	.484	
539	AC	ANNUNCIATOR PANEL & EYEPIECE STORAGE ASSEMBLY		1021255-041		NAS-9-497	A	I	NOTE 11B	2.000	1.312	1.906	1.375	.078	.048	.078	.093	NA	NA	1.125	.750	.593	
538	AC	ANNUNCIATOR PANEL & EYEPIECE STORAGE ASSEMBLY		1021255-031		NAS-9-497	A	I	NOTE 11B	2.000	1.312	1.906	1.375	.078	.048	.078	.093	NA	NA	1.125	.750	.593	
537	AC	TEST SELECTOR		2900028-031		NAS-9-497	B	II	NOTE 11C	2.125	.968	1.718	NA	.093	.031	.06	.093	⊠	.093	.858	.608	.484	
536	AC	ANALYZER, OPTICS-INERTIAL		2900023-041		NAS-9-497	B	II	NOTE 11C	4.125	1.812	3.250	NA	.125	.062	.12	.156		.125	1.625	1.140	.890	
535	AC	CONT, TEMP, PORTABLE		2900060-021		NAS-9-497	B	II	NOTE 11C	2.125	.968	1.718	NA	.093	.031	.06	.093	⊠	.093	.858	.608	.484	
534	AC	COMPUTER CONT & RETICLE DIMMER		6014512-021		NAS-9-497	A	I	NOTE 11B	2.000	1.312	1.906	1.375	.078	.048	.078	.093	NA	NA	1.125	.750	.593	
533	AC	ADPT MODULE, P.S.A.		1902431-041		NAS-9-497	B	II	NOTE 11C	2.125	.968	1.718	NA	.093	.031	.06	.093	⊠	.093	.858	.608	.484	
532	AC	TRAY BREAKOUT, 105 PIN		1900807-021		NAS-9-497	B	II	NOTE 11C	4.125	1.812	3.250	NA	.125	.062	.12	.156		.125	1.625	1.140	.890	
531	AC	TRAY BREAKOUT, 84 PIN		1900806-021		NAS-9-497	B	II	NOTE 11C	4.125	1.812	3.250	NA	.125	.062	.12	.156		.125	1.625	1.140	.890	
530	AC	HEAT SINK-TRAY EXTENDER		1900808-021		NAS-9-497	B	II	NOTE 11C	2.125	.968	1.718	NA	.093	.031	.06	.093		.093	.858	.608	.484	
529	AC	TESTER, FAILURE INDICATOR		1900809-021		NAS-9-497	B	II	NOTE 11C	2.125	.968	1.718	NA	.093	.031	.06	.093	⊠	.093	.858	.608	.484	
527	AC	FIX., MOUNTING, G & N	(-144)	1902204-021		NAS-9-497	B	II	NOTE 11C	FOR DIMENSIONS SEE DASH 500 VALUES BELOW													
526	AC	FIX., MOUNTING, G & N	(-144)	2900067-031		NAS-9-497	B	II	NOTE 11C	FOR DIMENSIONS SEE DASH 500 VALUES BELOW													
525	AC	PORTABLE TEMP. CONTROLLER		1900496-021		NAS-9-497	B	II	NOTE 11C	3.000	1.937	2.437	2.312	.125	.031	.125	.156	.125	.125	1.718	1.187	.968	
524	AC	POWER, SERVO & THERMOCOUPLE ASSEMBLY C/M		2010743		NAS-9-497	A	I	NOTE 11B	2.125	.968	1.718	NA	.093	.031	.06	.093	NA	NA	.858	.608	.484	
523	AC	PULSE TORQUE AND THERMOCOUPLE ASSEMBLY-LEM		6010656		NAS-9-497	A	I	NOTE 11B	FOR DIMENSIONS SEE DASH 508 VALUES BELOW													
522	AC	COUPLING DATA UNIT & THERMOCOUPLE ASSEMBLY-LEM		2010744		NAS-9-497	A	I	NOTE 11B	FOR DIMENSIONS SEE DASH 508 VALUES BELOW													
521	AC	COUPLING DATA UNIT & THERMOCOUPLE ASSEMBLY-C/M		2010744		NAS-9-497	A	I	NOTE 11B	FOR DIMENSIONS SEE DASH 508 VALUES BELOW													
520	AC	PIPA ELECTRONICS AND THERMOCOUPLE ASSEMBLY		2010745		NAS-9-497	A	I	NOTE 11B	FOR DIMENSIONS SEE DASH 508 VALUES BELOW													
519	AC	FIXTURE, HANDLING, LEM-PSA	(-141)	6900129-011		NAS-9-497	B	II	NOTE 11C	FOR DIMENSIONS SEE DASH 504 VALUES BELOW													
518	AC	JUNCTION BOX, GSE-PSA	(-144)	1901933-031		NAS-9-497	B	II	NOTE 11C	FOR DIMENSIONS SEE DASH 500 VALUES BELOW													
517	AC	FIX., HAND., OPTICS INST	(-141)	2901380-011		NAS-9-497	B	II	NOTE 11C	FOR DIMENSIONS SEE DASH 502 VALUES BELOW													
516	AC	POWER, SERVO AND THERMOCOUPLE ASSEMBLY-LEM		6010655		NAS-9-497	A	I	NOTE 11B	FOR DIMENSIONS SEE DASH 508 VALUES BELOW													
514	AC	SIGNAL COND. ASSY LEM OPER.	(-100)	6007013		NAS-9-497	A	I	NOTE 11B	FOR DIMENSIONS SEE DASH 508 VALUES BELOW													
513	AC	JUMPER, BY-PASS	(-141)	1021616		NAS-9-497	B	II	NOTE 11C	2.125	.968	1.718	NA	.093	.031	.06	.093	⊠	.093	.858	.608	.484	
512	AC	COUPLING DATA UNIT ASSEMBLY C/M	(-100)	2007322-011		NAS-9-497	A	I	NOTE 11B	FOR DIMENSIONS SEE DASH 508 VALUES BELOW													
511	AC	COUPLING DATA UNIT ASSEMBLY-LEM	(-100)	2007322-021		NAS-9-497	A	I	NOTE 11B	FOR DIMENSIONS SEE DASH 508 VALUES BELOW													
510	AC	BATTERY POWER PACK	(-144)	1900011-041		NAS-9-497	B	II	NOTE 11C	FOR DIMENSIONS SEE DASH 500 VALUES BELOW													
509	AC	JUNCTION BOX, P.S.A./G.S.E.	(-144)	1902195-021		NAS-9-497	B	II	NOTE 11C	FOR DIMENSIONS SEE DASH 500 VALUES BELOW													
508	AC	NAVIGATION BASE ASSEMBLY-LEM	(-101)	6899980		NAS-9-497	A	I	NOTE 11B	2.000	1.312	1.906	1.375	.078	.048	.078	.093	NA	NA	1.125	.750	.593	
507	AC	CSL, COOL, AND PWR, G AND N	(-144)	1902134-041		NAS-9-497	B	II	NOTE 11C	FOR DIMENSIONS SEE DASH 500 VALUES BELOW													
506	AC	BREAKOUT BOX, CABLE ADAPTER	(-141)	2901011-011		NAS-9-497	B	II	NOTE 11C	2.125	.968	1.718	NA	.093	.031	.06	.093	⊠	.093	.858	.608	.484	
505	AC	MONITOR AND CONTROL, TEMP	(-141)	2900026-021		NAS-9-497	B	II	NOTE 11C	2.125	.968	1.718	NA	.093	.031	.06	.093		.093	.858	.608	.484	
504	AC	PWR SUP, GUIDANCE SYSTEM	(-141)	1900033-021		NAS-9-497	B	II	NOTE 11C	2.125	.968	1.718	NA	.093	.031	.06	.093		.093	.858	.608	.484	
503	AC	CONTROL, GIMBAL POSITION	(-141)	2900036-021		NAS-9-497	B	II	NOTE 11C	2.125	.968	1.718	NA	.093	.031	.06	.093		.093	.858	.608	.484	
502	AC	ADPT, TEST POINT, PTA/PEA,	(-141)	2900145-021		NAS-9-497	B	II	NOTE 11C	2.125	.968	1.718	NA	.093	.031	.06	.093	⊠	.093	.858	.608	.484	
501	AC	MOUNTING PLATE, COMPONENT	(-144)	6900007-031		NAS-9-497	B	II	NOTE 11C	FOR DIMENSIONS SEE DASH 500 VALUES BELOW													
500	AC	MOUNTING PLATE, COMPONENT	(-144)	2900677-021		NAS-9-497	B	II	NOTE 11C	4.125	1.812	3.250	NA	.125	.062	.12	.156	⊠	.125	1.625	1.140	.890	

NOTES FOR TABLE

STYLE A IS FOR G & N SYSTEM
STYLE B IS FOR GROUND SUPPORT EQUIPMENT
TYPE I IS WITHOUT MOUNTING HOLES
TYPE II IS WITH MOUNTING HOLES

1004260 CT SHT 6

SYM	ZONE	DESCRIPTION	CHG NO	DATE	APPD
CL		REPLACES REV CK WITH CHANGE PER TDRR 34365		9/28/67	RWH
CM		REVISED PER TDRR 34395		17 OCT. 67	RAW.
CN		REVISED PER TDRR 34467		31 OCT 67	JRK
CP		REVISED PER TDRR 34855		6 NOV 67	EMS
CR		REVISED PER TDRR 35164		7 DEC 67	RWH
CS		REVISED PER TDRR 35307		3 JAN 68	RWH
CT		REVISION STATUS CHANGED		7 FEB 68	RWH

D	E	F	G	H	J	K	L	M	N	P	R	S	T	U	V	W	Y	Z	AA	AB	AC	AD	AE	AF	AG	AH	AJ	AK	AL	AM	AN	AP	AR
	DASH 535 VALUES																																
	DASH 542 VALUES																																
	DASH 500 VALUES																																
	DASH 550 VALUES																																
	DASH 181																																
	DASH 181																																
	DASH 181																																
	DASH 534																																
	DASH 500																																
	DASH 500																																
	DASH 141 VALUES																																
	DASH 534 VALUES																																
	DASH 181 VALUES																																
	DASH 141 VALUES																																
	DASH 141 VALUES																																
	DASH 500 VALUES																																
	.078	.048	.078	.093	NA	NA	1.125	.750	.593	.453	1.015	.062	.187	.078	.875	.718	1.375	.218	NA	NA	.048	.031	.875	.305	NA	.468	1.531	NA	NA	.078	.312	.187	NA
	.078	.048	.078	.093	NA	NA	1.125	.750	.593	.453	1.015	.062	.187	.078	.875	.718	1.375	.218	NA	NA	.048	.031	.875	.305	NA	.468	1.531	NA	NA	.078	.312	.187	NA
	.078	.048	.078	.093	NA	NA	1.125	.750	.593	.453	1.015	.062	.187	.078	.875	.718	1.375	.218	NA	NA	.048	.031	.875	.305	NA	.468	1.531	NA	NA	.078	.312	.187	NA
	.078	.048	.078	.093	NA	NA	1.125	.750	.593	.453	1.015	.052	.187	.078	.875	.718	1.375	.218	NA	NA	.048	.031	.875	.305	NA	.468	1.531	NA	NA	.078	.312	.187	NA
	.078	.048	.078	.093	NA	NA	1.125	.750	.593	.453	1.015	.062	.187	.078	.875	.718	1.375	.218	NA	NA	.048	.031	.875	.305	NA	.468	1.531	NA	NA	.078	.312	.187	NA
	.078	.048	.078	.093	NA	NA	1.125	.750	.593	.453	1.015	.062	.187	.078	.875	.718	1.375	.218	NA	NA	.048	.031	.875	.305	NA	.468	1.531	NA	NA	.078	.312	.187	NA
	.093	.031	.06	.093		.093	.858	.608	.484	.358	.733	.077	.116	.062	.937	.875	1.343	.125	.781	1.892	.046	NA	NA	.209	.093	.250	1.875	NA	1.840	.046	.23	.16	1.938
	.125	.062	.12	.156		.125	1.625	1.140	.890	.640	1.390	.125	.171	.125	1.875	1.687	2.625	.250	1.562	3.843	.093	NA	NA	.359	.125	.437	3.688	NA	3.687	.093	.40	.25	3.875
	.093	.031	.06	.093		.093	.858	.608	.484	.358	.733	.077	.116	.062	.937	.875	1.343	.125	.781	1.892	.046	NA	NA	.209	.093	.250	1.875	NA	1.840	.046	.23	.16	1.938
	.125	.062	.188	.156	NA	NA	1.750	1.125	.906	.688	1.500	NA	.281	.125	NA	1.094	2.062	.312	NA	2.500	.062	.125	1.312	.469	NA	NA	NA	.156	NA	.125	.469	.344	NA
	.093	.031	.06	.093		.093	.858	.608	.484	.358	.733	.077	.116	.062	.937	.875	1.343	.125	.781	1.892	.046	NA	NA	.209	.093	.250	1.875	NA	1.840	.046	.23	.16	1.938
	.093	.031	.06	.093		.093	.858	.608	.484	.358	.733	.077	.116	.062	.937	.875	1.343	.125	.781	1.892	.046	NA	NA	.209	.093	.250	1.875	NA	1.840	.046	.23	.25	1.938
	.093	.031	.06	.093		.093	.858	.608	.484	.358	.733	.077	.116	.062	.937	.875	1.343	.125	.781	1.892	.046	NA	NA	.209	.093	.250	1.875	NA	1.840	.046	.23	.16	1.938
	.125	.062	.12	.156		.125	1.625	1.140	.890	.640	1.390	.125	.171	.125	1.875	1.687	2.625	.250	1.562	3.843	.093	NA	NA	.359	.125	.437	3.688	NA	3.687	.093	.40	.25	3.875
	.093	.031	.06	.093		.093	.858	.608	.484	.358	.733	.077	.116	.062	.937	.875	1.343	.125	.781	1.892	.046	NA	NA	.209	.093	.250	1.875	NA	1.840	.046	.23	.16	1.938
	.078	.048	.078	.093	NA	NA	1.125	.750	.593	.453	1.015	.062	.187	.078	.875	.718	1.375	.218	NA	NA	.048	.031	.875	.305	.078	.531	1.906	.078	NA	.078	.531	.187	NA
	.078	.048	.078	.093	NA	NA	1.125	.750	.593	.453	1.015	.062	.187	.078	.875	.718	1.375	.218	NA	NA	.048	.031	.875	.305	.078	.531	1.906	.078	NA	.078	.531	.187	NA
	.093	.031	.06	.093		.093	.858	.608	.484	.358	.733	.077	.116	.062	.937	.875	1.343	.125	.781	1.892	.046	NA	NA	.209	.093	.250	1.875	NA	1.840	.046	.23	.16	1.938
	.125	.062	.12	.156		.125	1.625	1.140	.890	.640	1.390	.125	.171	.125	1.875	1.687	2.625	.250	1.562	3.843	.093	NA	NA	.359	.125	.437	3.688	NA	3.687	.093	.40	.25	3.875
	.093	.031	.06	.093		.093	.858	.608	.484	.358	.733	.077	.116	.062	.937	.875	1.343	.125	.781	1.892	.046	NA	NA	.209	.093	.250	1.875	NA	1.840	.046	.23	.16	1.938
	.078	.048	.078	.093	NA	NA	1.125	.750	.593	.453	1.015	.062	.187	.078	.875	.718	1.375	.218	NA	NA	.048	.031	.875	.305	.078	.531	1.906	.078	NA	.078	.531	.187	NA
	.093	.031	.06	.093		.093	.858	.608	.484	.358	.733	.077	.116	.062	.937	.875	1.343	.125	.781	1.892	.046	NA	NA	.209	.093	.250	1.875	NA	1.840	.046	.23	.16	1.938
	.125	.062	.12	.156		.125	1.625	1.140	.890	.640	1.390	.125	.171	.125	1.875	1.687	2.625	.250	1.562	3.843	.093	NA	NA	.359	.125	.437	3.688	NA	3.687	.093	.40	.25	3.875
	.125	.062	.12	.156		.125	1.625	1.140	.890	.640	1.390	.125	.171	.125	1.875	1.687	2.625	.250	1.562	3.843	.093	NA	NA	.359	.125	.437	3.688	NA	3.687	.093	.40	.25	3.875
	.093	.031	.06	.093		.093	.858	.608	.484	.358	.733	.077	.116	.062	.937	.875	1.343	.125	.781	1.892	.046	NA	NA	.209	.093	.250	1.875	NA	1.840	.046	.23	.16	1.938
	.093	.031	.06	.093		.093	.858	.608	.484	.358	.733	.077	.116	.062	.937	.875	1.343	.125	.781	1.892	.046	NA	NA	.209	.093	.250	1.875	NA	1.840	.046	.23	.16	1.938
	DASH 500 VALUES BELOW																																
	DASH 500 VALUES BELOW																																
	.125	.031	.125	.156	.125	.125	1.718	1.187	.968	.749	1.452	.093	.295	.090	1.312	1.00	2.000	.250	1.687	2.750	.062	NA	NA	.463	.125	.562	2.437	.140	2.562	.090	.468	.359	2.750
	.093	.031	.06	.093	NA	NA	.858	.608	.484	.358	.733	.062	.140	.062	NA	.968	1.450	.125	NA	1.720	.046	.03	NA	.210	NA	NA	NA	.070	NA	.046	.32	.16	NA
	DASH 508 VALUES BELOW																																
	DASH 508 VALUES BELOW																																
	DASH 508 VALUES BELOW																																
	DASH 508 VALUES BELOW																																
	DASH 504 VALUES BELOW																																
	DASH 500 VALUES BELOW																																
	DASH 502 VALUES BELOW																																
	DASH 508 VALUES BELOW																																
	DASH 508 VALUES BELOW																																
	.093	.031	.06	.093		.093	.858	.608	.484	.358	.733	.077	.116	.062	.937	.875	1.343	.125	.781	1.892	.046	NA	NA	.209	.093	.250	1.875	NA	1.840	.046	.23	.16	1.938
	DASH 508 VALUES BELOW																																
	DASH 508 VALUES BELOW																																
	DASH 500 VALUES BELOW																																
	DASH 500 VALUES BELOW																																
	.078	.048	.078	.093	NA	NA	1.125	.750	.593	.453	1.015	.062	.187	.078	.875	.718	1.375	.218	NA	NA	.048	.031	.875	.305	.078	.531	1.906	.078	NA	.078	.531	.187	NA
	DASH 500 VALUES BELOW																																
	.093	.031	.06	.093		.093	.858	.608	.484	.358	.733	.077	.116	.062	.937	.875	1.343	.125	.781	1.892	.046	NA	NA	.209	.093	.250	1.875	NA	1.840	.046	.23	.16	1.938
	.093	.031	.06	.093		.093	.858	.608	.484	.358	.733	.077	.116	.062	.937	.875	1.343	.125	.781	1.892	.046	NA	NA	.209	.093	.250	1.875	NA	1.840	.046	.23	.16	1.938
	.093	.031	.06	.093		.093	.858	.608	.484	.358	.733	.077	.116	.062	.937	.875	1.343	.125	.781	1.892	.046	NA	NA	.209	.093	.250	1.875	NA	1.840	.046	.23	.16	1.938
	.093	.031	.06	.093		.093	.858	.608	.484	.358	.733	.077	.116	.062	.937	.875	1.343	.125	.781	1.892	.046	NA	NA	.209	.093	.250	1.875	NA	1.840	.046	.23	.16	1.938
	.093	.031	.06	.093		.093	.858	.608	.484	.358	.733	.077	.116	.062	.937	.875	1.343	.125	.781	1.892	.046	NA	NA	.209	.093	.250	1.875	NA	1.840	.046	.23	.16	1.938
	DASH 500 VALUES BELOW																																
	.125	.062	.12	.156		.125	1.625	1.140	.890	.640	1.390	.125	.171	.125	1.875	1.687	2.625	.250	1.562	3.843	.093	NA	NA	.359	.125	.437	3.688	NA	3.687	.093	.40	.25	3.875

AC ELECTRONICS DASH NUMBERS

AS APPLICABLE	
NEXT ASSY	USED ON
APPLICATION	

UNLESS OTHERWISE SPECIFIED
DIMENSIONS ARE IN INCHES
TOLERANCES ON
2 PLACE DECIMALS ± | 3 PLACE DECIMALS ± .005 | ANGLES ±
DO NOT SCALE THIS DRAWING
MATERIAL SEE NOTE 11
APPROVAL

M I T
INSTRUMENTATION LAB
Cambridge Mass
DRAWN R A JONES DATE 16 JUL 65
CHECKED
APPROVAL W KUPFER 22 JUL 65
CONTRACT
NASA APPROVAL T. MICHAELS 22 JUL 65
MIT APPROVAL W KUPFER 22 JUL 65

MANNED
SPACECRAFT CENTER
HOUSTON TEXAS

NAMEPLATES,
APOLLO G&N - GSE
(STANDARDS)

SIZE J2 | CODE IDENT NO 80230 | 1004260
SCALE NONE | SHEET 6 OF 6

NOTES:

1. INTERPRET DRAWING IN ACCORDANCE WITH STANDARDS PRESCRIBED BY MIL-D-70327.
2. DIMENSIONS ON EACH VIEW APPLY TO ALL VIEWS (WITH THE EXCEPTION OF MOUNTING HOLES).
3. FORMATS ILLUSTRATED WILL BE APPLICABLE TO ALL ITEMS REQUIRING NAMEPLATES BELOW END ITEM DESIGNATION (SYSTEMS, ASSEMBLIES, ETC.)
4. PLATE BACKGROUND TO BE LUSTERLESS BLACK PER FED-STD-595, COLOR 37038. BORDER, MARKING AND LETTERING TO BE NATURAL METAL, (ANODIZED ALUMINUM).
5. MARKING METHOD TO BE DIE STAMPING, ETCHING OR ENGRAVING IN ACCORDANCE WITH MIL-P-19834.
6. LETTERING STYLE TO BE GOTHIC, (SANS SERIFS), AND NUMBERS TO BE ARABIC.
7. WHERE LOCATING DIMENSIONS ARE NOT SHOWN, CHARACTERS SHALL BE SYMMETRICALLY POSITIONED.
8. IDENTIFY WITH DRAWING NUMBER PER ND 1002019.
9. WHEN "AUTO MARK" METAL MARKING TYPEWRITER IS USED TO ADD DATA TO BLANK SPACES, TYPE SIZE IS TO BE SELECTED FROM DIMENSIONS U, AC, AND AM.
10. NASA SYMBOL IS TO BE PROPORTIONAL TO NAMEPLATE IN RATIO OF 1 TO 5 WITH DIMENSION A VALUE AND IS TO HAVE NATURAL BACKGROUND. NASA SYMBOL LETTERS LETTERING AND FEATHER TO BE BLACK, (OR WHITE FOR SILK SCREENING). WHERE BLACK FEATHER PROTRUDES INTO BLACK BACKGROUND, A MINIMUM OUTLINE OF NATURAL BACKGROUND SHALL EXIST.
11. NAMEPLATES WILL BE APPLIED BY METHODS LISTED BELOW, SHOWN IN ORDER OF PREFERENCE, (I.E., FOR RELIABILITY AND WEIGHT).
    - A - STENCIL OR SILK SCREEN DIRECTLY ON EQUIPMENT USING INK PER SCD 1010920, (WHITE OR BLACK).
    - B - ALUMINUM FOIL, (STYLE A OR B, TYPE I):
      FOIL SHALL BE .0030 ± .0005 THICK PER MIL-A-148.
      FOIL SHALL HAVE NO ADHESIVE BACKING.
      FOIL SHALL BE BONDED PER ND 1002219, (METHOD II).
      FOIL SHALL BE CLEAR ANODIZED PER MIL-A-8625, TYPE II.
    - C - PLATE, (STYLE A OR B, TYPE II):
      MATERIAL: QQ-A-250, TEMPER O OR H14, TYPE 1100, ALUMINUM ALLOY, .032 THICK. ANODIZE PER MIL-A-8625, TYPE II.
      ALUMINUM PLATE MUST BE FREE FROM BURRS AND SHARP CORNERS, MOUNTED WITH APPLICABLE SIZE FASTENERS.
12. NAMEPLATES SHALL BE CAPABLE OF MEETING APPLICABLE REQUIREMENTS OF MIL-M-13231.
13. ON DIMENSION TABLES SHOWN ON PAGES 2, 3, 4, 5, AND 6, NA MEANS, "NOT APPLICABLE".

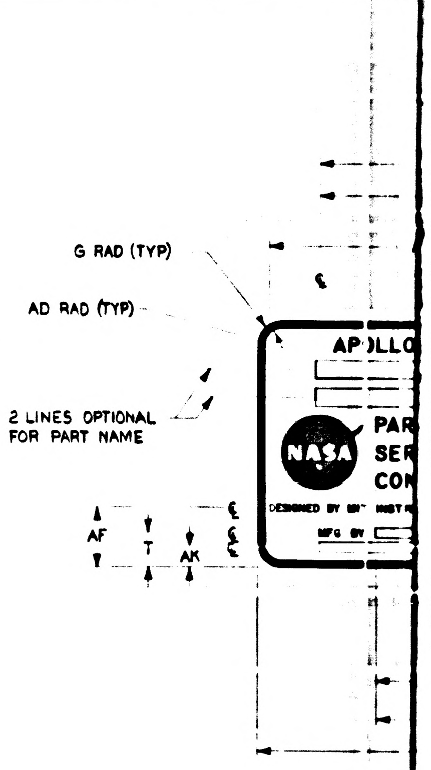

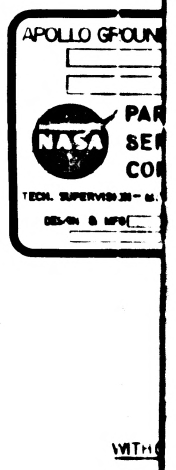

SUGGESTED PROPORTIONS FOR NAMEPLATE DIMENSIONS.

1. SELECT NAMEPLATE LENGTH, DIMENSION "A", TO FIT DESIGN NEEDS.
2. DIMENSIONS B THRU AS ON LINE 1 BELOW ARE PROPORTIONAL TO "A" BY MULTIPLIERS SHOWN IN LINE 2 BELOW.

1.	A	B	C	D	E	F	G	H	J	K	L	M	N	P	R	S	T	U	V	W
2.	1.000A	.6563A	.8438A	.6875A	.0391A	.0240A	.0391A	.0469A	.0547A	.0469A	.5938A	.3750A	.2969A	.2187A	.5079A	.0313A	.0938A	.0391A	.4375A	.3594A

1.	Y	Z	AA	AB	AC	AD	AE	AF	AG	AH	AJ	AK	AL	AM	AN	AP	AR	AS
2.	.6875A	.1094A	.5781A	.9219A	.0240A	.0156A	.4375A	.1525A	.0391A	.1563A	.8438A	.0548A	.8659A	.0391A	.1563A	.0938A	.9219A	.0151A

1004260	CU	SHT 1

1/41004260

SYM	ZONE	DESCRIPTION	CHG NO	DATE	APPD
CL		REPLACES REV CK WITHOUT CHANGE PER TDRR 34365		1/28/67	JWL RWH
CM		REVISION STATUS CHANGED		18 OCT 67	RAW
CN		REVISION STATUS CHANGED		31 OCT 67	JRK
CP		REVISION STATUS CHANGED		6 NOV 67	EHS
CR		REVISION STATUS CHANGED		7 DEC 67	MD RWH
CS		REVISION STATUS CHANGED		[illegible] 68	EHW
CT		REVISION STATUS CHANGED		7 FEB 68	JK
CU		REVISION STATUS CHANGED		22 FEB 68	JRK

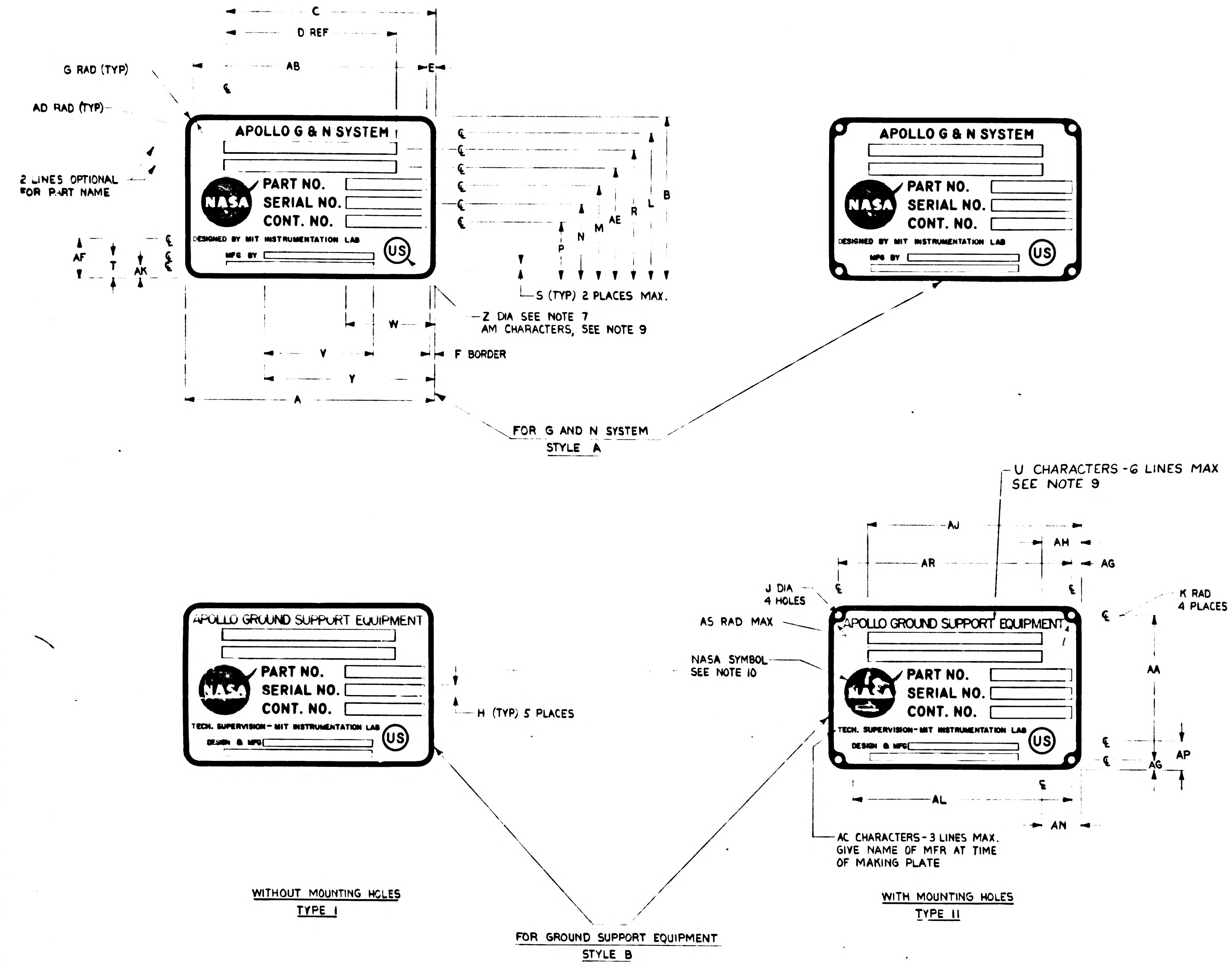
C
D REF
AB
E
G RAD (TYP)
AD RAD (TYP)
2 LINES OPTIONAL FOR PART NAME
APOLLO G & N SYSTEM
PART NO.
SERIAL NO.
CONT. NO.
NASA
DESIGNED BY MIT INSTRUMENTATION LAB
MFG BY
US
B
L
R
AE
M
N
P
S (TYP) 2 PLACES MAX.
AF
T
AK
W
Z DIA SEE NOTE 7
AM CHARACTERS, SEE NOTE 9
V
Y
F BORDER
A
U CHARACTERS - 6 LINES MAX
SEE NOTE 9
AJ
AH
AR
AG
J DIA
4 HOLES
AS RAD MAX
NASA SYMBOL
SEE NOTE 10
K RAD
4 PLACES
APOLLO GROUND SUPPORT EQUIPMENT
TECH. SUPERVISION - MIT INSTRUMENTATION LAB
DESIGN & MFG
H (TYP) 5 PLACES
AA
AP
AL
AN
AC CHARACTERS - 3 LINES MAX.
GIVE NAME OF MFR AT TIME
OF MAKING PLATE

FOR G AND N SYSTEM
STYLE A

WITHOUT MOUNTING HOLES
TYPE I

WITH MOUNTING HOLES
TYPE II

FOR GROUND SUPPORT EQUIPMENT
STYLE B

UNLESS OTHERWISE SPECIFIED DIMENSIONS ARE IN INCHES TOLERANCES ON 2 PLACE DECIMALS ± 3 PLACE DECIMALS ± .005 ANGLES ±	M I T INSTRUMENTATION LAB CAMBRIDGE, MASS	MANNED SPACECRAFT CENTER HOUSTON TEXAS		
	DRAWN R A JONES DATE 16 JUL 65	NAMEPLATES, APOLLO G&N - GSE (STANDARDS)		
	CHECKED			
	APPROVAL W KUPFER 22 JUL 65			
DO NOT SCALE THIS DRAWING	CONTRACT			
MATERIAL SEE NOTE 11	NASA APPROVAL T. MICHAELS 22 JUL 65	SIZE J2	CODE IDENT NO. 80230	1004260
APPROVAL	MIT APPROVAL W KUPFER 22 JUL 65	SCALE NONE		SHEET 1 OF 6

NEXT ASSY	USED ON
AS APPLICABLE	
APPLICATION	

1004260 CU SHT 1

1004260 CU

1004260

1004260 SHEET 1 OF 6

2/1004260

DASH NO.	P/C	PART NAME	REMARKS	PART NUMBER	SER. NO.	CONT. NO.	STYLE	TYPE	MATERIAL	A	B	C	D	E	F	G	H	J	K	L	M	N
399	K																					
398	K																					
350	K	ALIGNMENT OPTICAL TELESCOPE (LEM)		NA	NA	NA	A	I	NOTE 11B	4.000	2.625	3.375	2.750	.156	.093	.156	.187	NA	NA	2.312	1.468	1.187
309	K																					
308	K																					
307	K						B	I	NOTE 11B	4.000	2.625	3.375	2.750	.156	.093	.156	.187	NA	NA	2.328	1.468	1.1
306	K						B	II	NOTE 11C	4.000	2.625	3.375	2.750	.156	.093	.156	.187	.125	.156	2.328	1.468	1.1
305	K						B	I	NOTE 11B	2.000	1.312	1.687	1.375	.078	.048	.078	.093	NA	NA	1.164	.734	.59
304	K						B	II	NOTE 11C	2.000	1.312	1.687	1.375	.078	.048	.078	.093	.070	.078	1.164	.734	.59
303	K																					
302	K																					
301	K																					
300	K	OPTICAL UNIT		NA	NA	NA	A	I	NOTE 11B	2.000	1.312	1.675	NA	NA	.048	.078	NA	NA	NA	1.090	.812	.67
9	K	2 IN AUTOCOLLIMATOR		1001702			B	II	NOTE 11C	4.000	2.625	3.812	2.750	.156	.093	.156	.187	.125	.156	2.250	1.500	1.18
8	K	5 IN AUTOCOLLIMATOR		1017410			B	II	NOTE 11C	4.000	2.625	3.812	2.750	.156	.093	.156	.187	.125	.156	2.250	1.500	1.18
7	K	2-1/2 IN AUTOCOLLIMATOR (SCT)		1017435			B	II	NOTE 11C	4.000	2.625	3.812	2.750	.156	.093	.156	.187	.125	.156	2.250	1.500	1.18
6	K	2-1/2 IN AUTOCOLLIMATOR (SXT)		1017448			B	II	NOTE 11C	4.000	2.625	3.812	2.750	.156	.093	.156	.187	.125	.156	2.250	1.500	1.18
5	K	RETROREFLECTING PRISM ASSEMBLY		1019840			B	I	NOTE 11B	4.000	2.625	3.812	2.750	.156	.093	.156	.187	NA	NA	2.250	1.500	1.18
4	K	S/H SIMULATOR ASSEMBLY		1019896			B	I	NOTE 11B	4.000	2.625	3.812	2.750	.156	.093	.156	.187	NA	NA	2.250	1.500	1.18
3	K	REFERENCE MIRROR		1001767			B	I	NOTE 11B	2.000	1.312	1.906	1.375	.078	.048	.078	.093	NA	NA	1.125	.750	.59
2	K	2 IN PLANE READING AUTOCOLLIMATOR		1017413			B	I	NOTE 11B	2.000	1.312	1.906	1.375	.078	.048	.078	.093	NA	NA	1.125	.750	.59
1	K	2 IN AUTOCOLLIMATOR		1001702			B	I	NOTE 11B	2.000	1.312	1.906	1.375	.078	.048	.078	.093	NA	NA	1.125	.750	.59

NOTES FOR TABLE

STYLE A IS FOR G & N SYSTEM
STYLE B IS FOR GROUND SUPPORT EQUIPMENT
TYPE I IS WITHOUT MOUNTING HOLES
TYPE II IS WITH MOUNTING HOLES

1004260	CU	SHT 2

REVISIONS					
SYM	ZONE	DESCRIPTION	CHG NO	DATE	APPD
CL		REPLACES REV CK WITHOUT CHANGE PER TDRR 34365		9/28/67	JWL RWM
CM		REVISION STATUS CHANGED		18 OCT 67	RAW
CN		REVISION STATUS CHANGED		31 OCT 67	JRK
CP		REVISION STATUS CHANGED		6 NOV 67	EMS
CR		REVISION STATUS CHANGED		7 DEC 67	RWM
CS		REVISION STATUS CHANGED		3 JAN 68	JW EHW
CT		REVISION STATUS CHANGED		7 FEB 68	LK RWK
CU		REVISION STATUS CHANGED		22 FEB 68	JRK

	.093	.156	.187	NA	NA	2.312	1.468	1.187	.906	2.031	NA	.375	.156	NA	1.437	2.750	.437	NA	3.688	.062	.062	1.750	.593	NA	.625	3.375	.187	NA	.156	.531	.453	NA
	.093	.156	.187	NA	NA	2.328	1.468	1.187	.906	2.031	.062	.375	.156	NA	1.437	2.750	.437	NA	3.687	.062	.062	1.750	.593	NA	NA	NA	NA	NA	NA	NA	NA	NA
	.093	.156	.187	.125	.156	2.328	1.468	1.187	.906	2.031	.062	.375	.156	NA	1.437	2.750	.437	2.312	3.687	.062	NA	1.750	.593	NA	NA	NA	NA	NA	NA	NA	NA	NA
	.048	.078	.093	NA	NA	1.164	.734	.593	.453	1.015	.048	.171	.078	NA	.718	1.375	.187	NA	NA	.048	.031	.875	.320	NA	NA	NA	NA	NA	NA	NA	NA	NA
	.048	.078	.093	.070	.078	1.164	.734	.593	.453	1.015	.048	.171	.078	NA	.718	1.375	.187	.156	1.843	.048	NA	.875	.320	NA	NA	NA	NA	NA	NA	NA	NA	NA
	.048	.078	NA	NA	NA	1.090	.812	.675	.540	.940	NA	.265	NA	NA	NA	1.375	.218	NA	NA	NA	NA	NA	.375	NA	NA	NA	.180	NA	.078	NA	NA	NA
	.093	.156	.187	.125	.156	2.250	1.500	1.187	.906	2.031	.093	.375	.156	1.750	1.437	2.750	.437	2.312	3.687	.062	NA	1.750	.593	.156	1.062	3.812	.156	NA	.156	1.062	.375	3.687
	.093	.156	.187	.125	.156	2.250	1.500	1.187	.906	2.031	.093	.375	.156	1.750	1.437	2.750	.437	2.312	3.687	.062	NA	1.750	.593	.156	1.062	3.812	.156	NA	.156	1.062	.375	3.687
	.093	.156	.187	.125	.156	2.250	1.500	1.187	.906	2.031	.093	.375	.156	1.750	1.437	2.750	.437	2.312	3.687	.062	NA	1.750	.593	.156	1.062	3.812	.156	NA	.156	1.062	.375	3.687
	.093	.156	.187	.125	.156	2.250	1.500	1.187	.906	2.031	.093	.375	.156	1.750	1.437	2.750	.437	2.312	3.687	.062	NA	1.750	.593	.156	1.062	3.812	.156	NA	.156	1.062	.375	3.687
	.093	.156	.187	NA	NA	2.250	1.500	1.187	.906	2.031	.093	.375	.156	1.750	1.437	2.750	.437	NA	NA	.062	.062	1.750	.593	.156	1.062	3.812	.156	NA	.156	1.062	.375	NA
	.093	.156	.187	NA	NA	2.250	1.500	1.187	.906	2.031	.093	.375	.156	1.750	1.437	2.750	.437	NA	NA	.062	.062	1.750	.593	.156	1.062	3.812	.156	NA	.156	1.062	.375	NA
	.048	.078	.093	NA	NA	1.125	.750	.593	.453	1.015	.062	.187	.078	.875	.718	1.375	.218	NA	NA	.048	.031	.875	.305	.078	.531	1.906	.078	NA	.078	.531	.187	NA
	.048	.078	.093	NA	NA	1.125	.750	.593	.453	1.015	.062	.187	.078	.875	.718	1.375	.218	NA	NA	.048	.031	.875	.305	.078	.531	1.906	.078	NA	.078	.531	.187	NA
	.048	.078	.093	NA	NA	1.125	.750	.593	.453	1.015	.062	.187	.078	.875	.718	1.375	.218	NA	NA	.048	.031	.875	.305	.078	.531	1.906	.078	NA	.078	.531	.187	NA
	F	G	H	J	K	L	M	N	P	R	S	T	U	V	W	Y	Z	AA	AB	AC	AD	AE	AF	AG	AH	AJ	AK	AL	AM	AN	AP	AR

KOLLSMAN DASH NUMBERS

AS APPLICABLE	UNLESS OTHERWISE SPECIFIED DIMENSIONS ARE IN INCHES TOLERANCES ON 2 PLACE DECIMALS ± 3 PLACE DECIMALS ± .005 ANGLES ±	M I T INSTRUMENTATION LAB CAMBRIDGE MASS	MANNED SPACECRAFT CENTER HOUSTON TEXAS	
NEXT ASSY / USED ON	DO NOT SCALE THIS DRAWING	DRAWN R A JONES DATE 16 JUL 65 CHECKED APPROVAL W KUPFER 22 JUL 65 CONTRACT	NAMEPLATES, APOLLO GEN - GSE (STANDARDS)	
APPLICATION	MATERIAL SEE NOTE 11	NASA APPROVAL T MICHAELS 22 JUL 65 MIT APPROVAL W KUPFER 22 JUL 65	SIZE J2	CODE IDENT NO 80230
	APPROVAL		1004260	SCALE NONE / SHEET 2 OF 6

1004260 CU SHT 2

1004260 CU

1004260

SHEET 2 OF 6 1004260

2/1004260

DASH NO.	P/C	PART NAME	REMARKS	PART NUMBER	SER. NO.	CONT. NO.	STYLE	TYPE	MATERIAL	A	B	C	D	E	F	G	H	J	K	L	M	N
299	R																					
298	R																					
291	R	BUFFER CIRCUIT ASSY		2014254-041	NA	NAS-9-497	B	I	NOTE 11B	FOR DIMENSIONS SEE DASH 15 VALUES BELOW												
290	R	LOGIC DRAWER ASSY NO 2		2014037-051	NA	NAS-9 497	B	I	NOTE 11B	FOR DIMENSIONS SEE DASH 17 VALUES BELOW												
289	R	SELF TEST ASSY		2014392-021	NA	NAS-9 497	B	I	NOTE 11B	FOR DIMENSIONS SEE DASH 15 VALUES BELOW												
288	P	LOGIC DRAWER ASSY NO.1		2014036-051	NA	NAS-9-497	B	I	NOTE 11B	FOR DIMENSIONS SEE DASH 17 VALUES BELOW												
287	R	COMPUTER TEST SET		2014042-071	NA	NAS-9 497	B	II	NOTE 11C	FOR DIMENSIONS SEE DASH 18 VALUES BELOW												
286	R	DRAWER ASSY PROGRAM & MONITOR		2014041-061	NA	NAS-9-497	B	I	NOTE 11B	FOR DIMENSIONS SEE DASH 17 VALUES BELOW												
285	R	BUFFER CIRCUIT ASSY		2014254-031	NA	NAS-9-497	B	I	NOTE 11B	FOR DIMENSIONS SEE DASH 15 VALUES BELOW												
284	R	LOGIC DRAWER ASSY NO. 2		2014037-041	NA	NAS-9-497	B	I	NOTE 11B	FOR DIMENSIONS SEE DASH 17 VALUES BELOW												
283	R	DRAWER ASSY-PROGRAM & MONITOR		2014041-051	NA	NAS-9-497	B	I	NOTE 11B	FOR DIMENSIONS SEE DASH 17 VALUES BELOW												
282	R	COMPUTER TEST SET		2014042-061	NA	NAS-9-497	B	II	NOTE 11C	FOR DIMENSIONS SEE DASH 18 VALUES BELOW												
281	R	AGC HANDLING FIXTURE		2014282-031	NA	NAS-9-497	B	I	NOTE 11B	FOR DIMENSIONS SEE DASH 17 VALUES BELOW												
280	R	COMPUTER TEST SET		2014042-051	NA	NAS-9-497	B	II	NOTE 11C	FOR DIMENSIONS SEE DASH 18 VALUES BELOW												
279	R	SELF TEST ASSY		2014366-041	NA	NAS-9-497	B	I	NOTE 11B	FOR DIMENSIONS SEE DASH 15 VALUES BELOW												
278	R	LOGIC DRAWER ASSY NO. 1		2014036-041	NA	NAS-9-497	B	I	NOTE 11B	FOR DIMENSIONS SEE DASH 17 VALUES BELOW												
277	R	COMPUTER TEST SET		2014042-041	NA	NAS-9-497	B	II	NOTE 11C	FOR DIMENSIONS SEE DASH 18 VALUES BELOW												
276	R	DRAWER ASSY-PROGRAM & MONITOR		2014041-041	NA	NAS-9-497	B	I	NOTE 11B	FOR DIMENSIONS SEE DASH 17 VALUES BELOW												
275	R	DRAWER ASSY RDC INTERFACE		2014045-031	NA	NAS-9-497	B	I	NOTE 11B	FOR DIMENSIONS SEE DASH 15 VALUES BELOW												
274	R	SELF TEST ASSY		2014366-031	NA	NAS-9-497	B	I	NOTE 11B	FOR DIMENSIONS SEE DASH 15 VALUES BELOW												
273	R	LOGIC DRAWER ASSY NO. 2		2014037-031	NA	NAS-9-497	B	I	NOTE 11B	FOR DIMENSIONS SEE DASH 17 VALUES BELOW												
272	R	DRAWING ASSY PROGRAMMER & MONITOR		2014041-031	NA	NAS-9-497	B	I	NOTE 11B	FOR DIMENSIONS SEE DASH 17 VALUES BELOW												
271	R	LOGIC DRAWER ASSY NO. 1		2014036-031	NA	NAS-9-497	B	I	NOTE 11B	FOR DIMENSIONS SEE DASH 17 VALUES BELOW												
270	R	COMPUTER TEST SET		2014042-031	NA	NAS-9-497	B	II	NOTE 11C	FOR DIMENSIONS SEE DASH 18 VALUES BELOW												
269	R	POWER CONTROL ASSY		2014044-021	NA	NAS-9-497	B	I	NOTE 11B	FOR DIMENSIONS SEE DASH 17 VALUES BELOW												
268	R	SELF TEST ASSY		2014366-021	NA	NAS-9-497	B	I	NOTE 11B	FOR DIMENSIONS SEE DASH 15 VALUES BELOW												
267	R	AGC JUNCTION ASSY		2014341-021	NA	NAS-9-497	B	I	NOTE 11B	FOR DIMENSIONS SEE DASH 15 VALUES BELOW												
266	R	POWER CONTROL ASSY		2014079-021	NA	NAS-9-497	B	I	NOTE 11B	FOR DIMENSIONS SEE DASH 15 VALUES BELOW												
265	R	BUFFER CIRCUIT ASSY		2014254-021	NA	NAS-9-497	B	I	NOTE 11B	FOR DIMENSIONS SEE DASH 15 VALUES BELOW												
264	R	DRAWER ASSY X Y INTERFACE		2014040-021	NA	NAS-9-497	B	I	NOTE 11B	FOR DIMENSIONS SEE DASH 15 VALUES BELOW												
263	R	DRAWER ASSY RDC INTERFACE		2014045-021	NA	NAS-9-497	B	I	NOTE 11B	FOR DIMENSIONS SEE DASH 15 VALUES BELOW												
262	R	DRAWER ASSY PROGRAMMER & MONITOR		2014041-021	NA	NAS-9-497	B	I	NOTE 11B	FOR DIMENSIONS SEE DASH 17 VALUES BELOW												
261	R	LOGIC DRAWER ASSY NO. 2		2014037-021	NA	NAS-9-497	B	I	NOTE 11B	FOR DIMENSIONS SEE DASH 17 VALUES BELOW												
260	R	LOGIC DRAWER ASSY NO. 1		2014036-021	NA	NAS-9-497	B	I	NOTE 11B	FOR DIMENSIONS SEE DASH 17 VALUES BELOW												
259	R	OPERATION CONSOLE		2014024-021	NA	NAS-9-497	B	II	NOTE 11C	FOR DIMENSIONS SEE DASH 18 VALUES BELOW												
258	R	COMPUTER TEST SET		2014042-021	NA	NAS-9-497	B	II	NOTE 11C	FOR DIMENSIONS SEE DASH 18 VALUES BELOW												
257	R	AUXILIARY CALIBRATION CONSOLE		2014059-021	NA	NAS-9-497	B	II	NOTE 11C	FOR DIMENSIONS SEE DASH 18 VALUES BELOW												
256	R	AGC CALIBRATION CONSOLE		2014049-021	NA	NAS-9-497	B	II	NOTE 11C	FOR DIMENSIONS SEE DASH 18 VALUES BELOW												
255	R	AGC HANDLING FIXTURE		2014282-021	NA	NAS-9-497	B	I	NOTE 11B	FOR DIMENSIONS SEE DASH 17 VALUES BELOW												
254	R	DRAWER ASSY COMP. SIMULATOR		2014048-011	NA	NAS-9-497	B	II	NOTE 11C	FOR DIMENSIONS SEE DASH 18 VALUES BELOW												
253	R	SHIPPING KIT ASSY, NAV DSKY		2016312-011	NA	NAS-9-497	B	II	NOTE 11C	FOR DIMENSIONS SEE DASH 18 VALUES BELOW												
252	R	SHIPPING KIT ASSY, UNIVERSAL DSKY		2016316-011	NA	NAS-9-497	B	II	NOTE 11C	FOR DIMENSIONS SEE DASH 18 VALUES BELOW												
251	R	SHIPPING KIT ASSY, MAIN DSKY		2016313-011	NA	NAS-9-497	B	II	NOTE 11C	FOR DIMENSIONS SEE DASH 18 VALUES BELOW												
250	R	AMPLIFIER, REWORK		2014386	NA	NAS-9-497	B	I	NOTE 11B	FOR DIMENSIONS SEE DASH 15 VALUES BELOW												
249	R	TEMP MONITOR ASSY		2014313-011	NA	NAS-9-497	B	I	NOTE 11C	FOR DIMENSIONS SEE DASH 17 VALUES BELOW												
248	R	AGC JUNCTION ASSY		2014341-011	NA	NAS-9-497	B	I	NOTE 11B	FOR DIMENSIONS SEE DASH 15 VALUES BELOW												
247	R	AC INPUT PANEL ASSY		2014302-011	NA	NAS-9-497	B	I	NOTE 11B	FOR DIMENSIONS SEE DASH 15 VALUES BELOW												
246	R	SELF TEST ASSY		2014392-011	NA	NAS-9-497	B	I	NOTE 11B	FOR DIMENSIONS SEE DASH 15 VALUES BELOW												
245	R	TAPE PUNCH ASSEMBLY		2014039-011	NA	NAS-9-497	B	I	NOTE 11B	FOR DIMENSIONS SEE DASH 15 VALUES BELOW												
244	R	TAPE READER ASSEMBLY		2014038-011	NA	NAS-9-497	B	I	NOTE 11B	FOR DIMENSIONS SEE DASH 15 VALUES BELOW												
243																						
242																						
241	R	APOLLO GUIDANCE COMPUTER GROUP		6003001	NA	NAS-9-497	A	I	NOTE 11B	FOR DIMENSIONS SEE DASH 19 VALUES BELOW												
240	R	SELF TEST ASSEMBLY		2014366-011	NA	NAS-9-497	B	I	NOTE 11B	FOR DIMENSIONS SEE DASH 15 VALUES BELOW												
239	R	POWER SUPPLY ASSY-115V., 400 CYCLE		2014207-011	NA	NAS-9-497	B	I	NOTE 11B	FOR DIMENSIONS SEE DASH 17 VALUES BELOW												
238	R	AC INPUT PANEL ASSY		2014043-011	NA	NAS-9-497	B	I	NOTE 11B	FOR DIMENSIONS SEE DASH 17 VALUES BELOW												
237	R	POWER CONTROL ASSY		2014079-011	NA	NAS-9-497	B	I	NOTE 11B	FOR DIMENSIONS SEE DASH 15 VALUES BELOW												
236	R	DRAWER ASSY-X Y INTERFACE		2014040-011	NA	NAS-9-497	B	I	NOTE 11B	FOR DIMENSIONS SEE DASH 15 VALUES BELOW												
235	R	DRAWER ASSY RDC INTERFACE		2014045-011	NA	NAS-9-497	B	I	NOTE 11B	FOR DIMENSIONS SEE DASH 15 VALUES BELOW												
234	R	BUFFER CIRCUIT ASSY		2014254-011	NA	NAS-9-497	B	I	NOTE 11B	FOR DIMENSIONS SEE DASH 15 VALUES BELOW												
233	R	CONTROL & INTERFACE ASSY		2014204-011	NA	NAS-9-497	B	I	NOTE 11B	FOR DIMENSIONS SEE DASH 15 VALUES BELOW												
232	R	POWER CONTROL ASSY		2014044-011	NA	NAS-9-497	B	I	NOTE 11B	FOR DIMENSIONS SEE DASH 17 VALUES BELOW												
231	R	DRAWER ASSY, PROGRAMMER & MONITOR		2014041-011	NA	NAS-9-497	B	I	NOTE 11B	FOR DIMENSIONS SEE DASH 17 VALUES BELOW												
230	R	CONNECTOR INTERFACE ASSY		2014272-011	NA	NAS-9-497	B	I	NOTE 11B	FOR DIMENSIONS SEE DASH 15 VALUES BELOW												
229	R	CONNECTOR INTERFACE ASSY		2014047-011	NA	NAS-9-497	B	I	NOTE 11B	FOR DIMENSIONS SEE DASH 15 VALUES BELOW												
228	R	ANTENNA, TUNING CAPACITOR ASSY		2014209-011	NA	NAS-9-497	B	I	NOTE 11B	FOR DIMENSIONS SEE DASH 15 VALUES BELOW												
227	R	MOUNTING FIXTURE ASSY		2014006-011	NA	NAS-9-497	B	I	NOTE 11B	FOR DIMENSIONS SEE DASH 17 VALUES BELOW												
226	R	POWER SUPPLY ASSY 3 VDC		2014234-011	NA	NAS-9-497	B	I	NOTE 11B	FOR DIMENSIONS SEE DASH 15 VALUES BELOW												
225	R	PANEL ASSY—SIGNAL INTERFACE		2014010-011	NA	NAS-9-497	B	I	NOTE 11B	FOR DIMENSIONS SEE DASH 15 VALUES BELOW												
224	R	OSCILLOSCOPE ASSY		2014232-011	NA	NAS-9-497	B	I	NOTE 11B	FOR DIMENSIONS SEE DASH 15 VALUES BELOW												
223	R	AUXILIARY OUTLET ASSY		2014274-011	NA	NAS-9-497	B	I	NOTE 11B	FOR DIMENSIONS SEE DASH 15 VALUES BELOW												
222	R	FREQUENCY COUNTER		2014233-011	NA	NAS-9-497	B	I	NOTE 11B	FOR DIMENSIONS SEE DASH 15 VALUES BELOW												
221	R	POWER SUPPLY ASSY 10, 13, 28 VDC		2014235-011	NA	NAS-9-497	B	I	NOTE 11B	FOR DIMENSIONS SEE DASH 15 VALUES BELOW												
220	R	LOGIC DRAWER ASSY NO. 2		2014037-011	NA	NAS-9-497	B	I	NOTE 11B	FOR DIMENSIONS SEE DASH 17 VALUES BELOW												
219	R	LOGIC DRAWER ASSY NO. 1		2014036-011	NA	NAS-9-497	B	I	NOTE 11B	FOR DIMENSIONS SEE DASH 17 VALUES BELOW												
218	R	COUNTER, ELECTRICAL ASSY		2014288-011	NA	NAS-9-497	B	I	NOTE 11B	FOR DIMENSIONS SEE DASH 15 VALUES BELOW												
217	R	POWER SUPPLY ASSY		2014279-011	NA	NAS-9-497	B	I	NOTE 11B	FOR DIMENSIONS SEE DASH 15 VALUES BELOW												
216	R	TEST MOUNT ASSY		2014257-011	NA	NAS-9-497	B	I	NOTE 11B	FOR DIMENSIONS SEE DASH 15 VALUES BELOW												
215	R	UNIVERSAL DSKY PEDESTAL MOUNT		2014014-011	NA	NAS-9-497	B	I	NOTE 11B	FOR DIMENSIONS SEE DASH 17 VALUES BELOW												
214	R	MAIN DSKY PEDESTAL MOUNT		2014343	NA	NAS-9-497	B	I	NOTE 11B	FOR DIMENSIONS SEE DASH 17 VALUES BELOW												
213	R	SHIPPING CONTAINER, MAIN DSKY		1006229	NA	NAS-9-497	B	II	NOTE 11C	FOR DIMENSIONS SEE DASH 18 VALUES BELOW												
212	R	SHIPPING CONTAINER, NAV DSKY		1006231	NA	NAS-9-497	B	II	NOTE 11C	FOR DIMENSIONS SEE DASH 18 VALUES BELOW												
211	R	SHIPPING CONTAINER, AGC		1006230	NA	NAS-9-497	B	II	NOTE 11C	FOR DIMENSIONS SEE DASH 18 VALUES BELOW												
210	R	SHIPPING CONTAINER, UNIVERSAL DSKY		1006422	NA	NAS-9-497	B	II	NOTE 11C	FOR DIMENSIONS SEE DASH 18 VALUES BELOW												
209	R	SHIPPING CONTAINER, AGC		1006421	NA	NAS-9-497	B	II	NOTE 11C	FOR DIMENSIONS SEE DASH 18 VALUES BELOW												
208	R	UNIVERSAL DSKY HANDLING FIXTURE		2014013-011	NA	NAS-9-497	B	I	NOTE 11B	FOR DIMENSIONS SEE DASH 15 VALUES BELOW												
207	R	NAV DSKY HANDLING FIXTURE		1014377	NA	NAS-9-497	B	I	NOTE 11B	FOR DIMENSIONS SEE DASH 17 VALUES BELOW												
206	R	MAIN DSKY HANDLING FIXTURE		1014334	NA	NAS-9-497	B	I	NOTE 11B	FOR DIMENSIONS SEE DASH 17 VALUES BELOW												
205	R	AGC HANDLING FIXTURE		2014282-011	NA	NAS-9-497	B	I	NOTE 11B	FOR DIMENSIONS SEE DASH 17 VALUES BELOW												
204	R	OPERATION CONSOLE		2014024-011	NA	NAS-9-497	B	II	NOTE 11C	FOR DIMENSIONS SEE DASH 18 VALUES BELOW												
203	R	COMPUTER TEST SET		2014042-011	NA	NAS-9-497	B	II	NOTE 11C	FOR DIMENSIONS SEE DASH 18 VALUES BELOW												
202	R	DRAWER ASSY, COMPUTER SIMULATOR		2014048-011	NA	FNP-12775	B	II	NOTE 11C	FOR DIMENSIONS SEE DASH 18 VALUES BELOW												
201	R	AUXILIARY CALIBRATION CONSOLE		2014059-011	NA	NAS-9-497	B	II	NOTE 11C	FOR DIMENSIONS SEE DASH 18 VALUES BELOW												
200	R	AGC CALIBRATION CONSOLE		2014049-011	NA	NAS-9-497	B	II	NOTE 11C	FOR DIMENSIONS SEE DASH 18 VALUES BELOW												
21	R																					
20	R	NA		NA	NA	NA	A	II	NOTE 11C	2.000	1.312	1.687	1.375	.078	.031	.078	.093	[illegible]	.093	1.187	.750	.593
19	R	NA		NA	NA	NA	A	I	NOTE 11B	2.000	1.312	1.687	1.375	.078	.031	.078	.093	NA	NA	1.187	.750	.593
18	R	NA		NA	NA	NA	B	II	NOTE 11C	4.187	1.875	3.469	2.750	.156	.093	.156	.125	[illegible]	.125	1.625	1.032	.844
17	R	NA		NA	NA	NA	B	I	NOTE 11B	4.187	1.875	3.469	2.750	.156	.093	.156	.125	NA	NA	1.625	1.032	.844
16	R	NA		NA	NA	NA	B	II	NOTE 11C	2.000	1.312	1.687	1.375	.078	.031	.078	.093	[illegible]	.093	1.187	.750	.593
15	R	NA		NA	NA	NA	B	I	NOTE 11B	2.000	1.312	1.687	1.375	.078	.031	.078	.093	NA	NA	1.187	.750	.593

NOTES FOR TABLE

STYLE A IS FOR G & N SYSTEM
STYLE B IS FOR GROUND SUPPORT EQUIPMENT
TYPE I IS WITHOUT MOUNTING HOLES
TYPE II IS WITH MOUNTING HOLES

1004260	CU	SHT 3

REVISIONS					
SYM	ZONE	DESCRIPTION	CHG NO	DATE	APPD
CL		REPLACES REV CK WITHOUT CHANGE PER TDRR 34365		9/28/67	JWL RWH
CM		REVISION STATUS CHANGED		18 OCT 67	RAW
CV		REVISION STATUS CHANGED		31 OCT 67	JRK
CP		REVISION STATUS CHANGED		6 NOV 67	EMS
CR		REVISION STATUS CHANGED		7 DEC 67	RWH
CS		REVISION STATUS CHANGED		3 JAN 68	EHW
CT		REVISED PER TDRR 35526		7 FEB 68	[illegible]
CU		REVISION STATUS CHANGED		22 FEB 68	JRK

F	G	H	J	K	L	M	N	P	R	S	T	U	V	W	Y	Z	AA	AB	AC	AD	AE	AF	AG	AH	AJ	AK	AL	AM	AN	AP	AR
031	.078	.093	[illegible]	.093	1.187	.750	.593	.453	1.015	.062	.187	.078	.875	.718	1.375	.218	1.156	1.843	.048	NA	.875	.305	.078	.312	1.687	.078	NA	.078	.312	.187	1.843
[illegible]	.078	.093	NA	NA	1.187	.750	.593	.453	1.015	.062	.187	.078	.875	.718	1.375	.218	NA	NA	.048	.031	.875	.305	.078	.312	1.687	.078	NA	.078	.312	.187	NA
093	.156	.125	[illegible]	.125	1.625	1.032	.844	.656	1.406	.093	.344	.156	1.781	1.531	2.844	.312	1.562	3.875	.062	NA	1.219	.500	.156	.719	3.469	.156	NA	.156	.719	.344	3.875
093	.156	.125	NA	NA	1.625	1.032	.844	.656	1.406	.093	.344	.156	1.781	1.531	2.844	.312	NA	NA	.062	.062	1.219	.500	.156	.719	3.469	.156	NA	.156	.719	.344	NA
031	.078	.093	[illegible]	.093	1.187	.750	.593	.453	1.015	.062	.187	.078	.875	.718	1.375	.218	1.156	1.843	.048	NA	.875	.305	.078	.312	1.687	.078	NA	.078	.312	.187	1.843
031	.078	.093	NA	NA	1.187	.750	.593	.453	1.015	.062	.187	.078	.875	.718	1.375	.218	NA	NA	.048	.031	.875	.305	.078	.312	1.687	.078	NA	.078	.312	.187	NA

RAYTHEON DASH NUMBERS

AS APPLICABLE
NEXT ASSY | USED ON
APPLICATION

UNLESS OTHERWISE SPECIFIED
DIMENSIONS ARE IN INCHES
TOLERANCES ON
2 PLACE DECIMALS ± | 3 PLACE DECIMALS ± .005 | ANGLES ± —
DO NOT SCALE THIS DRAWING
MATERIAL
SEE NOTE 11
APPROVAL

M.I.T.
INSTRUMENTATION LAB
Cambridge, Mass
DRAWN R. A. JONES DATE 16 JUL 65
CHECKED
APPROVAL W KUPFER 22 JUL 65
CONTRACT
NASA APPROVAL T. MICHAELS 22 JUL 65
MIT APPROVAL W KUPFER 22 JUL 65

MANNED
SPACECRAFT CENTER
HOUSTON TEXAS

NAMEPLATES,
APOLLO G&N - GSE
(STANDARDS)

SIZE J2 | CODE IDENT NO 80230 | 1004260
SCALE NONE | SHEET 3 OF 6

AC DASH NUMBERS CONTINUED ON SHEET 6

DASH NO.	P/C	PART NAME	REMARKS	PART NUMBER	SER. NO.	CONT. NO.	STYLE	TYPE	MATERIAL	A	B	C	D	E	F	G	H	J	K	L	M	N
199	AC	EYEPIECE STOWAGE UNIT		2021255-011			A	I		FOR DIMENSIONS SEE DASH 100 VALUES BELOW												
198	AC	SIGNAL CONDITIONER ASSY C/M		2007234		NAS-9-497	A	I	NOTE 11B	FOR DIMENSIONS SEE DASH 100 VALUES BELOW												
197	AC	SIGNAL CONDITIONER ASSY C/M		2007235		NAS-9-497	A	I	NOTE 11B	FOR DIMENSIONS SEE DASH 100 VALUES BELOW												
196	AC	SIGNAL CONDITIONER ASSY LEM		6007010		NAS-9-497	A	I	NOTE 11B	FOR DIMENSIONS SEE DASH 100 VALUES BELOW												
195	AC	PSA & SIGNAL CONDITIONER ASSY		6007009		NAS-9-497	A	I	NOTE 11B	FOR DIMENSIONS SEE DASH 100 VALUES BELOW												
194	AC	PANEL, MONITOR		2900031-031		NAS-9-497	B	II	NOTE 11C	FOR DIMENSIONS SEE DASH 141 VALUES BELOW												
193	AC	DISTRIBUTION BOX, GSE		2900024-031		NAS-9-497	B	II	NOTE 11C	FOR DIMENSIONS SEE DASH 141 VALUES BELOW												
192	AC	ANALYZER, OPTICS-INERTIAL		2900023-031		NAS-9-497	B	II	NOTE 11C	FOR DIMENSIONS SEE DASH 144 VALUES BELOW												
191	AC	TEST CONTROL		2900027-031		NAS-9-497	B	II	NOTE 11C	FOR DIMENSIONS SEE DASH 141 VALUES BELOW												
190	AC	PANEL, PWR SUP AND LOAD		2900033-021		NAS-9-497	B	II	NOTE 11C	FOR DIMENSIONS SEE DASH 141 VALUES BELOW												
189	AC	ADPT MODULE, P.S.A.		6900088-011		NAS-9-497	B	II	NOTE 11C	FOR DIMENSIONS SEE DASH 141 VALUES BELOW												
188	AC	ADPT MODULE, P.S.A.		2901143-011		NAS-9-497	B	II	NOTE 11C	FOR DIMENSIONS SEE DASH 141 VALUES BELOW												
187	AC	FIXTURE, MTG, PTA/PEA		2900066-021		NAS-9-497	B	II	NOTE 11C	FOR DIMENSIONS SEE DASH 141 VALUES BELOW												
196	AC	ANNUNCIATOR PANEL & EYEPIECE STORAGE ASSEMBLY		1021255-021			A	I		FOR DIMENSIONS SEE DASH 100 VALUES BELOW												
185	AC	ANNUNCIATOR PANEL & EYEPIECE STORAGE ASSEMBLY		1021255-011			A	I		FOR DIMENSIONS SEE DASH 100 VALUES BELOW												
184	AC	FIX., HAND., G AND N HARNESS		1901846-041		NAS-9-497	B	II	NOTE 11C	FOR DIMENSIONS SEE DASH 144 VALUES BELOW												
183	AC	INSTALLING TOOL, ELEC, CONN		1902586-011		NAS-9-497	B	II	NOTE 11C	FOR DIMENSIONS SEE DASH 102 VALUES BELOW												
182	AC	ADPT MODULE, P.S.A.		6900088-011		NAS-9-497	B	II	NOTE 11C	FOR DIMENSIONS SEE DASH 141 VALUES BELOW												
181	AC	G & N INDICATOR CONTROL PANEL ASSY		2014578-011		NAS-9-497	A	I	NOTE 11B	3.000	1.938	2.437	NA	.125	.062	.188	.156	NA	NA	1.750	1.125	.906
180	AC	ADPT MODULE, P.S.A.		1902431-031		NAS-9-497	B	II		FOR DIMENSIONS SEE DASH 121 VALUES BELOW												
179	AC	MOUNTING PLATE, IMU/PTA		6900083-011		NAS-9-497	B	II		FOR DIMENSIONS SEE DASH 144 VALUES BELOW												
178	AC	MOUNTING PLATE, COMPONENT		6900007-021		NAS-9-497	B	II		FOR DIMENSIONS SEE DASH 144 VALUES BELOW												
177	AC	FIX., MOUNTING, SUBSYSTEM		2900070-021		NAS-9-497	B	II		FOR DIMENSIONS SEE DASH 144 VALUES BELOW												
176	AC	FIX., MOUNTING, G & N		2900067-021		NAS-9-497	B	II		FOR DIMENSIONS SEE DASH 144 VALUES BELOW												
175	AC	CSL, COOL. AND PWR, G & N		1902134-031		NAS-9-497	B	II		FOR DIMENSIONS SEE DASH 144 VALUES BELOW												
174	AC	FIX., HAND., C/M AND LEM CDU		2900999-011		NAS-9-497	B	II	NOTE 11C	FOR DIMENSIONS SEE DASH 141 VALUES BELOW												
173	AC	FIX., HANDLING, C/M PSA		2900998-011		NAS-9-497	B	II	NOTE 11C	FOR DIMENSIONS SEE DASH 141 VALUES BELOW												
172	AC	CAGING ELECTRONICS, GYRO		2900029-021		NAS-9-497	B	II	NOTE 11C	FOR DIMENSIONS SEE DASH 141 VALUES BELOW												
171	AC	DISTRIBUTION BOX, GSE		2900024-021		NAS-9-497	B	II	NOTE 11C	FOR DIMENSIONS SEE DASH 141 VALUES BELOW												
170	AC	ANALYZER, OPTICS-INERTIAL		2900023-021		NAS-9-497	B	II	NOTE 11C	FOR DIMENSIONS SEE DASH 144 VALUES BELOW												
169	AC	ADPT, TESTPOINT, P.S.A.		2900037-021		NAS-9-497	B	II	NOTE 11C	FOR DIMENSIONS SEE DASH 141 VALUES BELOW												
168	AC	TEST SELECTOR		2900028-021		NAS-9-497	B	II	NOTE 11C	FOR DIMENSIONS SEE DASH 141 VALUES BELOW												
167	AC	TEST CONTROL		2900027-021		NAS-9-497	B	II	NOTE 11C	FOR DIMENSIONS SEE DASH 141 VALUES BELOW												
166	AC	PANEL, MONITOR		2900031-021		NAS-9-497	B	II	NOTE 11C	FOR DIMENSIONS SEE DASH 141 VALUES BELOW												
165	AC	TERM. BOARD STORAGE DRAWER		2900927-011		NAS-9-497	B	II	NOTE 11C	FOR DIMENSIONS SEE DASH 141 VALUES BELOW												
164	AC	INPUT/OUTPUT PANEL		2900926-011		NAS-9-497	B	II	NOTE 11C	FOR DIMENSIONS SEE DASH 141 VALUES BELOW												
163	AC	CONTROL PANEL		2900896-011		NAS-9-497	B	II	NOTE 11C	FOR DIMENSIONS SEE DASH 141 VALUES BELOW												
162	AC	CSL, CAL AND TEST, SCM/PSAAM		2900895-011		NAS-9-497	B	II	NOTE 11C	FOR DIMENSIONS SEE DASH 144 VALUES BELOW												
161	AC	FIX., LIFT AND HAND., IMU		1015462-011		NAS-9-497	B	II	NOTE 11C	FOR DIMENSIONS SEE DASH 141 VALUES BELOW												
160	AC	FIX., HAND., G & N HARNESS		1901846-031		NAS-9-497	B	II	NOTE 11C	FOR DIMENSIONS SEE DASH 144 VALUES BELOW												
159	AC	BATTERY POWER PACK		1900011-031		NAS-9-497	B	II	NOTE 11C	FOR DIMENSIONS SEE DASH 144 VALUES BELOW												
158	AC	COUPLING DATA UNIT ASSEMBLY C/M		2007222		NAS-9-497	A	I	NOTE 11B	FOR DIMENSIONS SEE DASH 100 VALUES BELOW												
157	AC	COUPLING DATA UNIT ASSEMBLY - LEM		2007222		NAS-9-497	A	I	NOTE 11B	FOR DIMENSIONS SEE DASH 100 VALUES BELOW												
156	AC	POWER & SERVO ASSEMBLY C/M		2007200		NAS-9-497	A	I	NOTE 11B	2.125	.968	1.718	NA	.093	.031	.06	.093	NA	NA	.858	.608	.484
155	AC	PIPA ELECTRONICS ASSEMBLY		2007201		NAS-9-497	A	I	NOTE 11B	FOR DIMENSIONS SEE DASH 100 VALUES BELOW												
154	AC	PULSE TORQUE ASSEMBLY-LEM		6007000		NAS-9-497	A	I	NOTE 11B	FOR DIMENSIONS SEE DASH 100 VALUES BELOW												
153	AC	POWER & SERVO ASSEMBLY-LEM		6007200		NAS-9-497	A	I	NOTE 11B	FOR DIMENSIONS SEE DASH 100 VALUES BELOW												
152	AC	CONT PNL, RSVR CKT TESTER		2900770-011		NAS-9-497	B	II	NOTE 11C	FOR DIMENSIONS SEE DASH 141 VALUES BELOW												
151	AC	TESTER, RESOLVER CIRCUIT		2900708-011		NAS-9-497	B	II	NOTE 11C	FOR DIMENSIONS SEE DASH 141 VALUES BELOW												
150	AC	JUNCTION BOX, P.S.A./G.S.E.		1901933-021		NAS-9-497	B	II	NOTE 11C	FOR DIMENSIONS SEE DASH 144 VALUES BELOW												
149	AC	BATTERY PACK, LIFTING		2900812-011		NAS-9-497	B	II	NOTE 11C	FOR DIMENSIONS SEE DASH 141 VALUES BELOW												
148	AC	MOUNTING PLATE, COMPONENT		6900007-011		NAS-9-497	B	II	NOTE 11C	FOR DIMENSIONS SEE DASH 144 VALUES BELOW												
147	AC	MOUNTING PLATE, COMPONENT		2900677-011		NAS-9-497	B	II	NOTE 11C	FOR DIMENSIONS SEE DASH 144 VALUES BELOW												
146	AC	CART, TRANS, G & N		1900009-041		NAS-9-497	B	II	NOTE 11C	FOR DIMENSIONS SEE DASH 144 VALUES BELOW												
145	AC	CONTAINER, SHIPPING, IMU		1900010-021		NAS-9-497	B	II	NOTE 11C	FOR DIMENSIONS SEE DASH 144 VALUES BELOW												
144	AC	FIX., MOUNTING, G & N		1902204-021			B	II	NOTE 11C	4.125	1.812	3.250	NA	.125	.062	.12	.156	[illegible]	.125	1.625	1.140	.890
143	AC	CSL, COOL. AND PWR, G & N		1902134-021			B	II	NOTE 11C	4.125	1.812	3.250	NA	.125	.062	.12	.156		.125	1.625	1.140	.890
142	AC	ANALYZER, OPTICS-INERTIAL		2900023-011			B	II	NOTE 11C	4.125	1.812	3.250	NA	.125	.062	.12	.156		.125	1.625	1.140	.890
141	AC	CONT, TEMP, PORTABLE		2900060-011			B	II	NOTE 11C	2.125	.968	1.718	NA	.093	.031	.06	.093		.093	.858	.608	.484
140	AC	TESTER, CKT, IMU/CDU RSVR		2900286-011			B	II	NOTE 11C	4.125	1.812	3.250	NA	.125	.062	.12	.156		.125	1.625	1.140	.890
139	AC	SIMULATOR, LD/SIG, CDU		2900285-011			B	II	NOTE 11C	4.125	1.812	3.250	NA	.125	.062	.12	.156		.125	1.625	1.140	.890
138	AC	SIMULATOR, LD/SIG, OPTICS		1902023-021			B	II	NOTE 11C	4.125	1.812	3.250	NA	.125	.062	.12	.156		.125	1.625	1.140	.890
137	AC	FIX., MOUNTING, IMU/NAV BASE		6900003-011			B	II	NOTE 11C	4.125	1.812	3.250	NA	.125	.062	.12	.156		.125	1.625	1.140	.890
136	AC	FIXTURE, OPTICS/NAV BASE		2900072 011			B	II	NOTE 11C	4.125	1.812	3.250	NA	.125	.062	.12	.156		.125	1.625	1.140	.890
135	AC	FIX., MOUNTING, SUB SYSTEM		2900070-011			B	II	NOTE 11C	4.125	1.812	3.250	NA	.125	.062	.12	.156		.125	1.625	1.140	.890
134	AC	FIX., HAND., G & N HARNESS		2900069-011			B	II	NOTE 11C	4.125	1.812	3.250	NA	.125	.062	.12	.156		.125	1.625	1.140	.890
133	AC	CNTR, SHIPPING, NAV BASE		2900068-011			B	II	NOTE 11C	4.125	1.812	3.250	NA	.125	.062	.12	.156		.125	1.625	1.140	.890
132	AC	FIX., MOUNTING, G & N		2900067-011			B	II	NOTE 11C	4.125	1.812	3.250	NA	.125	.062	.12	.156		.125	1.625	1.140	.890
131	AC	SIMULATOR, LD/SIG, IMU/CDU		2900062-011			B	II	NOTE 11C	4.125	1.812	3.250	NA	.125	.062	.12	.156		.125	1.625	1.140	.890
130	AC	TESTER, GYRO WHEEL		2900061-011			B	II	NOTE 11C	4.125	1.812	3.250	NA	.125	.062	.12	.156		.125	1.625	1.140	.890
129	AC	COOLANT SUPPLY		1902133-021			B	II	NOTE 11C	4.125	1.812	3.250	NA	.125	.062	.12	.156		.125	1.625	1.140	.890
128	AC	TABLE, ROTARY		1900926-021			B	II	NOTE 11C	4.125	1.812	3.250	NA	.125	.062	.12	.156		.125	1.625	1.140	.890
127	AC	FIX., HAND., OPTICS		2900074-011			B	II	NOTE 11C	2.125	.968	1.718	NA	.093	.031	.06	.093		.093	.858	.608	.484
126	AC	FIXTURE, MTG, PTA/PEA.		2900066-011			B	II	NOTE 11	2.125	.968	1.718	NA	.093	.031	.06	.093		.093	.858	.608	.484
125	AC	CONT, TEMP, IMU LIFTING		2900063-011			B	II	NOTE 11C	2.125	.968	1.718	NA	.093	.031	.06	.093		.093	.858	.608	.484
124	AC	FIXTURE, HANDLING, IMU		2900064-011			B	II	NOTE 11C	2.125	.968	1.718	NA	.093	.031	.06	.093		.093	.858	.608	.484
123	AC	CONT, OPTICS, REMOTE		1902046-021			B	II	NOTE 11C	2.125	.968	1.718	NA	.093	.031	.06	.093		.093	.858	.608	.484
122	AC	TEST CONTROL		1902009-021			B	II	NOTE 11C	2.125	.968	1.718	NA	.093	.031	.06	.093		.093	.858	.608	.484
121	AC	ADPT MODULE, P.S.A.		1902431-021			B	II	NOTE 11C	2.125	.968	1.718	NA	.093	.031	.06	.093		.093	.858	.608	.484
120	AC	BRIDGE, DECADE ERROR		2900128-011			B	II	NOTE 11C	2.125	.968	1.718	NA	.093	.031	.06	.093		.093	.858	.608	.484
119	AC	PWR SUP, ELECTRONICS		2900012-011			B	II	NOTE 11C	2.125	.968	1.718	NA	.093	.031	.06	.093		.093	.858	.608	.48
118	AC	PWR SUP, RELAY AND LAMP		1900049-031			B	II	NOTE 11C	2.125	.968	1.718	NA	.093	.031	.06	.093		.093	.858	.608	.48
117	AC	CONSOLE, OSCILLOGRAPH		1900000-021			B	II	NOTE 11C	2.125	.968	1.718	NA	.093	.031	.06	.093		.093	.858	.608	.48
116	AC	ADPT MODULE, P.S.A.		1902431-011			B	II	NOTE 11C	2.125	.968	1.718	NA	.093	.031	.06	.093		.093	.858	.608	.48
115	AC	ADPT, TEST POINT, PTA/PEA.		2900145-011			B	II	NOTE 11C	2.125	.968	1.718	NA	.093	.031	.06	.093		.093	.858	.608	.48
114	AC	ADPT, TEST POINT, P.S.A.		2900037-011			B	II	NOTE 11C	2.125	.968	1.718	NA	.093	.031	.06	.093		.093	.858	.608	.48
113	AC	CONTROL, GIMBAL POSITION		2900036-011			B	II	NOTE 11C	2.125	.968	1.718	NA	.093	.031	.06	.093		.093	.858	.608	.48
112	AC	SELECTOR, SIGNAL, PRIMARY		2900035-011			B	II	NOTE 11C	2.125	.968	1.718	NA	.093	.031	.06	.093		.093	.858	.608	.48
111	AC	SEL, SIG, OSCILLOGRAPH		2900034-011			B	II	NOTE 11C	2.125	.968	1.718	NA	.093	.031	.06	.093		.093	.858	.608	.48
110	AC	PANEL, PWR SUP AND LOAD		2900033-011			B	II	NOTE 11C	2.125	.968	1.718	NA	.093	.031	.06	.093		.093	.858	.608	.48
109	AC	PANEL, MONITOR		2900031-011			B	II	NOTE 11C	2.125	.968	1.718	NA	.093	.031	.06	.093		.093	.858	.608	.48
108	AC	PANEL, AUXILIARY INPUT		2900030-011			B	II	NOTE 11C	2.125	.968	1.718	NA	.093	.031	.06	.093		.093	.858	.608	.48
107	AC	CAGING ELECTRONICS, GYRO		2900029-011			B	II	NOTE 11C	2.125	.968	1.718	NA	.093	.031	.06	.093		.093	.858	.608	.48
106	AC	TEST SELECTOR		2900028-011			B	II	NOTE 11C	2.125	.968	1.718	NA	.093	.031	.06	.093		.093	.858	.608	.48
105	AC	TEST CONTROL		2900027-011			B	II	NOTE 11C	2.125	.968	1.718	NA	.093	.031	.06	.093		.093	.858	.608	.48
104	AC	MONITOR AND CONTROL, TEMP		2900026-011			B	II	NOTE 11C	2.125	.968	1.718	NA	.093	.031	.06	.093		.093	.858	.608	.48
103	AC	DISTRIBUTION BOX, GSE		2900024-011			B	II	NOTE 11C	2.125	.968	1.718	NA	.093	.031	.06	.093		.093	.858	.608	.48
102	AC	VOLTMETER, DIGITAL		2900007-011			B	II	NOTE 11C	2.125	.968	1.718	NA	.093	.031	.06	.093	[illegible]	.093	.858	.608	.48
101	AC	NAVIGATION BASE ASSEMBLY-LEM		6899950		NAS-9-497	A	I	NOTE 11B	2.000	1.312	1.906	1.375	.078	.048	.078	.093	NA	NA	1.125	.750	.59
100	AC	NAVIGATION BASE ASSEMBLY		2899982		NAS-9-497	A	I	NOTE 11B	2.000	1.312	1.906	1.375	.078	.048	.078	.093	NA	NA	1.125	.750	.5

NOTES FOR TABLE

STYLE A IS FOR G & N SYSTEM
STYLE B IS FOR GROUND SUPPORT EQUIPMENT
TYPE I IS WITHOUT MOUNTING HOLES
TYPE II IS WITH MOUNTING HOLES

1004260	CU	SHT 4

SYM	ZONE	DESCRIPTION	CHG NO	DATE	APPD
CL		REPLACES REV CK WITHOUT CHANGE PER TDRR 34365		11/20/67	JWL RWH
CM		REVISION STATUS CHANGED		18 OCT 67	RAW
CN		REVISION STATUS CHANGE		31 OCT 67	JRK
CP		REVISION STATUS CHANGE		6 NOV 67	
CR		REVISION STATUS CHANGED		7 NOV 67	RWH
CS		REVISION STATUS CHANGED		JAN 68	J.W. EHW
CT		REVISION STATUS CHANGED		7 FEB 68	
CU		REVISION STATUS CHANGED		28 FEB 68	JRK

E	F	G	H	J	K	L	M	N	P	R	S	T	U	V	W	Y	Z	AA	AB	AC	AD	AE	AF	AG	AH	AJ	AK	AL	AM	AN	AP	AR
100 VALUES BELOW																																
100 VALUES BELOW																																
100 VALUES BELOW																																
100 VALUES BELOW																																
100 VALUES BELOW																																
141 VALUES BELOW																																
141 VALUES BELOW																																
144 VALUES BELOW																																
141 VALUES BELOW																																
141 VALUES BELOW																																
141 VALUES BELOW																																
141 VALUES BELOW																																
141 VALUES BELOW																																
130 VALUES BELOW																																
100 VALUES BELOW																																
144 VALUES BELOW																																
102 VALUES BELOW																																
141 VALUES BELOW																																
	.062	.188	.156	NA	NA	1.750	1.125	.906	.688	1.500	NA	.281	.125	NA	1.094	2.062	.312	NA	2.500	.062	.125	1.312	.469	NA	NA	NA	.156	NA	.125	.469	.344	NA
121 VALUES BELOW																																
144 VALUES BELOW																																
144 VALUES BELOW																																
144 VALUES BELOW																																
144 VALUES BELOW																																
144 VALUES BELOW																																
141 VALUES BELOW																																
141 VALUES BELOW																																
141 VALUES BELOW																																
141 VALUES BELOW																																
[illegible] VALUES BELOW																																
141 VALUES BELOW																																
141 VALUES BELOW																																
141 VALUES BELOW																																
141 VALUES BELOW																																
141 VALUES BELOW																																
141 VALUES BELOW																																
141 VALUES BELOW																																
144 VALUES BELOW																																
141 VALUES BELOW																																
144 VALUES BELOW																																
144 VALUES BELOW																																
100 VALUES BELOW																																
100 VALUES BELOW																																
	.031	.06	.093	NA	NA	.858	.608	.484	.358	.733	.062	.140	.062	NA	.968	1.450	.125	NA	1.720	.046	.03	NA	.210	NA	NA	NA	.070	NA	.046	.32	.16	NA
100 VALUES BELOW																																
100 VALUES BELOW																																
100 VALUES BELOW																																
141 VALUES BELOW																																
141 VALUES BELOW																																
144 VALUES BELOW																																
141 VALUES BELOW																																
144 VALUES BELOW																																
144 VALUES BELOW																																
144 VALUES BELOW																																
144 VALUES BELOW																																
	.062	.12	.156	[illegible]	.125	1.625	1.140	.890	.640	1.390	.125	.171	.125	1.875	1.687	2.625	.250	1.562	3.843	.093	NA	NA	.359	.125	.437	3.688	NA	3.687	.093	.40	.25	3.875
	.062	.12	.156		.125	1.625	1.140	.890	.640	1.390	.125	.171	.125	1.875	1.687	2.625	.250	1.562	3.843	.093	NA	NA	.359	.125	.437	3.688	NA	3.687	.093	.40	.25	3.875
	.062	.12	.156		.125	1.625	1.140	.890	.640	1.390	.125	.171	.125	1.875	1.687	2.625	.250	1.562	3.843	.093	NA	NA	.359	.125	.437	3.688	NA	3.687	.093	.40	.25	3.875
	.031	.06	.093		.093	.858	.608	.484	.358	.733	.077	.116	.062	.937	.875	1.343	.125	.781	1.892	.046	NA	NA	.209	.093	.250	1.875	NA	1.840	.046	.23	.16	1.938
	.062	.12	.156		.125	1.625	1.140	.890	.640	1.390	.125	.171	.125	1.875	1.687	2.625	.250	1.562	3.843	.093	NA	NA	.359	.125	.437	3.688	NA	3.687	.093	.40	.25	3.875
	.062	.12	.156		.125	1.625	1.140	.890	.640	1.390	.125	.171	.125	1.875	1.687	2.625	.250	1.562	3.843	.093	NA	NA	.359	.125	.437	3.688	NA	3.687	.093	.40	.25	3.875
	.062	.12	.156		.125	1.625	1.140	.890	.640	1.390	.125	.171	.125	1.875	1.687	2.625	.250	1.562	3.843	.093	NA	NA	.359	.125	.437	3.688	NA	3.687	.093	.40	.25	3.875
	.062	.12	.156		.125	1.625	1.140	.890	.640	1.390	.125	.171	.125	1.875	1.687	2.625	.250	1.562	3.843	.093	NA	NA	.359	.125	.437	3.688	NA	3.687	.093	.40	.25	3.875
	.062	.12	.156		.125	1.625	1.140	.890	.640	1.390	.125	.171	.125	1.875	1.687	2.625	.250	1.562	3.843	.093	NA	NA	.359	.125	.437	3.688	NA	3.687	.093	.40	.25	3.875
	.062	.12	.156		.125	1.625	1.140	.890	.640	1.390	.125	.171	.125	1.875	1.687	2.625	.250	1.562	3.843	.093	NA	NA	.359	.125	.437	3.688	NA	3.687	.093	.40	.25	3.875
	.062	.12	.156		.125	1.625	1.140	.890	.640	1.390	.125	.171	.125	1.875	1.687	2.625	.250	1.562	3.843	.093	NA	NA	.359	.125	.437	3.688	NA	3.687	.093	.40	.25	3.875
	.062	.12	.156		.125	1.625	1.140	.890	.640	1.390	.125	.171	.125	1.875	1.687	2.625	.250	1.562	3.843	.093	NA	NA	.359	.125	.437	3.688	NA	3.687	.093	.40	.25	3.875
	.062	.12	.156		.125	1.625	1.140	.890	.640	1.390	.125	.171	.125	1.875	1.687	2.625	.250	1.562	3.843	.093	NA	NA	.359	.125	.437	3.688	NA	3.687	.093	.40	.25	3.875
	.062	.12	.156		.125	1.625	1.140	.890	.640	1.390	.125	.171	.125	1.875	1.687	2.625	.250	1.562	3.843	.093	NA	NA	.359	.125	.437	3.688	NA	3.687	.093	.40	.25	3.875
	.062	.12	.156		.125	1.625	1.140	.890	.640	1.390	.125	.171	.125	1.875	1.687	2.625	.250	1.562	3.843	.093	NA	NA	.359	.125	.437	3.688	NA	3.687	.093	.40	.25	3.875
	.062	.12	.156		.125	1.625	1.140	.890	.640	1.390	.125	.171	.125	1.875	1.687	2.625	.250	1.562	3.843	.093	NA	NA	.359	.125	.437	3.688	NA	3.687	.093	.40	.25	3.875
	.062	.12	.156		.125	1.625	1.140	.890	.640	1.390	.125	.171	.125	1.875	1.687	2.625	.250	1.562	3.843	.093	NA	NA	.359	.125	.437	3.688	NA	3.687	.093	.40	.25	3.875
	.031	.06	.093		.093	.858	.608	.484	.358	.733	.077	.116	.062	.937	.875	1.343	.125	.781	1.892	.046	NA	NA	.209	.093	.250	1.875	NA	1.840	.046	.23	.16	1.938
	.031	.06	.093		.093	.858	.608	.484	.358	.733	.077	.116	.062	.937	.875	1.343	.125	.781	1.892	.046	NA	NA	.209	.093	.250	1.875	NA	1.840	.046	.23	.16	1.938
	.031	.06	.093		.093	.858	.608	.484	.358	.733	.077	.116	.062	.937	.875	1.343	.125	.781	1.892	.046	NA	NA	.209	.093	.250	1.875	NA	1.840	.046	.23	.16	1.938
	.031	.06	.093		.093	.858	.608	.484	.358	.733	.077	.116	.062	.937	.875	1.343	.125	.781	1.892	.046	NA	NA	.209	.093	.250	1.875	NA	1.840	.046	.23	.16	1.938
	.031	.06	.093		.093	.858	.608	.484	.358	.733	.077	.116	.062	.937	.875	1.343	.125	.781	1.892	.046	NA	NA	.209	.093	.250	1.875	NA	1.840	.046	.23	.16	1.938
	.031	.06	.093		.093	.858	.608	.484	.358	.733	.077	.116	.062	.937	.875	1.343	.125	.781	1.892	.046	NA	NA	.209	.093	.250	1.875	NA	1.840	.046	.23	.16	1.938
	.031	.06	.093		.093	.858	.608	.484	.358	.733	.077	.116	.062	.937	.875	1.343	.125	.781	1.892	.046	NA	NA	.209	.093	.250	1.875	NA	1.840	.046	.23	.16	1.938
	.031	.06	.093		.093	.858	.608	.484	.358	.733	.077	.116	.062	.937	.875	1.343	.125	.781	1.892	.046	NA	NA	.209	.093	.250	1.875	NA	1.840	.046	.23	.16	1.938
	.031	.06	.093		.093	.858	.608	.484	.358	.733	.077	.116	.062	.937	.875	1.343	.125	.781	1.892	.046	NA	NA	.209	.093	.250	1.875	NA	1.840	.046	.23	.16	1.938
	.031	.06	.093		.093	.858	.608	.484	.358	.733	.077	.116	.062	.937	.875	1.343	.125	.781	1.892	.046	NA	NA	.209	.093	.250	1.875	NA	1.840	.046	.23	.16	1.938
	.031	.06	.093		.093	.858	.608	.484	.358	.733	.077	.116	.062	.937	.875	1.343	.125	.781	1.892	.046	NA	NA	.209	.093	.250	1.875	NA	1.840	.046	.23	.16	1.938
	.031	.06	.093		.093	.858	.608	.484	.358	.733	.077	.116	.062	.937	.875	1.343	.125	.781	1.892	.046	NA	NA	.209	.093	.250	1.875	NA	1.840	.046	.23	.16	1.938
	.031	.06	.093		.093	.858	.608	.484	.358	.733	.077	.116	.062	.937	.875	1.343	.125	.781	1.892	.046	NA	NA	.209	.093	.250	1.875	NA	1.840	.046	.23	.16	1.938
	.031	.06	.093		.093	.858	.608	.484	.358	.733	.077	.116	.062	.937	.875	1.343	.125	.781	1.892	.046	NA	NA	.209	.093	.250	1.875	NA	1.840	.046	.23	.16	1.938
	.031	.06	.093		.093	.858	.608	.484	.358	.733	.077	.116	.062	.937	.875	1.343	.125	.781	1.892	.046	NA	NA	.209	.093	.250	1.875	NA	1.840	.046	.23	.16	1.938
	.031	.06	.093		.093	.858	.608	.484	.358	.733	.077	.116	.062	.937	.875	1.343	.125	.781	1.892	.046	NA	NA	.209	.093	.250	1.875	NA	1.840	.046	.23	.16	1.938
	.031	.06	.093		.093	.858	.608	.484	.358	.733	.077	.116	.062	.937	.875	1.343	.125	.781	1.892	.046	NA	NA	.209	.093	.250	1.875	NA	1.840	.046	.23	.16	1.938
	.031	.06	.093		.093	.858	.608	.484	.358	.733	.077	.116	.062	.937	.875	1.343	.125	.781	1.892	.046	NA	NA	.209	.093	.250	1.875	NA	1.840	.046	.23	.16	1.938
	.031	.06	.093		.093	.858	.608	.484	.358	.733	.077	.116	.062	.937	.875	1.343	.125	.781	1.892	.046	NA	NA	.209	.093	.250	1.875	NA	1.840	.046	.23	.16	1.938
	.031	.06	.093		.093	.858	.608	.484	.358	.733	.077	.116	.062	.937	.875	1.343	.125	.781	1.892	.046	NA	NA	.209	.093	.250	1.875	NA	1.840	.046	.23	.16	1.938
	.031	.06	.093		.093	.858	.608	.484	.358	.733	.077	.116	.062	.937	.875	1.343	.125	.781	1.892	.046	NA	NA	.209	.093	.250	1.875	NA	1.840	.046	.23	.16	1.938
	.031	.06	.093		.093	.858	.608	.484	.358	.733	.077	.116	.062	.937	.875	1.343	.125	.781	1.892	.046	NA	NA	.209	.093	.250	1.875	NA	1.840	.046	.23	.16	1.938
	.031	.06	.093		.093	.858	.608	.484	.358	.733	.077	.116	.062	.937	.875	1.343	.125	.781	1.892	.046	NA	NA	.209	.093	.250	1.875	NA	1.840	.046	.23	.16	1.938
	.031	.06	.093		.093	.858	.608	.484	.358	.733	.077	.116	.062	.937	.875	1.343	.125	.781	1.892	.046	NA	NA	.209	.093	.250	1.875	NA	1.840	.046	.23	.16	1.938
	.031	.06	.093		.093	.858	.608	.484	.358	.733	.077	.116	.062	.937	.875	1.343	.125	.781	1.892	.046	NA	NA	.209	.093	.250	1.875	NA	1.840	.046	.23	.16	1.938
	.031	.06	.093		.093	.858	.608	.484	.358	.733	.077	.116	.062	.937	.875	1.343	.125	.781	1.892	.046	NA	NA	.209	.093	.250	1.875	NA	1.840	.046	.23	.16	1.938
	.031	.06	.093	[illegible]	.093	.858	.608	.484	.358	.733	.077	.116	.062	.937	.875	1.343	.125	.781	1.892	.046	NA	NA	.209	.093	.250	1.875	NA	1.840	.046	.23	.16	1.938
	.048	.078	.093	NA	NA	1.125	.750	.593	.453	1.015	.062	.187	.078	.875	.718	1.375	.218	NA	NA	.048	.031	.875	.305	.078	.531	1.906	.078	NA	.078	.531	.187	NA
	.048	.078	.093	NA	NA	1.125	.750	.593	.453	1.015	.062	.187	.078	.875	.718	1.375	.218	NA	NA	.048	.031	.875	.305	.078	.531	1.906	.078	NA	.078	.531	.187	NA

AC ELECTRONICS DASH NUMBERS

APPLICATION	NEXT ASSY: AS APPLICABLE; USED ON:
UNLESS OTHERWISE SPECIFIED DIMENSIONS ARE IN INCHES TOLERANCES ON	2 PLACE DECIMALS ± ; 3 PLACE DECIMALS ± .005; ANGLES ±
DO NOT SCALE THIS DRAWING	
MATERIAL	SEE NOTE 11
APPROVAL	
M I T INSTRUMENTATION LAB CAMBRIDGE MASS	
DRAWN	R A JONES, DATE 16 JUL 65
CHECKED	
APPROVAL	W KUPFER 22 JUL 65
CONTRACT	
NASA APPROVAL	T MICHAELS 22 JUL 65
MIT APPROVAL	W KUPFER 22 JUL 65

MANNED
SPACECRAFT CENTER
HOUSTON TEXAS

NAMEPLATES, APOLLO GEN - GSE (STANDARDS)

SIZE J2 | CODE IDENT NO 80230 | 1004260
SCALE NONE | SHEET 4 OF 6

[illegible]

DASH NO.	P/C	PART NAME	REMARKS	PART NUMBER	SER. NO.	CONT. NO.	STYLE	TYPE	MATERIAL	A	B	C	D	E	F	G	H	J	K	L	M
401	MIT	COMPUTER ASSY		20C3100		NAS-9-497	A	I	NOTE 11B	2,000	1,312	1,906	1,375	,078	,048	,078	,093	NA	NA	1,125	,750
40C	MIT	LIFTING SLING-G&N INST.QUAL.FIX. & AZM.REF.FIX.		1021640		NAS-9-4065	B	II	NOTE 11C	2,000	1,312	1,687	1,375	,078	,048	,078	,093	[illegible]	,093	1,187	,750

NOTES FOR TABLE
STYLE A IS FOR G & N SYSTEM
STYLE B IS FOR GROUND SUPPORT EQUIPMENT
TYPE I IS WITHOUT MOUNTING HOLES
TYPE II IS WITH MOUNTING HOLES

1004260	CU	SHT 5

REVISIONS					
SYM	ZONE	DESCRIPTION	CHG NO	DATE	APPD
CL		REPLACES REV CK WITHOUT CHANGE PER TDRR 34365		11/20/67	JWL RWH
CM		REVISION STATUS CHANGED		10 OCT 67	RAW
CN		REVISION STATUS CHANGED		31 OCT 67	JRK
CP		REVISION STATUS CHANGED		6 NOV 67	EMS
CR		REVISION STATUS CHANGED		7 DEC 67	RWH
CS		REVISION STATUS CHANGED		9 JAN 68	RWH
CT		REVISION STATUS CHANGED		7 FEB 68	RWH
CU		REVISION STATUS CHANGED		22 FEB 68	JRK

78	.048	.078	.093	NA	NA	1.125	.750	.593	.453	1.015	.062	.187	.078	.875	.718	1.375	.218	NA	NA	.048	.031	.875	.305	.078	.531	1.906	.078	NA	.078	.531	.187	NA
78	.048	.078	.093	[illegible]	.093	1.187	.750	.593	.453	1.015	.062	.187	.078	.875	.718	1.375	.218	1.156	1.843	.048	NA	.875	.305	.078	.312	1.687	.110	1.830	.070	.275	.180	1.844
E	F	G	H	J	K	L	M	N	P	R	S	T	U	V	W	Y	Z	AA	AB	AC	AD	AE	AF	AG	AH	AJ	AK	AL	AM	AN	AP	AR

MIT DASH NUMBERS

AS APPLICABLE		UNLESS OTHERWISE SPECIFIED DIMENSIONS ARE IN INCHES TOLERANCES ON 2 PLACE DECIMALS ± 3 PLACE DECIMALS ± .005 ANGLES ±	MIT INSTRUMENTATION LAB CAMBRIDGE MASS
NEXT ASSY	USED ON	DO NOT SCALE THIS DRAWING	DRAWN R A JONES DATE 16 JUL 65
APPLICATION		MATERIAL SEE NOTE 11	CHECKED
		APPROVAL	W KUPFER 22 JUL 65 APPROVAL
			CONTRACT
			T MICHAELS 22 JUL 65 NASA APPROVAL
			W KUPFER 22 JUL 65 MIT APPROVAL

MANNED
SPACECRAFT CENTER
HOUSTON TEXAS

NAMEPLATES,
APOLLO GN - GSE
(STANDARDS)

SIZE	CODE IDENT NO	
J2	80230	1004260
SCALE NONE		SHEET 5 OF 6

1004260 CU

1004260

1004260	CU	SHT 5

1004260
SHEET 5 OF 6

2/1004260

DASH NO.	P/C	PART NAME	REMARKS	PART NUMBER	SER. NO.	CONT. NO.	STYLE	TYPE	MATERIAL	A	B	C	D	E	F	G	H	J	K	L	M	N
599	AC																					
598	AC																					
576		FIX.,MOUNTING G&N		2900067-061		FOR OTHER DATA SEE DASH 500																
575		CSL,CAL AND TEST, SCM/PSAAM		2900895-041		FOR DATA SEE DASH 559																
574		CONT., TEMP. PORTABLE		2900060-031		NAS-9-497	B	II	NOTE 11C	FOR DIMENSIONS SEE DASH 535 VALUES												
573		BATTERY PACK LIFTING		2900812-031		NAS-9-497	B	II	NOTE 11C	FOR DIMENSIONS SEE DASH 542 VALUES												
572		FIX., MOUNTING G&N	(-144)	2900067-051		NAS-9-497	B	II	NOTE 11C	FOR DIMENSIONS SEE DASH 500 VALUES												
570	AC	OPTICAL UNIT & BELLOWS ASSY				NAS-9-497	A	I	NOTE 11B	FOR DIMENSIONS SEE DASH 550 VALUES												
569	AC	G & N INDICATOR CONTROL PANEL ASSY		2021323-011		NAS-9-497	A	I	NOTE 11B	FOR DIMENSIONS SEE DASH 181												
568	AC	G & N INDICATOR CONTROL PANEL ASSY		2021290-021		NAS-9-497	A	I	NOTE 11B	FOR DIMENSIONS SEE DASH 181												
567	AC	G & N INDICATOR CONTROL PANEL ASSY		2021290-011		NAS-9-497	A	I	NOTE 11B	FOR DIMENSIONS SEE DASH 181												
566	AC	COMPUTER CONT & RETICLE DIMMER		6014512-061		NAS-9-497	A	I	NOTE 11B	FOR DIMENSIONS SEE DASH 534												
565		AUXILIARY BATTERY PACK		1901492-031		NAS-9-497	B	II	NOTE 11C	FOR DIMENSIONS SEE DASH 500												
564		BATTERY POWER PACK		1900011-051		NAS-9-497	B	II	NOTE 11C	FOR DIMENSIONS SEE DASH 500												
563		PSA ADAPTER MODULE (LEM)		6900088-031		NAS-9-497	B	II	NOTE 11C	FOR DIMENSIONS SEE DASH 141 VALUES												
562	AC	COMPUTER CONT & RETICLE DIMMER		6014512-041		NAS-9-497	A	I	NOTE 11B	FOR DIMENSIONS SEE DASH 534 VALUES												
561	AC	G & N INDICATOR CONTROL PANEL ASSY		2014578-031		NAS-9-497	A	I	NOTE 11B	FOR DIMENSIONS SEE DASH 181 VALUES												
560		ADPT. MODULE, PSA		2901143-021		NAS-9-497	B	II	NOTE 11C	FOR DIMENSIONS SEE DASH 141 VALUES												
559		CSL, CAL AND TEST, SCM/PSAAM		2900895-031		FOR OTHER DATA SEE DASH 547																
558		PSA ADAPTER MODULE (LEM)		6900088-021		FOR OTHER DATA SEE DASH 189																
557		FIX., HANDLING, C/M PSA		2900998-021		NAS-9-497	B	II	NOTE 11C	FOR DIMENSIONS SEE DASH 141 VALUES												
556		FIX., MOUNTING G & N	(-144)	2900067-041		NAS-9-497	B	II	NOTE 11C	FOR DIMENSIONS SEE DASH 500 VALUES												
555	AC	OPTICAL UNIT ASSEMBLY		1021368-061		NAS-9-497	A	I	NOTE 11B	2.000	1.312	1.687	1.375	.078	.048	.078	.093	NA	NA	1.125	.750	.593
554	AC	OPTICAL UNIT ASSEMBLY		1021368-041		NAS-9-497	A	I	NOTE 11B	2.000	1.312	1.687	1.375	.078	.048	.078	.093	NA	NA	1.125	.750	.593
553	AC	OPTICAL UNIT AND BELLOWS ASSEMBLY		2010790-111		NAS-9-497	A	I	NOTE 11B	2.000	1.312	1.687	1.375	.078	.048	.078	.093	NA	NA	1.125	.750	.593
552	AC	OPTICAL UNIT AND BELLOWS ASSEMBLY		2010790-081		NAS-9-497	A	I	NOTE 11B	2.000	1.312	1.687	1.375	.078	.048	.078	.093	NA	NA	1.125	.750	.593
551	AC	OPTICAL UNIT AND BELLOWS ASSEMBLY		2010790-071		NAS-9-497	A	I	NOTE 11B	2.000	1.312	1.687	1.375	.078	.048	.078	.093	NA	NA	1.125	.750	.593
550	AC	OPTICAL UNIT AND BELLOWS ASSEMBLY		2010790-061		NAS-9-497	A	I	NOTE 11B	2.000	1.312	1.687	1.375	.078	.048	.078	.093	NA	NA	1.125	.750	.593
548		CAGING ELECTRONICS, GYRO		2900029-031		NAS-9-497	B	II	NOTE 11C	2.125	.968	1.718	NA	.093	.031	.06	.093	[illegible]	.093	.858	.608	.484
547		CSL, CAL AND TEST, SCM/PSAAM		2900895-021		NAS-9-497	B	II	NOTE 11C	4.125	1.812	3.250	NA	.125	.062	.12	.156		.125	1.625	1.140	.890
546		FIX., HAND., C/M AND LEM CDU		2900999-021		NAS-9-497	B	II	NOTE 11C	2.125	.968	1.718	NA	.093	.031	.06	.093	[illegible]	.093	.858	.608	.484
545	AC	G & N INDICATOR CONTROL PANEL ASSY		2014578-021		NAS-9-497	A	I	NOTE 11B	3.000	1.938	2.437	NA	.125	.062	.188	.156	NA	NA	1.750	1.125	.506
544		ADPT MODULE, P.S.A.		1902431-051		NAS-9-497	B	II	NOTE 11C	2.125	.968	1.718	NA	.093	.031	.06	.093	[illegible]	.093	.858	.608	.484
543	AC	PANEL, MONITOR		2900031-041		NAS-9-497	B	II	NOTE 11C	2.125	.968	1.718	NA	.093	.031	.06	.093		.093	.858	.608	.484
542	AC	BATTERY PACK, LIFTING		2900812-021		NAS-9-497	B	II	NOTE 11C	2.125	.968	1.718	NA	.093	.031	.06	.093		.093	.858	.608	.484
541	AC	FIXTURE, MOUNTING, IMU		2900000-021		NAS-9-497	B	II	NOTE 11C	4.125	1.812	3.250	NA	.125	.062	.12	.156		.125	1.625	1.140	.890
540	AC	ADPT, TEST POINT, P.S.A.		2900037-031		NAS-9-497	B	II	NOTE 11C	2.125	.968	1.718	NA	.093	.031	.06	.093	[illegible]	.093	.858	.608	.484
539	AC	ANNUNCIATOR PANEL & EYEPIECE STORAGE ASSEMBLY		1021255-041		NAS-9-497	A	I	NOTE 11B	2.000	1.312	1.906	1.375	.078	.048	.078	.093	NA	NA	1.125	.750	.593
538	AC	ANNUNCIATOR PANEL & EYEPIECE STORAGE ASSEMBLY		1021255-031		NAS-9-497	A	I	NOTE 11B	2.000	1.312	1.906	1.375	.078	.048	.078	.093	NA	NA	1.125	.750	.593
537	AC	TEST SELECTOR		2900028-031		NAS-9-497	B	II	NOTE 11C	2.125	.968	1.718	NA	.093	.031	.06	.093	[illegible]	.093	.858	.608	.484
536	AC	ANALYZER, OPTICS-INERTIAL		2900023-041		NAS-9-497	B	II	NOTE 11C	4.125	1.812	3.250	NA	.125	.062	.12	.156		.125	1.625	1.140	.890
535	AC	CONT, TEMP, PORTABLE		2900060-021		NAS-9-497	B	II	NOTE 11C	2.125	.968	1.718	NA	.093	.031	.06	.093	[illegible]	.093	.858	.608	.484
534	AC	COMPUTER CONT & RETICLE DIMMER		6014512-021		NAS-9-497	A	I	NOTE 11B	2.000	1.312	1.906	1.375	.078	.048	.078	.093	NA	NA	1.125	.750	.593
533	AC	ADPT MODULE, P.S.A.		1902431-041		NAS-9-497	B	II	NOTE 11C	2.125	.968	1.718	NA	.093	.031	.06	.093	[illegible]	.093	.858	.608	.464
532	AC	TRAY BREAKOUT, 105 PIN		1900807-021		NAS-9-497	B	II	NOTE 11C	4.125	1.812	3.250	NA	.125	.062	.12	.156		.125	1.625	1.140	.890
531	AC	TRAY BREAKOUT, 84 PIN		1900806-021		NAS-9-497	B	II	NOTE 11C	4.125	1.812	3.250	NA	.125	.062	.12	.156		.125	1.625	1.140	.890
530	AC	HEAT SINK-TRAY EXTENDER		1900808-021		NAS-9-497	B	II	NOTE 11C	2.125	.968	1.718	NA	.093	.031	.06	.093		.093	.858	.608	.484
529	AC	TESTER, FAILURE INDICATOR		1900809-021		NAS-9-497	B	II	NOTE 11C	2.125	.968	1.718	NA	.093	.031	.06	.093	[illegible]	.093	.858	.608	.484
527	AC	FIX., MOUNTING, G & N	(-144)	1902204-021		NAS-9-497	B	II	NOTE 11C	FOR DIMENSIONS SEE DASH 500 VALUES BELOW												
526	AC	FIX., MOUNTING, G & N	(-144)	2900067-031		NAS-9-497	B	II	NOTE 11C	FOR DIMENSIONS SEE DASH 500 VALUES BELOW												
525	AC	PORTABLE TEMP. CONTROLLER		1900496-021		NAS-9-497	B	II	NOTE 11C	3.000	1.937	2.437	2.312	.125	.031	.125	.156	.125	.125	1.718	1.187	.6
524	AC	POWER, SERVO & THERMOCOUPLE ASSEMBLY C/M		2010743		NAS-9-497	A	I	NOTE 11B	2.125	.968	1.718	NA	.093	.031	.06	.093	NA	NA	.858	.608	.4
523	AC	PULSE TORQUE AND THERMOCOUPLE ASSEMBLY-LEM		6010656		NAS-9-497	A	I	NOTE 11B	FOR DIMENSIONS SEE DASH 508 VALUES BELOW												
522	AC	COUPLING DATA UNIT & THERMOCOUPLE ASSEMBLY-LEM		2010744		NAS-9-497	A	I	NOTE 11B	FOR DIMENSIONS SEE DASH 508 VALUES BELOW												
521	AC	COUPLING DATA UNIT & THERMOCOUPLE ASSEMBLY-C/M		2010744		NAS-9-497	A	I	NOTE 11B	FOR DIMENSIONS SEE DASH 508 VALUES BELOW												
520	AC	PIPA ELECTRONICS AND THERMOCOUPLE ASSEMBLY		2010745		NAS-9-497	A	I	NOTE 11B	FOR DIMENSIONS SEE DASH 508 VALUES BELOW												
519	AC	FIXTURE, HANDLING, LEM-PSA	(-141)	6900129-011		NAS-9-497	B	II	NOTE 11C	FOR DIMENSIONS SEE DASH 504 VALUES BELOW												
518	AC	JUNCTION BOX, GSE-PSA	(-144)	1901933-031		NAS-9-497	B	II	NOTE 11C	FOR DIMENSIONS SEE DASH 500 VALUES BELOW												
517	AC	FIX., HAND., OPTICS INSTL.	(-141)	2901380-011		NAS-9-497	B	II	NOTE 11C	FOR DIMENSIONS SEE DASH 502 VALUES BELOW												
516	AC	POWER, SERVO AND THERMOCOUPLE ASSEMBLY-LEM		6010655		NAS-9-497	A	I	NOTE 11B	FOR DIMENSIONS SEE DASH 508 VALUES BELOW												
514	AC	SIGNAL COND. ASSY LEM OPER.	(-100)	6007013		NAS-9-497	A	I	NOTE 11B	FOR DIMENSIONS SEE DASH 508 VALUES BELOW												
513	AC	JUMPER, BY-PASS	(-141)	1021616		NAS-9-497	B	II	NOTE 11C	2.125	.968	1.718	NA	.093	.031	.06	.093	[illegible]	.093	.858	.608	.4
512	AC	COUPLING DATA UNIT ASSEMBLY C/M	(-100)	2007322-011		NAS-9-497	A	I	NOTE 11B	FOR DIMENSIONS SEE DASH 508 VALUES BELOW												
511	AC	COUPLING DATA UNIT ASSEMBLY-LEM	(-100)	2007322-021		NAS-9-497	A	I	NOTE 11B	FOR DIMENSIONS SEE DASH 508 VALUES BELOW												
510	AC	BATTERY POWER PACK	(-144)	1900011-041		NAS-9-497	B	II	NOTE 11C	FOR DIMENSIONS SEE DASH 500 VALUES BELOW												
509	AC	JUNCTION BOX, P.S.A./G.S.E.	(-144)	1902195-021		NAS-9-497	B	II	NOTE 11C	FOR DIMENSIONS SEE DASH 500 VALUES BELOW												
508	AC	NAVIGATION BASE ASSEMBLY-LEM	(-101)	6899980		NAS-9-497	A	I	NOTE 11B	2.000	1.312	1.906	1.375	.078	.048	.078	.093	NA	NA	1.125	.750	.5
507	AC	CSL, COOL. AND PWR, G AND N	(-144)	1902134-041		NAS-9-497	B	II	NOTE 11C	FOR DIMENSIONS SEE DASH 500 VALUES BELOW												
506	AC	BREAKOUT BOX, CABLE ADAPTER	(-141)	2901011-011		NAS-9-497	B	II	NOTE 11C	2.125	.968	1.718	NA	.093	.031	.06	.093	[illegible]	.093	.858	.608	.4
505	AC	MONITOR AND CONTROL, TEMP	(-141)	2900026-021		NAS-9-497	B	II	NOTE 11C	2.125	.968	1.718	NA	.093	.031	.06	.093		.093	.858	.608	.4
504	AC	PWR SUP, GUIDANCE SYSTEM	(-141)	1900033-021		NAS-9-497	B	II	NOTE 11C	2.125	.968	1.718	NA	.093	.031	.06	.093		.093	.858	.608	.4
503	AC	CONTROL, GIMBAL POSITION	(-141)	2900036-021		NAS-9-497	B	II	NOTE 11C	2.125	.968	1.718	NA	.093	.031	.06	.093		.093	.858	.608	.4
502	AC	ADPT, TEST POINT, PTA/PEA.	(-141)	2900145-021		NAS-9-497	B	II	NOTE 11C	2.125	.968	1.718	NA	.093	.031	.06	.093	[illegible]	.093	.858	.608	.4
501	AC	MOUNTING PLATE, COMPONENT	(-144)	6900007-031		NAS-9-497	B	II	NOTE 11C	FOR DIMENSIONS SEE DASH 500 VALUES BELOW												
500	AC	MOUNTING PLATE, COMPONENT	(-144)	2900677-021		NAS-9-497	B	II	NOTE 11C	4.125	1.812	3.250	NA	.125	.062	.12	.156	[illegible]	.125	1.625	1.140	.

NOTES FOR TABLE

STYLE A IS FOR G & N SYSTEM
STYLE B IS FOR GROUND SUPPORT EQUIPMENT
TYPE I IS WITHOUT MOUNTING HOLES
TYPE II IS WITH MOUNTING HOLES

1004260 CU SHT 6

1/1004260

REVISIONS					
SYM	ZONE	DESCRIPTION	CHG NO	DATE	APPD
CL		REPLACES REV CK WITH CHANGE PER TDRR 34365		9/28/67	JWL RWH
CM		REVISED PER TDRR 34395		17 OCT 67	RAW.
CN		REVISED PER TDRR 34467		31 OCT 67	JRK
CP		REVISED PER TDRR 34855		6 NOV 67	EMS
CR		REVISED PER TDRR 35164		7 DEC 67	DRD RWH
CS		REVISED PER TDRR 35307		3 JAN 68	
CT		REVISION STATUS CHANGED		7 FEB 68	
CU		REVISED PER TDRR 35628		22 FEB 68	JRK

DASH 535 VALUES																																
DASH 542 VALUES																																
DASH 500 VALUES																																
550 VALUES																																
181																																
181																																
181																																
534																																
500																																
500																																
141 VALUES																																
534 VALUES																																
181 VALUES																																
141 VALUES																																
141 VALUES																																
500 VALUES																																
.078	.048	.078	.093	NA	NA	1.125	.750	.593	.453	1.015	.062	.187	.078	.875	.718	1.375	.218	NA	NA	.048	.031	.875	.305	NA	.468	1.531	NA	NA	.078	.312	.187	NA
.078	.048	.078	.093	NA	NA	1.125	.750	.593	.453	1.015	.062	.187	.078	.875	.718	1.375	.218	NA	NA	.048	.031	.875	.305	NA	.468	1.531	NA	NA	.078	.312	.187	NA
.078	.048	.078	.093	NA	NA	1.125	.750	.593	.453	1.015	.062	.187	.078	.875	.718	1.375	.218	NA	NA	.048	.031	.875	.305	NA	.468	1.531	NA	NA	.078	.312	.187	NA
.078	.048	.078	.093	NA	NA	1.125	.750	.593	.453	1.015	.062	.187	.078	.875	.718	1.375	.218	NA	NA	.048	.031	.875	.305	NA	.468	1.531	NA	NA	.078	.312	.187	NA
.078	.048	.078	.093	NA	NA	1.125	.750	.593	.453	1.015	.062	.187	.078	.875	.718	1.375	.218	NA	NA	.048	.031	.875	.305	NA	.468	1.531	NA	NA	.078	.312	.187	NA
.078	.048	.078	.093	NA	NA	1.125	.750	.593	.453	1.015	.062	.187	.078	.875	.718	1.375	.218	NA	NA	.048	.031	.875	.305	NA	.468	1.531	NA	NA	.078	.312	.187	NA
.093	.031	.06	.093	⊠	.093	.858	.608	.484	.358	.733	.077	.116	.062	.937	.875	1.343	.125	.781	1.892	.046	NA	NA	.209	.093	.250	1.875	NA	1.840	.046	.23	.16	1.938
.125	.062	.12	.156		.125	1.625	1.140	.890	.640	1.390	.125	.171	.125	1.875	1.687	2.625	.250	1.562	3.843	.093	NA	NA	.359	.125	.437	3.688	NA	3.687	.093	.40	.25	3.875
.093	.031	.06	.093	⊠	.093	.858	.608	.484	.358	.733	.077	.116	.062	.937	.875	1.343	.125	.781	1.892	.046	NA	NA	.209	.093	.250	1.875	NA	1.840	.046	.23	.16	1.938
.125	.062	.198	.156	NA	NA	1.750	1.125	.906	.688	1.500	NA	.281	.125	NA	1.094	2.062	.312	NA	2.500	.062	.125	1.312	.469	NA	NA	NA	.156	NA	.125	.469	.344	NA
.093	.031	.06	.093	⊠	.093	.858	.608	.484	.358	.733	.077	.116	.062	.937	.875	1.343	.125	.781	1.892	.046	NA	NA	.209	.093	.250	1.875	NA	1.840	.046	.23	.25	1.938
.093	.031	.06	.093		.093	.858	.608	.484	.358	.733	.077	.116	.062	.937	.875	1.343	.125	.781	1.892	.046	NA	NA	.209	.093	.250	1.875	NA	1.840	.046	.23	.16	1.938
.093	.031	.06	.093		.093	.858	.608	.484	.358	.733	.077	.116	.062	.937	.875	1.343	.125	.781	1.892	.046	NA	NA	.209	.093	.250	1.875	NA	1.840	.046	.23	.16	1.938
.125	.062	.12	.156		.125	1.625	1.140	.890	.640	1.390	.125	.171	.125	1.875	1.687	2.625	.250	1.562	3.843	.093	NA	NA	.359	.125	.437	3.688	NA	3.687	.093	.40	.25	3.875
.093	.031	.06	.093	⊠	.093	.858	.608	.484	.358	.733	.077	.116	.062	.937	.875	1.343	.125	.781	1.892	.046	NA	NA	.209	.093	.250	1.875	NA	1.840	.046	.23	.16	1.938
.078	.048	.078	.093	NA	NA	1.125	.750	.593	.453	1.015	.062	.187	.078	.875	.718	1.375	.218	NA	NA	.048	.031	.875	.305	.078	.531	1.906	.078	NA	.078	.531	.187	NA
.078	.048	.078	.093	NA	NA	1.125	.750	.593	.453	1.015	.062	.187	.078	.875	.718	1.375	.218	NA	NA	.048	.031	.875	.305	.078	.531	1.906	.078	NA	.078	.531	.187	NA
.093	.031	.06	.093	⊠	.093	.858	.608	.484	.358	.733	.077	.116	.062	.937	.875	1.343	.125	.781	1.892	.046	NA	NA	.209	.093	.250	1.875	NA	1.840	.046	.23	.16	1.938
.125	.062	.12	.156		.125	1.625	1.140	.890	.640	1.390	.125	.171	.125	1.875	1.687	2.625	.250	1.562	3.843	.093	NA	NA	.359	.125	.437	3.688	NA	3.687	.093	.40	.25	3.875
.093	.031	.06	.093	⊠	.093	.858	.608	.484	.358	.733	.077	.116	.062	.937	.875	1.343	.125	.781	1.892	.046	NA	NA	.209	.093	.250	1.875	NA	1.840	.046	.23	.16	1.938
.078	.048	.078	.093	NA	NA	1.125	.750	.593	.453	1.015	.062	.187	.078	.875	.718	1.375	.218	NA	NA	.048	.031	.875	.305	.078	.531	1.906	.078	NA	.078	.531	.187	NA
.093	.031	.06	.093	⊠	.093	.858	.608	.484	.358	.733	.077	.116	.062	.937	.875	1.343	.125	.781	1.892	.046	NA	NA	.209	.093	.250	1.875	NA	1.840	.046	.23	.16	1.938
.125	.062	.12	.156		.125	1.625	1.140	.890	.640	1.390	.125	.171	.125	1.875	1.687	2.625	.250	1.562	3.843	.093	NA	NA	.359	.125	.437	3.688	NA	3.687	.093	.40	.25	3.875
.125	.062	.12	.156		.125	1.625	1.140	.890	.640	1.390	.125	.171	.125	1.875	1.687	2.625	.250	1.562	3.843	.093	NA	NA	.359	.125	.437	3.688	NA	3.687	.093	.40	.25	3.875
.093	.031	.06	.093		.093	.858	.608	.484	.358	.733	.077	.116	.062	.937	.875	1.343	.125	.781	1.892	.046	NA	NA	.209	.093	.250	1.875	NA	1.840	.046	.23	.16	1.938
.093	.031	.06	.093	⊠	.093	.858	.608	.484	.358	.733	.077	.116	.062	.937	.875	1.343	.125	.781	1.892	.046	NA	NA	.209	.093	.250	1.875	NA	1.840	.046	.23	.16	1.938
500 VALUES BELOW																																
500 VALUES BELOW																																
.125	.031	.125	.156	.125	.125	1.718	1.187	.968	.749	1.452	.093	.295	.090	1.312	1.00	2.000	.250	1.687	2.750	.062	NA	NA	.463	.125	.562	2.437	.140	2.562	.090	.468	.359	2.750
.093	.031	.06	.093	NA	NA	.858	.608	.484	.358	.733	.062	.140	.062	NA	.968	1.450	.125	NA	1.720	.046	.03	NA	.210	NA	NA	NA	.070	NA	.046	.32	.16	NA
500 VALUES BELOW																																
508 VALUES BELOW																																
500 VALUES BELOW																																
508 VALUES BELOW																																
504 VALUES BELOW																																
500 VALUES BELOW																																
502 VALUES BELOW																																
508 VALUES BELOW																																
508 VALUES BELOW																																
.093	.031	.06	.093	⊠	.093	.858	.608	.484	.358	.733	.077	.116	.062	.937	.875	1.343	.125	.781	1.892	.046	NA	NA	.209	.093	.250	1.875	NA	1.840	.046	.23	.16	1.938
508 VALUES BELOW																																
508 VALUES BELOW																																
500 VALUES BELOW																																
500 VALUES BELOW																																
.078	.048	.078	.093	NA	NA	1.125	.750	.593	.453	1.015	.062	.187	.078	.875	.718	1.375	.218	NA	NA	.048	.031	.875	.305	.078	.531	1.906	.078	NA	.078	.531	.187	NA
500 VALUES BELOW																																
.093	.031	.06	.093	⊠	.093	.858	.608	.484	.358	.733	.077	.116	.062	.937	.875	1.343	.125	.781	1.892	.046	NA	NA	.209	.093	.250	1.875	NA	1.840	.046	.23	.16	1.938
.093	.031	.06	.093		.093	.858	.608	.484	.358	.733	.077	.116	.062	.937	.875	1.343	.125	.781	1.892	.046	NA	NA	.209	.093	.250	1.875	NA	1.840	.046	.23	.16	1.938
.093	.031	.06	.093		.093	.858	.608	.484	.358	.733	.077	.116	.062	.937	.875	1.343	.125	.781	1.892	.046	NA	NA	.209	.093	.250	1.875	NA	1.840	.046	.23	.16	1.938
.093	.031	.06	.093		.093	.858	.608	.484	.358	.733	.077	.116	.062	.937	.875	1.343	.125	.781	1.892	.046	NA	NA	.209	.093	.250	1.875	NA	1.840	.046	.23	.16	1.938
.093	.031	.06	.093	⊠	.093	.858	.608	.484	.358	.733	.077	.116	.062	.937	.875	1.343	.125	.781	1.892	.046	NA	NA	.209	.093	.250	1.875	NA	1.840	.046	.23	.16	1.938
500 VALUES BELOW																																
.125	.062	.12	.156	⊠	.125	1.625	1.140	.890	.640	1.390	.125	.171	.125	1.875	1.687	2.625	.250	1.562	3.843	.093	NA	NA	.359	.125	.437	3.688	NA	3.687	.093	.40	.25	3.875
E	F	G	H	J	K	L	M	N	P	R	S	T	U	V	W	Y	Z	AA	AB	AC	AD	AE	AF	AG	AH	AJ	AK	AL	AM	AN	AP	AR

AC ELECTRONICS DASH NUMBERS

AS APPLICABLE	UNLESS OTHERWISE SPECIFIED DIMENSIONS ARE IN INCHES TOLERANCES ON 2 PLACE DECIMALS ± — 3 PLACE DECIMALS ± .005 ANGLES ± —	MIT INSTRUMENTATION LAB Cambridge Mass	MANNED SPACECRAFT CENTER HOUSTON TEXAS	
NEXT ASSY	USED ON	DRAWN R A JONES DATE 16 JUL 65	NAMEPLATES, APOLLO GEN - GSE (STANDARDS)	
APPLICATION	DO NOT SCALE THIS DRAWING	CHECKED W KUPFER 22 JUL 65 APPROVAL		
	MATERIAL SEE NOTE 11	CONTRACT		
	APPROVAL	T. MICHAELS 22 JUL 65 NASA APPROVAL W KUPFER 22 JUL 65 MIT APPROVAL	SIZE J2	CODE IDENT NO 80230
			SCALE NONE	1004260 SHEET 6 OF 6

NOTES:

1. INTERPRET DRAWING IN ACCORDANCE WITH STANDARDS PRESCRIBED BY MIL-D-70327.
2. DIMENSIONS ON EACH VIEW APPLY TO ALL VIEWS (WITH THE EXCEPTION OF MOUNTING HOLES).
3. FORMATS ILLUSTRATED WILL BE APPLICABLE TO ALL ITEMS REQUIRING NAMEPLATES BELOW END ITEM DESIGNATION (SYSTEMS, ASSEMBLIES, ETC.)
4. PLATE BACKGROUND TO BE LUSTERLESS BLACK PER FED-STD-595, COLOR 37038. BORDER, MARKING AND LETTERING TO BE NATURAL METAL, (ANODIZED ALUMINUM).
5. MARKING METHOD TO BE DIE STAMPING, ETCHING OR ENGRAVING IN ACCORDANCE WITH MIL-P-19834.
6. LETTERING STYLE TO BE GOTHIC, (SANS SERIFS), AND NUMBERS TO BE ARABIC.
7. WHERE LOCATING DIMENSIONS ARE NOT SHOWN, CHARACTERS SHALL BE SYMMETRICALLY POSITIONED.
8. IDENTIFY WITH DRAWING NUMBER PER ND 1002019.
9. WHEN "AUTO MARK" METAL MARKING TYPEWRITER IS USED TO ADD DATA TO BLANK SPACES, TYPE SIZE IS TO BE SELECTED FROM DIMENSIONS U, AC, AND AM.
10. NASA SYMBOL IS TO BE PROPORTIONAL TO NAMEPLATE IN RATIO OF 1 TO 5 WITH DIMENSION A VALUE AND IS TO HAVE NATURAL BACKGROUND. NASA SYMBOL LETTERS LETTERING AND FEATHER TO BE BLACK, (OR WHITE FOR SILK SCREENING). WHERE BLACK FEATHER PROTRUDES INTO BLACK BACKGROUND, A MINIMUM OUTLINE OF NATURAL BACKGROUND SHALL EXIST.
11. NAMEPLATES WILL BE APPLIED BY METHODS LISTED BELOW, SHOWN IN ORDER OF PREFERENCE, (I.E., FOR RELIABILITY AND WEIGHT).
    A - STENCIL OR SILK SCREEN DIRECTLY ON EQUIPMENT USING INK PER SCD 1010920, (WHITE OR BLACK).
    B - ALUMINUM FOIL, (STYLE A OR B, TYPE I):
    FOIL SHALL BE .0030 ± .0005 THICK PER MIL-A-148.
    FOIL SHALL HAVE NO ADHESIVE BACKING.
    FOIL SHALL BE BONDED PER ND 1002219, (METHOD II).
    FOIL SHALL BE CLEAR ANODIZED PER MIL-A-8625, TYPE II.
    C - PLATE, (STYLE A OR B, TYPE II):
    MATERIAL: QQ-A-250, TEMPER 0 OR H14, TYPE 1100, ALUMINUM ALLOY, .032 THICK. ANODIZE PER MIL-A-8625, TYPE II.
    ALUMINUM PLATE MUST BE FREE FROM BURRS AND SHARP CORNERS, MOUNTED WITH APPLICABLE SIZE FASTENERS.
12. NAMEPLATES SHALL BE CAPABLE OF MEETING APPLICABLE REQUIREMENTS OF MIL-M-13231.
13. ON DIMENSION TABLES SHOWN ON PAGES 2, 3, 4, 5, AND 6, NA MEANS, "NOT APPLICABLE".

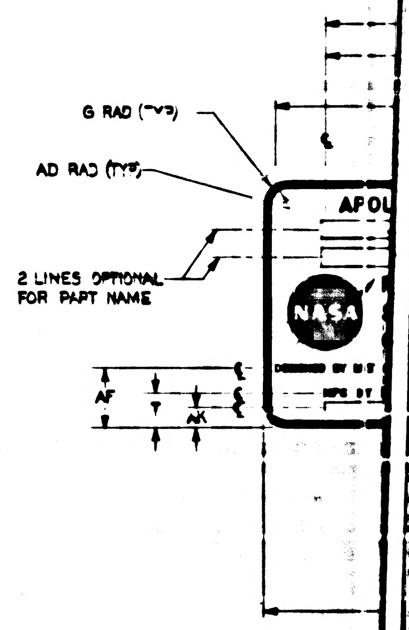

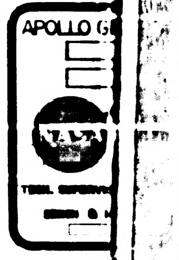

SUGGESTED PROPORTIONS FOR NAMEPLATE DIMENSIONS.
1. SELECT NAMEPLATE LENGTH, DIMENSION "A", TO FIT DESIGN NEEDS.
2. DIMENSIONS B THRU AS ON LINE 1 BELOW ARE PROPORTIONAL TO "A" BY MULTIPLIERS SHOWN IN LINE 2 BELOW.

1.	A	B	C	D	E	F	G	H	J	K	L	M	N	P	R	S	T	U
2.	1.000A	.6563A	.8438A	.6875A	.0391A	.0240A	.0391A	.0469A	.0547A	.0469A	.5938A	.3750A	.2969A	.2187A	.5079A	.0313A	.0938A	.0391A

1.	V	W	Y	Z	AA	AB	AC	AD	AE	AF	AG	AH	AJ	AK	AL	AM	AN	AP	AR	AS
2.	.4375A	.3594A	.6875A	.1094A	.5781A	.9219A	.0240A	.0156A	.4375A	.1525A	.0391A	.1563A	.8438A	.0548A	.8659A	.0391A	.1563A	.0938A	.9219A	.0151A

SYM	ZONE	DESCRIPTION	CHG NO	DATE	APPD
CL		REPLACES REV CK WITHOUT CHANGE PER TDRR 34365		1/23/67	JWL RWH
CM		REVISION STATUS CHANGED		18 OCT 67	RAW
CN		REVISION STATUS CHANGED		31 OCT 67	JRK
CP		REVISION STATUS CHANGED		6 NOV 67	
CR		REVISION STATUS CHANGED		1 JAN 68	RHH
CS		REVISION STATUS CHANGED		3 JAN 68	RWH
CT		REVISION STATUS CHANGED		1 FEB 68	LK
CU		REVISION STATUS CHANGED		22 FEB 68	JRK
CV		REVISION STATUS CHANGED		27 FEB 68	JK

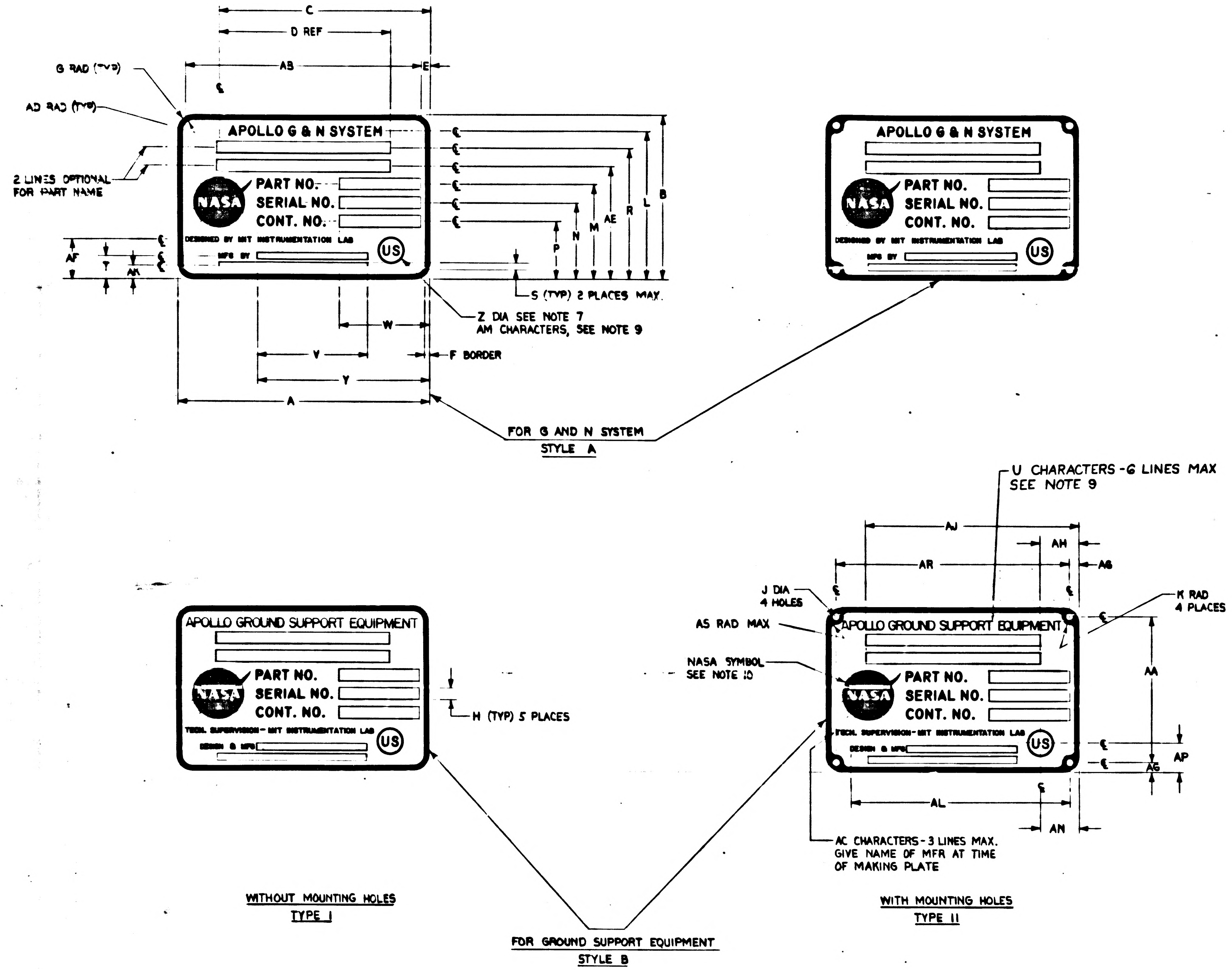
C
D REF
AB
E
G RAD (TYP)
AD RAD (TYP)
2 LINES OPTIONAL FOR PART NAME
APOLLO G & N SYSTEM
PART NO.
SERIAL NO.
CONT. NO.
NASA
DESIGNED BY MIT INSTRUMENTATION LAB
MFG BY
US
B
L
R
AE
M
N
P
AF
T
AK
S (TYP) 2 PLACES MAX.
Z DIA SEE NOTE 7
AM CHARACTERS, SEE NOTE 9
W
V
F BORDER
Y
A
APOLLO GROUND SUPPORT EQUIPMENT
TECH. SUPERVISION - MIT INSTRUMENTATION LAB
DESIGN & MFG
H (TYP) 5 PLACES
U CHARACTERS - 6 LINES MAX
SEE NOTE 9
AJ
AH
AR
AG
J DIA
4 HOLES
K RAD
4 PLACES
AS RAD MAX
NASA SYMBOL
SEE NOTE 10
AA
AP
AL
AN
AC CHARACTERS - 3 LINES MAX.
GIVE NAME OF MFR AT TIME
OF MAKING PLATE

FOR G AND N SYSTEM
STYLE A

WITHOUT MOUNTING HOLES
TYPE I

WITH MOUNTING HOLES
TYPE II

FOR GROUND SUPPORT EQUIPMENT
STYLE B

AS APPLICABLE	
NEXT ASSY	USED ON
APPLICATION	

UNLESS OTHERWISE SPECIFIED
DIMENSIONS ARE IN INCHES
TOLERANCES ON
2 PLACE DECIMALS ± 3 PLACE DECIMALS ± .005 ANGLES ±
DO NOT SCALE THIS DRAWING
MATERIAL SEE NOTE 11
APPROVAL

M I T
INSTRUMENTATION LAB
CAMBRIDGE MASS
DRAWN R. A. JONES DATE 16 JUL 65
CHECKED W. KUPFER 22 JUL 65
APPROVAL
CONTRACT
T. MICHAELS 22 JUL 65 NASA APPROVAL
W. KUPFER 22 JUL 65 MIT APPROVAL

MANNED
SPACECRAFT CENTER
HOUSTON, TEXAS

NAMEPLATES,
APOLLO G&N - GSE
(STANDARDS)

SIZE J2 CODE IDENT NO. 80230 1004260
SCALE NONE SHEET OF 6

1004260 CV SHT 1

1004260 CV

1004260

08SA001

[illegible]

DASH NO.	P/C	PART NAME	REMARKS	PART NUMBER	SER. NO.	CONT. NO.	STYLE	TYPE	MATERIAL	A	B	C	D	E	F	G	H	J	K	L	M	N
399	K																					
398	K																					
350	K	ALIGNMENT OPTICAL TELESCOPE (LEM)		NA	NA	NA	A	I	NOTE 11B	4.000	2.625	3.375	2.750	.156	.093	.156	.187	NA	NA	2.312	1.468	1.18
309	K																					
308	K																					
307	K						B	I	NOTE 11B	4.000	2.625	3.375	2.750	.156	.093	.156	.187	NA	NA	2.328	1.468	1.187
306	K						B	II	NOTE 11C	4.000	2.625	3.375	2.750	.156	.093	.156	.187	.125	.156	2.328	1.468	1.187
305	K						B	I	NOTE 11B	2.000	1.312	1.687	1.375	.078	.048	.078	.093	NA	NA	1.164	.734	.593
304	K						B	II	NOTE 11C	2.000	1.312	1.687	1.375	.078	.048	.078	.093	.070	.078	1.164	.734	.593
303	K																					
302	K																					
301	K																					
300	K	OPTICAL UNIT		NA	NA	NA	A	I	NOTE 11B	2.000	1.312	1.675	NA	NA	.048	.078	NA	NA	NA	1.090	.812	.675
9	K	2 IN AUTOCOLLIMATOR		1001702			B	II	NOTE 11C	4.000	2.625	3.812	2.750	.156	.093	.156	.187	.125	.156	2.250	1.500	1.187
8	K	5 IN AUTOCOLLIMATOR		1017410			B	II	NOTE 11C	4.000	2.625	3.812	2.750	.156	.093	.156	.187	.125	.156	2.250	1.500	1.187
7	K	2-1/2 IN AUTOCOLLIMATOR (SCT)		1017435			B	II	NOTE 11C	4.000	2.625	3.812	2.750	.156	.093	.156	.187	.125	.156	2.250	1.500	1.187
6	K	2-1/2 IN AUTOCOLLIMATOR (SXT)		1017448			B	II	NOTE 11C	4.000	2.625	3.812	2.750	.156	.093	.156	.187	.125	.156	2.250	1.500	1.187
5	K	RETROREFLECTING PRISM ASSEMBLY		1019840			B	I	NOTE 11B	4.000	2.625	3.812	2.750	.156	.093	.156	.187	NA	NA	2.250	1.500	1.187
4	K	S/H SIMULATOR ASSEMBLY		1019896			B	I	NOTE 119	4.000	2.625	3.812	2.750	.156	.093	.156	.187	NA	NA	2.250	1.500	1.187
3	K	REFERENCE MIRROR		1001767			B	I	NOTE 11B	2.000	1.312	1.906	1.375	.078	.048	.078	.093	NA	NA	1.125	.750	.593
2	K	2 IN PLANE READING AUTOCOLLIMATOR		1017413			B	I	NOTE 11B	2.000	1.312	1.906	1.375	.078	.048	.078	.093	NA	NA	1.125	.750	.593
1	K	2 IN AUTOCOLLIMATOR		1001702			B	I	NOTE 11B	2.000	1.312	1.906	1.375	.078	.048	.078	.093	NA	NA	1.125	.750	.593

NOTES FOR TABLE

STYLE A IS FOR G & N SYSTEM
STYLE B IS FOR GROUND SUPPORT EQUIPMENT
TYPE I IS WITHOUT MOUNTING HOLES
TYPE II IS WITH MOUNTING HOLES

REVISIONS					
SYM	ZONE	DESCRIPTION	CHG NO	DATE	APPD
CL		REPLACES REV CK WITHOUT CHANGE PER TDRR 34365		9 SEP 67	JWL
CM		REVISION STATUS CHANGED		18 OCT 67	R.A.W.
CN		REVISION STATUS CHANGED		31 OCT 67	JRK
CP		REVISION STATUS CHANGED		6 NOV 67	EHS
CR		REVISION STATUS CHANGED		7 DEC 67	
CS		REVISION STATUS CHANGED		3 JAN 68	J.W. EHW
CT		REVISION STATUS CHANGED		7 FEB 68	LK
CU		REVISION STATUS CHANGED		28 FEB	JRK
CV		REVISION STATUS CHANGED		68	LK

E	F	G	H	J	K	L	M	N	P	R	S	T	U	V	W	Y	Z	AA	AB	AC	AD	AE	AF	AG	AH	AJ	AK	AL	AM	AN	AP	AR
[illegible]	.093	.156	.187	NA	NA	2.312	1.468	1.187	.906	2.031	NA	.375	.156	NA	1.437	2.750	.437	NA	3.688	.062	.062	1.750	.593	NA	.625	3.375	.187	NA	.156	.531	.453	NA
[illegible]	.093	.156	.187	NA	NA	2.328	1.468	1.187	.906	2.031	.062	.375	.156	NA	1.437	2.750	.437	NA	3.687	.062	.062	1.750	.593	NA	NA	NA	NA	NA	NA	NA	NA	NA
[illegible]	.093	.156	.187	.125	.156	2.328	1.468	1.187	.906	2.031	.062	.375	.156	NA	1.437	2.750	.437	2.312	3.687	.062	NA	1.750	.593	NA	NA	NA	NA	NA	NA	NA	NA	NA
[illegible]	.048	.078	.093	NA	NA	1.164	.734	.593	.453	1.015	.048	.171	.078	NA	.718	1.375	.187	NA	NA	.048	.031	.875	.320	NA	NA	NA	NA	NA	NA	NA	NA	NA
[illegible]	.048	.078	.093	.070	.078	1.164	.734	.593	.453	1.015	.048	.171	.078	NA	.718	1.375	.187	.156	1.843	.048	NA	.875	.320	NA	NA	NA	NA	NA	NA	NA	NA	NA
NA	.048	.078	NA	NA	NA	1.090	.812	.675	.540	.940	NA	.265	NA	NA	NA	1.375	.218	NA	NA	NA	NA	NA	.375	NA	NA	NA	.180	NA	.078	NA	NA	NA
[illegible]	.093	.156	.187	.125	.156	2.250	1.500	1.187	.906	2.031	.093	.375	.156	1.750	1.437	2.750	.437	2.312	3.687	.062	NA	1.750	.593	.156	1.062	3.812	.156	NA	.156	1.062	.375	3.687
[illegible]	.093	.156	.187	.125	.156	2.250	1.500	1.187	.906	2.031	.093	.375	.156	1.750	1.437	2.750	.437	2.312	3.687	.062	NA	1.750	.593	.156	1.062	3.812	.156	NA	.156	1.062	.375	3.687
[illegible]	.093	.156	.187	.125	.156	2.250	1.500	1.187	.906	2.031	.093	.375	.156	1.750	1.437	2.750	.437	2.312	3.687	.062	NA	1.750	.593	.156	1.062	3.812	.156	NA	.156	1.062	.375	3.687
[illegible]	.093	.156	.187	.125	.156	2.250	1.500	1.187	.906	2.031	.093	.375	.156	1.750	1.437	2.750	.437	2.312	3.687	.062	NA	1.750	.593	.156	1.062	3.812	.156	NA	.156	1.062	.375	3.687
[illegible]	.093	.156	.187	NA	NA	2.250	1.500	1.187	.906	2.031	.093	.375	.156	1.750	1.437	2.750	.437	NA	NA	.062	.062	1.750	.593	.156	1.062	3.812	.156	NA	.156	1.062	.375	NA
[illegible]	.093	.156	.187	NA	NA	2.250	1.500	1.187	.906	2.031	.093	.375	.156	1.750	1.437	2.750	.437	NA	NA	.062	.062	1.750	.593	.156	1.062	3.812	.156	NA	.156	1.062	.375	NA
[illegible]	.048	.078	.093	NA	NA	1.125	.750	.593	.453	1.015	.062	.187	.078	.875	.718	1.375	.218	NA	NA	.048	.031	.875	.305	.078	.531	1.906	.078	NA	.078	.531	.187	NA
[illegible]	.048	.078	.093	NA	NA	1.125	.750	.593	.453	1.015	.062	.187	.078	.875	.718	1.375	.218	NA	NA	.048	.031	.875	.305	.078	.531	1.906	.078	NA	.078	.531	.187	NA
[illegible]	.048	.078	.093	NA	NA	1.125	.750	.593	.453	1.015	.062	.187	.078	.875	.718	1.375	.218	NA	NA	.048	.031	.875	.305	.078	.531	1.906	.078	NA	.078	.531	.187	NA

KOLLSMAN DASH NUMBERS

UNLESS OTHERWISE SPECIFIED DIMENSIONS ARE IN INCHES TOLERANCES ON 2 PLACE DECIMALS ± 3 PLACE DECIMALS ± .005 ANGLES ±	MIT INSTRUMENTATION LAB CAMBRIDGE MASS DRAWN R. A. JONES DATE 16 JUL 65 CHECKED APPROVAL W. KUPFER 22 JUL 65	MANNED SPACECRAFT CENTER HOUSTON, TEXAS	
DO NOT SCALE THIS DRAWING	CONTRACT	NAMEPLATES, APOLLO GEN - GSE (STANDARDS)	
MATERIAL SEE NOTE 11	NASA APPROVAL T. MICHAELS 22 JUL 65	SIZE J2	CODE IDENT NO. 80230
APPROVAL	MIT APPROVAL W. KUPFER 22 JUL 65	SCALE NONE	1004260 SHEET 2 OF 6

AS APPLICABLE	
NEXT ASSY	USED ON
APPLICATION	

1004260 CV

1004260

085A001

1004250 C SHT 2

2/1004260

DASH NO.	P/C	PART NAME	REMARKS	PART NUMBER	SER. NO.	CONT. NO.	STYLE	TYPE	MATERIAL	A	B	C	D	E	F	G	H	J	K	L	M	N
299	R																					
298	R																					
291	R	BUFFER CIRCUIT ASSY		2014254-041	NA	NAS-9-497	B	I	NOTE 11B	FOR DIMENSIONS SEE DASH 15 VALUES BELOW												
290	R	LOGIC DRAWER ASSY NO.2		2014037-051	NA	NAS-9 497	B	I	NOTE 11B	FOR DIMENSIONS SEE DASH 17 VALUES BELOW												
289	R	SELF TEST ASSY		2014392-021	NA	NAS-9-497	B	I	NOTE 11B	FOR DIMENSIONS SEE DASH 15 VALUES BELOW												
288	R	LOGIC DRAWER ASSY NO.1		2014036-051	NA	NAS-9-497	B	I	NOTE 11B	FOR DIMENSIONS SEE DASH 17 VALUES BELOW												
287	R	COMPUTER TEST SET		2014042-071	NA	NAS-9 497	B	II	NOTE 11C	FOR DIMENSIONS SEE DASH 18 VALUES BELOW												
286	R	DRAWER ASSY PROGRAM & MONITOR		2014041-061	NA	NAS-9-497	B	I	NOTE 11B	FOR DIMENSIONS SEE DASH 17 VALUES BELOW												
285	R	BUFFER CIRCUIT ASSY		2014254-031	NA	NAS-9-497	B	I	NOTE 11B	FOR DIMENSIONS SEE DASH 15 VALUES BELOW												
284	R	LOGIC DRAWER ASSY NO. 2		2014037-041	NA	NAS-9-497	B	I	NOTE 11B	FOR DIMENSIONS SEE DASH 17 VALUES BELOW												
283	R	DRAWER ASSY-PROGRAM & MONITOR		2014041-051	NA	NAS-9-497	B	I	NOTE 11B	FOR DIMENSIONS SEE DASH 17 VALUES BELOW												
282	R	COMPUTER TEST SET		2014042-061	NA	NAS-9-497	B	II	NOTE 11C	FOR DIMENSIONS SEE DASH 18 VALUES BELOW												
281	R	AGC HANDLING FIXTURE		2014282-031	NA	NAS-9-497	B	I	NOTE 11B	FOR DIMENSIONS SEE DASH 17 VALUES BELOW												
280	R	COMPUTER TEST SET		2014042-051	NA	NAS-9-497	B	II	NOTE 11C	FOR DIMENSIONS SEE DASH 18 VALUES BELOW												
279	R	SELF TEST ASSY		2014366-041	NA	NAS-9-497	B	I	NOTE 11B	FOR DIMENSIONS SEE DASH 15 VALUES BELOW												
278	R	LOGIC DRAWER ASSY NO. 1		2014036-041	NA	NAS-9-497	B	I	NOTE 11B	FOR DIMENSIONS SEE DASH 17 VALUES BELOW												
277	R	COMPUTER TEST SET		2014042-041	NA	NAS-9-497	B	II	NOTE 11C	FOR DIMENSIONS SEE DASH 18 VALUES BELOW												
276	R	DRAWER ASSY-PROGRAM & MONITOR		2014041-041	NA	NAS-9-497	B	I	NOTE 11B	FOR DIMENSIONS SEE DASH 17 VALUES BELOW												
275	R	DRAWER ASSY RDC INTERFACE		2014045-031	NA	NAS-9-497	B	I	NOTE 11B	FOR DIMENSIONS SEE DASH 15 VALUES BELOW												
274	R	SELF TEST ASSY		2014366-031	NA	NAS-9-497	B	I	NOTE 11B	FOR DIMENSIONS SEE DASH 15 VALUES BELOW												
273	R	LOGIC DRAWER ASSY NO. 2		2014037-031	NA	NAS-9-497	B	I	NOTE 11B	FOR DIMENSIONS SEE DASH 17 VALUES BELOW												
272	R	DRAWING ASSY PROGRAMMER & MONITOR		2014041-031	NA	NAS-9-497	B	I	NOTE 11B	FOR DIMENSIONS SEE DASH 17 VALUES BELOW												
271	R	LOGIC DRAWER ASSY NO. 1		2014036-031	NA	NAS-9-497	B	I	NOTE 11B	FOR DIMENSIONS SEE DASH 17 VALUES BELOW												
270	R	COMPUTER TEST SET		2014042-031	NA	NAS-9-497	B	II	NOTE 11C	FOR DIMENSIONS SEE DASH 18 VALUES BELOW												
269	R	POWER CONTROL ASSY		2014044-021	NA	NAS-9-497	B	I	NOTE 11B	FOR DIMENSIONS SEE DASH 17 VALUES BELOW												
268	R	SELF TEST ASSY		2014366-021	NA	NAS-9-497	B	I	NOTE 11B	FOR DIMENSIONS SEE DASH 15 VALUES BELOW												
267	R	AGC JUNCTION ASSY		2014341-021	NA	NAS-9-497	B	I	NOTE 11B	FOR DIMENSIONS SEE DASH 15 VALUES BELOW												
266	R	POWER CONTROL ASSY		2014079-021	NA	NAS-9-497	B	I	NOTE 11B	FOR DIMENSIONS SEE DASH 15 VALUES BELOW												
265	R	BUFFER CIRCUIT ASSY		2014254-021	NA	NAS-9-497	B	I	NOTE 11B	FOR DIMENSIONS SEE DASH 15 VALUES BELOW												
264	R	DRAWER ASSY X Y INTERFACE		2014040-021	NA	NAS-9-497	B	I	NOTE 11B	FOR DIMENSIONS SEE DASH 15 VALUES BELOW												
263	R	DRAWER ASSY RDC INTERFACE		2014045-021	NA	NAS-9-497	B	I	NOTE 11B	FOR DIMENSIONS SEE DASH 15 VALUES BELOW												
262	R	DRAWER ASSY PROGRAMMER & MONITOR		2014041-021	NA	NAS-9-497	B	I	NOTE 11B	FOR DIMENSIONS SEE DASH 17 VALUES BELOW												
261	R	LOGIC DRAWER ASSY NO. 2		2014037-021	NA	NAS-9-497	B	I	NOTE 11B	FOR DIMENSIONS SEE DASH 17 VALUES BELOW												
260	R	LOGIC DRAWER ASSY NO. 1		2014036-021	NA	NAS-9-497	B	I	NOTE 11B	FOR DIMENSIONS SEE DASH 17 VALUES BELOW												
259	R	OPERATION CONSOLE		2014024-021	NA	NAS-9-497	B	II	NOTE 11C	FOR DIMENSIONS SEE DASH 18 VALUES BELOW												
258	R	COMPUTER TEST SET		2014042-021	NA	NAS-9-497	B	II	NOTE 11C	FOR DIMENSIONS SEE DASH 18 VALUES BELOW												
257	R	AUXILIARY CALIBRATION CONSOLE		2014059-021	NA	NAS-9-497	B	II	NOTE 11C	FOR DIMENSIONS SEE DASH 18 VALUES BELOW												
256	R	AGC CALIBRATION CONSOLE		2014049-021	NA	NAS-9-497	B	II	NOTE 11C	FOR DIMENSIONS SEE DASH 18 VALUES BELOW												
255	R	AGC HANDLING FIXTURE		2014282-021	NA	NAS-9-497	B	I	NOTE 11B	FOR DIMENSIONS SEE DASH 17 VALUES BELOW												
254	R	DRAWER ASSY COMP. SIMULATOR		2014048-011	NA	NAS-9-497	B	II	NOTE 11C	FOR DIMENSIONS SEE DASH 18 VALUES BELOW												
253	R	SHIPPING KIT ASSY, NAV DSKY		2016312-011	NA	NAS-9-497	B	II	NOTE 11C	FOR DIMENSIONS SEE DASH 18 VALUES BELOW												
252	R	SHIPPING KIT ASSY, UNIVERSAL DSKY		2016316-011	NA	NAS-9-497	B	II	NOTE 11C	FOR DIMENSIONS SEE DASH 18 VALUES BELOW												
251	R	SHIPPING KIT ASSY, MAIN DSKY		2016313-011	NA	NAS-9-497	B	II	NOTE 11C	FOR DIMENSIONS SEE DASH 18 VALUES BELOW												
250	R	AMPLIFIER, REWORK		2014386	NA	NAS-9-497	B	I	NOTE 11B	FOR DIMENSIONS SEE DASH 15 VALUES BELOW												
249	R	TEMP MONITOR ASSY		2014313-011	NA	NAS-9-497	B	I	NOTE 11C	FOR DIMENSIONS SEE DASH 17 VALUES BELOW												
248	R	AGC JUNCTION ASSY		2014341-011	NA	NAS-9-497	B	I	NOTE 11B	FOR DIMENSIONS SEE DASH 15 VALUES BELOW												
247	R	AC INPUT PANEL ASSY		2014302-011	NA	NAS-9-497	B	I	NOTE 11B	FOR DIMENSIONS SEE DASH 15 VALUES BELOW												
246	R	SELF TEST ASSY		2014392-011	NA	NAS-9-497	B	I	NOTE 11B	FOR DIMENSIONS SEE DASH 15 VALUES BELOW												
245	R	TAPE PUNCH ASSEMBLY		2014039-011	NA	NAS-9-497	B	I	NOTE 11B	FOR DIMENSIONS SEE DASH 15 VALUES BELOW												
244	R	TAPE READER ASSEMBLY		2014038-011	NA	NAS-9-497	B	I	NOTE 11B	FOR DIMENSIONS SEE DASH 15 VALUES BELOW												
243																						
242																						
241	R	APOLLO GUIDANCE COMPUTER GROUP		6003001	NA	NAS-9-497	A	I	NOTE 11B	FOR DIMENSIONS SEE DASH 19 VALUES BELOW												
240	R	SELF TEST ASSEMBLY		2014366-011	NA	NAS-9-497	B	I	NOTE 11B	FOR DIMENSIONS SEE DASH 15 VALUES BELOW												
239	R	POWER SUPPLY ASSY-115V., 400 CYCLE		2014207-011	NA	NAS-9-497	B	I	NOTE 11B	FOR DIMENSIONS SEE DASH 17 VALUES BELOW												
238	R	AC INPUT PANEL ASSY		2014043-011	NA	NAS-9-497	B	I	NOTE 11B	FOR DIMENSIONS SEE DASH 17 VALUES BELOW												
237	R	POWER CONTROL ASSY		2014079-011	NA	NAS-9-497	B	I	NOTE 11B	FOR DIMENSIONS SEE DASH 15 VALUES BELOW												
236	R	DRAWER ASSY-X Y INTERFACE		2014040-011	NA	NAS-9-497	B	I	NOTE 11B	FOR DIMENSIONS SEE DASH 15 VALUES BELOW												
235	R	DRAWER ASSY RDC INTERFACE		2014045-011	NA	NAS-9-497	B	I	NOTE 11B	FOR DIMENSIONS SEE DASH 15 VALUES BELOW												
234	R	BUFFER CIRCUIT ASSY		2014254-011	NA	NAS-9-497	B	I	NOTE 11B	FOR DIMENSIONS SEE DASH 15 VALUES BELOW												
233	R	CONTROL & INTERFACE ASSY		2014204-011	NA	NAS-9-497	B	I	NOTE 11B	FOR DIMENSIONS SEE DASH 15 VALUES BELOW												
232	R	POWER CONTROL ASSY		2014044-011	NA	NAS-9-497	B	I	NOTE 11B	FOR DIMENSIONS SEE DASH 17 VALUES BELOW												
231	R	DRAWER ASSY, PROGRAMMER & MONITOR		2014041-011	NA	NAS-9-497	B	I	NOTE 11B	FOR DIMENSIONS SEE DASH 17 VALUES BELOW												
230	R	CONNECTOR INTERFACE ASSY		2014272-011	NA	NAS-9-497	B	I	NOTE 11B	FOR DIMENSIONS SEE DASH 15 VALUES BELOW												
229	R	CONNECTOR INTERFACE ASSY		2014047-011	NA	NAS-9-497	B	I	NOTE 11B	FOR DIMENSIONS SEE DASH 15 VALUES BELOW												
228	R	ANTENNA, TUNING CAPACITOR ASSY		2014209-011	NA	NAS-9-497	B	I	NOTE 11B	FOR DIMENSIONS SEE DASH 15 VALUES BELOW												
227	R	MOUNTING FIXTURE ASSY		2014006-011	NA	NAS-9-497	B	I	NOTE 11B	FOR DIMENSIONS SEE DASH 17 VALUES BELOW												
226	R	POWER SUPPLY ASSY 3 VDC		2014234-011	NA	NAS-9-497	B	I	NOTE 11B	FOR DIMENSIONS SEE DASH 15 VALUES BELOW												
225	R	PANEL ASSY—SIGNAL INTERFACE		2014010-011	NA	NAS-9-497	B	I	NOTE 11B	FOR DIMENSIONS SEE DASH 15 VALUES BELOW												
224	R	OSCILLOSCOPE ASSY		2014232-011	NA	NAS-9-497	B	I	NOTE 116	FOR DIMENSIONS SEE DASH 15 VALUES BELOW												
223	R	AUXILIARY OUTLET ASSY		2014274-011	NA	NAS-9-497	B	I	NOTE 11B	FOR DIMENSIONS SEE DASH 15 VALUES BELOW												
222	R	FREQUENCY COUNTER		2014233-011	NA	NAS-9-497	B	I	NOTE 11B	FOR DIMENSIONS SEE DASH 15 VALUES BELOW												
221	R	POWER SUPPLY ASSY 10, 13, 28 VDC		2014235-011	NA	NAS-9-497	B	I	NOTE 11B	FOR DIMENSIONS SEE DASH 15 VALUES BELOW												
220	R	LOGIC DRAWER ASSY NO. 2		2014037-011	NA	NAS-9-497	B	I	NOTE 11B	FOR DIMENSIONS SEE DASH 17 VALUES BELOW												
219	R	LOGIC DRAWER ASSY NO. 1		2014036-011	NA	NAS-9-497	B	I	NOTE 11B	FOR DIMENSIONS SEE DASH 17 VALUES BELOW												
218	R	COUNTER, ELECTRICAL ASSY		2014288-011	NA	NAS-9-497	B	I	NOTE 11B	FOR DIMENSIONS SEE DASH 15 VALUES BELOW												
217	R	POWER SUPPLY ASSY		2014279-011	NA	NAS-9-497	B	I	NOTE 11B	FOR DIMENSIONS SEE DASH 15 VALUES BELOW												
216	R	TEST MOUNT ASSY		2014257-011	NA	NAS-9-497	B	I	NOTE 11B	FOR DIMENSIONS SEE DASH 15 VALUES BELOW												
215	R	UNIVERSAL DSKY PEDESTAL MOUNT		2014014-011	NA	NAS-9-497	B	I	NOTE 11B	FOR DIMENSIONS SEE DASH 17 VALUES BELOW												
214	R	MAIN DSKY PEDESTAL MOUNT		2014343	NA	NAS-9-497	B	I	NOTE 11B	FOR DIMENSIONS SEE DASH 17 VALUES BELOW												
213	R	SHIPPING CONTAINER, MAIN DSKY		1006229	NA	NAS-9-497	B	II	NOTE 11C	FOR DIMENSIONS SEE DASH 18 VALUES BELOW												
212	R	SHIPPING CONTAINER, NAV DSKY		1006231	NA	NAS-9-497	B	II	NOTE 11C	FOR DIMENSIONS SEE DASH 18 VALUES BELOW												
211	R	SHIPPING CONTAINER, AGC		1006230	NA	NAS-9-497	B	II	NOTE 11C	FOR DIMENSIONS SEE DASH 18 VALUES BELOW												
210	R	SHIPPING CONTAINER, UNIVERSAL DSKY		1006422	NA	NAS-9-497	B	II	NOTE 11C	FOR DIMENSIONS SEE DASH 18 VALUES BELOW												
209	R	SHIPPING CONTAINER, AGC		1006421	NA	NAS-9-497	B	II	NOTE 11C	FOR DIMENSIONS SEE DASH 18 VALUES BELOW												
208	R	UNIVERSAL DSKY HANDLING FIXTURE		2014013-011	NA	NAS-9-497	B	I	NOTE 11B	FOR DIMENSIONS SEE DASH 15 VALUES BELOW												
207	R	NAV DSKY HANDLING FIXTURE		1014377	NA	NAS-9-497	B	I	NOTE 11B	FOR DIMENSIONS SEE DASH 17 VALUES BELOW												
206	R	MAIN DSKY HANDLING FIXTURE		1014334	NA	NAS-9-497	B	I	NOTE 11B	FOR DIMENSIONS SEE DASH 17 VALUES BELOW												
205	R	AGC HANDLING FIXTURE		2014282-011	NA	NAS-9-497	B	I	NOTE 11B	FOR DIMENSIONS SEE DASH 17 VALUES BELOW												
204	R	OPERATION CONSOLE		2014024-011	NA	NAS-9-497	B	II	NOTE 11C	FOR DIMENSIONS SEE DASH 18 VALUES BELOW												
203	R	COMPUTER TEST SET		2014042-011	NA	NAS-9-497	B	II	NOTE 11C	FOR DIMENSIONS SEE DASH 18 VALUES BELOW												
202	R	DRAWER ASSY, COMPUTER SIMULATOR		2014048-011	NA	FNP-12775	B	II	NOTE 11C	FOR DIMENSIONS SEE DASH 18 VALUES BELOW												
201	R	AUXILIARY CALIBRATION CONSOLE		2014059-011	NA	NAS-9-497	B	II	NOTE 11C	FOR DIMENSIONS SEE DASH 18 VALUES BELOW												
200	R	AGC CALIBRATION CONSOLE		2014049-011	NA	NAS-9-497	B	II	NOTE 11C	FOR DIMENSIONS SEE DASH 18 VALUES BELOW												
21	R																					
20	R	NA		NA	NA	NA	A	II	NOTE 11	2.000	1.312	1.687	1.375	.078	.031	.078	.093	[illegible]	.093	1.187	.750	.593
19	R	NA		NA	NA	NA	A	I	NOTE 116	2.000	1.312	1.687	1.375	.078	.031	.078	.093	NA	NA	1.187	.750	.593
18	R	NA		NA	NA	NA	B	II	NOTE 11C	4.187	1.875	3.469	2.750	.156	.093	.156	.125	[illegible]	.125	1.625	1.032	.844
17	R	NA		NA	NA	NA	B	I	NOTE 11B	4.187	1.875	3.469	2.750	.156	.093	.156	.125	NA	NA	1.625	1.032	.844
16	R	NA		NA	NA	NA	B	II	NOTE 11C	2.000	1.312	1.687	1.375	.078	.031	.078	.093	[illegible]	.093	1.187	.750	.593
15	R	NA		NA	NA	NA	B	I	NOTE 11B	2.000	1.312	1.687	1.375	.078	.031	.078	.093	NA	NA	1.187	.750	.593

NOTES FOR TABLE

STYLE A IS FOR G & N SYSTEM
STYLE B IS FOR GROUND SUPPORT EQUIPMENT
TYPE I IS WITHOUT MOUNTING HOLES
TYPE II IS WITH MOUNTING HOLES

1004260 C SHT 3

SYM	ZONE	DESCRIPTION	CHG NO	DATE	APPD
CL		REPLACES REV CK WITHOUT CHANGE PER TDRR 34365		9/18/67	JWL
CM		REVISION STATUS CHANGED		18 OCT 67	RAH
CN		REVISION STATUS CHANGED		31 OCT 67	JRK
CP		REVISION STATUS CHANGED		6 NOV 67	EMS
CR		REVISION STATUS CHANGED		9 DEC 67	
CS		REVISION STATUS CHANGED		3 JAN 68	EWW
CT		REVISED PER TDRR 35526		7 FEB 68	
CU		REVISION STATUS CHANGED		22 FEB 68	JRK
CV		REVISION STATUS CHANGED		20	

F	G	H	J	K	L	M	N	P	R	S	T	U	V	W	Y	Z	AA	AB	AC	AD	AE	AF	AG	AH	AJ	AK	AL	AM	AN	AP	AR
[illegible]	.078	.093	[illegible]	.093	1.187	.750	.593	.453	1.015	.062	.187	.078	.875	.718	1.375	.218	1.156	1.843	.048	NA	.875	.305	.078	.312	1.687	.078	NA	.078	.312	.187	1.843
[illegible]	.078	.093	NA	NA	1.187	.750	.593	.453	1.015	.062	.187	.078	.875	.718	1.375	.218	NA	NA	.048	.031	.875	.305	.078	.312	1.687	.078	NA	.078	.312	.187	NA
[illegible]	.156	.125	[illegible]	.125	1.625	1.032	.844	.656	1.406	.093	.344	.156	1.781	1.531	2.844	.312	1.562	3.875	.062	NA	1.219	.500	.156	.719	3.469	.156	NA	.156	.719	.344	3.875
[illegible]	.156	.125	NA	NA	1.625	1.032	.844	.656	1.406	.093	.344	.156	1.781	1.531	2.844	.312	NA	NA	.062	.062	1.219	.500	.156	.719	3.469	.156	NA	.156	.719	.344	NA
.031	.078	.093	[illegible]	.093	1.187	.750	.593	.453	1.015	.062	.187	.078	.875	.718	1.375	.218	1.156	1.843	.048	NA	.875	.305	.078	.312	1.687	.078	NA	.078	.312	.187	1.843
.031	.078	.093	NA	NA	1.187	.750	.593	.453	1.015	.062	.187	.078	.875	.718	1.375	.218	NA	NA	.048	.031	.875	.305	.078	.312	1.687	.078	NA	.078	.312	.187	NA

RAYTHEON DASH NUMBERS

UNLESS OTHERWISE SPECIFIED DIMENSIONS ARE IN INCHES TOLERANCES ON 2 PLACE DECIMALS ± 3 PLACE DECIMALS ±.005 ANGLES ±	M.I.T. INSTRUMENTATION LAB CAMBRIDGE MASS
DRAWN R. A. JONES	DATE 15 JUL 65
CHECKED W. KUPFER	22 JUL 65
APPROVAL	
DO NOT SCALE THIS DRAWING	CONTRACT
MATERIAL SEE NOTE 11	T. MICHAELS 22 JUL 65 NASA APPROVAL
APPROVAL	W. KUPFER 22 JUL 65 MIT APPROVAL
AS APPLICABLE	NEXT ASSY / USED ON — APPLICATION

MANNED SPACECRAFT CENTER
HOUSTON, TEXAS

NAMEPLATES, APOLLO GEN - GSE (STANDARDS)

SIZE J2 CODE IDENT NO 80230 1004260

SCALE NONE SHEET 3 OF 6

1004260 CV SHT 3

1004260 CV

1004260

0052A001

2/1004260

AC DASH NUMBERS CONTINUED ON SHEET 6

DASH NO.	P/C	PART NAME	REMARKS	PART NUMBER	SER. NO.	CONT. NO.	STYLE	TYPE	MATERIAL	A	B	C	D	E	F	G	H	J	K	L	M
199	AC	EYEPIECE STOWAGE UNIT		2021255-011			A	I		FOR DIMENSIONS SEE DASH 100 VALUES BELOW											
198	AC	SIGNAL CONDITIONER ASSY C/M		2007234		NAS-9-497	A	I	NOTE 11B	FOR DIMENSIONS SEE DASH 100 VALUES BELOW											
197	AC	SIGNAL CONDITIONER ASSY C/M		2007235		NAS-9-497	A	I	NOTE 11B	FOR DIMENSIONS SEE DASH 100 VALUES BELOW											
196	AC	SIGNAL CONDITIONER ASSY LEM		6007010		NAS-9-497	A	I	NOTE 11B	FOR DIMENSIONS SEE DASH 100 VALUES BELOW											
195	AC	PSA & SIGNAL CONDITIONER ASSY		6007009		NAS-9-497	A	I	NOTE 11B	FOR DIMENSIONS SEE DASH 100 VALUES BELOW											
194	AC	PANEL, MONITOR		2900031-031		NAS-9-497	B	II	NOTE 11C	FOR DIMENSIONS SEE DASH 141 VALUES BELOW											
193	AC	DISTRIBUTION BOX, GSE		2900024-031		NAS-9-497	B	II	NOTE 11C	FOR DIMENSIONS SEE DASH 141 VALUES BELOW											
192	AC	ANALYZER, OPTICS-INERTIAL		2900023-031		NAS-9-497	B	II	NOTE 11C	FOR DIMENSIONS SEE DASH 144 VALUES BELOW											
191	AC	TEST CONTROL		2900027-031		NAS-9-497	B	II	NOTE 11C	FOR DIMENSIONS SEE DASH 141 VALUES BELOW											
190	AC	PANEL, PWR SUP AND LOAD		2900033-021		NAS-9-497	B	II	NOTE 11C	FOR DIMENSIONS SEE DASH 141 VALUES BELOW											
189	AC	ADPT MODULE, P.S.A.		6900088-011		NAS-9-497	B	II	NOTE 11C	FOR DIMENSIONS SEE DASH 141 VALUES BELOW											
188	AC	ADPT MODULE, P.S.A.		2901143-011		NAS-9-497	B	II	NOTE 11C	FOR DIMENSIONS SEE DASH 141 VALUES BELOW											
187	AC	FIXTURE, MTG, PTA/PEA		2900066-021		NAS-9-497	B	II	NOTE 11C	FOR DIMENSIONS SEE DASH 141 VALUES BELOW											
186	AC	ANNUNCIATOR PANEL & EYEPIECE STORAGE ASSEMBLY		1021255-021			A	I		FOR DIMENSIONS SEE DASH 100 VALUES BELOW											
185	AC	ANNUNCIATOR PANEL & EYEPIECE STORAGE ASSEMBLY		1021255-011			A	I		FOR DIMENSIONS SEE DASH 100 VALUES BELOW											
184	AC	FIX., HAND., G AND N HARNESS		1901846-041		NAS-9-497	B	II	NOTE 11C	FOR DIMENSIONS SEE DASH 144 VALUES BELOW											
183	AC	INSTALLING TOOL, ELEC. CONN		1902586-011		NAS-9-497	B	II	NOTE 11C	FOR DIMENSIONS SEE DASH 102 VALUES BELOW											
182	AC	ADPT MODULE, P.S.A.		6900088-011		NAS-9-497	B	II	NOTE 11C	FOR DIMENSIONS SEE DASH 141 VALUES BELOW											
181	AC	G & N INDICATOR CONTROL PANEL ASSY		2014578-011		NAS-9-497	A	I	NOTE 11B	3.000	1.938	2.437	NA	.125	.062	.188	.156	NA	NA	1.750	1.125
180	AC	ADPT MODULE, P.S.A.		1902431-031		NAS-9-497	B	II		FOR DIMENSIONS SEE DASH 121 VALUES BELOW											
179	AC	MOUNTING PLATE, IMU/PTA		6900083-011		NAS-9-497	B	II		FOR DIMENSIONS SEE DASH 144 VALUES BELOW											
178	AC	MOUNTING PLATE, COMPONENT		6900007-021		NAS-9-497	B	II		FOR DIMENSIONS SEE DASH 144 VALUES BELOW											
177	AC	FIX., MOUNTING, SUBSYSTEM		2900070-021		NAS-9-497	B	II		FOR DIMENSIONS SEE DASH 144 VALUES BELOW											
176	AC	FIX., MOUNTING, G & N		2900067-021		NAS-9-497	B	II		FOR DIMENSIONS SEE DASH 144 VALUES BELOW											
175	AC	CSL, COOL. AND PWR, G & N		1902134-031		NAS-9-497	B	II		FOR DIMENSIONS SEE DASH 144 VALUES BELOW											
174	AC	FIX., HAND., C/M AND LEM CDU		2900999-011		NAS-9-497	B	II	NOTE 11C	FOR DIMENSIONS SEE DASH 141 VALUES BELOW											
173	AC	FIX., HANDLING, C/M PSA		2900998-011		NAS-9-497	B	II	NOTE 11C	FOR DIMENSIONS SEE DASH 141 VALUES BELOW											
172	AC	CAGING ELECTRONICS, GYRO		2900029-021		NAS-9-497	B	II	NOTE 11C	FOR DIMENSIONS SEE DASH 141 VALUES BELOW											
171	AC	DISTRIBUTION BOX, GSE		2900024-021		NAS-9-497	B	II	NOTE 11C	FOR DIMENSIONS SEE DASH 141 VALUES BELOW											
170	AC	ANALYZER, OPTICS-INERTIAL		2900023-021		NAS-9-497	B	II	NOTE 11C	FOR DIMENSIONS SEE DASH 144 VALUES BELOW											
169	AC	ADPT, TESTPOINT, P.S.A.		2900037-021		NAS-9-497	B	II	NOTE 11C	FOR DIMENSIONS SEE DASH 141 VALUES BELOW											
168	AC	TEST SELECTOR		2900028-021		NAS-9-497	B	II	NOTE 11C	FOR DIMENSIONS SEE DASH 141 VALUES BELOW											
167	AC	TEST CONTROL		2900027-021		NAS-9-497	B	II	NOTE 11C	FOR DIMENSIONS SEE DASH 141 VALUES BELOW											
166	AC	PANEL, MONITOR		2900031-021		NAS-9-497	B	II	NOTE 11C	FOR DIMENSIONS SEE DASH 141 VALUES BELOW											
165	AC	TERM. BOARD STORAGE DRAWER		2900927-011		NAS-9-497	B	II	NOTE 11C	FOR DIMENSIONS SEE DASH 141 VALUES BELOW											
164	AC	INPUT/OUTPUT PANEL		2900926-011		NAS-9-497	B	II	NOTE 11C	FOR DIMENSIONS SEE DASH 141 VALUES BELOW											
163	AC	CONTROL PANEL		2900896-011		NAS-9-497	B	II	NOTE 11C	FOR DIMENSIONS SEE DASH 141 VALUES BELOW											
162	AC	CSL, CAL AND TEST, SCM/PSAAM		2900895-011		NAS-9-497	B	II	NOTE 11C	FOR DIMENSIONS SEE DASH 144 VALUES BELOW											
161	AC	FIX., LIFT AND HAND., IMU		1015462-011		NAS-9-497	B	II	NOTE 11C	FOR DIMENSIONS SEE DASH 141 VALUES BELOW											
160	AC	FIX., HAND., G & N HARNESS		1901846-031		NAS-9-497	B	II	NOTE 11C	FOR DIMENSIONS SEE DASH 144 VALUES BELOW											
159	AC	BATTERY POWER PACK		1900011-031		NAS-9-497	B	II	NOTE 11C	FOR DIMENSIONS SEE DASH 144 VALUES BELOW											
158	AC	COUPLING DATA UNIT ASSEMBLY C/M		2007222		NAS-9-497	A	I	NOTE 11B	FOR DIMENSIONS SEE DASH 100 VALUES BELOW											
157	AC	COUPLING DATA UNIT ASSEMBLY - LEM		2007222		NAS-9-497	A	I	NOTE 11B	FOR DIMENSIONS SEE DASH 100 VALUES BELOW											
156	AC	POWER & SERVO ASSEMBLY C/M		2007200		NAS-9-497	A	I	NOTE 11B	2.125	.968	1.718	NA	.093	.031	.06	.093	NA	NA	.858	.608
155	AC	PIPA ELECTRONICS ASSEMBLY		2007201		NAS-9-497	A	I	NOTE 11B	FOR DIMENSIONS SEE DASH 100 VALUES BELOW											
154	AC	PULSE TORQUE ASSEMBLY-LEM		6007000		NAS-9-497	A	I	NOTE 11B	FOR DIMENSIONS SEE DASH 100 VALUES BELOW											
153	AC	POWER & SERVO ASSEMBLY-LEM		6007200		NAS-9-497	A	I	NOTE 11B	FOR DIMENSIONS SEE DASH 100 VALUES BELOW											
152	AC	CONT PNL, RSVR CKT TESTER		2900770-011		NAS-9-497	B	II	NOTE 11C	FOR DIMENSIONS SEE DASH 141 VALUES BELOW											
151	AC	TESTER, RESOLVER CIRCUIT		2900708-011		NAS-9-497	B	II	NOTE 11C	FOR DIMENSIONS SEE DASH 141 VALUES BELOW											
150	AC	JUNCTION BOX, P.S.A./G.S.E.		1901933-021		NAS-9-497	B	II	NOTE 11C	FOR DIMENSIONS SEE DASH 144 VALUES BELOW											
149	AC	BATTERY PACK, LIFTING		2900812-011		NAS-9-497	B	II	NOTE 11C	FOR DIMENSIONS SEE DASH 141 VALUES BELOW											
148	AC	MOUNTING PLATE, COMPONENT		6900007-011		NAS-9-497	B	II	NOTE 11C	FOR DIMENSIONS SEE DASH 144 VALUES BELOW											
147	AC	MOUNTING PLATE, COMPONENT		2900677-011		NAS-9-497	B	II	NOTE 11C	FOR DIMENSIONS SEE DASH 144 VALUES BELOW											
146	AC	CART, TRANS, G & N		1900009-041		NAS-9-497	B	II	NOTE 11C	FOR DIMENSIONS SEE DASH 144 VALUES BELOW											
145	AC	CONTAINER, SHIPPING, IMU		1900010-021		NAS-9-497	B	II	NOTE 11C	FOR DIMENSIONS SEE DASH 144 VALUES BELOW											
144	AC	FIX., MOUNTING, G & N		1902204-021			B	II	NOTE 11C	4.125	1.812	3.250	NA	.125	.062	.12	.156		.125	1.625	1.140
143	AC	CSL, COOL, AND PWR, G & N		1902134-021			B	II	NOTE 11C	4.125	1.812	3.250	NA	.125	.062	.12	.156		.125	1.625	1.140
142	AC	ANALYZER, OPTICS-INERTIAL		2900023-011			B	II	NOTE 11C	4.125	1.812	3.250	NA	.125	.062	.12	.156		.125	1.625	1.140
141	AC	CONT, TEMP, PORTABLE		2900060-011			B	II	NOTE 11C	2.125	.968	1.718	NA	.093	.031	.06	.093		.093	.858	.608
140	AC	TESTER, CKT, IMU/CDU RSVR		2900286-011			B	II	NOTE 11C	4.125	1.812	3.250	NA	.125	.062	.12	.156		.125	1.625	1.140
139	AC	SIMULATOR, LD/SIG, CDU		2900285-011			B	II	NOTE 11C	4.125	1.812	3.250	NA	.125	.062	.12	.156		.125	1.625	1.140
138	AC	SIMULATOR, LD/SIG, OPTICS		1902023-021			B	II	NOTE 11C	4.125	1.812	3.250	NA	.125	.062	.12	.156		.125	1.625	1.140
137	AC	FIX., MOUNTING, IMU/NAV BASE		6900003-011			B	II	NOTE 11C	4.125	1.812	3.250	NA	.125	.062	.12	.156		.125	1.625	1.140
136	AC	FIXTURE, OPTICS/NAV BASE		2900072-011			B	II	NOTE 11C	4.125	1.812	3.250	NA	.125	.062	.12	.156		.125	1.625	1.140
135	AC	FIX., MOUNTING, SUB SYSTEM		2900070-011			B	II	NOTE 11C	4.125	1.812	3.250	NA	.125	.062	.12	.156		.125	1.625	1.140
134	AC	FIX., HAND., G & N HARNESS		2900069-011			B	II	NOTE 11C	4.125	1.812	3.250	NA	.125	.062	.12	.156		.125	1.625	1.140
133	AC	CNTR, SHIPPING, NAV BASE		2900068-011			B	II	NOTE 11C	4.125	1.812	3.250	NA	.125	.062	.12	.156		.125	1.625	1.140
132	AC	FIX., MOUNTING, G & N		2900067-011			B	II	NOTE 11C	4.125	1.812	3.250	NA	.125	.062	.12	.156		.125	1.625	1.140
131	AC	SIMULATOR, LD/SIG, IMU/CDU		2900062-011			B	II	NOTE 11C	4.125	1.812	3.250	NA	.125	.062	.12	.156		.125	1.625	1.140
130	AC	TESTER, GYRO WHEEL		2900061-011			B	II	NOTE 11C	4.125	1.812	3.250	NA	.125	.062	.12	.156		.125	1.625	1.140
129	AC	COOLANT SUPPLY		1902133-021			B	II	NOTE 11C	4.125	1.812	3.250	NA	.125	.062	.12	.156		.125	1.625	1.140
128	AC	TABLE, ROTARY		1900326-021			B	II	NOTE 11C	4.125	1.812	3.250	NA	.125	.062	.12	.156		.125	1.625	1.140
127	AC	FIX., HAND., OPTICS		2900074-011			B	II	NOTE 11C	2.125	.968	1.718	NA	.093	.031	.06	.093		.093	.858	.608
126	AC	FIXTURE, MTG, PTA/PEA.		2900066-011			B	II	NOTE 11C	2.125	.968	1.718	NA	.093	.031	.06	.093		.093	.858	.608
125	AC	CONT, TEMP, IMU LIFTING		2900063-011			B	II	NOTE 11C	2.125	.968	1.718	NA	.093	.031	.06	.093		.093	.858	.608
124	AC	FIXTURE, HANDLING, IMU		2900064-011			B	II	NOTE 11C	2.125	.968	1.718	NA	.093	.031	.06	.093		.093	.858	.608
123	AC	CONT, OPTICS, REMOTE		1902046-021			B	II	NOTE 11C	2.125	.968	1.718	NA	.093	.031	.06	.093		.093	.858	.608
122	AC	TEST CONTROL		1902009-021			B	II	NOTE 11C	2.125	.968	1.718	NA	.093	.031	.06	.093		.093	.858	.608
121	AC	ADPT MODULE, P.S.A.		1902431-021			B	II	NOTE 11C	2.125	.968	1.718	NA	.093	.031	.06	.093		.093	.858	.608
120	AC	BRIDGE, DECADE ERROR		2900128-011			B	II	NOTE 11C	2.125	.968	1.718	NA	.093	.031	.06	.093		.093	.858	.608
119	AC	PWR SUP, ELECTRONICS		2900012-011			B	II	NOTE 11C	2.125	.968	1.718	NA	.093	.031	.06	.093		.093	.858	.608
118	AC	PWR SUP, RELAY AND LAMP		1900049-031			B	II	NOTE 11C	2.125	.968	1.718	NA	.093	.031	.06	.093		.093	.858	.608
117	AC	CONSOLE, OSCILLOGRAPH		1900000-021			B	II	NOTE 11C	2.125	.968	1.718	NA	.093	.031	.06	.093		.093	.858	.608
116	AC	ADPT MODULE, P.S.A.		1902431-011			B	II	NOTE 11C	2.125	.968	1.718	NA	.093	.031	.06	.093		.093	.858	.608
115	AC	ADPT, TEST POINT, PTA/PEA.		2900145-011			B	II	NOTE 11C	2.125	.968	1.718	NA	.093	.031	.06	.093		.093	.858	.608
114	AC	ADPT, TEST POINT, P.S.A.		2900037-011			B	II	NOTE 11C	2.125	.968	1.718	NA	.093	.031	.06	.093		.093	.858	.608
113	AC	CONTROL, GIMBAL POSITION		2900036-011			B	II	NOTE 11C	2.125	.968	1.718	NA	.093	.031	.06	.093		.093	.858	.608
112	AC	SELECTOR, SIGNAL, PRIMARY		2900035-011			B	II	NOTE 11C	2.125	.968	1.718	NA	.093	.031	.06	.093		.093	.858	.608
111	AC	SEL, SIG, OSCILLOGRAPH		2900034-011			B	II	NOTE 11C	2.125	.968	1.718	NA	.093	.031	.06	.093		.093	.858	.608
110	AC	PANEL, PWR SUP AND LOAD		2900033-011			B	II	NOTE 11C	2.125	.968	1.718	NA	.093	.031	.06	.093		.093	.858	.608
109	AC	PANEL, MONITOR		2900031-011			B	II	NOTE 11C	2.125	.968	1.718	NA	.093	.031	.06	.093		.093	.858	.608
108	AC	PANEL, AUXILIARY INPUT		2900030-011			B	II	NOTE 11C	2.125	.968	1.718	NA	.093	.031	.06	.093		.093	.858	.608
107	AC	CAGING ELECTRONICS, GYRO		2900029-011			B	II	NOTE 11C	2.125	.968	1.718	NA	.093	.031	.06	.093		.093	.858	.608
106	AC	TEST SELECTOR		2900028-011			B	II	NOTE 11C	2.125	.968	1.718	NA	.093	.031	.06	.093		.093	.858	.608
105	AC	TEST CONTROL		2900027-011			B	II	NOTE 11C	2.125	.968	1.718	NA	.093	.031	.06	.093		.093	.858	.608
104	AC	MONITOR AND CONTROL, TEMP		2900026-011			B	II	NOTE 11C	2.125	.968	1.718	NA	.093	.031	.06	.093		.093	.858	.608
103	AC	DISTRIBUTION BOX, GSE		2900024-011			B	II	NOTE 11C	2.125	.968	1.718	NA	.093	.031	.06	.093		.093	.858	.608
102	AC	VOLTMETER, DIGITAL		2900007-011			B	II	NOTE 11C	2.125	.968	1.718	NA	.093	.031	.06	.093		.093	.858	.608
101	AC	NAVIGATION BASE ASSEMBLY-LEM		6899950		NAS-9-497	A	I	NOTE 11B	2.000	1.312	1.906	1.375	.078	.048	.078	.093	NA	NA	1.125	.750
100	AC	NAVIGATION BASE ASSEMBLY		2899982		NAS-9-497	A	I	NOTE 11B	2.000	1.312	1.906	1.375	.078	.048	.078	.093	NA	NA	1.125	.750

NOTES FOR TABLE

STYLE A IS FOR G & N SYSTEM
STYLE B IS FOR GROUND SUPPORT EQUIPMENT
TYPE I IS WITHOUT MOUNTING HOLES
TYPE II IS WITH MOUNTING HOLES

1004260 CY SHT 4

1/1004260

REVISIONS					
SYM	ZONE	DESCRIPTION	CHG NO	DATE	APPD
CL		REPLACES REV CK WITHOUT CHANGE PER TDRR 34368		1 SEP 67	JWL
CM		REVISION STATUS CHANGED		18 OCT 67	R.A.W.
CN		REVISION STATUS CHANGE		31 OCT 67	JRK
CP		REVISION STATUS CHANGE		6 NOV 67	EWS
CR		REVISION STATUS CHANGED		9 NOV 67	NFD
CS		REVISION STATUS CHANGED		3 JAN 68	
CT		REVISION STATUS CHANGED		7 FEB 68	LK
CU		REVISION STATUS CHANGED		28 FEB 68	LK
CV		REVISION STATUS CHANGED		8 MAR 68	LK

100 VALUES BELOW																																
100 VALUES BELOW																																
100 VALUES BELOW																																
100 VALUES BELOW																																
[illegible] VALUES BELOW																																
141 VALUES BELOW																																
141 VALUES BELOW																																
144 VALUES BELOW																																
141 VALUES BELOW																																
141 VALUES BELOW																																
141 VALUES BELOW																																
141 VALUES BELOW																																
141 VALUES BELOW																																
100 VALUES BELOW																																
150 VALUES BELOW																																
144 VALUES BELOW																																
102 VALUES BELOW																																
141 VALUES BELOW																																
.125	.062	.188	.156	NA	NA	1.750	1.125	.906	.688	1.500	NA	.281	.125	NA	1.094	2.062	.312	NA	2.500	.062	.125	1.312	.469	NA	NA	NA	.156	NA	.125	.469	.344	NA
121 VALUES BELOW																																
144 VALUES BELOW																																
144 VALUES BELOW																																
144 VALUES BELOW																																
144 VALUES BELOW																																
144 VALUES BELOW																																
141 VALUES BELOW																																
141 VALUES BELOW																																
141 VALUES BELOW																																
[illegible] VALUES BELOW																																
144 VALUES BELOW																																
141 VALUES BELOW																																
141 VALUES BELOW																																
141 VALUES BELOW																																
[illegible] VALUES BELOW																																
141 VALUES BELOW																																
141 VALUES BELOW																																
141 VALUES BELOW																																
144 VALUES BELOW																																
141 VALUES BELOW																																
144 VALUES BELOW																																
144 VALUES BELOW																																
100 VALUES BELOW																																
100 VALUES BELOW																																
.093	.031	.06	.093	NA	NA	.858	.608	.484	.358	.733	.062	.140	.062	NA	.968	1.450	.125	NA	1.720	.046	.03	NA	.210	NA	NA	NA	.070	NA	.046	.32	.16	NA
100 VALUES BELOW																																
100 VALUES BELOW																																
[illegible] VALUES BELOW																																
141 VALUES BELOW																																
141 VALUES BELOW																																
144 VALUES BELOW																																
141 VALUES BELOW																																
144 VALUES BELOW																																
144 VALUES BELOW																																
144 VALUES BELOW																																
144 VALUES BELOW																																
.125	.062	.12	.156	[illegible]	.125	1.625	1.140	.890	.640	1.390	.125	.171	.125	1.875	1.687	2.625	.250	1.562	3.843	.093	NA	NA	.359	.125	.437	3.688	NA	3.687	.093	.40	.25	3.875
.125	.062	.12	.156		.125	1.625	1.140	.890	.640	1.390	.125	.171	.125	1.875	1.687	2.625	.250	1.562	3.843	.093	NA	NA	.359	.125	.437	3.688	NA	3.687	.093	.40	.25	3.875
.125	.062	.12	.156		.125	1.625	1.140	.890	.640	1.390	.125	.171	.125	1.875	1.687	2.625	.250	1.562	3.843	.093	NA	NA	.359	.125	.437	3.688	NA	3.687	.093	.40	.25	3.875
.093	.031	.06	.093		.093	.858	.608	.484	.358	.733	.077	.116	.062	.937	.875	1.343	.125	.781	1.892	.046	NA	NA	.209	.093	.250	1.875	NA	1.840	.046	.23	.16	1.938
.125	.062	.12	.156		.125	1.625	1.140	.890	.640	1.390	.125	.171	.125	1.875	1.687	2.625	.250	1.562	3.843	.093	NA	NA	.359	.125	.437	3.688	NA	3.687	.093	.40	.25	3.875
.125	.062	.12	.156		.125	1.625	1.140	.890	.640	1.390	.125	.171	.125	1.875	1.687	2.625	.250	1.562	3.843	.093	NA	NA	.359	.125	.437	3.688	NA	3.687	.093	.40	.25	3.875
.125	.062	.12	.156		.125	1.625	1.140	.890	.640	1.390	.125	.171	.125	1.875	1.687	2.625	.250	1.562	3.843	.093	NA	NA	.359	.125	.437	3.688	NA	3.687	.093	.40	.25	3.875
.125	.062	.12	.156		.125	1.625	1.140	.890	.640	1.390	.125	.171	.125	1.875	1.687	2.625	.250	1.562	3.843	.093	NA	NA	.359	.125	.437	3.688	NA	3.687	.093	.40	.25	3.875
.125	.062	.12	.156		.125	1.625	1.140	.890	.640	1.390	.125	.171	.125	1.875	1.687	2.625	.250	1.562	3.843	.093	NA	NA	.359	.125	.437	3.688	NA	3.687	.093	.40	.25	3.875
.125	.062	.12	.156		.125	1.625	1.140	.890	.640	1.390	.125	.171	.125	1.875	1.687	2.625	.250	1.562	3.843	.093	NA	NA	.359	.125	.437	3.688	NA	3.687	.093	.40	.25	3.875
.125	.062	.12	.156		.125	1.625	1.140	.890	.640	1.390	.125	.171	.125	1.875	1.687	2.625	.250	1.562	3.843	.093	NA	NA	.359	.125	.437	3.688	NA	3.687	.093	.40	.25	3.875
.125	.062	.12	.156		.125	1.625	1.140	.890	.640	1.390	.125	.171	.125	1.875	1.687	2.625	.250	1.562	3.843	.093	NA	NA	.359	.125	.437	3.688	NA	3.687	.093	.40	.25	3.875
.125	.062	.12	.156		.125	1.625	1.140	.890	.640	1.390	.125	.171	.125	1.875	1.687	2.625	.250	1.562	3.843	.093	NA	NA	.359	.125	.437	3.688	NA	3.687	.093	.40	.25	3.875
.125	.062	.12	.156		.125	1.625	1.140	.890	.640	1.390	.125	.171	.125	1.875	1.687	2.625	.250	1.562	3.843	.093	NA	NA	.359	.125	.437	3.688	NA	3.687	.093	.40	.25	3.875
.125	.062	.12	.156		.125	1.625	1.140	.890	.640	1.390	.125	.171	.125	1.875	1.687	2.625	.250	1.562	3.843	.093	NA	NA	.359	.125	.437	3.688	NA	3.687	.093	.40	.25	3.875
.125	.062	.12	.156		.125	1.625	1.140	.890	.640	1.390	.125	.171	.125	1.875	1.687	2.625	.250	1.562	3.843	.093	NA	NA	.359	.125	.437	3.688	NA	3.687	.093	.40	.25	3.875
.125	.062	.12	.156		.125	1.625	1.140	.890	.640	1.390	.125	.171	.125	1.875	1.687	2.625	.250	1.562	3.843	.093	NA	NA	.359	.125	.437	3.688	NA	3.687	.093	.40	.25	3.875
.093	.031	.06	.093		.093	.858	.608	.484	.358	.733	.077	.116	.062	.937	.875	1.343	.125	.781	1.892	.046	NA	NA	.209	.093	.250	1.875	NA	1.840	.046	.23	.16	1.938
.093	.031	.06	.093		.093	.858	.608	.484	.358	.733	.077	.116	.062	.937	.875	1.343	.125	.781	1.892	.046	NA	NA	.209	.093	.250	1.875	NA	1.840	.046	.23	.16	1.938
.093	.031	.06	.093		.093	.858	.608	.484	.358	.733	.077	.116	.062	.937	.875	1.343	.125	.781	1.892	.046	NA	NA	.209	.093	.250	1.875	NA	1.840	.046	.23	.16	1.938
.093	.031	.06	.093		.093	.858	.608	.484	.358	.733	.077	.116	.062	.937	.875	1.343	.125	.781	1.892	.046	NA	NA	.209	.093	.250	1.875	NA	1.840	.046	.23	.16	1.938
.093	.031	.06	.093		.093	.858	.608	.484	.358	.733	.077	.116	.062	.937	.875	1.343	.125	.781	1.892	.046	NA	NA	.209	.093	.250	1.875	NA	1.840	.046	.23	.16	1.938
.093	.031	.06	.093		.093	.858	.608	.484	.358	.733	.077	.116	.062	.937	.875	1.343	.125	.781	1.892	.046	NA	NA	.209	.093	.250	1.875	NA	1.840	.046	.23	.16	1.938
.093	.031	.06	.093		.093	.858	.608	.484	.358	.733	.077	.116	.062	.937	.875	1.343	.125	.781	1.892	.046	NA	NA	.209	.093	.250	1.875	NA	1.840	.046	.23	.16	1.938
.093	.031	.06	.093		.093	.858	.608	.484	.358	.733	.077	.116	.062	.937	.875	1.343	.125	.781	1.892	.046	NA	NA	.209	.093	.250	1.875	NA	1.840	.046	.23	.16	1.938
.093	.031	.06	.093		.093	.858	.608	.484	.358	.733	.077	.116	.062	.937	.875	1.343	.125	.781	1.892	.046	NA	NA	.209	.093	.250	1.875	NA	1.840	.046	.23	.16	1.938
.093	.031	.06	.093		.093	.858	.608	.484	.358	.733	.077	.116	.062	.937	.875	1.343	.125	.781	1.892	.046	NA	NA	.209	.093	.250	1.875	NA	1.840	.046	.23	.16	1.938
.093	.031	.06	.093		.093	.858	.608	.484	.358	.733	.077	.116	.062	.937	.875	1.343	.125	.781	1.892	.046	NA	NA	.209	.093	.250	1.875	NA	1.840	.046	.23	.16	1.938
.093	.031	.06	.093		.093	.858	.608	.484	.358	.733	.077	.116	.062	.937	.875	1.343	.125	.781	1.892	.046	NA	NA	.209	.093	.250	1.875	NA	1.840	.046	.23	.16	1.938
.093	.031	.06	.093		.093	.858	.608	.484	.358	.733	.077	.116	.062	.937	.875	1.343	.125	.781	1.892	.046	NA	NA	.209	.093	.250	1.875	NA	1.840	.046	.23	.16	1.938
.093	.031	.06	.093		.093	.858	.608	.484	.358	.733	.077	.116	.062	.937	.875	1.343	.125	.781	1.892	.046	NA	NA	.209	.093	.250	1.875	NA	1.840	.046	.23	.16	1.938
.093	.031	.06	.093		.093	.858	.608	.484	.358	.733	.077	.116	.062	.937	.875	1.343	.125	.781	1.892	.046	NA	NA	.209	.093	.250	1.875	NA	1.840	.046	.23	.16	1.938
.093	.031	.06	.093		.093	.858	.608	.484	.358	.733	.077	.116	.062	.937	.875	[illegible]343	.125	.781	1.892	.046	NA	NA	.209	.093	.250	1.875	NA	1.840	.046	.23	.16	1.938
.093	.031	.06	.093		.093	.858	.608	.484	.358	.733	.077	.116	.062	.937	.875	1.343	.125	.781	1.892	.046	NA	NA	.209	.093	.250	1.875	NA	1.840	.046	.23	.16	1.938
.093	.031	.06	.093		.093	.858	.608	.484	.358	.733	.077	.116	.062	.937	.875	1.343	.125	.781	1.892	.046	NA	NA	.209	.093	.250	1.875	NA	1.840	.046	.23	.16	1.938
.093	.031	.06	.093		.093	.858	.608	.484	.358	.733	.077	.116	.062	.937	.875	1.343	.125	.781	1.892	.046	NA	NA	.209	.093	.250	1.875	NA	1.840	.046	.23	.16	1.938
.093	.031	.06	.093		.093	.858	.608	.484	.358	.733	.077	.116	.062	.937	.875	1.343	.125	.781	1.892	.046	NA	NA	.209	.093	.250	1.875	NA	1.840	.046	.23	.16	1.938
.093	.031	.06	.093		.093	.858	.608	.484	.358	.733	.077	.116	.062	.937	.875	1.343	.125	.781	1.892	.046	NA	NA	.209	.093	.250	1.875	NA	1.840	.046	.23	.16	1.938
.093	.031	.06	.093		.093	.858	.608	.484	.358	.733	.077	.116	.062	.937	.875	1.343	.125	.781	1.892	.046	NA	NA	.209	.093	.250	1.875	NA	1.840	.046	.23	.16	1.938
.093	.031	.06	.093		.093	.858	.608	.484	.358	.733	.077	.116	.062	.937	.875	1.343	.125	.781	1.892	.046	NA	NA	.209	.093	.250	1.875	NA	1.840	.046	.23	.16	1.938
.093	.031	.06	.093		.093	.858	.608	.484	.358	.733	.077	.116	.062	.937	.875	1.343	.125	.781	1.892	.046	NA	NA	.209	.093	.250	1.875	NA	1.840	.046	.23	.16	1.938
.093	.031	.06	.093		.093	.858	.608	.484	.358	.733	.077	.116	.062	.937	.875	1.343	.125	.781	1.892	.046	NA	NA	.209	.093	.250	1.875	NA	1.840	.046	.23	.16	1.938
.093	.031	.06	.093		.093	.858	.608	.484	.358	.733	.077	.116	.062	.937	.875	1.343	.125	.781	1.892	.046	NA	NA	.209	.093	.250	1.875	NA	1.840	.046	.23	.16	1.938
.093	.031	.06	.093	NA	.093	.858	.608	.484	.358	.733	.077	.116	.062	.937	.875	1.343	.125	.781	1.892	.046	NA	NA	.209	.093	.250	1.875	NA	1.840	.046	.23	.16	1.938
.078	.048	.078	.093	NA	NA	1.125	.750	.593	.453	1.015	.062	.187	.078	.875	.718	1.375	.218	NA	NA	.048	.031	.875	.305	.078	.531	1.906	.078	NA	.078	.531	.187	NA
.078	.048	.078	.093	NA	NA	1.125	.750	.593	.453	1.015	.062	.187	.078	.875	.718	1.375	.218	NA	NA	.048	.031	.875	.305	.078	.531	1.906	.078	NA	.078	.531	.187	NA
E	F	G	H	J	K	L	M	N	P	R	S	T	U	V	W	Y	Z	AA	AB	AC	AD	AE	AF	AG	AH	AJ	AK	AL	AM	AN	AP	AR

AC ELECTRONICS DASH NUMBERS

		UNLESS OTHERWISE SPECIFIED DIMENSIONS ARE IN INCHES TOLERANCES ON 2 PLACE DECIMALS ± 3 PLACE DECIMALS ±.005 ANGLES ±	MIT INSTRUMENTATION LAB CAMBRIDGE MASS	MANNED SPACECRAFT CENTER HOUSTON, TEXAS
			DRAWN R. A. JONES DATE 16 JUL 65 CHECKED APPROVAL W. KUPFER 22 JUL 65	NAMEPLATES, APOLLO GEN - GSE (STANDARDS)
AS APPLICABLE		DO NOT SCALE THIS DRAWING	CONTRACT	
		MATERIAL SEE NOTE 11	NASA APPROVAL T. MICHAELS 22 JUL 65	SIZE J2 | CODE IDENT NO 80230 | 1004260
NEXT ASSY	USED ON		MIT APPROVAL W. KUPFER 22 JUL 65	
APPLICATION		APPROVAL		SCALE NONE | SHEET 4 OF 6

1004260 CV

1004260

1004260 | C | SHT 4

2/1004260

[illegible]

DASH NO.	P/C	PART NAME	REMARKS	PART NUMBER	SER. NO.	CONT. NO.	STYLE	TYPE	MATERIAL	A	B	C	D	E	F	G	H	J	K	L	M	N
401	MIT	COMPUTER ASSY		2003100		NAS-9-497	A	I	NOTE 11B	2,000	1,312	1,906	1,375	,078	,048	,078	,093	NA	NA	1,125	,750	,593
400	MIT	LIFTING SLING-G&N INST, QUAL, FIX, & AZM, REF, FIX,		1021640		NAS-9-4065	B	II	NOTE 11C	2,000	1,312	1,687	1,375	,078	,048	,078	,093	[illegible]	,093	1,187	,750	,593

NOTES FOR TABLE

STYLE A IS FOR G & N SYSTEM
STYLE B IS FOR GROUND SUPPORT EQUIPMENT
TYPE I IS WITHOUT MOUNTING HOLES
TYPE II IS WITH MOUNTING HOLES

1004260		SHT 5

1/1004260

REVISIONS					
SYM	ZONE	DESCRIPTION	CHG NO	DATE	APPD
CL		REPLACES REV CK WITHOUT CHANGE PER TDRR 34365		[illegible] 67	RWH
CM		REVISION STATUS CHANGED		18 OCT 67	R.A.W.
CN		REVISION STATUS CHANGED		31 OCT 67	JRK
CP		REVISION STATUS CHANGED		6 NOV 67	[illegible]
CR		REVISION STATUS CHANGED		7 DEC 67	[illegible]
CS		REVISION STATUS CHANGED		9 JAN 68	[illegible]
CT		REVISION STATUS CHANGED		[illegible] 68	LK
CU		REVISION STATUS CHANGED		22 FEB 68	JRK
CV		REVISION STATUS CHANGED		[illegible] 68	LK

1004260 CV

1004260

[illegible]	.048	.078	.093	NA	NA	1.125	.750	.593	.453	1.015	.062	.187	.078	.875	.718	1.375	.218	NA	NA	.048	.031	.875	.305	.078	.531	1.906	.078	NA	.078	.531	.187	NA
[illegible]	.048	.078	.093	[illegible]	.093	1.187	.750	.593	.453	1.015	.062	.187	.078	.875	.718	1.375	.218	1.156	1.843	.048	NA	.875	.305	.078	.312	1.687	.110	1.830	.070	.275	.180	1.844
[illegible]	F	G	H	J	K	L	M	N	P	R	S	T	U	V	W	Y	Z	AA	AB	AC	AD	AE	AF	AG	AH	AJ	AK	AL	AM	AN	AP	AR

MIT DASH NUMBERS

UNLESS OTHERWISE SPECIFIED DIMENSIONS ARE IN INCHES TOLERANCES ON 2 PLACE DECIMALS ± 3 PLACE DECIMALS ± .005 ANGLES ±	MIT INSTRUMENTATION LAB CAMBRIDGE, MASS. R.A JONES 16 JUL 65 DRAWN DATE CHECKED W. KUPFER 22 JUL 65 APPROVAL	MANNED SPACECRAFT CENTER HOUSTON, TEXAS	
DO NOT SCALE THIS DRAWING	CONTRACT	NAMEPLATES, APOLLO GEN - GSE (STANDARDS)	
MATERIAL SEE NOTE 11	T. MICHAELS 22 JUL 65 NASA APPROVAL	SIZE J2	CODE IDENT NO. 80230 1004260
APPROVAL	W. KUPFER 22 JUL 65 MIT APPROVAL	SCALE NONE	SHEET 5 OF 6

AS APPLICABLE

NEXT ASSY	USED ON
APPLICATION	

1004260	C.	SHT 5

2/1004260

[illegible]

DASH NO.	P/C	PART NAME	REMARKS	PART NUMBER	SER. NO.	CONT. NO.	STYLE	TYPE	MATERIAL	A	B	C	D	E	F	G	H	J	K	L	M
599	AC																				
598	AC																				
576		FIX., MOUNTING G & N		2900067-061		FOR OTHER DATA SEE DASH 500															
575		CSL. CAL AND TEST, SCM/PSAAM		2900895-041		FOR DATA SEE DASH 559															
574		CONT., TEMP PORTABLE		2900060-031		NAS-9-497	B	II	NOTE 11C	FOR DIMENSIONS SEE DASH 535 VALUES											
573		BATTERY PACK LIFTING		2900812-031		NAS-9-497	B	II	NOTE 11C	FOR DIMENSIONS SEE DASH 542 VALUES											
572		FIX., MOUNTING G & N	(-144)	2900067-081		NAS-9-497	B	II	NOTE 11C	FOR DIMENSIONS SEE DASH 500 VALUES											
571		EYEPIECE STORAGE UNIT		2021382		FOR OTHER DATA SEE DASH 100															
570	AC	OPTICAL UNIT & BELLOWS ASSY				NAS-9-497	A	I	NOTE 11B	FOR DIMENSIONS SEE DASH 550 VALUES											
569	AC	G & N INDICATOR CONTROL PANEL ASSY		2021323-011		NAS-9-497	A	I	NOTE 11B	FOR DIMENSIONS SEE DASH 181											
568	AC	G & N INDICATOR CONTROL PANEL ASSY		2021290-021		NAS-9-497	A	I	NOTE 11B	FOR DIMENSIONS SEE DASH 181											
567	AC	G & N INDICATOR CONTROL PANEL ASSY		2021290-011		NAS-9-497	A	I	NOTE 11B	FOR DIMENSIONS SEE DASH 181											
566	AC	COMPUTER CONT & RETICLE DIMMER		6014512-061		NAS-9-497	A	I	NOTE 11B	FOR DIMENSIONS SEE DASH 534											
565		AUXILIARY BATTERY PACK		1901492-031		NAS-9-497	B	II	NOTE 11C	FOR DIMENSIONS SEE DASH 500											
564		BATTERY POWER PACK		1900011-051		NAS-9-497	B	II	NOTE 11C	FOR DIMENSIONS SEE DASH 500											
563		PSA ADAPTER MODULE (LEM)		6900088-031		NAS-9-497	B	II	NOTE 11C	FOR DIMENSIONS SEE DASH 141 VALUES											
562	AC	COMPUTER CONT & RETICLE DIMMER		6014512-041		NAS-9-497	A	I	NOTE 11B	FOR DIMENSIONS SEE DASH 534 VALUES											
561	AC	G & N INDICATOR CONTROL PANEL ASSY		2014578-031		NAS-9-497	A	I	NOTE 11B	FOR DIMENSIONS SEE DASH 181 VALUES											
560		ADPT. MODULE, PSA		2901143-021		NAS-9-497	B	II	NOTE 11C	FOR DIMENSIONS SEE DASH 141 VALUES											
559		CSL. CAL AND TEST, SCM/PSAAM		2900895-031		FOR OTHER DATA SEE DASH 547															
558		PSA ADAPTER MODULE (LEM)		6900088-021		FOR OTHER DATA SEE DASH 189															
557		FIX., HANDLING, C/M PSA		2900008-021		NAS-9-497	B	II	NOTE 11C	FOR DIMENSIONS SEE DASH 141 VALUES											
556		FIX., MOUNTING G & N	(-144)	2900067-041		NAS-9-497	B	II	NOTE 11C	FOR DIMENSIONS SEE DASH 500 VALUES											
555	AC	OPTICAL UNIT ASSEMBLY		1021368-061		NAS-9-497	A	I	NOTE 11B	2.000	1.312	1.687	1.375	.078	.048	.078	.093	NA	NA	1.125	.750
554	AC	OPTICAL UNIT ASSEMBLY		1021368-041		NAS-9-497	A	I	NOTE 11B	2.000	1.312	1.687	1.375	.078	.048	.078	.093	NA	NA	1.125	.750
553	AC	OPTICAL UNIT AND BELLOWS ASSEMBLY		2010790-111		NAS-9-497	A	I	NOTE 11B	2.000	1.312	1.687	1.375	.078	.048	.078	.093	NA	NA	1.125	.750
552	AC	OPTICAL UNIT AND BELLOWS ASSEMBLY		2010790-081		NAS-9-497	A	I	NOTE 11B	2.000	1.312	1.687	1.375	.078	.048	.078	.093	NA	NA	1.125	.750
551	AC	OPTICAL UNIT AND BELLOWS ASSEMBLY		2010790-071		NAS-9-497	A	I	NOTE 11B	2.000	1.312	1.687	1.375	.078	.048	.078	.093	NA	NA	1.125	.750
550	AC	OPTICAL UNIT AND BELLOWS ASSEMBLY		2010790-061		NAS-9-497	A	I	NOTE 11B	2.000	1.312	1.687	1.375	.078	.048	.078	.093	NA	NA	1.125	.750
548		CAGING ELECTRONICS, GYRO		2900029-031		NAS-9-497	B	II	NOTE 11C	2.125	.968	1.718	NA	.093	.031	.06	.093	[illegible]	.093	.858	.608
547		CSL. CAL AND TEST, SCM/PSAAM		2900895-021		NAS-9-497	B	II	NOTE 11C	4.125	1.812	3.250	NA	.125	.062	.12	.156	[illegible]	.125	1.625	1.140
546		FIX., HAND., C/M AND LEM CDU		2900999-021		NAS-9-497	B	II	NOTE 11C	2.125	.968	1.718	NA	.093	.031	.06	.093	[illegible]	.093	.858	.608
545	AC	G & N INDICATOR CONTROL PANEL ASSY		2014578-021		NAS-9-497	A	I	NOTE 11B	3.000	1.938	2.437	NA	.125	.062	.168	.156	NA	NA	1.750	1.125
544		ADPT MODULE, P.S.A.		1902431-051		NAS-9-497	B	II	NOTE 11C	2.125	.968	1.718	NA	.093	.031	.06	.093	[illegible]	.093	.858	.608
543	AC	PANEL, MONITOR		2900031-041		NAS-9-497	B	II	NOTE 11C	2.125	.968	1.718	NA	.093	.031	.06	.093	[illegible]	.093	.858	.608
542	AC	BATTERY PACK, LIFTING		2900812-021		NAS-9-497	B	II	NOTE 11C	2.125	.968	1.718	NA	.093	.031	.06	.093	[illegible]	.093	.858	.608
541	AC	FIXTURE, MOUNTING, IMU		2900000-021		NAS-9-497	B	II	NOTE 11C	4.125	1.812	3.250	NA	.125	.062	.12	.156	[illegible]	.125	1.625	1.140
540	AC	ADPT, TEST POINT, P.S.A.		2900037-031		NAS-9-497	B	II	NOTE 11C	2.125	.968	1.718	NA	.093	.031	.06	.093	[illegible]	.093	.858	.608
539	AC	ANNUNCIATOR PANEL & EYEPIECE STORAGE ASSEMBLY		1021255-041		NAS-9-497	A	I	NOTE 11B	2.000	1.312	1.906	1.375	.078	.048	.078	.093	NA	NA	1.125	.750
538	AC	ANNUNCIATOR PANEL & EYEPIECE STORAGE ASSEMBLY		1021255-031		NAS-9-497	A	I	NOTE 11B	2.000	1.312	1.906	1.375	.078	.048	.078	.093	NA	NA	1.125	.750
537	AC	TEST SELECTOR		2900028-031		NAS-9-497	B	II	NOTE 11C	2.125	.968	1.718	NA	.093	.031	.06	.093	[illegible]	.093	.858	.608
536	AC	ANALYZER, OPTICS-INERTIAL		2900023-041		NAS-9-497	B	II	NOTE 11C	4.125	1.812	3.250	NA	.125	.062	.12	.156	[illegible]	.125	1.625	1.140
535	AC	CONT, TEMP, PORTABLE		2900060-021		NAS-9-497	B	II	NOTE 11C	2.125	.968	1.718	NA	.093	.031	.06	.093	[illegible]	.093	.858	.608
534	AC	COMPUTER CONT & RETICLE DIMMER		6014512-021		NAS-9-497	A	I	NOTE 11B	2.000	1.312	1.906	1.375	.078	.048	.078	.093	NA	NA	1.125	.750
533	AC	ADPT MODULE, P.S.A.		1902431-041		NAS-9-497	B	II	NOTE 11C	2.125	.968	1.718	NA	.093	.031	.06	.093	[illegible]	.093	.858	.608
532	AC	TRAY BREAKOUT, 105 PIN		1900807-021		NAS-9-497	B	II	NOTE 11C	4.125	1.812	3.250	NA	.125	.062	.12	.156	[illegible]	.125	1.625	1.140
531	AC	TRAY BREAKOUT, 84 PIN		1900806-021		NAS-9-497	B	II	NOTE 11C	4.125	1.812	3.250	NA	.125	.062	.12	.156	[illegible]	.125	1.625	1.140
530	AC	HEAT SINK-TRAY EXTENDER		1900808-021		NAS-9-497	B	II	NOTE 11C	2.125	.968	1.718	NA	.093	.031	.06	.093	[illegible]	.093	.858	.608
529	AC	TESTER, FAILURE INDICATOR		1900809-021		NAS-9-497	B	II	NOTE 11C	2.125	.968	1.718	NA	.093	.031	.06	.093	[illegible]	.093	.858	.608
527	AC	FIX., MOUNTING, G & N	(-144)	1902204-021		NAS-9-497	B	II	NOTE 11C	FOR DIMENSIONS SEE DASH 500 VALUES BELOW											
526	AC	FIX., MOUNTING, G & N	(-144)	2900067-031		NAS-9-497	B	II	NOTE 11C	FOR DIMENSIONS SEE DASH 500 VALUES BELOW											
525	AC	PORTABLE TEMP. CONTROLLER		1900496-021		NAS-9-497	B	II	NOTE 11C	3.000	1.937	2.437	2.312	.125	.031	.125	.156	.125	.125	1.718	1.187
524	AC	POWER, SERVO & THERMOCOUPLE ASSEMBLY C/M		2010743		NAS-9-497	A	I	NOTE 11B	2.125	.968	1.718	NA	.093	.031	.06	.093	NA	NA	.858	.608
523	AC	PULSE TORQUE AND THERMOCOUPLE ASSEMBLY-LEM		6010656		NAS-9-497	A	I	NOTE 11B	FOR DIMENSIONS SEE DASH 508 VALUES BELOW											
522	AC	COUPLING DATA UNIT & THERMOCOUPLE ASSEMBLY-LEM		2010744		NAS-9-497	A	I	NOTE 11B	FOR DIMENSIONS SEE DASH 508 VALUES BELOW											
521	AC	COUPLING DATA UNIT & THERMOCOUPLE ASSEMBLY-C/M		2010744		NAS-9-497	A	I	NOTE 11B	FOR DIMENSIONS SEE DASH 508 VALUES BELOW											
520	AC	PIPA ELECTRONICS AND THERMOCOUPLE ASSEMBLY		2010745		NAS-9-497	A	I	NOTE 11B	FOR DIMENSIONS SEE DASH 508 VALUES BELOW											
519	AC	FIXTURE, HANDLING, LEM-PSA	(-141)	6900129-011		NAS-9-497	B	II	NOTE 11C	FOR DIMENSIONS SEE DASH 504 VALUES BELOW											
518	AC	JUNCTION BOX, GSE-PSA	(-144)	1901933-031		NAS-9-497	B	II	NOTE 11C	FOR DIMENSIONS SEE DASH 500 VALUES BELOW											
517	AC	FIX., HAND., OPTICS INSTL.	(-141)	2901380-011		NAS-9-497	B	II	NOTE 11C	FOR DIMENSIONS SEE DASH 502 VALUES BELOW											
516	AC	POWER, SERVO AND THERMOCOUPLE ASSEMBLY-LEM		6010655		NAS-9-497	A	I	NOTE 11B	FOR DIMENSIONS SEE DASH 508 VALUES BELOW											
514	AC	SIGNAL COND. ASSY LEM OPER.	(-100)	6007013		NAS-9-497	A	I	NOTE 11B	FOR DIMENSIONS SEE DASH 508 VALUES BELOW											
513	AC	JUMPER, BY-PASS	(-141)	1021616		NAS-9-497	B	II	NOTE 11C	2.125	.968	1.718	NA	.093	.031	.06	.093	[illegible]	.093	.858	.608
512	AC	COUPLING DATA UNIT ASSEMBLY C/M	(-100)	2007322-011		NAS-9-497	A	I	NOTE 11B	FOR DIMENSIONS SEE DASH 508 VALUES BELOW											
511	AC	COUPLING DATA UNIT ASSEMBLY-LEM	(-100)	2007322-021		NAS-9-497	A	I	NOTE 11B	FOR DIMENSIONS SEE DASH 508 VALUES BELOW											
510	AC	BATTERY POWER PACK	(-144)	1900011-041		NAS-9-497	B	II	NOTE 11C	FOR DIMENSIONS SEE DASH 500 VALUES BELOW											
509	AC	JUNCTION BOX, P.S.A./G.S.E.	(-144)	1902195-021		NAS-9-497	B	II	NOTE 11C	FOR DIMENSIONS SEE DASH 500 VALUES BELOW											
508	AC	NAVIGATION BASE ASSEMBLY-LEM	(-101)	6899980		NAS-9-497	A	I	NOTE 11B	2.000	1.312	1.906	1.375	.078	.048	.078	.093	NA	NA	1.125	.750
507	AC	CSL, COOL, AND PWR, G AND N	(-144)	1902134-041		NAS-9-497	B	II	NOTE 11C	FOR DIMENSIONS SEE DASH 500 VALUES BELOW											
506	AC	BREAKOUT BOX, CABLE ADAPTER	(-141)	2901011-011		NAS-9-497	B	II	NOTE 11C	2.125	.968	1.718	NA	.093	.031	.06	.093	[illegible]	.093	.858	.608
505	AC	MONITOR AND CONTROL, TEMP	(-141)	2900026-021		NAS-9-497	B	II	NOTE 11C	2.125	.968	1.718	NA	.093	.031	.06	.093	[illegible]	.093	.858	.608
504	AC	PWR SUP, GUIDANCE SYSTEM	(-141)	1900033-021		NAS-9-497	B	II	NOTE 11C	2.125	.968	1.718	NA	.093	.031	.06	.093		.093	.858	.608
503	AC	CONTROL, GIMBAL POSITION	(-141)	2900036-021		NAS-9-497	B	II	NOTE 11C	2.125	.968	1.718	NA	.093	.031	.06	.093	[illegible]	.093	.858	.608
502	AC	ADPT, TEST POINT, PTA/PEA.	(-141)	2900145-021		NAS-9-497	B	II	NOTE 11C	2.125	.968	1.718	NA	.093	.031	.06	.093	[illegible]	.093	.858	.608
501	AC	MOUNTING PLATE, COMPONENT	(-144)	6900007-031		NAS-9-497	B	II	NOTE 11C	FOR DIMENSIONS SEE DASH 500 VALUES BELOW											
500	AC	MOUNTING PLATE, COMPONENT	(-144)	2900677-021		NAS-9-497	B	II	NOTE 11C	4.125	1.812	3.250	NA	.125	.062	.12	.156	[illegible]	.125	1.625	1.140

NOTES FOR TABLE

STYLE A IS FOR G & N SYSTEM
STYLE B IS FOR GROUND SUPPORT EQUIPMENT
TYPE I IS WITHOUT MOUNTING HOLES
TYPE II IS WITH MOUNTING HOLES

1004260	C/	SHT 6

SYM	ZONE	DESCRIPTION	CHG NO	DATE	APP'D
CL		REPLACES REV CK WITH CHANGE PER TDRR 34365		4/28/67	
CM		REVISED PER TDRR 34896		17 OCT. 67	R.A.H.
CN		REVISED PER TDRR 34467		31 OCT 67	JRK
CP		REVISED PER TDRR 34855		6 NOV 67	
CR		REVISED PER TDRR 35164		7 DEC 67	
CS		REVISED PER TDRR 35307		3 JAN 68	
CT		REVISION STATUS CHANGED		68	
CU		REVISED PER TDRR 35628		22 FEB 68	JRK
CV		REVISED PER TDRR 35675		27 FEB 68	

E	F	G	H	J	K	L	M	N	P	R	S	T	U	V	W	Y	Z	AA	AB	AC	AD	AE	AF	AG	AH	AJ	AK	AL	AM	AN	AP	AR
DASH 535 VALUES																																
DASH 542 VALUES																																
DASH 500 VALUES																																
DASH 550 VALUES																																
DASH 181																																
DASH 181																																
DASH 181																																
DASH 534																																
DASH 500																																
DASH 500																																
DASH 141 VALUES																																
DASH 534 VALUES																																
DASH 181 VALUES																																
DASH 141 VALUES																																
DASH 141 VALUES																																
DASH [illegible] VALUES																																
.078	.048	.078	.093	NA	NA	1.125	.750	.593	.453	1.015	.062	.187	.078	.875	.718	1.375	.218	NA	NA	.048	.031	.875	.305	NA	.468	1.531	NA	NA	.078	.312	.187	NA
.078	.048	.078	.093	NA	NA	1.125	.750	.593	.453	1.015	.062	.187	.078	.875	.718	1.375	.218	NA	NA	.048	.031	.875	.305	NA	.468	1.531	NA	NA	.078	.312	.187	NA
.078	.048	.078	.093	NA	NA	1.125	.750	.593	.453	1.015	.062	.187	.078	.875	.718	1.375	.218	NA	NA	.048	.031	.875	.305	NA	.468	1.531	NA	NA	.078	.312	.187	NA
.078	.048	.078	.093	NA	NA	1.125	.750	.593	.453	1.015	.062	.187	.078	.875	.718	1.375	.218	NA	NA	.048	.031	.875	.305	NA	.468	1.531	NA	NA	.078	.312	.187	NA
.078	.048	.078	.093	NA	NA	1.125	.750	.593	.453	1.015	.062	.187	.078	.875	.718	1.375	.218	NA	NA	.048	.031	.875	.305	NA	.468	1.531	NA	NA	.078	.312	.187	NA
.078	.048	.078	.093	NA	NA	1.125	.750	.593	.453	1.015	.062	.187	.078	.875	.718	1.375	.218	NA	NA	.048	.031	.875	.305	NA	.468	1.531	NA	NA	.078	.312	.187	NA
.093	.03	.06	.093		.093	.858	.608	.484	.358	.733	.077	.116	.062	.937	.875	1.343	.125	.781	1.892	.046	NA	NA	.209	.093	.250	1.875	NA	1.840	.046	.23	.16	1.938
.125	.062	.12	.156		.125	1.625	1.140	.890	.640	1.390	.125	.171	.125	1.875	1.687	2.625	.250	1.562	3.843	.093	NA	NA	.359	.125	.437	3.688	NA	3.687	.093	.40	.25	3.875
.093	.03	.06	.093		.093	.858	.608	.484	.358	.733	.077	.116	.062	.937	.875	1.343	.125	.781	1.892	.046	NA	NA	.209	.093	.250	1.875	NA	1.840	.046	.23	.16	1.938
.125	.062	.188	.156	NA	NA	1.750	1.125	.906	.688	1.500	NA	.281	.125	NA	1.094	2.062	.312	NA	2.500	.062	.125	1.312	.469	NA	NA	NA	.156	NA	.125	.469	.344	NA
[illegible]	.03	.06	.093		.093	.858	.608	.484	.358	.733	.077	.116	.062	.937	.875	1.343	.125	.781	1.892	.046	NA	NA	.209	.093	.250	1.875	NA	1.840	.046	.23	.16	1.938
.093	.03	.06	.093		.093	.858	.608	.484	.358	.733	.077	.116	.062	.937	.875	1.343	.125	.781	1.892	.046	NA	NA	.209	.093	.250	1.875	NA	1.840	.046	.23	.25	1.938
.093	.03	.06	.093		.093	.858	.608	.484	.358	.733	.077	.116	.062	.937	.875	1.343	.125	.781	1.892	.046	NA	NA	.209	.093	.250	1.875	NA	1.840	.046	.23	.16	1.938
.125	.062	.12	.156		.125	1.625	1.140	.890	.640	1.390	.125	.171	.125	1.875	1.687	2.625	.250	1.562	3.843	.093	NA	NA	.359	.125	.437	3.688	NA	3.687	.093	.40	.25	3.875
.093	.03	.06	.093		.093	.858	.608	.484	.358	.733	.077	.116	.062	.937	.875	1.343	.125	.781	1.892	.046	NA	NA	.209	.093	.250	1.875	NA	1.840	.046	.23	.16	1.938
.078	.048	.078	.093	NA	NA	1.125	.750	.593	.453	1.015	.062	.187	.078	.875	.718	1.375	.218	NA	NA	.048	.031	.875	.305	.078	.531	1.906	.078	NA	.078	.531	.187	NA
.078	.048	.078	.093	NA	NA	1.125	.750	.593	.453	1.015	.062	.187	.078	.875	.718	1.375	.218	NA	NA	.048	.031	.875	.305	.078	.531	1.906	.078	NA	.078	.531	.187	NA
[illegible]	[illegible]	.06	.093		.093	.858	.608	.484	.358	.733	.077	.116	.062	.937	.875	1.343	.125	.781	1.892	.046	NA	NA	.209	.093	.250	1.875	NA	1.840	.046	.23	.16	1.938
[illegible]	.062	.12	.156		.125	1.625	1.140	.890	.640	1.390	.125	.171	.125	1.875	1.687	2.625	.250	1.562	3.843	.093	NA	NA	.359	.125	.437	3.688	NA	3.687	.093	.40	.25	3.875
.093	.03	.06	.093		.093	.858	.608	.484	.358	.733	.077	.116	.062	.937	.875	1.343	.125	.781	1.892	.046	NA	NA	.209	.093	.250	1.875	NA	1.840	.046	.23	.16	1.938
.078	.048	.078	.093	NA	NA	1.125	.750	.593	.453	1.015	.062	.187	.078	.875	.718	1.375	.218	NA	NA	.048	.031	.875	.305	.078	.531	1.906	.078	NA	.078	.531	.187	NA
.093	.03	.06	.093		.093	.858	.608	.484	.358	.733	.077	.116	.062	.937	.875	1.343	.125	.781	1.892	.046	NA	NA	.209	.093	.250	1.875	NA	1.840	.046	.23	.16	1.938
.125	.062	.12	.156		.125	1.625	1.140	.890	.640	1.390	.125	.171	.125	1.875	1.687	2.625	.250	1.562	3.843	.093	NA	NA	.359	.125	.437	3.688	NA	3.687	.093	.40	.25	3.875
[illegible]	.062	.12	.156		.125	1.625	1.140	.890	.640	1.390	.125	.171	.125	1.875	1.687	2.625	.250	1.562	3.843	.093	NA	NA	.359	.125	.437	3.688	NA	3.687	.093	.40	.25	3.875
.093	.03	.06	.093		.093	.858	.608	.484	.358	.733	.077	.116	.062	.937	.875	1.343	.125	.781	1.892	.046	NA	NA	.209	.093	.250	1.875	NA	1.840	.046	.23	.16	1.938
.093	.031	.06	.093		.093	.858	.608	.484	.358	.733	.077	.116	.062	.937	.875	1.343	.125	.781	1.892	.046	NA	NA	.209	.093	.250	1.875	NA	1.840	.046	.23	.16	1.938
DASH 500 VALUES BELOW																																
DASH 500 VALUES BELOW																																
[illegible]	.03	.125	.156	.125	.125	1.718	1.187	.968	.749	1.452	.093	.295	.090	1.312	1.00	2.000	.250	1.687	2.750	.062	NA	NA	.463	.125	.562	2.437	.140	2.562	.090	.468	.359	2.750
.093	.031	.06	.093	NA	NA	.858	.608	.484	.358	.733	.062	.140	.062	NA	.968	1.450	.125	NA	1.720	.046	.03	NA	.210	NA	NA	NA	.070	NA	.046	.32	.16	NA
DASH 508 VALUES BELOW																																
DASH 508 VALUES BELOW																																
DASH 508 VALUES BELOW																																
DASH 508 VALUES BELOW																																
DASH 504 VALUES BELOW																																
DASH 500 VALUES BELOW																																
DASH 502 VALUES BELOW																																
DASH 508 VALUES BELOW																																
DASH 508 VALUES BELOW																																
.093	.031	.06	.093		.093	.858	.608	.484	.358	.733	.077	.116	.062	.937	.875	1.343	.125	.781	1.892	.046	NA	NA	.209	.093	.250	1.875	NA	1.840	.046	.23	.16	1.938
DASH 508 VALUES BELOW																																
DASH 508 VALUES BELOW																																
DASH 500 VALUES BELOW																																
DASH [illegible] VALUES BELOW																																
.078	.048	.078	.093	NA	NA	1.125	.750	.593	.453	1.015	.062	.187	.078	.875	.718	1.375	.218	NA	NA	.048	.031	.875	.305	.078	.531	1.906	.078	NA	.078	.531	.187	NA
DASH 500 VALUES BELOW																																
.093	.031	.06	.093		.093	.858	.608	.484	.358	.733	.077	.116	.062	.937	.875	1.343	.125	.781	1.892	.046	NA	NA	.209	.093	.250	1.875	NA	1.840	.046	.23	.16	1.938
.093	.031	.06	.093		.093	.858	.608	.484	.358	.733	.077	.116	.062	.937	.875	1.343	.125	.781	1.892	.046	NA	NA	.209	.093	.250	1.875	NA	1.840	.046	.23	.16	1.938
.093	.031	.06	.093		.093	.858	.608	.484	.358	.733	.077	.116	.062	.937	.875	1.343	.125	.781	1.892	.046	NA	NA	.209	.093	.250	1.875	NA	1.840	.046	.23	.16	1.938
.093	.031	.06	.093		.093	.858	.608	.484	.358	.733	.077	.116	.062	.937	.875	1.343	.125	.781	1.892	.046	NA	NA	.209	.093	.250	1.875	NA	1.840	.046	.23	.16	1.938
.093	.031	.06	.093		.093	.858	.608	.484	.358	.733	.077	.116	.062	.937	.875	1.343	.125	.781	1.892	.046	NA	NA	.209	.093	.250	1.875	NA	1.840	.046	.23	.16	1.938
DASH 500 VALUES BELOW																																
.125	.062	.12	.156		.125	1.625	1.140	.890	.640	1.390	.125	.171	.125	1.875	1.687	2.625	.250	1.562	3.843	.093	NA	NA	.359	.125	.437	3.688	NA	3.687	.093	.40	.25	3.875

AC ELECTRONICS DASH NUMBERS

UNLESS OTHERWISE SPECIFIED DIMENSIONS ARE IN INCHES TOLERANCES ON 2 PLACE DECIMALS ± 3 PLACE DECIMALS ± .005 ANGLES ±	MIT INSTRUMENTATION LAB CAMBRIDGE MASS DRAWN R. A. JONES DATE 16 JUL 65 CHECKED APPROVAL W. KUPFER 22 JUL 65 CONTRACT	MANNED SPACECRAFT CENTER HOUSTON, TEXAS	NAMEPLATES, APOLLO GEN - GSE (STANDARDS)
DO NOT SCALE THIS DRAWING MATERIAL SEE NOTE 11 APPROVAL	T. MICHAELS 22 JUL 65 NASA APPROVAL W. KUPFER 22 JUL 65 MIT APPROVAL	SIZE J2 CODE IDENT NO. 80230	1004260
AS APPLICABLE NEXT ASSY / USED ON APPLICATION		SCALE NONE	SHEET 6 OF 6

1004260 CV SHT 6

1004260 CV

27/1004260

NOTES:

1. INTERPRET DRAWING IN ACCORDANCE WITH STANDARDS PRESCRIBED BY MIL-D-70327.
2. DIMENSIONS ON EACH VIEW APPLY TO ALL VIEWS (WITH THE EXCEPTION OF MOUNTING HOLES).
3. FORMATS ILLUSTRATED WILL BE APPLICABLE TO ALL ITEMS REQUIRING NAMEPLATES BELOW END ITEM DESIGNATION (SYSTEMS, ASSEMBLIES, ETC.)
4. PLATE BACKGROUND TO BE LUSTERLESS BLACK PER FED-STD-595, COLOR 37038. BORDER, MARKING AND LETTERING TO BE NATURAL METAL, (ANODIZED ALUMINUM).
5. MARKING METHOD TO BE DIE STAMPING, ETCHING OR ENGRAVING IN ACCORDANCE WITH MIL-P-19834.
6. LETTERING STYLE TO BE GOTHIC, (SANS SERIFS), AND NUMBERS TO BE ARABIC.
7. WHERE LOCATING DIMENSIONS ARE NOT SHOWN, CHARACTERS SHALL BE SYMMETRICALLY POSITIONED.
8. IDENTIFY WITH DRAWING NUMBER PER ND 1002019.
9. WHEN "AUTO MARK" METAL MARKING TYPEWRITER IS USED TO ADD DATA TO BLANK SPACES, TYPE SIZE IS TO BE SELECTED FROM DIMENSIONS U, AC, AND AM.
10. NASA SYMBOL IS TO BE PROPORTIONAL TO NAMEPLATE IN RATIO OF 1 TO 5 WITH DIMENSION A VALUE AND IS TO HAVE NATURAL BACKGROUND. NASA SYMBOL LETTERS LETTERING AND FEATHER TO BE BLACK, (OR WHITE FOR SILK SCREENING). WHERE BLACK FEATHER PROTRUDES INTO BLACK BACKGROUND, A MINIMUM OUTLINE OF NATURAL BACKGROUND SHALL EXIST.
11. NAMEPLATES WILL BE APPLIED BY METHODS LISTED BELOW, SHOWN IN ORDER OF PREFERENCE, (I.E., FOR RELIABILITY AND WEIGHT).
    A - STENCIL OR SILK SCREEN DIRECTLY ON EQUIPMENT USING INK PER SCD 1010920, (WHITE OR BLACK).
    B - ALUMINUM FOIL, (STYLE A OR B, TYPE I):
    FOIL SHALL BE .0030 ± .0005 THICK PER MIL-A-148.
    FOIL SHALL HAVE NO ADHESIVE BACKING.
    FOIL SHALL BE BONDED PER ND 1002219, (METHOD II).
    FOIL SHALL BE CLEAR ANODIZED PER MIL-A-8625, TYPE II.
    C - PLATE, (STYLE A OR B, TYPE II):
    MATERIAL: QQ-A-250, TEMPER 0 OR H14, TYPE 1100, ALUMINUM ALLOY, .032 THICK. ANODIZE PER MIL-A-8625, TYPE II.
    ALUMINUM PLATE MUST BE FREE FROM BURRS AND SHARP CORNERS, MOUNTED WITH APPLICABLE SIZE FASTENERS.
12. NAMEPLATES SHALL BE CAPABLE OF MEETING APPLICABLE REQUIREMENTS OF MIL-M-13231.
13. ON DIMENSION TABLES SHOWN ON PAGES 2, 3, 4, 5, AND 6, NA MEANS, "NOT APPLICABLE".

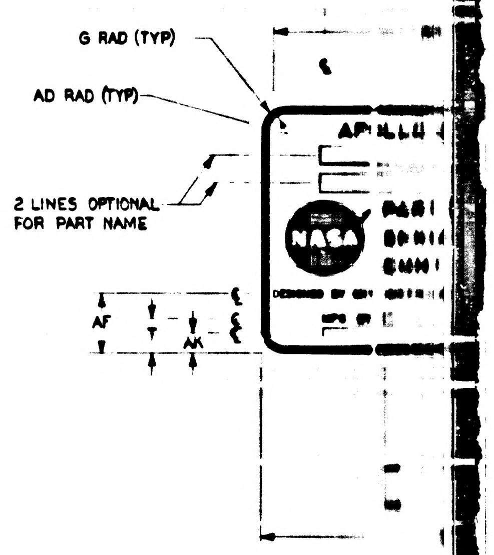

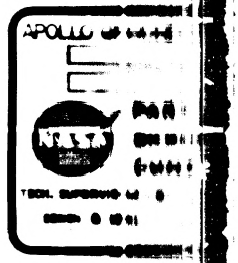

SUGGESTED PROPORTIONS FOR NAMEPLATE DIMENSIONS.
1. SELECT NAMEPLATE LENGTH, DIMENSION "A", TO FIT DESIGN NEEDS.
2. DIMENSIONS B THRU AS ON LINE 1 BELOW ARE PROPORTIONAL TO "A" BY MULTIPLIERS SHOWN IN LINE 2 BELOW.

1.	A	B	C	D	E	F	G	H	J	K	L	M	N	P	R	S	T	U
2.	1.000A	.6563A	.8438A	.6875A	.0391A	.0240A	.0391A	.0469A	.0547A	.0469A	.5938A	.3750A	.2969A	.2187A	.5079A	.0313A	.0938A	.0391A

1.	V	W	Y	Z	AA	AB	AC	AD	AE	AF	AG	AH	AJ	AK	AL	AM	AN	AP	AR	AS
2.	.4375A	.3594A	.6875A	.1094A	.5781A	.9219A	.0240A	.0156A	.4375A	.1525A	.0391A	.1563A	.8438A	.0548A	.8659A	.0391A	.1563A	.0938A	.9219A	.0151A

1004260	CN	SHT 1

REVISIONS					
SYM	ZONE	DESCRIPTION	CHG NO	DATE	APPD
CL		REPLACES REV CK WITHOUT CHANGE PER TDRR 34365		9/20/67	JWL
CM		REVISION STATUS CHANGED		18 OCT 67	RAW
CN		REVISION STATUS CHANGED		31 OCT 67	JRK
CP		REVISION STATUS CHANGED		6 NOV 67	[illegible]
CR		REVISION STATUS CHANGED		7 DEC 67	[illegible] WH
S		REVISION STATUS CHANGED		[illegible] 68	[illegible] BHW
CT		REVISION STATUS CHANGED		7 FEB 68	[illegible]
CU		REVISION STATUS CHANGED		22 FEB 68	JRK
CV		REVISION STATUS CHANGED		27 FEB 68	LR
CW		REVISION STATUS CHANGED		8 APR 68	[illegible]

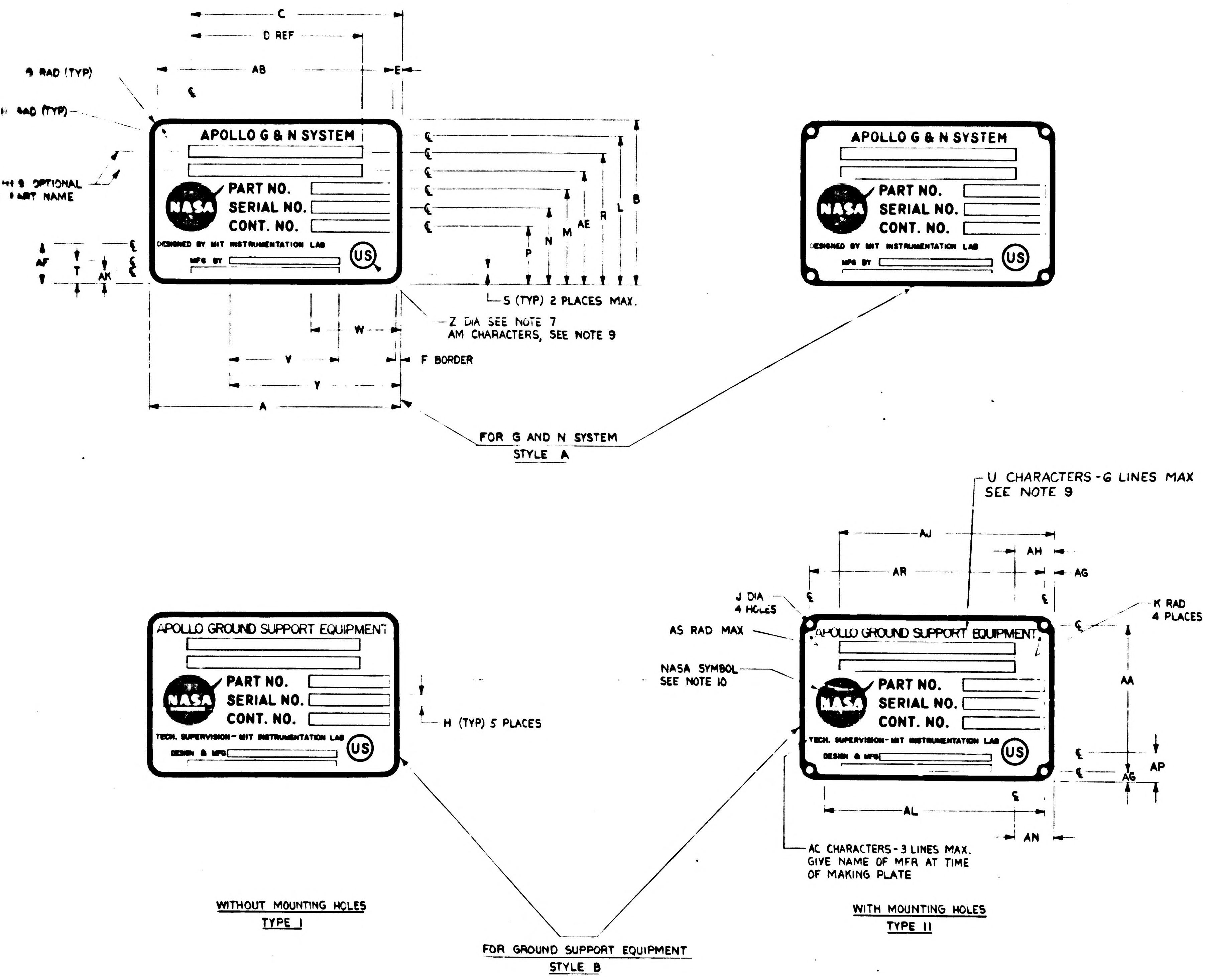
C
D REF
AB
E
9 RAD (TYP)
RAD (TYP)
OPTIONAL
PART NAME
APOLLO G & N SYSTEM
NASA
PART NO.
SERIAL NO.
CONT. NO.
DESIGNED BY MIT INSTRUMENTATION LAB
MFG BY
US
AF
T
AK
B
L
R
AE
M
N
P
S (TYP) 2 PLACES MAX.
Z DIA SEE NOTE 7
AM CHARACTERS, SEE NOTE 9
W
V
Y
F BORDER
A
FOR G AND N SYSTEM
STYLE A
U CHARACTERS - 6 LINES MAX
SEE NOTE 9
AJ
AH
AR
AG
J DIA
4 HOLES
AS RAD MAX
K RAD
4 PLACES
NASA SYMBOL
SEE NOTE 10
APOLLO GROUND SUPPORT EQUIPMENT
TECH. SUPERVISION - MIT INSTRUMENTATION LAB
DESIGN & MFG
H (TYP) 5 PLACES
AA
AP
AL
AN
AC CHARACTERS - 3 LINES MAX.
GIVE NAME OF MFR AT TIME
OF MAKING PLATE
WITHOUT MOUNTING HOLES
TYPE I
FOR GROUND SUPPORT EQUIPMENT
STYLE B
WITH MOUNTING HOLES
TYPE II

UNLESS OTHERWISE SPECIFIED DIMENSIONS ARE IN INCHES TOLERANCES ON 2 PLACE DECIMALS ± · 3 PLACE DECIMALS ± .005 · ANGLES ±	M I T INSTRUMENTATION LAB CAMBRIDGE, MASS	MANNED SPACECRAFT CENTER HOUSTON, TEXAS		
	DRAWN R A JONES · DATE 16 JUL 65	NAMEPLATES, APOLLO G&N - GSE (STANDARDS)		
	CHECKED			
	APPROVAL W KUPFER 22 JUL 65			
DO NOT SCALE THIS DRAWING	CONTRACT			
MATERIAL SEE NOTE 11	NASA APPROVAL T. MICHAELS 22 JUL 65	SIZE J2	CODE IDENT NO. 80230	1004260
APPROVAL	MIT APPROVAL W KUPFER 22 JUL 65	SCALE NONE		SHEET 1 OF 6

AS APPLICABLE	
NEXT ASSY	USED ON
APPLICATION	

1004260 CW

1004260

1004260
SHEET 1 OF 6

27-1004260

[illegible]

DASH NO.	P/C	PART NAME	REMARKS	PART NUMBER	SER. NO.	CONT. NO.	STYLE	TYPE	MATERIAL	A	B	C	D	E	F	G	H	J	K	L	M	N
399	K																					
398	K																					
350	K	ALIGNMENT OPTICAL TELESCOPE (LEM)		NA	NA	NA	A	I	NOTE 11B	4.000	2.625	3.375	2.750	.156	.093	.156	.187	NA	NA	2.312	1.468	1.187
309	K																					
308	K																					
307	K						B	I	NOTE 11B	4.000	2.625	3.375	2.750	.156	.093	.156	.187	NA	NA	2.328	1.468	1.187
306	K						B	II	NOTE 11C	4.000	2.625	3.375	2.750	.156	.093	.156	.187	.125	.156	2.328	1.468	1.187
305	K						B	I	NOTE 11B	2.000	1.312	1.687	1.375	.078	.048	.078	.093	NA	NA	1.164	.734	.593
304	K						B	II	NOTE 11C	2.000	1.312	1.687	1.375	.078	.048	.078	.093	.070	.078	1.164	.734	.593
303	K																					
302	K																					
301	K																					
300	K	OPTICAL UNIT		NA	NA	NA	A	I	NOTE 11B	2.000	1.312	1.675	NA	NA	.048	.078	NA	NA	NA	1.090	.812	.675
9	K	2 IN AUTOCOLLIMATOR		1001702			B	II	NOTE 11C	4.000	2.625	3.812	2.750	.156	.093	.156	.187	.125	.156	2.250	1.500	1.187
8	K	5 IN AUTOCOLLIMATOR		1017410			B	II	NOTE 11C	4.000	2.625	3.812	2.750	.156	.093	.156	.187	.125	.156	2.250	1.500	1.187
7	K	2-1/2 IN AUTOCOLLIMATOR (SCT)		1017435			B	II	NOTE 11C	4.000	2.625	3.812	2.750	.156	.093	.156	.187	.125	.156	2.250	1.500	1.187
6	K	2-1/2 IN AUTOCOLLIMATOR (SXT)		1017448			B	II	NOTE 11C	4.000	2.625	3.812	2.750	.156	.093	.156	.187	.125	.156	2.250	1.500	1.187
5	K	RETROREFLECTING PRISM ASSEMBLY		1019840			B	I	NOTE 11B	4.000	2.625	3.812	2.750	.156	.093	.156	.187	NA	NA	2.250	1.500	1.187
4	K	S/H SIMULATOR ASSEMBLY		1019896			B	I	NOTE 11B	4.000	2.625	3.812	2.750	.156	.093	.156	.187	NA	NA	2.250	1.500	1.187
3	K	REFERENCE MIRROR		1001767			B	I	NOTE 11B	2.000	1.312	1.906	1.375	.078	.048	.078	.093	NA	NA	1.125	.750	.593
2	K	2 IN PLANE READING AUTOCOLLIMATOR		1017413			B	I	NOTE 11B	2.000	1.312	1.906	1.375	.078	.048	.078	.093	NA	NA	1.125	.750	.593
1	K	2 IN AUTOCOLLIMATOR		1001702			B	I	NOTE 11B	2.000	1.312	1.906	1.375	.078	.048	.078	.093	NA	NA	1.125	.750	.593

NOTES FOR TABLE

STYLE A IS FOR G & N SYSTEM
STYLE B IS FOR GROUND SUPPORT EQUIPMENT
TYPE I IS WITHOUT MOUNTING HOLES
TYPE II IS WITH MOUNTING HOLES

1004260	CW	SHT 2

																								REVISIONS											
[illegible]	[illegible]	.156	.187	NA	NA	2.312	1.468	1.187	.906	2.031	NA	.375	.156	NA	1.437	2.750	.437	NA	3.688	.062	.062	1.750	.593	NA	.625	3.375	.187	NA	.156	.531	.453	NA
[illegible]	[illegible]	156	.187	NA	NA	2.328	1.468	1.187	.906	2.031	.062	.375	.156	NA	1.437	2.750	.437	NA	3.687	.062	.062	1.750	.593	NA	NA	NA	NA	NA	NA	NA	NA	NA
[illegible]	[illegible]	156	.187	.125	.156	2.328	1.468	1.187	.906	2.031	.062	.375	.156	NA	1.437	2.750	.437	2.312	3.687	.062	NA	1.750	.593	NA	NA	NA	NA	NA	NA	NA	NA	NA
[illegible]	[illegible]	078	.093	NA	NA	1.164	.734	.593	.453	1.015	.048	.171	.078	NA	.718	1.375	.187	NA	NA	.048	.031	.875	.320	NA	NA	NA	NA	NA	NA	NA	NA	NA
[illegible]	[illegible]	078	.093	.070	.078	1.164	.734	.593	.453	1.015	.048	.171	.078	NA	.718	1.375	.187	.156	1.843	.048	NA	.875	.320	NA	NA	NA	NA	NA	NA	NA	NA	NA
[illegible]	[illegible]	078	NA	NA	NA	1.090	.812	.675	.540	.940	NA	.265	NA	NA	NA	1.375	.218	NA	NA	NA	NA	NA	.375	NA	NA	NA	.180	NA	.078	NA	NA	NA
[illegible]	[illegible]	156	.187	.125	.156	2.250	1.500	1.187	.906	2.031	.093	.375	.156	1.750	1.437	2.750	.437	2.312	3.687	.062	NA	1.750	.593	.156	1.062	3.812	.156	NA	.156	1.062	.375	3.687
[illegible]	[illegible]	156	.187	.125	.156	2.250	1.500	1.187	.906	2.031	.093	.375	.156	1.750	1.437	2.750	.437	2.312	3.687	.062	NA	1.750	.593	.156	1.062	3.812	.156	NA	.156	1.062	.375	3.687
[illegible]	[illegible]	156	.187	.125	.156	2.250	1.500	1.187	.906	2.031	.093	.375	.156	1.750	1.437	2.750	.437	2.312	3.687	.062	NA	1.750	.593	.156	1.062	3.812	.156	NA	.156	1.062	.375	3.687
[illegible]	[illegible]	156	.187	.125	.156	2.250	1.500	1.187	.906	2.031	.093	.375	.156	1.750	1.437	2.750	.437	2.312	3.687	.062	NA	1.750	.593	.156	1.062	3.812	.156	NA	.156	1.062	.375	3.687
[illegible]	[illegible]	156	.187	NA	NA	2.250	1.500	1.187	.906	2.031	.093	.375	.156	1.750	1.437	2.750	.437	NA	NA	.062	.062	1.750	.593	.156	1.062	3.812	.156	NA	.156	1.062	.375	NA
[illegible]	[illegible]	156	.187	NA	NA	2.250	1.500	1.187	.906	2.031	.093	.375	.156	1.750	1.437	2.750	.437	NA	NA	.062	.062	1.750	.593	.156	1.062	3.812	.156	NA	.156	1.062	.375	NA
[illegible]	[illegible]	078	.093	NA	NA	1.125	.750	.593	.453	1.015	.062	.187	.078	.875	.718	1.375	.218	NA	NA	.048	.031	.875	.305	.078	.531	1.906	.078	NA	.078	.531	.187	NA
[illegible]	[illegible]	078	.093	NA	NA	1.125	.750	.593	.453	1.015	.062	.187	.078	.875	.718	1.375	.218	NA	NA	.048	.031	.875	.305	.078	.531	1.906	.078	NA	.078	.531	.187	NA
[illegible]	[illegible]	078	.093	NA	NA	1.125	.750	.593	.453	1.015	.062	.187	.078	.875	.718	1.375	.218	NA	NA	.048	.031	.875	.305	.078	.531	1.906	.078	NA	.078	.531	.187	NA
	F	G	H	J	K	L	M	N	P	R	S	T	U	V	W	Y	Z	AA	AB	AC	AD	AE	AF	AG	AH	AJ	AK	AL	AM	AN	AP	AR

KOLLSMAN DASH NUMBERS

REVISIONS

SYM	ZONE	DESCRIPTION	CHG NO	DATE	APPD
CL		REPLACES REV CK WITHOUT CHANGE PER TDRR 34365		9/20/67	JWL
CM		REVISION STATUS CHANGED		18 OCT 67	R.A.W.
CN		REVISION STATUS CHANGED		31 OCT 67	JRK
CP		REVISION STATUS CHANGED		6 NOV 67	EWS
CR		REVISION STATUS CHANGED		7 DEC 67	
CS		REVISION STATUS CHANGED		3 JAN 68	J.W. EHW
CT		REVISION STATUS CHANGED		7 FEB 68	LK
CU		REVISION STATUS CHANGED		22 FEB 68	JRK
CV		REVISION STATUS CHANGED		27 FEB 68	LK
CW		REVISION STATUS CHANGED		3 APR 68	

UNLESS OTHERWISE SPECIFIED
DIMENSIONS ARE IN INCHES
TOLERANCES ON
2 PLACE DECIMALS ± 3 PLACE DECIMALS ± .005 ANGLES ±
DO NOT SCALE THIS DRAWING
MATERIAL SEE NOTE 11
APPROVAL

AS APPLICABLE
NEXT ASSY | USED ON
APPLICATION

M I T
INSTRUMENTATION LAB
Cambridge Mass
DRAWN R A JONES DATE 16 JUL 65
CHECKED
W KUPFER 22 JUL 65
APPROVAL
CONTRACT
T MICHAELS 22 JUL 65
NASA APPROVAL
W KUPFER 22 JUL 65
MIT APPROVAL

MANNED
SPACECRAFT CENTER
HOUSTON TEXAS

NAMEPLATES,
APOLLO GϕN - GSE
(STANDARDS)

SIZE J2 | CODE IDENT NO 80230 | 1004260
SCALE NONE | SHEET 2 OF 6

1004260 CW

1004260

1004580
SHEET 3 of 6

1004260 | CN | SHT 2

2/1004260

DASH NO.	P/C	PART NAME	REMARKS	PART NUMBER	SER. NO.	CONT. NO.	STYLE	TYPE	MATERIAL	A
299	R									
298	R									
291	R	BUFFER CIRCUIT ASSY		2014254-041	NA	NAS-9-497	B	I	NOTE 11B	FOR DIMENSIONS SEE DASH 15 VALUES BELOW
290	R	LOGIC DRAWER ASSY NO 2		2014037-051	NA	NAS-9 497	B	I	NOTE 11B	FOR DIMENSIONS SEE DASH 17 VALUES BELOW
289	R	SELF TEST ASSY		2014392-021	NA	NAS-9 497	B	I	NOTE 11B	FOR DIMENSIONS SEE DASH 15 VALUES BELOW
288	R	LOGIC DRAWER ASSY NO.1		2014036-051	NA	NAS-9 497	B	I	NOTE 11B	FOR DIMENSIONS SEE DASH 17 VALUES BELOW
287	R	COMPUTER TEST SET		2014042-071	NA	NAS-9 497	B	II	NOTE 11C	FOR DIMENSIONS SEE DASH 18 VALUES BELOW
286	R	DRAWER ASSY PROGRAM & MONITOR		2014041-061	NA	NAS-9-497	B	I	NOTE 11B	FOR DIMENSIONS SEE DASH 17 VALUES BELOW
285	R	BUFFER CIRCUIT ASSY		2014254-031	NA	NAS-9-497	B	I	NOTE 11B	FOR DIMENSIONS SEE DASH 15 VALUES BELOW
284	R	LOGIC DRAWER ASSY NO. 2		2014037-041	NA	NAS-9-497	B	I	NOTE 11B	FOR DIMENSIONS SEE DASH 17 VALUES BELOW
283	R	DRAWER ASSY-PROGRAM & MONITOR		2014041-051	NA	NAS-9-497	B	I	NOTE 11B	FOR DIMENSIONS SEE DASH 17 VALUES BELOW
282	R	COMPUTER TEST SET		2014042-061	NA	NAS-9-497	B	II	NOTE 11C	FOR DIMENSIONS SEE DASH 18 VALUES BELOW
281	R	AGC HANDLING FIXTURE		2014282-031	NA	NAS-9-497	B	I	NOTE 11B	FOR DIMENSIONS SEE DASH 17 VALUES BELOW
280	R	COMPUTER TEST SET		2014042-051	NA	NAS-9-497	B	II	NOTE 11C	FOR DIMENSIONS SEE DASH 18 VALUES BELOW
279	R	SELF TEST ASSY		2014366-041	NA	NAS-9-497	B	I	NOTE 11B	FOR DIMENSIONS SEE DASH 15 VALUES BELOW
278	R	LOGIC DRAWER ASSY NO. 1		2014036-041	NA	NAS-9-497	B	I	NOTE 11B	FOR DIMENSIONS SEE DASH 17 VALUES BELOW
277	R	COMPUTER TEST SET		2014042-041	NA	NAS-9-497	B	II	NOTE 11C	FOR DIMENSIONS SEE DASH 18 VALUES BELOW
276	R	DRAWER ASSY-PROGRAM & MONITOR		2014041-041	NA	NAS-9-497	B	I	NOTE 11B	FOR DIMENSIONS SEE DASH 17 VALUES BELOW
275	R	DRAWER ASSY RDC INTERFACE		2014045-031	NA	NAS-9-497	B	I	NOTE 11B	FOR DIMENSIONS SEE DASH 15 VALUES BELOW
274	R	SELF TEST ASSY		2014366-031	NA	NAS-9-497	B	I	NOTE 11B	FOR DIMENSIONS SEE DASH 15 VALUES BELOW
273	R	LOGIC DRAWER ASSY NO. 2		2014037-031	NA	NAS-9-497	B	I	NOTE 11B	FOR DIMENSIONS SEE DASH 17 VALUES BELOW
272	R	DRAWING ASSY PROGRAMMER & MONITOR		2014041-031	NA	NAS-9-497	B	I	NOTE 11B	FOR DIMENSIONS SEE DASH 17 VALUES BELOW
271	R	LOGIC DRAWER ASSY NO. 1		2014036-031	NA	NAS-9-497	B	I	NOTE 11B	FOR DIMENSIONS SEE DASH 17 VALUES BELOW
270	R	COMPUTER TEST SET		2014042-031	NA	NAS-9-497	B	II	NOTE 11C	FOR DIMENSIONS SEE DASH 18 VALUES BELOW
269	R	POWER CONTROL ASSY		2014044-021	NA	NAS-9-497	B	I	NOTE 11B	FOR DIMENSIONS SEE DASH 17 VALUES BELOW
268	R	SELF TEST ASSY		2014366-021	NA	NAS-9-497	B	I	NOTE 11B	FOR DIMENSIONS SEE DASH 15 VALUES BELOW
267	R	AGC JUNCTION ASSY		2014341-021	NA	NAS-9-497	B	I	NOTE 11B	FOR DIMENSIONS SEE DASH 15 VALUES BELOW
266	R	POWER CONTROL ASSY		2014079-021	NA	NAS-9-497	B	I	NOTE 11B	FOR DIMENSIONS SEE DASH 15 VALUES BELOW
265	R	BUFFER CIRCUIT ASSY		2014254-021	NA	NAS-9-497	B	I	NOTE 11B	FOR DIMENSIONS SEE DASH 15 VALUES BELOW
264	R	DRAWER ASSY X Y INTERFACE		2014040-021	NA	NAS-9-497	B	I	NOTE 11B	FOR DIMENSIONS SEE DASH 15 VALUES BELOW
263	R	DRAWER ASSY RDC INTERFACE		2014045-021	NA	NAS-9-497	B	I	NOTE 11B	FOR DIMENSIONS SEE DASH 15 VALUES BELOW
262	R	DRAWER ASSY PROGRAMMER & MONITOR		2014041-021	NA	NAS-9-497	B	I	NOTE 11B	FOR DIMENSIONS SEE DASH 17 VALUES BELOW
261	R	LOGIC DRAWER ASSY NO. 2		2014037-021	NA	NAS-9-497	B	I	NOTE 11B	FOR DIMENSIONS SEE DASH 17 VALUES BELOW
260	R	LOGIC DRAWER ASSY NO. 1		2014036-021	NA	NAS-9-497	B	I	NOTE 11B	FOR DIMENSIONS SEE DASH 17 VALUES BELOW
259	R	OPERATION CONSOLE		2014024-021	NA	NAS-9-497	B	II	NOTE 11C	FOR DIMENSIONS SEE DASH 18 VALUES BELOW
258	R	COMPUTER TEST SET		2014042-021	NA	NAS-9-497	B	II	NOTE 11C	FOR DIMENSIONS SEE DASH 18 VALUES BELOW
257	R	AUXILIARY CALIBRATION CONSOLE		2014059-021	NA	NAS-9-497	B	II	NOTE 11C	FOR DIMENSIONS SEE DASH 18 VALUES BELOW
256	R	AGC CALIBRATION CONSOLE		2014049-021	NA	NAS-9-497	B	II	NOTE 11C	FOR DIMENSIONS SEE DASH 18 VALUES BELOW
255	R	AGC HANDLING FIXTURE		2014282-021	NA	NAS-9-497	B	I	NOTE 11B	FOR DIMENSIONS SEE DASH 17 VALUES BELOW
254	R	DRAWER ASSY COMP. SIMULATOR		2014048-011	NA	NAS-9-497	B	II	NOTE 11C	FOR DIMENSIONS SEE DASH 18 VALUES BELOW
253	R	SHIPPING KIT ASSY, NAV DSKY		2016312-011	NA	NAS-9-497	B	II	NOTE 11C	FOR DIMENSIONS SEE DASH 18 VALUES BELOW
252	R	SHIPPING KIT ASSY, UNIVERSAL DSKY		2016316-011	NA	NAS-9-497	B	II	NOTE 11C	FOR DIMENSIONS SEE DASH 18 VALUES BELOW
251	R	SHIPPING KIT ASSY, MAIN DSKY		2016313-011	NA	NAS-9-497	B	II	NOTE 11C	FOR DIMENSIONS SEE DASH 18 VALUES BELOW
250	R	AMPLIFIER, REWORK		2014306	NA	NAS-9-497	B	I	NOTE 11B	FOR DIMENSIONS SEE DASH 15 VALUES BELOW
249	R	TEMP MONITOR ASSY		2014313-011	NA	NAS-9-497	B	I	NOTE 11C	FOR DIMENSIONS SEE DASH 17 VALUES BELOW
248	R	AGC JUNCTION ASSY		2014341-011	NA	NAS-9-497	B	I	NOTE 11B	FOR DIMENSIONS SEE DASH 15 VALUES BELOW
247	R	AC INPUT PANEL ASSY		2014302-011	NA	NAS-9-497	B	I	NOTE 11B	FOR DIMENSIONS SEE DASH 15 VALUES BELOW
246	R	SELF TEST ASSY		2014392-011	NA	NAS-9-497	B	I	NOTE 11B	FOR DIMENSIONS SEE DASH 15 VALUES BELOW
245	R	TAPE PUNCH ASSEMBLY		2014039-011	NA	NAS-9-497	B	I	NOTE 11B	FOR DIMENSIONS SEE DASH 15 VALUES BELOW
244	R	TAPE READER ASSEMBLY		2014038-011	NA	NAS-9-497	B	I	NOTE 11B	FOR DIMENSIONS SEE DASH 15 VALUES BELOW
243										
242										
241	R	APOLLO GUIDANCE COMPUTER GROUP		6003001	NA	NAS-9-497	A	I	NOTE 11B	FOR DIMENSIONS SEE DASH 19 VALUES BELOW
240	R	SELF TEST ASSEMBLY		2014366-011	NA	NAS-9-497	B	I	NOTE 11B	FOR DIMENSIONS SEE DASH 15 VALUES BELOW
239	R	POWER SUPPLY ASSY-115V., 400 CYCLE		2014207-011	NA	NAS-9-497	B	I	NOTE 11B	FOR DIMENSIONS SEE DASH 17 VALUES BELOW
238	R	AC INPUT PANEL ASSY		2014043-011	NA	NAS-9-497	B	I	NOTE 11B	FOR DIMENSIONS SEE DASH 17 VALUES BELOW
237	R	POWER CONTROL ASSY		2014079-011	NA	NAS-9-497	B	I	NOTE 11B	FOR DIMENSIONS SEE DASH 15 VALUES BELOW
236	R	DRAWER ASSY-X Y INTERFACE		2014040-011	NA	NAS-9-497	B	I	NOTE 11B	FOR DIMENSIONS SEE DASH 15 VALUES BELOW
235	R	DRAWER ASSY RDC INTERFACE		2014045-011	NA	NAS-9-497	B	I	NOTE 11B	FOR DIMENSIONS SEE DASH 15 VALUES BELOW
234	R	BUFFER CIRCUIT ASSY		2014254-011	NA	NAS-9-497	B	I	NOTE 11B	FOR DIMENSIONS SEE DASH 15 VALUES BELOW
233	R	CONTROL & INTERFACE ASSY		2014204-011	NA	NAS-9-497	B	I	NOTE 11B	FOR DIMENSIONS SEE DASH 15 VALUES BELOW
232	R	POWER CONTROL ASSY		2014044-011	NA	NAS-9-497	B	I	NOTE 11B	FOR DIMENSIONS SEE DASH 17 VALUES BELOW
231	R	DRAWER ASSY, PROGRAMMER & MONITOR		2014041-011	NA	NAS-9-497	B	I	NOTE 11B	FOR DIMENSIONS SEE DASH 17 VALUES BELOW
230	R	CONNECTOR INTERFACE ASSY		2014272-011	NA	NAS-9-497	B	I	NOTE 11B	FOR DIMENSIONS SEE DASH 15 VALUES BELOW
229	R	CONNECTOR INTERFACE ASSY		2014047-011	NA	NAS-9-497	B	I	NOTE 11B	FOR DIMENSIONS SEE DASH 15 VALUES BELOW
228	R	ANTENNA, TUNING CAPACITOR ASSY		2014209-011	NA	NAS-9-497	B	I	NOTE 11B	FOR DIMENSIONS SEE DASH 15 VALUES BELOW
227	R	MOUNTING FIXTURE ASSY		2014006-011	NA	NAS-9-497	B	I	NOTE 11B	FOR DIMENSIONS SEE DASH 17 VALUES BELOW
226	R	POWER SUPPLY ASSY 3 VDC		2014234-011	NA	NAS-9-497	B	I	NOTE 11B	FOR DIMENSIONS SEE DASH 15 VALUES BELOW
225	R	PANEL ASSY—SIGNAL INTERFACE		2014010-011	NA	NAS-9-497	B	I	NOTE 11B	FOR DIMENSIONS SEE DASH 15 VALUES BELOW
224	R	OSCILLOSCOPE ASSY		2014232-011	NA	NAS-9-497	B	I	NOTE 11B	FOR DIMENSIONS SEE DASH 15 VALUES BELOW
223	R	AUXILIARY OUTLET ASSY		2014274-011	NA	NAS-9-497	B	I	NOTE 11B	FOR DIMENSIONS SEE DASH 15 VALUES BELOW
222	R	FREQUENCY COUNTER		2014233-011	NA	NAS-9-497	B	I	NOTE 11B	FOR DIMENSIONS SEE DASH 15 VALUES BELOW
221	R	POWER SUPPLY ASSY 10, 13, 28 VDC		2014235-011	NA	NAS-9-497	B	I	NOTE 11B	FOR DIMENSIONS SEE DASH 15 VALUES BELOW
220	R	LOGIC DRAWER ASSY NO. 2		2014037-011	NA	NAS-9-497	B	I	NOTE 11B	FOR DIMENSIONS SEE DASH 17 VALUES BELOW
219	R	LOGIC DRAWER ASSY NO. 1		2014036-011	NA	NAS-9-497	B	I	NOTE 11B	FOR DIMENSIONS SEE DASH 17 VALUES BELOW
218	R	COUNTER, ELECTRICAL ASSY		2014288-011	NA	NAS-9-497	B	I	NOTE 11B	FOR DIMENSIONS SEE DASH 15 VALUES BELOW
217	R	POWER SUPPLY ASSY		2014279-011	NA	NAS-9-497	B	I	NOTE 11B	FOR DIMENSIONS SEE DASH 15 VALUES BELOW
216	R	TEST MOUNT ASSY		2014257-011	NA	NAS-9-497	B	I	NOTE 11B	FOR DIMENSIONS SEE DASH 15 VALUES BELOW
215	R	UNIVERSAL DSKY PEDESTAL MOUNT		2014014-011	NA	NAS-9-497	B	I	NOTE 11B	FOR DIMENSIONS SEE DASH 17 VALUES BELOW
214	R	MAIN DSKY PEDESTAL MOUNT		2014343	NA	NAS-9-497	B	I	NOTE 11B	FOR DIMENSIONS SEE DASH 17 VALUES BELOW
213	R	SHIPPING CONTAINER, MAIN DSKY		1006229	NA	NAS-9-497	B	II	NOTE 11C	FOR DIMENSIONS SEE DASH 18 VALUES BELOW
212	R	SHIPPING CONTAINER, NAV DSKY		1006231	NA	NAS-9-497	B	II	NOTE 11C	FOR DIMENSIONS SEE DASH 18 VALUES BELOW
211	R	SHIPPING CONTAINER, AGC		1006230	NA	NAS-9-497	B	II	NOTE 11C	FOR DIMENSIONS SEE DASH 18 VALUES BELOW
210	R	SHIPPING CONTAINER, UNIVERSAL DSKY		1006422	NA	NAS-9-497	B	II	NOTE 11C	FOR DIMENSIONS SEE DASH 18 VALUES BELOW
209	R	SHIPPING CONTAINER, AGC		1006421	NA	NAS-9-497	B	II	NOTE 11C	FOR DIMENSIONS SEE DASH 18 VALUES BELOW
208	R	UNIVERSAL DSKY HANDLING FIXTURE		2014013-011	NA	NAS-9-497	B	I	NOTE 11B	FOR DIMENSIONS SEE DASH 15 VALUES BELOW
207	R	NAV DSKY HANDLING FIXTURE		1014377	NA	NAS-9-497	B	I	NOTE 11B	FOR DIMENSIONS SEE DASH 17 VALUES BELOW
206	R	MAIN DSKY HANDLING FIXTURE		1014334	NA	NAS-9-497	B	I	NOTE 11B	FOR DIMENSIONS SEE DASH 17 VALUES BELOW
205	R	AGC HANDLING FIXTURE		2014282-011	NA	NAS-9-497	B	I	NOTE 11B	FOR DIMENSIONS SEE DASH 17 VALUES BELOW
204	R	OPERATION CONSOLE		2014024-011	NA	NAS-9-497	B	II	NOTE 11C	FOR DIMENSIONS SEE DASH 18 VALUES BELOW
203	R	COMPUTER TEST SET		2014042-011	NA	NAS-9-497	B	II	NOTE 11C	FOR DIMENSIONS SEE DASH 18 VALUES BELOW
202	R	DRAWER ASSY, COMPUTER SIMULATOR		2014048-011	NA	FNP-12775	B	II	NOTE 11C	FOR DIMENSIONS SEE DASH 18 VALUES BELOW
201	R	AUXILIARY CALIBRATION CONSOLE		2014059-011	NA	NAS-9-497	B	II	NOTE 11C	FOR DIMENSIONS SEE DASH 18 VALUES BELOW
200	R	AGC CALIBRATION CONSOLE		2014049-011	NA	NAS-9-497	B	II	NOTE 11C	FOR DIMENSIONS SEE DASH 18 VALUES BELOW
21	R									
20	R	NA		NA	NA	NA	A	II	NOTE 11C	2.000
19	R	NA		NA	NA	NA	A	I	NOTE 11B	2.000
18	R	NA		NA	NA	NA	B	II	NOTE 11C	4.187
17	R	NA		NA	NA	NA	B	I	NOTE 11B	4.187
16	R	NA		NA	NA	NA	B	II	NOTE 11C	2.000
15	R	NA		NA	NA	NA	B	I	NOTE 11B	2.000

DASH NO.	B	C	D	E	F	G	H	J	K	L	M	N	P	R
21														
20	1.312	1.687	1.375	.078	.031	.078	.093	[illegible]	.093	1.187	.750	.593	.453	1.0
19	1.312	1.687	1.375	.078	.031	.078	.093	NA	NA	1.187	.750	.593	.453	1.0
18	1.875	3.469	2.750	.156	.093	.156	.125	[illegible]	.125	1.625	1.032	.844	.656	1.4
17	1.875	3.469	2.750	.156	.093	.156	.125	NA	NA	1.625	1.032	.844	.656	1.4
16	1.312	1.687	1.375	.078	.031	.078	.093	[illegible]	.093	1.187	.750	.593	.453	1.0
15	1.312	1.687	1.375	.078	.031	.078	.093	NA	NA	1.187	.750	.593	.453	1.0

NOTES FOR TABLE

STYLE A IS FOR G & N SYSTEM
STYLE B IS FOR GROUND SUPPORT EQUIPMENT
TYPE I IS WITHOUT MOUNTING HOLES
TYPE II IS WITH MOUNTING HOLES

1004260	CW	SHT 3

REVISIONS					
SYM	ZONE	DESCRIPTION	CHG NO	DATE	APPD
CL		REPLACES REV CK WITHOUT CHANGE PER TDRR 34365		7/20/67	JWL
CM		REVISION STATUS CHANGED		18 OCT 67	RAW
CN		REVISION STATUS CHANGED		31 OCT 67	JRK
CP		REVISION STATUS CHANGED		6 NOV 67	EHS
CR		REVISION STATUS CHANGED		7 DEC 67	
CS		REVISION STATUS CHANGED		3 JAN 68	JN
CT		REVISED PER TDRR 35526		[illegible] 68	
CU		REVISION STATUS CHANGED		22 FEB 68	JRK
CV		REVISION STATUS CHANGED		21 FEB 68	LK
CW		REVISION STATUS CHANGED		5 APR 68	

H	J	K	L	M	N	P	R	S	T	U	V	W	Y	Z	AA	AB	AC	AD	AE	AF	AG	AH	AJ	AK	AL	AM	AN	AP	AR
.093	[illegible]	.093	1.187	.750	.593	.453	1.015	.062	.187	.078	.875	.718	1.375	.218	1.156	1.843	.048	NA	.875	.305	.078	.312	1.687	.078	NA	.078	.312	.187	1.843
.093	NA	NA	1.187	.750	.593	.453	1.015	.062	.187	.078	.875	.718	1.375	.218	NA	NA	.048	.031	.875	.305	.078	.312	1.687	.078	NA	.078	.312	.187	NA
.125	[illegible]	.125	1.625	1.032	.844	.656	1.406	.093	.344	.156	1.781	1.531	2.844	.312	1.562	3.875	.062	NA	1.219	.500	.156	.719	3.469	.156	NA	.156	.719	.344	3.875
.125	NA	NA	1.625	1.032	.844	.656	1.406	.093	.344	.156	1.781	1.531	2.844	.312	NA	NA	.062	.062	1.219	.500	.156	.719	3.469	.156	NA	.156	.719	.344	NA
.093	[illegible]	.093	1.187	.750	.593	.453	1.015	.062	.187	.078	.875	.718	1.375	.218	1.156	1.843	.048	NA	.875	.305	.078	.312	1.687	.078	NA	.078	.312	.187	1.843
.093	NA	NA	1.187	.750	.593	.453	1.015	.062	.187	.078	.875	.718	1.375	.218	NA	NA	.048	.031	.875	.305	.078	.312	1.687	.078	NA	.078	.312	.187	NA

RAYTHEON DASH NUMBERS

AS APPLICABLE	
NEXT ASSY	USED ON
APPLICATION	

UNLESS OTHERWISE SPECIFIED
DIMENSIONS ARE IN INCHES
TOLERANCES ON
2 PLACE DECIMALS ± 3 PLACE DECIMALS ± .005 ANGLES ±
DO NOT SCALE THIS DRAWING
MATERIAL SEE NOTE 11
APPROVAL

MIT INSTRUMENTATION LAB
DRAWN R A JONES DATE 15 JUL 65
CHECKED
W KUPFER 22 JUL 65 APPROVAL
CONTRACT
T MICHAELS 22 JUL 65 NASA APPROVAL
W KUPFER 22 JUL 65 MIT APPROVAL

MANNED SPACECRAFT CENTER
HOUSTON TEXAS

NAMEPLATES,
APOLLO GEN - GSE
(STANDARDS)

SIZE J2 CODE IDENT NO 80230 1004260
SCALE NONE SHEET 3 OF 6

1004260 CW SHT 3

AC DASH NUMBERS CONTINUED ON SHEET 6

DASH NO.	P/C	PART NAME	REMARKS	PART NUMBER	SER. NO.	CONT. NO.	STYLE	TYPE	MATERIAL	A	B	C	D	E	F	G	H	J	K	L	M	N	P
199	AC	EYEPIECE STOWAGE UNIT		2021255-011			A	I		FOR DIMENSIONS SEE DASH 100 VALUES BELOW													
198	AC	SIGNAL CONDITIONER ASSY C/M		2007234		NAS-9-497	A	I	NOTE 11B	FOR DIMENSIONS SEE DASH 100 VALUES BELOW													
197	AC	SIGNAL CONDITIONER ASSY C/M		2007235		NAS-9-497	A	I	NOTE 11B	FOR DIMENSIONS SEE DASH 100 VALUES BELOW													
196	AC	SIGNAL CONDITIONER ASSY LEM		6007010		NAS-9-497	A	I	NOTE 11B	FOR DIMENSIONS SEE DASH 100 VALUES BELOW													
195	AC	PSA & SIGNAL CONDITIONER ASSY		6007009		NAS-9-497	A	I	NOTE 11B	FOR DIMENSIONS SEE DASH 100 VALUES BELOW													
194	AC	PANEL, MONITOR		2900031-031		NAS-9-497	B	II	NOTE 11C	FOR DIMENSIONS SEE DASH 141 VALUES BELOW													
193	AC	DISTRIBUTION BOX, GSE		2900024-031		NAS-9-497	B	II	NOTE 11C	FOR DIMENSIONS SEE DASH 141 VALUES BELOW													
192	AC	ANALYZER, OPTICS-INERTIAL		2900023-031		NAS-9-497	B	II	NOTE 11C	FOR DIMENSIONS SEE DASH 144 VALUES BELOW													
191	AC	TEST CONTROL		2900027-031		NAS-9-497	B	II	NOTE 11C	FOR DIMENSIONS SEE DASH 141 VALUES BELOW													
190	AC	PANEL, PWR SUP AND LOAD		2900033-021		NAS-9-497	B	II	NOTE 11C	FOR DIMENSIONS SEE DASH 141 VALUES BELOW													
189	AC	ADPT MODULE, P.S.A.		6900088-011		NAS-9-497	B	II	NOTE 11C	FOR DIMENSIONS SEE DASH 141 VALUES BELOW													
188	AC	ADPT MODULE, P.S.A.		2901143-011		NAS-9-497	B	II	NOTE 11C	FOR DIMENSIONS SEE DASH 141 VALUES BELOW													
187	AC	FIXTURE, MTG, PTA/PEA		2900066-021		NAS-9-497	B	II	NOTE 11C	FOR DIMENSIONS SEE DASH 141 VALUES BELOW													
186	AC	ANNUNCIATOR PANEL & EYEPIECE STORAGE ASSEMBLY		1021255-021			A	I		FOR DIMENSIONS SEE DASH 100 VALUES BELOW													
185	AC	ANNUNCIATOR PANEL & EYEPIECE STORAGE ASSEMBLY		1021255-011			A	I		FOR DIMENSIONS SEE DASH 100 VALUES BELOW													
184	AC	FIX., HAND., G AND N HARNESS		1901846-041		NAS-9-497	B	II	NOTE 11C	FOR DIMENSIONS SEE DASH 144 VALUES BELOW													
183	AC	INSTALLING TOOL, ELEC, CONN		1902586-011		NAS-9-497	B	II	NOTE 11C	FOR DIMENSIONS SEE DASH 102 VALUES BELOW													
182	AC	ADPT MODULE, P.S.A.		6900088-011		NAS-9-497	B	II	NOTE 11C	FOR DIMENSIONS SEE DASH 141 VALUES BELOW													
181	AC	G & N INDICATOR CONTROL PANEL ASSY		2014578-011		NAS-9-497	A	I	NOTE 11B	3.000	1.938	2.437	NA	.125	.062	.188	.156	NA	NA	1.750	1.125	[illegible]	[illegible]
180	AC	ADPT MODULE, P.S.A.		1902431-031		NAS-9-497	B	II		FOR DIMENSIONS SEE DASH 121 VALUES BELOW													
179	AC	MOUNTING PLATE, IMU/PTA		6900083-011		NAS-9-497	B	II		FOR DIMENSIONS SEE DASH 144 VALUES BELOW													
178	AC	MOUNTING PLATE, COMPONENT		6900007-021		NAS-9-497	B	II		FOR DIMENSIONS SEE DASH 144 VALUES BELOW													
177	AC	FIX., MOUNTING, SUBSYSTEM		2900070-021		NAS-9-497	B	II		FOR DIMENSIONS SEE DASH 144 VALUES BELOW													
176	AC	FIX., MOUNTING, G & N		2900067-021		NAS-9-497	B	II		FOR DIMENSIONS SEE DASH 144 VALUES BELOW													
175	AC	CSL, COOL. AND PWR, G & N		1902134-031		NAS-9-497	B	II		FOR DIMENSIONS SEE DASH 144 VALUES BELOW													
174	AC	FIX., HAND., C/M AND LEM CDU		2900999-011		NAS-9-497	B	II	NOTE 11C	FOR DIMENSIONS SEE DASH 141 VALUES BELOW													
173	AC	FIX., HANDLING, C/M PSA		[illegible]		NAS-9-497	B	II	NOTE 11C	FOR DIMENSIONS SEE DASH 141 VALUES BELOW													
172	AC	CAGING ELECTRONICS, GYRO		2900029-021		NAS-9-497	B	II	NOTE 11C	FOR DIMENSIONS SEE DASH 141 VALUES BELOW													
171	AC	DISTRIBUTION BOX, GSE		2900024-021		NAS-9-497	B	II	NOTE 11C	FOR DIMENSIONS SEE DASH 141 VALUES BELOW													
170	AC	ANALYZER, OPTICS-INERTIAL		2900023-021		NAS-9-497	B	II	NOTE 11C	FOR DIMENSIONS SEE DASH 144 VALUES BELOW													
169	AC	ADPT, TESTPOINT, P.S.A.		2900037-021		NAS-9-497	B	II	NOTE 11C	FOR DIMENSIONS SEE DASH 141 VALUES BELOW													
168	AC	TEST SELECTOR		2900028-021		NAS-9-497	B	II	NOTE 11C	FOR DIMENSIONS SEE DASH 141 VALUES BELOW													
167	AC	TEST CONTROL		2900027-021		NAS-9-497	B	II	NOTE 11C	FOR DIMENSIONS SEE DASH 141 VALUES BELOW													
166	AC	PANEL, MONITOR		2900031-021		NAS-9-497	B	II	NOTE 11C	FOR DIMENSIONS SEE DASH 141 VALUES BELOW													
165	AC	TERM. BOARD STORAGE DRAWER		2900927-011		NAS-9-497	B	II	NOTE 11C	FOR DIMENSIONS SEE DASH 141 VALUES BELOW													
164	AC	INPUT/OUTPUT PANEL		2900926-011		NAS-9-497	B	II	NOTE 11C	FOR DIMENSIONS SEE DASH 141 VALUES BELOW													
163	AC	CONTROL PANEL		2900896-011		NAS-9-497	B	II	NOTE 11C	FOR DIMENSIONS SEE DASH 141 VALUES BELOW													
162	AC	CSL, CAL AND TEST, SCM/PSAAM		2900895-011		NAS-9-497	B	II	NOTE 11C	FOR DIMENSIONS SEE DASH 144 VALUES BELOW													
161	AC	FIX., LIFT AND HAND., IMU		1015462-011		NAS-9-497	B	II	NOTE 11C	FOR DIMENSIONS SEE DASH 141 VALUES BELOW													
160	AC	FIX., HAND., G & N HARNESS		1901846-031		NAS-9-497	B	II	NOTE 11C	FOR DIMENSIONS SEE DASH 144 VALUES BELOW													
159	AC	BATTERY POWER PACK		1900011-031		NAS-9-497	B	II	NOTE 11C	FOR DIMENSIONS SEE DASH 144 VALUES BELOW													
158	AC	COUPLING DATA UNIT ASSEMBLY C/M		2007222		NAS-9-497	A	I	NOTE 11B	FOR DIMENSIONS SEE DASH 100 VALUES BELOW													
157	AC	COUPLING DATA UNIT ASSEMBLY - LEM		2007222		NAS-9-497	A	I	NOTE 11B	FOR DIMENSIONS SEE DASH 100 VALUES BELOW													
156	AC	POWER & SERVO ASSEMBLY C/M		2007200		NAS-9-497	A	I	NOTE 11B	2.125	.968	1.718	NA	.093	.031	.06	.093	NA	NA	.858	.608	[illegible]	[illegible]
155	AC	PIPA ELECTRONICS ASSEMBLY		2007201		NAS-9-497	A	I	NOTE 11B	FOR DIMENSIONS SEE DASH 100 VALUES BELOW													
154	AC	PULSE TORQUE ASSEMBLY-LEM		6007000		NAS-9-497	A	I	NOTE 11B	FOR DIMENSIONS SEE DASH 100 VALUES BELOW													
153	AC	POWER & SERVO ASSEMBLY-LEM		6007200		NAS-9-497	A	I	NOTE 11B	FOR DIMENSIONS SEE DASH 100 VALUES BELOW													
152	AC	CONT PNL, RSVR CKT TESTER		2900770-011		NAS-9-497	B	II	NOTE 11C	FOR DIMENSIONS SEE DASH 141 VALUES BELOW													
151	AC	TESTER, RESOLVER CIRCUIT		2900708-011		NAS-9-497	B	II	NOTE 11C	FOR DIMENSIONS SEE DASH 141 VALUES BELOW													
150	AC	JUNCTION BOX, P.S.A./G.S.E.		1901933-021		NAS-9-497	B	II	NOTE 11C	FOR DIMENSIONS SEE DASH 144 VALUES BELOW													
149	AC	BATTERY PACK, LIFTING		2900812-011		NAS-9-497	B	II	NOTE 11C	FOR DIMENSIONS SEE DASH 141 VALUES BELOW													
148	AC	MOUNTING PLATE, COMPONENT		6900007-011		NAS-9-497	B	II	NOTE 11C	FOR DIMENSIONS SEE DASH 144 VALUES BELOW													
147	AC	MOUNTING PLATE, COMPONENT		2900677-011		NAS-9-497	B	II	NOTE 11C	FOR DIMENSIONS SEE DASH 144 VALUES BELOW													
146	AC	CART, TRANS, G & N		1900009-041		NAS-9-497	B	II	NOTE 11C	FOR DIMENSIONS SEE DASH 144 VALUES BELOW													
145	AC	CONTAINER, SHIPPING, IMU		1900010-021		NAS-9-497	B	II	NOTE 11C	FOR DIMENSIONS SEE DASH 144 VALUES BELOW													
144	AC	FIX., MOUNTING, G & N		1902204-021			B	II	NOTE 11C	4.125	1.812	3.250	NA	.125	.062	.12	.156	NA	.125	1.625	1.140	.890	[illegible]
143	AC	CSL, COOL, AND PWR, G & N		1902134-021			B	II	NOTE 11C	4.125	1.812	3.250	NA	.125	.062	.12	.156		.125	1.625	1.140	.890	[illegible]
142	AC	ANALYZER, OPTICS-INERTIAL		2900023-011			B	II	NOTE 11C	4.125	1.812	3.250	NA	.125	.062	.12	.156		.125	1.625	1.140	.890	[illegible]
141	AC	CONT, TEMP, PORTABLE		2900060-011			B	II	NOTE 11C	2.125	.968	1.718	NA	.093	.031	.06	.093		.093	.858	.608	.484	[illegible]
140	AC	TESTER, CKT, IMU/CDU RSVR		2900286-011			B	II	NOTE 11C	4.125	1.812	3.250	NA	.125	.062	.12	.156		.125	1.625	1.140	.890	[illegible]
139	AC	SIMULATOR, LD/SIG, CDU		2900285-011			B	II	NOTE 11C	4.125	1.812	3.250	NA	.125	.062	.12	.156		.125	1.625	1.140	.890	[illegible]
138	AC	SIMULATOR, LD/SIG, OPTICS		1902023-021			B	II	NOTE 11C	4.125	1.812	3.250	NA	.125	.062	.12	.156		.125	1.625	1.140	.890	[illegible]
137	AC	FIX., MOUNTING, IMU/NAV BASE		6900003-011			B	II	NOTE 11C	4.125	1.812	3.250	NA	.125	.062	.12	.156		.125	1.625	1.140	[illegible]	[illegible]
136	AC	FIXTURE, OPTICS/NAV BASE		2900072-011			B	II	NOTE 11C	4.125	1.812	3.250	NA	.125	.062	.12	.156		.125	1.625	1.140	.890	[illegible]
135	AC	FIX., MOUNTING, SUB SYSTEM		2900070-011			B	II	NOTE 11C	4.125	1.812	3.250	NA	.125	.062	.12	.156		.125	1.625	1.140	[illegible]	[illegible]
134	AC	FIX., HAND., G & N HARNESS		2900069-011			B	II	NOTE 11C	4.125	1.812	3.250	NA	.125	.062	.12	.156		.125	1.625	1.140	[illegible]	[illegible]
133	AC	CNTR, SHIPPING, NAV BASE		2900068-011			B	II	NOTE 11C	4.125	1.812	3.250	NA	.125	.062	.12	.156		.125	1.625	1.140	.890	[illegible]
132	AC	FIX., MOUNTING, G & N		2900067-011			B	II	NOTE 11C	4.125	1.812	3.250	NA	.125	.062	.12	.156		.125	1.625	1.140	.890	[illegible]
131	AC	SIMULATOR, LD/SIG, IMU/CDU		2900062-011			B	II	NOTE 11C	4.125	1.812	3.250	NA	.125	.062	.12	.156		.125	1.625	1.140	.890	[illegible]
130	AC	TESTER, GYRO WHEEL		2900061-011			B	II	NOTE 11C	4.125	1.812	3.250	NA	.125	.062	.12	.156		.125	1.625	1.140	.890	[illegible]
129	AC	COOLANT SUPPLY		1902133-021			B	II	NOTE 11C	4.125	1.812	3.250	NA	.125	.062	.12	.156		.125	1.625	1.140	.890	[illegible]
128	AC	TABLE, ROTARY		1900926-021			B	II	NOTE 11C	4.125	1.812	3.250	NA	.125	.062	.12	.156		.125	1.625	1.140	.890	[illegible]
127	AC	FIX., HAND., OPTICS		2900074-011			B	II	NOTE 11C	2.125	.968	1.718	NA	.093	.031	.06	.093		.093	.858	.608	.484	[illegible]
126	AC	FIXTURE, MTG, PTA/PEA.		2900066-011			B	II	NOTE 11C	2.125	.968	1.718	NA	.093	.031	.06	.093		.093	.858	.608	.484	[illegible]
125	AC	CONT, TEMP, IMU LIFTING		2900063-011			B	II	NOTE 11C	2.125	.968	1.718	NA	.093	.031	.06	.093		.093	.858	.608	.484	[illegible]
124	AC	FIXTURE, HANDLING, IMU		2900064-011			B	II	NOTE 11C	2.125	.968	1.718	NA	.093	.031	.06	.093		.093	.858	.608	.484	[illegible]
123	AC	CONT, OPTICS, REMOTE		1902046-021			B	II	NOTE 11C	2.125	.968	1.718	NA	.093	.031	.06	.093		.093	.858	.608	.484	[illegible]
122	AC	TEST CONTROL		1902009-021			B	II	NOTE 11C	2.125	.968	1.718	NA	.093	.031	.06	.093		.093	.858	.608	.484	[illegible]
121	AC	ADPT MODULE, P.S.A.		1902431-021			B	II	NOTE 11C	2.125	.968	1.718	NA	.093	.031	.06	.093		.093	.858	.608	.484	[illegible]
120	AC	BRIDGE, DECADE ERROR		2900128-011			B	II	NOTE 11C	2.125	.968	1.718	NA	.093	.031	.06	.093		.093	.858	.608	.484	[illegible]
119	AC	PWR SUP, ELECTRONICS		2900012-011			B	II	NOTE 11C	2.125	.968	1.718	NA	.093	.031	.06	.093		.093	.858	.608	.484	[illegible]
118	AC	PWR SUP, RELAY AND LAMP		1900049-031			B	II	NOTE 11C	2.125	.968	1.718	NA	.093	.031	.06	.093		.093	.858	.608	.484	[illegible]
117	AC	CONSOLE, OSCILLOGRAPH		1900000-021			B	II	NOTE 11C	2.125	.968	1.718	NA	.093	.031	.06	.093		.093	.858	.608	.484	[illegible]
116	AC	ADPT MODULE, P.S.A.		1902431-011			B	II	NOTE 11C	2.125	.968	1.718	NA	.093	.031	.06	.093		.093	.858	.608	.484	[illegible]
115	AC	ADPT, TEST POINT, PTA/PEA.		2900145-011			B	II	NOTE 11C	2.125	.968	1.718	NA	.093	.031	.06	.093		.093	.858	.608	.484	[illegible]
114	AC	ADPT, TEST POINT, P.S.A.		2900037-011			B	II	NOTE 11C	2.125	.968	1.718	NA	.093	.031	.06	.093		.093	.858	.608	.484	[illegible]
113	AC	CONTROL, GIMBAL POSITION		2900036-011			B	II	NOTE 11C	2.125	.968	1.718	NA	.093	.031	.06	.093		.093	.858	.608	.484	[illegible]
112	AC	SELECTOR, SIGNAL, PRIMARY		2900035-011			B	II	NOTE 11C	2.125	.968	1.718	NA	.093	.031	.06	.093		.093	.858	.608	.484	[illegible]
111	AC	SEL, SIG, OSCILLOGRAPH		2900034-011			B	II	NOTE 11C	2.125	.968	1.718	NA	.093	.031	.06	.093		.093	.858	.608	.484	[illegible]
110	AC	PANEL, PWR SUP AND LOAD		2900033-011			B	II	NOTE 11C	2.125	.968	1.718	NA	.093	.031	.06	.093		.093	.858	.608	.484	[illegible]
109	AC	PANEL, MONITOR		2900031-011			B	II	NOTE 11C	2.125	.968	1.718	NA	.093	.031	.06	.093		.093	.858	.608	.484	[illegible]
108	AC	PANEL, AUXILIARY INPUT		2900030-011			B	II	NOTE 11C	2.125	.969	1.718	NA	.093	.031	.06	.093		.093	.858	.608	.484	[illegible]
107	AC	CAGING ELECTRONICS, GYRO		2900029-011			B	II	NOTE 11C	2.125	.968	1.718	NA	.093	.031	.06	.093		.093	.858	.608	.484	[illegible]
106	AC	TEST SELECTOR		2900028-011			B	II	NOTE 11C	2.125	.968	1.718	NA	.093	.031	.06	.093		.093	.858	.608	.484	[illegible]
105	AC	TEST CONTROL		2900027-011			B	II	NOTE 11C	2.125	.968	1.718	NA	.093	.031	.06	.093		.093	.858	.608	.484	[illegible]
104	AC	MONITOR AND CONTROL, TEMP		2900026-011			B	II	NOTE 11C	2.125	.968	1.718	NA	.093	.031	.06	.093		.093	.858	.608	.484	[illegible]
103	AC	DISTRIBUTION BOX, GSE		2900024-011			B	II	NOTE 11C	2.125	.968	1.718	NA	.093	.031	.06	.093		.093	.858	.608	.484	[illegible]
102	AC	VOLTMETER, DIGITAL		2900007-011			B	II	NOTE 11C	2.125	.968	1.718	NA	.093	.031	.06	.093	NA	.093	.858	.608	.484	[illegible]
101	AC	NAVIGATION BASE ASSEMBLY-LEM		6899950		NAS-9-497	A	I	NOTE 11B	2.000	1.312	1.906	1.375	.078	.048	.078	.093	NA	NA	1.125	.750	.593	[illegible]
100	AC	NAVIGATION BASE ASSEMBLY		2899982		NAS-9-497	A	I	NOTE 11B	2.000	1.312	1.906	1.375	.078	.048	.078	.093	NA	NA	1.125	.750	.593	[illegible]

NOTES FOR TABLE

STYLE A IS FOR G & N SYSTEM
STYLE B IS FOR GROUND SUPPORT EQUIPMENT
TYPE I IS WITHOUT MOUNTING HOLES
TYPE II IS WITH MOUNTING HOLES

1004260	CW	SHT 4

REVISIONS

SYM	ZONE	DESCRIPTION	CHG NO	DATE	APPD
CL		REPLACES REV CK WITHOUT CHANGE PER TDRR 34365		[illegible]	JWL RHM
CM		REVISION STATUS CHANGED		18 OCT 67	RAW
CN		REVISION STATUS CHANGE		31 OCT 67	JRK
CP		REVISION STATUS CHANGE		6 NOV 67	[illegible]
CR		REVISION STATUS CHANGED		[illegible] 67	[illegible] RHM
CS		REVISION STATUS CHANGED		[illegible] 68	JW EHW
CT		REVISION STATUS CHANGED		[illegible] 68	[illegible]
CU		REVISION STATUS CHANGED		28 FEB 68	JRK
CV		REVISION STATUS CHANGED		[illegible] 68	[illegible]
CW		REVISION STATUS CHANGED		[illegible]	[illegible]

F	G	H	J	K	L	M	N	P	R	S	T	U	V	W	Y	Z	AA	AB	AC	AD	AE	AF	AG	AH	AJ	AK	AL	AM	AN	AP	AR
VALUES BELOW																															
VALUES BELOW																															
VALUES BELOW																															
VALUES BELOW																															
VALUES BELOW																															
VALUES BELOW																															
VALUES BELOW																															
VALUES BELOW																															
VALUES BELOW																															
VALUES BELOW																															
VALUES BELOW																															
VALUES BELOW																															
VALUES BELOW																															
VALUES BELOW																															
VALUES BELOW																															
VALUES BELOW																															
VALUES BELOW																															
VALUES BELOW																															
	88	.156	NA	NA	1.750	1.125	.906	.688	1.500	NA	.281	.125	NA	1.094	2.062	.312	NA	2.500	.062	.125	1.312	.469	NA	NA	NA	.156	NA	.125	.469	.344	NA
VALUES BELOW																															
VALUES BELOW																															
VALUES BELOW																															
VALUES BELOW																															
VALUES BELOW																															
VALUES BELOW																															
VALUES BELOW																															
VALUES BELOW																															
VALUES BELOW																															
VALUES BELOW																															
VALUES BELOW																															
VALUES BELOW																															
VALUES BELOW																															
VALUES BELOW																															
VALUES BELOW																															
VALUES BELOW																															
VALUES BELOW																															
VALUES BELOW																															
VALUES BELOW																															
VALUES BELOW																															
VALUES BELOW																															
VALUES BELOW																															
VALUES BELOW																															
VALUES BELOW																															
	06	.093	NA	NA	.858	.608	.484	.358	.733	.062	.140	.062	NA	.968	1.450	.125	NA	1.720	.046	.03	NA	.210	NA	NA	NA	.070	NA	.046	.32	.16	NA
VALUES BELOW																															
VALUES BELOW																															
VALUES BELOW																															
VALUES BELOW																															
VALUES BELOW																															
VALUES BELOW																															
VALUES BELOW																															
VALUES BELOW																															
VALUES BELOW																															
VALUES BELOW																															
VALUES BELOW																															
	12	.156		.125	1.625	1.140	.890	.640	1.390	.125	.171	.125	1.875	1.687	2.625	.250	1.562	3.843	.093	NA	NA	.359	.125	.437	3.688	NA	3.687	.093	.40	.25	3.875
	12	.156		.125	1.625	1.140	.890	.640	1.390	.125	.171	.125	1.875	1.687	2.625	.250	1.562	3.843	.093	NA	NA	.359	.125	.437	3.688	NA	3.687	.093	.40	.25	3.875
	12	.156		.125	1.625	1.140	.890	.640	1.390	.125	.171	.125	1.875	1.687	2.625	.250	1.562	3.843	.093	NA	NA	.359	.125	.437	3.688	NA	3.687	.093	.40	.25	3.875
	06	.093		.093	.858	.608	.484	.358	.733	.077	.116	.062	.937	.875	1.343	.125	.781	1.892	.046	NA	NA	.209	.093	.250	1.875	NA	1.840	.046	.23	.16	1.338
	12	.156		.125	1.625	1.140	.890	.640	1.390	.125	.171	.125	1.875	1.687	2.625	.250	1.562	3.843	.093	NA	NA	.359	.125	.437	3.688	NA	3.687	.093	.40	.25	3.875
	12	.156		.125	1.625	1.140	.890	.640	1.390	.125	.171	.125	1.875	1.687	2.625	.250	1.562	3.843	.093	NA	NA	.359	.125	.437	3.688	NA	3.687	.093	.40	.25	3.875
	12	.156		.125	1.625	1.140	.890	.640	1.390	.125	.171	.125	1.875	1.687	2.625	.250	1.562	3.843	.093	NA	NA	.359	.125	.437	3.688	NA	3.687	.093	.40	.25	3.875
	12	.156		.125	1.625	1.140	.890	.640	1.390	.125	.171	.125	1.875	1.687	2.625	.250	1.562	3.843	.093	NA	NA	.359	.125	.437	3.688	NA	3.687	.093	.40	.25	3.875
	12	.156		.125	1.625	1.140	.890	.640	1.390	.125	.171	.125	1.875	1.687	2.625	.250	1.562	3.843	.093	NA	NA	.359	.125	.437	3.688	NA	3.687	.093	.40	.25	3.875
	12	.156		.125	1.625	1.140	.890	.640	1.390	.125	.171	.125	1.875	1.687	2.625	.250	1.562	3.843	.093	NA	NA	.359	.125	.437	3.688	NA	3.687	.093	.40	.25	3.875
	12	.156		.125	1.625	1.140	.890	.640	1.390	.125	.171	.125	1.875	1.687	2.625	.250	1.562	3.843	.093	NA	NA	.359	.125	.437	3.688	NA	3.687	.093	.40	.25	3.875
	12	.156		.125	1.625	1.140	.890	.640	1.390	.125	.171	.125	1.875	1.687	2.625	.250	1.562	3.843	.093	NA	NA	.359	.125	.437	3.688	NA	3.687	.093	.40	.25	3.875
	12	.156		.125	1.625	1.140	.890	.640	1.390	.125	.171	.125	1.875	1.687	2.625	.250	1.562	3.843	.093	NA	NA	.359	.125	.437	3.688	NA	3.687	.093	.40	.25	3.875
	12	.156		.125	1.625	1.140	.890	.640	1.390	.125	.171	.125	1.875	1.687	2.625	.250	1.562	3.843	.093	NA	NA	.359	.125	.437	3.688	NA	3.687	.093	.40	.25	3.875
	12	.156		.125	1.625	1.140	.890	.640	1.390	.125	.171	.125	1.875	1.687	2.625	.250	1.562	3.843	.093	NA	NA	.359	.125	.437	3.688	NA	3.687	.093	.40	.25	3.875
	12	.156		.125	1.625	1.140	.890	.640	1.390	.125	.171	.125	1.875	1.687	2.625	.250	1.562	3.843	.093	NA	NA	.359	.125	.437	3.688	NA	3.687	.093	.40	.25	3.875
	12	.156		.125	1.625	1.140	.890	.640	1.390	.125	.171	.125	1.875	1.687	2.625	.250	1.562	3.843	.093	NA	NA	.359	.125	.437	3.688	NA	3.687	.093	.40	.25	3.875
	06	.093		.093	.858	.608	.484	.358	.733	.077	.116	.062	.937	.875	1.343	.125	.781	1.892	.046	NA	NA	.209	.093	.250	1.875	NA	1.840	.046	.23	.16	1.938
	06	.093		.093	.858	.608	.484	.358	.733	.077	.116	.062	.937	.875	1.343	.125	.781	1.892	.046	NA	NA	.209	.093	.250	1.875	NA	1.840	.046	.23	.16	1.938
	06	.093		.093	.858	.608	.484	.358	.733	.077	.116	.062	.937	.875	1.343	.125	.781	1.892	.046	NA	NA	.209	.093	.250	1.875	NA	1.840	.046	.23	.16	1.938
	06	.093		.093	.858	.608	.484	.358	.733	.077	.116	.062	.937	.875	1.343	.125	.781	1.892	.046	NA	NA	.209	.093	.250	1.875	NA	1.840	.046	.23	.16	1.938
	06	.093		.093	.858	.608	.484	.358	.733	.077	.116	.062	.937	.875	1.343	.125	.781	1.892	.046	NA	NA	.209	.093	.250	1.875	NA	1.840	.046	.23	.16	1.938
	06	.093		.093	.858	.608	.484	.358	.733	.077	.116	.062	.937	.875	1.343	.125	.781	1.892	.046	NA	NA	.209	.093	.250	1.875	NA	1.840	.046	.23	.16	1.938
	06	.093		.093	.858	.608	.484	.358	.733	.077	.116	.062	.937	.875	1.343	.125	.781	1.892	.046	NA	NA	.209	.093	.250	1.875	NA	1.840	.046	.23	.16	1.938
	06	.093		.093	.858	.608	.484	.358	.733	.077	.116	.062	.937	.875	1.343	.125	.781	1.892	.046	NA	NA	.209	.093	.250	1.875	NA	1.840	.046	.23	.16	1.938
	06	.093		.093	.858	.608	.484	.358	.733	.077	.116	.062	.937	.875	1.343	.125	.781	1.892	.046	NA	NA	.209	.093	.250	1.875	NA	1.840	.046	.23	.16	1.938
	06	.093		.093	.858	.608	.484	.358	.733	.077	.116	.062	.937	.875	1.343	.125	.781	1.892	.046	NA	NA	.209	.093	.250	1.875	NA	1.840	.046	.23	.16	1.938
	06	.093		.093	.858	.608	.484	.358	.733	.077	.116	.062	.937	.875	1.343	.125	.781	1.892	.046	NA	NA	.209	.093	.250	1.875	NA	1.840	.046	.23	.16	1.938
	06	.093		.093	.858	.608	.484	.358	.733	.077	.116	.062	.937	.875	1.343	.125	.781	1.892	.046	NA	NA	.209	.093	.250	1.875	NA	1.840	.046	.23	.16	1.938
	06	.093		.093	.858	.608	.484	.358	.733	.077	.116	.062	.937	.875	1.343	.125	.781	1.892	.046	NA	NA	.209	.093	.250	1.875	NA	1.840	.046	.23	.16	1.938
	06	.093		.093	.858	.608	.484	.358	.733	.077	.116	.062	.937	.875	1.343	.125	.781	1.892	.046	NA	NA	.209	.093	.250	1.875	NA	1.840	.046	.23	.16	1.938
	06	.093		.093	.858	.608	.484	.358	.733	.077	.116	.062	.937	.875	1.343	.125	.781	1.892	.046	NA	NA	.209	.093	.250	1.875	NA	1.840	.046	.23	.16	1.938
	06	.093		.093	.858	.608	.484	.358	.733	.077	.116	.062	.937	.875	1.343	.125	.781	1.892	.046	NA	NA	.209	.093	.250	1.875	NA	1.840	.046	.23	.16	1.938
	06	.093		.093	.858	.608	.484	.358	.733	.077	.116	.062	.937	.875	1.343	.125	.781	1.892	.046	NA	NA	.209	.093	.250	1.875	NA	1.840	.046	.23	.16	1.938
	06	.093		.093	.858	.608	.484	.358	.733	.077	.116	.062	.937	.875	1.343	.125	.781	1.892	.046	NA	NA	.209	.093	.250	1.875	NA	1.840	.046	.23	.16	1.938
	06	.093		.093	.858	.608	.484	.358	.733	.077	.116	.062	.937	.875	1.343	.125	.781	1.892	.046	NA	NA	.209	.093	.250	1.875	NA	1.840	.046	.23	.16	1.938
	06	.093		.093	.858	.608	.484	.358	.733	.077	.116	.062	.937	.875	1.343	.125	.781	1.892	.046	NA	NA	.209	.093	.250	1.875	NA	1.840	.046	.23	.16	1.938
	06	.093		.093	.858	.608	.484	.358	.733	.077	.116	.062	.937	.875	1.343	.125	.781	1.892	.046	NA	NA	.209	.093	.250	1.875	NA	1.840	.046	.23	.16	1.938
	06	.093		.093	.858	.608	.484	.358	.733	.077	.116	.062	.937	.875	1.343	.125	.781	1.892	.046	NA	NA	.209	.093	.250	1.875	NA	1.840	.046	.23	.16	1.938
	06	.093		.093	.858	.608	.484	.358	.733	.077	.116	.062	.937	.875	1.343	.125	.781	1.892	.046	NA	NA	.209	.093	.250	1.875	NA	1.840	.046	.23	.16	1.938
	06	.093		.093	.858	.608	.484	.358	.733	.077	.116	.062	.937	.875	1.343	.125	.781	1.892	.046	NA	NA	.209	.093	.250	1.875	NA	1.840	.046	.23	.16	1.938
	06	.093		.093	.858	.608	.484	.358	.733	.077	.116	.062	.937	.875	1.343	.125	.781	1.892	.046	NA	NA	.209	.093	.250	1.875	NA	1.840	.046	.23	.16	1.938
	06	.093		.093	.858	.608	.484	.358	.733	.077	.116	.062	.937	.875	1.343	.125	.781	1.892	.046	NA	NA	.209	.093	.250	1.875	NA	1.840	.046	.23	.16	1.938
	06	.093		.093	.858	.608	.484	.358	.733	.077	.116	.062	.937	.875	1.343	.125	.781	1.892	.046	NA	NA	.209	.093	.250	1.875	NA	1.840	.046	.23	.16	1.938
	078	.093	NA	NA	1.125	.750	.593	.453	1.015	.062	.187	.078	.875	.718	1.375	.218	NA	NA	.048	.031	.875	.305	.078	.531	1.906	.078	NA	.078	.531	.187	NA
	075	.093	NA	NA	1.125	.750	.593	.453	1.015	.062	.187	.078	.875	.718	1.375	.218	NA	NA	.048	.031	.875	.305	.078	.531	1.906	.078	NA	.078	.531	.187	NA

AC ELECTRONICS DASH NUMBERS

AS APPLICABLE	
NEXT ASSY	USED ON
APPLICATION	

UNLESS OTHERWISE SPECIFIED
DIMENSIONS ARE IN INCHES
TOLERANCES ON
2 PLACE DECIMALS ± 3 PLACE DECIMALS ± .005 ANGLES ± —
DO NOT SCALE THIS DRAWING
MATERIAL SEE NOTE 11
APPROVAL

M I T
INSTRUMENTATION LAB
CAMBRIDGE MASS
DRAWN R A JONES DATE 16 JUL 65
CHECKED
APPROVAL W KUPFER 22 JUL 65
CONTRACT
T MICHAELS 22 JUL 65
NASA APPROVAL
W KUPFER 22 JUL 65
MIT APPROVAL

MANNED
SPACECRAFT CENTER
HOUSTON TEXAS

NAMEPLATES,
APOLLO GEN - GSE
(STANDARDS)

SIZE J2 CODE IDENT NO 80230 1004260
SCALE NONE SHEET 4 OF 6

1004260 CW SHT 4

1004260 CW

2/1004260

401	MIT	COMPUTER ASSY		2003100		NAS-9-497	A	I	NOTE 11B	2.000	1.312	1.906	1.375	.078	.048	.078	.093	NA	NA	1.125	[illegible]
400	MIT	LIFTING SLING-G&N INST, QUAL, FIX, & AZM, REF, FIX,		1021640		NAS-9-4065	B	II	NOTE 11C	2.000	1.312	1.687	1.375	.078	.048	.078	.093	[illegible]	.093	1.187	[illegible]
DASH NO.	%C	PART NAME	REMARKS	PART NUMBER	SER. NO.	CONT. NO.	STYLE	TYPE	MATERIAL	A	B	C	D	E	F	G	H	J	K	L	M

NOTES FOR TABLE

STYLE A IS FOR G & N SYSTEM
STYLE B IS FOR GROUND SUPPORT EQUIPMENT
TYPE I IS WITHOUT MOUNTING HOLES
TYPE II IS WITH MOUNTING HOLES

1004260	CW	SHT 5

1/1004260

REVISIONS					
SYM	ZONE	DESCRIPTION	CHG NO	DATE	APPD
CL		REPLACES REV CK WITHOUT CHANGE PER TURR 34365		[illegible] 67	JWL RWH
CM		REVISION STATUS CHANGED		18 OCT 67	RAW
CN		REVISION STATUS CHANGED		31 OCT 67	JRK
CP		REVISION STATUS CHANGED		6 NOV 67	[illegible]
CR		REVISION STATUS CHANGED		7 DEC 67	RWH
CS		REVISION STATUS CHANGED		9 JAN 68	[illegible]
CT		REVISION STATUS CHANGED		[illegible] 68	[illegible]
CU		REVISION STATUS CHANGED		28 FEB 68	JRK
CV		REVISION STATUS CHANGED		[illegible] 68	LR
CW		REVISION STATUS CHANGED		[illegible] 68	[illegible]

[illegible]	[illegible]	.078	.093	NA	NA	1.125	.750	.593	.453	1.015	.062	.187	.078	.875	.718	1.375	.218	NA	NA	.048	.031	.875	.305	.078	.531	1.906	.078	NA	.078	.531	.187	NA
[illegible]	[illegible]	.078	.093	[illegible]	.093	1.187	.750	.593	.453	1.015	.062	.187	.078	.875	.718	1.375	.218	1.156	1.843	.048	NA	.875	.335	.078	.312	1.687	.110	1.830	.070	.275	.180	1.844
[illegible]	F	G	H	J	K	L	M	N	P	R	S	T	U	V	W	Y	Z	AA	AB	AC	AD	AE	AF	AG	AH	AJ	AK	AL	AM	AN	AP	AR

MIT DASH NUMBERS

AS APPLICABLE	
NEXT ASSY	USED ON
APPLICATION	

UNLESS OTHERWISE SPECIFIED
DIMENSIONS ARE IN INCHES
TOLERANCES ON
2 PLACE DECIMALS ± 3 PLACE DECIMALS ± .005 ANGLES ±
DO NOT SCALE THIS DRAWING
MATERIAL SEE NOTE 11
APPROVAL

M.I.T. INSTRUMENTATION LAB CAMBRIDGE, MASS.
DRAWN R. A JONES DATE 16 JUL 65
CHECKED
W KUPFER 22 JUL 65 APPROVAL
CONTRACT
T MICHAELS 22 JUL 65 NASA APPROVAL
W KUPFER 22 JUL 65 MIT APPROVAL

MANNED SPACECRAFT CENTER
HOUSTON, TEXAS

NAMEPLATES, APOLLO G&N - GSE (STANDARDS)

SIZE J2 CODE IDENT NO 80230 1004260
SCALE NONE SHEET 5 OF 6

1004260 CW SHT 5

1004260 CW

1004260

2/1004260

DASH NO.	P/C	PART NAME	REMARKS	PART NUMBER	SER. NO.	CONT. NO.	STYLE	TYPE	MATERIAL	A	B	C	D	E	F	G	H	J	K	L	M	N	P
599	AC																						
598	AC																						
577		BREAKOUT BOX, CABLE ADAPTER		2901011-021		FOR OTHER DATA SEE DASH 506																	
576		FIX., MOUNTING G&N		2900067-061		FOR OTHER DATA SEE DASH 500																	
575		CSL, CAL AND TEST, SCM/PSAAM		2900895-041		FOR DATA SEE DASH 559																	
574		CONT., TEMP. PORTABLE		2900060-031		NAS-9-497	B	II	NOTE 11C	FOR DIMENSIONS SEE DASH 535 VALUES													
573		BATTERY PACK LIFTING		2900812-031		NAS-9-497	B	II	NOTE 11C	FOR DIMENSIONS SEE DASH 542 VALUES													
572		FIX., MOUNTING G&N	(-144)	2900067-081		NAS-9-497	B	II	NOTE 11C	FOR DIMENSIONS SEE DASH 500 VALUES													
571		EYEPIECE STORAGE UNIT		2021382		FOR OTHER DATA SEE DASH 100																	
570	AC	OPTICAL UNIT & BELLOWS ASSY				NAS-9-497	A	I	NOTE 11B	FOR DIMENSIONS SEE DASH 550 VALUES													
569	AC	G & N INDICATOR CONTROL PANEL ASSY		2021323-011		NAS-9-497	A	I	NOTE 11B	FOR DIMENSIONS SEE DASH 181													
568	AC	G & N INDICATOR CONTROL PANEL ASSY		2021290-021		NAS-9-497	A	I	NOTE 11B	FOR DIMENSIONS SEE DASH 181													
567	AC	G & N INDICATOR CONTROL PANEL ASSY		2021290-011		NAS-9-497	A	I	NOTE 11B	FOR DIMENSIONS SEE DASH 181													
566	AC	COMPUTER CONT & RETICLE DIMMER		6014512-061		NAS-9-497	A	I	NOTE 11B	FOR DIMENSIONS SEE DASH 534													
565		AUXILIARY BATTERY PACK		1901492-031		NAS-9-497	B	II	NOTE 11C	FOR DIMENSIONS SEE DASH 500													
564		BATTERY POWER PACK		1900011-051		NAS-9-497	B	II	NOTE 11C	FOR DIMENSIONS SEE DASH 500													
563		PSA ADAPTER MODULE (LEM)		6900088-031		NAS-9-497	B	II	NOTE 11C	FOR DIMENSIONS SEE DASH 141 VALUES													
562	AC	COMPUTER CONT & RETICLE DIMMER		6014512-041		NAS-9-497	A	I	NOTE 11B	FOR DIMENSIONS SEE DASH 534 VALUES													
561	AC	G & N INDICATOR CONTROL PANEL ASSY		2014578-031		NAS-9-497	A	I	NOTE 11B	FOR DIMENSIONS SEE DASH 181 VALUES													
560		ADPT. MODULE, PSA		2901143-021		NAS-9-497	B	II	NOTE 11C	FOR DIMENSIONS SEE DASH 141 VALUES													
559		CSL. CAL AND TEST, SCM/PSAAM		2900895-031		FOR OTHER DATA SEE DASH 547																	
558		PSA ADAPTER MODULE (LEM)		6900088-021		FOR OTHER DATA SEE DASH 189																	
557		FIX., HANDLING, C/M PSA		2900998-021		NAS-9-497	B	II	NOTE 11C	FOR DIMENSIONS SEE DASH 141 VALUES													
556		FIX., MOUNTING G & N	(-144)	2900067-041		NAS-9-497	B	II	NOTE 11C	FOR DIMENSIONS SEE DASH 500 VALUES													
555	AC	OPTICAL UNIT ASSEMBLY		1021368-061		NAS-9-497	A	I	NOTE 11B	2.000	1.312	1.687	1.375	.078	.048	.078	.093	NA	NA	1.125	.750	.593	
554	AC	OPTICAL UNIT ASSEMBLY		1021368-041		NAS-9-497	A	I	NOTE 11B	2.000	1.312	1.687	1.375	.078	.048	.078	.093	NA	NA	1.125	.750	.593	
553	AC	OPTICAL UNIT AND BELLOWS ASSEMBLY		2010790-111		NAS-9-497	A	I	NOTE 11B	2.000	1.312	1.687	1.375	.078	.048	.078	.093	NA	NA	1.125	.750	.593	
552	AC	OPTICAL UNIT AND BELLOWS ASSEMBLY		2010790-081		NAS-9-497	A	I	NOTE 11B	2.000	1.312	1.687	1.375	.078	.048	.078	.093	NA	NA	1.125	.750	.593	
551	AC	OPTICAL UNIT AND BELLOWS ASSEMBLY		2010790-071		NAS-9-497	A	I	NOTE 11B	2.000	1.312	1.687	1.375	.078	.048	.078	.093	NA	NA	1.125	.750	.593	
550	AC	OPTICAL UNIT AND BELLOWS ASSEMBLY		2010790-061		NAS-9-497	A	I	NOTE 11B	2.000	1.312	1.687	1.375	.078	.048	.078	.093	NA	NA	1.125	.750	.593	
548		CAGING ELECTRONICS, GYRO		2900029-031		NAS-9-497	B	II	NOTE 11C	2.125	.968	1.718	NA	.093	.031	.06	.093		.093	.858	.608	.484	
547		CSL. CAL AND TEST, SCM/PSAAM		2900895-021		NAS-9-497	B	II	NOTE 11C	4.125	1.812	3.250	NA	.125	.062	.12	.156		.125	1.625	1.140	.890	
546		FIX., HAND., C/M AND LEM CDU		2900999-021		NAS-9-497	B	II	NOTE 11C	2.125	.968	1.718	NA	.093	.031	.06	.093		.093	.858	.608	.484	
545	AC	G & N INDICATOR CONTROL PANEL ASSY		2014578-021		NAS-9-497	A	I	NOTE 11B	3.000	1.938	2.437	NA	.125	.062	.188	.156	NA	NA	1.750	1.125	.906	
544		ADPT MODULE, P.S.A.		1902431-051		NAS-9-497	B	II	NOTE 11C	2.125	.968	1.718	NA	.093	.031	.06	.093		.093	.858	.608	.484	
543	AC	PANEL, MONITOR		2900031-041		NAS-9-497	B	II	NOTE 11C	2.125	.968	1.718	NA	.093	.031	.06	.093		.093	.858	.608	.484	
542	AC	BATTERY PACK, LIFTING		2900812-021		NAS-9-497	B	II	NOTE 11C	2.125	.968	1.718	NA	.093	.031	.06	.093		.093	.858	.608	.484	
541	AC	FIXTURE, MOUNTING, IMU		2900000-021		NAS-9-497	B	II	NOTE 11C	4.125	1.812	3.250	NA	.125	.062	.12	.156		.125	1.625	1.140	.890	
540	AC	ADPT, TEST POINT, P.S.A.		2900037-031		NAS-9-497	B	II	NOTE 11C	2.125	.968	1.718	NA	.093	.031	.06	.093		.093	.858	.608	.484	
539	AC	ANNUNCIATOR PANEL & EYEPIECE STORAGE ASSEMBLY		1021255-041		NAS-9-497	A	I	NOTE 11B	2.000	1.312	1.906	1.375	.078	.048	.078	.093	NA	NA	1.125	.750	.593	
538	AC	ANNUNCIATOR PANEL & EYEPIECE STORAGE ASSEMBLY		1021255-031		NAS-9-497	A	I	NOTE 11B	2.000	1.312	1.906	1.375	.078	.048	.078	.093	NA	NA	1.125	.750	.593	
537	AC	TEST SELECTOR		2900028-031		NAS-9-497	B	II	NOTE 11C	2.125	.968	1.718	NA	.093	.031	.06	.093		.093	.858	.608	.484	
536	AC	ANALYZER, OPTICS-INERTIAL		2900023-041		NAS-9-497	B	II	NOTE 11C	4.125	1.812	3.250	NA	.125	.062	.12	.156		.125	1.625	1.140	.890	
535	AC	CONT, TEMP, PORTABLE		2900060-021		NAS-9-497	B	II	NOTE 11C	2.125	.968	1.718	NA	.093	.031	.06	.093		.093	.858	.608	.484	
534	AC	COMPUTER CONT & RETICLE DIMMER		6014512-021		NAS-9-497	A	I	NOTE 11B	2.000	1.312	1.906	1.375	.078	.048	.078	.093	NA	NA	1.125	.750	.593	
533	AC	ADPT MODULE, P.S.A.		1902431-041		NAS-9-497	B	II	NOTE 11C	2.125	.968	1.718	NA	.093	.031	.06	.093		.093	.858	.608	.484	
532	AC	TRAY BREAKOUT, 105 PIN		1900807 021		NAS-9-497	B	II	NOTE 11C	4.125	1.812	3.250	NA	.125	.062	.12	.156		.125	1.625	1.140	.890	
531	AC	TRAY BREAKOUT, 84 PIN		1900806-021		NAS-9-497	B	II	NOTE 11C	4.125	1.812	3.250	NA	.125	.062	.12	.156		.125	1.625	1.140	.890	
530	AC	HEAT SINK-TRAY EXTENDER		1900808-021		NAS-9-497	B	II	NOTE 11C	2.125	.968	1.718	NA	.093	.031	.06	.093		.093	.858	.608	.484	
529	AC	TESTER, FAILURE INDICATOR		1900809-021		NAS-9-497	B	II	NOTE 11C	2.125	.968	1.718	NA	.093	.031	.06	.093		.093	.858	.608	.484	
527	AC	FIX., MOUNTING, G & N	(-144)	1902204-021		NAS-9-497	B	II	NOTE 11C	FOR DIMENSIONS SEE DASH 500 VALUES BELOW													
526	AC	FIX., MOUNTING, G & N	(-144)	2900067-031		NAS-9-497	B	II	NOTE 11C	FOR DIMENSIONS SEE DASH 500 VALUES BELOW													
525	AC	PORTABLE TEMP. CONTROLLER		1900496-021		NAS-9-497	B	II	NOTE 11C	3.000	1.937	2.437	2.312	.125	.031	.125	.156	.125	.125	1.718	1.187	[illegible]	
524	AC	POWER, SERVO & THERMOCOUPLE ASSEMBLY C/M		2010743		NAS-9-497	A	I	NOTE 11B	2.125	.968	1.718	NA	.093	.031	.06	.093	NA	NA	.858	.608	.484	
523	AC	PULSE TORQUE AND THERMOCOUPLE ASSEMBLY-LEM		6010656		NAS-9-497	A	I	NOTE 11B	FOR DIMENSIONS SEE DASH 508 VALUES BELOW													
522	AC	COUPLING DATA UNIT & THERMOCOUPLE ASSEMBLY-LEM		2010744		NAS-9-497	A	I	NOTE 11B	FOR DIMENSIONS SEE DASH 508 VALUES BELOW													
521	AC	COUPLING DATA UNIT & THERMOCOUPLE ASSEMBLY-C/M		2010744		NAS-9-497	A	I	NOTE 11B	FOR DIMENSIONS SEE DASH 508 VALUES BELOW													
520	AC	PIPA ELECTRONICS AND THERMOCOUPLE ASSEMBLY		2010745		NAS-9-497	A	I	NOTE 11B	FOR DIMENSIONS SEE DASH 508 VALUES BELOW													
519	AC	FIXTURE, HANDLING, LEM-PSA	(-141)	6900129-011		NAS-9-497	B	II	NOTE 11C	FOR DIMENSIONS SEE DASH 504 VALUES BELOW													
518	AC	JUNCTION BOX, GSE-PSA	(-144)	1901933-031		NAS-9-497	B	II	NOTE 11C	FOR DIMENSIONS SEE DASH 500 VALUES BELOW													
517	AC	FIX., HAND., OPTICS INSTL.	(-141)	2901380-011		NAS-9-497	B	II	NOTE 11C	FOR DIMENSIONS SEE DASH 502 VALUES BELOW													
516	AC	POWER, SERVO AND THERMOCOUPLE ASSEMBLY-LEM		6010655		NAS-9-497	A	I	NOTE 11B	FOR DIMENSIONS SEE DASH 508 VALUES BELOW													
514	AC	SIGNAL COND. ASSY LEM OPER.	(-100)	6007013		NAS-9-497	A	I	NOTE 11B	FOR DIMENSIONS SEE DASH 508 VALUES BELOW													
513	AC	JUMPER, BY-PASS	(-141)	1021616		NAS-9-497	B	II	NOTE 11C	2.125	.968	1.718	NA	.093	.031	.06	.093		.093	.858	.608	.484	
512	AC	COUPLING DATA UNIT ASSEMBLY C/M	(-100)	2007322-011		NAS-9-497	A	I	NOTE 11B	FOR DIMENSIONS SEE DASH 508 VALUES BELOW													
511	AC	COUPLING DATA UNIT ASSEMBLY-LEM	(-100)	2007322-021		NAS-9-497	A	I	NOTE 11B	FOR DIMENSIONS SEE DASH 508 VALUES BELOW													
510	AC	BATTERY POWER PACK	(-144)	1900011-041		NAS-9-497	B	II	NOTE 11C	FOR DIMENSIONS SEE DASH 500 VALUES BELOW													
509	AC	JUNCTION BOX, P.S.A./G.S.E.	(-144)	1902195-021		NAS-9-497	B	II	NOTE 11C	FOR DIMENSIONS SEE DASH 500 VALUES BELOW													
508	AC	NAVIGATION BASE ASSEMBLY-LEM	(-101)	6899980		NAS-9-497	A	I	NOTE 11B	2.000	1.312	1.906	1.375	.078	.048	.078	.093	NA	NA	1.125	.750	.593	
507	AC	CSL, COOL, AND PWR, G AND N	(-144)	1902134-041		NAS-9-497	B	II	NOTE 11C	FOR DIMENSIONS SEE DASH 500 VALUES BELOW													
506	AC	BREAKOUT BOX, CABLE ADAPTER	(-141)	2901011-011		NAS-9-497	B	II	NOTE 11C	2.125	.968	1.718	NA	.093	.031	.06	.093		.093	.858	.608	.484	
505	AC	MONITOR AND CONTROL, TEMP	(-141)	2900026-021		NAS-9-497	B	II	NOTE 11C	2.125	.968	1.718	NA	.093	.031	.06	.093		.093	.858	.608	.484	
504	AC	PWR SUP, GUIDANCE SYSTEM	(-141)	1900033-021		NAS-9-497	B	II	NOTE 11C	2.125	.968	1.718	NA	.093	.031	.06	.093		.093	.858	.608	.484	
503	AC	CONTROL, GIMBAL POSITION	(-141)	2900036-021		NAS-9-497	B	II	NOTE 11C	2.125	.968	1.718	NA	.093	.031	.06	.093		.093	.858	.608	.484	
502	AC	ADPT, TEST POINT, PTA/PEA.	(-141)	2900145-021		NAS-9-497	B	II	NOTE 11C	2.125	.968	1.718	NA	.093	.031	.06	.093		.093	.858	.608	.484	
501	AC	MOUNTING PLATE, COMPONENT	(-144)	6900007-031		NAS-9-497	B	II	NOTE 11C	FOR DIMENSIONS SEE DASH 500 VALUES BELOW													
500	AC	MOUNTING PLATE, COMPONENT	(-144)	2900677-021		NAS-9-497	B	II	NOTE 11C	4.125	1.812	3.250	NA	.125	.062	.12	.156		.125	1.625	1.140	.890	

NOTES FOR TABLE

STYLE A IS FOR G & N SYSTEM
STYLE B IS FOR GROUND SUPPORT EQUIPMENT
TYPE I IS WITHOUT MOUNTING HOLES
TYPE II IS WITH MOUNTING HOLES

SYM	ZONE	REVISIONS DESCRIPTION	CHG NO	DATE	APPD
CL		REPLACES REV CK WITH CHANGE PER TDRR 34365		9/28/67	JL
CM		REVISED PER TDRR 34895		17 OCT 67	R.A.H.
CN		REVISED PER TDRR 34467		31 OCT 67	JRK
CP		REVISED PER TDRR 34853		6 NOV 67	EMS
CR		REVISED PER TDRR 35164		7 DEC 67	DWD
CS		REVISED PER TDRR 35307		3 JAN 68	
CT		REVISION STATUS CHANGED		7 FEB 68	
CU		REVISED PER TDRR 35628		22 FEB 68	NRK
CV		REVISED PER TDRR 35675		27 FEB 68	
CW		REVISED PER TDRR 35970		68	

	G	H	J	K	L	M	N	P	R	S	T	U	V	W	Y	Z	AA	AB	AC	AD	AE	AF	AG	AH	AJ	AK	AL	AM	AN	AP	AR
VALUES																															
VALUES																															
VALUES																															
VALUES																															
VALUES																															
VALUES																															
VALUES																															
VALUES																															
VALUES																															
VALUES																															
	.078	.093	NA	NA	1.125	.750	.593	.453	1.015	.062	.187	.078	.875	.718	1.375	.218	NA	NA	.048	.031	.875	.305	NA	.468	1.531	NA	NA	.078	.312	.187	NA
	.078	.093	NA	NA	1.125	.750	.593	.453	1.015	.062	.187	.078	.875	.718	1.375	.218	NA	NA	.048	.031	.875	.305	NA	.468	1.531	NA	NA	.078	.312	.187	NA
	.078	.093	NA	NA	1.125	.750	.593	.453	1.015	.062	.187	.078	.875	.718	1.375	.218	NA	NA	.048	.031	.875	.305	NA	.468	1.531	NA	NA	.078	.312	.187	NA
	.078	.093	NA	NA	1.125	.750	.593	.453	1.015	.062	.187	.078	.875	.718	1.375	.218	NA	NA	.048	.031	.875	.305	NA	.468	1.531	NA	NA	.078	.312	.187	NA
	.078	.093	NA	NA	1.125	.750	.593	.453	1.015	.062	.187	.078	.875	.718	1.375	.218	NA	NA	.048	.031	.875	.305	NA	.468	1.531	NA	NA	.078	.312	.187	NA
	.078	.093	NA	NA	1.125	.750	.593	.453	1.015	.062	.187	.078	.875	.718	1.375	.218	NA	NA	.048	.031	.875	.305	NA	.468	1.531	NA	NA	.078	.312	.187	NA
	.06	.093		.093	.858	.608	.484	.358	.733	.077	.116	.062	.937	.875	1.343	.125	.781	1.892	.046	NA	NA	.209	.093	.250	1.875	NA	1.840	.046	.23	.16	1.938
	.12	.156		.125	1.625	1.140	.890	.640	1.390	.125	.171	.125	1.875	1.687	2.625	.250	1.562	3.843	.093	NA	NA	.359	.125	.437	3.688	NA	3.687	.093	.40	.25	3.875
	.06	.093		.093	.858	.608	.484	.358	.733	.077	.116	.062	.937	.875	1.343	.125	.781	1.892	.046	NA	NA	.209	.093	.250	1.875	NA	1.840	.046	.23	.16	1.938
	.100	.156	NA	NA	1.750	1.125	.906	.688	1.500	NA	.281	.125	NA	1.094	2.062	.312	NA	2.500	.062	.125	1.312	.469	NA	NA	NA	.156	NA	.125	.469	.344	NA
	.06	.093		.093	.858	.608	.484	.358	.733	.077	.116	.062	.937	.875	1.343	.125	.781	1.892	.046	NA	NA	.209	.093	.250	1.875	NA	1.840	.046	.23	.16	1.938
	.06	.093		.093	.858	.608	.484	.358	.733	.077	.116	.062	.937	.875	1.343	.125	.781	1.892	.046	NA	NA	.209	.093	.250	1.875	NA	1.840	.046	.23	.25	1.938
	.06	.093		.093	.858	.608	.484	.358	.733	.077	.116	.062	.937	.875	1.343	.125	.781	1.892	.046	NA	NA	.209	.093	.250	1.875	NA	1.840	.046	.23	.16	1.938
	.12	.156		.125	1.625	1.140	.890	.640	1.390	.125	.171	.125	1.875	1.687	2.625	.250	1.562	3.843	.093	NA	NA	.359	.125	.437	3.688	NA	3.687	.093	.40	.25	3.875
	.06	.093		.093	.858	.608	.484	.358	.733	.077	.116	.062	.937	.875	1.343	.125	.781	1.892	.046	NA	NA	.209	.093	.250	1.875	NA	1.840	.046	.23	.16	1.938
	.078	.093	NA	NA	1.125	.750	.593	.453	1.015	.062	.187	.078	.875	.718	1.375	.218	NA	NA	.048	.031	.875	.305	.078	.531	1.906	.078	NA	.078	.531	.187	NA
	.078	.093	NA	NA	1.125	.750	.593	.453	1.015	.062	.187	.078	.875	.718	1.375	.218	NA	NA	.048	.031	.875	.305	.078	.531	1.906	.078	NA	.078	.531	.187	NA
	.06	.093		.093	.858	.608	.484	.358	.733	.077	.116	.062	.937	.875	1.343	.125	.781	1.892	.046	NA	NA	.209	.093	.250	1.875	NA	1.840	.046	.23	.16	1.938
	.12	.156		.125	1.625	1.140	.890	.640	1.390	.125	.171	.125	1.875	1.687	2.625	.250	1.562	3.843	.093	NA	NA	.359	.125	.437	3.688	NA	3.687	.093	.40	.25	3.875
	.06	.093		.093	.858	.608	.484	.358	.733	.077	.116	.062	.937	.875	1.343	.125	.781	1.892	.046	NA	NA	.209	.093	.250	1.875	NA	1.840	.046	.23	.16	1.938
	.078	.093	NA	NA	1.125	.750	.593	.453	1.015	.062	.187	.078	.875	.718	1.375	.218	NA	NA	.048	.031	.875	.305	.078	.531	1.906	.078	NA	.078	.531	.187	NA
	.06	.093		.093	.858	.608	.484	.358	.733	.077	.116	.062	.937	.875	1.343	.125	.781	1.892	.046	NA	NA	.209	.093	.250	1.875	NA	1.840	.046	.23	.16	1.938
	.12	.156		.125	1.625	1.140	.890	.640	1.390	.125	.171	.125	1.875	1.687	2.625	.250	1.562	3.843	.093	NA	NA	.359	.125	.437	3.688	NA	3.687	.093	.40	.25	3.875
	.12	.156		.125	1.625	1.140	.890	.640	1.390	.125	.171	.125	1.875	1.687	2.625	.250	1.562	3.843	.093	NA	NA	.359	.125	.437	3.688	NA	3.687	.093	.40	.25	3.875
	.06	.093		.093	.858	.608	.484	.358	.733	.077	.116	.062	.937	.875	1.343	.125	.781	1.892	.046	NA	NA	.209	.093	.250	1.875	NA	1.840	.046	.23	.16	1.938
	.06	.093		.093	.858	.608	.484	.358	.733	.077	.116	.062	.937	.875	1.343	.125	.781	1.892	.046	NA	NA	.209	.093	.250	1.875	NA	1.840	.046	.23	.16	1.938
VALUES BELOW																															
VALUES BELOW																															
	.125	.156	.125	.125	1.718	1.187	.968	.749	1.452	.093	.295	.090	1.312	1.00	2.000	.250	1.687	2.750	.062	NA	NA	.463	.125	.562	2.437	.140	2.562	.090	.468	.359	2.750
	.06	.093	NA	NA	.858	.608	.484	.358	.733	.062	.140	.062	NA	.968	1.450	.125	NA	1.720	.046	.03	NA	.210	NA	NA	NA	.070	NA	.046	.32	.16	NA
VALUES BELOW																															
VALUES BELOW																															
VALUES BELOW																															
VALUES BELOW																															
VALUES BELOW																															
VALUES BELOW																															
VALUES BELOW																															
VALUES BELOW																															
VALUES BELOW																															
	.06	.093		.093	.858	.608	.484	.358	.733	.077	.116	.062	.937	.875	1.343	.125	.781	1.892	.046	NA	NA	.209	.093	.250	1.875	NA	1.840	.046	.23	.16	1.938
VALUES BELOW																															
VALUES BELOW																															
VALUES BELOW																															
VALUES BELOW																															
	.078	.093	NA	NA	1.125	.750	.593	.453	1.015	.062	.187	.078	.875	.718	1.375	.218	NA	NA	.048	.031	.875	.305	.078	.531	1.906	.078	NA	.078	.531	.187	NA
VALUES BELOW																															
	.06	.093		.093	.858	.608	.484	.358	.733	.077	.116	.062	.937	.875	1.343	.125	.781	1.892	.046	NA	NA	.209	.093	.250	1.875	NA	1.840	.046	.23	.16	1.938
	.06	.093		.093	.858	.608	.484	.358	.733	.077	.116	.062	.937	.875	1.343	.125	.781	1.892	.046	NA	NA	.209	.093	.250	1.875	NA	1.840	.046	.23	.16	1.938
	.06	.093		.093	.858	.608	.484	.358	.733	.077	.116	.062	.937	.875	1.343	.125	.781	1.892	.046	NA	NA	.209	.093	.250	1.875	NA	1.840	.046	.23	.16	1.938
	.06	.093		.093	.858	.608	.484	.358	.733	.077	.116	.062	.937	.875	1.343	.125	.781	1.892	.046	NA	NA	.209	.093	.250	1.875	NA	1.840	.046	.23	.16	1.938
	.06	.093		.093	.858	.608	.484	.358	.733	.077	.116	.062	.937	.875	1.343	.125	.781	1.892	.046	NA	NA	.209	.093	.250	1.875	NA	1.840	.046	.23	.16	1.938
VALUES BELOW																															
	.12	.156		.125	1.625	1.140	.890	.640	1.390	.125	.171	.125	1.875	1.687	2.625	.250	1.562	3.843	.093	NA	NA	.359	.125	.437	3.688	NA	3.687	.093	.40	.25	3.875

AC ELECTRONICS DASH NUMBERS

UNLESS OTHERWISE SPECIFIED
DIMENSIONS ARE IN INCHES
TOLERANCES ON
2 PLACE DECIMALS ±
3 PLACE DECIMALS ± .005
ANGLES ±
DO NOT SCALE THIS DRAWING
MATERIAL SEE NOTE 11
APPROVAL

AS APPLICABLE
NEXT ASSY | USED ON
APPLICATION

MIT INSTRUMENTATION LAB
DRAWN R A JONES DATE 16 JUL 65
CHECKED
APPROVAL W KUPFER 22 JUL 65
CONTRACT
NASA APPROVAL T MICHAELS 22 JUL 65
MIT APPROVAL W KUPFER 22 JUL 65

MANNED SPACECRAFT CENTER
HOUSTON TEXAS

NAMEPLATES,
APOLLO GEN - GSE
(STANDARDS)

SIZE J2
CODE IDENT NO 80230
1004260
SCALE NONE
SHEET 6 OF 6

1004260

CW SHT 6

2/1004260

NOTES:

1. INTERPRET DRAWING IN ACCORDANCE WITH STANDARDS PRESCRIBED BY MIL-D-70327.
2. DIMENSIONS ON EACH VIEW APPLY TO ALL VIEWS (WITH THE EXCEPTION OF MOUNTING HOLES).
3. FORMATS ILLUSTRATED WILL BE APPLICABLE TO ALL ITEMS REQUIRING NAMEPLATES BELOW END ITEM DESIGNATION (SYSTEMS, ASSEMBLIES, ETC.)
4. PLATE BACKGROUND TO BE LUSTERLESS BLACK PER FED-STD-595, COLOR 37038. BORDER, MARKING AND LETTERING TO BE NATURAL METAL, (ANODIZED ALUMINUM).
5. MARKING METHOD TO BE DIE STAMPING, ETCHING OR ENGRAVING IN ACCORDANCE WITH MIL-P-19834.
6. LETTERING STYLE TO BE GOTHIC, (SANS SERIFS), AND NUMBERS TO BE ARABIC.
7. WHERE LOCATING DIMENSIONS ARE NOT SHOWN, CHARACTERS SHALL BE SYMMETRICALLY POSITIONED.
8. IDENTIFY WITH DRAWING NUMBER PER ND 1002019.
9. WHEN "AUTO MARK" METAL MARKING TYPEWRITER IS USED TO ADD DATA TO BLANK SPACES, TYPE SIZE IS TO BE SELECTED FROM DIMENSIONS U, AC, AND AM.
10. NASA SYMBOL IS TO BE PROPORTIONAL TO NAMEPLATE IN RATIO OF 1 TO 5 WITH DIMENSION A VALUE AND IS TO HAVE NATURAL BACKGROUND. NASA SYMBOL LETTERS LETTERING AND FEATHER TO BE BLACK, (OR WHITE FOR SILK SCREENING). WHERE BLACK FEATHER PROTRUDES INTO BLACK BACKGROUND, A MINIMUM OUTLINE OF NATURAL BACKGROUND SHALL EXIST.
11. NAMEPLATES WILL BE APPLIED BY METHODS LISTED BELOW, SHOWN IN ORDER OF PREFERENCE, (I.E., FOR RELIABILITY AND WEIGHT).
    - A - STENCIL OR SILK SCREEN DIRECTLY ON EQUIPMENT USING INK PER SCD 1010920, (WHITE OR BLACK).
    - B - ALUMINUM FOIL, (STYLE A OR B, TYPE I):
      FOIL SHALL BE .0030 ± .0005 THICK PER MIL-A-148.
      FOIL SHALL HAVE NO ADHESIVE BACKING.
      FOIL SHALL BE BONDED PER ND 1002219, (METHOD II).
      FOIL SHALL BE CLEAR ANODIZED PER MIL-A-8625, TYPE II.
    - C - PLATE, (STYLE A OR B, TYPE II):
      MATERIAL: QQ-A-250, TEMPER O OR H14, TYPE 1100, ALUMINUM ALLOY, .032 THICK. ANODIZE PER MIL-A-8625, TYPE II.
      ALUMINUM PLATE MUST BE FREE FROM BURRS AND SHARP CORNERS, MOUNTED WITH APPLICABLE SIZE FASTENERS.
12. NAMEPLATES SHALL BE CAPABLE OF MEETING APPLICABLE REQUIREMENTS OF MIL-M-13231.
13. ON DIMENSION TABLES SHOWN ON PAGES 2, 3, 4, 5, AND 6, NA MEANS, "NOT APPLICABLE".

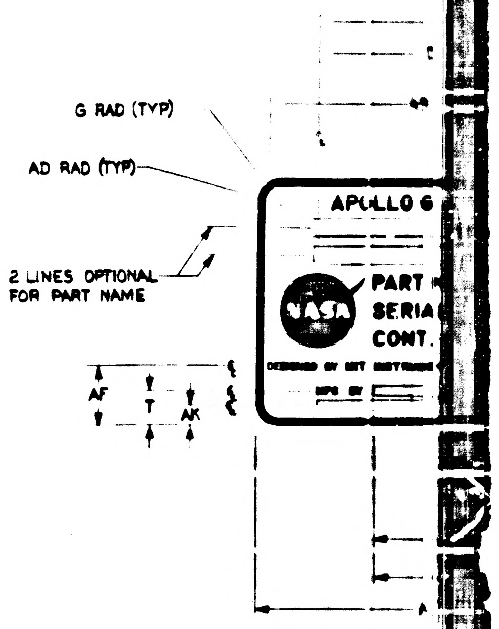

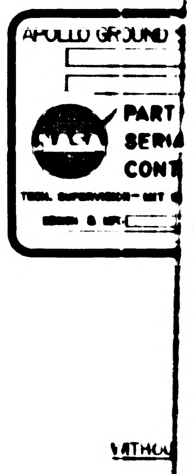

SUGGESTED PROPORTIONS FOR NAMEPLATE DIMENSIONS.

1. SELECT NAMEPLATE LENGTH, DIMENSION "A", TO FIT DESIGN NEEDS.
2. DIMENSIONS B THRU AS ON LINE 1 BELOW ARE PROPORTIONAL TO "A" BY MULTIPLIERS SHOWN IN LINE 2 BELOW.

1.	A	B	C	D	E	F	G	H	J	K	L	M	N	P	R	S	T	U	V	W
2.	1.000A	.6563A	.8438A	.6875A	.0391A	.0240A	.0391A	.0469A	.0547A	.0469A	.5938A	.3750A	.2969A	.2187A	.5079A	.0313A	.0938A	.0391A	.4375A	.3594A

1.	Y	Z	AA	AB	AC	AD	AE	AF	AG	AH	AJ	AK	AL	AM	AN	AP	AR	AS
2.	.6875A	.1094A	.5781A	.9219A	.0240A	.0156A	.4375A	.1525A	.8391A	.1563A	.8438A	.0548A	.8659A	.0391A	.1563A	.0938A	.9219A	.0151A

1004260	C	SHT 1

REVISIONS					
SYM	ZONE	DESCRIPTION	CHG NO	DATE	APPD
CL		REPLACES REV CK WITHOUT CHANGE PER TDRR 34365		7/28/67	JWL
CM		REVISION STATUS CHANGED		18 OCT 67	R.A.W.
CN		REVISION STATUS CHANGED		31 OCT 67	JRK
CP		REVISION STATUS CHANGED		6 NOV 67	[illegible]
CR		REVISION STATUS CHANGED		7 DEC 67	[illegible]
CS		REVISION STATUS CHANGED		[illegible] 68	[illegible]
CT		REVISION STATUS CHANGED		[illegible] 68	[illegible]
CU		REVISION STATUS CHANGED		22 FEB 68	[illegible]
CV		REVISION STATUS CHANGED		27 [illegible] 68	[illegible]
CW		REVISION STATUS CHANGED		[illegible] 68	[illegible]
CY		REVISION STATUS CHANGED		[illegible] 68	[illegible]

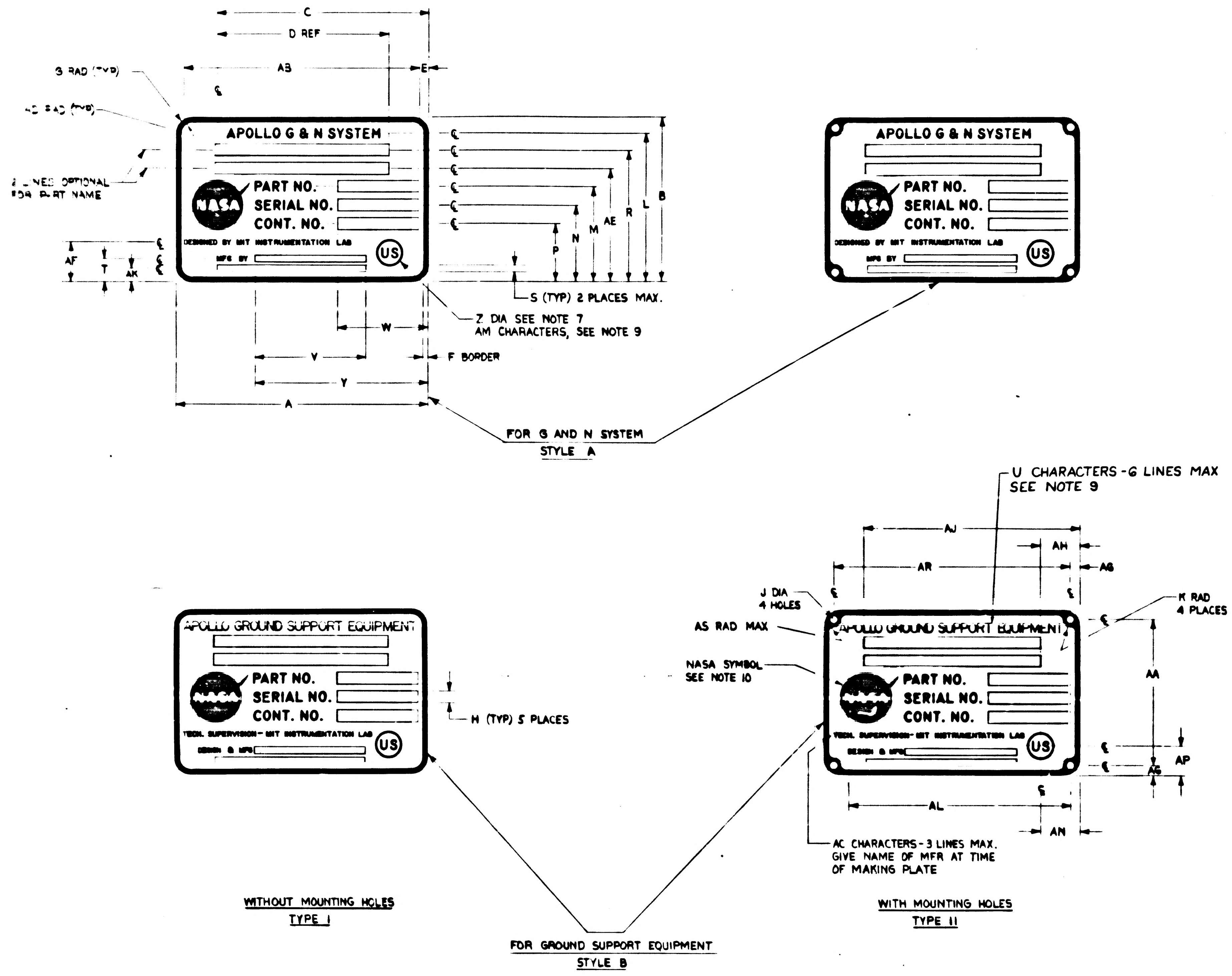
C
D REF
AB
E
3 RAD (TYP)
AD RAD (TYP)
2 LINES OPTIONAL FOR PART NAME
APOLLO G & N SYSTEM
NASA
PART NO.
SERIAL NO.
CONT. NO.
DESIGNED BY MIT INSTRUMENTATION LAB
MFG BY
US
AF
T
AK
P
N
M
AE
R
L
B
S (TYP) 2 PLACES MAX.
Z DIA SEE NOTE 7
AM CHARACTERS, SEE NOTE 9
W
V
Y
A
F BORDER
FOR G AND N SYSTEM
STYLE A
U CHARACTERS - 6 LINES MAX
SEE NOTE 9
AJ
AH
AR
AG
J DIA
4 HOLES
K RAD
4 PLACES
AS RAD MAX
NASA SYMBOL
SEE NOTE 10
APOLLO GROUND SUPPORT EQUIPMENT
TECH. SUPERVISION - MIT INSTRUMENTATION LAB
DESIGN & MFG
H (TYP) 5 PLACES
AA
AP
AL
AN
AC CHARACTERS - 3 LINES MAX.
GIVE NAME OF MFR AT TIME
OF MAKING PLATE
WITHOUT MOUNTING HOLES
TYPE I
WITH MOUNTING HOLES
TYPE II
FOR GROUND SUPPORT EQUIPMENT
STYLE B

UNLESS OTHERWISE SPECIFIED DIMENSIONS ARE IN INCHES TOLERANCES ON 2 PLACE DECIMALS ± 3 PLACE DECIMALS ± .005 ANGLES ±	M I T INSTRUMENTATION LAB CAMBRIDGE, MASS	MANNED SPACECRAFT CENTER HOUSTON, TEXAS
	DRAWN R A JONES DATE 16 JUL 65 CHECKED APPROVAL W KUPFER 22 JUL 65 CONTRACT	NAMEPLATES, APOLLO G&N - GSE (STANDARDS)
DO NOT SCALE THIS DRAWING		
MATERIAL SEE NOTE 11	NASA APPROVAL T. MICHAELS 22 JUL 65 MIT APPROVAL W KUPFER 22 JUL 65	SIZE J2 · CODE IDENT NO. 80230 · 1004260
APPROVAL		SCALE NONE · SHEET 1 OF 6

NEXT ASSY	USED ON
AS APPLICABLE	
APPLICATION	

1004260 SHT 1

1004260 CY

1004260

080SA001

2/1004260

[illegible]

DASH NO.	P/C	PART NAME	REMARKS	PART NUMBER	SER. NO.	CONT. NO.	STYLE	TYPE	MATERIAL	A	B	C	D	E	F	G	H	J	K	L	M	N	P
399	K																						
398	K																						
350	K	ALIGNMENT OPTICAL TELESCOPE (LEM)		NA	NA	NA	A	I	NOTE 11B	4.000	2.625	3.375	2.750	.156	.093	.156	.187	NA	NA	2.312	1.468	1.187	.906
309	K																						
308	K																						
307	K						B	I	NOTE 11B	4.000	2.625	3.375	2.750	.156	.093	.156	.187	NA	NA	2.328	1.468	1.187	.906
306	K						B	II	NOTE 11C	4.000	2.625	3.375	2.750	.156	.093	.156	.187	.125	.156	2.328	1.468	1.187	.906
305	K						B	I	NOTE 11B	2.000	1.312	1.687	1.375	.078	.048	.078	.093	NA	NA	1.164	.734	.593	.453
304	K						B	II	NOTE 11C	2.000	1.312	1.687	1.375	.078	.048	.078	.093	.070	.078	1.164	.734	.593	.453
303	K																						
302	K																						
301	K																						
300	K	OPTICAL UNIT		NA	NA	NA	A	I	NOTE 11B	2.000	1.312	1.675	NA	NA	.048	.078	NA	NA	NA	1.090	.812	.675	.540
9	K	2 IN AUTOCOLLIMATOR		1001702			B	II	NOTE 11C	4.000	2.625	3.812	2.750	.156	.093	.156	.187	.125	.156	2.250	1.500	1.187	.906
8	K	5 IN AUTOCOLLIMATOR		1017410			B	II	NOTE 11C	4.000	2.625	3.812	2.750	.156	.093	.156	.187	.125	.156	2.250	1.500	1.187	.906
7	K	2-1/2 IN AUTOCOLLIMATOR (SCT)		1017435			B	II	NOTE 11C	4.000	2.625	3.812	2.750	.156	.093	.156	.187	.125	.156	2.250	1.500	1.187	.906
6	K	2-1/2 IN AUTOCOLLIMATOR (SXT)		1017448			B	II	NOTE 11C	4.000	2.625	3.812	2.750	.156	.093	.156	.187	.125	.156	2.250	1.500	1.187	.906
5	K	RETROREFLECTING PRISM ASSEMBLY		1019840			B	I	NOTE 11B	4.000	2.625	3.812	2.750	.156	.093	.156	.187	NA	NA	2.250	1.500	1.187	.906
4	K	S/H SIMULATOR ASSEMBLY		1019896			B	I	NOTE 11B	4.000	2.625	3.812	2.750	.156	.093	.156	.187	NA	NA	2.250	1.500	1.187	.906
3	K	REFERENCE MIRROR		1001767			B	I	NOTE 11B	2.000	1.312	1.906	1.375	.078	.048	.078	.093	NA	NA	1.125	.750	.593	.453
2	K	2 IN PLANE READING AUTOCOLLIMATOR		1017413			B	I	NOTE 11B	2.000	1.312	1.906	1.375	.078	.048	.078	.093	NA	NA	1.125	.750	.593	.453
1	K	2 IN AUTOCOLLIMATOR		1001702			B	I	NOTE 11B	2.000	1.312	1.906	1.375	.078	.048	.078	.093	NA	NA	1.125	.750	.593	.453

NOTES FOR TABLE

STYLE A IS FOR G & N SYSTEM
STYLE B IS FOR GROUND SUPPORT EQUIPMENT
TYPE I IS WITHOUT MOUNTING HOLES
TYPE II IS WITH MOUNTING HOLES

REVISIONS					
SYM	ZONE	DESCRIPTION	CHG NO	DATE	APPD
CL		REPLACES REV CK WITHOUT CHANGE PER TDRR 34365		[illegible] 28/67	JWL
CM		REVISION STATUS CHANGED		18 OCT 67	RAW
CN		REVISION STATUS CHANGED		3 OCT 67	URK
CP		REVISION STATUS CHANGED		6 NOV 67	EMS
CR		REVISION STATUS CHANGED		[illegible] DEC 67	[illegible]
CS		REVISION STATUS CHANGED		[illegible] JAN 68	EHW
CT		REVISION STATUS CHANGED		[illegible] FEB 68	[illegible]
CU		REVISION STATUS CHANGED		28 FEB 68	JPK
CV		REVISION STATUS CHANGED		27 [illegible] 68	KK
CW		REVISION STATUS CHANGED		3 APR 68	[illegible]
CY		REVISION STATUS CHANGED		6 APR 68	[illegible]

.093	.156	.187	NA	NA	2.312	1.468	1.187	.906	2.031	NA	.375	.156	NA	1.437	2.750	.437	NA	3.688	.062	.062	1.750	.593	NA	.625	3.375	.187	NA	.156	.531	.453	NA
.093	.156	.187	NA	NA	2.328	1.468	1.187	.906	2.031	.062	.375	.156	NA	1.437	2.750	.437	NA	3.687	.062	.062	1.750	.593	NA	NA	NA	NA	NA	NA	NA	NA	NA
.093	.156	.187	.125	.156	2.328	1.468	1.187	.906	2.031	.062	.375	.156	NA	1.437	2.750	.437	2.312	3.687	.062	NA	1.750	.593	NA	NA	NA	NA	NA	NA	NA	NA	NA
.048	.078	.093	NA	NA	1.164	.734	.593	.453	1.015	.048	.171	.078	NA	.718	1.375	.187	NA	NA	.048	.031	.875	.320	NA	NA	NA	NA	NA	NA	NA	NA	NA
.048	.078	.093	.070	.078	1.164	.734	.593	.453	1.015	.048	.171	.078	NA	.718	1.375	.187	.156	1.843	.048	NA	.875	.320	NA	NA	NA	NA	NA	NA	NA	NA	NA
.048	.078	NA	NA	NA	1.090	.812	.675	.540	.940	NA	.265	NA	NA	NA	1.375	.218	NA	NA	NA	NA	NA	.375	NA	NA	NA	.180	NA	.078	NA	NA	NA
.093	.156	.187	.125	.156	2.250	1.500	1.187	.906	2.031	.093	.375	.156	1.750	1.437	2.750	.437	2.312	3.687	.062	NA	1.750	.593	.156	1.062	3.812	.156	NA	.156	1.062	.375	3.687
.093	.156	.187	.125	.156	2.250	1.500	1.187	.906	2.031	.093	.375	.156	1.750	1.437	2.750	.437	2.312	3.687	.062	NA	1.750	.593	.156	1.062	3.812	.156	NA	.156	1.062	.375	3.687
.093	.156	.187	.125	.156	2.250	1.500	1.187	.906	2.031	.093	.375	.156	1.750	1.437	2.750	.437	2.312	3.687	.062	NA	1.750	.593	.156	1.062	3.812	.156	NA	.156	1.062	.375	3.687
.093	.156	.187	.125	.156	2.250	1.500	1.187	.906	2.031	.093	.375	.156	1.750	1.437	2.750	.437	2.312	3.687	.062	NA	1.750	.593	.156	1.062	3.812	.156	NA	.156	1.062	.375	3.687
.093	.156	.187	NA	NA	2.250	1.500	1.187	.906	2.031	.093	.375	.156	1.750	1.437	2.750	.437	NA	NA	.062	.062	1.750	.593	.156	1.062	3.812	.156	NA	.156	1.062	.375	NA
.093	.156	.187	NA	NA	2.250	1.500	1.187	.906	2.031	.093	.375	.156	1.750	1.437	2.750	.437	NA	NA	.062	.062	1.750	.593	.156	1.062	3.812	.156	NA	.156	1.062	.375	NA
.048	.078	.093	NA	NA	1.125	.750	.593	.453	1.015	.062	.187	.078	.875	.718	1.375	.218	NA	NA	.048	.031	.875	.305	.078	.531	1.906	.078	NA	.078	.531	.187	NA
.048	.078	.093	NA	NA	1.125	.750	.593	.453	1.015	.062	.187	.078	.875	.718	1.375	.218	NA	NA	.048	.031	.875	.305	.078	.531	1.906	.078	NA	.078	.531	.187	NA
.048	.078	.093	NA	NA	1.125	.750	.593	.453	1.015	.062	.187	.078	.875	.718	1.375	.218	NA	NA	.048	.031	.875	.305	.078	.531	1.906	.078	NA	.078	.531	.187	NA
F	G	H	J	K	L	M	N	P	R	S	T	U	V	W	Y	Z	AA	AB	AC	AD	AE	AF	AG	AH	AJ	AK	AL	AM	AN	AP	AR

KOLLSMAN DASH NUMBERS

AS APPLICABLE	UNLESS OTHERWISE SPECIFIED DIMENSIONS ARE IN INCHES TOLERANCES ON 2 PLACE DECIMALS ± 3 PLACE DECIMALS ± .005 ANGLES ±	INSTRUMENTATION LAB CAMBRIDGE MASS	MANNED SPACECRAFT CENTER HOUSTON TEXAS	
NEXT ASSY / USED ON	DO NOT SCALE THIS DRAWING	DRAWN R A JONES DATE 16 JUL 63 CHECKED W KUPFER 22 JUL 65 APPROVAL CONTRACT	NAMEPLATES, APOLLO GEN - GSE (STANDARDS)	
APPLICATION	MATERIAL SEE NOTE 11	T MICHAELS 22 JUL 65 NASA APPROVAL	SIZE J2	CODE IDENT NO 80230
	APPROVAL	W KUPFER 22 JUL 65 MIT APPROVAL	SCALE NONE	1004260 SHEET 2 OF 6

1004260 CY

1004260

1004260 C SHT 2

2/1004260

DASH NO.	P/C	PART NAME	REMARKS	PART NUMBER	SER. NO.	CONT. NO.	STYLE	TYPE	MATERIAL	A	B	C	D	E	F	G	H	J	K	L	M	N	P	R
299	R																							
298	R																							
293	R	COMPUTER TEST SET		2014042-081	NA	NAS-9-497	B	II	NOTE 11C	FOR DIMENSIONS SEE DASH 18 VALUES BELOW														
292	R	DRAWER ASSY - PROGRAM & MONITOR		2014041-071	NA	NAS-9-497	B	I	NOTE 11B	FOR DIMENSIONS SEE DASH 17 VALUES BELOW														
291	R	BUFFER CIRCUIT ASSY		2014254-041	NA	NAS-9-497	B	I	NOTE 11B	FOR DIMENSIONS SEE DASH 15 VALUES BELOW														
290	R	LOGIC DRAWER ASSY NO 2		2014037-051	NA	NAS-9 497	B	I	NOTE 11B	FOR DIMENSIONS SEE DASH 17 VALUES BELOW														
289	R	SELF TEST ASSY		2014392-021	NA	NAS-9 497	B	I	NOTE 11B	FOR DIMENSIONS SEE DASH 15 VALUES BELOW														
288	R	LOGIC DRAWER ASSY NO.1		2014036-051	NA	NAS-9 497	B	I	NOTE 11B	FOR DIMENSIONS SEE DASH 17 VALUES BELOW														
287	R	COMPUTER TEST SET		2014042-071	NA	NAS-9 497	B	II	NOTE 11C	FOR DIMENSIONS SEE DASH 18 VALUES BELOW														
286	R	DRAWER ASSY PROGRAM & MONITOR		2014041-061	NA	NAS-9-497	B	I	NOTE 11B	FOR DIMENSIONS SEE DASH 17 VALUES BELOW														
285	R	BUFFER CIRCUIT ASSY		2014254-031	NA	NAS-9-497	B	I	NOTE 11B	FOR DIMENSIONS SEE DASH 15 VALUES BELOW														
284	R	LOGIC DRAWER ASSY NO. 2		2014037-041	NA	NAS-9-497	B	I	NOTE 11B	FOR DIMENSIONS SEE DASH 17 VALUES BELOW														
283	R	DRAWER ASSY-PROGRAM & MONITOR		2014041-051	NA	NAS-9-497	B	I	NOTE 11B	FOR DIMENSIONS SEE DASH 17 VALUES BELOW														
282	R	COMPUTER TEST SET		2014042-061	NA	NAS-9-497	B	II	NOTE 11C	FOR DIMENSIONS SEE DASH 18 VALUES BELOW														
281	R	AGC HANDLING FIXTURE		2014282-031	NA	NAS-9-497	B	I	NOTE 11B	FOR DIMENSIONS SEE DASH 17 VALUES BELOW														
280	R	COMPUTER TEST SET		2014042-051	NA	NAS-9-497	B	II	NOTE 11C	FOR DIMENSIONS SEE DASH 18 VALUES BELOW														
279	R	SELF TEST ASSY		2014366-041	NA	NAS-9-497	B	I	NOTE 11B	FOR DIMENSIONS SEE DASH 15 VALUES BELOW														
278	R	LOGIC DRAWER ASSY NO. 1		2014036-041	NA	NAS-9-497	B	I	NOTE 11B	FOR DIMENSIONS SEE DASH 17 VALUES BELOW														
277	R	COMPUTER TEST SET		2014042-041	NA	NAS-9-497	B	II	NOTE 11C	FOR DIMENSIONS SEE DASH 18 VALUES BELOW														
276	R	DRAWER ASSY-PROGRAM & MONITOR		2014041-041	NA	NAS-9-497	B	I	NOTE 11B	FOR DIMENSIONS SEE DASH 17 VALUES BELOW														
275	R	DRAWER ASSY RDC INTERFACE		2014045-031	NA	NAS-9-497	B	I	NOTE 11B	FOR DIMENSIONS SEE DASH 15 VALUES BELOW														
274	R	SELF TEST ASSY		2014366-031	NA	NAS-9-497	B	I	NOTE 11B	FOR DIMENSIONS SEE DASH 15 VALUES BELOW														
273	R	LOGIC DRAWER ASSY NO. 2		2014037-031	NA	NAS-9-497	B	I	NOTE 11B	FOR DIMENSIONS SEE DASH 17 VALUES BELOW														
272	R	DRAWING ASSY PROGRAMMER & MONITOR		2014041-031	NA	NAS-9-497	B	I	NOTE 11B	FOR DIMENSIONS SEE DASH 17 VALUES BELOW														
271	R	LOGIC DRAWER ASSY NO. 1		2014036-031	NA	NAS-9-497	B	I	NOTE 11B	FOR DIMENSIONS SEE DASH 17 VALUES BELOW														
270	R	COMPUTER TEST SET		2014042-031	NA	NAS-9-497	B	II	NOTE 11C	FOR DIMENSIONS SEE DASH 18 VALUES BELOW														
269	R	POWER CONTROL ASSY		2014044-021	NA	NAS-9-497	B	I	NOTE 11B	FOR DIMENSIONS SEE DASH 17 VALUES BELOW														
268	R	SELF TEST ASSY		2014366-021	NA	NAS-9-497	B	I	NOTE 11B	FOR DIMENSIONS SEE DASH 15 VALUES BELOW														
267	R	AGC JUNCTION ASSY		2014341-021	NA	NAS-9-497	B	I	NOTE 11B	FOR DIMENSIONS SEE DASH 15 VALUES BELOW														
266	R	POWER CONTROL ASSY		2014079-021	NA	NAS-9-497	B	I	NOTE 11B	FOR DIMENSIONS SEE DASH 15 VALUES BELOW														
265	R	BUFFER CIRCUIT ASSY		2014254-021	NA	NAS-9-497	B	I	NOTE 11B	FOR DIMENSIONS SEE DASH 15 VALUES BELOW														
264	R	DRAWER ASSY X Y INTERFACE		2014040-021	NA	NAS-9-497	B	I	NOTE 11B	FOR DIMENSIONS SEE DASH 15 VALUES BELOW														
263	R	DRAWER ASSY RDC INTERFACE		2014045-021	NA	NAS-9-497	B	I	NOTE 11B	FOR DIMENSIONS SEE DASH 15 VALUES BELOW														
262	R	DRAWER ASSY PROGRAMMER & MONITOR		2014041-021	NA	NAS-9-497	B	I	NOTE 11B	FOR DIMENSIONS SEE DASH 17 VALUES BELOW														
261	R	LOGIC DRAWER ASSY NO. 2		2014037-021	NA	NAS-9-497	B	I	NOTE 11B	FOR DIMENSIONS SEE DASH 17 VALUES BELOW														
260	R	LOGIC DRAWER ASSY NO. 1		2014036-021	NA	NAS-9-497	B	I	NOTE 11B	FOR DIMENSIONS SEE DASH 17 VALUES BELOW														
259	R	OPERATION CONSOLE		2014024-021	NA	NAS-9-497	B	II	NOTE 11C	FOR DIMENSIONS SEE DASH 18 VALUES BELOW														
258	R	COMPUTER TEST SET		2014042-021	NA	NAS-9-497	B	II	NOTE 11C	FOR DIMENSIONS SEE DASH 18 VALUES BELOW														
257	R	AUXILIARY CALIBRATION CONSOLE		2014059-021	NA	NAS-9-497	B	II	NOTE 11C	FOR DIMENSIONS SEE DASH 18 VALUES BELOW														
256	R	AGC CALIBRATION CONSOLE		2014049-021	NA	NAS-9-497	B	II	NOTE 11C	FOR DIMENSIONS SEE DASH 18 VALUES BELOW														
255	R	AGC HANDLING FIXTURE		2014282-021	NA	NAS-9-497	B	I	NOTE 11B	FOR DIMENSIONS SEE DASH 17 VALUES BELOW														
254	R	DRAWER ASSY COMP. SIMULATOR		2014048-011	NA	NAS-9-497	B	II	NOTE 11C	FOR DIMENSIONS SEE DASH 18 VALUES BELOW														
253	R	SHIPPING KIT ASSY, NAV DSKY		2016312-011	NA	NAS-9-497	B	II	NOTE 11C	FOR DIMENSIONS SEE DASH 18 VALUES BELOW														
252	R	SHIPPING KIT ASSY, UNIVERSAL DSKY		2016316-011	NA	NAS-9-497	B	II	NOTE 11C	FOR DIMENSIONS SEE DASH 18 VALUES BELOW														
251	R	SHIPPING KIT ASSY, MAIN DSKY		2016313-011	NA	NAS-9-497	B	II	NOTE 11C	FOR DIMENSIONS SEE DASH 18 VALUES BELOW														
250	R	AMPLIFIER, REWORK		2014366	NA	NAS-9-497	B	I	NOTE 11B	FOR DIMENSIONS SEE DASH 15 VALUES BELOW														
249	R	TEMP MONITOR ASSY		2014313-011	NA	NAS-9-497	B	I	NOTE 11C	FOR DIMENSIONS SEE DASH 17 VALUES BELOW														
248	R	AGC JUNCTION ASSY		2014341-011	NA	NAS-9-497	B	I	NOTE 11B	FOR DIMENSIONS SEE DASH 15 VALUES BELOW														
247	R	AC INPUT PANEL ASSY		2014302-011	NA	NAS-9-497	B	I	NOTE 11B	FOR DIMENSIONS SEE DASH 15 VALUES BELOW														
246	R	SELF TEST ASSY		2014392-011	NA	NAS-9-497	B	I	NOTE 11B	FOR DIMENSIONS SEE DASH 15 VALUES BELOW														
245	R	TAPE PUNCH ASSEMBLY		2014039-011	NA	NAS-9-497	B	I	NOTE 11B	FOR DIMENSIONS SEE DASH 15 VALUES BELOW														
244	R	TAPE READER ASSEMBLY		2014038-011	NA	NAS-9-497	B	I	NOTE 11B	FOR DIMENSIONS SEE DASH 15 VALUES BELOW														
243																								
242																								
241	R	APOLLO GUIDANCE COMPUTER GROUP		6003001	NA	NAS-9-497	A	I	NOTE 11B	FOR DIMENSIONS SEE DASH 19 VALUES BELOW														
240	R	SELF TEST ASSEMBLY		2014366-011	NA	NAS-9-497	B	I	NOTE 11B	FOR DIMENSIONS SEE DASH 15 VALUES BELOW														
239	R	POWER SUPPLY ASSY-115V., 400 CYCLE		2014207-011	NA	NAS-9-497	B	I	NOTE 11B	FOR DIMENSIONS SEE DASH 17 VALUES BELOW														
238	R	AC INPUT PANEL ASSY		2014043-011	NA	NAS-9-497	B	I	NOTE 11B	FOR DIMENSIONS SEE DASH 17 VALUES BELOW														
237	R	POWER CONTROL ASSY		2014079-011	NA	NAS-9-497	B	I	NOTE 11B	FOR DIMENSIONS SEE DASH 15 VALUES BELOW														
236	R	DRAWER ASSY-X Y INTERFACE		2014040-011	NA	NAS-9-497	B	I	NOTE 11B	FOR DIMENSIONS SEE DASH 15 VALUES BELOW														
235	R	DRAWER ASSY RDC INTERFACE		2014045-011	NA	NAS-9-497	B	I	NOTE 11B	FOR DIMENSIONS SEE DASH 15 VALUES BELOW														
234	R	BUFFER CIRCUIT ASSY		2014254-011	NA	NAS-9-497	B	I	NOTE 11B	FOR DIMENSIONS SEE DASH 15 VALUES BELOW														
233	R	CONTROL & INTERFACE ASSY		2014207-011	NA	NAS-9-497	B	I	NOTE 11B	FOR DIMENSIONS SEE DASH 15 VALUES BELOW														
232	R	POWER CONTROL ASSY		2014044-011	NA	NAS-9-497	B	I	NOTE 11B	FOR DIMENSIONS SEE DASH 17 VALUES BELOW														
231	R	DRAWER ASSY, PROGRAMMER & MONITOR		2014041-011	NA	NAS-9-497	B	I	NOTE 11B	FOR DIMENSIONS SEE DASH 17 VALUES BELOW														
230	R	CONNECTOR INTERFACE ASSY		2014272-011	NA	NAS-9-497	B	I	NOTE 11B	FOR DIMENSIONS SEE DASH 15 VALUES BELOW														
229	R	CONNECTOR INTERFACE ASSY		2014047-011	NA	NAS-9-497	B	I	NOTE 11B	FOR DIMENSIONS SEE DASH 15 VALUES BELOW														
228	R	ANTENNA, TUNING CAPACITOR ASSY		2014209-011	NA	NAS-9-497	B	I	NOTE 11B	FOR DIMENSIONS SEE DASH 15 VALUES BELOW														
227	R	MOUNTING FIXTURE ASSY		2014006-011	NA	NAS-9-497	B	I	NOTE 11B	FOR DIMENSIONS SEE DASH 17 VALUES BELOW														
226	R	POWER SUPPLY ASSY 3 VDC		2014234-011	NA	NAS-9-497	B	I	NOTE 11B	FOR DIMENSIONS SEE DASH 15 VALUES BELOW														
225	R	PANEL ASSY—SIGNAL INTERFACE		2014010-011	NA	NAS-9-497	B	I	NOTE 11B	FOR DIMENSIONS SEE DASH 15 VALUES BELOW														
224	R	OSCILLOSCOPE ASSY		2014232-011	NA	NAS-9-497	B	I	NOTE 11B	FOR DIMENSIONS SEE DASH 15 VALUES BELOW														
223	R	AUXILIARY OUTLET ASSY		2014274-011	NA	NAS-9-497	B	I	NOTE 11B	FOR DIMENSIONS SEE DASH 15 VALUES BELOW														
222	R	FREQUENCY COUNTER		2014233-011	NA	NAS-9-497	B	I	NOTE 11B	FOR DIMENSIONS SEE DASH 15 VALUES BELOW														
221	R	POWER SUPPLY ASSY 10, 13, 28 VDC		2014235-011	NA	NAS-9-497	B	I	NOTE 11B	FOR DIMENSIONS SEE DASH 15 VALUES BELOW														
220	R	LOGIC DRAWER ASSY NO. 2		2014037-011	NA	NAS-9-497	B	I	NOTE 11B	FOR DIMENSIONS SEE DASH 17 VALUES BELOW														
219	R	LOGIC DRAWER ASSY NO. 1		2014036-011	NA	NAS-9-497	B	I	NOTE 11B	FOR DIMENSIONS SEE DASH 17 VALUES BELOW														
218	R	COUNTER, ELECTRICAL ASSY		2014288-011	NA	NAS-9-497	B	I	NOTE 11B	FOR DIMENSIONS SEE DASH 15 VALUES BELOW														
217	R	POWER SUPPLY ASSY		2014279-011	NA	NAS-9-497	B	I	NOTE 11B	FOR DIMENSIONS SEE DASH 15 VALUES BELOW														
216	R	TEST MOUNT ASSY		2014257-011	NA	NAS-9-497	B	I	NOTE 11B	FOR DIMENSIONS SEE DASH 15 VALUES BELOW														
215	R	UNIVERSAL DSKY PEDESTAL MOUNT		2014014-011	NA	NAS-9-497	B	I	NOTE 11B	FOR DIMENSIONS SEE DASH 17 VALUES BELOW														
214	R	MAIN DSKY PEDESTAL MOUNT		2014343	NA	NAS-9-497	B	I	NOTE 11B	FOR DIMENSIONS SEE DASH 17 VALUES BELOW														
213	R	SHIPPING CONTAINER, MAIN DSKY		1006229	NA	NAS-9-497	B	II	NOTE 11C	FOR DIMENSIONS SEE DASH 18 VALUES BELOW														
212	R	SHIPPING CONTAINER, NAV DSKY		1006231	NA	NAS-9-497	B	II	NOTE 11C	FOR DIMENSIONS SEE DASH 18 VALUES BELOW														
211	R	SHIPPING CONTAINER, AGC		1006230	NA	NAS-9-497	B	II	NOTE 11C	FOR DIMENSIONS SEE DASH 18 VALUES BELOW														
210	R	SHIPPING CONTAINER, UNIVERSAL DSKY		1006422	NA	NAS-9-497	B	II	NOTE 11C	FOR DIMENSIONS SEE DASH 18 VALUES BELOW														
209	R	SHIPPING CONTAINER, AGC		1006421	NA	NAS-9-497	B	II	NOTE 11C	FOR DIMENSIONS SEE DASH 18 VALUES BELOW														
208	R	UNIVERSAL DSKY HANDLING FIXTURE		2014013-011	NA	NAS-9-497	B	I	NOTE 11B	FOR DIMENSIONS SEE DASH 15 VALUES BELOW														
207	R	NAV DSKY HANDLING FIXTURE		1014377	NA	NAS-9-497	B	I	NOTE 11B	FOR DIMENSIONS SEE DASH 17 VALUES BELOW														
206	R	MAIN DSKY HANDLING FIXTURE		1014334	NA	NAS-9-497	B	I	NOTE 11B	FOR DIMENSIONS SEE DASH 17 VALUES BELOW														
205	R	AGC HANDLING FIXTURE		2014282-011	NA	NAS-9-497	B	I	NOTE 11B	FOR DIMENSIONS SEE DASH 17 VALUES BELOW														
204	R	OPERATION CONSOLE		2014024-011	NA	NAS-9-497	B	II	NOTE 11C	FOR DIMENSIONS SEE DASH 18 VALUES BELOW														
203	R	COMPUTER TEST SET		2014042-011	NA	NAS-9-497	B	II	NOTE 11C	FOR DIMENSIONS SEE DASH 18 VALUES BELOW														
202	R	DRAWER ASSY, COMPUTER SIMULATOR		2014048-011	NA	FNP-12775	B	II	NOTE 11C	FOR DIMENSIONS SEE DASH 18 VALUES BELOW														
201	R	AUXILIARY CALIBRATION CONSOLE		2014059-011	NA	NAS-9-497	B	II	NOTE 11C	FOR DIMENSIONS SEE DASH 18 VALUES BELOW														
200	R	AGC CALIBRATION CONSOLE		2014049-011	NA	NAS-9-497	B	II	NOTE 11C	FOR DIMENSIONS SEE DASH 18 VALUES BELOW														
21	R																							
20	R	NA		NA	NA	NA	A	II	NOTE 11C	2.000	1.312	1.687	1.375	.078	.031	.078	.093	[illegible]	.093	1.187	.750	.593	.453	1.01
19	R	NA		NA	NA	NA	A	I	NOTE 11B	2.000	1.312	1.687	1.375	.078	.031	.078	.093	NA	NA	1.187	.750	.593	.453	1.01
18	R	NA		NA	NA	NA	B	II	NOTE 11C	4.187	1.875	3.469	2.750	.156	.093	.156	.125	[illegible]	.125	1.625	1.032	.844	.656	1.40
17	R	NA		NA	NA	NA	B	I	NOTE 11B	4.187	1.875	3.469	2.750	.156	.093	.156	.125	NA	NA	1.625	1.032	.844	.656	1.40
16	R	NA		NA	NA	NA	B	II	NOTE 11C	2.000	1.312	1.687	1.375	.078	.031	.078	.093	[illegible]	.093	1.187	.750	.593	.453	1.01
15	R	NA		NA	NA	NA	B	I	NOTE 11B	2.000	1.312	1.687	1.375	.078	.031	.078	.093	NA	NA	1.187	.750	.593	.453	1.01

NOTES FOR TABLE

STYLE A IS FOR G & N SYSTEM
STYLE B IS FOR GROUND SUPPORT EQUIPMENT
TYPE I IS WITHOUT MOUNTING HOLES
TYPE II IS WITH MOUNTING HOLES

REVISIONS					
SYM	ZONE	DESCRIPTION	CHG NO	DATE	APPD
CL		REPLACES REV CK WITHOUT CHANGE PER TDRR 34365		9/18/67	JWL
CM		REVISION STATUS CHANGED		18 OCT 67	RAK
CN		REVISION STATUS CHANGED		31 OCT 67	
CP		REVISION STATUS CHANGED		6 NOV 67	
CR		REVISION STATUS CHANGED			
CS		REVISION STATUS CHANGED		3 JAN 68	EHW
CT		REVISED PER TDRR 35526		68	
CU		REVISION STATUS CHANGED			
CV		REVISION STATUS CHANGED		68	
CW		REVISION STATUS CHANGED		APR 68	
CY		REVISED PER TDRR 36028		APR 68	

[illegible]																															
[illegible]																															
[illegible]																															
[illegible]																															
[illegible]																															
[illegible]																															
[illegible]																															
VALUES BELOW																															
VALUES BELOW																															
VALUES BELOW																															
VALUES BELOW																															
VALUES BELOW																															
VALUES BELOW																															
VALUES BELOW																															
VALUES BELOW																															
VALUES BELOW																															
VALUES BELOW																															
VALUES BELOW																															
VALUES BELOW																															
VALUES BELOW																															
VALUES BELOW																															
VALUES BELOW																															
VALUES BELOW																															
VALUES BELOW																															
VALUES BELOW																															
VALUES BELOW																															
VALUES BELOW																															
VALUES BELOW																															
VALUES BELOW																															
VALUES BELOW																															
VALUES BELOW																															
VALUES BELOW																															
VALUES BELOW																															
VALUES BELOW																															
VALUES BELOW																															
VALUES BELOW																															
VALUES BELOW																															
VALUES BELOW																															
VALUES BELOW																															
VALUES BELOW																															
VALUES BELOW																															
VALUES BELOW																															
VALUES BELOW																															
VALUES BELOW																															
VALUES BELOW																															
VALUES BELOW																															
VALUES BELOW																															
VALUES BELOW																															
VALUES BELOW																															
VALUES BELOW																															
VALUES BELOW																															
VALUES BELOW																															
VALUES BELOW																															
VALUES BELOW																															
VALUES BELOW																															
VALUES BELOW																															
VALUES BELOW																															
VALUES BELOW																															
VALUES BELOW																															
VALUES BELOW																															
VALUES BELOW																															
VALUES BELOW																															
VALUES BELOW																															
VALUES BELOW																															
VALUES BELOW																															
VALUES BELOW																															
VALUES BELOW																															
VALUES BELOW																															
VALUES BELOW																															
VALUES BELOW																															
VALUES BELOW																															
VALUES BELOW																															
VALUES BELOW																															
VALUES BELOW																															
VALUES BELOW																															
VALUES BELOW																															
VALUES BELOW																															
VALUES BELOW																															
VALUES BELOW																															
VALUES BELOW																															
VALUES BELOW																															
VALUES BELOW																															
VALUES BELOW																															
VALUES BELOW																															
VALUES BELOW																															
VALUES BELOW																															
VALUES BELOW																															
VALUES BELOW																															
VALUES BELOW																															
VALUES BELOW																															
VALUES BELOW																															
VALUES BELOW																															
VALUES BELOW																															
[illegible]	.078	.093	[illegible]	.093	1.187	.750	.593	.453	1.015	.062	.187	.078	.875	.718	1.375	.218	1.156	1.843	.048	NA	.875	.305	.078	.312	1.687	.078	NA	.078	.312	.187	1.843
[illegible]	.078	.093	NA	NA	1.187	.750	.593	.453	1.015	.062	.187	.078	.875	.718	1.375	.218	NA	NA	.048	.031	.875	.305	.078	.312	1.687	.078	NA	.078	.312	.187	NA
[illegible]	.156	.125	[illegible]	.125	1.625	1.032	.844	.656	1.406	.093	.344	.156	1.781	1.531	2.844	.312	1.562	3.875	.062	NA	1.219	.500	.156	.719	3.469	.156	NA	.156	.719	.344	3.875
[illegible]	.156	.125	NA	NA	1.625	1.032	.844	.656	1.406	.093	.344	.156	1.781	1.531	2.844	.312	NA	NA	.062	.062	1.219	.500	.156	.719	3.469	.156	NA	.156	.719	.344	NA
[illegible]	.078	.093	[illegible]	.093	1.187	.750	.593	.453	1.015	.062	.187	.078	.875	.718	1.375	.218	1.156	1.843	.048	NA	.875	.305	.078	.312	1.687	.078	NA	.078	.312	.187	1.843
[illegible]	.078	.093	NA	NA	1.187	.750	.593	.453	1.015	.062	.187	.078	.875	.718	1.375	.218	NA	NA	.048	.031	.875	.305	.078	.312	1.687	.078	NA	.078	.312	.187	NA
F	G	H	J	K	L	M	N	P	R	S	T	U	V	W	Y	Z	AA	AB	AC	AD	AE	AF	AG	AH	AJ	AK	AL	AM	AN	AP	AR

RAYTHEON DASH NUMBERS

AS APPLICABLE		UNLESS OTHERWISE SPECIFIED DIMENSIONS ARE IN INCHES TOLERANCES ON 2 PLACE DECIMALS ± 3 PLACE DECIMALS ± .005 ANGLES ±	MIT INSTRUMENTATION LAB CAMBRIDGE MASS
NEXT ASSY	USED ON	DO NOT SCALE THIS DRAWING	DRAWN R A JONES DATE 16 JUL 65
APPLICATION		MATERIAL SEE NOTE 11	CHECKED
		APPROVAL	APPROVAL W KUPFER 22 JUL 65
			CONTRACT
			NASA APPROVAL T MICHAELS 22 JUL 65
			MIT APPROVAL W KUPFER 22 JUL 65

MANNED
SPACECRAFT CENTER
HOUSTON, TEXAS

NAMEPLATES,
APOLLO GEN - GSE
(STANDARDS)

SIZE J2 CODE IDENT NO 80230 1004260
SCALE NONE SHEET 3 OF 6

1004260 CY SHT 3

1004260 CY

27/1004260

AC DASH NUMBERS CONTINUED ON SHEET 6

DASH NO.	P/C	PART NAME	REMARKS	PART NUMBER	SER. NO.	CONT. NO.	STYLE	TYPE	MATERIAL	A	B	C	D	E	F	G	H	J	K	L	M	N	P
199	AC	EYEPIECE STOWAGE UNIT		2021255-011			A	I		FOR DIMENSIONS SEE DASH 100 VALUES BELOW													
198	AC	SIGNAL CONDITIONER ASSY C/M		2007234		NAS-9-497	A	I	NOTE 11B	FOR DIMENSIONS SEE DASH 100 VALUES BELOW													
197	AC	SIGNAL CONDITIONER ASSY C/M		2007235		NAS-9-497	A	I	NOTE 11B	FOR DIMENSIONS SEE DASH 100 VALUES BELOW													
196	AC	SIGNAL CONDITIONER ASSY LEM		6007010		NAS-9-497	A	I	NOTE 11B	FOR DIMENSIONS SEE DASH 100 VALUES BELOW													
195	AC	PSA & SIGNAL CONDITIONER ASSY		6007009		NAS-9-497	A	I	NOTE 11B	FOR DIMENSIONS SEE DASH 100 VALUES BELOW													
194	AC	PANEL, MONITOR		2900031-031		NAS-9-497	B	II	NOTE 11C	FOR DIMENSIONS SEE DASH 141 VALUES BELOW													
193	AC	DISTRIBUTION BOX, GSE		2900024-031		NAS-9-497	B	II	NOTE 11C	FOR DIMENSIONS SEE DASH 141 VALUES BELOW													
192	AC	ANALYZER, OPTICS-INERTIAL		2900023-031		NAS-9-497	B	II	NOTE 11C	FOR DIMENSIONS SEE DASH 144 VALUES BELOW													
191	AC	TEST CONTROL		2900027-031		NAS-9-497	B	II	NOTE 11C	FOR DIMENSIONS SEE DASH 141 VALUES BELOW													
190	AC	PANEL, PWR SUP AND LOAD		2900033-021		NAS-9-497	B	II	NOTE 11C	FOR DIMENSIONS SEE DASH 141 VALUES BELOW													
189	AC	ADPT MODULE, P.S.A.		6900088-011		NAS-9-497	B	II	NOTE 11C	FOR DIMENSIONS SEE DASH 141 VALUES BELOW													
188	AC	ADPT MODULE, P.S.A.		2901143-011		NAS-9-497	B	II	NOTE 11C	FOR DIMENSIONS SEE DASH 141 VALUES BELOW													
187	AC	FIXTURE, MTG, PTA/PEA		2900066-021		NAS-9-497	B	II	NOTE 11C	FOR DIMENSIONS SEE DASH 141 VALUES BELOW													
186	AC	ANNUNCIATOR PANEL & EYEPIECE STORAGE ASSEMBLY		1021255-021			A	I		FOR DIMENSIONS SEE DASH 100 VALUES BELOW													
185	AC	ANNUNCIATOR PANEL & EYEPIECE STORAGE ASSEMBLY		1021255-011			A	I		FOR DIMENSIONS SEE DASH 100 VALUES BELOW													
184	AC	FIX., HAND., G AND N HARNESS		1901846-041		NAS-9-497	B	II	NOTE 11C	FOR DIMENSIONS SEE DASH 144 VALUES BELOW													
183	AC	INSTALLING TOOL, ELEC, CONN		1902586-011		NAS-9-497	B	II	NOTE 11C	FOR DIMENSIONS SEE DASH 102 VALUES BELOW													
182	AC	ADPT MODULE, P.S.A.		6900088-011		NAS-9-497	B	II	NOTE 11C	FOR DIMENSIONS SEE DASH 141 VALUES BELOW													
181	AC	G & N INDICATOR CONTROL PANEL ASSY		2014578-011		NAS-9-497	A	I	NOTE 11B	3.000	1.938	2.437	NA	.125	.062	.188	.156	NA	NA	1.750	1.125	.906	
180	AC	ADPT MODULE, P.S.A.		1902431-031		NAS-9-497	B	II		FOR DIMENSIONS SEE DASH 121 VALUES BELOW													
179	AC	MOUNTING PLATE, IMU/PTA		6900083-011		NAS-9-497	B	II		FOR DIMENSIONS SEE DASH 144 VALUES BELOW													
178	AC	MOUNTING PLATE, COMPONENT		6900007-021		NAS-9-497	B	II		FOR DIMENSIONS SEE DASH 144 VALUES BELOW													
177	AC	FIX., MOUNTING, SUBSYSTEM		2900070-021		NAS-9-497	B	II		FOR DIMENSIONS SEE DASH 144 VALUES BELOW													
176	AC	FIX., MOUNTING, G & N		2900067-021		NAS-9-497	B	II		FOR DIMENSIONS SEE DASH 144 VALUES BELOW													
175	AC	CSL, COOL. AND PWR, G & N		1902134-031		NAS-9-497	B	II		FOR DIMENSIONS SEE DASH 144 VALUES BELOW													
174	AC	FIX., HAND., C/M AND LEM CDU		[illegible]		NAS-9-497	B	II	NOTE 11C	FOR DIMENSIONS SEE DASH 141 VALUES BELOW													
173	AC	FIX., HANDLING, C/M PSA		2900998-011		NAS-9-497	B	II	NOTE 11C	FOR DIMENSIONS SEE DASH 141 VALUES BELOW													
172	AC	CAGING ELECTRONICS, GYRO		2900029-021		NAS-9-497	B	II	NOTE 11C	FOR DIMENSIONS SEE DASH 141 VALUES BELOW													
[illegible]	AC	DISTRIBUTION BOX, GSE		[illegible]		NAS-9-497	B	II	NOTE 11C	FOR DIMENSIONS SEE DASH 141 VALUES BELOW													
170	AC	ANALYZER, OPTICS-INERTIAL		2900023-021		NAS-9-497	B	II	NOTE 11C	FOR DIMENSIONS SEE DASH 144 VALUES BELOW													
169	AC	ADPT, TESTPOINT, P.S.A.		2900037-021		NAS-9-497	B	II	NOTE 11C	FOR DIMENSIONS SEE DASH 141 VALUES BELOW													
168	AC	TEST SELECTOR		2900028-021		NAS-9-497	B	II	NOTE 11C	FOR DIMENSIONS SEE DASH 141 VALUES BELOW													
167	AC	TEST CONTROL		2900027-021		NAS-9-497	B	II	NOTE 11C	FOR DIMENSIONS SEE DASH 141 VALUES BELOW													
166	AC	PANEL, MONITOR		2900031-021		NAS-9-497	B	II	NOTE 11C	FOR DIMENSIONS SEE DASH 141 VALUES BELOW													
165	AC	TERM. BOARD STORAGE DRAWER		2900927-011		NAS-9-497	B	II	NOTE 11C	FOR DIMENSIONS SEE DASH 141 VALUES BELOW													
164	AC	INPUT/OUTPUT PANEL		2900926-011		NAS-9-497	B	II	NOTE 11C	FOR DIMENSIONS SEE DASH 141 VALUES BELOW													
163	AC	CONTROL PANEL		2900896-011		NAS-9-497	B	II	NOTE 11C	FOR DIMENSIONS SEE DASH 141 VALUES BELOW													
162	AC	CSL, CAL AND TEST, SCM/PSAAM		2900895-011		NAS-9-497	B	II	NOTE 11C	FOR DIMENSIONS SEE DASH 144 VALUES BELOW													
161	AC	FIX., LIFT AND HAND., IMU		1015462-011		NAS-9-437	B	II	NOTE 11C	FOR DIMENSIONS SEE DASH 141 VALUES BELOW													
160	AC	FIX., HAND., G & N HARNESS		1901846-031		NAS-9-497	B	II	NOTE 11C	FOR DIMENSIONS SEE DASH 144 VALUES BELOW													
159	AC	BATTERY POWER PACK		1900011-031		NAS-9-497	B	II	NOTE 11C	FOR DIMENSIONS SEE DASH 144 VALUES BELOW													
158	AC	COUPLING DATA UNIT ASSEMBLY C/M		2007222		NAS-9-497	A	I	NOTE 11B	FOR DIMENSIONS SEE DASH 100 VALUES BELOW													
157	AC	COUPLING DATA UNIT ASSEMBLY - LEM		2007222		NAS-9-497	A	I	NOTE 11B	FOR DIMENSIONS SEE DASH 100 VALUES BELOW													
156	AC	POWER & SERVO ASSEMBLY C/M		2007200		NAS-9-497	A	I	NOTE 11B	2.125	.968	1.718	NA	.093	.031	.06	.093	NA	NA	.858	.608	.464	
155	AC	PIPA ELECTRONICS ASSEMBLY		2007201		NAS-9-497	A	I	NOTE 11B	FOR DIMENSIONS SEE DASH 100 VALUES BELOW													
154	AC	PULSE TORQUE ASSEMBLY-LEM		6007000		NAS-9-497	A	I	NOTE 11B	FOR DIMENSIONS SEE DASH 100 VALUES BELOW													
153	AC	POWER & SERVO ASSEMBLY-LEM		6007200		NAS-9-497	A	I	NOTE 11B	FOR DIMENSIONS SEE DASH 100 VALUES BELOW													
152	AC	CONT PNL, RSVR CKT TESTER		2900770-011		NAS-9-497	B	II	NOTE 11C	FOR DIMENSIONS SEE DASH 141 VALUES BELOW													
151	AC	TESTER, RESOLVER CIRCUIT		2900708-011		NAS-9-497	B	II	NOTE 11C	FOR DIMENSIONS SEE DASH 141 VALUES BELOW													
150	AC	JUNCTION BOX, P.S.A./G.S.E.		1901933-021		NAS-9-497	B	II	NOTE 11C	FOR DIMENSIONS SEE DASH 144 VALUES BELOW													
149	AC	BATTERY PACK, LIFTING		2900812-011		NAS-9-497	B	II	NOTE 11C	FOR DIMENSIONS SEE DASH 141 VALUES BELOW													
148	AC	MOUNTING PLATE, COMPONENT		6900007-011		NAS-9-497	B	II	NOTE 11C	FOR DIMENSIONS SEE DASH 144 VALUES BELOW													
147	AC	MOUNTING PLATE, COMPONENT		2900677-011		NAS-9-497	B	II	NOTE 11C	FOR DIMENSIONS SEE DASH 144 VALUES BELOW													
146	AC	CART, TRANS, G & N		1900009-041		NAS-9-497	B	II	NOTE 11C	FOR DIMENSIONS SEE DASH 144 VALUES BELOW													
145	AC	CONTAINER, SHIPPING, IMU		1900010-021		NAS-9-497	B	II	NOTE 11C	FOR DIMENSIONS SEE DASH 144 VALUES BELOW													
144	AC	FIX., MOUNTING, G & N		1902204-021			B	II	NOTE 11C	4.125	1.812	3.250	NA	.125	.062	.12	.156	NA	.125	1.625	1.140	.890	
143	AC	CSL, COOL, AND PWR, G & N		1902134-021			B	II	NOTE 11C	4.125	1.812	3.250	NA	.125	.062	.12	.156		.125	1.625	1.140	.890	
142	AC	ANALYZER, OPTICS-INERTIAL		2900023-011			B	II	NOTE 11C	4.125	1.812	3.250	NA	.125	.062	.12	.156		.125	1.625	1.140	.890	
141	AC	CONT, TEMP, PORTABLE		2900060-011			B	II	NOTE 11C	2.125	.968	1.718	NA	.093	.031	.06	.093		.093	.858	.608	.464	
140	AC	TESTER, CKT, IMU/CDU RSVR		2900236-011			B	II	NOTE 11C	4.125	1.812	3.250	NA	.125	.062	.12	.156		.125	1.625	1.140	.890	
139	AC	SIMULATOR, LD/SIG, CDU		2900285-011			B	II	NOTE 11C	4.125	1.812	3.250	NA	.125	.062	.12	.156		.125	1.625	1.140	.890	
138	AC	SIMULATOR, LD/SIG, OPTICS		1902023-021			B	II	NOTE 11C	4.125	1.812	3.250	NA	.125	.062	.12	.156		.125	1.625	1.140	.890	
137	AC	FIX., MOUNTING, IMU/NAV BASE		6900003-011			B	II	NOTE 11C	4.125	1.812	3.250	NA	.125	.062	.12	.156		.125	1.625	1.140	.890	
136	AC	FIXTURE, OPTICS NAV BASE		2900072-011			B	II	NOTE 11C	4.125	1.812	3.250	NA	.125	.062	.12	.156		.125	1.625	1.140	.890	
135	AC	FIX., MOUNTING, SUB SYSTEM		2900070-011			B	II	NOTE 11C	4.125	1.812	3.250	NA	.125	.062	.12	.156		.125	1.625	1.140	.890	
134	AC	FIX., HAND., G & N HARNESS		2900069-011			B	II	NOTE 11C	4.125	1.812	3.250	NA	.125	.062	.12	.156		.125	1.625	1.140	.890	
133	AC	CNTR, SHIPPING, NAV BASE		2900068-011			B	II	NOTE 11C	4.125	1.812	3.250	NA	.125	.062	.12	.156		.125	1.625	1.140	.890	
132	AC	FIX., MOUNTING, G & N		2900067-011			B	II	NOTE 11C	4.125	1.812	3.250	NA	.125	.062	.12	.156		.125	1.625	1.140	.890	
131	AC	SIMULATOR, LD/SIG, IMU/CDU		2900062-011			B	II	NOTE 11C	4.125	1.812	3.250	NA	.125	.062	.12	.156		.125	1.625	1.140	.890	
130	AC	TESTER, GYRO WHEEL		2900061-011			B	II	NOTE 11C	4.125	1.812	3.250	NA	.125	.062	.12	.156		.125	1.625	1.140	.890	
129	AC	COOLANT SUPPLY		1902133-021			B	II	NOTE 11C	4.125	1.812	3.250	NA	.125	.062	.12	.156		.125	1.625	1.140	.890	
128	AC	TABLE, ROTARY		1900926-021			B	II	NOTE 11C	4.125	1.812	3.250	NA	.125	.062	.12	.156		.125	1.625	1.140	.890	
127	AC	FIX., HAND., OPTICS		2900074-011			B	II	NOTE 11C	2.125	.968	1.718	NA	.093	.031	.06	.093		.093	.858	.608	.464	
126	AC	FIXTURE, MTG, PTA/PEA.		2900066-011			B	II	NOTE 11C	2.125	.968	1.718	NA	.093	.031	.06	.093		.093	.858	.608	.464	
125	AC	CONT, TEMP, IMU LIFTING		2900063-011			B	II	NOTE 11C	2.125	.968	1.718	NA	.093	.031	.06	.093		.093	.858	.608	.464	
124	AC	FIXTURE, HANDLING, IMU		2900064-011			B	II	NOTE 11C	2.125	.968	1.718	NA	.093	.031	.06	.093		.093	.858	.608	.464	
123	AC	CONT, OPTICS, REMOTE		1902046-021			B	II	NOTE 11C	2.125	.968	1.718	NA	.093	.031	.06	.093		.093	.858	.608	.464	
122	AC	TEST CONTROL		1902009-021			B	II	NOTE 11C	2.125	.968	1.718	NA	.093	.031	.06	.093		.093	.858	.608	.464	
121	AC	ADPT MODULE, P.S.A.		1902431-021			B	II	NOTE 11C	2.125	.968	1.718	NA	.093	.031	.06	.093		.093	.858	.608	.464	
120	AC	BRIDGE, DECADE ERROR		2900128-011			B	II	NOTE 11C	2.125	.968	1.718	NA	.093	.031	.06	.093		.093	.858	.608	.464	
119	AC	PWR SUP, ELECTRONICS		2900012-011			B	II	NOTE 11C	2.125	.968	1.718	NA	.093	.031	.06	.093		.093	.858	.608	.464	
118	AC	PWR SUP, RELAY AND LAMP		1900049-031			B	II	NOTE 11C	2.125	.968	1.718	NA	.093	.031	.06	.093		.093	.858	.608	.464	
117	AC	CONSOLE, OSCILLOGRAPH		1900000-021			B	II	NOTE 11C	2.125	.968	1.718	NA	.093	.031	.06	.093		.093	.858	.608	.464	
116	AC	ADPT MODULE, P.S.A.		1902431-011			B	II	NOTE 11C	2.125	.968	1.718	NA	.093	.031	.06	.093		.093	.858	.608	.464	
115	AC	ADPT, TEST POINT, PTA/PEA.		2900145-011			B	II	NOTE 11C	2.125	.968	1.718	NA	.093	.031	.06	.093		.093	.858	.608	.464	
114	AC	ADPT, TEST POINT, P.S.A.		2900037-011			B	II	NOTE 11C	2.125	.968	1.718	NA	.093	.031	.06	.093		.093	.858	.608	.464	
113	AC	CONTROL, GIMBAL POSITION		2900036-011			B	II	NOTE 11C	2.125	.968	1.718	NA	.093	.031	.06	.093		.093	.858	.608	.464	
112	AC	SELECTOR, SIGNAL, PRIMARY		2900035-011			B	II	NOTE 11C	2.125	.968	1.718	NA	.093	.031	.06	.093		.093	.858	.608	.464	
111	AC	SEL, SIG, OSCILLOGRAPH		2900034-011			B	II	NOTE 11C	2.125	.968	1.718	NA	.093	.031	.06	.093		.093	.858	.608	.464	
110	AC	PANEL, PWR SUP AND LOAD		2900033-011			B	II	NOTE 11C	2.125	.968	1.718	NA	.093	.031	.06	.093		.093	.858	.608	.464	
109	AC	PANEL, MONITOR		2900031-011			B	II	NOTE 11C	2.125	.968	1.718	NA	.093	.031	.06	.093		.093	.858	.608	.464	
108	AC	PANEL, AUXILIARY INPUT		2900030-011			B	II	NOTE 11C	2.125	.968	1.718	NA	.093	.031	.06	.093		.093	.858	.608	.464	
107	AC	CAGING ELECTRONICS, GYRO		2900029-011			B	II	NOTE 11C	2.125	.968	1.718	NA	.093	.031	.06	.093		.093	.858	.608	.464	
106	AC	TEST SELECTOR		2900028-011			B	II	NOTE 11C	2.125	.968	1.718	NA	.093	.031	.06	.093		.093	.858	.608	.464	
105	AC	TEST CONTROL		2900027-011			B	II	NOTE 11C	2.125	.968	1.718	NA	.093	.031	.06	.093		.093	.858	.608	.464	
104	AC	MONITOR AND CONTROL, TEMP		2900026-011			B	II	NOTE 11C	2.125	.968	1.718	NA	.093	.031	.06	.093		.093	.858	.608	.464	
103	AC	DISTRIBUTION BOX, GSE		2900024-011			B	II	NOTE 11C	2.125	.968	1.718	NA	.093	.031	.06	.093		.093	.858	.608	.464	
102	AC	VOLTMETER, DIGITAL		2900007-011			B	II	NOTE 11C	2.125	.968	1.718	NA	.093	.031	.06	.093		.093	.858	.608	.464	
101	AC	NAVIGATION BASE ASSEMBLY-LEM		6899950		NAS-9-497	A	I	NOTE 11B	2.000	1.312	1.906	1.375	.078	.048	.078	.093	NA	NA	1.125	.750	.593	
[illegible]	AC	NAVIGATION BASE ASSEMBLY		2899982		NAS-9-497	A	I	NOTE 11B	2.000	1.312	1.906	1.375	.078	.048	.078	.093	NA	NA	1.125	.750	.593	

NOTES FOR TABLE

STYLE A IS FOR G & N SYSTEM
STYLE B IS FOR GROUND SUPPORT EQUIPMENT
TYPE I IS WITHOUT MOUNTING HOLES
TYPE II IS WITH MOUNTING HOLES

REVISIONS					
SYM	ZONE	DESCRIPTION	CHG NO	DATE	APPD
CL		REPLACES REV CK WITHOUT CHANGE PER TDRR 34363		[illegible]	JWL RWH
CM		REVISION STATUS CHANGED		10 OCT 67	RAW
CN		REVISION STATUS CHANGE		3 OCT 67	URK
CP		REVISION STATUS CHANGE		6 NOV 67	
CR		REVISION STATUS CHANGED		[illegible]	RWH
CS		REVISION STATUS CHANGED		[illegible]	RWH
CT		REVISION STATUS CHANGED		7 FEB 68	
CU		REVISION STATUS CHANGED		28 FEB 68	
CV		REVISION STATUS CHANGED		[illegible] 68	
CW		REVISION STATUS CHANGED		9 [illegible]	
CY		REVISION STATUS CHANGED		16 APR 68	

VALUES BELOW																															
VALUES BELOW																															
VALUES BELOW																															
VALUES BELOW																															
VALUES BELOW																															
VALUES BELOW																															
VALUES BELOW																															
VALUES BELOW																															
VALUES BELOW																															
VALUES BELOW																															
VALUES BELOW																															
VALUES BELOW																															
VALUES BELOW																															
VALUES BELOW																															
VALUES BELOW																															
VALUES BELOW																															
VALUES BELOW																															
VALUES BELOW																															
[illegible]	.188	.156	NA	NA	1.750	1.125	.906	.688	1.500	NA	.281	.125	NA	1.094	2.062	.312	NA	2.500	.062	.125	1.312	.469	NA	NA	NA	.156	NA	.125	.469	.344	NA
VALUES BELOW																															
VALUES BELOW																															
VALUES BELOW																															
VALUES BELOW																															
VALUES BELOW																															
VALUES BELOW																															
VALUES BELOW																															
VALUES BELOW																															
VALUES BELOW																															
VALUES BELOW																															
VALUES BELOW																															
VALUES BELOW																															
VALUES BELOW																															
VALUES BELOW																															
VALUES BELOW																															
VALUES BELOW																															
VALUES BELOW																															
VALUES BELOW																															
VALUES BELOW																															
VALUES BELOW																															
VALUES BELOW																															
VALUES BELOW																															
VALUES BELOW																															
VALUES BELOW																															
.031	.06	.093	NA	NA	.858	.608	.484	.358	.733	.062	.140	.062	NA	.968	1.450	.125	NA	1.720	.046	.03	NA	.210	NA	NA	NA	.070	NA	.046	.32	.16	NA
VALUES BELOW																															
VALUES BELOW																															
VALUES BELOW																															
VALUES BELOW																															
VALUES BELOW																															
VALUES BELOW																															
VALUES BELOW																															
VALUES BELOW																															
VALUES BELOW																															
VALUES BELOW																															
VALUES BELOW																															
.062	.12	.156		.125	1.625	1.140	.890	.640	1.390	.125	.171	.125	1.875	1.687	2.625	.250	1.562	3.843	.093	NA	NA	.359	.125	.437	3.688	NA	3.687	.093	.40	.25	3.875
.062	.12	.156		.125	1.625	1.140	.890	.640	1.390	.125	.171	.125	1.875	1.687	2.625	.250	1.562	3.843	.093	NA	NA	.359	.125	.437	3.688	NA	3.687	.093	.40	.25	3.875
.062	.12	.156		.125	1.625	1.140	.890	.640	1.390	.125	.171	.125	1.875	1.687	2.625	.250	1.562	3.843	.093	NA	NA	.359	.125	.437	3.688	NA	3.687	.093	.40	.25	3.875
.031	.06	.093		.093	.858	.608	.484	.358	.733	.077	.116	.062	.937	.875	1.343	.125	.781	1.892	.046	NA	NA	.209	.093	.250	1.875	NA	1.840	.046	.23	.16	1.938
.062	.12	.156		.125	1.625	1.140	.890	.640	1.390	.125	.171	.125	1.875	1.687	2.625	.250	1.562	3.843	.093	NA	NA	.359	.125	.437	3.688	NA	3.687	.093	.40	.25	3.875
.062	.12	.156		.125	1.625	1.140	.890	.640	1.390	.125	.171	.125	1.875	1.687	2.625	.250	1.562	3.843	.093	NA	NA	.359	.125	.437	3.688	NA	3.687	.093	.40	.25	3.875
.062	.12	.156		.125	1.625	1.140	.890	.640	1.390	.125	.171	.125	1.875	1.687	2.625	.250	1.562	3.843	.093	NA	NA	.359	.125	.437	3.688	NA	3.687	.093	.40	.25	3.875
.062	.12	.156		.125	1.625	1.140	.890	.640	1.390	.125	.171	.125	1.875	1.687	2.625	.250	1.562	3.843	.093	NA	NA	.359	.125	.437	3.688	NA	3.687	.093	.40	.25	3.875
.062	.12	.156		.125	1.625	1.140	.890	.640	1.390	.125	.171	.125	1.875	1.687	2.625	.250	1.562	3.843	.093	NA	NA	.359	.125	.437	3.688	NA	3.687	.093	.40	.25	3.875
.062	.12	.156		.125	1.625	1.140	.890	.640	1.390	.125	.171	.125	1.875	1.687	2.625	.250	1.562	3.843	.093	NA	NA	.359	.125	.437	3.688	NA	3.687	.093	.40	.25	3.875
.062	.12	.156		.125	1.625	1.140	.890	.640	1.390	.125	.171	.125	1.875	1.687	2.625	.250	1.562	3.843	.093	NA	NA	.359	.125	.437	3.688	NA	3.687	.093	.40	.25	3.875
.062	.12	.156		.125	1.625	1.140	.890	.640	1.390	.125	.171	.125	1.875	1.687	2.625	.250	1.562	3.843	.093	NA	NA	.359	.125	.437	3.688	NA	3.687	.093	.40	.25	3.875
.062	.12	.156		.125	1.625	1.140	.890	.640	1.390	.125	.171	.125	1.875	1.687	2.625	.250	1.562	3.843	.093	NA	NA	.359	.125	.437	3.688	NA	3.687	.093	.40	.25	3.875
.062	.12	.156		.125	1.625	1.140	.890	.640	1.390	.125	.171	.125	1.875	1.687	2.625	.250	1.562	3.843	.093	NA	NA	.359	.125	.437	3.688	NA	3.687	.093	.40	.25	3.875
.062	.12	.156		.125	1.625	1.140	.890	.640	1.390	.125	.171	.125	1.875	1.687	2.625	.250	1.562	3.843	.093	NA	NA	.359	.125	.437	3.688	NA	3.687	.093	.40	.25	3.875
.062	.12	.156		.125	1.625	1.140	.890	.640	1.390	.125	.171	.125	1.875	1.687	2.625	.250	1.562	3.843	.093	NA	NA	.359	.125	.437	3.688	NA	3.687	.093	.40	.25	3.875
.062	.12	.156		.125	1.625	1.140	.890	.640	1.390	.125	.171	.125	1.875	1.687	2.625	.250	1.562	3.843	.093	NA	NA	.359	.125	.437	3.688	NA	3.687	.093	.40	.25	3.875
.031	.06	.093		.093	.858	.608	.484	.358	.733	.077	.116	.062	.937	.875	1.343	.125	.781	1.892	.046	NA	NA	.209	.093	.250	1.875	NA	1.840	.046	.23	.16	1.938
.031	.06	.093		.093	.858	.608	.484	.358	.733	.077	.116	.062	.937	.875	1.343	.125	.781	1.892	.046	NA	NA	.209	.093	.250	1.875	NA	1.840	.046	.23	.16	1.938
.031	.06	.093		.093	.858	.608	.484	.358	.733	.077	.116	.062	.937	.875	1.343	.125	.781	1.892	.046	NA	NA	.209	.093	.250	1.875	NA	1.840	.046	.23	.16	1.938
.031	.06	.093		.093	.858	.608	.484	.358	.733	.077	.116	.062	.937	.875	1.343	.125	.781	1.892	.046	NA	NA	.209	.093	.250	1.875	NA	1.840	.046	.23	.16	1.938
.031	.06	.093		.093	.858	.608	.484	.358	.733	.077	.116	.062	.937	.875	1.343	.125	.781	1.892	.046	NA	NA	.209	.093	.250	1.875	NA	1.840	.046	.23	.16	1.938
.031	.06	.093		.093	.858	.608	.484	.358	.733	.077	.116	.062	.937	.875	1.343	.125	.781	1.892	.046	NA	NA	.209	.093	.250	1.875	NA	1.840	.046	.23	.16	1.938
.031	.06	.093		.093	.858	.608	.484	.358	.733	.077	.116	.062	.937	.875	1.343	.125	.781	1.892	.046	NA	NA	.209	.093	.250	1.875	NA	1.840	.046	.23	.16	1.938
.031	.06	.093		.093	.858	.608	.484	.358	.733	.077	.116	.062	.937	.875	1.343	.125	.781	1.892	.046	NA	NA	.209	.093	.250	1.875	NA	1.840	.046	.23	.16	1.938
.031	.06	.093		.093	.858	.608	.484	.358	.733	.077	.116	.062	.937	.875	1.343	.125	.781	1.892	.046	NA	NA	.209	.093	.250	1.875	NA	1.840	.046	.23	.16	1.938
.031	.06	.093		.093	.858	.608	.484	.358	.733	.077	.116	.062	.937	.875	1.343	.125	.781	1.892	.046	NA	NA	.209	.093	.250	1.875	NA	1.840	.046	.23	.16	1.938
.031	.06	.093		.093	.858	.608	.484	.358	.733	.077	.116	.062	.937	.875	1.343	.125	.781	1.892	.046	NA	NA	.209	.093	.250	1.875	NA	1.840	.046	.23	.16	1.938
.031	.06	.093		.093	.858	.608	.484	.358	.733	.077	.116	.062	.937	.875	1.343	.125	.781	1.892	.046	NA	NA	.209	.093	.250	1.875	NA	1.840	.046	.23	.16	1.938
.031	.06	.093		.093	.858	.608	.484	.358	.733	.077	.116	.062	.937	.875	1.343	.125	.781	1.892	.046	NA	NA	.209	.093	.250	1.875	NA	1.840	.046	.23	.16	1.938
.031	.06	.093		.093	.858	.608	.484	.358	.733	.077	.116	.062	.937	.875	1.343	.125	.781	1.892	.046	NA	NA	.209	.093	.250	1.875	NA	1.840	.046	.23	.16	1.938
.031	.06	.093		.093	.858	.608	.484	.358	.733	.077	.116	.062	.937	.875	1.343	.125	.781	1.892	.046	NA	NA	.209	.093	.250	1.875	NA	1.840	.046	.23	.16	1.938
.031	.06	.093		.093	.858	.608	.484	.358	.733	.077	.116	.062	.937	.875	1.343	.125	.781	1.892	.046	NA	NA	.209	.093	.250	1.875	NA	1.840	.046	.23	.16	1.938
.031	.06	.093		.093	.858	.608	.484	.358	.733	.077	.116	.062	.937	.875	1.343	.125	.781	1.892	.046	NA	NA	.209	.093	.250	1.875	NA	1.840	.046	.23	.16	1.938
.031	.06	.093		.093	.858	.608	.484	.358	.733	.077	.116	.062	.937	.875	1.343	.125	.781	1.892	.046	NA	NA	.209	.093	.250	1.875	NA	1.840	.046	.23	.16	1.938
.031	.06	.093		.093	.858	.608	.484	.358	.733	.077	.116	.062	.937	.875	1.343	.125	.781	1.892	.046	NA	NA	.209	.093	.250	1.875	NA	1.840	.046	.23	.16	1.938
.031	.06	.093		.093	.858	.608	.484	.358	.733	.077	.116	.062	.937	.875	1.343	.125	.781	1.892	.046	NA	NA	.209	.093	.250	1.875	NA	1.840	.046	.23	.16	1.938
.031	.06	.093		.093	.858	.608	.484	.358	.733	.077	.116	.062	.937	.875	1.343	.125	.781	1.892	.046	NA	NA	.209	.093	.250	1.875	NA	1.840	.046	.23	.16	1.938
.031	.06	.093		.093	.858	.608	.484	.358	.733	.077	.116	.062	.937	.875	1.343	.125	.781	1.892	.046	NA	NA	.209	.093	.250	1.875	NA	1.840	.046	.23	.16	1.938
.031	.06	.093		.093	.858	.608	.484	.358	.733	.077	.116	.062	.937	.875	1.343	.125	.781	1.892	.046	NA	NA	.209	.093	.250	1.875	NA	1.840	.046	.23	.16	1.938
.031	.06	.093		.093	.858	.608	.484	.358	.733	.077	.116	.062	.937	.875	1.343	.125	.781	1.892	.046	NA	NA	.209	.093	.250	1.875	NA	1.840	.046	.23	.16	1.938
.031	.06	.093		.093	.858	.608	.484	.358	.733	.077	.116	.062	.937	.875	1.343	.125	.781	1.892	.046	NA	NA	.209	.093	.250	1.875	NA	1.840	.046	.23	.16	1.938
.031	.06	.093		.093	.858	.608	.484	.358	.733	.077	.116	.062	.937	.875	1.343	.125	.781	1.892	.046	NA	NA	.209	.093	.250	1.875	NA	1.840	.046	.23	.16	1.938
.031	.06	.093		.093	.858	.608	.484	.358	.733	.077	.116	.062	.937	.875	1.343	.125	.781	1.892	.046	NA	NA	.209	.093	.250	1.875	NA	1.840	.046	.23	.16	1.938
.031	.06	.093		.093	.858	.608	.484	.358	.733	.077	.116	.062	.937	.875	1.343	.125	.781	1.892	.046	NA	NA	.209	.093	.250	1.875	NA	1.840	.046	.23	.16	1.938
.048	.078	.093	NA	NA	1.125	.750	.593	.453	1.015	.062	.187	.078	.875	.718	1.375	.218	NA	NA	.048	.031	.875	.305	.078	.531	1.906	.078	NA	.078	.531	.187	NA
.048	.078	.093	NA	NA	1.125	.750	.593	.453	1.015	.062	.187	.078	.875	.718	1.375	.218	NA	NA	.048	.031	.875	.305	.078	.531	1.906	.078	NA	.078	.531	.187	NA
F	G	H	J	K	L	M	N	P	R	S	T	U	V	W	Y	Z	AA	AB	AC	AD	AE	AF	AG	AH	AJ	AK	AL	AM	AN	AP	AR

AC ELECTRONICS DASH NUMBERS

NEXT ASSY	USED ON
AS APPLICABLE	
APPLICATION	

UNLESS OTHERWISE SPECIFIED
DIMENSIONS ARE IN INCHES
TOLERANCES ON
2 PLACE DECIMALS ± 3 PLACE DECIMALS ± .005 ANGLES ±
DO NOT SCALE THIS DRAWING
MATERIAL: SEE NOTE 11
APPROVAL

M.I.T. INSTRUMENTATION LAB
CAMBRIDGE, MASS.
DRAWN: R A JONES DATE: 16 JUL 65
CHECKED
APPROVAL: W RUPFER 22 JUL 65
CONTRACT
NASA APPROVAL: T MICHAELS 22 JUL 65
MIT APPROVAL: W RUPFER 22 JUL 65

MANNED
SPACECRAFT CENTER
HOUSTON, TEXAS

NAMEPLATES, APOLLO GEN - GSE (STANDARDS)

SIZE: J2
CODE IDENT NO: 80230
1004260
SCALE: NONE
SHEET 4 OF 6

1004260 C SHT 4

2/1004260

[illegible]

DASH NO.	%c	PART NAME	REMARKS	PART NUMBER	SER. NO.	CONT. NO.	STYLE	TYPE	MATERIAL	A	B	C	D	E	F	G	H	J	K	L	M	N	P
401	MIT	COMPUTER ASSY		2003100		NAS-9-497	A	I	NOTE 11B	2,000	1,312	1.906	1,375	,078	,048	,078	,093	NA	NA	1,125	,750	,593	,453
400	MIT	LIFTING SLING-G&N INST,QUAL,FIX, & AZM,REF,FIX,		1021640		NAS-9-4065	B	II	NOTE 11C	2,000	1,312	1,687	1,375	,078	,048	,078	,093	[illegible]	,093	1,187	,750	,593	,453

NOTES FOR TABLE

STYLE A IS FOR G & N SYSTEM
STYLE B IS FOR GROUND SUPPORT EQUIPMENT
TYPE I IS WITHOUT MOUNTING HOLES
TYPE II IS WITH MOUNTING HOLES

REVISIONS					
SYM	ZONE	DESCRIPTION	CHG NO	DATE	APPD
CL		REPLACES REV CK WITHOUT CHANGE PER TURR 34365		20, 67	JWL RWH
CM		REVISION STATUS CHANGED		10 OCT 67	RAW
CN		REVISION STATUS CHANGED		31 OCT 67	JRK
CP		REVISION STATUS CHANGED		6 NOV 67	EMS
CR		REVISION STATUS CHANGED		9 DEC 67	
CS		REVISION STATUS CHANGED		9 JAN 68	
CT		REVISION STATUS CHANGED		7 FEB 68	
CU		REVISION STATUS CHANGED		28 FEB 68	JRK
CV		REVISION STATUS CHANGED		28	
CW		REVISION STATUS CHANGED		68	
CY		REVISION STATUS CHANGED		16 APR 68	RAH

F	G	H	J	K	L	M	N	P	R	S	T	U	V	W	Y	Z	AA	AB	AC	AD	AE	AF	AG	AH	AJ	AK	AL	AM	AN	AP	AR
[illegible]	.078	.093	NA	NA	1.125	.750	.593	.453	1.015	.062	.187	.078	.875	.718	1.375	.218	NA	NA	.048	.031	.875	.305	.078	.531	1.906	.078	NA	.078	.531	.187	NA
[illegible]	.078	.093	[illegible]	.093	1.187	.750	.593	.453	1.015	.062	.187	.078	.875	.718	1.375	.218	1.156	1.843	.048	NA	.875	.305	.078	.312	1.687	.110	1.830	.070	.275	.180	1.844

MIT DASH NUMBERS

UNLESS OTHERWISE SPECIFIED DIMENSIONS ARE IN INCHES TOLERANCES ON 2 PLACE DECIMALS ± 3 PLACE DECIMALS ± .005 ANGLES ±	M.I.T. INSTRUMENTATION LAB CAMBRIDGE, MASS.
DRAWN R A JONES	DATE 15 JUL 65
CHECKED W KUPFER APPROVAL	22 JUL 65
DO NOT SCALE THIS DRAWING	CONTRACT
MATERIAL SEE NOTE 11	NASA APPROVAL T MICHAELS 22 JUL 65
APPROVAL	MIT APPROVAL W KUPFER 22 JUL 65
AS APPLICABLE	NEXT ASSY / USED ON — APPLICATION

MANNED SPACECRAFT CENTER
HOUSTON TEXAS

NAMEPLATES,
APOLLO GEN - GSE
(STANDARDS)

SIZE J2 | CODE IDENT NO 80230 | 1004260
SCALE NONE | SHEET 3 OF 6

1004260 CY

SHT 5

2/1004260

[illegible]

DASH NO.	P/C	PART NAME	REMARKS	PART NUMBER	SER. NO.	CONT. NO.	STYLE	TYPE	MATERIAL	A	B	C	D	E	F	G	H	J	K	L	M
599	AC																				
598	AC																				
577		BREAKOUT BOX, CABLE ADAPTER		2901011-021		FOR OTHER DATA SEE DASH 506															
576		FIX., MOUNTING G&N		2900067-061		FOR OTHER DATA SEE DASH 500															
575		CSL, CAL AND TEST, SCM/PSAAM		2900895-041		FOR DATA SEE DASH 559															
574		CONT., TEMP PORTABLE		2900060-031		NAS-9-497	B	II	NOTE 11C	FOR DIMENSIONS SEE DASH 535 VALUES											
573		BATTERY PACK LIFTING		2900812-031		NAS-9-497	B	II	NOTE 11C	FOR DIMENSIONS SEE DASH 542 VALUES											
572		FIX., MOUNTING G&N	(-144)	2900067-081		NAS-9-497	B	II	NOTE 11C	FOR DIMENSIONS SEE DASH 500 VALUES											
571		EYEPIECE STORAGE UNIT		2021382		FOR OTHER DATA SEE DASH 100															
570	AC	OPTICAL UNIT & BELLOWS ASSY				NAS-9-497	A	I	NOTE 11B	FOR DIMENSIONS SEE DASH 550 VALUES											
569	AC	G & N INDICATOR CONTROL PANEL ASSY		2021323-011		NAS-9-497	A	I	NOTE 11B	FOR DIMENSIONS SEE DASH 181											
568	AC	G & N INDICATOR CONTROL PANEL ASSY		2021290-021		NAS-9-497	A	I	NOTE 11B	FOR DIMENSIONS SEE DASH 181											
567	AC	G & N INDICATOR CONTROL PANEL ASSY		2021290-011		NAS-9-497	A	I	NOTE 11B	FOR DIMENSIONS SEE DASH 181											
566	AC	COMPUTER CONT & RETICLE DIMMER		6014512-061		NAS-9-497	A	I	NOTE 11B	FOR DIMENSIONS SEE DASH 534											
565		AUXILIARY BATTERY PACK		1901492-031		NAS-9-497	B	II	NOTE 11C	FOR DIMENSIONS SEE DASH 500											
564		BATTERY POWER PACK		1900011-051		NAS-9-497	B	II	NOTE 11C	FOR DIMENSIONS SEE DASH 500											
563		PSA ADAPTER MODULE (LEM)		6900088-031		NAS-9-497	B	II	NOTE 11C	FOR DIMENSIONS SEE DASH 141 VALUES											
562	AC	COMPUTER CONT & RETICLE DIMMER		6014512-041		NAS-9-497	A	I	NOTE 11B	FOR DIMENSIONS SEE DASH 534 VALUES											
561	AC	G & N INDICATOR CONTROL PANEL ASSY		2014578-031		NAS-9-497	A	I	NOTE 11B	FOR DIMENSIONS SEE DASH 181 VALUES											
560		ADPT. MODULE, PSA		2901143-021		NAS-9-497	B	II	NOTE 11C	FOR DIMENSIONS SEE DASH 141 VALUES											
559		CSL, CAL AND TEST, SCM/PSAAM		2900895-031		FOR OTHER DATA SEE DASH 547															
558		PSA ADAPTER MODULE (LEM)		6900088-021		FOR OTHER DATA SEE DASH 189															
557		FIX., HANDLING, C/M PSA		2900998-021		NAS-9-497	B	II	NOTE 11C	FOR DIMENSIONS SEE DASH 141 VALUES											
556		FIX., MOUNTING G & N	(-144)	2900067-041		NAS-9-497	B	II	NOTE 11C	FOR DIMENSIONS SEE DASH 500 VALUES											
555	AC	OPTICAL UNIT ASSEMBLY		1021368-061		NAS-9-497	A	I	NOTE 11B	2.000	1.312	1.687	1.375	.078	.048	.078	.093	NA	NA	1.125	
554	AC	OPTICAL UNIT ASSEMBLY		1021368-041		NAS-9-497	A	I	NOTE 11B	2.000	1.312	1.687	1.375	.078	.048	.078	.093	NA	NA	1.125	
553	AC	OPTICAL UNIT AND BELLOWS ASSEMBLY		2010790-111		NAS-9-497	A	I	NOTE 11B	2.000	1.312	1.687	1.375	.078	.048	.078	.093	NA	NA	1.125	
552	AC	OPTICAL UNIT AND BELLOWS ASSEMBLY		2010790-081		NAS-9-497	A	I	NOTE 11B	2.000	1.312	1.687	1.375	.078	.048	.078	.093	NA	NA	1.125	
551	AC	OPTICAL UNIT AND BELLOWS ASSEMBLY		2010790-071		NAS-9-497	A	I	NOTE 11B	2.000	1.312	1.687	1.375	.078	.048	.078	.093	NA	NA	1.125	
550	AC	OPTICAL UNIT AND BELLOWS ASSEMBLY		2010790-061		NAS-9-497	A	I	NOTE 11B	2.000	1.312	1.687	1.375	.078	.048	.078	.093	NA	NA	1.125	
548		CAGING ELECTRONICS, GYRO		2900029-031		NAS-9-497	B	II	NOTE 11C	2.125	.968	1.718	NA	.093	.031	.06	.093	[illegible]	.093	.858	
547		CSL, CAL AND TEST, SCM/PSAAM		2900895-021		NAS-9-497	B	II	NOTE 11C	4.125	1.812	3.250	NA	.125	.062	.12	.156	[illegible]	.125	1.625	
546		FIX., HAND., C/M AND LEM CDU		2900999-021		NAS-9-497	B	II	NOTE 11C	2.125	.968	1.718	NA	.093	.031	.06	.093	[illegible]	.093	.858	
545	AC	G & N INDICATOR CONTROL PANEL ASSY		2014578-021		NAS-9-497	A	I	NOTE 11B	3.000	1.938	2.437	NA	.125	.062	.188	.156	NA	NA	1.750	
544		ADPT MODULE, F.S.A.		1902431-051		NAS-9-497	B	II	NOTE 11C	2.125	.968	1.718	NA	.093	.031	.06	.093	[illegible]	.093	.858	
543	AC	PANEL, MONITOR		2900031-041		NAS-9-497	B	II	NOTE 11C	2.125	.968	1.718	NA	.093	.031	.06	.093	[illegible]	.093	.858	
542	AC	BATTERY PACK, LIFTING		2900812-021		NAS-9-497	B	II	NOTE 11C	2.125	.968	1.718	NA	.093	.031	.06	.093	[illegible]	.093	.858	
541	AC	FIXTURE, MOUNTING, IMU		2900000-021		NAS-9-497	B	II	NOTE 11C	4.125	1.812	3.250	NA	.125	.062	.12	.156	[illegible]	.125	1.625	
540	AC	ADPT, TEST POINT, P.S.A.		2900037-031		NAS-9-497	B	II	NOTE 11C	2.125	.968	1.718	NA	.093	.031	.06	.093	[illegible]	.093	.858	
539	AC	ANNUNCIATOR PANEL & EYEPIECE STORAGE ASSEMBLY		1021255-041		NAS-9-497	A	I	NOTE 11B	2.000	1.312	1.906	1.375	.078	.048	.078	.093	NA	NA	1.125	
538	AC	ANNUNCIATOR PANEL & EYEPIECE STORAGE ASSEMBLY		1021255-031		NAS-9-497	A	I	NOTE 11B	2.000	1.312	1.906	1.375	.078	.048	.078	.093	NA	NA	1.125	
537	AC	TEST SELECTOR		2900028-031		NAS 9 497	B	II	NOTE 11C	2.125	.968	1.718	NA	.093	.031	.06	.093	[illegible]	.093	.858	
536	AC	ANALYZER, OPTICS-INERTIAL		2900023-041		NAS-9-497	B	II	NOTE 11C	4.125	1.812	3.250	NA	.125	.062	.12	.156	[illegible]	.125	1.625	
535	AC	CONT, TEMP, PORTABLE		2900060-021		NAS-9-497	B	II	NOTE 11C	2.125	.968	1.718	NA	.093	.031	.06	.093	[illegible]	.093	.858	
534	AC	COMPUTER CONT & RETICLE DIMMER		6014512-021		NAS-9-497	A	I	NOTE 11B	2.000	1.312	1.906	1.375	.078	.048	.078	.093	NA	NA	1.125	
533	AC	ADPT MODULE, P.S.A.		1902431-041		NAS-9-497	B	II	NOTE 11C	2.125	.968	1.718	NA	.093	.031	.06	.093	[illegible]	.093	.858	
532	AC	TRAY BREAKOUT, 105 PIN		1900807-021		NAS-9-497	B	II	NOTE 11C	4.125	1.812	3.250	NA	.125	.062	.12	.156	[illegible]	.125	1.625	
531	AC	TRAY BREAKOUT, 84 PIN		1900806-021		NAS-9-497	B	II	NOTE 11C	4.125	1.812	3.250	NA	.125	.062	.12	.156	[illegible]	.125	1.625	
530	AC	HEAT SINK-TRAY EXTENDER		1900808-021		NAS-9-497	B	II	NOTE 11C	2.125	.968	1.718	NA	.093	.031	.06	.093	[illegible]	.093	.858	
529	AC	TESTER, FAILURE INDICATOR		1900809-021		NAS-9-497	B	II	NOTE 11C	2.125	.968	1.718	NA	.093	.031	.06	.093	[illegible]	.093	.858	
527	AC	FIX., MOUNTING, G & N	(-144)	1902204-021		NAS-9-497	B	II	NOTE 11C	FOR DIMENSIONS SEE DASH 500 VALUES BELOW											
526	AC	FIX., MOUNTING, G & N	(-144)	2900067-031		NAS-9-497	B	II	NOTE 11C	FOR DIMENSIONS SEE DASH 500 VALUES BELOW											
525	AC	PORTABLE TEMP. CONTROLLER		1900496-021		NAS-9-497	B	II	NOTE 11C	3,000	1.937	2.437	2,312	.125	.031	.125	.156	.125	.125	1.718	
524	AC	POWER, SERVO & THERMOCOUPLE ASSEMBLY C/M		2010743		NAS-9-497	A	I	NOTE 11B	2.125	.968	1.718	NA	.093	.031	.06	.093	NA	NA	.858	
523	AC	PULSE TORQUE AND THERMOCOUPLE ASSEMBLY-LEM		6010656		NAS-9-497	A	I	NOTE 11B	FOR DIMENSIONS SEE DASH 508 VALUES BELOW											
522	AC	COUPLING DATA UNIT & THERMOCOUPLE ASSEMBLY-LEM		2010744		NAS-9-497	A	I	NOTE 11B	FOR DIMENSIONS SEE DASH 508 VALUES BELOW											
521	AC	COUPLING DATA UNIT & THERMOCOUPLE ASSEMBLY-C/M		2010744		NAS-9-497	A	I	NOTE 11B	FOR DIMENSIONS SEE DASH 508 VALUES BELOW											
520	AC	PIPA ELECTRONICS AND THERMOCOUPLE ASSEMBLY		2010745		NAS-9-497	A	I	NOTE 11B	FOR DIMENSIONS SEE DASH 508 VALUES BELOW											
519	AC	FIXTURE, HANDLING, LEM-PSA	(-141)	6900129-011		NAS-9-497	B	II	NOTE 11C	FOR DIMENSIONS SEE DASH 504 VALUES BELOW											
518	AC	JUNCTION BOX, GSE-PSA	(-144)	1901933-031		NAS-9-497	B	II	NOTE 11C	FOR DIMENSIONS SEE DASH 500 VALUES BELOW											
517	AC	FIX., HAND., OPTICS INSTL.	(-141)	2901380-011		NAS-9-497	B	II	NOTE 11C	FOR DIMENSIONS SEE DASH 502 VALUES BELOW											
516	AC	POWER, SERVO AND THERMOCOUPLE ASSEMBLY-LEM		6010655		NAS-9-497	A	I	NOTE 11B	FOR DIMENSIONS SEE DASH 508 VALUES BELOW											
514	AC	SIGNAL COND. ASSY LEM OPER.	(-100)	6007013		NAS-9-497	A	I	NOTE 11B	FOR DIMENSIONS SEE DASH 508 VALUES BELOW											
513	AC	JUMPER, BY-PASS	(-141)	1021616		NAS-9-497	B	II	NOTE 11C	2.125	.968	1.718	NA	.093	.031	.06	.093	[illegible]	.093	.858	
512	AC	COUPLING DATA UNIT ASSEMBLY C/M	(-100)	2007322-011		NAS-9-497	A	I	NOTE 11B	FOR DIMENSIONS SEE DASH 508 VALUES BELOW											
511	AC	COUPLING DATA UNIT ASSEMBLY-LEM	(-100)	2007322-021		NAS-9-497	A	I	NOTE 11B	FOR DIMENSIONS SEE DASH 508 VALUES BELOW											
510	AC	BATTERY POWER PACK	(-144)	1900011-041		NAS-9-497	B	II	NOTE 11C	FOR DIMENSIONS SEE DASH 500 VALUES BELOW											
509	AC	JUNCTION BOX, P.S.A./G.S.E.	(-144)	1902195-021		NAS 9-497	B	II	NOTE 11C	FOR DIMENSIONS SEE DASH 500 VALUES BELOW											
508	AC	NAVIGATION BASE ASSEMBLY-LEM	(-101)	6899980		NAS-9-497	A	I	NOTE 11B	2.000	1.312	1.906	1.375	.078	.048	.078	.093	NA	NA	1.125	
507	AC	CSL, COOL, AND PWR, G AND N	(-144)	1902134-041		NAS-9-497	B	II	NOTE 11C	FOR DIMENSIONS SEE DASH 500 VALUES BELOW											
506	AC	BREAKOUT BOX, CABLE ADAPTER	(-141)	2901011-011		NAS-9-497	B	II	NOTE 11C	2.125	.968	1.718	NA	.093	.031	.06	.093	[illegible]	.093	.858	
505	AC	MONITOR AND CONTROL, TEMP	(-141)	2900026-021		NAS-9-497	B	II	NOTE 11C	2.125	.968	1.718	NA	.093	.031	.06	.093	[illegible]	.093	.858	
504	AC	PWR SUP, GUIDANCE SYSTEM	(-141)	1900033-021		NAS-9-497	B	II	NOTE 11C	2.125	.968	1.718	NA	.093	.031	.06	.093	[illegible]	.093	.858	
503	AC	CONTROL, GIMBAL POSITION	(-141)	2900036-021		NAS-9-497	B	II	NOTE 11C	2.125	.968	1.718	NA	.093	.031	.06	.093	[illegible]	.093	.858	
502	AC	ADPT, TEST POINT, PTA/PEA.	(-141)	2900145-021		NAS-9-497	B	II	NOTE 11C	2.125	.968	1.718	NA	.093	.031	.06	.093	[illegible]	.093	.858	
501	AC	MOUNTING PLATE, COMPONENT	(-144)	6900007-031		NAS-9-497	B	II	NOTE 11C	FOR DIMENSIONS SEE DASH 500 VALUES BELOW											
500	AC	MOUNTING PLATE, COMPONENT	(-144)	2900677-021		NAS-9-497	B	II	NOTE 11C	4.125	1.812	3.250	NA	.125	.062	.12	.156	[illegible]	.125	1.625	

NOTES FOR TABLE

STYLE A IS FOR G & N SYSTEM
STYLE B IS FOR GROUND SUPPORT EQUIPMENT
TYPE I IS WITHOUT MOUNTING HOLES
TYPE II IS WITH MOUNTING HOLES

SYM	ZONE	DESCRIPTION	CHG NO	DATE	APPD
CL		REPLACES REV CK WITH CHANGE PER TDRR 34365		4/26/67	JL
CM		REVISED PER TDRR 34896		17 OCT 67	RAW
CN		REVISED PER TDRR 34467		31 OCT 67	WRK
CP		REVISED PER TDRR 34885		6 NOV 67	EMS
CR		REVISED PER TDRR 35164		7 DEC 67	
CS		REVISED PER TDRR 35307		3 JAN 68	
CT		REVISION STATUS CHANGED		68	RK
CU		REVISED PER TDRR 35628		22 68	WRK
CV		REVISED PER TDRR 35675		68	
CW		REVISED PER TDRR 35970			
CY		REVISION STATUS CHANGED		APR 68	

E	F	G	H	J	K	L	M	N	P	R	S	T	U	V	W	Y	Z	AA	AB	AC	AD	AE	AF	AG	AH	AJ	AK	AL	AM	AN	AP	AR
DASH [illegible] VALUES																																
DASH [illegible] VALUES																																
DASH 500 VALUES																																
DASH [illegible] VALUES																																
[illegible] VALUES																																
DASH [illegible] VALUES																																
DASH 101 VALUES																																
DASH 101 VALUES																																
DASH [illegible] VALUES																																
DASH [illegible] VALUES																																
.070	.048	.078	.093	NA	NA	1.125	.750	.593	.453	1.015	.062	.187	.078	.875	.718	1.375	.218	NA	NA	.048	.031	.875	.305	NA	.468	1.531	NA	NA	.078	.312	.187	NA
.070	.048	.078	.093	NA	NA	1.125	.750	.593	.453	1.015	.062	.187	.078	.875	.718	1.375	.218	NA	NA	.048	.031	.875	.305	NA	.468	1.531	NA	NA	.078	.312	.187	NA
.070	.048	.078	.093	NA	NA	1.125	.750	.593	.453	1.015	.062	.187	.078	.875	.718	1.375	.218	NA	NA	.048	.031	.875	.305	NA	.468	1.531	NA	NA	.078	.312	.187	NA
.070	.048	.078	.093	NA	NA	1.125	.750	.593	.453	1.015	.062	.187	.078	.875	.718	1.375	.218	NA	NA	.048	.031	.875	.305	NA	.468	1.531	NA	NA	.078	.312	.187	NA
.070	.048	.078	.093	NA	NA	1.125	.750	.593	.453	1.015	.062	.187	.078	.875	.718	1.375	.218	NA	NA	.048	.031	.875	.305	NA	.468	1.531	NA	NA	.078	.312	.187	NA
.070	.048	.078	.093	NA	NA	1.125	.750	.593	.453	1.015	.062	.187	.078	.875	.718	1.375	.218	NA	NA	.048	.031	.875	.305	NA	.468	1.531	NA	NA	.078	.312	.187	NA
.093	.031	.06	.093	[illegible]	.093	.858	.608	.484	.358	.733	.077	.116	.062	.937	.875	1.343	.125	.781	1.892	.046	NA	NA	.209	.093	.250	1.875	NA	1.840	.046	.23	.16	1.938
[illegible]	.062	.12	.156		.125	1.625	1.140	.890	.640	1.390	.125	.171	.125	1.875	1.687	2.625	.250	1.562	3.843	.093	NA	NA	.359	.125	.437	3.688	NA	3.687	.093	.40	.25	3.875
[illegible]	.031	.06	.093	[illegible]	.093	.858	.608	.484	.358	.733	.077	.116	.062	.937	.875	1.343	.125	.781	1.892	.046	NA	NA	.209	.093	.250	1.875	NA	1.840	.046	.23	.16	1.938
.125	.062	.188	.156	NA	NA	1.750	1.125	.906	.688	1.500	NA	.281	.125	NA	1.094	2.062	.312	NA	2.500	.062	.125	1.312	.469	NA	NA	NA	.156	NA	.125	.469	.344	NA
.093	.031	.06	.093	[illegible]	.093	.858	.608	.484	.358	.733	.077	.116	.062	.937	.875	1.343	.125	.781	1.892	.046	NA	NA	.209	.093	.250	1.875	NA	1.840	.046	.23	.16	1.938
.093	.031	.06	.093		.093	.858	.608	.484	.358	.733	.077	.116	.062	.937	.875	1.343	.125	.781	1.892	.046	NA	NA	.209	.093	.250	1.875	NA	1.840	.046	.23	.25	1.938
.093	.031	.06	.093		.093	.858	.608	.484	.358	.733	.077	.116	.062	.937	.875	1.343	.125	.781	1.892	.046	NA	NA	.209	.093	.250	1.875	NA	1.840	.046	.23	.16	1.938
.125	.062	.12	.156		.125	1.625	1.140	.890	.640	1.390	.125	.171	.125	1.875	1.687	2.625	.250	1.562	3.843	.093	NA	NA	.359	.125	.437	3.688	NA	3.687	.093	.40	.25	3.875
.093	.031	.06	.093	[illegible]	.093	.858	.608	.484	.358	.733	.077	.116	.062	.937	.875	1.343	.125	.781	1.892	.046	NA	NA	.209	.093	.250	1.875	NA	1.840	.046	.23	.16	1.938
.070	.048	.078	.093	NA	NA	1.125	.750	.593	.453	1.015	.062	.187	.078	.875	.718	1.375	.218	NA	NA	.048	.031	.875	.305	.078	.531	1.906	.078	NA	.078	.531	.187	NA
.070	.048	.078	.093	NA	NA	1.125	.750	.593	.453	1.015	.062	.187	.078	.875	.718	1.375	.218	NA	NA	.048	.031	.875	.305	.078	.531	1.906	.078	NA	.078	.531	.187	NA
[illegible]	.031	.06	.093	[illegible]	.093	.858	.608	.484	.358	.733	.077	.116	.062	.937	.875	1.343	.125	.781	1.892	.046	NA	NA	.209	.093	.250	1.875	NA	1.840	.046	.23	.16	1.938
[illegible]	.062	.12	.156		.125	1.625	1.140	.890	.640	1.390	.125	.171	.125	1.875	1.687	2.625	.250	1.562	3.843	.093	NA	NA	.359	.125	.437	3.688	NA	3.687	.093	.40	.25	3.875
.093	.031	.06	.093	[illegible]	.093	.858	.608	.484	.358	.733	.077	.116	.062	.937	.875	1.343	.125	.781	1.892	.046	NA	NA	.209	.093	.250	1.875	NA	1.840	.046	.23	.16	1.938
.070	.048	.078	.093	NA	NA	1.125	.750	.593	.453	1.015	.062	.187	.078	.875	.718	1.375	.218	NA	NA	.048	.031	.875	.305	.078	.531	1.906	.078	NA	.078	.531	.187	NA
.093	.031	.06	.093	[illegible]	.093	.858	.608	.484	.358	.733	.077	.116	.062	.937	.875	1.343	.125	.781	1.892	.046	NA	NA	.209	.093	.250	1.875	NA	1.840	.046	.23	.16	1.938
[illegible]	.062	.12	.156		.125	1.625	1.140	.890	.640	1.390	.125	.171	.125	1.875	1.687	2.625	.250	1.562	3.843	.093	NA	NA	.359	.125	.437	3.688	NA	3.687	.093	.40	.25	3.875
[illegible]	.062	.12	.156		.125	1.625	1.140	.890	.640	1.390	.125	.171	.125	1.875	1.687	2.625	.250	1.562	3.843	.093	NA	NA	.359	.125	.437	3.688	NA	3.687	.093	.40	.25	3.875
[illegible]	.031	.06	.093		.093	.858	.608	.484	.358	.733	.077	.116	.062	.937	.875	1.343	.125	.781	1.892	.046	NA	NA	.209	.093	.250	1.875	NA	1.840	.046	.23	.16	1.938
.093	.031	.06	.093	[illegible]	.093	.858	.608	.484	.358	.733	.077	.116	.062	.937	.875	1.343	.125	.781	1.892	.046	NA	NA	.209	.093	.250	1.875	NA	1.840	.046	.23	.16	1.938
DASH 500 VALUES BELOW																																
DASH 500 VALUES BELOW																																
[illegible]	[illegible]	.125	.156	.125	.125	1.718	1.187	.968	.749	1.452	.093	.295	.090	1.312	1.00	2.000	.250	1.687	2.750	.062	NA	NA	.463	.125	.562	2.437	.140	2.562	.090	.468	.359	2.750
.093	[illegible]	.06	.093	NA	NA	.858	.608	.484	.358	.733	.062	.140	.062	NA	.968	1.450	.125	NA	1.720	.046	.03	NA	.210	NA	NA	NA	.070	NA	.046	.32	.16	NA
DASH [illegible] VALUES BELOW																																
DASH [illegible] VALUES BELOW																																
DASH [illegible] VALUES BELOW																																
DASH [illegible] VALUES BELOW																																
DASH 504 VALUES BELOW																																
DASH [illegible] VALUES BELOW																																
DASH 502 VALUES BELOW																																
DASH [illegible] VALUES BELOW																																
DASH [illegible] VALUES BELOW																																
[illegible]	.031	.06	.093	[illegible]	.093	.858	.608	.484	.358	.733	.077	.116	.062	.937	.875	1.343	.125	.781	1.892	.046	NA	NA	.209	.093	.250	1.875	NA	1.840	.046	.23	.16	1.938
DASH [illegible] VALUES BELOW																																
DASH [illegible] VALUES BELOW																																
DASH [illegible] VALUES BELOW																																
DASH [illegible] VALUES BELOW																																
[illegible]	.048	.078	.093	NA	NA	1.125	.750	.593	.453	1.015	.062	.187	.078	.875	.718	1.375	.218	NA	NA	.048	.031	.875	.305	.078	.531	1.906	.078	NA	.078	.531	.187	NA
DASH [illegible] VALUES BELOW																																
[illegible]	.031	.06	.093	[illegible]	.093	.858	.608	.484	.358	.733	.077	.116	.062	.937	.875	1.343	.125	.781	1.892	.046	NA	NA	.209	.093	.250	1.875	NA	1.840	.046	.23	.16	1.938
.093	.031	.06	.093		.093	.858	.608	.484	.358	.733	.077	.116	.062	.937	.875	1.343	.125	.781	1.892	.046	NA	NA	.209	.093	.250	1.875	NA	1.840	.046	.23	.16	1.938
.093	.031	.06	.093		.093	.858	.608	.484	.358	.733	.077	.116	.062	.937	.875	1.343	.125	.781	1.892	.046	NA	NA	.209	.093	.250	1.875	NA	1.840	.046	.23	.16	1.938
.093	.031	.06	.093		.093	.858	.608	.484	.358	.733	.077	.116	.062	.937	.875	1.343	.125	.781	1.892	.046	NA	NA	.209	.093	.250	1.875	NA	1.840	.046	.23	.16	1.938
[illegible]	.031	.06	.093	[illegible]	.093	.858	.608	.484	.358	.733	.077	.116	.062	.937	.875	1.343	.125	.781	1.892	.046	NA	NA	.209	.093	.250	1.875	NA	1.840	.046	.23	.16	1.938
DASH [illegible] VALUES BELOW																																
[illegible]	.062	.12	.156	[illegible]	.125	1.625	1.140	.890	.640	1.390	.125	.171	.125	1.875	1.687	2.625	.250	1.562	3.843	.093	NA	NA	.359	.125	.437	3.688	NA	3.687	.093	.40	.25	3.875

AC ELECTRONICS DASH NUMBERS

UNLESS OTHERWISE SPECIFIED
DIMENSIONS ARE IN INCHES
TOLERANCES ON
2 PLACE DECIMALS ±
3 PLACE DECIMALS ± .005
ANGLES ±
DO NOT SCALE THIS DRAWING
MATERIAL SEE NOTE 11
APPROVAL

AS APPLICABLE
NEXT ASSY | USED ON
APPLICATION

MIT INSTRUMENTATION LAB
CAMBRIDGE MASS
DRAWN R A JONES DATE 16 JUL 65
CHECKED
APPROVAL W KUPFER 22 JUL 65
CONTRACT
NASA APPROVAL T MICHAELS 22 JUL 65
MIT APPROVAL W KUPFER 22 JUL 65

MANNED
SPACECRAFT CENTER
HOUSTON TEXAS

NAMEPLATES,
APOLLO GEN - GSE
(STANDARDS)

SIZE J2 CODE IDENT NO 80230 1004260
SCALE NONE SHEET 6 OF 6

HK14 3Y0 SHT 6

1004260

2/1004260

NOTES:

1. INTERPRET DRAWING IN ACCORDANCE WITH STANDARDS PRESCRIBED BY MIL-D-70327.
2. DIMENSIONS ON EACH VIEW APPLY TO ALL VIEWS (WITH THE EXCEPTION OF MOUNTING HOLES).
3. FORMATS ILLUSTRATED WILL BE APPLICABLE TO ALL ITEMS REQUIRING NAMEPLATES BELOW END ITEM DESIGNATION (SYSTEMS, ASSEMBLIES, ETC.)
4. PLATE BACKGROUND TO BE LUSTERLESS BLACK PER FED-STD-595, COLOR 37038. BORDER, MARKING AND LETTERING TO BE NATURAL METAL, (ANODIZED ALUMINUM).
5. MARKING METHOD TO BE DIE STAMPING, ETCHING OR ENGRAVING IN ACCORDANCE WITH MIL-P-19834.
6. LETTERING STYLE TO BE GOTHIC, (SANS SERIFS), AND NUMBERS TO BE ARABIC.
7. WHERE LOCATING DIMENSIONS ARE NOT SHOWN, CHARACTERS SHALL BE SYMMETRICALLY POSITIONED.
8. IDENTIFY WITH DRAWING NUMBER PER ND 1002019.
9. WHEN "AUTO MARK" METAL MARKING TYPEWRITER IS USED TO ADD DATA TO BLANK SPACES, TYPE SIZE IS TO BE SELECTED FROM DIMENSIONS U, AC, AND AM.
10. NASA SYMBOL IS TO BE PROPORTIONAL TO NAMEPLATE IN RATIO OF 1 TO 5 WITH DIMENSION A VALUE AND IS TO HAVE NATURAL BACKGROUND. NASA SYMBOL LETTERS LETTERING AND FEATHER TO BE BLACK, (OR WHITE FOR SILK SCREENING). WHERE BLACK FEATHER PROTRUDES INTO BLACK BACKGROUND, A MINIMUM OUTLINE OF NATURAL BACKGROUND SHALL EXIST.
11. NAMEPLATES WILL BE APPLIED BY METHODS LISTED BELOW, SHOWN IN ORDER OF PREFERENCE, (I.E., FOR RELIABILITY AND WEIGHT).
    - A - STENCIL OR SILK SCREEN DIRECTLY ON EQUIPMENT USING INK PER SCD 1010920, (WHITE OR BLACK).
    - B - ALUMINUM FOIL, (STYLE A OR B, TYPE I):
      FOIL SHALL BE .0030 ± .0005 THICK PER MIL-A-148.
      FOIL SHALL HAVE NO ADHESIVE BACKING.
      FOIL SHALL BE BONDED PER ND 1002219, (METHOD II).
      FOIL SHALL BE CLEAR ANODIZED PER MIL-A-8625, TYPE II.
    - C - PLATE, (STYLE A OR B, TYPE II):
      MATERIAL: QQ-A-250, TEMPER O OR H14, TYPE 1100, ALUMINUM ALLOY, .032 THICK. ANODIZE PER MIL-A-8625, TYPE II.
      ALUMINUM PLATE MUST BE FREE FROM BURRS AND SHARP CORNERS, MOUNTED WITH APPLICABLE SIZE FASTENERS.
12. NAMEPLATES SHALL BE CAPABLE OF MEETING APPLICABLE REQUIREMENTS OF MIL-M-13231.
13. ON DIMENSION TABLES SHOWN ON PAGES 2, 3, 4, 5, AND 6, NA MEANS, "NOT APPLICABLE".

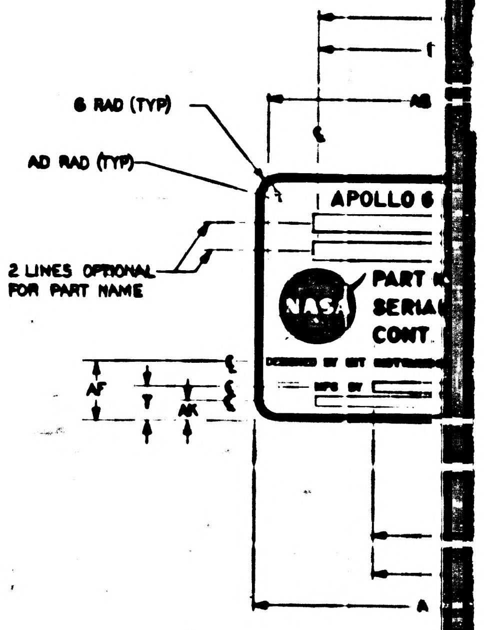

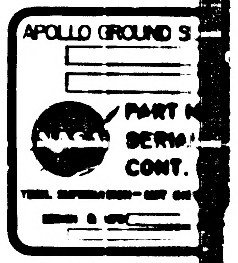

WITHOUT

SUGGESTED PROPORTIONS FOR NAMEPLATE DIMENSIONS.

1. SELECT NAMEPLATE LENGTH, DIMENSION "A", TO FIT DESIGN NEEDS.
2. DIMENSIONS B THRU AS ON LINE 1 BELOW ARE PROPORTIONAL TO "A" BY MULTIPLIERS SHOWN IN LINE 2 BELOW.

1.	A	B	C	D	E	F	G	H	J	K	L	M	N	P	R	S	T	U
2.	1.000A	.0863A	.0438A	.6875A	.0391A	.0240A	.0391A	.0400A	.0547A	.0469A	.5938A	.3750A	.2969A	.2187A	.3079A	.0313A	.0938A	.0391A

1.	V	W	Y	Z	AA	AB	AC	AD	AE	AF	AG	AH	AJ	AK	AL	AM	AN	AP	AR	AS
2.	.4375A	.3984A	.6875A	.1094A	.5781A	.9219A	.0240A	.0156A	.4375A	.1525A	.0391A	.1563A	.0438A	.0548A	.0859A	.0801A	.1563A	.0938A	.9219A	.0151A

1004260	CZ	SHEET 1

1/1004260

REVISIONS					
SYM	ZONE	DESCRIPTION	CHG NO	DATE	APPD
CL		REPLACES REV CK WITHOUT CHANGE PER TDRR 34365		[illegible] 67	JWL RWH
CM		REVISION STATUS CHANGED		10 OCT. 67	RAW
CN		REVISION STATUS CHANGED		31 OCT 67	JRK
CP		REVISION STATUS CHANGED		8 NOV 67	[illegible]
CR		REVISION STATUS CHANGED		[illegible] 67	RWH
CS		REVISION STATUS CHANGED		3 JAN 68	BHW
CT		REVISION STATUS CHANGED		[illegible] 68	[illegible]
CU		REVISION STATUS CHANGED		22 [illegible] 68	JRK
CV		REVISION STATUS CHANGED		27 [illegible]	[illegible]
CW		REVISION STATUS CHANGED		[illegible] 68	[illegible]
CY		REVISION STATUS CHANGED		5 APR 68	[illegible]
CZ		REVISION STATUS CHANGED		28 [illegible] 68	[illegible]

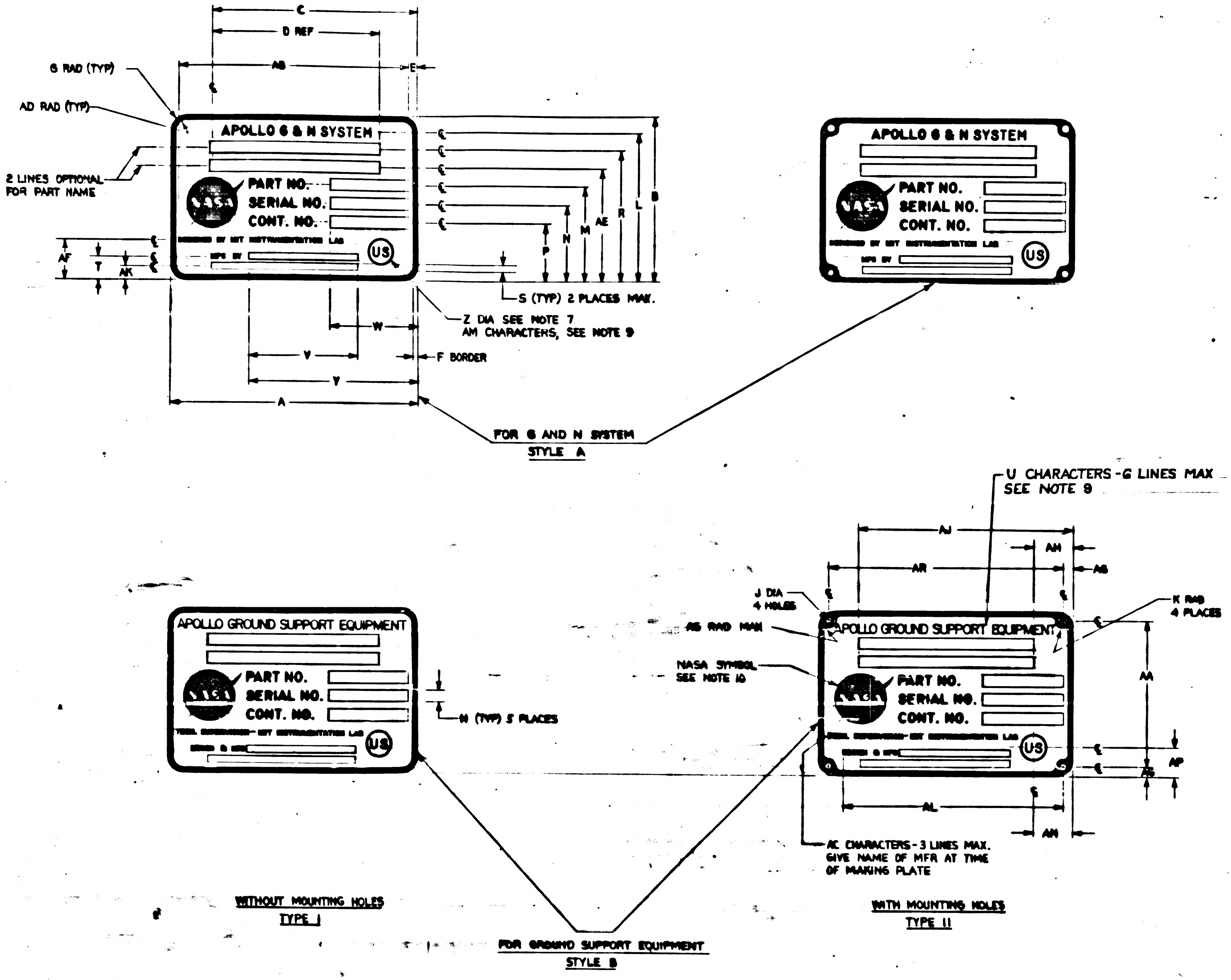
C
D REF
AB
E
G RAD (TYP)
AD RAD (TYP)
2 LINES OPTIONAL FOR PART NAME
APOLLO G & N SYSTEM
PART NO.
SERIAL NO.
CONT. NO.
US
AF
T
AK
S (TYP) 2 PLACES MAX.
P
N
M
AE
R
L
B
Z DIA SEE NOTE 7
AM CHARACTERS, SEE NOTE 9
W
V
Y
A
F BORDER
FOR G AND N SYSTEM
STYLE A
U CHARACTERS - 6 LINES MAX
SEE NOTE 9
AJ
AN
AR
AG
J DIA
4 HOLES
AG RAD MAX
K RAD
4 PLACES
APOLLO GROUND SUPPORT EQUIPMENT
NASA SYMBOL SEE NOTE 10
AA
AP
AS
AL
AN
AC CHARACTERS - 3 LINES MAX. GIVE NAME OF MFR AT TIME OF MAKING PLATE
H (TYP) 5 PLACES
WITHOUT MOUNTING HOLES
TYPE I
WITH MOUNTING HOLES
TYPE II
FOR GROUND SUPPORT EQUIPMENT
STYLE B

UNLESS OTHERWISE SPECIFIED DIMENSIONS ARE IN INCHES TOLERANCES ON 2 PLACE DECIMALS ± 3 PLACE DECIMALS ± .005 ANGLES ±	M I T INSTRUMENTATION LAB CAMBRIDGE MASS
DO NOT SCALE THIS DRAWING	DRAWN R. A. JONES DATE 15 JUL 65 CHECKED APPROVAL W. KUPFER 22 JUL 65
MATERIAL SEE NOTE 11	CONTRACT
APPROVAL	NASA APPROVAL T. MICHAELS 22 JUL 65 MIT APPROVAL W. KUPFER 22 JUL 65

AS APPLICABLE

NEXT ASSY | USED ON

APPLICATION

MANNED SPACECRAFT CENTER
HOUSTON, TEXAS

NAMEPLATES,
APOLLO G&N - GSE
(STANDARDS)

SIZE J2 | CODE IDENT NO. 80230 | 1004260

SCALE NONE | SHEET 1 OF 6

1004260 CZ Sheet 1

2/1004260

[illegible]

DASH NO.	P/C	PART NAME	REMARKS	PART NUMBER	SER. NO.	CONT. NO.	STYLE	TYPE	MATERIAL	A	B	C	D	E	F	G	H	J	K	L	M	N	P
399	K																						
398	K																						
350	K	ALIGNMENT OPTICAL TELESCOPE (LEM)		NA	NA	NA	A	I	NOTE 11B	4.000	2.625	3.375	2.750	.156	.093	.156	.187	NA	NA	2.312	1.468	1.187	.906
309	K																						
308	K																						
307	K						B	I	NOTE 11B	4.000	2.625	3.375	2.750	.156	.093	.156	.187	NA	NA	2.328	1.468	1.187	.906
306	K						B	II	NOTE 11C	4.000	2.625	3.375	2.750	.156	.093	.156	.187	.125	.156	2.328	1.468	1.187	.906
305	K						B	I	NOTE 11B	2.000	1.312	1.687	1.375	.078	.048	.078	.093	NA	NA	1.164	.734	.593	.453
304	K						B	II	NOTE 11C	2.000	1.312	1.687	1.375	.078	.048	.078	.093	.070	.078	1.164	.734	.593	.453
303	K																						
302	K																						
301	K																						
300	K	OPTICAL UNIT		NA	NA	NA	A	I	NOTE 11B	2.000	1.312	1.675	NA	NA	.048	.078	NA	NA	NA	1.090	.812	.675	.540
9	K	2 IN AUTOCOLLIMATOR		1001702			B	II	NOTE 11C	4.000	2.625	3.812	2.750	.156	.093	.156	.187	.125	.156	2.250	1.500	1.187	.906
8	K	5 IN AUTOCOLLIMATOR		1017410			B	II	NOTE 11C	4.000	2.625	3.812	2.750	.156	.093	.156	.187	.125	.156	2.250	1.500	1.187	.906
7	K	2-1/2 IN AUTOCOLLIMATOR (SCT)		1017435			B	II	NOTE 11C	4.000	2.625	3.812	2.750	.156	.093	.156	.187	.125	.156	2.250	1.500	1.187	.906
6	K	2-1/2 IN AUTOCOLLIMATOR (SXT)		1017448			B	II	NOTE 11C	4.000	2.625	3.812	2.750	.156	.093	.156	.187	.125	.156	2.250	1.500	1.187	.906
5	K	RETROREFLECTING PRISM ASSEMBLY		1019840			B	I	NOTE 11B	4.000	2.625	3.812	2.750	.156	.093	.156	.187	NA	NA	2.250	1.500	1.187	.906
4	K	S/H SIMULATOR ASSEMBLY		1019896			B	I	NOTE 11B	4.000	2.625	3.812	2.750	.156	.093	.156	.187	NA	NA	2.250	1.500	1.187	.906
3	K	REFERENCE MIRROR		1001767			B	I	NOTE 11B	2.000	1.312	1.906	1.375	.078	.048	.078	.093	NA	NA	1.125	.750	.593	.453
2	K	2 IN PLANE READING AUTOCOLLIMATOR		1017413			B	I	NOTE 11B	2.000	1.312	1.906	1.375	.078	.048	.078	.093	NA	NA	1.125	.750	.593	.453
1	K	2 IN AUTOCOLLIMATOR		1001702			B	I	NOTE 11B	2.000	1.312	1.906	1.375	.078	.048	.078	.093	NA	NA	1.125	.750	.593	.453

NOTES FOR TABLE

STYLE A IS FOR G & N SYSTEM
STYLE B IS FOR GROUND SUPPORT EQUIPMENT
TYPE I IS WITHOUT MOUNTING HOLES
TYPE II IS WITH MOUNTING HOLES

1004260 | CZ | SHT 2

REVISIONS					
SYM	ZONE	DESCRIPTION	CHG NO	DATE	APPD
CL		REPLACES REV CK WITHOUT CHANGE PER TDRR 3A365		[illegible]	[illegible]
CM		REVISION STATUS CHANGED		18 OCT 67	R.A.K.
CN		REVISION STATUS CHANGED		31 OCT 67	JRK
CP		REVISION STATUS CHANGED		6 NOV 67	[illegible]
CR		REVISION STATUS CHANGED		7 DEC 67	[illegible]
CS		REVISION STATUS CHANGED		3 JAN 68	J.N.
CT		REVISION STATUS CHANGED		[illegible] 68	LK
CU		REVISION STATUS CHANGED		[illegible] FEB 68	JRK
CV		REVISION STATUS CHANGED		[illegible] 68	LK
CW		REVISION STATUS CHANGED		[illegible] 68	[illegible]
CY		REVISION STATUS CHANGED		16 APR 68	A.N.
CZ		REVISION STATUS CHANGED		[illegible] 68	[illegible]

[illegible]	[illegible]	.156	.187	NA	NA	2.312	1.468	1.187	.906	2.031	NA	.375	.156	NA	1.437	2.750	.437	NA	3.688	.062	.062	1.750	.593	NA	.625	3.375	.187	NA	.156	.531	.453	NA
[illegible]	.093	.156	.187	NA	NA	2.328	1.468	1.187	.906	2.031	.062	.375	.156	NA	1.437	2.750	.437	NA	3.687	.062	.062	1.750	.593	NA	NA	NA	NA	NA	NA	NA	NA	NA
[illegible]	.093	.156	.187	.125	.156	2.328	1.468	1.187	.906	2.031	.062	.375	.156	NA	1.437	2.750	.437	2.312	3.687	.062	NA	1.750	.593	NA	NA	NA	NA	NA	NA	NA	NA	NA
[illegible]	.048	.078	.093	NA	NA	1.164	.734	.593	.453	1.015	.048	.171	.078	NA	.718	1.375	.187	NA	NA	.048	.031	.875	.320	NA	NA	NA	NA	NA	NA	NA	NA	NA
[illegible]	.048	.078	.093	.070	.078	1.164	.734	.593	.453	1.015	.048	.171	.078	NA	.718	1.375	.187	.156	1.843	.048	NA	.875	.320	NA	NA	NA	NA	NA	NA	NA	NA	NA
[illegible]	.048	.078	NA	NA	NA	1.090	.812	.675	.540	.940	NA	.265	NA	NA	NA	1.375	.218	NA	NA	NA	NA	NA	.375	NA	NA	NA	.100	NA	.078	NA	NA	NA
[illegible]	.093	.156	.187	.125	.156	2.250	1.500	1.187	.906	2.031	.093	.375	.156	1.750	1.437	2.750	.437	2.312	3.687	.062	NA	1.750	.593	.156	1.062	3.812	.156	NA	.156	1.062	.375	3.687
[illegible]	.093	.156	.187	.125	.156	2.250	1.500	1.187	.906	2.031	.093	.375	.156	1.750	1.437	2.750	.437	2.312	3.687	.062	NA	1.750	.593	.156	1.062	3.812	.156	NA	.156	1.062	.375	3.687
[illegible]	.093	.156	.187	.125	.156	2.250	1.500	1.187	.906	2.031	.093	.375	.156	1.750	1.437	2.750	.437	2.312	3.687	.062	NA	1.750	.593	.156	1.062	3.812	.156	NA	.156	1.062	.375	3.687
[illegible]	.093	.156	.187	.125	.156	2.250	1.500	1.187	.906	2.031	.093	.375	.156	1.750	1.437	2.750	.437	2.312	3.687	.062	NA	1.750	.593	.156	1.062	3.812	.156	NA	.156	1.062	.375	3.687
[illegible]	.093	.156	.187	NA	NA	2.250	1.500	1.187	.906	2.031	.093	.375	.156	1.750	1.437	2.750	.437	NA	NA	.062	.062	1.750	.593	.156	1.062	3.812	.156	NA	.156	1.062	.375	NA
[illegible]	.093	.156	.187	NA	NA	2.250	1.500	1.187	.906	2.031	.093	.375	.156	1.750	1.437	2.750	.437	NA	NA	.062	.062	1.750	.593	.156	1.062	3.812	.156	NA	.156	1.062	.375	NA
[illegible]	.048	.078	.093	NA	NA	1.125	.750	.593	.453	1.015	.062	.187	.078	.875	.718	1.375	.218	NA	NA	.048	.031	.875	.305	.078	.531	1.906	.078	NA	.078	.531	.187	NA
[illegible]	.048	.078	.093	NA	NA	1.125	.750	.593	.453	1.015	.062	.187	.078	.875	.718	1.375	.218	NA	NA	.048	.031	.875	.305	.078	.531	1.906	.078	NA	.078	.531	.187	NA
[illegible]	.048	.078	.093	NA	NA	1.125	.750	.593	.453	1.015	.062	.187	.078	.875	.718	1.375	.218	NA	NA	.048	.031	.875	.305	.078	.531	1.906	.078	NA	.078	.531	.187	NA
E	F	G	H	J	K	L	M	N	P	R	S	T	U	V	W	Y	Z	AA	AB	AC	AD	AE	AF	AG	AH	AJ	AK	AL	AM	AN	AP	AR

KOLLSMAN DASH NUMBERS

UNLESS OTHERWISE SPECIFIED DIMENSIONS ARE IN INCHES TOLERANCES ON 2 PLACE DECIMALS ± 3 PLACE DECIMALS ± .005 ANGLES ±	INSTRUMENTATION LAB CAMBRIDGE MASS	MANNED SPACECRAFT CENTER HOUSTON, TEXAS	
DO NOT SCALE THIS DRAWING	DRAWN R. A. JONES DATE 15 JUL 65 CHECKED W. KUPFER 22 JUL 65 APPROVAL CONTRACT	NAMEPLATES, APOLLO G&N - GSE (STANDARDS)	
MATERIAL SEE NOTE 11	T. MICHAELS 22 JUL 65 NASA APPROVAL W. KUPFER 22 JUL 65 MIT APPROVAL	SIZE J2	CODE IDENT NO. 80230 — 1004260
APPROVAL		SCALE NONE	SHEET 2 OF 6

AS APPLICABLE

NEXT ASSY | USED ON

APPLICATION

1004260 CZ SHT 2

1004260 CZ

1004260

2/1004260

DASH NO.	P/C	PART NAME	REMARKS	PART NUMBER	SER. NO.	CONT. NO.	STYLE	TYPE	MATERIAL	A	B	C	D	E	F	G	H	J	K	L	M	N	P
299	R																						
298	R																						
293	R	COMPUTER TEST SET		2014042-081	NA	NAS-9-497	B	II	NOTE 11C	FOR DIMENSIONS SEE DASH 18 VALUES BELOW													
292	R	DRAWER ASSY - PROGRAM & MONITOR		2014041-071	NA	NAS-9-497	B	I	NOTE 11B	FOR DIMENSIONS SEE DASH 17 VALUES BELOW													
291	R	BUFFER CIRCUIT ASSY		2014254-041	NA	NAS-9-497	B	I	NOTE 11B	FOR DIMENSIONS SEE DASH 15 VALUES BELOW													
290	R	LOGIC DRAWER ASSY NO.2		2014037-051	NA	NAS-9-497	B	I	NOTE 11B	FOR DIMENSIONS SEE DASH 17 VALUES BELOW													
289	R	SELF TEST ASSY		2014392-021	NA	NAS-9-497	B	I	NOTE 11B	FOR DIMENSIONS SEE DASH 15 VALUES BELOW													
288	R	LOGIC DRAWER ASSY NO.1		2014036-051	NA	NAS-9-497	B	I	NOTE 11B	FOR DIMENSIONS SEE DASH 17 VALUES BELOW													
287	R	COMPUTER TEST SET		2014042-071	NA	NAS-9-497	B	II	NOTE 11C	FOR DIMENSIONS SEE DASH 18 VALUES BELOW													
286	R	DRAWER ASSY PROGRAM & MONITOR		2014041-061	NA	NAS-9-497	B	I	NOTE 11B	FOR DIMENSIONS SEE DASH 17 VALUES BELOW													
285	R	BUFFER CIRCUIT ASSY		2014254-031	NA	NAS-9-497	B	I	NOTE 11B	FOR DIMENSIONS SEE DASH 15 VALUES BELOW													
284	R	LOGIC DRAWER ASSY NO. 2		2014037-041	NA	NAS-9-497	B	I	NOTE 11B	FOR DIMENSIONS SEE DASH 17 VALUES BELOW													
283	R	DRAWER ASSY-PROGRAM & MONITOR		2014041-051	NA	NAS-9-497	B	I	NOTE 11B	FOR DIMENSIONS SEE DASH 17 VALUES BELOW													
282	R	COMPUTER TEST SET		2014042-061	NA	NAS-9-497	B	II	NOTE 11C	FOR DIMENSIONS SEE DASH 18 VALUES BELOW													
281	R	AGC HANDLING FIXTURE		2014282-031	NA	NAS-9-497	B	I	NOTE 11B	FOR DIMENSIONS SEE DASH 17 VALUES BELOW													
280	R	COMPUTER TEST SET		2014042-051	NA	NAS-9-497	B	II	NOTE 11C	FOR DIMENSIONS SEE DASH 18 VALUES BELOW													
279	R	SELF TEST ASSY		2014366-041	NA	NAS-9-497	B	I	NOTE 11B	FOR DIMENSIONS SEE DASH 15 VALUES BELOW													
278	R	LOGIC DRAWER ASSY NO. 1		2014036-041	NA	NAS-9-497	B	I	NOTE 11B	FOR DIMENSIONS SEE DASH 17 VALUES BELOW													
277	R	COMPUTER TEST SET		2014042-041	NA	NAS-9-497	B	II	NOTE 11C	FOR DIMENSIONS SEE DASH 18 VALUES BELOW													
276	R	DRAWER ASSY-PROGRAM & MONITOR		2014041-041	NA	NAS-9-497	B	I	NOTE 11B	FOR DIMENSIONS SEE DASH 17 VALUES BELOW													
275	R	DRAWER ASSY RDC INTERFACE		2014045-031	NA	NAS-9-497	B	I	NOTE 11B	FOR DIMENSIONS SEE DASH 15 VALUES BELOW													
274	R	SELF TEST ASSY		2014366-031	NA	NAS-9-497	B	I	NOTE 11B	FOR DIMENSIONS SEE DASH 15 VALUES BELOW													
273	R	LOGIC DRAWER ASSY NO. 2		2014037-031	NA	NAS-9-497	B	I	NOTE 11B	FOR DIMENSIONS SEE DASH 17 VALUES BELOW													
272	R	DRAWING ASSY PROGRAMMER & MONITOR		2014041-031	NA	NAS-9-497	B	I	NOTE 11B	FOR DIMENSIONS SEE DASH 17 VALUES BELOW													
271	R	LOGIC DRAWER ASSY NO. 1		2014036-031	NA	NAS-9-497	B	I	NOTE 11B	FOR DIMENSIONS SEE DASH 17 VALUES BELOW													
270	R	COMPUTER TEST SET		2014042-031	NA	NAS-9-497	B	II	NOTE 11C	FOR DIMENSIONS SEE DASH 18 VALUES BELOW													
269	R	POWER CONTROL ASSY		2014044-021	NA	NAS-9-497	B	I	NOTE 11B	FOR DIMENSIONS SEE DASH 17 VALUES BELOW													
268	R	SELF TEST ASSY		2014366-021	NA	NAS-9-497	B	I	NOTE 11B	[illegible]													
267	R	AGC JUNCTION ASSY		2014341-021	NA	NAS-9-497	B	I	NOTE 11B	FOR DIMENSIONS SEE DASH 15 VALUES BELOW													
266	R	POWER CONTROL ASSY		2014079-021	NA	NAS-9-497	B	I	NOTE 11B	FOR DIMENSIONS SEE DASH 15 VALUES BELOW													
265	R	BUFFER CIRCUIT ASSY		2014254-021	NA	NAS-9-497	B	I	NOTE 11B	FOR DIMENSIONS SEE DASH 15 VALUES BELOW													
264	R	DRAWER ASSY X Y INTERFACE		2014040-021	NA	NAS-9-497	B	I	NOTE 11B	FOR DIMENSIONS SEE DASH 15 VALUES BELOW													
263	R	DRAWER ASSY RDC INTERFACE		[illegible]	NA	NAS-9-497	B	I	NOTE 11B	FOR DIMENSIONS SEE DASH 15 VALUES BELOW													
262	R	DRAWER ASSY PROGRAMMER & MONITOR		2014041-021	NA	NAS-9-497	B	I	NOTE 11B	FOR DIMENSIONS SEE DASH 17 VALUES BELOW													
261	R	LOGIC DRAWER ASSY NO. 2		2014037-021	NA	NAS-9-497	B	I	NOTE 11B	FOR DIMENSIONS SEE DASH 17 VALUES BELOW													
260	R	LOGIC DRAWER ASSY NO. 1		2014036-021	NA	NAS-9-497	B	I	NOTE 11B	FOR DIMENSIONS SEE DASH 17 VALUES BELOW													
259	R	OPERATION CONSOLE		2014024-021	NA	NAS-9-497	B	II	NOTE 11C	FOR DIMENSIONS SEE DASH 18 VALUES BELOW													
258	R	COMPUTER TEST SET		2014042-021	NA	NAS-9-497	B	II	NOTE 11C	FOR DIMENSIONS SEE DASH 18 VALUES BELOW													
257	R	AUXILIARY CALIBRATION CONSOLE		2014059-021	NA	NAS-9-497	B	II	NOTE 11C	FOR DIMENSIONS SEE DASH 18 VALUES BELOW													
256	R	AGC CALIBRATION CONSOLE		2014049-021	NA	NAS-9-497	B	II	NOTE 11C	FOR DIMENSIONS SEE DASH 18 VALUES BELOW													
255	R	AGC HANDLING FIXTURE		2014282-021	NA	NAS-9-497	B	I	NOTE 11B	FOR DIMENSIONS SEE DASH 17 VALUES BELOW													
254	R	DRAWER ASSY COMP. SIMULATOR		2014048-011	NA	NAS-9-497	B	II	NOTE 11C	FOR DIMENSIONS SEE DASH 18 VALUES BELOW													
253	R	SHIPPING KIT ASSY, NAV DSKY		2016312-011	NA	NAS-9-497	B	II	NOTE 11C	FOR DIMENSIONS SEE DASH 18 VALUES BELOW													
252	R	SHIPPING KIT ASSY, UNIVERSAL DSKY		2016316-011	NA	NAS-9-497	B	II	NOTE 11C	FOR DIMENSIONS SEE DASH 18 VALUES BELOW													
251	R	SHIPPING KIT ASSY, MAIN DSKY		2016313-011	NA	NAS-9-497	B	II	NOTE 11C	FOR DIMENSIONS SEE DASH 18 VALUES BELOW													
250	R	AMPLIFIER REWORK		[illegible]	NA	NAS-9-497	B	I	NOTE 11B	FOR DIMENSIONS SEE DASH 15 VALUES BELOW													
249	R	TEMP MONITOR ASSY		2014313-011	NA	NAS-9-497	B	I	NOTE 11C	FOR DIMENSIONS SEE DASH 17 VALUES BELOW													
248	R	AGC JUNCTION ASSY		2014341-011	NA	NAS-9-497	B	I	NOTE 11B	FOR DIMENSIONS SEE DASH 15 VALUES BELOW													
247	R	AC INPUT PANEL ASSY		2014302-011	NA	NAS-9-497	B	I	NOTE 11B	FOR DIMENSIONS SEE DASH 15 VALUES BELOW													
246	R	SELF TEST ASSY		2014392-011	NA	NAS-9-497	B	I	NOTE 11B	FOR DIMENSIONS SEE DASH 15 VALUES BELOW													
245	R	TAPE PUNCH ASSEMBLY		2014039-011	NA	NAS-9-497	B	I	NOTE 11B	FOR DIMENSIONS SEE DASH 15 VALUES BELOW													
244	R	TAPE READER ASSEMBLY		2014038-011	NA	NAS-9-497	B	I	NOTE 11B	FOR DIMENSIONS SEE DASH 15 VALUES BELOW													
243																							
242																							
241	R	APOLLO GUIDANCE COMPUTER GROUP		6003001	NA	NAS-9-497	A	I	NOTE 11B	FOR DIMENSIONS SEE DASH 19 VALUES BELOW													
240	R	SELF TEST ASSEMBLY		2014366-011	NA	NAS-9-497	B	I	NOTE 11B	FOR DIMENSIONS SEE DASH 15 VALUES BELOW													
239	R	POWER SUPPLY ASSY-115V., 400 CYCLE		2014207-011	NA	NAS-9-497	B	I	NOTE 11B	FOR DIMENSIONS SEE DASH 17 VALUES BELOW													
238	R	AC INPUT PANEL ASSY		2014043-011	NA	NAS-9-497	B	I	NOTE 11B	FOR DIMENSIONS SEE DASH 17 VALUES BELOW													
237	R	POWER CONTROL ASSY		2014079-011	NA	NAS-9-497	B	I	NOTE 11B	FOR DIMENSIONS SEE DASH 15 VALUES BELOW													
236	R	DRAWER ASSY-X Y INTERFACE		2014040-011	NA	NAS-9-497	B	I	NOTE 11B	FOR DIMENSIONS SEE DASH 15 VALUES BELOW													
235	R	DRAWER ASSY RDC INTERFACE		2014045-011	NA	NAS-9-497	B	I	NOTE 11B	FOR DIMENSIONS SEE DASH 15 VALUES BELOW													
234	R	BUFFER CIRCUIT ASSY		2014254-011	NA	NAS-9-497	B	I	NOTE 11B	FOR DIMENSIONS SEE DASH 15 VALUES BELOW													
233	R	CONTROL & INTERFACE ASSY		2014204-011	NA	NAS-9-497	B	I	NOTE 11B	FOR DIMENSIONS SEE DASH 15 VALUES BELOW													
232	R	POWER CONTROL ASSY		2014044-011	NA	NAS-9-497	B	I	NOTE 11B	FOR DIMENSIONS SEE DASH 17 VALUES BELOW													
231	R	DRAWER ASSY, PROGRAMMER & MONITOR		2014041-011	NA	NAS-9-497	B	I	NOTE 11B	FOR DIMENSIONS SEE DASH 17 VALUES BELOW													
230	R	CONNECTOR INTERFACE ASSY		2014272-011	NA	NAS-9-497	B	I	NOTE 11B	FOR DIMENSIONS SEE DASH 15 VALUES BELOW													
229	R	CONNECTOR INTERFACE ASSY		2014047-011	NA	NAS-9-497	B	I	NOTE 11B	FOR DIMENSIONS SEE DASH 15 VALUES BELOW													
228	R	ANTENNA, TUNING CAPACITOR ASSY		2014209-011	NA	NAS-9-497	B	I	NOTE 11B	FOR DIMENSIONS SEE DASH 15 VALUES BELOW													
227	R	MOUNTING FIXTURE ASSY		2014006-011	NA	NAS-9-497	B	I	NOTE 11B	FOR DIMENSIONS SEE DASH 17 VALUES BELOW													
226	R	POWER SUPPLY ASSY 3 VDC		2014234-011	NA	NAS-9-497	B	I	NOTE 11B	FOR DIMENSIONS SEE DASH 15 VALUES BELOW													
225	R	PANEL ASSY—SIGNAL INTERFACE		2014010-011	NA	NAS-9-497	B	I	NOTE 11B	FOR DIMENSIONS SEE DASH 15 VALUES BELOW													
224	R	OSCILLOSCOPE ASSY		2014232-011	NA	NAS-9-497	B	I	NOTE 11B	FOR DIMENSIONS SEE DASH 15 VALUES BELOW													
223	R	AUXILIARY OUTLET ASSY		2014274-011	NA	NAS-9-497	B	I	NOTE 11B	FOR DIMENSIONS SEE DASH 15 VALUES BELOW													
222	R	FREQUENCY COUNTER		2014233-011	NA	NAS-9-497	B	I	NOTE 11B	FOR DIMENSIONS SEE DASH 15 VALUES BELOW													
221	R	POWER SUPPLY ASSY 10, 13, 28 VDC		2014235-011	NA	NAS-9-497	B	I	NOTE 11B	FOR DIMENSIONS SEE DASH 15 VALUES BELOW													
220	R	LOGIC DRAWER ASSY NO. 2		2014037-011	NA	NAS-9-497	B	I	NOTE 11B	FOR DIMENSIONS SEE DASH 17 VALUES BELOW													
219	R	LOGIC DRAWER ASSY NO. 1		2014036-011	NA	NAS-9-497	B	I	NOTE 11B	FOR DIMENSIONS SEE DASH 17 VALUES BELOW													
218	R	COUNTER, ELECTRICAL ASSY		2014288-011	NA	NAS-9-497	B	I	NOTE 11B	FOR DIMENSIONS SEE DASH 15 VALUES BELOW													
217	R	POWER SUPPLY ASSY		2014279-011	NA	NAS-9-497	B	I	NOTE 11B	FOR DIMENSIONS SEE DASH 15 VALUES BELOW													
216	R	TEST MOUNT ASSY		2014257-011	NA	NAS-9-497	B	I	NOTE 11B	FOR DIMENSIONS SEE DASH 15 VALUES BELOW													
215	R	UNIVERSAL DSKY PEDESTAL MOUNT		2014014-011	NA	NAS-9-497	B	I	NOTE 11B	FOR DIMENSIONS SEE DASH 17 VALUES BELOW													
214	R	MAIN DSKY PEDESTAL MOUNT		2014343	NA	NAS-9-497	B	I	NOTE 11B	FOR DIMENSIONS SEE DASH 17 VALUES BELOW													
213	R	SHIPPING CONTAINER, MAIN DSKY		1006229	NA	NAS-9-497	B	II	NOTE 11C	FOR DIMENSIONS SEE DASH 18 VALUES BELOW													
212	R	SHIPPING CONTAINER, NAV DSKY		1006231	NA	NAS-9-497	B	II	NOTE 11C	FOR DIMENSIONS SEE DASH 18 VALUES BELOW													
211	R	SHIPPING CONTAINER, AGC		1006230	NA	NAS-9-497	B	II	NOTE 11C	FOR DIMENSIONS SEE DASH 18 VALUES BELOW													
210	R	SHIPPING CONTAINER, UNIVERSAL DSKY		1006422	NA	NAS-9-497	B	II	NOTE 11C	FOR DIMENSIONS SEE DASH 18 VALUES BELOW													
209	R	SHIPPING CONTAINER, AGC		1006421	NA	NAS-9-497	B	II	NOTE 11C	FOR DIMENSIONS SEE DASH 18 VALUES BELOW													
208	R	UNIVERSAL DSKY HANDLING FIXTURE		2014013-011	NA	NAS-9-497	B	I	NOTE 11B	FOR DIMENSIONS SEE DASH 15 VALUES BELOW													
207	R	NAV DSKY HANDLING FIXTURE		1014377	NA	NAS-9-497	B	I	NOTE 11B	FOR DIMENSIONS SEE DASH 17 VALUES BELOW													
206	R	MAIN DSKY HANDLING FIXTURE		1014334	NA	NAS-9-497	B	I	NOTE 11B	FOR DIMENSIONS SEE DASH 17 VALUES BELOW													
205	R	AGC HANDLING FIXTURE		2014282-011	NA	NAS-9-497	B	I	NOTE 11B	FOR DIMENSIONS SEE DASH 17 VALUES BELOW													
204	R	OPERATION CONSOLE		2014024-011	NA	NAS-9-497	B	II	NOTE 11C	FOR DIMENSIONS SEE DASH 18 VALUES BELOW													
203	R	COMPUTER TEST SET		2014042-011	NA	NAS-9-497	B	II	NOTE 11C	FOR DIMENSIONS SEE DASH 18 VALUES BELOW													
202	R	DRAWER ASSY, COMPUTER SIMULATOR		2014048-011	NA	FMP-12775	B	II	NOTE 11C	FOR DIMENSIONS SEE DASH 18 VALUES BELOW													
201	R	AUXILIARY CALIBRATION CONSOLE		2014059-011	NA	NAS-9-497	B	II	NOTE 11C	FOR DIMENSIONS SEE DASH 18 VALUES BELOW													
200	R	AGC CALIBRATION CONSOLE		2014049-011	NA	NAS-9-497	B	II	NOTE 11C	FOR DIMENSIONS SEE DASH 18 VALUES BELOW													
21	R																						
20	R	NA		NA	NA	NA	A	II	NOTE 11C	2.000	1.312	1.687	1.375	.078	.031	.078	.093	[illegible]	.093	1.187	.750	.593	.453
19	R	NA		NA	NA	NA	A	I	NOTE 11B	2.000	1.312	1.687	1.375	.078	.031	.078	.093	NA	NA	1.187	.750	.593	.453
18	R	NA		NA	NA	NA	B	II	NOTE 11C	4.187	1.875	3.469	2.750	.156	.093	.156	.125	[illegible]	.125	1.625	1.032	.844	.656
17	R	NA		NA	NA	NA	B	I	NOTE 11B	4.187	1.875	3.469	2.750	.156	.093	.156	.125	NA	NA	1.625	1.032	.844	.656
16	R	NA		NA	NA	NA	B	II	NOTE 11C	2.000	1.312	1.687	1.375	.078	.031	.078	.093	[illegible]	.093	1.187	.750	.593	.453
15	R	NA		NA	NA	NA	B	I	NOTE 11B	2.000	1.312	1.687	1.375	.078	.031	.078	.093	NA	NA	1.187	.750	.593	.453

NOTES FOR TABLE

STYLE A IS FOR G & N SYSTEM
STYLE B IS FOR GROUND SUPPORT EQUIPMENT
TYPE I IS WITHOUT MOUNTING HOLES
TYPE II IS WITH MOUNTING HOLES

SYM	ZONE	DESCRIPTION	CHG NO	DATE	APPD
REVISIONS					
CL		REPLACES REV CK WITHOUT CHANGE PER TDRR 34365		[illegible]	[illegible]
CM		REVISION STATUS CHANGED		[illegible] OCT 67	RAK
CN		REVISION STATUS CHANGED .		31 OCT 67	JRK
CP		REVISION STATUS CHANGED		[illegible] NOV 67	EMS
CR		REVISION STATUS CHANGED		[illegible]	[illegible]
CS		REVISION STATUS CHANGED		3 JAN 68	JW EWW
CT		REVISED PER TDRR 35526		[illegible] 68	[illegible]
CU		REVISION STATUS CHANGED		22 [illegible]	JRK
CV		REVISION STATUS CHANGED		[illegible] 68	[illegible]
CW		REVISION STATUS CHANGED		[illegible]	[illegible]
CY		REVISED PER TDRR 36028		16 APR 68	A.N.
CZ		REVISION STATUS CHANGED		23 MAY 68	[illegible]

VALUES BELOW
VALUES BELOW
VALUES BELOW
VALUES BELOW
VALUES BELOW
VALUES BELOW
VALUES BELOW
VALUES BELOW
VALUES BELOW
VALUES BELOW
VALUES BELOW
VALUES BELOW
VALUES BELOW
VALUES BELOW
VALUES BELOW
VALUES BELOW
VALUES BELOW
VALUES BELOW
VALUES BELOW
VALUES BELOW
VALUES BELOW
VALUES BELOW
VALUES BELOW
VALUES BELOW
VALUES BELOW
VALUES BELOW
VALUES BELOW
VALUES BELOW
VALUES BELOW
VALUES BELOW
VALUES BELOW
VALUES BELOW
VALUES BELOW
VALUES BELOW
VALUES BELOW
VALUES BELOW
VALUES BELOW
VALUES BELOW
VALUES BELOW
VALUES BELOW
VALUES BELOW
VALUES BELOW
VALUES BELOW
VALUES BELOW
VALUES BELOW
VALUES BELOW
VALUES BELOW
VALUES BELOW
VALUES BELOW
VALUES BELOW
VALUES BELOW

VALUES BELOW
VALUES BELOW
VALUES BELOW
VALUES BELOW
VALUES BELOW
VALUES BELOW
VALUES BELOW
VALUES BELOW
VALUES BELOW
VALUES BELOW
VALUES BELOW
VALUES BELOW
VALUES BELOW
VALUES BELOW
VALUES BELOW
VALUES BELOW
VALUES BELOW
VALUES BELOW
VALUES BELOW
VALUES BELOW
VALUES BELOW
VALUES BELOW
VALUES BELOW
VALUES BELOW
VALUES BELOW
VALUES BELOW
VALUES BELOW
VALUES BELOW
VALUES BELOW
VALUES BELOW
VALUES BELOW
VALUES BELOW
VALUES BELOW
VALUES BELOW
VALUES BELOW
VALUES BELOW
VALUES BELOW
VALUES BELOW
VALUES BELOW
VALUES BELOW
VALUES BELOW
VALUES BELOW
VALUES BELOW

	F	G	H	J	K	L	M	N	P	R	S	T	U	V	W	Y	Z	AA	AB	AC	AD	AE	AF	AG	AH	AJ	AK	AL	AM	AN	AP	AR
[illegible]	.031	.078	.093	[illegible]	.093	1.187	.750	.593	.453	1.015	.062	.187	.078	.875	.718	1.375	.218	1.156	1.843	.048	NA	.875	.305	.078	.312	1.687	.078	NA	.078	.312	.187	1.843
[illegible]	.031	.078	.093	NA	NA	1.187	.750	.593	.453	1.015	.062	.187	.078	.875	.718	1.375	.218	NA	NA	.048	.031	.875	.305	.078	.312	1.687	.078	NA	.078	.312	.187	NA
[illegible]	[illegible]	[illegible]	.125	[illegible]	.125	1.625	1.032	.844	.656	1.406	.093	.344	.156	1.781	1.531	2.844	.312	1.562	3.875	.062	NA	1.219	.500	.156	.719	3.469	.156	NA	.156	.719	.344	3.875
[illegible]	[illegible]	[illegible]	[illegible]	NA	NA	1.625	1.032	.844	.656	1.406	.093	.344	.156	1.781	1.531	2.844	.312	NA	NA	.062	.062	1.219	.500	.156	.719	3.469	.156	NA	.156	.719	.344	NA
[illegible]	.031	.078	.093	[illegible]	.093	1.187	.750	.593	.453	1.015	.062	.187	.078	.875	.718	1.375	.218	1.156	1.843	.048	NA	.875	.305	.078	.312	1.687	.078	NA	.078	.312	.187	1.843
[illegible]	[illegible]	.075	[illegible]	NA	NA	1.187	.750	.593	.453	1.015	.062	.187	.078	.875	.718	1.375	.218	NA	NA	.048	.031	.875	.305	.078	.312	1.687	.078	NA	.078	.312	.187	NA

RAYTHEON DASH NUMBERS

APPLICATION	NEXT ASSY: AS APPLICABLE / USED ON:
UNLESS OTHERWISE SPECIFIED	DIMENSIONS ARE IN INCHES. TOLERANCES ON: 2 PLACE DECIMALS ± ; 3 PLACE DECIMALS ± .005 ; ANGLES ± —
	DO NOT SCALE THIS DRAWING
MATERIAL	SEE NOTE H
	APPROVAL
	M.I.T. INSTRUMENTATION LAB, Cambridge, Mass.
DRAWN	R.A. JONES — DATE 16 JUL 65
CHECKED	W. KUPFER 22 JUL 65
APPROVAL	
CONTRACT	
NASA APPROVAL	T. MICHAELS 22 JUL 65
MIT APPROVAL	W. KUPFER 22 JUL 65
	MANNED SPACECRAFT CENTER, HOUSTON, TEXAS
TITLE	NAMEPLATES, APOLLO GEN - GSE (STANDARDS)
SIZE	J2
CODE IDENT NO.	80230
DRAWING NO.	1004260
SCALE	NONE
SHEET	3 OF 6

1004260 CZ

1004260

AC DASH NUMBERS CONTINUED ON SHEET 6

DASH NO.	P/C	PART NAME	REMARKS	PART NUMBER	SER. NO.	CONT. NO.	STYLE	TYPE	MATERIAL	A	B	C	D	E	F	G	H	J	K	L	M	N
199	AC	EYEPIECE STORAGE UNIT		2021255-011			A	I		FOR DIMENSIONS SEE DASH 100 VALUES BELOW												
198	AC	SIGNAL CONDITIONER ASSY C/M		2007234		NAS-9-497	A	I	NOTE 11B	FOR DIMENSIONS SEE DASH 100 VALUES BELOW												
197	AC	SIGNAL CONDITIONER ASSY C/M		2007235		NAS-9-497	A	I	NOTE 11B	FOR DIMENSIONS SEE DASH 100 VALUES BELOW												
196	AC	SIGNAL CONDITIONER ASSY LEM		6007010		NAS-9-497	A	I	NOTE 11B	FOR DIMENSIONS SEE DASH 100 VALUES BELOW												
195	AC	PSA & SIGNAL CONDITIONER ASSY		6007009		NAS-9-497	A	I	NOTE 11B	FOR DIMENSIONS SEE DASH 100 VALUES BELOW												
194	AC	PANEL, MONITOR		2900031-031		NAS-9-497	B	II	NOTE 11C	FOR DIMENSIONS SEE DASH 141 VALUES BELOW												
193	AC	DISTRIBUTION BOX, GSE		2900024-031		NAS-9-497	B	II	NOTE 11C	FOR DIMENSIONS SEE DASH 141 VALUES BELOW												
192	AC	ANALYZER, OPTICS-INERTIAL		2900023-031		NAS-9-497	B	II	NOTE 11C	FOR DIMENSIONS SEE DASH 144 VALUES BELOW												
191	AC	TEST CONTROL		2900027-031		NAS-9-497	B	II	NOTE 11C	FOR DIMENSIONS SEE DASH 141 VALUES BELOW												
190	AC	PANEL, PWR SUP AND LOAD		2900033-021		NAS-9-497	B	II	NOTE 11C	FOR DIMENSIONS SEE DASH 141 VALUES BELOW												
189	AC	ADPT MODULE, P.S.A.		6900088-011		NAS-9-497	B	II	NOTE 11C	FOR DIMENSIONS SEE DASH 141 VALUES BELOW												
188	AC	ADPT MODULE, P.S.A.		2901143-011		NAS-9-497	B	II	NOTE 11C	FOR DIMENSIONS SEE DASH 141 VALUES BELOW												
187	AC	FIXTURE, MTG, PTA/PEA		2900066-021		NAS-9-497	B	II	NOTE 11C	FOR DIMENSIONS SEE DASH 141 VALUES BELOW												
186	AC	ANNUNCIATOR PANEL & EYEPIECE STORAGE ASSEMBLY		1021255-021			A	I		FOR DIMENSIONS SEE DASH 100 VALUES BELOW												
185	AC	ANNUNCIATOR PANEL & EYEPIECE STORAGE ASSEMBLY		1021255-011			A	I		FOR DIMENSIONS SEE DASH 100 VALUES BELOW												
184	AC	FIX., HAND., G AND N HARNESS		1901846-041		NAS-9-497	B	II	NOTE 11C	FOR DIMENSIONS SEE DASH 144 VALUES BELOW												
183	AC	INSTALLING TOOL, ELEC. CONN		1902586-011		NAS-9-497	B	II	NOTE 11C	FOR DIMENSIONS SEE DASH 102 VALUES BELOW												
182	AC	ADPT MODULE, P.S.A.		6900088-011		NAS-9-497	B	II	NOTE 11C	FOR DIMENSIONS SEE DASH 141 VALUES BELOW												
181	AC	G & N INDICATOR CONTROL PANEL ASSY		2014578-011		NAS-9-497	A	I	NOTE 11B	3.000	1.938	2.437	NA	.125	.062	.188	.156	NA	NA	1.750	1.125	.906
180	AC	ADPT MODULE, P.S.A.		1902431-031		NAS-9-497	B	II		FOR DIMENSIONS SEE DASH 121 VALUES BELOW												
179	AC	MOUNTING PLATE, IMU/PTA		6900083-011		NAS-9-497	B	II		FOR DIMENSIONS SEE DASH 144 VALUES BELOW												
178	AC	MOUNTING PLATE, COMPONENT		6900007-021		NAS-9-497	B	II		FOR DIMENSIONS SEE DASH 144 VALUES BELOW												
177	AC	FIX., MOUNTING, SUBSYSTEM		2900070-021		NAS-9-497	B	II		FOR DIMENSIONS SEE DASH 144 VALUES BELOW												
176	AC	FIX., MOUNTING, G & N		2900067-021		NAS-9-497	B	II		FOR DIMENSIONS SEE DASH 144 VALUES BELOW												
175	AC	CSL, COOL. AND PWR, G & N		1902134-031		NAS-9-497	B	II		FOR DIMENSIONS SEE DASH 144 VALUES BELOW												
174	AC	FIX., HAND., C/M AND LEM CDU		2900944-011		NAS-9-497	B	II	NOTE 11C	FOR DIMENSIONS SEE DASH 141 VALUES BELOW												
173	AC	FIX., HANDLING, C/M PSA		2900998-011		NAS-9-497	B	II	NOTE 11C	FOR DIMENSIONS SEE DASH 141 VALUES BELOW												
172	AC	CAGING ELECTRONICS, GYRO		2900029-021		NAS-9-497	B	II	NOTE 11C	FOR DIMENSIONS SEE DASH 141 VALUES BELOW												
171	AC	DISTRIBUTION BOX, GSE		2900024-021		NAS-9-497	B	II	NOTE 11C	FOR DIMENSIONS SEE DASH 141 VALUES BELOW												
170	AC	ANALYZER, OPTICS-INERTIAL		2900023-021		NAS-9-497	B	II	NOTE 11C	FOR DIMENSIONS SEE DASH 144 VALUES BELOW												
169	AC	ADPT, TESTPOINT, P.S.A.		2900037-021		NAS-9-497	B	II	NOTE 11C	FOR DIMENSIONS SEE DASH 141 VALUES BELOW												
168	AC	TEST SELECTOR		2900028-021		NAS-9-497	B	II	NOTE 11C	FOR DIMENSIONS SEE DASH 141 VALUES BELOW												
167	AC	TEST CONTROL		2900027-021		NAS-9-497	B	II	NOTE 11C	FOR DIMENSIONS SEE DASH 141 VALUES BELOW												
166	AC	PANEL, MONITOR		2900031-021		NAS-9-497	B	II	NOTE 11C	FOR DIMENSIONS SEE DASH 141 VALUES BELOW												
165	AC	TERM. BOARD STORAGE DRAWER		2900927-011		NAS-9-497	B	II	NOTE 11C	FOR DIMENSIONS SEE DASH 141 VALUES BELOW												
164	AC	INPUT/OUTPUT PANEL		2900926-011		NAS-9-497	B	II	NOTE 11C	FOR DIMENSIONS SEE DASH 141 VALUES BELOW												
163	AC	CONTROL PANEL		2900896-011		NAS-9-497	B	II	NOTE 11C	FOR DIMENSIONS SEE DASH 141 VALUES BELOW												
162	AC	CSL, CAL AND TEST, SCM/PSAAM		2900895-011		NAS-9-497	B	II	NOTE 11C	FOR DIMENSIONS SEE DASH 144 VALUES BELOW												
161	AC	FIX., LIFT AND HAND., IMU		1015462-011		NAS-9-497	B	II	NOTE 11C	FOR DIMENSIONS SEE DASH 141 VALUES BELOW												
160	AC	FIX., HAND., G & N HARNESS		1901846-031		NAS-9-497	B	II	NOTE 11C	FOR DIMENSIONS SEE DASH 144 VALUES BELOW												
159	AC	BATTERY POWER PACK		1900011-031		NAS-9-497	B	II	NOTE 11C	FOR DIMENSIONS SEE DASH 144 VALUES BELOW												
158	AC	COUPLING DATA UNIT ASSEMBLY C/M		2007222		NAS-9-497	A	I	NOTE 11B	FOR DIMENSIONS SEE DASH 100 VALUES BELOW												
157	AC	COUPLING DATA UNIT ASSEMBLY - LEM		2007222		NAS-9-497	A	I	NOTE 11B	FOR DIMENSIONS SEE DASH 100 VALUES BELOW												
156	AC	POWER & SERVO ASSEMBLY C/M		2007200		NAS-9-497	A	I	NOTE 11B	2.125	.968	1.718	NA	.093	.031	.06	.093	NA	NA	.858	.608	.484
155	AC	PIPA ELECTRONICS ASSEMBLY		2007201		NAS-9-497	A	I	NOTE 11B	FOR DIMENSIONS SEE DASH 100 VALUES BELOW												
154	AC	PULSE TORQUE ASSEMBLY-LEM		6007000		NAS-9-497	A	I	NOTE 11B	FOR DIMENSIONS SEE DASH 100 VALUES BELOW												
153	AC	POWER & SERVO ASSEMBLY LEM		6007200		NAS-9-497	A	I	NOTE 11B	FOR DIMENSIONS SEE DASH 100 VALUES BELOW												
152	AC	CONT PNL, RSVR CKT TESTER		2900770-011		NAS-9-497	B	II	NOTE 11C	FOR DIMENSIONS SEE DASH 141 VALUES BELOW												
151	AC	TESTER, RESOLVER CIRCUIT		2900708-011		NAS-9-497	B	II	NOTE 11C	FOR DIMENSIONS SEE DASH 141 VALUES BELOW												
150	AC	JUNCTION BOX, P.S.A./G.S.E.		1901933-021		NAS-9-497	B	II	NOTE 11C	FOR DIMENSIONS SEE DASH 144 VALUES BELOW												
149	AC	BATTERY PACK, LIFTING		2900812-011		NAS-9-497	B	II	NOTE 11C	FOR DIMENSIONS SEE DASH 141 VALUES BELOW												
148	AC	MOUNTING PLATE, COMPONENT		6900007-011		NAS-9-497	B	II	NOTE 11C	FOR DIMENSIONS SEE DASH 144 VALUES BELOW												
147	AC	MOUNTING PLATE, COMPONENT		2900677-011		NAS-9-497	B	II	NOTE 11C	FOR DIMENSIONS SEE DASH 144 VALUES BELOW												
146	AC	CART, TRANS, G & N		1900009-041		NAS-9-497	B	II	NOTE 11C	FOR DIMENSIONS SEE DASH 144 VALUES BELOW												
145	AC	CONTAINER, SHIPPING, IMU		1900010-021		NAS-9-497	B	II	NOTE 11C	FOR DIMENSIONS SEE DASH 144 VALUES BELOW												
144	AC	FIX., MOUNTING, G & N		1902204-021			B	II	NOTE 11C	4.125	1.812	3.250	NA	.125	.062	.12	.156		.125	1.625	1.140	.890
143	AC	CSL, COOL. AND PWR, G & N		1902134-021			B	II	NOTE 11C	4.125	1.812	3.250	NA	.125	.062	.12	.156		.125	1.625	1.140	.890
142	AC	ANALYZER, OPTICS-INERTIAL		2900023-011			B	II	NOTE 11C	4.125	1.812	3.250	NA	.125	.062	.12	.156		.125	1.625	1.140	.890
141	AC	CONT, TEMP, PORTABLE		2900060-011			B	II	NOTE 11C	2.125	.968	1.718	NA	.093	.031	.06	.093		.093	.858	.608	.484
140	AC	TESTER, CKT, IMU/CDU RSVR		2900286-011			B	II	NOTE 11C	4.125	1.812	3.250	NA	.125	.062	.12	.156		.125	1.625	1.140	.890
139	AC	SIMULATOR, LD/SIG, CDU		2900285-011			B	II	NOTE 11C	4.125	1.812	3.250	NA	.125	.062	.12	.156		.125	1.625	1.140	.890
138	AC	SIMULATOR, LD/SIG, OPTICS		1902023-021			B	II	NOTE 11C	4.125	1.812	3.250	NA	.125	.062	.12	.156		.125	1.625	1.140	.890
137	AC	FIX., MOUNTING, IMU/NAV BASE		6900003-011			B	II	NOTE 11C	4.125	1.812	3.250	NA	.125	.062	.12	.156		.125	1.625	1.140	.890
136	AC	FIXTURE, OPTICS/NAV BASE		2900072-011			B	II	NOTE 11C	4.125	1.812	3.250	NA	.125	.062	.12	.156		.125	1.625	1.140	.890
135	AC	FIX., MOUNTING, SUB SYSTEM		2900070-011			B	II	NOTE 11C	4.125	1.812	3.250	NA	.125	.062	.12	.156		.125	1.625	1.140	.890
134	AC	FIX., HAND., G & N HARNESS		2900069-011			B	II	NOTE 11C	4.125	1.812	3.250	NA	.125	.062	.12	.156		.125	1.625	1.140	.890
133	AC	CNTR, SHIPPING, NAV BASE		2900068-011			B	II	NOTE 11C	4.125	1.812	3.250	NA	.125	.062	.12	.156		.125	1.625	1.140	.890
132	AC	FIX., MOUNTING, G & N		2900067-011			B	II	NOTE 11C	4.125	1.812	3.250	NA	.125	.062	.12	.156		.125	1.625	1.140	.890
131	AC	SIMULATOR, LD/SIG, IMU/CDU		2900062-011			B	II	NOTE 11C	4.125	1.812	3.250	NA	.125	.062	.12	.156		.125	1.625	1.140	.890
130	AC	TESTER, GYRO WHEEL		2900061-011			B	II	NOTE 11C	4.125	1.812	3.250	NA	.125	.062	.12	.156		.125	1.625	1.140	.890
129	AC	COOLANT SUPPLY		1902133-021			B	II	NOTE 11C	4.125	1.812	3.250	NA	.125	.062	.12	.156		.125	1.625	1.140	.890
128	AC	TABLE, ROTARY		1900926-021			B	II	NOTE 11C	4.125	1.812	3.250	NA	.125	.062	.12	.156		.125	1.625	1.140	.890
127	AC	FIX., HAND., OPTICS		2900074-011			B	II	NOTE 11C	2.125	.968	1.718	NA	.093	.031	.06	.093		.093	.858	.608	.484
126	AC	FIXTURE, MTG, PTA/PEA.		2900066-011			B	II	NOTE 11C	2.125	.968	1.718	NA	.093	.031	.06	.093		.093	.858	.608	.484
125	AC	CONT, TEMP, IMU LIFTING		2900063-011			B	II	NOTE 11C	2.125	.968	1.718	NA	.093	.031	.06	.093		.093	.858	.608	.484
124	AC	FIXTURE, HANDLING, IMU		2900064-011			B	II	NOTE 11C	2.125	.968	1.718	NA	.093	.031	.06	.093		.093	.858	.608	.484
123	AC	CONT, OPTICS, REMOTE		1902046-021			B	II	NOTE 11C	2.125	.968	1.718	NA	.093	.031	.06	.093		.093	.858	.608	.484
122	AC	TEST CONTROL		1902009-021			B	II	NOTE 11C	2.125	.968	1.718	NA	.093	.031	.06	.093		.093	.858	.608	.484
121	AC	ADPT MODULE, P.S.A.		1902431-021			B	II	NOTE 11C	2.125	.968	1.718	NA	.093	.031	.06	.093		.093	.858	.608	.484
120	AC	BRIDGE, DECADE ERROR		2900128-011			B	II	NOTE 11C	2.125	.968	1.718	NA	.093	.031	.06	.093		.093	.858	.608	.484
119	AC	PWR SUP, ELECTRONICS		2900012-011			B	II	NOTE 11C	2.125	.968	1.718	NA	.093	.031	.06	.093		.093	.858	.608	.484
118	AC	PWR SUP, RELAY AND LAMP		1900049-031			B	II	NOTE 11C	2.125	.968	1.718	NA	.093	.031	.06	.093		.093	.858	.608	.484
117	AC	CONSOLE, OSCILLOGRAPH		1900000-021			B	II	NOTE 11C	2.125	.968	1.718	NA	.093	.031	.06	.093		.093	.858	.608	.484
116	AC	ADPT MODULE, P.S.A.		1902431-011			B	II	NOTE 11C	2.125	.968	1.718	NA	.093	.031	.06	.093		.093	.858	.608	.484
115	AC	ADPT, TEST POINT, PTA/PEA.		2900145-011			B	II	NOTE 11C	2.125	.968	1.718	NA	.093	.031	.06	.093		.093	.858	.608	.484
114	AC	ADPT, TEST POINT, P.S.A.		2900037-011			B	II	NOTE 11C	2.125	.968	1.718	NA	.093	.031	.06	.093		.093	.858	.608	.484
113	AC	CONTROL, GIMBAL POSITION		2900036-011			B	II	NOTE 11C	2.125	.968	1.718	NA	.093	.031	.06	.093		.093	.858	.608	.484
112	AC	SELECTOR, SIGNAL, PRIMARY		2900035-011			B	II	NOTE 11C	2.125	.968	1.718	NA	.093	.031	.06	.093		.093	.858	.608	.484
111	AC	SEL, SIG, OSCILLOGRAPH		2900034-011			B	II	NOTE 11C	2.125	.968	1.718	NA	.093	.031	.06	.093		.093	.858	.608	.484
110	AC	PANEL, PWR SUP AND LOAD		2900033-011			B	II	NOTE 11C	2.125	.968	1.718	NA	.093	.031	.06	.093		.093	.858	.608	.484
109	AC	PANEL, MONITOR		2900031-011			B	II	NOTE 11C	2.125	.968	1.718	NA	.093	.031	.06	.093		.093	.858	.608	.484
108	AC	PANEL, AUXILIARY INPUT		2900030-011			B	II	NOTE 11C	2.125	.968	1.718	NA	.093	.031	.06	.093		.093	.858	.608	.484
107	AC	CAGING ELECTRONICS, GYRO		2900029-011			B	II	NOTE 11C	2.125	.968	1.718	NA	.093	.031	.06	.093		.093	.858	.608	.484
106	AC	TEST SELECTOR		2900028-011			B	II	NOTE 11C	2.125	.968	1.718	NA	.093	.031	.06	.093		.093	.858	.608	.484
105	AC	TEST CONTROL		2900027-011			B	II	NOTE 11C	2.125	.968	1.718	NA	.093	.031	.06	.093		.093	.858	.608	.484
104	AC	MONITOR AND CONTROL, TEMP		2900026-011			B	II	NOTE 11C	2.125	.968	1.718	NA	.093	.031	.06	.093		.093	.858	.608	.484
103	AC	DISTRIBUTION BOX, GSE		2900024-011			B	II	NOTE 11C	2.125	.968	1.718	NA	.093	.031	.06	.093		.093	.858	.608	.484
102	AC	VOLTMETER, DIGITAL		2900007-011			B	II	NOTE 11C	2.125	.968	1.718	NA	.093	.031	.06	.093		.093	.858	.608	.484
101	AC	NAVIGATION BASE ASSEMBLY-LEM		6899950		NAS-9-497	A	I	NOTE 11B	2.000	1.312	1.906	1.375	.078	.048	.078	.093	NA	NA	1.125	.750	.59
100	AC	NAVIGATION BASE ASSEMBLY		2899982		NAS-9-497	A	I	NOTE 11B	2.000	1.312	1.906	1.375	.078	.048	.078	.093	NA	NA	1.125	.750	.59

NOTES FOR TABLE

STYLE A IS FOR G & N SYSTEM
STYLE B IS FOR GROUND SUPPORT EQUIPMENT
TYPE I IS WITHOUT MOUNTING HOLES
TYPE II IS WITH MOUNTING HOLES

1004260	CZ	SHT 4

17 1004260

REVISIONS					
SYM	ZONE	DESCRIPTION	CHG NO	DATE	APPD
CL		REPLACES REV CK WITHOUT CHANGE PER TDRR 34368			JWL
CM		REVISION STATUS CHANGED		10 OCT 67	R.A.W.
CN		REVISION STATUS CHANGE		31 OCT 67	JRK
CP		REVISION STATUS CHANGE		6 NOV 67	EHS
CR		REVISION STATUS CHANGED			
CS		REVISION STATUS CHANGED		3 JAN 68	J.W. EHW
CT		REVISION STATUS CHANGED			LK
CU		REVISION STATUS CHANGED			JRK
CV		REVISION STATUS CHANGED			LK
CW		REVISION STATUS CHANGED			
CY		REVISION STATUS CHANGED		APR 68	
CZ		REVISION STATUS CHANGED			

	E	F	G	H	J	K	L	M	N	P	R	S	T	U	V	W	Y	Z	AA	AB	AC	AD	AE	AF	AG	AH	AJ	AK	AL	AM	AN	AP	AR
DASH 100 VALUES BELOW																																	
DASH 100 VALUES BELOW																																	
DASH 100 VALUES BELOW																																	
DASH 100 VALUES BELOW																																	
DASH 100 VALUES BELOW																																	
DASH 141 VALUES BELOW																																	
DASH 141 VALUES BELOW																																	
DASH 144 VALUES BELOW																																	
DASH 141 VALUES BELOW																																	
DASH 141 VALUES BELOW																																	
DASH 141 VALUES BELOW																																	
DASH 141 VALUES BELOW																																	
DASH 141 VALUES BELOW																																	
DASH 100 VALUES BELOW																																	
DASH 100 VALUES BELOW																																	
DASH 144 VALUES BELOW																																	
DASH 102 VALUES BELOW																																	
DASH 141 VALUES BELOW																																	
	.125	.062	.188	.156	NA	NA	1.750	1.125	.906	.688	1.500	NA	.281	.125	NA	1.094	2.062	.312	NA	2.500	.062	.125	1.312	.469	NA	NA	NA	.156	NA	.125	.469	.344	NA
DASH 121 VALUES BELOW																																	
DASH 144 VALUES BELOW																																	
DASH 144 VALUES BELOW																																	
DASH 144 VALUES BELOW																																	
DASH 144 VALUES BELOW																																	
DASH 144 VALUES BELOW																																	
DASH 141 VALUES BELOW																																	
DASH 141 VALUES BELOW																																	
DASH 141 VALUES BELOW																																	
DASH 141 VALUES BELOW																																	
DASH 144 VALUES BELOW																																	
DASH 141 VALUES BELOW																																	
DASH 141 VALUES BELOW																																	
DASH 141 VALUES BELOW																																	
DASH 141 VALUES BELOW																																	
DASH 141 VALUES BELOW																																	
DASH 141 VALUES BELOW																																	
DASH 141 VALUES BELOW																																	
DASH 144 VALUES BELOW																																	
DASH 141 VALUES BELOW																																	
DASH 144 VALUES BELOW																																	
DASH 144 VALUES BELOW																																	
DASH 100 VALUES BELOW																																	
DASH 100 VALUES BELOW																																	
	.093	.031	.06	.093	NA	NA	.858	.608	.484	.358	.733	.062	.140	.062	NA	.968	1.450	.125	NA	1.720	.046	.03	NA	.218	NA	NA	NA	.070	NA	.046	.32	.16	NA
DASH 100 VALUES BELOW																																	
DASH 100 VALUES BELOW																																	
DASH 100 VALUES BELOW																																	
DASH 141 VALUES BELOW																																	
DASH 141 VALUES BELOW																																	
DASH 144 VALUES BELOW																																	
DASH 141 VALUES BELOW																																	
DASH 144 VALUES BELOW																																	
DASH 144 VALUES BELOW																																	
DASH 144 VALUES BELOW																																	
DASH 144 VALUES BELOW																																	
	.125	.062	.12	.156		.125	1.625	1.140	.890	.640	1.390	.125	.171	.125	1.875	1.687	2.625	.250	1.562	3.843	.093	NA	NA	.359	.125	.437	3.688	NA	3.687	.093	.40	.25	3.875
	.125	.062	.12	.156		.125	1.625	1.140	.890	.640	1.390	.125	.171	.125	1.875	1.687	2.625	.250	1.562	3.843	.093	NA	NA	.359	.125	.437	3.688	NA	3.687	.093	.40	.25	3.875
	.125	.062	.12	.156		.125	1.625	1.140	.890	.640	1.390	.125	.171	.125	1.875	1.687	2.625	.250	1.562	3.843	.093	NA	NA	.359	.125	.437	3.688	NA	3.687	.093	.40	.25	3.875
	.093	.031	.06	.093		.093	.858	.608	.484	.358	.733	.077	.116	.062	.937	.875	1.343	.125	.781	1.892	.046	NA	NA	.209	.093	.250	1.875	NA	1.840	.046	.23	.16	1.938
	.125	.062	.12	.156		.125	1.625	1.140	.890	.640	1.390	.125	.171	.125	1.875	1.687	2.625	.250	1.562	3.843	.093	NA	NA	.359	.125	.437	3.688	NA	3.687	.093	.40	.25	3.375
	.125	.062	.12	.156		.125	1.625	1.140	.890	.640	1.390	.125	.171	.125	1.875	1.687	2.625	.250	1.562	3.843	.093	NA	NA	.359	.125	.437	3.688	NA	3.687	.093	.40	.25	3.875
	.125	.062	.12	.156		.125	1.625	1.140	.890	.640	1.390	.125	.171	.125	1.875	1.687	2.625	.250	1.562	3.843	.093	NA	NA	.359	.125	.437	3.688	NA	3.687	.093	.40	.25	3.875
	.125	.062	.12	.156		.125	1.625	1.140	.890	.640	1.390	.125	.171	.125	1.875	1.687	2.625	.250	1.562	3.843	.093	NA	NA	.359	.125	.437	3.688	NA	3.687	.093	.40	.25	3.875
	.125	.062	.12	.156		.125	1.625	1.140	.890	.640	1.390	.125	.171	.125	1.875	1.687	2.625	.250	1.562	3.843	.093	NA	NA	.359	.125	.437	3.688	NA	3.687	.093	.40	.25	3.875
	.125	.062	.12	.156		.125	1.625	1.140	.890	.640	1.390	.125	.171	.125	1.875	1.687	2.625	.250	1.562	3.843	.093	NA	NA	.359	.125	.437	3.688	NA	3.687	.093	.40	.25	3.875
	.125	.062	.12	.156		.125	1.625	1.140	.890	.640	1.390	.125	.171	.125	1.875	1.687	2.625	.250	1.562	3.843	.093	NA	NA	.359	.125	.437	3.688	NA	3.687	.093	.40	.25	3.875
	.125	.062	.12	.156		.125	1.625	1.140	.890	.640	1.390	.125	.171	.125	1.875	1.687	2.625	.250	1.562	3.843	.093	NA	NA	.359	.125	.437	3.688	NA	3.687	.093	.40	.25	3.375
	.125	.062	.12	.156		.125	1.625	1.140	.890	.640	1.390	.125	.171	.125	1.875	1.687	2.625	.250	1.562	3.843	.093	NA	NA	.359	.125	.437	3.688	NA	3.687	.093	.40	.25	3.875
	.125	.062	.12	.156		.125	1.625	1.140	.890	.640	1.390	.125	.171	.125	1.875	1.687	2.625	.250	1.562	3.843	.093	NA	NA	.359	.125	.437	3.688	NA	3.687	.093	.40	.25	3.875
	.125	.062	.12	.156		.125	1.625	1.140	.890	.640	1.390	.125	.171	.125	1.875	1.687	2.625	.250	1.562	3.843	.093	NA	NA	.359	.125	.437	3.688	NA	3.687	.093	.40	.25	3.875
	.125	.062	.12	.156		.125	1.625	1.140	.890	.640	1.390	.125	.171	.125	1.875	1.687	2.625	.250	1.562	3.843	.093	NA	NA	.359	.125	.437	3.688	NA	3.687	.093	.40	.25	3.875
	.125	.062	.12	.156		.125	1.625	1.140	.890	.640	1.390	.125	.171	.125	1.875	1.687	2.625	.250	1.562	3.843	.093	NA	NA	.359	.125	.437	3.688	NA	3.687	.093	.40	.25	3.875
	.093	.031	.06	.093		.093	.858	.608	.484	.358	.733	.077	.116	.062	.937	.875	1.343	.125	.781	1.892	.046	NA	NA	.209	.093	.250	1.875	NA	1.840	.046	.23	.16	1.938
	.093	.031	.06	.093		.093	.858	.608	.484	.358	.733	.077	.116	.062	.937	.875	1.343	.125	.781	1.892	.046	NA	NA	.209	.093	.250	1.875	NA	1.840	.046	.23	.16	1.938
	.093	.031	.06	.093		.093	.858	.608	.484	.358	.733	.077	.116	.062	.937	.875	1.343	.125	.781	1.892	.046	NA	NA	.209	.093	.250	1.875	NA	1.840	.046	.23	.16	1.938
	.093	.031	.06	.093		.093	.858	.608	.484	.358	.733	.077	.116	.062	.937	.875	1.343	.125	.781	1.892	.046	NA	NA	.209	.093	.250	1.875	NA	1.840	.046	.23	.16	1.938
	.093	.031	.06	.093		.093	.858	.608	.484	.358	.733	.077	.116	.062	.937	.875	1.343	.125	.781	1.892	.046	NA	NA	.209	.093	.250	1.875	NA	1.840	.046	.23	.16	1.938
	.093	.031	.06	.093		.093	.858	.608	.484	.358	.733	.077	.116	.062	.937	.875	1.343	.125	.781	1.892	.046	NA	NA	.209	.093	.250	1.875	NA	1.840	.046	.23	.16	1.938
	.093	.031	.06	.093		.093	.858	.608	.484	.358	.733	.077	.116	.062	.937	.875	1.343	.125	.781	1.892	.046	NA	NA	.209	.093	.250	1.875	NA	1.840	.046	.23	.16	1.938
	.093	.031	.06	.093		.093	.858	.608	.484	.358	.733	.077	.116	.062	.937	.875	1.343	.125	.781	1.892	.046	NA	NA	.209	.093	.250	1.875	NA	1.840	.046	.23	.16	1.938
	.093	.031	.06	.093		.093	.858	.608	.484	.358	.733	.077	.116	.062	.937	.875	1.343	.125	.781	1.892	.046	NA	NA	.209	.093	.250	1.875	NA	1.840	.046	.23	.16	1.938
	.093	.031	.06	.093		.093	.858	.608	.484	.358	.733	.077	.116	.062	.937	.875	1.343	.125	.781	1.892	.046	NA	NA	.209	.093	.250	1.875	NA	1.840	.046	.23	.16	1.938
	.093	.031	.06	.093		.093	.858	.608	.484	.358	.733	.077	.116	.062	.937	.875	1.343	.125	.781	1.892	.046	NA	NA	.209	.093	.250	1.875	NA	1.840	.046	.23	.16	1.938
	.093	.031	.06	.093		.093	.858	.608	.484	.358	.733	.077	.116	.062	.937	.875	1.343	.125	.781	1.892	.046	NA	NA	.209	.093	.250	1.875	NA	1.840	.046	.23	.16	1.938
	.093	.031	.06	.093		.093	.858	.608	.484	.358	.733	.077	.116	.062	.937	.875	1.343	.125	.781	1.892	.046	NA	NA	.209	.093	.250	1.875	NA	1.840	.046	.23	.16	1.938
	.093	.031	.06	.093		.093	.858	.608	.484	.358	.733	.077	.116	.062	.937	.875	1.343	.125	.781	1.892	.046	NA	NA	.209	.093	.250	1.875	NA	1.840	.046	.23	.16	1.938
	.093	.031	.06	.093		.093	.858	.608	.484	.358	.733	.077	.116	.062	.937	.875	1.343	.125	.781	1.892	.046	NA	NA	.209	.093	.250	1.875	NA	1.840	.046	.23	.16	1.938
	.093	.031	.06	.093		.093	.858	.608	.484	.358	.733	.077	.116	.062	.937	.875	1.343	.125	.781	1.892	.046	NA	NA	.209	.093	.250	1.875	NA	1.840	.046	.23	.16	1.938
	.093	.031	.06	.093		.093	.858	.608	.484	.358	.733	.077	.116	.062	.937	.875	1.343	.125	.781	1.892	.046	NA	NA	.209	.093	.250	1.875	NA	1.840	.046	.23	.16	1.938
	.093	.031	.06	.093		.093	.858	.608	.484	.358	.733	.077	.116	.062	.937	.875	1.343	.125	.781	1.892	.046	NA	NA	.209	.093	.250	1.875	NA	1.840	.046	.23	.16	1.938
	.093	.031	.06	.093		.093	.858	.608	.484	.358	.733	.077	.116	.062	.937	.875	1.343	.125	.781	1.892	.046	NA	NA	.209	.093	.250	1.875	NA	1.840	.046	.23	.16	1.938
	.093	.031	.06	.093		.093	.858	.608	.484	.358	.733	.077	.116	.062	.937	.875	1.343	.125	.781	1.892	.046	NA	NA	.209	.093	.250	1.875	NA	1.840	.046	.23	.16	1.938
	.093	.031	.06	.093		.093	.858	.608	.484	.358	.733	.077	.116	.062	.937	.875	1.343	.125	.781	1.892	.046	NA	NA	.209	.093	.250	1.875	NA	1.840	.046	.23	.16	1.938
	.093	.031	.06	.093		.093	.858	.608	.484	.358	.733	.077	.116	.062	.937	.875	1.343	.125	.781	1.892	.046	NA	NA	.209	.093	.250	1.875	NA	1.840	.046	.23	.16	1.938
	.093	.031	.06	.093		.093	.858	.608	.484	.358	.733	.077	.116	.062	.937	.875	1.343	.125	.781	1.892	.046	NA	NA	.209	.093	.250	1.875	NA	1.840	.046	.23	.16	1.938
	.093	.031	.06	.093		.093	.858	.608	.484	.358	.733	.077	.116	.062	.937	.875	1.343	.125	.781	1.892	.046	NA	NA	.209	.093	.250	1.875	NA	1.840	.046	.23	.16	1.938
	.093	.031	.06	.093		.093	.858	.608	.484	.358	.733	.077	.116	.062	.937	.875	1.343	.125	.781	1.892	.046	NA	NA	.209	.093	.250	1.875	NA	1.840	.046	.23	.16	1.938
	.093	.031	.06	.093		.093	.858	.608	.484	.358	.733	.077	.116	.062	.937	.875	1.343	.125	.781	1.892	.046	NA	NA	.209	.093	.250	1.875	NA	1.840	.046	.23	.16	1.938
	.093	.031	.06	.093		.093	.858	.608	.484	.358	.733	.077	.116	.062	.937	.875	1.343	.125	.781	1.892	.046	NA	NA	.209	.093	.250	1.875	NA	1.840	.046	.23	.16	1.938
	.093	.031	.06	.093	NA	.093	.858	.608	.484	.358	.733	.077	.116	.062	.937	.875	1.343	.125	.781	1.892	.046	NA	NA	.209	.093	.250	1.875	NA	1.840	.046	.23	.16	1.938
	.078	.048	.078	.093	NA	NA	1.125	.750	.593	.453	1.015	.062	.187	.078	.875	.718	1.375	.218	NA	NA	.048	.031	.875	.305	.078	.531	1.906	.078	NA	.078	.531	.187	NA
	.078	.048	.078	.093	NA	NA	1.125	.750	.593	.453	1.015	.062	.187	.078	.875	.718	1.375	.218	NA	NA	.048	.031	.875	.305	.078	.531	1.906	.078	NA	.078	.531	.187	NA
	E	F	G	H	J	K	L	M	N	P	R	S	T	U	V	W	Y	Z	AA	AB	AC	AD	AE	AF	AG	AH	AJ	AK	AL	AM	AN	AP	AR

AC ELECTRONICS DASH NUMBERS

AS APPLICABLE	
NEXT ASSY	USED ON
APPLICATION	

UNLESS OTHERWISE SPECIFIED
DIMENSIONS ARE IN INCHES
TOLERANCES ON
2 PLACE DECIMALS ± 3 PLACE DECIMALS ± .005 ANGLES ± —
DO NOT SCALE THIS DRAWING
MATERIAL SEE NOTE 11
APPROVAL

MIT
INSTRUMENTATION LAB
CAMBRIDGE MASS
DRAWN R.A. JONES DATE 15 JUL 65
CHECKED
APPROVAL W. HUPFER 22 JUL 65
CONTRACT
T. MICHAELS 22 JUL 65
NASA APPROVAL
W. HUPFER 22 JUL 65
MIT APPROVAL

MANNED
SPACECRAFT CENTER
HOUSTON, TEXAS

NAMEPLATES, APOLLO GEN - GSE (STANDARDS)

SIZE J2 CODE IDENT NO. 80230 1004260
SCALE NONE SHEET 4 OF 6

1004260 CZ SHT 4

1004260 CZ

1004260

1004260

2/1004260

[illegible]

B/SN NO.	℅	PART NAME	REMARKS	PART NUMBER	SER. NO.	CONT. NO.	STYLE	TYPE	MATERIAL	A	B	C	D	E	F	G	H	J	K	L	M	N
401	UNIT	COMPUTER ASSY		2003100		NAS-9-497	A	I	NOTE 11B	2.000	1.312	1.906	1.375	.078	.048	.078	[illegible]	NA	NA	1.125	.750	.563
400	UNIT	LIFTING SLING-GSE TEST, QUAL, FIX, & A2M, REF, FIX,		[illegible]		NAS-9-4065	B	II	NOTE 11C	2.000	1.312	1.687	1.375	.078	.048	.078	.093	[illegible]	.093	1.187	.750	.563

NOTES FOR TABLE
STYLE A IS FOR G & N SYSTEM
STYLE B IS FOR GROUND SUPPORT EQUIPMENT
TYPE I IS WITHOUT MOUNTING HOLES
TYPE II IS WITH MOUNTING HOLES

1004260	CZ	SHT 5

1/1004260

REVISIONS

SYM	ZONE	DESCRIPTION	CHG NO	DATE	APPD
CL		REPLACES REV CK WITHOUT CHANGE PER TDRR 34365		[illegible]	[illegible]
CM		REVISION STATUS CHANGED		10 OCT 67	R.A.W.
CN		REVISION STATUS CHANGED		31 OCT 67	JRK
CP		REVISION STATUS CHANGED		6 NOV 67	[illegible]
CR		REVISION STATUS CHANGED		[illegible]	[illegible]
CS		REVISION STATUS CHANGED		3 JAN 68	EWW
CT		REVISION STATUS CHANGED		[illegible]	[illegible]
CU		REVISION STATUS CHANGED		12 FEB [illegible]	JRK
CV		REVISION STATUS CHANGED		[illegible]	LK
CW		REVISION STATUS CHANGED		[illegible]	[illegible]
CY		REVISION STATUS CHANGED		[illegible] APR 68	N.
CZ		REVISION STATUS CHANGED		23 [illegible] 68	[illegible]

.078	.046	.078	.093	NA	NA	1.125	.750	.593	.453	1.015	.062	.187	.078	.875	.718	1.375	.218	NA	NA	.048	.031	.875	.305	.078	.531	1.906	.078	NA	.078	.531	.187	NA
.078	.046	.078	.093	[illegible]	.093	1.187	.750	.593	.453	1.015	.062	.187	.078	.875	.718	1.375	.218	1.156	1.843	.048	NA	.875	.305	.078	.312	1.687	.110	1.890	.078	.275	.180	1.844
E	F	G	H	J	K	L	M	N	P	R	S	T	U	V	W	Y	Z	AA	AB	AC	AD	AE	AF	AG	AH	AJ	AK	AL	AM	AN	AP	AR

MIT DASH NUMBERS

IF APPLICABLE	
NEXT ASSY	USED ON
APPLICATION	

UNLESS OTHERWISE SPECIFIED
DIMENSIONS ARE IN INCHES
TOLERANCES ON
2 PLACE DECIMALS ±
3 PLACE DECIMALS ± .005
ANGLES ±
DO NOT SCALE THIS DRAWING
MATERIAL
SEE NOTE 11
APPROVAL

M I T
INSTRUMENTATION LAB
CAMBRIDGE, MASS.
DRAWN H. A. JONES DATE 15 JUL 65
CHECKED
W. RUFFER 22 JUL 65
APPROVAL
CONTRACT
T. MICHAELS 22 JUL 65
NASA APPROVAL
W. RUFFER 22 JUL 65
MIT APPROVAL

MANNED
SPACECRAFT CENTER
HOUSTON, TEXAS

NAMEPLATES,
APPOLLO G&N - GSE
(STANDARDS)

SIZE J2 CODE IDENT NO. 80230 1004260
SCALE NONE SHEET 5 OF 6

1004260 CJ

1004260

1004260	CZ	SHT 5

2/1004260

ITEM NO.	P/C	PART NAME	REMARKS	PART NUMBER	SER. NO.	CONT. NO.	STYLE	TYPE	MATERIAL	A	B	C	D	E	F	G	H	J	K	L	M
599	AC																				
598	AC																				
579	AC	COMPUTER CONT & RETICLE DIMMER		6014512-081		FOR OTHER DATA SEE DASH 534															
578	AC	G&N INDICATOR CONTROL PANEL ASSY		2021290-031		FOR OTHER DATA SEE DASH 181															
577		BREAKOUT BOX, CABLE ADAPTER		2901011-021		FOR OTHER DATA SEE DASH 506															
576		FIX., MOUNTING G&N		2900067-061		FOR OTHER DATA SEE DASH 500															
575		CSL, CAL AND TEST, SCM/PSAAM		2900895-041		FOR DATA SEE DASH 559															
574		CONT., TEMP PORTABLE		2900060-031		NAS-9-497	B	II	NOTE 11C	FOR DIMENSIONS SEE DASH 535 VALUES											
573		BATTERY PACK, LIFTING		2900812-031		NAS-9-497	B	II	NOTE 11C	FOR DIMENSIONS SEE DASH 542 VALUES											
572		FIX., MOUNTING G&N	(-144)	2900067-081		NAS-9-497	B	II	NOTE 11C	FOR DIMENSIONS SEE DASH 500 VALUES											
571		EYEPIECE STORAGE UNIT		2021382		FOR OTHER DATA SEE DASH 10C															
570	AC	OPTICAL UNIT & BELLOWS ASSY				NAS-9-497	A	I	NOTE 11B	FOR DIMENSIONS SEE DASH 550 VALUES											
569	AC	G & N INDICATOR CONTROL PANEL ASSY		2021323-011		NAS-9-497	A	I	NOTE 11B	FOR DIMENSIONS SEE DASH 181											
568	AC	G & N INDICATOR CONTROL PANEL ASSY		2021290-021		NAS-9-497	A	I	NOTE 11B	FOR DIMENSIONS SEE DASH 181											
567	AC	G & N INDICATOR CONTROL PANEL ASSY		2021290-011		NAS-9-497	A	I	NOTE 11B	FOR DIMENSIONS SEE DASH 181											
566	AC	COMPUTER CONT & RETICLE DIMMER		6014512-061		NAS-9-497	A	I	NOTE 11B	FOR DIMENSIONS SEE DASH 534											
565		AUXILIARY BATTERY PACK		1901492-031		NAS-9-497	B	II	NOTE 11C	FOR DIMENSIONS SEE DASH 500											
564		BATTERY POWER PACK		1900011-051		NAS-9-497	B	II	NOTE 11C	FOR DIMENSIONS SEE DASH 500											
563		PSA ADAPTER MODULE (LEM)		6900088-031		NAS-9-497	B	II	NOTE 11C	FOR DIMENSIONS SEE DASH 141 VALUES											
562	AC	COMPUTER CONT & RETICLE DIMMER		6014512-041		NAS-9-497	A	I	NOTE 11B	FOR DIMENSIONS SEE DASH 534 VALUES											
561	AC	G & N INDICATOR CONTROL PANEL ASSY		2014578-031		NAS-9-497	A	I	NOTE 11B	FOR DIMENSIONS SEE DASH 181 VALUES											
560		ADPT. MODULE, PSA		2901143-021		NAS-9-497	B	II	NOTE 11C	FOR DIMENSIONS SEE DASH 141 VALUES											
559		CSL. CAL AND TEST. SCM/PSAAM		2900895-031		FOR OTHER DATA SEE DASH 547															
558		PSA ADAPTER MODULE (LEM)		6900088-021		FOR OTHER DATA SEE DASH 189															
557		FIX., HANDLING, C/M PSA		2900998-021		NAS-9-497	B	II	NOTE 11C	FOR DIMENSIONS SEE DASH 141 VALUES											
556		FIX., MOUNTING G & N	(-144)	2900067-041		NAS-9-497	B	II	NOTE 11C	FOR DIMENSIONS SEE DASH 500 VALUES											
555	AC	OPTICAL UNIT ASSEMBLY		1021368-061		NAS-9-497	A	I	NOTE 11B	2.000	1.312	1.687	1.375	.078	.048	.078	.093	NA	NA	1.125	.750
554	AC	OPTICAL UNIT ASSEMBLY		1021368-041		NAS-9-497	A	I	NOTE 11B	2.000	1.312	1.687	1.375	.078	.048	.078	.093	NA	NA	1.125	.750
553	AC	OPTICAL UNIT AND BELLOWS ASSEMBLY		2010790-111		NAS-9-497	A	I	NOTE 11B	2.000	1.312	1.687	1.375	.078	.048	.078	.093	NA	NA	1.125	.750
552	AC	OPTICAL UNIT AND BELLOWS ASSEMBLY		2010790-081		NAS-9-497	A	I	NOTE 11B	2.000	1.312	1.687	1.375	.078	.048	.078	.093	NA	NA	1.125	.750
551	AC	OPTICAL UNIT AND BELLOWS ASSEMBLY		2010790-071		NAS-9-497	A	I	NOTE 11B	2.000	1.312	1.687	1.375	.078	.048	.078	.093	NA	NA	1.125	.750
550	AC	OPTICAL UNIT AND BELLOWS ASSEMBLY		2010790-061		NAS-9-497	A	I	NOTE 11B	2.000	1.312	1.687	1.375	.078	.048	.078	.093	NA	NA	1.125	.750
548		CASING ELECTRONICS, GYRO		2900029-031		NAS-9-497	B	II	NOTE 11C	2.125	.968	1.718	NA	.093	.031	.06	.093	[illegible]	.093	.858	.608
547		CSL, CAL AND TEST, SCM/PSAAM		2900895-021		NAS-9-497	B	II	NOTE 11C	4.125	1.812	3.250	NA	.125	.062	.12	.156		.125	1.625	1.140
546		FIX., HAND., C/M AND LEM CDU		2900999-021		NAS-9-497	B	II	NOTE 11C	2.125	.968	1.718	NA	.093	.031	.06	.093	[illegible]	.093	.858	.608
545	AC	G & N INDICATOR CONTROL PANEL ASSY		2014578-021		NAS-9-497	A	I	NOTE 11B	3.000	1.938	2.437	NA	.125	.062	.188	.156	NA	NA	1.750	1.125
544		ADPT MODULE, P.S.A.		1902431-051		NAS-9-497	B	II	NOTE 11C	2.125	.968	1.718	NA	.093	.031	.06	.093	[illegible]	.093	.858	.608
543	AC	PANEL, MONITOR		2900031-041		NAS-9-497	B	II	NOTE 11C	2.125	.968	1.718	NA	.093	.031	.06	.093	[illegible]	.093	.858	.608
542	AC	BATTERY PACK, LIFTING		2900812-021		NAS-9-497	B	II	NOTE 11C	2.125	.968	1.718	NA	.093	.031	.06	.093		.093	.858	.608
541	AC	FIXTURE, MOUNTING, IMU		2900000-021		NAS-9-497	B	II	NOTE 11C	4.125	1.812	3.250	NA	.125	.062	.12	.156		.125	1.625	1.140
540	AC	ADPT, TEST POINT, P.S.A.		2900037-031		NAS-9-497	B	II	NOTE 11C	2.125	.968	1.718	NA	.093	.031	.06	.093	[illegible]	.093	.858	.608
539	AC	ANNUNCIATOR PANEL & EYEPIECE STORAGE ASSEMBLY		1021255-041		NAS-9-497	A	I	NOTE 11B	2.000	1.312	1.906	1.375	.078	.048	.078	.093	NA	NA	1.125	.750
538	AC	ANNUNCIATOR PANEL & EYEPIECE STORAGE ASSEMBLY		1021255-031		NAS-9-497	A	I	NOTE 11B	2.000	1.312	1.906	1.375	.078	.048	.078	.093	NA	NA	1.125	.750
537	AC	TEST SELECTOR		2900028-031		NAS-9-497	B	II	NOTE 11C	2.125	.968	1.718	NA	.093	.031	.06	.093	[illegible]	.093	.858	.608
536	AC	ANALYZER, OPTICS-INERTIAL		2900027-041		NAS-9-497	B	II	NOTE 11C	4.125	1.812	3.250	NA	.125	.062	.12	.156		.125	1.625	1.140
535	AC	CONT, TEMP, PORTABLE		2900060-021		NAS-9-497	B	II	NOTE 11C	2.125	.968	1.718	NA	.093	.031	.06	.093	[illegible]	.093	.858	.608
534	AC	COMPUTER CONT & RETICLE DIMMER		6014512-021		NAS-9-497	A	I	NOTE 11B	2.000	1.312	1.906	1.375	.078	.048	.078	.093	NA	NA	1.125	.750
533	AC	ADPT MODULE, P.S.A.		1902431-041		NAS-9-497	B	II	NOTE 11C	2.125	.968	1.718	NA	.093	.031	.06	.093	[illegible]	.093	.858	.608
532	AC	TRAY BREAKOUT, 105 PIN		1900807-021		NAS-9-497	B	II	NOTE 11C	4.125	1.812	3.250	NA	.125	.062	.12	.156		.125	1.625	1.140
531	AC	TRAY BREAKOUT, 84 PIN		1900806-021		NAS-9-497	B	II	NOTE 11C	4.125	1.812	3.250	NA	.125	.062	.12	.156		.125	1.625	1.140
530	AC	HEAT SINK-TRAY EXTENDER		1900808-021		NAS-9-497	B	II	NOTE 11C	2.125	.968	1.718	NA	.093	.031	.06	.093		.093	.858	.608
529	AC	TESTER, FAILURE INDICATOR		1900809-021		NAS-9-497	B	II	NOTE 11C	2.125	.968	1.718	NA	.093	.031	.06	.093	[illegible]	.093	.858	.608
527	AC	FIX., MOUNTING, G & N	(-144)	1902204-021		NAS -497	B	II	NOTE 11C	FOR DIMENSIONS SEE DASH 500 VALUES BELOW											
526	AC	FIX., MOUNTING, G & N	(-144)	2900067-031		NAS -497	B	II	NOTE 11C	FOR DIMENSIONS SEE DASH 500 VALUES BELOW											
525	AC	PORTABLE TEMP. CONTROLLER		1900496-021		NAS-9-497	B	II	NOTE 11C	3.000	1.937	2.437	2.312	.125	.031	.125	.156	.125	.125	1.718	1.187
524	AC	POWER, SERVO & THERMOCOUPLE ASSEMBLY C/M		2010743		NAS-9-497	A	I	NOTE 11B	2.125	.968	1.718	NA	.093	.031	.06	.093	NA	NA	.858	.608
523	AC	PULSE TORQUE AND THERMOCOUPLE ASSEMBLY-LEM		6010656		NAS-9-497	A	I	NOTE 11B	FOR DIMENSIONS SEE DASH 508 VALUES BELOW											
522	AC	COUPLING DATA UNIT & THERMOCOUPLE ASSEMBLY-LEM		2010744		NAS-9-497	A	I	NOTE 11B	FOR DIMENSIONS SEE DASH 508 VALUES BELOW											
521	AC	COUPLING DATA UNIT & THERMOCOUPLE ASSEMBLY-C/M		2010744		NAS-9-497	A	I	NOTE 11B	FOR DIMENSIONS SEE DASH 508 VALUES BELOW											
520	AC	PIPA ELECTRONICS AND THERMOCOUPLE ASSEMBLY		2010745		NAS-9-497	A	I	NOTE 11B	FOR DIMENSIONS SEE DASH 508 VALUES BELOW											
519	AC	FIXTURE, HANDLING, LEM-PSA	(-141)	6900129-011		NAS-9-497	B	II	NOTE 11C	FOR DIMENSIONS SEE DASH 504 VALUES BELOW											
518	AC	JUNCTION BOX, GSE-PSA	(-144)	1901933-031		NAS-9-497	B	II	NOTE 11C	FOR DIMENSIONS SEE DASH 500 VALUES BELOW											
517	AC	FIX., HAND., OPTICS INSTL.	(-141)	2901380-011		NAS-9-497	B	II	NOTE 11C	FOR DIMENSIONS SEE DASH 502 VALUES BELOW											
516	AC	POWER, SERVO AND THERMOCOUPLE ASSEMBLY-LEM		6010655		NAS-9-497	A	I	NOTE 11B	FOR DIMENSIONS SEE DASH 508 VALUES BELOW											
514	AC	SIGNAL COND. ASSY LEM OPER.	(-100)	6007013		NAS-9-497	A	I	NOTE 11B	FOR DIMENSIONS SEE DASH 508 VALUES BELOW											
513	AC	JUMPER, BY-PASS	(-141)	1021616		NAS-9-497	B	II	NOTE 11C	2.125	.968	1.718	NA	.093	.031	.06	.093	[illegible]	.093	.858	.608
512	AC	COUPLING DATA UNIT ASSEMBLY C/M	(-100)	2007322-011		NAS-9-497	A	I	NOTE 11B	FOR DIMENSIONS SEE DASH 508 VALUES BELOW											
511	AC	COUPLING DATA UNIT ASSEMBLY-LEM	(-100)	2007322-021		NAS-9-497	A	I	NOTE 11B	FOR DIMENSIONS SEE DASH 508 VALUES BELOW											
510	AC	BATTERY POWER PACK	(-144)	1900011-041		NAS-9-497	B	II	NOTE 11C	FOR DIMENSIONS SEE DASH 500 VALUES BELOW											
509	AC	JUNCTION BOX, P.S.A./G.S.E.	(-144)	1902195-021		NAS-9-497	B	II	NOTE 11C	FOR DIMENSIONS SEE DASH 500 VALUES BELOW											
508	AC	NAVIGATION BASE ASSEMBLY-LEM	(-101)	6899980		NAS-9-497	A	I	NOTE 11B	2.000	1.312	1.906	1.375	.078	.048	.078	.093	NA	NA	1.125	.750
507	AC	CSL, COOL, AND PWR, G AND N	(-144)	1902134-041		NAS-9-497	B	II	NOTE 11C	FOR DIMENSIONS SEE DASH 500 VALUES BELOW											
506	AC	BREAKOUT BOX, CABLE ADAPTER	(-141)	2901011-011		NAS-9-497	B	II	NOTE 11C	2.125	.968	1.718	NA	.093	.031	.06	.093	[illegible]	.093	.858	.608
505	AC	MONITOR AND CONTROL, TEMP	(-141)	2900026-021		NAS-9-497	B	II	NOTE 11C	2.125	.968	1.718	NA	.093	.031	.06	.093		.093	.858	.608
504	AC	PWR SUP. GUIDANCE SYSTEM	(-141)	1900033-021		NAS-9-497	B	II	NOTE 11C	2.125	.968	1.718	NA	.093	.031	.06	.093		.093	.858	.608
503	AC	CONTROL, GIMBAL POSITION	(-141)	2900036-021		NAS-9-497	B	II	NOTE 11C	2.125	.968	1.718	NA	.093	.031	.06	.093		.093	.858	.608
[illegible]	AC	[illegible], FIX/PSA.	(-141)	2900145-021		NAS-9-497	B	II	NOTE 11C	2.125	.968	1.718	NA	.093	.031	.06	.093	[illegible]	.093	.858	.608
501	AC	MOUNTING PLATE, COMPONENT	(-144)	6900007-031		NAS-9-497	B	II	NOTE 11C	FOR DIMENSIONS SEE DASH 500 VALUES BELOW											
[illegible]	AC	MOUNTING PLATE, COMPONENT	(-144)	2900577-021		NAS-9-497	B	II	NOTE 11C	4.125	1.812	3.250	NA	.125	.062	.12	.156	[illegible]	.125	1.625	1.140

NOTES FOR TABLE

STYLE A IS FOR G & N SYSTEM
STYLE B IS FOR GROUND SUPPORT EQUIPMENT
TYPE I IS WITHOUT MOUNTING HOLES
TYPE II IS WITH MOUNTING HOLES

1004260	CZ	SHT 6

1/1004260

REV	ZONE	DESCRIPTION	CHG NO	DATE	APPD
CL		REPLACES REV CK WITH CHANGE PER TDRR 34365		9/18/67	JWR
CM		REVISED PER TDRR 34696		17 OCT. 67	RAR
CN		REVISED PER TDRR 34467		31 OCT 67	JRK
CP		REVISED PER TDRR 34886		6 NOV 67	
CR		REVISED PER TDRR 35164		7 DEC 67	
CS		REVISED PER TDRR 35307		3 JAN 68	JW
CT		REVISION STATUS CHANGED		68	
CU		REVISED PER TDRR 35628		22 FEB 68	JRK
CV		REVISED PER TDRR 35675		27 FEB 68	
CW		REVISED PER TDRR 35970			
CY		REVISION STATUS CHANGED		16 APR 68	AN
CZ		REVISED PER TDRR 36248		23 MAY 68	

D	E	F	G	H	J	K	L	M	N	P	R	S	T	U	V	W	Y	Z	AA	AB	AC	AD	AE	AF	AG	AH	AJ	AK	AL	AM	AN	AP	AR
	DASH 510 VALUES																																
	[illegible] VALUES																																
	DASH 530 VALUES																																
	DASH 550 VALUES																																
	DASH 101																																
	[illegible] 101																																
	DASH 101																																
	DASH 534																																
	DASH 500																																
	DASH 506																																
	DASH 141 VALUES																																
	DASH 534 VALUES																																
	DASH 101 VALUES																																
	DASH 141 VALUES																																
	DASH 141 VALUES																																
	DASH 500 VALUES																																
	.078	[illegible]	.078	.093	NA	NA	1.125	.750	.593	.453	[illegible]	[illegible]	[illegible]	[illegible]	[illegible]	[illegible]	[illegible]	[illegible]	NA	NA	[illegible]	[illegible]	[illegible]	[illegible]	NA	.468	1.531	NA	NA	.078	.312	.187	NA
	.078	.048	.078	.093	NA	NA	1.125	.750	.593	.453	1.015	.062	.187	.078	.875	.718	1.375	.218	NA	NA	.048	.031	.875	.305	NA	.468	1.531	NA	NA	.078	.312	.187	NA
	.078	.048	.078	.093	NA	NA	1.125	.750	.593	.453	1.015	.062	.187	.078	.875	.718	1.375	.218	NA	NA	.048	.031	.875	.305	NA	.468	1.531	NA	NA	.078	.312	.187	NA
	.078	.048	.078	.093	NA	NA	1.125	.750	.593	.453	1.015	.062	.187	.078	.875	.718	1.375	.218	NA	NA	.048	.031	.875	.305	NA	.468	1.531	NA	NA	.078	.312	.187	NA
	.078	.048	.078	.093	NA	NA	1.125	.750	.593	.453	1.015	.062	.187	.078	.875	.718	1.375	.218	NA	NA	.048	.031	.875	.305	NA	.468	1.531	NA	NA	.078	.312	.187	NA
	.078	.048	.078	.093	NA	NA	1.125	.750	.593	.453	1.015	.062	.187	.078	.875	.718	1.375	.218	NA	NA	.048	.031	.875	.305	NA	.468	1.531	NA	NA	.078	.312	.187	NA
	.093	.031	.06	.093		.093	.858	.608	.484	.358	.733	.077	.116	.062	.937	.875	1.343	.125	.781	1.892	.046	NA	NA	.209	.093	.250	1.875	NA	1.840	.046	.23	.16	1.938
	.125	.062	.12	.156		.125	1.625	1.140	.890	.640	1.390	.125	.171	.125	1.875	1.687	2.625	.250	1.562	3.843	.093	NA	NA	.359	.125	.437	3.688	NA	3.687	.093	.40	.25	3.875
	.093	.031	.06	.093		.093	.858	.608	.484	.358	.733	.077	.116	.062	.937	.875	1.343	.125	.781	1.892	.046	NA	NA	.209	.093	.250	1.875	NA	1.840	.046	.23	.16	1.938
	.125	.062	.188	.156	NA	NA	1.750	1.125	.906	.688	1.500	NA	.281	.125	NA	1.094	2.062	.312	NA	2.500	.062	.125	1.312	.469	NA	NA	NA	.156	NA	.125	.469	.344	NA
	.093	.031	.06	.093		.093	.858	.608	.484	.358	.733	.077	.116	.062	.937	.875	1.343	.125	.781	1.892	.046	NA	NA	.209	.093	.250	1.875	NA	1.840	.046	.23	.16	1.938
	.093	.031	.06	.093		.093	.858	.608	.484	.358	.733	.077	.116	.062	.937	.875	1.343	.125	.781	1.892	.046	NA	NA	.209	.093	.250	1.875	NA	1.840	.046	.23	.25	1.938
	.093	.031	.06	.093		.093	.858	.608	.484	.358	.733	.077	.116	.062	.937	.875	1.343	.125	.781	1.892	.046	NA	NA	.209	.093	.250	1.875	NA	1.840	.046	.23	.16	1.938
	.125	.062	.12	.156		.125	1.625	1.140	.890	.640	1.390	.125	.171	.125	1.875	1.687	2.625	.250	1.562	3.843	.093	NA	NA	.359	.125	.437	3.688	NA	3.687	.093	.40	.25	3.875
	.093	.031	.06	.093		.093	.858	.608	.484	.358	.733	.077	.116	.062	.937	.875	1.343	.125	.781	1.892	.046	NA	NA	.209	.093	.250	1.875	NA	1.840	.046	.23	.16	1.938
	.078	.048	.078	.093	NA	NA	1.125	.750	.593	.453	1.015	.062	.187	.078	.875	.718	1.375	.218	NA	NA	.048	.031	.875	.305	.078	.531	1.906	.078	NA	.078	.531	.187	NA
	.078	.048	.078	.093	NA	NA	1.125	.750	.593	.453	1.015	.062	.187	.078	.875	.718	1.375	.218	NA	NA	.048	.031	.875	.305	.078	.531	1.906	.078	NA	.078	.531	.187	NA
	.093	.031	.06	.093		.093	.858	.608	.484	.358	.733	.077	.116	.062	.937	.875	1.343	.125	.781	1.892	.046	NA	NA	.209	.093	.250	1.875	NA	1.840	.046	.23	.16	1.938
	.125	.062	.12	.156		.125	1.625	1.140	.890	.640	1.390	.125	.171	.125	1.875	1.687	2.625	.250	1.562	3.843	.093	NA	NA	.359	.125	.437	3.688	NA	3.687	.093	.40	.25	3.875
	.093	.031	.06	.093		.093	.858	.608	.484	.358	.733	.077	.116	.062	.937	.875	1.343	.125	.781	1.892	.046	NA	NA	.209	.093	.250	1.875	NA	1.840	.046	.23	.16	1.938
	.078	.048	.078	.093	NA	NA	1.125	.750	.593	.453	1.015	.062	.187	.078	.875	.718	1.375	.218	NA	NA	.048	.031	.875	.305	.078	.531	1.906	.078	NA	.078	.531	.187	NA
	.093	.031	.06	.093		.093	.858	.608	.484	.358	.733	.077	.116	.062	.937	.875	1.343	.125	.781	1.892	.046	NA	NA	.209	.093	.250	1.875	NA	1.840	.046	.23	.16	1.938
	.125	.062	.12	.156		.125	1.625	1.140	.890	.640	1.390	.125	.171	.125	1.875	1.687	2.625	.250	1.562	3.843	.093	NA	NA	.359	.125	.437	3.688	NA	3.687	.093	.40	.25	3.875
	.125	.062	.12	.156		.125	1.625	1.140	.890	.640	1.390	.125	.171	.125	1.875	1.687	2.625	.250	1.562	3.843	.093	NA	NA	.359	.125	.437	3.688	NA	3.687	.093	.40	.25	3.875
	.093	.031	.06	.093		.093	.858	.608	.484	.358	.733	.077	.116	.062	.937	.875	1.343	.125	.781	1.892	.046	NA	NA	.209	.093	.250	1.875	NA	1.840	.046	.23	.16	1.938
	.093	.031	.06	.093		.093	.858	.608	.484	.358	.733	.077	.116	.062	.937	.875	1.343	.125	.781	1.892	.046	NA	NA	.209	.093	.250	1.875	NA	1.840	.046	.23	.16	1.938
	DASH 500 VALUES BELOW																																
	DASH 500 VALUES BELOW																																
	.125	.031	.125	.156	.125	.125	1.718	1.187	.968	.749	1.452	.093	.295	.090	1.312	1.60	2.000	.250	1.687	2.750	.062	NA	NA	.463	.125	.562	2.437	.140	2.562	.090	.468	.359	2.750
	.093	.031	.06	.093	NA	NA	.858	.608	.484	.352	.733	.062	.140	.062	NA	.968	1.450	.125	NA	1.720	.046	.03	NA	.210	NA	NA	NA	.070	NA	.046	.32	.16	NA
	DASH 500 VALUES BELOW																																
	DASH 500 VALUES BELOW																																
	DASH 500 VALUES BELOW																																
	DASH 500 VALUES BELOW																																
	DASH 504 VALUES BELOW																																
	DASH 500 VALUES BELOW																																
	DASH 502 VALUES BELOW																																
	DASH 500 VALUES BELOW																																
	DASH 500 VALUES BELOW																																
	.093	.031	.06	.093		.093	.858	.608	.484	.358	.733	.077	.116	.062	.937	.875	1.343	.125	.781	1.892	.046	NA	NA	.209	.093	.250	1.875	NA	1.840	.046	.23	.16	1.938
	DASH 500 VALUES BELOW																																
	DASH 500 VALUES BELOW																																
	DASH 500 VALUES BELOW																																
	DASH 500 VALUES BELOW																																
	.078	.048	.078	.093	NA	NA	1.125	.750	.593	.453	1.015	.062	.187	.078	.875	.718	1.375	.218	NA	NA	.048	.031	.875	.305	.078	.531	1.906	.078	NA	.078	.531	.187	NA
	DASH 500 VALUES BELOW																																
	.093	.031	.06	.093		.093	.858	.608	.484	.358	.733	.077	.116	.062	.937	.875	1.343	.125	.781	1.892	.046	NA	NA	.209	.093	.250	1.875	NA	1.840	.046	.23	.16	1.938
	.093	.031	.06	.093		.093	.858	.608	.484	.358	.733	.077	.116	.062	.937	.875	1.343	.125	.781	1.892	.046	NA	NA	.209	.093	.250	1.875	NA	1.840	.046	.23	.16	1.938
	.093	.031	.06	.093		.093	.858	.608	.484	.358	.733	.077	.116	.062	.937	.875	1.343	.125	.781	1.892	.046	NA	NA	.209	.093	.250	1.875	NA	1.840	.046	.23	.16	1.938
	.093	.031	.06	.093		.093	.858	.608	.484	.358	.733	.077	.116	.062	.937	.875	1.343	.125	.781	1.892	.046	NA	NA	.209	.093	.250	1.875	NA	1.840	.046	.23	.16	1.938
	.093	.031	.06	.093		.093	.858	.608	.484	.358	.733	.077	.116	.062	.937	.875	1.343	.125	.781	1.892	.046	NA	NA	.209	.093	.250	1.875	NA	1.840	.046	.23	.16	1.938
	DASH 500 VALUES BELOW																																
	.125	.062	.12	.156		.125	1.625	1.140	.890	.640	1.390	.125	.171	.125	1.875	1.687	2.625	.250	1.562	3.843	.093	NA	NA	.359	.125	.437	3.688	NA	3.687	.093	.40	.25	3.875

AC ELECTRONICS DASH NUMBERS

UNLESS OTHERWISE SPECIFIED DIMENSIONS ARE IN INCHES TOLERANCES ON 2 PLACE DECIMALS ± 3 PLACE DECIMALS ± .005 ANGLES ±	MIT INSTRUMENTATION LAB CAMBRIDGE MASS	MANNED SPACECRAFT CENTER HOUSTON TEXAS	
DO NOT SCALE THIS DRAWING	DRAWN R.A. JONES DATE 15 JUL 65	NAMEPLATES, APOLLO GEN - GSE (STANDARDS)	
MATERIAL SEE NOTE H	CHECKED W. KUPFER 22 JUL 65 APPROVAL		
APPROVAL	CONTRACT	SIZE J2	CODE IDENT NO. 80230
	T. MICHAELS 22 JUL 65 NASA APPROVAL	1004260	
	W. KUPFER 22 JUL 65 MIT APPROVAL	SCALE NONE	SHEET 6 OF 6

AS APPLICABLE
NEXT ASSY | USED ON
APPLICATION

1004260 CZ SH 6

NOTES:

1. INTERPRET DRAWING IN ACCORDANCE WITH STANDARDS PRESCRIBED BY MIL-D-70327.
2. DIMENSIONS ON EACH VIEW APPLY TO ALL VIEWS (WITH THE EXCEPTION OF MOUNTING HOLES).
3. FORMATS ILLUSTRATED WILL BE APPLICABLE TO ALL ITEMS REQUIRING NAMEPLATES BELOW END ITEM DESIGNATION (SYSTEMS, ASSEMBLIES, ETC.)
4. PLATE BACKGROUND TO BE LUSTERLESS BLACK PER FED-STD-595, COLOR 37038. BORDER, MARKING AND LETTERING TO BE NATURAL METAL, (ANODIZED ALUMINUM).
5. MARKING METHOD TO BE DIE STAMPING, ETCHING OR ENGRAVING IN ACCORDANCE WITH MIL-P-19834.
6. LETTERING STYLE TO BE GOTHIC, (SANS SERIFS), AND NUMBERS TO BE ARABIC.
7. WHERE LOCATING DIMENSIONS ARE NOT SHOWN, CHARACTERS SHALL BE SYMMETRICALLY POSITIONED.
8. IDENTIFY WITH DRAWING NUMBER PER ND 1002019.
9. WHEN "AUTO MARK" METAL MARKING TYPEWRITER IS USED TO ADD DATA TO BLANK SPACES, TYPE SIZE IS TO BE SELECTED FROM DIMENSIONS U, AC, AND AM.
10. NASA SYMBOL IS TO BE PROPORTIONAL TO NAMEPLATE IN RATIO OF 1 TO 5 WITH DIMENSION A VALUE AND IS TO HAVE NATURAL BACKGROUND. NASA SYMBOL LETTERS LETTERING AND FEATHER TO BE BLACK, (OR WHITE FOR SILK SCREENING). WHERE BLACK FEATHER PROTRUDES INTO BLACK BACKGROUND, A MINIMUM OUTLINE OF NATURAL BACKGROUND SHALL EXIST.
11. NAMEPLATES WILL BE APPLIED BY METHODS LISTED BELOW, SHOWN IN ORDER OF PREFERENCE, (I.E., FOR RELIABILITY AND WEIGHT).
    A - STENCIL OR SILK SCREEN DIRECTLY ON EQUIPMENT USING INK PER SCD 1010920, (WHITE OR BLACK).
    B - ALUMINUM FOIL, (STYLE A OR B, TYPE I):
    FOIL SHALL BE .0030 ± .0005 THICK PER MIL-A-148.
    FOIL SHALL HAVE NO ADHESIVE BACKING.
    FOIL SHALL BE BONDED PER ND 1002219, (METHOD II).
    FOIL SHALL BE CLEAR ANODIZED PER MIL-A-8625, TYPE II.
    C - PLATE, (STYLE A OR B, TYPE II):
    MATERIAL: QQ-A-250, TEMPER 0 OR H14, TYPE 1100, ALUMINUM ALLOY, .032 THICK. ANODIZE PER MIL-A-8625, TYPE II.
    ALUMINUM PLATE MUST BE FREE FROM BURRS AND SHARP CORNERS, MOUNTED WITH APPLICABLE SIZE FASTENERS.
12. NAMEPLATES SHALL BE CAPABLE OF MEETING APPLICABLE REQUIREMENTS OF MIL-M-13231.
13. ON DIMENSION TABLES SHOWN ON PAGES 2, 3, 4, 5, AND 6, NA MEANS, "NOT APPLICABLE".

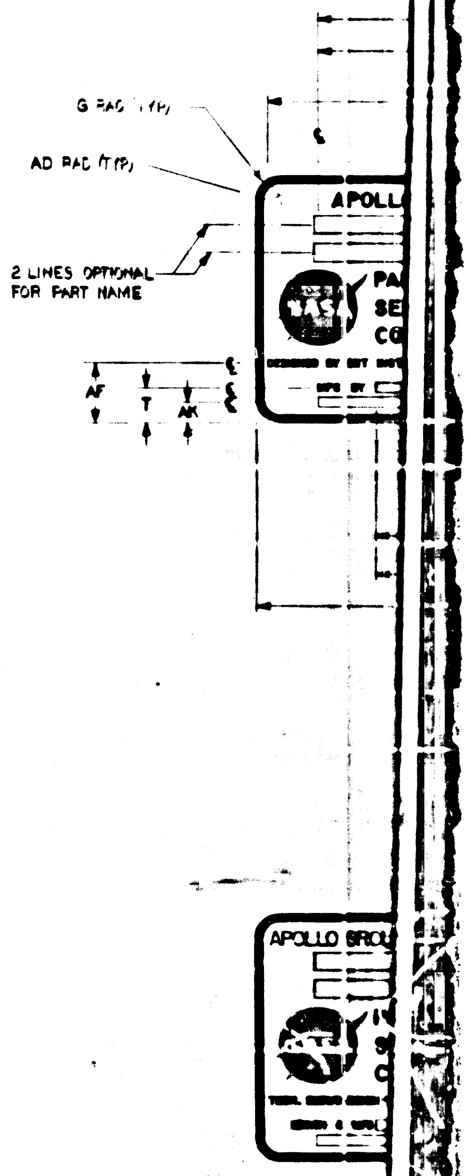

SUGGESTED PROPORTIONS FOR NAMEPLATE DIMENSIONS.
1. SELECT NAMEPLATE LENGTH, DIMENSION "A", TO FIT DESIGN NEEDS.
2. DIMENSIONS B THRU AS ON LINE 1 BELOW ARE PROPORTIONAL TO "A" BY MULTIPLIERS SHOWN IN LINE 2 BELOW.

1.	A	B	C	D	E	F	G	H	J	K	L	M	N	P	R	S	T	U	V	W
2.	1.000A	.6563A	.8438A	.6875A	.0391A	.0240A	.0391A	.0469A	.0547A	.0469A	.5938A	.3750A	.2969A	.2187A	.5079A	.0313A	.0938A	.0391A	.4375A	.3594A

1.	Y	Z	AA	AB	AC	AD	AE	AF	AG	AH	AJ	AK	AL	AM	AN	AP	AR	AS
2.	.6875A	.1094A	.5781A	.9219A	.0240A	.0156A	.4375A	.1525A	.0391A	.1563A	.8438A	.0548A	.8659A	.0391A	.1563A	.0938A	.9219A	.0151A

1004260 DA 1

REVISIONS					
SYM	ZONE	DESCRIPTION	CHG NO	DATE	APPD
CL		REPLACES REV CK WITHOUT CHANGE PER [illegible] 34365		28 67	RWW
CM		REVISION STATUS CHANGED		18 OCT 67	RAW
CN		REVISION STATUS CHANGED		31 OCT 67	URK DM
CP		REVISION STATUS CHANGED		6 NOV 67	
CR		REVISION STATUS CHANGED		7 67	RWH
CS		REVISION STATUS CHANGED		68	EHW
CT		REVISION STATUS CHANGED		68	
CU		REVISION STATUS CHANGED		22 FEB	URK
CV		REVISION STATUS CHANGED		27 FEB	
CW		REVISION STATUS CHANGED		68	
CY		REVISION STATUS CHANGED		16 APR 68	
CZ		REVISION STATUS CHANGED		28 MAY 68	
DA		REVISION STATUS CHANGED			

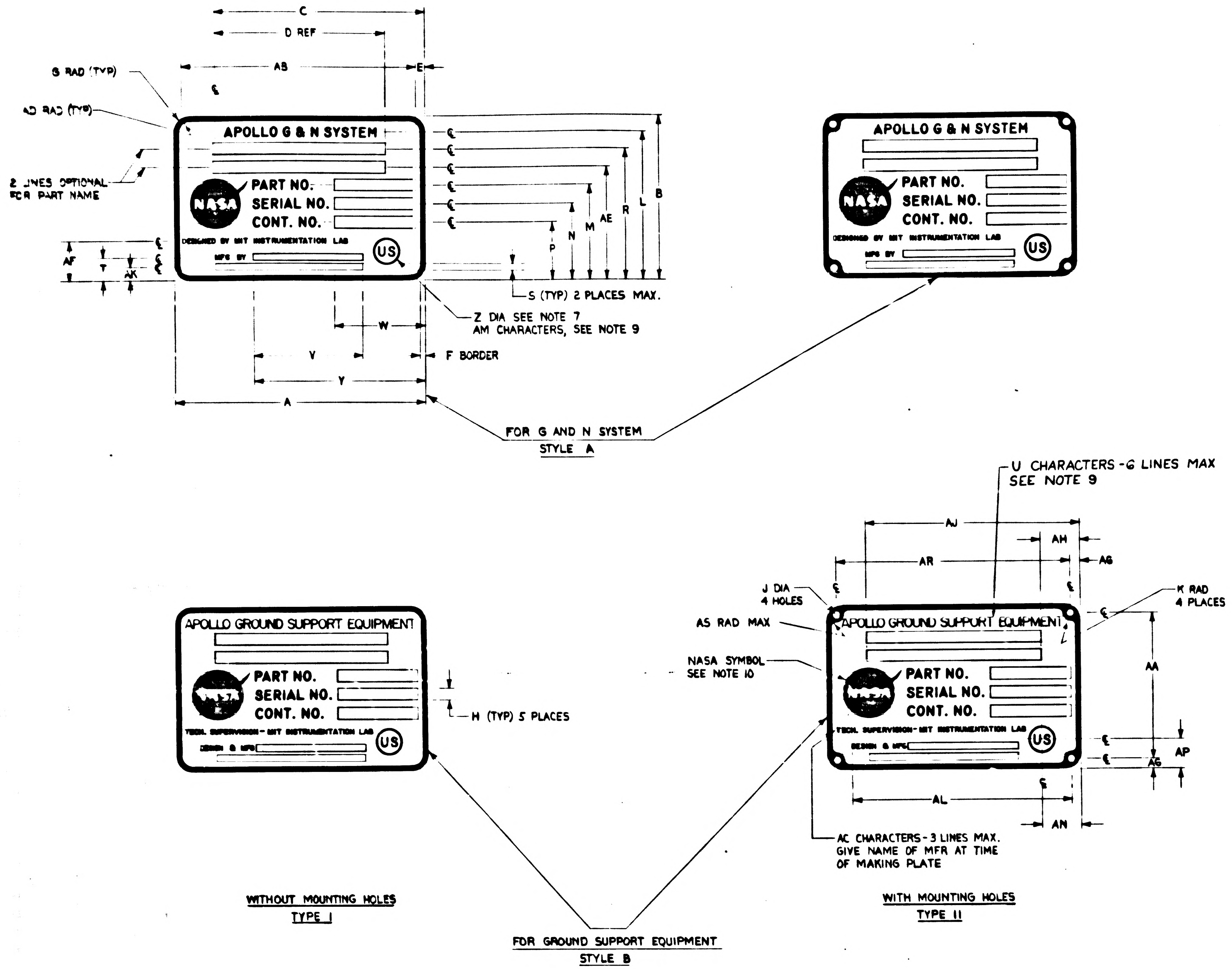

C
D REF
AB
E
B RAD (TYP)
AD RAD (TYP)
2 LINES OPTIONAL FOR PART NAME
APOLLO G & N SYSTEM
PART NO.
SERIAL NO.
CONT. NO.
NASA
DESIGNED BY MIT INSTRUMENTATION LAB
MFG BY
US
AF
T
AK
P
N
M
AE
R
L
B
S (TYP) 2 PLACES MAX.
Z DIA SEE NOTE 7
AM CHARACTERS, SEE NOTE 9
W
V
F BORDER
Y
A
FOR G AND N SYSTEM
STYLE A
U CHARACTERS - 6 LINES MAX
SEE NOTE 9
AJ
AH
AR
AG
J DIA
4 HOLES
K RAD
4 PLACES
AS RAD MAX
NASA SYMBOL
SEE NOTE 10
APOLLO GROUND SUPPORT EQUIPMENT
TECH. SUPERVISION - MIT INSTRUMENTATION LAB
DESIGN & MFG
H (TYP) 5 PLACES
AA
AP
AQ
AL
AN
AC CHARACTERS - 3 LINES MAX.
GIVE NAME OF MFR AT TIME
OF MAKING PLATE
WITHOUT MOUNTING HOLES
TYPE I
WITH MOUNTING HOLES
TYPE II
FOR GROUND SUPPORT EQUIPMENT
STYLE B

UNLESS OTHERWISE SPECIFIED DIMENSIONS ARE IN INCHES TOLERANCES ON 2 PLACE DECIMALS ± 3 PLACE DECIMALS ± .005 ANGLES ±	M I T INSTRUMENTATION LAB CAMBRIDGE MASS	MANNED SPACECRAFT CENTER HOUSTON, TEXAS		
	DRAWN R. A. JONES DATE 15 JUL 65	NAMEPLATES, APOLLO GεN - GSE (STANDARDS)		
	CHECKED			
	APPROVAL W KUPFER 22 JUL 65			
DO NOT SCALE THIS DRAWING	CONTRACT			
MATERIAL SEE NOTE 11	NASA APPROVAL T. MICHAELS 22 JUL 65	SIZE J2	CODE IDENT NO. 80230	1004260
	MIT APPROVAL W KUPFER 22 JUL 65			
APPROVAL		SCALE NONE		SHEET OF 6

NEXT ASSY	USED ON
AS APPLICABLE	
APPLICATION	

1004260 DA

1004260

08SA001
[illegible]

1004 260 D- SHT 1

2/1004260

[illegible]

DASH NO.	P/C	PART NAME	REMARKS	PART NUMBER	SER. NO.	CONT. NO.	STYLE	TYPE	MATERIAL	A	B	C	D	E	F	G	H	J	K	L	M	N
399	K																					
398	K																					
350	K	ALIGNMENT OPTICAL TELESCOPE (LEM)		NA	NA	NA	A	I	NOTE 11B	4.000	2.625	3.375	2.750	.156	.093	.156	.187	NA	NA	2.312	1.468	1.18
309	K																					
308	K																					
307	K						B	I	NOTE 11B	4.000	2.625	3.375	2.750	.156	.093	.156	.187	NA	NA	2.328	1.468	1.187
306	K						B	II	NOTE 11C	4.000	2.625	3.375	2.750	.156	.093	.156	.187	.125	.156	2.328	1.468	1.187
305	K						B	I	NOTE 11B	2.000	1.312	1.687	1.375	.078	.048	.078	.093	NA	NA	1.164	.734	.593
304	K						B	II	NOTE 11C	2.000	1.312	1.687	1.375	.078	.048	.078	.093	.070	.078	1.164	.734	.593
303	K																					
302	K																					
301	K																					
300	K	OPTICAL UNIT		NA	NA	NA	A	I	NOTE 11B	2.000	1.312	1.675	NA	NA	.048	.078	NA	NA	NA	1.090	.812	.875
9	K	2 IN AUTOCOLLIMATOR		1001702			B	II	NOTE 11C	4.000	2.625	3.812	2.750	.156	.093	.156	.187	.125	.156	2.250	1.500	1.187
8	K	5 IN AUTOCOLLIMATOR		1017410			B	II	NOTE 11C	4.000	2.625	3.812	2.750	.156	.093	.156	.187	.125	.156	2.250	1.500	1.187
7	K	2-1/2 IN AUTOCOLLIMATOR (SCT)		1017435			B	II	NOTE 11C	4.000	2.625	3.812	2.750	.156	.093	.156	.187	.125	.156	2.250	1.500	1.187
6	K	2-1/2 IN AUTOCOLLIMATOR (SXT)		1017448			B	II	NOTE 11C	4.000	2.625	3.812	2.750	.156	.093	.156	.187	.125	.156	2.250	1.500	1.187
5	K	RETROREFLECTING PRISM ASSEMBLY		1019840			B	I	NOTE 11B	4.000	2.625	3.812	2.750	.156	.093	.156	.187	NA	NA	2.250	1.500	1.187
4	K	S/H SIMULATOR ASSEMBLY		1019896			B	I	NOTE 11B	4.000	2.625	3.812	2.750	.156	.093	.156	.187	NA	NA	2.250	1.500	1.187
3	K	REFERENCE MIRROR		1001767			B	I	NOTE 11B	2.000	1.312	1.906	1.375	.078	.048	.078	.093	NA	NA	1.125	.750	.593
2	K	2 IN PLANE READING AUTOCOLLIMATOR		1017413			B	I	NOTE 11B	2.000	1.312	1.906	1.375	.078	.048	.078	.093	NA	NA	1.125	.750	.593
1	K	2 IN AUTOCOLLIMATOR		1001702			B	I	NOTE 11B	2.000	1.312	1.906	1.375	.078	.048	.078	.093	NA	NA	1.125	.750	.593

NOTES FOR TABLE

STYLE A IS FOR G & N SYSTEM
STYLE B IS FOR GROUND SUPPORT EQUIPMENT
TYPE I IS WITHOUT MOUNTING HOLES
TYPE II IS WITH MOUNTING HOLES

1004260	CA	SHT 2

SYM	ZONE	DESCRIPTION	CHG NO	DATE	APPD
CL		REPLACES REV CK WITHOUT CHANGE PER TDRR 34365		9 20 67	JWL
CM		REVISION STATUS CHANGED		18 OCT 67	R.A.W.
CN		REVISION STATUS CHANGED		3 OCT 6?	JRK
CP		REVISION STATUS CHANGED		6 NOV 67	EWS
CR		REVISION STATUS CHANGED		7 DEC 67	
CS		REVISION STATUS CHANGED		3 JAN 68	EHW
CT		REVISION STATUS CHANGED		FEB 68	
CU		REVISION STATUS CHANGED			JRK
CV		REVISION STATUS CHANGED		68	
CW		REVISION STATUS CHANGED		APR 68	
CY		REVISION STATUS CHANGED		6 APR 68	
CZ		REVISION STATUS CHANGED		23 MAY 68	
DA		REVISION STATUS CHANGED		17 JUL 68	

E	F	G	H	J	K	L	M	N	P	R	S	T	U	V	W	Y	Z	AA	AB	AC	AD	AE	AF	AG	AH	AJ	AK	AL	AM	AN	AP	AR
[illegible]	.093	.156	.187	NA	NA	2.312	1.468	1.187	.906	2.031	NA	.375	.156	NA	1.437	2.750	.437	NA	3.688	.062	.062	1.750	.593	NA	.625	3.375	.187	NA	.156	.531	.453	NA
[illegible]	[illegible]	.156	.187	NA	NA	2.328	1.468	1.187	.906	2.031	.062	.375	.156	NA	1.437	2.750	.437	NA	3.687	.062	.062	1.750	.593	NA	NA	NA	NA	NA	NA	NA	NA	NA
[illegible]	[illegible]	.156	.187	.125	.156	2.328	1.468	1.187	.906	2.031	.062	.375	.156	NA	1.437	2.750	.437	2.312	3.687	.062	NA	1.750	.593	NA	NA	NA	NA	NA	NA	NA	NA	NA
[illegible]	[illegible]	.078	.093	NA	NA	1.164	.734	.593	.453	1.015	.048	.171	.078	NA	.718	1.375	.187	NA	NA	.048	.031	.875	.320	NA	NA	NA	NA	NA	NA	NA	NA	NA
[illegible]	[illegible]	.078	.093	.070	.078	1.164	.734	.593	.453	1.015	.048	.171	.078	NA	.718	1.375	.187	.156	1.843	.048	NA	.875	.320	NA	NA	NA	NA	NA	NA	NA	NA	NA
NA	[illegible]	.078	NA	NA	NA	1.090	.812	.675	.540	.940	NA	.265	NA	NA	NA	1.375	.218	NA	NA	NA	NA	NA	.375	NA	NA	NA	.180	NA	.078	NA	NA	NA
[illegible]	[illegible]	.156	.187	.125	.156	2.250	1.500	1.187	.906	2.031	.093	.375	.156	1.750	1.437	2.750	.437	2.312	3.687	.062	NA	1.750	.593	.156	1.062	3.812	.156	NA	.156	1.062	.375	3.687
[illegible]	[illegible]	.156	.187	.125	.156	2.250	1.500	1.187	.906	2.031	.093	.375	.156	1.750	1.437	2.750	.437	2.312	3.687	.062	NA	1.750	.593	.156	1.062	3.812	.156	NA	.156	1.062	.375	3.687
[illegible]	[illegible]	.156	.187	.125	.156	2.250	1.500	1.187	.906	2.031	.093	.375	.156	1.750	1.437	2.750	.437	2.312	3.687	.062	NA	1.750	.593	.156	1.062	3.812	.156	NA	.156	1.062	.375	3.687
[illegible]	[illegible]	.156	.187	.125	.156	2.250	1.500	1.187	.906	2.031	.093	.375	.156	1.750	1.437	2.750	.437	2.312	3.687	.062	NA	1.750	.593	.156	1.062	3.812	.156	NA	.156	1.062	.375	3.687
[illegible]	[illegible]	.156	.187	NA	NA	2.250	1.500	1.187	.906	2.031	.093	.375	.156	1.750	1.437	2.750	.437	NA	NA	.062	.062	1.750	.593	.156	1.062	3.812	.156	NA	.156	1.062	.375	NA
[illegible]	[illegible]	.156	.187	NA	NA	2.250	1.500	1.187	.906	2.031	.093	.375	.156	1.750	1.437	2.750	.437	NA	NA	.062	.062	1.750	.593	.156	1.062	3.812	.156	NA	.156	1.062	.375	NA
[illegible]	[illegible]	.078	.093	NA	NA	1.125	.750	.593	.453	1.015	.062	.187	.078	.875	.718	1.375	.218	NA	NA	.048	.031	.875	.305	.078	.531	1.906	.078	NA	.078	.531	.187	NA
[illegible]	[illegible]	.078	.093	NA	NA	1.125	.750	.593	.453	1.015	.062	.187	.078	.875	.718	1.375	.218	NA	NA	.048	.031	.875	.305	.078	.531	1.906	.078	NA	.078	.531	.187	NA
[illegible]	[illegible]	.078	.093	NA	NA	1.125	.750	.593	.453	1.015	.062	.187	.078	.875	.718	1.375	.218	NA	NA	.048	.031	.875	.305	.078	.531	1.906	.078	NA	.078	.531	.187	NA

KOLLSMAN DASH NUMBERS

UNLESS OTHERWISE SPECIFIED
DIMENSIONS ARE IN INCHES
TOLERANCES ON
2 PLACE DECIMALS ± 3 PLACE DECIMALS ± .005 ANGLES ±
DO NOT SCALE THIS DRAWING
MATERIAL SEE NOTE 11
AS APPLICABLE
NEXT ASSY USED ON
APPLICATION
APPROVAL

M I T
INSTRUMENTATION LAB
Cambridge Mass
DRAWN R A JONES DATE 15 JUL 65
CHECKED
APPROVAL W KUPFER 22 JUL 65
CONTRACT
NASA APPROVAL T MICHAELS 22 JUL 65
MIT APPROVAL W KUPFER 22 JUL 65

MANNED
SPACECRAFT CENTER
HOUSTON TEXAS

NAMEPLATES,
APOLLO G&N - GSE
(STANDARDS)

SIZE J2
CODE IDENT NO. 80230
1004260
SCALE NONE
SHEET 2 OF 6

1004260 DA

1004260

1004260 - SHT 2

2/1004260

DASH NO.	P/C	PART NAME	REMARKS	PART NUMBER	SER. NO.	CONT. NO.	STYLE	TYPE	MATERIAL	A	B	C	D	E	F	G	H	J	K	L	M	N	
299	R																						
298	R																						
293	R	COMPUTER TEST SET		2014042-081	NA	NAS-9-497	B	II	NOTE 11C	FOR DIMENSIONS SEE DASH 18 VALUES BELOW													
292	R	DRAWER ASSY - PROGRAM & MONITOR		2014041-071	NA	NAS-9-497	B	I	NOTE 11B	FOR DIMENSIONS SEE DASH 17 VALUES BELOW													
291	R	BUFFER CIRCUIT ASSY		2014254-041	NA	NAS-9-497	B	I	NOTE 11B	FOR DIMENSIONS SEE DASH 15 VALUES BELOW													
290	R	LOGIC DRAWER ASSY NO 2		2014037-051	NA	NAS-9 497	B	I	NOTE 11B	FOR DIMENSIONS SEE DASH 17 VALUES BELOW													
289	R	SELF TEST ASSY		2014392-021	NA	NAS-9 497	B	I	NOTE 11B	FOR DIMENSIONS SEE DASH 15 VALUES BELOW													
288	R	LOGIC DRAWER ASSY NO.1		2014036-051	NA	NAS-9 497	B	I	NOTE 11B	FOR DIMENSIONS SEE DASH 17 VALUES BELOW													
287	R	COMPUTER TEST SET		2014042-071	NA	NAS-9 497	B	II	NOTE 11C	FOR DIMENSIONS SEE DASH 18 VALUES BELOW													
286	R	DRAWER ASSY PROGRAM & MONITOR		2014041-061	NA	NAS-9-497	B	I	NOTE 11B	FOR DIMENSIONS SEE DASH 17 VALUES BELOW													
285	R	BUFFER CIRCUIT ASSY		2014254-031	NA	NAS-9-497	B	I	NOTE 11B	FOR DIMENSIONS SEE DASH 15 VALUES BELOW													
284	R	LOGIC DRAWER ASSY NO. 2		2014037-041	NA	NAS-9-497	B	I	NOTE 11B	FOR DIMENSIONS SEE DASH 17 VALUES BELOW													
283	R	DRAWER ASSY-PROGRAM & MONITOR		2014041-051	NA	NAS-9-497	B	I	NOTE 11B	FOR DIMENSIONS SEE DASH 17 VALUES BELOW													
282	R	COMPUTER TEST SET		2014042-061	NA	NAS-9-497	B	II	NOTE 11C	FOR DIMENSIONS SEE DASH 18 VALUES BELOW													
281	R	AGC HANDLING FIXTURE		2014282-031	NA	NAS-9-497	B	I	NOTE 11B	FOR DIMENSIONS SEE DASH 17 VALUES BELOW													
280	R	COMPUTER TEST SET		2014042-051	NA	NAS-9-497	B	II	NOTE 11C	FOR DIMENSIONS SEE DASH 18 VALUES BELOW													
279	R	SELF TEST ASSY		2014366-041	NA	NAS-9-497	B	I	NOTE 11B	FOR DIMENSIONS SEE DASH 15 VALUES BELOW													
278	R	LOGIC DRAWER ASSY NO. 1		2014036-041	NA	NAS-9-497	B	I	NOTE 11B	FOR DIMENSIONS SEE DASH 17 VALUES BELOW													
277	R	COMPUTER TEST SET		2014042-041	NA	NAS-9-497	B	II	NOTE 11C	FOR DIMENSIONS SEE DASH 18 VALUES BELOW													
276	R	DRAWER ASSY-PROGRAM & MONITOR		2014041-041	NA	NAS-9-497	B	I	NOTE 11B	FOR DIMENSIONS SEE DASH 17 VALUES BELOW													
275	R	DRAWER ASSY RDC INTERFACE		2014045-031	NA	NAS-9-497	B	I	NOTE 11B	FOR DIMENSIONS SEE DASH 15 VALUES BELOW													
274	R	SELF TEST ASSY		2014366-031	NA	NAS-9-497	B	I	NOTE 11B	FOR DIMENSIONS SEE DASH 15 VALUES BELOW													
273	R	LOGIC DRAWER ASSY NO. 2		2014037-031	NA	NAS-9-497	B	I	NOTE 11B	FOR DIMENSIONS SEE DASH 17 VALUES BELOW													
272	R	DRAWING ASSY PROGRAMMER & MONITOR		2014041-031	NA	NAS-9-497	B	I	NOTE 11B	FOR DIMENSIONS SEE DASH 17 VALUES BELOW													
271	R	LOGIC DRAWER ASSY NO. 1		2014036-031	NA	NAS-9-497	B	I	NOTE 11B	FOR DIMENSIONS SEE DASH 17 VALUES BELOW													
270	R	COMPUTER TEST SET		2014042-031	NA	NAS-9-497	B	II	NOTE 11C	FOR DIMENSIONS SEE DASH 18 VALUES BELOW													
269	R	POWER CONTROL ASSY		2014044-021	NA	NAS-9-497	B	I	NOTE 11B	FOR DIMENSIONS SEE DASH 17 VALUES BELOW													
268	R	SELF TEST ASSY		2014366-021	NA	NAS-9-497	B	I	NOTE 11B	FOR DIMENSIONS SEE DASH 15 VALUES BELOW													
267	R	AGC JUNCTION ASSY		2014341-021	NA	NAS-9-497	B	I	NOTE 11B	FOR DIMENSIONS SEE DASH 15 VALUES BELOW													
266	R	POWER CONTROL ASSY		2014079-021	NA	NAS-9-497	B	I	NOTE 11B	FOR DIMENSIONS SEE DASH 15 VALUES BELOW													
265	R	BUFFER CIRCUIT ASSY		2014254-021	NA	NAS-9-497	B	I	NOTE 11B	FOR DIMENSIONS SEE DASH 15 VALUES BELOW													
264	R	DRAWER ASSY X Y INTERFACE		2014040-021	NA	NAS-9-497	B	I	NOTE 11B	FOR DIMENSIONS SEE DASH 15 VALUES BELOW													
263	R	DRAWER ASSY RDC INTERFACE		2014045-021	NA	NAS 9 497	B	I	NOTE 11B	FOR DIMENSIONS SEE DASH 15 VALUES BELOW													
262	R	DRAWER ASSY PROGRAMMER & MONITOR		2014041-021	NA	NAS-9-497	B	I	NOTE 11B	FOR DIMENSIONS SEE DASH 17 VALUES BELOW													
261	R	LOGIC DRAWER ASSY NO. 2		2014037-021	NA	NAS-9-497	B	I	NOTE 11B	FOR DIMENSIONS SEE DASH 17 VALUES BELOW													
260	R	LOGIC DRAWER ASSY NO. 1		2014036-021	NA	NAS-9-497	B	I	NOTE 11B	FOR DIMENSIONS SEE DASH 17 VALUES BELOW													
259	R	OPERATION CONSOLE		2014024-021	NA	NAS-9-497	B	II	NOTE 11C	FOR DIMENSIONS SEE DASH 18 VALUES BELOW													
258	R	COMPUTER TEST SET		2014042-021	NA	NAS-9-497	B	II	NOTE 11C	FOR DIMENSIONS SEE DASH 18 VALUES BELOW													
257	R	AUXILIARY CALIBRATION CONSOLE		2014059-021	NA	NAS-9-497	B	II	NOTE 11C	FOR DIMENSIONS SEE DASH 18 VALUES BELOW													
256	R	AGC CALIBRATION CONSOLE		2014049-021	NA	NAS-9-497	B	II	NOTE 11C	FOR DIMENSIONS SEE DASH 18 VALUES BELOW													
255	R	AGC HANDLING FIXTURE		2014282-021	NA	NAS-9-497	B	I	NOTE 11B	FOR DIMENSIONS SEE DASH 17 VALUES BELOW													
254	R	DRAWER ASSY COMP. SIMULATOR		2014048-011	NA	NAS-9-497	B	II	NOTE 11C	FOR DIMENSIONS SEE DASH 18 VALUES BELOW													
253	R	SHIPPING KIT ASSY, NAV DSKY		2016312-011	NA	NAS-9-497	B	II	NOTE 11C	FOR DIMENSIONS SEE DASH 18 VALUES BELOW													
252	R	SHIPPING KIT ASSY, UNIVERSAL DSKY		2016316-011	NA	NAS-9-497	B	II	NOTE 11C	FOR DIMENSIONS SEE DASH 18 VALUES BELOW													
251	R	SHIPPING KIT ASSY, MAIN DSKY		2016313-011	NA	NAS-9-497	B	II	NOTE 11C	FOR DIMENSIONS SEE DASH 18 VALUES BELOW													
250	R	AMPLIFIER, REWORK		2014386	NA	NAS-9-497	B	I	NOTE 11B	FOR DIMENSIONS SEE DASH 15 VALUES BELOW													
249	R	TEMP MONITOR ASSY		2014313-011	NA	NAS-9-497	B	I	NOTE 11C	FOR DIMENSIONS SEE DASH 17 VALUES BELOW													
248	R	AGC JUNCTION ASSY		2014341-011	NA	NAS-9-497	B	I	NOTE 11B	FOR DIMENSIONS SEE DASH 15 VALUES BELOW													
247	R	AC INPUT PANEL ASSY		2014302-011	NA	NAS-9-497	B	I	NOTE 11B	FOR DIMENSIONS SEE DASH 15 VALUES BELOW													
246	R	SELF TEST ASSY		2014392-011	NA	NAS-9-497	B	I	NOTE 11B	FOR DIMENSIONS SEE DASH 15 VALUES BELOW													
245	R	TAPE PUNCH ASSEMBLY		2014039-011	NA	NAS-9-497	B	I	NOTE 11B	FOR DIMENSIONS SEE DASH 15 VALUES BELOW													
244	R	TAPE READER ASSEMBLY		2014038-011	NA	NAS-9-497	B	I	NOTE 11B	FOR DIMENSIONS SEE DASH 15 VALUES BELOW													
243																							
242																							
241	R	APOLLO GUIDANCE COMPUTER GROUP		6003001	NA	NAS-9-497	A	I	NOTE 11B	FOR DIMENSIONS SEE DASH 19 VALUES BELOW													
240	R	SELF TEST ASSEMBLY		2014366-011	NA	NAS-9-497	B	I	NOTE 11B	FOR DIMENSIONS SEE DASH 15 VALUES BELOW													
239	R	POWER SUPPLY ASSY-115V., 400 CYCLE		2014207-011	NA	NAS-9-497	B	I	NOTE 11B	FOR DIMENSIONS SEE DASH 17 VALUES BELOW													
238	R	AC INPUT PANEL ASSY		2014043-011	NA	NAS-9-497	B	I	NOTE 11B	FOR DIMENSIONS SEE DASH 17 VALUES BELOW													
237	R	POWER CONTROL ASSY		2014079-011	NA	NAS-9-497	B	I	NOTE 11B	FOR DIMENSIONS SEE DASH 15 VALUES BELOW													
236	R	DRAWER ASSY-X Y INTERFACE		2014040-011	NA	NAS-9-497	B	I	NOTE 11B	FOR DIMENSIONS SEE DASH 15 VALUES BELOW													
235	R	DRAWER ASSY RDC INTERFACE		2014045-011	NA	NAS-9-497	B	I	NOTE 11B	FOR DIMENSIONS SEE DASH 15 VALUES BELOW													
234	R	BUFFER CIRCUIT ASSY		2014254-011	NA	NAS-9-497	B	I	NOTE 11B	FOR DIMENSIONS SEE DASH 15 VALUES BELOW													
233	R	CONTROL & INTERFACE ASSY		2014204-011	NA	NAS-9-497	B	I	NOTE 11B	FOR DIMENSIONS SEE DASH 15 VALUES BELOW													
232	R	POWER CONTROL ASSY		2014044-011	NA	NAS-9-497	B	I	NOTE 11B	FOR DIMENSIONS SEE DASH 17 VALUES BELOW													
231	R	DRAWER ASSY, PROGRAMMER & MONITOR		2014041-011	NA	NAS-9-497	B	I	NOTE 11B	FOR DIMENSIONS SEE DASH 17 VALUES BELOW													
230	R	CONNECTOR INTERFACE ASSY		2014272-011	NA	NAS-9-497	B	I	NOTE 11B	FOR DIMENSIONS SEE DASH 15 VALUES BELOW													
229	R	CONNECTOR INTERFACE ASSY		2014047-011	NA	NAS-9-497	B	I	NOTE 11B	FOR DIMENSIONS SEE DASH 15 VALUES BELOW													
228	R	ANTENNA, TUNING CAPACITOR ASSY		2014209-011	NA	NAS-9-497	B	I	NOTE 11B	FOR DIMENSIONS SEE DASH 15 VALUES BELOW													
227	R	MOUNTING FIXTURE ASSY		2014006-011	NA	NAS-9-497	B	I	NOTE 11B	FOR DIMENSIONS SEE DASH 17 VALUES BELOW													
226	R	POWER SUPPLY ASSY 3 VDC		2014234-011	NA	NAS-9-497	B	I	NOTE 11B	FOR DIMENSIONS SEE DASH 15 VALUES BELOW													
225	R	PANEL ASSY—SIGNAL INTERFACE		2014010-011	NA	NAS-9-497	B	I	NOTE 11B	FOR DIMENSIONS SEE DASH 15 VALUES BELOW													
224	R	OSCILLOSCOPE ASSY		2014232-011	NA	NAS-9-497	B	I	NOTE 11B	FOR DIMENSIONS SEE DASH 15 VALUES BELOW													
223	R	AUXILIARY OUTLET ASSY		2014274-011	NA	NAS-9-497	B	I	NOTE 11B	FOR DIMENSIONS SEE DASH 15 VALUES BELOW													
222	R	FREQUENCY COUNTER		2014233-011	NA	NAS-9-497	B	I	NOTE 11B	FOR DIMENSIONS SEE DASH 15 VALUES BELOW													
221	R	POWER SUPPLY ASSY 10, 13, 28 VDC		2014235-011	NA	NAS-9-497	B	I	NOTE 11B	FOR DIMENSIONS SEE DASH 15 VALUES BELOW													
220	R	LOGIC DRAWER ASSY NO. 2		2014037-011	NA	NAS-9-497	B	I	NOTE 11B	FOR DIMENSIONS SEE DASH 17 VALUES BELOW													
219	R	LOGIC DRAWER ASSY NO. 1		2014036-011	NA	NAS-9-497	B	I	NOTE 11B	FOR DIMENSIONS SEE DASH 17 VALUES BELOW													
218	R	COUNTER, ELECTRICAL ASSY		2014288-011	NA	NAS-9-497	B	I	NOTE 11B	FOR DIMENSIONS SEE DASH 15 VALUES BELOW													
217	R	POWER SUPPLY ASSY		2014279-011	NA	NAS-9-497	B	I	NOTE 11B	FOR DIMENSIONS SEE DASH 15 VALUES BELOW													
216	R	TEST MOUNT ASSY		2014257-011	NA	NAS-9-497	B	I	NOTE 11B	FOR DIMENSIONS SEE DASH 15 VALUES BELOW													
215	R	UNIVERSAL DSKY PEDESTAL MOUNT		2014014-011	NA	NAS-9-497	B	I	NOTE 11B	FOR DIMENSIONS SEE DASH 17 VALUES BELOW													
214	R	MAIN DSKY PEDESTAL MOUNT		2014343	NA	NAS-9-497	B	I	NOTE 11B	FOR DIMENSIONS SEE DASH 17 VALUES BELOW													
213	R	SHIPPING CONTAINER, MAIN DSKY		1006229	NA	NAS-9-497	B	II	NOTE 11C	FOR DIMENSIONS SEE DASH 18 VALUES BELOW													
212	R	SHIPPING CONTAINER, NAV DSKY		1006231	NA	NAS-9-497	B	II	NOTE 11C	FOR DIMENSIONS SEE DASH 18 VALUES BELOW													
211	R	SHIPPING CONTAINER, AGC		1006230	NA	NAS-9-497	B	II	NOTE 11C	FOR DIMENSIONS SEE DASH 18 VALUES BELOW													
210	R	SHIPPING CONTAINER, UNIVERSAL DSKY		1006422	NA	NAS-9-497	B	II	NOTE 11C	FOR DIMENSIONS SEE DASH 18 VALUES BELOW													
209	R	SHIPPING CONTAINER, AGC		1006421	NA	NAS-9-497	B	II	NOTE 11C	FOR DIMENSIONS SEE DASH 18 VALUES BELOW													
208	R	UNIVERSAL DSKY HANDLING FIXTURE		2014013-011	NA	NAS-9-497	B	I	NOTE 11B	FOR DIMENSIONS SEE DASH 15 VALUES BELOW													
207	R	NAV DSKY HANDLING FIXTURE		1014377	NA	NAS-9-497	B	I	NOTE 11B	FOR DIMENSIONS SEE DASH 17 VALUES BELOW													
206	R	MAIN DSKY HANDLING FIXTURE		1014334	NA	NAS-9-497	B	I	NOTE 11B	FOR DIMENSIONS SEE DASH 17 VALUES BELOW													
205	R	AGC HANDLING FIXTURE		2014282-011	NA	NAS-9-497	B	I	NOTE 11B	FOR DIMENSIONS SEE DASH 17 VALUES BELOW													
204	R	OPERATION CONSOLE		2014024-011	NA	NAS-9-497	B	II	NOTE 11C	FOR DIMENSIONS SEE DASH 18 VALUES BELOW													
203	R	COMPUTER TEST SET		2014042-011	NA	NAS-9-497	B	II	NOTE 11C	FOR DIMENSIONS SEE DASH 18 VALUES BELOW													
202	R	DRAWER ASSY, COMPUTER SIMULATOR		2014048-011	NA	FNP-12775	B	II	NOTE 11C	FOR DIMENSIONS SEE DASH 18 VALUES BELOW													
201	R	AUXILIARY CALIBRATION CONSOLE		2014059-011	NA	NAS-9-497	B	II	NOTE 11C	FOR DIMENSIONS SEE DASH 18 VALUES BELOW													
200	R	AGC CALIBRATION CONSOLE		2014049-011	NA	NAS-9-497	B	II	NOTE 11C	FOR DIMENSIONS SEE DASH 18 VALUES BELOW													
21	R																						
20	R	NA		NA	NA	NA	A	II	NOTE 11C	2.000	1.312	1.687	1.375	.078	.031	.078	.093	TYP	.093	1.187	.750	.593	.4
19	R	NA		NA	NA	NA	A	I	NOTE 11B	2.000	1.312	1.687	1.375	.078	.031	.078	.093	NA	NA	1.187	.750	.593	.4
18	R	NA		NA	NA	NA	B	II	NOTE 11C	4.187	1.875	3.469	2.750	.156	.093	.156	.125	TYP	.125	1.625	1.032	.844	.6
17	R	NA		NA	NA	NA	B	I	NOTE 11B	4.187	1.875	3.469	2.750	.156	.093	.156	.125	NA	NA	1.625	1.032	.844	.6
16	R	NA		NA	NA	NA	B	II	NOTE 11C	2.000	1.312	1.687	1.375	.078	.031	.078	.093	TYP	.093	1.187	.750	.593	.4
15	R	NA		NA	NA	NA	B	I	NOTE 11B	2.000	1.312	1.687	1.375	.078	.031	.078	.093	NA	NA	1.187	.750	.593	.4

NOTES FOR TABLE

STYLE A IS FOR G & N SYSTEM
STYLE B IS FOR GROUND SUPPORT EQUIPMENT
TYPE I IS WITHOUT MOUNTING HOLES
TYPE II IS WITH MOUNTING HOLES

1004260 C SHT 3

1/1004260

SYM	ZONE	DESCRIPTION	CHG NO	DATE	APPD
CL		REPLACES REV CK WITHOUT CHANGE PER TDRR 34365		7/28/67	
CM		REVISION STATUS CHANGED		18 OCT 67	RAN
CN		REVISION STATUS CHANGED		31 OCT 67	
CP		REVISION STATUS CHANGED		6 NOV 67	
CR		REVISION STATUS CHANGED			
CS		REVISION STATUS CHANGED		3 JAN 68	
CT		REVISED PER TDRR 35526		68	
CU		REVISION STATUS CHANGED		22 FEB	
CV		REVISION STATUS CHANGED		68	
CW		REVISION STATUS CHANGED		APR 68	
CY		REVISED PER TDRR 36028		APR 68	
CZ		REVISION STATUS CHANGED		29 MAY 68	
DA		REVISION STATUS CHANGED			

F	G	H	J	K	L	M	N	P	R	S	T	U	V	W	Y	Z	AA	AB	AC	AD	AE	AF	AG	AH	AJ	AK	AL	AM	AN	AP	AR
[illegible]	.078	.093	[illegible]	.093	1.187	.750	.593	.453	1.015	.062	.187	.078	.875	.718	1.375	.218	1.156	1.843	.048	NA	.875	.305	.078	.312	1.687	.078	NA	.078	.312	.187	1.843
[illegible]	.078	.093	NA	NA	1.187	.750	.593	.453	1.015	.062	.187	.078	.875	.718	1.375	.218	NA	NA	.048	.031	.875	.305	.078	.312	1.687	.078	NA	.078	.312	.187	NA
[illegible]	.156	.125	[illegible]	.125	1.625	1.032	.844	.656	1.406	.093	.344	.156	1.781	1.531	2.844	.312	1.562	3.875	.062	NA	1.219	.500	.156	.719	3.469	.156	NA	.156	.719	.344	3.875
[illegible]	[illegible]	.125	NA	NA	1.625	1.032	.844	.656	1.406	.093	.344	.156	1.781	1.531	2.844	.312	NA	NA	.062	.062	1.219	.500	.156	.719	3.469	.156	NA	.156	.719	.344	NA
[illegible]	.078	.093	[illegible]	.093	1.187	.750	.593	.453	1.015	.062	.187	.078	.875	.718	1.375	.218	1.156	1.843	.048	NA	.875	.305	.078	.312	1.687	.078	NA	.078	.312	.187	1.843
[illegible]	.078	.093	NA	NA	1.187	.750	.593	.453	1.015	.062	.187	.078	.875	.718	1.375	.218	NA	NA	.048	.031	.875	.305	.078	.312	1.687	.078	NA	.078	.312	.187	NA

RAYTHEON DASH NUMBERS

AS APPLICABLE
NEXT ASSY | USED ON
APPLICATION

UNLESS OTHERWISE SPECIFIED
DIMENSIONS ARE IN INCHES
TOLERANCES ON
2 PLACE DECIMALS ±
3 PLACE DECIMALS ± .005
ANGLES ±
DO NOT SCALE THIS DRAWING
MATERIAL SEE NOTE 11
APPROVAL

M I T
INSTRUMENTATION LAB
CAMBRIDGE MASS
DRAWN R A JONES DATE 15 JUL 65
CHECKED
APPROVAL W KUPFER 22 JUL 65
CONTRACT
NASA APPROVAL T. MICHAELS 22 JUL 65
MIT APPROVAL W KUPFER 22 JUL 65

MANNED
SPACECRAFT CENTER
HOUSTON, TEXAS

NAMEPLATES,
APOLLO GEN - GSE
(STANDARDS)

SIZE J2
CODE IDENT NO. 80230
1004260
SCALE NONE
SHEET 3 OF 6

1004260 DA

AC DASH NUMBERS CONTINUED ON SHEET 6

DASH NO.	P/C	PART NAME	REMARKS	PART NUMBER	SER. NO.	CONT. NO.	STYLE	TYPE	MATERIAL	A	B	C	D	E	F	G	H	J	K	L	M	N	P
199	AC	EYEPIECE STOWAGE UNIT		2021255-011			A	I		FOR DIMENSIONS SEE DASH 100 VALUES BELOW													
198	AC	SIGNAL CONDITIONER ASSY C/M		2007234		NAS-9-497	A	I	NOTE 11B	FOR DIMENSIONS SEE DASH 100 VALUES BELOW													
197	AC	SIGNAL CONDITIONER ASSY C/M		2007235		NAS-9-497	A	I	NOTE 11B	FOR DIMENSIONS SEE DASH 100 VALUES BELOW													
196	AC	SIGNAL CONDITIONER ASSY LEM		6007010		NAS-9-497	A	I	NOTE 11B	FOR DIMENSIONS SEE DASH 100 VALUES BELOW													
195	AC	PSA & SIGNAL CONDITIONER ASSY		6007009		NAS-9-497	A	I	NOTE 11B	FOR DIMENSIONS SEE DASH 100 VALUES BELOW													
194	AC	PANEL, MONITOR		2900031-031		NAS-9-497	B	II	NOTE 11C	FOR DIMENSIONS SEE DASH 141 VALUES BELOW													
193	AC	DISTRIBUTION BOX, GSE		2900024-031		NAS-9-497	B	II	NOTE 11C	FOR DIMENSIONS SEE DASH 141 VALUES BELOW													
192	AC	ANALYZER, OPTICS-INERTIAL		2900023-031		NAS-9-497	B	II	NOTE 11C	FOR DIMENSIONS SEE DASH 144 VALUES BELOW													
191	AC	TEST CONTROL		2900027-031		NAS-9-497	B	II	NOTE 11C	FOR DIMENSIONS SEE DASH 141 VALUES BELOW													
190	AC	PANEL, PWR SUP AND LOAD		2900033-021		NAS-9-497	B	II	NOTE 11C	FOR DIMENSIONS SEE DASH 141 VALUES BELOW													
189	AC	ADPT MODULE, P.S.A.		6900088-011		NAS-9-497	B	II	NOTE 11C	FOR DIMENSIONS SEE DASH 141 VALUES BELOW													
188	AC	ADPT MODULE, P.S.A.		2901143-011		NAS-9-497	B	II	NOTE 11C	FOR DIMENSIONS SEE DASH 141 VALUES BELOW													
187	AC	FIXTURE, MTG, PTA/PEA		2900066-021		NAS-9-497	B	II	NOTE 11C	FOR DIMENSIONS SEE DASH 141 VALUES BELOW													
186	AC	ANNUNCIATOR PANEL & EYEPIECE STORAGE ASSEMBLY		1021255-021			A	I		FOR DIMENSIONS SEE DASH 100 VALUES BELOW													
185	AC	ANNUNCIATOR PANEL & EYEPIECE STORAGE ASSEMBLY		1021255-011			A	I		FOR DIMENSIONS SEE DASH 100 VALUES BELOW													
184	AC	FIX., HAND., G AND N HARNESS		1901846-041		NAS-9-497	B	II	NOTE 11C	FOR DIMENSIONS SEE DASH 144 VALUES BELOW													
183	AC	INSTALLING TOOL, ELEC, CONN		1902586-011		NAS-9-497	B	II	NOTE 11C	FOR DIMENSIONS SEE DASH 102 VALUES BELOW													
182	AC	ADPT MODULE, P.S.A.		6900088-011		NAS-9-497	B	II	NOTE 11C	FOR DIMENSIONS SEE DASH 141 VALUES BELOW													
181	AC	G & N INDICATOR CONTROL PANEL ASSY		2014578-011		NAS-9-497	A	I	NOTE 11B	3.000	1.938	2.437	NA	.125	.062	.188	.156	NA	NA	1.750	1.125	.906	.688
180	AC	ADPT MODULE, P.S.A.		1902431-031		NAS-9-497	B	II		FOR DIMENSIONS SEE DASH 121 VALUES BELOW													
179	AC	MOUNTING PLATE, IMU/PTA		6900083-011		NAS-9-497	B	II		FOR DIMENSIONS SEE DASH 144 VALUES BELOW													
178	AC	MOUNTING PLATE, COMPONENT		6900007-021		NAS-9-497	B	II		FOR DIMENSIONS SEE DASH 144 VALUES BELOW													
177	AC	FIX., MOUNTING, SUBSYSTEM		2900070-021		NAS-9-497	B	II		FOR DIMENSIONS SEE DASH 144 VALUES BELOW													
176	AC	FIX., MOUNTING, G & N		2900067-021		NAS-9-497	B	II		FOR DIMENSIONS SEE DASH 144 VALUES BELOW													
175	AC	CSL, COOL. AND PWR, G & N		1902134-031		NAS-9-497	B	II		FOR DIMENSIONS SEE DASH 144 VALUES BELOW													
174	AC	FIX., HAND., C/M AND LEM CDU		2900999-011		NAS-9-497	B	II	NOTE 11C	FOR DIMENSIONS SEE DASH 141 VALUES BELOW													
173	AC	FIX., HANDLING, C/M PSA		2900998-011		NAS-9-497	B	II	NOTE 11C	FOR DIMENSIONS SEE DASH 141 VALUES BELOW													
172	AC	CAGING ELECTRONICS, GYRO		2900029-021		NAS-9-497	B	II	NOTE 11C	FOR DIMENSIONS SEE DASH 141 VALUES BELOW													
171	AC	DISTRIBUTION BOX, GSE		2900024-021		NAS-9-497	B	II	NOTE 11C	FOR DIMENSIONS SEE DASH 141 VALUES BELOW													
170	AC	ANALYZER, OPTICS-INERTIAL		2900023-021		NAS-9-497	B	II	NOTE 11C	FOR DIMENSIONS SEE DASH 144 VALUES BELOW													
169	AC	ADPT, TESTPOINT, P.S.A.		2900037-021		NAS-9-497	B	II	NOTE 11C	FOR DIMENSIONS SEE DASH 141 VALUES BELOW													
168	AC	TEST SELECTOR		[illegible]		NAS-9-497	B	II	NOTE 11C	FOR DIMENSIONS SEE DASH 141 VALUES BELOW													
167	AC	TEST CONTROL		2900027-021		NAS-9-497	B	II	NOTE 11C	FOR DIMENSIONS SEE DASH 141 VALUES BELOW													
166	AC	PANEL, MONITOR		2900031-021		NAS-9-497	B	II	NOTE 11C	FOR DIMENSIONS SEE DASH 141 VALUES BELOW													
165	AC	TERM. BOARD STORAGE DRAWER		2900927-011		NAS-9-497	B	II	NOTE 11C	FOR DIMENSIONS SEE DASH 141 VALUES BELOW													
164	AC	INPUT/OUTPUT PANEL		2900926-011		NAS-9-497	B	II	NOTE 11C	FOR DIMENSIONS SEE DASH 141 VALUES BELOW													
163	AC	CONTROL PANEL		2900896-011		NAS-9-497	B	II	NOTE 11C	FOR DIMENSIONS SEE DASH 141 VALUES BELOW													
162	AC	CSL, CAL AND TEST, SCM/PSAAM		2900895-011		NAS-9-497	B	II	NOTE 11C	FOR DIMENSIONS SEE DASH 144 VALUES BELOW													
161	AC	FIX., LIFT AND HAND., IMU		1015462-011		NAS-9-497	B	II	NOTE 11C	FOR DIMENSIONS SEE DASH 141 VALUES BELOW													
160	AC	FIX., HAND., G & N HARNESS		1901846-031		NAS-9-497	B	II	NOTE 11C	FOR DIMENSIONS SEE DASH 144 VALUES BELOW													
159	AC	BATTERY POWER PACK		1900011-031		NAS-9-497	B	II	NOTE 11C	FOR DIMENSIONS SEE DASH 144 VALUES BELOW													
158	AC	COUPLING DATA UNIT ASSEMBLY C/M		2007222		NAS-9-497	A	I	NOTE 11B	FOR DIMENSIONS SEE DASH 100 VALUES BELOW													
157	AC	COUPLING DATA UNIT ASSEMBLY - LEM		2007222		NAS-9-497	A	I	NOTE 11B	FOR DIMENSIONS SEE DASH 100 VALUES BELOW													
156	AC	POWER & SERVO ASSEMBLY C/M		2007200		NAS-9-497	A	I	NOTE 11B	2.125	.968	1.718	NA	.093	.031	.06	.093	NA	NA	.858	.608	.484	[illegible]
155	AC	PIPA ELECTRONICS ASSEMBLY		2007201		NAS-9-497	A	I	NOTE 11B	FOR DIMENSIONS SEE DASH 100 VALUES BELOW													
154	AC	PULSE TORQUE ASSEMBLY-LEM		6007000		NAS-9-497	A	I	NOTE 11B	FOR DIMENSIONS SEE DASH 100 VALUES BELOW													
153	AC	POWER & SERVO ASSEMBLY-LEM		6007200		NAS-9-497	A	I	NOTE 11B	FOR DIMENSIONS SEE DASH 100 VALUES BELOW													
152	AC	CONT PNL, RSVR CKT TESTER		2900770-011		NAS-9-497	B	II	NOTE 11C	FOR DIMENSIONS SEE DASH 141 VALUES BELOW													
151	AC	TESTER, RESOLVER CIRCUIT		2900708-011		NAS-9-497	B	II	NOTE 11C	FOR DIMENSIONS SEE DASH 141 VALUES BELOW													
150	AC	JUNCTION BOX, P.S.A./G.S.E.		1901933-021		NAS-9-497	B	II	NOTE 11C	FOR DIMENSIONS SEE DASH 144 VALUES BELOW													
149	AC	BATTERY PACK, LIFTING		2900812-011		NAS-9-497	B	II	NOTE 11C	FOR DIMENSIONS SEE DASH 141 VALUES BELOW													
148	AC	MOUNTING PLATE, COMPONENT		6900007-011		NAS-9-497	B	II	NOTE 11C	FOR DIMENSIONS SEE DASH 144 VALUES BELOW													
147	AC	MOUNTING PLATE, COMPONENT		2900677-011		NAS-9-497	B	II	NOTE 11C	FOR DIMENSIONS SEE DASH 144 VALUES BELOW													
146	AC	CART, TRANS, G & N		1900009-041		NAS-9-497	B	II	NOTE 11C	FOR DIMENSIONS SEE DASH 144 VALUES BELOW													
145	AC	CONTAINER, SHIPPING, IMU		1900010-021		NAS-9-497	B	II	NOTE 11C	FOR DIMENSIONS SEE DASH 144 VALUES BELOW													
144	AC	FIX., MOUNTING, G & N		1902204-021			B	II	NOTE 11C	4.125	1.812	3.250	NA	.125	.062	.12	.156		.125	1.625	1.140	.890	.640
143	AC	CSL, COOL. AND PWR, G & N		1902134-021			B	II	NOTE 11C	4.125	1.812	3.250	NA	.125	.062	.12	.156		.125	1.625	1.140	.890	.640
142	AC	ANALYZER, OPTICS-INERTIAL		2900023-011			B	II	NOTE 11C	4.125	1.812	3.250	NA	.125	.062	.12	.156		.125	1.625	1.140	.890	.640
141	AC	CONT, TEMP, PORTABLE		2900060-011			B	II	NOTE 11C	2.125	.968	1.718	NA	.093	.031	.06	.093		.093	.858	.608	.484	.358
140	AC	TESTER, CKT, IMU/CDU RSVR		2900286-011			B	II	NOTE 11C	4.125	1.812	3.250	NA	.125	.062	.12	.156		.125	1.625	1.140	.890	.640
139	AC	SIMULATOR, LD/SIG, CDU		2900285-011			B	II	NOTE 11C	4.125	1.812	3.250	NA	.125	.062	.12	.156		.125	1.625	1.140	.890	.640
138	AC	SIMULATOR, LD/SIG, OPTICS		1902023-021			B	II	NOTE 11C	4.125	1.812	3.250	NA	.125	.062	.12	.156		.125	1.625	1.140	.890	.640
137	AC	FIX., MOUNTING, IMU/NAV BASE		6900003-011			B	II	NOTE 11C	4.125	1.812	3.250	NA	.125	.062	.12	.156		.125	1.625	1.140	.890	.640
136	AC	FIXTURE, OPTICS/NAV BASE		2900072-011			B	II	NOTE 11C	4.125	1.812	3.250	NA	.125	.062	.12	.156		.125	1.625	1.140	.890	.640
135	AC	FIX., MOUNTING, SUB SYSTEM		2900070-011			B	II	NOTE 11C	4.125	1.812	3.250	NA	.125	.062	.12	.156		.125	1.625	1.140	.890	.640
134	AC	FIX., HAND., G & N HARNESS		2900069-011			B	II	NOTE 11C	4.125	1.812	3.250	NA	.125	.062	.12	.156		.125	1.625	1.140	.890	.640
133	AC	CNTR, SHIPPING, NAV BASE		2900068-011			B	II	NOTE 11C	4.125	1.812	3.250	NA	.125	.062	.12	.156		.125	1.625	1.140	.890	.640
132	AC	FIX., MOUNTING, G & N		2900067-011			B	II	NOTE 11C	4.125	1.812	3.250	NA	.125	.062	.12	.156		.125	1.625	1.140	.890	.640
131	AC	SIMULATOR, LD/SIG, IMU/CDU		2900062-011			B	II	NOTE 11C	4.125	1.812	3.250	NA	.125	.062	.12	.156		.125	1.625	1.140	.890	.640
130	AC	TESTER, GYRO WHEEL		2900061-011			B	II	NOTE 11C	4.125	1.812	3.250	NA	.125	.062	.12	.156		.125	1.625	1.140	.890	.640
129	AC	COOLANT SUPPLY		1902133-021			B	II	NOTE 11C	4.125	1.812	3.250	NA	.125	.062	.12	.156		.125	1.625	1.140	.890	.640
128	AC	TABLE, ROTARY		1900926-021			B	II	NOTE 11C	4.125	1.812	3.250	NA	.125	.062	.12	.156		.125	1.625	1.140	.890	.640
127	AC	FIX., HAND., OPTICS		2900074-011			B	II	NOTE 11C	2.125	.968	1.718	NA	.093	.031	.06	.093		.093	.858	.608	.484	.358
126	AC	FIXTURE, MTG, PTA/PEA.		2900066-011			B	II	NOTE 11C	2.125	.968	1.718	NA	.093	.031	.06	.093		.093	.858	.608	.484	.358
125	AC	CONT, TEMP, IMU LIFTING		2900063-011			B	II	NOTE 11C	2.125	.968	1.718	NA	.093	.031	.06	.093		.093	.858	.608	.484	.358
124	AC	FIXTURE, HANDLING, IMU		2900064-011			B	II	NOTE 11C	2.125	.968	1.718	NA	.093	.031	.06	.093		.093	.858	.608	.484	.358
123	AC	CONT, OPTICS, REMOTE		1902046-021			B	II	NOTE 11C	2.125	.968	1.718	NA	.093	.031	.06	.093		.093	.858	.608	.484	.358
122	AC	TEST CONTROL		1902009-021			B	II	NOTE 11C	2.125	.968	1.718	NA	.093	.031	.06	.093		.093	.858	.608	.484	.358
121	AC	ADPT MODULE, P.S.A.		1902431-021			B	II	NOTE 11C	2.125	.968	1.718	NA	.093	.031	.06	.093		.093	.858	.608	.484	.358
120	AC	BRIDGE, DECADE ERROR		2900128-011			B	II	NOTE 11C	2.125	.968	1.718	NA	.093	.031	.06	.093		.093	.858	.608	.484	.358
119	AC	PWR SUP, ELECTRONICS		2900012-011			B	II	NOTE 11C	2.125	.968	1.718	NA	.093	.031	.06	.093		.093	.858	.608	.484	.358
118	AC	PWR SUP, RELAY AND LAMP		1900049-031			B	II	NOTE 11C	2.125	.968	1.718	NA	.093	.031	.06	.093		.093	.858	.608	.484	.358
117	AC	CONSOLE, OSCILLOGRAPH		1900000-021			B	II	NOTE 11C	2.125	.968	1.718	NA	.093	.031	.06	.093		.093	.858	.608	.484	.358
116	AC	ADPT MODULE, P.S.A.		1902431-011			B	II	NOTE 11C	2.125	.968	1.718	NA	.093	.031	.06	.093		.093	.858	.608	.484	.358
115	AC	ADPT, TEST POINT, PTA/PEA.		2900145-011			B	II	NOTE 11C	2.125	.968	1.718	NA	.093	.031	.06	.093		.093	.858	.608	.484	.358
114	AC	ADPT, TEST POINT, P.S.A.		2900037-011			B	II	NOTE 11C	2.125	.968	1.718	NA	.093	.031	.06	.093		.093	.858	.608	.484	.358
113	AC	CONTROL, GIMBAL POSITION		2900036-011			B	II	NOTE 11C	2.125	.968	1.718	NA	.093	.031	.06	.093		.093	.858	.608	.484	.358
112	AC	SELECTOR, SIGNAL, PRIMARY		2900035-011			B	II	NOTE 11C	2.125	.968	1.718	NA	.093	.031	.06	.093		.093	.858	.608	.484	.358
111	AC	SEL, SIG, OSCILLOGRAPH		2900034-011			B	II	NOTE 11C	2.125	.968	1.718	NA	.093	.031	.06	.093		.093	.858	.608	.484	.358
110	AC	PANEL, PWR SUP AND LOAD		2900033-011			B	II	NOTE 11C	2.125	.968	1.718	NA	.093	.031	.06	.093		.093	.858	.608	.484	.358
109	AC	PANEL, MONITOR		2900031-011			B	II	NOTE 11C	2.125	.968	1.718	NA	.093	.031	.06	.093		.093	.858	.608	.484	.358
108	AC	PANEL, AUXILIARY INPUT		2900030-011			B	II	NOTE 11C	2.125	.968	1.718	NA	.093	.031	.06	.093		.093	.858	.608	.484	.358
107	AC	CAGING ELECTRONICS, GYRO		2900029-011			B	II	NOTE 11C	2.125	.968	1.718	NA	.093	.031	.06	.093		.093	.858	.608	.484	.358
106	AC	TEST SELECTOR		2900028-011			B	II	NOTE 11C	2.125	.968	1.718	NA	.093	.031	.06	.093		.093	.858	.608	.484	.358
105	AC	TEST CONTROL		2900027-011			B	II	NOTE 11C	2.125	.968	1.718	NA	.093	.031	.06	.093		.093	.858	.608	.484	.358
104	AC	MONITOR AND CONTROL, TEMP		2900026-011			B	II	NOTE 11C	2.125	.968	1.718	NA	.093	.031	.06	.093		.093	.858	.608	.484	.358
103	AC	DISTRIBUTION BOX, GSE		2900024-011			B	II	NOTE 11C	2.125	.968	1.718	NA	.093	.031	.06	.093		.093	.858	.608	.484	.358
102	AC	VOLTMETER, DIGITAL		2900007-011			B	II	NOTE 11C	2.125	.968	1.718	NA	.093	.031	.06	.093		.093	.858	.608	.484	.358
101	AC	NAVIGATION BASE ASSEMBLY-LEM		6899950		NAS-9-497	A	I	NOTE 11B	2.000	1.312	1.906	1.375	.078	.048	.078	.093	NA	NA	1.125	.750	.593	.453
100	AC	NAVIGATION BASE ASSEMBLY		2899982		NAS-9-497	A	I	NOTE 11B	2.000	1.312	1.906	1.375	.078	.048	.078	.093	NA	NA	1.125	.750	.593	.453

NOTES FOR TABLE

STYLE A IS FOR G & N SYSTEM
STYLE B IS FOR GROUND SUPPORT EQUIPMENT
TYPE I IS WITHOUT MOUNTING HOLES
TYPE II IS WITH MOUNTING HOLES

1004260 | [illegible] | SHT 4

REVISIONS					
SYM	ZONE	DESCRIPTION	CHG NO	DATE	APPD
CL		REPLACES REV CK WITHOUT CHANGE PER TDRR 34365		16 SEP 67	
CM		REVISION STATUS CHANGED		18 OCT 67	RA
CN		REVISION STATUS CHANGE		31 OCT 67	
CP		REVISION STATUS CHANGE		6 NOV 67	
CR		REVISION STATUS CHANGED			
CS		REVISION STATUS CHANGED			
CT		REVISION STATUS CHANGED			
CU		REVISION STATUS CHANGED			
CV		REVISION STATUS CHANGED			
CW		REVISION STATUS CHANGED			
CY		REVISION STATUS CHANGED			
CZ		REVISION STATUS CHANGED			
DA		REVISION STATUS CHANGED			

E	F	G	H	J	K	L	M	N	P	R	S	T	U	V	W	Y	Z	AA	AB	AC	AD	AE	AF	AG	AH	AJ	AK	AL	AM	AN	AP	AR
DASH 100 VALUES BELOW																																
DASH [illegible] VALUES BELOW																																
DASH [illegible] VALUES BELOW																																
DASH [illegible] VALUES BELOW																																
DASH 100 VALUES BELOW																																
DASH 141 VALUES BELOW																																
DASH 141 VALUES BELOW																																
DASH 144 VALUES BELOW																																
DASH 141 VALUES BELOW																																
DASH 141 VALUES BELOW																																
DASH 141 VALUES BELOW																																
DASH 141 VALUES BELOW																																
DASH 141 VALUES BELOW																																
DASH 100 VALUES BELOW																																
DASH 100 VALUES BELOW																																
DASH [illegible] VALUES BELOW																																
DASH 102 VALUES BELOW																																
DASH 141 VALUES BELOW																																
[illegible]	.062	.188	.156	NA	NA	1.750	1.125	.906	.688	1.500	NA	.281	.125	NA	1.094	2.062	.312	NA	2.500	.062	.125	1.312	.469	NA	NA	NA	.156	NA	.125	.469	.344	NA
DASH 121 VALUES BELOW																																
DASH 144 VALUES BELOW																																
DASH 144 VALUES BELOW																																
DASH 144 VALUES BELOW																																
DASH 144 VALUES BELOW																																
DASH 144 VALUES BELOW																																
DASH 141 VALUES BELOW																																
DASH 141 VALUES BELOW																																
DASH 141 VALUES BELOW																																
DASH 141 VALUES BELOW																																
DASH 144 VALUES BELOW																																
DASH 141 VALUES BELOW																																
DASH 141 VALUES BELOW																																
DASH 141 VALUES BELOW																																
DASH 141 VALUES BELOW																																
DASH 1 VALUES BELOW																																
DASH [illegible] VALUES BELOW																																
DASH 141 VALUES BELOW																																
DASH 144 VALUES BELOW																																
DASH 141 VALUES BELOW																																
DASH 144 VALUES BELOW																																
DASH 144 VALUES BELOW																																
DASH 100 VALUES BELOW																																
DASH 100 VALUES BELOW																																
.093	.031	.06	.093	NA	NA	.858	.608	.484	.358	.733	.062	.140	.062	NA	.968	1.450	.125	NA	1.720	.046	.03	NA	.210	NA	NA	NA	.070	NA	.046	.32	.16	NA
DASH 100 VALUES BELOW																																
DASH 100 VALUES BELOW																																
DASH 100 VALUES BELOW																																
DASH 141 VALUES BELOW																																
DASH [illegible] VALUES BELOW																																
DASH 144 VALUES BELOW																																
DASH 141 VALUES BELOW																																
DASH 144 VALUES BELOW																																
DASH 144 VALUES BELOW																																
DASH 144 VALUES BELOW																																
DASH 144 VALUES BELOW																																
.125	.062	.12	.156		.125	1.625	1.140	.890	.640	1.390	.125	.171	.125	1.875	1.687	2.625	.250	1.562	3.843	.093	NA	NA	.359	.125	.437	3.688	NA	3.687	.093	.40	.25	3.875
.125	.062	.12	.156		.125	1.625	1.140	.890	.640	1.390	.125	.171	.125	1.875	1.687	2.625	.250	1.562	3.843	.093	NA	NA	.359	.125	.437	3.688	NA	3.687	.093	.40	.25	3.875
.125	.062	.12	.156		.125	1.625	1.140	.890	.640	1.390	.125	.171	.125	1.875	1.687	2.625	.250	1.562	3.843	.093	NA	NA	.359	.125	.437	3.688	NA	3.687	.093	.40	.25	3.875
.093	.031	.06	.093		.093	.858	.608	.484	.358	.733	.077	.116	.062	.937	.875	1.343	.125	.781	1.892	.046	NA	NA	.209	.093	.250	1.875	NA	1.840	.046	.23	.16	1.938
.125	.062	.12	.156		.125	1.625	1.140	.890	.640	1.390	.125	.171	.125	1.875	1.687	2.625	.250	1.562	3.843	.093	NA	NA	.359	.125	.437	3.688	NA	3.687	.093	.40	.25	3.875
.125	.062	.12	.156		.125	1.625	1.140	.890	.640	1.390	.125	.171	.125	1.875	1.687	2.625	.250	1.562	3.843	.093	NA	NA	.359	.125	.437	3.688	NA	3.687	.093	.40	.25	3.875
.125	.062	.12	.156		.125	1.625	1.140	.890	.640	1.390	.125	.171	.125	1.875	1.687	2.625	.250	1.562	3.843	.093	NA	NA	.359	.125	.437	3.688	NA	3.687	.093	.40	.25	3.875
.125	.062	.12	.156		.125	1.625	1.140	.890	.640	1.390	.125	.171	.125	1.875	1.687	2.625	.250	1.562	3.843	.093	NA	NA	.359	.125	.437	3.688	NA	3.687	.093	.40	.25	3.875
.125	.062	.12	.156		.125	1.625	1.140	.890	.640	1.390	.125	.171	.125	1.875	1.687	2.625	.250	1.562	3.843	.093	NA	NA	.359	.125	.437	3.688	NA	3.687	.093	.40	.25	3.875
.125	.062	.12	.156		.125	1.625	1.140	.890	.640	1.390	.125	.171	.125	1.875	1.687	2.625	.250	1.562	3.843	.093	NA	NA	.359	.125	.437	3.688	NA	3.687	.093	.40	.25	3.875
.125	.062	.12	.156		.125	1.625	1.140	.890	.640	1.390	.125	.171	.125	1.875	1.687	2.625	.250	1.562	3.843	.093	NA	NA	.359	.125	.437	3.688	NA	3.687	.093	.40	.25	3.875
.125	.062	.12	.156		.125	1.625	1.140	.890	.640	1.390	.125	.171	.125	1.875	1.687	2.625	.250	1.562	3.843	.093	NA	NA	.359	.125	.437	3.688	NA	3.687	.093	.40	.25	3.875
.125	.062	.12	.156		.125	1.625	1.140	.890	.640	1.390	.125	.171	.125	1.875	1.687	2.625	.250	1.562	3.843	.093	NA	NA	.359	.125	.437	3.688	NA	3.687	.093	.40	.25	3.875
.125	.062	.12	.156		.125	1.625	1.140	.890	.640	1.390	.125	.171	.125	1.875	1.687	2.625	.250	1.562	3.843	.093	NA	NA	.359	.125	.437	3.688	NA	3.687	.093	.40	.25	3.875
.125	.062	.12	.156		.125	1.625	1.140	.890	.640	1.390	.125	.171	.125	1.875	1.687	2.625	.250	1.562	3.843	.093	NA	NA	.359	.125	.437	3.688	NA	3.687	.093	.40	.25	3.875
.125	.062	.12	.156		.125	1.625	1.140	.890	.640	1.390	.125	.171	.125	1.875	1.687	2.625	.250	1.562	3.843	.093	NA	NA	.359	.125	.437	3.688	NA	3.687	.093	.40	.25	3.875
.125	.062	.12	.156		.125	1.625	1.140	.890	.640	1.390	.125	.171	.125	1.875	1.687	2.625	.250	1.562	3.843	.093	NA	NA	.359	.125	.437	3.688	NA	3.687	.093	.40	.25	3.875
.093	.031	.06	.093		.093	.858	.608	.484	.358	.733	.077	.116	.062	.937	.875	1.343	.125	.781	1.892	.046	NA	NA	.209	.093	.250	1.875	NA	1.840	.046	.23	.16	1.938
.093	.031	.06	.093		.093	.858	.608	.484	.358	.733	.077	.116	.062	.937	.875	1.343	.125	.781	1.892	.046	NA	NA	.209	.093	.250	1.875	NA	1.840	.046	.23	.16	1.938
.093	.031	.06	.093		.093	.858	.608	.484	.358	.733	.077	.116	.062	.937	.875	1.343	.125	.781	1.892	.046	NA	NA	.209	.093	.250	1.875	NA	1.840	.046	.23	.16	1.938
.093	.031	.06	.093		.093	.858	.608	.484	.358	.733	.077	.116	.062	.937	.875	1.343	.125	.781	1.892	.046	NA	NA	.209	.093	.250	1.875	NA	1.840	.046	.23	.16	1.938
.093	.031	.06	.093		.093	.858	.608	.484	.358	.733	.077	.116	.062	.937	.875	1.343	.125	.781	1.892	.046	NA	NA	.209	.093	.250	1.875	NA	1.840	.046	.23	.16	1.938
.093	.031	.06	.093		.093	.858	.608	.484	.358	.733	.077	.116	.062	.937	.875	1.343	.125	.781	1.892	.046	NA	NA	.209	.093	.250	1.875	NA	1.840	.046	.23	.16	1.938
.093	.031	.06	.093		.093	.858	.608	.484	.358	.733	.077	.116	.062	.937	.875	1.343	.125	.781	1.892	.046	NA	NA	.209	.093	.250	1.875	NA	1.840	.046	.23	.16	1.938
.093	.031	.06	.093		.093	.858	.608	.484	.358	.733	.077	.116	.062	.937	.875	1.343	.125	.781	1.892	.046	NA	NA	.209	.093	.250	1.875	NA	1.840	.046	.23	.16	1.938
.093	.031	.06	.093		.093	.858	.608	.484	.358	.733	.077	.116	.062	.937	.875	1.343	.125	.781	1.892	.046	NA	NA	.209	.093	.250	1.875	NA	1.840	.046	.23	.16	1.938
.093	.031	.06	.093		.093	.858	.608	.484	.358	.733	.077	.116	.062	.937	.875	1.343	.125	.781	1.892	.046	NA	NA	.209	.093	.250	1.875	NA	1.840	.046	.23	.16	1.938
.093	.031	.06	.093		.093	.858	.608	.484	.358	.733	.077	.116	.062	.937	.875	1.343	.125	.781	1.892	.046	NA	NA	.209	.093	.250	1.875	NA	1.840	.046	.23	.16	1.938
.093	.031	.06	.093		.093	.858	.608	.484	.358	.733	.077	.116	.062	.937	.875	1.343	.125	.781	1.892	.046	NA	NA	.209	.093	.250	1.875	NA	1.840	.046	.23	.16	1.938
.093	.031	.06	.093		.093	.858	.608	.484	.358	.733	.077	.116	.062	.937	.875	1.343	.125	.781	1.892	.046	NA	NA	.209	.093	.250	1.875	NA	1.840	.046	.23	.16	1.938
.093	.031	.06	.093		.093	.858	.608	.484	.358	.733	.077	.116	.062	.937	.875	1.343	.125	.781	1.892	.046	NA	NA	.209	.093	.250	1.875	NA	1.840	.046	.23	.16	1.938
.093	.031	.06	.093		.093	.858	.608	.484	.358	.733	.077	.116	.062	.937	.875	1.343	.125	.781	1.892	.046	NA	NA	.209	.093	.250	1.875	NA	1.840	.046	.23	.16	1.938
.093	.031	.06	.093		.093	.858	.608	.484	.358	.733	.077	.116	.062	.937	.875	1.343	.125	.781	1.892	.046	NA	NA	.209	.093	.250	1.875	NA	1.840	.046	.23	.16	1.938
.093	.031	.06	.093		.093	.858	.608	.484	.358	.733	.077	.116	.062	.937	.875	1.343	.125	.781	1.892	.046	NA	NA	.209	.093	.250	1.875	NA	1.840	.046	.23	.16	1.938
.093	.031	.06	.093		.093	.858	.608	.484	.358	.733	.077	.116	.062	.937	.875	1.343	.125	.781	1.892	.046	NA	NA	.209	.093	.250	1.875	NA	1.840	.046	.23	.16	1.938
.093	.031	.06	.093		.093	.858	.608	.484	.358	.733	.077	.116	.062	.937	.875	1.343	.125	.781	1.892	.046	NA	NA	.209	.093	.250	1.875	NA	1.840	.046	.23	.16	1.938
.093	.031	.06	.093		.093	.858	.608	.484	.358	.733	.077	.116	.062	.937	.875	1.343	.125	.781	1.892	.046	NA	NA	.209	.093	.250	1.875	NA	1.840	.046	.23	.16	1.938
.093	.031	.06	.093		.093	.858	.608	.484	.358	.733	.077	.116	.062	.937	.875	1.343	.125	.781	1.892	.046	NA	NA	.209	.093	.250	1.875	NA	1.840	.046	.23	.16	1.938
.093	.031	.06	.093		.093	.858	.608	.484	.358	.733	.077	.116	.062	.937	.875	1.343	.125	.781	1.892	.046	NA	NA	.209	.093	.250	1.875	NA	1.840	.046	.23	.16	1.938
.093	.031	.06	.093		.093	.858	.608	.484	.358	.733	.077	.116	.062	.937	.875	1.343	.125	.781	1.892	.046	NA	NA	.209	.093	.250	1.875	NA	1.840	.046	.23	.16	1.938
.093	.031	.06	.093		.093	.858	.608	.484	.358	.733	.077	.116	.062	.937	.875	1.343	.125	.781	1.892	.046	NA	NA	.209	.093	.250	1.875	NA	1.840	.046	.23	.16	1.938
.093	.031	.06	.093		.093	.858	.608	.484	.358	.733	.077	.116	.062	.937	.875	1.343	.125	.781	1.892	.046	NA	NA	.209	.093	.250	1.875	NA	1.840	.046	.23	.16	1.938
.093	.031	.06	.093		.093	.858	.608	.484	.358	.733	.077	.116	.062	.937	.875	1.343	.125	.781	1.892	.046	NA	NA	.209	.093	.250	1.875	NA	1.840	.046	.23	.16	1.938
.093	.031	.06	.093		.093	.858	.608	.484	.358	.733	.077	.116	.062	.937	.875	1.343	.125	.781	1.892	.046	NA	NA	.209	.093	.250	1.875	NA	1.840	.046	.23	.16	1.938
.078	.048	.078	.093	NA	NA	1.125	.750	.593	.453	1.015	.062	.187	.078	.875	.718	1.375	.218	NA	NA	.048	.031	.875	.305	.078	.531	1.906	.078	NA	.078	.531	.187	NA
.078	.048	.078	.093	NA	NA	1.125	.750	.593	.453	1.015	.062	.187	.078	.875	.718	1.375	.218	NA	NA	.048	.031	.875	.305	.078	.531	1.906	.078	NA	.078	.531	.187	NA

AC ELECTRONICS DASH NUMBERS

AS APPLICABLE	
NEXT ASSY	USED ON
APPLICATION	

UNLESS OTHERWISE SPECIFIED
DIMENSIONS ARE IN INCHES
TOLERANCES ON
2 PLACE DECIMALS ± 3 PLACE DECIMALS ± .005 ANGLES ±
DO NOT SCALE THIS DRAWING
MATERIAL SEE NOTE 11
APPROVAL

MIT
INSTRUMENTATION LAB
CAMBRIDGE, MASS.
R A JONES 15 JUL 65
DRAWN DATE
CHECKED
W KUPFER 22 JUL 65
APPROVAL
CONTRACT
T. MICHAELS 22 JUL 65
NASA APPROVAL
W KUPFER 22 JUL 65
MIT APPROVAL

MANNED
SPACECRAFT CENTER
HOUSTON, TEXAS

NAMEPLATES,
APOLLO GN - GSE
(STANDARDS)

SIZE J2 CODE IDENT NO. 80230 1004260
SCALE NONE SHEET 4 OF 6

1004260 DA

1004260

1004500

1004260 SHT 4

2/1004260

DASH NO.	%C	PART NAME	REMARKS	PART NUMBER	SER. NO.	CONT. NO.	STYLE	TYPE	MATERIAL	A	B	C	D	E	F	G	H	J	K	L	M	N	P
401	MIT	COMPUTER ASSY		2003100		NAS-9-497	A	I	NOTE 11B	2.000	1.312	1.906	1.375	.078	.048	.078	.093	NA	NA	1.125	.750	.593	[illegible]
400	MIT	LIFTING SLING-G&N INST,QUAL,FIX, & AZM,REF,FIX.		1021640		NAS-9-4065	B	II	NOTE 11C	2.000	1.312	1.687	1.375	.078	.048	.078	.093	[illegible]	.093	1.187	.750	.593	[illegible]

NOTES FOR TABLE
STYLE A IS FOR G & N SYSTEM
STYLE B IS FOR GROUND SUPPORT EQUIPMENT
TYPE I IS WITHOUT MOUNTING HOLES
TYPE II IS WITH MOUNTING HOLES

1004260	DA	SHT 5

1/1004260

REVISIONS

SYM	ZONE	DESCRIPTION	CHG NO	DATE	APPD
CL		REPLACES REV CK WITHOUT CHANGE PER TURR 34365		[illegible] 67	RWM
CM		REVISION STATUS CHANGED		18 OCT 67	RAW
CN		REVISION STATUS CHANGED		31 OCT 67	JRK
CP		REVISION STATUS CHANGED		6 NOV 67	
CR		REVISION STATUS CHANGED		7 DEC 67	RWM
CS		REVISION STATUS CHANGED		9 JAN 68	
CT		REVISION STATUS CHANGED		7 FEB 68	
CU		REVISION STATUS CHANGED		22 FEB 68	JRK
CV		REVISION STATUS CHANGED		[illegible] 68	LR
CW		REVISION STATUS CHANGED		8 APR 68	
CY		REVISION STATUS CHANGED		16 APR 68	AN
CZ		REVISION STATUS CHANGED		28 MAY 68	
DA		REVISION STATUS CHANGED		12 JUN 68	

[illegible]	.078	.140	.070	.093	NA	NA	1.125	.750	.593	.453	1.015	.062	.187	.078	.875	.718	1.375	.218	NA	NA	.048	.031	.875	.305	.078	.531	1.906	.078	NA	.078	.531	.187	NA
[illegible]	.078	.140	.070	.093	REF	.093	1.187	.750	.593	.453	1.015	.062	.187	.078	.875	.718	1.375	.218	1.156	1.843	.048	NA	.875	.305	.078	.312	1.687	.110	1.830	.070	.275	.180	1.844
D	E	F	G	H	J	K	L	M	N	P	R	S	T	U	V	W	Y	Z	AA	AB	AC	AD	AE	AF	AG	AH	AJ	AK	AL	AM	AN	AP	AR

MIT DASH NUMBERS

AS APPLICABLE	
NEXT ASSY	USED ON
APPLICATION	

UNLESS OTHERWISE SPECIFIED
DIMENSIONS ARE IN INCHES
TOLERANCES ON
2 PLACE DECIMALS ± 3 PLACE DECIMALS ± .005 ANGLES ± —
DO NOT SCALE THIS DRAWING
MATERIAL SEE NOTE H
APPROVAL

MIT INSTRUMENTATION LAB
CAMBRIDGE MASS
DRAWN R.A JONES DATE 15 JUL 65
CHECKED W. RUPFER 22 JUL 65
APPROVAL
CONTRACT
T. MICHAELS 22 JUL 65
NASA APPROVAL
W. RUPFER 22 JUL 65
MIT APPROVAL

MANNED SPACECRAFT CENTER
HOUSTON, TEXAS

NAMEPLATES,
APOLLO G&N - GSE
(STANDARDS)

SIZE J2 CODE IDENT NO. 80230 1004260
SCALE NONE SHEET 5 OF 6

1004260 DA

1004260

1004260 DA SHT 5

2/1004260

[illegible]

DASH NO.	P/C	PART NAME	REMARKS	PART NUMBER	SER. NO.	CONT. NO.	STYLE	TYPE	MATERIAL	A	B	C	D	E	F	G	H	J	K	L	M	N
599	AC																					
598	AC																					
582	AC	G&N INDICATOR CONTROL PANEL ASSY		2021290-041		FOR OTHER DATA SEE DASH 181																
581	AC	G&N INDICATOR CONTROL PANEL ASSY		2021323-021		FOR OTHER DATA SEE DASH 181																
579	AC	COMPUTER CONT & RETICLE DIMMER		6014512-081		FOR OTHER DATA SEE DASH 534																
578	AC	G&N INDICATOR CONTROL PANEL ASSY		2021290-031		FOR OTHER DATA SEE DASH 181																
577		BREAKOUT BOX, CABLE ADAPTER		2901011-021		FOR OTHER DATA SEE DASH 506																
576		FIX.,MOUNTING G&N		2900067-061		FOR OTHER DATA SEE DASH 500																
575		CSL, CAL AND TEST, SCM/PSAAM		[illegible]		FOR DATA SEE DASH 559																
574		CONT., TEMP. PORTABLE		2900060-031		NAS-9-497	B	II	NOTE 11C	FOR DIMENSIONS SEE DASH 535 VALUES												
573		BATTERY PACK LIFTING		2900812-031		NAS-9-497	B	II	NOTE 11C	FOR DIMENSIONS SEE DASH 542 VALUES												
572		FIX., MOUNTING G&N	(-144)	2900067-05[illegible]		NAS-9-497	B	II	NOTE 11C	FOR DIMENSIONS SEE DASH 500 VALUES												
571		EYEPIECE STORAGE UNIT		2021382		FOR OTHER DATA SEE DASH 100																
570	AC	OPTICAL UNIT & BELLOWS ASSY				NAS-9-497	A	I	NOTE 11B	FOR DIMENSIONS SEE DASH 550 VALUES												
569	AC	G & N INDICATOR CONTROL PANEL ASSY		2021323-011		NAS-9-497	A	I	NOTE 11B	FOR DIMENSIONS SEE DASH 181												
568	AC	G & N INDICATOR CONTROL PANEL ASSY		2021290-021		NAS-9-497	A	I	NOTE 11B	FOR DIMENSIONS SEE DASH 181												
567	AC	G & N INDICATOR CONTROL PANEL ASSY		2021290-011		NAS-9-497	A	I	NOTE 11B	FOR DIMENSIONS SEE DASH 181												
566	AC	COMPUTER CONT & RETICLE DIMMER		6014512-061		NAS-9-497	A	I	NOTE 11B	FOR DIMENSIONS SEE DASH 534												
565		AUXILIARY BATTERY PACK		1901492-031		NAS-9-497	B	II	NOTE 11C	FOR DIMENSIONS SEE DASH 500												
564		BATTERY POWER PACK		1900011-051		NAS-9-497	B	II	NOTE 11C	FOR DIMENSIONS SEE DASH 500												
563		PSA ADAPTER MODULE (LEM)		6900088-031		NAS-9-497	B	II	NOTE 11C	FOR DIMENSIONS SEE DASH 141 VALUES												
562	AC	COMPUTER CONT & RETICLE DIMMER		6014512-041		NAS-9-497	A	I	NOTE 11B	FOR DIMENSIONS SEE DASH 534 VALUES												
561	AC	G & N INDICATOR CONTROL PANEL ASSY		2014578-031		NAS-9-497	A	I	NOTE 11B	FOR DIMENSIONS SEE DASH 181 VALUES												
560		ADPT. MODULE, PSA		2901143-021		NAS-9-497	B	II	NOTE 11C	FOR DIMENSIONS SEE DASH 141 VALUES												
559		CSL. CAL AND TEST. SCM/PSAAM		2900895-031		FOR OTHER DATA SEE DASH 547																
558		PSA ADAPTER MODULE (LEM)		6900088-021		FOR OTHER DATA SEE DASH 189																
557		FIX., HANDLING, C/M PSA		2900998-021		NAS-9-497	B	II	NOTE 11C	FOR DIMENSIONS SEE DASH 141 VALUES												
556		FIX., MOUNTING G & N	(-144)	2900067-041		NAS-9-497	B	II	NOTE 11C	FOR DIMENSIONS SEE DASH 500 VALUES												
555	AC	OPTICAL UNIT ASSEMBLY		1021368-061		NAS-9-497	A	I	NOTE 11B	2.000	1.312	1.687	1.375	.078	.048	.078	.093	NA	NA	1.125	.75	.593
554	AC	OPTICAL UNIT ASSEMBLY		1021368-041		NAS-9-497	A	I	NOTE 11B	2.000	1.312	1.687	1.375	.078	.048	.078	.093	NA	NA	1.125	.75	.593
553	AC	OPTICAL UNIT AND BELLOWS ASSEMBLY		2010790-111		NAS-9-497	A	I	NOTE 11B	2.000	1.312	1.687	1.375	.078	.048	.078	.093	NA	NA	1.125	.75	.593
552	AC	OPTICAL UNIT AND BELLOWS ASSEMBLY		2010790-081		NAS-9-497	A	I	NOTE 11B	2.000	1.312	1.687	1.375	.078	.048	.078	.093	NA	NA	1.125	.75	.593
551	AC	OPTICAL UNIT AND BELLOWS ASSEMBLY		2010790-071		NAS-9-497	A	I	NOTE 11B	2.000	1.312	1.687	1.375	.078	.048	.078	.093	NA	NA	1.125	.75	.593
550	AC	OPTICAL UNIT AND BELLOWS ASSEMBLY		2010790-061		NAS-9-497	A	I	NOTE 11B	2.000	1.312	1.687	1.375	.078	.048	.078	.093	NA	NA	1.125	.75	.593
548		CAGING ELECTRONICS, GYRO		2900029-031		NAS-9-497	B	II	NOTE 11C	2.125	.968	1.718	NA	.093	.031	.06	.093	[illegible]	.093	.858	[illegible]	.484
547		CSL, CAL AND TEST, SCM/PSAAM		2900895-021		NAS-9-497	B	II	NOTE 11C	4.125	1.812	3.250	NA	.125	.062	.12	.156		.125	1.625	1.14	.890
546		FIX., HAND., C/M AND LEM CDU		2900999-021		NAS-9-497	B	II	NOTE 11C	2.125	.968	1.718	NA	.093	.031	.06	.093	[illegible]	.093	.858	[illegible]	.484
545	AC	G & N INDICATOR CONTROL PANEL ASSY		2014578-021		NAS-9-497	A	I	NOTE 11B	3.000	1.938	2.437	NA	.125	.062	.188	.156	NA	NA	1.750	1.12	[illegible]
544		ADPT MODULE, P.S.A.		1902431-051		NAS-9-497	B	II	NOTE 11C	2.125	.968	1.718	NA	.093	.031	.06	.093	[illegible]	.093	.858	[illegible]	.484
543	AC	PANEL, MONITOR		2900031-041		NAS-9-497	B	II	NOTE 11C	2.125	.968	1.718	NA	.093	.031	.06	.093		.093	.858	[illegible]	.484
542	AC	BATTERY PACK, LIFTING		2900812-021		NAS-9-497	B	II	NOTE 11C	2.125	.968	1.718	NA	.093	.031	.06	.093		.093	.858	[illegible]	.484
541	AC	FIXTURE, MOUNTING, IMU		2900000-021		NAS-9-497	B	II	NOTE 11C	4.125	1.812	3.250	NA	.125	.062	.12	.156		.125	1.625	1.14	.890
540	AC	ADPT. TEST POINT, P.S.A.		2900037-031		NAS-9-497	B	II	NOTE 11C	2.125	.968	1.718	NA	.093	.031	.06	.093	[illegible]	.093	.858	[illegible]	.484
539	AC	ANNUNCIATOR PANEL & EYEPIECE STORAGE ASSEMBLY		1021255-041		NAS-9-497	A	I	NOTE 11B	2.000	1.312	1.906	1.375	.078	.048	.078	.093	NA	NA	1.125	[illegible]	.593
538	AC	ANNUNCIATOR PANEL & EYEPIECE STORAGE ASSEMBLY		1021255-031		NAS-9-497	A	I	NOTE 11B	2.000	1.312	1.906	1.375	.078	.048	.078	.093	NA	NA	1.125	[illegible]	.593
537	AC	TEST SELECTOR		2900028-031		NAS-9-497	B	II	NOTE 11C	2.125	.968	1.718	NA	.093	.031	.06	.093	[illegible]	.093	.858	[illegible]	.484
536	AC	ANALYZER, OPTICS-INERTIAL		2900023-041		NAS-9-497	B	II	NOTE 11C	4.125	1.812	3.250	NA	.125	.062	.12	.156		.125	1.625	[illegible]	.890
535	AC	CONT, TEMP, PORTABLE		2900060-021		NAS-9-497	B	II	NOTE 11C	2.125	.968	1.718	NA	[illegible]	[illegible]	[illegible]	[illegible]	[illegible]	[illegible]	[illegible]	[illegible]	[illegible]
534	AC	COMPUTER CONT & RETICLE DIMMER		6014512-021		NAS-9-497	A	I	NOTE 11B	2.000	1.312	1.906	1.375	.078	[illegible]	.078	.093	NA	NA	1.125	[illegible]	.593
533	AC	ADPT MODULE, P.S.A.		1902431-041		NAS-9-497	B	II	NOTE 11C	2.125	.968	1.718	NA	.093	.031	.06	.093	[illegible]	.093	.858	[illegible]	.484
532	AC	TRAY BREAKOUT, 105 PIN		1900807-021		NAS-9-497	B	II	NOTE 11C	4.125	1.812	3.250	NA	.125	.062	.12	.156		.125	1.625	[illegible]	.890
531	AC	TRAY BREAKOUT, 84 PIN		1900806-021		NAS-9-497	B	II	NOTE 11C	4.125	1.812	3.250	NA	.125	.062	.12	.156		.125	1.625	[illegible]	[illegible]
530	AC	HEAT SINK-TRAY EXTENDER		1900808-021		NAS-9-497	B	II	NOTE 11C	2.125	.968	1.718	NA	.093	.031	.06	.093		.093	.858	[illegible]	.484
529	AC	TESTER, FAILURE INDICATOR		1900809-021		NAS-9-497	B	II	NOTE 11C	2.125	.968	1.718	NA	.093	.031	.06	.093	[illegible]	.093	.858	[illegible]	.484
527	AC	FIX., MOUNTING, G & N	(-144)	1902204-021		NAS-9-497	B	II	NOTE 11C	FOR DIMENSIONS SEE DASH 500 VALUES BELOW												
526	AC	FIX., MOUNTING, G & N	(-144)	2900067-031		NAS-9-497	B	II	NOTE 11C	FOR DIMENSIONS SEE DASH 500 VALUES BELOW												
525	AC	PORTABLE TEMP. CONTROLLER		1900496-021		NAS-9-497	B	II	NOTE 11C	3.000	1.937	2.437	2.312	.125	.031	.125	.156	.125	.125	1.718	[illegible]	[illegible]
524	AC	POWER, SERVO & THERMOCOUPLE ASSEMBLY C/M		2010743		NAS-9-497	A	I	NOTE 11B	2.125	.968	1.718	NA	.093	.031	.06	.093	NA	NA	.858	[illegible]	.484
523	AC	PULSE TORQUE AND THERMOCOUPLE ASSEMBLY-LEM		6010656		NAS-9-497	A	I	NOTE 11B	FOR DIMENSIONS SEE DASH 508 VALUES BELOW												
522	AC	COUPLING DATA UNIT & THERMOCOUPLE ASSEMBLY-LEM		2010744		NAS-9-497	A	I	NOTE 11B	FOR DIMENSIONS SEE DASH 508 VALUES BELOW												
521	AC	COUPLING DATA UNIT & THERMOCOUPLE ASSEMBLY-C/M		2010744		NAS-9-497	A	I	NOTE 11B	FOR DIMENSIONS SEE DASH 508 VALUES BELOW												
520	AC	PIPA ELECTRONICS AND THERMOCOUPLE ASSEMBLY		2010745		NAS-9-497	A	I	NOTE 11B	FOR DIMENSIONS SEE DASH 508 VALUES BELOW												
519	AC	FIXTURE, HANDLING, LEM-PSA	(-141)	6900129-011		NAS-9-497	B	II	NOTE 11C	FOR DIMENSIONS SEE DASH 504 VALUES BELOW												
518	AC	JUNCTION BOX, GSE-PSA	(-144)	1901933-031		NAS-9-497	B	II	NOTE 11C	FOR DIMENSIONS SEE DASH 500 VALUES BELOW												
517	AC	FIX., HAND., OPTICS INSTL.	(-141)	2901380-011		NAS-9-497	B	II	NOTE 11C	FOR DIMENSIONS SEE DASH 502 VALUES BELOW												
516	AC	POWER, SERVO AND THERMOCOUPLE ASSEMBLY-LEM		6010655		NAS-9-497	A	I	NOTE 11B	FOR DIMENSIONS SEE DASH 508 VALUES BELOW												
514	AC	SIGNAL COND. ASSY LEM OPER.	(-100)	6007013		NAS-9-497	A	I	NOTE 11B	FOR DIMENSIONS SEE DASH 508 VALUES BELOW												
513	AC	JUMPER, BY-PASS	(-141)	1021616		NAS-9-497	B	II	NOTE 11C	2.125	.968	1.718	NA	.093	.031	.06	.093	[illegible]	.093	[illegible]	[illegible]	.484
512	AC	COUPLING DATA UNIT ASSEMBLY C/M	(-100)	2007322-011		NAS-9-497	A	I	NOTE 11B	FOR DIMENSIONS SEE DASH 508 VALUES BELOW												
511	AC	COUPLING DATA UNIT ASSEMBLY-LEM	(-100)	2007322-021		NAS-9-497	A	I	NOTE 11B	FOR DIMENSIONS SEE DASH 508 VALUES BELOW												
510	AC	BATTERY POWER PACK	(-144)	1900011-041		NAS-9-497	B	II	NOTE 11C	FOR DIMENSIONS SEE DASH 500 VALUES BELOW												
509	AC	JUNCTION BOX, P.S.A./G.S.E.	(-144)	1902195-021		NAS-9-497	B	II	NOTE 11C	FOR DIMENSIONS SEE DASH 500 VALUES BELOW												
508	AC	NAVIGATION BASE ASSEMBLY-LEM	(-101)	6899980		NAS-9-497	A	I	NOTE 11B	2.000	1.312	1.906	1.375	.078	.048	.078	.093	NA	NA	1.125	[illegible]	[illegible]
507	AC	CSL, COOL, AND PWR, G AND N	(-144)	1902134-041		NAS-9-497	B	II	NOTE 11C	FOR DIMENSIONS SEE DASH 500 VALUES BELOW												
506	AC	BREAKOUT BOX, CABLE ADAPTER	(-141)	2901011-011		NAS-9-497	B	II	NOTE 11C	2.125	.968	1.718	NA	.093	.031	.06	.093	[illegible]	.093	[illegible]	[illegible]	.484
505	AC	MONITOR AND CONTROL, TEMP	(-141)	2900026-021		NAS-9-497	B	II	NOTE 11C	2.125	.968	1.718	NA	.093	.031	.06	.093		.093	[illegible]	[illegible]	.484
504	AC	PWR SUP. GUIDANCE SYSTEM	(-141)	1900033-021		NAS-9-497	B	II	NOTE 11C	2.125	.968	1.718	NA	.093	.031	.06	.093		.093	.858	[illegible]	.484
503	AC	CONTROL, GIMBAL POSITION	(-141)	2900036-021		NAS-9-497	B	II	NOTE 11C	2.125	.968	1.718	NA	.093	.031	.06	.093		.093	.858	[illegible]	.484
502	AC	ADPT, TEST POINT, PTA/PEA.	(-141)	2900145-021		NAS-9-497	B	II	NOTE 11C	2.125	.968	1.718	NA	.093	.031	.06	.093	[illegible]	.093	[illegible]	[illegible]	.484
501	AC	MOUNTING PLATE, COMPONENT	(-144)	6900007-031		NAS-9-497	B	II	NOTE 11C	FOR DIMENSIONS SEE DASH 500 VALUES BELOW												
500	AC	MOUNTING PLATE, COMPONENT	(-144)	2900677-021		NAS-9-497	B	II	NOTE 11C	4.125	1.812	3.250	NA	.125	.062	.12	.156	[illegible]	.125	[illegible]	[illegible]	[illegible]

NOTES FOR TABLE
STYLE A IS FOR G & N SYSTEM
STYLE B IS FOR GROUND SUPPORT EQUIPMENT
TYPE I IS WITHOUT MOUNTING HOLES
TYPE II IS WITH MOUNTING HOLES

SYM	ZONE	DESCRIPTION	CHG NO	DATE	APPD
		REVISIONS			
CL		REPLACES REV CK WITH CHANGE PER TDRR 34365		4/12/67	JL
CM		REVISED PER TDRR 34895		17 OCT 67	R.A.R.
CN		REVISED PER TDRR 34467		31 OCT 67	JRK
CP		REVISED PER TDRR 34855		6 NOV 67	ENS
CR		REVISED PER TDRR 35164		[illegible] 67	JWD
CS		REVISED PER TDRR 35307		3 JAN 68	[illegible]
CT		REVISION STATUS CHANGED		[illegible] 68	[illegible]
CU		REVISED PER TDRR 35628		22 FEB 68	JRK
CV		REVISED PER TDRR 35675		27 FEB 68	[illegible]
CW		REVISED PER TDRR 35970		9 APR 68	[illegible]
CY		REVISION STATUS CHANGED		6 APR 68	JN
CZ		REVISED PER TDRR 36245		23 MAY 68	[illegible]
DA		REVISED PER TDRR 36384		7 JUN 68	[illegible]

SEE DASH 535 VALUES																																	
[illegible]																																	
SEE DASH 500 VALUES																																	
SEE DASH 550 VALUES																																	
SEE DASH 181																																	
DASH 181																																	
SEE DASH 181																																	
SEE DASH 534																																	
SEE DASH 500																																	
SEE DASH 500																																	
SEE DASH 141 VALUES																																	
SEE DASH 534 VALUES																																	
SEE DASH 181 VALUES																																	
SEE DASH 141 VALUES																																	
SEE DASH 141 VALUES																																	
SEE DASH 500 VALUES																																	
.375	.078	.048	.078	.093	NA	NA	1.125	.750	.593	.453	1.015	.062	.187	.078	.875	.718	1.375	.218	NA	NA	.048	.031	.875	.305	NA	.468	1.531	NA	NA	.078	.312	.187	NA
.375	.078	.048	.078	.093	NA	NA	1.125	.750	.593	.453	1.015	.062	.187	.078	.875	.718	1.375	.218	NA	NA	.048	.031	.875	.305	NA	.468	1.531	NA	NA	.078	.312	.187	NA
.375	.078	.048	.078	.093	NA	NA	1.125	.750	.593	.453	1.015	.062	.187	.078	.875	.718	1.375	.218	NA	NA	.048	.031	.875	.305	NA	.468	1.531	NA	NA	.078	.312	.187	NA
.375	.078	.048	.078	.093	NA	NA	1.125	.750	.593	.453	1.015	.062	.187	.078	.875	.718	1.375	.218	NA	NA	.048	.031	.875	.305	NA	.468	1.531	NA	NA	.078	.312	.187	NA
.375	.078	.048	.078	.093	NA	NA	1.125	.750	.593	.453	1.015	.062	.187	.078	.875	.718	1.375	.218	NA	NA	.048	.031	.875	.305	NA	.468	1.531	NA	NA	.078	.312	.187	NA
.375	.078	.048	.078	.093	NA	NA	1.125	.750	.593	.453	1.015	.062	.187	.078	.875	.718	1.375	.218	NA	NA	.048	.031	.875	.305	NA	.468	1.531	NA	NA	.078	.312	.187	NA
NA	.093	.031	.06	.093	NA	.093	.858	.608	.484	.358	.733	.077	.116	.062	.937	.875	1.343	.125	.781	1.892	.046	NA	NA	.209	.093	.250	1.875	NA	1.840	.046	.23	.16	1.938
NA	.125	.062	.12	.156		.125	1.625	1.140	.890	.640	1.390	.125	.171	.125	1.875	1.687	2.625	.250	1.562	3.843	.093	NA	NA	.359	.125	.437	3.688	NA	3.687	.093	.40	.25	3.875
NA	.093	.031	.06	.093	NA	.093	.858	.608	.484	.358	.733	.077	.116	.062	.937	.875	1.343	.125	.781	1.892	.046	NA	NA	.209	.093	.250	1.875	NA	1.840	.046	.23	.16	1.938
NA	.125	.062	.188	.156	NA	NA	1.750	1.125	.906	.688	1.500	NA	.281	.125	NA	1.094	2.062	.312	NA	2.500	.062	.125	1.312	.469	NA	NA	NA	.156	NA	.125	.469	.344	NA
NA	.093	.031	.06	.093	NA	.093	.858	.608	.484	.358	.733	.077	.116	.062	.937	.875	1.343	.125	.781	1.892	.046	NA	NA	.209	.093	.250	1.875	NA	1.840	.046	.23	.16	1.938
NA	.093	.031	.06	.093		.093	.858	.608	.484	.358	.733	.077	.116	.062	.937	.875	1.343	.125	.781	1.892	.046	NA	NA	.209	.093	.250	1.875	NA	1.840	.046	.23	.25	1.938
NA	.093	.031	.06	.093		.093	.858	.608	.484	.358	.733	.077	.116	.062	.937	.875	1.343	.125	.781	1.892	.046	NA	NA	.209	.093	.250	1.875	NA	1.840	.046	.23	.16	1.938
NA	.125	.062	.12	.156		.125	1.625	1.140	.890	.640	1.390	.125	.171	.125	1.875	1.687	2.625	.250	1.562	3.843	.093	NA	NA	.359	.125	.437	3.688	NA	3.687	.093	.40	.25	3.875
NA	.093	.031	.06	.093	NA	.093	.858	.608	.484	.358	.733	.077	.116	.062	.937	.875	1.343	.125	.781	1.892	.046	NA	NA	.209	.093	.250	1.875	NA	1.840	.046	.23	.16	1.938
.375	.078	.048	.078	.093	NA	NA	1.125	.750	.593	.453	1.015	.062	.187	.078	.875	.718	1.375	.218	NA	NA	.048	.031	.875	.305	.078	.531	1.906	.078	NA	.078	.531	.187	NA
.375	.078	.048	.078	.093	NA	NA	1.125	.750	.593	.453	1.015	.062	.187	.078	.875	.718	1.375	.218	NA	NA	.048	.031	.875	.305	.078	.531	1.906	.078	NA	.078	.531	.187	NA
NA	.093	.031	.06	.093	NA	.093	.858	.608	.484	.358	.733	.077	.116	.062	.937	.875	1.343	.125	.781	1.892	.046	NA	NA	.209	.093	.250	1.875	NA	1.840	.046	.23	.16	1.938
NA	.125	.062	.12	.156		.125	1.625	1.140	.890	.640	1.390	.125	.171	.125	1.875	1.687	2.625	.250	1.562	3.843	.093	NA	NA	.359	.125	.437	3.688	NA	3.687	.093	.40	.25	3.875
NA	.093	.031	.06	.093	NA	.093	.858	.608	.484	.358	.733	.077	.116	.062	.937	.875	1.343	.125	.781	1.892	.046	NA	NA	.209	.093	.250	1.875	NA	1.840	.046	.23	.16	1.938
.375	.078	.048	.078	.093	NA	NA	1.125	.750	.593	.453	1.015	.062	.187	.078	.875	.718	1.375	.218	NA	NA	.048	.031	.875	.305	.078	.531	1.906	.078	NA	.078	.531	.187	NA
NA	.093	.031	.06	.093	NA	.093	.858	.608	.484	.358	.733	.077	.116	.062	.937	.875	1.343	.125	.781	1.892	.046	NA	NA	.209	.093	.250	1.875	NA	1.840	.046	.23	.16	1.938
NA	.125	.062	.12	.156		.125	1.625	1.140	.890	.640	1.390	.125	.171	.125	1.875	1.687	2.625	.250	1.562	3.843	.093	NA	NA	.359	.125	.437	3.688	NA	3.687	.093	.40	.25	3.875
NA	.125	.062	.12	.156		.125	1.625	1.140	.890	.640	1.390	.125	.171	.125	1.875	1.687	2.625	.250	1.562	3.843	.093	NA	NA	.359	.125	.437	3.688	NA	3.687	.093	.40	.25	3.875
NA	.093	.031	.06	.093		.093	.858	.608	.484	.358	.733	.077	.116	.062	.937	.875	1.343	.125	.781	1.892	.046	NA	NA	.209	.093	.250	1.875	NA	1.840	.046	.23	.16	1.938
NA	.093	.031	.06	.093	NA	.093	.858	.608	.484	.358	.733	.077	.116	.062	.937	.875	1.343	.125	.781	1.892	.046	NA	NA	.209	.093	.250	1.875	NA	1.840	.046	.23	.16	1.938
SEE DASH 500 VALUES BELOW																																	
SEE DASH 500 VALUES BELOW																																	
.312	.125	.031	.125	.156	.125	.125	1.718	1.187	.968	.749	1.452	.093	.295	.090	1.312	1.00	2.000	.250	1.687	2.750	.062	NA	NA	.463	.125	.562	2.437	.140	2.562	.090	.468	.359	2.750
NA	.093	.031	.06	.093	NA	NA	.858	.608	.484	.358	.733	.062	.140	.062	NA	.968	1.450	.125	NA	1.720	.046	.03	NA	.210	NA	NA	NA	.070	NA	.046	.32	.16	NA
SEE DASH 500 VALUES BELOW																																	
SEE DASH 500 VALUES BELOW																																	
SEE DASH 500 VALUES BELOW																																	
SEE DASH 500 VALUES BELOW																																	
SEE DASH 500 VALUES BELOW																																	
SEE DASH 500 VALUES BELOW																																	
SEE DASH 500 VALUES BELOW																																	
SEE DASH 500 VALUES BELOW																																	
SEE DASH 500 VALUES BELOW																																	
NA	.093	.031	.06	.093	NA	.093	.858	.608	.484	.358	.733	.077	.116	.062	.937	.875	1.343	.125	.781	1.892	.046	NA	NA	.209	.093	.250	1.875	NA	1.840	.046	.23	.16	1.938
SEE DASH 500 VALUES BELOW																																	
SEE DASH 500 VALUES BELOW																																	
SEE DASH 500 VALUES BELOW																																	
SEE DASH 500 VALUES BELOW																																	
.375	.078	.048	.078	.093	NA	NA	1.125	.750	.593	.453	1.015	.062	.187	.078	.875	.718	1.375	.218	NA	NA	.048	.031	.875	.305	.078	.531	1.906	.078	NA	.078	.531	.187	NA
SEE DASH 500 VALUES BELOW																																	
NA	.093	.031	.06	.093	NA	.093	.858	.608	.484	.358	.733	.077	.116	.062	.937	.875	1.343	.125	.781	1.892	.046	NA	NA	.209	.093	.250	1.875	NA	1.840	.046	.23	.16	1.938
NA	.093	.031	.06	.093		.093	.858	.608	.484	.358	.733	.077	.116	.062	.937	.875	1.343	.125	.781	1.892	.046	NA	NA	.209	.093	.250	1.875	NA	1.840	.046	.23	.16	1.938
NA	.093	.031	.06	.093		.093	.858	.608	.484	.358	.733	.077	.116	.062	.937	.875	1.343	.125	.781	1.892	.046	NA	NA	.209	.093	.250	1.875	NA	1.840	.046	.23	.16	1.938
NA	.093	.031	.06	.093		.093	.858	.608	.484	.358	.733	.077	.116	.062	.937	.875	1.343	.125	.781	1.892	.046	NA	NA	.209	.093	.250	1.875	NA	1.840	.046	.23	.16	1.938
NA	[illegible]	[illegible]	.06	.093	NA	.093	.858	.608	.484	.358	.733	.077	.116	.062	.937	.875	1.343	.125	.781	1.892	.046	NA	NA	.209	.093	.250	1.875	NA	1.840	.046	.23	.16	1.938
SEE DASH 500 VALUES BELOW																																	
NA	.125	.062	.12	.156	NA	.125	1.625	1.140	.890	.640	1.390	.125	.171	.125	1.875	1.687	2.625	.250	1.562	3.843	.093	NA	NA	.359	.125	.437	3.688	NA	3.687	.093	.40	.25	3.875
D	E	F	G	H	J	K	L	M	N	P	R	S	T	U	V	W	Y	Z	AA	AB	AC	AD	AE	AF	AG	AH	AJ	AK	AL	AM	AN	AP	AR

AC ELECTRONICS DASH NUMBERS

AS APPLICABLE NEXT ASSY / USED ON APPLICATION	UNLESS OTHERWISE SPECIFIED DIMENSIONS ARE IN INCHES TOLERANCES ON 2 PLACE DECIMALS ± — 3 PLACE DECIMALS ± .005 ANGLES ± — DO NOT SCALE THIS DRAWING	MIT INSTRUMENTATION LAB CAMBRIDGE, MASS. DRAWN R.A. JONES DATE 15 JUL 65 CHECKED W. KUPFER 22 JUL 65 APPROVAL CONTRACT	MANNED SPACECRAFT CENTER HOUSTON, TEXAS NAMEPLATES, APOLLO G&N - GSE (STANDARDS)
	MATERIAL SEE NOTE 11 APPROVAL	T. MICHAELS 22 JUL 65 NASA APPROVAL W. KUPFER 22 JUL 65 MIT APPROVAL	SIZE J2 CODE IDENT NO. 80230 1004260 SCALE NONE SHEET 6 OF 8

1004260 SHT 6

2/1004260

NOTES:

1. INTERPRET DRAWING IN ACCORDANCE WITH STANDARDS PRESCRIBED BY MIL-D-70327.
2. DIMENSIONS ON EACH VIEW APPLY TO ALL VIEWS (WITH THE EXCEPTION OF MOUNTING HOLES).
3. FORMATS ILLUSTRATED WILL BE APPLICABLE TO ALL ITEMS REQUIRING NAMEPLATES BELOW END ITEM DESIGNATION (SYSTEMS, ASSEMBLIES, ETC.)
4. PLATE BACKGROUND TO BE LUSTERLESS BLACK PER FED-STD-595, COLOR 37038. BORDER, MARKING AND LETTERING TO BE NATURAL METAL, (ANODIZED ALUMINUM).
5. MARKING METHOD TO BE DIE STAMPING, ETCHING OR ENGRAVING IN ACCORDANCE WITH MIL-P-19834.
6. LETTERING STYLE TO BE GOTHIC, (SANS SERIFS), AND NUMBERS TO BE ARABIC.
7. WHERE LOCATING DIMENSIONS ARE NOT SHOWN, CHARACTERS SHALL BE SYMMETRICALLY POSITIONED.
8. IDENTIFY WITH DRAWING NUMBER PER ND 1002019.
9. WHEN "AUTO MARK" METAL MARKING TYPEWRITER IS USED TO ADD DATA TO BLANK SPACES, TYPE SIZE IS TO BE SELECTED FROM DIMENSIONS U, AC, AND AM.
10. NASA SYMBOL IS TO BE PROPORTIONAL TO NAMEPLATE IN RATIO OF 1 TO 5 WITH DIMENSION A VALUE AND IS TO HAVE NATURAL BACKGROUND. NASA SYMBOL LETTERS LETTERING AND FEATHER TO BE BLACK, (OR WHITE FOR SILK SCREENING). WHERE BLACK FEATHER PROTRUDES INTO BLACK BACKGROUND, A MINIMUM OUTLINE OF NATURAL BACKGROUND SHALL EXIST.
11. NAMEPLATES WILL BE APPLIED BY METHODS LISTED BELOW, SHOWN IN ORDER OF PREFERENCE, (I.E., FOR RELIABILITY AND WEIGHT).
    - A - STENCIL OR SILK SCREEN DIRECTLY ON EQUIPMENT USING INK PER SCD 1010920, (WHITE OR BLACK).
    - B - ALUMINUM FOIL, (STYLE A OR B, TYPE I):
      FOIL SHALL BE .0030 ± .0005 THICK PER MIL-A-148.
      FOIL SHALL HAVE NO ADHESIVE BACKING.
      FOIL SHALL BE BONDED PER ND 1002219, (METHOD II).
      FOIL SHALL BE CLEAR ANODIZED PER MIL-A-8625, TYPE II.
    - C - PLATE, (STYLE A OR B, TYPE II):
      MATERIAL: QQ-A-250, TEMPER O OR H14, TYPE 1100, ALUMINUM ALLOY, .032 THICK. ANODIZE PER MIL-A-8625, TYPE II.
      ALUMINUM PLATE MUST BE FREE FROM BURRS AND SHARP CORNERS, MOUNTED WITH APPLICABLE SIZE FASTENERS.
12. NAMEPLATES SHALL BE CAPABLE OF MEETING APPLICABLE REQUIREMENTS OF MIL-M-13231.
13. ON DIMENSION TABLES SHOWN ON PAGES 2, 3, 4, 5, AND 6, NA MEANS, "NOT APPLICABLE".

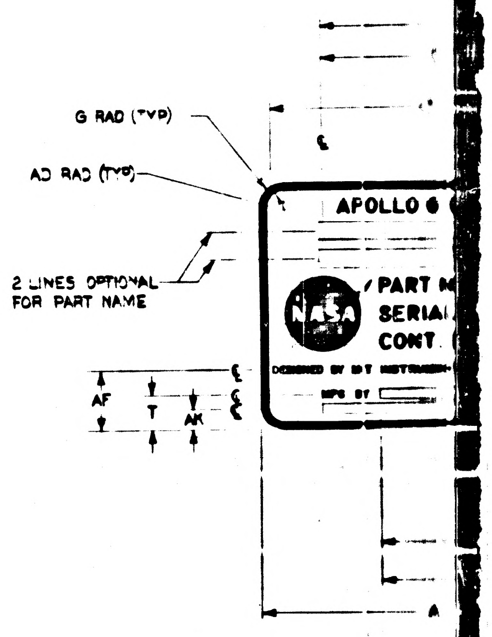

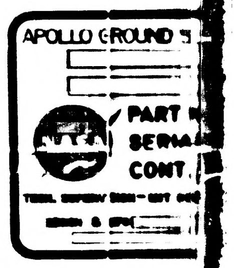

WITHOU

SUGGESTED PROPORTIONS FOR NAMEPLATE DIMENSIONS.
1. SELECT NAMEPLATE LENGTH, DIMENSION "A", TO FIT DESIGN NEEDS.
2. DIMENSIONS B THRU AS ON LINE 1 BELOW ARE PROPORTIONAL TO "A" BY MULTIPLIERS SHOWN IN LINE 2 BELOW.

1.	A	B	C	D	E	F	G	H	J	K	L	M	N	P	R	S	T	U	V
2.	1.000A	.6563A	.8438A	.6875A	.0391A	.0240A	.0391A	.0469A	.0547A	.0469A	.5938A	.3750A	.2969A	.2187A	.5079A	.0313A	.0938A	.0391A	.4375A

1.	W	Y	Z	AA	AB	AC	AD	AE	AF	AG	AH	AJ	AK	AL	AM	AN	AP	AR	AS
2.	.3594A	.6875A	.1094A	.5781A	.9219A	.0240A	.0156A	.4375A	.1525A	.8891A	.1563A	.8438A	.0548A	.8659A	.0391A	.1563A	.0938A	.9219A	.0151A

1004260	DB	SHT 1

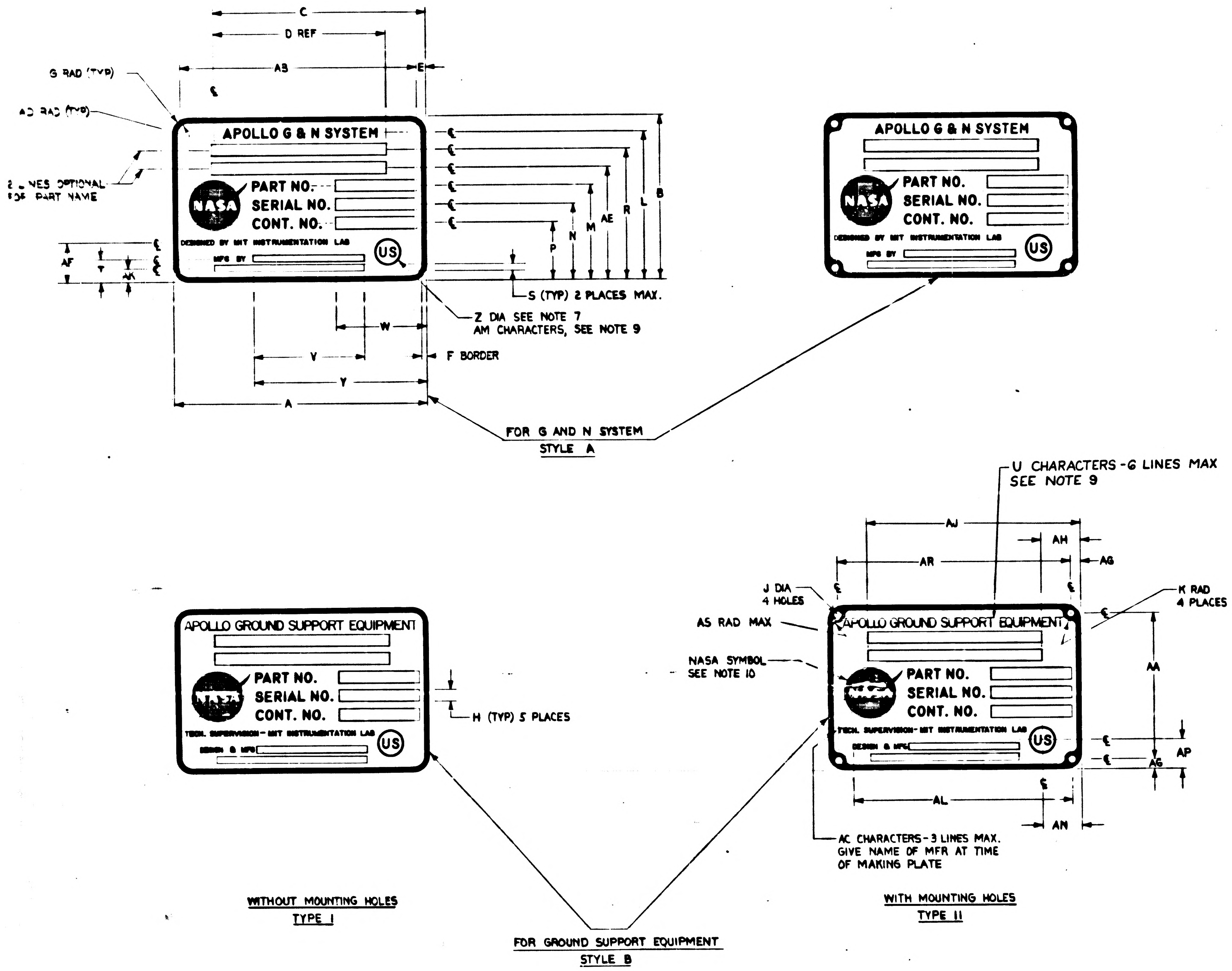
C
D REF
AB
E
G RAD (TYP)
AD RAD (TYP)
2 LINES OPTIONAL FOR PART NAME
APOLLO G & N SYSTEM
NASA
PART NO.
SERIAL NO.
CONT. NO.
DESIGNED BY MIT INSTRUMENTATION LAB
MFG BY
US
AF
AK
B
L
R
AE
M
N
P
S (TYP) 2 PLACES MAX.
Z DIA SEE NOTE 7
AM CHARACTERS, SEE NOTE 9
W
V
Y
A
F BORDER
FOR G AND N SYSTEM
STYLE A
U CHARACTERS -6 LINES MAX
SEE NOTE 9
AJ
AH
AR
AG
J DIA
4 HOLES
K RAD
4 PLACES
AS RAD MAX
NASA SYMBOL
SEE NOTE 10
APOLLO GROUND SUPPORT EQUIPMENT
TECH. SUPERVISION - MIT INSTRUMENTATION LAB
DESIGN & MFG
H (TYP) 5 PLACES
AA
AP
AG
AL
AN
AC CHARACTERS - 3 LINES MAX.
GIVE NAME OF MFR AT TIME
OF MAKING PLATE
WITHOUT MOUNTING HOLES
TYPE I
WITH MOUNTING HOLES
TYPE II
FOR GROUND SUPPORT EQUIPMENT
STYLE B

REVISIONS

SYM	ZONE	DESCRIPTION	CHG NO	DATE	APPD
CL		REPLACES REV CK WITHOUT CHANGE PER TDRR 34365		1/28 67	JWL RWH
CM		REVISION STATUS CHANGED		18 OCT 67	RAW
CN		REVISION STATUS CHANGED		3 OCT 67	RK
CP		REVISION STATUS CHANGED		6 NOV 67	[illegible]
CR		REVISION STATUS CHANGED		[illegible]	[illegible] RWH
S		REVISION STATUS CHANGED		[illegible] 68	EHW
CT		REVISION STATUS CHANGED		[illegible] 68	[illegible]
CU		REVISION STATUS CHANGED		22 FEB 68	[illegible]
CV		REVISION STATUS CHANGED		27 [illegible] 68	[illegible]
CW		REVISION STATUS CHANGED		[illegible] 68	[illegible]
CY		REVISION STATUS CHANGED		[illegible] 68	[illegible]
CZ		REVISION STATUS CHANGED		22 MAY 68	[illegible]
DA		REVISION STATUS CHANGED		[illegible] 68	[illegible]
DB		REVISION STATUS CHANGED		[illegible] SEP 68	[illegible]

UNLESS OTHERWISE SPECIFIED
DIMENSIONS ARE IN INCHES
TOLERANCES ON
2 PLACE DECIMALS ± 3 PLACE DECIMALS ± .005 ANGLES ±
DO NOT SCALE THIS DRAWING
MATERIAL
SEE NOTE 11

AS APPLICABLE
NEXT ASSY USED ON
APPLICATION

M I T
INSTRUMENTATION LAB
CAMBRIDGE, MASS
R. A. JONES 15 JUL 65
DRAWN DATE
CHECKED
W. KUPFER 22 JUL 65
APPROVAL
CONTRACT
T. MICHAELS 22 JUL 65
NASA APPROVAL
W. KUPFER 22 JUL 65
MIT APPROVAL
APPROVAL

MANNED
SPACECRAFT CENTER
HOUSTON, TEXAS

NAMEPLATES,
APOLLO G&N - GSE
(STANDARDS)

SIZE J2 | CODE IDENT NO. 80230 | 1004260
SCALE NONE | SHEET 1 OF 6

1004260 DB

HHM 260 DB SHEET 1

2/1004260

DASH NO.	P/C	PART NAME	REMARKS	PART NUMBER	SER. NO.	CONT. NO.	STYLE	TYPE	MATERIAL	A	B	C	D	E	F	G	H	J	K	L	M	N
399	K																					
398	K																					
350	K	ALIGNMENT OPTICAL TELESCOPE (LEM)		NA	NA	NA	A	I	NOTE 11B	4.000	2.625	3.375	2.750	.156	.093	.156	.187	NA	NA	2.312	1.468	1.[illegible]
309	K																					
308	K																					
307	K						B	I	NOTE 11B	4.000	2.625	3.375	2.750	.156	.093	.156	.187	NA	NA	2.328	1.468	1.[illegible]87
306	K						B	II	NOTE 11C	4.000	2.625	3.375	2.750	.156	.093	.156	.187	.125	.156	2.328	1.468	1.[illegible]87
305	K						B	I	NOTE 11B	2.000	1.312	1.687	1.375	.078	.048	.078	.093	NA	NA	1.164	.734	.593
304	K						B	II	NOTE 11C	2.000	1.312	1.687	1.375	.078	.048	.078	.093	.070	.078	1.164	.734	.[illegible]93
303	K																					
302	K																					
301	K																					
300	K	OPTICAL UNIT		NA	NA	NA	A	I	NOTE 11B	2.000	1.312	1.675	NA	NA	.048	.078	NA	NA	NA	1.090	.812	.675
9	K	2 IN AUTOCOLLIMATOR		1001702			B	II	NOTE 11C	4.000	2.625	3.812	2.750	.156	.093	.156	.187	.125	.156	2.250	1.500	1.[illegible]87
8	K	5 IN AUTOCOLLIMATOR		1017410			B	II	NOTE 11C	4.000	2.625	3.812	2.750	.156	.093	.156	.187	.125	.156	2.250	1.500	1.[illegible]87
7	K	2-1/2 IN AUTOCOLLIMATOR (SCT)		1017435			B	II	NOTE 11C	4.000	2.625	3.812	2.750	.156	.093	.156	.187	.125	.156	2.250	1.500	1.[illegible]87
6	K	2-1/2 IN AUTOCOLLIMATOR (SXT)		1017448			B	II	NOTE 11C	4.000	2.625	3.812	2.750	.156	.093	.156	.187	.125	.156	2.250	1.500	1.[illegible]87
5	K	RETROREFLECTING PRISM ASSEMBLY		1019840			B	I	NOTE 11B	4.000	2.625	3.812	2.750	.156	.093	.156	.187	NA	NA	2.250	1.500	1.[illegible]87
4	K	S/H SIMULATOR ASSEMBLY		1019896			B	I	NOTE 11B	4.000	2.625	3.812	2.750	.156	.093	.156	.187	NA	NA	2.250	1.500	1.[illegible]87
3	K	REFERENCE MIRROR		1001767			B	I	NOTE 11B	2.000	1.312	1.906	1.375	.078	.048	.078	.093	NA	NA	1.125	.750	.593
2	K	2 IN PLANE READING AUTOCOLLIMATOR		1017413			B	I	NOTE 11B	2.000	1.312	1.906	1.375	.078	.048	.078	.093	NA	NA	1.125	.750	.593
1	K	2 IN AUTOCOLLIMATOR		1001702			B	I	NOTE 11B	2.000	1.312	1.906	1.375	.078	.048	.078	.093	NA	NA	1.125	.750	.[illegible]93

NOTES FOR TABLE

STYLE A IS FOR G & N SYSTEM
STYLE B IS FOR GROUND SUPPORT EQUIPMENT
TYPE I IS WITHOUT MOUNTING HOLES
TYPE II IS WITH MOUNTING HOLES

1004260 DB SHT 2

1/1004260

REVISIONS					
SYM	ZONE	DESCRIPTION	CHG NO	DATE	APPD
CL		REPLACES REV CK WITHOUT CHANGE PER TDRR 34365		[illegible]28/67	JWL
CM		REVISION STATUS CHANGED		18 OCT 67	RAW
CN		REVISION STATUS CHANGED		3 OCT 6[illegible]	URK
CP		REVISION STATUS CHANGED		6 NOV 67	EMS
CR		REVISION STATUS CHANGED		7 DEC 67	[illegible]
CS		REVISION STATUS CHANGED		3 JAN 68	EHW
CT		REVISION STATUS CHANGED		[illegible]EB 68	[illegible]
CU		REVISION STATUS CHANGED		[illegible] FEB 68	URK
CV		REVISION STATUS CHANGED		[illegible]	[illegible]
CW		REVISION STATUS CHANGED		3 APR 68	[illegible]
CY		REVISION STATUS CHANGED		6 APR 68	AK
CZ		REVISION STATUS CHANGED		23 MAY 68	[illegible]
DA		REVISION STATUS CHANGED		[illegible] 68	[illegible]
DB		REVISION STATUS CHANGED		[illegible]SEP 6[illegible]	[illegible]

[illegible]	F	G	H	J	K	L	M	N	P	R	S	T	U	V	W	Y	Z	AA	AB	AC	AD	AE	AF	AG	AH	AJ	AK	AL	AM	AN	AP	AR
[illegible]	.093	.156	.187	NA	NA	2.312	1.468	1.187	.906	2.031	NA	.375	.156	NA	1.437	2.750	.437	NA	3.688	.062	.062	1.750	.593	NA	.625	3.375	.187	NA	.156	.531	.453	NA
[illegible]	.093	.156	.187	NA	NA	2.328	1.468	1.187	.906	2.031	.062	.375	.156	NA	1.437	2.750	.437	NA	3.687	.062	.062	1.750	.593	NA	NA	NA	NA	NA	NA	NA	NA	NA
[illegible]	.093	.156	.187	.125	.156	2.328	1.468	1.187	.906	2.031	.062	.375	.156	NA	1.437	2.750	.437	2.312	3.687	.062	NA	1.750	.593	NA	NA	NA	NA	NA	NA	NA	NA	NA
[illegible]	.048	.078	.093	NA	NA	1.164	.734	.593	.453	1.015	.048	.171	.078	NA	.718	1.375	.187	NA	NA	.048	.031	.875	.320	NA	NA	NA	NA	NA	NA	NA	NA	NA
[illegible]	.048	.078	.093	.070	.078	1.164	.734	.593	.453	1.015	.048	.171	.078	NA	.718	1.375	.187	.156	1.843	.048	NA	.875	.320	NA	NA	NA	NA	NA	NA	NA	NA	NA
[illegible]	.048	.078	NA	NA	NA	1.090	.812	.675	.540	.940	NA	.265	NA	NA	NA	1.375	.218	NA	NA	NA	NA	NA	.375	NA	NA	NA	.180	NA	.078	NA	NA	NA
[illegible]	.093	.156	.187	.125	.156	2.250	1.500	1.187	.906	2.031	.093	.375	.156	1.750	1.437	2.750	.437	2.312	3.687	.062	NA	1.750	.593	.156	1.062	3.812	.156	NA	.156	1.062	.375	3.687
[illegible]	.093	.156	.187	.125	.156	2.250	1.500	1.187	.906	2.031	.093	.375	.156	1.750	1.437	2.750	.437	2.312	3.687	.062	NA	1.750	.593	.156	1.062	3.812	.156	NA	.156	1.062	.375	3.687
[illegible]	.093	.156	.187	.125	.156	2.250	1.500	1.187	.906	2.031	.093	.375	.156	1.750	1.437	2.750	.437	2.312	3.687	.062	NA	1.750	.593	.156	1.062	3.812	.156	NA	.156	1.062	.375	3.687
[illegible]	.093	.156	.187	.125	.156	2.250	1.500	1.187	.906	2.031	.093	.375	.156	1.750	1.437	2.750	.437	2.312	3.687	.062	NA	1.750	.593	.156	1.062	3.812	.156	NA	.156	1.062	.375	3.687
[illegible]	.093	.156	.187	NA	NA	2.250	1.500	1.187	.906	2.031	.093	.375	.156	1.750	1.437	2.750	.437	NA	NA	.062	.062	1.750	.593	.156	1.062	3.812	.156	NA	.156	1.062	.375	NA
[illegible]	.093	.156	.187	NA	NA	2.250	1.500	1.187	.906	2.031	.093	.375	.156	1.750	1.437	2.750	.437	NA	NA	.062	.062	1.750	.593	.156	1.062	3.812	.156	NA	.156	1.062	.375	NA
[illegible]	.048	.078	.093	NA	NA	1.125	.750	.593	.453	1.015	.062	.187	.078	.875	.718	1.375	.218	NA	NA	.048	.031	.875	.305	.078	.531	1.906	.078	NA	.078	.531	.187	NA
[illegible]	.048	.078	.093	NA	NA	1.125	.750	.593	.453	1.015	.062	.187	.078	.875	.718	1.375	.218	NA	NA	.048	.031	.875	.305	.078	.531	1.906	.078	NA	.078	.531	.187	NA
[illegible]	.048	.078	.093	NA	NA	1.125	.750	.593	.453	1.015	.062	.187	.078	.875	.718	1.375	.218	NA	NA	.048	.031	.875	.305	.078	.531	1.906	.078	NA	.078	.531	.187	NA

KOLLSMAN DASH NUMBERS

AS APPLICABLE	UNLESS OTHERWISE SPECIFIED DIMENSIONS ARE IN INCHES TOLERANCES ON 2 PLACE DECIMALS ± 3 PLACE DECIMALS ± .005 ANGLES ±	M I T INSTRUMENTATION LAB CAMBRIDGE MASS	MANNED SPACECRAFT CENTER HOUSTON, TEXAS	
NEXT ASSY / USED ON	DO NOT SCALE THIS DRAWING	DRAWN R.A. JONES DATE 15 JUL 65 CHECKED APPROVAL W KUPFER 22 JUL 65 CONTRACT	NAMEPLATES, APOLLO GEN - GSE (STANDARDS)	
APPLICATION	MATERIAL SEE NOTE 11	T. MICHAELS 22 JUL 65 NASA APPROVAL	SIZE J2	CODE IDENT NO 80230
	APPROVAL	W KUPFER 22 JUL 65 MIT APPROVAL	SCALE NONE	1004260 SHEET 2 OF 6

1004-260 DB SHT 2

1004260 DB

1004260

085A001

2/1004260

DASH NO.	P/C	PART NAME	REMARKS	PART NUMBER	SER. NO.	CONT. NO.	STYLE	TYPE	MATERIAL	A	B	C	D	E	F	G	H	J	K	L	M	N	P
299	R																						
298	R																						
293	R	COMPUTER TEST SET		2014042-081	NA	NAS-9-497	B	II	NOTE 11C	FOR DIMENSIONS SEE DASH 18 VALUES BELOW													
292	R	DRAWER ASSY PROGRAM & MONITOR		2014041-071	NA	NAS-9-497	B	I	NOTE 11B	FOR DIMENSIONS SEE DASH 17 VALUES BELOW													
291	R	BUFFER CIRCUIT ASSY		2014254-041	NA	NAS-9-497	B	I	NOTE 11B	FOR DIMENSIONS SEE DASH 15 VALUES BELOW													
290	R	LOGIC DRAWER ASSY NO.2		2014037-051	NA	NAS-9-497	B	I	NOTE 11B	FOR DIMENSIONS SEE DASH 17 VALUES BELOW													
289	R	SELF TEST ASSY		2014392-021	NA	NAS-9-497	B	I	NOTE 11B	FOR DIMENSIONS SEE DASH 15 VALUES BELOW													
288	R	LOGIC DRAWER ASSY NO.1		2014036-051	NA	NAS-9-497	B	I	NOTE 11B	FOR DIMENSIONS SEE DASH 17 VALUES BELOW													
287	R	COMPUTER TEST SET		2014042-071	NA	NAS-9-497	B	II	NOTE 11C	FOR DIMENSIONS SEE DASH 18 VALUES BELOW													
286	R	DRAWER ASSY PROGRAM & MONITOR		2014041-061	NA	NAS-9-497	B	I	NOTE 11B	FOR DIMENSIONS SEE DASH 17 VALUES BELOW													
285	R	BUFFER CIRCUIT ASSY		2014254-031	NA	NAS-9-497	B	I	NOTE 11B	FOR DIMENSIONS SEE DASH 15 VALUES BELOW													
284	R	LOGIC DRAWER ASSY NO. 2		2014037-041	NA	NAS-9-497	B	I	NOTE 11B	FOR DIMENSIONS SEE DASH 17 VALUES BELOW													
283	R	DRAWER ASSY-PROGRAM & MONITOR		2014041-051	NA	NAS-9-497	B	I	NOTE 11B	FOR DIMENSIONS SEE DASH 17 VALUES BELOW													
282	R	COMPUTER TEST SET		2014042-061	NA	NAS-9-497	B	II	NOTE 11C	FOR DIMENSIONS SEE DASH 18 VALUES BELOW													
281	R	AGC HANDLING FIXTURE		2014282-031	NA	NAS-9-497	B	I	NOTE 11B	FOR DIMENSIONS SEE DASH 17 VALUES BELOW													
280	R	COMPUTER TEST SET		2014042-051	NA	NAS-9-497	B	II	NOTE 11C	FOR DIMENSIONS SEE DASH 18 VALUES BELOW													
279	R	SELF TEST ASSY		2014366-041	NA	NAS-9-497	B	I	NOTE 11B	FOR DIMENSIONS SEE DASH 15 VALUES BELOW													
278	R	LOGIC DRAWER ASSY NO. 1		2014036-041	NA	NAS-9-497	B	I	NOTE 11B	FOR DIMENSIONS SEE DASH 17 VALUES BELOW													
277	R	COMPUTER TEST SET		2014042-041	NA	NAS-9-497	B	II	NOTE 11C	FOR DIMENSIONS SEE DASH 18 VALUES BELOW													
276	R	DRAWER ASSY-PROGRAM & MONITOR		2014041-041	NA	NAS-9-497	B	I	NOTE 11B	FOR DIMENSIONS SEE DASH 17 VALUES BELOW													
275	R	DRAWER ASSY RDC INTERFACE		2014045-031	NA	NAS-9-497	B	I	NOTE 11B	FOR DIMENSIONS SEE DASH 15 VALUES BELOW													
274	R	SELF TEST ASSY		2014366-031	NA	NAS-9-497	B	I	NOTE 11B	FOR DIMENSIONS SEE DASH 15 VALUES BELOW													
273	R	LOGIC DRAWER ASSY NO. 2		2014037-031	NA	NAS-9-497	B	I	NOTE 11B	FOR DIMENSIONS SEE DASH 17 VALUES BELOW													
272	R	DRAWING ASSY PROGRAMMER & MONITOR		2014041-031	NA	NAS-9-497	B	I	NOTE 11B	FOR DIMENSIONS SEE DASH 17 VALUES BELOW													
271	R	LOGIC DRAWER ASSY NO. 1		2014036-031	NA	NAS-9-497	B	I	NOTE 11B	FOR DIMENSIONS SEE DASH 17 VALUES BELOW													
270	R	COMPUTER TEST SET		2014042-031	NA	NAS-9-497	B	II	NOTE 11C	FOR DIMENSIONS SEE DASH 18 VALUES BELOW													
269	R	POWER CONTROL ASSY		2014044-021	NA	NAS-9-497	B	I	NOTE 11B	FOR DIMENSIONS SEE DASH 17 VALUES BELOW													
268	R	SELF TEST ASSY		2014366-021	NA	NAS-9-497	B	I	NOTE 11B	FOR DIMENSIONS SEE DASH 15 VALUES BELOW													
267	R	AGC JUNCTION ASSY		2014341-021	NA	NAS-9-497	B	I	NOTE 11B	FOR DIMENSIONS SEE DASH 15 VALUES BELOW													
266	R	POWER CONTROL ASSY		2014079-021	NA	NAS-9-497	B	I	NOTE 11B	FOR DIMENSIONS SEE DASH 15 VALUES BELOW													
265	R	BUFFER CIRCUIT ASSY		2014254-021	NA	NAS-9-497	B	I	NOTE 11B	FOR DIMENSIONS SEE DASH 15 VALUES BELOW													
264	R	DRAWER ASSY X Y INTERFACE		2014040-021	NA	NAS-9-497	B	I	NOTE 11B	FOR DIMENSIONS SEE DASH 15 VALUES BELOW													
263	R	DRAWER ASSY RDC INTERFACE		2014045-021	NA	NAS-9-497	B	I	NOTE 11B	FOR DIMENSIONS SEE DASH 15 VALUES BELOW													
262	R	DRAWER ASSY PROGRAMMER & MONITOR		2014041-021	NA	NAS-9-497	B	I	NOTE 11B	FOR DIMENSIONS SEE DASH 17 VALUES BELOW													
261	R	LOGIC DRAWER ASSY NO. 2		2014037-021	NA	NAS-9-497	B	I	NOTE 11B	FOR DIMENSIONS SEE DASH 17 VALUES BELOW													
260	R	LOGIC DRAWER ASSY NO. 1		2014036-021	NA	NAS-9-497	B	I	NOTE 11B	FOR DIMENSIONS SEE DASH 17 VALUES BELOW													
259	R	OPERATION CONSOLE		2014024-021	NA	NAS-9-497	B	II	NOTE 11C	FOR DIMENSIONS SEE DASH 18 VALUES BELOW													
258	R	COMPUTER TEST SET		2014042-021	NA	NAS-9-497	B	II	NOTE 11C	FOR DIMENSIONS SEE DASH 18 VALUES BELOW													
257	R	AUXILIARY CALIBRATION CONSOLE		2014059-021	NA	NAS-9-497	B	II	NOTE 11C	FOR DIMENSIONS SEE DASH 18 VALUES BELOW													
256	R	AGC CALIBRATION CONSOLE		2014049-021	NA	NAS-9-497	B	II	NOTE 11C	FOR DIMENSIONS SEE DASH 18 VALUES BELOW													
255	R	AGC HANDLING FIXTURE		2014282-021	NA	NAS-9-497	B	I	NOTE 11B	FOR DIMENSIONS SEE DASH 17 VALUES BELOW													
254	R	DRAWER ASSY COMP. SIMULATOR		2014048-011	NA	NAS-9-497	B	II	NOTE 11C	FOR DIMENSIONS SEE DASH 18 VALUES BELOW													
253	R	SHIPPING KIT ASSY, NAV DSKY		2016312-011	NA	NAS-9-497	B	II	NOTE 11C	FOR DIMENSIONS SEE DASH 18 VALUES BELOW													
252	R	SHIPPING KIT ASSY, UNIVERSAL DSKY		2016316-011	NA	NAS-9-497	B	II	NOTE 11C	FOR DIMENSIONS SEE DASH 18 VALUES BELOW													
251	R	SHIPPING KIT ASSY, MAIN DSKY		2016313-011	NA	NAS-9-497	B	II	NOTE 11C	FOR DIMENSIONS SEE DASH 18 VALUES BELOW													
250	R	AMPLIFIER, REWORK		2014386	NA	NAS-9-497	B	I	NOTE 11B	FOR DIMENSIONS SEE DASH 15 VALUES BELOW													
249	R	TEMP MONITOR ASSY		2014313-011	NA	NAS-9-497	B	I	NOTE 11C	FOR DIMENSIONS SEE DASH 17 VALUES BELOW													
248	R	AGC JUNCTION ASSY		2014341-011	NA	NAS-9-497	B	I	NOTE 11B	FOR DIMENSIONS SEE DASH 15 VALUES BELOW													
247	R	AC INPUT PANEL ASSY		2014302-011	NA	NAS-9-497	B	I	NOTE 11B	FOR DIMENSIONS SEE DASH 15 VALUES BELOW													
246	R	SELF TEST ASSY		2014392-011	NA	NAS-9-497	B	I	NOTE 11B	FOR DIMENSIONS SEE DASH 15 VALUES BELOW													
245	R	TAPE PUNCH ASSEMBLY		2014039-011	NA	NAS-9-497	B	I	NOTE 11B	FOR DIMENSIONS SEE DASH 15 VALUES BELOW													
244	R	TAPE READER ASSEMBLY		2014038-011	NA	NAS-9-497	B	I	NOTE 11B	FOR DIMENSIONS SEE DASH 15 VALUES BELOW													
243																							
242																							
241	R	APOLLO GUIDANCE COMPUTER GROUP		6003001	NA	NAS-9-497	A	I	NOTE 11B	FOR DIMENSIONS SEE DASH 19 VALUES BELOW													
240	R	SELF TEST ASSEMBLY		2014366-011	NA	NAS-9-497	B	I	NOTE 11B	FOR DIMENSIONS SEE DASH 15 VALUES BELOW													
239	R	POWER SUPPLY ASSY-115V., 400 CYCLE		2014207-011	NA	NAS-9-497	B	I	NOTE 11B	FOR DIMENSIONS SEE DASH 17 VALUES BELOW													
238	R	AC INPUT PANEL ASSY		2014043-011	NA	NAS-9-497	B	I	NOTE 11B	FOR DIMENSIONS SEE DASH 17 VALUES BELOW													
237	R	POWER CONTROL ASSY		2014079-011	NA	NAS-9-497	B	I	NOTE 11B	FOR DIMENSIONS SEE DASH 15 VALUES BELOW													
236	R	DRAWER ASSY-X Y INTERFACE		2014040-011	NA	NAS-9-497	B	I	NOTE 11B	FOR DIMENSIONS SEE DASH 15 VALUES BELOW													
235	R	DRAWER ASSY RDC INTERFACE		2014045-011	NA	NAS-9-497	B	I	NOTE 11B	FOR DIMENSIONS SEE DASH 15 VALUES BELOW													
234	R	BUFFER CIRCUIT ASSY		2014254-011	NA	NAS-9-497	B	I	NOTE 11B	FOR DIMENSIONS SEE DASH 15 VALUES BELOW													
233	R	CONTROL & INTERFACE ASSY		2014204-011	NA	NAS-9-497	B	I	NOTE 11B	FOR DIMENSIONS SEE DASH 15 VALUES BELOW													
232	R	POWER CONTROL ASSY		2014044-011	NA	NAS-9-497	B	I	NOTE 11B	FOR DIMENSIONS SEE DASH 17 VALUES BELOW													
231	R	DRAWER ASSY, PROGRAMMER & MONITOR		2014041-011	NA	NAS-9-497	B	I	NOTE 11B	FOR DIMENSIONS SEE DASH 17 VALUES BELOW													
230	R	CONNECTOR INTERFACE ASSY		2014272-011	NA	NAS-9-497	B	I	NOTE 11B	FOR DIMENSIONS SEE DASH 15 VALUES BELOW													
229	R	CONNECTOR INTERFACE ASSY		2014047-011	NA	NAS-9-497	B	I	NOTE 11B	FOR DIMENSIONS SEE DASH 15 VALUES BELOW													
228	R	ANTENNA, TUNING CAPACITOR ASSY		2014209-011	NA	NAS-9-497	B	I	NOTE 11B	FOR DIMENSIONS SEE DASH 15 VALUES BELOW													
227	R	MOUNTING FIXTURE ASSY		2014006-011	NA	NAS-9-497	B	I	NOTE 11B	FOR DIMENSIONS SEE DASH 17 VALUES BELOW													
226	R	POWER SUPPLY ASSY 3 VDC		2014234-011	NA	NAS-9-497	B	I	NOTE 11B	FOR DIMENSIONS SEE DASH 15 VALUES BELOW													
225	R	PANEL ASSY—SIGNAL INTERFACE		2014010-011	NA	NAS-9-497	B	I	NOTE 11B	FOR DIMENSIONS SEE DASH 15 VALUES BELOW													
224	R	OSCILLOSCOPE ASSY		2014232-011	NA	NAS-9-497	B	I	NOTE 11B	FOR DIMENSIONS SEE DASH 15 VALUES BELOW													
223	R	AUXILIARY OUTLET ASSY		2014274-011	NA	NAS-9-497	B	I	NOTE 11B	FOR DIMENSIONS SEE DASH 15 VALUES BELOW													
222	R	FREQUENCY COUNTER		2014233-011	NA	NAS-9-497	B	I	NOTE 11B	FOR DIMENSIONS SEE DASH 15 VALUES BELOW													
221	R	POWER SUPPLY ASSY 10, 13, 28 VDC		2014235-011	NA	NAS-9-497	B	I	NOTE 11B	FOR DIMENSIONS SEE DASH 15 VALUES BELOW													
220	R	LOGIC DRAWER ASSY NO. 2		2014037-011	NA	NAS-9-497	B	I	NOTE 11B	FOR DIMENSIONS SEE DASH 17 VALUES BELOW													
219	R	LOGIC DRAWER ASSY NO. 1		2014036-011	NA	NAS-9-497	B	I	NOTE 11B	FOR DIMENSIONS SEE DASH 17 VALUES BELOW													
218	R	COUNTER, ELECTRICAL ASSY		2014288-011	NA	NAS-9-497	B	I	NOTE 11B	FOR DIMENSIONS SEE DASH 15 VALUES BELOW													
217	R	POWER SUPPLY ASSY		2014279-011	NA	NAS-9-497	B	I	NOTE 11B	FOR DIMENSIONS SEE DASH 15 VALUES BELOW													
216	R	TEST MOUNT ASSY		2014257-011	NA	NAS-9-497	B	I	NOTE 11B	FOR DIMENSIONS SEE DASH 15 VALUES BELOW													
215	R	UNIVERSAL DSKY PEDESTAL MOUNT		2014014-011	NA	NAS-9-497	B	I	NOTE 11B	FOR DIMENSIONS SEE DASH 17 VALUES BELOW													
214	R	MAIN DSKY PEDESTAL MOUNT		2014343	NA	NAS-9-497	B	I	NOTE 11B	FOR DIMENSIONS SEE DASH 17 VALUES BELOW													
213	R	SHIPPING CONTAINER, MAIN DSKY		1006229	NA	NAS-9-497	B	II	NOTE 11C	FOR DIMENSIONS SEE DASH 18 VALUES BELOW													
212	R	SHIPPING CONTAINER, NAV DSKY		1006231	NA	NAS-9-497	B	II	NOTE 11C	FOR DIMENSIONS SEE DASH 18 VALUES BELOW													
211	R	SHIPPING CONTAINER, AGC		1006230	NA	NAS-9-497	B	II	NOTE 11C	FOR DIMENSIONS SEE DASH 18 VALUES BELOW													
210	R	SHIPPING CONTAINER, UNIVERSAL DSKY		1006422	NA	NAS-9-497	B	II	NOTE 11C	FOR DIMENSIONS SEE DASH 18 VALUES BELOW													
209	R	SHIPPING CONTAINER, AGC		1006421	NA	NAS-9-497	B	II	NOTE 11C	FOR DIMENSIONS SEE DASH 18 VALUES BELOW													
208	R	UNIVERSAL DSKY HANDLING FIXTURE		2014013-011	NA	NAS-9-497	B	I	NOTE 11B	FOR DIMENSIONS SEE DASH 15 VALUES BELOW													
207	R	NAV DSKY HANDLING FIXTURE		1014377	NA	NAS-9-497	B	I	NOTE 11B	FOR DIMENSIONS SEE DASH 17 VALUES BELOW													
206	R	MAIN DSKY HANDLING FIXTURE		1014334	NA	NAS-9-497	B	I	NOTE 11B	FOR DIMENSIONS SEE DASH 17 VALUES BELOW													
205	R	AGC HANDLING FIXTURE		2014282-011	NA	NAS-9-497	B	I	NOTE 11B	FOR DIMENSIONS SEE DASH 17 VALUES BELOW													
204	R	OPERATION CONSOLE		2014024-011	NA	NAS-9-497	B	II	NOTE 11C	FOR DIMENSIONS SEE DASH 18 VALUES BELOW													
203	R	COMPUTER TEST SET		2014042-011	NA	NAS-9-497	B	II	NOTE 11C	FOR DIMENSIONS SEE DASH 18 VALUES BELOW													
202	R	DRAWER ASSY, COMPUTER SIMULATOR		2014048-011	NA	FMP-12775	B	II	NOTE 11C	FOR DIMENSIONS SEE DASH 18 VALUES BELOW													
201	R	AUXILIARY CALIBRATION CONSOLE		2014059-011	NA	NAS-9-497	B	II	NOTE 11C	FOR DIMENSIONS SEE DASH 18 VALUES BELOW													
200	R	AGC CALIBRATION CONSOLE		2014049-011	NA	NAS-9-497	B	II	NOTE 11C	FOR DIMENSIONS SEE DASH 18 VALUES BELOW													
21	R																						
20	R	NA		NA	NA	NA	A	II	NOTE 11C	2.000	1.312	1.687	1.375	.078	.031	.078	.093	[illegible]	.093	1.187	.750	.593	.453
19	R	NA		NA	NA	NA	A	I	NOTE 11B	2.000	1.312	1.687	1.375	.078	.031	.078	.093	NA	NA	1.187	.750	.593	.453
18	R	NA		NA	NA	NA	B	II	NOTE 11C	4.187	1.375	3.469	2.750	.156	.093	.156	.125	[illegible]	.125	1.625	1.032	.844	.656
17	R	NA		NA	NA	NA	B	I	NOTE 11B	4.187	1.875	3.469	2.750	.156	.093	.156	.125	NA	NA	1.625	1.032	.844	.656
16	R	NA		NA	NA	NA	B	II	NOTE 11C	2.000	1.312	1.687	1.375	.078	.031	.078	.093	[illegible]	.093	1.187	.750	.593	.453
15	R	NA		NA	NA	NA	B	I	NOTE 11B	2.000	1.312	1.687	1.375	.078	.031	.078	.093	NA	NA	1.187	.750	.593	.453

NOTES FOR TABLE

STYLE A IS FOR G & N SYSTEM
STYLE B IS FOR GROUND SUPPORT EQUIPMENT
TYPE I IS WITHOUT MOUNTING HOLES
TYPE II IS WITH MOUNTING HOLES

1004260	B	SHT 3

REVISIONS					
SYM	ZONE	DESCRIPTION	CHG NO	DATE	APPD
CL		REPLACES REV CY WITHOUT CHANGE PER TDRR 34365		9/28/67	JWL
CM		REVISION STATUS CHANGED		18 OCT 67	RAH
CN		REVISION STATUS CHANGED		3 OCT 67	JPK
CP		REVISION STATUS CHANGED		6 NOV 67	EMD
CR		REVISION STATUS CHANGED		7 DEC 67	
CS		REVISION STATUS CHANGED		3 JAN 68	JW
CT		REVISED PER TDRR 35526		7 FEB 68	
CU		REVISION STATUS CHANGED		22 FEB 68	JRK
CV		REVISION STATUS CHANGED		68	
CW		REVISION STATUS CHANGED		68	
CY		REVISED PER TDRR 36028		6 APR 68	
CZ		REVISION STATUS CHANGED		29 MAY 68	
DA		REVISION STATUS CHANGED		17 JUL 68	
DB		REVISION STATUS CHANGED		SEP 68	

VALUES BELOW																																
VALUES BELOW																																
VALUES BELOW																																
VALUES BELOW																																
VALUES BELOW																																
VALUES BELOW																																
VALUES BELOW																																
VALUES BELOW																																
15 VALUES BELOW																																
17 VALUES BELOW																																
17 VALUES BELOW																																
18 VALUES BELOW																																
17 VALUES BELOW																																
18 VALUES BELOW																																
15 VALUES BELOW																																
17 VALUES BELOW																																
18 VALUES BELOW																																
17 VALUES BELOW																																
15 VALUES BELOW																																
15 VALUES BELOW																																
17 VALUES BELOW																																
17 VALUES BELOW																																
17 VALUES BELOW																																
18 VALUES BELOW																																
17 VALUES BELOW																																
15 VALUES BELOW																																
15 VALUES BELOW																																
15 VALUES BELOW																																
15 VALUES BELOW																																
VALUES BELOW																																
18 VALUES BELOW																																
17 VALUES BELOW																																
17 VALUES BELOW																																
17 VALUES BELOW																																
18 VALUES BELOW																																
18 VALUES BELOW																																
18 VALUES BELOW																																
18 VALUES BELOW																																
17 VALUES BELOW																																
18 VALUES BELOW																																
18 VALUES BELOW																																
18 VALUES BELOW																																
VALUES BELOW																																
15 VALUES BELOW																																
17 VALUES BELOW																																
15 VALUES BELOW																																
15 VALUES BELOW																																
15 VALUES BELOW																																
15 VALUES BELOW																																
15 VALUES BELOW																																
19 VALUES BELOW																																
18 VALUES BELOW																																
17 VALUES BELOW																																
17 VALUES BELOW																																
18 VALUES BELOW																																
18 VALUES BELOW																																
15 VALUES BELOW																																
18 VALUES BELOW																																
18 VALUES BELOW																																
VALUES BELOW																																
17 VALUES BELOW																																
15 VALUES BELOW																																
15 VALUES BELOW																																
17 VALUES BELOW																																
17 VALUES BELOW																																
17 VALUES BELOW																																
15 VALUES BELOW																																
15 VALUES BELOW																																
15 VALUES BELOW																																
15 VALUES BELOW																																
15 VALUES BELOW																																
17 VALUES BELOW																																
17 VALUES BELOW																																
15 VALUES BELOW																																
15 VALUES BELOW																																
15 VALUES BELOW																																
17 VALUES BELOW																																
17 VALUES BELOW																																
18 VALUES BELOW																																
18 VALUES BELOW																																
18 VALUES BELOW																																
18 VALUES BELOW																																
15 VALUES BELOW																																
17 VALUES BELOW																																
17 VALUES BELOW																																
17 VALUES BELOW																																
VALUES BELOW																																
18 VALUES BELOW																																
18 VALUES BELOW																																
18 VALUES BELOW																																
18 VALUES BELOW																																
	.031	.078	.093	[illegible]	.093	1.187	.750	.593	.453	1.015	.062	.187	.078	.875	.718	1.375	.218	1.156	1.843	.048	NA	.875	.305	.078	.312	1.687	.078	NA	.078	.312	.187	1.843
	.031	.078	.093	NA	NA	1.187	.750	.593	.453	1.015	.062	.187	.078	.875	.718	1.375	.218	NA	NA	.048	.031	.875	.305	.078	.312	1.687	.078	NA	.078	.312	.187	NA
	.093	.156	.125	[illegible]	.125	1.625	1.032	.844	.656	1.406	.093	.344	.156	1.781	1.531	2.844	.312	1.562	3.875	.062	NA	1.219	.500	.156	.719	3.469	.156	NA	.156	.719	.344	3.875
	.093	.156	.125	NA	NA	1.625	1.032	.844	.656	1.406	.093	.344	.156	1.781	1.531	2.844	.312	NA	NA	.062	.062	1.219	.500	.156	.719	3.469	.156	NA	.156	.719	.344	NA
	.031	.078	.093	[illegible]	.093	1.187	.750	.593	.453	1.015	.062	.187	.078	.875	.718	1.375	.218	1.156	1.843	.048	NA	.875	.305	.078	.312	1.687	.078	NA	.078	.312	.187	1.843
	.031	.078	.093	NA	NA	1.187	.750	.593	.453	1.015	.062	.187	.078	.875	.718	1.375	.218	NA	NA	.048	.031	.875	.305	.078	.312	1.687	.078	NA	.078	.312	.187	NA
	F	G	H	J	K	L	M	N	P	R	S	T	U	V	W	Y	Z	AA	AB	AC	AD	AE	AF	AG	AH	AJ	AK	AL	AM	AN	AP	AR

RAYTHEON DASH NUMBERS

AS APPLICABLE	
NEXT ASSY	USED ON
APPLICATION	

UNLESS OTHERWISE SPECIFIED
DIMENSIONS ARE IN INCHES
TOLERANCES ON
2 PLACE DECIMALS ± 3 PLACE DECIMALS ± .005 ANGLES ±
DO NOT SCALE THIS DRAWING
MATERIAL SEE NOTE 11
APPROVAL

INSTRUMENTATION LAB
DRAWN R. A. JONES DATE 15 JUL 65
CHECKED W. KUPFER 22 JUL 65
APPROVAL
CONTRACT
T. MICHAELS 22 JUL 65
NASA APPROVAL
W. KUPFER 22 JUL 65
MIT APPROVAL

MANNED SPACECRAFT CENTER
HOUSTON, TEXAS

NAMEPLATES, APOLLO G&N - GSE (STANDARDS)

SIZE J2 CODE IDENT NO. 80230 **1004260**
SCALE NONE SHEET 3 OF 6

DB
1004260

1004260 SHT 3

2/1004260

AC DASH NUMBERS CONTINUED ON SHEET 6

DASH NO.	P/C	PART NAME	REMARKS	PART NUMBER	SER. NO.	CONT. NO.	STYLE	TYPE	MATERIAL	A	B	C	D	E	F	G	H	J	K	L	M	N	P
199	AC	EYEPIECE STOWAGE UNIT		2021255-011			A	I		FOR DIMENSIONS SEE DASH 100 VALUES BELOW													
198	AC	SIGNAL CONDITIONER ASSY C/M		2007234		NAS-9-497	A	I	NOTE 11B	FOR DIMENSIONS SEE DASH 100 VALUES BELOW													
197	AC	SIGNAL CONDITIONER ASSY C/M		2007235		NAS-9-497	A	I	NOTE 11B	FOR DIMENSIONS SEE DASH 100 VALUES BELOW													
196	AC	SIGNAL CONDITIONER ASSY LEM		6007010		NAS-9-497	A	I	NOTE 11B	FOR DIMENSIONS SEE DASH 100 VALUES BELOW													
195	AC	FSA & SIGNAL CONDITIONER ASSY		6007009		NAS-9-497	A	I	NOTE 11B	FOR DIMENSIONS SEE DASH 100 VALUES BELOW													
194	AC	PANEL, MONITOR		2900031-031		NAS-9-497	B	II	NOTE 11C	FOR DIMENSIONS SEE DASH 141 VALUES BELOW													
193	AC	DISTRIBUTION BOX, GSE		2900024-031		NAS-9-497	B	II	NOTE 11C	FOR DIMENSIONS SEE DASH 141 VALUES BELOW													
192	AC	ANALYZER, OPTICS-INERTIAL		2900023-031		NAS-9-497	B	II	NOTE 11C	FOR DIMENSIONS SEE DASH 144 VALUES BELOW													
191	AC	TEST CONTROL		2900027-031		NAS-9-497	B	II	NOTE 11C	FOR DIMENSIONS SEE DASH 141 VALUES BELOW													
190	AC	PANEL, PWR SUP AND LOAD		2900033-021		NAS-9-497	B	II	NOTE 11C	FOR DIMENSIONS SEE DASH 141 VALUES BELOW													
189	AC	ADPT MODULE, P.S.A.		6900088-011		NAS-9-497	B	II	NOTE 11C	FOR DIMENSIONS SEE DASH 141 VALUES BELOW													
188	AC	ADPT MODULE, P.S.A.		2901143-011		NAS-9-497	B	II	NOTE 11C	FOR DIMENSIONS SEE DASH 141 VALUES BELOW													
187	AC	FIXTURE, MTG, PTA/PEA		2900066-021		NAS-9-497	B	II	NOTE 11C	FOR DIMENSIONS SEE DASH 141 VALUES BELOW													
186	AC	ANNUNCIATOR PANEL & EYEPIECE STORAGE ASSEMBLY		1021255-021			A	I		FOR DIMENSIONS SEE DASH 100 VALUES BELOW													
185	AC	ANNUNCIATOR PANEL & EYEPIECE STORAGE ASSEMBLY		1021255-011			A	I		FOR DIMENSIONS SEE DASH 100 VALUES BELOW													
184	AC	FIX., HAND., G AND N HARNESS		1901846-041		NAS-9-497	B	II	NOTE 11C	FOR DIMENSIONS SEE DASH 144 VALUES BELOW													
183	AC	INSTALLING TOOL, ELEC, CONN		1902586-011		NAS-9-497	B	II	NOTE 11C	FOR DIMENSIONS SEE DASH 102 VALUES BELOW													
182	AC	ADPT MODULE, P.S.A.		6900088-011		NAS-9-497	B	II	NOTE 11C	FOR DIMENSIONS SEE DASH 141 VALUES BELOW													
181	AC	G & N INDICATOR CONTROL PANEL ASSY		2014578-011		NAS-9-497	A	I	NOTE 11B	3.000	1.938	2.437	NA	.125	.062	.188	.156	NA	NA	1.750	1.125	.906	[illegible]
180	AC	ADPT MODULE, P.S.A.		1902431-031		NAS-9-497	B	II		FOR DIMENSIONS SEE DASH 121 VALUES BELOW													
179	AC	MOUNTING PLATE, IMU/PTA		6900083-011		NAS-9-497	B	II		FOR DIMENSIONS SEE DASH 144 VALUES BELOW													
178	AC	MOUNTING PLATE, COMPONENT		6900007-021		NAS-9-497	B	II		FOR DIMENSIONS SEE DASH 144 VALUES BELOW													
177	AC	FIX., MOUNTING, SUBSYSTEM		2900070-021		NAS-9-497	B	II		FOR DIMENSIONS SEE DASH 144 VALUES BELOW													
176	AC	FIX., MOUNTING, G & N		2900067-021		NAS-9-497	B	II		FOR DIMENSIONS SEE DASH 144 VALUES BELOW													
175	AC	CSL, COOL. AND PWR, G & N		1902134-031		NAS-9-497	B	II		FOR DIMENSIONS SEE DASH 144 VALUES BELOW													
174	AC	FIX., HAND., C/M AND LEM CDU		2900999-011		NAS-9-497	B	II	NOTE 11C	FOR DIMENSIONS SEE DASH 141 VALUES BELOW													
173	AC	FIX., HANDLING, C/M PSA		2900998-011		NAS-9-497	B	II	NOTE 11C	FOR DIMENSIONS SEE DASH 141 VALUES BELOW													
172	AC	CAGING ELECTRONICS, GYRO		2900029-021		NAS-9-497	B	II	NOTE 11C	FOR DIMENSIONS SEE DASH 141 VALUES BELOW													
171	AC	DISTRIBUTION BOX, GSE		2900024-021		NAS-9-497	B	II	NOTE 11C	FOR DIMENSIONS SEE DASH 141 VALUES BELOW													
170	AC	ANALYZER, OPTICS-INERTIAL		2900023-021		NAS-9-497	B	II	NOTE 11C	FOR DIMENSIONS SEE DASH 144 VALUES BELOW													
169	AC	ADPT, TESTPOINT, P.S.A.		2900037-021		NAS-9-497	B	II	NOTE 11C	FOR DIMENSIONS SEE DASH 141 VALUES BELOW													
168	AC	TEST SELECTOR		2900028-021		NAS-9-497	B	II	NOTE 11C	FOR DIMENSIONS SEE DASH 141 VALUES BELOW													
167	AC	TEST CONTROL		2900027-021		NAS-9-497	B	II	NOTE 11C	FOR DIMENSIONS SEE DASH 141 VALUES BELOW													
166	AC	PANEL, MONITOR		2900031-021		NAS-9-497	B	II	NOTE 11C	FOR DIMENSIONS SEE DASH 141 VALUES BELOW													
165	AC	TERM. BOARD STORAGE DRAWER		2900927-011		NAS-9-497	B	II	NOTE 11C	FOR DIMENSIONS SEE DASH 141 VALUES BELOW													
164	AC	INPUT/OUTPUT PANEL		2900926-011		NAS-9-497	B	II	NOTE 11C	FOR DIMENSIONS SEE DASH 141 VALUES BELOW													
163	AC	CONTROL PANEL		2900896-011		NAS-9-497	B	II	NOTE 11C	FOR DIMENSIONS SEE DASH 141 VALUES BELOW													
162	AC	CSL, CAL AND TEST, SCM/PSAAM		2900895-011		NAS-9-497	B	II	NOTE 11C	FOR DIMENSIONS SEE DASH 144 VALUES BELOW													
161	AC	FIX., LIFT AND HAND., IMU		1015462-011		NAS-9-497	B	II	NOTE 11C	FOR DIMENSIONS SEE DASH 141 VALUES BELOW													
160	AC	FIX., HAND., G & N HARNESS		1901846-031		NAS-9-497	B	II	NOTE 11C	FOR DIMENSIONS SEE DASH 144 VALUES BELOW													
159	AC	BATTERY POWER PACK		1900011-031		NAS-9-497	B	II	NOTE 11C	FOR DIMENSIONS SEE DASH 144 VALUES BELOW													
158	AC	COUPLING DATA UNIT ASSEMBLY C/M		2007222		NAS-9-497	A	I	NOTE 11B	FOR DIMENSIONS SEE DASH 100 VALUES BELOW													
157	AC	COUPLING DATA UNIT ASSEMBLY - LEM		2007222		NAS-9-497	A	I	NOTE 11B	FOR DIMENSIONS SEE DASH 100 VALUES BELOW													
156	AC	POWER & SERVO ASSEMBLY C/M		2007203		NAS-9-497	A	I	NOTE 11B	2.125	.968	1.718	NA	.093	.031	.06	.093	NA	NA	.858	.608	.484	.358
155	AC	PIPA ELECTRONICS ASSEMBLY		2007201		NAS-9-497	A	I	NOTE 11B	FOR DIMENSIONS SEE DASH 100 VALUES BELOW													
154	AC	PULSE TORQUE ASSEMBLY-LEM		6007000		NAS-9-497	A	I	NOTE 11B	FOR DIMENSIONS SEE DASH 10C VALUES BELOW													
153	AC	POWER & SERVO ASSEMBLY-LEM		6007200		NAS-9-497	A	I	NOTE 11B	FOR DIMENSIONS SEE DASH 100 VALUES BELOW													
152	AC	CONT PNL, RSVR CKT TESTER		2900770-011		NAS-9-497	B	II	NOTE 11C	FOR DIMENSIONS SEE DASH 141 VALUES BELOW													
151	AC	TESTER, RESOLVER CIRCUIT		2900708-011		NAS-9-497	B	II	NOTE 11C	FOR DIMENSIONS SEE DASH 141 VALUES BELOW													
150	AC	JUNCTION BOX, P.S.A./G.S.E.		1901933-021		NAS-9-497	B	II	NOTE 11C	FOR DIMENSIONS SEE DASH 144 VALUES BELOW													
149	AC	BATTERY PACK, LIFTING		2900812-011		NAS-9-497	B	II	NOTE 11C	FOR DIMENSIONS SEE DASH 141 VALUES BELOW													
148	AC	MOUNTING PLATE, COMPONENT		6900007-011		NAS-9-497	B	II	NOTE 11C	FOR DIMENSIONS SEE DASH 144 VALUES BELOW													
147	AC	MOUNTING PLATE, COMPONENT		2900677-011		NAS-9-497	B	II	NOTE 11C	FOR DIMENSIONS SEE DASH 144 VALUES BELOW													
146	AC	CART, TRANS, G & N		1900009-041		NAS-9-497	B	II	NOTE 11C	FOR DIMENSIONS SEE DASH 144 VALUES BELOW													
145	AC	CONTAINER, SHIPPING, IMU		1900010-021		NAS-9-497	B	II	NOTE 11C	FOR DIMENSIONS SEE DASH 144 VALUES BELOW													
144	AC	FIX., MOUNTING, G & N		1902204-021			B	II	NOTE 11C	4.125	1.812	3.250	NA	.125	.062	.12	.156		.125	1.625	1.140	.890	.640
143	AC	CSL, COOL. AND PWR, G & N		1902134-021			B	II	NOTE 11C	4.125	1.812	3.250	NA	.125	.062	.12	.156		.125	1.625	1.140	.890	.640
142	AC	ANALYZER, OPTICS-INERTIAL		2900023-011			B	II	NOTE 11C	4.125	1.812	3.250	NA	.125	.062	.12	.156		.125	1.625	1.140	.890	.640
141	AC	CONT, TEMP, PORTABLE		2900060-011			B	II	NOTE 11C	2.125	.968	1.718	NA	.093	.031	.06	.093		.093	.858	.608	.484	.358
140	AC	TESTER, CKT, IMU/CDU RSVR		2900286-011			B	II	NOTE 11C	4.125	1.812	3.250	NA	.125	.062	.12	.156		.125	1.625	1.140	.890	.640
139	AC	SIMULATOR, LD/SIG, CDU		2900285-011			B	II	NOTE 11C	4.125	1.812	3.250	NA	.125	.062	.12	.156		.125	1.625	1.140	.890	.640
138	AC	SIMULATOR, LD/SIG, OPTICS		1902023-021			B	II	NOTE 11C	4.125	1.812	3.250	NA	.125	.062	.12	.156		.125	1.625	1.140	.890	.640
137	AC	FIX., MOUNTING, IMU/NAV BASE		6900003-011			B	II	NOTE 11C	4.125	1.812	3.250	NA	.125	.062	.12	.156		.125	1.625	1.140	.890	.640
136	AC	FIXTURE, OPTICS/NAV BASE		2900072-011			B	II	NOTE 11C	4.125	1.812	3.250	NA	.125	.062	.12	.156		.125	1.625	1.140	.890	.640
135	AC	FIX., MOUNTING, SUB SYSTEM		2900070-011			B	II	NOTE 11C	4.125	1.812	3.250	NA	.125	.062	.12	.156		.125	1.625	1.140	.890	.640
134	AC	FIX., HAND., G & N HARNESS		2900069-011			B	II	NOTE 11C	4.125	1.812	3.250	NA	.125	.062	.12	.156		.125	1.625	1.140	.890	.640
133	AC	CNTR, SHIPPING, NAV BASE		2900068-011			B	II	NOTE 11C	4.125	1.812	3.250	NA	.125	.062	.12	.156		.125	1.625	1.140	.890	.640
132	AC	FIX., MOUNTING, G & N		2900067-011			B	II	NOTE 11C	4.125	1.812	3.250	NA	.125	.062	.12	.156		.125	1.625	1.140	.890	.640
131	AC	SIMULATOR, LD/SIG, IMU/CDU		2900062-011			B	II	NOTE 11C	4.125	1.812	3.250	NA	.125	.062	.12	.156		.125	1.625	1.140	.890	.640
130	AC	TESTER, GYRO WHEEL		2900061-011			B	II	NOTE 11C	4.125	1.812	3.250	NA	.125	.062	.12	.156		.125	1.625	1.140	.890	.640
129	AC	COOLANT SUPPLY		1902133-021			B	II	NOTE 11C	4.125	1.812	3.250	NA	.125	.062	.12	.156		.125	1.625	1.140	.890	.640
128	AC	TABLE, ROTARY		1900926-021			B	II	NOTE 11C	4.125	1.812	3.250	NA	.125	.062	.12	.156		.125	1.625	1.140	.890	.640
127	AC	FIX., HAND., OPTICS		2900074-011			B	II	NOTE 11C	2.125	.968	1.718	NA	.093	.031	.06	.093		.093	.858	.608	.484	.358
126	AC	FIXTURE, MTG, PTA/PEA.		2900066-011			B	II	NOTE 11C	2.125	.968	1.718	NA	.093	.031	.06	.093		.093	.858	.608	.484	.358
125	AC	CONT, TEMP, IMU LIFTING		2900063-011			B	II	NOTE 11C	2.125	.968	1.718	NA	.093	.031	.06	.093		.093	.858	.608	.484	.358
124	AC	FIXTURE, HANDLING, IMU		2900064-011			B	II	NOTE 11C	2.125	.968	1.718	NA	.093	.031	.06	.093		.093	.858	.608	.484	.358
123	AC	CONT, OPTICS, REMOTE		1902046-021			B	II	NOTE 11C	2.125	.968	1.718	NA	.093	.031	.06	.093		.093	.858	.608	.484	.358
122	AC	TEST CONTROL		1902009-021			B	II	NOTE 11C	2.125	.968	1.718	NA	.093	.031	.06	.093		.093	.858	.608	.484	.358
121	AC	ADPT MODULE, P.S.A.		1902431-021			B	II	NOTE 11C	2.125	.968	1.718	NA	.093	.031	.06	.093		.093	.858	.608	.484	.358
120	AC	BRIDGE, DECADE ERROR		2900128-011			B	II	NOTE 11C	2.125	.968	1.718	NA	.093	.031	.06	.093		.093	.858	.608	.484	.358
119	AC	PWR SUP, ELECTRONICS		2900012-011			B	II	NOTE 11C	2.125	.968	1.718	NA	.093	.031	.06	.093		.093	.858	.608	.484	.358
118	AC	PWR SUP, RELAY AND LAMP		1900049-031			B	II	NOTE 11C	2.125	.968	1.718	NA	.093	.031	.06	.093		.093	.858	.608	.484	.358
117	AC	CONSOLE, OSCILLOGRAPH		1900000-021			B	II	NOTE 11C	2.125	.968	1.718	NA	.093	.031	.06	.093		.093	.858	.608	.484	.358
116	AC	ADPT MODULE, P.S.A.		1902431-011			B	II	NOTE 11C	2.125	.968	1.718	NA	.093	.031	.06	.093		.093	.858	.608	.484	.358
115	AC	ADPT, TEST POINT, PTA/PEA.		2900145-011			B	II	NOTE 11C	2.125	.968	1.718	NA	.093	.031	.06	.093		.093	.858	.608	.484	.358
114	AC	ADPT, TEST POINT, P.S.A.		2900037-011			B	II	NOTE 11C	2.125	.968	1.718	NA	.093	.031	.06	.093		.093	.858	.608	.484	.358
113	AC	CONTROL, GIMBAL POSITION		2900036-011			B	II	NOTE 11C	2.125	.968	1.718	NA	.093	.031	.06	.093		.093	.858	.608	.484	.358
112	AC	SELECTOR, SIGNAL, PRIMARY		2900035-011			B	II	NOTE 11C	2.125	.968	1.718	NA	.093	.031	.06	.093		.093	.858	.608	.484	.358
111	AC	SEL, SIG, OSCILLOGRAPH		2900034-011			B	II	NOTE 11C	2.125	.968	1.718	NA	.093	.031	.06	.093		.093	.858	.608	.484	.358
110	AC	PANEL, PWR SUP AND LOAD		2900033-011			B	II	NOTE 11C	2.125	.968	1.718	NA	.093	.031	.06	.093		.093	.858	.608	.484	.358
109	AC	PANEL, MONITOR		2900031-011			B	II	NOTE 11C	2.125	.968	1.718	NA	.093	.031	.06	.093		.093	.858	.608	.484	.358
108	AC	PANEL, AUXILIARY INPUT		2900030-011			B	II	NOTE 11C	2.125	.968	1.718	NA	.093	.031	.06	.093		.093	.858	.608	.484	.358
107	AC	CAGING ELECTRONICS, GYRO		2900029-011			B	II	NOTE 11C	2.125	.968	1.718	NA	.093	.031	.06	.093		.093	.858	.608	.484	.358
106	AC	TEST SELECTOR		2900028-011			B	II	NOTE 11C	2.125	.968	1.718	NA	.093	.031	.06	.093		.093	.858	.608	.484	.358
105	AC	TEST CONTROL		2900027-011			B	II	NOTE 11C	2.125	.968	1.718	NA	.093	.031	.06	.093		.093	.858	.608	.484	.358
104	AC	MONITOR AND CONTROL, TEMP		2900026-011			B	II	NOTE 11C	2.125	.968	1.718	NA	.093	.031	.06	.093		.093	.858	.608	.484	.358
103	AC	DISTRIBUTION BOX, GSE		2900024-011			B	II	NOTE 11C	2.125	.968	1.718	NA	.093	.031	.06	.093		.093	.858	.608	.484	.358
102	AC	VOLTMETER, DIGITAL		2900007-011			B	II	NOTE 11C	2.125	.968	1.718	NA	.093	.031	.06	.093		.093	.858	.608	.484	.358
101	AC	NAVIGATION BASE ASSEMBLY-LEM		6809950		NAS-9-497	A	I	NOTE 11B	2.000	1.312	1.906	1.375	.078	.048	.078	.093	NA	NA	1.125	.750	.593	.48
100	AC	NAVIGATION BASE ASSEMBLY		2899982		NAS-9-497	A	I	NOTE 11B	2.000	1.312	1.906	1.375	.078	.048	.078	.093	NA	NA	1.125	.750	.593	[illegible]

NOTES FOR TABLE

STYLE A IS FOR G & N SYSTEM
STYLE B IS FOR GROUND SUPPORT EQUIPMENT
TYPE I IS WITHOUT MOUNTING HOLES
TYPE II IS WITH MOUNTING HOLES

1004260	B	SHT 4

E	F	G	H	J	K	L	M	N	P	R	S	T	U	V	W	Y	Z	AA	AB	AC	AD	AE	AF	AG	AH	AJ	AK	AL	AM	AN	AP	AR
100 VALUES BELOW																																
100 VALUES BELOW																																
100 VALUES BELOW																																
144 VALUES BELOW																																
144 VALUES BELOW																																
141 VALUES BELOW																																
141 VALUES BELOW																																
144 VALUES BELOW																																
141 VALUES BELOW																																
141 VALUES BELOW																																
141 VALUES BELOW																																
141 VALUES BELOW																																
141 VALUES BELOW																																
100 VALUES BELOW																																
100 VALUES BELOW																																
144 VALUES BELOW																																
144 VALUES BELOW																																
141 VALUES BELOW																																
[illegible]	.06	.188	.156	NA	NA	1.750	1.125	.906	.688	1.500	NA	.281	.125	NA	1.094	2.062	.312	NA	2.500	.062	.125	1.312	.469	NA	NA	NA	.156	NA	.125	.469	.344	NA
141 VALUES BELOW																																
144 VALUES BELOW																																
144 VALUES BELOW																																
144 VALUES BELOW																																
144 VALUES BELOW																																
144 VALUES BELOW																																
141 VALUES BELOW																																
141 VALUES BELOW																																
144 VALUES BELOW																																
141 VALUES BELOW																																
144 VALUES BELOW																																
141 VALUES BELOW																																
141 VALUES BELOW																																
141 VALUES BELOW																																
141 VALUES BELOW																																
141 VALUES BELOW																																
141 VALUES BELOW																																
141 VALUES BELOW																																
144 VALUES BELOW																																
141 VALUES BELOW																																
144 VALUES BELOW																																
144 VALUES BELOW																																
100 VALUES BELOW																																
100 VALUES BELOW																																
[illegible]	.03	.06	.093	NA	NA	.858	.608	.484	.358	.733	.062	.140	.062	NA	.968	1.450	.125	NA	1.720	.046	.03	NA	.210	NA	NA	NA	.070	NA	.046	.32	.16	NA
100 VALUES BELOW																																
100 VALUES BELOW																																
100 VALUES BELOW																																
141 VALUES BELOW																																
141 VALUES BELOW																																
144 VALUES BELOW																																
141 VALUES BELOW																																
144 VALUES BELOW																																
144 VALUES BELOW																																
144 VALUES BELOW																																
144 VALUES BELOW																																
[illegible]	.06	.12	.156		.125	1.625	1.140	.890	.640	1.390	.125	.171	.125	1.875	1.687	2.625	.250	1.562	3.843	.093	NA	NA	.359	.125	.437	3.688	NA	3.687	.093	.40	.25	3.875
[illegible]	.06	.12	.156		.125	1.625	1.140	.890	.640	1.390	.125	.171	.125	1.875	1.687	2.625	.250	1.562	3.843	.093	NA	NA	.359	.125	.437	3.688	NA	3.687	.093	.40	.25	3.875
[illegible]	.06	.12	.156		.125	1.625	1.140	.890	.640	1.390	.125	.171	.125	1.875	1.687	2.625	.250	1.562	3.843	.093	NA	NA	.359	.125	.437	3.688	NA	3.687	.093	.40	.25	3.875
[illegible]	.03	.06	.093		.093	.858	.608	.484	.358	.733	.077	.116	.062	.937	.875	1.343	.125	.781	1.892	.046	NA	NA	.209	.093	.250	1.875	NA	1.840	.046	.23	.16	1.938
[illegible]	.06	.12	.156		.125	1.625	1.140	.890	.640	1.390	.125	.171	.125	1.875	1.687	2.625	.250	1.562	3.843	.093	NA	NA	.359	.125	.437	3.688	NA	3.687	.093	.40	.25	3.875
[illegible]	.06	.12	.156		.125	1.625	1.140	.890	.640	1.390	.125	.171	.125	1.875	1.687	2.625	.250	1.562	3.843	.093	NA	NA	.359	.125	.437	3.688	NA	3.687	.093	.40	.25	3.875
[illegible]	.06	.12	.156		.125	1.625	1.140	.890	.640	1.390	.125	.171	.125	1.875	1.687	2.625	.250	1.562	3.843	.093	NA	NA	.359	.125	.437	3.688	NA	3.687	.093	.40	.25	3.875
[illegible]	.06	.12	.156		.125	1.625	1.140	.890	.640	1.390	.125	.171	.125	1.875	1.687	2.625	.250	1.562	3.843	.093	NA	NA	.359	.125	.437	3.688	NA	3.687	.093	.40	.25	3.875
[illegible]	.06	.12	.156		.125	1.625	1.140	.890	.640	1.390	.125	.171	.125	1.875	1.687	2.625	.250	1.562	3.843	.093	NA	NA	.359	.125	.437	3.688	NA	3.687	.093	.40	.25	3.875
[illegible]	.06	.12	.156		.125	1.625	1.140	.890	.640	1.390	.125	.171	.125	1.875	1.687	2.625	.250	1.562	3.843	.093	NA	NA	.359	.125	.437	3.688	NA	3.687	.093	.40	.25	3.875
[illegible]	.06	.12	.156		.125	1.625	1.140	.890	.640	1.390	.125	.171	.125	1.875	1.687	2.625	.250	1.562	3.843	.093	NA	NA	.359	.125	.437	3.688	NA	3.687	.093	.40	.25	3.875
[illegible]	.06	.12	.156		.125	1.625	1.140	.890	.640	1.390	.125	.171	.125	1.875	1.687	2.625	.250	1.562	3.843	.093	NA	NA	.359	.125	.437	3.688	NA	3.687	.093	.40	.25	3.875
[illegible]	.06	.12	.156		.125	1.625	1.140	.890	.640	1.390	.125	.171	.125	1.875	1.687	2.625	.250	1.562	3.843	.093	NA	NA	.359	.125	.437	3.688	NA	3.687	.093	.40	.25	3.875
[illegible]	.06	.12	.156		.125	1.625	1.140	.890	.640	1.390	.125	.171	.125	1.875	1.687	2.625	.250	1.562	3.843	.093	NA	NA	.359	.125	.437	3.688	NA	3.687	.093	.40	.25	3.875
[illegible]	.06	.12	.156		.125	1.625	1.140	.890	.640	1.390	.125	.171	.125	1.875	1.687	2.625	.250	1.562	3.843	.093	NA	NA	.359	.125	.437	3.688	NA	3.687	.093	.40	.25	3.875
[illegible]	.06	.12	.156		.125	1.625	1.140	.890	.640	1.390	.125	.171	.125	1.875	1.687	2.625	.250	1.562	3.843	.093	NA	NA	.359	.125	.437	3.688	NA	3.687	.093	.40	.25	3.875
[illegible]	.06	.12	.156		.125	1.625	1.140	.890	.640	1.390	.125	.171	.125	1.875	1.687	2.625	.250	1.562	3.843	.093	NA	NA	.359	.125	.437	3.688	NA	3.687	.093	.40	.25	3.875
[illegible]	.03	.06	.093		.093	.858	.608	.484	.358	.733	.077	.116	.062	.937	.875	1.343	.125	.781	1.892	.046	NA	NA	.209	.093	.250	1.875	NA	1.840	.046	.23	.16	1.938
[illegible]	.03	.06	.093		.093	.858	.608	.484	.358	.733	.077	.116	.062	.937	.875	1.343	.125	.781	1.892	.046	NA	NA	.209	.093	.250	1.875	NA	1.840	.046	.23	.16	1.938
[illegible]	.03	.06	.093		.093	.858	.608	.484	.358	.733	.077	.116	.062	.937	.875	1.343	.125	.781	1.892	.046	NA	NA	.209	.093	.250	1.875	NA	1.840	.046	.23	.16	1.938
[illegible]	.03	.06	.093		.093	.858	.608	.484	.358	.733	.077	.116	.062	.937	.875	1.343	.125	.781	1.892	.046	NA	NA	.209	.093	.250	1.875	NA	1.840	.046	.23	.16	1.938
[illegible]	.03	.06	.093		.093	.858	.608	.484	.358	.733	.077	.116	.062	.937	.875	1.343	.125	.781	1.892	.046	NA	NA	.209	.093	.250	1.875	NA	1.840	.046	.23	.16	1.938
[illegible]	.03	.06	.093		.093	.858	.608	.484	.358	.733	.077	.116	.062	.937	.875	1.343	.125	.781	1.892	.046	NA	NA	.209	.093	.250	1.875	NA	1.840	.046	.23	.16	1.938
[illegible]	.03	.06	.093		.093	.858	.608	.484	.358	.733	.077	.116	.062	.937	.875	1.343	.125	.781	1.892	.046	NA	NA	.209	.093	.250	1.875	NA	1.840	.046	.23	.16	1.938
[illegible]	.03	.06	.093		.093	.858	.608	.484	.358	.733	.077	.116	.062	.937	.875	1.343	.125	.781	1.892	.046	NA	NA	.209	.093	.250	1.875	NA	1.840	.046	.23	.16	1.938
[illegible]	.03	.06	.093		.093	.858	.608	.484	.358	.733	.077	.116	.062	.937	.875	1.343	.125	.781	1.892	.046	NA	NA	.209	.093	.250	1.875	NA	1.840	.046	.23	.16	1.938
[illegible]	.03	.06	.093		.093	.858	.608	.484	.358	.733	.077	.116	.062	.937	.875	1.343	.125	.781	1.892	.046	NA	NA	.209	.093	.250	1.875	NA	1.840	.046	.23	.16	1.938
[illegible]	.03	.06	.093		.093	.858	.608	.484	.358	.733	.077	.116	.062	.937	.875	1.343	.125	.781	1.892	.046	NA	NA	.209	.093	.250	1.875	NA	1.840	.046	.23	.16	1.938
[illegible]	.03	.06	.093		.093	.858	.608	.484	.358	.733	.077	.116	.062	.937	.875	1.343	.125	.781	1.892	.046	NA	NA	.209	.093	.250	1.875	NA	1.840	.046	.23	.16	1.938
[illegible]	.03	.06	.093		.093	.858	.608	.484	.358	.733	.077	.116	.062	.937	.875	1.343	.125	.781	1.892	.046	NA	NA	.209	.093	.250	1.875	NA	1.840	.046	.23	.16	1.938
[illegible]	.03	.06	.093		.093	.858	.608	.484	.358	.733	.077	.116	.062	.937	.875	1.343	.125	.781	1.892	.046	NA	NA	.209	.093	.250	1.875	NA	1.840	.046	.23	.16	1.938
[illegible]	.03	.06	.093		.093	.858	.608	.484	.358	.733	.077	.116	.062	.937	.875	1.343	.125	.781	1.892	.046	NA	NA	.209	.093	.250	1.875	NA	1.840	.046	.23	.16	1.938
[illegible]	.03	.06	.093		.093	.858	.608	.484	.358	.733	.077	.116	.062	.937	.875	1.343	.125	.781	1.892	.046	NA	NA	.209	.093	.250	1.875	NA	1.840	.046	.23	.16	1.938
[illegible]	.03	.06	.093		.093	.858	.608	.484	.358	.733	.077	.116	.062	.937	.875	1.343	.125	.781	1.892	.046	NA	NA	.209	.093	.250	1.875	NA	1.840	.046	.23	.16	1.938
[illegible]	.03	.06	.093		.093	.858	.608	.484	.358	.733	.077	.116	.062	.937	.875	1.343	.125	.781	1.892	.046	NA	NA	.209	.093	.250	1.875	NA	1.840	.046	.23	.16	1.938
[illegible]	.03	.06	.093		.093	.858	.608	.484	.358	.733	.077	.116	.062	.937	.875	1.343	.125	.781	1.892	.046	NA	NA	.209	.093	.250	1.875	NA	1.840	.046	.23	.16	1.938
[illegible]	.03	.06	.093		.093	.858	.608	.484	.358	.733	.077	.116	.062	.937	.875	1.343	.125	.781	1.892	.046	NA	NA	.209	.093	.250	1.875	NA	1.840	.046	.23	.16	1.938
[illegible]	.03	.06	.093		.093	.858	.608	.484	.358	.733	.077	.116	.062	.937	.875	1.343	.125	.781	1.892	.046	NA	NA	.209	.093	.250	1.875	NA	1.840	.046	.23	.16	1.938
[illegible]	.03	.06	.093		.093	.858	.608	.484	.358	.733	.077	.116	.062	.937	.875	1.343	.125	.781	1.892	.046	NA	NA	.209	.093	.250	1.875	NA	1.840	.046	.23	.16	1.938
[illegible]	.03	.06	.093		.093	.858	.608	.484	.358	.733	.077	.116	.062	.937	.875	1.343	.125	.781	1.892	.046	NA	NA	.209	.093	.250	1.875	NA	1.840	.046	.23	.16	1.938
[illegible]	.03	.06	.093		.093	.858	.608	.484	.358	.733	.077	.116	.062	.937	.875	1.343	.125	.781	1.892	.046	NA	NA	.209	.093	.250	1.875	NA	1.840	.046	.23	.16	1.938
[illegible]	.03	.06	.093		.093	.858	.608	.484	.358	.733	.077	.116	.062	.937	.875	1.343	.125	.781	1.892	.046	NA	NA	.209	.093	.250	1.875	NA	1.840	.046	.23	.16	1.938
[illegible]	.03	.06	.093		.093	.858	.608	.484	.358	.733	.077	.116	.062	.937	.875	1.343	.125	.781	1.892	.046	NA	NA	.209	.093	.250	1.875	NA	1.840	.046	.23	.16	1.938
[illegible]	.03	.06	.093		.093	.858	.608	.484	.358	.733	.077	.116	.062	.937	.875	1.343	.125	.781	1.892	.046	NA	NA	.209	.093	.250	1.875	NA	1.840	.046	.23	.16	1.938
[illegible]	.03	.06	.093		.093	.858	.608	.484	.358	.733	.077	.116	.062	.937	.875	1.343	.125	.781	1.892	.046	NA	NA	.209	.093	.250	1.875	NA	1.840	.046	.23	.16	1.938
[illegible]	[illegible]	.078	.093	NA	NA	1.125	.750	.593	.453	1.015	.062	.187	.078	.875	.718	1.375	.218	NA	NA	.048	.031	.875	.305	.078	.531	1.906	.078	NA	.078	.531	.187	NA
[illegible]	[illegible]	.078	.093	NA	NA	1.125	.750	.593	.453	1.015	.062	.187	.078	.875	.718	1.375	.218	NA	NA	.048	.031	.875	.305	.078	.531	1.906	.078	NA	.078	.531	.187	NA

REVISIONS

SYM	ZONE	DESCRIPTION	CHG NO	DATE	APPD
CL		REPLACES REV CK WITHOUT CHANGE PER TDRR 34365		18 SEP 67	RWH
CM		REVISION STATUS CHANGED		18 OCT 67	RAW
CN		REVISION STATUS CHANGE		3 OCT 67	JRK
CP		REVISION STATUS CHANGE		6 NOV 67	
CR		REVISION STATUS CHANGED		[illegible]	RWH
CS		REVISION STATUS CHANGED		[illegible] 68	RWH
CT		REVISION STATUS CHANGED		[illegible] 68	
CU		REVISION STATUS CHANGED		22 FEB 68	JRK
CV		REVISION STATUS CHANGED		[illegible] 68	
CW		REVISION STATUS CHANGED		[illegible]	
CY		REVISION STATUS CHANGED		[illegible] 68	RAN
CZ		REVISION STATUS CHANGED		26 JUN 68	
DA		REVISION STATUS CHANGED		[illegible] 68	
DB		REVISION STATUS CHANGED		3 SEP 68	

AC ELECTRONICS DASH NUMBERS

AS APPLICABLE	
NEXT ASSY	USED ON
APPLICATION	

UNLESS OTHERWISE SPECIFIED
DIMENSIONS ARE IN INCHES
TOLERANCES ON
2 PLACE DECIMALS ± | 3 PLACE DECIMALS ± .005 | ANGLES ± —
DO NOT SCALE THIS DRAWING
MATERIAL SEE NOTE 11
APPROVAL

MIT INSTRUMENTATION LAB
CAMBRIDGE MASS
DRAWN R. A. JONES DATE 15 JUL 65
CHECKED
W. RUPFER 22 JUL 65 APPROVAL
CONTRACT
T. MICHAELS 22 JUL 65 NASA APPROVAL
W. RUPFER 22 JUL 65 MIT APPROVAL

MANNED SPACECRAFT CENTER
HOUSTON TEXAS

NAMEPLATES. APOLLO G&N - GSE (STANDARDS)

SIZE J2 | CODE IDENT NO. 80230 | 1004260
SCALE NONE | SHEET 4 OF 6

1004260 | DB | SHT 4

1004260

2/1004260

[illegible]

[illegible]	[illegible]	[illegible] BODY		2003100		NAS-9-497	A	I	NOTE 11B	2,000	1,312	1,906	1,375	,078	,048	,078	,093	NA	NA	1,125	,750	,593
[illegible]	[illegible]	[illegible] FITTING [illegible] TEST, QUAL, FIX, & AZM, REF, FIX,		1021640		NAS-9-4065	B	II	NOTE 11C	2,000	1,312	1,687	1,375	,078	,048	,078	,093	[illegible]	,093	1,187	,750	,593
DASH NO.	[illegible]	PART NAME	REMARKS	PART NUMBER	SER. NO.	CONT. NO.	STYLE	TYPE	MATERIAL	A	B	C	D	E	F	G	H	J	K	L	M	N

NOTES FOR TABLE

STYLE A IS FOR G & N SYSTEM
STYLE B IS FOR GROUND SUPPORT EQUIPMENT
TYPE I IS WITHOUT MOUNTING HOLES
TYPE II IS WITH MOUNTING HOLES

1004260	D3	SHT 5

REVISIONS

SYM	ZONE	DESCRIPTION	CHG NO	DATE	APPD
CL		REPLACES REV CK WITHOUT CHANGE PER TURR 34365		20, 67	JWL
CM		REVISION STATUS CHANGED		18 OCT 67	R A
CN		REVISION STATUS CHANGED		31 OCT 67	JR
CP		REVISION STATUS CHANGED		6 NOV 67	
CR		REVISION STATUS CHANGED		7 DEC 67	
CS		REVISION STATUS CHANGED		JAN 68	
CT		REVISION STATUS CHANGED		68	
CU		REVISION STATUS CHANGED		22 FEB 68	JRK
CV		REVISION STATUS CHANGED		68	
CW		REVISION STATUS CHANGED		68	
CY		REVISION STATUS CHANGED		6 APR 68	
CZ		REVISION STATUS CHANGED		23 MAY 68	
DA		REVISION STATUS CHANGED		68	
DB		REVISION STATUS CHANGED		SEP 68	

E	F	G	H	J	K	L	M	N	P	R	S	T	U	V	W	Y
[illegible]	(4)	.078	.093	NA	NA	1.125	.750	.593	.453	1.015	.062	.187	.078	.875	.718	1.375
[illegible]	(4)	.078	.093	[illegible]	.093	1.187	.750	.593	.453	1.015	.062	.187	.078	.875	.718	1.375

Z	AA	AB	AC	AD	AE	AF	AG	AH	AJ	AK	AL	AM	AN	AP	AR
.218	NA	NA	.048	.031	.875	.305	.078	.531	1.906	.078	NA	.078	.531	.187	NA
.218	1.156	1.843	.048	NA	.875	.305	.078	.312	1.687	.110	1.830	.070	.275	.180	1.844

MIT DASH NUMBERS

AS APPLICABLE NEXT ASSY / USED ON APPLICATION	UNLESS OTHERWISE SPECIFIED DIMENSIONS ARE IN INCHES TOLERANCES ON 2 PLACE DECIMALS ± 3 PLACE DECIMALS ± .005 ANGLES ± DO NOT SCALE THIS DRAWING MATERIAL SEE NOTE 11 APPROVAL	MIT INSTRUMENTATION LAB CAMBRIDGE MASS DRAWN R.A. JONES DATE 16 JUL 65 CHECKED APPROVAL W. HUPFER 22 JUL 65 CONTRACT NASA APPROVAL T. MICHAELS 22 JUL 65 MIT APPROVAL W. HUPFER 22 JUL 65	MANNED SPACECRAFT CENTER HOUSTON, TEXAS NAMEPLATES, APOLLO GN - GSE (STANDARDS) SIZE J2 CODE IDENT NO. 80230 1004260 SCALE NONE SHEET 5 OF 6	

[illegible] 260 DB SHT 5

1004260 DB

1004260

1004260 SHEET 5 OF 6

2/1004260

[illegible]

DASH NO.	P/C	PART NAME	REMARKS	PART NUMBER	SER. NO.	CONT. NO.	STYLE	TYPE	MATERIAL	A	B	C	D	E	F	G	H	J	K	L	M	N
599	AC																					
598	AC																					
585		ANALYZER, OPTICS INERTIAL		2900023-051		FOR OTHER DATA SEE DASH 536																
583		SWITCH CROSS BAR ASSY		1900048-021		FOR OTHER DATA SEE DASH 102																
582	AC	G & N INDICATOR CONTROL PANEL ASSY		2021290-041		FOR OTHER DATA SEE DASH 81																
581	AC	G & N INDICATOR CONTROL PANEL ASSY		2021323-021		FOR OTHER DATA SEE DASH 81																
580		AUXILIARY BATTERY PACK		1901492-041		FOR OTHER DATA SEE DASH 565																
579	AC	COMPUTER CONT & RETICLE DIMMER		6014512-081		FOR OTHER DATA SEE DASH 534																
578	AC	G&N INDICATOR CONTROL PANEL ASSY		2021290-031		FOR OTHER DATA SEE DASH 181																
577		BREAKOUT BOX, CABLE ADAPTER		2901011-021		FOR OTHER DATA SEE DASH 506																
576		FIX., MOUNTING G&N		2900067-061		FOR OTHER DATA SEE DASH 500																
575		CSL, CAL AND TEST, SCM/PSAAM		2900895-041		FOR DATA SEE DASH 559																
574		CONT., TEMP. PORTABLE		2900060-031		NAS-9-497	B	II	NOTE 11C	FOR DIMENSIONS SEE DASH 535 VALUES												
573		BATTERY PACK LIFTING		2900812-031		NAS-9-497	B	II	NOTE 11C	FOR DIMENSIONS SEE DASH 542 VALUES												
572		FIX., MOUNTING G&N	(-144)	2900067-051		NAS-9-497	B	II	NOTE 11C	FOR DIMENSIONS SEE DASH 500 VALUES												
571		EYEPIECE STORAGE UNIT		2021382		FOR OTHER DATA SEE DASH 100																
570	AC	OPTICAL UNIT & BELLOWS ASSY				NAS-9-497	A	I	NOTE 11B	FOR DIMENSIONS SEE DASH 550 VALUES												
569	AC	G & N INDICATOR CONTROL PANEL ASSY		2021323-011		NAS-9-497	A	I	NOTE 11B	FOR DIMENSIONS SEE DASH 181												
568	AC	G & N INDICATOR CONTROL PANEL ASSY		2021290-021		NAS-9-497	A	I	NOTE 11B	FOR DIMENSIONS SEE DASH 181												
567	AC	G & N INDICATOR CONTROL PANEL ASSY		2021290-011		NAS-9-497	A	I	NOTE 11B	FOR DIMENSIONS SEE DASH 181												
566	AC	COMPUTER CONT & RETICLE DIMMER		6014512-061		NAS-9-497	A	I	NOTE 11B	FOR DIMENSIONS SEE DASH 534												
565		AUXILIARY BATTERY PACK		1901492-031		NAS-9-497	B	II	NOTE 11C	FOR DIMENSIONS SEE DASH 500												
564		BATTERY POWER PACK		1900011-051		NAS-9-497	B	II	NOTE 11C	FOR DIMENSIONS SEE DASH 500												
563		PSA ADAPTER MODULE (LEM)		6900088-031		NAS-9-497	B	II	NOTE 11C	FOR DIMENSIONS SEE DASH 141 VALUES												
562	AC	COMPUTER CONT & RETICLE DIMMER		6014512-041		NAS-9-497	A	I	NOTE 11B	FOR DIMENSIONS SEE DASH 534 VALUES												
561	AC	G & N INDICATOR CONTROL PANEL ASSY		2014578-031		NAS-9-497	A	I	NOTE 11B	FOR DIMENSIONS SEE DASH 181 VALUES												
560		ADPT. MODULE, PSA		2901143-021		NAS-9-497	B	II	NOTE 11C	FOR DIMENSIONS SEE DASH 141 VALUES												
559		CSL, CAL AND TEST, SCM/PSAAM		2900895-031		FOR OTHER DATA SEE DASH 547																
558		PSA ADAPTER MODULE (LEM)		6900088-021		FOR OTHER DATA SEE DASH 189																
557		FIX., HANDLING, C/M PSA		2900998-021		NAS-9-497	B	II	NOTE 11C	FOR DIMENSIONS SEE DASH 141 VALUES												
556		FIX., MOUNTING G & N	(-144)	2900067-041		NAS-9-497	B	II	NOTE 11C	FOR DIMENSIONS SEE DASH 500 VALUES												
555	AC	OPTICAL UNIT ASSEMBLY		1021368-061		NAS-9-497	A	I	NOTE 11B	2.000	1.312	1.687	1.375	.078	.048	.078	.093	NA	NA	1.125	.750	.593
554	AC	OPTICAL UNIT ASSEMBLY		1021368-041		NAS-9-497	A	I	NOTE 11B	2.000	1.312	1.687	1.375	.078	.048	.078	.093	NA	NA	1.125	.750	.593
553	AC	OPTICAL UNIT AND BELLOWS ASSEMBLY		2010790-111		NAS-9-497	A	I	NOTE 11B	2.000	1.312	1.687	1.375	.078	.048	.078	.093	NA	NA	1.125	.750	.593
552	AC	OPTICAL UNIT AND BELLOWS ASSEMBLY		2010790-081		NAS-9-497	A	I	NOTE 11B	2.000	1.312	1.687	1.375	.078	.048	.078	.093	NA	NA	1.125	.750	.593
551	AC	OPTICAL UNIT AND BELLOWS ASSEMBLY		2010790-071		NAS-9-497	A	I	NOTE 11B	2.000	1.312	1.687	1.375	.078	.048	.078	.093	NA	NA	1.125	.750	.593
550	AC	OPTICAL UNIT AND BELLOWS ASSEMBLY		2010790-061		NAS-9-497	A	I	NOTE 11B	2.000	1.312	1.687	1.375	.078	.048	.078	.093	NA	NA	1.125	.750	.593
548		CAGING ELECTRONICS, GYRO		2900029-031		NAS-9-497	B	II	NOTE 11C	2.125	.968	1.718	NA	.093	.031	.06	.093		.093	.858	.608	.484
547		CSL, CAL AND TEST, SCM/PSAAM		2900895-021		NAS-9-497	B	II	NOTE 11C	4.125	1.812	3.250	NA	.125	.062	.12	.156		.125	1.625	1.140	.890
546		FIX., HAND., C/M AND LEM CDU		2900999-021		NAS-9-497	B	II	NOTE 11C	2.125	.968	1.718	NA	.093	.031	.06	.093		.093	.858	.608	.484
545	AC	G & N INDICATOR CONTROL PANEL ASSY		2014578-021		NAS-9-497	A	I	NOTE 11B	3.000	1.938	2.437	NA	.125	.062	.188	.156	NA	NA	1.750	1.125	.906
544		ADPT MODULE, P.S.A.		1902431-051		NAS-9-497	B	II	NOTE 11C	2.125	.968	1.718	NA	.093	.031	.06	.093		.093	.858	.608	.484
543	AC	PANEL, MONITOR		2900031-041		NAS-9-497	B	II	NOTE 11C	2.125	.968	1.718	NA	.093	.031	.06	.093		.093	.858	.608	.484
542	AC	BATTERY PACK, LIFTING		2900812-021		NAS-9-497	B	II	NOTE 11C	2.125	.968	1.718	NA	.093	.031	.06	.093		.093	.858	.608	.484
541	AC	FIXTURE, MOUNTING, IMU		2900000-021		NAS-9-497	B	II	NOTE 11C	4.125	1.812	3.250	NA	.125	.062	.12	.156		.125	1.625	1.140	.890
540	AC	ADPT, TEST POINT, P.S.A.		2900037-031		NAS-9-497	B	II	NOTE 11C	2.125	.968	1.718	NA	.093	.031	.06	.093		.093	.858	.608	.484
539	AC	ANNUNCIATOR PANEL & EYEPIECE STORAGE ASSEMBLY		1021255-041		NAS-9-497	A	I	NOTE 11B	2.000	1.312	1.906	1.375	.078	.048	.078	.093	NA	NA	1.125	.750	.593
538	AC	ANNUNCIATOR PANEL & EYEPIECE STORAGE ASSEMBLY		1021255-031		NAS-9-497	A	I	NOTE 11B	2.000	1.312	1.906	1.375	.078	.048	.078	.093	NA	NA	1.125	.750	.593
537	AC	TEST SELECTOR		2900028-031		NAS-9-497	B	II	NOTE 11C	2.125	.968	1.718	NA	.093	.031	.06	.093		.093	.858	.608	.484
536	AC	ANALYZER, OPTICS-INERTIAL		2900023-041		NAS-9-497	B	II	NOTE 11C	4.125	1.812	3.250	NA	.125	.062	.12	.156		.125	1.625	1.14	.890
535	AC	CONT, TEMP, PORTABLE		2900060-021		NAS-9-497	B	II	NOTE 11C	2.125	.968	1.718	NA	.093	.031	.06	.093		.093	.858	.6	.484
534	AC	COMPUTER CONT & RETICLE DIMMER		6014512-021		NAS-9-497	A	I	NOTE 11B	2.000	1.312	1.906	1.375	.078	.048	.078	.093	NA	NA	1.125	.75	.59
533	AC	ADPT MODULE, P.S.A.		1902431-041		NAS-9-497	B	II	NOTE 11C	2.125	.968	1.718	NA	.093	.031	.06	.093		.093	.858	.60	.4 4
532	AC	TRAY BREAKOUT, 105 PIN		1900807-021		NAS-9-497	B	II	NOTE 11C	4.125	1.812	3.250	NA	.125	.062	.12	.156		.125	1.625	1.14	.890
531	AC	TRAY BREAKOUT, 84 PIN		1900806-021		NAS-9-497	B	II	NOTE 11C	4.125	1.812	3.250	NA	.125	.062	.12	.156		.125	1.625	1.14	.890
530	AC	HEAT SINK-TRAY EXTENDER		1900808-021		NAS-9-497	B	II	NOTE 11C	2.125	.968	1.718	NA	.093	.031	.06	.093		.093	.858	.60	.484
529	AC	TESTER, FAILURE INDICATOR		1900809-021		NAS-9-497	B	II	NOTE 11C	2.125	.968	1.718	NA	.093	.031	.06	.093		.093	.858	.60	.484
527	AC	FIX., MOUNTING, G & N	(-144)	1902204-021		NAS-9-497	B	II	NOTE 11C	FOR DIMENSIONS SEE DASH 500 VALUES BELOW												
526	AC	FIX., MOUNTING, G & N	(-144)	2900067-031		NAS-9-497	B	II	NOTE 11C	FOR DIMENSIONS SEE DASH 500 VALUES BELOW												
525	AC	PORTABLE TEMP. CONTROLLER		1900496-021		NAS-9-497	B	II	NOTE 11C	3.000	1.937	2.437	2.312	.125	.031	.125	.156	.125	.125	1.718	1.18	.968
524	AC	POWER, SERVO & THERMOCOUPLE ASSEMBLY C/M		2010743		NAS-9-497	A	I	NOTE 11B	2.125	.968	1.718	NA	.093	.031	.06	.093	NA	NA	.858	.60	.484
523	AC	PULSE TORQUE AND THERMOCOUPLE ASSEMBLY-LEM		6010656		NAS-9-497	A	I	NOTE 11B	FOR DIMENSIONS SEE DASH 508 VALUES BELOW												
522	AC	COUPLING DATA UNIT & THERMOCOUPLE ASSEMBLY-LEM		2010744		NAS-9-497	A	I	NOTE 11B	FOR DIMENSIONS SEE DASH 508 VALUES BELOW												
521	AC	COUPLING DATA UNIT & THERMOCOUPLE ASSEMBLY-C/M		2010744		NAS-9-497	A	I	NOTE 11B	FOR DIMENSIONS SEE DASH 508 VALUES BELOW												
520	AC	PIPA ELECTRONICS AND THERMOCOUPLE ASSEMBLY		2010745		NAS-9-497	A	I	NOTE 11B	FOR DIMENSIONS SEE DASH 508 VALUES BELOW												
519	AC	FIXTURE, HANDLING, LEM-PSA	(-141)	6900129-011		NAS-9-497	B	II	NOTE 11C	FOR DIMENSIONS SEE DASH 504 VALUES BELOW												
518	AC	JUNCTION BOX, GSE-PSA	(-144)	1901933-031		NAS-9-497	B	II	NOTE 11C	FOR DIMENSIONS SEE DASH 500 VALUES BELOW												
517	AC	FIX., HAND., OPTICS INSTL.	(-141)	2901380-011		NAS-9-497	B	II	NOTE 11C	FOR DIMENSIONS SEE DASH 502 VALUES BELOW												
516	AC	POWER, SERVO AND THERMOCOUPLE ASSEMBLY-LEM		6010655		NAS-9-497	A	I	NOTE 11B	FOR DIMENSIONS SEE DASH 508 VALUES BELOW												
514	AC	SIGNAL COND. ASSY LEM OPER.	(-100)	6007013		NAS-9-497	A	I	NOTE 11B	FOR DIMENSIONS SEE DASH 508 VALUES BELOW												
513	AC	JUMPER, BY-PASS	(-141)	1021616		NAS-9-497	B	II	NOTE 11C	2.125	.968	1.718	NA	.093	.031	.06	.093		.093	.858	.60	.484
512	AC	COUPLING DATA UNIT ASSEMBLY C/M	(-100)	2007322-011		NAS-9-497	A	I	NOTE 11B	FOR DIMENSIONS SEE DASH 508 VALUES BELOW												
511	AC	COUPLING DATA UNIT ASSEMBLY-LEM	(-100)	2007322-021		NAS-9-497	A	I	NOTE 11B	FOR DIMENSIONS SEE DASH 508 VALUES BELOW												
510	AC	BATTERY POWER PACK	(-144)	1900011-041		NAS-9-497	B	II	NOTE 11C	FOR DIMENSIONS SEE DASH 500 VALUES BELOW												
509	AC	JUNCTION BOX, P.S.A./G.S.E.	(-144)	1902195-021		NAS-9-497	B	II	NOTE 11C	FOR DIMENSIONS SEE DASH 500 VALUES BELOW												
508	AC	NAVIGATION BASE ASSEMBLY-LEM	(-101)	6899980		NAS-9-497	A	I	NOTE 11B	2.000	1.312	1.906	1.375	.078	.048	.078	.093	NA	NA	1.125	.75	.593
507	AC	CSL, COOL, AND PWR, G AND N	(-144)	1902134-041		NAS-9-497	B	II	NOTE 11C	FOR DIMENSIONS SEE DASH 500 VALUES BELOW												
506	AC	BREAKOUT BOX, CABLE ADAPTER	(-141)	2901011-011		NAS-9-497	B	II	NOTE 11C	2.125	.968	1.718	NA	.093	.031	.06	.093		.093	.858	.60	.484
505	AC	MONITOR AND CONTROL, TEMP	(-141)	2900026-021		NAS-9-497	B	II	NOTE 11C	2.125	.968	1.718	NA	.093	.031	.06	.093		.093	.858	.60	.484
504	AC	PWR SUP, GUIDANCE SYSTEM	(-141)	1900033-021		NAS-9-497	B	II	NOTE 11C	2.125	.968	1.718	NA	.093	.031	.06	.093		.093	.858	.60	.484
503	AC	CONTROL, GIMBAL POSITION	(-141)	2900036-021		NAS-9-497	B	II	NOTE 11C	2.125	.968	1.718	NA	.093	.031	.06	.093		.093	.858	.60	.484
502	AC	ADPT, TEST POINT, PTA/PEA.	(-141)	2900145-021		NAS-9-497	B	II	NOTE 11C	2.125	.968	1.718	NA	.093	.031	.06	.093		.093	.858	.60	.484
501	AC	MOUNTING PLATE, COMPONENT	(-144)	6900007-031		NAS-9-497	B	II	NOTE 11C	FOR DIMENSIONS SEE DASH 500 VALUES BELOW												
500	AC	MOUNTING PLATE, COMPONENT	(-144)	2900677-021		NAS-9-497	B	II	NOTE 11C	4.125	1.812	3.250	NA	.125	.062	.12	.156		.125	1.625	1.140	.890

NOTES FOR TABLE

STYLE A IS FOR G & N SYSTEM
STYLE B IS FOR GROUND SUPPORT EQUIPMENT
TYPE I IS WITHOUT MOUNTING HOLES
TYPE II IS WITH MOUNTING HOLES

1004260	D3	SHT 6

1/1004260

REVISIONS					
SYM	ZONE	DESCRIPTION	CHG NO	DATE	APPD
CL		REPLACES REV C4 WITH CHANGE PER TDRR 34365		6-28-67	JUL
CM		REVISED PER TDRR 34395		17 OCT. 67	RAR.
CN		REVISED PER TDRR 34467		31 OCT 67	JRK
CP		REVISED PER TDRR 34855		6 NOV 67	
CR		REVISED PER TDRR 35164		7 DEC 67	
CS		REVISED PER TDRR 35307		JAN 68	
CT		REVISION STATUS CHANGED		FEB 68	
CU		REVISED PER TDRR 35628		22 FEB 68	JRK
CV		REVISED PER TDRR 35675		27 FEB 68	
CW		REVISED PER TDRR 35970		8 APR 68	
CY		REVISION STATUS CHANGED		APR 68	
CZ		REVISED PER TDRR 36248		23 MAY 68	
DA		REVISED PER TDRR 36324		68	
DB		REVISED PER TDRR 36742		SEP	

	E	F	G	H	J	K	L	M	N	P	R	S	T	U	V	W	Y	Z	AA	AB	AC	AD	AE	AF	AG	AH	AJ	AK	AL	AM	AN	AP	AR
DASH 535 VALUES																																	
DASH 542 VALUES																																	
DASH 510 VALUES																																	
DASH 550 VALUES																																	
DASH 181																																	
DASH 181																																	
DASH 181																																	
DASH 534																																	
DASH 500																																	
DASH 500																																	
DASH 141 VALUES																																	
DASH 534 VALUES																																	
DASH 181 VALUES																																	
DASH 141 VALUES																																	
DASH 141 VALUES																																	
DASH 500 VALUES																																	
	.078	048	.078	.093	NA	NA	1.125	.750	.593	.453	1.015	.062	.187	.078	.875	.718	1.375	.218	NA	NA	.048	.031	.875	.305	NA	.468	1.531	NA	NA	.078	.312	.187	NA
	.078	048	.078	.093	NA	NA	1.125	.750	.593	.453	1.015	.062	.187	.078	.875	.718	1.375	.218	NA	NA	.048	.031	.875	.305	NA	.468	1.531	NA	NA	.078	.312	.187	NA
	.078	048	.078	.093	NA	NA	1.125	.750	.593	.453	1.015	.062	.187	.078	.875	.718	1.375	.218	NA	NA	.048	.031	.875	.305	NA	.468	1.531	NA	NA	.078	.312	.187	NA
	.078	048	.078	.093	NA	NA	1.125	.750	.593	.453	1.015	.062	.187	.078	.875	.718	1.375	.218	NA	NA	.048	.031	.875	.305	NA	.468	1.531	NA	NA	.078	.312	.187	NA
	.078	048	.078	.093	NA	NA	1.125	.750	.593	.453	1.015	.062	.187	.078	.875	.718	1.375	.218	NA	NA	.048	.031	.875	.305	NA	.468	1.531	NA	NA	.078	.312	.187	NA
	.078	048	.078	.093	NA	NA	1.125	.750	.593	.453	1.015	.062	.187	.078	.875	.718	1.375	.218	NA	NA	.048	.031	.875	.305	NA	.468	1.531	NA	NA	.078	.312	.187	NA
	.093	031	.06	.093		.093	.858	.608	.484	.358	.733	.077	.116	.062	.937	.875	1.343	.125	.781	1.892	.046	NA	NA	.209	.093	.250	1.875	NA	1.840	.046	.23	.16	1.938
	.125	062	.12	.156		.125	1.625	1.140	.890	.640	1.390	.125	.171	.125	1.875	1.687	2.625	.250	1.562	3.843	.093	NA	NA	.359	.125	.437	3.688	NA	3.687	.093	.40	.25	3.875
	.093	031	.06	.093		.093	.858	.608	.484	.358	.733	.077	.116	.062	.937	.875	1.343	.125	.781	1.892	.046	NA	NA	.209	.093	.250	1.875	NA	1.840	.046	.23	.16	1.938
	.125	062	.188	.156	NA	NA	1.750	1.125	.906	.688	1.500	NA	.281	.125	NA	1.094	2.062	.312	NA	2.500	.062	.125	1.312	.469	NA	NA	NA	.156	NA	.125	.469	.344	NA
	.093	031	.06	.093		.093	.858	.608	.484	.358	.733	.077	.116	.062	.937	.875	1.343	.125	.781	1.892	.046	NA	NA	.209	.093	.250	1.875	NA	1.840	.046	.23	.16	1.938
	.093	031	.06	.093		.093	.858	.608	.484	.358	.733	.077	.116	.062	.937	.875	1.343	.125	.781	1.892	.046	NA	NA	.209	.093	.250	1.875	NA	1.840	.046	.23	.25	1.938
	.093	031	.06	.093		.093	.858	.608	.484	.358	.733	.077	.116	.062	.937	.875	1.343	.125	.781	1.892	.046	NA	NA	.209	.093	.250	1.875	NA	1.840	.046	.23	.16	1.938
	.125	062	.12	.156		.125	1.625	1.140	.890	.640	1.390	.125	.171	.125	1.875	1.687	2.625	.250	1.562	3.843	.093	NA	NA	.359	.125	.437	3.688	NA	3.687	.093	.40	.25	3.875
	.093	031	.06	.093		.093	.858	.608	.484	.358	.733	.077	.116	.062	.937	.875	1.343	.125	.781	1.892	.046	NA	NA	.209	.093	.250	1.875	NA	1.840	.046	.23	.16	1.938
	.078	048	.078	.093	NA	NA	1.125	.750	.593	.453	1.015	.062	.187	.078	.875	.718	1.375	.218	NA	NA	.048	.031	.875	.305	.078	.531	1.906	.078	NA	.078	.531	.187	NA
	.078	048	.078	.093	NA	NA	1.125	.750	.593	.453	1.015	.062	.187	.078	.875	.718	1.375	.218	NA	NA	.048	.031	.875	.305	.078	.531	1.906	.078	NA	.078	.531	.187	NA
	.093	031	.06	.093		.093	.858	.608	.484	.358	.733	.077	.116	.062	.937	.875	1.343	.125	.781	1.892	.046	NA	NA	.209	.093	.250	1.875	NA	1.840	.046	.23	.16	1.938
	.125	062	.12	.156		.125	1.625	1.140	.890	.640	1.390	.125	.171	.125	1.875	1.687	2.625	.250	1.562	3.843	.093	NA	NA	.359	.125	.437	3.688	NA	3.687	.093	.40	.25	3.875
	.093	031	.06	.093		.093	.858	.608	.484	.358	.733	.077	.116	.062	.937	.875	1.343	.125	.781	1.892	.046	NA	NA	.209	.093	.250	1.875	NA	1.840	.046	.23	.16	1.938
	.078	.048	.078	.093	NA	NA	1.125	.750	.593	.453	1.015	.062	.187	.078	.875	.718	1.375	.218	NA	NA	.048	.031	.875	.305	.078	.531	1.906	.078	NA	.078	.531	.187	NA
	.093	.031	.06	.093		.093	.858	.608	.484	.358	.733	.077	.116	.062	.937	.875	1.343	.125	.781	1.892	.046	NA	NA	.209	.093	.250	1.875	NA	1.840	.046	.23	.16	1.938
	.125	.062	.12	.156		.125	1.625	1.140	.890	.640	1.390	.125	.171	.125	1.875	1.687	2.625	.250	1.562	3.843	.093	NA	NA	.359	.125	.437	3.688	NA	3.687	.093	.40	.25	3.875
	.125	.062	.12	.156		.125	1.625	1.140	.890	.640	1.390	.125	.171	.125	1.875	1.687	2.625	.250	1.562	3.843	.093	NA	NA	.359	.125	.437	3.688	NA	3.687	.093	.40	.25	3.875
	.093	.031	.06	.093		.093	.858	.608	.484	.358	.733	.077	.116	.062	.937	.875	1.343	.125	.781	1.892	.046	NA	NA	.209	.093	.250	1.875	NA	1.840	.046	.23	.16	1.938
	.093	.031	.06	.093		.093	.858	.608	.484	.358	.733	.077	.116	.062	.937	.875	1.343	.125	.781	1.892	.046	NA	NA	.209	.093	.250	1.875	NA	1.840	.046	.23	.16	1.938
DASH [illegible] VALUES BELOW																																	
DASH [illegible] VALUES BELOW																																	
	.125	.031	.125	.156	.125	.125	1.718	1.187	.968	.749	1.452	.093	.295	.090	1.312	1.00	2.000	.250	1.687	2.750	.062	NA	NA	.463	.125	.562	2.437	.140	2.562	.090	.468	.359	2.750
	.093	.031	.06	.093	NA	NA	.858	.608	.484	.358	.733	.062	.140	.062	NA	.968	1.450	.125	NA	1.720	.046	.03	NA	.210	NA	NA	NA	.070	NA	.046	.32	.16	NA
DASH [illegible] VALUES BELOW																																	
DASH [illegible] VALUES BELOW																																	
DASH [illegible] VALUES BELOW																																	
DASH [illegible] VALUES BELOW																																	
DASH [illegible] VALUES BELOW																																	
DASH [illegible] VALUES BELOW																																	
DASH [illegible] VALUES BELOW																																	
DASH [illegible] VALUES BELOW																																	
DASH [illegible] VALUES BELOW																																	
	.093	.031	.06	.093		.093	.858	.608	.484	.358	.733	.077	.116	.062	.937	.875	1.343	.125	.781	1.892	.046	NA	NA	.209	.093	.250	1.875	NA	1.840	.046	.23	.16	1.938
DASH [illegible] VALUES BELOW																																	
DASH [illegible] VALUES BELOW																																	
DASH [illegible] VALUES BELOW																																	
DASH [illegible] VALUES BELOW																																	
	.078	.048	.078	.093	NA	NA	1.125	.750	.593	.453	1.015	.062	.187	.078	.875	.718	1.375	.218	NA	NA	.048	.031	.875	.305	.078	.531	1.906	.078	NA	.078	.531	.187	NA
DASH [illegible] VALUES BELOW																																	
	.093	.031	.06	.093		.093	.858	.608	.484	.358	.733	.077	.116	.062	.937	.875	1.343	.125	.781	1.892	.046	NA	NA	.209	.093	.250	1.875	NA	1.840	.046	.23	.16	1.938
	.093	.031	.06	.093		.093	.858	.608	.484	.358	.733	.077	.116	.062	.937	.875	1.343	.125	.781	1.892	.046	NA	NA	.209	.093	.250	1.875	NA	1.840	.046	.23	.16	1.938
	.093	.031	.06	.093		.093	.858	.608	.484	.358	.733	.077	.116	.062	.937	.875	1.343	.125	.781	1.892	.046	NA	NA	.209	.093	.250	1.875	NA	1.840	.046	.23	.16	1.938
	.093	.031	.06	.093		.093	.858	.608	.484	.358	.733	.077	.116	.062	.937	.875	1.343	.125	.781	1.892	.046	NA	NA	.209	.093	.250	1.875	NA	1.840	.046	.23	.16	1.938
	.093	.031	.06	.093		.093	.858	.608	.484	.358	.733	.077	.116	.062	.937	.875	1.343	.125	.781	1.892	.046	NA	NA	.209	.093	.250	1.875	NA	1.840	.046	.23	.16	1.938
DASH [illegible] VALUES BELOW																																	
	.125	.062	.12	.156		.125	1.625	1.140	.890	.640	1.390	.125	.171	.125	1.875	1.687	2.625	.250	1.562	3.843	.093	NA	NA	.359	.125	.437	3.688	NA	3.687	.093	.40	.25	3.875

AC ELECTRONICS DASH NUMBERS

UNLESS OTHERWISE SPECIFIED DIMENSIONS ARE IN INCHES TOLERANCES ON 2 PLACE DECIMALS ± 3 PLACE DECIMALS ± .005 ANGLES ±	MIT INSTRUMENTATION LAB CAMBRIDGE MASS		MANNED SPACECRAFT CENTER HOUSTON, TEXAS	
	DRAWN R. A. JONES	DATE 16 JUL 65	NAMEPLATES, APOLLO GEN - GSE (STANDARDS)	
	CHECKED W KUPFER	22 JUL 65		
DO NOT SCALE THIS DRAWING	CONTRACT			
MATERIAL SEE NOTE 11	T. MICHAELS NASA APPROVAL	22 JUL 65	SIZE J2	CODE IDENT NO. 80230 · 1004260
APPROVAL	W KUPFER MIT APPROVAL	22 JUL 65	SCALE NONE	SHEET 6 OF 6

AS APPLICABLE | NEXT ASSY | USED ON | APPLICATION

1004260 DB SHT 6

1004260 DB

1004260

2/1004260

NOTES:

1. INTERPRET DRAWING IN ACCORDANCE WITH STANDARDS PRESCRIBED BY MIL-D-70327.
2. DIMENSIONS ON EACH VIEW APPLY TO ALL VIEWS (WITH THE EXCEPTION OF MOUNTING HOLES).
3. FORMATS ILLUSTRATED WILL BE APPLICABLE TO ALL ITEMS REQUIRING NAMEPLATES BELOW END ITEM DESIGNATION (SYSTEMS, ASSEMBLIES, ETC.)
4. PLATE BACKGROUND TO BE LUSTERLESS BLACK PER FED-STD-595, COLOR 37038. BORDER, MARKING AND LETTERING TO BE NATURAL METAL, (ANODIZED ALUMINUM).
5. MARKING METHOD TO BE DIE STAMPING, ETCHING OR ENGRAVING IN ACCORDANCE WITH MIL-P-19834.
6. LETTERING STYLE TO BE GOTHIC, (SANS SERIFS), AND NUMBERS TO BE ARABIC.
7. WHERE LOCATING DIMENSIONS ARE NOT SHOWN, CHARACTERS SHALL BE SYMMETRICALLY POSITIONED.
8. IDENTIFY WITH DRAWING NUMBER PER ND 1002019.
9. WHEN "AUTO MARK" METAL MARKING TYPEWRITER IS USED TO ADD DATA TO BLANK SPACES, TYPE SIZE IS TO BE SELECTED FROM DIMENSIONS U, AC, AND AM.
10. NASA SYMBOL IS TO BE PROPORTIONAL TO NAMEPLATE IN RATIO OF 1 TO 5 WITH DIMENSION A VALUE AND IS TO HAVE NATURAL BACKGROUND. NASA SYMBOL LETTERS LETTERING AND FEATHER TO BE BLACK, (OR WHITE FOR SILK SCREENING). WHERE BLACK FEATHER PROTRUDES INTO BLACK BACKGROUND, A MINIMUM OUTLINE OF NATURAL BACKGROUND SHALL EXIST.
11. NAMEPLATES WILL BE APPLIED BY METHODS LISTED BELOW, SHOWN IN ORDER OF PREFERENCE, (I.E., FOR RELIABILITY AND WEIGHT).
    - A - STENCIL OR SILK SCREEN DIRECTLY ON EQUIPMENT USING INK PER SCD 1010920, (WHITE OR BLACK).
    - B - ALUMINUM FOIL, (STYLE A OR B, TYPE I):
      FOIL SHALL BE .0030 ± .0005 THICK PER MIL-A-148.
      FOIL SHALL HAVE NO ADHESIVE BACKING.
      FOIL SHALL BE BONDED PER ND 1002219, (METHOD II).
      FOIL SHALL BE CLEAR ANODIZED PER MIL-A-8625, TYPE II.
    - C - PLATE, (STYLE A OR B, TYPE II):
      MATERIAL: QQ-A-250, TEMPER 0 OR H14, TYPE 1100, ALUMINUM ALLOY, .032 THICK. ANODIZE PER MIL-A-8625, TYPE II.
      ALUMINUM PLATE MUST BE FREE FROM BURRS AND SHARP CORNERS, MOUNTED WITH APPLICABLE SIZE FASTENERS.
12. NAMEPLATES SHALL BE CAPABLE OF MEETING APPLICABLE REQUIREMENTS OF MIL-M-13231.
13. ON DIMENSION TABLES SHOWN ON PAGES 2, 3, 4, 5, AND 6, NA MEANS, "NOT APPLICABLE".

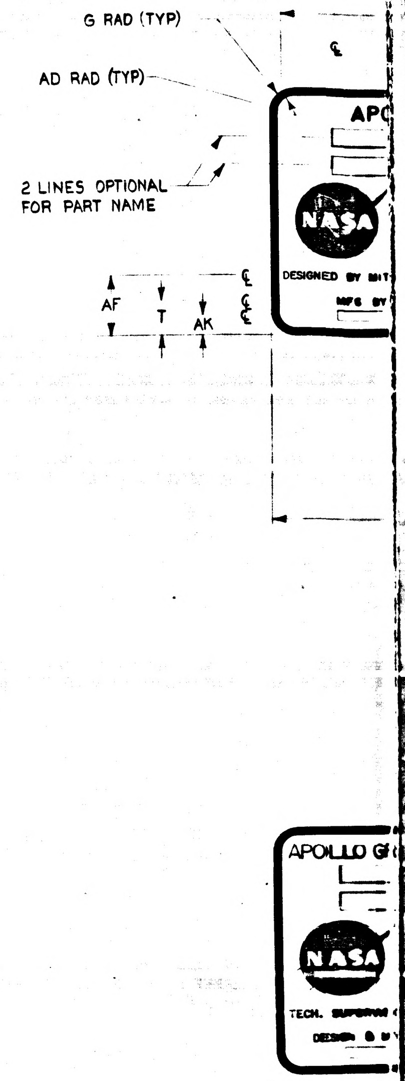

SUGGESTED PROPORTIONS FOR NAMEPLATE DIMENSIONS.
1. SELECT NAMEPLATE LENGTH, DIMENSION "A", TO FIT DESIGN NEEDS.
2. DIMENSIONS B THRU AS ON LINE 1 BELOW ARE PROPORTIONAL TO "A" BY MULTIPLIERS SHOWN IN LINE 2 BELOW.

1. A	B	C	D	E	F	G	H	J	K	L	M	N	P	R	S	T	U	V	W	Y	Z	AA	AB	AC	AD	AE	AF	AG	AH	AJ	AK	AL	AM	AN	AP	AR	AS
2. 1.000A	.6563A	.8438A	.6875A	.0391A	.0240A	.0391A	.0469A	.0547A	.0469A	.5938A	.3750A	.2969A	.2187A	.5079A	.0313A	.0938A	.0391A	.4375A	.3594A	.6875A	.1094A	.5781A	.9219A	.0240A	.0156A	.4375A	.1525A	.0391A	.1563A	.8438A	.0548A	.8659A	.0391A	.1563A	.0938A	.9219A	.0151A

1004260	DC	SHT 1

SYM	ZONE	DESCRIPTION	CHG NO	DATE	APPD
REVISIONS					
CL		REPLACES REV CK WITHOUT CHANGE PER TDRR 34365		9/28/67	JWL RWH
CM		REVISION STATUS CHANGED		18 OCT 67	R.A.W.
CN		REVISION STATUS CHANGED		31 OCT 67	JRK
CP		REVISION STATUS CHANGED		6 NOV 67	EMS
CR		REVISION STATUS CHANGED		7 DEC 67	RWH
CS		REVISION STATUS CHANGED		JAN 68	EHW
CT		REVISION STATUS CHANGED		7 FEB 68	LK RWH
CU		REVISION STATUS CHANGED		22 FEB 68	JRK
CV		REVISION STATUS CHANGED		27 FEB 68	LK
CW		REVISION STATUS CHANGED		3 APR 68	
CY		REVISION STATUS CHANGED		16 APR 68	A.N.
CZ		REVISION STATUS CHANGED		23 MAY 68	
DA		REVISION STATUS CHANGED		17 JUN 68	
DB		REVISION STATUS CHANGED		12 SEP 68	RWH
DC		REVISION STATUS CHANGED		16 DEC 68	LK

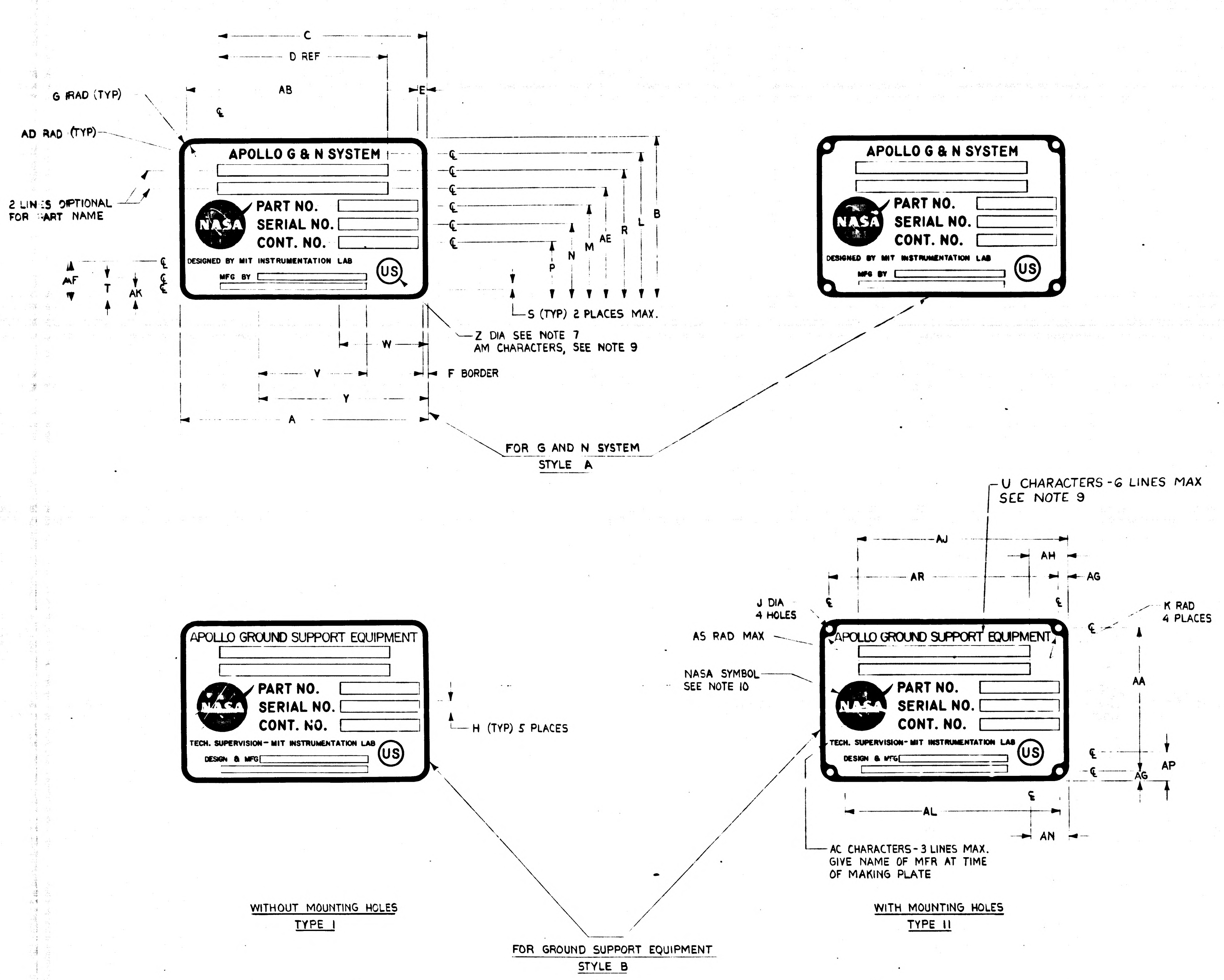
C
D REF
AB
E
G RAD (TYP)
AD RAD (TYP)
2 LINES OPTIONAL FOR PART NAME
APOLLO G & N SYSTEM
PART NO.
SERIAL NO.
CONT. NO.
DESIGNED BY MIT INSTRUMENTATION LAB
MFG BY
US
NASA
B
L
R
AE
M
N
P
AF
T
AK
S (TYP) 2 PLACES MAX.
Z DIA SEE NOTE 7
AM CHARACTERS, SEE NOTE 9
W
V
Y
F BORDER
A
FOR G AND N SYSTEM
STYLE A
U CHARACTERS - 6 LINES MAX
SEE NOTE 9
AJ
AH
AR
AG
J DIA
4 HOLES
AS RAD MAX
K RAD
4 PLACES
NASA SYMBOL
SEE NOTE 10
APOLLO GROUND SUPPORT EQUIPMENT
TECH. SUPERVISION - MIT INSTRUMENTATION LAB
DESIGN & MFG
H (TYP) 5 PLACES
AA
AP
AL
AN
AC CHARACTERS - 3 LINES MAX.
GIVE NAME OF MFR AT TIME
OF MAKING PLATE
WITHOUT MOUNTING HOLES
TYPE I
WITH MOUNTING HOLES
TYPE II
FOR GROUND SUPPORT EQUIPMENT
STYLE B

AS APPLICABLE	
NEXT ASSY	USED ON
APPLICATION	

UNLESS OTHERWISE SPECIFIED
DIMENSIONS ARE IN INCHES
TOLERANCES ON
2 PLACE DECIMALS ± 3 PLACE DECIMALS ±.005 ANGLES ±
DO NOT SCALE THIS DRAWING
MATERIAL SEE NOTE 11
APPROVAL

MIT
INSTRUMENTATION LAB
DRAWN R.A. JONES DATE 16 JUL 65
CHECKED
APPROVAL W. KUPFER 22 JUL 65
CONTRACT
NASA APPROVAL T. MICHAELS 22 JUL 65
MIT APPROVAL W. KUPFER 22 JUL 65

MANNED
SPACECRAFT CENTER
HOUSTON, TEXAS

NAMEPLATES,
APOLLO G&N - GSE
(STANDARDS)

SIZE J2 CODE IDENT NO. 80230 1004260
SCALE NONE SHEET 1 OF 6

NOTICE — WHEN GOVERNMENT DRAWINGS, SPECIFICATIONS, OR OTHER DATA ARE USED FOR ANY PURPOSE OTHER THAN IN CONNECTION WITH A DEFINITELY RELATED GOVERNMENT PROCUREMENT OPERATION, THE UNITED STATES GOVERNMENT THEREBY INCURS NO RESPONSIBILITY NOR ANY OBLIGATION WHATSOEVER; AND THE FACT THAT THE GOVERNMENT MAY HAVE FORMULATED, FURNISHED, OR IN ANY WAY SUPPLIED THE SAID DRAWINGS, SPECIFICATIONS, OR OTHER DATA IS NOT TO BE REGARDED BY IMPLICATION OR OTHERWISE AS IN ANY MANNER LICENSING THE HOLDER OR ANY OTHER PERSON OR CORPORATION, OR CONVEYING ANY RIGHTS OR PERMISSION TO MANUFACTURE, USE, OR SELL ANY PATENTED INVENTION THAT MAY IN ANY WAY BE RELATED THERETO.

DASH NO.	P/C	PART NAME	REMARKS	PART NUMBER	SER. NO.	CONT. NO.	STYLE	TYPE	MATERIAL	A	B	C	D	E	F	G	H	J	K	L	M	
399	K																					
398	K																					
350	K	ALIGNMENT OPTICAL TELESCOPE (LEM)		NA	NA	NA	A	I	NOTE 11B	4.000	2.625	3.375	2.750	.156	.093	.156	.187	NA	NA	2.312	1.468	1.18
309	K																					
308	K																					
307	K						B	I	NOTE 11B	4.000	2.625	3.375	2.750	.156	.093	.156	.187	NA	NA	2.328	1.468	1.1
306	K						B	II	NOTE 11C	4.000	2.625	3.375	2.750	.156	.093	.156	.187	.125	.156	2.328	1.468	1.1
305	K						B	I	NOTE 11B	2.000	1.312	1.687	1.375	.078	.048	.078	.093	NA	NA	1.164	.734	.5
304	K						B	II	NOTE 11C	2.000	1.312	1.687	1.375	.078	.048	.078	.093	.070	.078	1.164	.734	.5
303	K																					
302	K																					
301	K																					
300	K	OPTICAL UNIT		NA	NA	NA	A	I	NOTE 11B	2.000	1.312	1.675	NA	NA	.048	.078	NA	NA	NA	1.090	.812	.6
9	K	2 IN AUTOCOLLIMATOR		1001702			B	II	NOTE 11C	4.000	2.625	3.812	2.750	.156	.093	.156	.187	.125	.156	2.250	1.500	1.1
8	K	5 IN AUTOCOLLIMATOR		1017410			B	II	NOTE 11C	4.000	2.625	3.812	2.750	.156	.093	.156	.187	.125	.156	2.250	1.500	1.1
7	K	2-1/2 IN AUTOCOLLIMATOR (SCT)		1017435			B	II	NOTE 11C	4.000	2.625	3.812	2.750	.156	.093	.156	.187	.125	.156	2.250	1.500	1.1
6	K	2-1/2 IN AUTOCOLLIMATOR (SXT)		1017448			B	II	NOTE 11C	4.000	2.625	3.812	2.750	.156	.093	.156	.187	.125	.156	2.250	1.500	1.
5	K	RETROREFLECTING PRISM ASSEMBLY		1019840			B	I	NOTE 11B	4.000	2.625	3.812	2.750	.156	.093	.156	.187	NA	NA	2.250	1.500	1.
4	K	S/H SIMULATOR ASSEMBLY		1019896			B	I	NOTE 11B	4.000	2.625	3.812	2.750	.156	.093	.156	.187	NA	NA	2.250	1.500	1.
3	K	REFERENCE MIRROR		1001767			B	I	NOTE 11B	2.000	1.312	1.906	1.375	.078	.048	.078	.093	NA	NA	1.125	.750	.
2	K	2 IN PLANE READING AUTOCOLLIMATOR		1017413			B	I	NOTE 11B	2.000	1.312	1.906	1.375	.078	.048	.078	.093	NA	NA	1.125	.750	.
1	K	2 IN AUTOCOLLIMATOR		1001702			B	I	NOTE 11B	2.000	1.312	1.906	1.375	.078	.048	.078	.093	NA	NA	1.125	.750	.

NOTES FOR TABLE

STYLE A IS FOR G & N SYSTEM
STYLE B IS FOR GROUND SUPPORT EQUIPMENT
TYPE I IS WITHOUT MOUNTING HOLES
TYPE II IS WITH MOUNTING HOLES

REVISIONS					
SYM	ZONE	DESCRIPTION	CHG NO	DATE	APPD
CL		REPLACES REV CK WITHOUT CHANGE PER TDRR 34365		9/28/67	JJL RWH
CM		REVISION STATUS CHANGED		18 OCT 67	R.A.W.
CN		REVISION STATUS CHANGED		31 OCT 67	JRK
CP		REVISION STATUS CHANGED		6 NOV 67	EMS
CR		REVISION STATUS CHANGED		7 DEC 67	DKD RWH
CS		REVISION STATUS CHANGED		3 JAN 68	J.W. EHW
CT		REVISION STATUS CHANGED		7 FEB 68	LK RWH
CU		REVISION STATUS CHANGED		22 FEB 68	JRK
CV		REVISION STATUS CHANGED		27 FEB 68	LK
CW		REVISION STATUS CHANGED		3 APR 68	MTY
CY		REVISION STATUS CHANGED		16 APR 68	A.N.
CZ		REVISION STATUS CHANGED		23 MAY 68	MTY
DA		REVISION STATUS CHANGED		17 JUN 68	MTY
DB		REVISION STATUS CHANGED		12 SEP 68	
DC		REVISION STATUS CHANGED		16 DEC 68	LK

50	.156	.093	156	.187	NA	NA	2.312	1.468	1.187	.906	2.031	NA	.375	.156	NA	1.437	2.750	.437	NA	3.688	.062	.062	1.750	.593	NA	.625	3.375	.187	NA	.156	.531	.453	NA
750	.156	.093	.156	.187	NA	NA	2.328	1.468	1.187	.906	2.031	.062	.375	.156	NA	1.437	2.750	.437	NA	3.687	.062	.062	1.750	.593	NA	NA	NA	NA	NA	NA	NA	NA	NA
750	.156	.093	.156	.187	.125	.156	2.328	1.468	1.187	.906	2.031	.062	.375	.156	NA	1.437	2.750	.437	2.312	3.687	.062	NA	1.750	.593	NA	NA	NA	NA	NA	NA	NA	NA	NA
375	.078	.048	.078	.093	NA	NA	1.164	.734	.593	.453	1.015	.048	.171	.078	NA	.718	1.375	.187	NA	NA	.048	.031	.875	.320	NA	NA	NA	NA	NA	NA	NA	NA	NA
375	.078	.048	.078	.093	.070	.078	1.164	.734	.593	.453	1.015	.048	.171	.078	NA	.718	1.375	.187	.156	1.843	.048	NA	.875	.320	NA	NA	NA	NA	NA	NA	NA	NA	NA
A	NA	.048	.078	NA	NA	NA	1.090	.812	.675	.540	.940	NA	.265	NA	NA	NA	1.375	.218	NA	NA	NA	NA	NA	.375	NA	NA	NA	.180	NA	.078	NA	NA	NA
750	.156	.093	.156	.187	.125	.156	2.250	1.500	1.187	.906	2.031	.093	.375	.156	1.750	1.437	2.750	.437	2.312	3.687	.062	NA	1.750	.593	.156	1.062	3.812	.156	NA	.156	1.062	.375	3.687
750	.156	.093	.156	.187	.125	.156	2.250	1.500	1.187	.906	2.031	.093	.375	.156	1.750	1.437	2.750	.437	2.312	3.687	.062	NA	1.750	.593	.156	1.062	3.812	.156	NA	.156	1.062	.375	3.687
750	.156	.093	.156	.187	.125	.156	2.250	1.500	1.187	.906	2.031	.093	.375	.156	1.750	1.437	2.750	.437	2.312	3.687	.062	NA	1.750	.593	.156	1.062	3.812	.156	NA	.156	1.062	.375	3.687
750	.156	.093	.156	.187	.125	.156	2.250	1.500	1.187	.906	2.031	.093	.375	.156	1.750	1.437	2.750	.437	2.312	3.687	.062	NA	1.750	.593	.156	1.062	3.812	.156	NA	.156	1.062	.375	3.687
750	.156	.093	.156	.187	NA	NA	2.250	1.500	1.187	.906	2.031	.093	.375	.156	1.750	1.437	2.750	.437	NA	NA	.062	.062	1.750	.593	.156	1.062	3.812	.156	NA	.156	1.062	.375	NA
750	.156	.093	.156	.187	NA	NA	2.250	1.500	1.187	.906	2.031	.093	.375	.156	1.750	1.437	2.750	.437	NA	NA	.062	.062	1.750	.593	.156	1.062	3.812	.156	NA	.156	1.062	.375	NA
375	.078	.048	.078	.093	NA	NA	1.125	.750	.593	.453	1.015	.062	.187	.078	.875	.718	1.375	.218	NA	NA	.048	.031	.875	.305	.078	.531	1.906	.078	NA	.078	.531	.187	NA
375	.078	.048	.078	.093	NA	NA	1.125	.750	.593	.453	1.015	.062	.187	.078	.875	.718	1.375	.218	NA	NA	.048	.031	.875	.305	.078	.531	1.906	.078	NA	.078	.531	.187	NA
375	.078	.048	.078	.093	NA	NA	1.125	.750	.593	.453	1.015	.062	.187	.078	.875	.718	1.375	.218	NA	NA	.048	.031	.875	.305	.078	.531	1.906	.078	NA	.078	.531	.187	NA
D	E	F	G	H	J	K	L	M	N	P	R	S	T	U	V	W	Y	Z	AA	AB	AC	AD	AE	AF	AG	AH	AJ	AK	AL	AM	AN	AP	AR

KOLLSMAN DASH NUMBERS

AS APPLICABLE NEXT ASSY / USED ON APPLICATION	UNLESS OTHERWISE SPECIFIED DIMENSIONS ARE IN INCHES TOLERANCES ON 2 PLACE DECIMALS ± / 3 PLACE DECIMALS ± .005 / ANGLES ±	M I T INSTRUMENTATION LAB CAMBRIDGE MASS	MANNED SPACECRAFT CENTER HOUSTON, TEXAS	
	DO NOT SCALE THIS DRAWING	DRAWN R. A. JONES DATE 16 JUL 65 CHECKED W. KUPFER 22 JUL 65 APPROVAL CONTRACT	NAMEPLATES, APOLLO GϕN - GSE (STANDARDS)	
	MATERIAL SEE NOTE 11 APPROVAL	T. MICHAELS 22 JUL 65 NASA APPROVAL W. KUPFER 22 JUL 65 MIT APPROVAL	SIZE J2 SCALE NONE	CODE IDENT NO. 80230 1004260 SHEET 2 OF 6

1004260 DC SHT 2

1004260 DC

2T/1004260

DASH NO.	P/C	PART NAME	REMARKS	PART NUMBER	SER. NO.	CONT. NO.	STYLE	TYPE	MATERIAL	A	B	C	D	E	F	G	H	J	K	L	M	N
299	R																					
298	R																					
293	R	COMPUTER TEST SET		2014042-081	NA	NAS-9-497	B	II	NOTE 11C	FOR DIMENSIONS SEE DASH 18 VALUES BELOW												
292	R	DRAWER ASSY - PROGRAM & MONITOR		2014041-071	NA	NAS-9-497	B	I	NOTE 11B	FOR DIMENSIONS SEE DASH 17 VALUES BELOW												
291	R	BUFFER CIRCUIT ASSY		2014254-041	NA	NAS-9-497	B	I	NOTE 11B	FOR DIMENSIONS SEE DASH 15 VALUES BELOW												
290	R	LOGIC DRAWER ASSY NO 2		2014037-051	NA	NAS-9-497	B	I	NOTE 11B	FOR DIMENSIONS SEE DASH 17 VALUES BELOW												
289	R	SELF TEST ASSY		2014392-021	NA	NAS-9-497	B	I	NOTE 11B	FOR DIMENSIONS SEE DASH 15 VALUES BELOW												
288	R	LOGIC DRAWER ASSY NO.1		2014036-051	NA	NAS-9-497	B	I	NOTE 11B	FOR DIMENSIONS SEE DASH 17 VALUES BELOW												
287	R	COMPUTER TEST SET		2014042-071	NA	NAS-9-497	B	II	NOTE 11C	FOR DIMENSIONS SEE DASH 18 VALUES BELOW												
286	R	DRAWER ASSY PROGRAM & MONITOR		2014041-061	NA	NAS-9-497	B	I	NOTE 11B	FOR DIMENSIONS SEE DASH 17 VALUES BELOW												
285	R	BUFFER CIRCUIT ASSY		2014254-031	NA	NAS-9-497	B	I	NOTE 11B	FOR DIMENSIONS SEE DASH 15 VALUES BELOW												
284	R	LOGIC DRAWER ASSY NO. 2		2014037-041	NA	NAS-9-497	B	I	NOTE 11B	FOR DIMENSIONS SEE DASH 17 VALUES BELOW												
283	R	DRAWER ASSY-PROGRAM & MONITOR		2014041-051	NA	NAS-9-497	B	I	NOTE 11B	FOR DIMENSIONS SEE DASH 17 VALUES BELOW												
282	R	COMPUTER TEST SET		2014042-061	NA	NAS-9-497	B	II	NOTE 11C	FOR DIMENSIONS SEE DASH 18 VALUES BELOW												
281	R	AGC HANDLING FIXTURE		2014282-031	NA	NAS-9-497	B	I	NOTE 11B	FOR DIMENSIONS SEE DASH 17 VALUES BELOW												
280	R	COMPUTER TEST SET		2014042-051	NA	NAS-9-497	B	II	NOTE 11C	FOR DIMENSIONS SEE DASH 18 VALUES BELOW												
279	R	SELF TEST ASSY		2014366-041	NA	NAS-9-497	B	I	NOTE 11B	FOR DIMENSIONS SEE DASH 15 VALUES BELOW												
278	R	LOGIC DRAWER ASSY NO. 1		2014036-041	NA	NAS-9-497	B	I	NOTE 11B	FOR DIMENSIONS SEE DASH 17 VALUES BELOW												
277	R	COMPUTER TEST SET		2014042-041	NA	NAS-9-497	B	II	NOTE 11C	FOR DIMENSIONS SEE DASH 18 VALUES BELOW												
276	R	DRAWER ASSY-PROGRAM & MONITOR		2014041-041	NA	NAS-9-497	B	I	NOTE 11B	FOR DIMENSIONS SEE DASH 17 VALUES BELOW												
275	R	DRAWER ASSY RDC INTERFACE		2014045-031	NA	NAS-9-497	B	I	NOTE 11B	FOR DIMENSIONS SEE DASH 15 VALUES BELOW												
274	R	SELF TEST ASSY		2014366-031	NA	NAS-9-497	B	I	NOTE 11B	FOR DIMENSIONS SEE DASH 15 VALUES BELOW												
273	R	LOGIC DRAWER ASSY NO. 2		2014037-031	NA	NAS-9-497	B	I	NOTE 11B	FOR DIMENSIONS SEE DASH 17 VALUES BELOW												
272	R	DRAWING ASSY PROGRAMMER & MONITOR		2014041-031	NA	NAS-9-497	B	I	NOTE 11B	FOR DIMENSIONS SEE DASH 17 VALUES BELOW												
271	R	LOGIC DRAWER ASSY NO. 1		2014036-031	NA	NAS-9-497	B	I	NOTE 11B	FOR DIMENSIONS SEE DASH 17 VALUES BELOW												
270	R	COMPUTER TEST SET		2014042-031	NA	NAS-9-497	B	II	NOTE 11C	FOR DIMENSIONS SEE DASH 18 VALUES BELOW												
269	R	POWER CONTROL ASSY		2014044-021	NA	NAS-9-497	B	I	NOTE 11B	FOR DIMENSIONS SEE DASH 17 VALUES BELOW												
268	R	SELF TEST ASSY		2014366-021	NA	NAS-9-497	B	I	NOTE 11B	FOR DIMENSIONS SEE DASH 15 VALUES BELOW												
267	R	AGC JUNCTION ASSY		2014341-021	NA	NAS-9-497	B	I	NOTE 11B	FOR DIMENSIONS SEE DASH 15 VALUES BELOW												
266	R	POWER CONTROL ASSY		2014079-021	NA	NAS-9-497	B	I	NOTE 11B	FOR DIMENSIONS SEE DASH 15 VALUES BELOW												
265	R	BUFFER CIRCUIT ASSY		2014254-021	NA	NAS-9-497	B	I	NOTE 11B	FOR DIMENSIONS SEE DASH 15 VALUES BELOW												
264	R	DRAWER ASSY X Y INTERFACE		2014040-021	NA	NAS-9-497	B	I	NOTE 11B	FOR DIMENSIONS SEE DASH 15 VALUES BELOW												
263	R	DRAWER ASSY RDC INTERFACE		2014045-021	NA	NAS-9-497	B	I	NOTE 11B	FOR DIMENSIONS SEE DASH 15 VALUES BELOW												
262	R	DRAWER ASSY PROGRAMMER & MONITOR		2014041-021	NA	NAS-9-497	B	I	NOTE 11B	FOR DIMENSIONS SEE DASH 17 VALUES BELOW												
261	R	LOGIC DRAWER ASSY NO. 2		2014037-021	NA	NAS-9-497	B	I	NOTE 11B	FOR DIMENSIONS SEE DASH 17 VALUES BELOW												
260	R	LOGIC DRAWER ASSY NO. 1		2014036-021	NA	NAS-9-497	B	I	NOTE 11B	FOR DIMENSIONS SEE DASH 17 VALUES BELOW												
259	R	OPERATION CONSOLE		2014024-021	NA	NAS-9-497	B	II	NOTE 11C	FOR DIMENSIONS SEE DASH 18 VALUES BELOW												
258	R	COMPUTER TEST SET		2014042-021	NA	NAS-9-497	B	II	NOTE 11C	FOR DIMENSIONS SEE DASH 18 VALUES BELOW												
257	R	AUXILIARY CALIBRATION CONSOLE		2014059-021	NA	NAS-9-497	B	II	NOTE 11C	FOR DIMENSIONS SEE DASH 18 VALUES BELOW												
256	R	AGC CALIBRATION CONSOLE		2014049-021	NA	NAS-9-497	B	II	NOTE 11C	FOR DIMENSIONS SEE DASH 18 VALUES BELOW												
255	R	AGC HANDLING FIXTURE		2014282-021	NA	NAS-9-497	B	I	NOTE 11B	FOR DIMENSIONS SEE DASH 17 VALUES BELOW												
254	R	DRAWER ASSY COMP. SIMULATOR		2014048-011	NA	NAS-9-497	B	II	NOTE 11C	FOR DIMENSIONS SEE DASH 18 VALUES BELOW												
253	R	SHIPPING KIT ASSY, NAV DSKY		2016312-011	NA	NAS-9-497	B	II	NOTE 11C	FOR DIMENSIONS SEE DASH 18 VALUES BELOW												
252	R	SHIPPING KIT ASSY, UNIVERSAL DSKY		2016316-011	NA	NAS-9-497	B	II	NOTE 11C	FOR DIMENSIONS SEE DASH 18 VALUES BELOW												
251	R	SHIPPING KIT ASSY, MAIN DSKY		2016313-011	NA	NAS-9-497	B	II	NOTE 11C	FOR DIMENSIONS SEE DASH 18 VALUES BELOW												
250	R	AMPLIFIER, REWORK		2014386	NA	NAS-9-497	B	I	NOTE 11B	FOR DIMENSIONS SEE DASH 15 VALUES BELOW												
249	R	TEMP MONITOR ASSY		2014313-011	NA	NAS-9-497	B	I	NOTE 11C	FOR DIMENSIONS SEE DASH 17 VALUES BELOW												
248	R	AGC JUNCTION ASSY		2014341-011	NA	NAS-9-497	B	I	NOTE 11B	FOR DIMENSIONS SEE DASH 15 VALUES BELOW												
247	R	AC INPUT PANEL ASSY		2014302-011	NA	NAS-9-497	B	I	NOTE 11B	FOR DIMENSIONS SEE DASH 15 VALUES BELOW												
246	R	SELF TEST ASSY		2014392-011	NA	NAS-9-497	B	I	NOTE 11B	FOR DIMENSIONS SEE DASH 15 VALUES BELOW												
245	R	TAPE PUNCH ASSEMBLY		2014039-011	NA	NAS-9-497	B	I	NOTE 11B	FOR DIMENSIONS SEE DASH 15 VALUES BELOW												
244	R	TAPE READER ASSEMBLY		2014038-011	NA	NAS-9-497	B	I	NOTE 11B	FOR DIMENSIONS SEE DASH 15 VALUES BELOW												
243																						
242																						
241	R	APOLLO GUIDANCE COMPUTER GROUP		6003001	NA	NAS-9-497	A	I	NOTE 11B	FOR DIMENSIONS SEE DASH 19 VALUES BELOW												
240	R	SELF TEST ASSEMBLY		2014366-011	NA	NAS-9-497	B	I	NOTE 11B	FOR DIMENSIONS SEE DASH 15 VALUES BELOW												
239	R	POWER SUPPLY ASSY-115V., 400 CYCLE		2014207-011	NA	NAS-9-497	B	I	NOTE 11B	FOR DIMENSIONS SEE DASH 17 VALUES BELOW												
238	R	AC INPUT PANEL ASSY		2014043-011	NA	NAS-9-497	B	I	NOTE 11B	FOR DIMENSIONS SEE DASH 17 VALUES BELOW												
237	R	POWER CONTROL ASSY		2014079-011	NA	NAS-9-497	B	I	NOTE 11B	FOR DIMENSIONS SEE DASH 15 VALUES BELOW												
236	R	DRAWER ASSY-X Y INTERFACE		2014040-011	NA	NAS-9-497	B	I	NOTE 11B	FOR DIMENSIONS SEE DASH 15 VALUES BELOW												
235	R	DRAWER ASSY RDC INTERFACE		2014045-011	NA	NAS-9-497	B	I	NOTE 11B	FOR DIMENSIONS SEE DASH 15 VALUES BELOW												
234	R	BUFFER CIRCUIT ASSY		2014254-011	NA	NAS-9-497	B	I	NOTE 11B	FOR DIMENSIONS SEE DASH 15 VALUES BELOW												
233	R	CONTROL & INTERFACE ASSY		2014204-011	NA	NAS-9-497	B	I	NOTE 11B	FOR DIMENSIONS SEE DASH 15 VALUES BELOW												
232	R	POWER CONTROL ASSY		2014044-011	NA	NAS-9-497	B	I	NOTE 11B	FOR DIMENSIONS SEE DASH 17 VALUES BELOW												
231	R	DRAWER ASSY, PROGRAMMER & MONITOR		2014041-011	NA	NAS-9-497	B	I	NOTE 11B	FOR DIMENSIONS SEE DASH 17 VALUES BELOW												
230	R	CONNECTOR INTERFACE ASSY		2014272-011	NA	NAS-9-497	B	I	NOTE 11B	FOR DIMENSIONS SEE DASH 15 VALUES BELOW												
229	R	CONNECTOR INTERFACE ASSY		2014047-011	NA	NAS-9-497	B	I	NOTE 11B	FOR DIMENSIONS SEE DASH 15 VALUES BELOW												
228	R	ANTENNA, TUNING CAPACITOR ASSY		2014209-011	NA	NAS-9-497	B	I	NOTE 11B	FOR DIMENSIONS SEE DASH 15 VALUES BELOW												
227	R	MOUNTING FIXTURE ASSY		2014006-011	NA	NAS-9-497	B	I	NOTE 11B	FOR DIMENSIONS SEE DASH 17 VALUES BELOW												
226	R	POWER SUPPLY ASSY 3 VDC		2014234-011	NA	NAS-9-497	B	I	NOTE 11B	FOR DIMENSIONS SEE DASH 15 VALUES BELOW												
225	R	PANEL ASSY—SIGNAL INTERFACE		2014010-011	NA	NAS-9-497	B	I	NOTE 11B	FOR DIMENSIONS SEE DASH 15 VALUES BELOW												
224	R	OSCILLOSCOPE ASSY		2014232-011	NA	NAS-9-497	B	I	NOTE 11B	FOR DIMENSIONS SEE DASH 15 VALUES BELOW												
223	R	AUXILIARY OUTLET ASSY		2014274-011	NA	NAS-9-497	B	I	NOTE 11B	FOR DIMENSIONS SEE DASH 15 VALUES BELOW												
222	R	FREQUENCY COUNTER		2014233-011	NA	NAS-9-497	B	I	NOTE 11B	FOR DIMENSIONS SEE DASH 15 VALUES BELOW												
221	R	POWER SUPPLY ASSY 10, 13, 28 VDC		2014235-011	NA	NAS-9-497	B	I	NOTE 11B	FOR DIMENSIONS SEE DASH 15 VALUES BELOW												
220	R	LOGIC DRAWER ASSY NO. 2		2014037-011	NA	NAS-9-497	B	I	NOTE 11B	FOR DIMENSIONS SEE DASH 17 VALUES BELOW												
219	R	LOGIC DRAWER ASSY NO. 1		2014036-011	NA	NAS-9-497	B	I	NOTE 11B	FOR DIMENSIONS SEE DASH 17 VALUES BELOW												
218	R	COUNTER, ELECTRICAL ASSY		2014288-011	NA	NAS-9-497	B	I	NOTE 11B	FOR DIMENSIONS SEE DASH 15 VALUES BELOW												
217	R	POWER SUPPLY ASSY		2014279-011	NA	NAS-9-497	B	I	NOTE 11B	FOR DIMENSIONS SEE DASH 15 VALUES BELOW												
216	R	TEST MOUNT ASSY		2014257-011	NA	NAS-9-497	B	I	NOTE 11B	FOR DIMENSIONS SEE DASH 15 VALUES BELOW												
215	R	UNIVERSAL DSKY PEDESTAL MOUNT		2014014-011	NA	NAS-9-497	B	I	NOTE 11B	FOR DIMENSIONS SEE DASH 17 VALUES BELOW												
214	R	MAIN DSKY PEDESTAL MOUNT		2014343	NA	NAS-9-497	B	I	NOTE 11B	FOR DIMENSIONS SEE DASH 17 VALUES BELOW												
213	R	SHIPPING CONTAINER, MAIN DSKY		1006229	NA	NAS-9-497	B	II	NOTE 11C	FOR DIMENSIONS SEE DASH 18 VALUES BELOW												
212	R	SHIPPING CONTAINER, NAV DSKY		1006231	NA	NAS-9-497	B	II	NOTE 11C	FOR DIMENSIONS SEE DASH 18 VALUES BELOW												
211	R	SHIPPING CONTAINER, AGC		1006230	NA	NAS-9-497	B	II	NOTE 11C	FOR DIMENSIONS SEE DASH 18 VALUES BELOW												
210	R	SHIPPING CONTAINER, UNIVERSAL DSKY		1006422	NA	NAS-9-497	B	II	NOTE 11C	FOR DIMENSIONS SEE DASH 18 VALUES BELOW												
209	R	SHIPPING CONTAINER, AGC		1006421	NA	NAS-9-497	B	II	NOTE 11C	FOR DIMENSIONS SEE DASH 18 VALUES BELOW												
208	R	UNIVERSAL DSKY HANDLING FIXTURE		2014013-011	NA	NAS-9-497	B	I	NOTE 11B	FOR DIMENSIONS SEE DASH 15 VALUES BELOW												
207	R	NAV DSKY HANDLING FIXTURE		1014377	NA	NAS-9-497	B	I	NOTE 11B	FOR DIMENSIONS SEE DASH 17 VALUES BELOW												
206	R	MAIN DSKY HANDLING FIXTURE		1014334	NA	NAS-9-497	B	I	NOTE 11B	FOR DIMENSIONS SEE DASH 17 VALUES BELOW												
205	R	AGC HANDLING FIXTURE		2014282-011	NA	NAS-9-497	B	I	NOTE 11B	FOR DIMENSIONS SEE DASH 17 VALUES BELOW												
204	R	OPERATION CONSOLE		2014024-011	NA	NAS-9-497	B	II	NOTE 11C	FOR DIMENSIONS SEE DASH 18 VALUES BELOW												
203	R	COMPUTER TEST SET		2014042-011	NA	NAS-9-497	B	II	NOTE 11C	FOR DIMENSIONS SEE DASH 18 VALUES BELOW												
202	R	DRAWER ASSY, COMPUTER SIMULATOR		2014048-011	NA	FNP-12775	B	II	NOTE 11C	FOR DIMENSIONS SEE DASH 18 VALUES BELOW												
201	R	AUXILIARY CALIBRATION CONSOLE		2014059-011	NA	NAS-9-497	B	II	NOTE 11C	FOR DIMENSIONS SEE DASH 18 VALUES BELOW												
200	R	AGC CALIBRATION CONSOLE		2014049-011	NA	NAS-9-497	B	II	NOTE 11C	FOR DIMENSIONS SEE DASH 18 VALUES BELOW												
21	R																					
20	R	NA		NA	NA	NA	A	II	NOTE 11C	2.000	1.312	1.687	1.375	.078	.031	.078	.093	.105 .113	.093	1.187	.750	.593
19	R	NA		NA	NA	NA	A	I	NOTE 11B	2.000	1.312	1.687	1.375	.078	.031	.078	.093	NA	NA	1.187	.750	.593
18	R	NA		NA	NA	NA	B	II	NOTE 11C	4.187	1.875	3.469	2.750	.156	.093	.156	.125	.105 .113	.125	1.625	1.032	.844
17	R	NA		NA	NA	NA	B	I	NOTE 11B	4.187	1.875	3.469	2.750	.156	.093	.156	.125	NA	NA	1.625	1.032	.844
16	R	NA		NA	NA	NA	B	II	NOTE 11C	2.000	1.312	1.687	1.375	.078	.031	.078	.093	.105 .113	.093	1.187	.750	.593
15	R	NA		NA	NA	NA	B	I	NOTE 11B	2.000	1.312	1.687	1.375	.078	.031	.078	.093	NA	NA	1.187	.750	.593

NOTES FOR TABLE

STYLE A IS FOR G & N SYSTEM
STYLE B IS FOR GROUND SUPPORT EQUIPMENT
TYPE I IS WITHOUT MOUNTING HOLES
TYPE II IS WITH MOUNTING HOLES

1004260	DC	SHT 3

REVISIONS

SYM	ZONE	DESCRIPTION	CHG NO	DATE	APPD
CL		REPLACES REV CK WITHOUT CHANGE PER TDRR 34365		9/28/67	JWL RWH
CM		REVISION STATUS CHANGED		18 OCT 67	R.A.W.
CN		REVISION STATUS CHANGED		31 OCT 67	JRK
CP		REVISION STATUS CHANGED		6 NOV 67	EMS
CR		REVISION STATUS CHANGED		7 DEC 67	DKB RWH
CS		REVISION STATUS CHANGED		3 JAN 68	J.W. EHW
CT		REVISED PER TDRR 35526		7 FEB 68	LK
CU		REVISION STATUS CHANGED		22 FEB 68	JRK
CV		REVISION STATUS CHANGED		27 FEB 68	LK
CW		REVISION STATUS CHANGED		8 APR 68	WTY
CY		REVISED PER TDRR 36028		16 APR 68	L.N.
CZ		REVISION STATUS CHANGED		23 MAY 68	WTY
DA		REVISION STATUS CHANGED		17 JUN 68	WTY
DB		REVISION STATUS CHANGED		12 SEP 68	
DC		REVISION STATUS CHANGED		16 DEC 68	LK

ASH 18 VALUES BE.OW
ASH 17 VALUES BE.OW
H 15 VALUES BELOW
H 17 VALUES BELOW
H 15 VALUES BELOW
H 17 VALUES BELOW
H 18 VALUES BELOW
H 17 VALUES BELOW
SH 15 VALUES BELO
SH 17 VALUES BELO
SH 17 VALUES BELO
SH 18 VALUES BELO
SH 17 VALUES BELO
SH 18 VALUES BELO
SH 15 VALUES BELO
SH 17 VALUES BELO
SH 18 VALUES BELO
SH 17 VALUES BELO
SH 15 VALUES BELO
SH 15 VALUES BELO
SH 17 VALUES BELO
SH 17 VALUES BELO
SH 17 VALUES BELO
SH 18 VALUES BELO
SH 17 VALUES BELO
SH 15 VALUES BELO
SH 15 VALUES BELO
SH 15 VALUES BELO
SH 15 VALUES BELO
SH 15 VALUES BELO
SH 15 VALUES BELO
SH 17 VALUES BELO
SH 17 VALUES BELO
SH 17 VALUES BELO
SH 18 VALUES BELO
SH 19 VALUES BELO
SH 18 VALUES BELO
SH 18 VALUES BELO
SH 17 VALUES BELO
SH 18 VALUES BELO
SH 18 VALUES BELO
SH 18 VALUES BELO
SH 18 VALUES BELO
SH 15 VALUES BELO
SH 17 VALUES BELO
SH 15 VALUES BELO
SH 15 VALUES BELO
SH 15 VALUES BELO
SH 15 VALUES BELO
SH 15 VALUES BELO

SH 19 VALUES BELO
SH 15 VALUES BELO
SH 17 VALUES BELO
SH 17 VALUES BELO
SH 15 VALUES BELO
SH 15 VALUES BELO
SH 15 VALUES BELO
SH 15 VALUES BELO
SH 15 VALUES BELO
SH 17 VALUES BELO
SH 17 VALUES BELO
SH 1[illegible] VALUES BELO
SH 15 VALUES BELO
SH 15 VALUES BELO
SH 17 VALUES BELO
SH 15 VALUES BELO
SH 15 VALUES BELO
SH 15 VALUES BELO
SH 15 VALUES BELO
SH 15 VALUES BELO
SH 15 VALUES BELO
SH 17 VALUES BELO
SH 17 VALUES BELO
SH 15 VALUES BELO
SH 15 VALUES BELO
SH 15 VALUES BELO
SH 17 VALUES BELO
SH 17 VALUES BELO
SH 18 VALUES BELO
SH 18 VALUES BELO
SH 18 VALUES BELO
SH 18 VALUES BELO
SH 18 VALUES BELO
SH 15 VALUES BELO
SH 17 VALUES BELO
SH 17 VALUES BELO
SH 17 VALUES BELO
SH 18 VALUES BELO
SH 18 VALUES BELO
SH 18 VALUES BELO
SH 18 VALUES BELO
SH 18 VALUES BELO

E	F	G	H	J	K	L	M	N	P	R	S	T	U	V	W	Y	Z	AA	AB	AC	AD	AE	AF	AG	AH	AJ	AK	AL	AM	AN	AP	AR
.078	.031	.078	.093	[illegible]	.093	1.187	.750	.593	.453	1.015	.062	.187	.078	.875	.718	1.375	.218	1.156	1.843	.048	NA	.875	.305	.078	.312	1.687	.078	NA	.078	.312	.187	1.843
.078	.031	.078	.093	NA	NA	1.187	.750	.593	.453	1.015	.062	.187	.078	.875	.718	1.375	.218	NA	NA	.048	.031	.875	.305	.078	.312	1.687	.078	NA	.078	.312	.187	NA
.156	.093	.156	.125	[illegible]	.125	1.625	1.032	.844	.656	1.406	.093	.344	.156	1.781	1.531	2.844	.312	1.562	3.875	.062	NA	1.219	.500	.156	.719	3.469	.156	NA	.156	.719	.344	3.875
.156	.093	.156	.125	NA	NA	1.625	1.032	.844	.656	1.406	.093	.344	.156	1.781	1.531	2.844	.312	NA	NA	.062	.062	1.219	.500	.156	.719	3.469	.156	NA	.156	.719	.344	NA
.078	.031	.078	.093	[illegible]	.093	1.187	.750	.593	.453	1.015	.062	.187	.078	.875	.718	1.375	.218	1.156	1.843	.048	NA	.875	.305	.078	.312	1.687	.078	NA	.078	.312	.187	1.843
.078	.031	.078	.093	NA	NA	1.187	.750	.593	.453	1.015	.062	.187	.078	.875	.718	1.375	.218	NA	NA	.048	.031	.875	.305	.078	.312	1.687	.078	NA	.078	.312	.187	NA

RAYTHEON DASH NUMBERS

AS APPLICABLE	UNLESS OTHERWISE SPECIFIED DIMENSIONS ARE IN INCHES TOLERANCES ON 2 PLACE DECIMALS ± 3 PLACE DECIMALS ± .005 ANGLES ± —	MIT INSTRUMENTATION LAB CAMBRIDGE, MASS	MANNED SPACECRAFT CENTER HOUSTON, TEXAS	
NEXT ASSY / USED ON	DO NOT SCALE THIS DRAWING	DRAWN R.A. JONES DATE 16 JUL 65	NAMEPLATES, APOLLO G&N - GSE (STANDARDS)	
APPLICATION	MATERIAL SEE NOTE 11	CHECKED W. KUPFER APPROVAL 22 JUL 65	SIZE J2	CODE IDENT NO. 80230
	APPROVAL	CONTRACT	1004260	
		T. MICHAELS 22 JUL 65 NASA APPROVAL	SCALE NONE	SHEET 3 OF 6
		W. KUPFER 22 JUL 65 MIT APPROVAL		

1004260 DC

1004260 DC SHT 3

2Y1004260

AC DASH NUMBERS CONTINUED ON SHEET 6

DASH NO.	P/C	PART NAME	REMARKS	PART NUMBER	SER. NO.	CONT. NO.	STYLE	TYPE	MATERIAL	A	B	C	D	E	F	G	H	J	K	L	M	N	
199	AC	EYEPIECE STOWAGE UNIT		2021255-011			A	I		FOR DIMENSIONS SEE DASH 100 VALUES BELOW													
198	AC	SIGNAL CONDITIONER ASSY C/M		2007234		NAS-9-497	A	I	NOTE 11B	FOR DIMENSIONS SEE DASH 100 VALUES BELOW													
197	AC	SIGNAL CONDITIONER ASSY C/M		2007235		NAS-9-497	A	I	NOTE 11B	FOR DIMENSIONS SEE DASH 100 VALUES BELOW													
196	AC	SIGNAL CONDITIONER ASSY LEM		6007010		NAS-9-497	A	I	NOTE 11B	FOR DIMENSIONS SEE DASH 100 VALUES BELOW													
195	AC	PSA & SIGNAL CONDITIONER ASSY		6007009		NAS-9-497	A	I	NOTE 11B	FOR DIMENSIONS SEE DASH 100 VALUES BELOW													
194	AC	PANEL, MONITOR		2900031-031		NAS-9-497	B	II	NOTE 11C	FOR DIMENSIONS SEE DASH 141 VALUES BELOW													
193	AC	DISTRIBUTION BOX, GSE		2900024-031		NAS-9-497	B	II	NOTE 11C	FOR DIMENSIONS SEE DASH 141 VALUES BELOW													
192	AC	ANALYZER, OPTICS-INERTIAL		2900023-031		NAS-9-497	B	II	NOTE 11C	FOR DIMENSIONS SEE DASH 144 VALUES BELOW													
191	AC	TEST CONTROL		2900027-031		NAS-9-497	B	II	NOTE 11C	FOR DIMENSIONS SEE DASH 141 VALUES BELOW													
190	AC	PANEL, PWR SUP AND LOAD		2900033-021		NAS-9-497	B	II	NOTE 11C	FOR DIMENSIONS SEE DASH 141 VALUES BELOW													
189	AC	ADPT MODULE, P.S.A.		6900088-011		NAS-9-497	B	II	NOTE 11C	FOR DIMENSIONS SEE DASH 141 VALUES BELOW													
188	AC	ADPT MODULE, P.S.A.		2901143-011		NAS-9-497	B	II	NOTE 11C	FOR DIMENSIONS SEE DASH 141 VALUES BELOW													
187	AC	FIXTURE, MTG, PTA/PEA		2900066-021		NAS-9-497	B	II	NOTE 11C	FOR DIMENSIONS SEE DASH 141 VALUES BELOW													
186	AC	ANNUNCIATOR PANEL & EYEPIECE STORAGE ASSEMBLY		1021255-021			A	I		FOR DIMENSIONS SEE DASH 100 VALUES BELOW													
185	AC	ANNUNCIATOR PANEL & EYEPIECE STORAGE ASSEMBLY		1021255-011			A	I		FOR DIMENSIONS SEE DASH 100 VALUES BELOW													
184	AC	FIX., HAND., G AND N HARNESS		1901846-041		NAS-9-497	B	II	NOTE 11C	FOR DIMENSIONS SEE DASH 144 VALUES BELOW													
183	AC	INSTALLING TOOL, ELEC. CONN		1902586-011		NAS-9-497	B	II	NOTE 11C	FOR DIMENSIONS SEE DASH 102 VALUES BELOW													
182	AC	ADPT MODULE, P.S.A.		6900088-011		NAS-9-497	B	II	NOTE 11C	FOR DIMENSIONS SEE DASH 141 VALUES BELOW													
181	AC	G & N INDICATOR CONTROL PANEL ASSY		2014578-011		NAS-9-497	A	I	NOTE 11B	3.000	1.938	2.437	NA	.125	.062	.188	.156	NA	NA	1.750	1.125	.9[illegible]6	.688
180	AC	ADPT MODULE, P.S.A.		1902431-031		NAS-9-497	B	II		FOR DIMENSIONS SEE DASH 121 VALUES BELOW													
179	AC	MOUNTING PLATE, IMU/PTA		6900083-011		NAS-9-497	B	II		FOR DIMENSIONS SEE DASH 144 VALUES BELOW													
178	AC	MOUNTING PLATE, COMPONENT		6900007-021		NAS-9-497	B	II		FOR DIMENSIONS SEE DASH 144 VALUES BELOW													
177	AC	FIX., MOUNTING, SUBSYSTEM		2900070-021		NAS-9-497	B	II		FOR DIMENSIONS SEE DASH 144 VALUES BELOW													
176	AC	FIX., MOUNTING, G & N		2900067-021		NAS-9-497	B	II		FOR DIMENSIONS SEE DASH 144 VALUES BELOW													
175	AC	CSL, COOL. AND PWR, G & N		1902134-031		NAS-9-497	B	II		FOR DIMENSIONS SEE DASH 144 VALUES BELOW													
174	AC	FIX., HAND., C/M AND LEM CDU		2900999-011		NAS-9-497	B	II	NOTE 11C	FOR DIMENSIONS SEE DASH 141 VALUES BELOW													
173	AC	FIX., HANDLING, C/M PSA		2900998-011		NAS-9-497	B	II	NOTE 11C	FOR DIMENSIONS SEE DASH 141 VALUES BELOW													
172	AC	CAGING ELECTRONICS, GYRO		2900029-021		NAS-9-497	B	II	NOTE 11C	FOR DIMENSIONS SEE DASH 141 VALUES BELOW													
171	AC	DISTRIBUTION BOX, GSE		2900024-021		NAS-9-497	B	II	NOTE 11C	FOR DIMENSIONS SEE DASH 141 VALUES BELOW													
170	AC	ANALYZER, OPTICS-INERTIAL		2900023-021		NAS-9-497	B	II	NOTE 11C	FOR DIMENSIONS SEE DASH 144 VALUES BELOW													
169	AC	ADPT, TESTPOINT, P.S.A.		2900037-021		NAS-9-497	B	II	NOTE 11C	FOR DIMENSIONS SEE DASH 141 VALUES BELOW													
168	AC	TEST SELECTOR		2900028-021		NAS-9-497	B	II	NOTE 11C	FOR DIMENSIONS SEE DASH 141 VALUES BELOW													
167	AC	TEST CONTROL		2900027-021		NAS-9-497	B	II	NOTE 11C	FOR DIMENSIONS SEE DASH 141 VALUES BELOW													
166	AC	PANEL, MONITOR		2900031-021		NAS-9-497	B	II	NOTE 11C	FOR DIMENSIONS SEE DASH 141 VALUES BELOW													
165	AC	TERM. BOARD STORAGE DRAWER		2900927-011		NAS-9-497	B	II	NOTE 11C	FOR DIMENSIONS SEE DASH 141 VALUES BELOW													
164	AC	INPUT/OUTPUT PANEL		2900926-011		NAS-9-497	B	II	NOTE 11C	FOR DIMENSIONS SEE DASH 141 VALUES BELOW													
163	AC	CONTROL PANEL		2900896-011		NAS-9-497	B	II	NOTE 11C	FOR DIMENSIONS SEE DASH 141 VALUES BELOW													
162	AC	CSL, CAL AND TEST, SCM/PSAAM		2900895-011		NAS-9-497	B	II	NOTE 11C	FOR DIMENSIONS SEE DASH 144 VALUES BELOW													
161	AC	FIX., LIFT AND HAND., IMU		1015462-011		NAS-9-497	B	II	NOTE 11C	FOR DIMENSIONS SEE DASH 141 VALUES BELOW													
160	AC	FIX., HAND., G & N HARNESS		1901846-031		NAS-9-497	B	II	NOTE 11C	FOR DIMENSIONS SEE DASH 144 VALUES BELOW													
159	AC	BATTERY POWER PACK		1900011-031		NAS-9-497	B	II	NOTE 11C	FOR DIMENSIONS SEE DASH 144 VALUES BELOW													
158	AC	COUPLING DATA UNIT ASSEMBLY C/M		2007222		NAS-9-497	A	I	NOTE 11B	FOR DIMENSIONS SEE DASH 100 VALUES BELOW													
157	AC	COUPLING DATA UNIT ASSEMBLY - LEM		2007222		NAS-9-497	A	I	NOTE 11B	FOR DIMENSIONS SEE DASH 100 VALUES BELOW													
156	AC	POWER & SERVO ASSEMBLY C/M		2007200		NAS-9-497	A	I	NOTE 11B	2,125	.968	1.718	NA	.093	.031	.06	.093	NA	NA	.858	.608	.4[illegible]4	.358
155	AC	PIPA ELECTRONICS ASSEMBLY		2007201		NAS-9-497	A	I	NOTE 11B	FOR DIMENSIONS SEE DASH 100 VALUES BELOW													
154	AC	PULSE TORQUE ASSEMBLY-LEM		6007000		NAS-9-497	A	I	NOTE 11B	FOR DIMENSIONS SEE DASH 100 VALUES BELOW													
153	AC	POWER & SERVO ASSEMBLY-LEM		6007200		NAS-9-497	A	I	NOTE 11B	FOR DIMENSIONS SEE DASH 100 VALUES BELOW													
152	AC	CONT PNL, RSVR CKT TESTER		2900770-011		NAS-9-497	B	II	NOTE 11C	FOR DIMENSIONS SEE DASH 141 VALUES BELOW													
151	AC	TESTER, RESOLVER CIRCUIT		2900708-011		NAS-9-497	B	II	NOTE 11C	FOR DIMENSIONS SEE DASH 141 VALUES BELOW													
150	AC	JUNCTION BOX, P.S.A./G.S.E.		1901933-021		NAS-9-497	B	II	NOTE 11C	FOR DIMENSIONS SEE DASH 144 VALUES BELOW													
149	AC	BATTERY PACK, LIFTING		2900812-011		NAS-9-497	B	II	NOTE 11C	FOR DIMENSIONS SEE DASH 141 VALUES BELOW													
148	AC	MOUNTING PLATE, COMPONENT		6900007-011		NAS-9-497	B	II	NOTE 11C	FOR DIMENSIONS SEE DASH 144 VALUES BELOW													
147	AC	MOUNTING PLATE, COMPONENT		2900677-011		NAS-9-497	B	II	NOTE 11C	FOR DIMENSIONS SEE DASH 144 VALUES BELOW													
146	AC	CART, TRANS, G & N		1900009-041		NAS-9-497	B	II	NOTE 11C	FOR DIMENSIONS SEE DASH 144 VALUES BELOW													
145	AC	CONTAINER, SHIPPING, IMU		1900010-021		NAS-9-497	B	II	NOTE 11C	FOR DIMENSIONS SEE DASH 144 VALUES BELOW													
144	AC	FIX., MOUNTING, G & N		1902204-021			B	II	NOTE 11C	4.125	1.812	3.250	NA	.125	.062	.12	.156	.188 .194	.125	1.625	1.140	.8[illegible]0	.64
143	AC	CSL, COOL. AND PWR, G & N		1902134-021			B	II	NOTE 11C	4.125	1.812	3.250	NA	.125	.062	.12	.156		.125	1.625	1.140	.8[illegible]0	.64
142	AC	ANALYZER, OPTICS-INERTIAL		2900023-011			B	II	NOTE 11C	4.125	1.812	3.250	NA	.125	.062	.12	.156		.125	1.625	1.140	.8[illegible]0	.64
141	AC	CONT, TEMP, PORTABLE		2900060-011			B	II	NOTE 11C	2.125	.968	1.718	NA	.093	.031	.06	.093		.093	.858	.608	.4[illegible]4	.35
140	AC	TESTER, CKT, IMU/CDU RSVR		2900286-011			B	II	NOTE 11C	4.125	1.812	3.250	NA	.125	.062	.12	.156		.125	1.625	1.140	.8[illegible]0	.64
139	AC	SIMULATOR, LD/SIG, CDU		2900285-011			B	II	NOTE 11C	4.125	1.812	3.250	NA	.125	.062	.12	.156		.125	1.625	1.140	.8[illegible]0	.6
138	AC	SIMULATOR, LD/SIG, OPTICS		1902023-021			B	II	NOTE 11C	4.125	1.812	3.250	NA	.125	.062	.12	.156		.125	1.625	1.140	.8[illegible]0	.64
137	AC	FIX., MOUNTING, IMU/NAV BASE		6900003-011			B	II	NOTE 11C	4.125	1.812	3.250	NA	.125	.062	.12	.156		.125	1.625	1.140	.8[illegible]0	.6
136	AC	FIXTURE, OPTICS/NAV BASE		2900072-011			B	II	NOTE 11C	4.125	1.812	3.250	NA	.125	.062	.12	.156		.125	1.625	1.140	.8[illegible]0	.6
135	AC	FIX., MOUNTING, SUB SYSTEM		2900070-011			B	II	NOTE 11C	4.125	1.812	3.250	NA	.125	.062	.12	.156		.125	1.625	1.140	.8[illegible]0	.6
134	AC	FIX., HAND., G & N HARNESS		2900069-011			B	II	NOTE 11C	4.125	1.812	3.250	NA	.125	.062	.12	.156		.125	1.625	1.140	.8[illegible]0	.6
133	AC	CNTR, SHIPPING, NAV BASE		2900068-011			B	II	NOTE 11C	4.125	1.812	3.250	NA	.125	.062	.12	.156		.125	1.625	1.140	.8[illegible]0	.6
132	AC	FIX., MOUNTING, G & N		2900067-011			B	II	NOTE 11C	4.125	1.812	3.250	NA	.125	.062	.12	.156		.125	1.625	1.140	.8[illegible]0	.6
131	AC	SIMULATOR, LD/SIG, IMU/CDU		2900062-011			B	II	NOTE 11C	4.125	1.812	3.250	NA	.125	.062	.12	.156		.125	1.625	1.140	.8[illegible]0	.6
130	AC	TESTER, GYRO WHEEL		2900061-011			B	II	NOTE 11C	4.125	1.812	3.250	NA	.125	.062	.12	.156		.125	1.625	1.140	.8[illegible]0	.6
129	AC	COOLANT SUPPLY		1902133-021			B	II	NOTE 11C	4.125	1.812	3.250	NA	.125	.062	.12	.156		.125	1.625	1.140	.8[illegible]0	.6
128	AC	TABLE, ROTARY		1900926-021			B	II	NOTE 11C	4.125	1.812	3.250	NA	.125	.062	.12	.156		.125	1.625	1.140	.8[illegible]0	.6
127	AC	FIX., HAND., OPTICS		2900074-011			B	II	NOTE 11C	2.125	.968	1.718	NA	.093	.031	.06	.093		.093	.858	.608	.4[illegible]4	.3
126	AC	FIXTURE, MTG, PTA/PEA.		2900066-011			B	II	NOTE 11C	2.125	.968	1.718	NA	.093	.031	.06	.093		.093	.858	.608	.4[illegible]4	.
125	AC	CONT, TEMP, IMU LIFTING		2900063-011			B	II	NOTE 11C	2.125	.968	1.718	NA	.093	.031	.06	.093		.093	.858	.608	.4[illegible]4	.3
124	AC	FIXTURE, HANDLING, IMU		2900064-011			B	II	NOTE 11C	2.125	.968	1.718	NA	.093	.031	.06	.093		.093	.858	.608	.4[illegible]4	.
123	AC	CONT, OPTICS, REMOTE		1902046-021			B	II	NOTE 11C	2.125	.968	1.718	NA	.093	.031	.06	.093		.093	.858	.608	.4[illegible]4	.
122	AC	TEST CONTROL		1902009-021			B	II	NOTE 11C	2.125	.968	1.718	NA	.093	.031	.06	.093		.093	.858	.608	.4[illegible]4	.
121	AC	ADPT MODULE, P.S.A.		1902431-021			B	II	NOTE 11C	2.125	.968	1.718	NA	.093	.031	.06	.093		.093	.858	.608	.4[illegible]4	.
120	AC	BRIDGE, DECADE ERROR		2900128-011			B	II	NOTE 11C	2.125	.968	1.718	NA	.093	.031	.06	.093		.093	.858	.608	.4[illegible]4	.
119	AC	PWR SUP, ELECTRONICS		2900012-011			B	II	NOTE 11C	2.125	.968	1.718	NA	.093	.031	.06	.093		.093	.858	.608	.4[illegible]4	.
118	AC	PWR SUP, RELAY AND LAMP		1900049-031			B	II	NOTE 11C	2.125	.968	1.718	NA	.093	.031	.06	.093		.093	.858	.608	.4[illegible]4	.
117	AC	CONSOLE, OSCILLOGRAPH		1900000-021			B	II	NOTE 11C	2.125	.968	1.718	NA	.093	.031	.06	.093		.093	.858	.608	.4[illegible]4	.
116	AC	ADPT MODULE, P.S.A.		1902431-011			B	II	NOTE 11C	2.125	.968	1.718	NA	.093	.031	.06	.093		.093	.858	.608	.4[illegible]4	.
115	AC	ADPT, TEST POINT, PTA/PEA.		2900145-011			B	II	NOTE 11C	2.125	.968	1.718	NA	.093	.031	.06	.093		.093	.858	.608	.4[illegible]4	.
114	AC	ADPT, TEST POINT, P.S.A.		2900037-011			B	II	NOTE 11C	2.125	.968	1.718	NA	.093	.031	.06	.093		.093	.858	.608	.4[illegible]4	.
113	AC	CONTROL, GIMBAL POSITION		2900036-011			B	II	NOTE 11C	2.125	.968	1.718	NA	.093	.031	.06	.093		.093	.858	.608	.4[illegible]4	.
112	AC	SELECTOR, SIGNAL, PRIMARY		2900035-011			B	II	NOTE 11C	2.125	.968	1.718	NA	.093	.031	.06	.093		.093	.858	.608	.4[illegible]4	.
111	AC	SEL, SIG, OSCILLOGRAPH		2900034-011			B	II	NOTE 11C	2.125	.968	1.718	NA	.093	.031	.06	.093		.093	.858	.608	.4[illegible]4	.
110	AC	PANEL, PWR SUP AND LOAD		2900033-011			B	II	NOTE 11C	2.125	.968	1.718	NA	.093	.031	.06	.093		.093	.858	.608	.4[illegible]4	.
109	AC	PANEL, MONITOR		2900031-011			B	II	NOTE 11C	2.125	.968	1.718	NA	.093	.031	.06	.093		.093	.858	.608	.4[illegible]4	.
108	AC	PANEL, AUXILIARY INPUT		2900030-011			B	II	NOTE 11C	2.125	.968	1.718	NA	.093	.031	.06	.093		.093	.858	.608	.4[illegible]4	.
107	AC	CAGING ELECTRONICS, GYRO		2900029-011			B	II	NOTE 11C	2.125	.968	1.718	NA	.093	.031	.06	.093		.093	.858	.608	.4[illegible]4	.
106	AC	TEST SELECTOR		2900028-011			B	II	NOTE 11C	2.125	.968	1.718	NA	.093	.031	.06	.093		.093	.858	.608	.4[illegible]4	.
105	AC	TEST CONTROL		2900027-011			B	II	NOTE 11C	2.125	.968	1.718	NA	.093	.031	.06	.093		.093	.858	.608	.4[illegible]4	.
104	AC	MONITOR AND CONTROL, TEMP		2900026-011			B	II	NOTE 11C	2.125	.968	1.718	NA	.093	.031	.06	.093		.093	.858	.608	.4[illegible]4	.
103	AC	DISTRIBUTION BOX, GSE		2900024-011			B	II	NOTE 11C	2.125	.968	1.718	NA	.093	.031	.06	.093		.093	.858	.608	.4[illegible]4	.
102	AC	VOLTMETER, DIGITAL		2900007-011			B	II	NOTE 11C	2.125	.968	1.718	NA	.093	.031	.06	.093	.188 .194	.093	.858	.608	.4[illegible]4	.
101	AC	NAVIGATION BASE ASSEMBLY-LEM		6899950		NAS-9-497	A	I	NOTE 11B	2.000	1.312	1.906	1.375	.078	.048	.078	.093	NA	NA	1.125	.750	.5[illegible]3	
100	AC	NAVIGATION BASE ASSEMBLY		2899982		NAS-9-497	A	I	NOTE 11B	2.000	1.312	1.906	1.375	.078	.048	.078	.093	NA	NA	1.125	.750	.5[illegible]3	

NOTES FOR TABLE

STYLE A IS FOR G & N SYSTEM
STYLE B IS FOR GROUND SUPPORT EQUIPMENT
TYPE I IS WITHOUT MOUNTING HOLES
TYPE II IS WITH MOUNTING HOLES

1004260	DC	SHT 4

SYM	ZONE	DESCRIPTION	CHG NO	DATE	APPD
CL		REPLACES REV CK WITHOUT CHANGE PER TDRR 34365		9/28/67	JWL RWH
CM		REVISION STATUS CHANGED		18 OCT. 67	R.A.W.
CN		REVISION STATUS CHANGE		31 OCT 67	JRK
CP		REVISION STATUS CHANGE		6 NOV 67	EWS
CR		REVISION STATUS CHANGED		7 NOV 67	DKD RWH
CS		REVISION STATUS CHANGED		3 JAN 68	J.W. EHW
CT		REVISION STATUS CHANGED		7 FEB 68	LK RWH
CU		REVISION STATUS CHANGED		22 FEB 68	JRK
CV		REVISION STATUS CHANGED		27 FEB 68	LK
CW		REVISION STATUS CHANGED		3 APR 68	MTY
CY		REVISION STATUS CHANGED		16 APR 68	A.N.
CZ		REVISION STATUS CHANGED		23 MAY 68	MTY
DA		REVISION STATUS CHANGED		17 JUN 68	MTY
DB		REVISION STATUS CHANGED		12 SEP 68	[illegible]
DC		REVISION STATUS CHANGED		16 DEC 68	LK

D	E	F	G	H	J	K	L	M	N	P	R	S	T	U	V	W	Y	Z	AA	AB	AC	AD	AE	AF	AG	AH	AJ	AK	AL	AM	AN	AP	AR
DASH 100 VALUES BELOW																																	
DASH 100 VALUES BELOW																																	
DASH 100 VALUES BELOW																																	
DASH 100 VALUES BELOW																																	
DASH 100 VALUES BELOW																																	
DASH 141 VALUES BELOW																																	
DASH 141 VALUES BELOW																																	
DASH 144 VALUES BELOW																																	
DASH 141 VALUES BELOW																																	
DASH 141 VALUES BELOW																																	
DASH 141 VALUES BELOW																																	
DASH 141 VALUES BELOW																																	
DASH 141 VALUES BELOW																																	
DASH 100 VALUES BELOW																																	
DASH 100 VALUES BELOW																																	
DASH 144 VALUES BELOW																																	
DASH 102 VALUES BELOW																																	
DASH 141 VALUES BELOW																																	
	.125	.062	88	.156	NA	NA	1.750	1.125	.906	.688	1.500	NA	.281	.125	NA	1.094	2.062	.312	NA	2.500	.062	.125	1.312	.469	NA	NA	NA	.156	NA	.125	.469	.344	NA
DASH 121 VALUES BELOW																																	
DASH 144 VALUES BELOW																																	
DASH 144 VALUES BELOW																																	
DASH 144 VALUES BELOW																																	
DASH 144 VALUES BELOW																																	
DASH 144 VALUES BELOW																																	
DASH 141 VALUES BELOW																																	
DASH 141 VALUES BELOW																																	
DASH [illegible] VALUES BELOW																																	
DASH 141 VALUES BELOW																																	
DASH 144 VALUES BELOW																																	
DASH 141 VALUES BELOW																																	
DASH 141 VALUES BELOW																																	
DASH 141 VALUES BELOW																																	
DASH 141 VALUES BELOW																																	
DASH 141 VALUES BELOW																																	
DASH 141 VALUES BELOW																																	
DASH 141 VALUES BELOW																																	
DASH 144 VALUES BELOW																																	
DASH 141 VALUES BELOW																																	
DASH 144 VALUES BELOW																																	
DASH 144 VALUES BELOW																																	
DASH 100 VALUES BELOW																																	
DASH 100 VALUES BELOW																																	
	.093	.031	06	.093	NA	NA	.858	.608	.484	.358	.733	.062	.140	.062	NA	.968	1.450	.125	NA	1.720	.046	.03	NA	.210	NA	NA	NA	.070	NA	.046	.32	.16	NA
DASH 100 VALUES BELOW																																	
DASH 100 VALUES BELOW																																	
DASH 100 VALUES BELOW																																	
DASH 141 VALUES BELOW																																	
DASH 141 VALUES BELOW																																	
DASH 144 VALUES BELOW																																	
DASH 141 VALUES BELOW																																	
DASH 144 VALUES BELOW																																	
DASH 144 VALUES BELOW																																	
DASH 144 VALUES BELOW																																	
DASH 144 VALUES BELOW																																	
	.125	.062	12	.156	188	.125	1.625	1.140	.890	.640	1.390	.125	.171	.125	1.875	1.687	2.625	.250	1.562	3.843	.093	NA	NA	.359	.125	.437	3.688	NA	3.687	.093	.40	.25	3.875
	.125	.062	12	.156		.125	1.625	1.140	.890	.640	1.390	.125	.171	.125	1.875	1.687	2.625	.250	1.562	3.843	.093	NA	NA	.359	.125	.437	3.688	NA	3.687	.093	.40	.25	3.875
	.125	.062	12	.156		.125	1.625	1.140	.890	.640	1.390	.125	.171	.125	1.875	1.687	2.625	.250	1.562	3.843	.093	NA	NA	.359	.125	.437	3.688	NA	3.687	.093	.40	.25	3.875
	.093	.031	06	.093		.093	.858	.608	.484	.358	.733	.077	.116	.062	.937	.875	1.343	.125	.781	1.892	.046	NA	NA	.209	.093	.250	1.875	NA	1.840	.046	.23	.16	1.938
	.125	.062	12	.156		.125	1.625	1.140	.890	.640	1.390	.125	.171	.125	1.875	1.687	2.625	.250	1.562	3.843	.093	NA	NA	.359	.125	.437	3.688	NA	3.687	.093	.40	.25	3.875
	.125	.062	12	.156		.125	1.625	1.140	.890	.640	1.390	.125	.171	.125	1.875	1.687	2.625	.250	1.562	3.843	.093	NA	NA	.359	.125	.437	3.688	NA	3.687	.093	.40	.25	3.875
	.125	.062	12	.156		.125	1.625	1.140	.890	.640	1.390	.125	.171	.125	1.875	1.687	2.625	.250	1.562	3.843	.093	NA	NA	.359	.125	.437	3.688	NA	3.687	.093	.40	.25	3.875
	.125	.062	12	.156		.125	1.625	1.140	.890	.640	1.390	.125	.171	.125	1.875	1.687	2.625	.250	1.562	3.843	.093	NA	NA	.359	.125	.437	3.688	NA	3.687	.093	.40	.25	3.875
	.125	.062	12	.156		.125	1.625	1.140	.890	.640	1.390	.125	.171	.125	1.875	1.687	2.625	.250	1.562	3.843	.093	NA	NA	.359	.125	.437	3.688	NA	3.687	.093	.40	.25	3.875
	.125	.062	12	.156		.125	1.625	1.140	.890	.640	1.390	.125	.171	.125	1.875	1.687	2.625	.250	1.562	3.843	.093	NA	NA	.359	.125	.437	3.688	NA	3.687	.093	.40	.25	3.875
	.125	.062	12	.156		.125	1.625	1.140	.890	.640	1.390	.125	.171	.125	1.875	1.687	2.625	.250	1.562	3.843	.093	NA	NA	.359	.125	.437	3.688	NA	3.687	.093	.40	.25	3.875
	.125	.062	12	.156		.125	1.625	1.140	.890	.640	1.390	.125	.171	.125	1.875	1.687	2.625	.250	1.562	3.843	.093	NA	NA	.359	.125	.437	3.688	NA	3.687	.093	.40	.25	3.875
	.125	.062	12	.156		.125	1.625	1.140	.890	.640	1.390	.125	.171	.125	1.875	1.687	2.625	.250	1.562	3.843	.093	NA	NA	.359	.125	.437	3.688	NA	3.687	.093	.40	.25	3.875
	.125	.062	12	.156		.125	1.625	1.140	.890	.640	1.390	.125	.171	.125	1.875	1.687	2.625	.250	1.562	3.843	.093	NA	NA	.359	.125	.437	3.688	NA	3.687	.093	.40	.25	3.875
	.125	.062	12	.156		.125	1.625	1.140	.890	.640	1.390	.125	.171	.125	1.875	1.687	2.625	.250	1.562	3.843	.093	NA	NA	.359	.125	.437	3.688	NA	3.687	.093	.40	.25	3.875
	.125	.062	12	.156		.125	1.625	1.140	.890	.640	1.390	.125	.171	.125	1.875	1.687	2.625	.250	1.562	3.843	.093	NA	NA	.359	.125	.437	3.688	NA	3.687	.093	.40	.25	3.875
	.125	.062	12	.156		.125	1.625	1.140	.890	.640	1.390	.125	.171	.125	1.875	1.687	2.625	.250	1.562	3.843	.093	NA	NA	.359	.125	.437	3.688	NA	3.687	.093	.40	.25	3.875
	.093	.031	.06	.093		.093	.858	.608	.484	.358	.733	.077	.116	.062	.937	.875	1.343	.125	.781	1.892	.046	NA	NA	.209	.093	.250	1.875	NA	1.840	.046	.23	.16	1.938
	.093	.031	.06	.093		.093	.858	.608	.484	.358	.733	.077	.116	.062	.937	.875	1.343	.125	.781	1.892	.046	NA	NA	.209	.093	.250	1.875	NA	1.840	.046	.23	.16	1.938
	.093	.031	.06	.093		.093	.858	.608	.484	.358	.733	.077	.116	.062	.937	.875	1.343	.125	.781	1.892	.046	NA	NA	.209	.093	.250	1.875	NA	1.840	.046	.23	.16	1.938
	.093	.031	.06	.093		.093	.858	.608	.484	.358	.733	.077	.116	.062	.937	.875	1.343	.125	.781	1.892	.046	NA	NA	.209	.093	.250	1.875	NA	1.840	.046	.23	.16	1.938
	.093	.031	.06	.093		.093	.858	.608	.484	.358	.733	.077	.116	.062	.937	.875	1.343	.125	.781	1.892	.046	NA	NA	.209	.093	.250	1.875	NA	1.840	.046	.23	.16	1.938
	.093	.031	.06	.093		.093	.858	.608	.484	.358	.733	.077	.116	.062	.937	.875	1.343	.125	.781	1.892	.046	NA	NA	.209	.093	.250	1.875	NA	1.840	.046	.23	.16	1.938
	.093	.031	.06	.093		.093	.858	.608	.484	.358	.733	.077	.116	.062	.937	.875	1.343	.125	.781	1.892	.046	NA	NA	.209	.093	.250	1.875	NA	1.840	.046	.23	.16	1.938
	.093	.031	.06	.093		.093	.858	.608	.484	.358	.733	.077	.116	.062	.937	.875	1.343	.125	.781	1.892	.046	NA	NA	.209	.093	.250	1.875	NA	1.840	.046	.23	.16	1.938
	.093	.031	.06	.093		.093	.858	.608	.484	.358	.733	.077	.116	.062	.937	.875	1.343	.125	.781	1.892	.046	NA	NA	.209	.093	.250	1.875	NA	1.840	.046	.23	.16	1.938
	.093	.031	.06	.093		.093	.858	.608	.484	.358	.733	.077	.116	.062	.937	.875	1.343	.125	.781	1.892	.046	NA	NA	.209	.093	.250	1.875	NA	1.840	.046	.23	.16	1.938
	.093	.031	.06	.093		.093	.858	.608	.484	.358	.733	.077	.116	.062	.937	.875	1.343	.125	.781	1.892	.046	NA	NA	.209	.093	.250	1.875	NA	1.840	.046	.23	.16	1.938
	.093	.031	.06	.093		.093	.858	.608	.484	.358	.733	.077	.116	.062	.937	.875	1.343	.125	.781	1.892	.046	NA	NA	.209	.093	.250	1.875	NA	1.840	.046	.23	.16	1.938
	.093	.031	.06	.093		.093	.858	.608	.484	.358	.733	.077	.116	.062	.937	.875	1.343	.125	.781	1.892	.046	NA	NA	.209	.093	.250	1.875	NA	1.840	.046	.23	.16	1.938
	.093	.031	.06	.093		.093	.858	.608	.484	.358	.733	.077	.116	.062	.937	.875	1.343	.125	.781	1.892	.046	NA	NA	.209	.093	.250	1.875	NA	1.840	.046	.23	.16	1.938
	.093	.031	.06	.093		.093	.858	.608	.484	.358	.733	.077	.116	.062	.937	.875	1.343	.125	.781	1.892	.046	NA	NA	.209	.093	.250	1.875	NA	1.840	.046	.23	.16	1.938
	.093	.031	.06	.093		.093	.858	.608	.484	.358	.733	.077	.116	.062	.937	.875	1.343	.125	.781	1.892	.046	NA	NA	.209	.093	.250	1.875	NA	1.840	.046	.23	.16	1.938
	.093	.031	.06	.093		.093	.858	.608	.484	.358	.733	.077	.116	.062	.937	.875	1.343	.125	.781	1.892	.046	NA	NA	.209	.093	.250	1.875	NA	1.840	.046	.23	.16	1.938
	.093	.031	.06	.093		.093	.858	.608	.484	.358	.733	.077	.116	.062	.937	.875	1.343	.125	.781	1.892	.046	NA	NA	.209	.093	.250	1.875	NA	1.840	.046	.23	.16	1.938
	.093	.031	.06	.093		.093	.858	.608	.484	.358	.733	.077	.116	.062	.937	.875	1.343	.125	.781	1.892	.046	NA	NA	.209	.093	.250	1.875	NA	1.840	.046	.23	.16	1.938
	.093	.031	.06	.093		.093	.858	.608	.484	.358	.733	.077	.116	.062	.937	.875	1.343	.125	.781	1.892	.046	NA	NA	.209	.093	.250	1.875	NA	1.840	.046	.23	.16	1.938
	.093	.031	.06	.093		.093	.858	.608	.484	.358	.733	.077	.116	.062	.937	.875	1.343	.125	.781	1.892	.046	NA	NA	.209	.093	.250	1.875	NA	1.840	.046	.23	.16	1.938
	.093	.031	.06	.093		.093	.858	.608	.484	.358	.733	.077	.116	.062	.937	.875	1.343	.125	.781	1.892	.046	NA	NA	.209	.093	.250	1.875	NA	1.840	.046	.23	.16	1.938
	.093	.031	.06	.093		.093	.858	.608	.484	.358	.733	.077	.116	.062	.937	.875	1.343	.125	.781	1.892	.046	NA	NA	.209	.093	.250	1.875	NA	1.840	.046	.23	.16	1.938
	.093	.031	.06	.093		.093	.858	.608	.484	.358	.733	.077	.116	.062	.937	.875	1.343	.125	.781	1.892	.046	NA	NA	.209	.093	.250	1.875	NA	1.840	.046	.23	.16	1.938
	.093	.031	.06	.093		.093	.858	.608	.484	.358	.733	.077	.116	.062	.937	.875	1.343	.125	.781	1.892	.046	NA	NA	.209	.093	.250	1.875	NA	1.840	.046	.23	.16	1.938
	.093	.031	.06	.093		.093	.858	.608	.484	.358	.733	.077	.116	.062	.937	.875	1.343	.125	.781	1.892	.046	NA	NA	.209	.093	.250	1.875	NA	1.840	.046	.23	.16	1.938
	.093	.031	.06	.093	188 184	.093	.858	.608	.484	.358	.733	.077	.116	.062	.937	.875	1.343	.125	.781	1.892	.046	NA	NA	.209	.093	.250	1.875	NA	1.840	.046	.23	.16	1.938
575	.078	.048	.078	.093	NA	NA	1.125	.750	.593	.453	1.015	.062	.187	.078	.875	.718	1.375	.218	NA	NA	.048	.031	.875	.305	.078	.531	1.906	.078	NA	.078	.531	.187	NA
375	.078	.048	.078	.093	NA	NA	1.125	.750	.593	.453	1.015	.062	.187	.078	.875	.718	1.375	.218	NA	NA	.048	.031	.875	.305	.078	.531	1.906	.078	NA	.078	.531	.187	NA

AC ELECTRONICS DASH NUMBERS

AS APPLICABLE	
NEXT ASSY	USED ON
APPLICATION	

UNLESS OTHERWISE SPECIFIED
DIMENSIONS ARE IN INCHES
TOLERANCES ON
2 PLACE DECIMALS ±
3 PLACE DECIMALS ± .005
ANGLES ±
DO NOT SCALE THIS DRAWING
MATERIAL SEE NOTE 11
APPROVAL

M I T
INSTRUMENTATION LAB
CAMBRIDGE MASS
DWG NO CONTRACT
DRAWN R. A. JONES DATE 16 JUL 65
CHECKED
W. KUPFER 22 JUL 65
APPROVAL
CONTRACT
T. MICHAELS 22 JUL 65
NASA APPROVAL
W. KUPFER 22 JUL 65
MIT APPROVAL

MANNED
SPACECRAFT CENTER
HOUSTON, TEXAS

NAMEPLATES,
APOLLO G&N - GSE
(STANDARDS)

SIZE J2 CODE IDENT NO 80230 1004260
SCALE NONE SHEET 4 OF 6

1004260 DC SHT 4

1004260 DC

1004260

2/1004260

NOTICE - WHEN GOVERNMENT DRAWINGS, SPECIFICATIONS, OR OTHER DATA ARE USED FOR ANY PURPOSE OTHER THAN IN CONNECTION WITH A DEFINITELY RELATED GOVERNMENT PROCUREMENT OPERATION, THE UNITED STATES GOVERNMENT THEREBY INCURS NO RESPONSIBILITY NOR ANY OBLIGATION WHATSOEVER; AND THE FACT THAT THE GOVERNMENT MAY HAVE FORMULATED, FURNISHED, OR IN ANY WAY SUPPLIED THE SAID DRAWINGS, SPECIFICATIONS, OR OTHER DATA IS NOT TO BE REGARDED BY IMPLICATION OR OTHERWISE AS IN ANY MANNER LICENSING THE HOLDER OR ANY OTHER PERSON OR CORPORATION, OR CONVEYING ANY RIGHTS OR PERMISSION TO MANUFACTURE, USE, OR SELL ANY PATENTED INVENTION THAT MAY IN ANY WAY BE RELATED THERETO.

DASH NO.	P/C	PART NAME	REMARKS	PART NUMBER	SER. NO.	CONT. NO.	STYLE	TYPE	MATERIAL	A	B	C	D	E	F	G	H	J	K	L	M
401	MIT	COMPUTER ASSY		2003100		NAS-9-497	A	I	NOTE 11B	2.000	1.312	1.906	1.375	.078	.048	.078	.093	NA	NA	1.125	.750
400	MIT	LIFTING SLING-G&N INST.QUAL.FIX. & AZM.REF.FIX.		1021640		NAS-9-4065	B	II	NOTE 11C	2.000	1.312	1.687	1.375	.078	.048	.078	.093	.086 .081	.093	1.187	.750

NOTES FOR TABLE
STYLE A IS FOR G & N SYSTEM
STYLE B IS FOR GROUND SUPPORT EQUIPMENT
TYPE I IS WITHOUT MOUNTING HOLES
TYPE II IS WITH MOUNTING HOLES

1004260	DC	SHT 5

1/1004260

REVISIONS					
SYM	ZONE	DESCRIPTION	CHG NO	DATE	APPD
CL		REPLACES REV CK WITHOUT CHANGE PER TURR 34365		[illegible]20/67	JWL RWH
CM		REVISION STATUS CHANGED		18 OCT 67	R.A.W.
CN		REVISION STATUS CHANGED		31 OCT 67	JRK
CP		REVISION STATUS CHANGED		6 NOV 67	EMS
CR		REVISION STATUS CHANGED		7 DEC 67	DKF RWH
CS		REVISION STATUS CHANGED		3 JAN 68	EHN
CT		REVISION STATUS CHANGED		7 FEB 68	LK RWH
CU		REVISION STATUS CHANGED		22 FEB 68	JRK
CV		REVISION STATUS CHANGED		27 FEB 68	LK
CW		REVISION STATUS CHANGED		3 APR 68	
CY		REVISION STATUS CHANGED		16 APR 68	A.N. RJP
CZ		REVISION STATUS CHANGED		23 MAY 68	WMY
DA		REVISION STATUS CHANGED		7 JUN 68	WMY
DB		REVISION STATUS CHANGED		12 SEP 68	PWJ
DC		REVISION STATUS CHANGED		16 DEC 68	LK

1004260 DC

75	.078	.048	.078	.093	NA	NA	1.125	.750	.593	.453	1.015	.062	.187	.078	.875	.718	1.375	.218	NA	NA	.048	.031	.875	.305	.078	.531	1.906	.078	NA	.078	.531	.187	NA
75	.078	.048	.078	.093	[illegible]	.093	1.187	.750	.593	.453	1.015	.062	.187	.078	.875	.718	1.375	.218	1.156	1.843	.048	NA	.875	.305	.078	.312	1.687	.110	1.830	.070	.275	.180	1.844
	E	F	G	H	J	K	L	M	N	P	R	S	T	U	V	W	Y	Z	AA	AB	AC	AD	AE	AF	AG	AH	AJ	AK	AL	AM	AN	AP	AR

MIT DASH NUMBERS

1004260

AS APPLICABLE		
NEXT ASSY	USED ON	
APPLICATION		

UNLESS OTHERWISE SPECIFIED
DIMENSIONS ARE IN INCHES
TOLERANCES ON
2 PLACE DECIMALS ±
3 PLACE DECIMALS ± .005
ANGLES ±
DO NOT SCALE THIS DRAWING
MATERIAL SEE NOTE II
APPROVAL

MIT
INSTRUMENTATION LAB
CAMBRIDGE MASS
DRAWN R. A. JONES DATE 16 JUL 65
CHECKED W. KUPFER APPROVAL 22 JUL 65
CONTRACT
T. MICHAELS 22 JUL 65
NASA APPROVAL
W. KUPFER 22 JUL 65
MIT APPROVAL

MANNED
SPACECRAFT CENTER
HOUSTON, TEXAS

NAMEPLATES, APOLLO GEN - GSE (STANDARDS)

SIZE J2
CODE IDENT NO. 80230
1004260
SCALE NONE
SHEET 5 OF 6

1004260	DC	SHT 5

2/1004260

NOTICE — WHEN GOVERNMENT DRAWINGS, SPECIFICATIONS, OR OTHER DATA ARE USED FOR ANY PURPOSE OTHER THAN IN CONNECTION WITH A DEFINITELY RELATED GOVERNMENT PROCUREMENT OPERATION, THE UNITED STATES GOVERNMENT THEREBY INCURS NO RESPONSIBILITY NOR ANY OBLIGATION WHATSOEVER; AND THE FACT THAT THE GOVERNMENT MAY HAVE FORMULATED, FURNISHED, OR IN ANY WAY SUPPLIED THE SAID DRAWINGS, SPECIFICATIONS, OR OTHER DATA IS NOT TO BE REGARDED BY IMPLICATION OR OTHERWISE AS IN ANY MANNER LICENSING THE HOLDER OR ANY OTHER PERSON OR CORPORATION, OR CONVEYING ANY RIGHTS OR PERMISSION TO MANUFACTURE, USE, OR SELL ANY PATENTED INVENTION THAT MAY IN ANY WAY BE RELATED THERETO.

DASH NO.	P/C	PART NAME	REMARKS	PART NUMBER	SER. NO.	CONT. NO.	STYLE	TYPE	MATERIAL	A	B	C	D	E	F	G	H	J	K	L	
599	AC																				
598	AC																				
585		ANALYZER, OPTICS INERTIAL		2900023-051		FOR OTHER DATA SEE DASH 536															
584		ETHYLENE GLYCOL CLEANING KIT		2901630-011		NAS-9-497	B	I	NOTE 11B	FOR DIMENSIONS SEE DASH 4 VALUES BELOW											
583		SWITCH CROSS BAR ASSY		1900048-021		FOR OTHER DATA SEE DASH 102															
582	AC	G & N INDICATOR CONTROL PANEL ASSY		2021290-041		FOR OTHER DATA SEE DASH 181															
581	AC	G & N INDICATOR CONTROL PANEL ASSY		2021323-021		FOR OTHER DATA SEE DASH 181															
580		AUXILIARY BATTERY PACK		1901492-041		FOR OTHER DATA SEE DASH 565															
579	AC	COMPUTER CONT & RETICLE DIMMER		6014512-081		FOR OTHER DATA SEE DASH 534															
578	AC	G&N INDICATOR CONTROL PANEL ASSY		2021290-031		FOR OTHER DATA SEE DASH 181															
577		BREAKOUT BOX, CABLE ADAPTER		2901011-021		FOR OTHER DATA SEE DASH 506															
576		FIX., MOUNTING G&N		2900067-061		FOR OTHER DATA SEE DASH 500															
575		CSL, CAL AND TEST, SCM/PSAAM		2900895-041		FOR DATA SEE DASH 559															
574		CONT., TEMP, PORTABLE		2900060-031		NAS-9-497	B	II	NOTE 11C	FOR DIMENSIONS SEE DASH 535 VALUES											
573		BATTERY PACK LIFTING		2900812-031		NAS-9-497	B	II	NOTE 11C	FOR DIMENSIONS SEE DASH 542 VALUES											
572		FIX., MOUNTING G&N	(-144)	2900067-051		NAS-9-497	B	II	NOTE 11C	FOR DIMENSIONS SEE DASH 500 VALUES											
571		EYEPIECE STORAGE UNIT		2021382		FOR OTHER DATA SEE DASH 100															
570	AC	OPTICAL UNIT & BELLOWS ASSY				NAS-9-497	A	I	NOTE 11B	FOR DIMENSIONS SEE DASH 550 VALUES											
569	AC	G & N INDICATOR CONTROL PANEL ASSY		2021323-011		NAS-9-497	A	I	NOTE 11B	FOR DIMENSIONS SEE DASH 181											
568	AC	G & N INDICATOR CONTROL PANEL ASSY		2021290-021		NAS-9-497	A	I	NOTE 11B	FOR DIMENSIONS SEE DASH 181											
567	AC	G & N INDICATOR CONTROL PANEL ASSY		2021290-011		NAS-9-497	A	I	NOTE 11B	FOR DIMENSIONS SEE DASH 181											
566	AC	COMPUTER CONT & RETICLE DIMMER		6014512-061		NAS-9-497	A	I	NOTE 11B	FOR DIMENSIONS SEE DASH 534											
565		AUXILIARY BATTERY PACK		1901492-031		NAS-9-497	B	II	NOTE 11C	FOR DIMENSIONS SEE DASH 500											
564		BATTERY POWER PACK		1900011-051		NAS-9-497	B	II	NOTE 11C	FOR DIMENSIONS SEE DASH 500											
563		PSA ADAPTER MODULE (LEM)		6900088-031		NAS-9-497	B	II	NOTE 11C	FOR DIMENSIONS SEE DASH 141 VALUES											
562	AC	COMPUTER CONT & RETICLE DIMMER		6014512-041		NAS-9-497	A	I	NOTE 11B	FOR DIMENSIONS SEE DASH 534 VALUES											
561	AC	G & N INDICATOR CONTROL PANEL ASSY		2014578-031		NAS-9-497	A	I	NOTE 11B	FOR DIMENSIONS SEE DASH 181 VALUES											
560		ADPT. MODULE, PSA		2901143-021		NAS-9-497	B	II	NOTE 11C	FOR DIMENSIONS SEE DASH 141 VALUES											
559		CSL. CAL AND TEST. SCM/PSAAM		2900895-031		FOR OTHER DATA SEE DASH 547															
558		PSA ADAPTER MODULE (LEM)		6900088-021		FOR OTHER DATA SEE DASH 189															
557		FIX., HANDLING, C/M PSA		2900998-021		NAS-9-497	B	II	NOTE 11C	FOR DIMENSIONS SEE DASH 141 VALUES											
556		FIX., MOUNTING G & N	(-144)	2900067-041		NAS-9-497	B	II	NOTE 11C	FOR DIMENSIONS SEE DASH 500 VALUES											
555	AC	OPTICAL UNIT ASSEMBLY		1021368-061		NAS-9-497	A	I	NOTE 11B	2.000	1.312	1.687	1.375	.078	.048	.078	.093	NA	NA	1.125	.750
554	AC	OPTICAL UNIT ASSEMBLY		1021368-041		NAS-9-497	A	I	NOTE 11B	2.000	1.312	1.687	1.375	.078	.048	.078	.093	NA	NA	1.125	.750
553	AC	OPTICAL UNIT AND BELLOWS ASSEMBLY		2010790-111		NAS-9-497	A	I	NOTE 11B	2.000	1.312	1.687	1.375	.078	.048	.078	.093	NA	NA	1.125	.750
552	AC	OPTICAL UNIT AND BELLOWS ASSEMBLY		2010790-081		NAS-9-497	A	I	NOTE 11B	2.000	1.312	1.687	1.375	.078	.048	.078	.093	NA	NA	1.125	.750
551	AC	OPTICAL UNIT AND BELLOWS ASSEMBLY		2010790-071		NAS-9-497	A	I	NOTE 11B	2.000	1.312	1.687	1.375	.078	.048	.078	.093	NA	NA	1.125	.750
550	AC	OPTICAL UNIT AND BELLOWS ASSEMBLY		2010790-061		NAS-9-497	A	I	NOTE 11B	2.000	1.312	1.687	1.375	.078	.048	.078	.093	NA	NA	1.125	.750
548		CAGING ELECTRONICS, GYRO		2900029-031		NAS-9-497	B	II	NOTE 11C	2.125	.968	1.718	NA	.093	.031	.06	.093	100 104	.093	.858	.608
547		CSL, CAL AND TEST, SCM/PSAAM		2900895-021		NAS-9-497	B	II	NOTE 11C	4.125	1.812	3.250	NA	.125	.062	.12	.156		.125	1.625	1.140
546		FIX., HAND., C/M AND LEM CDU		2900999-021		NAS-9-497	B	II	NOTE 11C	2.125	.968	1.718	NA	.093	.031	.06	.093	100 104	.093	.858	.608
545	AC	G & N INDICATOR CONTROL PANEL ASSY		2014578-021		NAS-9-497	A	I	NOTE 11B	3.000	1.938	2.437	NA	.125	.062	.188	.156	NA	NA	1.750	1.125
544		ADPT MODULE, P.S.A.		1902431-051		NAS-9-497	B	II	NOTE 11C	2.125	.968	1.718	NA	.093	.031	.06	.093	100 104	.093	.858	.608
543	AC	PANEL, MONITOR		2900031-041		NAS-9-497	B	II	NOTE 11C	2.125	.968	1.718	NA	.093	.031	.06	.093		.093	.858	.608
542	AC	BATTERY PACK, LIFTING		2900812-021		NAS-9-497	B	II	NOTE 11C	2.125	.968	1.718	NA	.093	.031	.06	.093		.093	.858	.60
541	AC	FIXTURE, MOUNTING, IMU		2900000-021		NAS-9-497	B	II	NOTE 11C	4.125	1.812	3.250	NA	.125	.062	.12	.156		.125	1.625	1.14
540	AC	ADPT, TEST POINT, P.S.A.		2900037-031		NAS-9-497	B	II	NOTE 11C	2.125	.968	1.718	NA	.093	.031	.06	.093	100 104	.093	.858	.60
539	AC	ANNUNCIATOR PANEL & EYEPIECE STORAGE ASSEMBLY		1021255-041		NAS-9-497	A	I	NOTE 11B	2.000	1.312	1.906	1.375	.078	.048	.078	.093	NA	NA	1.125	.75
538	AC	ANNUNCIATOR PANEL & EYEPIECE STORAGE ASSEMBLY		1021255-031		NAS-9-497	A	I	NOTE 11B	2.000	1.312	1.906	1.375	.078	.048	.078	.093	NA	NA	1.125	.75
537	AC	TEST SELECTOR		2900028-031		NAS-9-497	B	II	NOTE 11C	2.125	.968	1.718	NA	.093	.031	.06	.093	100 104	.093	.858	.60
536	AC	ANALYZER, OPTICS-INERTIAL		2900023-041		NAS-9-497	B	II	NOTE 11C	4.125	1.812	3.250	NA	.125	.062	.12	.156		.125	1.625	1.14
535	AC	CONT, TEMP, PORTABLE		2900060-021		NAS-9-497	B	II	NOTE 11C	2.125	.968	1.718	NA	.093	.031	.06	.093	100 104	.093	.858	.60
534	AC	COMPUTER CONT & RETICLE DIMMER		6014512-021		NAS-9-497	A	I	NOTE 11B	2.000	1.312	1.906	1.375	.078	.048	.078	.093	NA	NA	1.125	.75
533	AC	ADPT MODULE, P.S.A.		1902431-041		NAS-9-497	B	II	NOTE 11C	2.125	.968	1.718	NA	.093	.031	.06	.093	100 104	.093	.858	.60
532	AC	TRAY BREAKOUT, 105 PIN		1900807-021		NAS-9-497	B	II	NOTE 11C	4.125	1.812	3.250	NA	.125	.062	.12	.156		.125	1.625	1.14
531	AC	TRAY BREAKOUT, 84 PIN		1900806-021		NAS-9-497	B	II	NOTE 11C	4.125	1.812	3.250	NA	.125	.062	.12	.156		.125	1.625	1.14
530	AC	HEAT SINK-TRAY EXTENDER		1900808-021		NAS-9-497	B	II	NOTE 11C	2.125	.968	1.718	NA	.093	.031	.06	.093		.093	.858	.6
529	AC	TESTER, FAILURE INDICATOR		1900809-021		NAS-9-497	B	II	NOTE 11C	2.125	.968	1.718	NA	.093	.031	.06	.093	100 104	.093	.858	.6
527	AC	FIX., MOUNTING, G & N	(-144)	1902204-021		NAS-9-497	B	II	NOTE 11C	FOR DIMENSIONS SEE DASH 500 VALUES BELOW											
526	AC	FIX., MOUNTING, G & N	(-144)	2900067-031		NAS-9-497	B	II	NOTE 11C	FOR DIMENSIONS SEE DASH 500 VALUES BELOW											
525	AC	PORTABLE TEMP. CONTROLLER		1900496-021		NAS-9-497	B	II	NOTE 11C	3.000	1.937	2.437	2.312	.125	.031	.125	.156	.125	.125	1.718	1.1
524	AC	POWER, SERVO & THERMOCOUPLE ASSEMBLY C/M		2010743		NAS-9-497	A	I	NOTE 11B	2.125	.968	1.718	NA	.093	.031	.06	.093	NA	NA	.858	.6
523	AC	PULSE TORQUE AND THERMOCOUPLE ASSEMBLY-LEM		6010656		NAS-9-497	A	I	NOTE 11B	FOR DIMENSIONS SEE DASH 508 VALUES BELOW											
522	AC	COUPLING DATA UNIT & THERMOCOUPLE ASSEMBLY-LEM		2010744		NAS-9-497	A	I	NOTE 11B	FOR DIMENSIONS SEE DASH 508 VALUES BELOW											
521	AC	COUPLING DATA UNIT & THERMOCOUPLE ASSEMBLY-C/M		2010744		NAS-9-497	A	I	NOTE 11B	FOR DIMENSIONS SEE DASH 508 VALUES BELOW											
520	AC	PIPA ELECTRONICS AND THERMOCOUPLE ASSEMBLY		2010745		NAS-9-497	A	I	NOTE 11B	FOR DIMENSIONS SEE DASH 508 VALUES BELOW											
519	AC	FIXTURE, HANDLING, LEM-PSA	(-141)	6900129-011		NAS-9-497	B	II	NOTE 11C	FOR DIMENSIONS SEE DASH 504 VALUES BELOW											
518	AC	JUNCTION BOX, GSE-PSA	(-144)	1901933-031		NAS-9-497	B	II	NOTE 11C	FOR DIMENSIONS SEE DASH 500 VALUES BELOW											
517	AC	FIX., HAND., OPTICS INSTL.	(-141)	2901380-011		NAS-9-497	B	II	NOTE 11C	FOR DIMENSIONS SEE DASH 502 VALUES BELOW											
516	AC	POWER, SERVO AND THERMOCOUPLE ASSEMBLY-LEM		6010655		NAS-9-497	A	I	NOTE 11B	FOR DIMENSIONS SEE DASH 508 VALUES BELOW											
514	AC	SIGNAL COND. ASSY LEM OPER.	(-100)	6007013		NAS-9-497	A	I	NOTE 11B	FOR DIMENSIONS SEE DASH 508 VALUES BELOW											
513	AC	JUMPER, BY-PASS	(-141)	1021616		NAS-9-497	B	II	NOTE 11C	2.125	.968	1.718	NA	.093	.031	.06	.093	100 104	.093	.858	
512	AC	COUPLING DATA UNIT ASSEMBLY C/M	(-100)	2007322-011		NAS-9-497	A	I	NOTE 11B	FOR DIMENSIONS SEE DASH 508 VALUES BELOW											
511	AC	COUPLING DATA UNIT ASSEMBLY-LEM	(-100)	2007322-021		NAS-9-497	A	I	NOTE 11B	FOR DIMENSIONS SEE DASH 508 VALUES BELOW											
510	AC	BATTERY POWER PACK	(-144)	1900011-041		NAS-9-497	B	II	NOTE 11C	FOR DIMENSIONS SEE DASH 500 VALUES BELOW											
509	AC	JUNCTION BOX, P.S.A./G.S.E.	(-144)	1902195-021		NAS-9-497	B	II	NOTE 11C	FOR DIMENSIONS SEE DASH 500 VALUES BELOW											
508	AC	NAVIGATION BASE ASSEMBLY-LEM	(-101)	6899980		NAS-9-497	A	I	NOTE 11B	2.000	1.312	1.906	1.375	.078	.048	.078	.093	NA	NA	1.125	
507	AC	CSL, COOL. AND PWR, G AND N	(-144)	1902134-041		NAS-9-497	B	II	NOTE 11C	FOR DIMENSIONS SEE DASH 500 VALUES BELOW											
506	AC	BREAKOUT BOX, CABLE ADAPTER	(-141)	2901011-011		NAS-9-497	B	II	NOTE 11C	2.125	.968	1.718	NA	.093	.031	.06	.093	100 104	.093	.858	
505	AC	MONITOR AND CONTROL, TEMP	(-141)	2900026-021		NAS-9-497	B	II	NOTE 11C	2.125	.968	1.718	NA	.093	.031	.06	.093		.093	.858	
504	AC	PWR SUP, GUIDANCE SYSTEM	(-141)	1900033-021		NAS-9-497	B	II	NOTE 11C	2.125	.968	1.718	NA	.093	.031	.06	.093		.093	.858	
503	AC	CONTROL, GIMBAL POSITION	(-141)	2900036-021		NAS-9-497	B	II	NOTE 11C	2.125	.968	1.718	NA	.093	.031	.06	.093		.093	.858	
502	AC	ADPT, TEST POINT, PTA/PEA.	(-141)	2900145-021		NAS-9-497	B	II	NOTE 11C	2.125	.968	1.718	NA	.093	.031	.06	.093	100 104	.093	.858	
501	AC	MOUNTING PLATE, COMPONENT	(-144)	6900007-031		NAS-9-497	B	II	NOTE 11C	FOR DIMENSIONS SEE DASH 500 VALUES BELOW											
500	AC	MOUNTING PLATE, COMPONENT	(-144)	2900677-021		NAS-9-497	B	II	NOTE 11C	4.125	1.812	3.250	NA	.125	.062	.12	.156	100 104	.125	1.625	

NOTES FOR TABLE

STYLE A IS FOR G & N SYSTEM
STYLE B IS FOR GROUND SUPPORT EQUIPMENT
TYPE I IS WITHOUT MOUNTING HOLES
TYPE II IS WITH MOUNTING HOLES

1004260	DC	SHT 6

REVISIONS					
SYM	ZONE	DESCRIPTION	CHG NO	DATE	APPD
CL		REPLACES REV CK WITH CHANGE PER TDRR 34365		9/28/67	JWL RWH
CM		REVISED PER TDRR 34395		17 OCT. 67	R.A.W.
CN		REVISED PER TDRR 34467		31 OCT 67	JRK
CP		REVISED PER TDRR 34855		6 NOV 67	EMS
CR		REVISED PER TDRR 35164		7 DEC 67	DWD RWH
CS		REVISED PER TDRR 35307		3 JAN 68	J.W EHW
CT		REVISION STATUS CHANGED		7 FEB 68	LK
CU		REVISED PER TDRR 35628		22 FEB 68	JRK
CV		REVISED PER TDRR 35675		27 FEB 68	LK
CW		REVISED PER TDRR 35970		3 APR 68	
CY		REVISION STATUS CHANGED		16 APR 68	A.N.
CZ		REVISED PER TDRR 36245		23 MAY 68	WTY
DA		REVISED PER TDRR 36324		17 JUN 68	WTY
DB		REVISED PER TDRR 36742		12 SEP 68	
DC		REVISED PER TDRR 37114		16 DEC 68	LK

SEE DASH 4 VALUES BELOW																																	
SEE DASH 535 VALUES																																	
SEE DASH 542 VALUES																																	
SEE DASH 500 VALUES																																	
SEE DASH 550 VALUES																																	
SEE DASH 181																																	
SEE DASH 181																																	
SEE DASH 181																																	
SEE DASH 534																																	
SEE DASH 500																																	
SEE DASH 500																																	
SEE DASH 141 VALUES																																	
SEE DASH 534 VALUES																																	
SEE DASH 191 VALUES																																	
SEE DASH 141 VALUES																																	
SEE DASH 141 VALUES																																	
SEE DASH 500 VALUES																																	
.375	.078	.048	.078	.093	NA	NA	1.125	.750	.593	.453	1.015	.062	.187	.078	.875	.718	1.375	.218	NA	NA	.048	.031	.875	.305	NA	.468	1.531	NA	NA	.078	.312	.187	NA
.375	.078	.048	.078	.093	NA	NA	1.125	.750	.593	.453	1.015	.062	.187	.078	.875	.718	1.375	.218	NA	NA	.048	.031	.875	.305	NA	.468	1.531	NA	NA	.078	.312	.187	NA
.375	.078	.048	.078	.093	NA	NA	1.125	.750	.593	.453	1.015	.062	.187	.078	.875	.718	1.375	.218	NA	NA	.048	.031	.875	.305	NA	.468	1.531	NA	NA	.078	.312	.187	NA
.375	.078	.048	.078	.093	NA	NA	1.125	.750	.593	.453	1.015	.062	.187	.078	.875	.718	1.375	.218	NA	NA	.048	.031	.875	.305	NA	.468	1.531	NA	NA	.078	.312	.187	NA
.375	.078	.048	.078	.093	NA	NA	1.125	.750	.593	.453	1.015	.062	.187	.078	.875	.718	1.375	.218	NA	NA	.048	.031	.875	.305	NA	.468	1.531	NA	NA	.078	.312	.187	NA
.375	.078	.048	.078	.093	NA	NA	1.125	.750	.593	.453	1.015	.062	.187	.078	.875	.718	1.375	.218	NA	NA	.048	.031	.875	.305	NA	.468	1.531	NA	NA	.078	.312	.187	NA
NA	.093	.031	.06	.093	100 104	.093	.858	.608	.484	.358	.733	.077	.116	.062	.937	.875	1.343	.125	.781	1.892	.046	NA	NA	.209	.093	.250	1.875	NA	1.840	.046	.23	.16	1.938
NA	.125	.062	.12	.156		.125	1.625	1.140	.890	.640	1.390	.125	.171	.125	1.875	1.687	2.625	.250	1.562	3.843	.093	NA	NA	.359	.125	.437	3.688	NA	3.687	.093	.40	.25	3.875
NA	.093	.031	.06	.093	100 104	.093	.858	.608	.484	.358	.733	.077	.116	.062	.937	.875	1.343	.125	.781	1.892	.046	NA	NA	.209	.093	.250	1.875	NA	1.840	.046	.23	.16	1.938
NA	.125	.062	.188	.156	NA	NA	1.750	1.125	.906	.688	1.500	NA	.281	.125	NA	1.094	2.062	.312	NA	2.500	.062	.125	1.312	.469	NA	NA	NA	.156	NA	.125	.469	.344	NA
NA	.093	.031	.06	.093	100 104	.093	.858	.608	.484	.358	.733	.077	.116	.062	.937	.875	1.343	.125	.781	1.892	.046	NA	NA	.209	.093	.250	1.875	NA	1.840	.046	.23	.16	1.938
NA	.093	.031	.06	.093		.093	.858	.608	.484	.358	.733	.077	.116	.062	.937	.875	1.343	.125	.781	1.892	.046	NA	NA	.209	.093	.250	1.875	NA	1.840	.046	.23	.25	1.938
NA	.093	.031	.06	.093		.093	.858	.608	.484	.358	.733	.077	.116	.062	.937	.875	1.343	.125	.781	1.892	.046	NA	NA	.209	.093	.250	1.875	NA	1.840	.046	.23	.16	1.938
NA	.125	.062	.12	.156		.125	1.625	1.140	.890	.640	1.390	.125	.171	.125	1.875	1.687	2.625	.250	1.562	3.843	.093	NA	NA	.359	.125	.437	3.688	NA	3.687	.093	.40	.25	3.875
NA	.093	.031	.06	.093	100 104	.093	.858	.608	.484	.358	.733	.077	.116	.062	.937	.875	1.343	.125	.781	1.892	.046	NA	NA	.209	.093	.250	1.875	NA	1.840	.046	.23	.16	1.938
.375	.078	.048	.078	.093	NA	NA	1.125	.750	.593	.453	1.015	.062	.187	.078	.875	.718	1.375	.218	NA	NA	.048	.031	.875	.305	.078	.531	1.906	.078	NA	.078	.531	.187	NA
.375	.078	.048	.078	.093	NA	NA	1.125	.750	.593	.453	1.015	.062	.187	.078	.875	.718	1.375	.218	NA	NA	.048	.031	.875	.305	.078	.531	1.906	.078	NA	.078	.531	.187	NA
NA	.093	.031	.06	.093	100 104	.093	.858	.608	.484	.358	.733	.077	.116	.062	.937	.875	1.343	.125	.781	1.892	.046	NA	NA	.209	.093	.250	1.875	NA	1.840	.046	.23	.16	1.938
NA	.125	.062	.12	.156		.125	1.625	1.140	.890	.640	1.390	.125	.171	.125	1.875	1.687	2.625	.250	1.562	3.843	.093	NA	NA	.359	.125	.437	3.688	NA	3.687	.093	.40	.25	3.875
NA	.093	.031	.06	.093	100 104	.093	.858	.608	.484	.358	.733	.077	.116	.062	.937	.875	1.343	.125	.781	1.892	.046	NA	NA	.209	.093	.250	1.875	NA	1.840	.046	.23	.16	1.938
.375	.078	.048	.078	.093	NA	NA	1.125	.750	.593	.453	1.015	.062	.187	.078	.875	.718	1.375	.218	NA	NA	.048	.031	.875	.305	.078	.531	1.906	.078	NA	.078	.531	.187	NA
NA	.093	.031	.06	.093	100 104	.093	.858	.608	.484	.358	.733	.077	.116	.062	.937	.875	1.343	.125	.781	1.892	.046	NA	NA	.209	.093	.250	1.875	NA	1.840	.046	.23	.16	1.938
NA	.125	.062	.12	.156		.125	1.625	1.140	.890	.640	1.390	.125	.171	.125	1.875	1.687	2.625	.250	1.562	3.843	.093	NA	NA	.359	.125	.437	3.688	NA	3.687	.093	.40	.25	3.875
NA	.125	.062	.12	.156		.125	1.625	1.140	.890	.640	1.390	.125	.171	.125	1.875	1.687	2.625	.250	1.562	3.843	.093	NA	NA	.359	.125	.437	3.688	NA	3.687	.093	.40	.25	3.875
NA	.093	.031	.06	.093		.093	.858	.608	.484	.358	.733	.077	.116	.062	.937	.875	1.343	.125	.781	1.892	.046	NA	NA	.209	.093	.250	1.875	NA	1.840	.046	.23	.16	1.938
NA	.093	.031	.06	.093	100 104	.093	.858	.608	.484	.358	.733	.077	.116	.062	.937	.875	1.343	.125	.781	1.892	.046	NA	NA	.209	.093	.250	1.875	NA	1.840	.046	.23	.16	1.938
SEE DASH 500 VALUES BELOW																																	
SEE DASH 500 VALUES BELOW																																	
2.312	.125	.03	.125	.156	.125	.125	1.718	1.187	.968	.749	1.452	.093	.295	.090	1.312	1.00	2.000	.250	1.687	2.750	.062	NA	NA	.463	.125	.562	2.437	.140	2.562	.090	.468	.359	2.750
NA	.093	.03	.06	.093	NA	NA	.858	.608	.484	.358	.733	.062	.140	.062	NA	.968	1.450	.125	NA	1.720	.046	.03	NA	.210	NA	NA	NA	.070	NA	.046	.32	.16	NA
SEE DASH 508 VALUES BELOW																																	
SEE DASH 508 VALUES BELOW																																	
SEE DASH 508 VALUES BELOW																																	
SEE DASH 508 VALUES BELOW																																	
SEE DASH 504 VALUES BELOW																																	
SEE DASH 500 VALUES BELOW																																	
SEE DASH 502 VALUES BELOW																																	
SEE DASH 509 VALUES BELOW																																	
SEE DASH 508 VALUES BELOW																																	
NA	.093	.03	.06	.093	100 104	.093	.858	.608	.484	.358	.733	.077	.116	.062	.937	.875	1.343	.125	.781	1.892	.046	NA	NA	.209	.093	.250	1.875	NA	1.840	.046	.23	.16	1.938
SEE DASH 508 VALUES BELOW																																	
SEE DASH 508 VALUES BELOW																																	
SEE DASH 500 VALUES BELOW																																	
SEE DASH 500 VALUES BELOW																																	
.375	.078	.048	.078	.093	NA	NA	1.125	.750	.593	.453	1.015	.062	.187	.078	.875	.718	1.375	.218	NA	NA	.048	.031	.875	.305	.078	.531	1.906	.078	NA	.078	.531	.187	NA
SEE DASH 500 VALUES BELOW																																	
NA	.093	.031	.06	.093	100 104	.093	.858	.608	.484	.358	.733	.077	.116	.062	.937	.875	1.343	.125	.781	1.892	.046	NA	NA	.209	.093	.250	1.875	NA	1.840	.046	.23	.16	1.938
NA	.093	.031	.06	.093		.093	.858	.608	.484	.358	.733	.077	.116	.062	.937	.875	1.343	.125	.781	1.892	.046	NA	NA	.209	.093	.250	1.875	NA	1.840	.046	.23	.16	1.938
NA	.093	.031	.06	.093		.093	.858	.608	.484	.358	.733	.077	.116	.062	.937	.875	1.343	.125	.781	1.892	.046	NA	NA	.209	.093	.250	1.875	NA	1.840	.046	.23	.16	1.938
NA	.093	.031	.06	.093		.093	.858	.608	.484	.358	.733	.077	.116	.062	.937	.875	1.343	.125	.781	1.892	.046	NA	NA	.209	.093	.250	1.875	NA	1.840	.046	.23	.16	1.938
NA	.093	.031	.06	.093	100 104	.093	.858	.608	.484	.358	.733	.077	.116	.062	.937	.875	1.343	.125	.781	1.892	.046	NA	NA	.209	.093	.250	1.875	NA	1.840	.046	.23	.16	1.938
SEE DASH 500 VALUES BELOW																																	
NA	.125	.062	.12	.156	100 104	.125	1.625	1.140	.890	.640	1.390	.125	.171	.125	1.875	1.687	2.625	.250	1.562	3.843	.093	NA	NA	.359	.125	.437	3.688	NA	3.687	.093	.40	.25	3.875
D	E	F	G	H	J	K	L	M	N	P	R	S	T	U	V	W	Y	Z	AA	AB	AC	AD	AE	AF	AG	AH	AJ	AK	AL	AM	AN	AP	AR

AC ELECTRONICS DASH NUMBERS

	UNLESS OTHERWISE SPECIFIED DIMENSIONS ARE IN INCHES TOLERANCES ON 2 PLACE DECIMALS ± 3 PLACE DECIMALS ± .005 ANGLES ±	MIT INSTRUMENTATION LAB CAMBRIDGE, MASS DWG NO / CONTRACT	MANNED SPACECRAFT CENTER HOUSTON, TEXAS	
		R. A. JONES DRAWN 16 JUL 65 DATE CHECKED W. KUPFER APPROVAL 22 JUL 65 CONTRACT	NAMEPLATES, APOLLO G&N - GSE (STANDARDS)	
	DO NOT SCALE THIS DRAWING			
AS APPLICABLE	MATERIAL SEE NOTE 11	T. MICHAELS 22 JUL 65 NASA APPROVAL	SIZE J2	CODE IDENT NO. 80230 — 1004260
NEXT ASSY / USED ON APPLICATION	APPROVAL	W. KUPFER 22 JUL 65 MIT APPROVAL	SCALE NONE	SHEET 6 OF 6

NOTICE — [illegible]

NOTES:

1. INTERPRET DRAWING IN ACCORDANCE WITH STANDARDS PRESCRIBED BY MIL-D-70327.
2. DIMENSIONS ON EACH VIEW APPLY TO ALL VIEWS (WITH THE EXCEPTION OF MOUNTING HOLES).
3. FORMATS ILLUSTRATED WILL BE APPLICABLE TO ALL ITEMS REQUIRING NAMEPLATES BELOW END ITEM DESIGNATION (SYSTEMS, ASSEMBLIES, ETC.)
4. PLATE BACKGROUND TO BE LUSTERLESS BLACK PER FED-STD-595, COLOR 37038. BORDER, MARKING AND LETTERING TO BE NATURAL METAL, (ANODIZED ALUMINUM).
5. MARKING METHOD TO BE DIE STAMPING, ETCHING OR ENGRAVING IN ACCORDANCE WITH MIL-P-19834.
6. LETTERING STYLE TO BE GOTHIC, (SANS SERIFS), AND NUMBERS TO BE ARABIC.
7. WHERE LOCATING DIMENSIONS ARE NOT SHOWN, CHARACTERS SHALL BE SYMMETRICALLY POSITIONED.
8. IDENTIFY WITH DRAWING NUMBER PER ND 1002019.
9. WHEN "AUTO MARK" METAL MARKING TYPEWRITER IS USED TO ADD DATA TO BLANK SPACES, TYPE SIZE IS TO BE SELECTED FROM DIMENSIONS U, AC, AND AM.
10. NASA SYMBOL IS TO BE PROPORTIONAL TO NAMEPLATE IN RATIO OF 1 TO 5 WITH DIMENSION A VALUE AND IS TO HAVE NATURAL BACKGROUND. NASA SYMBOL LETTERS LETTERING AND FEATHER TO BE BLACK, (OR WHITE FOR SILK SCREENING). WHERE BLACK FEATHER PROTRUDES INTO BLACK BACKGROUND, A MINIMUM OUTLINE OF NATURAL BACKGROUND SHALL EXIST.
11. NAMEPLATES WILL BE APPLIED BY METHODS LISTED BELOW, SHOWN IN ORDER OF PREFERENCE, (I.E., FOR RELIABILITY AND WEIGHT).
    - A - STENCIL OR SILK SCREEN DIRECTLY ON EQUIPMENT USING INK PER SCD 1010920, (WHITE OR BLACK).
    - B - ALUMINUM FOIL, (STYLE A OR B, TYPE I):
      FOIL SHALL BE .0030 ± .0005 THICK PER MIL-A-148.
      FOIL SHALL HAVE NO ADHESIVE BACKING.
      FOIL SHALL BE BONDED PER ND 1002219, (METHOD II).
      FOIL SHALL BE CLEAR ANODIZED PER MIL-A-8625, TYPE II.
    - C - PLATE, (STYLE A OR B, TYPE II):
      MATERIAL: QQ-A-250, TEMPER 0 OR H14, TYPE 1100, ALUMINUM ALLOY, .032 THICK. ANODIZE PER MIL-A-8625, TYPE II.
      ALUMINUM PLATE MUST BE FREE FROM BURRS AND SHARP CORNERS, MOUNTED WITH APPLICABLE SIZE FASTENERS.
12. NAMEPLATES SHALL BE CAPABLE OF MEETING APPLICABLE REQUIREMENTS OF MIL-M-13231.
13. ON DIMENSION TABLES SHOWN ON PAGES 2, 3, 4, 5, AND 6, NA MEANS, "NOT APPLICABLE".

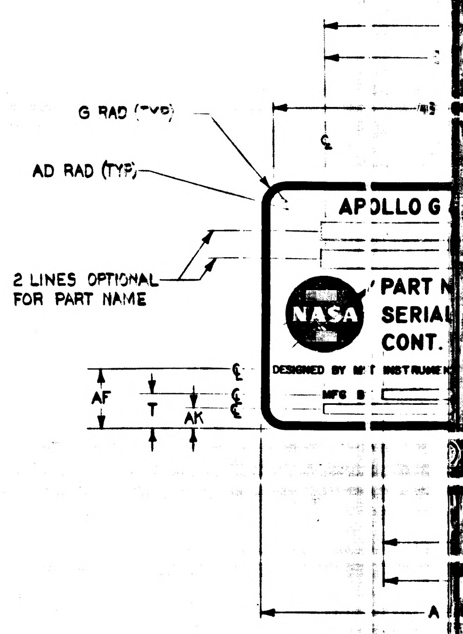

APOLLO GROUND S
NASA
PART
SERIA
CONT.
TECH. SUPERVISION - MIT IN
DESIGN & MFG
WITHOUT

SUGGESTED PROPORTIONS FOR NAMEPLATE DIMENSIONS.
1. SELECT NAMEPLATE LENGTH, DIMENSION "A", TO FIT DESIGN NEEDS.
2. DIMENSIONS B THRU AS ON LINE 1 BELOW ARE PROPORTIONAL TO "A" BY MULTIPLIERS SHOWN IN LINE 2 BELOW.

1.	A	B	C	D	E	F	G	H	J	K	L	M	N	P	R	S	T	U	V	W	Y
2.	1.000A	.6563A	.8438A	.6875A	.0391A	.0240A	.0391A	.0469A	.0547A	.0469A	.5938A	.3750A	.2969A	.2187A	.5079A	.0313A	.0938A	.0391A	.4375A	.3594A	.6875A

1.	Z	AA	AB	AC	AD	AE	AF	AG	AH	AJ	AK	AL	AM	AN	AP	AR	AS
2.	.1094A	.5781A	.9219A	.0240A	.0156A	.4375A	.1525A	.0391A	.1563A	.8438A	.0548A	.8659A	.0391A	.1563A	.0938A	.9219A	.0151A

REVISIONS					
SYM	ZONE	DESCRIPTION	CHG NO	DATE	APPD
CL		REPLACES REV CK WITHOUT CHANGE PER TDRR 34365		9/28/67	JWL RWH
CM		REVISION STATUS CHANGED		18 OCT. 67	R.A.W.
CN		REVISION STATUS CHANGED		31 OCT 67	JRK
CP		REVISION STATUS CHANGED		6 NOV 67	EMS
CR		REVISION STATUS CHANGED		7 DEC 67	DKD
CS		REVISION STATUS CHANGED		3 JAN 68	J.W.
CT		REVISION STATUS CHANGED		7 FEB 68	LK
CU		REVISION STATUS CHANGED		22 FEB 68	JRK
CV		REVISION STATUS CHANGED		27 FEB 68	LK
CW		REVISION STATUS CHANGED		[illegible] 68	[illegible]
CY		REVISION STATUS CHANGED		[illegible] 68	[illegible]
CZ		REVISION STATUS CHANGED		22 [illegible] 68	[illegible]
DA		REVISION STATUS CHANGED		[illegible] 68	[illegible]
DB		REVISION STATUS CHANGED		[illegible]	[illegible]
DC		REVISION STATUS CHANGED		16 DEC 68	LK
DD		REVISION STATUS CHANGED		30 DEC 68	[illegible]

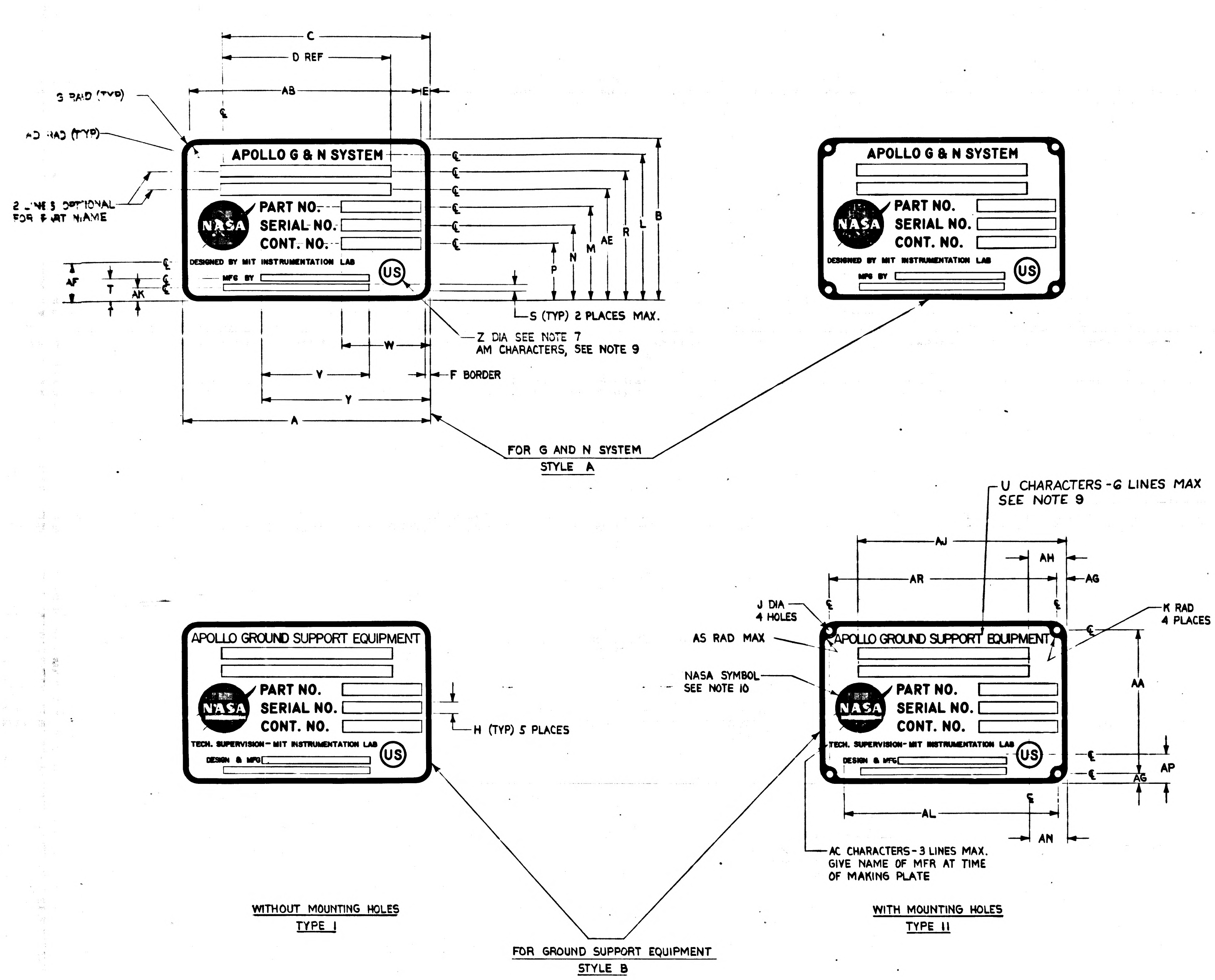

C
D REF
AB
E
S RAD (TYP)
AD RAD (TYP)
2 LINES OPTIONAL FOR PART NAME
APOLLO G & N SYSTEM
NASA
PART NO.
SERIAL NO.
CONT. NO.
DESIGNED BY MIT INSTRUMENTATION LAB
MFG BY
US
AF
T
AK
P
N
M
AE
L
B
S (TYP) 2 PLACES MAX.
Z DIA SEE NOTE 7
AM CHARACTERS, SEE NOTE 9
W
V
Y
F BORDER
A
FOR G AND N SYSTEM
STYLE A
U CHARACTERS -6 LINES MAX
SEE NOTE 9
AJ
AH
AR
AG
J DIA
4 HOLES
K RAD
4 PLACES
AS RAD MAX
NASA SYMBOL
SEE NOTE 10
APOLLO GROUND SUPPORT EQUIPMENT
TECH. SUPERVISION - MIT INSTRUMENTATION LAB
DESIGN & MFG
H (TYP) 5 PLACES
AA
AP
AL
AN
AC CHARACTERS - 3 LINES MAX.
GIVE NAME OF MFR AT TIME
OF MAKING PLATE
WITHOUT MOUNTING HOLES
TYPE I
WITH MOUNTING HOLES
TYPE II
FOR GROUND SUPPORT EQUIPMENT
STYLE B

AS APPLICABLE	
NEXT ASSY	USED ON
APPLICATION	

UNLESS OTHERWISE SPECIFIED
DIMENSIONS ARE IN INCHES
TOLERANCES ON
2 PLACE DECIMALS ±
3 PLACE DECIMALS ± .005
ANGLES ±
DO NOT SCALE THIS DRAWING
MATERIAL SEE NOTE 11
APPROVAL

MIT
INSTRUMENTATION LAB
CAMBRIDGE MASS
DWG NO
CONTRACT
DRAWN R.A. JONES DATE 16 JUL 65
CHECKED
APPROVAL W. KUPFER 22 JUL 65
CONTRACT
NASA APPROVAL T. MICHAELS 22 JUL 65
MIT APPROVAL W. KUPFER 22 JUL 65

MANNED
SPACECRAFT CENTER
HOUSTON, TEXAS

NAMEPLATES, APOLLO G&N - GSE (STANDARDS)

SIZE J2
CODE IDENT NO. 80230
1004260
SCALE NONE
SHEET OF 6

1004260 DD SHT 1

1004260 SHEET 1 OF 6

27 1004260

NOTICE — WHEN GOVERNMENT DRAWINGS, SPECIFICATIONS, OR OTHER DATA ARE USED FOR ANY PURPOSE OTHER THAN IN CONNECTION WITH A DEFINITELY RELATED GOVERNMENT PROCUREMENT OPERATION, THE UNITED STATES GOVERNMENT THEREBY INCURS NO RESPONSIBILITY NOR ANY OBLIGATION WHATSOEVER; AND THE FACT THAT THE GOVERNMENT MAY HAVE FORMULATED, FURNISHED, OR IN ANY WAY SUPPLIED THE SAID DRAWINGS, SPECIFICATIONS, OR OTHER DATA IS NOT TO BE REGARDED BY IMPLICATION OR OTHERWISE AS IN ANY MANNER LICENSING THE HOLDER OR ANY OTHER PERSON OR CORPORATION, OR CONVEYING ANY RIGHTS OR PERMISSION TO MANUFACTURE, USE, OR SELL ANY PATENTED INVENTION THAT MAY IN ANY WAY BE RELATED THERETO.

DASH NO.	P/C	PART NAME	REMARKS	PART NUMBER	SER. NO.	CONT. NO.	STYLE	TYPE	MATERIAL	A	B	C	D	E	F	G	H	J	K	L	M	N
399	K																					
398	K																					
350	K	ALIGNMENT OPTICAL TELESCOPE (LEM)		NA	NA	NA	A	I	NOTE 11B	4.000	2.625	3.375	2.750	.156	.093	.156	.187	NA	NA	2.312	1.468	1.187
309	K																					
308	K																					
307	K						B	I	NOTE 11B	4.000	2.625	3.375	2.750	.156	.093	.156	.187	NA	NA	2.328	1.468	1.18
306	K						B	II	NOTE 11C	4.000	2.625	3.375	2.750	.156	.093	.156	.187	.125	.156	2.328	1.468	1.18
305	K						B	I	NOTE 11B	2.000	1.312	1.687	1.375	.078	.048	.078	.093	NA	NA	1.164	.734	.59
304	K						B	II	NOTE 11C	2.000	1.312	1.687	1.375	.078	.048	.078	.093	.070	.078	1.164	.734	.59
303	K																					
302	K																					
301	K																					
300	K	OPTICAL UNIT		NA	NA	NA	A	I	NOTE 11B	2.000	1.312	1.675	NA	NA	.048	.078	NA	NA	NA	1.090	.812	.67
9	K	2 IN AUTOCOLLIMATOR		1001702			B	II	NOTE 11C	4.000	2.625	3.812	2.750	.156	.093	.156	.187	.125	.156	2.250	1.500	1.18
8	K	5 IN AUTOCOLLIMATOR		1017410			B	II	NOTE 11C	4.000	2.625	3.812	2.750	.156	.093	.156	.187	.125	.156	2.250	1.500	1.18
7	K	2-1/2 IN AUTOCOLLIMATOR (SCT)		1017435			B	II	NOTE 11C	4.000	2.625	3.812	2.750	.156	.093	.156	.187	.125	.156	2.250	1.500	1.18
6	K	2-1/2 IN AUTOCOLLIMATOR (SXT)		1017448			B	II	NOTE 11C	4.000	2.625	3.812	2.750	.156	.093	.156	.187	.125	.156	2.250	1.500	1.18
5	K	RETROREFLECTING PRISM ASSEMBLY		1019840			B	I	NOTE 11B	4.000	2.625	3.812	2.750	.156	.093	.156	.187	NA	NA	2.250	1.500	1.187
4	K	S/H SIMULATOR ASSEMBLY		1019896			B	I	NOTE 11B	4.000	2.625	3.812	2.750	.156	.093	.156	.187	NA	NA	2.250	1.500	1.187
3	K	REFERENCE MIRROR		1001767			B	I	NOTE 11B	2.000	1.312	1.906	1.375	.078	.048	.078	.093	NA	NA	1.125	.750	.59
2	K	2 IN PLANE READING AUTOCOLLIMATOR		1017413			B	I	NOTE 11B	2.000	1.312	1.906	1.375	.078	.048	.078	.093	NA	NA	1.125	.750	.59
1	K	2 IN AUTOCOLLIMATOR		1001702			B	I	NOTE 11B	2.000	1.312	1.906	1.375	.078	.048	.078	.093	NA	NA	1.125	.750	.59

NOTES FOR TABLE

STYLE A IS FOR G & N SYSTEM
STYLE B IS FOR GROUND SUPPORT EQUIPMENT
TYPE I IS WITHOUT MOUNTING HOLES
TYPE II IS WITH MOUNTING HOLES

1004260	DD	SHT 2

SYM	ZONE	DESCRIPTION	CHG NO	DATE	APPD
CL		REPLACES REV CK WITHOUT CHANGE PER TDRR 34365		9/28/67	JWL RWH
CM		REVISION STATUS CHANGED		18 OCT 67	R.A.W.
CN		REVISION STATUS CHANGED		31 OCT 67	JRK
CP		REVISION STATUS CHANGED		6 NOV 67	EMS
CR		REVISION STATUS CHANGED		7 DEC 67	OKA RWH
CS		REVISION STATUS CHANGED		3 JAN 68	J.W. EHW
CT		REVISION STATUS CHANGED		7 FEB 68	LK RWH
CU		REVISION STATUS CHANGED		22 FEB 68	JRK
CV		REVISION STATUS CHANGED		27 FEB 68	LK
CW		REVISION STATUS CHANGED		3 APR 68	
CY		REVISION STATUS CHANGED		16 APR 68	A.N.
CZ		REVISION STATUS CHANGED		23 MAY 68	
DA		REVISION STATUS CHANGED		17 JUN 68	
DB		REVISION STATUS CHANGED		12 SEP 68	
DC		REVISION STATUS CHANGED		16 DEC 68	LK
DD		REVISION STATUS CHANGED		30 DEC 68	

	E	F	G	H	J	K	L	M	N	P	R	S	T	U	V	W	Y	Z	AA	AB	AC	AD	AE	AF	AG	AH	AJ	AK	AL	AM	AN	AP	AR
30	.156	.093	.156	.187	NA	NA	2.312	1.468	1.187	.906	2.031	NA	.375	.156	NA	1.437	2.750	.437	NA	3.688	.062	.062	1.750	.593	NA	.625	3.375	.187	NA	.156	.531	.453	NA
50	.156	.093	.156	.187	NA	NA	2.328	1.468	1.187	.906	2.031	.062	.375	.156	NA	1.437	2.750	.437	NA	3.687	.062	.062	1.750	.593	NA	NA	NA	NA	NA	NA	NA	NA	NA
50	.156	.093	.156	.187	.125	.156	2.328	1.468	1.187	.906	2.031	.062	.375	.156	NA	1.437	2.750	.437	2.312	3.687	.062	NA	1.750	.593	NA	NA	NA	NA	NA	NA	NA	NA	NA
75	.078	.048	.078	.093	NA	NA	1.164	.734	.593	.453	1.015	.048	.171	.078	NA	.718	1.375	.187	NA	NA	.048	.031	.875	.320	NA	NA	NA	NA	NA	NA	NA	NA	NA
75	.078	.048	.078	.093	.070	.078	1.164	.734	.593	.453	1.015	.048	.171	.078	NA	.718	1.375	.187	.156	1.843	.048	NA	.875	.320	NA	NA	NA	NA	NA	NA	NA	NA	NA
	NA	.048	.078	NA	NA	NA	1.090	.812	.675	.540	.940	NA	.265	NA	NA	NA	1.375	.218	NA	NA	NA	NA	NA	.375	NA	NA	NA	.180	NA	.078	NA	NA	NA
50	.156	.093	.156	.187	.125	.156	2.250	1.500	1.187	.906	2.031	.093	.375	.156	1.750	1.437	2.750	.437	2.312	3.687	.062	NA	1.750	.593	.156	1.062	3.812	.156	NA	.156	1.062	.375	3.687
50	.156	.093	.156	.187	.125	.156	2.250	1.500	1.187	.906	2.031	.093	.375	.156	1.750	1.437	2.750	.437	2.312	3.687	.062	NA	1.750	.593	.156	1.062	3.812	.156	NA	.156	1.062	.375	3.687
50	.156	.093	.156	.187	.125	.156	2.250	1.500	1.187	.906	2.031	.093	.375	.156	1.750	1.437	2.750	.437	2.312	3.687	.062	NA	1.750	.593	.156	1.062	3.812	.156	NA	.156	1.062	.375	3.687
50	.156	.093	.156	.187	.125	.156	2.250	1.500	1.187	.906	2.031	.093	.375	.156	1.750	1.437	2.750	.437	2.312	3.687	.062	NA	1.750	.593	.156	1.062	3.812	.156	NA	.156	1.062	.375	3.687
[illegible]	.156	.093	.156	.187	NA	NA	2.250	1.500	1.187	.906	2.031	.093	.375	.156	1.750	1.437	2.750	.437	NA	NA	.062	.062	1.750	.593	.156	1.062	3.812	.156	NA	.156	1.062	.375	NA
50	.156	.093	.156	.187	NA	NA	2.250	1.500	1.187	.906	2.031	.093	.375	.156	1.750	1.437	2.750	.437	NA	NA	.062	.062	1.750	.593	.156	1.062	3.812	.156	NA	.156	1.062	.375	NA
75	.078	.048	.078	.093	NA	NA	1.125	.750	.593	.453	1.015	.062	.187	.078	.875	.718	1.375	.218	NA	NA	.048	.031	.875	.305	.078	.531	1.906	.078	NA	.078	.531	.187	NA
75	.078	.048	.078	.093	NA	NA	1.125	.750	.593	.453	1.015	.062	.187	.078	.875	.718	1.375	.218	NA	NA	.048	.031	.875	.305	.078	.531	1.906	.078	NA	.078	.531	.187	NA
75	.078	.048	.078	.093	NA	NA	1.125	.750	.593	.453	1.015	.062	.187	.078	.875	.718	1.375	.218	NA	NA	.048	.031	.875	.305	.078	.531	1.906	.078	NA	.078	.531	.187	NA

KOLLSMAN DASH NUMBERS

AS APPLICABLE	
NEXT ASSY	USED ON
APPLICATION	

UNLESS OTHERWISE SPECIFIED
DIMENSIONS ARE IN INCHES
TOLERANCES ON
2 PLACE DECIMALS ± 3 PLACE DECIMALS ± .005 ANGLES ± —
DO NOT SCALE THIS DRAWING
MATERIAL SEE NOTE 11
APPROVAL

M I T
INSTRUMENTATION LAB
Cambridge Mass
DRAWN R. A. JONES DATE 16 JUL 65
CHECKED W. KUPFER APPROVAL 22 JUL 65
CONTRACT
T. MICHAELS 22 JUL 65 NASA APPROVAL
W. KUPFER 22 JUL 65 MIT APPROVAL

MANNED
SPACECRAFT CENTER
HOUSTON, TEXAS

NAMEPLATES,
APOLLO G&N - GSE
(STANDARDS)

SIZE J2 CODE IDENT NO. 80230 1004260
SCALE NONE SHEET 2 OF 6

1004260 DD SHT 2

1004260 DD

2/1004260

DASH NO.	P/C	PART NAME	REMARKS	PART NUMBER	SER. NO.	CONT. NO.	STYLE	TYPE	MATERIAL	A	B	C	D	E	F	G	H	J	K	L	M	N	P
299	R																						
298	R																						
293	R	COMPUTER TEST SET		2014042-081	NA	NAS-9-497	B	II	NOTE 11C	FOR DIMENSIONS SEE DASH 18 VALUES BELOW													
292	R	DRAWER ASSY - PROGRAM & MONITOR		2014041-071	NA	NAS-9-497	B	I	NOTE 11B	FOR DIMENSIONS SEE DASH 17 VALUES BELOW													
291	R	BUFFER CIRCUIT ASSY		2014254-041	NA	NAS-9-497	B	I	NOTE 11B	FOR DIMENSIONS SEE DASH 15 VALUES BELOW													
290	R	LOGIC DRAWER ASSY NO 2		2014037-051	NA	NAS-9-497	B	I	NOTE 11B	FOR DIMENSIONS SEE DASH 17 VALUES BELOW													
289	R	SELF TEST ASSY		2014392-021	NA	NAS-9-497	B	I	NOTE 11B	FOR DIMENSIONS SEE DASH 15 VALUES BELOW													
288	R	LOGIC DRAWER ASSY NO.1		2014036-051	NA	NAS-9-497	B	I	NOTE 11B	FOR DIMENSIONS SEE DASH 17 VALUES BELOW													
287	R	COMPUTER TEST SET		2014042-071	NA	NAS-9-497	B	II	NOTE 11C	FOR DIMENSIONS SEE DASH 18 VALUES BELOW													
286	R	DRAWER ASSY-PROGRAM & MONITOR		2014041-061	NA	NAS-9-497	B	I	NOTE 11B	FOR DIMENSIONS SEE DASH 17 VALUES BELOW													
285	R	BUFFER CIRCUIT ASSY		2014254-031	NA	NAS-9-497	B	I	NOTE 11B	FOR DIMENSIONS SEE DASH 15 VALUES BELOW													
284	R	LOGIC DRAWER ASSY NO. 2		2014037-041	NA	NAS-9-497	B	I	NOTE 11B	FOR DIMENSIONS SEE DASH 17 VALUES BELOW													
283	R	DRAWER ASSY-PROGRAM & MONITOR		2014041-051	NA	NAS-9-497	B	I	NOTE 11B	FOR DIMENSIONS SEE DASH 17 VALUES BELOW													
282	R	COMPUTER TEST SET		2014042-061	NA	NAS-9-497	B	II	NOTE 11C	FOR DIMENSIONS SEE DASH 18 VALUES BELOW													
281	R	AGC HANDLING FIXTURE		2014282-031	NA	NAS-9-497	B	I	NOTE 11B	FOR DIMENSIONS SEE DASH 17 VALUES BELOW													
280	R	COMPUTER TEST SET		2014042-051	NA	NAS-9-497	B	II	NOTE 11C	FOR DIMENSIONS SEE DASH 18 VALUES BELOW													
279	R	SELF TEST ASSY		2014366-041	NA	NAS-9-497	B	I	NOTE 11B	FOR DIMENSIONS SEE DASH 15 VALUES BELOW													
278	R	LOGIC DRAWER ASSY NO. 1		2014036-041	NA	NAS-9-497	B	I	NOTE 11B	FOR DIMENSIONS SEE DASH 17 VALUES BELOW													
277	R	COMPUTER TEST SET		2014042-041	NA	NAS-9-497	B	II	NOTE 11C	FOR DIMENSIONS SEE DASH 18 VALUES BELOW													
276	R	DRAWER ASSY-PROGRAM & MONITOR		2014041-041	NA	NAS-9-497	B	I	NOTE 11B	FOR DIMENSIONS SEE DASH 17 VALUES BELOW													
275	R	DRAWER ASSY RDC INTERFACE		2014045-031	NA	NAS-9-497	B	I	NOTE 11B	FOR DIMENSIONS SEE DASH 15 VALUES BELOW													
274	R	SELF TEST ASSY		2014366-031	NA	NAS-9-497	B	I	NOTE 11B	FOR DIMENSIONS SEE DASH 15 VALUES BELOW													
273	R	LOGIC DRAWER ASSY NO. 2		2014037-031	NA	NAS-9-497	B	I	NOTE 11B	FOR DIMENSIONS SEE DASH 17 VALUES BELOW													
272	R	DRAWING ASSY PROGRAMMER & MONITOR		2014041-031	NA	NAS-9-497	B	I	NOTE 11B	FOR DIMENSIONS SEE DASH 17 VALUES BELOW													
271	R	LOGIC DRAWER ASSY NO. 1		2014036-031	NA	NAS-9-497	B	I	NOTE 11B	FOR DIMENSIONS SEE DASH 17 VALUES BELOW													
270	R	COMPUTER TEST SET		2014042-031	NA	NAS-9-497	B	II	NOTE 11C	FOR DIMENSIONS SEE DASH 18 VALUES BELOW													
269	R	POWER CONTROL ASSY		2014044-021	NA	NAS-9-497	B	I	NOTE 11B	FOR DIMENSIONS SEE DASH 17 VALUES BELOW													
268	R	SELF TEST ASSY		2014366-021	NA	NAS-9-497	B	I	NOTE 11B	FOR DIMENSIONS SEE DASH 15 VALUES BELOW													
267	R	AGC JUNCTION ASSY		2014341-021	NA	NAS-9-497	B	I	NOTE 11B	FOR DIMENSIONS SEE DASH 15 VALUES BELOW													
266	R	POWER CONTROL ASSY		2014079-021	NA	NAS-9-497	B	I	NOTE 11B	FOR DIMENSIONS SEE DASH 15 VALUES BELOW													
265	R	BUFFER CIRCUIT ASSY		2014254-021	NA	NAS-9-497	B	I	NOTE 11B	FOR DIMENSIONS SEE DASH 15 VALUES BELOW													
264	R	DRAWER ASSY X Y INTERFACE		2014040-021	NA	NAS-9-497	B	I	NOTE 11B	FOR DIMENSIONS SEE DASH 15 VALUES BELOW													
263	R	DRAWER ASSY RDC INTERFACE		2014045-021	NA	NAS-9-497	B	I	NOTE 11B	FOR DIMENSIONS SEE DASH 15 VALUES BELOW													
262	R	DRAWER ASSY PROGRAMMER & MONITOR		2014041-021	NA	NAS-9-497	B	I	NOTE 11B	FOR DIMENSIONS SEE DASH 17 VALUES BELOW													
261	R	LOGIC DRAWER ASSY NO. 2		2014037-021	NA	NAS-9-497	B	I	NOTE 11B	FOR DIMENSIONS SEE DASH 17 VALUES BELOW													
260	R	LOGIC DRAWER ASSY NO. 1		2014036-021	NA	NAS-9-497	B	I	NOTE 11B	FOR DIMENSIONS SEE DASH 17 VALUES BELOW													
259	R	OPERATION CONSOLE		2014024-021	NA	NAS-9-497	B	II	NOTE 11C	FOR DIMENSIONS SEE DASH 18 VALUES BELOW													
258	R	COMPUTER TEST SET		2014042-021	NA	NAS-9-497	B	II	NOTE 11C	FOR DIMENSIONS SEE DASH 18 VALUES BELOW													
257	R	AUXILIARY CALIBRATION CONSOLE		2014059-021	NA	NAS-9-497	B	II	NOTE 11C	FOR DIMENSIONS SEE DASH 18 VALUES BELOW													
256	R	AGC CALIBRATION CONSOLE		2014049-021	NA	NAS-9-497	B	II	NOTE 11C	FOR DIMENSIONS SEE DASH 18 VALUES BELOW													
255	R	AGC HANDLING FIXTURE		2014282-021	NA	NAS-9-497	B	I	NOTE 11B	FOR DIMENSIONS SEE DASH 17 VALUES BELOW													
254	R	DRAWER ASSY COMP. SIMULATOR		2014048-011	NA	NAS-9-497	B	II	NOTE 11C	FOR DIMENSIONS SEE DASH 18 VALUES BELOW													
253	R	SHIPPING KIT ASSY, NAV DSKY		2016312-011	NA	NAS-9-497	B	II	NOTE 11C	FOR DIMENSIONS SEE DASH 18 VALUES BELOW													
252	R	SHIPPING KIT ASSY, UNIVERSAL DSKY		2016316-011	NA	NAS-9-497	B	II	NOTE 11C	FOR DIMENSIONS SEE DASH 18 VALUES BELOW													
251	R	SHIPPING KIT ASSY, MAIN DSKY		2016313-011	NA	NAS-9-497	B	II	NOTE 11C	FOR DIMENSIONS SEE DASH 18 VALUES BELOW													
250	R	AMPLIFIER, REWORK		2014386	NA	NAS-9-497	B	I	NOTE 11B	FOR DIMENSIONS SEE DASH 15 VALUES BELOW													
249	R	TEMP MONITOR ASSY		2014313-011	NA	NAS-9-497	B	I	NOTE 11C	FOR DIMENSIONS SEE DASH 17 VALUES BELOW													
248	R	AGC JUNCTION ASSY		2014341-011	NA	NAS-9-497	B	I	NOTE 11B	FOR DIMENSIONS SEE DASH 15 VALUES BELOW													
247	R	AC INPUT PANEL ASSY		2014302-011	NA	NAS-9-497	B	I	NOTE 11B	FOR DIMENSIONS SEE DASH 15 VALUES BELOW													
246	R	SELF TEST ASSY		2014392-011	NA	NAS-9-497	B	I	NOTE 11B	FOR DIMENSIONS SEE DASH 15 VALUES BELOW													
245	R	TAPE PUNCH ASSEMBLY		2014039-011	NA	NAS-9-497	B	I	NOTE 11B	FOR DIMENSIONS SEE DASH 15 VALUES BELOW													
244	R	TAPE READER ASSEMBLY		2014038-011	NA	NAS-9-497	B	I	NOTE 11B	FOR DIMENSIONS SEE DASH 15 VALUES BELOW													
243																							
242																							
241	R	APOLLO GUIDANCE COMPUTER GROUP		6003001	NA	NAS-9-497	A	I	NOTE 11B	FOR DIMENSIONS SEE DASH 19 VALUES BELOW													
240	R	SELF TEST ASSEMBLY		2014366-011	NA	NAS-9-497	B	I	NOTE 11B	FOR DIMENSIONS SEE DASH 15 VALUES BELOW													
239	R	POWER SUPPLY ASSY-115V., 400 CYCLE		2014207-011	NA	NAS-9-497	B	I	NOTE 11B	FOR DIMENSIONS SEE DASH 17 VALUES BELOW													
238	R	AC INPUT PANEL ASSY		2014043-011	NA	NAS-9-497	B	I	NOTE 11B	FOR DIMENSIONS SEE DASH 17 VALUES BELOW													
237	R	POWER CONTROL ASSY		2014079-011	NA	NAS-9-497	B	I	NOTE 11B	FOR DIMENSIONS SEE DASH 15 VALUES BELOW													
236	R	DRAWER ASSY-X Y INTERFACE		2014040-011	NA	NAS-9-497	B	I	NOTE 11B	FOR DIMENSIONS SEE DASH 15 VALUES BELOW													
235	R	DRAWER ASSY RDC INTERFACE		2014045-011	NA	NAS-9-497	B	I	NOTE 11B	FOR DIMENSIONS SEE DASH 15 VALUES BELOW													
234	R	BUFFER CIRCUIT ASSY		2014254-011	NA	NAS-9-497	B	I	NOTE 11B	FOR DIMENSIONS SEE DASH 15 VALUES BELOW													
233	R	CONTROL & INTERFACE ASSY		2014204-011	NA	NAS-9-497	B	I	NOTE 11B	FOR DIMENSIONS SEE DASH 15 VALUES BELOW													
232	R	POWER CONTROL ASSY		2014044-011	NA	NAS-9-497	B	I	NOTE 11B	FOR DIMENSIONS SEE DASH 17 VALUES BELOW													
231	R	DRAWER ASSY, PROGRAMMER & MONITOR		2014041-011	NA	NAS-9-497	B	I	NOTE 11B	FOR DIMENSIONS SEE DASH 17 VALUES BELOW													
230	R	CONNECTOR INTERFACE ASSY		2014272-011	NA	NAS-9-497	B	I	NOTE 11B	FOR DIMENSIONS SEE DASH 15 VALUES BELOW													
229	R	CONNECTOR INTERFACE ASSY		2014047-011	NA	NAS-9-497	B	I	NOTE 11B	FOR DIMENSIONS SEE DASH 15 VALUES BELOW													
228	R	ANTENNA, TUNING CAPACITOR ASSY		2014209-011	NA	NAS-9-497	B	I	NOTE 11B	FOR DIMENSIONS SEE DASH 15 VALUES BELOW													
227	R	MOUNTING FIXTURE ASSY		2014006-011	NA	NAS-9-497	B	I	NOTE 11B	FOR DIMENSIONS SEE DASH 17 VALUES BELOW													
226	R	POWER SUPPLY ASSY 3 VDC		2014234-011	NA	NAS-9-497	B	I	NOTE 11B	FOR DIMENSIONS SEE DASH 15 VALUES BELOW													
225	R	PANEL ASSY--SIGNAL INTERFACE		2014010-011	NA	NAS-9-497	B	I	NOTE 11B	FOR DIMENSIONS SEE DASH 15 VALUES BELOW													
224	R	OSCILLOSCOPE ASSY		2014232-011	NA	NAS-9-497	B	I	NOTE 11B	FOR DIMENSIONS SEE DASH 15 VALUES BELOW													
223	R	AUXILIARY OUTLET ASSY		2014274-011	NA	NAS-9-497	B	I	NOTE 11B	FOR DIMENSIONS SEE DASH 15 VALUES BELOW													
222	R	FREQUENCY COUNTER		2014233-011	NA	NAS-9-497	B	I	NOTE 11B	FOR DIMENSIONS SEE DASH 15 VALUES BELOW													
221	R	POWER SUPPLY ASSY 10, 13, 28 VDC		2014235-011	NA	NAS-9-497	B	I	NOTE 11B	FOR DIMENSIONS SEE DASH 15 VALUES BELOW													
220	R	LOGIC DRAWER ASSY NO. 2		2014037-011	NA	NAS-9-497	B	I	NOTE 11B	FOR DIMENSIONS SEE DASH 17 VALUES BELOW													
219	R	LOGIC DRAWER ASSY NO. 1		2014036-011	NA	NAS-9-497	B	I	NOTE 11B	FOR DIMENSIONS SEE DASH 17 VALUES BELOW													
218	R	COUNTER, ELECTRICAL ASSY		2014288-011	NA	NAS-9-497	B	I	NOTE 11B	FOR DIMENSIONS SEE DASH 15 VALUES BELOW													
217	R	POWER SUPPLY ASSY		2014279-011	NA	NAS-9-497	B	I	NOTE 11B	FOR DIMENSIONS SEE DASH 15 VALUES BELOW													
216	R	TEST MOUNT ASSY		2014257-011	NA	NAS-9-497	B	I	NOTE 11B	FOR DIMENSIONS SEE DASH 15 VALUES BELOW													
215	R	UNIVERSAL DSKY PEDESTAL MOUNT		2014014-011	NA	NAS-9-497	B	I	NOTE 11B	FOR DIMENSIONS SEE DASH 17 VALUES BELOW													
214	R	MAIN DSKY PEDESTAL MOUNT		2014343	NA	NAS-9-497	B	I	NOTE 11B	FOR DIMENSIONS SEE DASH 17 VALUES BELOW													
213	R	SHIPPING CONTAINER, MAIN DSKY		1006229	NA	NAS-9-497	B	II	NOTE 11C	FOR DIMENSIONS SEE DASH 18 VALUES BELOW													
212	R	SHIPPING CONTAINER, NAV DSKY		1006231	NA	NAS-9-497	B	II	NOTE 11C	FOR DIMENSIONS SEE DASH 18 VALUES BELOW													
211	R	SHIPPING CONTAINER, AGC		1006230	NA	NAS-9-497	B	II	NOTE 11C	FOR DIMENSIONS SEE DASH 18 VALUES BELOW													
210	R	SHIPPING CONTAINER, UNIVERSAL DSKY		1006422	NA	NAS-9-497	B	II	NOTE 11C	FOR DIMENSIONS SEE DASH 18 VALUES BELOW													
209	R	SHIPPING CONTAINER, AGC		1006421	NA	NAS-9-497	B	II	NOTE 11C	FOR DIMENSIONS SEE DASH 18 VALUES BELOW													
208	R	UNIVERSAL DSKY HANDLING FIXTURE		2014013-011	NA	NAS-9-497	B	I	NOTE 11B	FOR DIMENSIONS SEE DASH 15 VALUES BELOW													
207	R	NAV DSKY HANDLING FIXTURE		1014377	NA	NAS-9-497	B	I	NOTE 11B	FOR DIMENSIONS SEE DASH 17 VALUES BELOW													
206	R	MAIN DSKY HANDLING FIXTURE		1014334	NA	NAS-9-497	B	I	NOTE 11B	FOR DIMENSIONS SEE DASH 17 VALUES BELOW													
205	R	AGC HANDLING FIXTURE		2014282-011	NA	NAS-9-497	B	I	NOTE 11B	FOR DIMENSIONS SEE DASH 17 VALUES BELOW													
204	R	OPERATION CONSOLE		2014024-011	NA	NAS-9-497	B	II	NOTE 11C	FOR DIMENSIONS SEE DASH 18 VALUES BELOW													
203	R	COMPUTER TEST SET		2014042-011	NA	NAS-9-497	B	II	NOTE 11C	FOR DIMENSIONS SEE DASH 18 VALUES BELOW													
202	R	DRAWER ASSY, COMPUTER SIMULATOR		2014048-011	NA	FNP-12775	B	II	NOTE 11C	FOR DIMENSIONS SEE DASH 18 VALUES BELOW													
201	R	AUXILIARY CALIBRATION CONSOLE		2014059-011	NA	NAS-9-497	B	II	NOTE 11C	FOR DIMENSIONS SEE DASH 18 VALUES BELOW													
200	R	AGC CALIBRATION CONSOLE		2014049-011	NA	NAS-9-497	B	II	NOTE 11C	FOR DIMENSIONS SEE DASH 18 VALUES BELOW													
21	R																						
20	R	NA		NA	NA	NA	A	II	NOTE 11C	2.000	1.312	1.687	1.375	.078	.031	.078	.093	.105 .113	.093	1.187	.750	.593	.453
19	R	NA		NA	NA	NA	A	I	NOTE 11B	2.000	1.312	1.687	1.375	.078	.031	.078	.093	NA	NA	1.187	.750	.593	.453
18	R	NA		NA	NA	NA	B	II	NOTE 11C	4.187	1.875	3.469	2.750	.156	.093	.156	.125	.105 .113	.125	1.625	1.032	.844	.656
17	R	NA		NA	NA	NA	B	I	NOTE 11B	4.187	1.875	3.469	2.750	.156	.093	.156	.125	NA	NA	1.625	1.032	.844	.656
16	R	NA		NA	NA	NA	B	II	NOTE 11C	2.000	1.312	1.687	1.375	.078	.031	.078	.093	.105 .113	.093	1.187	.750	.593	.453
15	R	NA		NA	NA	NA	B	I	NOTE 11B	2.000	1.312	1.687	1.375	.078	.031	.078	.093	NA	NA	1.187	.750	.593	.453

NOTES FOR TABLE

STYLE A IS FOR G & N SYSTEM
STYLE B IS FOR GROUND SUPPORT EQUIPMENT
TYPE I IS WITHOUT MOUNTING HOLES
TYPE II IS WITH MOUNTING HOLES

1004260		SHT 3

1/1004260

REVISIONS					
SYM	ZONE	DESCRIPTION	CHG NO	DATE	APPD
CL		REPLACES REV CK WITHOUT CHANGE PER TDRR 34365		9/28/67	JWL RWH
CM		REVISION STATUS CHANGED		18 OCT 67	RAW
CN		REVISION STATUS CHANGED		31 OCT 67	JRK
CP		REVISION STATUS CHANGED		6 NOV 67	EMS
CR		REVISION STATUS CHANGED		7 DEC 67	OKB RWH
CS		REVISION STATUS CHANGED		3 JAN 68	JW EHK
CT		REVISED PER TDRR 35526		7 FEB 68	LK
CU		REVISION STATUS CHANGED		22 FEB 68	JRK
CV		REVISION STATUS CHANGED		27 FEB 68	LK
CW		REVISION STATUS CHANGED		8 APR 68	
CY		REVISED PER TDRR 36028		16 APR 68	+N.
CZ		REVISION STATUS CHANGED		23 MAY 68	
DA		REVISION STATUS CHANGED		17 JUL 68	
DB		REVISION STATUS CHANGED		12 SEP 68	
DC		REVISION STATUS CHANGED		6 DEC 68	LK
DD		REVISION STATUS CHANGED		30 DEC 68	

[illegible] OW
[illegible] OW
[illegible]
[illegible]
[illegible]
[illegible]
[illegible]
[illegible]
H 15 VALUES BELO
H 17 VALUES BELO
H 17 VALUES BELO
H 18 VALUES BELO
H 17 VALUES BELO
H 18 VALUES BELO
H 15 VALUES BELO
H 17 VALUES BELO
H 18 VALUES BELO
H 17 VALUES BELO
H 15 VALUES BELO
H 15 VALUES BELO
H 17 VALUES BELO
H 17 VALUES BELO
H 17 VALUES BELO
H 18 VALUES BELO
H 17 VALUES BELO
H 15 VALUES BELO
H 15 VALUES BELO
H 15 VALUES BELO
H 15 VALUES BELO
H 18 VALUES BELO
H 15 VALUES BELO
H 17 VALUES BELO
H 17 VALUES BELO
H 17 VALUES BELO
H 18 VALUES BELO
H 18 VALUES BELO
H 18 VALUES BELO
H 18 VALUES BELO
H 17 VALUES BELO
H 18 VALUES BELO
H 18 VALUES BELO
H 18 VALUES BELO
[illegible]
H 15 VALUES BELO
H 17 VALUES BELO
H 15 VALUES BELO
H 15 VALUES BELO
H 15 VALUES BELO
H 15 VALUES BELO
H 15 VALUES BELO

SH 19 VALUES BELO
SH 15 VALUES BELO
SH 17 VALUES BELO
SH 17 VALUES BELO
SH 15 VALUES BELO
SH 15 VALUES BELO
SH 15 VALUES BELO
SH 15 VALUES BELO
SH 15 VALUES BELO
[illegible]
SH 17 VALUES BELO
SH 15 VALUES BELO
SH 15 VALUES BELO
SH 15 VALUES BELO
SH 17 VALUES BELO
SH 15 VALUES BELO
SH 15 VALUES BELO
SH 15 VALUES BELO
SH 15 VALUES BELO
SH 15 VALUES BELO
SH 15 VALUES BELO
SH 17 VALUES BEL
SH 17 VALUES BEL
SH 15 VALUES BEL
SH 15 VALUES BEL
SH 15 VALUES BEL
SH 17 VALUES BEL
SH 17 VALUES BEL
SH 18 VALUES BEL
SH 18 VALUES BEL
SH 18 VALUES BEL
SH 18 VALUES BEL
SH 18 VALUES BEL
SH 15 VALUES BEL
SH 17 VALUES BEL
SH 17 VALUES BEL
SH 17 VALUES BEL
[illegible]
SH 18 VALUES BEL
SH 18 VALUES BEL
SH 18 VALUES BEL
SH 18 VALUES BEL

E	F	G	H	J	K	L	M	N	P	R	S	T	U	V	W	Y	Z	AA	AB	AC	AD	AE	AF	AG	AH	AJ	AK	AL	AM	AN	AP	AR
.078	.031	.078	.093	[illegible]	.093	1.187	.750	.593	.453	1.015	.062	.187	.078	.875	.718	1.375	.218	1.156	1.843	.048	NA	.875	.305	.078	.312	1.687	.078	NA	.078	.312	.187	1.843
.078	.031	.078	.093	NA	NA	1.187	.750	.593	.453	1.015	.062	.187	.078	.875	.718	1.375	.218	NA	NA	.048	.031	.875	.305	.078	.312	1.687	.078	NA	.078	.312	.187	NA
.156	.093	.156	.125	[illegible]	.125	1.625	1.032	.844	.656	1.406	.093	.344	.156	1.781	1.531	2.844	.312	1.562	3.875	.062	NA	1.219	.500	.156	.719	3.469	.156	NA	.156	.719	.344	3.875
.156	.093	.156	.125	NA	NA	1.625	1.032	.844	.656	1.406	.093	.344	.156	1.781	1.531	2.844	.312	NA	NA	.062	.062	1.219	.500	.156	.719	3.469	.156	NA	.156	.719	.344	NA
.078	.031	.078	.093	[illegible]	.093	1.187	.750	.593	.453	1.015	.062	.187	.078	.875	.718	1.375	.218	1.156	1.843	.048	NA	.875	.305	.078	.312	1.687	.078	NA	.078	.312	.187	1.843
.078	.031	.078	.093	NA	NA	1.187	.750	.593	.453	1.015	.062	.187	.078	.875	.718	1.375	.218	NA	NA	.048	.031	.875	.305	.078	.312	1.687	.078	NA	.078	.312	.187	NA

RAYTHEON DASH NUMBERS

AS APPLICABLE	UNLESS OTHERWISE SPECIFIED DIMENSIONS ARE IN INCHES TOLERANCES ON 2 PLACE DECIMALS ± 3 PLACE DECIMALS ±.005 ANGLES ±	MIT INSTRUMENTATION LAB CAMBRIDGE MASS	MANNED SPACECRAFT CENTER HOUSTON, TEXAS
NEXT ASSY / USED ON	DO NOT SCALE THIS DRAWING	DRAWN R.A. JONES DATE 16 JUL 65 CHECKED W. KUPFER 22 JUL 65 APPROVAL CONTRACT	NAMEPLATES, APOLLO G&N - GSE (STANDARDS)
APPLICATION	MATERIAL SEE NOTE 11	T. MICHAELS 22 JUL 65 NASA APPROVAL W. KUPFER 22 JUL 65 MIT APPROVAL	SIZE J2 CODE IDENT NO. 80230 1004260
	APPROVAL		SCALE NONE SHEET 3 OF 6

AC DASH NUMBERS CONTINUED ON SHEET 6

DASH NO.	P/C	PART NAME	REMARKS	PART NUMBER	SER. NO.	CONT. NO.	STYLE	TYPE	MATERIAL	A	B	C	D	E	F	G	H	J	K	L	M	N	
199	AC	EYEPIECE STOWAGE UNIT		2021255-011			A	I		FOR DIMENSIONS SEE DASH 100 VALUES BELOW													
198	AC	SIGNAL CONDITIONER ASSY C/M		2007234		NAS-9-497	A	I	NOTE 11B	FOR DIMENSIONS SEE DASH 100 VALUES BELOW													
197	AC	SIGNAL CONDITIONER ASSY C/M		2007235		NAS-9-497	A	I	NOTE 11B	FOR DIMENSIONS SEE DASH 100 VALUES BELOW													
196	AC	SIGNAL CONDITIONER ASSY LEM		6007010		NAS-9-497	A	I	NOTE 11B	FOR DIMENSIONS SEE DASH 100 VALUES BELOW													
195	AC	PSA & SIGNAL CONDITIONER ASSY		6007009		NAS-9-497	A	I	NOTE 11B	FOR DIMENSIONS SEE DASH 100 VALUES BELOW													
194	AC	PANEL, MONITOR		2900031-031		NAS-9-497	B	II	NOTE 11C	FOR DIMENSIONS SEE DASH 141 VALUES BELOW													
193	AC	DISTRIBUTION BOX, GSE		2900024-031		NAS-9-497	B	II	NOTE 11C	FOR DIMENSIONS SEE DASH 141 VALUES BELOW													
192	AC	ANALYZER, OPTICS-INERTIAL		2900023-031		NAS-9-497	B	II	NOTE 11C	FOR DIMENSIONS SEE DASH 144 VALUES BELOW													
191	AC	TEST CONTROL		2900027-031		NAS-9-497	B	II	NOTE 11C	FOR DIMENSIONS SEE DASH 141 VALUES BELOW													
190	AC	PANEL, PWR SUP AND LOAD		2900033-021		NAS-9-497	B	II	NOTE 11C	FOR DIMENSIONS SEE DASH 141 VALUES BELOW													
189	AC	ADPT MODULE, P.S.A.		6900088-011		NAS-9-497	B	II	NOTE 11C	FOR DIMENSIONS SEE DASH 141 VALUES BELOW													
188	AC	ADPT MODULE, P.S.A.		2901143-011		NAS-9-497	B	II	NOTE 11C	FOR DIMENSIONS SEE DASH 141 VALUES BELOW													
187	AC	FIXTURE, MTG, PTA/PEA		2900066-021		NAS-9-497	B	II	NOTE 11C	FOR DIMENSIONS SEE DASH 141 VALUES BELOW													
186	AC	ANNUNCIATOR PANEL & EYEPIECE STORAGE ASSEMBLY		1021255-021			A	I		FOR DIMENSIONS SEE DASH 100 VALUES BELOW													
185	AC	ANNUNCIATOR PANEL & EYEPIECE STORAGE ASSEMBLY		1021255-011			A	I		FOR DIMENSIONS SEE DASH 100 VALUES BELOW													
184	AC	FIX., HAND., G AND N HARNESS		1901846-041		NAS-9-497	B	II	NOTE 11C	FOR DIMENSIONS SEE DASH 144 VALUES BELOW													
183	AC	INSTALLING TOOL, ELEC, CONN		1902586-011		NAS-9-497	B	II	NOTE 11C	FOR DIMENSIONS SEE DASH 102 VALUES BELOW													
182	AC	ADPT MODULE, P.S.A.		6900088-011		NAS-9-497	B	II	NOTE 11C	FOR DIMENSIONS SEE DASH 141 VALUES BELOW													
181	AC	G & N INDICATOR CONTROL PANEL ASSY		2014578-011		NAS-9-497	A	I	NOTE 11B	3.000	1.938	2.437	NA	.125	.062	.188	.156	NA	NA	1.750	1.125	.906	.68
180	AC	ADPT MODULE, P.S.A.		1902431-031		NAS-9-497	B	II		FOR DIMENSIONS SEE DASH 121 VALUES BELOW													
179	AC	MOUNTING PLATE, IMU/PTA		6900083-011		NAS-9-497	B	II		FOR DIMENSIONS SEE DASH 144 VALUES BELOW													
178	AC	MOUNTING PLATE, COMPONENT		6900007-021		NAS-9-497	B	II		FOR DIMENSIONS SEE DASH 144 VALUES BELOW													
177	AC	FIX., MOUNTING, SUBSYSTEM		2900070-021		NAS-9-497	B	II		FOR DIMENSIONS SEE DASH 144 VALUES BELOW													
176	AC	FIX., MOUNTING, G & N		2900067-021		NAS-9-497	B	II		FOR DIMENSIONS SEE DASH 144 VALUES BELOW													
175	AC	CSL, COOL. AND PWR, G & N		1902134-031		NAS-9-497	B	II		FOR DIMENSIONS SEE DASH 144 VALUES BELOW													
174	AC	FIX., HAND., C/M AND LEM CDU		2900999-011		NAS-9-497	B	II	NOTE 11C	FOR DIMENSIONS SEE DASH 141 VALUES BELOW													
173	AC	FIX., HANDLING, C/M PSA		2900998-011		NAS-9-497	B	II	NOTE 11C	FOR DIMENSIONS SEE DASH 141 VALUES BELOW													
172	AC	CAGING ELECTRONICS, GYRO		2900029-021		NAS-9-497	B	II	NOTE 11C	FOR DIMENSIONS SEE DASH 141 VALUES BELOW													
171	AC	DISTRIBUTION BOX, GSE		2900024-021		NAS-9-497	B	II	NOTE 11C	FOR DIMENSIONS SEE DASH 141 VALUES BELOW													
170	AC	ANALYZER, OPTICS-INERTIAL		2900023-021		NAS-9-497	B	II	NOTE 11C	FOR DIMENSIONS SEE DASH 144 VALUES BELOW													
169	AC	ADPT, TESTPOINT, P.S.A.		2900037-021		NAS-9-497	B	II	NOTE 11C	FOR DIMENSIONS SEE DASH 141 VALUES BELOW													
168	AC	TEST SELECTOR		2900028-021		NAS-9-497	B	II	NOTE 11C	FOR DIMENSIONS SEE DASH 141 VALUES BELOW													
167	AC	TEST CONTROL		2900027-021		NAS-9-497	B	II	NOTE 11C	FOR DIMENSIONS SEE DASH 141 VALUES BELOW													
166	AC	PANEL, MONITOR		2900031-021		NAS-9-497	B	II	NOTE 11C	FOR DIMENSIONS SEE DASH 141 VALUES BELOW													
165	AC	TERM. BOARD STORAGE DRAWER		2900927-011		NAS-9-497	B	II	NOTE 11C	FOR DIMENSIONS SEE DASH 141 VALUES BELOW													
164	AC	INPUT/OUTPUT PANEL		2900926-011		NAS-9-497	B	II	NOTE 11C	FOR DIMENSIONS SEE DASH 141 VALUES BELOW													
163	AC	CONTROL PANEL		2900896-011		NAS-9-497	B	II	NOTE 11C	FOR DIMENSIONS SEE DASH 141 VALUES BELOW													
162	AC	CSL, CAL AND TEST, SCM/PSAAM		2900895-011		NAS-9-497	B	II	NOTE 11C	FOR DIMENSIONS SEE DASH 144 VALUES BELOW													
161	AC	FIX., LIFT AND HAND., IMU		1015462-011		NAS-9-497	B	II	NOTE 11C	FOR DIMENSIONS SEE DASH 141 VALUES BELOW													
160	AC	FIX., HAND., G & N HARNESS		1901846-031		NAS-9-497	B	II	NOTE 11C	FOR DIMENSIONS SEE DASH 144 VALUES BELOW													
159	AC	BATTERY POWER PACK		1900011-031		NAS-9-497	B	II	NOTE 11C	FOR DIMENSIONS SEE DASH 144 VALUES BELOW													
158	AC	COUPLING DATA UNIT ASSEMBLY C/M		2007222		NAS-9-497	A	I	NOTE 11B	FOR DIMENSIONS SEE DASH 100 VALUES BELOW													
157	AC	COUPLING DATA UNIT ASSEMBLY - LEM		2007222		NAS-9-497	A	I	NOTE 11B	FOR DIMENSIONS SEE DASH 100 VALUES BELOW													
156	AC	POWER & SERVO ASSEMBLY C/M		2007200		NAS-9-497	A	I	NOTE 11B	2.125	.968	1.718	NA	.093	.031	.06	.093	NA	NA	.858	.608	.484	.3
155	AC	PIPA ELECTRONICS ASSEMBLY		2007201		NAS-9-497	A	I	NOTE 11B	FOR DIMENSIONS SEE DASH 100 VALUES BELOW													
154	AC	PULSE TORQUE ASSEMBLY-LEM		6007000		NAS-9-497	A	I	NOTE 11B	FOR DIMENSIONS SEE DASH 100 VALUES BELOW													
153	AC	POWER & SERVO ASSEMBLY LEM		6007200		NAS-9-497	A	I	NOTE 11B	FOR DIMENSIONS SEE DASH 100 VALUES BELOW													
152	AC	CONT PNL, RSVR CKT TESTER		2900770-011		NAS-9-497	B	II	NOTE 11C	FOR DIMENSIONS SEE DASH 141 VALUES BELOW													
151	AC	TESTER, RESOLVER CIRCUIT		2900708-011		NAS-9-497	B	II	NOTE 11C	FOR DIMENSIONS SEE DASH 141 VALUES BELOW													
150	AC	JUNCTION BOX, P.S.A./G.S.E.		1901933-021		NAS-9-497	B	II	NOTE 11C	FOR DIMENSIONS SEE DASH 144 VALUES BELOW													
149	AC	BATTERY PACK, LIFTING		2900812-011		NAS-9-497	B	II	NOTE 11C	FOR DIMENSIONS SEE DASH 141 VALUES BELOW													
148	AC	MOUNTING PLATE, COMPONENT		6900007-011		NAS-9-497	B	II	NOTE 11C	FOR DIMENSIONS SEE DASH 144 VALUES BELOW													
147	AC	MOUNTING PLATE, COMPONENT		2900677-011		NAS-9-497	B	II	NOTE 11C	FOR DIMENSIONS SEE DASH 144 VALUES BELOW													
146	AC	CART, TRANS, G & N		1900009-041		NAS-9-497	B	II	NOTE 11C	FOR DIMENSIONS SEE DASH 144 VALUES BELOW													
145	AC	CONTAINER, SHIPPING, IMU		1900010-021		NAS-9-497	B	II	NOTE 11C	FOR DIMENSIONS SEE DASH 144 VALUES BELOW													
144	AC	FIX., MOUNTING, G & N		1902204-021			B	II	NOTE 11C	4.125	1.812	3.250	NA	.125	.062	.12	.156	[illegible]	.125	1.625	1.140	.89	.6
143	AC	CSL, COOL. AND PWR, G & N		1902134-021			B	II	NOTE 11C	4.125	1.812	3.250	NA	.125	.062	.12	.156		.125	1.625	1.140	.89	.6
142	AC	ANALYZER, OPTICS-INERTIAL		2900023-011			B	II	NOTE 11C	4.125	1.812	3.250	NA	.125	.062	.12	.156		.125	1.625	1.140	.89	.6
141	AC	CONT, TEMP, PORTABLE		2900060-011			B	II	NOTE 11C	2.125	.968	1.718	NA	.093	.031	.06	.093		.093	.858	.608	.48	.3
140	AC	TESTER, CKT, IMU/CDU RSVR		2900286-011			B	II	NOTE 11C	4.125	1.812	3.250	NA	.125	.062	.12	.156		.125	1.625	1.140	.89	.6
139	AC	SIMULATOR, LD/SIG, CDU		2900285-011			B	II	NOTE 11C	4.125	1.812	3.250	NA	.125	.062	.12	.156		.125	1.625	1.140	.89	.6
138	AC	SIMULATOR, LD/SIG, OPTICS		1902023-021			B	II	NOTE 11C	4.125	1.812	3.250	NA	.125	.062	.12	.156		.125	1.625	1.140	.89	.6
137	AC	FIX., MOUNTING, IMU/NAV BASE		6900003-011			B	II	NOTE 11C	4.125	1.812	3.250	NA	.125	.062	.12	.156		.125	1.625	1.140	.89	.6
136	AC	FIXTURE, OPTICS/NAV BASE		2900072-011			B	II	NOTE 11C	4.125	1.812	3.250	NA	.125	.062	.12	.156		.125	1.625	1.140	.89	.6
135	AC	FIX., MOUNTING, SUB SYSTEM		2900070-011			B	II	NOTE 11C	4.125	1.812	3.250	NA	.125	.062	.12	.156		.125	1.625	1.140	.89	.6
134	AC	FIX., HAND., G & N HARNESS		2900069-011			B	II	NOTE 11C	4.125	1.812	3.250	NA	.125	.062	.12	.156		.125	1.625	1.140	.89	.6
133	AC	CNTR, SHIPPING, NAV BASE		2900068-011			B	II	NOTE 11C	4.125	1.812	3.250	NA	.125	.062	.12	.156		.125	1.625	1.140	.89	.6
132	AC	FIX., MOUNTING, G & N		2900067-011			B	II	NOTE 11C	4.125	1.812	3.250	NA	.125	.062	.12	.156		.125	1.625	1.140	.89	.6
131	AC	SIMULATOR, LD/SIG, IMU/CDU		2900062-011			B	II	NOTE 11C	4.125	1.812	3.250	NA	.125	.062	.12	.156		.125	1.625	1.140	.89	.6
130	AC	TESTER, GYRO WHEEL		2900061-011			B	II	NOTE 11C	4.125	1.812	3.250	NA	.125	.062	.12	.156		.125	1.625	1.140	.89	.6
129	AC	COOLANT SUPPLY		1902133-021			B	II	NOTE 11C	4.125	1.812	3.250	NA	.125	.062	.12	.156		.125	1.625	1.140	.89	.6
128	AC	TABLE, ROTARY		1900926-021			B	II	NOTE 11C	4.125	1.812	3.250	NA	.125	.062	.12	.156		.125	1.625	1.140	.89	.6
127	AC	FIX., HAND., OPTICS		2900074-011			B	II	NOTE 11C	2.125	.968	1.718	NA	.093	.031	.06	.093		.093	.858	.608	.48	.3
126	AC	FIXTURE, MTG, PTA/PEA.		2900066-011			B	II	NOTE 11C	2.125	.968	1.718	NA	.093	.031	.06	.093		.093	.858	.608	.48	.3
125	AC	CONT, TEMP, IMU LIFTING		2900063-011			B	II	NOTE 11C	2.125	.968	1.718	NA	.093	.031	.06	.093		.093	.858	.608	.484	.3
124	AC	FIXTURE, HANDLING, IMU		2900064-011			B	II	NOTE 11C	2.125	.968	1.718	NA	.093	.031	.06	.093		.093	.858	.608	.48	.3
123	AC	CONT, OPTICS, REMOTE		1902046-021			B	II	NOTE 11C	2.125	.968	1.718	NA	.093	.031	.06	.093		.093	.858	.608	.48	.3
122	AC	TEST CONTROL		1902009-021			B	II	NOTE 11C	2.125	.968	1.718	NA	.093	.031	.06	.093		.093	.858	.608	.48	.3
121	AC	ADPT MODULE, P.S.A.		1902431-021			B	II	NOTE 11C	2.125	.968	1.718	NA	.093	.031	.06	.093		.093	.858	.608	.48	.3
120	AC	BRIDGE, DECADE ERROR		2900128-011			B	II	NOTE 11C	2.125	.968	1.718	NA	.093	.031	.06	.093		.093	.858	.608	.48	.3
119	AC	PWR SUP, ELECTRONICS		2900012-011			B	II	NOTE 11C	2.125	.968	1.718	NA	.093	.031	.06	.093		.093	.858	.608	.48	.3
118	AC	PWR SUP, RELAY AND LAMP		1900049-031			B	II	NOTE 11C	2.125	.968	1.718	NA	.093	.031	.06	.093		.093	.858	.608	.48	.3
117	AC	CONSOLE, OSCILLOGRAPH		1900000-021			B	II	NOTE 11C	2.125	.968	1.718	NA	.093	.031	.06	.093		.093	.858	.608	.48	.3
116	AC	ADPT MODULE, P.S.A.		1902431-011			B	II	NOTE 11C	2.125	.968	1.718	NA	.093	.031	.06	.093		.093	.858	.608	.48	.3
115	AC	ADPT, TEST POINT, PTA/PEA.		2900145-011			B	II	NOTE 11C	2.125	.968	1.718	NA	.093	.031	.06	.093		.093	.858	.608	.48	.3
114	AC	ADPT, TEST POINT, P.S.A.		2900037-011			B	II	NOTE 11C	2.125	.968	1.718	NA	.093	.031	.06	.093		.093	.858	.608	.48	.3
113	AC	CONTROL, GIMBAL POSITION		2900036-011			B	II	NOTE 11C	2.125	.968	1.718	NA	.093	.031	.06	.093		.093	.858	.608	.48	.3
112	AC	SELECTOR, SIGNAL, PRIMARY		2900035-011			B	II	NOTE 11C	2.125	.968	1.718	NA	.093	.031	.06	.093		.093	.858	.608	.48	.3
111	AC	SEL, SIG, OSCILLOGRAPH		2900034-011			B	II	NOTE 11C	2.125	.968	1.718	NA	.093	.031	.06	.093		.093	.858	.608	.48	.3
110	AC	PANEL, PWR SUP AND LOAD		2900033-011			B	II	NOTE 11C	2.125	.968	1.718	NA	.093	.031	.06	.093		.093	.858	.608	.48	.3
109	AC	PANEL, MONITOR		2900031-011			B	II	NOTE 11C	2.125	.968	1.718	NA	.093	.031	.06	.093		.093	.858	.608	.48	.3
108	AC	PANEL, AUXILIARY INPUT		2900030-011			B	II	NOTE 11C	2.125	.968	1.718	NA	.093	.031	.06	.093		.093	.858	.608	.48	.3
107	AC	CAGING ELECTRONICS, GYRO		2900029-011			B	II	NOTE 11C	2.125	.968	1.718	NA	.093	.031	.06	.093		.093	.858	.608	.48	.3
106	AC	TEST SELECTOR		2900028-011			B	II	NOTE 11C	2.125	.968	1.718	NA	.093	.031	.06	.093		.093	.858	.608	.48	.3
105	AC	TEST CONTROL		2900027-011			B	II	NOTE 11C	2.125	.968	1.718	NA	.093	.031	.06	.093		.093	.858	.608	.48	.3
104	AC	MONITOR AND CONTROL, TEMP		2900026-011			B	II	NOTE 11C	2.125	.968	1.718	NA	.093	.031	.06	.093		.093	.858	.608	.48	.3
103	AC	DISTRIBUTION BOX, GSE		2900024-011			B	II	NOTE 11C	2.125	.968	1.718	NA	.093	.031	.06	.093		.093	.858	.608	.48	.3
102	AC	VOLTMETER, DIGITAL		2900007-011			B	II	NOTE 11C	2.125	.968	1.718	NA	.093	.031	.06	.093	[illegible]	.093	.858	.608	.48	.3
101	AC	NAVIGATION BASE ASSEMBLY-LEM		6899950		NAS-9-497	A	I	NOTE 11B	2.000	1.312	1.906	1.375	.078	.048	.078	.093	NA	NA	1.125	.750	.59	
100	AC	NAVIGATION BASE ASSEMBLY		2899982		NAS-9-497	A	I	NOTE 11B	2.000	1.312	1.906	1.375	.078	.048	.078	.093	NA	NA	1.125	.750	.59	

NOTES FOR TABLE

STYLE A IS FOR G & N SYSTEM
STYLE B IS FOR GROUND SUPPORT EQUIPMENT
TYPE I IS WITHOUT MOUNTING HOLES
TYPE II IS WITH MOUNTING HOLES

1004260 SHT 4

1/1004260

REVISIONS					
SYM	ZONE	DESCRIPTION	CHG NO	DATE	APPD
CL		REPLACES REV CK WITHOUT CHANGE PER TDRR 34365		9/28/67	JWL RWH
CM		REVISION STATUS CHANGED		18 OCT 67	R.A.W.
CN		REVISION STATUS CHANGE		31 OCT 67	JRK
Ⓜ CP		REVISION STATUS CHANGE		6 NOV 67	ENS
Ⓜ CR		REVISION STATUS CHANGED		9 NOV 67	DVD RW
Ⓜ CS		REVISION STATUS CHANGED		3 JAN 68	J.W. EHW
CT		REVISION STATUS CHANGED		7 FEB 68	LK
CU		REVISION STATUS CHANGED		22 FEB 68	LK
Ⓜ CV		REVISION STATUS CHANGED		27 FEB 68	LK
CW		REVISION STATUS CHANGED		3 APR 68	
Ⓜ CY		REVISION STATUS CHANGED		16 APR 68	A.K.
Ⓜ CZ		REVISION STATUS CHANGED		23 MAY 68	
Ⓜ DA		REVISION STATUS CHANGED		17 JUN 68	
Ⓜ DB		REVISION STATUS CHANGED		13 SEP 68	
DC		REVISION STATUS CHANGED		16 DEC 68	LK
DD		REVISION STATUS CHANGED		30 DEC 68	

D	E	F	G	H	J	K	L	M	N	P	R	S	T	U	V	W	Y	Z	AA	AB	AC	AD	AE	AF	AG	AH	AJ	AK	AL	AM	AN	AP	AR
DASH 100 VALUES BELOW																																	
DASH 100 VALUES BELOW																																	
DASH 100 VALUES BELOW																																	
DASH 100 VALUES BELOW																																	
DASH 100 VALUES BELOW																																	
DASH 141 VALUES BELOW																																	
DASH 141 VALUES BELOW																																	
DASH 144 VALUES BELOW																																	
DASH 141 VALUES BELOW																																	
DASH 141 VALUES BELOW																																	
DASH 141 VALUES BELOW																																	
DASH 141 VALUES BELOW																																	
DASH 141 VALUES BELOW																																	
DASH 100 VALUES BELOW																																	
DASH 100 VALUES BELOW																																	
DASH 144 VALUES BELOW																																	
DASH 102 VALUES BELOW																																	
DASH 141 VALUES BELOW																																	
	.125	.062	.88	.156	NA	NA	1.750	1.125	.906	.688	1.500	NA	.281	.125	NA	1.094	2.062	.312	NA	2.500	.062	.125	1.312	.469	NA	NA	NA	.156	NA	.125	.469	.344	NA
DASH 121 VALUES BELOW																																	
DASH 144 VALUES BELOW																																	
DASH 144 VALUES BELOW																																	
DASH 144 VALUES BELOW																																	
DASH 144 VALUES BELOW																																	
DASH 144 VALUES BELOW																																	
DASH 141 VALUES BELOW																																	
DASH 141 VALUES BELOW																																	
DASH 141 VALUES BELOW																																	
DASH 141 VALUES BELOW																																	
DASH 144 VALUES BELOW																																	
DASH 141 VALUES BELOW																																	
DASH 141 VALUES BELOW																																	
DASH 141 VALUES BELOW																																	
DASH 141 VALUES BELOW																																	
DASH 141 VALUES BELOW																																	
DASH 141 VALUES BELOW																																	
DASH 141 VALUES BELOW																																	
DASH 144 VALUES BELOW																																	
DASH 141 VALUES BELOW																																	
DASH 144 VALUES BELOW																																	
DASH 144 VALUES BELOW																																	
DASH 100 VALUES BELOW																																	
DASH 100 VALUES BELOW																																	
	.093	.031	.06	.093	NA	NA	.858	.608	.484	.358	.733	.062	.140	.062	NA	.968	1.450	.125	NA	1.720	.046	.03	NA	.210	NA	NA	NA	.070	NA	.046	.32	.16	NA
DASH 100 VALUES BELOW																																	
DASH 100 VALUES BELOW																																	
DASH 100 VALUES BELOW																																	
DASH 141 VALUES BELOW																																	
DASH 141 VALUES BELOW																																	
DASH 144 VALUES BELOW																																	
DASH 141 VALUES BELOW																																	
DASH 144 VALUES BELOW																																	
DASH 144 VALUES BELOW																																	
DASH 144 VALUES BELOW																																	
DASH 144 VALUES BELOW																																	
	.125	.062	.12	.156	.100 .104	.125	1.625	1.140	.890	.640	1.390	.125	.171	.125	1.875	1.687	2.625	.250	1.562	3.843	.093	NA	NA	.359	.125	.437	3.688	NA	3.687	.093	.40	.25	3.875
	.125	.062	.12	.156		.125	1.625	1.140	.890	.640	1.390	.125	.171	.125	1.875	1.687	2.625	.250	1.562	3.843	.093	NA	NA	.359	.125	.437	3.688	NA	3.687	.093	.40	.25	3.875
	.125	.062	.12	.156		.125	1.625	1.140	.890	.640	1.390	.125	.171	.125	1.875	1.687	2.625	.250	1.562	3.843	.093	NA	NA	.359	.125	.437	3.688	NA	3.687	.093	.40	.25	3.875
	.093	.031	.06	.093		.093	.858	.608	.484	.358	.733	.077	.116	.062	.937	.875	1.343	.125	.781	1.892	.046	NA	NA	.209	.093	.250	1.875	NA	1.840	.046	.23	.16	1.938
	.125	.062	.12	.156		.125	1.625	1.140	.890	.640	1.390	.125	.171	.125	1.875	1.687	2.625	.250	1.562	3.843	.093	NA	NA	.359	.125	.437	3.688	NA	3.687	.093	.40	.25	3.875
	.125	.062	.12	.156		.125	1.625	1.140	.890	.640	1.390	.125	.171	.125	1.875	1.687	2.625	.250	1.562	3.843	.093	NA	NA	.359	.125	.437	3.688	NA	3.687	.093	.40	.25	3.875
	.125	.062	.12	.156		.125	1.625	1.140	.890	.640	1.390	.125	.171	.125	1.875	1.687	2.625	.250	1.562	3.843	.093	NA	NA	.359	.125	.437	3.688	NA	3.687	.093	.40	.25	3.875
	.125	.062	.12	.156		.125	1.625	1.140	.890	.640	1.390	.125	.171	.125	1.875	1.687	2.625	.250	1.562	3.843	.093	NA	NA	.359	.125	.437	3.688	NA	3.687	.093	.40	.25	3.875
	.125	.062	.12	.156		.125	1.625	1.140	.890	.640	1.390	.125	.171	.125	1.875	1.687	2.625	.250	1.562	3.843	.093	NA	NA	.359	.125	.437	3.688	NA	3.687	.093	.40	.25	3.875
	.125	.062	.12	.156		.125	1.625	1.140	.890	.640	1.390	.125	.171	.125	1.875	1.687	2.625	.250	1.562	3.843	.093	NA	NA	.359	.125	.437	3.688	NA	3.687	.093	.40	.25	3.875
	.125	.062	.12	.156		.125	1.625	1.140	.890	.640	1.390	.125	.171	.125	1.875	1.687	2.625	.250	1.562	3.843	.093	NA	NA	.359	.125	.437	3.688	NA	3.687	.093	.40	.25	3.875
	.125	.062	.12	.156		.125	1.625	1.140	.890	.640	1.390	.125	.171	.125	1.875	1.687	2.625	.250	1.562	3.843	.093	NA	NA	.359	.125	.437	3.688	NA	3.687	.093	.40	.25	3.875
	.125	.062	.12	.156		.125	1.625	1.140	.890	.640	1.390	.125	.171	.125	1.875	1.687	2.625	.250	1.562	3.843	.093	NA	NA	.359	.125	.437	3.688	NA	3.687	.093	.40	.25	3.875
	.125	.062	.12	.156		.125	1.625	1.140	.890	.640	1.390	.125	.171	.125	1.875	1.687	2.625	.250	1.562	3.843	.093	NA	NA	.359	.125	.437	3.688	NA	3.687	.093	.40	.25	3.875
	.125	.062	.12	.156		.125	1.625	1.140	.890	.640	1.390	.125	.171	.125	1.875	1.687	2.625	.250	1.562	3.843	.093	NA	NA	.359	.125	.437	3.688	NA	3.687	.093	.40	.25	3.875
	.125	.062	.12	.156		.125	1.625	1.140	.890	.640	1.390	.125	.171	.125	1.875	1.687	2.625	.250	1.562	3.843	.093	NA	NA	.359	.125	.437	3.688	NA	3.687	.093	.40	.25	3.875
	.125	.062	.12	.156		.125	1.625	1.140	.890	.640	1.390	.125	.171	.125	1.875	1.687	2.625	.250	1.562	3.843	.093	NA	NA	.359	.125	.437	3.688	NA	3.687	.093	.40	.25	3.875
	.093	.031	.06	.093		.093	.858	.608	.484	.358	.733	.077	.116	.062	.937	.875	1.343	.125	.781	1.892	.046	NA	NA	.209	.093	.250	1.875	NA	1.840	.046	.23	.16	1.938
	.093	.031	.06	.093		.093	.858	.608	.484	.358	.733	.077	.116	.062	.937	.875	1.343	.125	.781	1.892	.046	NA	NA	.209	.093	.250	1.875	NA	1.840	.046	.23	.16	1.938
	.093	.031	.06	.093		.093	.858	.608	.484	.358	.733	.077	.116	.062	.937	.875	1.343	.125	.781	1.892	.046	NA	NA	.209	.093	.250	1.875	NA	1.840	.046	.23	.16	1.938
	.093	.031	.06	.093		.093	.858	.608	.484	.358	.733	.077	.116	.062	.937	.875	1.343	.125	.781	1.892	.046	NA	NA	.209	.093	.250	1.875	NA	1.840	.046	.23	.16	1.938
	.093	.031	.06	.093		.093	.858	.608	.484	.358	.733	.077	.116	.062	.937	.875	1.343	.125	.781	1.892	.046	NA	NA	.209	.093	.250	1.875	NA	1.840	.046	.23	.16	1.938
	.093	.031	.06	.093		.093	.858	.608	.484	.358	.733	.077	.116	.062	.937	.875	1.343	.125	.781	1.892	.046	NA	NA	.209	.093	.250	1.875	NA	1.840	.046	.23	.16	1.938
	.093	.031	.06	.093		.093	.858	.608	.484	.358	.733	.077	.116	.062	.937	.875	1.343	.125	.781	1.892	.046	NA	NA	.209	.093	.250	1.875	NA	1.840	.046	.23	.16	1.938
	.093	.031	.06	.093		.093	.858	.608	.484	.358	.733	.077	.116	.062	.937	.875	1.343	.125	.781	1.892	.046	NA	NA	.209	.093	.250	1.875	NA	1.840	.046	.23	.16	1.938
	.093	.031	.06	.093		.093	.858	.608	.484	.358	.733	.077	.116	.062	.937	.875	1.343	.125	.781	1.892	.046	NA	NA	.209	.093	.250	1.875	NA	1.840	.046	.23	.16	1.938
	.093	.031	.06	.093		.093	.858	.608	.484	.358	.733	.077	.116	.062	.937	.875	1.343	.125	.781	1.892	.046	NA	NA	.209	.093	.250	1.875	NA	1.840	.046	.23	.16	1.938
	.093	.031	.06	.093		.093	.858	.608	.484	.358	.733	.077	.116	.062	.937	.875	1.343	.125	.781	1.892	.046	NA	NA	.209	.093	.250	1.875	NA	1.840	.046	.23	.16	1.938
	.093	.031	.06	.093		.093	.858	.608	.484	.358	.733	.077	.116	.062	.937	.875	1.343	.125	.781	1.892	.046	NA	NA	.209	.093	.250	1.875	NA	1.840	.046	.23	.16	1.938
	.093	.031	.06	.093		.093	.858	.608	.484	.358	.733	.077	.116	.062	.937	.875	1.343	.125	.781	1.892	.046	NA	NA	.209	.093	.250	1.875	NA	1.840	.046	.23	.16	1.938
	.093	.031	.06	.093		.093	.858	.608	.484	.358	.733	.077	.116	.062	.937	.875	1.343	.125	.781	1.892	.046	NA	NA	.209	.093	.250	1.875	NA	1.840	.046	.23	.16	1.938
	.093	.031	.06	.093		.093	.858	.608	.484	.358	.733	.077	.116	.062	.937	.875	1.343	.125	.781	1.892	.046	NA	NA	.209	.093	.250	1.875	NA	1.840	.046	.23	.16	1.938
	.093	.031	.06	.093		.093	.858	.608	.484	.358	.733	.077	.116	.062	.937	.875	1.343	.125	.781	1.892	.046	NA	NA	.209	.093	.250	1.875	NA	1.840	.046	.23	.16	1.938
	.093	.031	.06	.093		.093	.858	.608	.484	.358	.733	.077	.116	.062	.937	.875	1.343	.125	.781	1.892	.046	NA	NA	.209	.093	.250	1.875	NA	1.840	.046	.23	.16	1.938
	.093	.031	.06	.093		.093	.858	.608	.484	.358	.733	.077	.116	.062	.937	.875	1.343	.125	.781	1.892	.046	NA	NA	.209	.093	.250	1.875	NA	1.840	.046	.23	.16	1.938
	.093	.031	.06	.093		.093	.858	.608	.484	.358	.733	.077	.116	.062	.937	.875	1.343	.125	.781	1.892	.046	NA	NA	.209	.093	.250	1.875	NA	1.840	.046	.23	.16	1.938
	.093	.031	.06	.093		.093	.858	.608	.484	.358	.733	.077	.116	.062	.937	.875	1.343	.125	.781	1.892	.046	NA	NA	.209	.093	.250	1.875	NA	1.840	.046	.23	.16	1.938
	.093	.031	.06	.093		.093	.858	.608	.484	.358	.733	.077	.116	.062	.937	.875	1.343	.125	.781	1.892	.046	NA	NA	.209	.093	.250	1.875	NA	1.840	.046	.23	.16	1.938
	.093	.031	.06	.093		.093	.858	.608	.484	.358	.733	.077	.116	.062	.937	.875	1.343	.125	.781	1.892	.046	NA	NA	.209	.093	.250	1.875	NA	1.840	.046	.23	.16	1.938
	.093	.031	.06	.093		.093	.858	.608	.484	.358	.733	.077	.116	.062	.937	.875	1.343	.125	.781	1.892	.046	NA	NA	.209	.093	.250	1.875	NA	1.840	.046	.23	.16	1.938
	.093	.031	.06	.093		.093	.858	.608	.484	.358	.733	.077	.116	.062	.937	.875	1.343	.125	.781	1.892	.046	NA	NA	.209	.093	.250	1.875	NA	1.840	.046	.23	.16	1.938
	.093	.031	.06	.093		.093	.858	.608	.484	.358	.733	.077	.116	.062	.937	.875	1.343	.125	.781	1.892	.046	NA	NA	.209	.093	.250	1.875	NA	1.840	.046	.23	.16	1.938
	.093	.031	.06	.093		.093	.858	.608	.484	.358	.733	.077	.116	.062	.937	.875	1.343	.125	.781	1.892	.046	NA	NA	.209	.093	.250	1.875	NA	1.840	.046	.23	.16	1.938
	.093	.031	.06	.093	.100 .104	.093	.858	.608	.484	.358	.733	.077	.116	.062	.937	.875	1.343	.125	.781	1.892	.046	NA	NA	.209	.093	.250	1.875	NA	1.840	.046	.23	.16	1.938
375	.078	.048	.078	.093	NA	NA	1.125	.750	.593	.453	1.015	.062	.187	.078	.875	.718	1.375	.218	NA	NA	.048	.031	.875	.305	.078	.531	1.906	.078	NA	.078	.531	.187	NA
575	.078	.048	.078	.093	NA	NA	1.125	.750	.593	.453	1.015	.062	.187	.078	.875	.718	1.375	.218	NA	NA	.048	.031	.875	.305	.078	.531	1.906	.078	NA	.078	.531	.187	NA

AC ELECTRONICS DASH NUMBERS

		UNLESS OTHERWISE SPECIFIED DIMENSIONS ARE IN INCHES TOLERANCES ON 2 PLACE DECIMALS ± 3 PLACE DECIMALS ± .005 ANGLES ±	MIT INSTRUMENTATION LAB CAMBRIDGE MASS DWG NO CONTRACT DRAWN R.A. JONES DATE 16 JUL 65 CHECKED APPROVAL W. KUPFER 22 JUL 65	MANNED SPACECRAFT CENTER HOUSTON, TEXAS
		DO NOT SCALE THIS DRAWING	CONTRACT	NAMEPLATES, APOLLO G&N - GSE (STANDARDS)
AS APPLICABLE		MATERIAL SEE NOTE 11	T. MICHAELS 22 JUL 65 NASA APPROVAL	SIZE J2 · CODE IDENT NO. 80230 · 1004260
NEXT ASSY	USED ON		W. KUPFER 22 JUL 65 MIT APPROVAL	
APPLICATION		APPROVAL		SCALE NONE · SHEET 4 OF 6

1004260 DD

1004260 DD SHT 4

27-1004260

NOTICE — WHEN GOVERNMENT DRAWINGS, SPECIFICATIONS, OR OTHER DATA ARE USED FOR ANY PURPOSE OTHER THAN IN CONNECTION WITH A DEFINITELY RELATED GOVERNMENT PROCUREMENT OPERATION, THE UNITED STATES GOVERNMENT THEREBY INCURS NO RESPONSIBILITY NOR ANY OBLIGATION WHATSOEVER; AND THE FACT THAT THE GOVERNMENT MAY HAVE FORMULATED, FURNISHED, OR IN ANY WAY SUPPLIED THE SAID DRAWINGS, SPECIFICATIONS, OR OTHER DATA IS NOT TO BE REGARDED BY IMPLICATION OR OTHERWISE AS IN ANY MANNER LICENSING THE HOLDER OR ANY OTHER PERSON OR CORPORATION, OR CONVEYING ANY RIGHTS OR PERMISSION TO MANUFACTURE, USE, OR SELL ANY PATENTED INVENTION THAT MAY IN ANY WAY BE RELATED THERETO.

401	MIT	COMPUTER ASSY		2003100		NAS-9-497	A	I	NOTE 11B	2.000	1.312	1.906	1.375	.078	.048	.078	.093	NA	NA	1.125	.750	.93
400	MIT	LIFTING SLING-G&N INST. QUAL. FIX, & AZM. REF. FIX.		1021640		NAS-9-4065	B	II	NOTE 11C	2.000	1.312	1.687	1.375	.078	.048	.078	.093	[illegible]	.093	1.187	.750	.93
DASH NO.	P/C	PART NAME	REMARKS	PART NUMBER	SER. NO.	CONT. NO.	STYLE	TYPE	MATERIAL	A	B	C	D	E	F	G	H	J	K	L	M	

NOTES FOR TABLE

STYLE A IS FOR G & N SYSTEM

STYLE B IS FOR GROUND SUPPORT EQUIPMENT

TYPE I IS WITHOUT MOUNTING HOLES

TYPE II IS WITH MOUNTING HOLES

REVISIONS					
SYM	ZONE	DESCRIPTION	CHG NO	DATE	APPD
CL		REPLACES REV CK WITHOUT CHANGE PER TURR 34365		9/28/67	JWL RWH
CM		REVISION STATUS CHANGED		3 OCT 67	R.A.W.
CN		REVISION STATUS CHANGED		2 OCT 67	JRK
CP		REVISION STATUS CHANGED		6 NOV 67	EMS
CR		REVISION STATUS CHANGED		7 DEC 67	DWB RWH
CS		REVISION STATUS CHANGED		JAN 68	EHN
CT		REVISION STATUS CHANGED		7 FEB 68	LK
CU		REVISION STATUS CHANGED		22 FEB 68	JRK
CV		REVISION STATUS CHANGED		27 FEB 68	LK
CW		REVISION STATUS CHANGED		68	MTY
CY		REVISION STATUS CHANGED		6 APR 68	A.N.
CZ		REVISION STATUS CHANGED		23 MAY 68	MTY
DA		REVISION STATUS CHANGED		JULY 68	MTY
DB		REVISION STATUS CHANGED		18 SEP 68	
DC		REVISION STATUS CHANGED		16 DEC 68	LK
DD		REVISION STATUS CHANGED		30 DEC 68	MTY

[illegible]	.078	.048	.078	.093	NA	NA	1.125	.750	.593	.453	1.015	.062	.187	.078	.875	.718	1.375	.218	NA	NA	.048	.031	.875	.305	.078	.531	1.906	.078	NA	.078	.531	.187	NA
375	.078	.048	.078	.093	[illegible]	.093	1.187	.750	.593	.453	1.015	.062	.187	.078	.875	.718	1.375	.218	1.156	1.843	.048	NA	.875	.305	.078	.312	1.687	.110	1.830	.070	.275	.180	1.844
D	E	F	G	H	J	K	L	M	N	P	R	S	T	U	V	W	Y	Z	AA	AB	AC	AD	AE	AF	AG	AH	AJ	AK	AL	AM	AN	AP	AR

1004260 DD

1004260

MIT DASH NUMBERS

AS APPLICABLE	UNLESS OTHERWISE SPECIFIED DIMENSIONS ARE IN INCHES TOLERANCES ON 2 PLACE DECIMALS ± 3 PLACE DECIMALS ± .005 ANGLES ±	M I T INSTRUMENTATION LAB CAMBRIDGE MASS DWG NO CONTRACT	MANNED SPACECRAFT CENTER HOUSTON, TEXAS
NEXT ASSY | USED ON	DO NOT SCALE THIS DRAWING	DRAWN R. A. JONES DATE 16 JUL 65 CHECKED APPROVAL W. KUPFER 22 JUL 65 CONTRACT	NAMEPLATES, APOLLO G&N - GSE (STANDARDS)
APPLICATION	MATERIAL SEE NOTE 11	NASA APPROVAL T. MICHAELS 22 JUL 65 MIT APPROVAL W. KUPFER 22 JUL 65	SIZE J2 | CODE IDENT NO. 80230 | 1004260
	APPROVAL		SCALE NONE | SHEET 5 OF 6

1004260 DD SHT 5

2/1004260

NOTICE — WHEN GOVERNMENT DRAWINGS, SPECIFICATIONS, OR OTHER DATA ARE USED FOR ANY PURPOSE OTHER THAN IN CONNECTION WITH A DEFINITELY RELATED GOVERNMENT PROCUREMENT OPERATION, THE UNITED STATES GOVERNMENT THEREBY INCURS NO RESPONSIBILITY NOR ANY OBLIGATION WHATSOEVER; AND THE FACT THAT THE GOVERNMENT MAY HAVE FORMULATED, FURNISHED, OR IN ANY WAY SUPPLIED THE SAID DRAWINGS, SPECIFICATIONS, OR OTHER DATA IS NOT TO BE REGARDED BY IMPLICATION OR OTHERWISE AS IN ANY MANNER LICENSING THE HOLDER OR ANY OTHER PERSON OR CORPORATION, OR CONVEYING ANY RIGHTS OR PERMISSION TO MANUFACTURE, USE, OR SELL ANY PATENTED INVENTION THAT MAY IN ANY WAY BE RELATED THERETO.

DASH NO.	P/C	PART NAME	REMARKS	PART NUMBER	SER. NO.	CONT. NO.	STYLE	TYPE	MATERIAL	A	B	C	D	E	F	G	H	J	K	L	M
599	AC																				
598	AC																				
587		AUXILIARY BATTERY PACK		1901492-051		FOR OTHER DATA SEE DASH 565															
586		BATTERY POWER PACK		1900011-061		FOR OTHER DATA SEE DASH 565															
585		ANALYZER, OPTICS INERTIAL		2900023-051		FOR OTHER DATA SEE DASH 536															
584		ETHYLENE GLYCOL CLEANING KIT		2901630-011		NAS-9-497	B	I	NOTE 11B	FOR DIMENSIONS SEE DASH 4 VALUES BELOW											
583		SWITCH CROSS BAR ASSY		1900048-021		FOR OTHER DATA SEE DASH 102															
582	AC	G & N INDICATOR CONTROL PANEL ASSY		2021290-041		FOR OTHER DATA SEE DASH 181															
581	AC	G & N INDICATOR CONTROL PANEL ASSY		2021323-021		FOR OTHER DATA SEE DASH 181															
580		AUXILIARY BATTERY PACK		1901492-041		FOR OTHER DATA SEE DASH 565															
579	AC	COMPUTER CONT & RETICLE DIMMER		6014512-081		FOR OTHER DATA SEE DASH 534															
578	AC	G&N INDICATOR CONTROL PANEL ASSY		2021290-031		FOR OTHER DATA SEE DASH 181															
577		BREAKOUT BOX, CABLE ADAPTER		2901011-021		FOR OTHER DATA SEE DASH 506															
576		FIX., MOUNTING G&N		2900067-061		FOR OTHER DATA SEE DASH 500															
575		CSL, CAL AND TEST, SCM/PSAAM		2900895-041		FOR DATA SEE DASH 559															
574		CONT., TEMP. PORTABLE		2900060-031		NAS-9-497	B	II	NOTE 11C	FOR DIMENSIONS SEE DASH 535 VALUES											
573		BATTERY PACK LIFTING		2900812-031		NAS-9-497	B	II	NOTE 11C	FOR DIMENSIONS SEE DASH 542 VALUES											
572		FIX., MOUNTING G&N	(-144)	2900067-051		NAS-9-497	B	II	NOTE 11C	FOR DIMENSIONS SEE DASH 500 VALUES											
571		EYEPIECE STORAGE UNIT		2021382		FOR OTHER DATA SEE DASH 100															
570	AC	OPTICAL UNIT & BELLOWS ASSY				NAS-9-497	A	I	NOTE 11B	FOR DIMENSIONS SEE DASH 550 VALUES											
569	AC	G & N INDICATOR CONTROL PANEL ASSY		2021323-011		NAS-9-497	A	I	NOTE 11B	FOR DIMENSIONS SEE DASH 181											
568	AC	G & N INDICATOR CONTROL PANEL ASSY		2021290-021		NAS-9-497	A	I	NOTE 11B	FOR DIMENSIONS SEE DASH 181											
567	AC	G & N INDICATOR CONTROL PANEL ASSY		2021290-011		NAS-9-497	A	I	NOTE 11B	FOR DIMENSIONS SEE DASH 181											
566	AC	COMPUTER CONT & RETICLE DIMMER		6014512-061		NAS-9-497	A	I	NOTE 11B	FOR DIMENSIONS SEE DASH 534											
565		AUXILIARY BATTERY PACK		1901492-031		NAS-9-497	B	II	NOTE 11C	FOR DIMENSIONS SEE DASH 500											
564		BATTERY POWER PACK		1900011-051		NAS-9-497	B	II	NOTE 11C	FOR DIMENSIONS SEE DASH 500											
563		PSA ADAPTER MODULE (LEM)		6900088-031		NAS-9-497	B	II	NOTE 11C	FOR DIMENSIONS SEE DASH 141 VALUES											
562	AC	COMPUTER CONT & RETICLE DIMMER		6014512-041		NAS-9-497	A	I	NOTE 11B	FOR DIMENSIONS SEE DASH 534 VALUES											
561	AC	G & N INDICATOR CONTROL PANEL ASSY		2014578-031		NAS-9-497	A	I	NOTE 11B	FOR DIMENSIONS SEE DASH 181 VALUES											
560		ADPT. MODULE, PSA		2901143-021		NAS-9-497	B	II	NOTE 11C	FOR DIMENSIONS SEE DASH 141 VALUES											
559		CSL, CAL AND TEST, SCM/PSAAM		2900895-031		FOR OTHER DATA SEE DASH 547															
558		PSA ADAPTER MODULE (LEM)		6900088-021		FOR OTHER DATA SEE DASH 189															
557		FIX., HANDLING, C/M PSA		2900998-021		NAS-9-497	B	II	NOTE 11C	FOR DIMENSIONS SEE DASH 141 VALUES											
556		FIX., MOUNTING G & N	(-144)	2900067-041		NAS-9-497	B	II	NOTE 11C	FOR DIMENSIONS SEE DASH 500 VALUES											
555	AC	OPTICAL UNIT ASSEMBLY		1021368-061		NAS-9-497	A	I	NOTE 11B	2.000	1.312	1.687	1.375	.078	.048	.078	.093	NA	NA	1.125	.750
554	AC	OPTICAL UNIT ASSEMBLY		1021368-041		NAS-9-497	A	I	NOTE 11B	2.000	1.312	1.687	1.375	.078	.048	.078	.093	NA	NA	1.125	.750
553	AC	OPTICAL UNIT AND BELLOWS ASSEMBLY		2010790-111		NAS-9-497	A	I	NOTE 11B	2.000	1.312	1.687	1.375	.078	.048	.078	.093	NA	NA	1.125	.750
552	AC	OPTICAL UNIT AND BELLOWS ASSEMBLY		2010790-081		NAS-9-497	A	I	NOTE 11B	2.000	1.312	1.687	1.375	.078	.048	.078	.093	NA	NA	1.125	.750
551	AC	OPTICAL UNIT AND BELLOWS ASSEMBLY		2010790-071		NAS-9-497	A	I	NOTE 11B	2.000	1.312	1.687	1.375	.078	.048	.078	.093	NA	NA	1.125	.750
550	AC	OPTICAL UNIT AND BELLOWS ASSEMBLY		2010790-061		NAS-9-497	A	I	NOTE 11B	2.000	1.312	1.687	1.375	.078	.048	.078	.093	NA	NA	1.125	.750
548		CAGING ELECTRONICS, GYRO		2900029-031		NAS-9-497	B	II	NOTE 11C	2.125	.968	1.718	NA	.093	.031	.06	.093	.188 .164	.093	.858	.608
547		CSL, CAL AND TEST, SCM/PSAAM		2900895-021		NAS-9-497	B	II	NOTE 11C	4.125	1.812	3.250	NA	.125	.062	.12	.156		.125	1.625	1.140
546		FIX., HAND., C/M AND LEM CDU		2900999-021		NAS-9-497	B	II	NOTE 11C	2.125	.968	1.718	NA	.093	.031	.06	.093	.188 .164	.093	.858	.608
545	AC	G & N INDICATOR CONTROL PANEL ASSY		2014578-021		NAS-9-497	A	I	NOTE 11B	3.000	1.938	2.437	NA	.125	.062	.188	.156	NA	NA	1.750	1.125
544		ADPT MODULE, P.S.A.		1902431-051		NAS-9-497	B	II	NOTE 11C	2.125	.968	1.718	NA	.093	.031	.06	.093	.188 .164	.093	.858	.608
543	AC	PANEL, MONITOR		2900031-041		NAS-9-497	B	II	NOTE 11C	2.125	.968	1.718	NA	.093	.031	.06	.093		.093	.858	.608
542	AC	BATTERY PACK, LIFTING		2900812-021		NAS-9-497	B	II	NOTE 11C	2.125	.968	1.718	NA	.093	.031	.06	.093		.093	.858	.608
541	AC	FIXTURE, MOUNTING, IMU		2900000-021		NAS-9-497	B	II	NOTE 11C	4.125	1.812	3.250	NA	.125	.062	.12	.156		.125	1.625	1.140
540	AC	ADPT, TEST POINT, P.S.A.		2900037-031		NAS-9-497	B	II	NOTE 11C	2.125	.968	1.718	NA	.093	.031	.06	.093	.188 .164	.093	.858	.608
539	AC	ANNUNCIATOR PANEL & EYEPIECE STORAGE ASSEMBLY		1021255-041		NAS-9-497	A	I	NOTE 11B	2.000	1.312	1.906	1.375	.078	.048	.078	.093	NA	NA	1.125	.750
538	AC	ANNUNCIATOR PANEL & EYEPIECE STORAGE ASSEMBLY		1021255-031		NAS-9-497	A	I	NOTE 11B	2.000	1.312	1.906	1.375	.078	.048	.078	.093	NA	NA	1.125	.750
537	AC	TEST SELECTOR		2900028-031		NAS-9-497	B	II	NOTE 11C	2.125	.968	1.718	NA	.093	.031	.06	.093	.188 .164	.093	.858	.608
536	AC	ANALYZER, OPTICS-INERTIAL		2900023-041		NAS-9-497	B	II	NOTE 11C	4.125	1.812	3.250	NA	.125	.062	.12	.156		.125	1.625	1.140
535	AC	CONT, TEMP, PORTABLE		2900060-021		NAS-9-497	B	II	NOTE 11C	2.125	.968	1.718	NA	.093	.031	.06	.093	.188 .164	.093	.858	.608
534	AC	COMPUTER CONT & RETICLE DIMMER		6014512-021		NAS-9-497	A	I	NOTE 11B	2.000	1.312	1.906	1.375	.078	.048	.078	.093	NA	NA	1.125	.750
533	AC	ADPT MODULE, P.S.A.		1902431-041		NAS-9-497	B	II	NOTE 11C	2.125	.968	1.718	NA	.093	.031	.06	.093	.188 .164	.093	.858	.608
532	AC	TRAY BREAKOUT, 105 PIN		1900807-021		NAS-9-497	B	II	NOTE 11C	4.125	1.812	3.250	NA	.125	.062	.12	.156		.125	1.625	1.140
531	AC	TRAY BREAKOUT, 84 PIN		1900806-021		NAS-9-497	B	II	NOTE 11C	4.125	1.812	3.250	NA	.125	.062	.12	.156		.125	1.625	1.140
530	AC	HEAT SINK-TRAY EXTENDER		1900808-021		NAS-9-497	B	II	NOTE 11C	2.125	.968	1.718	NA	.093	.031	.06	.093		.093	.858	.608
529	AC	TESTER, FAILURE INDICATOR		1900809-021		NAS-9-497	B	II	NOTE 11C	2.125	.968	1.718	NA	.093	.031	.06	.093	.188 .164	.093	.858	.608
527	AC	FIX., MOUNTING, G & N	(-144)	1902204-021		NAS-9-497	B	II	NOTE 11C	FOR DIMENSIONS SEE DASH 500 VALUES BELOW											
526	AC	FIX., MOUNTING, G & N	(-144)	2900067-031		NAS-9-497	B	II	NOTE 11C	FOR DIMENSIONS SEE DASH 500 VALUES BELOW											
525	AC	PORTABLE TEMP. CONTROLLER		1900496-021		NAS-9-497	B	II	NOTE 11C	3.000	1.937	2.437	2.312	.125	.031	.125	.156	.125	.125	1.718	1.187
524	AC	POWER, SERVO & THERMOCOUPLE ASSEMBLY C/M		2010743		NAS-9-497	A	I	NOTE 11B	2.125	.968	1.718	NA	.093	.031	.06	.093	NA	NA	.858	.608
523	AC	PULSE TORQUE AND THERMOCOUPLE ASSEMBLY-LEM		6010656		NAS-9-497	A	I	NOTE 11B	FOR DIMENSIONS SEE DASH 508 VALUES BELOW											
522	AC	COUPLING DATA UNIT & THERMOCOUPLE ASSEMBLY-LEM		2010744		NAS-9-497	A	I	NOTE 11B	FOR DIMENSIONS SEE DASH 508 VALUES BELOW											
521	AC	COUPLING DATA UNIT & THERMOCOUPLE ASSEMBLY-C/M		2010744		NAS-9-497	A	I	NOTE 11B	FOR DIMENSIONS SEE DASH 508 VALUES BELOW											
520	AC	PIPA ELECTRONICS AND THERMOCOUPLE ASSEMBLY		2010745		NAS-9-497	A	I	NOTE 11B	FOR DIMENSIONS SEE DASH 508 VALUES BELOW											
519	AC	FIXTURE, HANDLING, LEM-PSA	(-141)	6900129-011		NAS-9-497	B	II	NOTE 11C	FOR DIMENSIONS SEE DASH 504 VALUES BELOW											
518	AC	JUNCTION BOX, GSE-PSA	(-144)	1901933-031		NAS-9-497	B	II	NOTE 11C	FOR DIMENSIONS SEE DASH 500 VALUES BELOW											
517	AC	FIX., HAND., OPTICS INSTL.	(-141)	2901380-011		NAS-9-497	B	II	NOTE 11C	FOR DIMENSIONS SEE DASH 502 VALUES BELOW											
516	AC	POWER, SERVO AND THERMOCOUPLE ASSEMBLY-LEM		6010655		NAS-9-497	A	I	NOTE 11B	FOR DIMENSIONS SEE DASH 508 VALUES BELOW											
514	AC	SIGNAL COND. ASSY LEM OPER.	(-100)	6007013		NAS-9-497	A	I	NOTE 11B	FOR DIMENSIONS SEE DASH 508 VALUES BELOW											
513	AC	JUMPER, BY-PASS	(-141)	1021616		NAS-9-497	B	II	NOTE 11C	2.125	.968	1.718	NA	.093	.031	.06	.093	.188 .164	.093	.858	.608
512	AC	COUPLING DATA UNIT ASSEMBLY C/M	(-100)	2007322-011		NAS-9-497	A	I	NOTE 11B	FOR DIMENSIONS SEE DASH 508 VALUES BELOW											
511	AC	COUPLING DATA UNIT ASSEMBLY-LEM	(-100)	2007322-021		NAS-9-497	A	I	NOTE 11B	FOR DIMENSIONS SEE DASH 508 VALUES BELOW											
510	AC	BATTERY POWER PACK	(-144)	1900011-041		NAS-9-497	B	II	NOTE 11C	FOR DIMENSIONS SEE DASH 500 VALUES BELOW											
509	AC	JUNCTION BOX, P.S.A./G.S.E.	(-144)	1902195-021		NAS-9-497	B	II	NOTE 11C	FOR DIMENSIONS SEE DASH 500 VALUES BELOW											
508	AC	NAVIGATION BASE ASSEMBLY-LEM	(-101)	6899980		NAS-9-497	A	I	NOTE 11B	2.000	1.312	1.906	1.375	.078	.048	.078	.093	NA	NA	1.125	.750
507	AC	CSL, COOL. AND PWR, G AND N	(-144)	1902134-041		NAS-9-497	B	II	NOTE 11C	FOR DIMENSIONS SEE DASH 500 VALUES BELOW											
506	AC	BREAKOUT BOX, CABLE ADAPTER	(-141)	2901011-011		NAS-9-497	B	II	NOTE 11C	2.125	.968	1.718	NA	.093	.031	.06	.093	.188 .164	.093	.858	.608
505	AC	MONITOR AND CONTROL, TEMP	(-141)	2900026-021		NAS-9-497	B	II	NOTE 11C	2.125	.968	1.718	NA	.093	.031	.06	.093		.093	.858	.608
504	AC	PWR SUP, GUIDANCE SYSTEM	(-141)	1900033-021		NAS-9-497	B	II	NOTE 11C	2.125	.968	1.718	NA	.093	.031	.06	.093		.093	.858	.608
503	AC	CONTROL, GIMBAL POSITION	(-141)	2900036-021		NAS-9-497	B	II	NOTE 11C	2.125	.968	1.718	NA	.093	.031	.06	.093		.093	.858	.608
502	AC	ADPT, TEST POINT, PTA/PEA.	(-141)	2900145-021		NAS-9-497	B	II	NOTE 11C	2.125	.968	1.718	NA	.093	.031	.06	.093	.188 .164	.093	.858	.608
501	AC	MOUNTING PLATE, COMPONENT	(-144)	6900007-031		NAS-9-497	B	II	NOTE 11C	FOR DIMENSIONS SEE DASH 500 VALUES BELOW											
500	AC	MOUNTING PLATE, COMPONENT	(-144)	2900677-021		NAS-9-497	B	II	NOTE 11C	4.125	1.812	3.250	NA	.125	.062	.12	.156	.188 .164	.125	1.625	1.140

NOTES FOR TABLE

STYLE A IS FOR G & N SYSTEM
STYLE B IS FOR GROUND SUPPORT EQUIPMENT
TYPE I IS WITHOUT MOUNTING HOLES
TYPE II IS WITH MOUNTING HOLES

1004260 SHT 6

1/1004260

REVISIONS					
SYM	ZONE	DESCRIPTION	CHG NO	DATE	APPD
CL		REPLACES REV CK WITH CHANGE PER TDRR 34365		9/28/67	JWL RWH
CM		REVISED PER TDRR 34895		17 OCT. 67	R.A.W.
CN		REVISED PER TDRR 34467		31 OCT 67	JRK
CP		REVISED PER TDRR 34855		6 NOV 67	EMS
CR		REVISED PER TDRR 35164		7 DEC 67	DKD RWH
CS		REVISED PER TDRR 35307		3 JAN 68	EHW
CT		REVISION STATUS CHANGED		7 FEB 68	LK
CU		REVISED PER TDRR 35628		22 FEB 68	JRK
CV		REVISED PER TDRR 35675		27 FEB 68	LK
CW		REVISED PER TDRR 35970		[illegible] 68	
CY		REVISION STATUS CHANGED		10 APR 68	
CZ		REVISED PER TDRR 36245		23 MAY 68	
DA		REVISED PER TDRR 36324		17 JUN 68	
DB		REVISED PER TDRR 36742		12 SEP 68	
DC		REVISED PER TDRR 37[illegible]4		6 DEC 68	
DD		REVISED PER TDRR 37146		[illegible] 68	

D	E	F	G	H	J	K	L	M	N	P	R	S	T	U	V	W	Y	Z	AA	AB	AC	AD	AE	AF	AG	AH	AJ	AK	AL	AM	AN	AP	AR
SEE DASH [illegible] VALUES BELOW																																	
SEE DASH 535 VALUES																																	
SEE DASH 542 VALUES																																	
SEE DASH 500 VALUES																																	
SEE DASH [illegible] VALUES																																	
SEE DASH 181																																	
SEE DASH 181																																	
SEE DASH 181																																	
SEE DASH 534																																	
SEE DASH 500																																	
SEE DASH 500																																	
SEE DASH 141 VALUES																																	
SEE DASH 534 VALUES																																	
SEE DASH 181 VALUES																																	
SEE DASH 141 VALUES																																	
SEE DASH 141 VALUES																																	
SEE DASH 500 VALUES																																	
.375	.078	.04	.078	.093	NA	NA	1.125	.750	.593	.453	1.015	.062	.187	.078	.875	.718	1.375	.218	NA	NA	.048	.031	.875	.305	NA	.468	1.531	NA	NA	.078	.312	.187	NA
.375	.078	.04	.078	.093	NA	NA	1.125	.750	.593	.453	1.015	.062	.187	.078	.875	.718	1.375	.218	NA	NA	.048	.031	.875	.305	NA	.468	1.531	NA	NA	.078	.312	.187	NA
.375	.078	.04	.078	.093	NA	NA	1.125	.750	.593	.453	1.015	.062	.187	.078	.875	.718	1.375	.218	NA	NA	.048	.031	.875	.305	NA	.468	1.531	NA	NA	.078	.312	.187	NA
.375	.078	.04	.078	.093	NA	NA	1.125	.750	.593	.453	1.015	.062	.187	.078	.875	.718	1.375	.218	NA	NA	.048	.031	.875	.305	NA	.468	1.531	NA	NA	.078	.312	.187	NA
.375	.078	.04	.078	.093	NA	NA	1.125	.750	.593	.453	1.015	.062	.187	.078	.875	.718	1.375	.218	NA	NA	.048	.031	.875	.305	NA	.468	1.531	NA	NA	.078	.312	.187	NA
.375	.078	.04	.078	.093	NA	NA	1.125	.750	.593	.453	1.015	.062	.187	.078	.875	.718	1.375	.218	NA	NA	.048	.031	.875	.305	NA	.468	1.531	NA	NA	.078	.312	.187	NA
NA	.093	.03	.06	.093	100 104	.093	.858	.608	.484	.358	.733	.077	.116	.062	.937	.875	1.343	.125	.781	1.892	.046	NA	NA	.209	.093	.250	1.875	NA	1.840	.046	.23	.16	1.938
NA	.125	.06	.12	.156		.125	1.625	1.140	.890	.640	1.390	.125	.171	.125	1.875	1.687	2.625	.250	1.562	3.843	.093	NA	NA	.359	.125	.437	3.688	NA	3.687	.093	.40	.25	3.875
NA	.093	.03	.06	.093	100 104	.093	.858	.608	.484	.358	.733	.077	.116	.062	.937	.875	1.343	.125	.781	1.892	.046	NA	NA	.209	.093	.250	1.875	NA	1.840	.046	.23	.16	1.938
NA	.125	.06	.188	.156	NA	NA	1.750	1.125	.906	.688	1.500	NA	.281	.125	NA	1.094	2.062	.312	NA	2.500	.062	.125	1.312	.469	NA	NA	NA	.156	NA	.125	.469	.344	NA
NA	.093	.03	.06	.093	100 104	.093	.858	.608	.484	.358	.733	.077	.116	.062	.937	.875	1.343	.125	.781	1.892	.046	NA	NA	.209	.093	.250	1.875	NA	1.840	.046	.23	.16	1.938
NA	.093	.03	.06	.093		.093	.858	.608	.484	.358	.733	.077	.116	.062	.937	.875	1.343	.125	.781	1.892	.046	NA	NA	.209	.093	.250	1.875	NA	1.840	.046	.23	.25	1.938
NA	.093	.03	.06	.093		.093	.858	.608	.484	.358	.733	.077	.116	.062	.937	.875	1.343	.125	.781	1.892	.046	NA	NA	.209	.093	.250	1.875	NA	1.840	.046	.23	.16	1.938
NA	.125	.06	.12	.156		.125	1.625	1.140	.890	.640	1.390	.125	.171	.125	1.875	1.687	2.625	.250	1.562	3.843	.093	NA	NA	.359	.125	.437	3.688	NA	3.687	.093	.40	.25	3.875
NA	.093	.03	.06	.093	100 104	.093	.858	.608	.484	.358	.733	.077	.116	.062	.937	.875	1.343	.125	.781	1.892	.046	NA	NA	.209	.093	.250	1.875	NA	1.840	.046	.23	.16	1.938
.375	.078	.04	.078	.093	NA	NA	1.125	.750	.593	.453	1.015	.062	.187	.078	.875	.718	1.375	.218	NA	NA	.048	.031	.875	.305	.078	.531	1.906	.078	NA	.078	.531	.187	NA
[illegible]	[illegible]	.04	.078	.093	NA	NA	1.125	.750	.593	.453	1.015	.062	.187	.078	.875	.718	1.375	.218	NA	NA	.048	.031	.875	.305	.078	.531	1.906	.078	NA	.078	.531	.187	NA
NA	.093	.03	.06	.093	100 104	.093	.858	.608	.484	.358	.733	.077	.116	.062	.937	.875	1.343	.125	.781	1.892	.046	NA	NA	.209	.093	.250	1.875	NA	1.840	.046	.23	.16	1.938
NA	.125	.06	.12	.156		.125	1.625	1.140	.890	.640	1.390	.125	.171	.125	1.875	1.687	2.625	.250	1.562	3.843	.093	NA	NA	.359	.125	.437	3.688	NA	3.687	.093	.40	.25	3.875
NA	.093	.03	.06	.093	100 104	.093	.858	.608	.484	.358	.733	.077	.116	.062	.937	.975	1.343	.125	.781	1.892	.046	NA	NA	.209	.093	.250	1.875	NA	1.840	.046	.23	.16	1.938
1.375	.078	.04	.078	.093	NA	NA	1.125	.750	.593	.453	1.015	.062	.187	.078	.875	.718	1.375	.218	NA	NA	.048	.031	.875	.305	.078	.531	1.906	.078	NA	.078	.531	.187	NA
NA	.093	.03	.06	.093	100 104	.093	.858	.608	.484	.358	.733	.077	.116	.062	.937	.875	1.343	.125	.781	1.892	.046	NA	NA	.209	.093	.250	1.875	NA	1.840	.046	.23	.16	1.938
NA	.125	.06	.12	.156		.125	1.625	1.140	.890	.640	1.390	.125	.171	.125	1.875	1.687	2.625	.250	1.562	3.843	.093	NA	NA	.359	.125	.437	3.688	NA	3.687	.093	.40	.25	3.875
NA	.125	.06	.12	.156		.125	1.625	1.140	.890	.640	1.390	.125	.171	.125	1.875	1.687	2.625	.250	1.562	3.843	.093	NA	NA	.359	.125	.437	3.688	NA	3.687	.093	.40	.25	3.875
NA	.093	.03	.06	.093		.093	.858	.608	.484	.358	.733	.077	.116	.062	.937	.875	1.343	.125	.781	1.892	.046	NA	NA	.209	.093	.250	1.875	NA	1.840	.046	.23	.16	1.938
NA	.093	.03	.06	.093	100 104	.093	.858	.608	.484	.358	.733	.077	.116	.062	.937	.875	1.343	.125	.781	1.892	.046	NA	NA	.209	.093	.250	1.875	NA	1.840	.046	.23	.16	1.938
SEE DASH 500 VALUES BELOW																																	
SEE DASH 500 VALUES BELOW																																	
2.312	.125	.0	.125	.156	.125	.125	1.718	1.187	.968	.749	1.452	.093	.295	.090	1.312	1.00	2.000	.250	1.687	2.750	.062	NA	NA	.463	.125	.562	2.437	.140	2.562	.090	.468	.359	2.750
NA	.093	.0	.06	.093	NA	NA	.858	.608	.484	.358	.733	.062	.140	.062	NA	.968	1.450	.125	NA	1.720	.046	.03	NA	.210	NA	NA	NA	.070	NA	.046	.32	.16	NA
SEE DASH 508 VALUES BELOW																																	
SEE DASH 508 VALUES BELOW																																	
SEE DASH 508 VALUES BELOW																																	
SEE DASH 508 VALUES BELOW																																	
SEE DASH 504 VALUES BELOW																																	
SEE DASH 500 VALUES BELOW																																	
SEE DASH 502 VALUES BELOW																																	
SEE DASH 508 VALUES BELOW																																	
SEE DASH 508 VALUES BELOW																																	
NA	.093	.0	.06	.093	100 104	.093	.858	.608	.484	.358	.733	.077	.116	.062	.937	.875	1.343	.125	.781	1.892	.046	NA	NA	.209	.093	.250	1.875	NA	1.840	.046	.23	.16	1.938
SEE DASH 508 VALUES BELOW																																	
SEE DASH 508 VALUES BELOW																																	
SEE DASH 500 VALUES BELOW																																	
SEE DASH 500 VALUES BELOW																																	
1.375	.078	.0	.078	.093	NA	NA	1.125	.750	.593	.453	1.015	.062	.187	.078	.875	.718	1.375	.218	NA	NA	.048	.031	.875	.305	.078	.531	1.906	.078	NA	.078	.531	.187	NA
SEE DASH 500 VALUES BELOW																																	
NA	.093	.0	.06	.093	100 104	.093	.858	.608	.484	.358	.733	.077	.116	.062	.937	.875	1.343	.125	.781	1.892	.046	NA	NA	.209	.093	.250	1.875	NA	1.840	.046	.23	.16	1.938
NA	.093	.0	.06	.093		.093	.858	.608	.484	.358	.733	.077	.116	.062	.937	.875	1.343	.125	.781	1.892	.046	NA	NA	.209	.093	.250	1.875	NA	1.840	.046	.23	.16	1.938
NA	.093	.0	.06	.093		.093	.858	.608	.484	.358	.733	.077	.116	.062	.937	.875	1.343	.125	.781	1.892	.046	NA	NA	.209	.093	.250	1.875	NA	1.840	.046	.23	.16	1.938
NA	.093	.0	.06	.093		.093	.858	.608	.484	.358	.733	.077	.116	.062	.937	.875	1.343	.125	.781	1.892	.046	NA	NA	.209	.093	.250	1.875	NA	1.840	.046	.23	.16	1.938
NA	.093	.0	.06	.093	100 104	.093	.858	.608	.484	.358	.733	.077	.116	.062	.937	.875	1.343	.125	.781	1.892	.046	NA	NA	.209	.093	.250	1.875	NA	1.840	.046	.23	.16	1.938
SEE DASH 500 VALUES BELOW																																	
NA	.125	.0	.12	.156	100 104	.125	1.625	1.140	.890	.640	1.390	.125	.171	.125	1.875	1.687	2.625	.250	1.562	3.843	.093	NA	NA	.359	.125	.437	3.688	NA	3.687	.093	.40	.25	3.875

AC ELECTRONICS DASH NUMBERS

AS APPLICABLE	UNLESS OTHERWISE SPECIFIED DIMENSIONS ARE IN INCHES TOLERANCES ON 2 PLACE DECIMALS ± 3 PLACE DECIMALS ±.005 ANGLES ± DO NOT SCALE THIS DRAWING	MIT INSTRUMENTATION LAB CAMBRIDGE MASS DRAWN R.A. JONES DATE 16 JUL 65 CHECKED APPROVAL W. KUPFER 22 JUL 65 CONTRACT	MANNED SPACECRAFT CENTER HOUSTON, TEXAS	
NEXT ASSY / USED ON	MATERIAL SEE NOTE 11	NASA APPROVAL T. MICHAELS 22 JUL 65 MIT APPROVAL W. KUPFER 22 JUL 65	NAMEPLATES, APOLLO GEN - GSE (STANDARDS)	
APPLICATION	APPROVAL		SIZE J2 CODE IDENT NO. 80230	1004260
			SCALE NONE	SHEET 6 OF 6

1004260 DD SHT 6

1004260

NOTICE – WHEN GOVERNMENT DRAWINGS, SPECIFICATIONS OR OTHER DATA [illegible]

NOTES:

1. INTERPRET DRAWING IN ACCORDANCE WITH STANDARDS PRESCRIBED BY MIL-D-70327.
2. DIMENSIONS ON EACH VIEW APPLY TO ALL VIEWS (WITH THE EXCEPTION OF MOUNTING HOLES).
3. FORMATS ILLUSTRATED WILL BE APPLICABLE TO ALL ITEMS REQUIRING NAMEPLATES BELOW END ITEM DESIGNATION (SYSTEMS, ASSEMBLIES, ETC.)
4. PLATE BACKGROUND TO BE LUSTERLESS BLACK PER FED-STD-595, COLOR 37038. BORDER, MARKING AND LETTERING TO BE NATURAL METAL, (ANODIZED ALUMINUM).
5. MARKING METHOD TO BE DIE STAMPING, ETCHING OR ENGRAVING IN ACCORDANCE WITH MIL-P-19834.
6. LETTERING STYLE TO BE GOTHIC, (SANS SERIFS), AND NUMBERS TO BE ARABIC.
7. WHERE LOCATING DIMENSIONS ARE NOT SHOWN, CHARACTERS SHALL BE SYMMETRICALLY POSITIONED.
8. IDENTIFY WITH DRAWING NUMBER PER ND 1002019.
9. WHEN "AUTO MARK" METAL MARKING TYPEWRITER IS USED TO ADD DATA TO BLANK SPACES, TYPE SIZE IS TO BE SELECTED FROM DIMENSIONS U, AC, AND AM.
10. NASA SYMBOL IS TO BE PROPORTIONAL TO NAMEPLATE IN RATIO OF 1 TO 5 WITH DIMENSION A VALUE AND IS TO HAVE NATURAL BACKGROUND. NASA SYMBOL LETTERS LETTERING AND FEATHER TO BE BLACK, (OR WHITE FOR SILK SCREENING). WHERE BLACK FEATHER PROTRUDES INTO BLACK BACKGROUND, A MINIMUM OUTLINE OF NATURAL BACKGROUND SHALL EXIST.
11. NAMEPLATES WILL BE APPLIED BY METHODS LISTED BELOW, SHOWN IN ORDER OF PREFERENCE, (I.E., FOR RELIABILITY AND WEIGHT).
    - A - STENCIL OR SILK SCREEN DIRECTLY ON EQUIPMENT USING INK PER SCD 1010920, (WHITE OR BLACK).
    - B - ALUMINUM FOIL, (STYLE A OR B, TYPE I):
      FOIL SHALL BE .0030 ± .0005 THICK PER MIL-A-148.
      FOIL SHALL HAVE NO ADHESIVE BACKING.
      FOIL SHALL BE BONDED PER ND 1002219, (METHOD II).
      FOIL SHALL BE CLEAR ANODIZED PER MIL-A-8625, TYPE II.
    - C - PLATE, (STYLE A OR B, TYPE II):
      MATERIAL: QQ-A-250, TEMPER O OR H14, TYPE 1100, ALUMINUM ALLOY, .032 THICK. ANODIZE PER MIL-A-8625, TYPE II.
      ALUMINUM PLATE MUST BE FREE FROM BURRS AND SHARP CORNERS, MOUNTED WITH APPLICABLE SIZE FASTENERS.
12. NAMEPLATES SHALL BE CAPABLE OF MEETING APPLICABLE REQUIREMENTS OF MIL-M-13231.
13. ON DIMENSION TABLES SHOWN ON PAGES 2, 3, 4, 5, AND 6, NA MEANS, "NOT APPLICABLE".

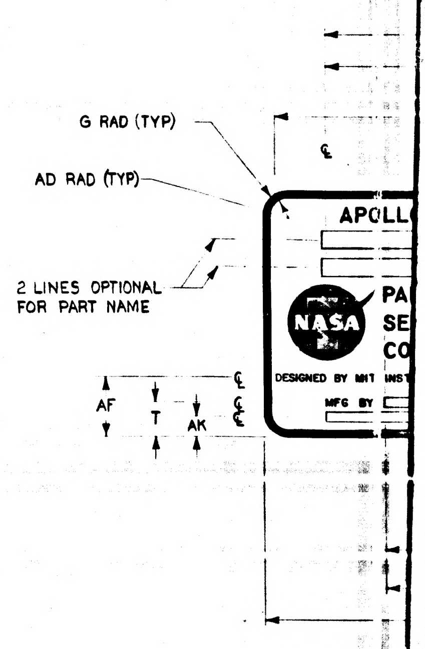

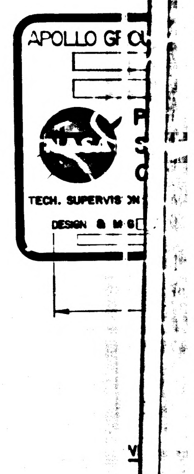

SUGGESTED PROPORTIONS FOR NAMEPLATE DIMENSIONS.
1. SELECT NAMEPLATE LENGTH, DIMENSION "A", TO FIT DESIGN NEEDS.
2. DIMENSIONS B THRU AS ON LINE 1 BELOW ARE PROPORTIONAL TO "A" BY MULTIPLIERS SHOWN IN LINE 2 BELOW.

1.	A	B	C	D	E	F	G	H	J	K	L	M	N	P	R	S	T	U	V	W	Y	Z	AA
2.	1.000A	.6563A	.8438A	.6875A	.0391A	.0240A	.0391A	.0469A	.0547A	.0469A	.5938A	.3750A	.2969A	.2187A	.5079A	.0313A	.0938A	.0391A	.4375A	.3594A	.6875A	.1094A	.5781A

1.	AB	AC	AD	AE	AF	AG	AH	AJ	AK	AL	AM	AN	AP	AR	AS
2.	.9219A	.0240A	.0156A	.4375A	.1525A	.0391A	.1563A	.8438A	.0548A	.8659A	.0391A	.1563A	.0938A	.9219A	.0151A

REVISIONS					
SYM	ZONE	DESCRIPTION	CHG NO	DATE	APPD
CL		REPLACES REV CK WITHOUT CHANGE PER TDRR 34365		9/28/67	JWL RWH
CM		REVISION STATUS CHANGED		18 OCT 67	R.A.W.
CN		REVISION STATUS CHANGED		31 OCT 67	JRK
CP		REVISION STATUS CHANGED		6 NOV 67	EMS
CR		REVISION STATUS CHANGED		7 DEC 67	DKD RWH
CS		REVISION STATUS CHANGED		JAN 68	J.W. EHW
CT		REVISION STATUS CHANGED		7 FEB 68	LK
CU		REVISION STATUS CHANGED		22 FEB 68	JRK
CV		REVISION STATUS CHANGED		27 FEB 68	LK
CW		REVISION STATUS CHANGED		3 APR 68	MTY
CY		REVISION STATUS CHANGED		16 APR 68	A.N.
CZ		REVISION STATUS CHANGED		23 MAY 68	MTY
DA		REVISION STATUS CHANGED		17 JUN 68	MTY
DB		REVISION STATUS CHANGED		12 SEP 68	RWH
DC		REVISION STATUS CHANGED		16 DEC 68	LK
DD		REVISION STATUS CHANGED		30 DEC 68	MTY
DE		REVISED PER TDRR 37251		23 JAN 69	

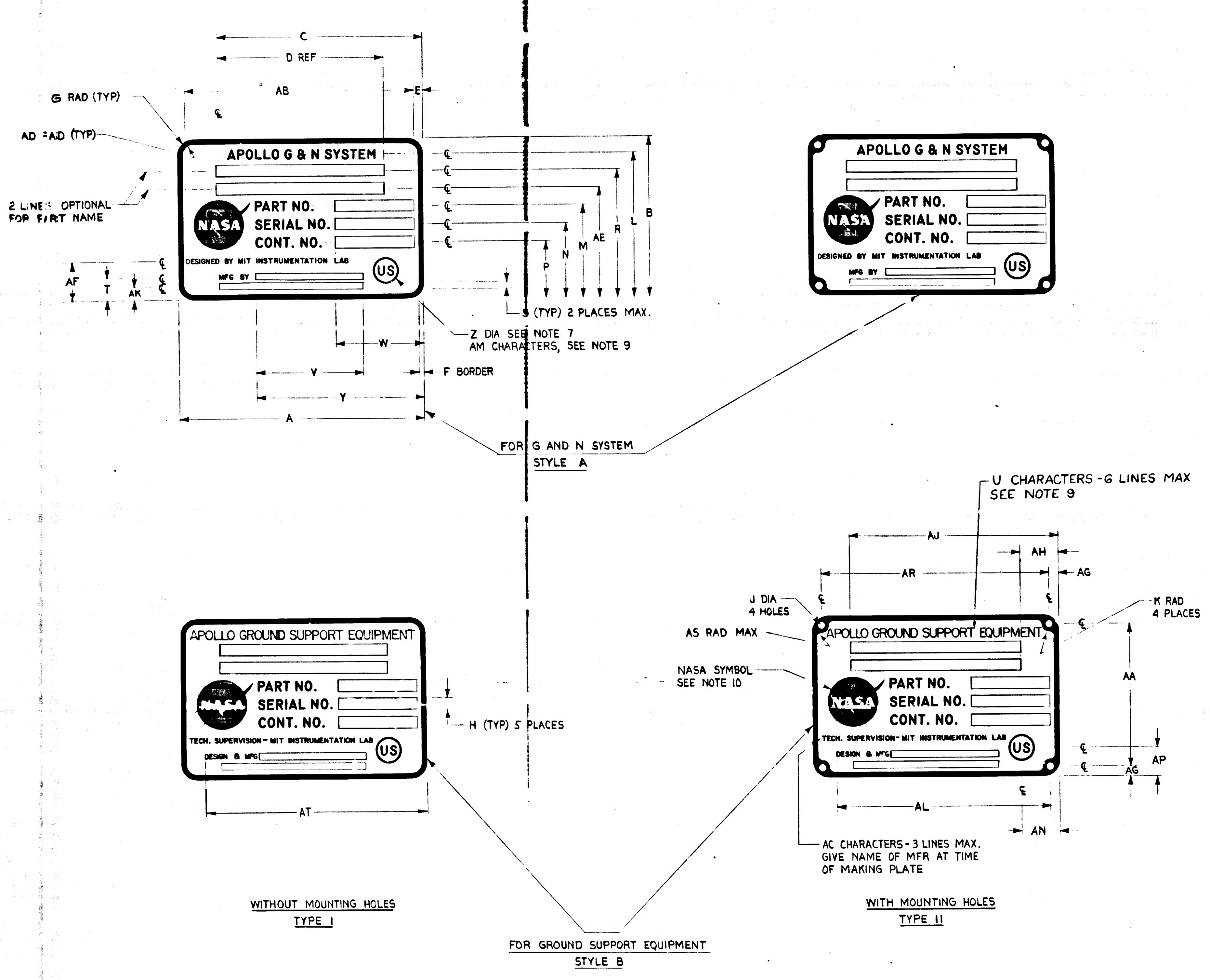

C
D REF
AB
E
G RAD (TYP)
AD RAD (TYP)
2 LINES OPTIONAL FOR PART NAME
APOLLO G & N SYSTEM
PART NO.
SERIAL NO.
CONT. NO.
NASA
DESIGNED BY MIT INSTRUMENTATION LAB
MFG BY
US
AF
T
AK
P
N
M
AE
R
L
B
S (TYP) 2 PLACES MAX.
Z DIA SEE NOTE 7
AM CHARACTERS, SEE NOTE 9
W
V
Y
A
F BORDER
FOR G AND N SYSTEM
STYLE A
U CHARACTERS - 6 LINES MAX
SEE NOTE 9
AJ
AH
AR
AG
J DIA
4 HOLES
AS RAD MAX
K RAD
4 PLACES
NASA SYMBOL
SEE NOTE 10
APOLLO GROUND SUPPORT EQUIPMENT
TECH. SUPERVISION - MIT INSTRUMENTATION LAB
DESIGN & MFG
H (TYP) 5 PLACES
AA
AP
AL
AN
AT
AC CHARACTERS - 3 LINES MAX.
GIVE NAME OF MFR AT TIME
OF MAKING PLATE
WITHOUT MOUNTING HOLES
TYPE I
WITH MOUNTING HOLES
TYPE II
FOR GROUND SUPPORT EQUIPMENT
STYLE B

		UNLESS OTHERWISE SPECIFIED DIMENSIONS ARE IN INCHES TOLERANCES ON 2 PLACE DECIMALS ± 3 PLACE DECIMALS ± .005 ANGLES ±	MIT INSTRUMENTATION LAB CAMBRIDGE, MASS	MANNED SPACECRAFT CENTER HOUSTON, TEXAS
		DO NOT SCALE THIS DRAWING	DRAWN R. A. JONES DATE 16 JUL 65 CHECKED APPROVAL W. KUPFER 22 JUL 65 CONTRACT	NAMEPLATES, APOLLO G&N - GSE (STANDARDS)
AS APPLICABLE		MATERIAL SEE NOTE 11	NASA APPROVAL T. MICHAELS 22 JUL 65	SIZE J2 · CODE IDENT NO. 80230 · 1004260
NEXT ASSY	USED ON	APPROVAL	MIT APPROVAL W. KUPFER 22 JUL 65	SCALE NONE · SHEET 1 OF 6
APPLICATION				

1004260 DE SHT 1

NOTICE — WHEN GOVERNMENT DRAWINGS, SPECIFICATIONS, OR OTHER DATA ARE USED FOR ANY PURPOSE OTHER THAN IN CONNECTION WITH A DEFINITELY RELATED GOVERNMENT PROCUREMENT OPERATION, THE UNITED STATES GOVERNMENT THEREBY INCURS NO RESPONSIBILITY NOR ANY OBLIGATION WHATSOEVER; AND THE FACT THAT THE GOVERNMENT MAY HAVE FORMULATED, FURNISHED, OR IN ANY WAY SUPPLIED THE SAID DRAWINGS, SPECIFICATIONS, OR OTHER DATA IS NOT TO BE REGARDED BY IMPLICATION OR OTHERWISE AS IN ANY MANNER LICENSING THE HOLDER OR ANY OTHER PERSON OR CORPORATION, OR CONVEYING ANY RIGHTS OR PERMISSION TO MANUFACTURE, USE, OR SELL ANY PATENTED INVENTION THAT MAY IN ANY WAY BE RELATED THERETO

DASH NO.	P/C	PART NAME	REMARKS	PART NUMBER	SER. NO.	CONT. NO.	STYLE	TYPE	MATERIAL	A	B	C	D	E	F	G	H	J	K	L	M	N	
399	K																						
398	K																						
350	K	ALIGNMENT OPTICAL TELESCOPE (LEM)		NA	NA	NA	A	I	NOTE 11B	4.000	2.625	3.375	2.750	.156	.093	.156	.187	NA	NA	2.312	1.468	1.187	.9
309	K																						
308	K																						
307	K						B	I	NOTE 11B	4.000	2.625	3.375	2.750	.156	.093	.156	.187	NA	NA	2.328	1.468	1.18	.90
306	K						B	II	NOTE 11C	4.000	2.625	3.375	2.750	.156	.093	.156	.187	.125	.156	2.328	1.468	1.18	.90
305	K						B	I	NOTE 11B	2.000	1.312	1.687	1.375	.078	.048	.078	.093	NA	NA	1.164	.734	.59	.45
304	K						B	II	NOTE 11C	2.000	1.312	1.687	1.375	.078	.048	.078	.093	.070	.078	1.164	.734	.59	.45
303	K																						
302	K																						
301	K																						
300	K	OPTICAL UNIT		NA	NA	NA	A	I	NOTE 11B	2.000	1.312	1.675	NA	NA	.048	.078	NA	NA	NA	1.090	.812	.67	.54
9	K	2 IN AUTOCOLLIMATOR		1001702			B	II	NOTE 11C	4.000	2.625	3.812	2.750	.156	.093	.156	.187	.125	.156	2.250	1.500	1.18	.90
8	K	5 IN AUTOCOLLIMATOR		1017410			B	II	NOTE 11C	4.000	2.625	3.812	2.750	.156	.093	.156	.187	.125	.156	2.250	1.500	1.18	.90
7	K	2-1/2 IN AUTOCOLLIMATOR (SCT)		1017435			B	II	NOTE 11C	4.000	2.625	3.812	2.750	.156	.093	.156	.187	.125	.156	2.250	1.500	1.18	.90
6	K	2-1/2 IN AUTOCOLLIMATOR (SXT)		1017448			B	II	NOTE 11C	4.000	2.625	3.812	2.750	.156	.093	.156	.187	.125	.156	2.250	1.500	1.18	.9
5	K	RETROREFLECTING PRISM ASSEMBLY		1019840			B	I	NOTE 11B	4.000	2.625	3.812	2.750	.156	.093	.156	.187	NA	NA	2.250	1.500	1.18	.9
4	K	S/H SIMULATOR ASSEMBLY		1019896			B	I	NOTE 11B	4.000	2.625	3.812	2.750	.156	.093	.156	.187	NA	NA	2.250	1.500	1.18	.90
3	K	REFERENCE MIRROR		1001767			B	I	NOTE 11B	2.000	1.312	1.906	1.375	.078	.048	.078	.093	NA	NA	1.125	.750	.59	.45
2	K	2 IN PLANE READING AUTOCOLLIMATOR		1017413			B	I	NOTE 11B	2.000	1.312	1.906	1.375	.078	.048	.078	.093	NA	NA	1.125	.750	.59	.45
1	K	2 IN AUTOCOLLIMATOR		1001702			B	I	NOTE 11B	2.000	1.312	1.906	1.375	.078	.048	.078	.093	NA	NA	1.125	.750	.59	.4

NOTES FOR TABLE
STYLE A IS FOR G & N SYSTEM
STYLE B IS FOR GROUND SUPPORT EQUIPMENT
TYPE I IS WITHOUT MOUNTING HOLES
TYPE II IS WITH MOUNTING HOLES

1004260	DE	SHT 2

REVISIONS					
SYM	ZONE	DESCRIPTION	CHG NO	DATE	APPD
CL		REPLACES REV CK WITHOUT CHANGE PER TDRR 34365		9/28/67	JWL RWH
CM		REVISION STATUS CHANGED		18 OCT 67	R.A.W.
CN		REVISION STATUS CHANGED		31 OCT 67	JRK
CP		REVISION STATUS CHANGED		6 NOV 67	EMS
CR		REVISION STATUS CHANGED		7 DEC 67	OKD RWH
CS		REVISION STATUS CHANGED		3 JAN 68	J.W. EHW
CT		REVISION STATUS CHANGED		7 FEB 68	LK RWH
CU		REVISION STATUS CHANGED		22 FEB 68	JRK
CV		REVISION STATUS CHANGED		27 FEB 68	LK
CW		REVISION STATUS CHANGED		3 APR 68	
CY		REVISION STATUS CHANGED		16 APR 68	A.N.
CZ		REVISION STATUS CHANGED		23 MAY 68	
DA		REVISION STATUS CHANGED		17 JUN 68	
DB		REVISION STATUS CHANGED		12 SEP 68	
DC		REVISION STATUS CHANGED		16 DEC 68	LK
DD		REVISION STATUS CHANGED		30 DEC 68	
DE		REVISION STATUS CHANGED		23 JAN 69	JW

E	F	G	H	J	K	L	M	N	P	R	S	T	U	V	W	Y	Z	AA	AB	AC	AD	AE	AF	AG	AH	AJ	AK	AL	AM	AN	AP	AR
.156	.093	156	.187	NA	NA	2.312	1.468	1.187	.906	2.031	NA	.375	.156	NA	1.437	2.750	.437	NA	3.688	.062	.062	1.750	.593	NA	.625	3.375	.187	NA	.156	.531	.453	NA
.156	.093	156	.187	NA	NA	2.328	1.468	1.187	.906	2.031	.062	.375	.156	NA	1.437	2.750	.437	NA	3.687	.062	.062	1.750	.593	NA	NA	NA	NA	NA	NA	NA	NA	NA
.156	.093	156	.187	.125	.156	2.328	1.468	1.187	.906	2.031	.062	.375	.156	NA	1.437	2.750	.437	2.312	3.687	.062	NA	1.750	.593	NA	NA	NA	NA	NA	NA	NA	NA	NA
.078	.048	078	.093	NA	NA	1.164	.734	.593	.453	1.015	.048	.171	.078	NA	.718	1.375	.187	NA	NA	.048	.031	.875	.320	NA	NA	NA	NA	NA	NA	NA	NA	NA
.078	.048	078	.093	.070	.078	1.164	.734	.593	.453	1.015	.048	.171	.078	NA	.718	1.375	.187	.156	1.843	.048	NA	.875	.320	NA	NA	NA	NA	NA	NA	NA	NA	NA
NA	.048	078	NA	NA	NA	1.090	.812	.675	.540	.940	NA	.265	NA	NA	NA	1.375	.218	NA	NA	NA	NA	NA	.375	NA	NA	NA	.180	NA	.078	NA	NA	NA
.156	.093	156	.187	.125	.156	2.250	1.500	1.187	.906	2.031	.093	.375	.156	1.750	1.437	2.750	.437	2.312	3.687	.062	NA	1.750	.593	.156	1.062	3.812	.156	NA	.156	1.062	.375	3.687
.156	.093	156	.187	.125	.156	2.250	1.500	1.187	.906	2.031	.093	.375	.156	1.750	1.437	2.750	.437	2.312	3.687	.062	NA	1.750	.593	.156	1.062	3.812	.156	NA	.156	1.062	.375	3.687
.156	.093	156	.187	.125	.156	2.250	1.500	1.187	.906	2.031	.093	.375	.156	1.750	1.437	2.750	.437	2.312	3.687	.062	NA	1.750	.593	.156	1.062	3.812	.156	NA	.156	1.062	.375	3.687
.156	.093	156	.187	.125	.156	2.250	1.500	1.187	.906	2.031	.093	.375	.156	1.750	1.437	2.750	.437	2.312	3.687	.062	NA	1.750	.593	.156	1.062	3.812	.156	NA	.156	1.062	.375	3.687
.156	.093	156	.187	NA	NA	2.250	1.500	1.187	.906	2.031	.093	.375	.156	1.750	1.437	2.750	.437	NA	NA	.062	.062	1.750	.593	.156	1.062	3.812	.156	NA	.156	1.062	.375	NA
.156	.093	156	.187	NA	NA	2.250	1.500	1.187	.906	2.031	.093	.375	.156	1.750	1.437	2.750	.437	NA	NA	.062	.062	1.750	.593	.156	1.062	3.812	.156	NA	.156	1.062	.375	NA
.078	.048	078	.093	NA	NA	1.125	.750	.593	.453	1.015	.062	.187	.078	.875	.718	1.375	.218	NA	NA	.048	.031	.875	.305	.078	.531	1.906	.078	NA	.078	.531	.187	NA
.078	.048	078	.093	NA	NA	1.125	.750	.593	.453	1.015	.062	.187	.078	.875	.718	1.375	.218	NA	NA	.048	.031	.875	.305	.078	.531	1.906	.078	NA	.078	.531	.187	NA
.078	.048	078	.093	NA	NA	1.125	.750	.593	.453	1.015	.062	.187	.078	.875	.718	1.375	.218	NA	NA	.048	.031	.875	.305	.078	.531	1.906	.078	NA	.078	.531	.187	NA

KOLLSMAN DASH NUMBERS

AS APPLICABLE	UNLESS OTHERWISE SPECIFIED DIMENSIONS ARE IN INCHES TOLERANCES ON 2 PLACE DECIMALS ± 3 PLACE DECIMALS ± .005 ANGLES ±	MIT INSTRUMENTATION LAB CAMBRIDGE MASS DWG NO / CONTRACT	MANNED SPACECRAFT CENTER HOUSTON, TEXAS	
NEXT ASSY / USED ON	DO NOT SCALE THIS DRAWING	DRAWN R. A. JONES DATE 16 JUL 65 CHECKED W. KUPFER 22 JUL 65 APPROVAL CONTRACT	NAMEPLATES, APOLLO G&N - GSE (STANDARDS)	
APPLICATION	MATERIAL SEE NOTE 11	T. MICHAELS 22 JUL 65 NASA APPROVAL	SIZE J2	CODE IDENT NO. 80230 — 1004260
	APPROVAL	W. KUPFER 22 JUL 65 MIT APPROVAL	SCALE NONE	SHEET 2 OF 6

1004260 DE SHT 2

DASH NO.	P/C	PART NAME	REMARKS	PART NUMBER	SER. NO.	CONT. NO.	STYLE	TYPE	MATERIAL	A	B	C	D	E	F	G	H	J	K	L	M	N
299	R																					
298	R																					
293	R	COMPUTER TEST SET		2014042-081	NA	NAS-9-497	B	II	NOTE 11C	FOR DIMENSIONS SEE DASH 18 VALUES BELOW												
292	R	DRAWER ASSY - PROGRAM & MONITOR		2014041-071	NA	NAS-9-497	B	I	NOTE 11B	FOR DIMENSIONS SEE DASH 17 VALUES BELOW												
291	R	BUFFER CIRCUIT ASSY		2014254-041	NA	NAS-9-497	B	I	NOTE 11B	FOR DIMENSIONS SEE DASH 15 VALUES BELOW												
290	R	LOGIC DRAWER ASSY NO.2		2014037-051	NA	NAS-9-497	B	I	NOTE 11B	FOR DIMENSIONS SEE DASH 17 VALUES BELOW												
289	R	SELF TEST ASSY		2014392-021	NA	NAS-9-497	B	I	NOTE 11B	FOR DIMENSIONS SEE DASH 15 VALUES BELOW												
288	R	LOGIC DRAWER ASSY NO.1		2014036-051	NA	NAS-9-497	B	I	NOTE 11B	FOR DIMENSIONS SEE DASH 17 VALUES BELOW												
287	R	COMPUTER TEST SET		2014042-071	NA	NAS-9-497	B	II	NOTE 11C	FOR DIMENSIONS SEE DASH 18 VALUES BELOW												
286	R	DRAWER ASSY PROGRAM & MONITOR		2014041-061	NA	NAS-9-497	B	I	NOTE 11B	FOR DIMENSIONS SEE DASH 17 VALUES BELOW												
285	R	BUFFER CIRCUIT ASSY		2014254-031	NA	NAS-9-497	B	I	NOTE 11B	FOR DIMENSIONS SEE DASH 15 VALUES BELOW												
284	R	LOGIC DRAWER ASSY NO. 2		2014037-041	NA	NAS-9-497	B	I	NOTE 11B	FOR DIMENSIONS SEE DASH 17 VALUES BELOW												
283	R	DRAWER ASSY-PROGRAM & MONITOR		2014041-051	NA	NAS-9-497	B	I	NOTE 11B	FOR DIMENSIONS SEE DASH 17 VALUES BELOW												
282	R	COMPUTER TEST SET		2014042-061	NA	NAS-9-497	B	II	NOTE 11C	FOR DIMENSIONS SEE DASH 18 VALUES BELOW												
281	R	AGC HANDLING FIXTURE		2014282-031	NA	NAS-9-497	B	I	NOTE 11B	FOR DIMENSIONS SEE DASH 17 VALUES BELOW												
280	R	COMPUTER TEST SET		2014042-051	NA	NAS-9-497	B	II	NOTE 11C	FOR DIMENSIONS SEE DASH 18 VALUES BELOW												
279	R	SELF TEST ASSY		2014366-041	NA	NAS-9-497	B	I	NOTE 11B	FOR DIMENSIONS SEE DASH 15 VALUES BELOW												
278	R	LOGIC DRAWER ASSY NO. 1		2014036-041	NA	NAS-9-497	B	I	NOTE 11B	FOR DIMENSIONS SEE DASH 17 VALUES BELOW												
277	R	COMPUTER TEST SET		2014042-041	NA	NAS-9-497	B	II	NOTE 11C	FOR DIMENSIONS SEE DASH 18 VALUES BELOW												
276	R	DRAWER ASSY-PROGRAM & MONITOR		2014041-041	NA	NAS-9-497	B	I	NOTE 11B	FOR DIMENSIONS SEE DASH 17 VALUES BELOW												
275	R	DRAWER ASSY RDC INTERFACE		2014045-031	NA	NAS-9-497	B	I	NOTE 11B	FOR DIMENSIONS SEE DASH 15 VALUES BELOW												
274	R	SELF TEST ASSY		2014366-031	NA	NAS-9-497	B	I	NOTE 11B	FOR DIMENSIONS SEE DASH 15 VALUES BELOW												
273	R	LOGIC DRAWER ASSY NO. 2		2014037-031	NA	NAS-9-497	B	I	NOTE 11B	FOR DIMENSIONS SEE DASH 17 VALUES BELOW												
272	R	DRAWING ASSY PROGRAMMER & MONITOR		2014041-031	NA	NAS-9-497	B	I	NOTE 11B	FOR DIMENSIONS SEE DASH 17 VALUES BELOW												
271	R	LOGIC DRAWER ASSY NO. 1		2014036-031	NA	NAS-9-497	B	I	NOTE 11B	FOR DIMENSIONS SEE DASH 17 VALUES BELOW												
270	R	COMPUTER TEST SET		2014042-031	NA	NAS-9-497	B	II	NOTE 11C	FOR DIMENSIONS SEE DASH 18 VALUES BELOW												
269	R	POWER CONTROL ASSY		2014044-021	NA	NAS-9-497	B	I	NOTE 11B	FOR DIMENSIONS SEE DASH 17 VALUES BELOW												
268	R	SELF TEST ASSY		2014366-021	NA	NAS-9-497	B	I	NOTE 11B	FOR DIMENSIONS SEE DASH 15 VALUES BELOW												
267	R	AGC JUNCTION ASSY		2014341-021	NA	NAS-9-497	B	I	NOTE 11B	FOR DIMENSIONS SEE DASH 15 VALUES BELOW												
266	R	POWER CONTROL ASSY		2014079-021	NA	NAS-9-497	B	I	NOTE 11B	FOR DIMENSIONS SEE DASH 15 VALUES BELOW												
265	R	BUFFER CIRCUIT ASSY		2014254-021	NA	NAS-9-497	B	I	NOTE 11B	FOR DIMENSIONS SEE DASH 15 VALUES BELOW												
264	R	DRAWER ASSY X Y INTERFACE		2014040-021	NA	NAS-9-497	B	I	NOTE 11B	FOR DIMENSIONS SEE DASH 15 VALUES BELOW												
263	R	DRAWER ASSY RDC INTERFACE		2014045-021	NA	NAS-9-497	B	I	NOTE 11B	FOR DIMENSIONS SEE DASH 15 VALUES BELOW												
262	R	DRAWER ASSY PROGRAMMER & MONITOR		2014041-021	NA	NAS-9-497	B	I	NOTE 11B	FOR DIMENSIONS SEE DASH 17 VALUES BELOW												
261	R	LOGIC DRAWER ASSY NO. 2		2014037-021	NA	NAS-9-497	B	I	NOTE 11B	FOR DIMENSIONS SEE DASH 17 VALUES BELOW												
260	R	LOGIC DRAWER ASSY NO. 1		2014036-021	NA	NAS-9-497	B	I	NOTE 11B	FOR DIMENSIONS SEE DASH 17 VALUES BELOW												
259	R	OPERATION CONSOLE		2014024-021	NA	NAS-9-497	B	II	NOTE 11C	FOR DIMENSIONS SEE DASH 18 VALUES BELOW												
258	R	COMPUTER TEST SET		2014042-021	NA	NAS-9-497	B	II	NOTE 11C	FOR DIMENSIONS SEE DASH 18 VALUES BELOW												
257	R	AUXILIARY CALIBRATION CONSOLE		2014059-021	NA	NAS-9-497	B	II	NOTE 11C	FOR DIMENSIONS SEE DASH 18 VALUES BELOW												
256	R	AGC CALIBRATION CONSOLE		2014049-021	NA	NAS-9-497	B	II	NOTE 11C	FOR DIMENSIONS SEE DASH 18 VALUES BELOW												
255	R	AGC HANDLING FIXTURE		2014282-021	NA	NAS-9-497	B	I	NOTE 11B	FOR DIMENSIONS SEE DASH 17 VALUES BELOW												
254	R	DRAWER ASSY COMP. SIMULATOR		2014048-011	NA	NAS-9-497	B	II	NOTE 11C	FOR DIMENSIONS SEE DASH 18 VALUES BELOW												
253	R	SHIPPING KIT ASSY, NAV DSKY		2016312-011	NA	NAS-9-497	B	II	NOTE 11C	FOR DIMENSIONS SEE DASH 18 VALUES BELOW												
252	R	SHIPPING KIT ASSY, UNIVERSAL DSKY		2016316-011	NA	NAS-9-497	B	II	NOTE 11C	FOR DIMENSIONS SEE DASH 18 VALUES BELOW												
251	R	SHIPPING KIT ASSY, MAIN DSKY		2016313-011	NA	NAS-9-497	B	II	NOTE 11C	FOR DIMENSIONS SEE DASH 18 VALUES BELOW												
250	R	AMPLIFIER, REWORK		2014386	NA	NAS-9-497	B	I	NOTE 11B	FOR DIMENSIONS SEE DASH 15 VALUES BELOW												
249	R	TEMP MONITOR ASSY		2014313-011	NA	NAS-9-497	B	I	NOTE 11C	FOR DIMENSIONS SEE DASH 17 VALUES BELOW												
248	R	AGC JUNCTION ASSY		2014341-011	NA	NAS-9-497	B	I	NOTE 11B	FOR DIMENSIONS SEE DASH 15 VALUES BELOW												
247	R	AC INPUT PANEL ASSY		2014302-011	NA	NAS-9-497	B	I	NOTE 11B	FOR DIMENSIONS SEE DASH 15 VALUES BELOW												
246	R	SELF TEST ASSY		2014392-011	NA	NAS-9-497	B	I	NOTE 11B	FOR DIMENSIONS SEE DASH 15 VALUES BELOW												
245	R	TAPE PUNCH ASSEMBLY		2014039-011	NA	NAS-9-497	B	I	NOTE 11B	FOR DIMENSIONS SEE DASH 15 VALUES BELOW												
244	R	TAPE READER ASSEMBLY		2014038-011	NA	NAS-9-497	B	I	NOTE 11B	FOR DIMENSIONS SEE DASH 15 VALUES BELOW												
243																						
242																						
241	R	APOLLO GUIDANCE COMPUTER GROUP		6003001	NA	NAS-9-497	A	I	NOTE 11B	FOR DIMENSIONS SEE DASH 19 VALUES BELOW												
240	R	SELF TEST ASSEMBLY		2014366-011	NA	NAS-9-497	B	I	NOTE 11B	FOR DIMENSIONS SEE DASH 15 VALUES BELOW												
239	R	POWER SUPPLY ASSY-115V., 400 CYCLE		2014207-011	NA	NAS-9-497	B	I	NOTE 11B	FOR DIMENSIONS SEE DASH 17 VALUES BELOW												
238	R	AC INPUT PANEL ASSY		2014043-011	NA	NAS-9-497	B	I	NOTE 11B	FOR DIMENSIONS SEE DASH 17 VALUES BELOW												
237	R	POWER CONTROL ASSY		2014079-011	NA	NAS-9-497	B	I	NOTE 11B	FOR DIMENSIONS SEE DASH 15 VALUES BELOW												
236	R	DRAWER ASSY-X Y INTERFACE		2014040-011	NA	NAS-9-497	B	I	NOTE 11B	FOR DIMENSIONS SEE DASH 15 VALUES BELOW												
235	R	DRAWER ASSY RDC INTERFACE		2014045-011	NA	NAS-9-497	B	I	NOTE 11B	FOR DIMENSIONS SEE DASH 15 VALUES BELOW												
234	R	BUFFER CIRCUIT ASSY		2014254-011	NA	NAS-9-497	B	I	NOTE 11B	FOR DIMENSIONS SEE DASH 15 VALUES BELOW												
233	R	CONTROL & INTERFACE ASSY		2014204-011	NA	NAS-9-497	B	I	NOTE 11B	FOR DIMENSIONS SEE DASH 15 VALUES BELOW												
232	R	POWER CONTROL ASSY		2014044-011	NA	NAS-9-497	B	I	NOTE 11B	FOR DIMENSIONS SEE DASH 17 VALUES BELOW												
231	R	DRAWER ASSY, PROGRAMMER & MONITOR		2014041-011	NA	NAS-9-497	B	I	NOTE 11B	FOR DIMENSIONS SEE DASH 17 VALUES BELOW												
230	R	CONNECTOR INTERFACE ASSY		2014272-011	NA	NAS-9-497	B	I	NOTE 11B	FOR DIMENSIONS SEE DASH 15 VALUES BELOW												
229	R	CONNECTOR INTERFACE ASSY		2014047-011	NA	NAS-9-497	B	I	NOTE 11B	FOR DIMENSIONS SEE DASH 15 VALUES BELOW												
228	R	ANTENNA, TUNING CAPACITOR ASSY		2014209-011	NA	NAS-9-497	B	I	NOTE 11B	FOR DIMENSIONS SEE DASH 15 VALUES BELOW												
227	R	MOUNTING FIXTURE ASSY		2014006-011	NA	NAS-9-497	B	I	NOTE 11B	FOR DIMENSIONS SEE DASH 17 VALUES BELOW												
226	R	POWER SUPPLY ASSY 3 VDC		2014234-011	NA	NAS-9-497	B	I	NOTE 11B	FOR DIMENSIONS SEE DASH 15 VALUES BELOW												
225	R	PANEL ASSY—SIGNAL INTERFACE		2014010-011	NA	NAS-9-497	B	I	NOTE 11B	FOR DIMENSIONS SEE DASH 15 VALUES BELOW												
224	R	OSCILLOSCOPE ASSY		2014232-011	NA	NAS-9-497	B	I	NOTE 11B	FOR DIMENSIONS SEE DASH 15 VALUES BELOW												
223	R	AUXILIARY OUTLET ASSY		2014274-011	NA	NAS-9-497	B	I	NOTE 11B	FOR DIMENSIONS SEE DASH 15 VALUES BELOW												
222	R	FREQUENCY COUNTER		2014233-011	NA	NAS-9-497	B	I	NOTE 11B	FOR DIMENSIONS SEE DASH 15 VALUES BELOW												
221	R	POWER SUPPLY ASSY 10, 13, 28 VDC		2014235-011	NA	NAS-9-497	B	I	NOTE 11B	FOR DIMENSIONS SEE DASH 15 VALUES BELOW												
220	R	LOGIC DRAWER ASSY NO. 2		2014037-011	NA	NAS-9-497	B	I	NOTE 11B	FOR DIMENSIONS SEE DASH 17 VALUES BELOW												
219	R	LOGIC DRAWER ASSY NO. 1		2014036-011	NA	NAS-9-497	B	I	NOTE 11B	FOR DIMENSIONS SEE DASH 17 VALUES BELOW												
218	R	COUNTER, ELECTRICAL ASSY		2014288-011	NA	NAS-9-497	B	I	NOTE 11B	FOR DIMENSIONS SEE DASH 15 VALUES BELOW												
217	R	POWER SUPPLY ASSY		2014279-011	NA	NAS-9-497	B	I	NOTE 11B	FOR DIMENSIONS SEE DASH 15 VALUES BELOW												
216	R	TEST MOUNT ASSY		2014257-011	NA	NAS-9-497	B	I	NOTE 11B	FOR DIMENSIONS SEE DASH 15 VALUES BELOW												
215	R	UNIVERSAL DSKY PEDESTAL MOUNT		2014014-011	NA	NAS-9-497	B	I	NOTE 11B	FOR DIMENSIONS SEE DASH 17 VALUES BELOW												
214	R	MAIN DSKY PEDESTAL MOUNT		2014343	NA	NAS-9-497	B	I	NOTE 11B	FOR DIMENSIONS SEE DASH 17 VALUES BELOW												
213	R	SHIPPING CONTAINER, MAIN DSKY		1006229	NA	NAS-9-497	B	II	NOTE 11C	FOR DIMENSIONS SEE DASH 18 VALUES BELOW												
212	R	SHIPPING CONTAINER, NAV DSKY		1006231	NA	NAS-9-497	B	II	NOTE 11C	FOR DIMENSIONS SEE DASH 18 VALUES BELOW												
211	R	SHIPPING CONTAINER, AGC		1006230	NA	NAS-9-497	B	II	NOTE 11C	FOR DIMENSIONS SEE DASH 18 VALUES BELOW												
210	R	SHIPPING CONTAINER, UNIVERSAL DSKY		1006422	NA	NAS-9-497	B	II	NOTE 11C	FOR DIMENSIONS SEE DASH 18 VALUES BELOW												
209	R	SHIPPING CONTAINER, AGC		1006421	NA	NAS-9-497	B	II	NOTE 11C	FOR DIMENSIONS SEE DASH 18 VALUES BELOW												
208	R	UNIVERSAL DSKY HANDLING FIXTURE		2014013-011	NA	NAS-9-497	B	I	NOTE 11B	FOR DIMENSIONS SEE DASH 15 VALUES BELOW												
207	R	NAV DSKY HANDLING FIXTURE		1014377	NA	NAS-9-497	B	I	NOTE 11B	FOR DIMENSIONS SEE DASH 17 VALUES BELOW												
206	R	MAIN DSKY HANDLING FIXTURE		1014334	NA	NAS-9-497	B	I	NOTE 11B	FOR DIMENSIONS SEE DASH 17 VALUES BELOW												
205	R	AGC HANDLING FIXTURE		2014282-011	NA	NAS-9-497	B	I	NOTE 11B	FOR DIMENSIONS SEE DASH 17 VALUES BELOW												
204	R	OPERATION CONSOLE		2014024-011	NA	NAS-9-497	B	II	NOTE 11C	FOR DIMENSIONS SEE DASH 18 VALUES BELOW												
203	R	COMPUTER TEST SET		2014042-011	NA	NAS-9-497	B	II	NOTE 11C	FOR DIMENSIONS SEE DASH 18 VALUES BELOW												
202	R	DRAWER ASSY, COMPUTER SIMULATOR		2014048-011	NA	FNP-12775	B	II	NOTE 11C	FOR DIMENSIONS SEE DASH 18 VALUES BELOW												
201	R	AUXILIARY CALIBRATION CONSOLE		2014059-011	NA	NAS-9-497	B	II	NOTE 11C	FOR DIMENSIONS SEE DASH 18 VALUES BELOW												
200	R	AGC CALIBRATION CONSOLE		2014049-011	NA	NAS-9-497	B	II	NOTE 11C	FOR DIMENSIONS SEE DASH 18 VALUES BELOW												
21	R																					
20	R	NA		NA	NA	NA	A	II	NOTE 11C	2.000	1.312	1.687	1.375	.078	.031	.078	.093	.106 .113	.093	1.187	.750	.593
19	R	NA		NA	NA	NA	A	I	NOTE 11B	2.000	1.312	1.687	1.375	.078	.031	.078	.093	NA	NA	1.187	.750	.593
18	R	NA		NA	NA	NA	B	II	NOTE 11C	4.187	1.875	3.469	2.750	.156	.093	.156	.125	.106 .113	.125	1.625	1.032	.844
17	R	NA		NA	NA	NA	B	I	NOTE 11B	4.187	1.875	3.469	2.750	.156	.093	.156	.125	NA	NA	1.625	1.032	.844
16	R	NA		NA	NA	NA	B	II	NOTE 11C	2.000	1.312	1.687	1.375	.078	.031	.078	.093	.106 .113	.093	1.187	.750	.593
15	R	NA		NA	NA	NA	B	I	NOTE 11B	2.000	1.312	1.687	1.375	.078	.031	.078	.093	NA	NA	1.187	.750	.593

NOTES FOR TABLE

STYLE A IS FOR G & N SYSTEM
STYLE B IS FOR GROUND SUPPORT EQUIPMENT
TYPE I IS WITHOUT MOUNTING HOLES
TYPE II IS WITH MOUNTING HOLES

1004260	DE	SHT 3

1/1004260

REVISIONS					
SYM	ZONE	DESCRIPTION	CHG NO	DATE	APPD
CL		REPLACES REV CK WITHOUT CHANGE PER TDRR 34365		9/28/67	JWL RWH
CM		REVISION STATUS CHANGED		18 OCT 67	R.A.W.
CN		REVISION STATUS CHANGED		31 OCT 67	JRK
CP		REVISION STATUS CHANGED		6 NOV 67	EMS
CR		REVISION STATUS CHANGED		7 DEC 67	DKB RWH
CS		REVISION STATUS CHANGED		3 JAN 68	J.W EHW
CT		REVISED PER TDRR 35526		7 FEB 68	LK
CU		REVISION STATUS CHANGED		22 FEB 68	JRK
CV		REVISION STATUS CHANGED		27 FEB 68	LK
CW		REVISION STATUS CHANGED		8 APR 68	WTY
CY		REVISED PER TDRR 36028		16 APR 68	A.N.
CZ		REVISION STATUS CHANGED		23 MAY 68	WTY
DA		REVISION STATUS CHANGED		17 JUN 68	WTY
DB		REVISION STATUS CHANGED		12 SEP 68	
DC		REVISION STATUS CHANGED		16 DEC 68	LK
DD		REVISION STATUS CHANGED		30 DEC 68	WTY
DE		REVISION STATUS CHANGED		23 JAN 69	JW

SH 18 VALUES BELOW
SH 17 VALUES BELOW
15 VALUES BELOW
17 VALUES BELOW
15 VALUES BELOW
17 VALUES BELOW
18 VALUES BELOW
17 VALUES BELOW
H 15 VALUES BEL
H 17 VALUES BEL
H 17 VALUES BEL
H 18 VALUES BEL
H 17 VALUES BEL
H 18 VALUES BEL
H 15 VALUES BEL
H 17 VALUES BEL
H 18 VALUES BEL
H 17 VALUES BEL
H 15 VALUES BEL
H 15 VALUES BEL
H 17 VALUES BEL
H 17 VALUES BEL
H 17 VALUES BEL
H 18 VALUES BEL
H 17 VALUES BEL
H 15 VALUES BEL
H 15 VALUES BEL
H 15 VALUES BEL
H 15 VALUES BEL
H 15 VALUES BEL
H 15 VALUES BEL
H 17 VALUES BEL
H 17 VALUES BEL
H 17 VALUES BEL
H 18 VALUES BEL
H 18 VALUES BEL
H 18 VALUES BEL
H 18 VALUES BEL
H 17 VALUES BEL
H 18 VALUES BEL
H 18 VALUES BEL
H 18 VALUES BEL
H 18 VALUES BEL
H 15 VALUES BEL
H 17 VALUES BEL
H 15 VALUES BEL
H 15 VALUES BEL
H 15 VALUES BEL
H 15 VALUES BEL
H 15 VALUES BEL

H 19 VALUES BEL
H 15 VALUES BEL
H 17 VALUES BEL
H 17 VALUES BEL
H 15 VALUES BEL
H 15 VALUES BEL
H 15 VALUES BEL
H 15 VALUES BEL
H 15 VALUES BEL
[illegible]
17 VALUES BEL
H 15 VALUES BEL
H 15 VALUES BEL
H 15 VALUES BEL
H 17 VALUES BEL
SH 15 VALUES BEL
15 VALUES BEL
.5 VALUES BEL
H 15 VALUES BEL
SH 15 VALUES BEL
SH 15 VALUES BEL
H 17 VALUES BEL
SH 17 VALUES BEL
SH 15 VALUES BEL
SH 15 VALUES BEL
SH 15 VALUES BEL
SH 17 VALUES BEL
SH 17 VALUES BEL
SH 18 VALUES BEL
SH 18 VALUES BEL
SH 18 VALUES BEL
SH 18 VALUES BEL
SH 18 VALUES BEL
SH 15 VALUES BEL
SH 17 VALUES BEL
SH 17 VALUES BEL
SH 17 VALUES BEL
SH 18 VALUES BEL
SH 18 VALUES BE
SH 18 VALUES BE
SH 18 VALUES BE
SH 18 VALUES BE

E	F	G	H	J	K	L	M	N	P	R	S	T	U	V	W	Y	Z	AA	AB	AC	AD	AE	AF	AG	AH	AJ	AK	AL	AM	AN	AP	AR
.078	.031	.07	.093	[illegible]	.093	1.187	.750	.593	.453	1.015	.062	.187	.078	.875	.718	1.375	.218	1.156	1.843	.048	NA	.875	.305	.078	.312	1.687	.078	NA	.078	.312	.187	1.843
.078	.031	.07	.093	NA	NA	1.187	.750	.593	.453	1.015	.062	.187	.078	.875	.718	1.375	.218	NA	NA	.048	.031	.875	.305	.078	.312	1.687	.078	NA	.078	.312	.187	NA
.156	.093	.15	.125	[illegible]	.125	1.625	1.032	.844	.656	1.406	.093	.344	.156	1.781	1.531	2.844	.312	1.562	3.875	.062	NA	1.219	.500	.156	.719	3.469	.156	NA	.156	.719	.344	3.875
[illegible]	[illegible]	.15	.125	NA	NA	1.625	1.032	.844	.656	1.406	.093	.344	.156	1.781	1.531	2.844	.312	NA	NA	.062	.062	1.219	.500	.156	.719	3.469	.156	NA	.156	.719	.344	NA
.078	.031	.07	.093	[illegible]	.093	1.187	.750	.593	.453	1.015	.062	.187	.078	.875	.718	1.375	.218	1.156	1.843	.048	NA	.875	.305	.078	.312	1.687	.078	NA	.078	.312	.187	1.843
.078	.031	.07	.093	NA	NA	1.187	.750	.593	.453	1.015	.062	.187	.078	.875	.718	1.375	.218	NA	NA	.048	.031	.875	.305	.078	.312	1.687	.078	NA	.078	.312	.187	NA

RAYTHEON DASH NUMBERS

AS APPLICABLE	
NEXT ASSY	USED ON
APPLICATION	

UNLESS OTHERWISE SPECIFIED
DIMENSIONS ARE IN INCHES
TOLERANCES ON
2 PLACE DECIMALS ±
3 PLACE DECIMALS ± .005
ANGLES ±
DO NOT SCALE THIS DRAWING
MATERIAL SEE NOTE 11
APPROVAL

MIT
INSTRUMENTATION LAB
CAMBRIDGE, MASS
DWG NO
CONTRACT
DRAWN R. A. JONES DATE 16 JUL 65
CHECKED
APPROVAL W. KUPFER 22 JUL 65
CONTRACT
NASA APPROVAL T. MICHAELS 22 JUL 65
MIT APPROVAL W. KUPFER 22 JUL 65

MANNED
SPACECRAFT CENTER
HOUSTON, TEXAS

NAMEPLATES, APOLLO G&N - GSE (STANDARDS)

SIZE J2
CODE IDENT NO. 80230
1004260
SCALE NONE
SHEET 3 OF 6

AC DASH NUMBERS CONTINUED ON SHEET 6

DASH NO.	P/C	PART NAME	REMARKS	PART NUMBER	SER. NO.	CONT. NO.	STYLE	TYPE	MATERIAL	A	B	C	D	E	F	G	H	J	K	L	M	N
199	AC	EYEPIECE STOWAGE UNIT		2021255-011			A	I		FOR DIMENSIONS SEE DASH 100 VALUES BELOW												
198	AC	SIGNAL CONDITIONER ASSY C/M		2007234		NAS-9-497	A	I	NOTE 11B	FOR DIMENSIONS SEE DASH 100 VALUES BELOW												
197	AC	SIGNAL CONDITIONER ASSY C/M		2007235		NAS-9-497	A	I	NOTE 11B	FOR DIMENSIONS SEE DASH 100 VALUES BELOW												
196	AC	SIGNAL CONDITIONER ASSY LEM		6007010		NAS-9-497	A	I	NOTE 11B	FOR DIMENSIONS SEE DASH 100 VALUES BELOW												
195	AC	PSA & SIGNAL CONDITIONER ASSY		6007009		NAS-9-497	A	I	NOTE 11B	FOR DIMENSIONS SEE DASH 100 VALUES BELOW												
194	AC	PANEL, MONITOR		2900031-031		NAS-9-497	B	II	NOTE 11C	FOR DIMENSIONS SEE DASH 141 VALUES BELOW												
193	AC	DISTRIBUTION BOX, GSE		2900024-031		NAS-9-497	B	II	NOTE 11C	FOR DIMENSIONS SEE DASH 141 VALUES BELOW												
192	AC	ANALYZER, OPTICS-INERTIAL		2900023-031		NAS-9-497	B	II	NOTE 11C	FOR DIMENSIONS SEE DASH 144 VALUES BELOW												
191	AC	TEST CONTROL		2900027-031		NAS-9-497	B	II	NOTE 11C	FOR DIMENSIONS SEE DASH 141 VALUES BELOW												
190	AC	PANEL, PWR SUP AND LOAD		2900033-021		NAS-9-497	B	II	NOTE 11C	FOR DIMENSIONS SEE DASH 141 VALUES BELOW												
189	AC	ADPT MODULE, P.S.A.		6900088-011		NAS-9-497	B	II	NOTE 11C	FOR DIMENSIONS SEE DASH 141 VALUES BELOW												
188	AC	ADPT MODULE, P.S.A.		2901143-011		NAS-9-497	B	II	NOTE 11C	FOR DIMENSIONS SEE DASH 141 VALUES BELOW												
187	AC	FIXTURE, MTG, PTA/PEA		2900066-021		NAS-9-497	B	II	NOTE 11C	FOR DIMENSIONS SEE DASH 141 VALUES BELOW												
186	AC	ANNUNCIATOR PANEL & EYEPIECE STORAGE ASSEMBLY		1021255-021			A	I		FOR DIMENSIONS SEE DASH 100 VALUES BELOW												
185	AC	ANNUNCIATOR PANEL & EYEPIECE STORAGE ASSEMBLY		1021255-011			A	I		FOR DIMENSIONS SEE DASH 100 VALUES BELOW												
184	AC	FIX., HAND., G AND N HARNESS		1901846-041		NAS-9-497	B	II	NOTE 11C	FOR DIMENSIONS SEE DASH 144 VALUES BELOW												
183	AC	INSTALLING TOOL, ELEC. CONN		1902586-011		NAS-9-497	B	II	NOTE 11C	FOR DIMENSIONS SEE DASH 102 VALUES BELOW												
182	AC	ADPT MODULE, P.S.A.		6900088-011		NAS-9-497	B	II	NOTE 11C	FOR DIMENSIONS SEE DASH 141 VALUES BELOW												
181	AC	G & N INDICATOR CONTROL PANEL ASSY		2014578-011		NAS-9-497	A	I	NOTE 11B	3.000	1.938	2.437	NA	.125	.062	.188	.156	NA	NA	1.750	1.125	.90
180	AC	ADPT MODULE, P.S.A.		1902431-031		NAS-9-497	B	II		FOR DIMENSIONS SEE DASH 121 VALUES BELOW												
179	AC	MOUNTING PLATE, IMU/PTA		6900083-011		NAS-9-497	B	II		FOR DIMENSIONS SEE DASH 144 VALUES BELOW												
178	AC	MOUNTING PLATE, COMPONENT		6900007-021		NAS-9-497	B	II		FOR DIMENSIONS SEE DASH 144 VALUES BELOW												
177	AC	FIX., MOUNTING, SUBSYSTEM		2900070-021		NAS-9-497	B	II		FOR DIMENSIONS SEE DASH 144 VALUES BELOW												
176	AC	FIX., MOUNTING, G & N		2900067-021		NAS-9-497	B	II		FOR DIMENSIONS SEE DASH 144 VALUES BELOW												
175	AC	CSL, COOL. AND PWR, G & N		1902134-031		NAS-9-497	B	II		FOR DIMENSIONS SEE DASH 144 VALUES BELOW												
174	AC	FIX., HAND., C/M AND LEM CDU		2900999-011		NAS-9-497	B	II	NOTE 11C	FOR DIMENSIONS SEE DASH 141 VALUES BELOW												
173	AC	FIX., HANDLING, C/M PSA		2900998-011		NAS-9-497	B	II	NOTE 11C	FOR DIMENSIONS SEE DASH 141 VALUES BELOW												
172	AC	CAGING ELECTRONICS, GYRO		2900029-021		NAS-9-497	B	II	NOTE 11C	FOR DIMENSIONS SEE DASH 141 VALUES BELOW												
171	AC	DISTRIBUTION BOX, GSE		2900024-021		NAS-9-497	B	II	NOTE 11C	FOR DIMENSIONS SEE DASH 141 VALUES BELOW												
170	AC	ANALYZER, OPTICS-INERTIAL		2900023-021		NAS-9-497	B	II	NOTE 11C	FOR DIMENSIONS SEE DASH 144 VALUES BELOW												
169	AC	ADPT, TESTPOINT, P.S.A.		2900037-021		NAS-9-497	B	II	NOTE 11C	FOR DIMENSIONS SEE DASH 141 VALUES BELOW												
168	AC	TEST SELECTOR		2900028-021		NAS-9-497	B	II	NOTE 11C	FOR DIMENSIONS SEE DASH 141 VALUES BELOW												
167	AC	TEST CONTROL		2900027-021		NAS-9-497	B	II	NOTE 11C	FOR DIMENSIONS SEE DASH 141 VALUES BELOW												
166	AC	PANEL, MONITOR		2900031-021		NAS-9-497	B	II	NOTE 11C	FOR DIMENSIONS SEE DASH 141 VALUES BELOW												
165	AC	TERM. BOARD STORAGE DRAWER		2900927-011		NAS-9-497	B	II	NOTE 11C	FOR DIMENSIONS SEE DASH 141 VALUES BELOW												
164	AC	INPUT/OUTPUT PANEL		2900926-011		NAS-9-497	B	II	NOTE 11C	FOR DIMENSIONS SEE DASH 141 VALUES BELOW												
163	AC	CONTROL PANEL		2900896-011		NAS-9-497	B	II	NOTE 11C	FOR DIMENSIONS SEE DASH 141 VALUES BELOW												
162	AC	CSL, CAL AND TEST, SCM/PSAAM		2900895-011		NAS-9-497	B	II	NOTE 11C	FOR DIMENSIONS SEE DASH 144 VALUES BELOW												
161	AC	FIX., LIFT AND HAND., IMU		1015462-011		NAS-9-497	B	II	NOTE 11C	FOR DIMENSIONS SEE DASH 141 VALUES BELOW												
160	AC	FIX., HAND., G & N HARNESS		1901846-031		NAS-9-497	B	II	NOTE 11C	FOR DIMENSIONS SEE DASH 144 VALUES BELOW												
159	AC	BATTERY POWER PACK		1900011-031		NAS-9-497	B	II	NOTE 11C	FOR DIMENSIONS SEE DASH 144 VALUES BELOW												
158	AC	COUPLING DATA UNIT ASSEMBLY C/M		2007222		NAS-9-497	A	I	NOTE 11B	FOR DIMENSIONS SEE DASH 100 VALUES BELOW												
157	AC	COUPLING DATA UNIT ASSEMBLY - LEM		2007222		NAS-9-497	A	I	NOTE 11B	FOR DIMENSIONS SEE DASH 100 VALUES BELOW												
156	AC	POWER & SERVO ASSEMBLY C/M		2007200		NAS-9-497	A	I	NOTE 11B	2.125	.968	1.718	NA	.093	.031	.06	.093	NA	NA	.858	.608	.48
155	AC	PIPA ELECTRONICS ASSEMBLY		2007201		NAS-9-497	A	I	NOTE 11B	FOR DIMENSIONS SEE DASH 100 VALUES BELOW												
154	AC	PULSE TORQUE ASSEMBLY-LEM		6007000		NAS-9-497	A	I	NOTE 11B	FOR DIMENSIONS SEE DASH 100 VALUES BELOW												
153	AC	POWER & SERVO ASSEMBLY-LEM		6007200		NAS-9-497	A	I	NOTE 11B	FOR DIMENSIONS SEE DASH 100 VALUES BELOW												
152	AC	CONT PNL, RSVR CKT TESTER		2900770-011		NAS-9-497	B	II	NOTE 11C	FOR DIMENSIONS SEE DASH 141 VALUES BELOW												
151	AC	TESTER, RESOLVER CIRCUIT		2900708-011		NAS-9-497	B	II	NOTE 11C	FOR DIMENSIONS SEE DASH 141 VALUES BELOW												
150	AC	JUNCTION BOX, P.S.A./G.S.E.		1901933-021		NAS-9-497	B	II	NOTE 11C	FOR DIMENSIONS SEE DASH 144 VALUES BELOW												
149	AC	BATTERY PACK, LIFTING		2900812-011		NAS-9-497	B	II	NOTE 11C	FOR DIMENSIONS SEE DASH 141 VALUES BELOW												
148	AC	MOUNTING PLATE, COMPONENT		6900007-011		NAS-9-497	B	II	NOTE 11C	FOR DIMENSIONS SEE DASH 144 VALUES BELOW												
147	AC	MOUNTING PLATE, COMPONENT		2900677-011		NAS-9-497	B	II	NOTE 11C	FOR DIMENSIONS SEE DASH 144 VALUES BELOW												
146	AC	CART, TRANS, G & N		1900009-041		NAS-9-497	B	II	NOTE 11C	FOR DIMENSIONS SEE DASH 144 VALUES BELOW												
145	AC	CONTAINER, SHIPPING, IMU		1900010-021		NAS-9-497	B	II	NOTE 11C	FOR DIMENSIONS SEE DASH 144 VALUES BELOW												
144	AC	FIX., MOUNTING, G & N		1902204-021			B	II	NOTE 11C	4.125	1.812	3.250	NA	.125	.062	.12	.156		.125	1.625	1.140	.890
143	AC	CSL, COOL. AND PWR, G & N		1902134-021			B	II	NOTE 11C	4.125	1.812	3.250	NA	.125	.062	.12	.156		.125	1.625	1.140	.890
142	AC	ANALYZER, OPTICS-INERTIAL		2900023-011			B	II	NOTE 11C	4.125	1.812	3.250	NA	.125	.062	.12	.156		.125	1.625	1.140	.890
141	AC	CONT, TEMP, PORTABLE		2900060-011			B	II	NOTE 11C	2.125	.968	1.718	NA	.093	.031	.06	.093		.093	.858	.608	.484
140	AC	TESTER, CKT, IMU/CDU RSVR		2900286-011			B	II	NOTE 11C	4.125	1.812	3.250	NA	.125	.062	.12	.156		.125	1.625	1.140	.890
139	AC	SIMULATOR, LD/SIG, CDU		2900285-011			B	II	NOTE 11C	4.125	1.812	3.250	NA	.125	.062	.12	.156		.125	1.625	1.140	.890
138	AC	SIMULATOR, LD/SIG, OPTICS		1902023-021			B	II	NOTE 11C	4.125	1.812	3.250	NA	.125	.062	.12	.156		.125	1.625	1.140	.890
137	AC	FIX., MOUNTING, IMU/NAV BASE		6900003-011			B	II	NOTE 11C	4.125	1.812	3.250	NA	.125	.062	.12	.156		.125	1.625	1.140	.890
136	AC	FIXTURE, OPTICS/NAV BASE		2900072-011			B	II	NOTE 11C	4.125	1.812	3.250	NA	.125	.062	.12	.156		.125	1.625	1.140	.890
135	AC	FIX., MOUNTING, SUB SYSTEM		2900070-011			B	II	NOTE 11C	4.125	1.812	3.250	NA	.125	.062	.12	.156		.125	1.625	1.140	.890
134	AC	FIX., HAND., G & N HARNESS		290006[illegible]-011			B	II	NOTE 11C	4.125	1.812	3.250	NA	.125	.062	.12	.156		.125	1.625	1.140	.890
133	AC	CNTR, SHIPPING, NAV BASE		2900068-011			B	II	NOTE 11C	4.125	1.812	3.250	NA	.125	.062	.12	.156		.125	1.625	1.140	.890
132	AC	FIX., MOUNTING, G & N		2900067-011			B	II	NOTE 11C	4.125	1.812	3.250	NA	.125	.062	.12	.156		.125	1.625	1.140	.890
131	AC	SIMULATOR, LD/SIG, IMU/CDU		2900062-011			B	II	NOTE 11C	4.125	1.812	3.250	NA	.125	.062	.12	.156		.125	1.625	1.140	.890
130	AC	TESTER, GYRO WHEEL		2900061-011			B	II	NOTE 11C	4.125	1.812	3.250	NA	.125	.062	.12	.156		.125	1.625	1.140	.890
129	AC	COOLANT SUPPLY		1902133-021			B	II	NOTE 11C	4.125	1.812	3.250	NA	.125	.062	.12	.156		.125	1.625	1.140	.890
128	AC	TABLE, ROTARY		1900926-021			B	II	NOTE 11C	4.125	1.812	3.250	NA	.125	.062	.12	.156		.125	1.625	1.140	.890
127	AC	FIX., HAND., OPTICS		2900074-011			B	II	NOTE 11C	2.125	.968	1.718	NA	.093	.031	.06	.093		.093	.858	.608	.484
126	AC	FIXTURE, MTG, PTA/PEA.		2900066-011			B	II	NOTE 11C	2.125	.968	1.718	NA	.093	.031	.06	.093		.093	.858	.608	.484
125	AC	CONT, TEMP, IMU LIFTING		2900063-011			B	II	NOTE 11C	2.125	.968	1.718	NA	.093	.031	.06	.093		.093	.858	.608	.484
124	AC	FIXTURE, HANDLING, IMU		2900064-011			B	II	NOTE 11C	2.125	.968	1.718	NA	.093	.031	.06	.093		.093	.858	.608	.484
123	AC	CONT, OPTICS, REMOTE		1902046-021			B	II	NOTE 11C	2.125	.968	1.718	NA	.093	.031	.06	.093		.093	.858	.608	.484
122	AC	TEST CONTROL		1902009-021			B	II	NOTE 11C	2.125	.968	1.718	NA	.093	.031	.06	.093		.093	.858	.608	.484
121	AC	ADPT MODULE, P.S.A.		1902431-021			B	II	NOTE 11C	2.125	.968	1.718	NA	.093	.031	.06	.093		.093	.858	.608	.484
120	AC	BRIDGE, DECADE ERROR		2900128-011			B	II	NOTE 11C	2.125	.968	1.718	NA	.093	.031	.06	.093		.093	.858	.608	.484
119	AC	PWR SUP, ELECTRONICS		2900012-011			B	II	NOTE 11C	2.125	.968	1.718	NA	.093	.031	.06	.093		.093	.858	.608	.484
118	AC	PWR SUP, RELAY AND LAMP		1900049-031			B	II	NOTE 11C	2.125	.968	1.718	NA	.093	.031	.06	.093		.093	.858	.608	.484
117	AC	CONSOLE, OSCILLOGRAPH		1900000-021			B	II	NOTE 11C	2.125	.968	1.718	NA	.093	.031	.06	.093		.093	.858	.608	.484
116	AC	ADPT MODULE, P.S.A.		1902431-011			B	II	NOTE 11C	2.125	.968	1.718	NA	.093	.031	.06	.093		.093	.858	.608	.484
115	AC	ADPT, TEST POINT, PTA/PEA.		2900145-011			B	II	NOTE 11C	2.125	.968	1.718	NA	.093	.031	.05	.093		.093	.858	.608	.484
114	AC	ADPT, TEST POINT, P.S.A.		2900037-011			B	II	NOTE 11C	2.125	.968	1.718	NA	.093	.031	.06	.093		.093	.858	.608	.484
113	AC	CONTROL, GIMBAL POSITION		2900036-011			B	II	NOTE 11C	2.125	.968	1.718	NA	.093	.031	.06	.093		.093	.858	.608	.484
112	AC	SELECTOR, SIGNAL, PRIMARY		2900035-011			B	II	NOTE 11C	2.125	.968	1.718	NA	.093	.031	.06	.093		.093	.858	.608	.484
111	AC	SEL, SIG, OSCILLOGRAPH		2900034-011			B	II	NOTE 11C	2.125	.968	1.718	NA	.093	.031	.06	.093		.093	.858	.608	.484
110	AC	PANEL, PWR SUP AND LOAD		2900033-011			B	II	NOTE 11C	2.125	.968	1.718	NA	.093	.031	.06	.093		.093	.858	.608	.484
109	AC	PANEL, MONITOR		2900031-011			B	II	NOTE 11C	2.125	.968	1.718	NA	.093	.031	.06	.093		.093	.858	.608	.484
108	AC	PANEL, AUXILIARY INPUT		2900030-011			B	II	NOTE 11C	2.125	.963	1.718	NA	.093	.031	.06	.093		.093	.858	.608	.484
107	AC	CAGING ELECTRONICS, GYRO		2900029-011			B	II	NOTE 11C	2.125	.968	1.718	NA	.093	.031	.06	.093		.093	.858	.608	.484
106	AC	TEST SELECTOR		2900028-011			B	II	NOTE 11C	2.125	.968	1.718	NA	.093	.031	.06	.093		.093	.858	.608	.484
105	AC	TEST CONTROL		2900027-011			B	II	NOTE 11C	2.125	.968	1.718	NA	.093	.031	.06	.093		.093	.858	.608	.484
104	AC	MONITOR AND CONTROL, TEMP		2900026-011			B	II	NOTE 11C	2.125	.968	1.718	NA	.093	.031	.06	.093		.093	.858	.608	.484
103	AC	DISTRIBUTION BOX, GSE		2900024-011			B	II	NOTE 11C	2.125	.968	1.718	NA	.093	.031	.06	.093		.093	.858	.608	.484
102	AC	VOLTMETER, DIGITAL		2900007-011			B	II	NOTE 11C	2.125	.968	1.718	NA	.093	.031	.06	.093		.093	.858	.608	.484
101	AC	NAVIGATION BASE ASSEMBLY-LEM		6899950		NAS-9-497	A	I	NOTE 11B	2.000	1.312	1.906	1.375	.078	.048	.078	.093	NA	NA	1.125	.750	.593
100	AC	NAVIGATION BASE ASSEMBLY		2899982		NAS-9-497	A	I	NOTE 11B	2.000	1.312	1.906	1.375	.078	.048	.078	.093	NA	NA	1.125	.750	.593

NOTES FOR TABLE

STYLE A IS FOR G & N SYSTEM
STYLE B IS FOR GROUND SUPPORT EQUIPMENT
TYPE I IS WITHOUT MOUNTING HOLES
TYPE II IS WITH MOUNTING HOLES

1004260 DE SHT 4

SYM	ZONE	DESCRIPTION	CHG NO	DATE	APPD
CL		REPLACES REV CK WITHOUT CHANGE PER TDRR 34365		9/28/67	JWL RWH
CM		REVISION STATUS CHANGED		18 OCT 67	R.A.W
CN		REVISION STATUS CHANGE		31 OCT 67	JRK
CP		REVISION STATUS CHANGE		6 NOV 67	
CR		REVISION STATUS CHANGED		7 NOV 67	DKD RWH
CS		REVISION STATUS CHANGED		3 JAN 68	J.W. EHW
CT		REVISION STATUS CHANGED		7 FEB 68	LK RWH
CU		REVISION STATUS CHANGED		22 FEB 68	JRK
CV		REVISION STATUS CHANGED		27 FEB 68	LK
CW		REVISION STATUS CHANGED		9 APR 68	
CY		REVISION STATUS CHANGED		16 APR 68	A.N. RHP
CZ		REVISION STATUS CHANGED		23 MAY 68	
DA		REVISION STATUS CHANGED		17 JUN 68	
DB		REVISION STATUS CHANGED		12 SEP 68	
DC		REVISION STATUS CHANGED		16 DEC 68	LK
DD		REVISION STATUS CHANGED		30 DEC 68	
DE		REVISION STATUS CHANGED		23 JAN 69	

DASH 100 VALUES BELOW																																
DASH 100 VALUES BELOW																																
DASH 100 VALUES BELOW																																
DASH 100 VALUES BELOW																																
DASH 100 VALUES BELOW																																
DASH 141 VALUES BELOW																																
DASH 141 VALUES BELOW																																
DASH 144 VALUES BELOW																																
DASH 141 VALUES BELOW																																
DASH 141 VALUES BELOW																																
DASH 141 VALUES BELOW																																
DASH 141 VALUES BELOW																																
DASH 141 VALUES BELOW																																
DASH 100 VALUES BELOW																																
DASH 100 VALUES BELOW																																
DASH 144 VALUES BELOW																																
DASH 102 VALUES BELOW																																
DASH 141 VALUES BELOW																																
.125	.062	188	.156	NA	NA	1.750	1.125	.906	.688	1.500	NA	.281	.125	NA	1.094	2.062	.312	NA	2.500	.062	.125	1.312	.469	NA	NA	NA	.156	NA	.125	.469	.344	NA
DASH 121 VALUES BELOW																																
DASH 144 VALUES BELOW																																
DASH 144 VALUES BELOW																																
DASH 144 VALUES BELOW																																
DASH 144 VALUES BELOW																																
DASH 144 VALUES BELOW																																
DASH 141 VALUES BELOW																																
DASH 141 VALUES BELOW																																
DASH 141 VALUES BELOW																																
DASH 141 VALUES BELOW																																
DASH 144 VALUES BELOW																																
DASH 141 VALUES BELOW																																
DASH 141 VALUES BELOW																																
DASH 141 VALUES BELOW																																
DASH 141 VALUES BELOW																																
DASH 141 VALUES BELOW																																
DASH 141 VALUES BELOW																																
DASH 141 VALUES BELOW																																
DASH 144 VALUES BELOW																																
DASH 141 VALUES BELOW																																
DASH 144 VALUES BELOW																																
DASH 144 VALUES BELOW																																
DASH 100 VALUES BELOW																																
DASH 100 VALUES BELOW																																
.093	.031	06	.093	NA	NA	.858	.608	.484	.358	.733	.062	.140	.062	NA	.968	1.450	.125	NA	1.720	.046	.03	NA	.210	NA	NA	NA	.070	NA	.046	.32	.16	NA
DASH 100 VALUES BELOW																																
DASH 100 VALUES BELOW																																
DASH 100 VALUES BELOW																																
DASH 141 VALUES BELOW																																
DASH 141 VALUES BELOW																																
DASH 144 VALUES BELOW																																
DASH 141 VALUES BELOW																																
DASH 144 VALUES BELOW																																
DASH 144 VALUES BELOW																																
DASH 144 VALUES BELOW																																
DASH 144 VALUES BELOW																																
.125	.062	12	.156	[illegible]	.125	1.625	1.140	.890	.640	1.390	.125	.171	.125	1.875	1.687	2.625	.250	1.562	3.843	.093	NA	NA	.359	.125	.437	3.688	NA	3.687	.093	.40	.25	3.875
.125	.062	12	.156		.125	1.625	1.140	.890	.640	1.390	.125	.171	.125	1.875	1.687	2.625	.250	1.562	3.843	.093	NA	NA	.359	.125	.437	3.688	NA	3.687	.093	.40	.25	3.875
.125	.062	12	.156		.125	1.625	1.140	.890	.640	1.390	.125	.171	.125	1.875	1.687	2.625	.250	1.562	3.843	.093	NA	NA	.359	.125	.437	3.688	NA	3.687	.093	.40	.25	3.875
.093	.031	06	.093		.093	.858	.608	.484	.358	.733	.077	.116	.062	.937	.875	1.343	.125	.781	1.892	.046	NA	NA	.209	.093	.250	1.875	NA	1.840	.046	.23	.16	1.938
.125	.062	12	.156		.125	1.625	1.140	.890	.640	1.390	.125	.171	.125	1.875	1.687	2.625	.250	1.562	3.843	.093	NA	NA	.359	.125	.437	3.688	NA	3.687	.093	.40	.25	3.875
.125	.062	12	.156		.125	1.625	1.140	.890	.640	1.390	.125	.171	.125	1.875	1.687	2.625	.250	1.562	3.843	.093	NA	NA	.359	.125	.437	3.688	NA	3.687	.093	.40	.25	3.875
.125	.062	12	.156		.125	1.625	1.140	.890	.640	1.390	.125	.171	.125	1.875	1.687	2.625	.250	1.562	3.843	.093	NA	NA	.359	.125	.437	3.688	NA	3.687	.093	.40	.25	3.875
.125	.062	12	.156		.125	1.625	1.140	.890	.640	1.390	.125	.171	.125	1.875	1.687	2.625	.250	1.562	3.843	.093	NA	NA	.359	.125	.437	3.688	NA	3.687	.093	.40	.25	3.875
.125	.062	12	.156		.125	1.625	1.140	.890	.640	1.390	.125	.171	.125	1.875	1.687	2.625	.250	1.562	3.843	.093	NA	NA	.359	.125	.437	3.688	NA	3.687	.093	.40	.25	3.875
.125	.062	12	.156		.125	1.625	1.140	.890	.640	1.390	.125	.171	.125	1.875	1.687	2.625	.250	1.562	3.843	.093	NA	NA	.359	.125	.437	3.688	NA	3.687	.093	.40	.25	3.875
.125	.062	12	.156		.125	1.625	1.140	.890	.640	1.390	.125	.171	.125	1.875	1.687	2.625	.250	1.562	3.843	.092	NA	NA	.359	.125	.437	3.688	NA	3.687	.093	.40	.25	3.875
.125	.062	12	.156		.125	1.625	1.140	.890	.640	1.390	.125	.171	.125	1.875	1.687	2.625	.250	1.562	3.843	.093	NA	NA	.359	.125	.437	3.688	NA	3.687	.093	.40	.25	3.875
.125	.062	12	.156		.125	1.625	1.140	.890	.640	1.390	.125	.171	.125	1.875	1.687	2.625	.250	1.562	3.843	.093	NA	NA	.359	.125	.437	3.688	NA	3.687	.093	.40	.25	3.875
.125	.062	12	.156		.125	1.625	1.140	.890	.640	1.390	.125	.171	.125	1.875	1.687	2.625	.250	1.562	3.843	.093	NA	NA	.359	.125	.437	3.688	NA	3.687	.093	.40	.25	3.875
.125	.062	12	.156		.125	1.625	1.140	.890	.640	1.390	.125	.171	.125	1.875	1.687	2.625	.250	1.562	3.843	.093	NA	NA	.359	.125	.437	3.688	NA	3.687	.093	.40	.25	3.875
.125	.062	12	.156		.125	1.625	1.140	.890	.640	1.390	.125	.171	.125	1.875	1.687	2.625	.250	1.562	3.843	.093	NA	NA	.359	.125	.437	3.688	NA	3.687	.093	.40	.25	3.875
.125	.062	12	.156		.125	1.625	1.140	.890	.640	1.390	.125	.171	.125	1.875	1.687	2.625	.250	1.562	3.843	.093	NA	NA	.359	.125	.437	3.688	NA	3.687	.093	.40	.25	3.875
.093	.031	06	.093		.093	.858	.608	.484	.358	.733	.077	.116	.062	.937	.875	1.343	.125	.781	1.892	.046	NA	NA	.209	.093	.250	1.875	NA	1.840	.046	.23	.16	1.938
.093	.031	06	.093		.093	.858	.608	.484	.358	.733	.077	.116	.062	.937	.875	1.343	.125	.781	1.892	.046	NA	NA	.209	.093	.250	1.875	NA	1.840	.046	.23	.16	1.938
.093	.031	06	.093		.093	.858	.608	.484	.358	.733	.077	.116	.062	.937	.875	1.343	.125	.781	1.892	.046	NA	NA	.209	.093	.250	1.875	NA	1.840	.046	.23	.16	1.938
.093	.031	06	.093		.093	.858	.608	.484	.358	.733	.077	.116	.062	.937	.875	1.343	.125	.781	1.892	.046	NA	NA	.209	.093	.250	1.875	NA	1.840	.046	.23	.16	1.938
.093	.031	06	.093		.093	.858	.608	.484	.358	.733	.077	.116	.062	.937	.875	1.343	.125	.781	1.892	.046	NA	NA	.209	.093	.250	1.875	NA	1.840	.046	.23	.16	1.938
.093	.031	06	.093		.093	.858	.608	.484	.358	.733	.077	.116	.062	.937	.875	1.343	.125	.781	1.892	.046	NA	NA	.209	.093	.250	1.875	NA	1.840	.046	.23	.16	1.938
.093	.031	06	.093		.093	.858	.608	.484	.358	.733	.077	.116	.062	.937	.875	1.343	.125	.781	1.892	.046	NA	NA	.209	.093	.250	1.875	NA	1.840	.046	.23	.16	1.938
.093	.031	06	.093		.093	.858	.608	.484	.358	.733	.077	.116	.062	.937	.875	1.343	.125	.781	1.892	.046	NA	NA	.209	.093	.250	1.875	NA	1.840	.046	.23	.16	1.938
.093	.031	06	.093		.093	.858	.608	.484	.358	.733	.077	.116	.062	.937	.875	1.343	.125	.781	1.892	.046	NA	NA	.209	.093	.250	1.875	NA	1.840	.046	.23	.16	1.938
.093	.031	06	.093		.093	.858	.608	.484	.358	.733	.077	.116	.062	.937	.875	1.343	.125	.781	1.892	.046	NA	NA	.209	.093	.250	1.875	NA	1.840	.046	.23	.16	1.938
.093	.031	06	.093		.093	.858	.608	.484	.358	.733	.077	.116	.062	.937	.875	1.343	.125	.781	1.892	.046	NA	NA	.209	.093	.250	1.875	NA	1.840	.046	.23	.16	1.938
.093	.031	06	.093		.093	.858	.608	.484	.358	.733	.077	.116	.062	.937	.875	1.343	.125	.781	1.892	.046	NA	NA	.209	.093	.250	1.875	NA	1.840	.046	.23	.16	1.938
.093	.031	06	.093		.093	.858	.608	.484	.358	.733	.077	.116	.062	.937	.875	1.343	.125	.781	1.892	.046	NA	NA	.209	.093	.250	1.875	NA	1.840	.046	.23	.16	1.938
.093	.031	06	.093		.093	.858	.608	.484	.358	.733	.077	.116	.062	.937	.875	1.343	.125	.781	1.892	.046	NA	NA	.209	.093	.250	1.875	NA	1.840	.046	.23	.16	1.938
.093	.031	06	.093		.093	.858	.608	.484	.358	.733	.077	.116	.062	.937	.875	1.343	.125	.781	1.892	.046	NA	NA	.209	.093	.250	1.875	NA	1.840	.046	.23	.16	1.938
.093	.031	06	.093		.093	.858	.608	.484	.358	.733	.077	.116	.062	.937	.875	1.343	.125	.781	1.892	.046	NA	NA	.209	.093	.250	1.875	NA	1.840	.046	.23	.16	1.938
.093	.031	06	.093		.093	.858	.608	.484	.358	.733	.077	.116	.062	.937	.875	1.343	.125	.781	1.892	.046	NA	NA	.209	.093	.250	1.875	NA	1.840	.046	.23	.16	1.938
.093	.031	06	.093		.093	.858	.608	.484	.358	.733	.077	.116	.062	.937	.875	1.343	.125	.781	1.892	.046	NA	NA	.209	.093	.250	1.875	NA	1.840	.046	.23	.16	1.938
.093	.031	06	.093		.093	.858	.608	.484	.358	.733	.077	.116	.062	.937	.875	1.343	.125	.781	1.892	.046	NA	NA	.209	.093	.250	1.875	NA	1.840	.046	.23	.16	1.938
.093	.031	06	.093		.093	.858	.608	.484	.358	.733	.077	.116	.062	.937	.875	1.343	.125	.781	1.892	.046	NA	NA	.209	.093	.250	1.875	NA	1.840	.046	.23	.16	1.938
.093	.031	06	.093		.093	.858	.608	.484	.358	.733	.077	.116	.062	.937	.875	1.343	.125	.781	1.892	.046	NA	NA	.209	.093	.250	1.875	NA	1.840	.046	.23	.16	1.938
.093	.031	06	.093		.093	.858	.608	.484	.358	.733	.077	.116	.062	.937	.875	1.343	.125	.781	1.892	.046	NA	NA	.209	.093	.250	1.875	NA	1.840	.046	.23	.16	1.938
.093	.031	06	.093		.093	.858	.608	.484	.358	.733	.077	.116	.062	.937	.875	1.343	.125	.781	1.892	.046	NA	NA	.209	.093	.250	1.875	NA	1.840	.046	.23	.16	1.938
.093	.031	06	.093		.093	.858	.608	.484	.358	.733	.077	.116	.062	.937	.875	1.343	.125	.781	1.892	.046	NA	NA	.209	.093	.250	1.875	NA	1.840	.046	.23	.16	1.938
.093	.031	06	.093		.093	.858	.608	.484	.358	.733	.077	.116	.062	.937	.875	1.343	.125	.781	1.892	.046	NA	NA	.209	.093	.250	1.875	NA	1.840	.046	.23	.16	1.938
.093	.031	06	.093		.093	.858	.608	.484	.358	.733	.077	.116	.062	.937	.875	1.343	.125	.781	1.892	.046	NA	NA	.209	.093	.250	1.875	NA	1.840	.046	.23	.16	1.938
.093	.031	06	.093	100 104	.093	.858	.608	.484	.358	.733	.077	.116	.062	.937	.875	1.343	.125	.781	1.892	.046	NA	NA	.209	.093	.250	1.875	NA	1.840	.046	.23	.16	1.938
.078	.048	.078	.093	NA	NA	1.125	.750	.593	.453	1.015	.062	.187	.078	.875	.718	1.375	.218	NA	NA	.048	.031	.875	.305	.078	.531	1.906	.078	NA	.078	.531	.187	NA
.078	.048	.078	.093	NA	NA	1.125	.750	.593	.453	1.015	.062	.187	.078	.875	.718	1.375	.218	NA	NA	.048	.031	.875	.305	.078	.531	1.906	.078	NA	.078	.531	.187	NA
E	F	G	H	J	K	L	M	N	P	R	S	T	U	V	W	Y	Z	AA	AB	AC	AD	AE	AF	AG	AH	AJ	AK	AL	AM	AN	AP	AR

AC ELECTRONICS DASH NUMBERS

AS APPLICABLE	
NEXT ASSY	USED ON
APPLICATION	

UNLESS OTHERWISE SPECIFIED
DIMENSIONS ARE IN INCHES
TOLERANCES ON
2 PLACE DECIMALS ± | 3 PLACE DECIMALS ± .005 | ANGLES ± —
DO NOT SCALE THIS DRAWING
MATERIAL
SEE NOTE 11
APPROVAL

MIT
INSTRUMENTATION LAB
CAMBRIDGE MASS
DWG NO
CONTRACT
DRAWN R. A. JONES DATE 16 JUL 65
CHECKED
APPROVAL W. KUPFER 22 JUL 65
CONTRACT
NASA APPROVAL T. MICHAELS 22 JUL 65
MIT APPROVAL W. KUPFER 22 JUL 65

MANNED
SPACECRAFT CENTER
HOUSTON, TEXAS

NAMEPLATES,
APOLLO G&N - GSE
(STANDARDS)

SIZE J2
CODE IDENT NO. 80230
1004260
SCALE NONE
SHEET 4 OF 6

1004260 DE

27 1004260

NOTICE — WHEN GOVERNMENT DRAWINGS, SPECIFICATIONS, OR OTHER DATA ARE USED FOR ANY PURPOSE OTHER THAN IN CONNECTION WITH A DEFINITELY RELATED GOVERNMENT PROCUREMENT OPERATION, THE UNITED STATES GOVERNMENT THEREBY INCURS NO RESPONSIBILITY NOR ANY OBLIGATION WHATSOEVER; AND THE FACT THAT THE GOVERNMENT MAY HAVE FORMULATED, FURNISHED, OR IN ANY WAY SUPPLIED THE SAID DRAWINGS, SPECIFICATIONS, OR OTHER DATA IS NOT TO BE REGARDED BY IMPLICATION OR OTHERWISE AS IN ANY MANNER LICENSING THE HOLDER OR ANY OTHER PERSON OR CORPORATION, OR CONVEYING ANY RIGHTS OR PERMISSION TO MANUFACTURE, USE, OR SELL ANY PATENTED INVENTION THAT MAY IN ANY WAY BE RELATED THERETO.

DASH NO.	P/C	PART NAME	REMARKS	PART NUMBER	SER. NO.	CONT. NO.	STYLE	TYPE	MATERIAL	A	B	C	D	E	F	G	H	J	K	L	M
401	MIT	COMPUTER ASSY		2003100		NAS-9-497	A	I	NOTE 11B	2,000	1,312	1,906	1,375	,078	,048	,078	,093	NA	NA	1,125	,750
400	MIT	LIFTING SLING-G&N INST.QUAL.FIX. & AZM.REF.FIX.		1021640		NAS-9-4065	B	II	NOTE 11C	2,000	1,312	1,687	1,375	,078	,048	,078	,093	[illegible]	,093	1,187	,750

NOTES FOR TABLE
STYLE A IS FOR G & N SYSTEM
STYLE B IS FOR GROUND SUPPORT EQUIPMENT
TYPE I IS WITHOUT MOUNTING HOLES
TYPE II IS WITH MOUNTING HOLES

REVISIONS

SYM	ZONE	DESCRIPTION	CHG NO	DATE	APPD
CL		REPLACES REV CK WITHOUT CHANGE PER TURR 34365		9/20/67	JWL RWH
CM		REVISION STATUS CHANGED		18 OCT 67	R.A.W.
CN		REVISION STATUS CHANGED		31 OCT 67	JRK
CP		REVISION STATUS CHANGED		6 NOV 67	EMS
CR		REVISION STATUS CHANGED		7 DEC 67	DKF RWH
CS		REVISION STATUS CHANGED		3 JAN 68	EHW
CT		REVISION STATUS CHANGED		7 FEB 68	LP RWH
CU		REVISION STATUS CHANGED		22 FEB 68	JRK
CV		REVISION STATUS CHANGED		27 FEB 68	LK
CW		REVISION STATUS CHANGED		3 APR 68	WTY
CY		REVISION STATUS CHANGED		16 APR 68	A.N. RJP
CZ		REVISION STATUS CHANGED		23 MAY 68	WTY
DA		REVISION STATUS CHANGED		17 JUN 68	WTY
DB		REVISION STATUS CHANGED		12 SEP 68	PW
DC		REVISION STATUS CHANGED		16 DEC 68	LK
DD		REVISION STATUS CHANGED		30 DEC 68	WTY
DE		REVISION STATUS CHANGED		23 JAN 69	JW

.078	.043	078	.093	NA	NA	1,125	.750	.593	.453	1.015	.062	.187	.078	.875	.718	1.375	.218	NA	NA	.048	.031	.875	.305	.078	.531	1.906	.078	NA	.078	.531	.187	NA
.078	.043	078	.093	[illegible]	.093	1,187	.750	.593	.453	1.015	.062	.187	.078	.875	.718	1.375	.218	1.156	1.843	.048	NA	.875	.305	.078	.312	1.687	.110	1.830	.070	.275	.180	1.844
E	F	G	H	J	K	L	M	N	P	R	S	T	U	V	W	Y	Z	AA	AB	AC	AD	AE	AF	AG	AH	AJ	AK	AL	AM	AN	AP	AR

MIT DASH NUMBERS

AS APPLICABLE	
NEXT ASSY	USED ON
APPLICATION	

UNLESS OTHERWISE SPECIFIED
DIMENSIONS ARE IN INCHES
TOLERANCES ON
2 PLACE DECIMALS ± 3 PLACE DECIMALS ±.005 ANGLES ± —
DO NOT SCALE THIS DRAWING
MATERIAL SEE NOTE 11
APPROVAL

MIT INSTRUMENTATION LAB
CAMBRIDGE MASS

DRAWN R. A. JONES DATE 16 JUL 65
CHECKED
APPROVAL W. KUPFER 22 JUL 65
CONTRACT
NASA APPROVAL T. MICHAELS 22 JUL 65
MIT APPROVAL W. KUPFER 22 JUL 65

MANNED
SPACECRAFT CENTER
HOUSTON, TEXAS

NAMEPLATES,
APOLLO G&N - GSE
(STANDARDS)

SIZE J2 CODE IDENT NO. 80230 1004260
SCALE NONE SHEET 5 OF 6

1004260 DE SHT 5

DASH NO.	P/C	PART NAME	REMARKS	PART NUMBER	SER. NO.	CONT. NO.	STYLE	TYPE	MATERIAL	A	B	C	D	E	F	G	H	J	K	L	M
599	AC																				
598	AC																				
587		AUXILIARY BATTERY PACK		1901492-051		FOR OTHER DATA SEE DASH 565															
586		BATTERY POWER PACK		1900011-061		FOR OTHER DATA SEE DASH 565															
585		ANALYZER, OPTICS INERTIAL		2900023-051		FOR OTHER DATA SEE DASH 536															
584		ETHYLENE GLYCOL CLEANING KIT		2901630-011		NAS-9-497	B	I	NOTE 11B	4.000	2.625	3.380	NA	.260	.093	.156	.160	NA	NA	2.290	1.440
583		SWITCH CROSS BAR ASSY		1900048-021		FOR OTHER DATA SEE DASH 102															
582	AC	G&N INDICATOR CONTROL PANEL ASSY		2021290-041		FOR OTHER DATA SEE DASH 181															
581	AC	G&N INDICATOR CONTROL PANEL ASSY		2021323-021		FOR OTHER DATA SEE DASH 181															
580		AUXILIARY BATTERY PACK		1901492-041		FOR OTHER DATA SEE DASH 565															
579	AC	COMPUTER CONT & RETICLE DIMMER		6014512-081		FOR OTHER DATA SEE DASH 534															
578	AC	G&N INDICATOR CONTROL PANEL ASSY		2021290-031		FOR OTHER DATA SEE DASH 181															
577		BREAKOUT BOX, CABLE ADAPTER		2901011-021		FOR OTHER DATA SEE DASH 506															
576		FIX., MOUNTING G&N		2900067-061		FOR OTHER DATA SEE DASH 500															
575		CSL, CAL AND TEST, SCM/PSAAM		2900895-041		FOR DATA SEE DASH 559															
574		CONT., TEMP. PORTABLE		2900060-031		NAS-9-497	B	II	NOTE 11C	FOR DIMENSIONS SEE DASH 535 VALUES											
573		BATTERY PACK LIFTING		2900812-031		NAS-9-497	B	II	NOTE 11C	FOR DIMENSIONS SEE DASH 542 VALUES											
572		FIX., MOUNTING G&N	(-144)	2900067-051		NAS-9-497	B	II	NOTE 11C	FOR DIMENSIONS SEE DASH 500 VALUES											
571		EYEPIECE STORAGE UNIT		2021382		FOR OTHER DATA SEE DASH 100															
570	AC	OPTICAL UNIT & BELLOWS ASSY				NAS-9-497	A	I	NOTE 11B	FOR DIMENSIONS SEE DASH 550 VALUES											
569	AC	G & N INDICATOR CONTROL PANEL ASSY		2021323-011		NAS-9-497	A	I	NOTE 11B	FOR DIMENSIONS SEE DASH 181											
568	AC	G & N INDICATOR CONTROL PANEL ASSY		2021290-021		NAS-9-497	A	I	NOTE 11B	FOR DIMENSIONS SEE DASH 181											
567	AC	G & N INDICATOR CONTROL PANEL ASSY		2021290-011		NAS-9-497	A	I	NOTE 11B	FOR DIMENSIONS SEE DASH 181											
566	AC	COMPUTER CONT & RETICLE DIMMER		6014512-061		NAS-9-497	A	I	NOTE 11B	FOR DIMENSIONS SEE DASH 534											
565		AUXILIARY BATTERY PACK		1901492-031		NAS-9-497	B	II	NOTE 11C	FOR DIMENSIONS SEE DASH 500											
564		BATTERY POWER PACK		1900011-051		NAS-9-497	B	II	NOTE 11C	FOR DIMENSIONS SEE DASH 500											
563		PSA ADAPTER MODULE (LEM)		6900088-031		NAS-9-497	B	II	NOTE 11C	FOR DIMENSIONS SEE DASH 141 VALUES											
562	AC	COMPUTER CONT & RETICLE DIMMER		6014512-041		NAS-9-497	A	I	NOTE 11B	FOR DIMENSIONS SEE DASH 534 VALUES											
561	AC	G & N INDICATOR CONTROL PANEL ASSY		2014578-031		NAS-9-497	A	I	NOTE 11B	FOR DIMENSIONS SEE DASH 181 VALUES											
560		ADPT. MODULE, PSA		2901143-021		NAS-9-497	B	II	NOTE 11C	FOR DIMENSIONS SEE DASH 141 VALUES											
559		CSL, CAL AND TEST, SCM/PSAAM		2900895-031		FOR OTHER DATA SEE DASH 547															
558		PSA ADAPTER MODULE (LEM)		6900088-021		FOR OTHER DATA SEE DASH 189															
557		FIX., HANDLING, C/M PSA		2900998-021		NAS-9-497	B	II	NOTE 11C	FOR DIMENSIONS SEE DASH 141 VALUES											
556		FIX., MOUNTING G & N	(-144)	2900067-041		NAS-9-497	B	II	NOTE 11C	FOR DIMENSIONS SEE DASH 500 VALUES											
555	AC	OPTICAL UNIT ASSEMBLY		1021368-061		NAS-9-497	A	I	NOTE 11B	2.000	1.312	1.687	1.375	.078	.048	.078	.093	NA	NA	1.125	.750
554	AC	OPTICAL UNIT ASSEMBLY		1021368-041		NAS-9-497	A	I	NOTE 11B	2.000	1.312	1.687	1.375	.078	.048	.078	.093	NA	NA	1.125	.750
553	AC	OPTICAL UNIT AND BELLOWS ASSEMBLY		2010790-111		NAS-9-497	A	I	NOTE 11B	2.000	1.312	1.687	1.375	.078	.048	.078	.093	NA	NA	1.125	.750
552	AC	OPTICAL UNIT AND BELLOWS ASSEMBLY		2010790-081		NAS-9-497	A	I	NOTE 11B	2.000	1.312	1.687	1.375	.078	.048	.078	.093	NA	NA	1.125	.750
551	AC	OPTICAL UNIT AND BELLOWS ASSEMBLY		2010790-071		NAS-9-497	A	I	NOTE 11B	2.000	1.312	1.687	1.375	.078	.048	.078	.093	NA	NA	1.125	.750
550	AC	OPTICAL UNIT AND BELLOWS ASSEMBLY		2010790-061		NAS-9-497	A	I	NOTE 11B	2.000	1.312	1.687	1.375	.078	.048	.078	.093	NA	NA	1.125	.750
548		CAGING ELECTRONICS, GYRO		2900029-031		NAS-9-497	B	II	NOTE 11C	2.125	.968	1.718	NA	.093	.031	.06	.093	.100 .104	.093	.858	.608
547		CSL, CAL AND TEST, SCM/PSAAM		2900895-021		NAS-9-497	B	II	NOTE 11C	4.125	1.812	3.250	NA	.125	.062	.12	.156		.125	1.625	1.140
546		FIX., HAND., C/M AND LEM CDU		2900999-021		NAS-9-497	B	II	NOTE 11C	2.125	.968	1.718	NA	.093	.031	.06	.093	.100 .104	.093	.858	.608
545	AC	G & N INDICATOR CONTROL PANEL ASSY		2014578-021		NAS-9-497	A	I	NOTE 11B	3.000	1.938	2.437	NA	.125	.062	.188	.156	NA	NA	1.750	1.125
544		ADPT MODULE, P.S.A.		1902431-051		NAS-9-497	B	II	NOTE 11C	2.125	.968	1.718	NA	.093	.031	.06	.093	.100 .104	.093	.858	.608
543	AC	PANEL, MONITOR		2900031-041		NAS-9-497	B	II	NOTE 11C	2.125	.968	1.718	NA	.093	.031	.06	.093		.093	.858	.608
542	AC	BATTERY PACK, LIFTING		2900812-021		NAS-9-497	B	II	NOTE 11C	2.125	.968	1.718	NA	.093	.031	.06	.093		.093	.858	.608
541	AC	FIXTURE, MOUNTING, IMU		2900000-021		NAS-9-497	B	II	NOTE 11C	4.125	1.812	3.250	NA	.125	.062	.12	.156		.125	1.625	1.140
540	AC	ADPT, TEST POINT, P.S.A.		2900037-031		NAS-9-497	B	II	NOTE 11C	2.125	.968	1.718	NA	.093	.031	.06	.093	.100 .104	.093	.858	.608
539	AC	ANNUNCIATOR PANEL & EYEPIECE STORAGE ASSEMBLY		1021255-041		NAS-9-497	A	I	NOTE 11B	2.000	1.312	1.906	1.375	.078	.048	.078	.093	NA	NA	1.125	.750
538	AC	ANNUNCIATOR PANEL & EYEPIECE STORAGE ASSEMBLY		1021255-031		NAS-9-497	A	I	NOTE 11B	2.000	1.312	1.906	1.375	.078	.048	.078	.093	NA	NA	1.125	.750
537	AC	TEST SELECTOR		2900028-031		NAS-9-497	B	II	NOTE 11C	2.125	.968	1.718	NA	.093	.031	.06	.093	.100 .104	.093	.858	.608
536	AC	ANALYZER, OPTICS-INERTIAL		2900023-041		NAS-9-497	B	II	NOTE 11C	4.125	1.812	3.250	NA	.125	.062	.12	.156		.125	1.625	1.140
535	AC	CONT, TEMP, PORTABLE		2900060-021		NAS-9-497	B	II	NOTE 11C	2.125	.968	1.718	NA	.093	.031	.06	.093	.100 .104	.093	.858	.608
534	AC	COMPUTER CONT & RETICLE DIMMER		6014512-021		NAS-9-497	A	I	NOTE 11B	2.000	1.312	1.906	1.375	.078	.048	.078	.093	NA	NA	1.125	.750
533	AC	ADPT MODULE, P.S.A.		1902431-041		NAS-9-497	B	II	NOTE 11C	2.125	.968	1.718	NA	.093	.031	.06	.093	.100 .104	.093	.858	.608
532	AC	TRAY BREAKOUT, 105 PIN		1900807-021		NAS-9-497	B	II	NOTE 11C	4.125	1.812	3.250	NA	.125	.062	.12	.156		.125	1.625	1.140
531	AC	TRAY BREAKOUT, 84 PIN		1900806-021		NAS-9-497	B	II	NOTE 11C	4.125	1.812	3.250	NA	.125	.062	.12	.156		.125	1.625	1.140
530	AC	HEAT SINK-TRAY EXTENDER		1900808-021		NAS-9-497	B	II	NOTE 11C	2.125	.968	1.718	NA	.093	.031	.06	.093		.093	.858	.608
529	AC	TESTER, FAILURE INDICATOR		1900809-021		NAS-9-497	B	II	NOTE 11C	2.125	.968	1.718	NA	.093	.031	.06	.093	.100 .104	.093	.858	.608
527	AC	FIX., MOUNTING, G & N	(-144)	1902204-021		NAS-9-497	B	II	NOTE 11C	FOR DIMENSIONS SEE DASH 500 VALUES BELOW											
526	AC	FIX., MOUNTING, G & N	(-144)	2900067-031		NAS-9-497	B	II	NOTE 11C	FOR DIMENSIONS SEE DASH 500 VALUES BELOW											
525	AC	PORTABLE TEMP. CONTROLLER		1900496-021		NAS-9-497	B	II	NOTE 11C	3.000	1.937	2.437	2.312	.125	.031	.125	.156	.125	.125	1.718	1.187
524	AC	POWER, SERVO & THERMOCOUPLE ASSEMBLY C/M		2010743		NAS-9-497	A	I	NOTE 11B	2.125	.968	1.718	NA	.093	.031	.06	.093	NA	NA	.858	.608
523	AC	PULSE TORQUE AND THERMOCOUPLE ASSEMBLY-LEM		6010656		NAS-9-497	A	I	NOTE 11B	FOR DIMENSIONS SEE DASH 508 VALUES BELOW											
522	AC	COUPLING DATA UNIT & THERMOCOUPLE ASSEMBLY-LEM		2010744		NAS-9-497	A	I	NOTE 11B	FOR DIMENSIONS SEE DASH 508 VALUES BELOW											
521	AC	COUPLING DATA UNIT & THERMOCOUPLE ASSEMBLY-C/M		2010744		NAS-9-497	A	I	NOTE 11B	FOR DIMENSIONS SEE DASH 508 VALUES BELOW											
520	AC	PIPA ELECTRONICS AND THERMOCOUPLE ASSEMBLY		2010745		NAS-9-497	A	I	NOTE 11B	FOR DIMENSIONS SEE DASH 508 VALUES BELOW											
519	AC	FIXTURE, HANDLING, LEM-PSA	(-141)	6900129-011		NAS-9-497	B	II	NOTE 11C	FOR DIMENSIONS SEE DASH 504 VALUES BELOW											
518	AC	JUNCTION BOX, GSE-PSA	(-144)	1901933-031		NAS-9-497	B	II	NOTE 11C	FOR DIMENSIONS SEE DASH 500 VALUES BELOW											
517	AC	FIX., HAND., OPTICS INSTL.	(-141)	2901380-011		NAS-9-497	B	II	NOTE 11C	FOR DIMENSIONS SEE DASH 502 VALUES BELOW											
516	AC	POWER, SERVO AND THERMOCOUPLE ASSEMBLY-LEM		6010655		NAS-9-497	A	I	NOTE 11B	FOR DIMENSIONS SEE DASH 508 VALUES BELOW											
514	AC	SIGNAL COND. ASSY LEM OPER.	(-100)	6007013		NAS-9-497	A	I	NOTE 11B	FOR DIMENSIONS SEE DASH 508 VALUES BELOW											
513	AC	JUMPER, BY-PASS	(-141)	1021616		NAS-9-497	B	II	NOTE 11C	2.125	.968	1.718	NA	.093	.031	.06	.093	.100 .104	.093	.858	.608
512	AC	COUPLING DATA UNIT ASSEMBLY C/M	(-100)	2007322-011		NAS-9-497	A	I	NOTE 11B	FOR DIMENSIONS SEE DASH 508 VALUES BELOW											
511	AC	COUPLING DATA UNIT ASSEMBLY-LEM	(-100)	2007322-021		NAS-9-497	A	I	NOTE 11B	FOR DIMENSIONS SEE DASH 508 VALUES BELOW											
510	AC	BATTERY POWER PACK	(-144)	1900011-041		NAS-9-497	B	II	NOTE 11C	FOR DIMENSIONS SEE DASH 500 VALUES BELOW											
509	AC	JUNCTION BOX, P.S.A./G.S.E.	(-144)	1902195-021		NAS-9-497	B	II	NOTE 11C	FOR DIMENSIONS SEE DASH 500 VALUES BELOW											
508	AC	NAVIGATION BASE ASSEMBLY-LEM	(-101)	6899980		NAS-9-497	A	I	NOTE 11B	2.000	1.312	1.906	1.375	.078	.048	.078	.093	NA	NA	1.125	.750
507	AC	CSL, COOL. AND PWR, G AND N	(-144)	1902134-041		NAS-9-497	B	II	NOTE 11C	FOR DIMENSIONS SEE DASH 500 VALUES BELOW											
506	AC	BREAKOUT BOX, CABLE ADAPTER	(-141)	2901011-011		NAS-9-497	B	II	NOTE 11C	2.125	.968	1.718	NA	.093	.031	.06	.093	.100 .104	.093	.858	.608
505	AC	MONITOR AND CONTROL, TEMP	(-141)	2900026-021		NAS-9-497	B	II	NOTE 11C	2.125	.968	1.718	NA	.093	.031	.06	.093		.093	.858	.608
504	AC	PWR SUP, GUIDANCE SYSTEM	(-141)	1900033-021		NAS-9-497	B	II	NOTE 11C	2.125	.968	1.718	NA	.093	.031	.06	.093		.093	.858	.608
503	AC	CONTROL, GIMBAL POSITION	(-141)	2900036-021		NAS-9-497	B	II	NOTE 11C	2.125	.968	1.718	NA	.093	.031	.06	.093		.093	.858	.608
502	AC	ADPT, TEST POINT, PTA/PEA.	(-141)	2900145-021		NAS-9-497	B	II	NOTE 11C	2.125	.968	1.718	NA	.093	.031	.06	.093	.100 .104	.093	.858	.608
501	AC	MOUNTING PLATE, COMPONENT	(-144)	6900007-031		NAS-9-497	B	II	NOTE 11C	FOR DIMENSIONS SEE DASH 500 VALUES BELOW											
500	AC	MOUNTING PLATE, COMPONENT	(-144)	2900677-021		NAS-9-497	B	II	NOTE 11C	4.125	1.812	3.250	NA	.125	.062	.12	.156	.100 .104	.125	1.625	1.140

NOTES FOR TABLE

STYLE A IS FOR G & N SYSTEM
STYLE B IS FOR GROUND SUPPORT EQUIPMENT
TYPE I IS WITHOUT MOUNTING HOLES
TYPE II IS WITH MOUNTING HOLES

1004260 DE SHT 6

9 8 7 6 5 4 3 2 1

	NA	.260	.0 3	.156	.160	NA	NA	2.290	1.440	1.180	.940	1.900	NA	.375	.125	NA	1.790	2.760	.312	NA	3.590	.093	.062	NA	.525	NA	NA	NA	.225	NA	.093	.480	.430	NA	NA	3.670
S	SEE DASH 538		VALUES																																	
S	SEE DASH 542		VALUES																																	
S	SEE DASH 500		VALUES																																	
S	SEE DASH 550		VALUES																																	
S	SEE DASH 181																																			
S	SEE DASH 181																																			
S	SEE DASH 181																																			
S	SEE DASH 534																																			
S	SEE DASH 500																																			
S	SEE DASH 500																																			
S	SEE DASH 141		VALUES																																	
S	SEE DASH 534		VALUES																																	
S	SEE DASH 181		VALUES																																	
S	SEE DASH 141		VALUES																																	
S	SEE DASH 141		VALUES																																	
S	SEE DASH 500		VALUES																																	
	1.375	.078	.0 8	.078	.093	NA	NA	1.125	.750	.593	.453	1.015	.062	.187	.078	.875	.718	1.375	.218	NA	NA	.048	.031	.875	.305	NA	.468	1.531	NA	NA	.078	.312	.187	NA		
	1.375	.078	.0 8	.078	.093	NA	NA	1.125	.750	.593	.453	1.015	.062	.187	.078	.875	.718	1.375	.218	NA	NA	.048	.031	.875	.305	NA	.468	1.531	NA	NA	.078	.312	.187	NA		
	1.375	.078	.0 8	.078	.093	NA	NA	1.125	.750	.593	.453	1.015	.062	.187	.078	.875	.718	1.375	.218	NA	NA	.048	.031	.875	.305	NA	.468	1.531	NA	NA	.078	.312	.187	NA		
	1.375	.078	.0 8	.078	.093	NA	NA	1.125	.750	.593	.453	1.015	.062	.187	.078	.875	.718	1.375	.218	NA	NA	.048	.031	.875	.305	NA	.468	1.531	NA	NA	.078	.312	.187	NA		
	1.375	.078	.0 8	.078	.093	NA	NA	1.125	.750	.593	.453	1.015	.062	.187	.078	.875	.718	1.375	.218	NA	NA	.048	.031	.875	.305	NA	.468	1.531	NA	NA	.078	.312	.187	NA		
	1.375	.078	.0 8	.078	.093	NA	NA	1.125	.750	.593	.453	1.015	.062	.187	.078	.875	.718	1.375	.218	NA	NA	.048	.031	.875	.305	NA	.468	1.531	NA	NA	.078	.312	.187	NA		
	NA	.093	.0 1	.06	.093	100 104	.093	.858	.608	.484	.358	.733	.077	.116	.062	.937	.875	1.343	.125	.781	1.892	.046	NA	NA	.209	.093	.250	1.875	NA	1.840	.046	.23	.16	1.938		
	NA	.125	.0 2	.12	.156		.125	1.625	1.140	.890	.640	1.390	.125	.171	.125	1.875	1.687	2.625	.250	1.562	3.843	.093	NA	NA	.359	.125	.437	3.688	NA	3.687	.093	.40	.25	3.375		
	NA	.093	.0 1	.06	.093	100 104	.093	.858	.608	.484	.358	.733	.077	.116	.062	.937	.875	1.343	.125	.781	1.892	.046	NA	NA	.209	.093	.250	1.875	NA	1.840	.046	.23	.16	1.938		
	NA	.125	.0 2	.188	.156	NA	NA	1.750	1.125	.906	.688	1.500	NA	.281	.125	NA	1.094	2.062	.312	NA	2.500	.062	.125	1.312	.469	NA	NA	NA	.156	NA	.125	.469	.344	NA		
	NA	.093	.0 1	.06	.093	100 104	.093	.858	.608	.484	.358	.733	.077	.116	.062	.937	.875	1.343	.125	.781	1.892	.046	NA	NA	.209	.093	.250	1.875	NA	1.840	.046	.23	.16	1.938		
	NA	.093	.0 1	.06	.093		.093	.858	.608	.484	.358	.733	.077	.116	.062	.937	.875	1.343	.125	.781	1.892	.046	NA	NA	.209	.093	.250	1.875	NA	1.840	.046	.23	.25	1.938		
	NA	.093	.0 1	.06	.093		.093	.858	.608	.484	.358	.733	.077	.116	.062	.937	.875	1.343	.125	.781	1.892	.046	NA	NA	.209	.093	.250	1.875	NA	1.840	.046	.23	.16	1.938		
	NA	.125	.0 2	.12	.156		.125	1.625	1.140	.890	.640	1.390	.125	.171	.125	1.875	1.687	2.625	.250	1.562	3.843	.093	NA	NA	.359	.125	.437	3.688	NA	3.687	.093	.40	.25	3.875		
	NA	.093	.0 1	.06	.093	100 104	.093	.858	.608	.484	.358	.733	.077	.116	.062	.937	.875	1.343	.125	.781	1.892	.046	NA	NA	.209	.093	.250	1.875	NA	1.840	.046	.23	.16	1.938		
	1.375	.078	.0 8	.078	.093	NA	NA	1.125	.750	.593	.453	1.015	.062	.187	.078	.875	.718	1.375	.218	NA	NA	.048	.031	.875	.305	.078	.531	1.906	.078	NA	.078	.531	.187	NA		
	1.375	.078	48	.078	.093	NA	NA	1.125	.750	.593	.453	1.015	.062	.187	.078	.875	.718	1.375	.218	NA	NA	.048	.031	.875	.305	.078	.531	1.906	.078	NA	.078	.531	.187	NA		
	NA	.093	31	.06	.093	100 104	.093	.858	.608	.484	.358	.733	.077	.116	.062	.937	.875	1.343	.125	.781	1.892	.046	NA	NA	.209	.093	.250	1.875	NA	1.840	.046	.23	.16	1.938		
	NA	.125	2	.12	.156		.125	1.625	1.140	.890	.640	1.390	.125	.171	.125	1.875	1.687	2.625	.250	1.562	3.843	.093	NA	NA	.359	.125	.437	3.688	NA	3.687	.093	.40	.25	3.875		
	NA	.093	31	.06	.093	100 104	.093	.858	.608	.484	.358	.733	.077	.116	.062	.937	.875	1.343	.125	.781	1.892	.046	NA	NA	.209	.093	.250	1.875	NA	1.840	.046	.23	.16	1.938		
	1.375	.078	48	.078	.093	NA	NA	1.125	.750	.593	.453	1.015	.062	.187	.078	.875	.718	1.375	.218	NA	NA	.048	.031	.875	.305	.078	.531	1.906	.078	NA	.078	.531	.187	NA		
	NA	.093	31	.06	.093	100 104	.093	.858	.608	.484	.358	.733	.077	.116	.062	.937	.875	1.343	.125	.781	1.892	.046	NA	NA	.209	.093	.250	1.875	NA	1.840	.046	.23	.16	1.938		
	NA	.125	52	.12	.156		.125	1.625	1.140	.890	.640	1.390	.125	.171	.125	1.875	1.687	2.625	.250	1.562	3.843	.093	NA	NA	.359	.125	.437	3.688	NA	3.687	.093	.40	.25	3.875		
	NA	.125	52	.12	.156		.125	1.625	1.140	.890	.640	1.390	.125	.171	.125	1.875	1.687	2.625	.250	1.562	3.843	.093	NA	NA	.359	.125	.437	3.688	NA	3.687	.093	.40	.25	3.875		
	NA	.093	31	.06	.093		.093	.858	.608	.484	.358	.733	.077	.116	.062	.937	.875	1.343	.125	.781	1.892	.046	NA	NA	.209	.093	.250	1.875	NA	1.840	.046	.23	.16	1.938		
	NA	.093	5.	.06	.093	100 104	.093	.858	.608	.484	.358	.733	.077	.116	.062	.937	.875	1.343	.125	.781	1.892	.046	NA	NA	.209	.093	.250	1.875	NA	1.840	.046	.23	.16	1.938		
S	SEE DASH 500		ALUES BELOW																																	
S	SEE DASH 500		ALUES BELOW																																	
	.312	.125	31	.125	.156	.125	.125	1.718	1.187	.968	.749	1.452	.093	.295	.090	1.312	1.00	2.000	.250	1.687	2.750	.062	NA	NA	.463	.125	.562	2.437	.140	2.562	.090	.468	.359	2.750		
	NA	.093	31	.06	.093	NA	NA	.858	.608	.484	.358	.733	.062	.140	.062	NA	.968	1.450	.125	NA	1.720	.046	.03	NA	.210	NA	NA	NA	.070	NA	.046	.32	.16	NA		
S	SEE DASH 508		ALUES BELOW																																	
S	SEE DASH 508		ALUES BELOW																																	
S	SEE DASH 508		ALUES BELOW																																	
S	SEE DASH 508		ALUES BELOW																																	
S	SEE DASH 504		ALUES BELOW																																	
S	SEE DASH 500		ALUES BELOW																																	
S	SEE DASH 502		ALUES BELOW																																	
S	SEE DASH 508		ALUES BELOW																																	
S	SEE DASH 508		ALUES BELOW																																	
	NA	.093	31	.06	.093	100 104	.093	.858	.608	.484	.358	.733	.077	.116	.062	.937	.875	1.343	.125	.781	1.892	.046	NA	NA	.209	.093	.250	1.875	NA	1.840	.046	.23	.16	1.938		
S	SEE DASH 508		ALUES BELOW																																	
S	SEE DASH 508		ALUES BELOW																																	
S	SEE DASH 500		ALUES BELOW																																	
S	SEE DASH 500		ALUES BELOW																																	
	1.375	.078	48	.078	.093	NA	NA	1.125	.750	.593	.453	1.015	.062	.187	.078	.875	.718	1.375	.218	NA	NA	.048	.031	.875	.305	.078	.531	1.906	.078	NA	.078	.531	.187	NA		
S	SEE DASH 500		ALUES BELOW																																	
	NA	.093	31	.06	.093	100 104	.093	.858	.608	.484	.358	.733	.077	.116	.062	.937	.875	1.343	.125	.781	1.892	.046	NA	NA	.209	.093	.250	1.875	NA	1.840	.046	.23	.16	1.938		
	NA	.093	31	.06	.093		.093	.858	.608	.484	.358	.733	.077	.116	.062	.937	.875	1.343	.125	.781	1.892	.046	NA	NA	.209	.093	.250	1.875	NA	1.840	.046	.23	.16	1.938		
	NA	.093	31	.06	.093		.093	.858	.608	.484	.358	.733	.077	.116	.062	.937	.875	1.343	.125	.781	1.892	.046	NA	NA	.209	.093	.250	1.875	NA	1.840	.046	.23	.16	1.938		
	NA	.093	31	.06	.093		.093	.858	.608	.484	.358	.733	.077	.116	.062	.937	.875	1.343	.125	.781	1.892	.046	NA	NA	.209	.093	.250	1.875	NA	1.840	.046	.23	.16	1.938		
	NA	.093	31	.06	.093	100 104	.093	.858	.608	.484	.358	.733	.077	.116	.062	.937	.875	1.343	.125	.781	1.892	.046	NA	NA	.209	.093	.250	1.875	NA	1.840	.046	.23	.16	1.938		
S	SEE DASH 500		ALUES BELOW																																	
	NA	.125	62	.12	.156	100 104	.125	1.625	1.140	.890	.640	1.390	.125	.171	.125	1.875	1.687	2.625	.250	1.562	3.843	.093	NA	NA	.359	.125	.437	3.688	NA	3.687	.093	.40	.25	3.875		
	D	E	F	G	H	J	K	L	M	N	P	R	S	T	U	V	W	Y	Z	AA	AB	AC	AD	AE	AF	AG	AH	AJ	AK	AL	AM	AN	AP	AR	AS	AT

REVISIONS					
SYM	ZONE	DESCRIPTION	CHG NO	DATE	APPD
CL		REPLACES REV CK WITH CHANGE PER TDRR 34365		9/28/67	JWL RWH
CM		REVISED PER TDRR 34395		17 OCT. 67	R.A.W.
CN		REVISED PER TDRR 34467		31 OCT 67	JRK
CP		REVISED PER TDRR 34855		6 NOV 67	EMS
CR		REVISED PER TDRR 35164		7 DEC 67	DKD RWH
CS		REVISED PER TDRR 35307		3 JAN 68	EHW
CT		REVISION STATUS CHANGED		7 FEB 68	LK RWH
CU		REVISED PER TDRR 35628		22 FEB 68	JRK
CV		REVISED PER TDRR 35675		27 FEB 68	LK
CW		REVISED PER TDRR 35970		3 APR 68	MTY
CY		REVISION STATUS CHANGED		16 APR 68	J.N.
CZ		REVISED PER TDRR 36243		23 MAY 68	MTY
DA		REVISED PER TDRR 36324		17 JUN 68	MTY
DB		REVISED PER TDRR 36742		12 SEP 68	
DC		REVISED PER TDRR 37114		16 DEC 68	LK
DD		REVISED PER TDRR 37146		30 DEC 68	MTY
DE		REVISED PER TDRR 37251		23 JAN 69	

H G F E D C B A

1004260 DE

1004260

AC ELECTRONICS DASH NUMBERS

AS APPLICABLE	
NEXT ASSY	USED ON
APPLICATION	

UNLESS OTHERWISE SPECIFIED
DIMENSIONS ARE IN INCHES
TOLERANCES ON
2 PLACE DECIMALS ± 3 PLACE DECIMALS ± .005 ANGLES ± —
DO NOT SCALE THIS DRAWING
MATERIAL SEE NOTE 11
APPROVAL

MIT INSTRUMENTATION LAB
CAMBRIDGE MASS
DRG NO CONTRACT
DRAWN R. A. JONES DATE 16 JUL 65
CHECKED
APPROVAL W. KUPFER 22 JUL 65
CONTRACT
NASA APPROVAL T. MICHAELS 22 JUL 65
MIT APPROVAL W. KUPFER 22 JUL 65

MANNED
SPACECRAFT CENTER
HOUSTON, TEXAS

NAMEPLATES,
APOLLO G&N - GSE
(STANDARDS)

SIZE J2 CODE IDENT NO. 80230 1004260
SCALE NONE SHEET 6 OF 6

1004260	DE	SHT 6

9 8 7 6 5 4 3 2 1

2/1004260

NOTES:

1. INTERPRET DRAWING IN ACCORDANCE WITH STANDARDS PRESCRIBED BY MIL-D-70327.
2. DIMENSIONS ON EACH VIEW APPLY TO ALL VIEWS (WITH THE EXCEPTION OF MOUNTING HOLES).
3. FORMATS ILLUSTRATED WILL BE APPLICABLE TO ALL ITEMS REQUIRING NAMEPLATES BELOW END ITEM DESIGNATION (SYSTEMS, ASSEMBLIES, ETC.)
4. PLATE BACKGROUND TO BE LUSTERLESS BLACK PER FED-STD-595, COLOR 37038. BORDER, MARKING AND LETTERING TO BE NATURAL METAL, (ANODIZED ALUMINUM).
5. MARKING METHOD TO BE DIE STAMPING, ETCHING OR ENGRAVING IN ACCORDANCE WITH MIL-P-19834.
6. LETTERING STYLE TO BE GOTHIC, (SANS SERIFS), AND NUMBERS TO BE ARABIC.
7. WHERE LOCATING DIMENSIONS ARE NOT SHOWN, CHARACTERS SHALL BE SYMMETRICALLY POSITIONED.
8. IDENTIFY WITH DRAWING NUMBER PER ND 1002019.
9. WHEN "AUTO MARK" METAL MARKING TYPEWRITER IS USED TO ADD DATA TO BLANK SPACES, TYPE SIZE IS TO BE SELECTED FROM DIMENSIONS U, AC, AND AM.
10. NASA SYMBOL IS TO BE PROPORTIONAL TO NAMEPLATE IN RATIO OF 1 TO 5 WITH DIMENSION A VALUE AND IS TO HAVE NATURAL BACKGROUND. NASA SYMBOL LETTERS LETTERING AND FEATHER TO BE BLACK, (OR WHITE FOR SILK SCREENING). WHERE BLACK FEATHER PROTRUDES INTO BLACK BACKGROUND, A MINIMUM OUTLINE OF NATURAL BACKGROUND SHALL EXIST.
11. NAMEPLATES WILL BE APPLIED BY METHODS LISTED BELOW, SHOWN IN ORDER OF PREFERENCE, (I.E., FOR RELIABILITY AND WEIGHT).
    A - STENCIL OR SILK SCREEN DIRECTLY ON EQUIPMENT USING INK PER SCD 1010920, (WHITE OR BLACK).
    B - ALUMINUM FOIL, (STYLE A OR B, TYPE I):
    FOIL SHALL BE .0030 ± .0005 THICK PER MIL-A-148.
    FOIL SHALL HAVE NO ADHESIVE BACKING.
    FOIL SHALL BE BONDED PER ND 1002219, (METHOD II).
    FOIL SHALL BE CLEAR ANODIZED PER MIL-A-8625, TYPE II.
    C - PLATE, (STYLE A OR B, TYPE II):
    MATERIAL: QQ-A-250, TEMPER 0 OR H14, TYPE 1100, ALUMINUM ALLOY, .032 THICK. ANODIZE PER MIL-A-8625, TYPE II.
    ALUMINUM PLATE MUST BE FREE FROM BURRS AND SHARP CORNERS, MOUNTED WITH APPLICABLE SIZE FASTENERS.
12. NAMEPLATES SHALL BE CAPABLE OF MEETING APPLICABLE REQUIREMENTS OF MIL-M-13231.
13. ON DIMENSION TABLES SHOWN ON PAGES 2, 3, 4, 5, AND 6, NA MEANS, "NOT APPLICABLE".

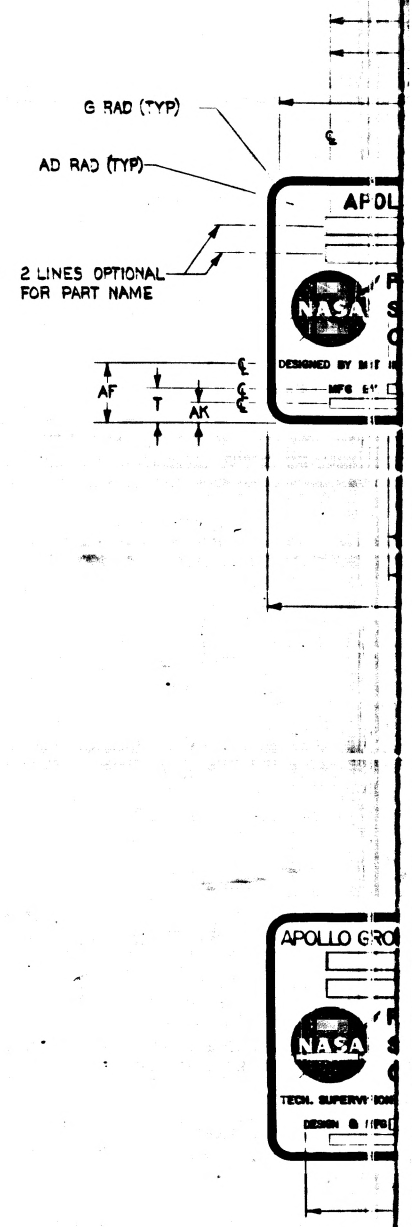

SUGGESTED PROPORTIONS FOR NAMEPLATE DIMENSIONS.
1. SELECT NAMEPLATE LENGTH, DIMENSION "A", TO FIT DESIGN NEEDS.
2. DIMENSIONS B THRU AS ON LINE 1 BELOW ARE PROPORTIONAL TO "A" BY MULTIPLIERS SHOWN IN LINE 2 BELOW.

1.	A	B	C	D	E	F	G	H	J	K	L	M	N	P	R	S	T	U	V	W
2.	1.000A	.6563A	.8438A	.6875A	.0391A	.0240A	.0391A	.0469A	.0547A	.0469A	.5938A	.3750A	.2969A	.2187A	.5079A	.0313A	.0938A	.0391A	.4375A	.3594A

1.	Y	Z	AA	AB	AC	AD	AE	AF	AG	AH	AJ	AK	AL	AM	AN	AP	AR	AS
2.	.6875A	.1094A	.5781A	.9219A	.0240A	.0156A	.4375A	.1525A	.0391A	.1563A	.8438A	.0548A	.8659A	.0391A	.1563A	.0938A	.9219A	.0151A

1004260 DF Sh 1

1/1004260

REVISIONS

SYM	ZONE	DESCRIPTION	CHG NO	DATE	APPD
CL		REPLACES REV CK WITHOUT CHANGE PER TDRR 34365		9/28/67	JWL RWH
CM		REVISION STATUS CHANGED		18 OCT 67	R.A.W.
CN		REVISION STATUS CHANGED		31 OCT 67	JRK
CP		REVISION STATUS CHANGED		6 NOV 67	EMS
CR		REVISION STATUS CHANGED		7 DEC 67	AKD RWH
CS		REVISION STATUS CHANGED		5 JAN 68	J.W. EHW
CT		REVISION STATUS CHANGED		7 FEB 68	LK
CU		REVISION STATUS CHANGED		22 FEB 68	JRK
CV		REVISION STATUS CHANGED		27 FEB 68	LK
CW		REVISION STATUS CHANGED		3 APR 68	MTY
CY		REVISION STATUS CHANGED		16 APR 68	A.N.
CZ		REVISION STATUS CHANGED		23 MAY 68	MTY
DA		REVISION STATUS CHANGED		17 JUN 68	MTY
DB		REVISION STATUS CHANGED		12 SEP 68	RWH
DC		REVISION STATUS CHANGED		16 DEC 68	LK
DD		REVISION STATUS CHANGED		30 DEC 68	MTY
DE		REVISED PER TDRR 3-25		22 JAN 69	
DF		REVISION STATUS CHANGED		27 JAN 69	LK RWH

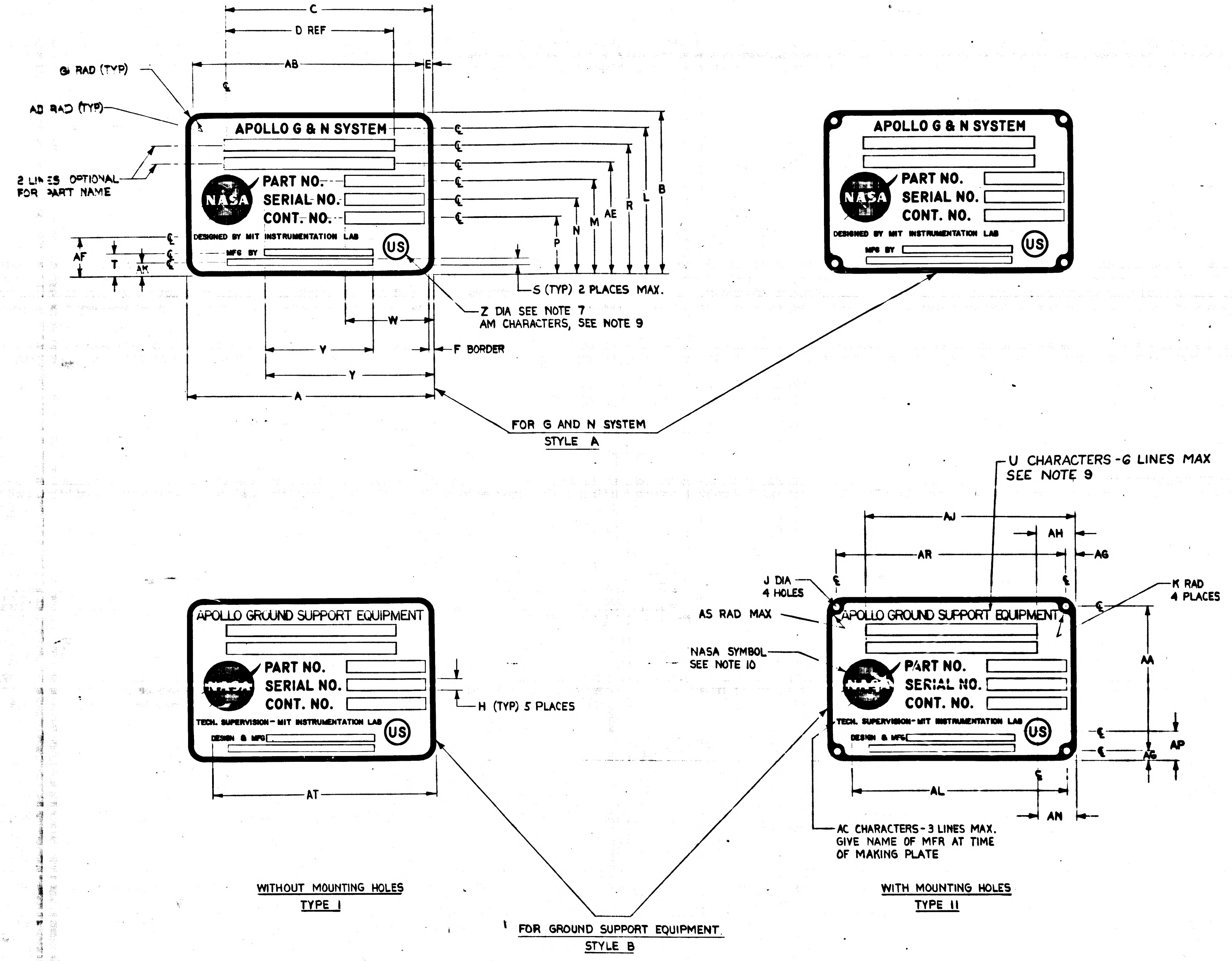
C
D REF
AB
E
G RAD (TYP)
AD RAD (TYP)
2 LINES OPTIONAL FOR PART NAME
APOLLO G & N SYSTEM
PART NO.
SERIAL NO.
CONT. NO.
NASA
DESIGNED BY MIT INSTRUMENTATION LAB
MFG BY
US
AF
T
AK
P
N
M
AE
R
L
B
S (TYP) 2 PLACES MAX.
Z DIA SEE NOTE 7
AM CHARACTERS, SEE NOTE 9
W
V
Y
F BORDER
A
FOR G AND N SYSTEM
STYLE A
U CHARACTERS - 6 LINES MAX
SEE NOTE 9
AJ
AH
AR
AG
J DIA
4 HOLES
K RAD
4 PLACES
AS RAD MAX
NASA SYMBOL
SEE NOTE 10
APOLLO GROUND SUPPORT EQUIPMENT
TECH. SUPERVISION - MIT INSTRUMENTATION LAB
DESIGN & MFG
H (TYP) 5 PLACES
AA
AP
AQ
AL
AN
AT
AC CHARACTERS - 3 LINES MAX.
GIVE NAME OF MFR AT TIME
OF MAKING PLATE
WITHOUT MOUNTING HOLES
TYPE I
WITH MOUNTING HOLES
TYPE II
FOR GROUND SUPPORT EQUIPMENT
STYLE B

AS APPLICABLE	
NEXT ASSY	USED ON
APPLICATION	

UNLESS OTHERWISE SPECIFIED
DIMENSIONS ARE IN INCHES
TOLERANCES ON
2 PLACE DECIMALS ±
3 PLACE DECIMALS ± .005
ANGLES ±
DO NOT SCALE THIS DRAWING
MATERIAL SEE NOTE 11
APPROVAL

MIT
INSTRUMENTATION LAB
CAMBRIDGE MASS
DWG NO
CONTRACT
DRAWN R. A. JONES DATE 16 JUL 65
CHECKED
APPROVAL W. KUPFER 22 JUL 65
CONTRACT
NASA APPROVAL T. MICHAELS 22 JUL 65
MIT APPROVAL W. KUPFER 22 JUL 65

MANNED
SPACECRAFT CENTER
HOUSTON, TEXAS

NAMEPLATES,
APOLLO G&N - GSE
(STANDARDS)

SIZE J2
CODE IDENT NO. 80230
1004260
SCALE NONE
SHEET OF 6

1004260 DF

1004260

NOTICE — WHEN GOVERNMENT DRAWINGS, SPECIFICATIONS, OR OTHER DATA ARE USED FOR ANY PURPOSE OTHER THAN IN CONNECTION WITH A DEFINITELY RELATED GOVERNMENT PROCUREMENT OPERATION, THE UNITED STATES GOVERNMENT THEREBY INCURS NO RESPONSIBILITY NOR ANY OBLIGATION WHATSOEVER; AND THE FACT THAT THE GOVERNMENT MAY HAVE FORMULATED, FURNISHED, OR IN ANY WAY SUPPLIED THE SAID DRAWINGS, SPECIFICATIONS, OR OTHER DATA IS NOT TO BE REGARDED BY IMPLICATION OR OTHERWISE AS IN ANY MANNER LICENSING THE HOLDER OR ANY OTHER PERSON OR CORPORATION, OR CONVEYING ANY RIGHTS OR PERMISSION TO MANUFACTURE, USE, OR SELL ANY PATENTED INVENTION THAT MAY IN ANY WAY BE RELATED THERETO.

DASH NO.	P/C	PART NAME	REMARKS	PART NUMBER	SER. NO.	CONT. NO.	STYLE	TYPE	MATERIAL	A	B	C	D	E	F	G	H	J	K	L	M	N
399	K																					
398	K																					
350	K	ALIGNMENT OPTICAL TELESCOPE (LEM)		NA	NA	NA	A	I	NOTE 11B	4.000	2.625	3.375	2.750	.156	.093	.156	.187	NA	NA	2.312	1.468	1.18
309	K																					
308	K																					
307	K						B	I	NOTE 11B	4.000	2.625	3.375	2.750	.156	.093	.156	.187	NA	NA	2.328	1.468	1.18
306	K						B	II	NOTE 11C	4.000	2.625	3.375	2.750	.156	.093	.156	.187	.125	.156	2.328	1.468	1.18
305	K						B	I	NOTE 11B	2.000	1.312	1.687	1.375	.078	.048	.078	.093	NA	NA	1.164	.734	.59
304	K						B	II	NOTE 11C	2.000	1.312	1.687	1.375	.078	.048	.078	.093	.070	.078	1.164	.734	.59
303	K																					
302	K																					
301	K																					
300	K	OPTICAL UNIT		NA	NA	NA	A	I	NOTE 11B	2.000	1.312	1.675	NA	NA	.048	.078	NA	NA	NA	1.090	.812	.67
9	K	2 IN AUTOCOLLIMATOR		1001702			B	II	NOTE 11C	4.000	2.625	3.812	2.750	.156	.093	.156	.187	.125	.156	2.250	1.500	1.18
8	K	5 IN AUTOCOLLIMATOR		1017410			B	II	NOTE 11C	4.000	2.625	3.812	2.750	.156	.093	.156	.187	.125	.156	2.250	1.500	1.18
7	K	2-1/2 IN AUTOCOLLIMATOR (SCT)		1017435			B	II	NOTE 11C	4.000	2.625	3.812	2.750	.156	.093	.156	.187	.125	.156	2.250	1.500	1.18
6	K	2-1/2 IN AUTOCOLLIMATOR (SXT)		1017448			B	II	NOTE 11C	4.000	2.625	3.812	2.750	.156	.093	.156	.187	.125	.156	2.250	1.500	1.18
5	K	RETROREFLECTING PRISM ASSEMBLY		1019840			B	I	NOTE 11B	4.000	2.625	3.812	2.750	.156	.093	.156	.187	NA	NA	2.250	1.500	1.18
4	K	S/H SIMULATOR ASSEMBLY		1019896			B	I	NOTE 11B	4.000	2.625	3.812	2.750	.156	.093	.156	.187	NA	NA	2.250	1.500	1.18
3	K	REFERENCE MIRROR		1001767			B	I	NOTE 11B	2.000	1.312	1.906	1.375	.078	.048	.078	.093	NA	NA	1.125	.750	.59
2	K	2 IN PLANE READING AUTOCOLLIMATOR		1017413			B	I	NOTE 11B	2.000	1.312	1.906	1.375	.078	.048	.078	.093	NA	NA	1.125	.750	.59
1	K	2 IN AUTOCOLLIMATOR		1001702			B	I	NOTE 11B	2.000	1.312	1.906	1.375	.078	.048	.078	.093	NA	NA	1.125	.750	.59

NOTES FOR TABLE

STYLE A IS FOR G & N SYSTEM
STYLE B IS FOR GROUND SUPPORT EQUIPMENT
TYPE I IS WITHOUT MOUNTING HOLES
TYPE II IS WITH MOUNTING HOLES

1004260 | D | SHT 2

SYM	ZONE	DESCRIPTION	CHG NO	DATE	APPD
CL		REPLACES REV CK WITHOUT CHANGE PER TDRR 34365		9/28/67	JWL RWH
CM		REVISION STATUS CHANGED		18 OCT 67	R.A.W.
CN		REVISION STATUS CHANGED		3 OCT 67	JRK
CP		REVISION STATUS CHANGED		6 NOV 67	EMS
CR		REVISION STATUS CHANGED		7 DEC 67	DKD RWH
CS		REVISION STATUS CHANGED		3 JAN 68	J.W. EHW
CT		REVISION STATUS CHANGED		7 FEB 68	LK RWK
CU		REVISION STATUS CHANGED		22 FEB 68	JRK
CV		REVISION STATUS CHANGED		27 FEB 68	LK
CW		REVISION STATUS CHANGED		3 APR 68	
CY		REVISION STATUS CHANGED		16 APR 68	A.N.
CZ		REVISION STATUS CHANGED		23 MAY 68	
DA		REVISION STATUS CHANGED		17 JUN 68	
DB		REVISION STATUS CHANGED		12 SEP 68	
DC		REVISION STATUS CHANGED		16 DEC 68	LK
DD		REVISION STATUS CHANGED		30 DEC 68	
DE		REVISION STATUS CHANGED		23 JAN 69	
DF		REVISION STATUS CHANGED		27 JAN 69	LK

E	F	G	H	J	K	L	M	N	P	R	S	T	U	V	W	Y	Z	AA	AB	AC	AD	AE	AF	AG	AH	AJ	AK	AL	AM	AN	AP	AR
.156	.093	156	.187	NA	NA	2.312	1.468	1.187	.906	2.031	NA	.375	.156	NA	1.437	2.750	.437	NA	3.688	.062	.062	1.750	.593	NA	.625	3.375	.187	NA	.156	.531	.453	NA
.156	.093	156	.187	NA	NA	2.328	1.468	1.187	.906	2.031	.062	.375	.156	NA	1.437	2.750	.437	NA	3.687	.062	.062	1.750	.593	NA	NA	NA	NA	NA	NA	NA	NA	NA
.156	.093	156	.187	.125	.156	2.328	1.468	1.187	.906	2.031	.062	.375	.156	NA	1.437	2.750	.437	2.312	3.687	.062	NA	1.750	.593	NA	NA	NA	NA	NA	NA	NA	NA	NA
.078	.048	078	.093	NA	NA	1.164	.734	.593	.453	1.015	.048	.171	.078	NA	.718	1.375	.187	NA	NA	.048	.031	.875	.320	NA	NA	NA	NA	NA	NA	NA	NA	NA
.078	.048	078	.093	.070	.078	1.164	.734	.593	.453	1.015	.048	.171	.078	NA	.718	1.375	.187	.156	1.843	.048	NA	.875	.320	NA	NA	NA	NA	NA	NA	NA	NA	NA
NA	.048	.078	NA	NA	NA	1.090	.812	.675	.540	.940	NA	.265	NA	NA	NA	1.375	.218	NA	NA	NA	NA	NA	.375	NA	NA	NA	.180	NA	.078	NA	NA	NA
.156	.093	.156	.187	.125	.156	2.250	1.500	1.187	.906	2.031	.093	.375	.156	1.750	1.437	2.750	.437	2.312	3.687	.062	NA	1.750	.593	.156	1.062	3.812	.156	NA	.156	1.062	.375	3.687
.156	.093	.156	.187	.125	.156	2.250	1.500	1.187	.906	2.031	.093	.375	.156	1.750	1.437	2.750	.437	2.312	3.687	.062	NA	1.750	.593	.156	1.062	3.812	.156	NA	.156	1.062	.375	3.687
.156	.093	.156	.187	.125	.156	2.250	1.500	1.187	.906	2.031	.093	.375	.156	1.750	1.437	2.750	.437	2.312	3.687	.062	NA	1.750	.593	.156	1.062	3.812	.156	NA	.156	1.062	.375	3.687
.156	.093	.156	.187	.125	.156	2.250	1.500	1.187	.906	2.031	.093	.375	.156	1.750	1.437	2.750	.437	2.312	3.687	.062	NA	1.750	.593	.156	1.062	3.812	.156	NA	.156	1.062	.375	3.687
.156	.093	.156	.187	NA	NA	2.250	1.500	1.187	.906	2.031	.093	.375	.156	1.750	1.437	2.750	.437	NA	NA	.062	.062	1.750	.593	.156	1.062	3.812	.156	NA	.156	1.062	.375	NA
.156	.093	.156	.187	NA	NA	2.250	1.500	1.187	.906	2.031	.093	.375	.156	1.750	1.437	2.750	.437	NA	NA	.062	.062	1.750	.593	.156	1.062	3.812	.156	NA	.156	1.062	.375	NA
.078	.048	.078	.093	NA	NA	1.125	.750	.593	.453	1.015	.062	.187	.078	.875	.718	1.375	.218	NA	NA	.048	.031	.875	.305	.078	.531	1.906	.078	NA	.078	.531	.187	NA
.078	.048	.078	.093	NA	NA	1.125	.750	.593	.453	1.015	.062	.187	.078	.875	.718	1.375	.218	NA	NA	.048	.031	.875	.305	.078	.531	1.906	.078	NA	.078	.531	.187	NA
.078	.048	.078	.093	NA	NA	1.125	.750	.593	.453	1.015	.062	.187	.078	.875	.718	1.375	.218	NA	NA	.048	.031	.875	.305	.078	.531	1.906	.078	NA	.078	.531	.187	NA

KOLLSMAN DASH NUMBERS

AS APPLICABLE	
NEXT ASSY	USED ON
APPLICATION	

UNLESS OTHERWISE SPECIFIED
DIMENSIONS ARE IN INCHES
TOLERANCES ON
2 PLACE DECIMALS ± | 3 PLACE DECIMALS ± .005 | ANGLES ± —
DO NOT SCALE THIS DRAWING
MATERIAL
SEE NOTE 11
APPROVAL

MIT
INSTRUMENTATION LAB
CAMBRIDGE MASS
DRAWN R. A. JONES DATE 16 JUL 65
CHECKED
W. KUPFER 22 JUL 65
APPROVAL
CONTRACT
T. MICHAELS 22 JUL 65
NASA APPROVAL
W. KUPFER 22 JUL 65
MIT APPROVAL

MANNED
SPACECRAFT CENTER
HOUSTON, TEXAS

NAMEPLATES,
APOLLO GEN - GSE
(STANDARDS)

SIZE J2
CODE IDENT NO. 80230
1004260
SCALE NONE
SHEET 2 OF 6

1004260 DF

1004260

DASH NO.	P/C	PART NAME	REMARKS	PART NUMBER	SER. NO.	CONT. NO.	STYLE	TYPE	MATERIAL	A	B	C	D	E	F	G	H	J	K	L	M	N
299	R																					
298	R																					
293	R	COMPUTER TEST SET		2014042-081	NA	NAS-9-497	B	II	NOTE 11C	FOR DIMENSIONS SEE DASH 18 VALUES BELOW												
292	R	DRAWER ASSY - PROGRAM & MONITOR		2014041-071	NA	NAS-9-497	B	I	NOTE 11B	FOR DIMENSIONS SEE DASH 17 VALUES BELOW												
291	R	BUFFER CIRCUIT ASSY		2014254-041	NA	NAS-9-497	B	I	NOTE 11B	FOR DIMENSIONS SEE DASH 15 VALUES BELOW												
290	R	LOGIC DRAWER ASSY NO.2		2014037-051	NA	NAS-9-497	B	I	NOTE 11B	FOR DIMENSIONS SEE DASH 17 VALUES BELOW												
289	R	SELF TEST ASSY		2014392-021	NA	NAS-9-497	B	I	NOTE 11B	FOR DIMENSIONS SEE DASH 15 VALUES BELOW												
288	R	LOGIC DRAWER ASSY NO.1		2014036-051	NA	NAS-9-497	B	I	NOTE 11B	FOR DIMENSIONS SEE DASH 17 VALUES BELOW												
287	R	COMPUTER TEST SET		2014042-071	NA	NAS-9-497	B	II	NOTE 11C	FOR DIMENSIONS SEE DASH 18 VALUES BELOW												
286	R	DRAWER ASSY- PROGRAM & MONITOR		2014041-061	NA	NAS-9-497	B	I	NOTE 11B	FOR DIMENSIONS SEE DASH 17 VALUES BELOW												
285	R	BUFFER CIRCUIT ASSY		2014254-031	NA	NAS-9-497	B	I	NOTE 11B	FOR DIMENSIONS SEE DASH 15 VALUES BELOW												
284	R	LOGIC DRAWER ASSY NO. 2		2014037-041	NA	NAS-9-497	B	I	NOTE 11B	FOR DIMENSIONS SEE DASH 17 VALUES BELOW												
283	R	DRAWER ASSY-PROGRAM & MONITOR		2014041-051	NA	NAS-9-497	B	I	NOTE 11B	FOR DIMENSIONS SEE DASH 17 VALUES BELOW												
282	R	COMPUTER TEST SET		2014042-061	NA	NAS-9-497	B	II	NOTE 11C	FOR DIMENSIONS SEE DASH 18 VALUES BELOW												
281	R	AGC HANDLING FIXTURE		2014282-031	NA	NAS-9-497	B	I	NOTE 11B	FOR DIMENSIONS SEE DASH 17 VALUES BELOW												
280	R	COMPUTER TEST SET		2014042-051	NA	NAS-9-497	B	II	NOTE 11C	FOR DIMENSIONS SEE DASH 18 VALUES BELOW												
279	R	SELF TEST ASSY		2014366-041	NA	NAS-9-497	B	I	NOTE 11B	FOR DIMENSIONS SEE DASH 15 VALUES BELOW												
278	R	LOGIC DRAWER ASSY NO. 1		2014036-041	NA	NAS-9-497	B	I	NOTE 11B	FOR DIMENSIONS SEE DASH 17 VALUES BELOW												
277	R	COMPUTER TEST SET		2014042-041	NA	NAS-9-497	B	II	NOTE 11C	FOR DIMENSIONS SEE DASH 18 VALUES BELOW												
276	R	DRAWER ASSY-PROGRAM & MONITOR		2014041-041	NA	NAS-9-497	B	I	NOTE 11B	FOR DIMENSIONS SEE DASH 17 VALUES BELOW												
275	R	DRAWER ASSY RDC INTERFACE		2014045-031	NA	NAS-9-497	B	I	NOTE 11B	FOR DIMENSIONS SEE DASH 15 VALUES BELOW												
274	R	SELF TEST ASSY		2014366-031	NA	NAS-9-497	B	I	NOTE 11B	FOR DIMENSIONS SEE DASH 15 VALUES BELOW												
273	R	LOGIC DRAWER ASSY NO. 2		2014037-031	NA	NAS-9-497	B	I	NOTE 11B	FOR DIMENSIONS SEE DASH 17 VALUES BELOW												
272	R	DRAWING ASSY PROGRAMMER & MONITOR		2014041-031	NA	NAS-9-497	B	I	NOTE 11B	FOR DIMENSIONS SEE DASH 17 VALUES BELOW												
271	R	LOGIC DRAWER ASSY NO. 1		2014036-031	NA	NAS-9-497	B	I	NOTE 11B	FOR DIMENSIONS SEE DASH 17 VALUES BELOW												
270	R	COMPUTER TEST SET		2014042-031	NA	NAS-9-497	B	II	NOTE 11C	FOR DIMENSIONS SEE DASH 18 VALUES BELOW												
269	R	POWER CONTROL ASSY		2014044-021	NA	NAS-9-497	B	I	NOTE 11B	FOR DIMENSIONS SEE DASH 17 VALUES BELOW												
268	R	SELF TEST ASSY		2014366-021	NA	NAS-9-497	B	I	NOTE 11B	FOR DIMENSIONS SEE DASH 15 VALUES BELOW												
267	R	AGC JUNCTION ASSY		2014341-021	NA	NAS-9-497	B	I	NOTE 11B	FOR DIMENSIONS SEE DASH 15 VALUES BELOW												
266	R	POWER CONTROL ASSY		2014079-021	NA	NAS-9-497	B	I	NOTE 11B	FOR DIMENSIONS SEE DASH 15 VALUES BELOW												
265	R	BUFFER CIRCUIT ASSY		2014254-021	NA	NAS-9-497	B	I	NOTE 11B	FOR DIMENSIONS SEE DASH 15 VALUES BELOW												
264	R	DRAWER ASSY X Y INTERFACE		2014040-021	NA	NAS-9-497	B	I	NOTE 11B	FOR DIMENSIONS SEE DASH 15 VALUES BELOW												
263	R	DRAWER ASSY RDC INTERFACE		2014045-021	NA	NAS-9-497	B	I	NOTE 11B	FOR DIMENSIONS SEE DASH 15 VALUES BELOW												
262	R	DRAWER ASSY PROGRAMMER & MONITOR		2014041-021	NA	NAS-9-497	B	I	NOTE 11B	FOR DIMENSIONS SEE DASH 17 VALUES BELOW												
261	R	LOGIC DRAWER ASSY NO. 2		2014037-021	NA	NAS-9-497	B	I	NOTE 11B	FOR DIMENSIONS SEE DASH 17 VALUES BELOW												
260	R	LOGIC DRAWER ASSY NO. 1		2014036-021	NA	NAS-9-497	B	I	NOTE 11B	FOR DIMENSIONS SEE DASH 17 VALUES BELOW												
259	R	OPERATION CONSOLE		2014024-021	NA	NAS-9-497	B	II	NOTE 11C	FOR DIMENSIONS SEE DASH 18 VALUES BELOW												
258	R	COMPUTER TEST SET		2014042-021	NA	NAS-9-497	B	II	NOTE 11C	FOR DIMENSIONS SEE DASH 18 VALUES BELOW												
257	R	AUXILIARY CALIBRATION CONSOLE		2014059-021	NA	NAS-9-497	B	II	NOTE 11C	FOR DIMENSIONS SEE DASH 18 VALUES BELOW												
256	R	AGC CALIBRATION CONSOLE		2014049-021	NA	NAS-9-497	B	II	NOTE 11C	FOR DIMENSIONS SEE DASH 18 VALUES BELOW												
255	R	AGC HANDLING FIXTURE		2014282-021	NA	NAS-9-497	B	I	NOTE 11B	FOR DIMENSIONS SEE DASH 17 VALUES BELOW												
254	R	DRAWER ASSY COMP. SIMULATOR		2014048-011	NA	NAS-9-497	B	II	NOTE 11C	FOR DIMENSIONS SEE DASH 18 VALUES BELOW												
253	R	SHIPPING KIT ASSY, NAV DSKY		2016312-011	NA	NAS-9-497	B	II	NOTE 11C	FOR DIMENSIONS SEE DASH 18 VALUES BELOW												
252	R	SHIPPING KIT ASSY, UNIVERSAL DSKY		2016316-011	NA	NAS-9-497	B	II	NOTE 11C	FOR DIMENSIONS SEE DASH 18 VALUES BELOW												
251	R	SHIPPING KIT ASSY, MAIN DSKY		2016313-011	NA	NAS-9-497	B	II	NOTE 11C	FOR DIMENSIONS SEE DASH 18 VALUES BELOW												
250	R	AMPLIFIER, REWORK		2014386	NA	NAS 9-497	B	I	NOTE 11B	FOR DIMENSIONS SEE DASH 15 VALUES BELOW												
249	R	TEMP MONITOR ASSY		2014313-011	NA	NAS-9-497	B	I	NOTE 11C	FOR DIMENSIONS SEE DASH 17 VALUES BELOW												
248	R	AGC JUNCTION ASSY		2014341-011	NA	NAS-9-497	B	I	NOTE 11B	FOR DIMENSIONS SEE DASH 15 VALUES BELOW												
247	R	AC INPUT PANEL ASSY		2014302-011	NA	NAS-9-497	B	I	NOTE 11B	FOR DIMENSIONS SEE DASH 15 VALUES BELOW												
246	R	SELF TEST ASSY		2014392-011	NA	NAS-9-497	B	I	NOTE 11B	FOR DIMENSIONS SEE DASH 15 VALUES BELOW												
245	R	TAPE PUNCH ASSEMBLY		2014039-011	NA	NAS-9-497	B	I	NOTE 11B	FOR DIMENSIONS SEE DASH 15 VALUES BELOW												
244	R	TAPE READER ASSEMBLY		2014038-011	NA	NAS-9-497	B	I	NOTE 11B	FOR DIMENSIONS SEE DASH 15 VALUES BELOW												
243																						
242																						
241	R	APOLLO GUIDANCE COMPUTER GROUP		6003001	NA	NAS-9-497	A	I	NOTE 11B	FOR DIMENSIONS SEE DASH 19 VALUES BELOW												
240	R	SELF TEST ASSEMBLY		2014366-011	NA	NAS-9-497	B	I	NOTE 11B	FOR DIMENSIONS SEE DASH 15 VALUES BELOW												
239	R	POWER SUPPLY ASSY-115V., 400 CYCLE		2014207-011	NA	NAS-9-497	B	I	NOTE 11B	FOR DIMENSIONS SEE DASH 17 VALUES BELOW												
238	R	AC INPUT PANEL ASSY		2014043-011	NA	NAS-9-497	B	I	NOTE 11B	FOR DIMENSIONS SEE DASH 17 VALUES BELOW												
237	R	POWER CONTROL ASSY		2014079-011	NA	NAS-9-497	B	I	NOTE 11B	FOR DIMENSIONS SEE DASH 15 VALUES BELOW												
236	R	DRAWER ASSY-X Y INTERFACE		2014040-011	NA	NAS-9-497	B	I	NOTE 11B	FOR DIMENSIONS SEE DASH 15 VALUES BELOW												
235	R	DRAWER ASSY RDC INTERFACE		2014045-011	NA	NAS-9-497	B	I	NOTE 11B	FOR DIMENSIONS SEE DASH 15 VALUES BELOW												
234	R	BUFFER CIRCUIT ASSY		2014254-011	NA	NAS-9-497	B	I	NOTE 11B	FOR DIMENSIONS SEE DASH 15 VALUES BELOW												
233	R	CONTROL & INTERFACE ASSY		2014204-011	NA	NAS-9-497	B	I	NOTE 11B	FOR DIMENSIONS SEE DASH 15 VALUES BELOW												
232	R	POWER CONTROL ASSY		2014044-011	NA	NAS-9-497	B	I	NOTE 11B	FOR DIMENSIONS SEE DASH 17 VALUES BELOW												
231	R	DRAWER ASSY, PROGRAMMER & MONITOR		2014041-011	NA	NAS-9-497	B	I	NOTE 11B	FOR DIMENSIONS SEE DASH 17 VALUES BELOW												
230	R	CONNECTOR INTERFACE ASSY		2014272-011	NA	NAS-9-497	B	I	NOTE 11B	FOR DIMENSIONS SEE DASH 15 VALUES BELOW												
229	R	CONNECTOR INTERFACE ASSY		2014047-011	NA	NAS-9-497	B	I	NOTE 11B	FOR DIMENSIONS SEE DASH 15 VALUES BELOW												
228	R	ANTENNA, TUNING CAPACITOR ASSY		2014209-011	NA	NAS-9-497	B	I	NOTE 11B	FOR DIMENSIONS SEE DASH 15 VALUES BELOW												
227	R	MOUNTING FIXTURE ASSY		2014006-011	NA	NAS-9-497	B	I	NOTE 11B	FOR DIMENSIONS SEE DASH 17 VALUES BELOW												
226	R	POWER SUPPLY ASSY 3 VDC		2014234-011	NA	NAS-9-497	B	I	NOTE 11B	FOR DIMENSIONS SEE DASH 15 VALUES BELOW												
225	R	PANEL ASSY—SIGNAL INTERFACE		2014010-011	NA	NAS-9-497	B	I	NOTE 11B	FOR DIMENSIONS SEE DASH 15 VALUES BELOW												
224	R	OSCILLOSCOPE ASSY		2014232-011	NA	NAS-9-497	B	I	NOTE 11B	FOR DIMENSIONS SEE DASH 15 VALUES BELOW												
223	R	AUXILIARY OUTLET ASSY		2014274-011	NA	NAS-9-497	B	I	NOTE 11B	FOR DIMENSIONS SEE DASH 15 VALUES BELOW												
222	R	FREQUENCY COUNTER		2014233-011	NA	NAS-9-497	B	I	NOTE 11B	FOR DIMENSIONS SEE DASH 15 VALUES BELOW												
221	R	POWER SUPPLY ASSY 10, 13, 28 VDC		2014235-011	NA	NAS-9-497	B	I	NOTE 11B	FOR DIMENSIONS SEE DASH 15 VALUES BELOW												
220	R	LOGIC DRAWER ASSY NO. 2		2014037-011	NA	NAS-9-497	B	I	NOTE 11B	FOR DIMENSIONS SEE DASH 17 VALUES BELOW												
219	R	LOGIC DRAWER ASSY NO. 1		2014036-011	NA	NAS-9-497	B	I	NOTE 11B	FOR DIMENSIONS SEE DASH 17 VALUES BELOW												
218	R	COUNTER, ELECTRICAL ASSY		2014288-011	NA	NAS-9-497	B	I	NOTE 11B	FOR DIMENSIONS SEE DASH 15 VALUES BELOW												
217	R	POWER SUPPLY ASSY		2014279-011	NA	NAS-9-497	B	I	NOTE 11B	FOR DIMENSIONS SEE DASH 15 VALUES BELOW												
216	R	TEST MOUNT ASSY		2014257-011	NA	NAS-9-497	B	I	NOTE 11B	FOR DIMENSIONS SEE DASH 15 VALUES BELOW												
215	R	UNIVERSAL DSKY PEDESTAL MOUNT		2014014-011	NA	NAS-9-497	B	I	NOTE 11B	FOR DIMENSIONS SEE DASH 17 VALUES BELOW												
214	R	MAIN DSKY PEDESTAL MOUNT		2014343	NA	NAS-9-497	B	I	NOTE 11B	FOR DIMENSIONS SEE DASH 17 VALUES BELOW												
213	R	SHIPPING CONTAINER, MAIN DSKY		1006229	NA	NAS-9-497	B	II	NOTE 11C	FOR DIMENSIONS SEE DASH 18 VALUES BELOW												
212	R	SHIPPING CONTAINER, NAV DSKY		1006231	NA	NAS-9-497	B	II	NOTE 11C	FOR DIMENSIONS SEE DASH 18 VALUES BELOW												
211	R	SHIPPING CONTAINER, AGC		1006230	NA	NAS-9-497	B	II	NOTE 11C	FOR DIMENSIONS SEE DASH 18 VALUES BELOW												
210	R	SHIPPING CONTAINER, UNIVERSAL DSKY		1006422	NA	NAS-9-497	B	II	NOTE 11C	FOR DIMENSIONS SEE DASH 18 VALUES BELOW												
209	R	SHIPPING CONTAINER, AGC		1006421	NA	NAS-9-497	B	II	NOTE 11C	FOR DIMENSIONS SEE DASH 18 VALUES BELOW												
208	R	UNIVERSAL DSKY HANDLING FIXTURE		2014013-011	NA	NAS-9-497	B	I	NOTE 11B	FOR DIMENSIONS SEE DASH 15 VALUES BELOW												
207	R	NAV DSKY HANDLING FIXTURE		1014377	NA	NAS-9-497	B	I	NOTE 11B	FOR DIMENSIONS SEE DASH 17 VALUES BELOW												
206	R	MAIN DSKY HANDLING FIXTURE		1014334	NA	NAS-9-497	B	I	NOTE 11B	FOR DIMENSIONS SEE DASH 17 VALUES BELOW												
205	R	AGC HANDLING FIXTURE		2014282-011	NA	NAS-9-497	B	I	NOTE 11B	FOR DIMENSIONS SEE DASH 17 VALUES BELOW												
204	R	OPERATION CONSOLE		2014024-011	NA	NAS-9-497	B	II	NOTE 11C	FOR DIMENSIONS SEE DASH 18 VALUES BELOW												
203	R	COMPUTER TEST SET		2014042-011	NA	NAS-9-497	B	II	NOTE 11C	FOR DIMENSIONS SEE DASH 18 VALUES BELOW												
202	R	DRAWER ASSY, COMPUTER SIMULATOR		2014048-011	NA	FNP-12775	B	II	NOTE 11C	FOR DIMENSIONS SEE DASH 18 VALUES BELOW												
201	R	AUXILIARY CALIBRATION CONSOLE		2014059-011	NA	NAS-9-497	B	II	NOTE 11C	FOR DIMENSIONS SEE DASH 18 VALUES BELOW												
200	R	AGC CALIBRATION CONSOLE		2014049-011	NA	NAS-9-497	B	II	NOTE 11C	FOR DIMENSIONS SEE DASH 18 VALUES BELOW												
21	R																					
20	R	NA		NA	NA	NA	A	II	NOTE 11C	2.000	1.312	1.687	1.375	.078	.031	.078	.093	.105 .113	.093	1.187	.750	.593
19	R	NA		NA	NA	NA	A	I	NOTE 11B	2.000	1.312	1.687	1.375	.078	.031	.078	.093	NA	NA	1.187	.750	.593
18	R	NA		NA	NA	NA	B	II	NOTE 11C	4.187	1.875	3.469	2.750	.156	.093	.156	.125	.105 .113	.125	1.625	1.032	.844
17	R	NA		NA	NA	NA	B	I	NOTE 11B	4.187	1.875	3.469	2.750	.156	.093	.156	.125	NA	NA	1.625	1.032	.844
16	R	NA		NA	NA	NA	B	II	NOTE 11C	2.000	1.312	1.687	1.375	.078	.031	.078	.093	.105 .113	.093	1.187	.750	.593
15	R	NA		NA	NA	NA	B	I	NOTE 11B	2.000	1.312	1.687	1.375	.078	.031	.078	.093	NA	NA	1.187	.750	.593

NOTES FOR TABLE

STYLE A IS FOR G & N SYSTEM
STYLE B IS FOR GROUND SUPPORT EQUIPMENT
TYPE I IS WITHOUT MOUNTING HOLES
TYPE II IS WITH MOUNTING HOLES

REVISIONS

SYM	ZONE	DESCRIPTION	CHG NO	DATE	APPD
CL		REPLACES REV CK WITHOUT CHANGE PER TDRR 34365		9/20/67	JWL RWH
CM		REVISION STATUS CHANGED		18 OCT 67	R.A.W.
CN		REVISION STATUS CHANGED		31 OCT 67	JRK
CP		REVISION STATUS CHANGED		6 NOV 67	EMS
CR		REVISION STATUS CHANGED		7 DEC 67	GKB RWH
CS		REVISION STATUS CHANGED		3 JAN 68	J.W. EHW
CT		REVISED PER TDRR 35526		7 FEB 68	LK
CU		REVISION STATUS CHANGED		22 FEB 68	JRK
CV		REVISION STATUS CHANGED		27 FEB 68	LK
CW		REVISION STATUS CHANGED		8 APR 68	
CY		REVISED PER TDRR 36028		16 APR 68	F.N.
CZ		REVISION STATUS CHANGED		23 MAY 68	
DA		REVISION STATUS CHANGED		17 JUN 68	
DB		REVISION STATUS CHANGED		13 SEP 68	
DC		REVISION STATUS CHANGED		16 DEC 68	LK
DD		REVISION STATUS CHANGED		30 DEC 68	
DE		REVISION STATUS CHANGED		23 JAN 69	
DF		REVISION STATUS CHANGED		27 JAN 69	LK

[illegible] BELOW
[illegible] BELOW
[illegible]
[illegible]
[illegible]
[illegible]
[illegible]
[illegible]
SH 15 VALUES BELOW
SH 17 VALUES BELOW
SH 17 VALUES BELOW
SH 18 VALUES BELOW
SH 17 VALUES BELOW
SH 18 VALUES BELOW
SH 15 VALUES BELOW
SH 17 VALUES BELOW
SH 18 VALUES BELOW
SH 17 VALUES BELOW
SH 15 VALUES BELOW
SH 15 VALUES BELOW
SH 17 VALUES BELOW
SH 17 VALUES BELOW
SH 17 VALUES BELOW
SH 18 VALUES BELOW
SH 17 VALUES BELOW
[illegible]
SH 15 VALUES BELOW
SH 15 VALUES BELOW
SH 15 VALUES BELOW
SH 15 VALUES BELOW
SH 15 VALUES BELOW
SH 17 VALUES BELOW
SH 17 VALUES BELOW
SH 17 VALUES BELOW
SH 18 VALUES BELOW
SH 18 VALUES BELOW
SH 18 VALUES BELOW
SH 18 VALUES BELOW
SH 17 VALUES BELOW
SH 18 VALUES BELOW
SH 18 VALUES BELOW
SH 19 VALUES BELOW
SH 18 VALUES BELOW
[illegible]
SH 17 VALUES BELOW
SH 15 VALUES BELOW
SH 15 VALUES BELOW
SH 15 VALUES BELOW
SH 15 VALUES BELOW
SH 15 VALUES BELOW

SH 19 VALUES BELOW
SH 15 VALUES BELOW
SH 17 VALUES BELOW
SH 17 VALUES BELOW
SH 15 VALUES BELOW
SH 15 VALUES BELOW
SH 15 VALUES BELOW
SH 15 VALUES BELOW
SH 15 VALUES BELOW
SH 17 VALUES BELOW
SH 17 VALUES BELOW
SH 15 VALUES BELOW
SH 15 VALUES BELOW
SH 15 VALUES BELOW
SH 17 VALUES BELOW
SH 15 VALUES BELOW
SH 15 VALUES BELOW
SH 15 VALUES BELOW
SH 15 VALUES BELOW
SH 15 VALUES BELOW
SH 15 VALUES BELOW
SH 17 VALUES BELOW
SH 17 VALUES BELOW
SH 15 VALUES BELOW
SH 15 VALUES BELOW
SH 15 VALUES BELOW
SH 17 VALUES BELOW
SH 17 VALUES BELOW
SH 15 VALUES BELOW
SH 18 VALUES BELOW
SH 19 VALUES BELOW
SH 18 VALUES BELOW
SH 18 VALUES BELOW
SH 15 VALUES BELOW
SH 17 VALUES BELOW
SH 17 VALUES BELOW
SH 17 VALUES BELOW
SH 18 VALUES BELOW
[illegible]
SH 18 VALUES BELOW
SH 1C VALUES BELOW
SH 18 VALUES BELOW

E	F	G	H	J	K	L	M	N	P	R	S	T	U	V	W	Y	Z	AA	AB	AC	AD	AE	AF	AG	AH	AJ	AK	AL	AM	AN	AP	AR
.078	.031	.0[illegible]3	.093	.188 .113	.093	1.187	.750	.593	.453	1.015	.062	.187	.078	.875	.718	1.375	.218	1.156	1.843	.048	NA	.875	.305	.078	.312	1.687	.078	NA	.078	.312	.187	1.843
[illegible]	[illegible]	.0[illegible]3	.093	NA	NA	1.187	.750	.593	.453	1.015	.062	.187	.078	.875	.718	1.375	.218	NA	NA	.048	.031	.875	.305	.078	.312	1.687	.078	NA	.078	.312	.187	NA
.156	.093	.1[illegible]5	.125	.188 .113	.125	1.625	1.032	.844	.656	1.406	.093	.344	.156	1.781	1.531	2.844	.312	1.562	3.875	.062	NA	1.219	.500	.156	.719	3.469	.156	NA	.156	.719	.344	3.875
.156	.093	.1[illegible]5	.125	NA	NA	1.625	1.032	.844	.656	1.406	.093	.344	.156	1.781	1.531	2.844	.312	NA	NA	.062	.062	1.219	.500	.156	.719	3.469	.156	NA	.156	.719	.344	NA
.078	.031	.0[illegible]3	.093	.188 .113	.093	1.187	.750	.593	.453	1.015	.062	.187	.078	.875	.718	1.375	.218	1.156	1.843	.048	NA	.875	.305	.078	.312	1.687	.078	NA	.078	.312	.187	1.843
.078	.031	.0[illegible]3	.093	NA	NA	1.187	.750	.593	.453	1.015	.062	.187	.078	.875	.718	1.375	.218	NA	NA	.048	.031	.875	.305	.078	.312	1.687	.078	NA	.078	.312	.187	NA

RAYTHEON DASH NUMBERS

AS APPLICABLE	UNLESS OTHERWISE SPECIFIED DIMENSIONS ARE IN INCHES TOLERANCES ON 2 PLACE DECIMALS ± 3 PLACE DECIMALS ± .005 ANGLES ±	M I T INSTRUMENTATION LAB CAMBRIDGE MASS DWG NO / CONTRACT	MANNED SPACECRAFT CENTER HOUSTON, TEXAS	
NEXT ASSY / USED ON	DO NOT SCALE THIS DRAWING	DRAWN R.A. JONES / DATE 16 JUL 65 CHECKED W. KUPFER 22 JUL 65 APPROVAL CONTRACT	NAMEPLATES, APOLLO G&N - GSE (STANDARDS)	
APPLICATION	MATERIAL SEE NOTE 11	T. MICHAELS 22 JUL 65 NASA APPROVAL W. KUPFER 22 JUL 65 MIT APPROVAL	SIZE J2 / CODE IDENT NO. 80230	1004260
	APPROVAL		SCALE NONE	SHEET 3 OF 6

1004260 DF SHT 3

1004260 DF

1004260

25/1004260

AC DASH NUMBERS CONTINUED ON SHEET 6

DASH NO.	P/C	PART NAME	REMARKS	PART NUMBER	SER. NO.	CONT. NO.	STYLE	TYPE	MATERIAL	A	B	C	D	E	F	G	H	J	K	L	M	N
199	AC	EYEPIECE STOWAGE UNIT		2021255-011			A	I		FOR DIMENSIONS SEE DASH 100 VALUES BELOW												
198	AC	SIGNAL CONDITIONER ASSY C/M		2007234		NAS-9-497	A	I	NOTE 11B	FOR DIMENSIONS SEE DASH 100 VALUES BELOW												
197	AC	SIGNAL CONDITIONER ASSY C/M		2007235		NAS-9-497	A	I	NOTE 11B	FOR DIMENSIONS SEE DASH 100 VALUES BELOW												
196	AC	SIGNAL CONDITIONER ASSY LEM		6007010		NAS-9-497	A	I	NOTE 11B	FOR DIMENSIONS SEE DASH 100 VALUES BELOW												
195	AC	PSA & SIGNAL CONDITIONER ASSY		6007009		NAS-9-497	A	I	NOTE 11B	FOR DIMENSIONS SEE DASH 100 VALUES BELOW												
194	AC	PANEL, MONITOR		2900031-031		NAS-9-497	B	II	NOTE 11C	FOR DIMENSIONS SEE DASH 141 VALUES BELOW												
193	AC	DISTRIBUTION BOX, GSE		2900024-031		NAS-9-497	B	II	NOTE 11C	FOR DIMENSIONS SEE DASH 141 VALUES BELOW												
192	AC	ANALYZER, OPTICS-INERTIAL		2900023-031		NAS-9-497	B	II	NOTE 11C	FOR DIMENSIONS SEE DASH 144 VALUES BELOW												
191	AC	TEST CONTROL		2900027-031		NAS-9-497	B	II	NOTE 11C	FOR DIMENSIONS SEE DASH 141 VALUES BELOW												
190	AC	PANEL, PWR SUP AND LOAD		2900033-021		NAS-9-497	B	II	NOTE 11C	FOR DIMENSIONS SEE DASH 141 VALUES BELOW												
189	AC	ADPT MODULE, P.S.A.		6900088-011		NAS-9-497	B	II	NOTE 11C	FOR DIMENSIONS SEE DASH 141 VALUES BELOW												
188	AC	ADPT MODULE, P.S.A.		2901143-011		NAS-9-497	B	II	NOTE 11C	FOR DIMENSIONS SEE DASH 141 VALUES BELOW												
187	AC	FIXTURE, MTG, PTA/PEA		2900066-021		NAS-9-497	B	II	NOTE 11C	FOR DIMENSIONS SEE DASH 141 VALUES BELOW												
186	AC	ANNUNCIATOR PANEL & EYEPIECE STORAGE ASSEMBLY		1021255-021			A	I		FOR DIMENSIONS SEE DASH 100 VALUES BELOW												
185	AC	ANNUNCIATOR PANEL & EYEPIECE STORAGE ASSEMBLY		1021255-011			A	I		FOR DIMENSIONS SEE DASH 100 VALUES BELOW												
184	AC	FIX., HAND., G AND N HARNESS		1901846-041		NAS-9-497	B	II	NOTE 11C	FOR DIMENSIONS SEE DASH 144 VALUES BELOW												
183	AC	INSTALLING TOOL, ELEC, CONN		1902586-011		NAS-9-497	B	II	NOTE 11C	FOR DIMENSIONS SEE DASH 102 VALUES BELOW												
182	AC	ADPT MODULE, P.S.A.		6900088-011		NAS-9-497	B	II	NOTE 11C	FOR DIMENSIONS SEE DASH 141 VALUES BELOW												
181	AC	G & N INDICATOR CONTROL PANEL ASSY		2014578-011		NAS-9-497	A	I	NOTE 11B	3,000	1,938	2.437	NA	.125	.062	.188	.156	NA	NA	1.750	1.125	.90
180	AC	ADPT MODULE, P.S.A.		1902431-031		NAS-9-497	B	II		FOR DIMENSIONS SEE DASH 121 VALUES BELOW												
179	AC	MOUNTING PLATE, IMU/PTA		6900083-011		NAS-9-497	B	II		FOR DIMENSIONS SEE DASH 144 VALUES BELOW												
178	AC	MOUNTING PLATE, COMPONENT		6900007-021		NAS-9-497	B	II		FOR DIMENSIONS SEE DASH 144 VALUES BELOW												
177	AC	FIX., MOUNTING, SUBSYSTEM		2900070-021		NAS-9-497	B	II		FOR DIMENSIONS SEE DASH 144 VALUES BELOW												
176	AC	FIX., MOUNTING, G & N		2900067-021		NAS-9-497	B	II		FOR DIMENSIONS SEE DASH 144 VALUES BELOW												
175	AC	CSL, COOL. AND PWR, G & N		1902134-031		NAS-9-497	B	II		FOR DIMENSIONS SEE DASH 144 VALUES BELOW												
174	AC	FIX., HAND., C/M AND LEM CDU		2900999-011		NAS-9-497	B	II	NOTE 11C	FOR DIMENSIONS SEE DASH 141 VALUES BELOW												
173	AC	FIX., HANDLING, C/M PSA		2900998-011		NAS-9-497	B	II	NOTE 11C	FOR DIMENSIONS SEE DASH 141 VALUES BELOW												
172	AC	CAGING ELECTRONICS, GYRO		2900029-021		NAS-9-497	B	II	NOTE 11C	FOR DIMENSIONS SEE DASH 141 VALUES BELOW												
171	AC	DISTRIBUTION BOX, GSE		2900024-021		NAS-9-497	B	II	NOTE 11C	FOR DIMENSIONS SEE DASH 141 VALUES BELOW												
170	AC	ANALYZER, OPTICS-INERTIAL		2900023-021		NAS-9-497	B	II	NOTE 11C	FOR DIMENSIONS SEE DASH 144 VALUES BELOW												
169	AC	ADPT, TESTPOINT, P.S.A.		2900037-021		NAS-9-497	B	II	NOTE 11C	FOR DIMENSIONS SEE DASH 141 VALUES BELOW												
168	AC	TEST SELECTOR		2900028-021		NAS-9-497	B	II	NOTE 11C	FOR DIMENSIONS SEE DASH 141 VALUES BELOW												
167	AC	TEST CONTROL		2900027-021		NAS-9-497	B	II	NOTE 11C	FOR DIMENSIONS SEE DASH 141 VALUES BELOW												
166	AC	PANEL, MONITOR		2900031-021		NAS-9-497	B	II	NOTE 11C	FOR DIMENSIONS SEE DASH 141 VALUES BELOW												
165	AC	TERM. BOARD STORAGE DRAWER		2900927-011		NAS-9-497	B	II	NOTE 11C	FOR DIMENSIONS SEE DASH 141 VALUES BELOW												
164	AC	INPUT/OUTPUT PANEL		2900926-011		NAS-9-497	B	II	NOTE 11C	FOR DIMENSIONS SEE DASH 141 VALUES BELOW												
163	AC	CONTROL PANEL		2900896-011		NAS-9-497	B	II	NOTE 11C	FOR DIMENSIONS SEE DASH 141 VALUES BELOW												
162	AC	CSL, CAL AND TEST, SCM/PSAAM		2900895-011		NAS-9-497	B	II	NOTE 11C	FOR DIMENSIONS SEE DASH 144 VALUES BELOW												
161	AC	FIX., LIFT AND HAND., IMU		1015462-011		NAS-9-497	B	II	NOTE 11C	FOR DIMENSIONS SEE DASH 141 VALUES BELOW												
160	AC	FIX., HAND., G & N HARNESS		1901846-031		NAS-9-497	B	II	NOTE 11C	FOR DIMENSIONS SEE DASH 144 VALUES BELOW												
159	AC	BATTERY POWER PACK		1900011-031		NAS-9-497	B	II	NOTE 11C	FOR DIMENSIONS SEE DASH 144 VALUES BELOW												
158	AC	COUPLING DATA UNIT ASSEMBLY C/M		2007222		NAS-9-497	A	I	NOTE 11B	FOR DIMENSIONS SEE DASH 100 VALUES BELOW												
157	AC	COUPLING DATA UNIT ASSEMBLY - LEM		2007222		NAS-9-497	A	I	NOTE 11B	FOR DIMENSIONS SEE DASH 100 VALUES BELOW												
156	AC	POWER & SERVO ASSEMBLY C/M		2007200		NAS-9-497	A	I	NOTE 11B	2,125	.968	1.718	NA	.093	.031	.06	.093	NA	NA	.858	.608	.4[illegible]4
155	AC	PIPA ELECTRONICS ASSEMBLY		2007201		NAS-9-497	A	I	NOTE 11B	FOR DIMENSIONS SEE DASH 100 VALUES BELOW												
154	AC	PULSE TORQUE ASSEMBLY-LEM		6007000		NAS-9-497	A	I	NOTE 11B	FOR DIMENSIONS SEE DASH 100 VALUES BELOW												
153	AC	POWER & SERVO ASSEMBLY-LEM		6007200		NAS-9-497	A	I	NOTE 11B	FOR DIMENSIONS SEE DASH 100 VALUES BELOW												
152	AC	CONT PNL, RSVR CKT TESTER		2900770-011		NAS-9-497	B	II	NOTE 11C	FOR DIMENSIONS SEE DASH 141 VALUES BELOW												
151	AC	TESTER, RESOLVER CIRCUIT		2900708-011		NAS-9-497	B	II	NOTE 11C	FOR DIMENSIONS SEE DASH 141 VALUES BELOW												
150	AC	JUNCTION BOX, P.S.A./G.S.E.		1901933-021		NAS-9-497	B	II	NOTE 11C	FOR DIMENSIONS SEE DASH 144 VALUES BELOW												
149	AC	BATTERY PACK, LIFTING		2900812-011		NAS-9-497	B	II	NOTE 11C	FOR DIMENSIONS SEE DASH 141 VALUES BELOW												
148	AC	MOUNTING PLATE, COMPONENT		6900007-011		NAS-9-497	B	II	NOTE 11C	FOR DIMENSIONS SEE DASH 144 VALUES BELOW												
147	AC	MOUNTING PLATE, COMPONENT		2900677-011		NAS-9-497	B	II	NOTE 11C	FOR DIMENSIONS SEE DASH 144 VALUES BELOW												
146	AC	CART, TRANS, G & N		1900009-041		NAS-9-497	B	II	NOTE 11C	FOR DIMENSIONS SEE DASH 144 VALUES BELOW												
145	AC	CONTAINER, SHIPPING, IMU		1900010-021		NAS-9-497	B	II	NOTE 11C	FOR DIMENSIONS SEE DASH 144 VALUES BELOW												
144	AC	FIX., MOUNTING, G & N		1902204-021			B	II	NOTE 11C	4.125	1.812	3.250	NA	.125	.062	.12	.156	[illegible]	.125	1.625	1.140	.8[illegible]0
143	AC	CSL, COOL. AND PWR, G & N		1902134-021			B	II	NOTE 11C	4.125	1.812	3.250	NA	.125	.062	.12	.156		.125	1.625	1.140	.8[illegible]0
142	AC	ANALYZER, OPTICS-INERTIAL		2900023-011			B	II	NOTE 11C	4.125	1.812	3.250	NA	.125	.062	.12	.156		.125	1.625	1.140	.[illegible]0
141	AC	CONT, TEMP, PORTABLE		2900060-011			B	II	NOTE 11C	2.125	.968	1.718	NA	.093	.031	.06	.093		.093	.858	.608	.4[illegible]4
140	AC	TESTER, CKT, IMU/CDU RSVR		2900286-011			B	II	NOTE 11C	4.125	1.812	3.250	NA	.125	.062	.12	.156		.125	1.625	1.140	.8[illegible]0
139	AC	SIMULATOR, LD/SIG, CDU		2900285-011			B	II	NOTE 11C	4.125	1.812	3.250	NA	.125	.062	.12	.156		.125	1.625	1.140	.8[illegible]0
138	AC	SIMULATOR, LD/SIG, OPTICS		1902023-021			B	II	NOTE 11C	4.125	1.812	3.250	NA	.125	.062	.12	.156		.125	1.625	1.140	.8[illegible]0
137	AC	FIX., MOUNTING, IMU/NAV BASE		6900003-011			B	II	NOTE 11C	4.125	1.812	3.250	NA	.125	.062	.12	.156		.125	1.625	1.140	.8[illegible]0
136	AC	FIXTURE, OPTICS/NAV BASE		2900072-011			B	II	NOTE 11C	4.125	1.812	3.250	NA	.125	.062	.12	.156		.125	1.625	1.140	.8[illegible]0
135	AC	FIX., MOUNTING, SUB SYSTEM		2900070-011			B	II	NOTE 11C	4.125	1.812	3.250	NA	.125	.062	.12	.156		.125	1.625	1.140	.[illegible]0
134	AC	FIX., HAND., G & N HARNESS		2900069-011			B	II	NOTE 11C	4.125	1.812	3.250	NA	.125	.062	.12	.156		.125	1.625	1.140	[illegible]
133	AC	CNTR, SHIPPING, NAV BASE		2900068-011			B	II	NOTE 11C	4.125	1.812	3.250	NA	.125	.062	.12	.156		.125	1.625	1.140	.8[illegible]0
132	AC	FIX., MOUNTING, G & N		2900067-011			B	II	NOTE 11C	4.125	1.812	3.250	NA	.125	.062	.12	.156		.125	1.625	1.140	.[illegible]0
131	AC	SIMULATOR, LD/SIG, IMU/CDU		2900062-011			B	II	NOTE 11C	4.125	1.812	3.250	NA	.125	.062	.12	.156		.125	1.625	1.140	.8[illegible]0
130	AC	TESTER, GYRO WHEEL		2900061-011			B	II	NOTE 11C	4.125	1.812	3.250	NA	.125	.062	.12	.156		.125	1.625	1.140	.[illegible]0
129	AC	COOLANT SUPPLY		1902133-021			B	II	NOTE 11C	4.125	1.812	3.250	NA	.125	.062	.12	.156		.125	1.625	1.140	.8[illegible]0
128	AC	TABLE, ROTARY		1900926-021			B	II	NOTE 11C	4.125	1.812	3.250	NA	.125	.062	.12	.156		.125	1.625	1.140	.8[illegible]0
127	AC	FIX., HAND., OPTICS		2900074-011			B	II	NOTE 11C	2.125	.968	1.718	NA	.093	.031	.06	.093		.093	.858	.608	.4[illegible]4
126	AC	FIXTURE, MTG, PTA/PEA.		2900066-011			B	II	NOTE 11C	2.125	.968	1.718	NA	.093	.031	.06	.093		.093	.858	.608	.4[illegible]4
125	AC	CONT, TEMP, IMU LIFTING		2900063-011			B	II	NOTE 11C	2.125	.968	1.718	NA	.093	.031	.06	.093		.093	.858	.608	.4[illegible]4
124	AC	FIXTURE, HANDLING, IMU		2900064-011			B	II	NOTE 11C	2.125	.968	1.718	NA	.093	.031	.06	.093		.093	.858	.608	.[illegible]4
123	AC	CONT, OPTICS, REMOTE		1902046-021			B	II	NOTE 11C	2.125	.968	1.718	NA	.093	.031	.06	.093		.093	.858	.608	.[illegible]4
122	AC	TEST CONTROL		1902009-021			B	II	NOTE 11C	2.125	.968	1.718	NA	.093	.031	.06	.093		.093	.858	.608	[illegible]
121	AC	ADPT MODULE, P.S.A.		1902431-021			B	II	NOTE 11C	2.125	.968	1.718	NA	.093	.031	.06	.093		.093	.858	.608	.4[illegible]4
120	AC	BRIDGE, DECADE ERROR		2900128-011			B	II	NOTE 11C	2.125	.968	1.718	NA	.093	.031	.06	.093		.093	.858	.608	.4[illegible]4
119	AC	PWR SUP, ELECTRONICS		2900012-011			B	II	NOTE 11C	2.125	.968	1.718	NA	.093	.031	.06	.093		.093	.858	.608	.4[illegible]4
118	AC	PWR SUP, RELAY AND LAMP		1900049-031			B	II	NOTE 11C	2.125	.968	1.718	NA	.093	.031	.06	.093		.093	.858	.608	.4[illegible]4
117	AC	CONSOLE, OSCILLOGRAPH		1900000-021			B	II	NOTE 11C	2.125	.968	1.718	NA	.093	.031	.06	.093		.093	.858	.608	.4[illegible]4
116	AC	ADPT MODULE, P.S.A.		1902431-011			B	II	NOTE 11C	2.125	.968	1.718	NA	.093	.031	.06	.093		.093	.858	.608	.4[illegible]4
115	AC	ADPT, TEST POINT, PTA/PEA.		2900145-011			B	II	NOTE 11C	2.125	.968	1.718	NA	.093	.031	.06	.093		.093	.858	.608	.4[illegible]4
114	AC	ADPT, TEST POINT, P.S.A.		2900037-011			B	II	NOTE 11C	2.125	.968	1.718	NA	.093	.031	.06	.093		.093	.858	.608	.4[illegible]4
113	AC	CONTROL, GIMBAL POSITION		2900036-011			B	II	NOTE 11C	2.125	.968	1.718	NA	.093	.031	.06	.093		.093	.858	.608	.4[illegible]4
112	AC	SELECTOR, SIGNAL, PRIMARY		2900035-011			B	II	NOTE 11C	2.125	.968	1.718	NA	.093	.031	.06	.093		.093	.858	.608	.4[illegible]4
111	AC	SEL, SIG, OSCILLOGRAPH		2900034-011			B	II	NOTE 11C	2.125	.968	1.718	NA	.093	.031	.06	.093		.093	.858	.608	.4[illegible]4
110	AC	PANEL, PWR SUP AND LOAD		2900033-011			B	II	NOTE 11C	2.125	.968	1.718	NA	.093	.031	.06	.093		.093	.858	.608	.4[illegible]4
109	AC	PANEL, MONITOR		2900031-011			B	II	NOTE 11C	2.125	.968	1.718	NA	.093	.031	.06	.093		.093	.858	.608	.4[illegible]4
108	AC	PANEL, AUXILIARY INPUT		2900030-011			B	II	NOTE 11C	2.125	.968	1.718	NA	.093	.031	.06	.093		.093	.858	.608	.4[illegible]4
107	AC	CAGING ELECTRONICS, GYRO		2900029-011			B	II	NOTE 11C	2.125	.968	1.718	NA	.093	.031	.06	.093		.093	.858	.608	.4[illegible]4
106	AC	TEST SELECTOR		2900028-011			B	II	NOTE 11C	2.125	.968	1.718	NA	.093	.031	.06	.093		.093	.858	.608	.4[illegible]4
105	AC	TEST CONTROL		2900027-011			B	II	NOTE 11C	2.125	.968	1.718	NA	.093	.031	.06	.093		.093	.858	.608	.4[illegible]4
104	AC	MONITOR AND CONTROL, TEMP		2900026-011			B	II	NOTE 11C	2.125	.968	1.718	NA	.093	.031	.06	.093		.093	.858	.608	.4[illegible]4
103	AC	DISTRIBUTION BOX, GSE		2900024-011			B	II	NOTE 11C	2.125	.968	1.718	NA	.093	.031	.06	.093		.093	.858	.608	.4[illegible]4
102	AC	VOLTMETER, DIGITAL		2900007-011			B	II	NOTE 11C	2.125	.968	1.718	NA	.093	.031	.06	.093	[illegible]	.093	.858	.608	.4[illegible]4
101	AC	NAVIGATION BASE ASSEMBLY-LEM		6899950		NAS-9-497	A	I	NOTE 11B	2.000	1.312	1.906	1.375	.078	.048	.078	.093	NA	NA	1.125	.750	.3[illegible]3
100	AC	NAVIGATION BASE ASSEMBLY		2899982		NAS-9-497	A	I	NOTE 11B	2.000	1.312	1.906	1.375	.078	.048	.078	.093	NA	NA	1.125	.750	.[illegible]3

NOTES FOR TABLE

STYLE A IS FOR G & N SYSTEM
STYLE B IS FOR GROUND SUPPORT EQUIPMENT
TYPE I IS WITHOUT MOUNTING HOLES
TYPE II IS WITH MOUNTING HOLES

1004260 SHT 4

1/1004260

D	E	F	G	H	J	K	L	M	N	P	R	S	T	U	V	W	Y	Z	AA	AB	AC	AD	AE	AF	AG	AH	AJ	AK	AL	AM	AN	AP	AR
DASH 100 VALUES BELOW																																	
DASH 100 VALUES BELOW																																	
DASH 100 VALUES BELOW																																	
DASH 100 VALUES BELOW																																	
DASH 100 VALUES BELOW																																	
DASH 141 VALUES BELOW																																	
DASH 141 VALUES BELOW																																	
DASH 144 VALUES BELOW																																	
DASH 141 VALUES BELOW																																	
DASH 141 VALUES BELOW																																	
DASH 141 VALUES BELOW																																	
DASH 141 VALUES BELOW																																	
DASH 141 VALUES BELOW																																	
DASH 100 VALUES BELOW																																	
DASH 100 VALUES BELOW																																	
DASH 144 VALUES BELOW																																	
DASH 102 VALUES BELOW																																	
DASH 141 VALUES BELOW																																	
NA	.125	.062	.188	.156	NA	NA	1.750	1.125	.906	.688	1.500	NA	.281	.125	NA	1.094	2.062	.312	NA	2.500	.062	.125	1.312	.469	NA	NA	NA	.156	NA	.125	.469	.344	NA
SEE DASH 121 VALUES BELOW																																	
SEE DASH 144 VALUES BELOW																																	
SEE DASH 144 VALUES BELOW																																	
SEE DASH 144 VALUES BELOW																																	
SEE DASH 144 VALUES BELOW																																	
SEE DASH 144 VALUES BELOW																																	
[illegible]																																	
SEE DASH 141 VALUES BELOW																																	
SEE DASH 141 VALUES BELOW																																	
DASH 141 VALUES BELOW																																	
SEE DASH 144 VALUES BELOW																																	
SEE DASH 141 VALUES BELOW																																	
SEE DASH 141 VALUES BELOW																																	
SEE DASH 141 VALUES BELOW																																	
DASH 141 VALUES BELOW																																	
SEE DASH 141 VALUES BELOW																																	
SEE DASH 141 VALUES BELOW																																	
SEE DASH 141 VALUES BELOW																																	
SEE DASH 144 VALUES BELOW																																	
SEE DASH 141 VALUES BELOW																																	
SEE DASH 144 VALUES BELOW																																	
SEE DASH 144 VALUES BELOW																																	
SEE DASH 100 VALUES BELOW																																	
SEE DASH 103 VALUES BELOW																																	
NA	.093	.031	.06	.093	NA	NA	.858	.608	.484	.358	.733	.062	.140	.062	NA	.968	1.450	.125	NA	1.720	.046	.03	NA	.210	NA	NA	NA	.070	NA	.046	.32	.16	NA
SEE DASH 100 VALUES BELOW																																	
SEE DASH 100 VALUES BELOW																																	
SEE DASH 100 VALUES BELOW																																	
SEE DASH 141 VALUES BELOW																																	
SEE DASH 141 VALUES BELOW																																	
SEE DASH 144 VALUES BELOW																																	
SEE DASH 141 VALUES BELOW																																	
SEE DASH 144 VALUES BELOW																																	
SEE DASH 144 VALUES BELOW																																	
SEE DASH 144 VALUES BELOW																																	
SEE DASH 144 VALUES BELOW																																	
[illegible]	.125	.062	.12	.156	[illegible]	.125	1.625	1.140	.890	.640	1.390	.125	.171	.125	1.875	1.687	2.625	.250	1.562	3.843	.093	NA	NA	.359	.125	.437	3.688	NA	3.687	.093	.40	.25	3.875
NA	.125	.062	.12	.156		.125	1.625	1.140	.890	.640	1.390	.125	.171	.125	1.875	1.687	2.625	.250	1.562	3.843	.093	NA	NA	.359	.125	.437	3.688	NA	3.687	.093	.40	.25	3.875
NA	.125	.062	.12	.156		.125	1.625	1.140	.890	.640	1.390	.125	.171	.125	1.875	1.687	2.625	.250	1.562	3.843	.093	NA	NA	.359	.125	.437	3.688	NA	3.687	.093	.40	.25	3.875
NA	.093	.031	.06	.093		.093	.858	.608	.484	.358	.733	.077	.116	.062	.937	.875	1.343	.125	.781	1.892	.046	NA	NA	.209	.093	.250	1.875	NA	1.840	.046	.23	.16	1.938
NA	.125	.062	.12	.156		.125	1.625	1.140	.890	.640	1.390	.125	.171	.125	1.875	1.687	2.625	.250	1.562	3.843	.093	NA	NA	.359	.125	.437	3.688	NA	3.687	.093	.40	.25	3.875
NA	.125	.062	.12	.156		.125	1.625	1.140	.890	.640	1.390	.125	.171	.125	1.875	1.687	2.625	.250	1.562	3.843	.093	NA	NA	.359	.125	.437	3.688	NA	3.687	.093	.40	.25	3.875
NA	.125	.062	.12	.156		.125	1.625	1.140	.890	.640	1.390	.125	.171	.125	1.875	1.687	2.625	.250	1.562	3.843	.093	NA	NA	.359	.125	.437	3.688	NA	3.687	.093	.40	.25	3.875
NA	.125	.062	.12	.156		.125	1.625	1.140	.890	.640	1.390	.125	.171	.125	1.875	1.687	2.625	.250	1.562	3.843	.093	NA	NA	.359	.125	.437	3.688	NA	3.687	.093	.40	.25	3.875
NA	.125	.062	.12	.156		.125	1.625	1.140	.890	.640	1.390	.125	.171	.125	1.875	1.687	2.625	.250	1.562	3.843	.093	NA	NA	.359	.125	.437	3.688	NA	3.687	.093	.40	.25	3.875
NA	.125	.062	.12	.156		.125	1.625	1.140	.890	.640	1.390	.125	.171	.125	1.875	1.687	2.625	.250	1.562	3.843	.093	NA	NA	.359	.125	.437	3.688	NA	3.687	.093	.40	.25	3.875
NA	.125	.062	.12	.156		.125	1.625	1.140	.890	.640	1.390	.125	.171	.125	1.875	1.687	2.625	.250	1.562	3.843	.093	NA	NA	.359	.125	.437	3.688	NA	3.687	.093	.40	.25	3.875
NA	.125	.062	.12	.156		.125	1.625	1.140	.890	.640	1.390	.125	.171	.125	1.875	1.687	2.625	.250	1.562	3.843	.093	NA	NA	.359	.125	.437	3.688	NA	3.687	.093	.40	.25	3.875
NA	.125	.062	.12	.156		.125	1.625	1.140	.890	.640	1.390	.125	.171	.125	1.875	1.687	2.625	.250	1.562	3.843	.093	NA	NA	.359	.125	.437	3.688	NA	3.687	.093	.40	.25	3.875
NA	.125	.062	.12	.156		.125	1.625	1.140	.890	.640	1.390	.125	.171	.125	1.875	1.687	2.625	.250	1.562	3.843	.093	NA	NA	.359	.125	.437	3.688	NA	3.687	.093	.40	.25	3.875
NA	.125	.062	.12	.156		.125	1.625	1.140	.890	.640	1.390	.125	.171	.125	1.875	1.687	2.625	.250	1.562	3.843	.093	NA	NA	.359	.125	.437	3.688	NA	3.687	.093	.40	.25	3.875
NA	.125	.062	.12	.156		.125	1.625	1.140	.890	.640	1.390	.125	.171	.125	1.875	1.687	2.625	.250	1.562	3.843	.093	NA	NA	.359	.125	.437	3.688	NA	3.687	.093	.40	.25	3.875
NA	.125	.062	.12	.156		.125	1.625	1.140	.890	.640	1.390	.125	.171	.125	1.875	1.687	2.625	.250	1.562	3.843	.093	NA	NA	.359	.125	.437	3.688	NA	3.687	.093	.40	.25	3.875
NA	.093	.031	.06	.093		.093	.858	.608	.484	.358	.733	.077	.116	.062	.937	.875	1.343	.125	.781	1.892	.046	NA	NA	.209	.093	.250	1.875	NA	1.840	.046	.23	.16	1.938
NA	.093	.031	.06	.093		.093	.858	.608	.484	.358	.733	.077	.116	.062	.937	.875	1.343	.125	.781	1.892	.046	NA	NA	.209	.093	.250	1.875	NA	1.840	.046	.23	.16	1.938
NA	.093	.031	.06	.093		.093	.858	.608	.484	.358	.733	.077	.116	.062	.937	.875	1.343	.125	.781	1.892	.046	NA	NA	.209	.093	.250	1.875	NA	1.840	.046	.23	.16	1.938
NA	.093	.031	.06	.093		.093	.858	.608	.484	.358	.733	.077	.116	.062	.937	.875	1.343	.125	.781	1.892	.046	NA	NA	.209	.093	.250	1.875	NA	1.840	.046	.23	.16	1.938
[illegible]	[illegible]	.031	.06	.093		.093	.858	.608	.484	.358	.733	.077	.116	.062	.937	.875	1.343	.125	.781	1.892	.046	NA	NA	.209	.093	.250	1.875	NA	1.840	.046	.23	.16	1.938
NA	.093	.031	.06	.093		.093	.858	.608	.484	.358	.733	.077	.116	.062	.937	.875	1.343	.125	.781	1.892	.046	NA	NA	.209	.093	.250	1.875	NA	1.840	.046	.23	.16	1.938
NA	.093	.031	.06	.093		.093	.858	.608	.484	.358	.733	.077	.116	.062	.937	.875	1.343	.125	.781	1.892	.046	NA	NA	.209	.093	.250	1.875	NA	1.840	.046	.23	.16	1.938
NA	.093	.031	.06	.093		.093	.858	.608	.484	.358	.733	.077	.116	.062	.937	.875	1.343	.125	.781	1.892	.046	NA	NA	.209	.093	.250	1.875	NA	1.840	.046	.23	.16	1.938
NA	.093	.031	.06	.093		.093	.858	.608	.484	.358	.733	.077	.116	.062	.937	.875	1.343	.125	.781	1.892	.046	NA	NA	.209	.093	.250	1.875	NA	1.840	.046	.23	.16	1.938
NA	.093	.031	.06	.093		.093	.858	.608	.484	.358	.733	.077	.116	.062	.937	.875	1.343	.125	.781	1.892	.046	NA	NA	.209	.093	.250	1.875	NA	1.840	.046	.23	.16	1.938
NA	.093	.031	.06	.093		.093	.858	.608	.484	.358	.733	.077	.116	.062	.937	.875	1.343	.125	.781	1.892	.046	NA	NA	.209	.093	.250	1.875	NA	1.840	.046	.23	.16	1.938
NA	.093	.031	.06	.093		.093	.858	.608	.484	.358	.733	.077	.116	.062	.937	.875	1.343	.125	.781	1.892	.046	NA	NA	.209	.093	.250	1.875	NA	1.840	.046	.23	.16	1.938
NA	.093	.031	.06	.093		.093	.858	.608	.484	.358	.733	.077	.116	.062	.937	.875	1.343	.125	.781	1.892	.046	NA	NA	.209	.093	.250	1.875	NA	1.840	.046	.23	.16	1.938
NA	.093	.031	.06	.093		.093	.858	.608	.484	.358	.733	.077	.116	.062	.937	.875	1.343	.125	.781	1.892	.046	NA	NA	.209	.093	.250	1.875	NA	1.840	.046	.23	.16	1.938
NA	.093	.031	.06	.093		.093	.858	.608	.484	.358	.733	.077	.116	.062	.937	.875	1.343	.125	.781	1.892	.046	NA	NA	.209	.093	.250	1.875	NA	1.840	.046	.23	.16	1.938
NA	.093	.031	.06	.093		.093	.858	.608	.484	.358	.733	.077	.116	.062	.937	.875	1.343	.125	.781	1.892	.046	NA	NA	.209	.093	.250	1.875	NA	1.840	.046	.23	.16	1.938
NA	.093	.031	.06	.093		.093	.858	.608	.484	.358	.733	.077	.116	.062	.937	.875	1.343	.125	.781	1.892	.046	NA	NA	.209	.093	.250	1.875	NA	1.840	.046	.23	.16	1.938
NA	.093	.031	.06	.093		.093	.858	.608	.484	.358	.733	.077	.116	.062	.937	.875	1.343	.125	.781	1.892	.046	NA	NA	.209	.093	.250	1.875	NA	1.840	.046	.23	.16	1.938
NA	.093	.031	.06	.093		.093	.858	.608	.484	.358	.733	.077	.116	.062	.937	.875	1.343	.125	.781	1.892	.046	NA	NA	.209	.093	.250	1.875	NA	1.840	.046	.23	.16	1.938
NA	.093	.031	.06	.093		.093	.858	.608	.484	.358	.733	.077	.116	.062	.937	.875	1.343	.125	.781	1.892	.046	NA	NA	.209	.093	.250	1.875	NA	1.840	.046	.23	.16	1.938
NA	.093	.031	.06	.093		.093	.858	.608	.484	.358	.733	.077	.116	.062	.937	.875	1.343	.125	.781	1.892	.046	NA	NA	.209	.093	.250	1.875	NA	1.840	.046	.23	.16	1.938
NA	.093	.031	.06	.093		.093	.858	.608	.484	.358	.733	.077	.116	.062	.937	.875	1.343	.125	.781	1.892	.046	NA	NA	.209	.093	.250	1.875	NA	1.840	.046	.23	.16	1.938
NA	.093	.031	.06	.093		.093	.858	.608	.484	.358	.733	.077	.116	.062	.937	.875	1.343	.125	.781	1.892	.046	NA	NA	.209	.093	.250	1.875	NA	1.840	.046	.23	.16	1.938
NA	.093	.031	.06	.093		.093	.858	.608	.484	.358	.733	.077	.116	.062	.937	.875	1.343	.125	.781	1.892	.046	NA	NA	.209	.093	.250	1.875	NA	1.840	.046	.23	.16	1.938
NA	.093	.031	.06	.093		.093	.858	.608	.484	.358	.733	.077	.116	.062	.937	.875	1.343	.125	.781	1.892	.046	NA	NA	.209	.093	.250	1.875	NA	1.840	.046	.23	.16	1.938
NA	.093	.031	.06	.093		.093	.858	.608	.484	.358	.733	.077	.116	.062	.937	.875	1.343	.125	.781	1.892	.046	NA	NA	.209	.093	.250	1.875	NA	1.840	.046	.23	.16	1.938
NA	.093	.031	.06	.093	.100 .104	.093	.858	.608	.484	.358	.733	.077	.116	.062	.937	.875	1.343	.125	.781	1.892	.046	NA	NA	.209	.093	.250	1.875	NA	1.840	.046	.23	.16	1.938
.375	.078	.044	.078	.093	NA	NA	1.125	.750	.593	.453	1.015	.062	.187	.078	.875	.718	1.375	.218	NA	NA	.048	.031	.875	.305	.078	.531	1.906	.078	NA	.078	.531	.187	NA
.375	.078	.044	.078	.093	NA	NA	1.125	.750	.593	.453	1.015	.062	.187	.078	.875	.718	1.375	.218	NA	NA	.048	.031	.875	.305	.078	.531	1.906	.078	NA	.078	.531	.187	NA

REVISIONS

SYM	ZONE	DESCRIPTION	CHG NO	DATE	APPD
CL		REPLACES REV CK WITHOUT CHANGE PER TDRR 34365		9/28/67	JWL RWH
CM		REVISION STATUS CHANGED		18 OCT 67	R.A.W.
CN		REVISION STATUS CHANGE		31 OCT 67	URK
(M) CP		REVISION STATUS CHANGE		6 NOV 67	EMS
(M) CR		REVISION STATUS CHANGED		7 NOV 67	RWH
(M) CS		REVISION STATUS CHANGED		3 JAN 68	J.W. EHW
CT		REVISION STATUS CHANGED		7 FEB 68	LK
CU		REVISION STATUS CHANGED		28 FEB 68	URK
(M) CV		REVISION STATUS CHANGED		27 FEB 68	LK
CW		REVISION STATUS CHANGED		5 APR 68	
(M) CY		REVISION STATUS CHANGED		16 APR 68	A.N.
(M) CZ		REVISION STATUS CHANGED		28 MAY 68	
(M) DA		REVISION STATUS CHANGED		11 JUN 68	
(M) DB		REVISION STATUS CHANGED		5 SEP 68	
DC		REVISION STATUS CHANGED		6 DEC 68	LK
(M) DD		REVISION STATUS CHANGED		30 DEC 68	
DE		REVISION STATUS CHANGED		23 JAN 69	
DF		REVISION STATUS CHANGED		27 JAN 69	LK RWH

AC ELECTRONICS DASH NUMBERS

NEXT ASSY	USED ON
AS APPLICABLE	
APPLICATION	

UNLESS OTHERWISE SPECIFIED
DIMENSIONS ARE IN INCHES
TOLERANCES ON
2 PLACE DECIMALS ± 3 PLACE DECIMALS ± .005 ANGLES ±
DO NOT SCALE THIS DRAWING
MATERIAL SEE NOTE 11
APPROVAL

MIT INSTRUMENTATION LAB
CAMBRIDGE MASS
DRAWN R. A. JONES DATE 16 JUL 65
CHECKED
APPROVAL W. KUPFER 22 JUL 65
CONTRACT
NASA APPROVAL T. MICHAELS 22 JUL 65
MIT APPROVAL W. KUPFER 22 JUL 65

MANNED SPACECRAFT CENTER
HOUSTON, TEXAS

NAMEPLATES, APOLLO G&N - GSE (STANDARDS)

SIZE J2
CODE IDENT NO. 80230
1004260
SCALE NONE
SHEET 4 OF 6

1004260 DF SHT 4

1004260 DF

08SA001

27-1004260

NOTICE — WHEN GOVERNMENT DRAWINGS, SPECIFICATIONS, OR OTHER DATA ARE USED FOR ANY PURPOSE OTHER THAN IN CONNECTION WITH A DEFINITELY RELATED GOVERNMENT PROCUREMENT OPERATION, THE UNITED STATES GOVERNMENT THEREBY INCURS NO RESPONSIBILITY NOR ANY OBLIGATION WHATSOEVER; AND THE FACT THAT THE GOVERNMENT MAY HAVE FORMULATED, FURNISHED, OR IN ANY WAY SUPPLIED THE SAID DRAWINGS, SPECIFICATIONS, OR OTHER DATA IS NOT TO BE REGARDED BY IMPLICATION OR OTHERWISE AS IN ANY MANNER LICENSING THE HOLDER OR ANY OTHER PERSON OR CORPORATION, OR CONVEYING ANY RIGHTS OR PERMISSION TO MANUFACTURE, USE, OR SELL ANY PATENTED INVENTION THAT MAY IN ANY WAY BE RELATED THERETO.

DASH NO.	P/C	PART NAME	REMARKS	PART NUMBER	SER. NO.	CONT. NO.	STYLE	TYPE	MATERIAL	A	B	C	D	E	F	G	H	J	K	L	M	
401	MIT	COMPUTER ASSY		2003100		NAS-9-497	A	I	NOTE 11B	2,000	1,312	1,906	1,375	,078	,048	,078	,093	NA	NA	1,125	,750	,193
400	MIT	LIFTING SLING-G&N INST.QUAL.FIX. & AZM.REF.FIX.		1021640		NAS-9-4065	B	II	NOTE 11C	2,000	1,312	1,687	1,375	,078	,048	,078	,093	[illegible]	,093	1,187	,750	,193

NOTES FOR TABLE
STYLE A IS FOR G & N SYSTEM
STYLE B IS FOR GROUND SUPPORT EQUIPMENT
TYPE I IS WITHOUT MOUNTING HOLES
TYPE II IS WITH MOUNTING HOLES

1004260 D SHT 5

REVISIONS					
SYM	ZONE	DESCRIPTION	CHG NO	DATE	APPD
CL		REPLACES REV CK WITHOUT CHANGE PER TURR 34365		28 67	JWL RWH
CM		REVISION STATUS CHANGED		2 OCT 67	R.A.W.
CN		REVISION STATUS CHANGED		4 OCT 67	JRK
Ⓜ CP		REVISION STATUS CHANGED		6 NOV 67	EMS
Ⓜ CR		REVISION STATUS CHANGED		7 DEC 67	RWH
Ⓜ CS		REVISION STATUS CHANGED		3 JAN 68	EHW
CT		REVISION STATUS CHANGED		7 FEB 68	LK
CU		REVISION STATUS CHANGED		22 FEB 68	JRK
Ⓜ CV		REVISION STATUS CHANGED		6 MAR 68	LK
CW		REVISION STATUS CHANGED		3 APR 68	
Ⓜ CY		REVISION STATUS CHANGED		16 APR 68	A.N.
Ⓜ CZ		REVISION STATUS CHANGED		23 MAY 68	
Ⓜ DA		REVISION STATUS CHANGED		17 JUN 68	
Ⓜ DB		REVISION STATUS CHANGED		18 SEP 68	
DC		REVISION STATUS CHANGED		16 DEC 68	LK
Ⓜ DD		REVISION STATUS CHANGED		30 DEC 68	
DE		REVISION STATUS CHANGED		23 JAN 69	
DF		REVISION STATUS CHANGED		27 JAN 69	LK RWH

[illegible]	.078	.04	.078	.093	NA	NA	1.125	.750	.593	.453	1.015	.062	.187	.078	.875	.718	1.375	.218	NA	NA	.048	.031	.875	.305	.078	.531	1.906	.078	NA	.078	.531	.187	NA
[illegible]	.078	.04	.078	.093	[illegible]	.093	1.187	.750	.593	.453	1.015	.062	.187	.078	.875	.718	1.375	.218	1.156	1.843	.048	NA	.875	.305	.078	.312	1.687	.110	1.230	.070	.275	.180	1.844
D	E	F	G	H	J	K	L	M	N	P	R	S	T	U	V	W	Y	Z	AA	AB	AC	AD	AE	AF	AG	AH	AJ	AK	AL	AM	AN	AP	AR

MIT DASH NUMBERS

AS APPLICABLE			
NEXT ASSY	USED ON		
APPLICATION			

UNLESS OTHERWISE SPECIFIED
DIMENSIONS ARE IN INCHES
TOLERANCES ON
2 PLACE DECIMALS ± 3 PLACE DECIMALS ± .005 ANGLES ± —
DO NOT SCALE THIS DRAWING
MATERIAL SEE NOTE 11
APPROVAL

MIT INSTRUMENTATION LAB CAMBRIDGE MASS
DWG NO CONTRACT
DRAWN R.A. JONES DATE 16 JUL 65
CHECKED
APPROVAL W. KUPFER 22 JUL 65
CONTRACT
NASA APPROVAL T. MICHAELS 22 JUL 65
MIT APPROVAL W. KUPFER 22 JUL 65

MANNED SPACECRAFT CENTER
HOUSTON, TEXAS

NAMEPLATES, APOLLO G&N - GSE (STANDARDS)

SIZE J2 CODE IDENT NO. 80230 1004260
SCALE NONE SHEET 5 OF 6

1004260 DF SHT 5

1004260 DF

1004260

271004260

NOTICE — WHEN GOVERNMENT DRAWINGS, SPECIFICATIONS, OR OTHER DATA ARE USED FOR ANY PURPOSE OTHER THAN IN CONNECTION WITH A DEFINITELY RELATED GOVERNMENT PROCUREMENT OPERATION, THE UNITED STATES GOVERNMENT THEREBY INCURS NO RESPONSIBILITY, NOR ANY OBLIGATION WHATSOEVER; AND THE FACT THAT THE GOVERNMENT MAY HAVE FORMULATED, FURNISHED, OR IN ANY WAY SUPPLIED THE SAID DRAWINGS, SPECIFICATIONS, OR OTHER DATA IS NOT TO BE REGARDED BY IMPLICATION OR OTHERWISE AS IN ANY MANNER LICENSING THE HOLDER OR ANY OTHER PERSON OR CORPORATION, OR CONVEYING ANY RIGHTS OR PERMISSION TO MANUFACTURE, USE, OR SELL ANY PATENTED INVENTION THAT MAY IN ANY WAY BE RELATED THERETO.

DASH NO.	P/C	PART NAME	REMARKS	PART NUMBER	SER. NO.	CONT. NO.	STYLE	TYPE	MATERIAL	A	B	C	D	E	F	G	H	J	K	L	M
599	AC																				
598	AC																				
587		AUXILIARY BATTERY PACK		1901492-051		FOR OTHER DATA SEE DASH 586															
586	AC	BATTERY POWER PACK		1900011-061		NAS-9-497	B	II	NOTE 11C	4.125	1.812	3.250	NA	.125	.062	.12	.56	[illegible]	.25	.625	.46
585		ANALYZER, OPTICS INERTIAL		2900023-051		FOR OTHER DATA SEE DASH 536															
584		ETHYLENE GLYCOL CLEANING KIT		2901630-011		NAS-9-497	B	I	NOTE 11B	4.000	2.625	3.380	NA	.260	.093	.56	.160	NA	NA	2.250	.445
583		SWITCH CROSS BAR ASSY		1900048-021		FOR OTHER DATA SEE DASH 102															
582	AC	G&N INDICATOR CONTROL PANEL ASSY		2021290-041		FOR OTHER DATA SEE DASH 181															
581	AC	G&N INDICATOR CONTROL PANEL ASSY		2021323-021		FOR OTHER DATA SEE DASH 181															
580		AUXILIARY BATTERY PACK		1901492-041		FOR OTHER DATA SEE DASH 565															
579	AC	COMPUTER CONT & RETICLE DIMMER		6014512-081		FOR OTHER DATA SEE DASH 534															
578	AC	G&N INDICATOR CONTROL PANEL ASSY		2021290-031		FOR OTHER DATA SEE DASH 181															
577		BREAKOUT BOX, CABLE ADAPTER		2901011-021		FOR OTHER DATA SEE DASH 506															
576		FIX., MOUNTING G&N		2900067-061		FOR OTHER DATA SEE DASH 500															
575		CSL, CAL AND TEST, SCM/PSAAM		2900895-041		FOR DATA SEE DASH 559															
574		CONT., TEMP. PORTABLE		2900060-031		NAS-9-497	B	II	NOTE 11C	FOR DIMENSIONS SEE DASH 535 VALUES											
573		BATTERY PACK LIFTING		2900812-031		NAS-9-497	B	II	NOTE 11C	FOR DIMENSIONS SEE DASH 542 VALUES											
572		FIX., MOUNTING G&N	(-144)	2900067-051		NAS-9-497	B	II	NOTE 11C	FOR DIMENSIONS SEE DASH 500 VALUES											
571		EYEPIECE STORAGE UNIT		2021382		FOR OTHER DATA SEE DASH 100															
570	AC	OPTICAL UNIT & BELLOWS ASSY				NAS-9-497	A	I	NOTE 11B	FOR DIMENSIONS SEE DASH 550 VALUES											
569	AC	G & N INDICATOR CONTROL PANEL ASSY		2021323-011		NAS-9-497	A	I	NOTE 11B	FOR DIMENSIONS SEE DASH 181											
568	AC	G & N INDICATOR CONTROL PANEL ASSY		2021290-021		NAS-9-497	A	I	NOTE 11B	FOR DIMENSIONS SEE DASH 181											
567	AC	G & N INDICATOR CONTROL PANEL ASSY		2021290-011		NAS-9-497	A	I	NOTE 11B	FOR DIMENSIONS SEE DASH 181											
566	AC	COMPUTER CONT & RETICLE DIMMER		6014512-061		NAS-9-497	A	I	NOTE 11B	FOR DIMENSIONS SEE DASH 534											
565		AUXILIARY BATTERY PACK		1901492-031		NAS-9-497	B	II	NOTE 11C	FOR DIMENSIONS SEE DASH 500											
564		BATTERY POWER PACK		1900011-051		NAS-9-497	B	II	NOTE 11C	FOR DIMENSIONS SEE DASH 500											
563		PSA ADAPTER MODULE (LEM)		6900088-031		NAS-9-497	B	II	NOTE 11C	FOR DIMENSIONS SEE DASH 141 VALUES											
562	AC	COMPUTER CONT & RETICLE DIMMER		6014512-041		NAS-9-497	A	I	NOTE 11B	FOR DIMENSIONS SEE DASH 534 VALUES											
561	AC	G & N INDICATOR CONTROL PANEL ASSY		2014578-031		NAS-9-497	A	I	NOTE 11B	FOR DIMENSIONS SEE DASH 181 VALUES											
560		ADPT. MODULE, PSA		2901143-021		NAS-9-497	B	II	NOTE 11C	FOR DIMENSIONS SEE DASH 141 VALUES											
559		CSL. CAL AND TEST. SCM/PSAAM		2900895-031		FOR OTHER DATA SEE DASH 547															
558		PSA ADAPTER MODULE (LEM)		6900088-021		FOR OTHER DATA SEE DASH 189															
557		FIX., HANDLING, C/M PSA		2900998-021		NAS-9-497	B	II	NOTE 11C	FOR DIMENSIONS SEE DASH 141 VALUES											
556		FIX., MOUNTING G & N	(-144)	2900067-041		NAS-9-497	B	II	NOTE 11C	FOR DIMENSIONS SEE DASH 500 VALUES											
555	AC	OPTICAL UNIT ASSEMBLY		1021368-061		NAS-9-497	A	I	NOTE 11B	2.000	1.312	1.687	1.375	.078	.048	.078	.093	NA	NA	1.125	.750
554	AC	OPTICAL UNIT ASSEMBLY		1021368-041		NAS-9-497	A	I	NOTE 11B	2.000	1.312	1.687	1.375	.078	.048	.078	.093	NA	NA	1.125	.750
553	AC	OPTICAL UNIT AND BELLOWS ASSEMBLY		2010790-111		NAS-9-497	A	I	NOTE 11B	2.000	1.312	1.687	1.375	.078	.048	.078	.093	NA	NA	1.125	.750
552	AC	OPTICAL UNIT AND BELLOWS ASSEMBLY		2010790-081		NAS-9-497	A	I	NOTE 11B	2.000	1.312	1.687	1.375	.078	.048	.078	.093	NA	NA	1.125	.750
551	AC	OPTICAL UNIT AND BELLOWS ASSEMBLY		2010790-071		NAS-9-497	A	I	NOTE 11B	2.000	1.312	1.687	1.375	.078	.048	.078	.093	NA	NA	1.125	.750
550	AC	OPTICAL UNIT AND BELLOWS ASSEMBLY		2010790-061		NAS-9-497	A	I	NOTE 11B	2.000	1.312	1.687	1.375	.078	.048	.078	.093	NA	NA	1.125	.750
548		CAGING ELECTRONICS, GYRO		2900029-031		NAS-9-497	B	II	NOTE 11C	2.125	.968	1.718	NA	.093	.031	.06	.093	.188 .164	.093	.858	.608
547		CSL, CAL AND TEST, SCM/PSAAM		2900895-021		NAS-9-497	B	II	NOTE 11C	4.125	1.812	3.250	NA	.125	.062	.12	.156	↕	.125	1.625	1.140
546		FIX., HAND., C/M AND LEM CDU		2900999-021		NAS-9-497	B	II	NOTE 11C	2.125	.968	1.718	NA	.093	.031	.06	.093	.188 .164	.093	.858	.608
545	AC	G & N INDICATOR CONTROL PANEL ASSY		2014578-021		NAS-9-497	A	I	NOTE 11B	3.000	1.938	2.437	NA	.125	.062	.188	.156	NA	NA	1.750	1.125
544		ADPT MODULE, P.S.A.		1902431-051		NAS-9-497	B	II	NOTE 11C	2.125	.968	1.718	NA	.093	.031	.06	.093	.188 .164	.093	.858	.608
543	AC	PANEL, MONITOR		2900031-041		NAS-9-497	B	II	NOTE 11C	2.125	.968	1.718	NA	.093	.031	.06	.093	↕	.093	.858	.608
542	AC	BATTERY PACK, LIFTING		2900812-021		NAS-9-497	B	II	NOTE 11C	2.125	.968	1.718	NA	.093	.031	.06	.093	↕	.093	.858	.608
541	AC	FIXTURE, MOUNTING, IMU		2900000-021		NAS-9-497	B	II	NOTE 11C	4.125	1.812	3.250	NA	.125	.062	.12	.156	↕	.125	1.625	1.140
540	AC	ADPT, TEST POINT, P.S.A.		2900037-031		NAS-9-497	B	II	NOTE 11C	2.125	.968	1.718	NA	.093	.031	.06	.093	.188 .164	.093	.858	.608
539	AC	ANNUNCIATOR PANEL & EYEPIECE STORAGE ASSEMBLY		1021255-041		NAS-9-497	A	I	NOTE 11B	2.000	1.312	1.906	1.375	.078	.048	.078	.093	NA	NA	1.125	.750
538	AC	ANNUNCIATOR PANEL & EYEPIECE STORAGE ASSEMBLY		1021255-031		NAS-9-497	A	I	NOTE 11B	2.000	1.312	1.906	1.375	.078	.048	.078	.093	NA	NA	1.125	.750
537	AC	TEST SELECTOR		2900028-031		NAS-9-497	B	II	NOTE 11C	2.125	.968	1.718	NA	.093	.031	.06	.093	.188 .164	.093	.858	.608
536	AC	ANALYZER, OPTICS-INERTIAL		2900023-041		NAS-9-497	B	II	NOTE 11C	4.125	1.812	3.250	NA	.125	.062	.12	.156	↕	.125	1.625	1.140
535	AC	CONT, TEMP, PORTABLE		2900060-021		NAS-9-497	B	II	NOTE 11C	2.125	.968	1.718	NA	.093	.031	.06	.093	.188 .164	.093	.858	.608
534	AC	COMPUTER CONT & RETICLE DIMMER		6014512-021		NAS-9-497	A	I	NOTE 11B	2.000	1.312	1.906	1.375	.078	.048	.078	.093	NA	NA	1.125	.750
533	AC	ADPT MODULE, P.S.A.		1902431-041		NAS-9-497	B	II	NOTE 11C	2.125	.968	1.718	NA	.093	.031	.06	.093	.188 .164	.093	.858	.608
532	AC	TRAY BREAKOUT, 105 PIN		1900807-021		NAS-9-497	B	II	NOTE 11C	4.125	1.812	3.250	NA	.125	.062	.12	.156	↕	.125	1.625	1.140
531	AC	TRAY BREAKOUT, 84 PIN		1900806-021		NAS-9-497	B	II	NOTE 11C	4.125	1.812	3.250	NA	.125	.062	.12	.156	↕	.125	1.625	1.140
530	AC	HEAT SINK-TRAY EXTENDER		1900808-021		NAS-9-497	B	II	NOTE 11C	2.125	.968	1.718	NA	.093	.031	.06	.093	↕	.093	.858	.608
529	AC	TESTER, FAILURE INDICATOR		1900809-021		NAS-9-497	B	II	NOTE 11C	2.125	.968	1.718	NA	.093	.031	.06	.093	.188 .164	.093	.858	.608
527	AC	FIX., MOUNTING, G & N	(-144)	1902204-021		NAS-9-497	B	II	NOTE 11C	FOR DIMENSIONS SEE DASH 500 VALUES BELOW											
526	AC	FIX., MOUNTING, G & N	(-144)	2900067-031		NAS-9-497	B	II	NOTE 11C	FOR DIMENSIONS SEE DASH 500 VALUES BELOW											
525	AC	PORTABLE TEMP. CONTROLLER		1900496-021		NAS-9-497	B	II	NOTE 11C	3.000	1.937	2.437	2.312	.125	.031	.125	.156	.125	.125	1.718	1.187
524	AC	POWER, SERVO & THERMOCOUPLE ASSEMBLY C/M		2010743		NAS-9-497	A	I	NOTE 11B	2.125	.968	1.718	NA	.093	.031	.06	.093	NA	NA	.858	.608
523	AC	PULSE TORQUE AND THERMOCOUPLE ASSEMBLY-LEM		6010656		NAS-9-497	A	I	NOTE 11B	FOR DIMENSIONS SEE DASH 508 VALUES BELOW											
522	AC	COUPLING DATA UNIT & THERMOCOUPLE ASSEMBLY-LEM		2010744		NAS-9-497	A	I	NOTE 11B	FOR DIMENSIONS SEE DASH 508 VALUES BELOW											
521	AC	COUPLING DATA UNIT & THERMOCOUPLE ASSEMBLY-C/M		2010744		NAS-9-497	A	I	NOTE 11B	FOR DIMENSIONS SEE DASH 508 VALUES BELOW											
520	AC	PIPA ELECTRONICS AND THERMOCOUPLE ASSEMBLY		2010745		NAS-9-497	A	I	NOTE 11B	FOR DIMENSIONS SEE DASH 508 VALUES BELOW											
519	AC	FIXTURE, HANDLING, LEM-PSA	(-141)	6900129-011		NAS-9-497	B	II	NOTE 11C	FOR DIMENSIONS SEE DASH 504 VALUES BELOW											
518	AC	JUNCTION BOX, GSE-PSA	(-144)	1901933-031		NAS-9-497	B	II	NOTE 11C	FOR DIMENSIONS SEE DASH 500 VALUES BELOW											
517	AC	FIX., HAND., OPTICS INSTL.	(-141)	2901380-011		NAS-9-497	B	II	NOTE 11C	FOR DIMENSIONS SEE DASH 502 VALUES BELOW											
516	AC	POWER, SERVO AND THERMOCOUPLE ASSEMBLY-LEM		6010655		NAS-9-497	A	I	NOTE 11B	FOR DIMENSIONS SEE DASH 508 VALUES BELOW											
514	AC	SIGNAL COND. ASSY LEM OPER.	(-100)	6007013		NAS-9-497	A	I	NOTE 11B	FOR DIMENSIONS SEE DASH 508 VALUES BELOW											
513	AC	JUMPER, BY-PASS	(-141)	1021616		NAS-9-497	B	II	NOTE 11C	2.125	.968	1.718	NA	.093	.031	.06	.093	.188 .164	.093	.858	.608
512	AC	COUPLING DATA UNIT ASSEMBLY C/M	(-100)	2007322-011		NAS-9-497	A	I	NOTE 11B	FOR DIMENSIONS SEE DASH 508 VALUES BELOW											
511	AC	COUPLING DATA UNIT ASSEMBLY-LEM	(-100)	2007322-021		NAS-9-497	A	I	NOTE 11B	FOR DIMENSIONS SEE DASH 508 VALUES BELOW											
510	AC	BATTERY POWER PACK	(-144)	1900011-041		NAS-9-497	B	II	NOTE 11C	FOR DIMENSIONS SEE DASH 500 VALUES BELOW											
509	AC	JUNCTION BOX, P.S.A./G.S.E.	(-144)	1902195-021		NAS-9-497	B	II	NOTE 11C	FOR DIMENSIONS SEE DASH 500 VALUES BELOW											
508	AC	NAVIGATION BASE ASSEMBLY-LEM	(-101)	6899980		NAS-9-497	A	I	NOTE 11B	2.000	1.312	1.906	1.375	.078	.048	.078	.093	NA	NA	1.125	.75
507	AC	CSL, COOL, AND PWR, G AND N	(-144)	1902134-041		NAS-9-497	B	II	NOTE 11C	FOR DIMENSIONS SEE DASH 500 VALUES BELOW											
506	AC	BREAKOUT BOX, CABLE ADAPTER	(-141)	2901011-011		NAS-9-497	B	II	NOTE 11C	2.125	.968	1.718	NA	.093	.031	.06	.093	.188 .164	.093	.858	.60
505	AC	MONITOR AND CONTROL, TEMP	(-141)	2900026-021		NAS-9-497	B	II	NOTE 11C	2.125	.968	1.718	NA	.093	.031	.06	.093	↕	.093	.858	.60
504	AC	PWR SUP. GUIDANCE SYSTEM	(-141)	1900033-021		NAS-9-497	B	II	NOTE 11C	2.125	.968	1.718	NA	.093	.031	.06	.093	↕	.093	.858	.60
503	AC	CONTROL, GIMBAL POSITION	(-141)	2900036-021		NAS-9-497	B	II	NOTE 11C	2.125	.968	1.718	NA	.093	.031	.06	.093	↕	.093	.858	.60
502	AC	ADPT, TEST POINT, PTA/PEA.	(-141)	2900145-021		NAS-9-497	B	II	NOTE 11C	2.125	.968	1.718	NA	.093	.031	.06	.093	.188 .164	.093	.858	.60
501	AC	MOUNTING PLATE, COMPONENT	(-144)	6900007-031		NAS-9-497	B	II	NOTE 11C	FOR DIMENSIONS SEE DASH 500 VALUES BELOW											
500	AC	MOUNTING PLATE, COMPONENT	(-144)	2900677-021		NAS-9-497	B	II	NOTE 11C	4.125	1.812	3.250	NA	.125	.062	.12	.156	.188 .164	.125	1.625	1.14

NOTES FOR TABLE

STYLE A IS FOR G & N SYSTEM
STYLE B IS FOR GROUND SUPPORT EQUIPMENT
TYPE I IS WITHOUT MOUNTING HOLES
TYPE II IS WITH MOUNTING HOLES

SYM	ZONE	DESCRIPTION	CHG NO	DATE	APPD
CL		REPLACES REV CK WITH CHANGE PER TDRR 34365		9/28/67	JWL RWH
CM		REVISED PER TDRR 34395		17 OCT. 67	R.A.W.
CN		REVISED PER TDRR 34467		31 OCT 67	JRK
Ⓜ CP		REVISED PER TDRR 34855		6 NOV 67	EMS
Ⓜ CR		REVISED PER TDRR 35164		7 DEC 67	DKD RWH
Ⓜ CS		REVISED PER TDRR 35307		3 JAN 68	J.W. EHW
CT		REVISION STATUS CHANGED		7 FEB 68	LK
CU		REVISED PER TDRR 35628		22 FEB 68	JRK
Ⓜ CV		REVISED PER TDRR 35675		27 FEB 68	LK
CW		REVISED PER TDRR 35970		3 APR 68	
Ⓜ CY		REVISION STATUS CHANGED		16 APR 68	A.N.
Ⓜ CZ		REVISED PER TDRR 36248		23 MAY 68	
Ⓜ DA		REVISED PER TDRR 36324		17 JUN 68	
Ⓜ DB		REVISED PER TDRR 36742		12 SEP 68	
DC		REVISED PER TDRR 37114		16 DEC 68	LK
Ⓜ DD		REVISED PER TDRR 37146		30 DEC 68	
DE		REVISED PER TDRR 37251		23 JAN 69	
DF		REVISED PER TDRR 37262		27 JAN 69	LK

	D	E	F	G	H	J	K	L	M	N	P	R	S	T	U	V	W	Y	Z	AA	AB	AC	AD	AE	AF	AG	AH	AJ	AK	AL	AM	AN	AP	AR	AS	AT
	NA	[illegible]	[illegible]	.2	.56	.32	.25	.625	1.140	.890	.640	1.390	NA	NA	.125	1.875	1.650	2.625	.250	1.562	3.843	.093	NA	NA	.408	.125	.437	3.688	NA	3.687	.093	.625	.31	3.875	.062	NA
	[illegible]	[illegible]	[illegible]	.36	[illegible]	NA	NA	2.290	1.440	1.180	.940	1.900	NA	.375	.125	NA	1.790	2.760	.312	NA	3.590	.093	.062	NA	.525	NA	NA	NA	.225	NA	.093	.480	.430	NA	NA	3.670
NS SEE DASH 535 VALUES																																			
NS SEE DASH 542 VALUES																																			
NS SEE DASH 500 VALUES																																			
[illegible] VALUES																																			
NS SEE DASH 181																																			
NS SEE DASH 181																																			
NS SEE DASH 181																																			
NS SEE DASH 534																																			
NS SEE DASH 500																																			
NS SEE DASH 500																																			
NS SEE DASH 141 VALUES																																			
NS SEE DASH 534 VALUES																																			
NS SEE DASH 181 VALUES																																			
NS SEE DASH 141 VALUES																																			
[illegible] VALUES																																			
NS SEE DASH 500 VALUES																																			
7	1.375	.078	.0 8	.078	.093	NA	NA	1.125	.750	.593	.453	1.015	.062	.187	.078	.875	.718	1.375	.218	NA	NA	.048	.031	.875	.305	NA	.468	1.531	NA	NA	.078	.312	.187	NA		
7	1.375	.078	.0 8	.078	.093	NA	NA	1.125	.750	.593	.453	1.015	.062	.187	.078	.875	.718	1.375	.218	NA	NA	.048	.031	.875	.305	NA	.468	1.531	NA	NA	.078	.312	.187	NA		
7	1.375	.078	.0 8	.078	.093	NA	NA	1.125	.750	.593	.453	1.015	.062	.187	.078	.875	.718	1.375	.218	NA	NA	.048	.031	.875	.305	NA	.468	1.531	NA	NA	.078	.312	.187	NA		
7	1.375	.078	.0 8	.078	.093	NA	NA	1.125	.750	.593	.453	1.015	.062	.187	.078	.875	.718	1.375	.218	NA	NA	.048	.031	.875	.305	NA	.468	1.531	NA	NA	.078	.312	.187	NA		
7	1.375	.078	.0 8	.078	.093	NA	NA	1.125	.750	.593	.453	1.015	.062	.187	.078	.875	.718	1.375	.218	NA	NA	.048	.031	.875	.305	NA	.468	1.531	NA	NA	.078	.312	.187	NA		
7	1.375	.078	.0 8	.078	.093	NA	NA	1.125	.750	.593	.453	1.015	.062	.187	.078	.875	.718	1.375	.218	NA	NA	.048	.031	.875	.305	NA	.468	1.531	NA	NA	.078	.312	.187	NA		
	NA	.093	.0 1	.06	.093	▨	.093	.858	.608	.484	.358	.733	.077	.116	.062	.937	.875	1.343	.125	.781	1.892	.046	NA	NA	.209	.093	.250	1.875	NA	1.840	.046	.23	.16	1.938		
	NA	.125	.0	.12	.156		.125	1.625	1.140	.890	.640	1.390	.125	.171	.125	1.875	1.687	2.625	.250	1.562	3.843	.093	NA	NA	.359	.125	.437	3.688	NA	3.687	.093	.40	.25	3.875		
	NA	.093	.0 1	.06	.093	▨	.093	.858	.608	.484	.358	.733	.077	.116	.062	.937	.875	1.343	.125	.781	1.892	.046	NA	NA	.209	.093	.250	1.875	NA	1.840	.046	.23	.16	1.938		
	NA	[illegible]	.0 2	.188	.156	NA	NA	1.750	1.125	.906	.688	1.500	NA	.281	.125	NA	1.094	2.062	.312	NA	2.500	.062	.125	1.312	.469	NA	NA	NA	.156	NA	.125	.469	.344	NA		
	NA	.093	.0 1	.06	.093	▨	.093	.858	.608	.484	.358	.733	.077	.116	.062	.937	.875	1.343	.125	.781	1.892	.046	NA	NA	.209	.093	.250	1.875	NA	1.840	.046	.23	.16	1.938		
	NA	.093	.0 1	.06	.093		.093	.858	.608	.484	.358	.733	.077	.116	.062	.937	.875	1.343	.125	.781	1.892	.046	NA	NA	.209	.093	.250	1.875	NA	1.840	.046	.23	.25	1.938		
	NA	.093	.0 1	.06	.093		.093	.858	.608	.484	.358	.733	.077	.116	.062	.937	.875	1.343	.125	.781	1.892	.046	NA	NA	.209	.093	.250	1.875	NA	1.840	.046	.23	.16	1.938		
	NA	.125	.0 2	.12	.156		.125	1.625	1.140	.890	.640	1.390	.125	.171	.125	1.875	1.687	2.625	.250	1.562	3.843	.093	NA	NA	.359	.125	.437	3.688	NA	3.687	.093	.40	.25	3.875		
	NA	.093	.031	.06	.093	▨	.093	.858	.608	.484	.358	.733	.077	.116	.062	.937	.875	1.343	.125	.781	1.892	.046	NA	NA	.209	.093	.250	1.875	NA	1.840	.046	.23	.16	1.938		
	1.375	.078	.048	.078	.093	NA	NA	1.125	.750	.593	.453	1.015	.062	.187	.078	.875	.718	1.375	.218	NA	NA	.048	.031	.875	.305	.078	.531	1.906	.078	NA	.078	.531	.187	NA		
	[illegible]	[illegible]	. 8	.078	.093	NA	NA	1.125	.750	.593	.453	1.015	.062	.187	.078	.875	.718	1.375	.218	NA	NA	.048	.031	.875	.305	.078	.531	1.906	.078	NA	.078	.531	.187	NA		
	NA	.093	.031	.06	.093	▨	.093	.858	.608	.484	.358	.733	.077	.116	.062	.937	.875	1.343	.125	.781	1.892	.046	NA	NA	.209	.093	.250	1.875	NA	1.840	.046	.23	.16	1.938		
	NA	.125	.052	.12	.156		.125	1.625	1.140	.890	.640	1.390	.125	.171	.125	1.875	1.687	2.625	.250	1.562	3.843	.093	NA	NA	.359	.125	.437	3.688	NA	3.687	.093	.40	.25	3.875		
	NA	.093	.031	.06	.093	▨	.093	.858	.608	.484	.358	.733	.077	.116	.062	.937	.875	1.343	.125	.781	1.892	.046	NA	NA	.209	.093	.250	1.875	NA	1.840	.046	.23	.16	1.938		
	1.375	.078	.048	.078	.093	NA	NA	1.125	.750	.593	.453	1.015	.062	.187	.078	.875	.718	1.375	.218	NA	NA	.048	.031	.875	.305	.078	.531	1.906	.078	NA	.078	.531	.187	NA		
	NA	.093	.031	.06	.093	▨	.093	.858	.608	.484	.358	.733	.077	.116	.062	.937	.875	1.343	.125	.781	1.892	.046	NA	NA	.209	.093	.250	1.875	NA	1.840	.046	.23	.16	1.938		
	NA	.125	.052	.12	.156		.125	1.625	1.140	.890	.640	1.390	.125	.171	.125	1.875	1.687	2.625	.250	1.562	3.843	.093	NA	NA	.359	.125	.437	3.688	NA	3.687	.093	.40	.25	3.875		
	NA	.125	.052	.12	.156		.125	1.625	1.140	.890	.640	1.390	.125	.171	.125	1.875	1.687	2.625	.250	1.562	3.843	.093	NA	NA	.359	.125	.437	3.688	NA	3.687	.093	.40	.25	3.875		
	NA	.093	.031	.06	.093		.093	.858	.608	.484	.358	.733	.077	.116	.062	.937	.875	1.343	.125	.781	1.892	.046	NA	NA	.209	.093	.250	1.875	NA	1.840	.046	.23	.16	1.938		
	NA	.093	.031	.06	.093	▨	.093	.858	.608	.484	.358	.733	.077	.116	.062	.937	.875	1.343	.125	.781	1.892	.046	NA	NA	.209	.093	.250	1.875	NA	1.840	.046	.23	.16	1.938		
NS SEE DASH 500 VALUES BELOW																																			
NS SEE DASH 500 VALUES BELOW																																			
7	2.312	.125	.031	.125	.156	.125	.125	1.718	1.187	.968	.749	1.452	.093	.295	.090	1.312	1.00	2.000	.250	1.687	2.750	.062	NA	NA	.463	.125	.562	2.437	.140	2.562	.090	.468	.359	2.750		
	NA	.093	.031	.06	.093	NA	NA	.858	.608	.484	.358	.733	.062	.140	.062	NA	.968	1.450	.125	NA	1.720	.046	.03	NA	.210	NA	NA	NA	.070	NA	.046	.32	.16	NA		
NS SEE DASH 508 VALUES BELOW																																			
NS SEE DASH 508 VALUES BELOW																																			
NS SEE DASH 508 VALUES BELOW																																			
NS SEE DASH 508 VALUES BELOW																																			
NS SEE DASH 504 VALUES BELOW																																			
NS SEE DASH 500 VALUES BELOW																																			
NS SEE DASH 502 VALUES BELOW																																			
NS SEE DASH 508 VALUES BELOW																																			
NS SEE DASH 508 VALUES BELOW																																			
	NA	.093	.031	.06	.093	▨	.093	.858	.608	.484	.358	.733	.077	.116	.062	.937	.875	1.343	.125	.781	1.892	.046	NA	NA	.209	.093	.250	1.875	NA	1.840	.046	.23	.16	1.938		
NS SEE DASH 508 VALUES BELOW																																			
NS SEE DASH 508 VALUES BELOW																																			
[illegible] VALUES BELOW																																			
NS SEE DASH 500 VALUES BELOW																																			
	1.375	.078	.048	.078	.093	NA	NA	1.125	.750	.593	.453	1.015	.062	.187	.078	.875	.718	1.375	.218	NA	NA	.048	.031	.875	.305	.078	.531	1.906	.078	NA	.078	.531	.187	NA		
NS SEE DASH 500 VALUES BELOW																																			
	NA	.093	.031	.06	.093	▨	.093	.858	.608	.484	.358	.733	.077	.116	.062	.937	.875	1.343	.125	.781	1.892	.046	NA	NA	.209	.093	.250	1.875	NA	1.840	.046	.23	.16	1.938		
	NA	.093	.031	.06	.093		.093	.858	.608	.484	.358	.733	.077	.116	.062	.937	.875	1.343	.125	.781	1.892	.046	NA	NA	.209	.093	.250	1.875	NA	1.840	.046	.23	.16	1.938		
	NA	.093	.031	.06	.093		.093	.858	.608	.484	.358	.733	.077	.116	.062	.937	.875	1.343	.125	.781	1.892	.046	NA	NA	.209	.093	.250	1.875	NA	1.840	.046	.23	.16	1.938		
	NA	.093	.031	.06	.093		.093	.858	.608	.484	.358	.733	.077	.116	.062	.937	.875	1.343	.125	.781	1.892	.046	NA	NA	.209	.093	.250	1.875	NA	1.840	.046	.23	.16	1.938		
	NA	.093	.031	.06	.093	▨	.093	.858	.608	.484	.358	.733	.077	.116	.062	.937	.875	1.343	.125	.781	1.892	.046	NA	NA	.209	.093	.250	1.875	NA	1.840	.046	.23	.16	1.938		
NS SEE DASH 530 VALUES BELOW																																			
	NA	.125	.062	.12	.156	▨	.125	1.625	1.140	.890	.640	1.390	.125	.171	.125	1.875	1.687	2.625	.250	1.562	3.843	.093	NA	NA	.359	.125	.437	3.688	NA	3.687	.093	.40	.25	3.875		

AC ELECTRONICS DASH NUMBERS

AS APPLICABLE	
NEXT ASSY	USED ON
APPLICATION	

UNLESS OTHERWISE SPECIFIED
DIMENSIONS ARE IN INCHES
TOLERANCES ON
2 PLACE DECIMALS ±
3 PLACE DECIMALS ± .005
ANGLES ± —
DO NOT SCALE THIS DRAWING
MATERIAL
SEE NOTE 11
APPROVAL

MIT
INSTRUMENTATION LAB
CAMBRIDGE MASS
DWG NO
CONTRACT
DRAWN R.A. JONES DATE 16 JUL 65
CHECKED W. KUPFER 22 JUL 65
APPROVAL
CONTRACT
T. MICHAELS 22 JUL 65
NASA APPROVAL
W. KUPFER 22 JUL 65
MIT APPROVAL

MANNED
SPACECRAFT CENTER
HOUSTON, TEXAS

NAMEPLATES, APOLLO G&N - GSE (STANDARDS)

SIZE J2 CODE IDENT NO. 80230 1004260
SCALE NONE SHEET 6 OF 6

[illegible]

NOTES:

1. INTERPRET DRAWING IN ACCORDANCE WITH STANDARDS PRESCRIBED BY MIL-D-70327.
2. DIMENSIONS ON EACH VIEW APPLY TO ALL VIEWS (WITH THE EXCEPTION OF MOUNTING HOLES).
3. FORMATS ILLUSTRATED WILL BE APPLICABLE TO ALL ITEMS REQUIRING NAMEPLATES BELOW END ITEM DESIGNATION (SYSTEMS, ASSEMBLIES, ETC.)
4. PLATE BACKGROUND TO BE LUSTERLESS BLACK PER FED-STD-595, COLOR 37038. BORDER, MARKING AND LETTERING TO BE NATURAL METAL, (ANODIZED ALUMINUM).
5. MARKING METHOD TO BE DIE STAMPING, ETCHING OR ENGRAVING IN ACCORDANCE WITH MIL-P-19834.
6. LETTERING STYLE TO BE GOTHIC, (SANS SERIFS), AND NUMBERS TO BE ARABIC.
7. WHERE LOCATING DIMENSIONS ARE NOT SHOWN, CHARACTERS SHALL BE SYMMETRICALLY POSITIONED.
8. IDENTIFY WITH DRAWING NUMBER PER ND 1002019.
9. WHEN "AUTO MARK" METAL MARKING TYPEWRITER IS USED TO ADD DATA TO BLANK SPACES, TYPE SIZE IS TO BE SELECTED FROM DIMENSIONS U, AC, AND AM.
10. NASA SYMBOL IS TO BE PROPORTIONAL TO NAMEPLATE IN RATIO OF 1 TO 5 WITH DIMENSION A VALUE AND IS TO HAVE NATURAL BACKGROUND. NASA SYMBOL LETTERS LETTERING AND FEATHER TO BE BLACK, (OR WHITE FOR SILK SCREENING). WHERE BLACK FEATHER PROTRUDES INTO BLACK BACKGROUND, A MINIMUM OUTLINE OF NATURAL BACKGROUND SHALL EXIST.
11. NAMEPLATES WILL BE APPLIED BY METHODS LISTED BELOW, SHOWN IN ORDER OF PREFERENCE, (I.E., FOR RELIABILITY AND WEIGHT).
    A - STENCIL OR SILK SCREEN DIRECTLY ON EQUIPMENT USING INK PER SCD 1010920, (WHITE OR BLACK).
    B - ALUMINUM FOIL, (STYLE A OR B, TYPE I):
    FOIL SHALL BE .0030 ± .0005 THICK PER MIL-A-148.
    FOIL SHALL HAVE NO ADHESIVE BACKING.
    FOIL SHALL BE BONDED PER ND 1002219, (METHOD II).
    FOIL SHALL BE CLEAR ANODIZED PER MIL-A-8625, TYPE II.
    C - PLATE, (STYLE A OR B, TYPE II):
    MATERIAL: QQ-A-250, TEMPER 0 OR H14, TYPE 1100, ALUMINUM ALLOY, .032 THICK. ANODIZE PER MIL-A-8625, TYPE II.
    ALUMINUM PLATE MUST BE FREE FROM BURRS AND SHARP CORNERS, MOUNTED WITH APPLICABLE SIZE FASTENERS.
12. NAMEPLATES SHALL BE CAPABLE OF MEETING APPLICABLE REQUIREMENTS OF MIL-M-13231.
13. ON DIMENSION TABLES SHOWN ON PAGES 2, 3, 4, 5, AND 6, NA MEANS, "NOT APPLICABLE".

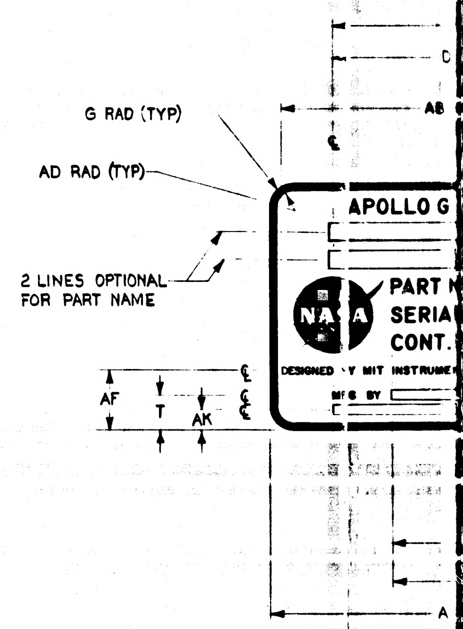

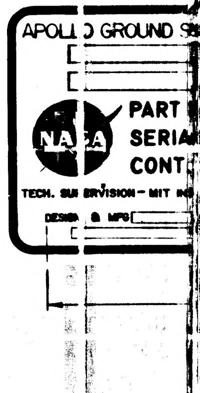

WITHOUT

SUGGESTED PROPORTIONS FOR NAMEPLATE DIMENSIONS.
1. SELECT NAMEPLATE LENGTH, DIMENSION "A", TO FIT DESIGN NEEDS.
2. DIMENSIONS B THRU AS ON LINE 1 BELOW ARE PROPORTIONAL TO "A" BY MULTIPLIERS SHOWN IN LINE 2 BELOW.

1.	A	B	C	D	E	F	G	H	J	K	L	M	N	P	R	S	T	U	V	W
2.	1.000A	.6563A	.8438A	.6875A	.0391A	.0240A	.0391A	.0469A	.0547A	.0469A	.5938A	.3750A	.2969A	.2187A	.5079A	.0313A	.0938A	.0391A	.4375A	.3594A

1.	Y	Z	AA	AB	AC	AD	AE	AF	AG	AH	AJ	AK	AL	AM	AN	AP	AR	AS
2.	.6875A	.1094A	.5781A	.9219A	.0240A	.0156A	.4375A	.1525A	.0391A	.1563A	.8438A	.0548A	.8659A	.0391A	.1563A	.0938A	.9219A	.0151A

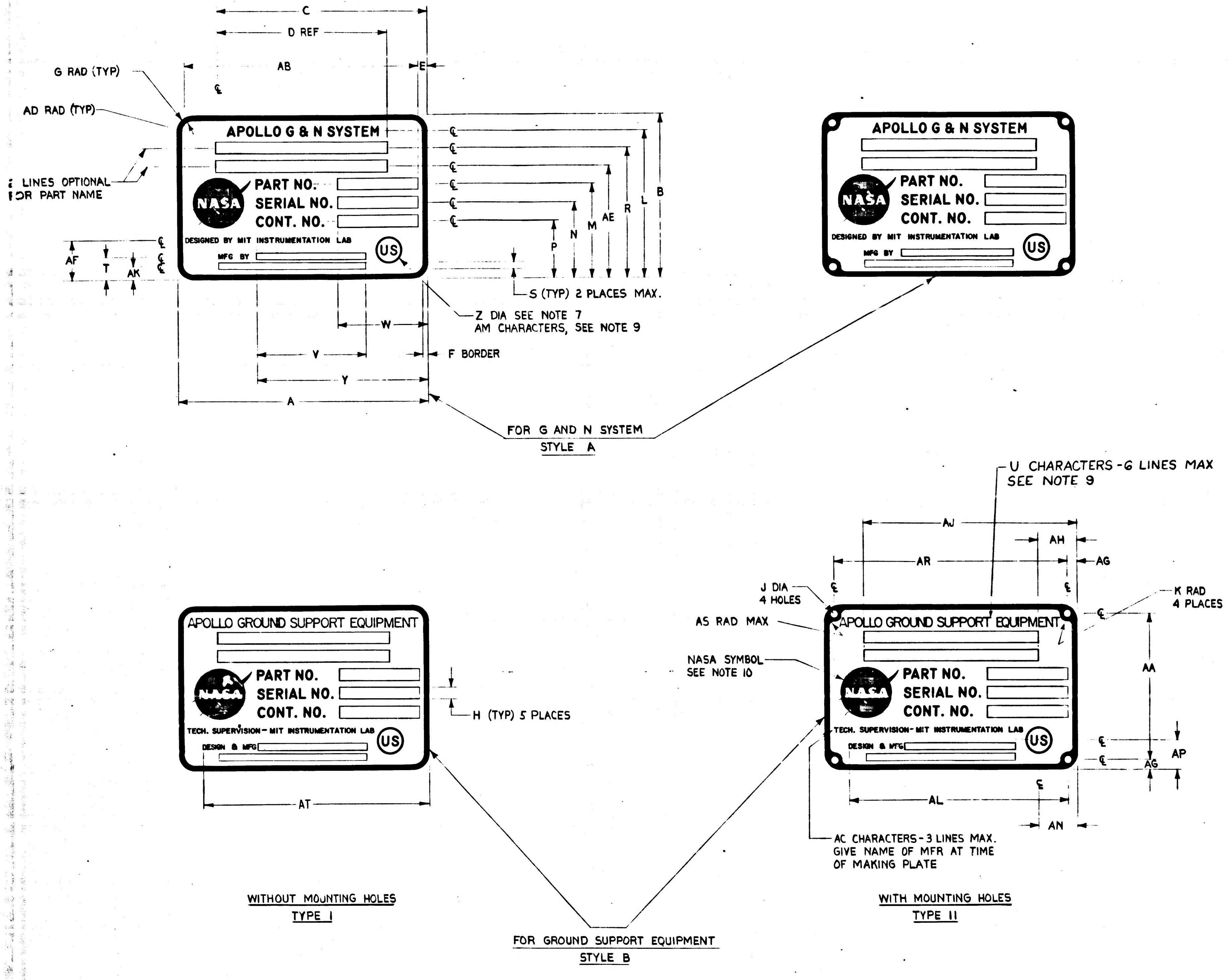
C
D REF
AB
E
G RAD (TYP)
AD RAD (TYP)
LINES OPTIONAL
OR PART NAME
APOLLO G & N SYSTEM
PART NO.
SERIAL NO.
CONT. NO.
NASA
DESIGNED BY MIT INSTRUMENTATION LAB
MFG BY
US
AF
T
AK
P
N
M
AE
R
L
B
S (TYP) 2 PLACES MAX.
Z DIA SEE NOTE 7
AM CHARACTERS, SEE NOTE 9
W
V
F BORDER
Y
A
FOR G AND N SYSTEM
STYLE A
U CHARACTERS - 6 LINES MAX
SEE NOTE 9
AJ
AH
AR
AG
J DIA
4 HOLES
K RAD
4 PLACES
AS RAD MAX
APOLLO GROUND SUPPORT EQUIPMENT
NASA SYMBOL
SEE NOTE 10
AA
H (TYP) 5 PLACES
TECH. SUPERVISION - MIT INSTRUMENTATION LAB
DESIGN & MFG
AP
AG
AL
AN
AT
AC CHARACTERS - 3 LINES MAX.
GIVE NAME OF MFR AT TIME
OF MAKING PLATE
WITHOUT MOUNTING HOLES
TYPE I
WITH MOUNTING HOLES
TYPE II
FOR GROUND SUPPORT EQUIPMENT
STYLE B

REVISIONS					
SYM	ZONE	DESCRIPTION	CHG NO	DATE	APPD
CL		REPLACES REV CK WITHOUT CHANGE PER TDRR 34365		9/28/67	JWL RWH
CM		REVISION STATUS CHANGED		18 OCT 67	R.A.W.
CN		REVISION STATUS CHANGED		31 OCT 67	JRK
CP		REVISION STATUS CHANGED		6 NOV 67	EMS
CR		REVISION STATUS CHANGED		7 DEC 67	DKD RWH
CS		REVISION STATUS CHANGED		3 JAN 68	J.W. EHW
CT		REVISION STATUS CHANGED		7 FEB 68	LK
CU		REVISION STATUS CHANGED		22 FEB 68	JRK
CV		REVISION STATUS CHANGED		27 FEB 68	LK
CW		REVISION STATUS CHANGED		3 APR 68	MTY
CY		REVISION STATUS CHANGED		16 APR 68	A.N.
CZ		REVISION STATUS CHANGED		23 MAY 68	MTY
DA		REVISION STATUS CHANGED		17 JUN 68	MTY
DB		REVISION STATUS CHANGED		12 SEP 68	RWH
DC		REVISION STATUS CHANGED		16 DEC 68	LK
DD		REVISION STATUS CHANGED		30 DEC 68	MTY
DE		REVISED PER TDRR 37251		23 JAN 69	
DF		REVISION STATUS CHANGED		27 JAN 69	LK RWH
DG		REVISION STATUS CHANGED		27 SEP 69	DKD

AS APPLICABLE	
NEXT ASSY	USED ON
APPLICATION	

UNLESS OTHERWISE SPECIFIED
DIMENSIONS ARE IN INCHES
TOLERANCES ON
2 PLACE DECIMALS ± 3 PLACE DECIMALS ± .005 ANGLES ± —
DO NOT SCALE THIS DRAWING
MATERIAL SEE NOTE 11
APPROVAL

MIT
INSTRUMENTATION LAB
CAMBRIDGE, MASS
DRAWN R.A. JONES DATE 16 JUL 65
CHECKED
APPROVAL W. KUPFER 22 JUL 65
CONTRACT
NASA APPROVAL T. MICHAELS 22 JUL 65
MIT APPROVAL W. KUPFER 22 JUL 65

MANNED
SPACECRAFT CENTER
HOUSTON, TEXAS

NAMEPLATES, APOLLO G&N - GSE (STANDARDS)

SIZE J2 CODE IDENT NO. 80230 1004260
SCALE NONE SHEET 1 OF 6

1004260 DG

1004260

0854001
SHEET 1 OF 6

1004260 DG SHT 1

2/1004260

NOTICE – WHEN GOVERNMENT DRAWINGS, SPECIFICATIONS, OR OTHER DATA ARE USED FOR ANY PURPOSE OTHER THAN IN CONNECTION WITH A DEFINITELY RELATED GOVERNMENT PROCUREMENT OPERATION, THE UNITED STATES GOVERNMENT THEREBY INCURS NO RESPONSIBILITY NOR ANY OBLIGATION WHATSOEVER; AND THE FACT THAT THE GOVERNMENT MAY HAVE FORMULATED, FURNISHED, OR IN ANY WAY SUPPLIED THE SAID DRAWINGS, SPECIFICATIONS, OR OTHER DATA IS NOT TO BE REGARDED BY IMPLICATION OR OTHERWISE AS IN ANY MANNER LICENSING THE HOLDER OR ANY OTHER PERSON OR CORPORATION, OR CONVEYING ANY RIGHTS OR PERMISSION TO MANUFACTURE, USE, OR SELL ANY PATENTED INVENTION THAT MAY IN ANY WAY BE RELATED THERETO

DASH NO.	P/C	PART NAME	REMARKS	PART NUMBER	SER. NO.	CONT. NO.	STYLE	TYPE	MATERIAL	A	B	C	D	E	F	G	H	J	K	L	M	N
399	K																					
398	K																					
350	K	ALIGNMENT OPTICAL TELESCOPE (LEM)		NA	NA	NA	A	I	NOTE 11B	4.000	2.625	3.375	2.750	.156	.093	.156	.187	NA	NA	2.312	1.468	1.187
309	K																					
308	K																					
307	K						B	I	NOTE 11B	4.000	2.625	3.375	2.750	.156	.093	.156	.187	NA	NA	2.328	1.468	1 18
306	K						B	II	NOTE 11C	4.000	2.625	3.375	2.750	.156	.093	.156	.187	.125	.156	2.328	1.468	1 18
305	K						B	I	NOTE 11B	2.000	1.312	1.687	1.375	.078	.048	.078	.093	NA	NA	1.164	.734	59
304	K						B	II	NOTE 11C	2.000	1.312	1.687	1.375	.078	.048	.078	.093	.070	.078	1.164	.734	59
303	K																					
302	K																					
301	K																					
300	K	OPTICAL UNIT		NA	NA	NA	A	I	NOTE 11B	2.000	1.312	1.675	NA	NA	.048	.078	NA	NA	NA	1.090	.812	67
9	K	2 IN AUTOCOLLIMATOR		1001702			B	II	NOTE 11C	4.000	2.625	3.812	2.750	.156	.093	.156	.187	.125	.156	2.250	1.500	1 1
8	K	5 IN AUTOCOLLIMATOR		1017410			B	II	NOTE 11C	4.000	2.625	3.812	2.750	.156	.093	.156	.187	.125	.156	2.250	1.500	1 1
7	K	2-1/2 IN AUTOCOLLIMATOR (SCT)		1017435			B	II	NOTE 11C	4.000	2.625	3.812	2.750	.156	.093	.156	.187	.125	.156	2.250	1.500	1 18
6	K	2-1/2 IN AUTOCOLLIMATOR (SXT)		1017448			B	II	NOTE 11C	4.000	2.625	3.812	2.750	.156	.093	.156	.187	.125	.156	2.250	1.500	1 1
5	K	RETROREFLECTING PRISM ASSEMBLY		1019840			B	I	NOTE 11B	4.000	2.625	3.812	2.750	.156	.093	.156	.187	NA	NA	2.250	1.500	1 1
4	K	S/H SIMULATOR ASSEMBLY		1019896			B	I	NOTE 11B	4.000	2.625	3.812	2.750	.156	.093	.156	.187	NA	NA	2.250	1.500	1 1
3	K	REFERENCE MIRROR		1001767			B	I	NOTE 11B	2.000	1.312	1.906	1.375	.078	.048	.078	.093	NA	NA	1.125	.750	5
2	K	2 IN PLANE READING AUTOCOLLIMATOR		1017413			B	I	NOTE 11B	2.000	1.312	1.906	1.375	.078	.048	.078	.093	NA	NA	1.125	.750	5
1	K	2 IN AUTOCOLLIMATOR		1001702			B	I	NOTE 11B	2.000	1.312	1.906	1.375	.078	.048	.078	.093	NA	NA	1.125	.750	5

NOTES FOR TABLE

STYLE A IS FOR G & N SYSTEM
STYLE B IS FOR GROUND SUPPORT EQUIPMENT
TYPE I IS WITHOUT MOUNTING HOLES
TYPE II IS WITH MOUNTING HOLES

SYM	ZONE	DESCRIPTION	CHG NO	DATE	APPD
REVISIONS					
CL		REPLACES REV CK WITHOUT CHANGE PER TDRR 34365		9/28/67	JWL RWH
CM		REVISION STATUS CHANGED		18 OCT 67	R.A.W.
CN		REVISION STATUS CHANGED		31 OCT 67	JRK
CP		REVISION STATUS CHANGED		6 NOV 67	EMS
CR		REVISION STATUS CHANGED		7 DEC 67	DKD RWH
CS		REVISION STATUS CHANGED		3 JAN 68	J.W. EHW
CT		REVISION STATUS CHANGED		7 FEB 68	LK RWH
CU		REVISION STATUS CHANGED		22 FEB 68	JRK
CV		REVISION STATUS CHANGED		27 FEB 68	LK
CW		REVISION STATUS CHANGED		3 APR 68	MTY
CY		REVISION STATUS CHANGED		16 APR 68	A.N.
CZ		REVISION STATUS CHANGED		23 MAY 68	MTY
DA		REVISION STATUS CHANGED		17 JUN 68	MTY
DB		REVISION STATUS CHANGED		12 SEP 68	
DC		REVISION STATUS CHANGED		16 DEC 68	LK
DD		REVISION STATUS CHANGED		30 DEC 68	MTY
DE		REVISION STATUS CHANGED		23 JAN 69	
DF		REVISION STATUS CHANGED		27 JAN 69	LK RWH
DG		REVISION STATUS CHANGED		26 SEP 69	DKD

.156	.093	.156	.187	NA	NA	2.312	1.468	1.187	.906	2.031	NA	.375	.156	NA	1.437	2.750	.437	NA	3.688	.062	.062	1.750	.593	NA	.625	3.375	.187	NA	.156	.531	.453	NA
[illegible]	.093	.156	.187	NA	NA	2.328	1.468	1.187	.906	2.031	.062	.375	.156	NA	1.437	2.750	.437	NA	3.687	.062	.062	1.750	.593	NA	NA	NA	NA	NA	NA	NA	NA	NA
[illegible]	.093	.156	.187	.125	.156	2.328	1.468	1.187	.906	2.031	.062	.375	.156	NA	1.437	2.750	.437	2.312	3.687	.062	NA	1.750	.593	NA	NA	NA	NA	NA	NA	NA	NA	NA
[illegible]	.048	.078	.093	NA	NA	1.164	.734	.593	.453	1.015	.048	.171	.078	NA	.718	1.375	.187	NA	NA	.048	.031	.875	.320	NA	NA	NA	NA	NA	NA	NA	NA	NA
[illegible]	.048	.078	.093	.070	.078	1.164	.734	.593	.453	1.015	.048	.171	.078	NA	.718	1.375	.187	.156	1.843	.048	NA	.875	.320	NA	NA	NA	NA	NA	NA	NA	NA	NA
[illegible]	.048	.078	NA	NA	NA	1.090	.812	.675	.540	.940	NA	.265	NA	NA	NA	1.375	.218	NA	NA	NA	NA	NA	.375	NA	NA	NA	.180	NA	.078	NA	NA	NA
[illegible]	.093	.156	.187	.125	.156	2.250	1.500	1.187	.906	2.031	.093	.375	.156	1.750	1.437	2.750	.437	2.312	3.687	.062	NA	1.750	.593	.156	1.062	3.812	.156	NA	.156	1.062	.375	3.687
[illegible]	.093	.156	.187	.125	.156	2.250	1.500	1.187	.906	2.031	.093	.375	.156	1.750	1.437	2.750	.437	2.312	3.687	.062	NA	1.750	.593	.156	1.062	3.812	.156	NA	.156	1.062	.375	3.687
[illegible]	.093	.156	.187	.125	.156	2.250	1.500	1.187	.906	2.031	.093	.375	.156	1.750	1.437	2.750	.437	2.312	3.687	.062	NA	1.750	.593	.156	1.062	3.812	.156	NA	.156	1.062	.375	3.687
[illegible]	.093	.156	.187	.125	.156	2.250	1.500	1.187	.906	2.031	.093	.375	.156	1.750	1.437	2.750	.437	2.312	3.687	.062	NA	1.750	.593	.156	1.062	3.812	.156	NA	.156	1.062	.375	3.687
[illegible]	.093	.156	.187	NA	NA	2.250	1.500	1.187	.906	2.031	.093	.375	.156	1.750	1.437	2.750	.437	NA	NA	.062	.062	1.750	.593	.156	1.062	3.812	.156	NA	.156	1.062	.375	NA
[illegible]	.093	.156	.187	NA	NA	2.250	1.500	1.187	.906	2.031	.093	.375	.156	1.750	1.437	2.750	.437	NA	NA	.062	.062	1.750	.593	.156	1.062	3.812	.156	NA	.156	1.062	.375	NA
[illegible]	.048	.078	.093	NA	NA	1.125	.750	.593	.453	1.015	.062	.187	.078	.875	.718	1.375	.218	NA	NA	.048	.031	.875	.305	.078	.531	1.906	.078	NA	.078	.531	.187	NA
[illegible]	.048	.078	.093	NA	NA	1.125	.750	.593	.453	1.015	.062	.187	.078	.875	.718	1.375	.218	NA	NA	.048	.031	.875	.305	.078	.531	1.906	.078	NA	.078	.531	.187	NA
[illegible]	.048	.078	.093	NA	NA	1.125	.750	.593	.453	1.015	.062	.187	.078	.875	.718	1.375	.218	NA	NA	.048	.031	.875	.305	.078	.531	1.906	.078	NA	.078	.531	.187	NA
		G	H	J	K	L	M	N	P	R	S	T	U	V	W	Y	Z	AA	AB	AC	AD	AE	AF	AG	AH	AJ	AK	AL	AM	AN	AP	AR

KOLLSMAN DASH NUMBERS

AS APPLICABLE	
NEXT ASSY	USED ON
APPLICATION	

UNLESS OTHERWISE SPECIFIED
DIMENSIONS ARE IN INCHES
TOLERANCES ON
2 PLACE DECIMALS ± 3 PLACE DECIMALS ± .005 ANGLES ± —
DO NOT SCALE THIS DRAWING
MATERIAL SEE NOTE II
APPROVAL

MIT
INSTRUMENTATION LAB
CAMBRIDGE MASS
DWG NO CONTRACT
DRAWN R.A. JONES DATE 16 JUL 65
CHECKED
APPROVAL W. KUPFER 22 JUL 65
CONTRACT
NASA APPROVAL T. MICHAELS 22 JUL 65
MIT APPROVAL W. KUPFER 22 JUL 65

MANNED
SPACECRAFT CENTER
HOUSTON, TEXAS

NAMEPLATES,
APOLLO G&N - GSE
(STANDARDS)

SIZE J2 CODE IDENT NO. 80230 1004260
SCALE NONE SHEET 2 OF 6

1004260 DG SHT 2

DASH NO.	P/C	PART NAME	REMARKS	PART NUMBER	SER. NO.	CONT. NO.	STYLE	TYPE	MATERIAL	A	B	C	D	E	F	G	H	J	K	L	M	N
299	R																					
298	R																					
293	R	COMPUTER TEST SET		2014042-081	NA	NAS-9-497	B	II	NOTE 11C	FOR DIMENSIONS SEE DASH 18 VALUES BELOW												
292	R	DRAWER ASSY - PROGRAM & MONITOR		2014041-071	NA	NAS-9-497	B	I	NOTE 11B	FOR DIMENSIONS SEE DASH 17 VALUES BELOW												
291	R	BUFFER CIRCUIT ASSY		2014254-041	NA	NAS-9-497	B	I	NOTE 11B	FOR DIMENSIONS SEE DASH 15 VALUES BELOW												
290	R	LOGIC DRAWER ASSY NO 2		2014037-051	NA	NAS-9-497	B	I	NOTE 11B	FOR DIMENSIONS SEE DASH 17 VALUES BELOW												
289	R	SELF TEST ASSY		2014392-021	NA	NAS-9-497	B	I	NOTE 11B	FOR DIMENSIONS SEE DASH 15 VALUES BELOW												
288	R	LOGIC DRAWER ASSY NO.1		2014036-051	NA	NAS-9-497	B	I	NOTE 11B	FOR DIMENSIONS SEE DASH 17 VALUES BELOW												
287	R	COMPUTER TEST SET		2014042-071	NA	NAS-9-497	B	II	NOTE 11C	FOR DIMENSIONS SEE DASH 18 VALUES BELOW												
286	R	DRAWER ASSY PROGRAM & MONITOR		2014041-061	NA	NAS-9-497	B	I	NOTE 11B	FOR DIMENSIONS SEE DASH 17 VALUES BELOW												
285	R	BUFFER CIRCUIT ASSY		2014254-031	NA	NAS-9-497	B	I	NOTE 11B	FOR DIMENSIONS SEE DASH 15 VALUES BELOW												
284	R	LOGIC DRAWER ASSY NO. 2		2014037-041	NA	NAS-9-497	B	I	NOTE 11B	FOR DIMENSIONS SEE DASH 17 VALUES BELOW												
283	R	DRAWER ASSY-PROGRAM & MONITOR		2014041-051	NA	NAS-9-497	B	I	NOTE 11B	FOR DIMENSIONS SEE DASH 17 VALUES BELOW												
282	R	COMPUTER TEST SET		2014042-061	NA	NAS-9-497	B	II	NOTE 11C	FOR DIMENSIONS SEE DASH 18 VALUES BELOW												
281	R	AGC HANDLING FIXTURE		2014282-031	NA	NAS-9-497	B	I	NOTE 11B	FOR DIMENSIONS SEE DASH 17 VALUES BELOW												
280	R	COMPUTER TEST SET		2014042-051	NA	NAS-9-497	B	II	NOTE 11C	FOR DIMENSIONS SEE DASH 18 VALUES BELOW												
279	R	SELF TEST ASSY		2014366-041	NA	NAS-9-497	B	I	NOTE 11B	FOR DIMENSIONS SEE DASH 15 VALUES BELOW												
278	R	LOGIC DRAWER ASSY NO. 1		2014036-041	NA	NAS-9-497	B	I	NOTE 11B	FOR DIMENSIONS SEE DASH 17 VALUES BELOW												
277	R	COMPUTER TEST SET		2014042-041	NA	NAS-9-497	B	II	NOTE 11C	FOR DIMENSIONS SEE DASH 18 VALUES BELOW												
276	R	DRAWER ASSY-PROGRAM & MONITOR		2014041-041	NA	NAS-9-497	B	I	NOTE 11B	FOR DIMENSIONS SEE DASH 17 VALUES BELOW												
275	R	DRAWER ASSY RDC INTERFACE		2014045-031	NA	NAS-9-497	B	I	NOTE 11B	FOR DIMENSIONS SEE DASH 15 VALUES BELOW												
274	R	SELF TEST ASSY		2014366-031	NA	NAS-9-497	B	I	NOTE 11B	FOR DIMENSIONS SEE DASH 15 VALUES BELOW												
273	R	LOGIC DRAWER ASSY NO. 2		2014037-031	NA	NAS-9-497	B	I	NOTE 11B	FOR DIMENSIONS SEE DASH 17 VALUES BELOW												
272	R	DRAWING ASSY PROGRAMMER & MONITOR		2014041-031	NA	NAS-9-497	B	I	NOTE 11B	FOR DIMENSIONS SEE DASH 17 VALUES BELOW												
271	R	LOGIC DRAWER ASSY NO. 1		2014036-031	NA	NAS-9-497	B	I	NOTE 11B	FOR DIMENSIONS SEE DASH 17 VALUES BELOW												
270	R	COMPUTER TEST SET		2014042-031	NA	NAS-9-497	B	II	NOTE 11C	FOR DIMENSIONS SEE DASH 18 VALUES BELOW												
269	R	POWER CONTROL ASSY		2014044-021	NA	NAS-9-497	B	I	NOTE 11B	FOR DIMENSIONS SEE DASH 17 VALUES BELOW												
268	R	SELF TEST ASSY		2014366-021	NA	NAS-9-497	B	I	NOTE 11B	FOR DIMENSIONS SEE DASH 15 VALUES BELOW												
267	R	AGC JUNCTION ASSY		2014341-021	NA	NAS-9-497	B	I	NOTE 11B	FOR DIMENSIONS SEE DASH 15 VALUES BELOW												
266	R	POWER CONTROL ASSY		2014079-021	NA	NAS-9-497	B	I	NOTE 11B	FOR DIMENSIONS SEE DASH 15 VALUES BELOW												
265	R	BUFFER CIRCUIT ASSY		2014254-021	NA	NAS-9-497	B	I	NOTE 11B	FOR DIMENSIONS SEE DASH 15 VALUES BELOW												
264	R	DRAWER ASSY X Y INTERFACE		2014040-021	NA	NAS-9-497	B	I	NOTE 11B	FOR DIMENSIONS SEE DASH 15 VALUES BELOW												
263	R	DRAWER ASSY RDC INTERFACE		2014045-021	NA	NAS-9-497	B	I	NOTE 11B	FOR DIMENSIONS SEE DASH 15 VALUES BELOW												
262	R	DRAWER ASSY PROGRAMMER & MONITOR		2014041-021	NA	NAS-9-497	B	I	NOTE 11B	FOR DIMENSIONS SEE DASH 17 VALUES BELOW												
261	R	LOGIC DRAWER ASSY NO. 2		2014037-021	NA	NAS-9-497	B	I	NOTE 11B	FOR DIMENSIONS SEE DASH 17 VALUES BELOW												
260	R	LOGIC DRAWER ASSY NO. 1		2014036-021	NA	NAS-9-497	B	I	NOTE 11B	FOR DIMENSIONS SEE DASH 17 VALUES BELOW												
259	R	OPERATION CONSOLE		2014024-021	NA	NAS-9-497	B	II	NOTE 11C	FOR DIMENSIONS SEE DASH 18 VALUES BELOW												
258	R	COMPUTER TEST SET		2014042-021	NA	NAS-9-497	B	II	NOTE 11C	FOR DIMENSIONS SEE DASH 18 VALUES BELOW												
257	R	AUXILIARY CALIBRATION CONSOLE		2014059-021	NA	NAS-9-497	B	II	NOTE 11C	FOR DIMENSIONS SEE DASH 18 VALUES BELOW												
256	R	AGC CALIBRATION CONSOLE		2014049-021	NA	NAS-9-497	B	II	NOTE 11C	FOR DIMENSIONS SEE DASH 18 VALUES BELOW												
255	R	AGC HANDLING FIXTURE		2014282-021	NA	NAS-9-497	B	I	NOTE 11B	FOR DIMENSIONS SEE DASH 17 VALUES BELOW												
254	R	DRAWER ASSY COMP. SIMULATOR		2014048-011	NA	NAS-9-497	B	II	NOTE 11C	FOR DIMENSIONS SEE DASH 18 VALUES BELOW												
253	R	SHIPPING KIT ASSY, NAV DSKY		2016312-011	NA	NAS-9-497	B	II	NOTE 11C	FOR DIMENSIONS SEE DASH 18 VALUES BELOW												
252	R	SHIPPING KIT ASSY, UNIVERSAL DSKY		2016316-011	NA	NAS-9-497	B	II	NOTE 11C	FOR DIMENSIONS SEE DASH 18 VALUES BELOW												
251	R	SHIPPING KIT ASSY, MAIN DSKY		2016313-011	NA	NAS-9-497	B	II	NOTE 11C	FOR DIMENSIONS SEE DASH 18 VALUES BELOW												
250	R	AMPLIFIER, REWORK		2014386	NA	NAS-9-497	B	I	NOTE 11B	FOR DIMENSIONS SEE DASH 15 VALUES BELOW												
249	R	TEMP MONITOR ASSY		2014313-011	NA	NAS-9-497	B	I	NOTE 11C	FOR DIMENSIONS SEE DASH 17 VALUES BELOW												
248	R	AGC JUNCTION ASSY		2014341-011	NA	NAS-9-497	B	I	NOTE 11B	FOR DIMENSIONS SEE DASH 15 VALUES BELOW												
247	R	AC INPUT PANEL ASSY		2014302-011	NA	NAS-9-497	B	I	NOTE 11B	FOR DIMENSIONS SEE DASH 15 VALUES BELOW												
246	R	SELF TEST ASSY		2014392-011	NA	NAS-9-497	B	I	NOTE 11B	FOR DIMENSIONS SEE DASH 15 VALUES BELOW												
245	R	TAPE PUNCH ASSEMBLY		2014039-011	NA	NAS-9-497	B	I	NOTE 11B	FOR DIMENSIONS SEE DASH 15 VALUES BELOW												
244	R	TAPE READER ASSEMBLY		2014038-011	NA	NAS-9-497	B	I	NOTE 11B	FOR DIMENSIONS SEE DASH 15 VALUES BELOW												
243																						
242																						
241	R	APOLLO GUIDANCE COMPUTER GROUP		6003001	NA	NAS-9-497	A	I	NOTE 11B	FOR DIMENSIONS SEE DASH 19 VALUES BELOW												
240	R	SELF TEST ASSEMBLY		2014366-011	NA	NAS-9-497	B	I	NOTE 11B	FOR DIMENSIONS SEE DASH 15 VALUES BELOW												
239	R	POWER SUPPLY ASSY-115V., 400 CYCLE		2014207-011	NA	NAS-9-497	B	I	NOTE 11B	FOR DIMENSIONS SEE DASH 17 VALUES BELOW												
238	R	AC INPUT PANEL ASSY		2014043-011	NA	NAS-9-497	B	I	NOTE 11B	FOR DIMENSIONS SEE DASH 17 VALUES BELOW												
237	R	POWER CONTROL ASSY		2014079-011	NA	NAS-9-497	B	I	NOTE 11B	FOR DIMENSIONS SEE DASH 15 VALUES BELOW												
236	R	DRAWER ASSY-X Y INTERFACE		2014040-011	NA	NAS-9-497	B	I	NOTE 11B	FOR DIMENSIONS SEE DASH 15 VALUES BELOW												
235	R	DRAWER ASSY RDC INTERFACE		2014045-011	NA	NAS-9-497	B	I	NOTE 11B	FOR DIMENSIONS SEE DASH 15 VALUES BELOW												
234	R	BUFFER CIRCUIT ASSY		2014254-011	NA	NAS-9-497	B	I	NOTE 11B	FOR DIMENSIONS SEE DASH 15 VALUES BELOW												
233	R	CONTROL & INTERFACE ASSY		2014204-011	NA	NAS-9-497	B	I	NOTE 11B	FOR DIMENSIONS SEE DASH 15 VALUES BELOW												
232	R	POWER CONTROL ASSY		2014044-011	NA	NAS-9-497	B	I	NOTE 11B	FOR DIMENSIONS SEE DASH 17 VALUES BELOW												
231	R	DRAWER ASSY, PROGRAMMER & MONITOR		2014041-011	NA	NAS-9-497	B	I	NOTE 11B	FOR DIMENSIONS SEE DASH 17 VALUES BELOW												
230	R	CONNECTOR INTERFACE ASSY		2014272-011	NA	NAS-9-497	B	I	NOTE 11B	FOR DIMENSIONS SEE DASH 15 VALUES BELOW												
229	R	CONNECTOR INTERFACE ASSY		2014047-011	NA	NAS-9-497	B	I	NOTE 11B	FOR DIMENSIONS SEE DASH 15 VALUES BELOW												
228	R	ANTENNA, TUNING CAPACITOR ASSY		2014209-011	NA	NAS-9-497	B	I	NOTE 11B	FOR DIMENSIONS SEE DASH 15 VALUES BELOW												
227	R	MOUNTING FIXTURE ASSY		2014006-011	NA	NAS-9-497	B	I	NOTE 11B	FOR DIMENSIONS SEE DASH 17 VALUES BELOW												
226	R	POWER SUPPLY ASSY 3 VDC		2014234-011	NA	NAS-9-497	B	I	NOTE 11B	FOR DIMENSIONS SEE DASH 15 VALUES BELOW												
225	R	PANEL ASSY—SIGNAL INTERFACE		2014010-011	NA	NAS-9-497	B	I	NOTE 11B	FOR DIMENSIONS SEE DASH 15 VALUES BELOW												
224	R	OSCILLOSCOPE ASSY		2014232-011	NA	NAS-9-497	B	I	NOTE 11B	FOR DIMENSIONS SEE DASH 15 VALUES BELOW												
223	R	AUXILIARY OUTLET ASSY		2014274-011	NA	NAS-9-497	B	I	NOTE 11B	FOR DIMENSIONS SEE DASH 15 VALUES BELOW												
222	R	FREQUENCY COUNTER		2014233-011	NA	NAS-9-497	B	I	NOTE 11B	FOR DIMENSIONS SEE DASH 15 VALUES BELOW												
221	R	POWER SUPPLY ASSY 10, 13, 28 VDC		2014235-011	NA	NAS-9-497	B	I	NOTE 11B	FOR DIMENSIONS SEE DASH 15 VALUES BELOW												
220	R	LOGIC DRAWER ASSY NO. 2		2014037-011	NA	NAS-9-497	B	I	NOTE 11B	FOR DIMENSIONS SEE DASH 17 VALUES BELOW												
219	R	LOGIC DRAWER ASSY NO. 1		2014036-011	NA	NAS-9-497	B	I	NOTE 11B	FOR DIMENSIONS SEE DASH 17 VALUES BELOW												
218	R	COUNTER, ELECTRICAL ASSY		2014288-011	NA	NAS-9-497	B	I	NOTE 11B	FOR DIMENSIONS SEE DASH 15 VALUES BELOW												
217	R	POWER SUPPLY ASSY		2014279-011	NA	NAS-9-497	B	I	NOTE 11B	FOR DIMENSIONS SEE DASH 15 VALUES BELOW												
216	R	TEST MOUNT ASSY		2014257-011	NA	NAS-9-497	B	I	NOTE 11B	FOR DIMENSIONS SEE DASH 15 VALUES BELOW												
215	R	UNIVERSAL DSKY PEDESTAL MOUNT		2014014-011	NA	NAS-9-497	B	I	NOTE 11B	FOR DIMENSIONS SEE DASH 17 VALUES BELOW												
214	R	MAIN DSKY PEDESTAL MOUNT		2014343	NA	NAS-9-497	B	I	NOTE 11B	FOR DIMENSIONS SEE DASH 17 VALUES BELOW												
213	R	SHIPPING CONTAINER, MAIN DSKY		1006229	NA	NAS-9-497	B	II	NOTE 11C	FOR DIMENSIONS SEE DASH 18 VALUES BELOW												
212	R	SHIPPING CONTAINER, NAV DSKY		1006231	NA	NAS-9-497	B	II	NOTE 11C	FOR DIMENSIONS SEE DASH 18 VALUES BELOW												
211	R	SHIPPING CONTAINER, AGC		1006230	NA	NAS-9-497	B	II	NOTE 11C	FOR DIMENSIONS SEE DASH 18 VALUES BELOW												
210	R	SHIPPING CONTAINER, UNIVERSAL DSKY		1006422	NA	NAS-9-497	B	II	NOTE 11C	FOR DIMENSIONS SEE DASH 18 VALUES BELOW												
209	R	SHIPPING CONTAINER, AGC		1006421	NA	NAS-9-497	B	II	NOTE 11C	FOR DIMENSIONS SEE DASH 18 VALUES BELOW												
208	R	UNIVERSAL DSKY HANDLING FIXTURE		2014013-011	NA	NAS-9-497	B	I	NOTE 11B	FOR DIMENSIONS SEE DASH 15 VALUES BELOW												
207	R	NAV DSKY HANDLING FIXTURE		1014377	NA	NAS-9-497	B	I	NOTE 11B	FOR DIMENSIONS SEE DASH 17 VALUES BELOW												
206	R	MAIN DSKY HANDLING FIXTURE		1014334	NA	NAS-9-497	B	I	NOTE 11B	FOR DIMENSIONS SEE DASH 17 VALUES BELOW												
205	R	AGC HANDLING FIXTURE		2014282-011	NA	NAS-9-497	B	I	NOTE 11B	FOR DIMENSIONS SEE DASH 17 VALUES BELOW												
204	R	OPERATION CONSOLE		2014024-011	NA	NAS-9-497	B	II	NOTE 11C	FOR DIMENSIONS SEE DASH 18 VALUES BELOW												
203	R	COMPUTER TEST SET		2014042-011	NA	NAS-9-497	B	II	NOTE 11C	FOR DIMENSIONS SEE DASH 18 VALUES BELOW												
202	R	DRAWER ASSY, COMPUTER SIMULATOR		2014048-011	NA	FNP-12775	B	II	NOTE 11C	FOR DIMENSIONS SEE DASH 18 VALUES BELOW												
201	R	AUXILIARY CALIBRATION CONSOLE		2014059-011	NA	NAS-9-497	B	II	NOTE 11C	FOR DIMENSIONS SEE DASH 18 VALUES BELOW												
200	R	AGC CALIBRATION CONSOLE		2014049-011	NA	NAS-9-497	B	II	NOTE 11C	FOR DIMENSIONS SEE DASH 18 VALUES BELOW												
21	R																					
20	R	NA		NA	NA	NA	A	II	NOTE 11C	2.000	1.312	1.687	1.375	.078	.031	.078	.093	[illegible] .113	.093	1.187	.750	.59
19	R	NA		NA	NA	NA	A	I	NOTE 11B	2.000	1.312	1.687	1.375	.078	.031	.078	.093	NA	NA	1.187	.750	.59
18	R	NA		NA	NA	NA	B	II	NOTE 11C	4.187	1.875	3.469	2.750	.156	.093	.156	.125	[illegible] .113	.125	1.625	1.032	.84
17	R	NA		NA	NA	NA	B	I	NOTE 11B	4.187	1.875	3.469	2.750	.156	.093	.156	.125	NA	NA	1.625	1.032	.84
16	R	NA		NA	NA	NA	B	II	NOTE 11C	2.000	1.312	1.687	1.375	.078	.031	.078	.093	[illegible] .113	.093	1.187	.750	.59
15	R	NA		NA	NA	NA	B	I	NOTE 11B	2.000	1.312	1.687	1.375	.078	.031	.078	.093	NA	NA	1.187	.750	.59

NOTES FOR TABLE

STYLE A IS FOR G & N SYSTEM
STYLE B IS FOR GROUND SUPPORT EQUIPMENT
TYPE I IS WITHOUT MOUNTING HOLES
TYPE II IS WITH MOUNTING HOLES

SYM	ZONE	DESCRIPTION	CHG NO	DATE	APPD
CL		REPLACES REV CK WITHOUT CHANGE PER TDRR 34365		9/28/67	JWL RWH
CM		REVISION STATUS CHANGED		18 OCT 67	R.A.W.
CN		REVISION STATUS CHANGED		31 OCT 67	JRK
CP		REVISION STATUS CHANGED		6 NOV 67	EMS
CR		REVISION STATUS CHANGED		7 DEC 67	OKD RWH
CS		REVISION STATUS CHANGED		3 JAN 68	JW EHW
CT		REVISED PER TDRR 35526		7 FEB 68	LK
CU		REVISION STATUS CHANGED		22 FEB 68	JRK
CV		REVISION STATUS CHANGED		27 FEB 68	LK
CW		REVISION STATUS CHANGED		8 APR 68	MTY
CY		REVISED PER TDRR 36028		16 APR 68	A.N.
CZ		REVISION STATUS CHANGED		23 MAY 68	MTY
DA		REVISION STATUS CHANGED		17 JUN 68	MTY
DB		REVISION STATUS CHANGED		13 SEP 68	RWD
DC		REVISION STATUS CHANGED		16 DEC 68	LK
DD		REVISION STATUS CHANGED		30 DEC 68	MTY
DE		REVISION STATUS CHANGED		23 JAN 69	
DF		REVISION STATUS CHANGED		27 JAN 69	LK RWH
DG		REVISION STATUS CHANGED		26 SEP 69	DKO

BELOW
BELOW
OW
OW
OW
OW
LOW
LOW
BELOW
BELOW
BELOW
BELOW
BELOW
BELOW
BELOW
BELOW
BELOW
BELOW
BELOW
BELOW
BELOW
BELOW
BELOW
BELOW
BELOW
BELOW
BELOW
BELOW
BELOW
BELOW
BELOW
BELOW
BELOW
BELOW
BELOW
BELOW
BELOW
BELOW
BELOW
BELOW
BELOW
BELOW
BELOW
BELOW
BELOW
BELOW
BELOW
BELOW
BELOW
BELOW

BELOW
BELOW
BELOW
BELOW
BELOW
BELOW
BELOW
BELOW
BELOW
BELOW
BELOW
BELOW
BELOW
BELOW
BELOW
BELOW
BELOW
BELOW
BELOW
BELOW
BELOW
BELOW
BELOW
BELOW
BELOW
BELOW
BELOW
BELOW
BELOW
BELOW
BELOW
BELOW
BELOW
BELOW
BELOW
BELOW
BELOW
BELOW
BELOW
BELOW
BELOW
BELOW

G	H	J	K	L	M	N	P	R	S	T	U	V	W	Y	Z	AA	AB	AC	AD	AE	AF	AG	AH	AJ	AK	AL	AM	AN	AP	AR
.078	.093	[illegible]	.093	1.187	.750	.593	.453	1.015	.062	.187	.078	.875	.718	1.375	.218	1.156	1.843	.048	NA	.875	.305	.078	.312	1.687	.078	NA	.078	.312	.187	1.843
.078	.093	NA	NA	1.187	.750	.593	.453	1.015	.062	.187	.078	.875	.718	1.375	.218	NA	NA	.048	.031	.875	.305	.078	.312	1.687	.078	NA	.078	.312	.187	NA
.156	.125	[illegible]	.125	1.625	1.032	.844	.656	1.406	.093	.344	.156	1.781	1.531	2.844	.312	1.562	3.875	.062	NA	1.219	.500	.156	.719	3.469	.156	NA	.156	.719	.344	3.875
.156	.125	NA	NA	1.625	1.032	.844	.656	1.406	.093	.344	.156	1.781	1.531	2.844	.312	NA	NA	.062	.062	1.219	.500	.156	.719	3.469	.156	NA	.156	.719	.344	NA
.078	.093	[illegible]	.093	1.187	.750	.593	.453	1.015	.062	.187	.078	.875	.718	1.375	.218	1.156	1.843	.048	NA	.875	.305	.078	.312	1.687	.078	NA	.078	.312	.187	1.843
.078	.093	NA	NA	1.187	.750	.593	.453	1.015	.062	.187	.078	.875	.718	1.375	.218	NA	NA	.048	.031	.875	.305	.078	.312	1.687	.078	NA	.078	.312	.187	NA

RAYTHEON DASH NUMBERS

AS APPLICABLE	
NEXT ASSY	USED ON
APPLICATION	

UNLESS OTHERWISE SPECIFIED
DIMENSIONS ARE IN INCHES
TOLERANCES ON
2 PLACE DECIMALS ± | 3 PLACE DECIMALS ± .005 | ANGLES ± —
DO NOT SCALE THIS DRAWING
MATERIAL
SEE NOTE 11
APPROVAL

MIT
INSTRUMENTATION LAB
CAMBRIDGE, MASS
DRAWN R.A. JONES DATE 16 JUL 65
CHECKED
APPROVAL W. KUPFER 22 JUL 65
CONTRACT
NASA APPROVAL T. MICHAELS 22 JUL 65
MIT APPROVAL W. KUPFER 22 JUL 65

MANNED
SPACECRAFT CENTER
HOUSTON, TEXAS

NAMEPLATES,
APOLLO G&N - GSE
(STANDARDS)

SIZE J2 | CODE IDENT NO 80230 | 1004260
SCALE NONE | SHEET 3 OF 6

1004260 DG

1004260

AC DASH NUMBERS CONTINUED ON SHEET 6

DASH NO.	P/C	PART NAME	REMARKS	PART NUMBER	SER. NO.	CONT. NO.	STYLE	TYPE	MATERIAL	A	B	C	D	E	F	G	H	J	K	L	M
199	AC	EYEPIECE STOWAGE UNIT		2021255-011			A	I		FOR DIMENSIONS SEE DASH 100 VALUES BELOW											
198	AC	SIGNAL CONDITIONER ASSY C/M		2007234		NAS-9-497	A	I	NOTE 11B	FOR DIMENSIONS SEE DASH 100 VALUES BELOW											
197	AC	SIGNAL CONDITIONER ASSY C/M		2007235		NAS-9-497	A	I	NOTE 11B	FOR DIMENSIONS SEE DASH 100 VALUES BELOW											
196	AC	SIGNAL CONDITIONER ASSY LEM		6007010		NAS-9-497	A	I	NOTE 11B	FOR DIMENSIONS SEE DASH 100 VALUES BELOW											
195	AC	PSA & SIGNAL CONDITIONER ASSY		6007009		NAS-9-497	A	I	NOTE 11B	FOR DIMENSIONS SEE DASH 100 VALUES BELOW											
194	AC	PANEL, MONITOR		2900031-031		NAS-9-497	B	II	NOTE 11C	FOR DIMENSIONS SEE DASH 141 VALUES BELOW											
193	AC	DISTRIBUTION BOX, GSE		2900024-031		NAS-9-497	B	II	NOTE 11C	FOR DIMENSIONS SEE DASH 141 VALUES BELOW											
192	AC	ANALYZER, OPTICS-INERTIAL		2900023-031		NAS-9-497	B	II	NOTE 11C	FOR DIMENSIONS SEE DASH 144 VALUES BELOW											
191	AC	TEST CONTROL		2900027-031		NAS-9-497	B	II	NOTE 11C	FOR DIMENSIONS SEE DASH 141 VALUES BELOW											
190	AC	PANEL, PWR SUP AND LOAD		2900033-021		NAS-9-497	B	II	NOTE 11C	FOR DIMENSIONS SEE DASH 141 VALUES BELOW											
189	AC	ADPT MODULE, P.S.A.		6900088-011		NAS-9-497	B	II	NOTE 11C	FOR DIMENSIONS SEE DASH 141 VALUES BELOW											
188	AC	ADPT MODULE, P.S.A.		2901143-011		NAS-9-497	B	II	NOTE 11C	FOR DIMENSIONS SEE DASH 141 VALUES BELOW											
187	AC	FIXTURE, MTG, PTA/PEA		2900066-021		NAS-9-497	B	II	NOTE 11C	FOR DIMENSIONS SEE DASH 141 VALUES BELOW											
186	AC	ANNUNCIATOR PANEL & EYEPIECE STORAGE ASSEMBLY		1021255-021			A	I		FOR DIMENSIONS SEE DASH 100 VALUES BELOW											
185	AC	ANNUNCIATOR PANEL & EYEPIECE STORAGE ASSEMBLY		1021255-011			A	I		FOR DIMENSIONS SEE DASH 100 VALUES BELOW											
184	AC	FIX., HAND., G AND N HARNESS		1901846-041		NAS-9-497	B	II	NOTE 11C	FOR DIMENSIONS SEE DASH 144 VALUES BELOW											
183	AC	INSTALLING TOOL, ELEC. CONN		1902586-011		NAS-9-497	B	II	NOTE 11C	FOR DIMENSIONS SEE DASH 102 VALUES BELOW											
182	AC	ADPT MODULE, P.S.A.		6900088-011		NAS-9-497	B	II	NOTE 11C	FOR DIMENSIONS SEE DASH 141 VALUES BELOW											
181	AC	G & N INDICATOR CONTROL PANEL ASSY		2014578-011		NAS-9-497	A	I	NOTE 11B	3.000	1.938	2.437	NA	.125	.062	.188	.156	NA	NA	1.750	1.125
180	AC	ADPT MODULE, P.S.A.		1902431-031		NAS-9-497	B	II		FOR DIMENSIONS SEE DASH 121 VALUES BELOW											
179	AC	MOUNTING PLATE, IMU/PTA		6900083-011		NAS-9-497	B	II		FOR DIMENSIONS SEE DASH 144 VALUES BELOW											
178	AC	MOUNTING PLATE, COMPONENT		6900007-021		NAS-9-497	B	II		FOR DIMENSIONS SEE DASH 144 VALUES BELOW											
177	AC	FIX., MOUNTING, SUBSYSTEM		2900070-021		NAS-9-497	B	II		FOR DIMENSIONS SEE DASH 144 VALUES BELOW											
176	AC	FIX., MOUNTING, G & N		2900067-021		NAS-9-497	B	II		FOR DIMENSIONS SEE DASH 144 VALUES BELOW											
175	AC	CSL, COOL. AND PWR, G & N		1902134-031		NAS-9-497	B	II		FOR DIMENSIONS SEE DASH 144 VALUES BELOW											
174	AC	FIX., HAND., C/M AND LEM CDU		2900999-011		NAS-9-497	B	II	NOTE 11C	FOR DIMENSIONS SEE DASH 141 VALUES BELOW											
173	AC	FIX., HANDLING, C/M PSA		2900998-011		NAS-9-497	B	II	NOTE 11C	FOR DIMENSIONS SEE DASH 141 VALUES BELOW											
172	AC	CAGING ELECTRONICS, GYRO		2900029-021		NAS-9-497	B	II	NOTE 11C	FOR DIMENSIONS SEE DASH 141 VALUES BELOW											
171	AC	DISTRIBUTION BOX, GSE		2900024-021		NAS-9-497	B	II	NOTE 11C	FOR DIMENSIONS SEE DASH 141 VALUES BELOW											
170	AC	ANALYZER, OPTICS-INERTIAL		2900023-021		NAS-9-497	B	II	NOTE 11C	FOR DIMENSIONS SEE DASH 144 VALUES BELOW											
169	AC	ADPT, TESTPOINT, P.S.A.		2900037-021		NAS-9-497	B	II	NOTE 11C	FOR DIMENSIONS SEE DASH 141 VALUES BELOW											
168	AC	TEST SELECTOR		2900028-021		NAS-9-497	B	II	NOTE 11C	FOR DIMENSIONS SEE DASH 141 VALUES BELOW											
167	AC	TEST CONTROL		2900027-021		NAS-9-497	B	II	NOTE 11C	FOR DIMENSIONS SEE DASH 141 VALUES BELOW											
166	AC	PANEL, MONITOR		2900031-021		NAS-9-497	B	II	NOTE 11C	FOR DIMENSIONS SEE DASH 141 VALUES BELOW											
165	AC	TERM. BOARD STORAGE DRAWER		2900927-011		NAS-9-497	B	II	NOTE 11C	FOR DIMENSIONS SEE DASH 141 VALUES BELOW											
164	AC	INPUT/OUTPUT PANEL		2900926-011		NAS-9-497	B	II	NOTE 11C	FOR DIMENSIONS SEE DASH 141 VALUES BELOW											
163	AC	CONTROL PANEL		2900896-011		NAS-9-497	B	II	NOTE 11C	FOR DIMENSIONS SEE DASH 141 VALUES BELOW											
162	AC	CSL, CAL AND TEST, SCM/PSAAM		2900895-011		NAS-9-497	B	II	NOTE 11C	FOR DIMENSIONS SEE DASH 144 VALUES BELOW											
161	AC	FIX., LIFT AND HAND., IMU		1015462-011		NAS-9-497	B	II	NOTE 11C	FOR DIMENSIONS SEE DASH 141 VALUES BELOW											
160	AC	FIX., HAND., G & N HARNESS		1901846-031		NAS-9-497	B	II	NOTE 11C	FOR DIMENSIONS SEE DASH 144 VALUES BELOW											
159	AC	BATTERY POWER PACK		1900011-031		NAS-9-497	B	II	NOTE 11C	FOR DIMENSIONS SEE DASH 144 VALUES BELOW											
158	AC	COUPLING DATA UNIT ASSEMBLY C/M		2007222		NAS-9-497	A	I	NOTE 11B	FOR DIMENSIONS SEE DASH 100 VALUES BELOW											
157	AC	COUPLING DATA UNIT ASSEMBLY - LEM		2007222		NAS-9-497	A	I	NOTE 11B	FOR DIMENSIONS SEE DASH 100 VALUES BELOW											
156	AC	POWER & SERVO ASSEMBLY C/M		2007200		NAS-9-497	A	I	NOTE 11B	2.125	.968	1.718	NA	.093	.031	.06	.093	NA	NA	.858	.608
155	AC	PIPA ELECTRONICS ASSEMBLY		2007201		NAS-9-497	A	I	NOTE 11B	FOR DIMENSIONS SEE DASH 100 VALUES BELOW											
154	AC	PULSE TORQUE ASSEMBLY-LEM		6007000		NAS-9-497	A	I	NOTE 11B	FOR DIMENSIONS SEE DASH 100 VALUES BELOW											
153	AC	POWER & SERVO ASSEMBLY-LEM		6007200		NAS-9-497	A	I	NOTE 11B	FOR DIMENSIONS SEE DASH 100 VALUES BELOW											
152	AC	CONT PNL, RSVR CKT TESTER		2900770-011		NAS-9-497	B	II	NOTE 11C	FOR DIMENSIONS SEE DASH 141 VALUES BELOW											
151	AC	TESTER, RESOLVER CIRCUIT		2900708-011		NAS-9-497	B	II	NOTE 11C	FOR DIMENSIONS SEE DASH 141 VALUES BELOW											
150	AC	JUNCTION BOX, P.S.A./G.S.E.		1901933-021		NAS-9-497	B	II	NOTE 11C	FOR DIMENSIONS SEE DASH 144 VALUES BELOW											
149	AC	BATTERY PACK, LIFTING		2900812-011		NAS-9-497	B	II	NOTE 11C	FOR DIMENSIONS SEE DASH 141 VALUES BELOW											
148	AC	MOUNTING PLATE, COMPONENT		6900007-011		NAS-9-497	B	II	NOTE 11C	FOR DIMENSIONS SEE DASH 144 VALUES BELOW											
147	AC	MOUNTING PLATE, COMPONENT		2900677-011		NAS-9-497	B	II	NOTE 11C	FOR DIMENSIONS SEE DASH 144 VALUES BELOW											
146	AC	CART, TRANS, G & N		1900009-041		NAS-9-497	B	II	NOTE 11C	FOR DIMENSIONS SEE DASH 144 VALUES BELOW											
145	AC	CONTAINER, SHIPPING, IMU		1900010-021		NAS-9-497	B	II	NOTE 11C	FOR DIMENSIONS SEE DASH 144 VALUES BELOW											
144	AC	FIX., MOUNTING, G & N		1902204-021			B	II	NOTE 11C	4.125	1.812	3.250	NA	.125	.062	.12	.156		.125	1.625	1.14
143	AC	CSL, COOL, AND PWR, G & N		1902134-021			B	II	NOTE 11C	4.125	1.812	3.250	NA	.125	.062	.12	.156		.125	1.625	1.14
142	AC	ANALYZER, OPTICS-INERTIAL		2900023-011			B	II	NOTE 11C	4.125	1.812	3.250	NA	.125	.062	.12	.156		.125	1.625	1.14
141	AC	CONT, TEMP, PORTABLE		2900060-011			B	II	NOTE 11C	2.125	.968	1.718	NA	.093	.031	.06	.093		.093	.858	.60
140	AC	TESTER, CKT, IMU/CDU RSVR		2900286-011			B	II	NOTE 11C	4.125	1.812	3.250	NA	.125	.062	.12	.156		.125	1.625	1.14
139	AC	SIMULATOR, LD/SIG, CDU		2900285-011			B	II	NOTE 11C	4.125	1.812	3.250	NA	.125	.062	.12	.156		.125	1.625	1.14
138	AC	SIMULATOR, LD/SIG, OPTICS		1902023-021			B	II	NOTE 11C	4.125	1.812	3.250	NA	.125	.062	.12	.156		.125	1.625	1.14
137	AC	FIX , MOUNTING, IMU/NAV BASE		6900003-011			B	II	NOTE 11C	4.125	1.812	3.250	NA	.125	.062	.12	.156		.125	1.625	1.14
136	AC	FIXTURE, OPTICS/NAV BASE		2900072-011			B	II	NOTE 11C	4.125	1.812	3.250	NA	.125	.062	.12	.156		.125	1.625	1.14
135	AC	FIX., MOUNTING, SUB SYSTEM		2900070-011			B	II	NOTE 11C	4.125	1.812	3.250	NA	.125	.062	.12	.156		.125	1.625	1.14
134	AC	FIX., HAND., G & N HARNESS		2900069-011			B	II	NOTE 11C	4.125	1.812	3.250	NA	.125	.062	.12	.156		.125	1.625	1.14
133	AC	CNTR, SHIPPING, NAV BASE		2900068-011			B	II	NOTE 11C	4.125	1.812	3.250	NA	.125	.062	.12	.156		.125	1.625	1.14
132	AC	FIX., MOUNTING, G & N		2900067-011			B	II	NOTE 11C	4.125	1.812	3.250	NA	.125	.062	.12	.156		.125	1.625	1.14
131	AC	SIMULATOR, LD/SIG, IMU/CDU		2900062-011			B	II	NOTE 11C	4.125	1.812	3.250	NA	.125	.062	.12	.156		.125	1.625	1.14
130	AC	TESTER, GYRO WHEEL		2900061-011			B	II	NOTE 11C	4.125	1.812	3.250	NA	.125	.062	.12	.156		.125	1.625	1.14
129	AC	COOLANT SUPPLY		1902133-021			B	II	NOTE 11C	4.125	1.812	3.250	NA	.125	.062	.12	.156		.125	1.625	1.14
128	AC	TABLE, ROTARY		1900926-021			B	II	NOTE 11C	4.125	1.812	3.250	NA	.125	.062	.12	.156		.125	1.625	1.14
127	AC	FIX., HAND., OPTICS		2900074-011			B	II	NOTE 11C	2.125	.968	1.718	NA	.093	.031	.06	.093		.093	.858	.60
126	AC	FIXTURE, MTG, PTA/PEA.		2900066-011			B	II	NOTE 11C	2.125	.968	1.718	NA	.093	.031	.06	.093		.093	.858	.60
125	AC	CONT, TEMP, IMU LIFTING		2900063-011			B	II	NOTE 11C	2.125	.968	1.718	NA	.093	.031	.06	.093		.093	.858	.60
124	AC	FIXTURE, HANDLING, IMU		2900064-011			B	II	NOTE 11C	2.125	.968	1.718	NA	.093	.031	.06	.093		.093	.858	.60
123	AC	CONT, OPTICS, REMOTE		1902046-021			B	II	NOTE 11C	2.125	.968	1.718	NA	.093	.031	.06	.093		.093	.858	.60
122	AC	TEST CONTROL		1902009-021			B	II	NOTE 11C	2.125	.968	1.718	NA	.093	.031	.06	.093		.093	.858	.60
121	AC	ADPT MODULE, P.S.A.		1902431-021			B	II	NOTE 11C	2.125	.968	1.718	NA	.093	.031	.06	.093		.093	.858	.60
120	AC	BRIDGE, DECADE ERROR		2900128-011			B	II	NOTE 11C	2.125	.968	1.718	NA	.093	.031	.06	.093		.093	.858	.60
119	AC	PWR SUP, ELECTRONICS		2900012-011			B	II	NOTE 11C	2.125	.968	1.718	NA	.093	.031	.06	.093		.093	.858	.60
118	AC	PWR SUP, RELAY AND LAMP		1900049-031			B	II	NOTE 11C	2.125	.968	1.718	NA	.093	.031	.06	.093		.093	.858	.60
117	AC	CONSOLE, OSCILLOGRAPH		1900000-021			B	II	NOTE 11C	2.125	.968	1.718	NA	.093	.031	.06	.093		.093	.858	.60
116	AC	ADPT MODULE, P.S.A.		1902431-011			B	II	NOTE 11C	2.125	.968	1.718	NA	.093	.031	.06	.093		.093	.858	.60
115	AC	ADPT, TEST POINT, PTA/PEA.		2900145-011			B	II	NOTE 11C	2.125	.968	1.718	NA	.093	.031	.06	.093		.093	.858	.60
114	AC	ADPT, TEST POINT, P.S.A.		2900037-011			B	II	NOTE 11C	2.125	.968	1.718	NA	.093	.031	.06	.093		.093	.858	.60
113	AC	CONTROL, GIMBAL POSITION		2900036-011			B	II	NOTE 11C	2.125	.968	1.718	NA	.093	.031	.06	.093		.093	.858	.60
112	AC	SELECTOR, SIGNAL, PRIMARY		2900035-011			B	II	NOTE 11C	2.125	.968	1.718	NA	.093	.031	.06	.093		.093	.858	.60
111	AC	SEL, SIG, OSCILLOGRAPH		2900034-011			B	II	NOTE 11C	2.125	.968	1.718	NA	.093	.031	.06	.093		.093	.858	.60
110	AC	PANEL, PWR SUP AND LOAD		2900033-011			B	II	NOTE 11C	2.125	.968	1.718	NA	.093	.031	.06	.093		.093	.858	.60
109	AC	PANEL, MONITOR		2900031-011			B	II	NOTE 11C	2.125	.968	1.718	NA	.093	.031	.06	.093		.093	.858	.60
108	AC	PANEL, AUXILIARY INPUT		2900030-011			B	II	NOTE 11C	2.125	.968	1.718	NA	.093	.031	.06	.093		.093	.858	.60
107	AC	CAGING ELECTRONICS, GYRO		2900029-011			B	II	NOTE 11C	2.125	.968	1.718	NA	.093	.031	.06	.093		.093	.858	.60
106	AC	TEST SELECTOR		2900028-011			B	II	NOTE 11C	2.125	.968	1.718	NA	.093	.031	.06	.093		.093	.858	.60
105	AC	TEST CONTROL		2900027-011			B	II	NOTE 11C	2.125	.968	1.718	NA	.093	.031	.06	.093		.093	.858	.60
104	AC	MONITOR AND CONTROL, TEMP		2900026-011			B	II	NOTE 11C	2.125	.968	1.718	NA	.093	.031	.06	.093		.093	.858	.60
103	AC	DISTRIBUTION BOX, GSE		2900024-011			B	II	NOTE 11C	2.125	.968	1.718	NA	.093	.031	.06	.093		.093	.858	.60
102	AC	VOLTMETER, DIGITAL		2900007-011			B	II	NOTE 11C	2.125	.968	1.718	NA	.093	.031	.06	.093		.093	.858	.60
101	AC	NAVIGATION BASE ASSEMBLY-LEM		6899950		NAS-9-497	A	I	NOTE 11B	2.000	1.312	1.906	1.375	.078	.048	.078	.093	NA	NA	1.125	.75
100	AC	NAVIGATION BASE ASSEMBLY		2899982		NAS-9-497	A	I	NOTE 11B	2.000	1.312	1.906	1.375	.078	.048	.078	.093	NA	NA	1.125	.75

NOTES FOR TABLE

STYLE A IS FOR G & N SYSTEM
STYLE B IS FOR GROUND SUPPORT EQUIPMENT
TYPE I IS WITHOUT MOUNTING HOLES
TYPE II IS WITH MOUNTING HOLES

1004260	DG	SHT 4

SYM	ZONE	DESCRIPTION	CHG NO	DATE	APPD
CL		REPLACES REV CK WITHOUT CHANGE PER TDRR 34365		9/28/67	JWL RWH
CM		REVISION STATUS CHANGED		18 OCT 67	R.A.W.
CN		REVISION STATUS CHANGE		31 OCT 67	JRK
CP		REVISION STATUS CHANGE		6 NOV 67	
CR		REVISION STATUS CHANGED		7 NOV 67	DKD RWH
CS		REVISION STATUS CHANGED		3 JAN 68	J.W. EHW
CT		REVISION STATUS CHANGED		7 FEB 68	LK
CU		REVISION STATUS CHANGED		22 FEB 68	JRK
CV		REVISION STATUS CHANGED		27 FEB 68	LK
CW		REVISION STATUS CHANGED		3 APR 68	
CY		REVISION STATUS CHANGED		16 APR 68	A.N.
CZ		REVISION STATUS CHANGED		23 MAY 68	
DA		REVISION STATUS CHANGED		17 JUN 68	
DB		REVISION STATUS CHANGED		13 SEP 68	
DC		REVISION STATUS CHANGED		16 DEC 68	LK
DD		REVISION STATUS CHANGED		30 DEC 68	
DE		REVISION STATUS CHANGED		23 JAN 69	
DF		REVISION STATUS CHANGED		2 JAN 69	LK RWH
DG		REVISION STATUS CHANGED		26 SEP 69	DKD

E	F	G	H	J	K	L	M	N	P	R	S	T	U	V	W	Y	Z	AA	AB	AC	AD	AE	AF	AG	AH	AJ	AK	AL	AM	AN	AP	AR
DASH 100	VALUES BELOW																															
[illegible]	VALUES BELOW																															
DASH 100	VALUES BELOW																															
DASH 100	VALUES BELOW																															
[illegible]	VALUES BELOW																															
[illegible]	VALUES BELOW																															
DASH 141	VALUES BELOW																															
DASH 144	VALUES BELOW																															
DASH 141	VALUES BELOW																															
DASH 141	VALUES BELOW																															
DASH 141	VALUES BELOW																															
DASH 141	VALUES BELOW																															
DASH 141	VALUES BELOW																															
DASH 100	VALUES BELOW																															
DASH 100	VALUES BELOW																															
DASH 144	VALUES BELOW																															
DASH 102	VALUES BELOW																															
DASH 141	VALUES BELOW																															
.125	062	.188	.156	NA	NA	1.750	1.125	.906	.688	1.500	NA	.281	.125	NA	1.094	2.062	.312	NA	2.500	.062	.125	1.312	.469	NA	NA	NA	.156	NA	.125	.469	.344	NA
DASH 121	VALUES BELOW																															
DASH 144	VALUES BELOW																															
DASH 144	VALUES BELOW																															
DASH 144	VALUES BELOW																															
DASH 144	VALUES BELOW																															
DASH 144	VALUES BELOW																															
[illegible]	VALUES BELOW																															
DASH 141	VALUES BELOW																															
DASH 141	VALUES BELOW																															
[illegible]	VALUES BELOW																															
DASH 141	VALUES BELOW																															
DASH 141	VALUES BELOW																															
DASH 141	VALUES BELOW																															
DASH 141	VALUES BELOW																															
[illegible]	VALUES BELOW																															
DASH 141	VALUES BELOW																															
DASH 141	VALUES BELOW																															
DASH 141	VALUES BELOW																															
DASH 144	VALUES BELOW																															
DASH 141	VALUES BELOW																															
DASH 144	VALUES BELOW																															
DASH 144	VALUES BELOW																															
DASH 100	VALUES BELOW																															
DASH 100	VALUES BELOW																															
.093	031	.06	.093	NA	NA	.858	.608	.484	.358	.733	.062	.140	.062	NA	.968	1.450	.125	NA	1.720	.046	.03	NA	.210	NA	NA	NA	.070	NA	.046	.32	.16	NA
DASH 100	VALUES BELOW																															
DASH 100	VALUES BELOW																															
[illegible]	VALUES BELOW																															
DASH 141	VALUES BELOW																															
DASH 141	VALUES BELOW																															
DASH 144	VALUES BELOW																															
DASH 141	VALUES BELOW																															
DASH 144	VALUES BELOW																															
DASH 144	VALUES BELOW																															
DASH 144	VALUES BELOW																															
DASH 144	VALUES BELOW																															
.125	062	.12	.156	100 104	.125	1.625	1.140	.890	.640	1.390	.125	.171	.125	1.875	1.687	2.625	.250	1.562	3.843	.093	NA	NA	.359	.125	.437	3.688	NA	3.687	.093	.40	.25	3.875
.125	062	.12	.156		.125	1.625	1.140	.890	.640	1.390	.125	.171	.125	1.875	1.687	2.625	.250	1.562	3.843	.093	NA	NA	.359	.125	.437	3.688	NA	3.687	.093	.40	.25	3.875
.125	062	.12	.156		.125	1.625	1.140	.890	.640	1.390	.125	.171	.125	1.875	1.687	2.625	.250	1.562	3.843	.093	NA	NA	.359	.125	.437	3.688	NA	3.687	.093	.40	.25	3.875
.093	031	.06	.093		.093	.858	.608	.484	.358	.733	.077	.116	.062	.937	.875	1.343	.125	.781	1.892	.046	NA	NA	.209	.093	.250	1.875	NA	1.840	.046	.23	.16	1.938
.125	062	.12	.156		.125	1.625	1.140	.890	.640	1.390	.125	.171	.125	1.875	1.687	2.625	.250	1.562	3.843	.093	NA	NA	.359	.125	.437	3.688	NA	3.687	.093	.40	.25	3.875
.125	062	.12	.156		.125	1.625	1.140	.890	.640	1.390	.125	.171	.125	1.875	1.687	2.625	.250	1.562	3.843	.093	NA	NA	.359	.125	.437	3.688	NA	3.687	.093	.40	.25	3.875
.125	062	.12	.156		.125	1.625	1.140	.890	.640	1.390	.125	.171	.125	1.875	1.687	2.625	.250	1.562	3.843	.093	NA	NA	.359	.125	.437	3.688	NA	3.687	.093	.40	.25	3.875
.125	062	.12	.156		.125	1.625	1.140	.890	.640	1.390	.125	.171	.125	1.875	1.687	2.625	.250	1.562	3.843	.093	NA	NA	.359	.125	.437	3.688	NA	3.687	.093	.40	.25	3.875
.125	062	.12	.156		.125	1.625	1.140	.890	.640	1.390	.125	.171	.125	1.875	1.687	2.625	.250	1.562	3.843	.093	NA	NA	.359	.125	.437	3.688	NA	3.687	.093	.40	.25	3.875
.125	062	.12	.156		.125	1.625	1.140	.890	.640	1.390	.125	.171	.125	1.875	1.687	2.625	.250	1.562	3.843	.093	NA	NA	.359	.125	.437	3.688	NA	3.687	.093	.40	.25	3.875
.125	062	.12	.156		.125	1.625	1.140	.890	.640	1.390	.125	.171	.125	1.875	1.687	2.625	.250	1.562	3.843	.093	NA	NA	.359	.125	.437	3.688	NA	3.687	.093	.40	.25	3.875
.125	062	.12	.156		.125	1.625	1.140	.890	.640	1.390	.125	.171	.125	1.875	1.687	2.625	.250	1.562	3.843	.093	NA	NA	.359	.125	.437	3.688	NA	3.687	.093	.40	.25	3.875
.125	062	.12	.156		.125	1.625	1.140	.890	.640	1.390	.125	.171	.125	1.875	1.687	2.625	.250	1.562	3.843	.093	NA	NA	.359	.125	.437	3.688	NA	3.687	.093	.40	.25	3.875
.125	062	.12	.156		.125	1.625	1.140	.890	.640	1.390	.125	.171	.125	1.875	1.687	2.625	.250	1.562	3.843	.093	NA	NA	.359	.125	.437	3.688	NA	3.687	.093	.40	.25	3.875
.125	062	.12	.156		.125	1.625	1.140	.890	.640	1.390	.125	.171	.125	1.875	1.687	2.625	.250	1.562	3.843	.093	NA	NA	.359	.125	.437	3.698	NA	3.687	.093	.40	.25	3.875
.125	062	.12	.156		.125	1.625	1.140	.890	.640	1.390	.125	.171	.125	1.875	1.687	2.625	.250	1.562	3.843	.093	NA	NA	.359	.125	.437	3.688	NA	3.687	.093	.40	.25	3.875
.125	062	.12	.156		.125	1.625	1.140	.890	.640	1.390	.125	.171	.125	1.875	1.687	2.625	.250	1.562	3.843	.093	NA	NA	.359	.125	.437	3.688	NA	3.687	.093	.40	.25	3.875
.093	031	.06	.093		.093	.858	.608	.484	.358	.733	.077	.116	.062	.937	.875	1.343	.125	.781	1.892	.046	NA	NA	.209	.093	.250	1.875	NA	1.840	.046	.23	.16	1.938
.093	031	.06	.093		.093	.858	.608	.484	.358	.733	.077	.116	.062	.937	.875	1.343	.125	.781	1.892	.046	NA	NA	.209	.093	.250	1.875	NA	1.840	.046	.23	.16	1.938
.093	031	.06	.093		.093	.858	.608	.484	.358	.733	.077	.116	.062	.937	.875	1.343	.125	.781	1.892	.046	NA	NA	.209	.093	.250	1.875	NA	1.840	.046	.23	.16	1.938
.093	031	.06	.093		.093	.858	.608	.484	.358	.733	.077	.116	.062	.937	.875	1.343	.125	.781	1.892	.046	NA	NA	.209	.093	.250	1.875	NA	1.840	.046	.23	.16	1.938
.093	031	.06	.093		.093	.858	.608	.484	.358	.733	.077	.116	.062	.937	.875	1.343	.125	.781	1.892	.046	NA	NA	.209	.093	.250	1.875	NA	1.840	.046	.23	.16	1.938
.093	031	.06	.093		.093	.858	.608	.484	.358	.733	.077	.116	.062	.937	.875	1.343	.125	.781	1.892	.046	NA	NA	.209	.093	.250	1.875	NA	1.840	.046	.23	.16	1.938
.093	031	.06	.093		.093	.858	.608	.484	.358	.733	.077	.116	.062	.937	.875	1.343	.125	.781	1.892	.046	NA	NA	.209	.093	.250	1.875	NA	1.840	.046	.23	.16	1.938
.093	031	.06	.093		.093	.858	.608	.484	.358	.733	.077	.116	.062	.937	.875	1.343	.125	.781	1.892	.046	NA	NA	.209	.093	.250	1.875	NA	1.840	.046	.23	.16	1.938
.093	031	.06	.093		.093	.858	.608	.484	.358	.733	.077	.116	.062	.937	.875	1.343	.125	.781	1.892	.046	NA	NA	.209	.093	.250	1.875	NA	1.840	.046	.23	.16	1.938
.093	031	.06	.093		.093	.858	.608	.484	.358	.733	.077	.116	.062	.937	.875	1.343	.125	.781	1.892	.046	NA	NA	.209	.093	.250	1.875	NA	1.840	.046	.23	.16	1.938
.093	031	.06	.093		.093	.858	.608	.484	.358	.733	.077	.116	.062	.937	.875	1.343	.125	.781	1.892	.046	NA	NA	.209	.093	.250	1.875	NA	1.840	.046	.23	.16	1.938
.093	031	.06	.093		.093	.858	.608	.484	.358	.733	.077	.116	.062	.937	.875	1.343	.125	.781	1.892	.046	NA	NA	.209	.093	.250	1.875	NA	1.840	.046	.23	.16	1.938
.093	031	.06	.093		.093	.858	.608	.484	.358	.733	.077	.116	.062	.937	.875	1.343	.125	.781	1.892	.046	NA	NA	.209	.093	.250	1.875	NA	1.840	.046	.23	.16	1.938
.093	031	.06	.093		.093	.858	.608	.484	.358	.733	.077	.116	.062	.937	.875	1.343	.125	.781	1.892	.046	NA	NA	.209	.093	.250	1.875	NA	1.840	.046	.23	.16	1.938
.093	031	.06	.093		.093	.858	.608	.484	.358	.733	.077	.116	.062	.937	.875	1.343	.125	.781	1.892	.046	NA	NA	.209	.093	.250	1.875	NA	1.840	.046	.23	.16	1.938
.093	031	.06	.093		.093	.858	.608	.484	.358	.733	.077	.116	.062	.937	.875	1.343	.125	.781	1.892	.046	NA	NA	.209	.093	.250	1.875	NA	1.840	.046	.23	.16	1.938
.093	031	.06	.093		.093	.858	.608	.484	.358	.733	.077	.116	.062	.937	.875	1.343	.125	.781	1.892	.046	NA	NA	.209	.093	.250	1.875	NA	1.840	.046	.23	.16	1.938
.093	031	.06	.093		.093	.858	.608	.484	.358	.733	.077	.116	.062	.937	.875	1.343	.125	.781	1.892	.046	NA	NA	.209	.093	.250	1.875	NA	1.840	.046	.23	.16	1.938
.093	031	.06	.093		.093	.858	.608	.484	.358	.733	.077	.116	.062	.937	.875	1.343	.125	.781	1.892	.046	NA	NA	.209	.093	.250	1.875	NA	1.840	.046	.23	.16	1.938
.093	031	.06	.093		.093	.858	.608	.484	.358	.733	.077	.116	.062	.937	.875	1.343	.125	.781	1.892	.046	NA	NA	.209	.093	.250	1.875	NA	1.840	.046	.23	.16	1.938
.093	031	.06	.093		.093	.858	.608	.484	.358	.733	.077	.116	.062	.937	.875	1.343	.125	.781	1.892	.046	NA	NA	.209	.093	.250	1.875	NA	1.840	.046	.23	.16	1.938
.093	031	.06	.093		.093	.858	.608	.484	.358	.733	.077	.116	.062	.937	.875	1.343	.125	.781	1.892	.046	NA	NA	.209	.093	.250	1.875	NA	1.840	.046	.23	.16	1.938
.093	031	.06	.093		.093	.858	.608	.484	.358	.733	.077	.116	.062	.937	.875	1.343	.125	.781	1.892	.046	NA	NA	.209	.093	.250	1.875	NA	1.840	.046	.23	.16	1.938
.093	031	.06	.093		.093	.858	.608	.484	.358	.733	.077	.116	.062	.937	.875	1.343	.125	.781	1.892	.046	NA	NA	.209	.093	.250	1.875	NA	1.840	.046	.23	.16	1.938
.093	031	.06	.093		.093	.858	.608	.484	.358	.733	.077	.116	.062	.937	.875	1.343	.125	.781	1.892	.046	NA	NA	.209	.093	.250	1.875	NA	1.840	.046	.23	.16	1.938
.093	031	.06	.093		.093	.858	.608	.484	.358	.733	.077	.116	.062	.937	.875	1.343	.125	.781	1.892	.046	NA	NA	.209	.093	.250	1.875	NA	1.840	.046	.23	.16	1.938
.093	031	.06	.093	100 104	.093	.858	.608	.484	.358	.733	.077	.116	.062	.937	.875	1.343	.125	.781	1.892	.046	NA	NA	.209	.093	.250	1.875	NA	1.840	.046	.23	.16	1.938
.078	048	.078	.093	NA	NA	1.125	.750	.593	.453	1.015	.062	.187	.078	.875	.718	1.375	.218	NA	NA	.048	.031	.875	.305	.078	.531	1.906	.078	NA	.078	.531	.187	NA
.078	048	.078	.093	NA	NA	1.125	.750	.593	.453	1.015	.062	.187	.078	.875	.718	1.375	.218	NA	NA	.048	.031	.875	.305	.078	.531	1.906	.078	NA	.078	.531	.187	NA

AC ELECTRONICS DASH NUMBERS

UNLESS OTHERWISE SPECIFIED
DIMENSIONS ARE IN INCHES
TOLERANCES ON
2 PLACE DECIMALS ± 3 PLACE DECIMALS ± .005 ANGLES ± —
DO NOT SCALE THIS DRAWING
MATERIAL SEE NOTE 11
APPROVAL

AS APPLICABLE
NEXT ASSY | USED ON
APPLICATION

MIT
INSTRUMENTATION LAB
CAMBRIDGE MASS
DWG NO CONTRACT
DRAWN R.A. JONES DATE 16 JUL 65
CHECKED
APPROVAL W. KUPFER 22 JUL 65
CONTRACT
NASA APPROVAL T. MICHAELS 22 JUL 65
MIT APPROVAL W. KUPFER 22 JUL 65

MANNED
SPACECRAFT CENTER
HOUSTON, TEXAS

NAMEPLATES,
APOLLO G&N - GSE
(STANDARDS)

SIZE J2
CODE IDENT NO. 80230
1004260
SCALE NONE
SHEET 4 OF 6

NOTICE – WHEN GOVERNMENT DRAWINGS, SPECIFICATIONS, OR OTHER DATA ARE USED FOR ANY PURPOSE OTHER THAN IN CONNECTION WITH A DEFINITELY RELATED GOVERNMENT PROCUREMENT OPERATION, THE UNITED STATES GOVERNMENT THEREBY INCURS NO RESPONSIBILITY NOR ANY OBLIGATION WHATSOEVER; AND THE FACT THAT THE GOVERNMENT MAY HAVE FORMULATED, FURNISHED, OR IN ANY WAY SUPPLIED THE SAID DRAWINGS, SPECIFICATIONS, OR OTHER DATA IS NOT TO BE REGARDED BY IMPLICATION OR OTHERWISE AS IN ANY MANNER LICENSING THE HOLDER OR ANY OTHER PERSON OR CORPORATION, OR CONVEYING ANY RIGHTS OR PERMISSION TO MANUFACTURE, USE, OR SELL ANY PATENTED INVENTION THAT MAY IN ANY WAY BE RELATED THERETO.

DASH NO.	P/C	PART NAME	REMARKS	PART NUMBER	SER. NO.	CONT. NO.	STYLE	TYPE	MATERIAL	A	B	C	D	E	F	G	H	J	K	L	M	N
401	MIT	COMPUTER ASSY		2003100		NAS-9-497	A	I	NOTE 11B	2.000	1.312	1.906	1.375	.078	.048	.078	.093	NA	NA	1.125	.750	.59
400	MIT	LIFTING SLING-G&N INST.QUAL.FIX. & AZM.REF.FIX.		1021640		NAS-9-4065	B	II	NOTE 11C	2.000	1.312	1.687	1.375	.078	.048	.078	.093	[illegible]	.093	1.187	.750	.59

NOTES FOR TABLE
STYLE A IS FOR G & N SYSTEM
STYLE B IS FOR GROUND SUPPORT EQUIPMENT
TYPE I IS WITHOUT MOUNTING HOLES
TYPE II IS WITH MOUNTING HOLES

REVISIONS					
SYM	ZONE	DESCRIPTION	CHG NO	DATE	APPD
CL		REPLACES REV CK WITHOUT CHANGE PER TURR 34365		9/20/67	JWL RWH
CM		REVISION STATUS CHANGED		18 OCT 67	R.AW.
CN		REVISION STATUS CHANGED		31 OCT 67	JRK
CP		REVISION STATUS CHANGED		6 NOV 67	EMS
CR		REVISION STATUS CHANGED		7 DEC 67	RWH
CS		REVISION STATUS CHANGED		9 JAN 68	EHW
CT		REVISION STATUS CHANGED		7 FEB 68	LK RWH
CU		REVISION STATUS CHANGED		22 FEB 68	JRK
CV		REVISION STATUS CHANGED		27 FEB 68	LK
CW		REVISION STATUS CHANGED		8 APR 68	
CY		REVISION STATUS CHANGED		16 APR 68	A.N.
CZ		REVISION STATUS CHANGED		23 MAY 68	
DA		REVISION STATUS CHANGED		17 JUN 68	
DB		REVISION STATUS CHANGED		12 SEP 68	
DC		REVISION STATUS CHANGED		16 DEC 68	LK
DD		REVISION STATUS CHANGED		30 DEC 68	
DE		REVISION STATUS CHANGED		23 JAN 69	
DF		REVISION STATUS CHANGED		27 JAN 69	LK RWH
DG		REVISION STATUS CHANGED		26 SEP 69	DKD

8	.078	.093	NA	NA	1.125	.750	.593	.453	1.015	.062	.187	.078	.875	.718	1.375	.218	NA	NA	.048	.031	.875	.305	.078	.531	1.906	.078	NA	.078	.531	.187	NA
8	.078	.093	[illegible]	.093	1.187	.750	.593	.453	1.015	.062	.187	.078	.875	.718	1.375	.218	1.156	1.843	.048	NA	.875	.305	.078	.312	1.687	.110	1.830	.070	.275	.180	1.844
	G	H	J	K	L	M	N	P	R	S	T	U	V	W	Y	Z	AA	AB	AC	AD	AE	AF	AG	AH	AJ	AK	AL	AM	AN	AP	AR

MIT DASH NUMBERS

UNLESS OTHERWISE SPECIFIED
DIMENSIONS ARE IN INCHES
TOLERANCES ON
2 PLACE DECIMALS ±
3 PLACE DECIMALS ± .005
ANGLES ± —
DO NOT SCALE THIS DRAWING
MATERIAL SEE NOTE II
APPROVAL

AS APPLICABLE
NEXT ASSY
USED ON
APPLICATION

MIT
INSTRUMENTATION LAB
CAMBRIDGE, MASS.
DRAWN R.A. JONES DATE 16 JUL 65
CHECKED
APPROVAL W. KUPFER 22 JUL 65
CONTRACT
NASA APPROVAL T. MICHAELS 22 JUL 65
MIT APPROVAL W. KUPFER 22 JUL 65

MANNED
SPACECRAFT CENTER
HOUSTON, TEXAS

NAMEPLATES,
APOLLO G&N - GSE
(STANDARDS)

SIZE J2
CODE IDENT NO. 80230
1004260
SCALE NONE
SHEET 5 OF 6

[illegible]

DASH NO.	P/C	PART NAME	REMARKS	PART NUMBER	SER. NO.	CONT. NO.	STYLE	TYPE	MATERIAL	A	B	C	D	E	F	G	H	J	K	L	M
599	AC																				
598	AC																				
590		PSA ADAPTER MODULE (BLK II)		2901143-031		NAS9-497	B	II	NOTE 11C	FOR DIMENSIONS SEE DASH 141 VALUES											
587		AUXILIARY BATTERY PACK		1901492-051		FOR OTHER DATA SEE DASH 586															
586	AC	BATTERY POWER PACK		1900011-061		NAS-9-497	B	II	NOTE 11C	4.125	1.812	3.250	NA	.125	.062	.12	.156	.100 .104	.125	1.625	1.140
585		ANALYZER, OPTICS INERTIAL		2900023-051		FOR OTHER DATA SEE DASH 536															
584		ETHYLENE GLYCOL CLEANING KIT		2901630-011		NAS-9-497	B	I	NOTE 11B	4.000	2.625	3.380	NA	.260	.093	.156	.160	NA	NA	2.290	1.440
583		SWITCH CROSS BAR ASSY		1900048-021		FOR OTHER DATA SEE DASH 102															
582	AC	G&N INDICATOR CONTROL PANEL ASSY		2021290-041		FOR OTHER DATA SEE DASH 181															
581	AC	G&N INDICATOR CONTROL PANEL ASSY		2021323-021		FOR OTHER DATA SEE DASH 181															
580		AUXILIARY BATTERY PACK		1901492-041		FOR OTHER DATA SEE DASH 565															
579	AC	COMPUTER CONT & RETICLE DIMMER		6014512-081		FOR OTHER DATA SEE DASH 534															
578	AC	G&N INDICATOR CONTROL PANEL ASSY		2021290-031		FOR OTHER DATA SEE DASH 181															
577		BREAKOUT BOX, CABLE ADAPTER		2901011-021		FOR OTHER DATA SEE DASH 506															
576		FIX.,MOUNTING G&N		2900067-061		FOR OTHER DATA SEE DASH 500															
575		CSL,CAL AND TEST, SCM/PSAAM		2900895-041		FOR DATA SEE DASH 559															
574		CONT., TEMP PORTABLE		2900060-031		NAS-9-497	B	II	NOTE 11C	FOR DIMENSIONS SEE DASH 535 VALUES											
573		BATTERY PACK LIFTING		2900812-031		NAS-9-497	B	II	NOTE 11C	FOR DIMENSIONS SEE DASH 542 VALUES											
572		FIX., MOUNTING G&N	(-144)	2900067-051		NAS-9-497	B	II	NOTE 11C	FOR DIMENSIONS SEE DASH 500 VALUES											
571		EYEPIECE STORAGE UNIT		2021382		FOR OTHER DATA SEE DASH 100															
570	AC	OPTICAL UNIT & BELLOWS ASSY				NAS-9-497	A	I	NOTE 11B	FOR DIMENSIONS SEE DASH 550 VALUES											
569	AC	G & N INDICATOR CONTROL PANEL ASSY		2021323-011		NAS-9-497	A	I	NOTE 11B	FOR DIMENSIONS SEE DASH 181											
568	AC	G & N INDICATOR CONTROL PANEL ASSY		2021290-021		NAS-9-497	A	I	NOTE 11B	FOR DIMENSIONS SEE DASH 181											
567	AC	G & N INDICATOR CONTROL PANEL ASSY		2021290-011		NAS-9-497	A	I	NOTE 11B	FOR DIMENSIONS SEE DASH 181											
566	AC	COMPUTER CONT & RETICLE DIMMER		6014512-061		NAS-9-497	A	I	NOTE 11B	FOR DIMENSIONS SEE DASH 534											
565		AUXILIARY BATTERY PACK		1901492-031		NAS-9-497	B	II	NOTE 11C	FOR DIMENSIONS SEE DASH 500											
564		BATTERY POWER PACK		1900011-051		NAS-9-497	B	II	NOTE 11C	FOR DIMENSIONS SEE DASH 500											
563		PSA ADAPTER MODULE (LEM)		6900088-031		NAS-9-497	B	II	NOTE 11C	FOR DIMENSIONS SEE DASH 141 VALUES											
562	AC	COMPUTER CONT & RETICLE DIMMER		6014512-041		NAS-9-497	A	I	NOTE 11B	FOR DIMENSIONS SEE DASH 534 VALUES											
561	AC	G & N INDICATOR CONTROL PANEL ASSY		2014578-031		NAS-9-497	A	I	NOTE 11B	FOR DIMENSIONS SEE DASH 181 VALUES											
560		ADPT. MODULE, PSA		2901143-021		NAS-9-497	B	II	NOTE 11C	FOR DIMENSIONS SEE DASH 141 VALUES											
559		CSL. CAL AND TEST, SCM/PSAAM		2900895-031		FOR OTHER DATA SEE DASH 547															
558		PSA ADAPTER MODULE (LEM)		6900088-021		FOR OTHER DATA SEE DASH 189															
557		FIX., HANDLING, C/M PSA		2900998-021		NAS-9-497	B	II	NOTE 11C	FOR DIMENSIONS SEE DASH 141 VALUES											
556		FIX., MOUNTING G & N	(-144)	2900067-041		NAS-9-497	B	II	NOTE 11C	FOR DIMENSIONS SEE DASH 500 VALUES											
555	AC	OPTICAL UNIT ASSEMBLY		1021368-061		NAS-9-497	A	I	NOTE 11B	2.000	1.312	1.687	1.375	.078	.048	.078	.093	NA	NA	1.125	.75
554	AC	OPTICAL UNIT ASSEMBLY		1021368-041		NAS-9-497	A	I	NOTE 11B	2.000	1.312	1.687	1.375	.078	.048	.078	.093	NA	NA	1.125	.75
553	AC	OPTICAL UNIT AND BELLOWS ASSEMBLY		2010790-111		NAS-9-497	A	I	NOTE 11B	2.000	1.312	1.687	1.375	.078	.048	.078	.093	NA	NA	1.125	.75
552	AC	OPTICAL UNIT AND BELLOWS ASSEMBLY		2010790-081		NAS-9-497	A	I	NOTE 11B	2.000	1.312	1.687	1.375	.078	.048	.078	.093	NA	NA	1.125	.75
551	AC	OPTICAL UNIT AND BELLOWS ASSEMBLY		2010790-071		NAS-9-497	A	I	NOTE 11B	2.000	1.312	1.687	1.375	.078	.048	.078	.093	NA	NA	1.125	.75
550	AC	OPTICAL UNIT AND BELLOWS ASSEMBLY		2010790-061		NAS-9-497	A	I	NOTE 11B	2.000	1.312	1.687	1.375	.078	.048	.078	.093	NA	NA	1.125	.75
548		CAGING ELECTRONICS, GYRO		2900029-031		NAS-9-497	B	II	NOTE 11C	2.125	.968	1.718	NA	.093	.031	.06	.093	.100 .104	.093	.858	.6
547		CSL, CAL AND TEST, SCM/PSAAM		2900895-021		NAS-9-497	B	II	NOTE 11C	4.125	1.812	3.250	NA	.125	.062	.12	.156		.125	1.625	1.14
546		FIX., HAND., C/M AND LEM CDU		2900999-021		NAS-9-497	B	II	NOTE 11C	2.125	.968	1.718	NA	.093	.031	.06	.093	.100 .104	.093	.858	.6
545	AC	G & N INDICATOR CONTROL PANEL ASSY		2014578-021		NAS-9-497	A	I	NOTE 11B	3.000	1.938	2.437	NA	.125	.062	.188	.156	NA	NA	1.750	1.12
544		ADPT MODULE, P.S.A.		1902431-051		NAS-9-497	B	II	NOTE 11C	2.125	.968	1.718	NA	.093	.031	.06	.093	.100 .104	.093	.858	.60
543	AC	PANEL, MONITOR		2900031-041		NAS-9-497	B	II	NOTE 11C	2.125	.968	1.718	NA	.093	.031	.06	.093		.093	.858	.60
542	AC	BATTERY PACK, LIFTING		2900812-021		NAS-9-497	B	II	NOTE 11C	2.125	.968	1.718	NA	.093	.031	.06	.093		.093	.858	.60
541	AC	FIXTURE, MOUNTING, IMU		2900000-021		NAS-9-497	B	II	NOTE 11C	4.125	1.812	3.250	NA	.125	.062	.12	.156		.125	1.625	1.14
540	AC	ADPT, TEST POINT, P.S.A.		2900037-031		NAS-9-497	B	II	NOTE 11C	2.125	.968	1.718	NA	.093	.031	.06	.093	.100 .104	.093	.858	.60
539	AC	ANNUNCIATOR PANEL & EYEPIECE STORAGE ASSEMBLY		1021255-041		NAS-9-497	A	I	NOTE 11B	2.000	1.312	1.906	1.375	.078	.048	.078	.093	NA	NA	1.125	.75
538	AC	ANNUNCIATOR PANEL & EYEPIECE STORAGE ASSEMBLY		1021255-031		NAS-9-497	A	I	NOTE 11B	2.000	1.312	1.906	1.375	.078	.048	.078	.093	NA	NA	1.125	.75
537	AC	TEST SELECTOR		2900028-031		NAS-9-497	B	II	NOTE 11C	2.125	.968	1.718	NA	.093	.031	.06	.093	.100 .104	.093	.858	.6
536	AC	ANALYZER, OPTICS-INERTIAL		2900023-041		NAS-9-497	B	II	NOTE 11C	4.125	1.812	3.250	NA	.125	.062	.12	.156		.125	1.625	1.14
535	AC	CONT, TEMP, PORTABLE		2900060-021		NAS-9-497	B	II	NOTE 11C	2.125	.968	1.718	NA	.093	.031	.06	.093	.100 .104	.093	.858	.60
534	AC	COMPUTER CONT & RETICLE DIMMER		6014512-021		NAS-9-497	A	I	NOTE 11B	2.000	1.312	1.906	1.375	.078	.048	.078	.093	NA	NA	1.125	.75
533	AC	ADPT MODULE, P.S.A.		1902431-041		NAS-9-497	B	II	NOTE 11C	2.125	.968	1.718	NA	.093	.031	.06	.093	.100 .104	.093	.858	.60
532	AC	TRAY BREAKOUT, 105 PIN		1900807-021		NAS-9-497	B	II	NOTE 11C	4.125	1.812	3.250	NA	.125	.062	.12	.156		.125	1.625	1.14
531	AC	TRAY BREAKOUT, 84 PIN		1900806-021		NAS-9-497	B	II	NOTE 11C	4.125	1.812	3.250	NA	.125	.062	.12	.156		.125	1.625	1.1
530	AC	HEAT SINK-TRAY EXTENDER		1900808-021		NAS-9-497	B	II	NOTE 11C	2.125	.968	1.718	NA	.093	.031	.06	.093		.093	.858	.60
529	AC	TESTER, FAILURE INDICATOR		1900809-021		NAS-9-497	B	II	NOTE 11C	2.125	.968	1.718	NA	.093	.031	.06	.093	.100 .104	.093	.858	.60
527	AC	FIX., MOUNTING, G & N	(-144)	1902204-021		NAS-9-497	B	II	NOTE 11C	FOR DIMENSIONS SEE DASH 500 VALUES BELOW											
526	AC	FIX., MOUNTING, G & N	(-144)	2900067-031		NAS-9-497	B	II	NOTE 11C	FOR DIMENSIONS SEE DASH 500 VALUES BELOW											
525	AC	PORTABLE TEMP. CONTROLLER		1900496-021		NAS-9-497	B	II	NOTE 11C	3.000	1.937	2.437	2.312	.125	.031	.125	.156	.125	.125	1.718	1.1
524	AC	POWER, SERVO & THERMOCOUPLE ASSEMBLY C/M		2010743		NAS-9-497	A	I	NOTE 11B	2.125	.968	1.718	NA	.093	.031	.06	.093	NA	NA	.858	.60
523	AC	PULSE TORQUE AND THERMOCOUPLE ASSEMBLY-LEM		6010656		NAS-9-497	A	I	NOTE 11B	FOR DIMENSIONS SEE DASH 508 VALUES BELOW											
522	AC	COUPLING DATA UNIT & THERMOCOUPLE ASSEMBLY-LEM		2010744		NAS-9-497	A	I	NOTE 11B	FOR DIMENSIONS SEE DASH 508 VALUES BELOW											
521	AC	COUPLING DATA UNIT & THERMOCOUPLE ASSEMBLY-C/M		2010744		NAS-9-497	A	I	NOTE 11B	FOR DIMENSIONS SEE DASH 508 VALUES BELOW											
520	AC	PIPA ELECTRONICS AND THERMOCOUPLE ASSEMBLY		2010745		NAS-9-497	A	I	NOTE 11B	FOR DIMENSIONS SEE DASH 508 VALUES BELOW											
519	AC	FIXTURE, HANDLING, LEM-PSA	(-141)	6900129-011		NAS-9-497	B	II	NOTE 11C	FOR DIMENSIONS SEE DASH 504 VALUES BELOW											
518	AC	JUNCTION BOX, GSE-PSA	(-144)	1901933-031		NAS-9-497	B	II	NOTE 11C	FOR DIMENSIONS SEE DASH 500 VALUES BELOW											
517	AC	FIX., HAND., OPTICS INSTL.	(-141)	2901380-011		NAS-9-497	B	II	NOTE 11C	FOR DIMENSIONS SEE DASH 502 VALUES BELOW											
516	AC	POWER, SERVO AND THERMOCOUPLE ASSEMBLY-LEM		6010655		NAS-9-497	A	I	NOTE 11B	FOR DIMENSIONS SEE DASH 508 VALUES BELOW											
514	AC	SIGNAL COND. ASSY LEM OPER.	(-100)	6007013		NAS-9-497	A	I	NOTE 11B	FOR DIMENSIONS SEE DASH 508 VALUES BELOW											
513	AC	JUMPER, BY-PASS	(-141)	1021616		NAS-9-497	B	II	NOTE 11C	2.125	.968	1.718	NA	.093	.031	.06	.093	.100 .104	.093	.858	.608
512	AC	COUPLING DATA UNIT ASSEMBLY C/M	(-100)	2007322-011		NAS-9-497	A	I	NOTE 11B	FOR DIMENSIONS SEE DASH 508 VALUES BELOW											
511	AC	COUPLING DATA UNIT ASSEMBLY-LEM	(-100)	2007322-021		NAS-9-497	A	I	NOTE 11B	FOR DIMENSIONS SEE DASH 508 VALUES BELOW											
510	AC	BATTERY POWER PACK	(-144)	1900011-041		NAS-9-497	B	II	NOTE 11C	FOR DIMENSIONS SEE DASH 500 VALUES BELOW											
509	AC	JUNCTION BOX, P.S.A./G.S.E.	(-144)	1902195-021		NAS-9-497	B	II	NOTE 11C	FOR DIMENSIONS SEE DASH 500 VALUES BELOW											
508	AC	NAVIGATION BASE ASSEMBLY-LEM	(-101)	6899980		NAS-9-497	A	I	NOTE 11B	2.000	1.312	1.906	1.375	.078	.048	.078	.093	NA	NA	1.125	.750
507	AC	CSL, COOL. AND PWR, G AND N	(-144)	1902134-041		NAS-9-497	B	II	NOTE 11C	FOR DIMENSIONS SEE DASH 500 VALUES BELOW											
506	AC	BREAKOUT BOX, CABLE ADAPTER	(-141)	2901011-011		NAS-9-497	B	II	NOTE 11C	2.125	.968	1.718	NA	.093	.031	.06	.093	.100 .104	.093	.858	.608
505	AC	MONITOR AND CONTROL, TEMP	(-141)	2900026-021		NAS-9-497	B	II	NOTE 11C	2.125	.968	1.718	NA	.093	.031	.06	.093		.093	.858	.608
504	AC	PWR SUP, GUIDANCE SYSTEM	(-141)	1900033-021		NAS-9-497	B	II	NOTE 11C	2.125	.968	1.718	NA	.093	.031	.06	.093		.093	.858	.608
503	AC	CONTROL, GIMBAL POSITION	(-141)	2900036-021		NAS-9-497	B	II	NOTE 11C	2.125	.968	1.718	NA	.093	.031	.06	.093		.093	.858	.608
502	AC	ADPT, TEST POINT, PTA/PEA,	(-141)	2900145-021		NAS-9-497	B	II	NOTE 11C	2.125	.968	1.718	NA	.093	.031	.06	.093	.100 .104	.093	.858	.6
501	AC	MOUNTING PLATE, COMPONENT	(-144)	6900007-031		NAS-9-497	B	II	NOTE 11C	FOR DIMENSIONS SEE DASH 500 VALUES BELOW											
500	AC	MOUNTING PLATE, COMPONENT	(-144)	2900677-021		NAS-9-497	B	II	NOTE 11C	4.125	1.812	3.250	NA	.125	.062	.12	.156	.100 .104	.125	1.625	1.1

NOTES FOR TABLE

STYLE A IS FOR G & N SYSTEM
STYLE B IS FOR GROUND SUPPORT EQUIPMENT
TYPE I IS WITHOUT MOUNTING HOLES
TYPE II IS WITH MOUNTING HOLES

REVISIONS

SYM	ZONE	DESCRIPTION	CHG NO	DATE	APPD
CL		REPLACES REV CK WITH CHANGE PER TDRR 34365		9/28/67	JWL RWH
CM		REVISED PER TDRR 34395		17 OCT. 67	R.A.W.
CN		REVISED PER TDRR 34467		31 OCT 67	JRK
CP		REVISED PER TDRR 34855		6 NOV 67	EMS
CR		REVISED PER TDRR 35164		7 DEC 67	DKD RWH
CS		REVISED PER TDRR 35307		3 JAN 68	EHW
CT		REVISION STATUS CHANGED		7 FEB 68	RWH
CU		REVISED PER TDRR 35628		22 FEB 68	JRK
CV		REVISED PER TDRR 35675		27 FEB 68	LK
CW		REVISED PER TDRR 35970		3 APR 68	MTY
CY		REVISION STATUS CHANGED		16 APR 68	A.N.
CZ		REVISED PER TDRR 36245		23 MAY 68	MTY
DA		REVISED PER TDRR 36324		17 JUN 68	MTY
DB		REVISED PER TDRR 36742		12 SEP 68	
DC		REVISED PER TDRR 37114		16 DEC 68	LK
DD		REVISED PER TDRR 37146		30 DEC 68	MTY
DE		REVISED PER TDRR 37251		23 JAN 69	
DF		REVISED PER TDRR 37262		27 JAN 69	LK RWH
DG		REVISED PER TDRR 37811		26 SEP 69	DKD

DASH 41 VALUES																																		
.125	.062	.12	.156	.100 .104	.125	1.625	1.140	.890	.640	1.390	NA	NA	.125	1.875	1.650	2.625	.250	1.562	3.843	.093	NA	NA	.408	.125	.437	3.688	NA	3.687	.093	.625	.31	3.875	.062	NA
.260	.093	.156	.160	NA	NA	2.290	1.440	1.180	.940	1.900	NA	.375	.125	NA	1.790	2.760	.312	NA	3.590	.093	.062	NA	.525	NA	NA	NA	.225	NA	.093	.480	.430	NA	NA	3.670
35 VALUES																																		
DASH 5 42 VALUES																																		
DASH 5 00 VALUES																																		
DASH 55 VALUES																																		
31																																		
DASH 181																																		
DASH 181																																		
DASH 53																																		
DASH 50																																		
DASH 50																																		
DASH 141 VALUES																																		
DASH 53 VALUES																																		
DASH 18 VALUES																																		
DASH 14 VALUES																																		
DASH 14 VALUES																																		
DASH 50 VALUES																																		
.078	.048	.078	.093	NA	NA	1.125	.750	.593	.453	1.015	.062	.187	.078	.875	.718	1.375	.218	NA	NA	.048	.031	.875	.305	NA	.468	1.531	NA	NA	.078	.312	.187	NA		
.078	.048	.078	.093	NA	NA	1.125	.750	.593	.453	1.015	.062	.187	.078	.875	.718	1.375	.218	NA	NA	.048	.031	.875	.305	NA	.468	1.531	NA	NA	.078	.312	.187	NA		
.078	.048	.078	.093	NA	NA	1.125	.750	.593	.453	1.015	.062	.187	.078	.875	.718	1.375	.218	NA	NA	.048	.031	.875	.305	NA	.468	1.531	NA	NA	.078	.312	.187	NA		
.078	.048	.078	.093	NA	NA	1.125	.750	.593	.453	1.015	.062	.187	.078	.875	.718	1.375	.218	NA	NA	.048	.031	.875	.305	NA	.468	1.531	NA	NA	.078	.312	.187	NA		
.078	.048	.078	.093	NA	NA	1.125	.750	.593	.453	1.015	.062	.187	.078	.875	.718	1.375	.218	NA	NA	.048	.031	.875	.305	NA	.468	1.531	NA	NA	.078	.312	.187	NA		
.078	.048	.078	.093	NA	NA	1.125	.750	.593	.453	1.015	.062	.187	.078	.875	.718	1.375	.218	NA	NA	.048	.031	.875	.305	NA	.468	1.531	NA	NA	.078	.312	.187	NA		
.093	.031	.06	.093	.100 .104	.093	.858	.608	.484	.358	.733	.077	.116	.062	.937	.875	1.343	.125	.781	1.892	.046	NA	NA	.209	.093	.250	1.875	NA	1.840	.046	.23	.16	1.938		
.125	.062	.12	.156		.125	1.625	1.140	.890	.640	1.390	.125	.171	.125	1.875	1.687	2.625	.250	1.562	3.843	.093	NA	NA	.359	.125	.437	3.688	NA	3.687	.093	.40	.25	3.875		
.093	.031	.06	.093	.100 .104	.093	.858	.608	.484	.358	.733	.077	.116	.062	.937	.875	1.343	.125	.781	1.892	.046	NA	NA	.209	.093	.250	1.875	NA	1.840	.046	.23	.16	1.938		
.125	.062	.188	.156	NA	NA	1.750	1.125	.906	.688	1.500	NA	.281	.125	NA	1.094	2.062	.312	NA	2.500	.062	.125	1.312	.469	NA	NA	NA	.156	NA	.125	.469	.344	NA		
.093	.031	.06	.093	.100 .104	.093	.858	.608	.484	.358	.733	.077	.116	.062	.937	.875	1.343	.125	.781	1.892	.046	NA	NA	.209	.093	.250	1.875	NA	1.840	.046	.23	.16	1.938		
.093	.031	.06	.093		.093	.858	.608	.484	.358	.733	.077	.116	.062	.937	.875	1.343	.125	.781	1.892	.046	NA	NA	.209	.093	.250	1.875	NA	1.840	.046	.23	.25	1.938		
.093	.031	.06	.093		.093	.858	.608	.484	.358	.733	.077	.116	.062	.937	.875	1.343	.125	.781	1.892	.046	NA	NA	.209	.093	.250	1.875	NA	1.840	.046	.23	.16	1.938		
.125	.062	.12	.156		.125	1.625	1.140	.890	.640	1.390	.125	.171	.125	1.875	1.687	2.625	.250	1.562	3.843	.093	NA	NA	.359	.125	.437	3.688	NA	3.687	.093	.40	.25	3.875		
.093	.031	.06	.093	.100 .104	.093	.858	.608	.484	.358	.733	.077	.116	.062	.937	.875	1.343	.125	.781	1.892	.046	NA	NA	.209	.093	.250	1.875	NA	1.840	.046	.23	.16	1.938		
.078	.048	.078	.093	NA	NA	1.125	.750	.593	.453	1.015	.062	.187	.078	.875	.718	1.375	.218	NA	NA	.048	.031	.875	.305	.078	.531	1.906	.078	NA	.078	.531	.187	NA		
.078	.048	.078	.093	NA	NA	1.125	.750	.593	.453	1.015	.062	.187	.078	.875	.718	1.375	.218	NA	NA	.048	.031	.875	.305	.078	.531	1.906	.078	NA	.078	.531	.187	NA		
.093	.031	.06	.093	.100 .104	.093	.858	.608	.484	.358	.733	.077	.116	.062	.937	.875	1.343	.125	.781	1.892	.046	NA	NA	.209	.093	.250	1.875	NA	1.840	.046	.23	.16	1.938		
.125	.062	.12	.156		.125	1.625	1.140	.890	.640	1.390	.125	.171	.125	1.875	1.687	2.625	.250	1.562	3.843	.093	NA	NA	.359	.125	.437	3.688	NA	3.687	.093	.40	.25	3.875		
.093	.031	.06	.093	.100 .104	.093	.858	.608	.484	.358	.733	.077	.116	.062	.937	.875	1.343	.125	.781	1.892	.046	NA	NA	.209	.093	.250	1.875	NA	1.840	.046	.23	.16	1.938		
.078	.048	.078	.093	NA	NA	1.125	.750	.593	.453	1.015	.062	.187	.078	.875	.718	1.375	.218	NA	NA	.048	.031	.875	.305	.078	.531	1.906	.078	NA	.078	.531	.187	NA		
.093	.031	.06	.093	.100 .104	.093	.858	.608	.484	.358	.733	.077	.116	.062	.937	.875	1.343	.125	.781	1.892	.046	NA	NA	.209	.093	.250	1.875	NA	1.840	.046	.23	.16	1.938		
.125	.062	.12	.156		.125	1.625	1.140	.890	.640	1.390	.125	.171	.125	1.875	1.687	2.625	.250	1.562	3.843	.093	NA	NA	.359	.125	.437	3.688	NA	3.687	.093	.40	.25	3.875		
.125	.062	.12	.156		.125	1.625	1.140	.890	.640	1.390	.125	.171	.125	1.875	1.687	2.625	.250	1.562	3.843	.093	NA	NA	.359	.125	.437	3.688	NA	3.687	.093	.40	.25	3.875		
.093	.031	.06	.093		.093	.858	.608	.484	.358	.733	.077	.116	.062	.937	.875	1.343	.125	.781	1.892	.046	NA	NA	.209	.093	.250	1.875	NA	1.840	.046	.23	.16	1.938		
.093	.031	.06	.093	.100 .104	.093	.858	.608	.484	.358	.733	.077	.116	.062	.937	.875	1.343	.125	.781	1.892	.046	NA	NA	.209	.093	.250	1.875	NA	1.840	.046	.23	.16	1.938		
DASH 50 VALUES BELOW																																		
DASH 50 VALUES BELOW																																		
.125	.031	.125	.156	.125	.125	1.718	1.187	.968	.749	1.452	.093	.295	.090	1.312	1.00	2.000	.250	1.687	2.750	.062	NA	NA	.463	.125	.562	2.437	.140	2.562	.090	.468	.359	2.750		
.093	.031	.06	.093	NA	NA	.858	.608	.484	.358	.733	.062	.140	.062	NA	.968	1.450	.125	NA	1.720	.046	.03	NA	.210	NA	NA	NA	.070	NA	.046	.32	.16	NA		
DASH 50 VALUES BELOW																																		
DASH 50 VALUES BELOW																																		
ASH 50 VALUES BELOW																																		
DASH 50 VALUES BELOW																																		
DASH 50 VALUES BELOW																																		
DASH 50 VALUES BELOW																																		
DASH 50 VALUES BELOW																																		
DASH 50 VALUES BELOW																																		
DASH 50 VALUES BELOW																																		
.093	.031	.06	.093	.100 .104	.093	.858	.608	.484	.358	.733	.077	.116	.062	.937	.875	1.343	.125	.781	1.892	.046	NA	NA	.209	.093	.250	1.875	NA	1.840	.046	.23	.16	1.938		
DASH 50 VALUES BELOW																																		
DASH 50 VALUES BELOW																																		
DASH 50 VALUES BELOW																																		
DASH 50 VALUES BELOW																																		
.078	.048	.078	.093	NA	NA	1.125	.750	.593	.453	1.015	.062	.187	.078	.875	.718	1.375	.218	NA	NA	.048	.031	.875	.305	.078	.531	1.906	.078	NA	.078	.531	.187	NA		
DASH 50 VALUES BELOW																																		
.093	.031	.06	.093	.100 .104	.093	.858	.608	.484	.358	.733	.077	.116	.062	.937	.875	1.343	.125	.781	1.892	.046	NA	NA	.209	.093	.250	1.875	NA	1.840	.046	.23	.16	1.938		
.093	.031	.06	.093		.093	.858	.608	.484	.358	.733	.077	.116	.062	.937	.875	1.343	.125	.781	1.892	.046	NA	NA	.209	.093	.250	1.875	NA	1.840	.046	.23	.16	1.938		
.093	.031	.06	.093		.093	.858	.608	.484	.358	.733	.077	.116	.062	.937	.875	1.343	.125	.781	1.892	.046	NA	NA	.209	.093	.250	1.875	NA	1.840	.046	.23	.16	1.938		
.093	.031	.06	.093		.093	.858	.608	.484	.358	.733	.077	.116	.062	.937	.875	1.343	.125	.781	1.892	.046	NA	NA	.209	.093	.250	1.875	NA	1.840	.046	.23	.16	1.938		
.093	.031	.06	.093	.100 .104	.093	.858	.608	.484	.358	.733	.077	.116	.062	.937	.875	1.343	.125	.781	1.892	.046	NA	NA	.209	.093	.250	1.875	NA	1.840	.046	.23	.16	1.938		
50 VALUES BELOW																																		
.125	.062	.12	.156	.100 .104	.125	1.625	1.140	.890	.640	1.390	.125	.171	.125	1.875	1.687	2.625	.250	1.562	3.843	.093	NA	NA	.359	.125	.437	3.688	NA	3.687	.093	.40	.25	3.875		
E	F	G	H	J	K	L	M	N	P	R	S	T	U	V	W	Y	Z	AA	AB	AC	AD	AE	AF	AG	AH	AJ	AK	AL	AM	AN	AP	AR	AS	AT

AC ELECTRONICS DASH NUMBERS

AS APPLICABLE	
NEXT ASSY	USED ON
APPLICATION	

UNLESS OTHERWISE SPECIFIED
DIMENSIONS ARE IN INCHES
TOLERANCES ON
2 PLACE DECIMALS ±
3 PLACE DECIMALS ± .005
ANGLES ± —
DO NOT SCALE THIS DRAWING
MATERIAL: SEE NOTE 11
APPROVAL

MIT INSTRUMENTATION LAB
CAMBRIDGE MASS
DWG NO
CONTRACT
DRAWN: R.A. JONES — DATE: 16 JUL 65
CHECKED
APPROVAL: W. KUPFER — 22 JUL 65
CONTRACT
NASA APPROVAL: T. MICHAELS — 22 JUL 65
MIT APPROVAL: W. KUPFER — 22 JUL 65

MANNED SPACECRAFT CENTER
HOUSTON, TEXAS

NAMEPLATES, APOLLO G&N - GSE (STANDARDS)

SIZE: J2
CODE IDENT NO. 80230
1004260
SCALE NONE
SHEET 6 OF 6

1004260 DG

1004260 DG
SHT 6

SHEET 6 OF 6
1004260

27 1004260

NOTICE – WHEN GOVERNMENT DRAWINGS, SPECIFICATIONS OR OTHER DATA [illegible]

NOTES:

1. INTERPRET DRAWING IN ACCORDANCE WITH STANDARDS PRESCRIBED BY MIL-D-70327.
2. DIMENSIONS ON EACH VIEW APPLY TO ALL VIEWS (WITH THE EXCEPTION OF MOUNTING HOLES).
3. FORMATS ILLUSTRATED WILL BE APPLICABLE TO ALL ITEMS REQUIRING NAMEPLATES BELOW END ITEM DESIGNATION (SYSTEMS, ASSEMBLIES, ETC.)
4. PLATE BACKGROUND TO BE LUSTERLESS BLACK PER FED-STD-595, COLOR 37038. BORDER, MARKING AND LETTERING TO BE NATURAL METAL, (ANODIZED ALUMINUM).
5. MARKING METHOD TO BE DIE STAMPING, ETCHING OR ENGRAVING IN ACCORDANCE WITH MIL-P-19834.
6. LETTERING STYLE TO BE GOTHIC, (SANS SERIFS), AND NUMBERS TO BE ARABIC.
7. WHERE LOCATING DIMENSIONS ARE NOT SHOWN, CHARACTERS SHALL BE SYMMETRICALLY POSITIONED.
8. IDENTIFY WITH DRAWING NUMBER PER ND 1002019.
9. WHEN "AUTO MARK" METAL MARKING TYPEWRITER IS USED TO ADD DATA TO BLANK SPACES, TYPE SIZE IS TO BE SELECTED FROM DIMENSIONS U, AC, AND AM.
10. NASA SYMBOL IS TO BE PROPORTIONAL TO NAMEPLATE IN RATIO OF 1 TO 5 WITH DIMENSION A VALUE AND IS TO HAVE NATURAL BACKGROUND. NASA SYMBOL LETTERS LETTERING AND FEATHER TO BE BLACK, (OR WHITE FOR SILK SCREENING). WHERE BLACK FEATHER PROTRUDES INTO BLACK BACKGROUND, A MINIMUM OUTLINE OF NATURAL BACKGROUND SHALL EXIST.
11. NAMEPLATES WILL BE APPLIED BY METHODS LISTED BELOW, SHOWN IN ORDER OF PREFERENCE, (I.E., FOR RELIABILITY AND WEIGHT).
    A - STENCIL OR SILK SCREEN DIRECTLY ON EQUIPMENT USING INK PER SCD 1010920, (WHITE OR BLACK).
    B - ALUMINUM FOIL, (STYLE A OR B, TYPE I):
    FOIL SHALL BE .0030 ± .0005 THICK PER MIL-A-148.
    FOIL SHALL HAVE NO ADHESIVE BACKING.
    FOIL SHALL BE BONDED PER ND 1002219, (METHOD II).
    FOIL SHALL BE CLEAR ANODIZED PER MIL-A-8625, TYPE II.
    C - PLATE, (STYLE A OR B, TYPE II):
    MATERIAL: QQ-A-250, TEMPER 0 OR H14, TYPE 1100, ALUMINUM ALLOY, .032 THICK. ANODIZE PER MIL-A-8625, TYPE II.
    ALUMINUM PLATE MUST BE FREE FROM BURRS AND SHARP CORNERS, MOUNTED WITH APPLICABLE SIZE FASTENERS.
12. NAMEPLATES SHALL BE CAPABLE OF MEETING APPLICABLE REQUIREMENTS OF MIL-M-13231.
13. ON DIMENSION TABLES SHOWN ON PAGES 2, 3, 4, 5, AND 6, NA MEANS, "NOT APPLICABLE".

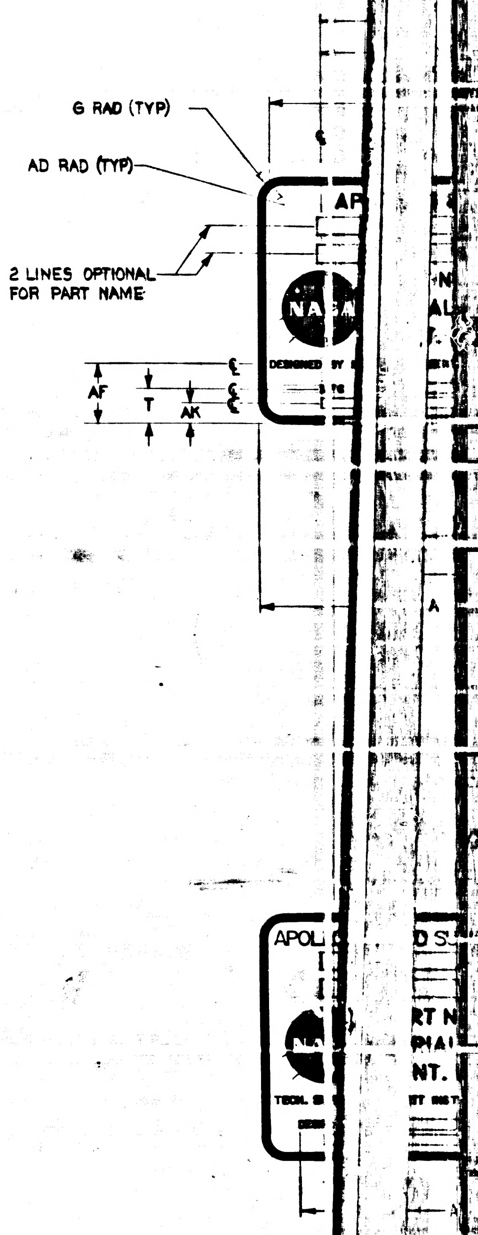

SUGGESTED PROPORTIONS FOR NAMEPLATE DIMENSIONS.
1. SELECT NAMEPLATE LENGTH, DIMENSION "A", TO FIT DESIGN NEEDS.
2. DIMENSIONS B THRU AS ON LINE 1 BELOW ARE PROPORTIONAL TO "A" BY MULTIPLIERS SHOWN IN LINE 2 BELOW.

1.	A	B	C	D	E	F	G	H	J	K	L	M	N	P	R	S	T	U
2.	1.000A	.6563A	.8438A	.6875A	.0391A	.0240A	.0391A	.0469A	.0547A	.0469A	.5938A	.3750A	.2969A	.2187A	.5079A	.0313A	.0938A	.0391A

1.	V	W	Y	Z	AA	AB	AC	AD	AE	AF	AG	AH	AJ	AK	AL	AM	AN	AP	AR	AS
2.	.4375A	.3594A	.6875A	.1094A	.5781A	.9219A	.0240A	.0156A	.4375A	.1525A	.0391A	.1563A	.8438A	.0548A	.8659A	.0391A	.1563A	.0938A	.9219A	.0151A

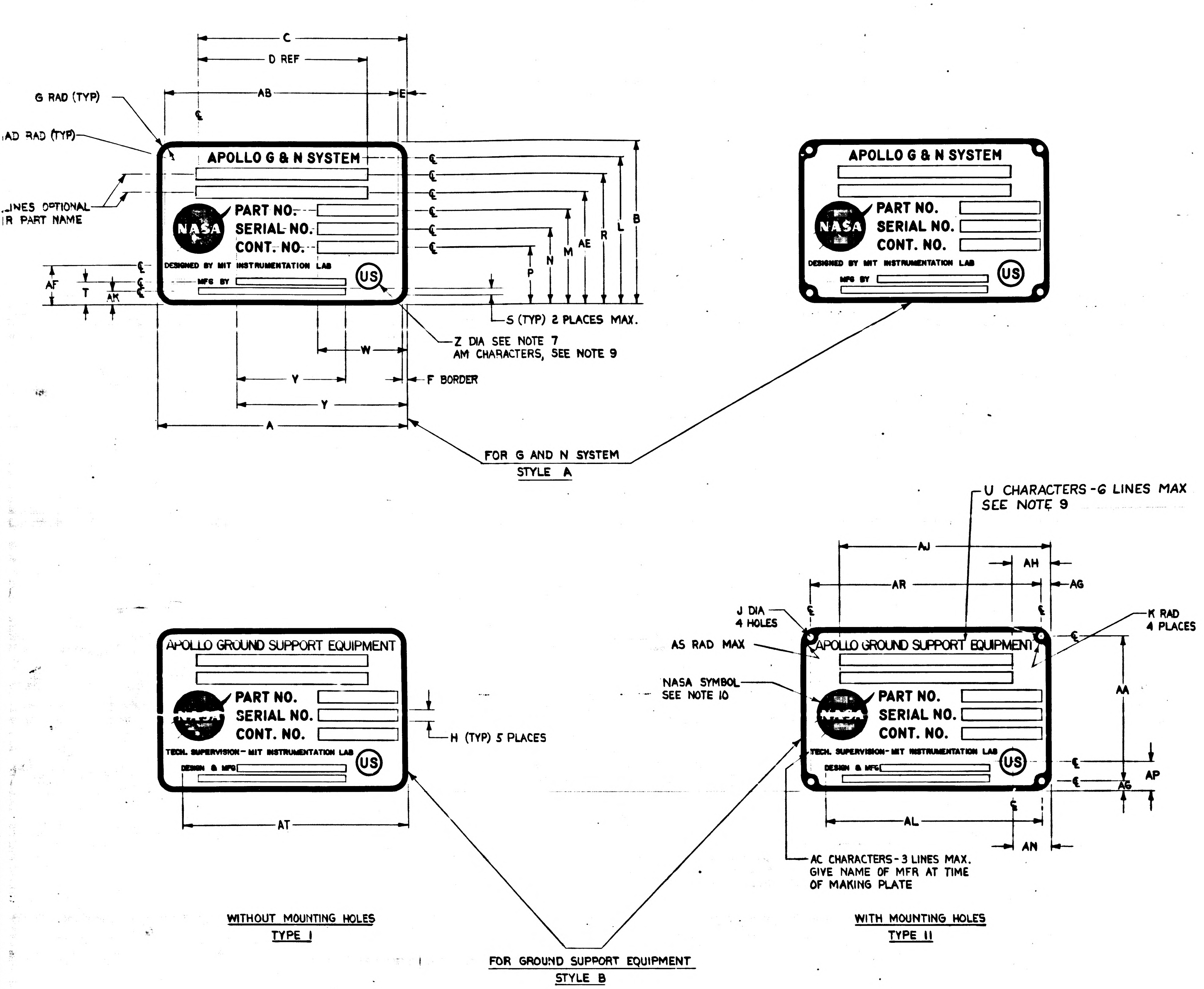
C
D REF
AB
E
G RAD (TYP)
AD RAD (TYP)
LINES OPTIONAL
R PART NAME
APOLLO G & N SYSTEM
NASA
PART NO.
SERIAL NO.
CONT. NO.
DESIGNED BY MIT INSTRUMENTATION LAB
MFG BY
US
AF
T
AK
P
N
M
AE
R
L
B
S (TYP) 2 PLACES MAX.
Z DIA SEE NOTE 7
AM CHARACTERS, SEE NOTE 9
W
Y
Y
F BORDER
A
FOR G AND N SYSTEM
STYLE A
U CHARACTERS -6 LINES MAX
SEE NOTE 9
AJ
AH
AR
AG
J DIA
4 HOLES
K RAD
4 PLACES
AS RAD MAX
NASA SYMBOL
SEE NOTE 10
APOLLO GROUND SUPPORT EQUIPMENT
TECH. SUPERVISION - MIT INSTRUMENTATION LAB
DESIGN & MFG
H (TYP) 5 PLACES
AT
AA
AP
AQ
AL
AN
AC CHARACTERS - 3 LINES MAX.
GIVE NAME OF MFR AT TIME
OF MAKING PLATE
WITHOUT MOUNTING HOLES
TYPE I
WITH MOUNTING HOLES
TYPE II
FOR GROUND SUPPORT EQUIPMENT
STYLE B

REVISIONS

SYM	ZONE	DESCRIPTION	CHG NO	DATE	APPD
CL		REPLACES REV CK WITHOUT CHANGE PER TDRR 34365		9/28/67	JWL RWH
CM		REVISION STATUS CHANGED		18 OCT. 67	R.A.W.
CN		REVISION STATUS CHANGED		31 OCT 67	JRK
Ⓜ CP		REVISION STATUS CHANGED		6 NOV 67	SMS
Ⓜ CR		REVISION STATUS CHANGED		7 DEC 67	AKD RWH
Ⓜ CS		REVISION STATUS CHANGED		3 JAN 68	J.W. EHW
CT		REVISION STATUS CHANGED		7 FEB 68	LK
CU		REVISION STATUS CHANGED		22 FEB 68	JRK
Ⓜ CV		REVISION STATUS CHANGED		27 FEB 68	LK
CW		REVISION STATUS CHANGED		3 APR 68	WTY
Ⓜ CY		REVISION STATUS CHANGED		6 APR 68	A.N.
Ⓜ CZ		REVISION STATUS CHANGED		23 MAY 68	WTY
Ⓜ DA		REVISION STATUS CHANGED		17 JUN 68	WTY
Ⓜ DB		REVISION STATUS CHANGED		12 SEP 68	RWH
DC		REVISION STATUS CHANGED		16 DEC 68	LK
Ⓜ DD		REVISION STATUS CHANGED		30 DEC 68	WTY
DE		REVISED PER TDRR 37251		23 JAN 69	
Ⓜ DF		REVISION STATUS CHANGED		27 JAN 69	LK
DG		REVISION STATUS CHANGED		27 SEP 69	DKG
DH		REVISION STATUS CHANGED		29 SEP 69	WTY CF

AS APPLICABLE		UNLESS OTHERWISE SPECIFIED DIMENSIONS ARE IN INCHES TOLERANCES ON 2 PLACE DECIMALS ± 3 PLACE DECIMALS ± .005 ANGLES ±	MIT INSTRUMENTATION LAB CAMBRIDGE MASS
NEXT ASSY	USED ON	DO NOT SCALE THIS DRAWING	DRAWN R.A. JONES DATE 16 JUL 65
APPLICATION		MATERIAL SEE NOTE 11	CHECKED W. KUPFER APPROVAL 22 JUL 65
		APPROVAL	CONTRACT
			T. MICHAELS 22 JUL 65 NASA APPROVAL
			W. KUPFER 22 JUL 65 MIT APPROVAL

MANNED
SPACECRAFT CENTER
HOUSTON, TEXAS

NAMEPLATES, APOLLO G&N - GSE (STANDARDS)

SIZE J2 | CODE IDENT NO. 80230 | 1004260

SCALE NONE | SHEET 1 OF 6

DH 1004260

1004260

260 D- SHT 1

271004260

NOTICE — WHEN GOVERNMENT DRAWINGS, SPECIFICATIONS, OR OTHER DATA ARE USED FOR ANY PURPOSE OTHER THAN IN CONNECTION WITH A DEFINITELY RELATED GOVERNMENT PROCUREMENT OPERATION, THE UNITED STATES GOVERNMENT THEREBY INCURS NO RESPONSIBILITY NOR ANY OBLIGATION WHATSOEVER; AND THE FACT THAT THE GOVERNMENT MAY HAVE FORMULATED, FURNISHED, OR IN ANY WAY SUPPLIED THE SAID DRAWINGS, SPECIFICATIONS, OR OTHER DATA IS NOT TO BE REGARDED BY IMPLICATION OR OTHERWISE AS IN ANY MANNER LICENSING THE HOLDER OR ANY OTHER PERSON OR CORPORATION, OR CONVEYING ANY RIGHTS OR PERMISSION TO MANUFACTURE, USE, OR SELL ANY PATENTED INVENTION THAT MAY IN ANY WAY BE RELATED THERETO.

DASH NO.	P/C	PART NAME	REMARKS	PART NUMBER	SER. NO.	CONT. NO.	STYLE	TYPE	MATERIAL	A	B	C	D	E	F	G	H	J	K	L	M
399	K																				
398	K																				
350	K	ALIGNMENT OPTICAL TELESCOPE (LEM)		NA	NA	NA	A	I	NOTE 11B	4.000	2.625	3.375	2.750	.156	.093	.156	.187	NA	NA	2.312	1.468
309	K																				
308	K																				
307	K						B	I	NOTE 11B	4.000	2.625	3.375	2.750	.156	.093	.156	.187	NA	NA	2.328	1.468
306	K						B	II	NOTE 11C	4.000	2.625	3.375	2.750	.156	.093	.156	.187	.125	.156	2.328	1.468
305	K						B	I	NOTE 11B	2.000	1.312	1.687	1.375	.078	.048	.078	.093	NA	NA	1.164	.734
304	K						B	II	NOTE 11C	2.000	1.312	1.687	1.375	.078	.048	.078	.093	.070	.078	1.164	.734
303	K																				
302	K																				
301	K																				
300	K	OPTICAL UNIT		NA	NA	NA	A	I	NOTE 11B	2.000	1.312	1.675	NA	NA	.048	.078	NA	NA	NA	1.090	.812
9	K	2 IN AUTOCOLLIMATOR		1001702			B	II	NOTE 11C	4.000	2.625	3.812	2.750	.156	.093	.156	.187	.125	.156	2.250	1.500
8	K	5 IN AUTOCOLLIMATOR		1017410			B	II	NOTE 11C	4.000	2.625	3.812	2.750	.156	.093	.156	.187	.125	.156	2.250	1.500
7	K	2-1/2 IN AUTOCOLLIMATOR (SCT)		1017435			B	II	NOTE 11C	4.000	2.625	3.812	2.750	.156	.093	.156	.187	.125	.156	2.250	1.500
6	K	2-1/2 IN AUTOCOLLIMATOR (SXT)		1017448			B	II	NOTE 11C	4.000	2.625	3.812	2.750	.156	.093	.156	.187	.125	.156	2.250	1.500
5	K	RETROREFLECTING PRISM ASSEMBLY		1019840			B	I	NOTE 11B	4.000	2.625	3.812	2.750	.156	.093	.156	.187	NA	NA	2.250	1.500
4	K	S/H SIMULATOR ASSEMBLY		1019896			B	I	NOTE 11B	4.000	2.625	3.812	2.750	.156	.093	.156	.187	NA	NA	2.250	1.500
3	K	REFERENCE MIRROR		1001767			B	I	NOTE 11B	2.000	1.312	1.906	1.375	.078	.048	.078	.093	NA	NA	1.125	.750
2	K	2 IN PLANE READING AUTOCOLLIMATOR		1017413			B	I	NOTE 11B	2.000	1.312	1.906	1.375	.078	.048	.078	.093	NA	NA	1.125	.750
1	K	2 IN AUTOCOLLIMATOR		1001702			B	I	NOTE 11B	2.000	1.312	1.906	1.375	.078	.048	.078	.093	NA	NA	1.125	.750

NOTES FOR TABLE

STYLE A IS FOR G & N SYSTEM
STYLE B IS FOR GROUND SUPPORT EQUIPMENT
TYPE I IS WITHOUT MOUNTING HOLES
TYPE II IS WITH MOUNTING HOLES

REVISIONS					
SYM	ZONE	DESCRIPTION	CHG NO	DATE	APPD
CL		REPLACES REV CK WITHOUT CHANGE PER TDRR 34365		9/28/67	JWL RWH
CM		REVISION STATUS CHANGED		18 OCT 67	R.A.W.
CN		REVISION STATUS CHANGED		31 OCT 67	JRK
CP		REVISION STATUS CHANGED		6 NOV 67	EMS
CR		REVISION STATUS CHANGED		7 DEC 67	DKD RWH
CS		REVISION STATUS CHANGED		3 JAN 68	J.W. EHW
CT		REVISION STATUS CHANGED		7 FEB 68	LK RWH
CU		REVISION STATUS CHANGED		22 FEB 68	JRK
CV		REVISION STATUS CHANGED		[illegible] 68	LK
CW		REVISION STATUS CHANGED		3 APR 68	WTY
CY		REVISION STATUS CHANGED		16 APR 68	A.N.
CZ		REVISION STATUS CHANGED		23 MAY 68	WTY
DA		REVISION STATUS CHANGED		17 JUN 68	WTY
DB		REVISION STATUS CHANGED		12 SEP 68	RWH
DC		REVISION STATUS CHANGED		16 DEC 68	LK
DD		REVISION STATUS CHANGED		30 DEC 68	WTY
DE		REVISION STATUS CHANGED		23 JAN 69	JW
DF		REVISION STATUS CHANGED		27 JAN 69	LK RWH
DG		REVISION STATUS CHANGED		26 SEP 69	DKD
DH		REVISION STATUS CHANGED		29 SEP 69	WTY CP

.156	.187	NA	NA	2.312	1.468	1.187	.906	2.031	NA	.375	.156	NA	1.437	2.750	.437	NA	3.688	.062	.062	1.750	.593	NA	.625	3.375	.187	NA	.156	.531	.453	NA
.156	.187	NA	NA	2.328	1.468	1.187	.906	2.031	.062	.375	.156	NA	1.437	2.750	.437	NA	3.687	.062	.062	1.750	.593	NA	NA	NA	NA	NA	NA	NA	NA	NA
.156	.187	.125	.156	2.328	1.468	1.187	.906	2.031	.062	.375	.156	NA	1.437	2.750	.437	2.312	3.687	.062	NA	1.750	.593	NA	NA	NA	NA	NA	NA	NA	NA	NA
.078	.093	NA	NA	1.164	.734	.593	.453	1.015	.048	.171	.078	NA	.718	1.375	.187	NA	NA	.048	.031	.875	.320	NA	NA	NA	NA	NA	NA	NA	NA	NA
.078	.093	.070	.078	1.164	.734	.593	.453	1.015	.048	.171	.078	NA	.718	1.375	.187	.156	1.843	.048	NA	.875	.320	NA	NA	NA	NA	NA	NA	NA	NA	NA
.078	NA	NA	NA	1.090	.812	.675	.540	.940	NA	.265	NA	NA	NA	1.375	.218	NA	NA	NA	NA	NA	.375	NA	NA	NA	.180	NA	.078	NA	NA	NA
.156	.187	.125	.156	2.250	1.500	1.187	.906	2.031	.093	.375	.156	1.750	1.437	2.750	.437	2.312	3.687	.062	NA	1.750	.593	.156	1.062	3.812	.156	NA	.156	1.062	.375	3.687
.156	.187	.125	.156	2.250	1.500	1.187	.906	2.031	.093	.375	.156	1.750	1.437	2.750	.437	2.312	3.687	.062	NA	1.750	.593	.156	1.062	3.812	.156	NA	.156	1.062	.375	3.687
.156	.187	.125	.156	2.250	1.500	1.187	.906	2.031	.093	.375	.156	1.750	1.437	2.750	.437	2.312	3.687	.062	NA	1.750	.593	.156	1.062	3.812	.156	NA	.156	1.062	.375	3.687
.156	.187	.125	.156	2.250	1.500	1.187	.906	2.031	.093	.375	.156	1.750	1.437	2.750	.437	2.312	3.687	.062	NA	1.750	.593	.156	1.062	3.812	.156	NA	.156	1.062	.375	3.687
.156	.187	NA	NA	2.250	1.500	1.187	.906	2.031	.093	.375	.156	1.750	1.437	2.750	.437	NA	NA	.062	.062	1.750	.593	.156	1.062	3.812	.156	NA	.156	1.062	.375	NA
.156	.187	NA	NA	2.250	1.500	1.187	.906	2.031	.093	.375	.156	1.750	1.437	2.750	.437	NA	NA	.062	.062	1.750	.593	.156	1.062	3.812	.156	NA	.156	1.062	.375	NA
.078	.093	NA	NA	1.125	.750	.593	.453	1.015	.062	.187	.078	.875	.718	1.375	.218	NA	NA	.048	.031	.875	.305	.078	.531	1.906	.078	NA	.078	.531	.187	NA
.078	.093	NA	NA	1.125	.750	.593	.453	1.015	.062	.187	.078	.875	.718	1.375	.218	NA	NA	.048	.031	.875	.305	.078	.531	1.906	.078	NA	.078	.531	.187	NA
.078	.093	NA	NA	1.125	.750	.593	.453	1.015	.062	.187	.078	.875	.718	1.375	.218	NA	NA	.048	.031	.875	.305	.078	.531	1.906	.078	NA	.078	.531	.187	NA
G	H	J	K	L	M	N	P	R	S	T	U	V	W	Y	Z	AA	AB	AC	AD	AE	AF	AG	AH	AJ	AK	AL	AM	AN	AP	AR

KOLLSMAN DASH NUMBERS

AS APPLICABLE		UNLESS OTHERWISE SPECIFIED DIMENSIONS ARE IN INCHES TOLERANCES ON 2 PLACE DECIMALS ± 3 PLACE DECIMALS ± .005 ANGLES ±	MIT INSTRUMENTATION LAB CAMBRIDGE MASS DWG NO / CONTRACT
NEXT ASSY	USED ON	DO NOT SCALE THIS DRAWING	DRAWN R.A. JONES DATE 16 JUL 65 CHECKED W. KUPFER 22 JUL 65 APPROVAL CONTRACT
APPLICATION		MATERIAL SEE NOTE 11	T. MICHAELS 22 JUL 65 NASA APPROVAL W. KUPFER 22 JUL 65 MIT APPROVAL
		APPROVAL	

MANNED SPACECRAFT CENTER
HOUSTON, TEXAS

NAMEPLATES, APOLLO GEN - GSE (STANDARDS)

SIZE J2 | CODE IDENT NO. 80230 | 1004260
SCALE NONE | SHEET 2 OF 6

[illegible]

DASH NO.	P/C	PART NAME	REMARKS	PART NUMBER	SER. NO.	CONT. NO.	STYLE	TYPE	MATERIAL	A	B	C	D	E	F	G	H	J	K	L	M	N
299	R																					
298	R																					
293	R	COMPUTER TEST SET		2014042-081	NA	NAS-9-497	B	II	NOTE 11C	FOR DIMENSIONS SEE DASH 18 VALUES BELOW												
292	R	DRAWER ASSY - PROGRAM & MONITOR		2014041-071	NA	NAS-9-497	B	I	NOTE 11B	FOR DIMENSIONS SEE DASH 17 VALUES BELOW												
291	R	BUFFER CIRCUIT ASSY		2014254-041	NA	NAS-9-497	B	I	NOTE 11B	FOR DIMENSIONS SEE DASH 15 VALUES BELOW												
290	R	LOGIC DRAWER ASSY NO. 2		2014037-051	NA	NAS-9-497	B	I	NOTE 11B	FOR DIMENSIONS SEE DASH 17 VALUES BELOW												
289	R	SELF TEST ASSY		2014392-021	NA	NAS-9-497	B	I	NOTE 11B	FOR DIMENSIONS SEE DASH 15 VALUES BELOW												
288	R	LOGIC DRAWER ASSY NO. 1		2014036-051	NA	NAS-9-497	B	I	NOTE 11B	FOR DIMENSIONS SEE DASH 17 VALUES BELOW												
287	R	COMPUTER TEST SET		2014042-071	NA	NAS-9-497	B	II	NOTE 11C	FOR DIMENSIONS SEE DASH 18 VALUES BELOW												
286	R	DRAWER ASSY-PROGRAM & MONITOR		2014041-061	NA	NAS-9-497	B	I	NOTE 11B	FOR DIMENSIONS SEE DASH 17 VALUES BELOW												
285	R	BUFFER CIRCUIT ASSY		2014254-031	NA	NAS-9-497	B	I	NOTE 11B	FOR DIMENSIONS SEE DASH 15 VALUES BELOW												
284	R	LOGIC DRAWER ASSY NO. 2		2014037-041	NA	NAS-9-497	B	I	NOTE 11B	FOR DIMENSIONS SEE DASH 17 VALUES BELOW												
283	R	DRAWER ASSY-PROGRAM & MONITOR		2014041-051	NA	NAS-9-497	B	I	NOTE 11B	FOR DIMENSIONS SEE DASH 17 VALUES BELOW												
282	R	COMPUTER TEST SET		2014042-061	NA	NAS-9-497	B	II	NOTE 11C	FOR DIMENSIONS SEE DASH 18 VALUES BELOW												
281	R	AGC HANDLING FIXTURE		2014282-031	NA	NAS-9-497	B	I	NOTE 11B	FOR DIMENSIONS SEE DASH 17 VALUES BELOW												
280	R	COMPUTER TEST SET		2014042-051	NA	NAS-9-497	B	II	NOTE 11C	FOR DIMENSIONS SEE DASH 18 VALUES BELOW												
279	R	SELF TEST ASSY		2014366-041	NA	NAS-9-497	B	I	NOTE 11B	FOR DIMENSIONS SEE DASH 15 VALUES BELOW												
278	R	LOGIC DRAWER ASSY NO. 1		2014036-041	NA	NAS-9-497	B	I	NOTE 11B	FOR DIMENSIONS SEE DASH 17 VALUES BELOW												
277	R	COMPUTER TEST SET		2014042-041	NA	NAS-9-497	B	II	NOTE 11C	FOR DIMENSIONS SEE DASH 18 VALUES BELOW												
276	R	DRAWER ASSY-PROGRAM & MONITOR		2014041-041	NA	NAS-9-497	B	I	NOTE 11B	FOR DIMENSIONS SEE DASH 17 VALUES BELOW												
275	R	DRAWER ASSY RDC INTERFACE		2014045-031	NA	NAS-9-497	B	I	NOTE 11B	FOR DIMENSIONS SEE DASH 15 VALUES BELOW												
274	R	SELF TEST ASSY		2014366-031	NA	NAS-9-497	B	I	NOTE 11B	FOR DIMENSIONS SEE DASH 15 VALUES BELOW												
273	R	LOGIC DRAWER ASSY NO. 2		2014037-031	NA	NAS-9-497	B	I	NOTE 11B	FOR DIMENSIONS SEE DASH 17 VALUES BELOW												
272	R	DRAWING ASSY PROGRAMMER & MONITOR		2014041-031	NA	NAS-9-497	B	I	NOTE 11B	FOR DIMENSIONS SEE DASH 17 VALUES BELOW												
271	R	LOGIC DRAWER ASSY NO. 1		2014036-031	NA	NAS-9-497	B	I	NOTE 11B	FOR DIMENSIONS SEE DASH 17 VALUES BELOW												
270	R	COMPUTER TEST SET		2014042-031	NA	NAS-9-497	B	II	NOTE 11C	FOR DIMENSIONS SEE DASH 18 VALUES BELOW												
269	R	POWER CONTROL ASSY		2014044-021	NA	NAS-9-497	B	I	NOTE 11B	FOR DIMENSIONS SEE DASH 17 VALUES BELOW												
268	R	SELF TEST ASSY		2014366-021	NA	NAS-9-497	B	I	NOTE 11B	FOR DIMENSIONS SEE DASH 15 VALUES BELOW												
267	R	AGC JUNCTION ASSY		2014341-021	NA	NAS-9-497	B	I	NOTE 11B	FOR DIMENSIONS SEE DASH 15 VALUES BELOW												
266	R	POWER CONTROL ASSY		2014079-021	NA	NAS-9-497	B	I	NOTE 11B	FOR DIMENSIONS SEE DASH 15 VALUES BELOW												
265	R	BUFFER CIRCUIT ASSY		2014254-021	NA	NAS-9-497	B	I	NOTE 11B	FOR DIMENSIONS SEE DASH 15 VALUES BELOW												
264	R	DRAWER ASSY X Y INTERFACE		2014040-021	NA	NAS-9-497	B	I	NOTE 11B	FOR DIMENSIONS SEE DASH 15 VALUES BELOW												
263	R	DRAWER ASSY RDC INTERFACE		2014045-021	NA	NAS-9-497	B	I	NOTE 11B	FOR DIMENSIONS SEE DASH 15 VALUES BELOW												
262	R	DRAWER ASSY PROGRAMMER & MONITOR		2014041-021	NA	NAS-9-497	B	I	NOTE 11B	FOR DIMENSIONS SEE DASH 17 VALUES BELOW												
261	R	LOGIC DRAWER ASSY NO. 2		2014037-021	NA	NAS-9-497	B	I	NOTE 11B	FOR DIMENSIONS SEE DASH 17 VALUES BELOW												
260	R	LOGIC DRAWER ASSY NO. 1		2014036-021	NA	NAS-9-497	B	I	NOTE 11B	FOR DIMENSIONS SEE DASH 17 VALUES BELOW												
259	R	OPERATION CONSOLE		2014024-021	NA	NAS-9-497	B	II	NOTE 11C	FOR DIMENSIONS SEE DASH 18 VALUES BELOW												
258	R	COMPUTER TEST SET		2014042-021	NA	NAS-9-497	B	II	NOTE 11C	FOR DIMENSIONS SEE DASH 18 VALUES BELOW												
257	R	AUXILIARY CALIBRATION CONSOLE		2014059-021	NA	NAS-9-497	B	II	NOTE 11C	FOR DIMENSIONS SEE DASH 18 VALUES BELOW												
256	R	AGC CALIBRATION CONSOLE		2014049-021	NA	NAS-9-497	B	II	NOTE 11C	FOR DIMENSIONS SEE DASH 18 VALUES BELOW												
255	R	AGC HANDLING FIXTURE		2014282-021	NA	NAS-9-497	B	I	NOTE 11B	FOR DIMENSIONS SEE DASH 17 VALUES BELOW												
254	R	DRAWER ASSY COMP. SIMULATOR		2014048-011	NA	NAS-9-497	B	II	NOTE 11C	FOR DIMENSIONS SEE DASH 18 VALUES BELOW												
253	R	SHIPPING KIT ASSY, NAV DSKY		2016312-011	NA	NAS-9-497	B	II	NOTE 11C	FOR DIMENSIONS SEE DASH 18 VALUES BELOW												
252	R	SHIPPING KIT ASSY, UNIVERSAL DSKY		2016316-011	NA	NAS-9-497	B	II	NOTE 11C	FOR DIMENSIONS SEE DASH 18 VALUES BELOW												
251	R	SHIPPING KIT ASSY, MAIN DSKY		2016313-011	NA	NAS-9-497	B	II	NOTE 11C	FOR DIMENSIONS SEE DASH 18 VALUES BELOW												
250	R	AMPLIFIER, REWORK		2014386	NA	NAS-9-497	B	I	NOTE 11B	FOR DIMENSIONS SEE DASH 15 VALUES BELOW												
249	R	TEMP MONITOR ASSY		2014313-011	NA	NAS-9-497	B	I	NOTE 11C	FOR DIMENSIONS SEE DASH 17 VALUES BELOW												
248	R	AGC JUNCTION ASSY		2014341-011	NA	NAS-9-497	B	I	NOTE 11B	FOR DIMENSIONS SEE DASH 15 VALUES BELOW												
247	R	AC INPUT PANEL ASSY		2014302-011	NA	NAS-9-497	B	I	NOTE 11B	FOR DIMENSIONS SEE DASH 15 VALUES BELOW												
246	R	SELF TEST ASSY		2014392-011	NA	NAS-9-497	B	I	NOTE 11B	FOR DIMENSIONS SEE DASH 15 VALUES BELOW												
245	R	TAPE PUNCH ASSEMBLY		2014039-011	NA	NAS-9-497	B	I	NOTE 11B	FOR DIMENSIONS SEE DASH 15 VALUES BELOW												
244	R	TAPE READER ASSEMBLY		2014038-011	NA	NAS-9-497	B	I	NOTE 11B	FOR DIMENSIONS SEE DASH 15 VALUES BELOW												
243																						
242																						
241	R	APOLLO GUIDANCE COMPUTER GROUP		6003001	NA	NAS-9-497	A	I	NOTE 11B	FOR DIMENSIONS SEE DASH 19 VALUES BELOW												
240	R	SELF TEST ASSEMBLY		2014366-011	NA	NAS-9-497	B	I	NOTE 11B	FOR DIMENSIONS SEE DASH 15 VALUES BELOW												
239	R	POWER SUPPLY ASSY-115V., 400 CYCLE		2014207-011	NA	NAS-9-497	B	I	NOTE 11B	FOR DIMENSIONS SEE DASH 17 VALUES BELOW												
238	R	AC INPUT PANEL ASSY		2014043-011	NA	NAS-9-497	B	I	NOTE 11B	FOR DIMENSIONS SEE DASH 17 VALUES BELOW												
237	R	POWER CONTROL ASSY		2014079-011	NA	NAS-9-497	B	I	NOTE 11B	FOR DIMENSIONS SEE DASH 15 VALUES BELOW												
236	R	DRAWER ASSY-X Y INTERFACE		2014040-011	NA	NAS-9-497	B	I	NOTE 11B	FOR DIMENSIONS SEE DASH 15 VALUES BELOW												
235	R	DRAWER ASSY RDC INTERFACE		2014045-011	NA	NAS-9-497	B	I	NOTE 11B	FOR DIMENSIONS SEE DASH 15 VALUES BELOW												
234	R	BUFFER CIRCUIT ASSY		2014254-011	NA	NAS-9-497	B	I	NOTE 11B	FOR DIMENSIONS SEE DASH 15 VALUES BELOW												
233	R	CONTROL & INTERFACE ASSY		2014204-011	NA	NAS-9-497	B	I	NOTE 11B	FOR DIMENSIONS SEE DASH 15 VALUES BELOW												
232	R	POWER CONTROL ASSY		2014044-011	NA	NAS-9-497	B	I	NOTE 11B	FOR DIMENSIONS SEE DASH 17 VALUES BELOW												
231	R	DRAWER ASSY, PROGRAMMER & MONITOR		2014041-011	NA	NAS-9-497	B	I	NOTE 11B	FOR DIMENSIONS SEE DASH 17 VALUES BELOW												
230	R	CONNECTOR INTERFACE ASSY		2014272-011	NA	NAS-9-497	B	I	NOTE 11B	FOR DIMENSIONS SEE DASH 15 VALUES BELOW												
229	R	CONNECTOR INTERFACE ASSY		2014047-011	NA	NAS-9-497	B	I	NOTE 11B	FOR DIMENSIONS SEE DASH 15 VALUES BELOW												
228	R	ANTENNA, TUNING CAPACITOR ASSY		2014209-011	NA	NAS-9-497	B	I	NOTE 11B	FOR DIMENSIONS SEE DASH 15 VALUES BELOW												
227	R	MOUNTING FIXTURE ASSY		2014006-011	NA	NAS-9-497	B	I	NOTE 11B	FOR DIMENSIONS SEE DASH 17 VALUES BELOW												
226	R	POWER SUPPLY ASSY 3 VDC		2014234-011	NA	NAS-9-497	B	I	NOTE 11B	FOR DIMENSIONS SEE DASH 15 VALUES BELOW												
225	R	PANEL ASSY—SIGNAL INTERFACE		2014010-011	NA	NAS-9-497	B	I	NOTE 11B	FOR DIMENSIONS SEE DASH 15 VALUES BELOW												
224	R	OSCILLOSCOPE ASSY		2014232-011	NA	NAS-9-497	B	I	NOTE 11B	FOR DIMENSIONS SEE DASH 15 VALUES BELOW												
223	R	AUXILIARY OUTLET ASSY		2014274-011	NA	NAS-9-497	B	I	NOTE 11B	FOR DIMENSIONS SEE DASH 15 VALUES BELOW												
222	R	FREQUENCY COUNTER		2014233-011	NA	NAS-9-497	B	I	NOTE 11B	FOR DIMENSIONS SEE DASH 15 VALUES BELOW												
221	R	POWER SUPPLY ASSY 10, 13, 28 VDC		2014235-011	NA	NAS-9-497	B	I	NOTE 11B	FOR DIMENSIONS SEE DASH 15 VALUES BELOW												
220	R	LOGIC DRAWER ASSY NO. 2		2014037-011	NA	NAS-9-497	B	I	NOTE 11B	FOR DIMENSIONS SEE DASH 17 VALUES BELOW												
219	R	LOGIC DRAWER ASSY NO. 1		2014036-011	NA	NAS-9-497	B	I	NOTE 11B	FOR DIMENSIONS SEE DASH 17 VALUES BELOW												
218	R	COUNTER, ELECTRICAL ASSY		2014288-011	NA	NAS-9-497	B	I	NOTE 11B	FOR DIMENSIONS SEE DASH 15 VALUES BELOW												
217	R	POWER SUPPLY ASSY		2014279-011	NA	NAS-9-497	B	I	NOTE 11B	FOR DIMENSIONS SEE DASH 15 VALUES BELOW												
216	R	TEST MOUNT ASSY		2014257-011	NA	NAS-9-497	B	I	NOTE 11B	FOR DIMENSIONS SEE DASH 15 VALUES BELOW												
215	R	UNIVERSAL DSKY PEDESTAL MOUNT		2014014-011	NA	NAS-9-497	B	I	NOTE 11B	FOR DIMENSIONS SEE DASH 17 VALUES BELOW												
214	R	MAIN DSKY PEDESTAL MOUNT		2014343	NA	NAS-9-497	B	I	NOTE 11B	FOR DIMENSIONS SEE DASH 17 VALUES BELOW												
213	R	SHIPPING CONTAINER, MAIN DSKY		1006229	NA	NAS-9-497	B	II	NOTE 11C	FOR DIMENSIONS SEE DASH 18 VALUES BELOW												
212	R	SHIPPING CONTAINER, NAV DSKY		1006231	NA	NAS-9-497	B	II	NOTE 11C	FOR DIMENSIONS SEE DASH 18 VALUES BELOW												
211	R	SHIPPING CONTAINER, AGC		1006230	NA	NAS-9-497	B	II	NOTE 11C	FOR DIMENSIONS SEE DASH 18 VALUES BELOW												
210	R	SHIPPING CONTAINER, UNIVERSAL DSKY		1006422	NA	NAS-9-497	B	II	NOTE 11C	FOR DIMENSIONS SEE DASH 18 VALUES BELOW												
209	R	SHIPPING CONTAINER, AGC		1006421	NA	NAS-9-497	B	II	NOTE 11C	FOR DIMENSIONS SEE DASH 18 VALUES BELOW												
208	R	UNIVERSAL DSKY HANDLING FIXTURE		2014013-011	NA	NAS-9-497	B	I	NOTE 11B	FOR DIMENSIONS SEE DASH 15 VALUES BELOW												
207	R	NAV DSKY HANDLING FIXTURE		1014377	NA	NAS-9-497	B	I	NOTE 11B	FOR DIMENSIONS SEE DASH 17 VALUES BELOW												
206	R	MAIN DSKY HANDLING FIXTURE		1014334	NA	NAS-9-497	B	I	NOTE 11B	FOR DIMENSIONS SEE DASH 17 VALUES BELOW												
205	R	AGC HANDLING FIXTURE		2014282-011	NA	NAS-9-497	B	I	NOTE 11B	FOR DIMENSIONS SEE DASH 17 VALUES BELOW												
204	R	OPERATION CONSOLE		2014024-011	NA	NAS-9-497	B	II	NOTE 11C	FOR DIMENSIONS SEE DASH 18 VALUES BELOW												
203	R	COMPUTER TEST SET		2014042-011	NA	NAS-9-497	B	II	NOTE 11C	FOR DIMENSIONS SEE DASH 18 VALUES BELOW												
202	R	DRAWER ASSY, COMPUTER SIMULATOR		2014048-011	NA	FNP-12775	B	II	NOTE 11C	FOR DIMENSIONS SEE DASH 18 VALUES BELOW												
201	R	AUXILIARY CALIBRATION CONSOLE		2014059-011	NA	NAS-9-497	B	II	NOTE 11C	FOR DIMENSIONS SEE DASH 18 VALUES BELOW												
200	R	AGC CALIBRATION CONSOLE		2014049-011	NA	NAS-9-497	B	II	NOTE 11C	FOR DIMENSIONS SEE DASH 18 VALUES BELOW												
21	R																					
20	R	NA		NA	NA	NA	A	II	NOTE 11C	2.000	1.312	1.687	1.375	.078	.031	.078	.093	[illegible] .113	.093	1.187	.750	.593
19	R	NA		NA	NA	NA	A	I	NOTE 11B	2.000	1.312	1.687	1.375	.078	.031	.078	.093	NA	NA	1.187	.750	.593
18	R	NA		NA	NA	NA	B	II	NOTE 11C	4.187	1.875	3.469	2.750	.156	.093	.156	.125	[illegible]	.125	1.625	1.032	.844
17	R	NA		NA	NA	NA	B	I	NOTE 11B	4.187	1.875	3.469	2.750	.156	.093	.156	.125	NA	NA	1.625	1.032	.844
16	R	NA		NA	NA	NA	B	II	NOTE 11C	2.000	1.312	1.687	1.375	.078	.031	.078	.093	[illegible] .113	.093	1.187	.750	.593
15	R	NA		NA	NA	NA	B	I	NOTE 11B	2.000	1.312	1.687	1.375	.078	.031	.078	.093	NA	NA	1.187	.750	.593

NOTES FOR TABLE

STYLE A IS FOR G & N SYSTEM
STYLE B IS FOR GROUND SUPPORT EQUIPMENT
TYPE I IS WITHOUT MOUNTING HOLES
TYPE II IS WITH MOUNTING HOLES

1004260 DH SHT 3

1/1004260

REVISIONS					
SYM	ZONE	DESCRIPTION	CHG NO	DATE	APPD
CL		REPLACES REV CK WITHOUT CHANGE PER TDRR 34365		9/28/67	JWL RWH
CM		REVISION STATUS CHANGED		18 OCT 67	R.A.W.
CN		REVISION STATUS CHANGED		31 OCT 67	JRK
CP		REVISION STATUS CHANGED		6 NOV 67	EMS
CR		REVISION STATUS CHANGED		7 DEC 67	RWH
CS		REVISION STATUS CHANGED		3 JAN 68	J.W. EHW
CT		REVISED PER TDRR 35526		7 FEB 68	LK
CU		REVISION STATUS CHANGED		22 FEB 68	JRK
CV		REVISION STATUS CHANGED		27 FEB 68	LK
CW		REVISION STATUS CHANGED		8 APR 68	
CY		REVISED PER TDRR 36028		16 APR 68	
CZ		REVISION STATUS CHANGED		23 MAY 68	
DA		REVISION STATUS CHANGED		17 JUN 68	
DB		REVISION STATUS CHANGED		SEP 68	
DC		REVISION STATUS CHANGED		16 DEC 68	LK
DD		REVISION STATUS CHANGED		30 DEC 68	
DE		REVISION STATUS CHANGED		23 JAN 69	
DF		REVISION STATUS CHANGED		27 JAN 69	LK RNH
DG		REVISION STATUS CHANGED		26 SEP 69	
DH		REVISION STATUS CHANGED		29 SEP 69	MY CP

S BELOW
BELOW
BELOW
BELOW
BELOW
BELOW
BELOW
BELOW
BELOW
BELOW
BELOW
BELOW
BELOW
BELOW
BELOW
BELOW
BELOW
BELOW
BELOW
BELOW
BELOW
BELOW
BELOW
BELOW
BELOW
BELOW
BELOW
BELOW
BELOW
BELOW
BELOW
BELOW
BELOW
BELOW
BELOW
BELOW
BELOW
BELOW
BELOW
BELOW
BELOW
BELOW
BELOW
BELOW
BELOW
BELOW
BELOW
BELOW
BELOW
BELOW

BELOW
BELOW
BELOW
BELOW
BELOW
BELOW
BELOW
BELOW
BELOW
BELOW
BELOW
BELOW
BELOW
BELOW
BELOW
BELOW
BELOW
BELOW
BELOW
BELOW
BELOW
BELOW
BELOW
BELOW
BELOW
BELOW
BELOW
BELOW
BELOW
BELOW
BELOW
BELOW
BELOW
BELOW
BELOW
BELOW
BELOW
BELOW
BELOW
BELOW
BELOW
BELOW

078	.093	[illegible]	.093	1.187	.750	.593	.453	1.015	.062	.187	.078	.875	.718	1.375	.218	1.156	1.843	.048	NA	.875	.305	.078	.312	1.687	.078	NA	.078	.312	.187	1.843
[illegible]	.093	NA	NA	1.187	.750	.593	.453	1.015	.062	.187	.078	.875	.718	1.375	.218	NA	NA	.048	.031	.875	.305	.078	.312	1.687	.078	NA	.078	.312	.187	NA
156	.125	[illegible]	.125	1.625	1.032	.844	.656	1.406	.093	.344	.156	1.781	1.531	2.844	.312	1.562	3.875	.062	NA	1.219	.500	.156	.719	3.469	.156	NA	.156	.719	.344	3.875
56	.125	NA	NA	1.625	1.032	.844	.656	1.406	.093	.344	.156	1.781	1.531	2.844	.312	NA	NA	.062	.062	1.219	.500	.156	.719	3.469	.156	NA	.156	.719	.344	NA
078	.033	[illegible]	.093	1.187	.750	.593	.453	1.015	.062	.187	.078	.875	.718	1.375	.218	1.156	1.843	.048	NA	.875	.305	.078	.312	1.687	.078	NA	.078	.312	.187	1.843
078	.093	NA	NA	1.187	.750	.593	.453	1.015	.062	.187	.078	.875	.718	1.375	.218	NA	NA	.048	.031	.875	.305	.078	.312	1.687	.078	NA	.078	.312	.187	NA
	H	J	K	L	M	N	P	R	S	T	U	V	W	Y	Z	AA	AB	AC	AD	AE	AF	AG	AH	AJ	AK	AL	AM	AN	AP	AR

RAYTHEON DASH NUMBERS

AS APPLICABLE		UNLESS OTHERWISE SPECIFIED DIMENSIONS ARE IN INCHES TOLERANCES ON 2 PLACE DECIMALS ± 3 PLACE DECIMALS ± .005 ANGLES ±	MIT INSTRUMENTATION LAB Cambridge Mass R. A. JONES DRAWN 16 JUL 65 DATE CHECKED W. KUPFER APPROVAL 22 JUL 65 CONTRACT	MANNED SPACECRAFT CENTER HOUSTON, TEXAS NAMEPLATES, APOLLO GEN - GSE (STANDARDS)
NEXT ASSY	USED ON	DO NOT SCALE THIS DRAWING		
APPLICATION		MATERIAL SEE NOTE 11	T. MICHAELS 22 JUL 65 NASA APPROVAL W. KUPFER 22 JUL 65 MIT APPROVAL	SIZE J2 · CODE IDENT NO. 80230 · 1004260
		APPROVAL		SCALE NONE · SHEET 3 OF 6

260 D SHT 3

1004260 DH

1004260

27 1004260

NOTICE: WHEN GOVERNMENT DRAWINGS, SPECIFICATIONS, OR OTHER DATA ARE USED FOR ANY PURPOSE OTHER THAN IN CONNECTION WITH A DEFINITELY RELATED GOVERNMENT PROCUREMENT OPERATION, THE UNITED STATES GOVERNMENT THEREBY INCURS NO RESPONSIBILITY NOR ANY OBLIGATION WHATSOEVER; AND THE FACT THAT THE GOVERNMENT MAY HAVE FORMULATED, FURNISHED, OR IN ANY WAY SUPPLIED THE SAID DRAWINGS, SPECIFICATIONS, OR OTHER DATA IS NOT TO BE REGARDED BY IMPLICATION OR OTHERWISE AS IN ANY MANNER LICENSING THE HOLDER OR ANY OTHER PERSON OR CORPORATION, OR CONVEYING ANY RIGHTS OR PERMISSION TO MANUFACTURE, USE, OR SELL ANY PATENTED INVENTION THAT MAY IN ANY WAY BE RELATED THERETO.

AC DASH NUMBERS CONTINUED ON SHEET 6

DASH NO.	P/C	PART NAME	REMARKS	PART NUMBER	SER. NO.	CONT. NO.	STYLE	TYPE	MATERIAL	A	B	C	D	E	F	G	H	J	K	L	M
199	AC	EYEPIECE STOWAGE UNIT		2021255-011			A	I		FOR DIMENSIONS SEE DASH 100 VALUES BELOW											
198	AC	SIGNAL CONDITIONER ASSY C/M		2007234		NAS-9-497	A	I	NOTE 11B	FOR DIMENSIONS SEE DASH 100 VALUES BELOW											
197	AC	SIGNAL CONDITIONER ASSY C/M		2007235		NAS-9-497	A	I	NOTE 11B	FOR DIMENSIONS SEE DASH 100 VALUES BELOW											
196	AC	SIGNAL CONDITIONER ASSY LEM		6007010		NAS-9-497	A	I	NOTE 11B	FOR DIMENSIONS SEE DASH 100 VALUES BELOW											
195	AC	PSA & SIGNAL CONDITIONER ASSY		6007009		NAS-9-497	A	I	NOTE 11B	FOR DIMENSIONS SEE DASH 100 VALUES BELOW											
194	AC	PANEL, MONITOR		2900031-031		NAS-9-497	B	II	NOTE 11C	FOR DIMENSIONS SEE DASH 141 VALUES BELOW											
193	AC	DISTRIBUTION BOX, GSE		2900024-031		NAS-9-497	B	II	NOTE 11C	FOR DIMENSIONS SEE DASH 141 VALUES BELOW											
192	AC	ANALYZER, OPTICS-INERTIAL		2900023-031		NAS-9-497	B	II	NOTE 11C	FOR DIMENSIONS SEE DASH 144 VALUES BELOW											
191	AC	TEST CONTROL		2900027-031		NAS-9-497	B	II	NOTE 11C	FOR DIMENSIONS SEE DASH 141 VALUES BELOW											
190	AC	PANEL, PWR SUP AND LOAD		2900033-021		NAS-9-497	B	II	NOTE 11C	FOR DIMENSIONS SEE DASH 141 VALUES BELOW											
189	AC	ADPT MODULE, P.S.A.		6900088-011		NAS-9-497	B	II	NOTE 11C	FOR DIMENSIONS SEE DASH 141 VALUES BELOW											
188	AC	ADPT MODULE, P.S.A.		2901143-011		NAS-9-497	B	II	NOTE 11C	FOR DIMENSIONS SEE DASH 141 VALUES BELOW											
187	AC	FIXTURE, MTG, PTA/PEA		2900066-021		NAS-9-497	B	II	NOTE 11C	FOR DIMENSIONS SEE DASH 141 VALUES BELOW											
186	AC	ANNUNCIATOR PANEL & EYEPIECE STORAGE ASSEMBLY		1021255-021			A	I		FOR DIMENSIONS SEE DASH 100 VALUES BELOW											
185	AC	ANNUNCIATOR PANEL & EYEPIECE STORAGE ASSEMBLY		1021255-011			A	I		FOR DIMENSIONS SEE DASH 100 VALUES BELOW											
184	AC	FIX., HAND., G AND N HARNESS		1901846-041		NAS-9-497	B	II	NOTE 11C	FOR DIMENSIONS SEE DASH 144 VALUES BELOW											
183	AC	INSTALLING TOOL, ELEC, CONN		1902586-011		NAS-9-497	B	II	NOTE 11C	FOR DIMENSIONS SEE DASH 102 VALUES BELOW											
182	AC	ADPT MODULE, P.S.A.		6900088-011		NAS-9-497	B	II	NOTE 11C	FOR DIMENSIONS SEE DASH 141 VALUES BELOW											
181	AC	G & N INDICATOR CONTROL PANEL ASSY		2014578-011		NAS-9-497	A	I	NOTE 11B	3,000	1,938	2,437	NA	.125	.062	.188	.156	NA	NA	1.750	1.125
180	AC	ADPT MODULE, P.S.A.		1902431-031		NAS-9-497	B	II		FOR DIMENSIONS SEE DASH 121 VALUES BELOW											
179	AC	MOUNTING PLATE, IMU/PTA		6900083-011		NAS-9-497	B	II		FOR DIMENSIONS SEE DASH 144 VALUES BELOW											
178	AC	MOUNTING PLATE, COMPONENT		6900007-021		NAS-9-497	B	II		FOR DIMENSIONS SEE DASH 144 VALUES BELOW											
177	AC	FIX., MOUNTING, SUBSYSTEM		2900070-021		NAS-9-497	B	II		FOR DIMENSIONS SEE DASH 144 VALUES BELOW											
176	AC	FIX., MOUNTING, G & N		2900067-021		NAS-9-497	B	II		FOR DIMENSIONS SEE DASH 144 VALUES BELOW											
175	AC	CSL, COOL. AND PWR, G & N		1902134-031		NAS-9-497	B	II		FOR DIMENSIONS SEE DASH 144 VALUES BELOW											
174	AC	FIX., HAND., C/M AND LEM CDU		2900999-011		NAS-9-497	B	II	NOTE 11C	FOR DIMENSIONS SEE DASH 141 VALUES BELOW											
173	AC	FIX., HANDLING, C/M PSA		2900998-011		NAS-9-497	B	II	NOTE 11C	FOR DIMENSIONS SEE DASH 141 VALUES BELOW											
172	AC	CAGING ELECTRONICS, GYRO		2900029-021		NAS-9-497	B	II	NOTE 11C	FOR DIMENSIONS SEE DASH 141 VALUES BELOW											
171	AC	DISTRIBUTION BOX, GSE		2900024-021		NAS-9-497	B	II	NOTE 11C	FOR DIMENSIONS SEE DASH 141 VALUES BELOW											
170	AC	ANALYZER, OPTICS-INERTIAL		2900023-021		NAS-9-497	B	II	NOTE 11C	FOR DIMENSIONS SEE DASH 144 VALUES BELOW											
169	AC	ADPT, TESTPOINT, P.S.A.		2900037-021		NAS-9-497	B	II	NOTE 11C	FOR DIMENSIONS SEE DASH 141 VALUES BELOW											
168	AC	TEST SELECTOR		2900028-021		NAS-9-497	B	II	NOTE 11C	FOR DIMENSIONS SEE DASH 141 VALUES BELOW											
167	AC	TEST CONTROL		2900027-021		NAS-9-497	B	II	NOTE 11C	FOR DIMENSIONS SEE DASH 141 VALUES BELOW											
166	AC	PANEL, MONITOR		2900031-021		NAS-9-497	B	II	NOTE 11C	FOR DIMENSIONS SEE DASH 141 VALUES BELOW											
165	AC	TERM. BOARD STORAGE DRAWER		2900927-011		NAS-9-497	B	II	NOTE 11C	FOR DIMENSIONS SEE DASH 141 VALUES BELOW											
164	AC	INPUT/OUTPUT PANEL		2900926-011		NAS-9-497	B	II	NOTE 11C	FOR DIMENSIONS SEE DASH 141 VALUES BELOW											
163	AC	CONTROL PANEL		2900896-011		NAS-9-497	B	II	NOTE 11C	FOR DIMENSIONS SEE DASH 141 VALUES BELOW											
162	AC	CSL, CAL AND TEST, SCM/PSAAM		2900895-011		NAS-9-497	B	II	NOTE 11C	FOR DIMENSIONS SEE DASH 144 VALUES BELOW											
161	AC	FIX., LIFT AND HAND., IMU		1015462-011		NAS-9-497	B	II	NOTE 11C	FOR DIMENSIONS SEE DASH 141 VALUES BELOW											
160	AC	FIX., HAND., G & N HARNESS		1901846-031		NAS-9-497	B	II	NOTE 11C	FOR DIMENSIONS SEE DASH 144 VALUES BELOW											
159	AC	BATTERY POWER PACK		1900011-031		NAS-9-497	B	II	NOTE 11C	FOR DIMENSIONS SEE DASH 144 VALUES BELOW											
158	AC	COUPLING DATA UNIT ASSEMBLY C/M		2007222		NAS-9-497	A	I	NOTE 11B	FOR DIMENSIONS SEE DASH 100 VALUES BELOW											
157	AC	COUPLING DATA UNIT ASSEMBLY - LEM		2007222		NAS-9-497	A	I	NOTE 11B	FOR DIMENSIONS SEE DASH 100 VALUES BELOW											
156	AC	POWER & SERVO ASSEMBLY C/M		2007200		NAS-9-497	A	I	NOTE 11B	2,125	,968	1.718	NA	.093	.031	.06	.093	NA	NA	.858	.608
155	AC	PIPA ELECTRONICS ASSEMBLY		2007201		NAS-9-497	A	I	NOTE 11B	FOR DIMENSIONS SEE DASH 100 VALUES BELOW											
154	AC	PULSE TORQUE ASSEMBLY-LEM		6007000		NAS-9-497	A	I	NOTE 11B	FOR DIMENSIONS SEE DASH 100 VALUES BELOW											
153	AC	POWER & SERVO ASSEMBLY-LEM		6007200		NAS-9-497	A	I	NOTE 11B	FOR DIMENSIONS SEE DASH 100 VALUES BELOW											
152	AC	CONT PNL, RSVR CKT TESTER		2900770-011		NAS-9-497	B	II	NOTE 11C	FOR DIMENSIONS SEE DASH 141 VALUES BELOW											
151	AC	TESTER, RESOLVER CIRCUIT		2900708-011		NAS-9-497	B	II	NOTE 11C	FOR DIMENSIONS SEE DASH 141 VALUES BELOW											
150	AC	JUNCTION BOX, P.S.A./G.S.E.		1901933-021		NAS-9-497	B	II	NOTE 11C	FOR DIMENSIONS SEE DASH 144 VALUES BELOW											
149	AC	BATTERY PACK, LIFTING		2900812-011		NAS-9-497	B	II	NOTE 11C	FOR DIMENSIONS SEE DASH 141 VALUES BELOW											
148	AC	MOUNTING PLATE, COMPONENT		6900007-011		NAS-9-497	B	II	NOTE 11C	FOR DIMENSIONS SEE DASH 144 VALUES BELOW											
147	AC	MOUNTING PLATE, COMPONENT		2900677-011		NAS-9-497	B	II	NOTE 11C	FOR DIMENSIONS SEE DASH 144 VALUES BELOW											
146	AC	CART, TRANS, G & N		1900009-041		NAS-9-497	B	II	NOTE 11C	FOR DIMENSIONS SEE DASH 144 VALUES BELOW											
145	AC	CONTAINER, SHIPPING, IMU		1900010-021		NAS-9-497	B	II	NOTE 11C	FOR DIMENSIONS SEE DASH 144 VALUES BELOW											
144	AC	FIX., MOUNTING, G & N		1902204-021			B	II	NOTE 11C	4.125	1.812	3.250	NA	.125	.062	.12	.156	NA	.125	1.625	1.140
143	AC	CSL, COOL, AND PWR, G & N		1902134-021			B	II	NOTE 11C	4.125	1.812	3.250	NA	.125	.062	.12	.156		.125	1.625	1.140
142	AC	ANALYZER, OPTICS-INERTIAL		2900023-011			B	II	NOTE 11C	4.125	1.812	3.250	NA	.125	.062	.12	.156		.125	1.625	1.140
141	AC	CONT, TEMP, PORTABLE		2900060-011			B	II	NOTE 11C	2.125	.968	1.718	NA	.093	.031	.06	.093		.093	.858	.608
140	AC	TESTER, CKT, IMU/CDU RSVR		2900286-011			B	II	NOTE 11C	4.125	1.812	3.250	NA	.125	.062	.12	.156		.125	1.625	1.140
139	AC	SIMULATOR, LD/SIG, CDU		2900285-011			B	II	NOTE 11C	4.125	1.812	3.250	NA	.125	.062	.12	.156		.125	1.625	1.140
138	AC	SIMULATOR, LD/SIG, OPTICS		1902023-021			B	II	NOTE 11C	4.125	1.812	3.250	NA	.125	.062	.12	.156		.125	1.625	1.140
137	AC	FIX., MOUNTING, IMU/NAV BASE		6900003-011			B	II	NOTE 11C	4.125	1.812	3.250	NA	.125	.062	.12	.156		.125	1.625	1.140
136	AC	FIXTURE, OPTICS/NAV BASE		2900072-011			B	II	NOTE 11C	4.125	1.812	3.250	NA	.125	.062	.12	.156		.125	1.625	1.140
135	AC	FIX., MOUNTING, SUB SYSTEM		2900070-011			B	II	NOTE 11C	4.125	1.812	3.250	NA	.125	.062	.12	.156		.125	1.625	1.140
134	AC	FIX., HAND., G & N HARNESS		2900069-011			B	II	NOTE 11C	4.125	1.812	3.250	NA	.125	.062	.12	.156		.125	1.625	1.140
133	AC	CNTR, SHIPPING, NAV BASE		2900068-011			B	II	NOTE 11C	4.125	1.812	3.250	NA	.125	.062	.12	.156		.125	1.625	1.140
132	AC	FIX., MOUNTING, G & N		2900067-011			B	II	NOTE 11C	4.125	1.812	3.250	NA	.125	.062	.12	.156		.125	1.625	1.140
131	AC	SIMULATOR, LD/SIG, IMU/CDU		2900062-011			B	II	NOTE 11C	4.125	1.812	3.250	NA	.125	.062	.12	.156		.125	1.625	1.140
130	AC	TESTER, GYRO WHEEL		2900061-011			B	II	NOTE 11C	4.125	1.812	3.250	NA	.125	.062	.12	.156		.125	1.625	1.140
129	AC	COOLANT SUPPLY		1902133-021			B	II	NOTE 11C	4.125	1.812	3.250	NA	.125	.062	.12	.156		.125	1.625	1.140
128	AC	TABLE, ROTARY		1900926-021			B	II	NOTE 11C	4.125	1.812	3.250	NA	.125	.062	.12	.156		.125	1.625	1.140
127	AC	FIX., HAND., OPTICS		2900074-011			B	II	NOTE 11C	2.125	.968	1.718	NA	.093	.031	.06	.093		.093	.858	.608
126	AC	FIXTURE, MTG, PTA/PEA.		2900066-011			B	II	NOTE 11C	2.125	.968	1.718	NA	.093	.031	.06	.093		.093	.858	.608
125	AC	CONT, TEMP, IMU LIFTING		2900063-011			B	II	NOTE 11C	2.125	.968	1.718	NA	.093	.031	.06	.093		.093	.858	.608
124	AC	FIXTURE, HANDLING, IMU		2900064-011			B	II	NOTE 11C	2.125	.968	1.718	NA	.093	.031	.06	.093		.093	.858	.608
123	AC	CONT, OPTICS, REMOTE		1902046-021			B	II	NOTE 11C	2.125	.968	1.718	NA	.093	.031	.06	.093		.093	.858	.608
122	AC	TEST CONTROL		1902009-021			B	II	NOTE 11C	2.125	.968	1.718	NA	.093	.031	.06	.093		.093	.858	.608
121	AC	ADPT MODULE, P.S.A.		1902431-021			B	II	NOTE 11C	2.125	.968	1.718	NA	.093	.031	.06	.093		.093	.858	.608
120	AC	BRIDGE, DECADE ERROR		2900128-011			B	II	NOTE 11C	2.125	.968	1.718	NA	.093	.031	.06	.093		.093	.858	.608
119	AC	PWR SUP, ELECTRONICS		2900012-011			B	II	NOTE 11C	2.125	.968	1.718	NA	.093	.031	.06	.093		.093	.858	.608
118	AC	PWR SUP, RELAY AND LAMP		1900049-031			B	II	NOTE 11C	2.125	.968	1.718	NA	.093	.031	.06	.093		.093	.858	.608
117	AC	CONSOLE, OSCILLOGRAPH		1900000-021			B	II	NOTE 11C	2.125	.968	1.718	NA	.093	.031	.06	.093		.093	.858	.608
116	AC	ADPT MODULE, P.S.A.		1902431-011			B	II	NOTE 11C	2.125	.968	1.718	NA	.093	.031	.06	.093		.093	.858	.608
115	AC	ADPT, TEST POINT, PTA/PEA.		2900145-011			B	II	NOTE 11C	2.125	.968	1.718	NA	.093	.031	.06	.093		.093	.858	.608
114	AC	ADPT, TEST POINT, P.S.A.		2900037-011			B	II	NOTE 11C	2.125	.968	1.718	NA	.093	.031	.06	.093		.093	.858	.608
113	AC	CONTROL, GIMBAL POSITION		2900036-011			B	II	NOTE 11C	2.125	.968	1.718	NA	.093	.031	.06	.093		.093	.858	.608
112	AC	SELECTOR, SIGNAL, PRIMARY		2900035-011			B	II	NOTE 11C	2.125	.968	1.718	NA	.093	.031	.06	.093		.093	.858	.608
111	AC	SEL, SIG, OSCILLOGRAPH		2900034-011			B	II	NOTE 11C	2.125	.968	1.718	NA	.093	.031	.06	.093		.093	.858	.608
110	AC	PANEL, PWR SUP AND LOAD		2900033-011			B	II	NOTE 11C	2.125	.968	1.718	NA	.093	.031	.06	.093		.093	.858	.608
109	AC	PANEL, MONITOR		2900031-011			B	II	NOTE 11C	2.125	.968	1.718	NA	.093	.031	.06	.093		.093	.858	.608
108	AC	PANEL, AUXILIARY INPUT		2900030-011			B	II	NOTE 11C	2.125	.968	1.718	NA	.093	.031	.06	.093		.093	.858	.608
107	AC	CAGING ELECTRONICS, GYRO		2900029-011			B	II	NOTE 11C	2.125	.968	1.718	NA	.093	.031	.06	.093		.093	.858	.608
106	AC	TEST SELECTOR		2900028-011			B	II	NOTE 11C	2.125	.968	1.718	NA	.093	.031	.06	.093		.093	.858	.608
105	AC	TEST CONTROL		2900027-011			B	II	NOTE 11C	2.125	.968	1.718	NA	.093	.031	.06	.093		.093	.858	.608
104	AC	MONITOR AND CONTROL, TEMP		2900026-011			B	II	NOTE 11C	2.125	.968	1.718	NA	.093	.031	.06	.093		.093	.858	.608
103	AC	DISTRIBUTION BOX, GSE		2900024-011			B	II	NOTE 11C	2.125	.968	1.718	NA	.093	.031	.06	.093		.093	.858	.608
102	AC	VOLTMETER, DIGITAL		2900007-011			B	II	NOTE 11C	2.125	.968	1.718	NA	.093	.031	.06	.093	NA	.093	.858	.608
101	AC	NAVIGATION BASE ASSEMBLY-LEM		68[illegible]50		NAS-9-497	A	I	NOTE 11B	2.000	1.312	1.906	1.375	.078	.048	.078	.093	NA	NA	1.125	.750
100	AC	NAVIGATION BASE ASSEMBLY		2899982		NAS-9-497	A	I	NOTE 11B	2.000	1.312	1.906	1.375	.078	.048	.078	.093	NA	NA	1.125	.750

NOTES FOR TABLE

STYLE A IS FOR G & N SYSTEM
STYLE B IS FOR GROUND SUPPORT EQUIPMENT
TYPE I IS WITHOUT MOUNTING HOLES
TYPE II IS WITH MOUNTING HOLES

SYM	ZONE	REVISIONS DESCRIPTION	CHG NO	DATE	APPD
CL		REPLACES REV CK WITHOUT CHANGE PER TDRR 34365		9/28/67	JWL RWH
CM		REVISION STATUS CHANGED		18 OCT 67	R.A.W.
CN		REVISION STATUS CHANGE		31 OCT 67	JRK
Ⓜ CP		REVISION STATUS CHANGE		6 NOV 67	ENS
Ⓜ CR		REVISION STATUS CHANGED		9 NOV 67	DVD RWH
Ⓜ CS		REVISION STATUS CHANGED		3 JAN 68	J.W. EHW
CT		REVISION STATUS CHANGED		7 FEB 68	LK
CU		REVISION STATUS CHANGED		22 FEB 68	JRK
Ⓜ CV		REVISION STATUS CHANGED		27 FEB 68	LK
CW		REVISION STATUS CHANGED		5 APR 68	
Ⓜ CY		REVISION STATUS CHANGED		16 APR 68	R.N.
Ⓜ CZ		REVISION STATUS CHANGED		28 MAY 68	
Ⓜ DA		REVISION STATUS CHANGED		17 JUN 68	
Ⓜ DB		REVISION STATUS CHANGED		13 SEP 68	
DC		REVISION STATUS CHANGED		16 DEC 68	LK
Ⓜ DD		REVISION STATUS CHANGED		30 DEC 68	
DE		REVISION STATUS CHANGED		23 JAN 69	
Ⓜ DF		REVISION STATUS CHANGED		27 JAN 69	LK RWH
DG		REVISION STATUS CHANGED		26 SEP 69	
DH		REVISION STATUS CHANGED		29 SEP 69	CP

G	H	J	K	L	M	N	P	R	S	T	U	V	W	Y	Z	AA	AB	AC	AD	AE	AF	AG	AH	AJ	AK	AL	AM	AN	AP	AR
LUES BELOW																														
LUES BELOW																														
LUES BELOW																														
LUES BELOW																														
LUES BELOW																														
LUES BELOW																														
LUES BELOW																														
LUES BELOW																														
LUES BELOW																														
LUES BELOW																														
LUES BELOW																														
LUES BELOW																														
LUES BELOW																														
LUES BELOW																														
LUES BELOW																														
LUES BELOW																														
LUES BELOW																														
LUES BELOW																														
.188	.156	NA	NA	1.750	1.125	.906	.688	1.500	NA	.281	.125	NA	1.094	2.062	.312	NA	2.500	.062	.125	1.312	.469	NA	NA	NA	.156	NA	.125	.469	.344	NA
LUES BELOW																														
LUES BELOW																														
LUES BELOW																														
LUES BELOW																														
LUES BELOW																														
LUES BELOW																														
LUES BELOW																														
LUES BELOW																														
LUES BELOW																														
LUES BELOW																														
LUES BELOW																														
ALUES BELOW																														
ALUES BELOW																														
ALUES BELOW																														
ALUES BELOW																														
ALUES BELOW																														
ALUES BELOW																														
ALUES BELOW																														
ALUES BELOW																														
ALUES BELOW																														
ALUES BELOW																														
ALUES BELOW																														
ALUES BELOW																														
ALUES BELOW																														
.06	.093	NA	NA	.858	.608	.484	.358	.733	.062	.140	.062	NA	.968	1.450	.125	NA	1.720	.046	.03	NA	.210	NA	NA	NA	.070	NA	.046	.32	.16	NA
ALUES BELOW																														
ALUES BELOW																														
ALUES BELOW																														
ALUES BELOW																														
ALUES BELOW																														
ALUES BELOW																														
ALUES BELOW																														
ALUES BELOW																														
ALUES BELOW																														
ALUES BELOW																														
ALUES BELOW																														
.12	.156	[illegible]	.125	1.625	1.140	.890	.640	1.390	.125	.171	.125	1.875	1.687	2.625	.250	1.562	3.843	.093	NA	NA	.359	.125	.437	3.688	NA	3.687	.093	.40	.25	3.875
.12	.156		.125	1.625	1.140	.890	.640	1.390	.125	.171	.125	1.875	1.687	2.625	.250	1.562	3.843	.093	NA	NA	.359	.125	.437	3.688	NA	3.687	.093	.40	.25	3.875
.12	.156		.125	1.625	1.140	.890	.640	1.390	.125	.171	.125	1.875	1.687	2.625	.250	1.562	3.843	.093	NA	NA	.359	.125	.437	3.688	NA	3.687	.093	.40	.25	3.875
.06	.093		.093	.858	.608	.484	.358	.733	.077	.116	.062	.937	.875	1.343	.125	.781	1.892	.046	NA	NA	.209	.093	.250	1.875	NA	1.840	.046	.23	.16	1.938
.12	.156		.125	1.625	1.140	.890	.640	1.390	.125	.171	.125	1.875	1.687	2.625	.250	1.562	3.843	.093	NA	NA	.359	.125	.437	3.688	NA	3.687	.093	.40	.25	3.875
.12	.156		.125	1.625	1.140	.890	.640	1.390	.125	.171	.125	1.875	1.687	2.625	.250	1.562	3.843	.093	NA	NA	.359	.125	.437	3.688	NA	3.687	.093	.40	.25	3.875
.12	.156		.125	1.625	1.140	.890	.640	1.390	.125	.171	.125	1.875	1.687	2.625	.250	1.562	3.843	.093	NA	NA	.359	.125	.437	3.688	NA	3.687	.093	.40	.25	3.875
.12	.156		.125	1.625	1.140	.890	.640	1.390	.125	.171	.125	1.875	1.687	2.625	.250	1.562	3.843	.093	NA	NA	.359	.125	.437	3.688	NA	3.687	.093	.40	.25	3.875
.12	.156		.125	1.625	1.140	.890	.640	1.390	.125	.171	.125	1.875	1.687	2.625	.250	1.562	3.843	.093	NA	NA	.359	.125	.437	3.688	NA	3.687	.093	.40	.25	3.875
.12	.156		.125	1.625	1.140	.890	.640	1.390	.125	.171	.125	1.875	1.687	2.625	.250	1.562	3.843	.093	NA	NA	.359	.125	.437	3.688	NA	3.687	.093	.40	.25	3.875
.12	.156		.125	1.625	1.140	.890	.640	1.390	.125	.171	.125	1.875	1.687	2.625	.250	1.562	3.843	.093	NA	NA	.359	.125	.437	3.688	NA	3.687	.093	.40	.25	3.875
.12	.156		.125	1.625	1.140	.890	.640	1.390	.125	.171	.125	1.875	1.687	2.625	.250	1.562	3.843	.093	NA	NA	.359	.125	.437	3.688	NA	3.687	.093	.40	.25	3.875
.12	.156		.125	1.625	1.140	.890	.640	1.390	.125	.171	.125	1.875	1.687	2.625	.250	1.562	3.843	.093	NA	NA	.359	.125	.437	3.688	NA	3.687	.093	.40	.25	3.875
.12	.156		.125	1.625	1.140	.890	.640	1.390	.125	.171	.125	1.875	1.687	2.625	.250	1.562	3.843	.093	NA	NA	.359	.125	.437	3.688	NA	3.687	.093	.40	.25	3.875
.12	.156		.125	1.625	1.140	.890	.640	1.390	.125	.171	.125	1.875	1.687	2.625	.250	1.562	3.843	.093	NA	NA	.359	.125	.437	3.688	NA	3.687	.093	.40	.25	3.875
.12	.156		.125	1.625	1.140	.890	.640	1.390	.125	.171	.125	1.875	1.687	2.625	.250	1.562	3.843	.093	NA	NA	.359	.125	.437	3.688	NA	3.687	.093	.40	.25	3.875
.12	.156		.125	1.625	1.140	.890	.640	1.390	.125	.171	.125	1.875	1.687	2.625	.250	1.562	3.843	.093	NA	NA	.359	.125	.437	3.688	NA	3.687	.093	.40	.25	3.875
.06	.093		.093	.858	.608	.484	.358	.733	.077	.116	.062	.937	.875	1.343	.125	.781	1.892	.046	NA	NA	.209	.093	.250	1.875	NA	1.840	.046	.23	.16	1.938
.06	.093		.093	.858	.608	.484	.358	.733	.077	.116	.062	.937	.875	1.343	.125	.781	1.892	.046	NA	NA	.209	.093	.250	1.875	NA	1.840	.046	.23	.16	1.938
.06	.093		.093	.858	.608	.484	.358	.733	.077	.116	.062	.937	.875	1.343	.125	.781	1.892	.046	NA	NA	.209	.093	.250	1.875	NA	1.840	.046	.23	.16	1.938
.06	.093		.093	.858	.608	.484	.358	.733	.077	.116	.062	.937	.875	1.343	.125	.781	1.892	.046	NA	NA	.209	.093	.250	1.875	NA	1.840	.046	.23	.16	1.938
.06	.093		.093	.858	.608	.484	.358	.733	.077	.116	.062	.937	.875	1.343	.125	.781	1.892	.046	NA	NA	.209	.093	.250	1.875	NA	1.840	.046	.23	.16	1.938
.06	.093		.093	.858	.608	.484	.358	.733	.077	.116	.062	.937	.875	1.343	.125	.781	1.892	.046	NA	NA	.209	.093	.250	1.875	NA	1.840	.046	.23	.16	1.938
.06	.093		.093	.858	.608	.484	.358	.733	.077	.116	.062	.937	.875	1.343	.125	.781	1.892	.046	NA	NA	.209	.093	.250	1.875	NA	1.840	.046	.23	.16	1.938
.06	.093		.093	.858	.608	.484	.358	.733	.077	.116	.062	.937	.875	1.343	.125	.781	1.892	.046	NA	NA	.209	.093	.250	1.875	NA	1.840	.046	.23	.16	1.938
.06	.093		.093	.858	.608	.484	.358	.733	.077	.116	.062	.937	.875	1.343	.125	.781	1.892	.046	NA	NA	.209	.093	.250	1.875	NA	1.840	.046	.23	.16	1.938
.06	.093		.093	.858	.608	.484	.358	.733	.077	.116	.062	.937	.875	1.343	.125	.781	1.892	.046	NA	NA	.209	.093	.250	1.875	NA	1.840	.046	.23	.16	1.938
.06	.093		.093	.858	.608	.484	.358	.733	.077	.116	.062	.937	.875	1.343	.125	.781	1.892	.046	NA	NA	.209	.093	.250	1.875	NA	1.840	.046	.23	.16	1.938
.06	.093		.093	.858	.608	.484	.358	.733	.077	.116	.062	.937	.875	1.343	.125	.781	1.892	.046	NA	NA	.209	.093	.250	1.875	NA	1.840	.046	.23	.16	1.938
.06	.093		.093	.858	.608	.484	.358	.733	.077	.116	.062	.937	.875	1.343	.125	.781	1.892	.046	NA	NA	.209	.093	.250	1.875	NA	1.840	.046	.23	.16	1.938
.06	.093		.093	.858	.608	.484	.358	.733	.077	.116	.062	.937	.875	1.343	.125	.781	1.892	.046	NA	NA	.209	.093	.250	1.875	NA	1.840	.046	.23	.16	1.938
.06	.093		.093	.858	.608	.484	.358	.733	.077	.116	.062	.937	.875	1.343	.125	.781	1.892	.046	NA	NA	.209	.093	.250	1.875	NA	1.840	.046	.23	.16	1.938
.06	.093		.093	.858	.608	.484	.358	.733	.077	.116	.062	.937	.875	1.343	.125	.781	1.892	.046	NA	NA	.209	.093	.250	1.875	NA	1.840	.046	.23	.16	1.938
.06	.093		.093	.858	.608	.484	.358	.733	.077	.116	.062	.937	.875	1.343	.125	.781	1.892	.046	NA	NA	.209	.093	.250	1.875	NA	1.840	.046	.23	.16	1.938
.06	.093		.093	.858	.608	.484	.358	.733	.077	.116	.062	.937	.875	1.343	.125	.781	1.892	.046	NA	NA	.209	.093	.250	1.875	NA	1.840	.046	.23	.16	1.938
.06	.093		.093	.858	.608	.484	.358	.733	.077	.116	.062	.937	.875	1.343	.125	.781	1.892	.046	NA	NA	.209	.093	.250	1.875	NA	1.840	.046	.23	.16	1.938
.06	.093		.093	.858	.608	.484	.358	.733	.077	.116	.062	.937	.875	1.343	.125	.781	1.892	.046	NA	NA	.209	.093	.250	1.875	NA	1.840	.046	.23	.16	1.938
.06	.093		.093	.858	.608	.484	.358	.733	.077	.116	.062	.937	.875	1.343	.125	.781	1.892	.046	NA	NA	.209	.093	.250	1.875	NA	1.840	.046	.23	.16	1.938
.06	.093		.093	.858	.608	.484	.358	.733	.077	.116	.062	.937	.875	1.343	.125	.781	1.892	.046	NA	NA	.209	.093	.250	1.875	NA	1.840	.046	.23	.16	1.938
.06	.093		.093	.858	.608	.484	.358	.733	.077	.116	.062	.937	.875	1.343	.125	.781	1.892	.046	NA	NA	.209	.093	.250	1.875	NA	1.840	.046	.23	.16	1.938
.06	.093		.093	.858	.608	.484	.358	.733	.077	.116	.062	.937	.875	1.343	.125	.781	1.892	.046	NA	NA	.209	.093	.250	1.875	NA	1.840	.046	.23	.16	1.938
.06	.093		.093	.858	.608	.484	.358	.733	.077	.116	.062	.937	.875	1.343	.125	.781	1.892	.046	NA	NA	.209	.093	.250	1.875	NA	1.840	.046	.23	.16	1.938
.06	.093		.093	.858	.608	.484	.358	.733	.077	.116	.062	.937	.875	1.343	.125	.781	1.892	.046	NA	NA	.209	.093	.250	1.875	NA	1.840	.046	.23	.16	1.938
.06	.093		.093	.858	.608	.484	.358	.733	.077	.116	.062	.937	.875	1.343	.125	.781	1.892	.046	NA	NA	.209	.093	.250	1.875	NA	1.840	.046	.23	.16	1.938
.06	.093	[illegible]	.093	.858	.608	.484	.358	.733	.077	.116	.062	.937	.875	1.343	.125	.781	1.892	.046	NA	NA	.209	.093	.250	1.875	NA	1.840	.046	.23	.16	1.938
.078	.093	NA	NA	1.125	.750	.593	.453	1.015	.062	.187	.078	.875	.718	1.375	.218	NA	NA	.048	.031	.875	.305	.078	.531	1.906	.078	NA	.078	.531	.187	NA
.078	.093	NA	NA	1.125	.750	.593	.453	1.015	.062	.187	.078	.875	.718	1.375	.218	NA	NA	.048	.031	.875	.305	.078	.531	1.906	.078	NA	.078	.531	.187	NA

AC ELECTRONICS DASH NUMBERS

AS APPLICABLE	
NEXT ASSY	USED ON
APPLICATION	

UNLESS OTHERWISE SPECIFIED
DIMENSIONS ARE IN INCHES
TOLERANCES ON
2 PLACE DECIMALS ±
3 PLACE DECIMALS ± .005
ANGLES ±
DO NOT SCALE THIS DRAWING
MATERIAL SEE NOTE 11
APPROVAL

MIT INSTRUMENTATION LAB
CAMBRIDGE MASS
DRAWN R.A. JONES DATE 16 JUL 65
CHECKED
W. KUPFER APPROVAL 22 JUL 65
CONTRACT
T. MICHAELS NASA APPROVAL 22 JUL 65
W. KUPFER MIT APPROVAL 22 JUL 65

MANNED
SPACECRAFT CENTER
HOUSTON, TEXAS

NAMEPLATES,
APOLLO G&N - GSE
(STANDARDS)

SIZE J2
CODE IDENT NO. 80230
1004260
SCALE NONE
SHEET 4 OF 6

1004260 DH

1004260

260 D- SHT 4

2/1004260

NOTICE — WHEN GOVERNMENT DRAWINGS, SPECIFICATIONS, OR OTHER DATA ARE USED FOR ANY PURPOSE OTHER THAN IN CONNECTION WITH A DEFINITELY RELATED GOVERNMENT PROCUREMENT OPERATION, THE UNITED STATES GOVERNMENT THEREBY INCURS NO RESPONSIBILITY NOR ANY OBLIGATION WHATSOEVER; AND THE FACT THAT THE GOVERNMENT MAY HAVE FORMULATED, FURNISHED, OR IN ANY WAY SUPPLIED THE SAID DRAWINGS, SPECIFICATIONS, OR OTHER DATA IS NOT TO BE REGARDED BY IMPLICATION OR OTHERWISE AS IN ANY MANNER LICENSING THE HOLDER OR ANY OTHER PERSON OR CORPORATION, OR CONVEYING ANY RIGHTS OR PERMISSION TO MANUFACTURE, USE, OR SELL ANY PATENTED INVENTION THAT MAY IN ANY WAY BE RELATED THERETO.

401	MIT	COMPUTER ASSY		2003100		NAS-9-497	A	I	NOTE 11B	2,000	1,312	1,906	1,375	,078	,048	,078	,093	NA	NA	1,125	.75
400	MIT	LIFTING SLING-G&N INST.QUAL,FIX, & AZM.REF,FIX,		1021640		NAS-9-4065	B	II	NOTE 11C	2,000	1,312	1,587	1,375	,078	,048	,078	,093	[illegible]	,093	1,187	.75
DASH NO.	P/C	PART NAME	REMARKS	PART NUMBER	SER. NO.	CONT. NO.	STYLE	TYPE	MATERIAL	A	B	C	D	E	F	G	H	J	K	L	M

NOTES FOR TABLE
STYLE A IS FOR G & N SYSTEM
STYLE B IS FOR GROUND SUPPORT EQUIPMENT
TYPE I IS WITHOUT MOUNTING HOLES
TYPE II IS WITH MOUNTING HOLES

1004260	D	SHT 5

REVISIONS					
SYM	ZONE	DESCRIPTION	CHG NO	DATE	APPD
CL		REPLACES REV CK WITHOUT CHANGE PER TURR 34365		7/20/67	JWL RWH
CM		REVISION STATUS CHANGED		18 OCT 67	R.A.Y.
CN		REVISION STATUS CHANGED		31 OCT 67	JRK
CP		REVISION STATUS CHANGED		6 NOV 67	EMS
CR		REVISION STATUS CHANGED		7 DEC 67	CMS RWH
CS		REVISION STATUS CHANGED		3 JAN 68	EHN
CT		REVISION STATUS CHANGED		7 FEB 68	LK
CU		REVISION STATUS CHANGED		22 FEB 68	JRK
CV		REVISION STATUS CHANGED		27 FEB 68	LK
CW		REVISION STATUS CHANGED		5 APR 68	
CY		REVISION STATUS CHANGED		16 APR 68	A.N.
CZ		REVISION STATUS CHANGED		23 MAY 68	
DA		REVISION STATUS CHANGED		1 JULY 68	
DB		REVISION STATUS CHANGED		12 SEP 68	
DC		REVISION STATUS CHANGED		16 DEC 68	LK
DD		REVISION STATUS CHANGED		30 DEC 68	
DE		REVISION STATUS CHANGED		28 JAN 69	
DF		REVISION STATUS CHANGED		27 JAN 69	LK RWH
DG		REVISION STATUS CHANGED		26 SEP 69	
DH		REVISION STATUS CHANGED		29 SEP 69	

	.078	.093	NA	NA	1.125	.750	.593	.453	1.015	.062	.187	.078	.875	.718	1.375	.218	NA	NA	.048	.031	.875	.305	.078	.531	1.906	.078	NA	.078	.531	.187	NA
	.078	.093	[illegible]	.093	1.187	.750	.593	.453	1.015	.062	.187	.078	.875	.718	1.375	.218	1.156	1.843	.048	NA	.875	.305	.078	.312	1.687	.110	1.830	.070	.275	.180	1.844
	G	H	J	K	L	M	N	P	R	S	T	U	V	W	Y	Z	AA	AB	AC	AD	AE	AF	AG	AH	AJ	AK	AL	AM	AN	AP	AR

MIT DASH NUMBERS

AS APPLICABLE	
NEXT ASSY	USED ON
APPLICATION	

UNLESS OTHERWISE SPECIFIED
DIMENSIONS ARE IN INCHES
TOLERANCES ON
2 PLACE DECIMALS ± 3 PLACE DECIMALS ± .005 ANGLES ± —
DO NOT SCALE THIS DRAWING
MATERIAL SEE NOTE 11
APPROVAL

M I T
INSTRUMENTATION LAB
CAMBRIDGE MASS
DOC NO CONTRACT
DRAWN R. A. JONES DATE 16 JUL 65
CHECKED
W. KUPFER 22 JUL 65
APPROVAL
CONTRACT
T. MICHAELS 22 JUL 65
NASA APPROVAL
W. KUPFER 22 JUL 65
MIT APPROVAL

MANNED
SPACECRAFT CENTER
HOUSTON, TEXAS

NAMEPLATES, APOLLO GEN - GSE (STANDARDS)

SIZE J2 CODE IDENT NO. 80230 1004260
SCALE NONE SHEET 5 OF 6

1004260 DH SHT 5

NOTICE — WHEN GOVERNMENT DRAWINGS, SPECIFICATIONS, OR OTHER DATA ARE USED FOR ANY PURPOSE OTHER THAN IN CONNECTION WITH A DEFINITELY RELATED GOVERNMENT PROCUREMENT OPERATION, THE UNITED STATES GOVERNMENT THEREBY INCURS NO RESPONSIBILITY NOR ANY OBLIGATION WHATSOEVER; AND THE FACT THAT THE GOVERNMENT MAY HAVE FORMULATED, FURNISHED, OR IN ANY WAY SUPPLIED THE SAID DRAWINGS, SPECIFICATIONS, OR OTHER DATA IS NOT TO BE REGARDED BY IMPLICATION OR OTHERWISE AS IN ANY MANNER LICENSING THE HOLDER OR ANY OTHER PERSON OR CORPORATION, OR CONVEYING ANY RIGHTS OR PERMISSION TO MANUFACTURE, USE, OR SELL ANY PATENTED INVENTION THAT MAY IN ANY WAY BE RELATED THERETO.

DASH NO.	P/C	PART NAME	REMARKS	PART NUMBER	SER. NO.	CONT. NO.	STYLE	TYPE	MATERIAL	A	B	C	D	E	F	G	H	J	K	L
599	AC																			
598	AC																			
590		PSA ADAPTER MODULE (BLK II)		2901143-031		NAS9-497	B	II	NOTE 11C	FOR DIMENSIONS SEE DASH 141 VALUES										
589	AC	G&N INDICATOR CONTROL PANEL ASSY		2021290-061		FOR OTHER DATA SEE DASH 181														
588	AC	G&N INDICATOR CONTROL PANEL ASSY		2021290-051		FOR OTHER DATA SEE DASH 181														
587		AUXILIARY BATTERY PACK		1901492-051		FOR OTHER DATA SEE DASH 586														
586	AC	BATTERY POWER PACK		1900011-061		NAS-9-497	B	II	NOTE 11C	4.125	1.812	3.250	NA	.125	.062	.12	.156	.188 .164	.125	1.625
585		ANALYZER, OPTICS INERTIAL		2900023-051		FOR OTHER DATA SEE DASH 536														
584		ETHYLENE GLYCOL CLEANING KIT		2901630-011		NAS-9-497	B	I	NOTE 11B	4.000	2.625	3.380	NA	.260	.093	.56	.160	NA	NA	2.250
583		SWITCH CROSS BAR ASSY		1900048-021		FOR OTHER DATA SEE DASH 102														
582	AC	G&N INDICATOR CONTROL PANEL ASSY		2021290-041		FOR OTHER DATA SEE DASH 181														
581	AC	G&N INDICATOR CONTROL PANEL ASSY		2021323-021		FOR OTHER DATA SEE DASH 181														
580		AUXILIARY BATTERY PACK		1901492-041		FOR OTHER DATA SEE DASH 565														
579	AC	COMPUTER CONT & RETICLE DIMMER		6014512-081		FOR OTHER DATA SEE DASH 534														
578	AC	G&N INDICATOR CONTROL PANEL ASSY		2021290-031		FOR OTHER DATA SEE DASH 181														
577		BREAKOUT BOX, CABLE ADAPTER		2901011-021		FOR OTHER DATA SEE DASH 506														
576		FIX., MOUNTING G&N		2900067-061		FOR OTHER DATA SEE DASH 500														
575		CSL, CAL AND TEST, SCM/PSAAM		2900895-041		FOR DATA SEE DASH 559														
574		CONT., TEMP. PORTABLE		2900060-031		NAS-9-497	B	II	NOTE 11C	FOR DIMENSIONS SEE DASH 535 VALUES										
573		BATTERY PACK LIFTING		2900812-031		NAS-9-497	B	II	NOTE 11C	FOR DIMENSIONS SEE DASH 542 VALUES										
572		FIX., MOUNTING G&N	(-144)	2900067-051		NAS-9-497	B	II	NOTE 11C	FOR DIMENSIONS SEE DASH 500 VALUES										
571		EYEPIECE STORAGE UNIT		2021382		FOR OTHER DATA SEE DASH 100														
570	AC	OPTICAL UNIT & BELLOWS ASSY				NAS-9-497	A	I	NOTE 11B	FOR DIMENSIONS SEE DASH 550 VALUES										
569	AC	G & N INDICATOR CONTROL PANEL ASSY		2021323-011		NAS-9-497	A	I	NOTE 11B	FOR DIMENSIONS SEE DASH 181										
568	AC	G & N INDICATOR CONTROL PANEL ASSY		2021290-021		NAS-9-497	A	I	NOTE 11B	FOR DIMENSIONS SEE DASH 181										
567	AC	G & N INDICATOR CONTROL PANEL ASSY		2021290011		NAS-9-497	A	I	NOTE 11B	FOR DIMENSIONS SEE DASH 181										
566	AC	COMPUTER CONT & RETICLE DIMMER		6014512-061		NAS-9-497	A	I	NOTE 11B	FOR DIMENSIONS SEE DASH 534										
565		AUXILIARY BATTERY PACK		1901492-031		NAS-9-497	B	II	NOTE 11C	FOR DIMENSIONS SEE DASH 500										
564		BATTERY POWER PACK		1900011-051		NAS-9-497	B	II	NOTE 11C	FOR DIMENSIONS SEE DASH 500										
563		PSA ADAPTER MODULE (LEM)		6900088-031		NAS-9-497	B	II	NOTE 11C	FOR DIMENSIONS SEE DASH 141 VALUES										
562	AC	COMPUTER CONT & RETICLE DIMMER		6014512-041		NAS-9-497	A	I	NOTE 11B	FOR DIMENSIONS SEE DASH 534 VALUES										
561	AC	G & N INDICATOR CONTROL PANEL ASSY		2014578-031		NAS-9-497	A	I	NOTE 11B	FOR DIMENSIONS SEE DASH 181 VALUES										
560		ADPT. MODULE, PSA		2901143-021		NAS-9-497	B	II	NOTE 11C	FOR DIMENSIONS SEE DASH 141 VALUES										
559		CSL. CAL AND TEST. SCM/PSAAM		2900895-031		FOR OTHER DATA SEE DASH 547														
558		PSA ADAPTER MODULE (LEM)		6900088-021		FOR OTHER DATA SEE DASH 189														
557		FIX., HANDLING, C/M PSA		2900998-021		NAS-9-497	B	II	NOTE 11C	FOR DIMENSIONS SEE DASH 141 VALUES										
556		FIX., MOUNTING G & N	(-144)	2900067-041		NAS-9-497	B	II	NOTE 11C	FOR DIMENSIONS SEE DASH 500 VALUES										
555	AC	OPTICAL UNIT ASSEMBLY		1021368-061		NAS-9-497	A	I	NOTE 11B	2.000	1.312	1.687	1.375	.078	.048	.078	.093	NA	NA	1.125
554	AC	OPTICAL UNIT ASSEMBLY		1021368-041		NAS-9-497	A	I	NOTE 11B	2.000	1.312	1.687	1.375	.078	.048	.078	.093	NA	NA	1.125
553	AC	OPTICAL UNIT AND BELLOWS ASSEMBLY		2010790-111		NAS-9-497	A	I	NOTE 11B	2.000	1.312	1.687	1.375	.078	.048	.078	.093	NA	NA	1.125
552	AC	OPTICAL UNIT AND BELLOWS ASSEMBLY		2010790-081		NAS-9-497	A	I	NOTE 11B	2.000	1.312	1.687	1.375	.078	.048	.078	.093	NA	NA	1.125
551	AC	OPTICAL UNIT AND BELLOWS ASSEMBLY		2010790-071		NAS-9-497	A	I	NOTE 11B	2.000	1.312	1.687	1.375	.078	.048	.078	.093	NA	NA	1.125
550	AC	OPTICAL UNIT AND BELLOWS ASSEMBLY		2010790-061		NAS-9-497	A	I	NOTE 11B	2.000	1.312	1.687	1.375	.078	.048	.078	.093	NA	NA	1.125
548		CAGING ELECTRONICS, GYRO		2900029-031		NAS-9-497	B	II	NOTE 11C	2.125	.968	1.718	NA	.093	.031	.06	.093	.188 .164	.093	.858
547		CSL, CAL AND TEST, SCM/PSAAM		2900895-021		NAS-9-497	B	II	NOTE 11C	4.125	1.812	3.250	NA	.125	.062	.12	.156		.125	1.625
546		FIX., HAND., C/M AND LEM CDU		2900999-021		NAS-9-497	B	II	NOTE 11C	2.125	.968	1.718	NA	.093	.031	.06	.093	.188 .164	.093	.858
545	AC	G & N INDICATOR CONTROL PANEL ASSY		2014578-021		NAS-9-497	A	I	NOTE 11B	3.000	1.938	2.437	NA	.125	.062	.188	.156	NA	NA	1.750
544		ADPT MODULE, P.S.A.		1902431-051		NAS-9-497	B	II	NOTE 11C	2.125	.968	1.718	NA	.093	.031	.06	.093	.188 .164	.093	.858
543	AC	PANEL, MONITOR		2900031-041		NAS-9-497	B	II	NOTE 11C	2.125	.968	1.718	NA	.093	.031	.06	.093		.093	.858
542	AC	BATTERY PACK, LIFTING		2900812-021		NAS-9-497	B	II	NOTE 11C	2.125	.968	1.718	NA	.093	.031	.06	.093		.093	.858
541	AC	FIXTURE, MOUNTING, IMU		2900000-021		NAS-9-497	B	II	NOTE 11C	4.125	1.812	3.250	NA	.125	.062	.12	.156		.125	1.625
540	AC	ADPT, TEST POINT, P.S.A.		2900037-031		NAS-9-497	B	II	NOTE 11C	2.125	.968	1.718	NA	.093	.031	.06	.093	.188 .164	.093	.858
539	AC	ANNUNCIATOR PANEL & EYEPIECE STORAGE ASSEMBLY		1021255-041		NAS-9-497	A	I	NOTE 11B	2.000	1.312	1.906	1.375	.078	.048	.078	.093	NA	NA	1.125
538	AC	ANNUNCIATOR PANEL & EYEPIECE STORAGE ASSEMBLY		1021255-031		NAS-9-497	A	I	NOTE 11B	2.000	1.312	1.906	1.375	.078	.048	.078	.093	NA	NA	1.125
537	AC	TEST SELECTOR		2900028-031		NAS-9-497	B	II	NOTE 11C	2.125	.968	1.718	NA	.093	.031	.06	.093	.188 .164	.093	.858
536	AC	ANALYZER, OPTICS-INERTIAL		2900023-041		NAS-9-497	B	II	NOTE 11C	4.125	1.812	3.250	NA	.125	.062	.12	.156		.125	1.625
535	AC	CONT, TEMP, PORTABLE		2900060-021		NAS-9-497	B	II	NOTE 11C	2.125	.968	1.718	NA	.093	.031	.06	.093	.188 .164	.093	.858
534	AC	COMPUTER CONT & RETICLE DIMMER		6014512-021		NAS-9-497	A	I	NOTE 11B	2.000	1.312	1.906	1.375	.078	.048	.078	.093	NA	NA	1.125
533	AC	ADPT MODULE, P.S.A.		1902431-041		NAS-9-497	B	II	NOTE 11C	2.125	.968	1.718	NA	.093	.031	.06	.093	.188 .164	.093	.858
532	AC	TRAY BREAKOUT, 105 PIN		1900807-021		NAS-9-497	B	II	NOTE 11C	4.125	1.812	3.250	NA	.125	.062	.12	.156		.125	1.625
531	AC	TRAY BREAKOUT, 84 PIN		1900806-021		NAS-9-497	B	II	NOTE 11C	4.125	1.812	3.250	NA	.125	.062	.12	.156		.125	1.625
530	AC	HEAT SINK-TRAY EXTENDER		1900808-021		NAS-9-497	B	II	NOTE 11C	2.125	.968	1.718	NA	.093	.031	.06	.093		.093	.858
529	AC	TESTER, FAILURE INDICATOR		1900809-021		NAS-9-497	B	II	NOTE 11C	2.125	.968	1.718	NA	.093	.031	.06	.093	.188 .164	.093	.858
527	AC	FIX., MOUNTING, G & N	(-144)	1902204-021		NAS-9-497	B	II	NOTE 11C	FOR DIMENSIONS SEE DASH 500 VALUES BELOW										
526	AC	FIX., MOUNTING, G & N	(-144)	2900067-031		NAS-9-497	B	II	NOTE 11C	FOR DIMENSIONS SEE DASH 500 VALUES BELOW										
525	AC	PORTABLE TEMP. CONTROLLER		1900496-021		NAS-9-497	B	II	NOTE 11C	3.000	1.937	2.437	2.312	.125	.031	.125	.156	.125	.125	1.718
524	AC	POWER, SERVO & THERMOCOUPLE ASSEMBLY C/M		2010743		NAS-9-497	A	I	NOTE 11B	2.125	.968	1.718	NA	.093	.031	.06	.093	NA	NA	.858
523	AC	PULSE TORQUE AND THERMOCOUPLE ASSEMBLY-LEM		6010656		NAS-9-497	A	I	NOTE 11B	FOR DIMENSIONS SEE DASH 508 VALUES BELOW										
522	AC	COUPLING DATA UNIT & THERMOCOUPLE ASSEMBLY-LEM		2010744		NAS-9-497	A	I	NOTE 11B	FOR DIMENSIONS SEE DASH 508 VALUES BELOW										
521	AC	COUPLING DATA UNIT & THERMOCOUPLE ASSEMBLY-C/M		2010744		NAS-9-497	A	I	NOTE 11B	FOR DIMENSIONS SEE DASH 508 VALUES BELOW										
520	AC	PIPA ELECTRONICS AND THERMOCOUPLE ASSEMBLY		2010745		NAS-9-497	A	I	NOTE 11B	FOR DIMENSIONS SEE DASH 508 VALUES BELOW										
519	AC	FIXTURE, HANDLING, LEM-PSA	(-141)	6900129-011		NAS-9-497	B	II	NOTE 11C	FOR DIMENSIONS SEE DASH 504 VALUES BELOW										
518	AC	JUNCTION BOX, GSE-PSA	(-144)	1901933-031		NAS-9-497	B	II	NOTE 11C	FOR DIMENSIONS SEE DASH 500 VALUES BELOW										
517	AC	FIX., HAND., OPTICS INSTL.	(-141)	2901380-011		NAS-9-497	B	II	NOTE 11C	FOR DIMENSIONS SEE DASH 502 VALUES BELOW										
516	AC	POWER, SERVO AND THERMOCOUPLE ASSEMBLY-LEM		6010655		NAS-9-497	A	I	NOTE 11B	FOR DIMENSIONS SEE DASH 508 VALUES BELOW										
514	AC	SIGNAL COND. ASSY LEM OPER.	(-100)	6007013		NAS-9-497	A	I	NOTE 11B	FOR DIMENSIONS SEE DASH 508 VALUES BELOW										
513	AC	JUMPER, BY-PASS	(-141)	1021616		NAS-9-497	B	II	NOTE 11C	2.125	.968	1.718	NA	.093	.031	.06	.093	.188 .164	.093	.858
512	AC	COUPLING DATA UNIT ASSEMBLY C/M	(-100)	2007322-011		NAS-9-497	A	I	NOTE 11B	FOR DIMENSIONS SEE DASH 508 VALUES BELOW										
511	AC	COUPLING DATA UNIT ASSEMBLY-LEM	(-100)	2007322-021		NAS-9-497	A	I	NOTE 11B	FOR DIMENSIONS SEE DASH 508 VALUES BELOW										
510	AC	BATTERY POWER PACK	(-144)	1900011-041		NAS-9-497	B	II	NOTE 11C	FOR DIMENSIONS SEE DASH 500 VALUES BELOW										
509	AC	JUNCTION BOX, P.S.A./G.S.E.	(-144)	1902195-021		NAS-9-497	B	II	NOTE 11C	FOR DIMENSIONS SEE DASH 500 VALUES BELOW										
508	AC	NAVIGATION BASE ASSEMBLY-LEM	(-101)	6899980		NAS-9-497	A	I	NOTE 11B	2.000	1.312	1.906	1.375	.078	.048	.078	.093	NA	NA	1.125
507	AC	CSL, COOL, AND PWR, G AND N	(-144)	1902134-041		NAS-9-497	B	II	NOTE 11C	FOR DIMENSIONS SEE DASH 500 VALUES BELOW										
506	AC	BREAKOUT BOX, CABLE ADAPTER	(-141)	2901011-011		NAS-9-497	B	II	NOTE 11C	2.125	.968	1.718	NA	.093	.031	.06	.093	.188 .164	.093	.858
505	AC	MONITOR AND CONTROL, TEMP	(-141)	2900026-021		NAS-9-497	B	II	NOTE 11C	2.125	.968	1.718	NA	.093	.031	.06	.093		.093	.858
504	AC	PWR SUP, GUIDANCE SYSTEM	(-141)	1900033-021		NAS-9-497	B	II	NOTE 11C	2.125	.968	1.718	NA	.093	.031	.06	.093		.093	.858
503	AC	CONTROL, GIMBAL POSITION	(-141)	2900036-021		NAS-9-497	B	II	NOTE 11C	2.125	.968	1.718	NA	.093	.031	.06	.093	.188 .164	.093	.858
502	AC	ADPT, TEST POINT, PTA/PEA.	(-141)	2900145-021		NAS-9-497	B	II	NOTE 11C	FOR DIMENSIONS SEE DASH 500 VALUES BELOW										
501	AC	MOUNTING PLATE, COMPONENT	(-144)	6900007-031		NAS-9-497	B	II	NOTE 11C	FOR DIMENSIONS SEE DASH 500 VALUES BELOW										
500	AC	MOUNTING PLATE, COMPONENT	(-144)	2900677-021		NAS-9-497	B	II	NOTE 11C	4.125	1.812	3.250	NA	.125	.062	.12	.156	.188 .164	.125	1.625

NOTES FOR TABLE

STYLE A IS FOR G & N SYSTEM
STYLE B IS FOR GROUND SUPPORT EQUIPMENT
TYPE I IS WITHOUT MOUNTING HOLES
TYPE II IS WITH MOUNTING HOLES

1004260	D	SHT 6

SYM	ZONE	DESCRIPTION	CHG NO	DATE	APPD
CL		REPLACES REV CK WITH CHANGE PER TDRR 34365		9/28/67	JWL RWH
CM		REVISED PER TDRR 34395		17 OCT. 67	R.A.W.
CN		REVISED PER TDRR 34467		31 OCT 67	JRK
CP		REVISED PER TDRR 34855		6 NOV 67	EMS
CR		REVISED PER TDRR 35164		7 DEC 67	DKD RWH
CS		REVISED PER TDRR 35307		3 JAN 68	ENW
CT		REVISION STATUS CHANGED		7 FEB 68	LK
CU		REVISED PER TDRR 35628		22 FEB 68	JRK
CV		REVISED PER TDRR 35675		27 FEB 68	LK
CW		REVISED PER TDRR 35970		68	
CY		REVISION STATUS CHANGED		16 APR 68	A.N.
CZ		REVISED PER TDRR 36248		23 MAY 68	
DA		REVISED PER TDRR 36324		17 JUN 68	
DB		REVISED PER TDRR 36742		12 SEP 68	
DC		REVISED PER TDRR 37114		16 DEC 68	LK
DD		REVISED PER TDRR 37146		30 DEC 68	
DE		REVISED PER TDRR 37251		23 JAN 69	
DF		REVISED PER TDRR 37262		27 JAN 69	LK
DG		REVISED PER TDRR 37811		SEP 69	DKD
DH		REVISED PER TDRR 37820		29 SEP 69	CP

	F	G	H	J	K	L	M	N	P	R	S	T	U	V	W	Y	Z	AA	AB	AC	AD	AE	AF	AG	AH	AJ	AK	AL	AM	AN	AP	AR	AS	AT
35 VALUES																																		
	.062	.2	.156	[illegible]	.125	1.625	1.140	.890	.640	1.390	NA	NA	.125	1.875	1.650	2.625	.250	1.562	3.843	.093	NA	NA	.408	.125	.437	3.688	NA	3.687	.093	.625	.31	3.875	.062	NA
	.093	.156	.160	NA	NA	2.290	1.440	1.180	.940	1.900	NA	.375	.125	NA	1.790	2.760	.312	NA	3.590	.093	.062	NA	.525	NA	NA	NA	.225	NA	.093	.480	.430	NA	NA	3.670
35 VALUES																																		
42 VALUES																																		
50 VALUES																																		
VALUES																																		
VALUES																																		
VALUES																																		
VALUES																																		
VALUES																																		
VALUES																																		
VALUES																																		
	.048	.078	.093	NA	NA	1.125	.750	.593	.453	1.015	.062	.187	.078	.875	.718	1.375	.218	NA	NA	.048	.031	.875	.305	NA	.468	1.531	NA	NA	.078	.312	.187	NA		
	.048	.078	.093	NA	NA	1.125	.750	.593	.453	1.015	.062	.187	.078	.875	.718	1.375	.218	NA	NA	.048	.031	.875	.305	NA	.468	1.531	NA	NA	.078	.312	.187	NA		
	.048	.078	.093	NA	NA	1.125	.750	.593	.453	1.015	.062	.187	.078	.875	.718	1.375	.218	NA	NA	.048	.031	.875	.305	NA	.468	1.531	NA	NA	.078	.312	.187	NA		
	.048	.078	.093	NA	NA	1.125	.750	.593	.453	1.015	.062	.187	.078	.875	.718	1.375	.218	NA	NA	.048	.031	.875	.305	NA	.468	1.531	NA	NA	.078	.312	.187	NA		
	.048	.078	.093	NA	NA	1.125	.750	.593	.453	1.015	.062	.187	.078	.875	.718	1.375	.218	NA	NA	.048	.031	.875	.305	NA	.468	1.531	NA	NA	.078	.312	.187	NA		
	.048	.078	.093	NA	NA	1.125	.750	.593	.453	1.015	.062	.187	.078	.875	.718	1.375	.218	NA	NA	.048	.031	.875	.305	NA	.468	1.531	NA	NA	.078	.312	.187	NA		
	.031	.06	.093	[illegible]	.093	.858	.608	.484	.358	.733	.077	.116	.062	.937	.875	1.343	.125	.781	1.892	.046	NA	NA	.209	.093	.250	1.875	NA	1.840	.046	.23	.16	1.938		
	.062	.12	.156		.125	1.625	1.140	.890	.640	1.390	.125	.171	.125	1.875	1.687	2.625	.250	1.562	3.843	.093	NA	NA	.359	.125	.437	3.688	NA	3.687	.093	.40	.25	3.875		
	.031	.06	.093	[illegible]	.093	.858	.608	.484	.358	.733	.077	.116	.062	.937	.875	1.343	.125	.781	1.892	.046	NA	NA	.209	.093	.250	1.875	NA	1.840	.046	.23	.16	1.938		
	.062	.186	.156	NA	NA	1.750	1.125	.906	.688	1.500	NA	.281	.125	NA	1.094	2.062	.312	NA	2.500	.062	.125	1.312	.469	NA	NA	NA	.156	NA	.125	.469	.344	NA		
	.031	.06	.093	[illegible]	.093	.858	.608	.484	.358	.733	.077	.116	.062	.937	.875	1.343	.125	.781	1.892	.046	NA	NA	.209	.093	.250	1.875	NA	1.840	.046	.23	.16	1.938		
	.031	.06	.093		.093	.858	.608	.484	.358	.733	.077	.116	.062	.937	.875	1.343	.125	.781	1.892	.046	NA	NA	.209	.093	.250	1.875	NA	1.840	.046	.23	.25	1.938		
	.031	.06	.093		.093	.858	.608	.484	.358	.733	.077	.116	.062	.937	.875	1.343	.125	.781	1.892	.046	NA	NA	.209	.093	.250	1.875	NA	1.840	.046	.23	.16	1.938		
	.062	.12	.156		.125	1.625	1.140	.890	.640	1.390	.125	.171	.125	1.875	1.687	2.625	.250	1.562	3.843	.093	NA	NA	.359	.125	.437	3.688	NA	3.687	.093	.40	.25	3.875		
	.031	.06	.093	[illegible]	.093	.858	.608	.484	.358	.733	.077	.116	.062	.937	.875	1.343	.125	.781	1.892	.046	NA	NA	.209	.093	.250	1.875	NA	1.840	.046	.23	.16	1.938		
	.048	.078	.093	NA	NA	1.125	.750	.593	.453	1.015	.062	.187	.078	.875	.718	1.375	.218	NA	NA	.048	.031	.875	.305	.078	.531	1.906	.078	NA	.078	.531	.187	NA		
	.048	.078	.093	NA	NA	1.125	.750	.593	.453	1.015	.062	.187	.078	.875	.718	1.375	.218	NA	NA	.048	.031	.875	.305	.078	.531	1.906	.078	NA	.078	.531	.187	NA		
	.031	.06	.093	[illegible]	.093	.858	.608	.484	.358	.733	.077	.116	.062	.937	.875	1.343	.125	.781	1.892	.046	NA	NA	.209	.093	.250	1.875	NA	1.840	.046	.23	.16	1.938		
	.062	.12	.156		.125	1.625	1.140	.890	.640	1.390	.125	.171	.125	1.875	1.687	2.625	.250	1.562	3.843	.093	NA	NA	.359	.125	.437	3.688	NA	3.687	.093	.40	.25	3.875		
	.031	.06	.093	[illegible]	.093	.858	.608	.484	.358	.733	.077	.116	.062	.937	.875	1.343	.125	.781	1.892	.046	NA	NA	.209	.093	.250	1.875	NA	1.840	.046	.23	.16	1.938		
	.048	.078	.093	NA	NA	1.125	.750	.593	.453	1.015	.062	.187	.078	.875	.718	1.375	.218	NA	NA	.048	.031	.875	.305	.078	.531	1.906	.078	NA	.078	.531	.187	NA		
	.031	.06	.093	[illegible]	.093	.858	.608	.484	.358	.733	.077	.116	.062	.937	.875	1.343	.125	.781	1.892	.046	NA	NA	.209	.093	.250	1.875	NA	1.840	.046	.23	.16	1.938		
	.062	.12	.156		.125	1.625	1.140	.890	.640	1.390	.125	.171	.125	1.875	1.687	2.625	.250	1.562	3.843	.093	NA	NA	.359	.125	.437	3.688	NA	3.687	.093	.40	.25	3.875		
	.062	.12	.156		.125	1.625	1.140	.890	.640	1.390	.125	.171	.125	1.875	1.687	2.625	.250	1.562	3.843	.093	NA	NA	.359	.125	.437	3.688	NA	3.687	.093	.40	.25	3.875		
	.031	.06	.093		.093	.858	.608	.484	.358	.733	.077	.116	.062	.937	.875	1.343	.125	.781	1.892	.046	NA	NA	.209	.093	.250	1.875	NA	1.840	.046	.23	.16	1.938		
	.031	.06	.093	[illegible]	.093	.858	.608	.484	.358	.733	.077	.116	.062	.937	.875	1.343	.125	.781	1.892	.046	NA	NA	.209	.093	.250	1.875	NA	1.840	.046	.23	.16	1.938		
VALUES BELOW																																		
VALUES BELOW																																		
	.031	.125	.156	.125	.125	1.718	1.187	.968	.749	1.452	.093	.295	.090	1.312	1.00	2.000	.250	1.687	2.750	.062	NA	NA	.463	.125	.562	2.437	.140	2.562	.090	.468	.359	2.750		
	.031	.06	.093	NA	NA	.858	.608	.484	.358	.733	.062	.140	.062	NA	.968	1.450	.125	NA	1.720	.046	.03	NA	.210	NA	NA	NA	.070	NA	.046	.32	.16	NA		
VALUES BELOW																																		
VALUES BELOW																																		
VALUES BELOW																																		
VALUES BELOW																																		
VALUES BELOW																																		
VALUES BELOW																																		
VALUES BELOW																																		
VALUES BELOW																																		
VALUES BELOW																																		
	.031	.06	.093	[illegible]	.093	.858	.608	.484	.358	.733	.077	.116	.062	.937	.875	1.343	.125	.781	1.892	.046	NA	NA	.209	.093	.250	1.875	NA	1.840	.046	.23	.16	1.938		
VALUES BELOW																																		
VALUES BELOW																																		
VALUES BELOW																																		
VALUES BELOW																																		
	.048	.078	.093	NA	NA	1.125	.750	.593	.453	1.015	.062	.187	.078	.875	.718	1.375	.218	NA	NA	.048	.031	.875	.305	.078	.531	1.906	.078	NA	.078	.531	.187	NA		
VALUES BELOW																																		
	.031	.06	.093	[illegible]	.093	.858	.608	.484	.358	.733	.077	.116	.062	.937	.875	1.343	.125	.781	1.892	.046	NA	NA	.209	.093	.250	1.875	NA	1.840	.046	.23	.16	1.938		
	.031	.06	.093		.093	.858	.608	.484	.358	.733	.077	.116	.062	.937	.875	1.343	.125	.781	1.892	.046	NA	NA	.209	.093	.250	1.875	NA	1.840	.046	.23	.16	1.938		
	.031	.06	.093		.093	.858	.608	.484	.358	.733	.077	.116	.062	.937	.875	1.343	.125	.781	1.892	.046	NA	NA	.209	.093	.250	1.875	NA	1.840	.046	.23	.16	1.938		
	.031	.06	.093		.093	.858	.608	.484	.358	.733	.077	.116	.062	.937	.875	1.343	.125	.781	1.892	.046	NA	NA	.209	.093	.250	1.875	NA	1.840	.046	.23	.16	1.938		
	.031	.06	.093	[illegible]	.093	.858	.608	.484	.358	.733	.077	.116	.062	.937	.875	1.343	.125	.781	1.892	.046	NA	NA	.209	.093	.250	1.875	NA	1.840	.046	.23	.16	1.938		
VALUES BELOW																																		
	.062	.12	.156	[illegible]	.125	1.625	1.140	.890	.640	1.390	.125	.171	.125	1.875	1.687	2.625	.250	1.562	3.843	.093	NA	NA	.359	.125	.437	3.688	NA	3.687	.093	.40	.25	3.875		

AC ELECTRONICS DASH NUMBERS

UNLESS OTHERWISE SPECIFIED DIMENSIONS ARE IN INCHES TOLERANCES ON 2 PLACE DECIMALS ± 3 PLACE DECIMALS ± .005 ANGLES ±	MIT INSTRUMENTATION LAB CAMBRIDGE MASS
DO NOT SCALE THIS DRAWING	DRAWN R. A. JONES DATE 16 JUL 65
MATERIAL SEE NOTE 11	CHECKED W. KUPFER APPROVAL 22 JUL 65
APPROVAL	CONTRACT
AS APPLICABLE	T. MICHAELS NASA APPROVAL 22 JUL 65
NEXT ASSY / USED ON / APPLICATION	W. KUPFER MIT APPROVAL 22 JUL 65

MANNED SPACECRAFT CENTER
HOUSTON, TEXAS

NAMEPLATES, APOLLO GEN - GSE (STANDARDS)

SIZE J2 CODE IDENT NO. 80230 1004260

SCALE NONE SHEET 6 OF 6

260 DH SHT 6

1004260 DH

NOTICE [illegible]

NOTES:

1. INTERPRET DRAWING IN ACCORDANCE WITH STANDARDS PRESCRIBED BY MIL-D-70327.
2. DIMENSIONS ON EACH VIEW APPLY TO ALL VIEWS (WITH THE EXCEPTION OF MOUNTING HOLES).
3. FORMATS ILLUSTRATED WILL BE APPLICABLE TO ALL ITEMS REQUIRING NAMEPLATES BELOW END ITEM DESIGNATION (SYSTEMS, ASSEMBLIES, ETC.)
4. PLATE BACKGROUND TO BE LUSTERLESS BLACK PER FED-STD-595, COLOR 37038. BORDER, MARKING AND LETTERING TO BE NATURAL METAL, (ANODIZED ALUMINUM).
5. MARKING METHOD TO BE DIE STAMPING, ETCHING OR ENGRAVING IN ACCORDANCE WITH MIL-P-19834.
6. LETTERING STYLE TO BE GOTHIC, (SANS SERIFS), AND NUMBERS TO BE ARABIC.
7. WHERE LOCATING DIMENSIONS ARE NOT SHOWN, CHARACTERS SHALL BE SYMMETRICALLY POSITIONED.
8. IDENTIFY WITH DRAWING NUMBER PER ND 1002019.
9. WHEN "AUTO MARK" METAL MARKING TYPEWRITER IS USED TO ADD DATA TO BLANK SPACES, TYPE SIZE IS TO BE SELECTED FROM DIMENSIONS U, AC, AND AM.
10. NASA SYMBOL IS TO BE PROPORTIONAL TO NAMEPLATE IN RATIO OF 1 TO 5 WITH DIMENSION A VALUE AND IS TO HAVE NATURAL BACKGROUND. NASA SYMBOL LETTERS LETTERING AND FEATHER TO BE BLACK, (OR WHITE FOR SILK SCREENING). WHERE BLACK FEATHER PROTRUDES INTO BLACK BACKGROUND, A MINIMUM OUTLINE OF NATURAL BACKGROUND SHALL EXIST.
11. NAMEPLATES WILL BE APPLIED BY METHODS LISTED BELOW, SHOWN IN ORDER OF PREFERENCE, (I.E., FOR RELIABILITY AND WEIGHT).
    - A - STENCIL OR SILK SCREEN DIRECTLY ON EQUIPMENT USING INK PER SCD 1010920, (WHITE OR BLACK).
    - B - ALUMINUM FOIL, (STYLE A OR B, TYPE I):
      FOIL SHALL BE .0030 ± .0005 THICK PER MIL-A-148.
      FOIL SHALL HAVE NO ADHESIVE BACKING.
      FOIL SHALL BE BONDED PER ND 1002219, (METHOD II).
      FOIL SHALL BE CLEAR ANODIZED PER MIL-A-8625, TYPE II.
    - C - PLATE, (STYLE A OR B, TYPE II):
      MATERIAL: QQ-A-250, TEMPER 0 OR H14, TYPE 1100, ALUMINUM ALLOY, .032 THICK. ANODIZE PER MIL-A-8625, TYPE II.
      ALUMINUM PLATE MUST BE FREE FROM BURRS AND SHARP CORNERS, MOUNTED WITH APPLICABLE SIZE FASTENERS.
12. NAMEPLATES SHALL BE CAPABLE OF MEETING APPLICABLE REQUIREMENTS OF MIL-M-13231.
13. ON DIMENSION TABLES SHOWN ON PAGES 2, 3, 4, 5, AND 6, NA MEANS, "NOT APPLICABLE".

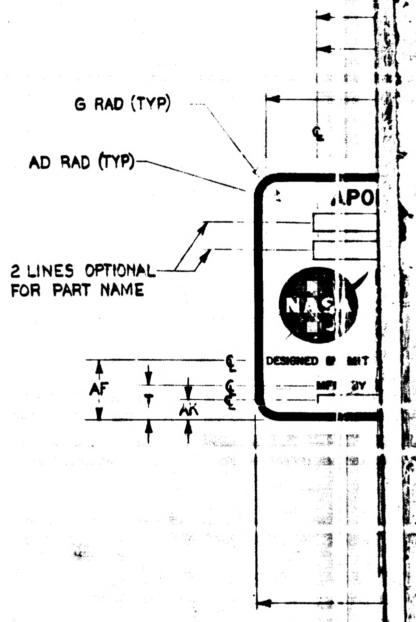

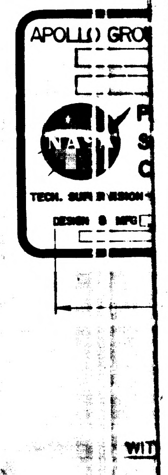

SUGGESTED PROPORTIONS FOR NAMEPLATE DIMENSIONS.
1. SELECT NAMEPLATE LENGTH, DIMENSION "A", TO FIT DESIGN NEEDS.
2. DIMENSIONS B THRU AS ON LINE 1 BELOW ARE PROPORTIONAL TO "A" BY MULTIPLIERS SHOWN IN LINE 2 BELOW.

1.	A	B	C	D	E	F	G	H	J	K	L	M	N	P	R	S	T	U
2.	1.000A	.6563A	.8438A	.6875A	.0391A	.0240A	.0391A	.0469A	.0547A	.0469A	.5938A	.3750A	.2969A	.2187A	.5079A	.0313A	.0938A	.0391A

1.	V	W	Y	Z	AA	AB	AC	AD	AE	AF	AG	AH	AJ	AK	AL	AM	AN	AP	AR	AS
2.	.4375A	.3594A	.6875A	.1094A	.5781A	.9219A	.0240A	.0156A	.4375A	.1525A	.0391A	.1563A	.8438A	.0548A	.8659A	.0391A	.1563A	.0938A	.9219A	.0151A

1004260 D SHT 1

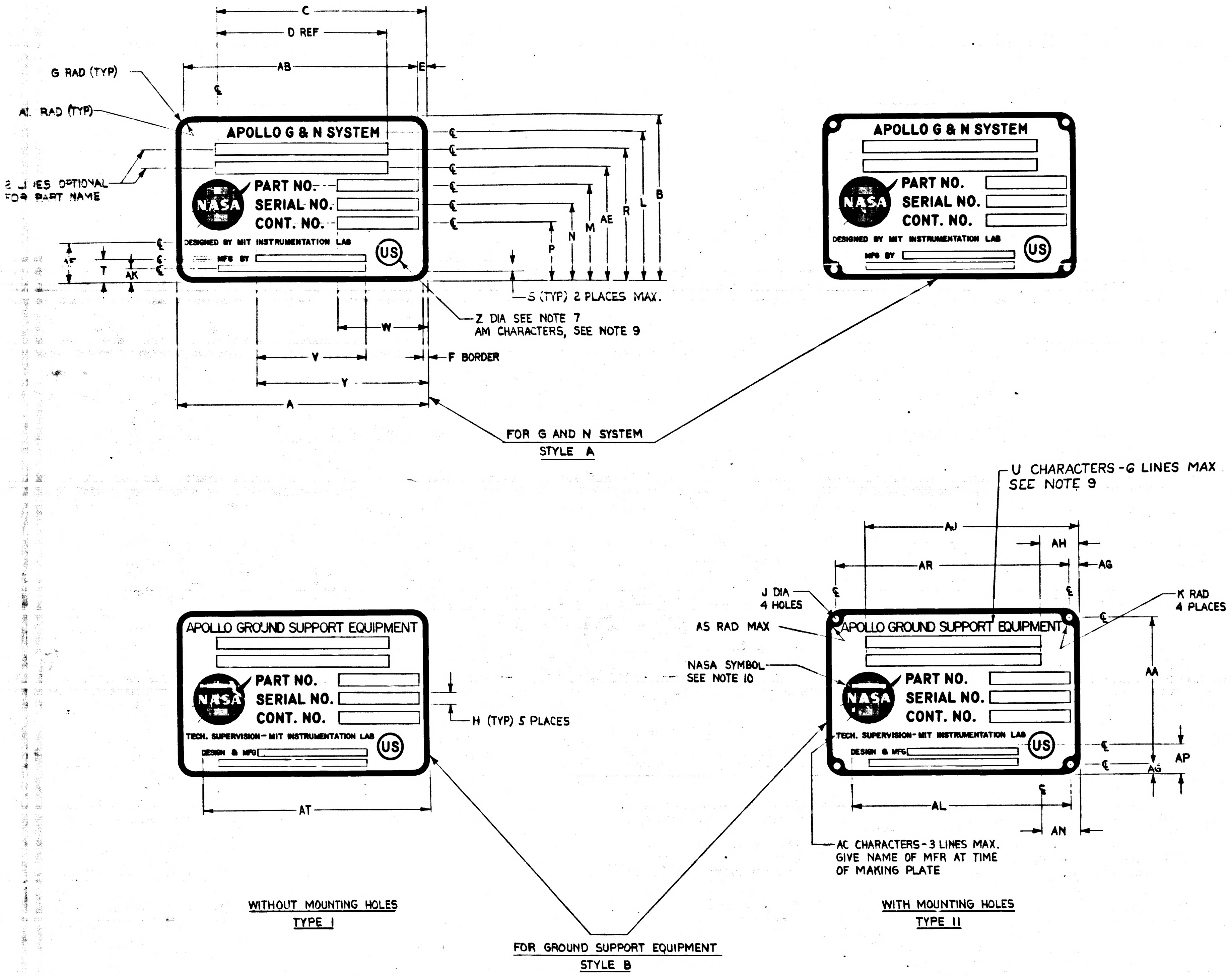
C
D REF
AB
E
G RAD (TYP)
AL RAD (TYP)
2 LINES OPTIONAL FOR PART NAME
APOLLO G & N SYSTEM
PART NO.
SERIAL NO.
CONT. NO.
NASA
DESIGNED BY MIT INSTRUMENTATION LAB
MFG BY
US
AF
T
AK
P
N
M
AE
R
L
B
S (TYP) 2 PLACES MAX.
W
V
Y
A
F BORDER
Z DIA SEE NOTE 7
AM CHARACTERS, SEE NOTE 9
FOR G AND N SYSTEM
STYLE A
U CHARACTERS - 6 LINES MAX
SEE NOTE 9
AJ
AH
AR
AG
J DIA
4 HOLES
K RAD
4 PLACES
AS RAD MAX
NASA SYMBOL
SEE NOTE 10
APOLLO GROUND SUPPORT EQUIPMENT
TECH. SUPERVISION - MIT INSTRUMENTATION LAB
DESIGN & MFG
AA
AP
AG
AL
AN
H (TYP) 5 PLACES
AT
AC CHARACTERS - 3 LINES MAX.
GIVE NAME OF MFR AT TIME
OF MAKING PLATE
WITHOUT MOUNTING HOLES
TYPE I
WITH MOUNTING HOLES
TYPE II
FOR GROUND SUPPORT EQUIPMENT
STYLE B

REVISIONS

SYM	ZONE	DESCRIPTION	CHG NO	DATE	APPD
CL		REPLACES REV CK WITHOUT CHANGE PER TDRR 34365		9/28/67	JWL RWH
CM		REVISION STATUS CHANGED		18 OCT 67	R.A.W.
CN		REVISION STATUS CHANGED		31 OCT 67	JRK
CP		REVISION STATUS CHANGED		6 NOV 67	EMS
CR		REVISION STATUS CHANGED		7 DEC 67	AKD RWH
CS		REVISION STATUS CHANGED		3 [illegible] 68	J.W. EHW
CT		REVISION STATUS CHANGED		1 FEB 68	LK
CU		REVISION STATUS CHANGED		22 FEB 68	JRK
CV		REVISION STATUS CHANGED		27 [illegible] 68	LK
CW		REVISION STATUS CHANGED		3 [illegible] 68	MTY
CY		REVISION STATUS CHANGED		16 APR 68	F.N.
CZ		REVISION STATUS CHANGED		23 MAY 68	MTY
DA		REVISION STATUS CHANGED		17 [illegible] 68	
DB		REVISION STATUS CHANGED		12 SEP 68	
DC		REVISION STATUS CHANGED		16 DEC 68	LK
DD		REVISION STATUS CHANGED		30 DEC 68	MTY
DE		REVISED PER TDRR 37251		22 JAN 69	
DF		REVISION STATUS CHANGED		27 JAN 69	LK
DG		REVISION STATUS CHANGED		27 SEP 69	DKD
DH		REVISION STATUS CHANGED		29 SEP 69	MTY CP
DJ		REVISION STATUS CHANGED		11 SEP 70	

AS APPLICABLE	UNLESS OTHERWISE SPECIFIED DIMENSIONS ARE IN INCHES TOLERANCES ON 2 PLACE DECIMALS ± 3 PLACE DECIMALS ± .005 ANGLES ±	MIT INSTRUMENTATION LAB CAMBRIDGE MASS	MANNED SPACECRAFT CENTER HOUSTON, TEXAS	
NEXT ASSY | USED ON	DO NOT SCALE THIS DRAWING	DRAWN R.A. JONES DATE 16 JUL 65 CHECKED APPROVAL W. KUPFER 22 JUL 65 CONTRACT	NAMEPLATES, APOLLO G&N - GSE (STANDARDS)	
APPLICATION	MATERIAL SEE NOTE 11	NASA APPROVAL T. MICHAELS 22 JUL 65	SIZE J2	CODE IDENT NO. 80230 | 1004260
	APPROVAL	MIT APPROVAL W. KUPFER 22 JUL 65	SCALE NONE	SHEET 1 OF 6

1004260 DJ

1004260 D SHT 1

NOTICE — WHEN GOVERNMENT DRAWINGS, SPECIFICATIONS, OR OTHER DATA ARE USED FOR ANY PURPOSE OTHER THAN IN CONNECTION WITH A DEFINITELY RELATED GOVERNMENT PROCUREMENT OPERATION, THE UNITED STATES GOVERNMENT THEREBY INCURS NO RESPONSIBILITY NOR ANY OBLIGATION WHATSOEVER; AND THE FACT THAT THE GOVERNMENT MAY HAVE FORMULATED, FURNISHED, OR IN ANY WAY SUPPLIED THE SAID DRAWINGS, SPECIFICATIONS, OR OTHER DATA IS NOT TO BE REGARDED BY IMPLICATION OR OTHERWISE AS IN ANY MANNER LICENSING THE HOLDER OR ANY OTHER PERSON OR CORPORATION, OR CONVEYING ANY RIGHTS OR PERMISSION TO MANUFACTURE, USE, OR SELL ANY PATENTED INVENTION THAT MAY IN ANY WAY BE RELATED THERETO.

DASH NO.	P/C	PART NAME	REMARKS	PART NUMBER	SER. NO.	CONT. NO.	STYLE	TYPE	MATERIAL	A	B	C	D	E	F	G	H	J	K	L	M	N
399	K																					
398	K																					
350	K	ALIGNMENT OPTICAL TELESCOPE (LEM)		NA	NA	NA	A	I	NOTE 11B	4.000	2.625	3.375	2.750	.156	.093	.156	.187	NA	NA	2.312	1.468	1.187
309	K																					
308	K																					
307	K						B	I	NOTE 11B	4.000	2.625	3.375	2.750	.156	.093	.156	.187	NA	NA	2.328	1.468	1.187
306	K						B	II	NOTE 11C	4.000	2.625	3.375	2.750	.156	.093	.156	.187	.125	.156	2.328	1.468	1.187
305	K						B	I	NOTE 11B	2.000	1.312	1.687	1.375	.078	.048	.078	.093	NA	NA	1.164	.734	.593
304	K						B	II	NOTE 11C	2.000	1.312	1.687	1.375	.078	.048	.078	.093	.070	.078	1.164	.734	.593
303	K																					
302	K																					
301	K																					
300	K	OPTICAL UNIT		NA	NA	NA	A	I	NOTE 11B	2.000	1.312	1.675	NA	NA	.048	.078	NA	NA	NA	1.090	.812	.675
9	K	2 IN AUTOCOLLIMATOR		1001702			B	II	NOTE 11C	4.000	2.625	3.812	2.750	.156	.093	.156	.187	.125	.156	2.250	1.500	1.187
8	K	5 IN AUTOCOLLIMATOR		1017410			B	II	NOTE 11C	4.000	2.625	3.812	2.750	.156	.093	.156	.187	.125	.156	2.250	1.500	1.187
7	K	2-1/2 IN AUTOCOLLIMATOR (SCT)		1017435			B	II	NOTE 11C	4.000	2.625	3.812	2.750	.156	.093	.156	.187	.125	.156	2.250	1.500	1.187
6	K	2-1/2 IN AUTOCOLLIMATOR (SXT)		1017448			B	II	NOTE 11C	4.000	2.625	3.812	2.750	.156	.093	.156	.187	.125	.156	2.250	1.500	1.187
5	K	RETROREFLECTING PRISM ASSEMBLY		1019840			B	I	NOTE 11B	4.000	2.625	3.812	2.750	.156	.093	.156	.187	NA	NA	2.250	1.500	1.187
4	K	S/H SIMULATOR ASSEMBLY		1019896			B	I	NOTE 11B	4.000	2.625	3.812	2.750	.156	.093	.156	.187	NA	NA	2.250	1.500	1.187
3	K	REFERENCE MIRROR		1001767			B	I	NOTE 11B	2.000	1.312	1.906	1.375	.078	.048	.078	.093	NA	NA	1.125	.750	.593
2	K	2 IN PLANE READING AUTOCOLLIMATOR		1017413			B	I	NOTE 11B	2.000	1.312	1.906	1.375	.078	.048	.078	.093	NA	NA	1.125	.750	.593
1	K	2 IN AUTOCOLLIMATOR		1001702			B	I	NOTE 11B	2.000	1.312	1.906	1.375	.078	.048	.078	.093	NA	NA	1.125	.750	.593

NOTES FOR TABLE

STYLE A IS FOR G & N SYSTEM
STYLE B IS FOR GROUND SUPPORT EQUIPMENT
TYPE I IS WITHOUT MOUNTING HOLES
TYPE II IS WITH MOUNTING HOLES

1004260 SHT 2

REVISIONS					
SYM	ZONE	DESCRIPTION	CHG NO	DATE	APPD
CL		REPLACES REV CK WITHOUT CHANGE PER TORR 34365		9/28/67	JWL RWH
CM		REVISION STATUS CHANGED		18 OCT 67	R.A.W.
CN		REVISION STATUS CHANGED		31 OCT 67	JRK
CP		REVISION STATUS CHANGED		6 NOV 67	EMS
CR		REVISION STATUS CHANGED		1 DEC 67	DKB RWH
CS		REVISION STATUS CHANGED		3 JAN 68	J.W. EHN
CT		REVISION STATUS CHANGED		7 FEB 68	LK
CU		REVISION STATUS CHANGED		22 FEB 68	JRK
CV		REVISION STATUS CHANGED		[illegible] 68	LK
CW		REVISION STATUS CHANGED		3 APR 68	
CY		REVISION STATUS CHANGED		16 APR 68	A.N.
CZ		REVISION STATUS CHANGED		23 MAY 68	
DA		REVISION STATUS CHANGED		17 JUN 68	
DB		REVISION STATUS CHANGED		12 SEP 68	
DC		REVISION STATUS CHANGED		16 DEC 68	LK
DD		REVISION STATUS CHANGED		30 DEC 68	
DE		REVISION STATUS CHANGED		23 JAN 69	
DF		REVISION STATUS CHANGED		27 JAN 69	LK RWH
DG		REVISION STATUS CHANGED		26 SEP 69	DKD
DH		REVISION STATUS CHANGED		29 SEP 69	CP
DJ		REVISION STATUS CHANGED		11 SEP 70	JJJ

[illegible]	[illegible]	.187	NA	NA	2.312	1.468	1.187	.906	2.031	NA	.375	.156	NA	1.437	2.750	.437	NA	3.688	.062	.062	1.750	.593	NA	.625	3.375	.187	NA	.156	.531	.453	NA
[illegible]	.156	.187	NA	NA	2.328	1.468	1.187	.906	2.031	.062	.375	.156	NA	1.437	2.750	.437	NA	3.687	.062	.062	1.750	.593	NA	NA	NA	NA	NA	NA	NA	NA	NA
[illegible]	.156	.187	.125	.156	2.328	1.468	1.187	.906	2.031	.062	.375	.156	NA	1.437	2.750	.437	2.312	3.687	.062	NA	1.750	.593	NA	NA	NA	NA	NA	NA	NA	NA	NA
[illegible]	.078	.093	NA	NA	1.164	.734	.593	.453	1.015	.048	.171	.078	NA	.718	1.375	.187	NA	NA	.048	.031	.875	.320	NA	NA	NA	NA	NA	NA	NA	NA	NA
[illegible]	.078	.093	.070	.078	1.164	.734	.593	.453	1.015	.048	.171	.078	NA	.718	1.375	.187	.156	1.843	.048	NA	.875	.320	NA	NA	NA	NA	NA	NA	NA	NA	NA
[illegible]	.078	NA	NA	NA	1.090	.812	.675	.540	.940	NA	.265	NA	NA	NA	1.375	.218	NA	NA	NA	NA	NA	.375	NA	NA	NA	.180	NA	.078	NA	NA	NA
[illegible]	.156	.187	.125	.156	2.250	1.500	1.187	.906	2.031	.093	.375	.156	1.750	1.437	2.750	.437	2.312	3.687	.062	NA	1.750	.593	.156	1.062	3.812	.156	NA	.156	1.062	.375	3.687
[illegible]	.156	.187	.125	.156	2.250	1.500	1.187	.906	2.031	.093	.375	.156	1.750	1.437	2.750	.437	2.312	3.687	.062	NA	1.750	.593	.156	1.062	3.812	.156	NA	.156	1.062	.375	3.687
[illegible]	.156	.187	.125	.156	2.250	1.500	1.187	.906	2.031	.093	.375	.156	1.750	1.437	2.750	.437	2.312	3.687	.062	NA	1.750	.593	.156	1.062	3.812	.156	NA	.156	1.062	.375	3.687
[illegible]	.156	.187	.125	.156	2.250	1.500	1.187	.906	2.031	.093	.375	.156	1.750	1.437	2.750	.437	2.312	3.687	.062	NA	1.750	.593	.156	1.062	3.812	.156	NA	.156	1.062	.375	3.687
[illegible]	.156	.187	NA	NA	2.250	1.500	1.187	.906	2.031	.093	.375	.156	1.750	1.437	2.750	.437	NA	NA	.062	.062	1.750	.593	.156	1.062	3.812	.156	NA	.156	1.062	.375	NA
[illegible]	.156	.187	NA	NA	2.250	1.500	1.187	.906	2.031	.093	.375	.156	1.750	1.437	2.750	.437	NA	NA	.062	.062	1.750	.593	.156	1.062	3.812	.156	NA	.156	1.062	.375	NA
[illegible]	.078	.093	NA	NA	1.125	.750	.593	.453	1.015	.062	.187	.078	.875	.718	1.375	.218	NA	NA	.048	.031	.875	.305	.078	.531	1.906	.078	NA	.078	.531	.187	NA
[illegible]	.078	.093	NA	NA	1.125	.750	.593	.453	1.015	.062	.187	.078	.875	.718	1.375	.218	NA	NA	.048	.031	.875	.305	.078	.531	1.906	.078	NA	.078	.531	.187	NA
[illegible]	.078	.093	NA	NA	1.125	.750	.593	.453	1.015	.062	.187	.078	.875	.718	1.375	.218	NA	NA	.048	.031	.875	.305	.078	.531	1.906	.078	NA	.078	.531	.187	NA
F	G	H	J	K	L	M	N	P	R	S	T	U	V	W	Y	Z	AA	AB	AC	AD	AE	AF	AG	AH	AJ	AK	AL	AM	AN	AP	AR

KOLLSMAN DASH NUMBERS

AS APPLICABLE	UNLESS OTHERWISE SPECIFIED DIMENSIONS ARE IN INCHES TOLERANCES ON 2 PLACE DECIMALS ± 3 PLACE DECIMALS ± .005 ANGLES ±	MIT INSTRUMENTATION LAB Cambridge Mass DWG NO CONTRACT	MANNED SPACECRAFT CENTER HOUSTON, TEXAS	
NEXT ASSY / USED ON	DO NOT SCALE THIS DRAWING	DRAWN R. A. JONES DATE 16 JUL 65 CHECKED W. KUPFER 22 JUL 65 APPROVAL CONTRACT	NAMEPLATES, APOLLO GEN - GSE (STANDARDS)	
APPLICATION	MATERIAL SEE NOTE 11 APPROVAL	T. MICHAELS 22 JUL 65 NASA APPROVAL W. KUPFER 22 JUL 65 MIT APPROVAL	SIZE J2 CODE IDENT NO. 80230 SCALE NONE	1004260 SHEET 2 OF 6

1004260 DJ

08SA001

1004 260 DJ SHT 2

DASH NO.	P/C	PART NAME	REMARKS	PART NUMBER	SER. NO.	CONT. NO.	STYLE	TYPE	MATERIAL	A	B	C	D	E	F	G	H	J	K	L	M	N	P
299	R																						
298	R																						
293	R	COMPUTER TEST SET		2014042-081	NA	NAS-9-497	B	II	NOTE 11C	FOR DIMENSIONS SEE DASH 18 VALUES BELOW													
292	R	DRAWER ASSY - PROGRAM & MONITOR		2014041-071	NA	NAS-9-497	B	I	NOTE 11B	FOR DIMENSIONS SEE DASH 17 VALUES BELOW													
291	R	BUFFER CIRCUIT ASSY		2014254-041	NA	NAS-9-497	B	I	NOTE 11B	FOR DIMENSIONS SEE DASH 15 VALUES BELOW													
290	R	LOGIC DRAWER ASSY NO. 2		2014037-051	NA	NAS-9-497	B	I	NOTE 11B	FOR DIMENSIONS SEE DASH 17 VALUES BELOW													
289	R	SELF TEST ASSY		2014392-021	NA	NAS-9-497	B	I	NOTE 11B	FOR DIMENSIONS SEE DASH 15 VALUES BELOW													
288	R	LOGIC DRAWER ASSY NO. 1		2014036-051	NA	NAS-9-497	B	I	NOTE 11B	FOR DIMENSIONS SEE DASH 17 VALUES BELOW													
287	R	COMPUTER TEST SET		2014042-071	NA	NAS-9-497	B	II	NOTE 11C	FOR DIMENSIONS SEE DASH 18 VALUES BELOW													
286	R	DRAWER ASSY PROGRAM & MONITOR		2014041-061	NA	NAS-9-497	B	I	NOTE 11B	FOR DIMENSIONS SEE DASH 17 VALUES BELOW													
285	R	BUFFER CIRCUIT ASSY		2014254-031	NA	NAS-9-497	B	I	NOTE 11B	FOR DIMENSIONS SEE DASH 15 VALUES BELOW													
284	R	LOGIC DRAWER ASSY NO. 2		2014037-041	NA	NAS-9-497	B	I	NOTE 11B	FOR DIMENSIONS SEE DASH 17 VALUES BELOW													
283	R	DRAWER ASSY-PROGRAM & MONITOR		2014041-051	NA	NAS-9-497	B	I	NOTE 11B	FOR DIMENSIONS SEE DASH 17 VALUES BELOW													
282	R	COMPUTER TEST SET		2014042-061	NA	NAS-9-497	B	II	NOTE 11C	FOR DIMENSIONS SEE DASH 18 VALUES BELOW													
281	R	AGC HANDLING FIXTURE		2014282-031	NA	NAS-9-497	B	I	NOTE 11B	FOR DIMENSIONS SEE DASH 17 VALUES BELOW													
280	R	COMPUTER TEST SET		2014042-051	NA	NAS-9-497	B	II	NOTE 11C	FOR DIMENSIONS SEE DASH 18 VALUES BELOW													
279	R	SELF TEST ASSY		2014366-041	NA	NAS-9-497	B	I	NOTE 11B	FOR DIMENSIONS SEE DASH 15 VALUES BELOW													
278	R	LOGIC DRAWER ASSY NO. 1		2014036-041	NA	NAS-9-497	B	I	NOTE 11B	FOR DIMENSIONS SEE DASH 17 VALUES BELOW													
277	R	COMPUTER TEST SET		2014042-041	NA	NAS-9-497	B	II	NOTE 11C	FOR DIMENSIONS SEE DASH 18 VALUES BELOW													
276	R	DRAWER ASSY-PROGRAM & MONITOR		2014041-041	NA	NAS-9-497	B	I	NOTE 11B	FOR DIMENSIONS SEE DASH 17 VALUES BELOW													
275	R	DRAWER ASSY RDC INTERFACE		2014045-031	NA	NAS-9-497	B	I	NOTE 11B	FOR DIMENSIONS SEE DASH 15 VALUES BELOW													
274	R	SELF TEST ASSY		2014366-031	NA	NAS-9-497	B	I	NOTE 11B	FOR DIMENSIONS SEE DASH 15 VALUES BELOW													
273	R	LOGIC DRAWER ASSY NO. 2		2014037-031	NA	NAS-9-497	B	I	NOTE 11B	FOR DIMENSIONS SEE DASH 17 VALUES BELOW													
272	R	DRAWING ASSY PROGRAMMER & MONITOR		2014041-031	NA	NAS-9-497	B	I	NOTE 11B	FOR DIMENSIONS SEE DASH 17 VALUES BELOW													
271	R	LOGIC DRAWER ASSY NO. 1		2014036-031	NA	NAS-9-497	B	I	NOTE 11B	FOR DIMENSIONS SEE DASH 17 VALUES BELOW													
270	R	COMPUTER TEST SET		2014042-031	NA	NAS-9-497	B	II	NOTE 11C	FOR DIMENSIONS SEE DASH 18 VALUES BELOW													
269	R	POWER CONTROL ASSY		2014044-021	NA	NAS-9-497	B	I	NOTE 11B	FOR DIMENSIONS SEE DASH 17 VALUES BELOW													
268	R	SELF TEST ASSY		2014366-021	NA	NAS-9-497	B	I	NOTE 11B	FOR DIMENSIONS SEE DASH 15 VALUES BELOW													
267	R	AGC JUNCTION ASSY		2014341-021	NA	NAS-9-497	B	I	NOTE 11B	FOR DIMENSIONS SEE DASH 15 VALUES BELOW													
266	R	POWER CONTROL ASSY		2014079-021	NA	NAS-9-497	B	I	NOTE 11B	FOR DIMENSIONS SEE DASH 15 VALUES BELOW													
265	R	BUFFER CIRCUIT ASSY		2014254-021	NA	NAS-9-497	B	I	NOTE 11B	FOR DIMENSIONS SEE DASH 15 VALUES BELOW													
264	R	DRAWER ASSY X Y INTERFACE		2014040-021	NA	NAS-9-497	B	I	NOTE 11B	FOR DIMENSIONS SEE DASH 15 VALUES BELOW													
263	R	DRAWER ASSY RDC INTERFACE		2014045-021	NA	NAS-9-497	B	I	NOTE 11B	FOR DIMENSIONS SEE DASH 15 VALUES BELOW													
262	R	DRAWER ASSY PROGRAMMER & MONITOR		2014041-021	NA	NAS-9-497	B	I	NOTE 11B	FOR DIMENSIONS SEE DASH 17 VALUES BELOW													
261	R	LOGIC DRAWER ASSY NO. 2		2014037-021	NA	NAS-9-497	B	I	NOTE 11B	FOR DIMENSIONS SEE DASH 17 VALUES BELOW													
260	R	LOGIC DRAWER ASSY NO. 1		2014036-021	NA	NAS-9-497	B	I	NOTE 11B	FOR DIMENSIONS SEE DASH 17 VALUES BELOW													
259	R	OPERATION CONSOLE		2014024-021	NA	NAS-9-497	B	II	NOTE 11C	FOR DIMENSIONS SEE DASH 18 VALUES BELOW													
258	R	COMPUTER TEST SET		2014042-021	NA	NAS-9-497	B	II	NOTE 11C	FOR DIMENSIONS SEE DASH 18 VALUES BELOW													
257	R	AUXILIARY CALIBRATION CONSOLE		2014059-021	NA	NAS-9-497	B	II	NOTE 11C	FOR DIMENSIONS SEE DASH 18 VALUES BELOW													
256	R	AGC CALIBRATION CONSOLE		2014049-021	NA	NAS-9-497	B	II	NOTE 11C	FOR DIMENSIONS SEE DASH 18 VALUES BELOW													
255	R	AGC HANDLING FIXTURE		2014282-021	NA	NAS-9-497	B	I	NOTE 11B	FOR DIMENSIONS SEE DASH 17 VALUES BELOW													
254	R	DRAWER ASSY COMP. SIMULATOR		2014048-011	NA	NAS-9-497	B	II	NOTE 11C	FOR DIMENSIONS SEE DASH 18 VALUES BELOW													
253	R	SHIPPING KIT ASSY, NAV DSKY		2016312-011	NA	NAS-9-497	B	II	NOTE 11C	FOR DIMENSIONS SEE DASH 18 VALUES BELOW													
252	R	SHIPPING KIT ASSY, UNIVERSAL DSKY		2016316-011	NA	NAS-9-497	B	II	NOTE 11C	FOR DIMENSIONS SEE DASH 18 VALUES BELOW													
251	R	SHIPPING KIT ASSY, MAIN DSKY		2016313-011	NA	NAS-9-497	B	II	NOTE 11C	FOR DIMENSIONS SEE DASH 18 VALUES BELOW													
250	R	AMPLIFIER, REWORK		2014386	NA	NAS-9-497	B	I	NOTE 11B	FOR DIMENSIONS SEE DASH 15 VALUES BELOW													
249	R	TEMP MONITOR ASSY		2014313-011	NA	NAS-9-497	B	I	NOTE 11C	FOR DIMENSIONS SEE DASH 17 VALUES BELOW													
248	R	AGC JUNCTION ASSY		2014341-011	NA	NAS-9-497	B	I	NOTE 11B	FOR DIMENSIONS SEE DASH 15 VALUES BELOW													
247	R	AC INPUT PANEL ASSY		2014302-011	NA	NAS-9-497	B	I	NOTE 11B	FOR DIMENSIONS SEE DASH 15 VALUES BELOW													
246	R	SELF TEST ASSY		2014392-011	NA	NAS-9-497	B	I	NOTE 11B	FOR DIMENSIONS SEE DASH 15 VALUES BELOW													
245	R	TAPE PUNCH ASSEMBLY		2014039-011	NA	NAS-9-497	B	I	NOTE 11B	FOR DIMENSIONS SEE DASH 15 VALUES BELOW													
244	R	TAPE READER ASSEMBLY		2014038-011	NA	NAS-9-497	B	I	NOTE 11B	FOR DIMENSIONS SEE DASH 15 VALUES BELOW													
243																							
242																							
241	R	APOLLO GUIDANCE COMPUTER GROUP		6003001	NA	NAS-9-497	A	I	NOTE 11B	FOR DIMENSIONS SEE DASH 19 VALUES BELOW													
240	R	SELF TEST ASSEMBLY		2014366-011	NA	NAS-9-497	B	I	NOTE 11B	FOR DIMENSIONS SEE DASH 15 VALUES BELOW													
239	R	POWER SUPPLY ASSY-115V., 400 CYCLE		2014207-011	NA	NAS-9-497	B	I	NOTE 11B	FOR DIMENSIONS SEE DASH 17 VALUES BELOW													
238	R	AC INPUT PANEL ASSY		2014043-011	NA	NAS-9-497	B	I	NOTE 11B	FOR DIMENSIONS SEE DASH 17 VALUES BELOW													
237	R	POWER CONTROL ASSY		2014079-011	NA	NAS-9-497	B	I	NOTE 11B	FOR DIMENSIONS SEE DASH 15 VALUES BELOW													
236	R	DRAWER ASSY-X Y INTERFACE		2014040-011	NA	NAS-9-497	B	I	NOTE 11B	FOR DIMENSIONS SEE DASH 15 VALUES BELOW													
235	R	DRAWER ASSY RDC INTERFACE		2014045-011	NA	NAS-9-497	B	I	NOTE 11B	FOR DIMENSIONS SEE DASH 15 VALUES BELOW													
234	R	BUFFER CIRCUIT ASSY		2014254-011	NA	NAS-9-497	B	I	NOTE 11B	FOR DIMENSIONS SEE DASH 15 VALUES BELOW													
233	R	CONTROL & INTERFACE ASSY		2014204-011	NA	NAS-9-497	B	I	NOTE 11B	FOR DIMENSIONS SEE DASH 15 VALUES BELOW													
232	R	POWER CONTROL ASSY		2014044-011	NA	NAS-9-497	B	I	NOTE 11B	FOR DIMENSIONS SEE DASH 17 VALUES BELOW													
231	R	DRAWER ASSY, PROGRAMMER & MONITOR		2014041-011	NA	NAS-9-497	B	I	NOTE 11B	FOR DIMENSIONS SEE DASH 17 VALUES BELOW													
230	R	CONNECTOR INTERFACE ASSY		2014272-011	NA	NAS-9-497	B	I	NOTE 11B	FOR DIMENSIONS SEE DASH 15 VALUES BELOW													
229	R	CONNECTOR INTERFACE ASSY		2014047-011	NA	NAS-9-497	B	I	NOTE 11B	FOR DIMENSIONS SEE DASH 15 VALUES BELOW													
228	R	ANTENNA, TUNING CAPACITOR ASSY		2014209-011	NA	NAS-9-497	B	I	NOTE 11B	FOR DIMENSIONS SEE DASH 15 VALUES BELOW													
227	R	MOUNTING FIXTURE ASSY		2014006-011	NA	NAS-9-497	B	I	NOTE 11B	FOR DIMENSIONS SEE DASH 17 VALUES BELOW													
226	R	POWER SUPPLY ASSY 3 VDC		2014234-011	NA	NAS-9-497	B	I	NOTE 11B	FOR DIMENSIONS SEE DASH 15 VALUES BELOW													
225	R	PANEL ASSY—SIGNAL INTERFACE		2014010-011	NA	NAS-9-497	B	I	NOTE 11B	FOR DIMENSIONS SEE DASH 15 VALUES BELOW													
224	R	OSCILLOSCOPE ASSY		2014232-011	NA	NAS-9-497	B	I	NOTE 11B	FOR DIMENSIONS SEE DASH 15 VALUES BELOW													
223	R	AUXILIARY OUTLET ASSY		2014274-011	NA	NAS-9-497	B	I	NOTE 11B	FOR DIMENSIONS SEE DASH 15 VALUES BELOW													
222	R	FREQUENCY COUNTER		2014233-011	NA	NAS-9-497	B	I	NOTE 11B	FOR DIMENSIONS SEE DASH 15 VALUES BELOW													
221	R	POWER SUPPLY ASSY 10, 13, 28 VDC		2014235-011	NA	NAS-9-497	B	I	NOTE 11B	FOR DIMENSIONS SEE DASH 15 VALUES BELOW													
220	R	LOGIC DRAWER ASSY NO. 2		2014037-011	NA	NAS-9-497	B	I	NOTE 11B	FOR DIMENSIONS SEE DASH 17 VALUES BELOW													
219	R	LOGIC DRAWER ASSY NO. 1		2014036-011	NA	NAS-9-497	B	I	NOTE 11B	FOR DIMENSIONS SEE DASH 17 VALUES BELOW													
218	R	COUNTER, ELECTRICAL ASSY		2014288-011	NA	NAS-9-497	B	I	NOTE 11B	FOR DIMENSIONS SEE DASH 15 VALUES BELOW													
217	R	POWER SUPPLY ASSY		2014279-011	NA	NAS-9-497	B	I	NOTE 11B	FOR DIMENSIONS SEE DASH 15 VALUES BELOW													
216	R	TEST MOUNT ASSY		2014257-011	NA	NAS-9-497	B	I	NOTE 11B	FOR DIMENSIONS SEE DASH 15 VALUES BELOW													
215	R	UNIVERSAL DSKY PEDESTAL MOUNT		2014014-011	NA	NAS-9-497	B	I	NOTE 11B	FOR DIMENSIONS SEE DASH 17 VALUES BELOW													
214	R	MAIN DSKY PEDESTAL MOUNT		2014343	NA	NAS-9-497	B	I	NOTE 11B	FOR DIMENSIONS SEE DASH 17 VALUES BELOW													
213	R	SHIPPING CONTAINER, MAIN DSKY		1006229	NA	NAS-9-497	B	II	NOTE 11C	FOR DIMENSIONS SEE DASH 18 VALUES BELOW													
212	R	SHIPPING CONTAINER, NAV DSKY		1006231	NA	NAS-9-497	B	II	NOTE 11C	FOR DIMENSIONS SEE DASH 18 VALUES BELOW													
211	R	SHIPPING CONTAINER, AGC		1006230	NA	NAS-9-497	B	II	NOTE 11C	FOR DIMENSIONS SEE DASH 18 VALUES BELOW													
210	R	SHIPPING CONTAINER, UNIVERSAL DSKY		1006422	NA	NAS-9-497	B	II	NOTE 11C	FOR DIMENSIONS SEE DASH 18 VALUES BELOW													
209	R	SHIPPING CONTAINER, AGC		1006421	NA	NAS-9-497	B	II	NOTE 11C	FOR DIMENSIONS SEE DASH 18 VALUES BELOW													
208	R	UNIVERSAL DSKY HANDLING FIXTURE		2014013-011	NA	NAS-9-497	B	I	NOTE 11B	FOR DIMENSIONS SEE DASH 15 VALUES BELOW													
207	R	NAV DSKY HANDLING FIXTURE		1014377	NA	NAS-9-497	B	I	NOTE 11B	FOR DIMENSIONS SEE DASH 17 VALUES BELOW													
206	R	MAIN DSKY HANDLING FIXTURE		1014334	NA	NAS-9-497	B	I	NOTE 11B	FOR DIMENSIONS SEE DASH 17 VALUES BELOW													
205	R	AGC HANDLING FIXTURE		2014282-011	NA	NAS-9-497	B	I	NOTE 11B	FOR DIMENSIONS SEE DASH 17 VALUES BELOW													
204	R	OPERATION CONSOLE		2014024-011	NA	NAS-9-497	B	II	NOTE 11C	FOR DIMENSIONS SEE DASH 18 VALUES BELOW													
203	R	COMPUTER TEST SET		2014042-011	NA	NAS-9-497	B	II	NOTE 11C	FOR DIMENSIONS SEE DASH 18 VALUES BELOW													
202	R	DRAWER ASSY, COMPUTER SIMULATOR		2014048-011	NA	FNP-12775	B	II	NOTE 11C	FOR DIMENSIONS SEE DASH 18 VALUES BELOW													
201	R	AUXILIARY CALIBRATION CONSOLE		2014059-011	NA	NAS-9-497	B	II	NOTE 11C	FOR DIMENSIONS SEE DASH 18 VALUES BELOW													
200	R	AGC CALIBRATION CONSOLE		2014049-011	NA	NAS-9-497	B	II	NOTE 11C	FOR DIMENSIONS SEE DASH 18 VALUES BELOW													
21	R																						
20	R	NA		NA	NA	NA	A	II	NOTE 11C	2.000	1.312	1.687	1.375	.078	.031	.078	.093	[illegible]	.093	1.187	.750	.593	.45
19	R	NA		NA	NA	NA	A	I	NOTE 11B	2.000	1.312	1.687	1.375	.078	.031	.078	.093	NA	NA	1.187	.750	.593	.45
18	R	NA		NA	NA	NA	B	II	NOTE 11C	4.187	1.875	3.469	2.750	.156	.093	.156	.125	[illegible]	.125	1.625	1.032	.844	.35
17	R	NA		NA	NA	NA	B	I	NOTE 11B	4.187	1.875	3.469	2.750	.156	.093	.156	.125	NA	NA	1.625	1.032	.844	.35
16	R	NA		NA	NA	NA	B	II	NOTE 11C	2.000	1.312	1.687	1.375	.078	.031	.078	.093	[illegible]	.093	1.187	.750	.593	.45
15	R	NA		NA	NA	NA	B	I	NOTE 11B	2.000	1.312	1.687	1.375	.078	.031	.078	.093	NA	NA	1.187	.750	.593	.45

NOTES FOR TABLE

STYLE A IS FOR G & N SYSTEM
STYLE B IS FOR GROUND SUPPORT EQUIPMENT
TYPE I IS WITHOUT MOUNTING HOLES
TYPE II IS WITH MOUNTING HOLES

1004260 - SHT 3

SYM	ZONE	DESCRIPTION	CHG NO	DATE	APPD
CL		REPLACES REV CK WITHOUT CHANGE PER TDRR 34365		9/28/67	JWL RWH
CM		REVISION STATUS CHANGED		18 OCT 67	RAW
CN		REVISION STATUS CHANGED		31 OCT 67	JRK
CP		REVISION STATUS CHANGED		6 NOV 67	EMS
CR		REVISION STATUS CHANGED		7 DEC 67	RWH
CS		REVISION STATUS CHANGED		3 JAN 68	EHW
CT		REVISED PER TDRR 35526		7 FEB 68	LK RWH
CU		REVISION STATUS CHANGED		22 FEB 68	JRK
CV		REVISION STATUS CHANGED		27 FEB 68	LK
CW		REVISION STATUS CHANGED		8 APR 68	
CY		REVISED PER TDRR 36028		16 APR 68	
CZ		REVISION STATUS CHANGED		23 MAY 68	
DA		REVISION STATUS CHANGED		17 JUN 68	
DB		REVISION STATUS CHANGED		13 SEP 68	
DC		REVISION STATUS CHANGED		16 DEC 68	LK
DD		REVISION STATUS CHANGED		30 DEC 68	
DE		REVISION STATUS CHANGED		23 JAN 69	
DF		REVISION STATUS CHANGED		27 JAN 69	LK RWH
DG		REVISION STATUS CHANGED		26 SEP 69	
DH		REVISION STATUS CHANGED		25 SEP 69	
DJ		REVISION STATUS CHANGED		11 SEP 70	

F	G	H	J	K	L	M	N	P	R	S	T	U	V	W	Y	Z	AA	AB	AC	AD	AE	AF	AG	AH	AJ	AK	AL	AM	AN	AP	AR
.031	.078	.093	[illegible]	.093	1.187	.750	.593	.453	1.015	.062	.187	.078	.875	.718	1.375	.218	1.156	1.843	.048	NA	.875	.305	.078	.312	1.687	.078	NA	.078	.312	.187	1.843
.031	.078	.093	NA	NA	1.187	.750	.593	.453	1.015	.062	.187	.078	.875	.718	1.375	.218	NA	NA	.048	.031	.875	.305	.078	.312	1.687	.078	NA	.078	.312	.187	NA
.093	.156	.125	[illegible]	.125	1.625	1.032	.844	.656	1.406	.093	.344	.156	1.781	1.531	2.844	.312	1.562	3.875	.062	NA	1.219	.500	.156	.719	3.469	.156	NA	.156	.719	.344	3.875
.093	.156	.125	NA	NA	1.625	1.032	.844	.656	1.406	.093	.344	.156	1.781	1.531	2.844	.312	NA	NA	.062	.062	1.219	.500	.156	.719	3.469	.156	NA	.156	.719	.344	NA
.031	.078	.093	[illegible]	.093	1.187	.750	.593	.453	1.015	.062	.187	.078	.875	.718	1.375	.218	1.156	1.843	.048	NA	.875	.305	.078	.312	1.687	.078	NA	.078	.312	.187	1.843
.031	.078	.093	NA	NA	1.187	.750	.593	.453	1.015	.062	.187	.078	.875	.718	1.375	.218	NA	NA	.048	.031	.875	.305	.078	.312	1.687	.078	NA	.078	.312	.187	NA

RAYTHEON DASH NUMBERS

AS APPLICABLE	
NEXT ASSY	USED ON
APPLICATION	

UNLESS OTHERWISE SPECIFIED
DIMENSIONS ARE IN INCHES
TOLERANCES ON
2 PLACE DECIMALS ± 3 PLACE DECIMALS ± .005 ANGLES ± —
DO NOT SCALE THIS DRAWING
MATERIAL SEE NOTE 11
APPROVAL

MIT INSTRUMENTATION LAB
CAMBRIDGE MASS
DWG NO CONTRACT
DRAWN R. A. JONES DATE 16 JUL 65
CHECKED
APPROVAL W. KUPFER 22 JUL 65
CONTRACT
NASA APPROVAL T. MICHAELS 22 JUL 65
MIT APPROVAL W. KUPFER 22 JUL 65

MANNED SPACECRAFT CENTER
HOUSTON, TEXAS

NAMEPLATES,
APOLLO G&N - GSE
(STANDARDS)

SIZE J2 CODE IDENT NO. 80230 1004260
SCALE NONE SHEET 3 OF 6

1004260 DJ

1004 260 DJ SHT 3

AC DASH NUMBERS CONTINUED ON SHEET 6

DASH NO.	P/C	PART NAME	REMARKS	PART NUMBER	SER. NO.	CONT. NO.	STYLE	TYPE	MATERIAL	A	B	C	D	E	F	G	H	J	K	L	M	N
199	AC	EYEPIECE STOWAGE UNIT		2021255-011			A	I		FOR DIMENSIONS SEE DASH 100 VALUES BELOW												
198	AC	SIGNAL CONDITIONER ASSY C/M		2007234		NAS-9-497	A	I	NOTE 11B	FOR DIMENSIONS SEE DASH 100 VALUES BELOW												
197	AC	SIGNAL CONDITIONER ASSY C/M		2007235		NAS-9-497	A	I	NOTE 11B	FOR DIMENSIONS SEE DASH 100 VALUES BELOW												
196	AC	SIGNAL CONDITIONER ASSY LEM		6007010		NAS-9-497	A	I	NOTE 11B	FOR DIMENSIONS SEE DASH 100 VALUES BELOW												
195	AC	PSA & SIGNAL CONDITIONER ASSY		6007009		NAS-9-497	A	I	NOTE 11B	FOR DIMENSIONS SEE DASH 100 VALUES BELOW												
194	AC	PANEL, MONITOR		2900031-031		NAS-9-497	B	II	NOTE 11C	FOR DIMENSIONS SEE DASH 141 VALUES BELOW												
193	AC	DISTRIBUTION BOX, GSE		2900024-031		NAS-9-497	B	II	NOTE 11C	FOR DIMENSIONS SEE DASH 141 VALUES BELOW												
192	AC	ANALYZER, OPTICS-INERTIAL		2900023-031		NAS-9-497	B	II	NOTE 11C	FOR DIMENSIONS SEE DASH 144 VALUES BELOW												
191	AC	TEST CONTROL		2900027-031		NAS-9-497	B	II	NOTE 11C	FOR DIMENSIONS SEE DASH 141 VALUES BELOW												
190	AC	PANEL, PWR SUP AND LOAD		2900033-021		NAS-9-497	B	II	NOTE 11C	FOR DIMENSIONS SEE DASH 141 VALUES BELOW												
189	AC	ADPT MODULE, P.S.A.		6900088-011		NAS-9-497	B	II	NOTE 11C	FOR DIMENSIONS SEE DASH 141 VALUES BELOW												
188	AC	ADPT MODULE, P.S.A.		2901143-011		NAS-9-497	B	II	NOTE 11C	FOR DIMENSIONS SEE DASH 141 VALUES BELOW												
187	AC	FIXTURE, MTG, PTA/PEA		2900066-021		NAS-9-497	B	II	NOTE 11C	FOR DIMENSIONS SEE DASH 141 VALUES BELOW												
186	AC	ANNUNCIATOR PANEL & EYEPIECE STORAGE ASSEMBLY		1021255-021			A	I		FOR DIMENSIONS SEE DASH 100 VALUES BELOW												
185	AC	ANNUNCIATOR PANEL & EYEPIECE STORAGE ASSEMBLY		1021255-011			A	I		FOR DIMENSIONS SEE DASH 100 VALUES BELOW												
184	AC	FIX., HAND., G AND N HARNESS		1901846-041		NAS-9-497	B	II	NOTE 11C	FOR DIMENSIONS SEE DASH 144 VALUES BELOW												
183	AC	INSTALLING TOOL, ELEC. CONN		1902586-011		NAS-9-497	B	II	NOTE 11C	FOR DIMENSIONS SEE DASH 102 VALUES BELOW												
182	AC	ADPT MODULE, P.S.A.		6900088-011		NAS-9-497	B	II	NOTE 11C	FOR DIMENSIONS SEE DASH 141 VALUES BELOW												
181	AC	G & N INDICATOR CONTROL PANEL ASSY		2014578-011		NAS-9-497	A	I	NOTE 11B	3.000	1.938	2.437	NA	.125	.062	.188	.156	NA	NA	1.750	1.125	.906
180	AC	ADPT MODULE, P.S.A.		1902431-031		NAS-9-497	B	II		FOR DIMENSIONS SEE DASH 121 VALUES BELOW												
179	AC	MOUNTING PLATE, IMU/PTA		6900083-011		NAS-9-497	B	II		FOR DIMENSIONS SEE DASH 144 VALUES BELOW												
178	AC	MOUNTING PLATE, COMPONENT		6900007-021		NAS-9-497	B	II		FOR DIMENSIONS SEE DASH 144 VALUES BELOW												
177	AC	FIX., MOUNTING, SUBSYSTEM		2900070-021		NAS-9-497	B	II		FOR DIMENSIONS SEE DASH 144 VALUES BELOW												
176	AC	FIX., MOUNTING, G & N		2900067-021		NAS-9-497	B	II		FOR DIMENSIONS SEE DASH 144 VALUES BELOW												
175	AC	CSL, COOL. AND PWR. G & N		1902134-031		NAS-9-497	B	II		FOR DIMENSIONS SEE DASH 144 VALUES BELOW												
174	AC	FIX., HAND., C/M AND LEM CDU		2900999-011		NAS-9-497	B	II	NOTE 11C	FOR DIMENSIONS SEE DASH 141 VALUES BELOW												
173	AC	FIX., HANDLING, C/M PSA		2900998-011		NAS-9-497	B	II	NOTE 11C	FOR DIMENSIONS SEE DASH 141 VALUES BELOW												
172	AC	CAGING ELECTRONICS, GYRO		2900029-021		NAS-9-497	B	II	NOTE 11C	FOR DIMENSIONS SEE DASH 141 VALUES BELOW												
171	AC	DISTRIBUTION BOX, GSE		2900024-021		NAS-9-497	B	II	NOTE 11C	FOR DIMENSIONS SEE DASH 141 VALUES BELOW												
170	AC	ANALYZER, OPTICS-INERTIAL		2900023-021		NAS-9-497	B	II	NOTE 11C	FOR DIMENSIONS SEE DASH 144 VALUES BELOW												
169	AC	ADPT, TESTPOINT, P.S.A.		2900037-021		NAS-9-497	B	II	NOTE 11C	FOR DIMENSIONS SEE DASH 141 VALUES BELOW												
168	AC	TEST SELECTOR		2900028-021		NAS-9-497	B	II	NOTE 11C	FOR DIMENSIONS SEE DASH 141 VALUES BELOW												
167	AC	TEST CONTROL		2900027-021		NAS-9-497	B	II	NOTE 11C	FOR DIMENSIONS SEE DASH 141 VALUES BELOW												
166	AC	PANEL, MONITOR		2900031-021		NAS-9-497	B	II	NOTE 11C	FOR DIMENSIONS SEE DASH 141 VALUES BELOW												
165	AC	TERM. BOARD STORAGE DRAWER		2900927-011		NAS-9-497	B	II	NOTE 11C	FOR DIMENSIONS SEE DASH 141 VALUES BELOW												
164	AC	INPUT/OUTPUT PANEL		2900926-011		NAS-9-497	B	II	NOTE 11C	FOR DIMENSIONS SEE DASH 141 VALUES BELOW												
163	AC	CONTROL PANEL		2900896-011		NAS-9-497	B	II	NOTE 11C	FOR DIMENSIONS SEE DASH 141 VALUES BELOW												
162	AC	CSL, CAL AND TEST, SCM/PSAAM		2900895-011		NAS-9-497	B	II	NOTE 11C	FOR DIMENSIONS SEE DASH 144 VALUES BELOW												
161	AC	FIX., LIFT AND HAND., IMU		1015462-011		NAS-9-497	B	II	NOTE 11C	FOR DIMENSIONS SEE DASH 141 VALUES BELOW												
160	AC	FIX., HAND., G & N HARNESS		1901846-031		NAS-9-497	B	II	NOTE 11C	FOR DIMENSIONS SEE DASH 144 VALUES BELOW												
159	AC	BATTERY POWER PACK		1900011-031		NAS-9-497	B	II	NOTE 11C	FOR DIMENSIONS SEE DASH 144 VALUES BELOW												
158	AC	COUPLING DATA UNIT ASSEMBLY C/M		2007222		NAS-9-497	A	I	NOTE 11B	FOR DIMENSIONS SEE DASH 100 VALUES BELOW												
157	AC	COUPLING DATA UNIT ASSEMBLY - LEM		2007222		NAS-9-497	A	I	NOTE 11B	FOR DIMENSIONS SEE DASH 100 VALUES BELOW												
156	AC	POWER & SERVO ASSEMBLY C/M		2007200		NAS-9-497	A	I	NOTE 11B	2.125	.968	1.718	NA	.093	.031	.06	.093	NA	NA	.858	.608	.484
155	AC	PIPA ELECTRONICS ASSEMBLY		2007201		NAS-9-497	A	I	NOTE 11B	FOR DIMENSIONS SEE DASH 100 VALUES BELOW												
154	AC	PULSE TORQUE ASSEMBLY-LEM		6007000		NAS-9-497	A	I	NOTE 11B	FOR DIMENSIONS SEE DASH 100 VALUES BELOW												
153	AC	POWER & SERVO ASSEMBLY-LEM		6007200		NAS-9-497	A	I	NOTE 11B	FOR DIMENSIONS SEE DASH 100 VALUES BELOW												
152	AC	CONT PNL, RSVR CKT TESTER		2900770-011		NAS-9-497	B	II	NOTE 11C	FOR DIMENSIONS SEE DASH 141 VALUES BELOW												
151	AC	TESTER, RESOLVER CIRCUIT		2900708-011		NAS-9-497	B	II	NOTE 11C	FOR DIMENSIONS SEE DASH 141 VALUES BELOW												
150	AC	JUNCTION BOX, P.S.A./G.S.E.		1901933-021		NAS-9-497	B	II	NOTE 11C	FOR DIMENSIONS SEE DASH 144 VALUES BELOW												
149	AC	BATTERY PACK, LIFTING		2900812-011		NAS-9-497	B	II	NOTE 11C	FOR DIMENSIONS SEE DASH 141 VALUES BELOW												
148	AC	MOUNTING PLATE, COMPONENT		6900007-011		NAS-9-497	B	II	NOTE 11C	FOR DIMENSIONS SEE DASH 144 VALUES BELOW												
147	AC	MOUNTING PLATE, COMPONENT		2900677-011		NAS-9-497	B	II	NOTE 11C	FOR DIMENSIONS SEE DASH 144 VALUES BELOW												
146	AC	CART, TRANS, G & N		1900009-041		NAS-9-497	B	II	NOTE 11C	FOR DIMENSIONS SEE DASH 144 VALUES BELOW												
145	AC	CONTAINER, SHIPPING, IMU		1900010-021		NAS-9-497	B	II	NOTE 11C	FOR DIMENSIONS SEE DASH 144 VALUES BELOW												
144	AC	FIX., MOUNTING, G & N		1902204-021			B	II	NOTE 11C	4.125	1.812	3.250	NA	.125	.062	.12	.156		.125	1.625	1.140	.390
143	AC	CSL, COOL, AND PWR, G & N		1902134-021			B	II	NOTE 11C	4.125	1.812	3.250	NA	.125	.062	.12	.156		.125	1.625	1.140	.390
142	AC	ANALYZER, OPTICS-INERTIAL		2900023-011			B	II	NOTE 11C	4.125	1.812	3.250	NA	.125	.062	.12	.156		.125	1.625	1.140	.390
141	AC	CONT, TEMP, PORTABLE		2900060-011			B	II	NOTE 11C	2.125	.968	1.718	NA	.093	.031	.06	.093		.093	.858	.608	.484
140	AC	TESTER, CKT, IMU/CDU RSVR		2900286-011			B	II	NOTE 11C	4.125	1.812	3.250	NA	.125	.062	.12	.156		.125	1.625	1.140	.390
139	AC	SIMULATOR, LD/SIG, CDU		2900285-011			B	II	NOTE 11C	4.125	1.812	3.250	NA	.125	.062	.12	.156		.125	1.625	1.140	.390
138	AC	SIMULATOR, LD/SIG, OPTICS		1902023-021			B	II	NOTE 11C	4.125	1.812	3.250	NA	.125	.062	.12	.156		.125	1.625	1.140	.390
137	AC	FIX., MOUNTING, IMU/NAV BASE		6900003-011			B	II	NOTE 11C	4.125	1.812	3.250	NA	.125	.062	.12	.156		.125	1.625	1.140	.390
136	AC	FIXTURE, OPTICS/NAV BASE		2900072-011			B	II	NOTE 11C	4.125	1.812	3.250	NA	.125	.062	.12	.156		.125	1.625	1.140	.390
135	AC	FIX., MOUNTING, SUB SYSTEM		2900070-011			B	II	NOTE 11C	4.125	1.812	3.250	NA	.125	.062	.12	.156		.125	1.625	1.140	.390
134	AC	FIX., HAND., G & N HARNESS		2900069-011			B	II	NOTE 11C	4.125	1.812	3.250	NA	.125	.062	.12	.156		.125	1.625	1.140	.390
133	AC	CNTR, SHIPPING, NAV BASE		2900068-011			B	II	NOTE 11C	4.125	1.812	3.250	NA	.125	.062	.12	.156		.125	1.625	1.140	.390
132	AC	FIX., MOUNTING, G & N		2900067-011			B	II	NOTE 11C	4.125	1.812	3.250	NA	.125	.062	.12	.156		.125	1.625	1.140	.390
131	AC	SIMULATOR, LD/SIG, IMU/CDU		2900062-011			B	II	NOTE 11C	4.125	1.812	3.250	NA	.125	.062	.12	.156		.125	1.625	1.140	.390
130	AC	TESTER, GYRO WHEEL		2900061-011			B	II	NOTE 11C	4.125	1.812	3.250	NA	.125	.062	.12	.156		.125	1.625	1.140	.390
129	AC	COOLANT SUPPLY		1902133-021			B	II	NOTE 11C	4.125	1.812	3.250	NA	.125	.062	.12	.156		.125	1.625	1.140	.390
128	AC	TABLE, ROTARY		1900926-021			B	II	NOTE 11C	4.125	1.812	3.250	NA	.125	.062	.12	.156		.125	1.625	1.140	.390
127	AC	FIX., HAND., OPTICS		2900074-011			B	II	NOTE 11C	2.125	.968	1.718	NA	.093	.031	.06	.093		.093	.858	.608	.484
126	AC	FIXTURE, MTG, PTA/PEA.		2900066-011			B	II	NOTE 11C	2.125	.968	1.718	NA	.093	.031	.06	.093		.093	.858	.608	.484
125	AC	CONT, TEMP, IMU LIFTING		2900063-011			B	II	NOTE 11C	2.125	.968	1.718	NA	.093	.031	.06	.093		.093	.858	.608	.484
124	AC	FIXTURE, HANDLING, IMU		2900064-011			B	II	NOTE 11C	2.125	.968	1.718	NA	.093	.031	.06	.093		.093	.858	.608	.484
123	AC	CONT, OPTICS, REMOTE		1902046-021			B	II	NOTE 11C	2.125	.968	1.718	NA	.093	.031	.06	.093		.093	.858	.608	.484
122	AC	TEST CONTROL		1902009-021			B	II	NOTE 11C	2.125	.968	1.718	NA	.093	.031	.06	.093		.093	.858	.608	.484
121	AC	ADPT MODULE, P.S.A.		1902431-021			B	II	NOTE 11C	2.125	.968	1.718	NA	.093	.031	.06	.093		.093	.858	.608	.484
120	AC	BRIDGE, DECADE ERROR		2900128-011			B	II	NOTE 11C	2.125	.968	1.718	NA	.093	.031	.06	.093		.093	.858	.608	.484
119	AC	PWR SUP, ELECTRONICS		2900012-011			B	II	NOTE 11C	2.125	.968	1.718	NA	.093	.031	.06	.093		.093	.858	.608	.484
118	AC	PWR SUP, RELAY AND LAMP		1900049-031			B	II	NOTE 11C	2.125	.968	1.718	NA	.093	.031	.06	.093		.093	.858	.608	.484
117	AC	CONSOLE, OSCILLOGRAPH		1900000-021			B	II	NOTE 11C	2.125	.968	1.718	NA	.093	.031	.06	.093		.093	.858	.608	.484
116	AC	ADPT MODULE, P.S.A.		1902431-011			B	II	NOTE 11C	2.125	.968	1.718	NA	.093	.031	.06	.093		.093	.858	.608	.484
115	AC	ADPT, TEST POINT, PTA/PEA.		2900145-011			B	II	NOTE 11C	2.125	.968	1.718	NA	.093	.031	.06	.093		.093	.858	.608	.484
114	AC	ADPT, TEST POINT, P.S.A.		2900037-011			B	II	NOTE 11C	2.125	.968	1.718	NA	.093	.031	.06	.093		.093	.858	.608	.484
113	AC	CONTROL, GIMBAL POSITION		2900036-011			B	II	NOTE 11C	2.125	.968	1.718	NA	.093	.031	.06	.093		.093	.858	.608	.484
112	AC	SELECTOR, SIGNAL, PRIMARY		2900035-011			B	II	NOTE 11C	2.125	.968	1.718	NA	.093	.031	.06	.093		.093	.858	.608	.484
111	AC	SEL, SIG, OSCILLOGRAPH		2900034-011			B	II	NOTE 11C	2.125	.968	1.718	NA	.093	.031	.06	.093		.093	.858	.608	.484
110	AC	PANEL, PWR SUP AND LOAD		2900033-011			B	II	NOTE 11C	2.125	.968	1.718	NA	.093	.031	.06	.093		.093	.858	.608	.484
109	AC	PANEL, MONITOR		2900031-011			B	II	NOTE 11C	2.125	.968	1.718	NA	.093	.031	.06	.093		.093	.858	.608	.484
108	AC	PANEL, AUXILIARY INPUT		2900030-011			B	II	NOTE 11C	2.125	.968	1.718	NA	.093	.031	.06	.093		.093	.858	.608	.484
107	AC	CAGING ELECTRONICS, GYRO		2900029-011			B	II	NOTE 11C	2.125	.968	1.718	NA	.093	.031	.06	.093		.093	.858	.608	.484
106	AC	TEST SELECTOR		2900028-011			B	II	NOTE 11C	2.125	.968	1.718	NA	.093	.031	.06	.093		.093	.858	.608	.484
105	AC	TEST CONTROL		2900027-011			B	II	NOTE 11C	2.125	.968	1.718	NA	.093	.031	.06	.093		.093	.858	.608	.484
104	AC	MONITOR AND CONTROL, TEMP		2900026-011			B	II	NOTE 11C	2.125	.968	1.718	NA	.093	.031	.06	.093		.093	.858	.608	.484
103	AC	DISTRIBUTION BOX, GSE		2900024-011			B	II	NOTE 11C	2.125	.968	1.718	NA	.093	.031	.06	.093		.093	.858	.608	.484
102	AC	VOLTMETER, DIGITAL		2900007-011			B	II	NOTE 11C	2.125	.968	1.718	NA	.093	.031	.06	.093		.093	.858	.608	.484
101	AC	NAVIGATION BASE ASSEMBLY-LEM		6699950		NAS-9-497	A	I	NOTE 11B	2.000	1.312	1.906	1.375	.078	.048	.078	.093	NA	NA	1.125	.750	.563
100	AC	NAVIGATION BASE ASSEMBLY		2899982		NAS-9-497	A	I	NOTE 11B	2.000	1.312	1.906	1.375	.078	.048	.078	.093	NA	NA	1.125	.750	.563

NOTES FOR TABLE

STYLE A IS FOR G & N SYSTEM
STYLE B IS FOR GROUND SUPPORT EQUIPMENT
TYPE I IS WITHOUT MOUNTING HOLES
TYPE II IS WITH MOUNTING HOLES

REVISIONS					
SYM	ZONE	DESCRIPTION	CHG NO	DATE	APPD
CL		REPLACES REV CK WITHOUT CHANGE PER TDRR 34365		9/28/67	W. RWH
CM		REVISION STATUS CHANGED		18 OCT 67	R.A.H.
CN		REVISION STATUS CHANGE		31 OCT 67	J.R.K.
CP		REVISION STATUS CHANGE		6 NOV 67	ENS
CR		REVISION STATUS CHANGED		7 NOV 67	DKD RWH
CS		REVISION STATUS CHANGED		3 JAN 68	J.W. EHW
CT		REVISION STATUS CHANGED		7 FEB 68	LK
CU		REVISION STATUS CHANGED		22 FEB 68	JRK
CV		REVISION STATUS CHANGED		27 FEB 68	LK
CW		REVISION STATUS CHANGED		3 APR 68	
CY		REVISION STATUS CHANGED		16 APR 68	A N.
CZ		REVISION STATUS CHANGED		28 MAY 68	
DA		REVISION STATUS CHANGED		17 JUN 68	
DB		REVISION STATUS CHANGED		13 SEP 68	
DC		REVISION STATUS CHANGED		16 DEC 68	LK
DD		REVISION STATUS CHANGED		30 DEC 68	
DE		REVISION STATUS CHANGED		23 JAN 69	
DF		REVISION STATUS CHANGED		27 JAN 69	LK
DG		REVISION STATUS CHANGED		26 SEP 69	
DH		REVISION STATUS CHANGED		29 SEP 69	CP
DJ		REVISION STATUS CHANGED		11 SEP 70	JJJ

	F	G	H	J	K	L	M	N	P	R	S	T	U	V	W	Y	Z	AA	AB	AC	AD	AE	AF	AG	AH	AJ	AK	AL	AM	AN	AP	AR
100		UES BELOW																														
100		UES BELOW																														
100		UES BELOW																														
[illegible]		UES BELOW																														
[illegible]		UES BELOW																														
141		UES BELOW																														
141		UES BELOW																														
144		UES BELOW																														
[illegible]		UES BELOW																														
141		UES BELOW																														
141		UES BELOW																														
141		UES BELOW																														
141		UES BELOW																														
100		UES BELOW																														
100		UES BELOW																														
144		UES BELOW																														
[illegible]		UES BELOW																														
141		UES BELOW																														
125	.2	..188	.156	NA	NA	1.750	1.125	.906	.688	1.500	NA	.281	.125	NA	1.094	2.062	.312	NA	2.500	.062	.125	1.312	.469	NA	NA	NA	.156	NA	.125	.469	.344	NA
121		UES BELOW																														
144		UES BELOW																														
144		UES BELOW																														
144		UES BELOW																														
144		UES BELOW																														
[illegible]		UES BELOW																														
141		UES BELOW																														
[illegible]		UES BELOW																														
[illegible]		UES BELOW																														
141		UES BELOW																														
144		UES BELOW																														
141		UES BELOW																														
[illegible]		UES BELOW																														
[illegible]		UES BELOW																														
141		UES BELOW																														
141		UES BELOW																														
141		UES BELOW																														
[illegible]		UES BELOW																														
[illegible]		UES BELOW																														
141		UES BELOW																														
144		UES BELOW																														
144		UES BELOW																														
[illegible]		UES BELOW																														
100		UES BELOW																														
[illegible]	.01	..06	.093	NA	NA	.858	.608	.484	.358	.733	.062	.140	.062	NA	.968	1.450	.125	NA	1.720	.046	.03	NA	.210	NA	NA	NA	.070	NA	.046	.32	.16	NA
100		UES BELOW																														
100		UES BELOW																														
[illegible]		UES BELOW																														
141		UES BELOW																														
141		UES BELOW																														
144		UES BELOW																														
141		UES BELOW																														
144		UES BELOW																														
[illegible]		UES BELOW																														
[illegible]		UES BELOW																														
[illegible]		UES BELOW																														
125	.02	..12	.156	[illegible]	.125	1.625	1.140	.890	.640	1.390	.125	.171	.125	1.875	1.687	2.625	.250	1.562	3.843	.093	NA	NA	.359	.125	.437	3.688	NA	3.687	.093	.40	.25	3.875
125	.02	..12	.156		.125	1.625	1.140	.890	.640	1.390	.125	.171	.125	1.875	1.687	2.625	.250	1.562	3.843	.093	NA	NA	.359	.125	.437	3.688	NA	3.687	.093	.40	.25	3.875
125	.02	..12	.156		.125	1.625	1.140	.890	.640	1.390	.125	.171	.125	1.875	1.687	2.625	.250	1.562	3.843	.093	NA	NA	.359	.125	.437	3.688	NA	3.687	.093	.40	.25	3.875
093	.01	..06	.093		.093	.858	.608	.484	.358	.733	.077	.116	.062	.937	.875	1.343	.125	.781	1.892	.046	NA	NA	.209	.093	.250	1.875	NA	1.840	.046	.23	.16	1.938
125	.02	..12	.156		.125	1.625	1.140	.890	.640	1.390	.125	.171	.125	1.875	1.687	2.625	.250	1.562	3.843	.093	NA	NA	.359	.125	.437	3.688	NA	3.687	.093	.40	.25	3.875
125	.02	..12	.156		.125	1.625	1.140	.890	.640	1.390	.125	.171	.125	1.875	1.687	2.625	.250	1.562	3.843	.093	NA	NA	.359	.125	.437	3.688	NA	3.687	.093	.40	.25	3.875
125	.02	..12	.156		.125	1.625	1.140	.890	.640	1.390	.125	.171	.125	1.875	1.687	2.625	.250	1.562	3.843	.093	NA	NA	.359	.125	.437	3.688	NA	3.687	.093	.40	.25	3.875
125	.02	..12	.156		.125	1.625	1.140	.890	.640	1.390	.125	.171	.125	1.875	1.687	2.625	.250	1.562	3.843	.093	NA	NA	.359	.125	.437	3.688	NA	3.687	.093	.40	.25	3.875
125	.02	..12	.156		.125	1.625	1.140	.890	.640	1.390	.125	.171	.125	1.875	1.687	2.625	.250	1.562	3.843	.093	NA	NA	.359	.125	.437	3.688	NA	3.687	.093	.40	.25	3.875
125	.02	..12	.156		.125	1.625	1.140	.890	.640	1.390	.125	.171	.125	1.875	1.687	2.625	.250	1.562	3.843	.093	NA	NA	.359	.125	.437	3.688	NA	3.687	.093	.40	.25	3.875
125	.02	.12	.156		.125	1.625	1.140	.890	.640	1.390	.125	.171	.125	1.875	1.687	2.625	.250	1.562	3.843	.093	NA	NA	.359	.125	.437	3.688	NA	3.687	.093	.40	.25	3.875
125	.02	.12	.156		.125	1.625	1.140	.890	.640	1.390	.125	.171	.125	1.875	1.687	2.625	.250	1.562	3.843	.093	NA	NA	.359	.125	.437	3.688	NA	3.687	.093	.40	.25	3.875
125	.02	.12	.156		.125	1.625	1.140	.890	.640	1.390	.125	.171	.125	1.875	1.687	2.625	.250	1.562	3.843	.093	NA	NA	.359	.125	.437	3.688	NA	3.687	.093	.40	.25	3.875
125	.02	.12	.156		.125	1.625	1.140	.890	.640	1.390	.125	.171	.125	1.875	1.687	2.625	.250	1.562	3.843	.093	NA	NA	.359	.125	.437	3.688	NA	3.687	.093	.40	.25	3.875
125	.02	.12	.156		.125	1.625	1.140	.890	.640	1.390	.125	.171	.125	1.875	1.687	2.625	.250	1.562	3.843	.093	NA	NA	.359	.125	.437	3.688	NA	3.687	.093	.40	.25	3.875
125	.02	.12	.156		.125	1.625	1.140	.890	.640	1.390	.125	.171	.125	1.875	1.687	2.625	.250	1.562	3.843	.093	NA	NA	.359	.125	.437	3.688	NA	3.687	.093	.40	.25	3.875
125	.02	.12	.156		.125	1.625	1.140	.890	.640	1.390	.125	.171	.125	1.875	1.687	2.625	.250	1.562	3.843	.093	NA	NA	.359	.125	.437	3.688	NA	3.687	.093	.40	.25	3.875
093	.01	.06	.093		.093	.858	.608	.484	.358	.733	.077	.116	.062	.937	.875	1.343	.125	.781	1.892	.046	NA	NA	.209	.093	.250	1.875	NA	1.840	.046	.23	.16	1.938
093	.01	.06	.093		.093	.858	.608	.484	.358	.733	.077	.116	.062	.937	.875	1.343	.125	.781	1.892	.046	NA	NA	.209	.093	.250	1.875	NA	1.840	.046	.23	.16	1.938
093	.01	.06	.093		.093	.858	.608	.484	.358	.733	.077	.116	.062	.937	.875	1.343	.125	.781	1.892	.046	NA	NA	.209	.093	.250	1.875	NA	1.840	.046	.23	.16	1.938
093	.01	.06	.093		.093	.858	.608	.484	.358	.733	.077	.116	.062	.937	.875	1.343	.125	.781	1.892	.046	NA	NA	.209	.093	.250	1.875	NA	1.840	.046	.23	.16	1.938
093	.01	.06	.093		.093	.858	.608	.484	.358	.733	.077	.116	.062	.937	.875	1.343	.125	.781	1.892	.046	NA	NA	.209	.093	.250	1.875	NA	1.840	.046	.23	.16	1.938
093	.01	.06	.093		.093	.858	.608	.484	.358	.733	.077	.116	.062	.937	.875	1.343	.125	.781	1.892	.046	NA	NA	.209	.093	.250	1.875	NA	1.840	.046	.23	.16	1.938
093	.01	.06	.093		.093	.858	.608	.484	.358	.733	.077	.116	.062	.937	.875	1.343	.125	.781	1.892	.046	NA	NA	.209	.093	.250	1.875	NA	1.840	.046	.23	.16	1.938
093	.01	.06	.093		.093	.858	.608	.484	.358	.733	.077	.116	.062	.937	.875	1.343	.125	.781	1.892	.046	NA	NA	.209	.093	.250	1.875	NA	1.840	.046	.23	.16	1.938
093	.01	.06	.093		.093	.858	.608	.484	.358	.733	.077	.116	.062	.937	.875	1.343	.125	.781	1.892	.046	NA	NA	.209	.093	.250	1.875	NA	1.840	.046	.23	.16	1.938
093	.01	.06	.093		.093	.858	.608	.484	.358	.733	.077	.116	.062	.937	.875	1.343	.125	.781	1.892	.046	NA	NA	.209	.093	.250	1.875	NA	1.840	.046	.23	.16	1.938
093	.01	.06	.093		.093	.858	.608	.484	.358	.733	.077	.116	.062	.937	.875	1.343	.125	.781	1.892	.046	NA	NA	.209	.093	.250	1.875	NA	1.840	.046	.23	.16	1.938
093	.01	.06	.093		.093	.858	.608	.484	.358	.733	.077	.116	.062	.937	.875	1.343	.125	.781	1.892	.046	NA	NA	.209	.093	.250	1.875	NA	1.840	.046	.23	.16	1.938
093	.01	.06	.093		.093	.858	.608	.484	.358	.733	.077	.116	.062	.937	.875	1.343	.125	.781	1.892	.046	NA	NA	.209	.093	.250	1.875	NA	1.840	.046	.23	.16	1.938
093	.01	.06	.093		.093	.858	.608	.484	.358	.733	.077	.116	.062	.937	.875	1.343	.125	.781	1.892	.046	NA	NA	.209	.093	.250	1.875	NA	1.840	.046	.23	.16	1.938
093	.01	.06	.093		.093	.858	.608	.484	.358	.733	.077	.116	.062	.937	.875	1.343	.125	.781	1.892	.046	NA	NA	.209	.093	.250	1.875	NA	1.840	.046	.23	.16	1.938
093	.01	.06	.093		.093	.858	.608	.484	.358	.733	.077	.116	.062	.937	.875	1.343	.125	.781	1.892	.046	NA	NA	.209	.093	.250	1.875	NA	1.840	.046	.23	.16	1.938
093	.01	.06	.093		.093	.858	.608	.484	.358	.733	.077	.116	.062	.937	.875	1.343	.125	.781	1.892	.046	NA	NA	.209	.093	.250	1.875	NA	1.840	.046	.23	.16	1.938
093	.01	.06	.093		.093	.858	.608	.484	.358	.733	.077	.116	.062	.937	.875	1.343	.125	.781	1.892	.046	NA	NA	.209	.093	.250	1.875	NA	1.840	.046	.23	.16	1.938
093	.01	.06	.093		.093	.858	.608	.484	.358	.733	.077	.116	.062	.937	.875	1.343	.125	.781	1.892	.046	NA	NA	.209	.093	.250	1.875	NA	1.840	.046	.23	.16	1.938
093	.01	.06	.093		.093	.858	.608	.484	.358	.733	.077	.116	.062	.937	.875	1.343	.125	.781	1.892	.046	NA	NA	.209	.093	.250	1.875	NA	1.840	.046	.23	.16	1.938
093	.01	.06	.093		.093	.858	.608	.484	.358	.733	.077	.116	.062	.937	.875	1.343	.125	.781	1.892	.046	NA	NA	.209	.093	.250	1.875	NA	1.840	.046	.23	.16	1.938
093	.01	.06	.093		.093	.858	.608	.484	.358	.733	.077	.116	.062	.937	.875	1.343	.125	.781	1.892	.046	NA	NA	.209	.093	.250	1.875	NA	1.840	.046	.23	.16	1.938
093	.01	.06	.093		.093	.858	.608	.484	.358	.733	.077	.116	.062	.937	.875	1.343	.125	.781	1.892	.046	NA	NA	.209	.093	.250	1.875	NA	1.840	.046	.23	.16	1.938
093	.01	.06	.093		.093	.858	.608	.484	.358	.733	.077	.116	.062	.937	.875	1.343	.125	.781	1.892	.046	NA	NA	.209	.093	.250	1.875	NA	1.840	.046	.23	.16	1.938
093	.01	.06	.093		.093	.858	.608	.484	.358	.733	.077	.116	.062	.937	.875	1.343	.125	.781	1.892	.046	NA	NA	.209	.093	.250	1.875	NA	1.840	.046	.23	.16	1.938
093	.01	.06	.093		.093	.858	.608	.484	.358	.733	.077	.116	.062	.937	.875	1.343	.125	.781	1.892	.046	NA	NA	.209	.093	.250	1.875	NA	1.840	.046	.23	.16	1.938
093	.01	.06	.093	.100 .104	.093	.858	.608	.484	.358	.733	.077	.116	.062	.937	.875	1.343	.125	.781	1.892	.046	NA	NA	.209	.093	.250	1.875	NA	1.840	.046	.23	.16	1.938
078	.018	.078	.093	NA	NA	1.125	.750	.593	.453	1.015	.062	.187	.078	.875	.718	1.375	.218	NA	NA	.048	.031	.875	.305	.078	.531	1.906	.078	NA	.078	.531	.187	NA
078	.018	.078	.093	NA	NA	1.125	.750	.593	.453	1.015	.062	.187	.078	.875	.718	1.375	.218	NA	NA	.048	.031	.875	.305	.078	.531	1.906	.078	NA	.078	.531	.187	NA

AC ELECTRONICS DASH NUMBERS

		UNLESS OTHERWISE SPECIFIED DIMENSIONS ARE IN INCHES TOLERANCES ON 2 PLACE DECIMALS ± 3 PLACE DECIMALS ±.005 ANGLES ±	MIT INSTRUMENTATION LAB CAMBRIDGE MASS DRAWN R. A. JONES DATE 16 JUL 65 CHECKED APPROVAL W. KUPFER 22 JUL 65 CONTRACT	MANNED SPACECRAFT CENTER HOUSTON, TEXAS	NAMEPLATES, APOLLO GEN - GSE (STANDARDS)
AS APPLICABLE		DO NOT SCALE THIS DRAWING MATERIAL SEE NOTE 11	T. MICHAELS 22 JUL 65 NASA APPROVAL W. KUPFER 22 JUL 65 MIT APPROVAL	SIZE J2	CODE IDENT NO. 80230
NEXT ASSY	USED ON	APPROVAL		SCALE NONE	1004260 SHEET 4 OF 6
APPLICATION					

1004260 DJ

1004260 - SHT 4

NOTICE — WHEN GOVERNMENT DRAWINGS, SPECIFICATIONS, OR OTHER DATA ARE USED FOR ANY PURPOSE OTHER THAN IN CONNECTION WITH A DEFINITELY RELATED GOVERNMENT PROCUREMENT OPERATION, THE UNITED STATES GOVERNMENT THEREBY INCURS NO RESPONSIBILITY NOR ANY OBLIGATION WHATSOEVER; AND THE FACT THAT THE GOVERNMENT MAY HAVE FORMULATED, FURNISHED, OR IN ANY WAY SUPPLIED THE SAID DRAWINGS, SPECIFICATIONS, OR OTHER DATA IS NOT TO BE REGARDED BY IMPLICATION OR OTHERWISE AS IN ANY MANNER LICENSING THE HOLDER OR ANY OTHER PERSON OR CORPORATION, OR CONVEYING ANY RIGHTS OR PERMISSION TO MANUFACTURE, USE, OR SELL ANY PATENTED INVENTION THAT MAY IN ANY WAY BE RELATED THERETO.

DASH NO.	P/C	PART NAME	REMARKS	PART NUMBER	SER. NO.	CONT. NO.	STYLE	TYPE	MATERIAL	A	B	C	D	E	F	G	H	J	K	L	M	N
401	MIT	COMPUTER ASSY		2003100		NAS-9-497	A	I	NOTE 11B	2,000	1,312	1,906	1,375	,078	,048	,078	,093	NA	NA	1,125	,750	,593
400	MIT	LIFTING SLING-G&N INST.QUAL.FIX. & AZM.REF.FIX.		1021640		NAS-9-4065	B	II	NOTE 11C	2,000	1,312	1,697	1,375	,078	,048	,078	,093	[illegible]	,093	1,187	,750	,593

NOTES FOR TABLE
STYLE A IS FOR G & N SYSTEM
STYLE B IS FOR GROUND SUPPORT EQUIPMENT
TYPE I IS WITHOUT MOUNTING HOLES
TYPE II IS WITH MOUNTING HOLES

1004260	D	SHT 5

MIL 1050J2 D

REVISIONS					
SYM	ZONE	DESCRIPTION	CHG NO	DATE	APPD
CL		REPLACES REV CK WITHOUT CHANGE PER TURR 34365		28/67	JWL RWH
CM		REVISION STATUS CHANGED		8 OCT 67	R.A.W.
CN		REVISION STATUS CHANGED		31 OCT 67	JRK
CP		REVISION STATUS CHANGED		6 NOV 67	EMS
CR		REVISION STATUS CHANGED		7 DEC 67	RWH
CS		REVISION STATUS CHANGED		3 JAN 68	EHA
CT		REVISION STATUS CHANGED		7 FEB 68	LK
CU		REVISION STATUS CHANGED		22 FEB 68	JRK
CV		REVISION STATUS CHANGED		27 FEB 68	LK
CW		REVISION STATUS CHANGED		3 APR 68	
CY		REVISION STATUS CHANGED		16 APR 68	AN
CZ		REVISION STATUS CHANGED		23 MAY 68	MY
DA		REVISION STATUS CHANGED		JUN 68	MY
DB		REVISION STATUS CHANGED		12 SEP 68	
DC		REVISION STATUS CHANGED		16 DEC 68	LK
DD		REVISION STATUS CHANGED		30 DEC 68	MY
DE		REVISION STATUS CHANGED		23 JAN 69	
DF		REVISION STATUS CHANGED		27 JAN 69	LK
DG		REVISION STATUS CHANGED		26 SEP 69	
DH		REVISION STATUS CHANGED		29 SEP 69	MY
DJ		REVISION STATUS CHANGED		SEP 70	

.078	[illegible]	.078	.093	NA	NA	1.125	.750	.593	.453	1.015	.062	.187	.078	.875	.718	1.375	.218	NA	NA	.048	.031	.875	.305	.078	.531	1.906	.078	NA	.078	.531	.187	NA
.078	[illegible]	.078	.093	[illegible]	.093	1.187	.750	.593	.453	1.015	.062	.187	.078	.875	.718	1.375	.218	1.156	1.843	.048	NA	.875	.305	.078	.312	1.687	.110	1.830	.070	.275	.180	1.844
E	F	G	H	J	K	L	M	N	P	R	S	T	U	V	W	Y	Z	AA	AB	AC	AD	AE	AF	AG	AH	AJ	AK	AL	AM	AN	AP	AR

MIT DASH NUMBERS

AS APPLICABLE NEXT ASSY / USED ON APPLICATION	UNLESS OTHERWISE SPECIFIED DIMENSIONS ARE IN INCHES TOLERANCES ON 2 PLACE DECIMALS ± / 3 PLACE DECIMALS ± .005 / ANGLES ± DO NOT SCALE THIS DRAWING	M I T INSTRUMENTATION LAB CAMBRIDGE MASS DWG NO / CONTRACT DRAWN R.A. JONES DATE 16 JUL 65 CHECKED APPROVAL W. KUPFER 22 JUL 65 CONTRACT	MANNED SPACECRAFT CENTER HOUSTON, TEXAS NAMEPLATES, APOLLO GEN - GSE (STANDARDS)
	MATERIAL SEE NOTE II APPROVAL	T. MICHAELS 22 JUL 65 NASA APPROVAL W. KUPFER 22 JUL 65 MIT APPROVAL	SIZE J2 CODE IDENT NO. 80230 1004260 SCALE NONE SHEET 5 OF 6

1004260 DJ

1004 260 -- SHT 5

2/1004260

NOTICE — WHEN GOVERNMENT DRAWINGS, SPECIFICATIONS, OR OTHER DATA ARE USED FOR ANY PURPOSE OTHER THAN IN CONNECTION WITH A DEFINITELY RELATED GOVERNMENT PROCUREMENT OPERATION, THE UNITED STATES GOVERNMENT THEREBY INCURS NO RESPONSIBILITY NOR ANY OBLIGATION WHATSOEVER; AND THE FACT THAT THE GOVERNMENT MAY HAVE FORMULATED, FURNISHED, OR IN ANY WAY SUPPLIED THE SAID DRAWINGS, SPECIFICATIONS, OR OTHER DATA IS NOT TO BE REGARDED BY IMPLICATION OR OTHERWISE AS IN ANY MANNER LICENSING THE HOLDER OR ANY OTHER PERSON OR CORPORATION, OR CONVEYING ANY RIGHTS OR PERMISSION TO MANUFACTURE, USE, OR SELL ANY PATENTED INVENTION THAT MAY IN ANY WAY BE RELATED THERETO.

DASH NO.	P/C	PART NAME	REMARKS	PART NUMBER	SER. NO.	CONT. NO.	STYLE	TYPE	MATERIAL	A	B	C	D	E	F	G	H	J	K	L	M
599	AC																				
598	AC																				
592	AC	CSL, COOL & PWR, G&N		1902134-041			B	II	NOTE 11C	FOR DIMENSIONS SEE DASH 586 VALUES											
591	AC	COOLANT SUPPLY		1902133-031			B	II	NOTE 11C	FOR DIMENSIONS SEE DASH 586 VALUES											
590		PSA ADAPTER MODULE (BLK II)		2901143-031		NAS9-497	B	II	NOTE 11C	FOR DIMENSIONS SEE DASH [illegible] VALUES											
589	AC	G&N INDICATOR CONTROL PANEL ASSY		2021290-061		FOR OTHER DATA SEE DASH 181															
588	AC	G&N INDICATOR CONTROL PANEL ASSY		2021290-051		FOR OTHER DATA SEE DASH 181															
587		AUXILIARY BATTERY PACK		1901492-051		FOR OTHER DATA SEE DASH 586															
586	AC	BATTERY POWER PACK		1900011-061		NAS-9-497	B	II	NOTE 11C	4.125	1.812	3.250	NA	.125	.062	.12	.156	[illegible]	.125	1.625	1.140
585		ANALYZER, OPTICS INERTIAL		2900023-051		FOR OTHER DATA SEE DASH 536															
584		ETHYLENE GLYCOL CLEANING KIT		2901630-011		NAS-9-497	B	I	NOTE 11B	4.000	2.625	3.380	NA	.260	.093	.156	.160	NA	NA	2.250	1.440
583		SWITCH CROSS BAR ASSY		1900048-021		FOR OTHER DATA SEE DASH 102															
582	AC	G&N INDICATOR CONTROL PANEL ASSY		2021290-041		FOR OTHER DATA SEE DASH 181															
581	AC	G&N INDICATOR CONTROL PANEL ASSY		2021323-021		FOR OTHER DATA SEE DASH 181															
580		AUXILIARY BATTERY PACK		1901492-041		FOR OTHER DATA SEE DASH 565															
579	AC	COMPUTER CONT & RETICLE DIMMER		6014512-081		FOR OTHER DATA SEE DASH 534															
578	AC	G&N INDICATOR CONTROL PANEL ASSY		2021290-031		FOR OTHER DATA SEE DASH 181															
577		BREAKOUT BOX, CABLE ADAPTER		2901011-021		FOR OTHER DATA SEE DASH 506															
576		FIX., MOUNTING G&N		2900067-061		FOR OTHER DATA SEE DASH 500															
575		CSL, CAL AND TEST, SCM/PSAAM		2900895-041		FOR DATA SEE DASH 559															
574		CONT., TEMP. PORTABLE		2900060-031		NAS-9-497	B	II	NOTE 11C	FOR DIMENSIONS SEE DASH 535 VALUES											
573		BATTERY PACK LIFTING		2900812-031		NAS-9-497	B	II	NOTE 11C	FOR DIMENSIONS SEE DASH 542 VALUES											
572		FIX., MOUNTING G&N	(-144)	2900067-051		NAS-9-497	B	II	NOTE 11C	FOR DIMENSIONS SEE DASH 500 VALUES											
571		EYEPIECE STORAGE UNIT		2021382		FOR OTHER DATA SEE DASH 100															
570	AC	OPTICAL UNIT & BELLOWS ASSY				NAS-9-497	A	I	NOTE 11B	FOR DIMENSIONS SEE DASH 550 VALUES											
569	AC	G & N INDICATOR CONTROL PANEL ASSY		2021323-011		NAS-9-497	A	I	NOTE 11B	FOR DIMENSIONS SEE DASH 181											
568	AC	G & N INDICATOR CONTROL PANEL ASSY		2021290-021		NAS-9-497	A	I	NOTE 11B	FOR DIMENSIONS SEE DASH 181											
567	AC	G & N INDICATOR CONTROL PANEL ASSY		2021290011		NAS-9-497	A	I	NOTE 11B	FOR DIMENSIONS SEE DASH 181											
566	AC	COMPUTER CONT & RETICLE DIMMER		6014512-061		NAS-9-497	A	I	NOTE 11B	FOR DIMENSIONS SEE DASH 534											
565		AUXILIARY BATTERY PACK		1901492-031		NAS-9-497	B	II	NOTE 11C	FOR DIMENSIONS SEE DASH 500											
564		BATTERY POWER PACK		1900011-051		NAS-9-497	B	II	NOTE 11C	FOR DIMENSIONS SEE DASH 500											
563		PSA ADAPTER MODULE (LEM)		6900088-031		NAS-9-497	B	II	NOTE 11C	FOR DIMENSIONS SEE DASH 141 VALUES											
562	AC	COMPUTER CONT & RETICLE DIMMER		6014512-041		NAS-9-497	A	I	NOTE 11B	FOR DIMENSIONS SEE DASH 534 VALUES											
561	AC	G & N INDICATOR CONTROL PANEL ASSY		2014578-031		NAS-9-497	A	I	NOTE 11B	FOR DIMENSIONS SEE DASH 181 VALUES											
560		ADPT. MODULE, PSA		2901143-021		NAS-9-497	B	II	NOTE 11C	FOR DIMENSIONS SEE DASH 141 VALUES											
559		CSL. CAL AND TEST, SCM/PSAAM		2900895-031		FOR OTHER DATA SEE DASH 547															
558		PSA ADAPTER MODULE (LEM)		6900088-021		FOR OTHER DATA SEE DASH 189															
557		FIX., HANDLING, C/M PSA		2900998-021		NAS-9-497	B	II	NOTE 11C	FOR DIMENSIONS SEE DASH 141 VALUES											
556		FIX., MOUNTING G & N	(-144)	2900067-041		NAS-9-497	B	II	NOTE 11C	FOR DIMENSIONS SEE DASH 500 VALUES											
555	AC	OPTICAL UNIT ASSEMBLY		1021368-061		NAS-9-497	A	I	NOTE 11B	2.000	1.312	1.687	1.375	.078	.048	.078	.093	NA	NA	1.125	.750
554	AC	OPTICAL UNIT ASSEMBLY		1021368-041		NAS-9-497	A	I	NOTE 11B	2.000	1.312	1.687	1.375	.078	.048	.078	.093	NA	NA	1.125	.750
553	AC	OPTICAL UNIT AND BELLOWS ASSEMBLY		2010790-111		NAS-9-497	A	I	NOTE 11B	2.000	1.312	1.687	1.375	.078	.048	.078	.093	NA	NA	1.125	.750
552	AC	OPTICAL UNIT AND BELLOWS ASSEMBLY		2010790-081		NAS-9-497	A	I	NOTE 11B	2.000	1.312	1.687	1.375	.078	.048	.078	.093	NA	NA	1.125	.750
551	AC	OPTICAL UNIT AND BELLOWS ASSEMBLY		2010790-071		NAS-9-497	A	I	NOTE 11B	2.000	1.312	1.687	1.375	.078	.048	.078	.093	NA	NA	1.125	.750
550	AC	OPTICAL UNIT AND BELLOWS ASSEMBLY		2010790-061		NAS-9-497	A	I	NOTE 11B	2.000	1.312	1.687	1.375	.078	.048	.078	.093	NA	NA	1.125	.750
548		CAGING ELECTRONICS, GYRO		2900029-031		NAS-9-497	B	II	NOTE 11C	2.125	.968	1.718	NA	.093	.031	.06	.093	[illegible]	.093	.858	.608
547		CSL, CAL AND TEST, SCM/PSAAM		2900895-021		NAS-9-497	B	II	NOTE 11C	4.125	1.812	3.250	NA	.125	.062	.12	.156		.125	1.625	1.140
546		FIX., HAND., C/M AND LEM CDU		2900999-021		NAS-9-497	B	II	NOTE 11C	2.125	.968	1.718	NA	.093	.031	.06	.093	[illegible]	.093	.858	.608
545	AC	G & N INDICATOR CONTROL PANEL ASSY		2014578-021		NAS-9-497	A	I	NOTE 11B	3.000	1.938	2.437	NA	.125	.062	.188	.156	NA	NA	1.750	1.125
544		ADPT MODULE, P.S.A.		1902431-051		NAS-9-497	B	II	NOTE 11C	2.125	.968	1.718	NA	.093	.031	.06	.093	[illegible]	.093	.858	.608
543	AC	PANEL, MONITOR		2900031-041		NAS-9-497	B	II	NOTE 11C	2.125	.968	1.718	NA	.093	.031	.06	.093		.093	.858	.608
542	AC	BATTERY PACK, LIFTING		2900812-021		NAS-9-497	B	II	NOTE 11C	2.125	.968	1.718	NA	.093	.031	.06	.093		.093	.858	.608
541	AC	FIXTURE, MOUNTING, IMU		2900000-021		NAS-9-497	B	II	NOTE 11C	4.125	1.812	3.250	NA	.125	.062	.12	.156		.125	1.625	1.140
540	AC	ADPT, TEST POINT, P.S.A.		2900037-031		NAS-9-497	B	II	NOTE 11C	2.125	.968	1.718	NA	.093	.031	.06	.093	.188 .104	.093	.858	.608
539	AC	ANNUNCIATOR PANEL & EYEPIECE STORAGE ASSEMBLY		1021255-041		NAS-9-497	A	I	NOTE 11B	2.000	1.312	1.906	1.375	.078	.048	.078	.093	NA	NA	1.125	.750
538	AC	ANNUNCIATOR PANEL & EYEPIECE STORAGE ASSEMBLY		1021255-031		NAS-9-497	A	I	NOTE 11B	2.000	1.312	1.906	1.375	.078	.048	.078	.093	NA	NA	1.125	.750
537	AC	TEST SELECTOR		2900028-031		NAS-9-497	B	II	NOTE 11C	2.125	.968	1.718	NA	.093	.031	.06	.093	.188 .104	.093	.858	.608
536	AC	ANALYZER, OPTICS-INERTIAL		2900023-041		NAS-9-497	B	II	NOTE 11C	4.125	1.812	3.250	NA	.125	.062	.12	.156		.125	1.625	1.140
535	AC	CONT, TEMP, PORTABLE		2900060-021		NAS-9-497	B	II	NOTE 11C	2.125	.968	1.718	NA	.093	.031	.06	.093	[illegible]	.093	.858	.608
534	AC	COMPUTER CONT & RETICLE DIMMER		6014512-021		NAS-9-497	A	I	NOTE 11B	2.000	1.312	1.906	1.375	.078	.048	.078	.093	NA	NA	1.125	.750
533	AC	ADPT MODULE, P.S.A.		1902431-041		NAS-9-497	B	II	NOTE 11C	2.125	.968	1.718	NA	.093	.031	.06	.093	.188 .104	.093	.858	.608
532	AC	TRAY BREAKOUT, 105 PIN		1900807-021		NAS-9-497	B	II	NOTE 11C	4.125	1.812	3.250	NA	.125	.062	.12	.156		.125	1.625	1.140
531	AC	TRAY BREAKOUT, 84 PIN		1900806-021		NAS-9-497	B	II	NOTE 11C	4.125	1.812	3.250	NA	.125	.062	.12	.156		.125	1.625	1.140
530	AC	HEAT SINK-TRAY EXTENDER		1900808-021		NAS-9-497	B	II	NOTE 11C	2.125	.968	1.718	NA	.093	.031	.06	.093		.093	.858	.608
529	AC	TESTER, FAILURE INDICATOR		1900809-021		NAS-9-497	B	II	NOTE 11C	2.125	.968	1.718	NA	.093	.031	.06	.093	.188 .104	.093	.858	.608
527	AC	FIX., MOUNTING, G & N	(-144)	1902204-021		NAS-9-497	B	II	NOTE 11C	FOR DIMENSIONS SEE DASH 500 VALUES BELOW											
526	AC	FIX., MOUNTING, G & N	(-144)	2900067-031		NAS-9-497	B	II	NOTE 11C	FOR DIMENSIONS SEE DASH 500 VALUES BELOW											
525	AC	PORTABLE TEMP. CONTROLLER		1900496-021		NAS-9-497	B	II	NOTE 11C	3.000	1.937	2.437	2.312	.125	.031	.125	.156	.125	.125	1.718	1.187
524	AC	POWER, SERVO & THERMOCOUPLE ASSEMBLY C/M		2010743		NAS-9-497	A	I	NOTE 11B	2.125	.968	1.718	NA	.093	.031	.06	.093	NA	NA	.858	.608
523	AC	PULSE TORQUE AND THERMOCOUPLE ASSEMBLY-LEM		6010656		NAS-9-497	A	I	NOTE 11B	FOR DIMENSIONS SEE DASH 508 VALUES BELOW											
522	AC	COUPLING DATA UNIT & THERMOCOUPLE ASSEMBLY-LEM		2010744		NAS-9-497	A	I	NOTE 11B	FOR DIMENSIONS SEE DASH 508 VALUES BELOW											
521	AC	COUPLING DATA UNIT & THERMOCOUPLE ASSEMBLY-C/M		2010744		NAS-9-497	A	I	NOTE 11B	FOR DIMENSIONS SEE DASH 508 VALUES BELOW											
520	AC	PIPA ELECTRONICS AND THERMOCOUPLE ASSEMBLY		2010745		NAS-9-497	A	I	NOTE 11B	FOR DIMENSIONS SEE DASH 508 VALUES BELOW											
519	AC	FIXTURE, HANDLING, LEM-PSA	(-141)	6900129-011		NAS-9-497	B	II	NOTE 11C	FOR DIMENSIONS SEE DASH 504 VALUES BELOW											
518	AC	JUNCTION BOX, GSE-PSA	(-144)	1901933-031		NAS-9-497	B	II	NOTE 11C	FOR DIMENSIONS SEE DASH 500 VALUES BELOW											
517	AC	FIX., HAND., OPTICS INSTL.	(-141)	2901380-011		NAS-9-497	B	II	NOTE 11C	FOR DIMENSIONS SEE DASH 502 VALUES BELOW											
516	AC	POWER, SERVO AND THERMOCOUPLE ASSEMBLY-LEM		6010655		NAS-9-497	A	I	NOTE 11B	FOR DIMENSIONS SEE DASH 508 VALUES BELOW											
514	AC	SIGNAL COND. ASSY LEM OPER.	(-100)	6007013		NAS-9-497	A	I	NOTE 11B	FOR DIMENSIONS SEE DASH 508 VALUES BELOW											
513	AC	JUMPER, BY-PASS	(-141)	1021616		NAS-9-497	B	II	NOTE 11C	2.125	.968	1.718	NA	.093	.031	.06	.093	.188 .104	.093	.858	.608
512	AC	COUPLING DATA UNIT ASSEMBLY C/M	(-100)	2007322-011		NAS-9-497	A	I	NOTE 11B	FOR DIMENSIONS SEE DASH 508 VALUES BELOW											
511	AC	COUPLING DATA UNIT ASSEMBLY-LEM	(-100)	2007322-021		NAS-9-497	A	I	NOTE 11B	FOR DIMENSIONS SEE DASH 508 VALUES BELOW											
510	AC	BATTERY POWER PACK	(-144)	1900011-041		NAS-9-497	B	II	NOTE 11C	FOR DIMENSIONS SEE DASH 500 VALUES BELOW											
509	AC	JUNCTION BOX, P.S.A./G.S.E.	(-144)	1902195-021		NAS-9-497	B	II	NOTE 11C	FOR DIMENSIONS SEE DASH 500 VALUES BELOW											
508	AC	NAVIGATION BASE ASSEMBLY-LEM	(-101)	6899980		NAS-9-497	A	I	NOTE 11B	2.000	1.312	1.906	1.375	.078	.048	.078	.093	NA	NA	1.125	.750
507	AC	CSL, COOL, AND PWR, G AND N	(-144)	1902134-041		NAS-9-497	B	II	NOTE 11C	FOR DIMENSIONS SEE DASH 500 VALUES BELOW											
506	AC	BREAKOUT BOX, CABLE ADAPTER	(-141)	2901011-011		NAS-9-497	B	II	NOTE 11C	2.125	.968	1.718	NA	.093	.031	.06	.093	.188 .104	.093	.858	.608
505	AC	MONITOR AND CONTROL, TEMP	(-141)	2900026-021		NAS-9-497	B	II	NOTE 11C	2.125	.968	1.718	NA	.093	.031	.06	.093		.093	.858	.608
504	AC	PWR SUP, GUIDANCE SYSTEM	(-141)	1900033-021		NAS-9-497	B	II	NOTE 11C	2.125	.968	1.718	NA	.093	.031	.06	.093		.093	.858	.608
503	AC	CONTROL, GIMBAL POSITION	(-141)	2900036-021		NAS-9-497	B	II	NOTE 11C	2.125	.968	1.718	NA	.093	.031	.06	.093		.093	.858	.608
502	AC	ADPT, TEST POINT, PTA/PEA.	(-141)	2900145-021		NAS-9-497	B	II	NOTE 11C	2.125	.968	1.718	NA	.093	.031	.06	.093	.188 .104	.093	.858	.608
501	AC	MOUNTING PLATE, COMPONENT	(-144)	6900007-031		NAS-9-497	B	II	NOTE 11C	FOR DIMENSIONS SEE DASH 500 VALUES BELOW											
500	AC	MOUNTING PLATE, COMPONENT	(-144)	2900677-021		NAS-9-497	B	II	NOTE 11C	4.125	1.812	3.250	NA	.125	.062	.12	.156	.188 .104	.125	1.625	1.140

NOTES FOR TABLE
STYLE A IS FOR G & N SYSTEM
STYLE B IS FOR GROUND SUPPORT EQUIPMENT
TYPE I IS WITHOUT MOUNTING HOLES
TYPE II IS WITH MOUNTING HOLES

1004260	DJ	SHT 6

REVISIONS					
SYM	ZONE	DESCRIPTION	CHG NO	DATE	APPD
CL		REPLACES REV CK WITH CHANGE PER TDRR 34365		9/28/67	JWL RWH
CM		REVISED PER TDRR 34395		17 OCT. 67	R.A.W.
CN		REVISED PER TDRR 34467		31 OCT 67	URK
CP		REVISED PER TDRR 34855		6 NOV 67	EMS
CR		REVISED PER TDRR 35164		7 DEC 67	DKD RWH
CS		REVISED PER TDRR 35307		3 JAN 68	EHW
CT		REVISION STATUS CHANGED		7 FEB 68	LK
CU		REVISED PER TDRR 35628		22 FEB 68	URK
CV		REVISED PER TDRR 35675		27 FEB 68	LK
CW		REVISED PER TDRR 35970		5 APR 68	
CY		REVISION STATUS CHANGED		16 APR 68	J.N
CZ		REVISED PER TDRR 36243		23 MAY 68	
DA		REVISED PER TDRR 36324		17 JUN 68	
DB		REVISED PER TDRR 36742		12 SEP 68	
DC		REVISED PER TDRR 37114		16 DEC 68	LK
DD		REVISED PER TDRR 37146		30 DEC 68	
DE		REVISED PER TDRR 37251		23 JAN 69	
DF		REVISED PER TDRR 37262		27 JAN 69	LK
DG		REVISED PER TDRR 37811		26 SEP 69	DKD
DH		REVISED PER TDRR 37820		29 SEP 69	
DJ		REVISED PER TDRR 38205		SEP 70	

E	F	G	H	J	K	L	M	N	P	R	S	T	U	V	W	Y	Z	AA	AB	AC	AD	AE	AF	AG	AH	AJ	AK	AL	AM	AN	AP	AR	AS	AT
	VALUES																																	
	VALUES																																	
	[illegible]																																	
	[illegible]	.2	.56	[illegible]	.25	.625	1.140	.890	.640	1.390	NA	NA	.125	1.875	1.650	2.625	.250	1.562	3.843	.093	NA	NA	.408	.25	.437	3.688	NA	3.687	.093	.625	.31	3.875	.062	NA
	[illegible]	[illegible]	[illegible]	[illegible]	NA	2.290	[illegible]	[illegible]	.940	[illegible]	NA	.375	.125	NA	1.790	2.760	.312	NA	3.590	.093	.062	NA	.525	NA	NA	NA	.225	NA	.093	.480	.430	NA	NA	3.670
	VALUES																																	
	VALUES																																	
	VALUES																																	
	VALUES																																	
	VALUES																																	
	VALUES																																	
	VALUES																																	
	VALUES																																	
	VALUES																																	
	VALUES																																	
	0448	.078	.093	NA	NA	1.125	.750	.593	.453	1.015	.062	.187	.078	.875	.718	1.375	.218	NA	NA	.048	.031	.875	.305	NA	.468	1.531	NA	NA	.078	.312	.187	NA		
	0448	.078	.093	NA	NA	1.125	.750	.593	.453	1.015	.062	.187	.078	.875	.718	1.375	.218	NA	NA	.048	.031	.875	.305	NA	.468	1.531	NA	NA	.078	.312	.187	NA		
	0448	.078	.093	NA	NA	1.125	.750	.593	.453	1.015	.062	.187	.078	.875	.718	1.375	.218	NA	NA	.048	.031	.875	.305	NA	.468	1.531	NA	NA	.078	.312	.187	NA		
	0448	.078	.093	NA	NA	1.125	.750	.593	.453	1.015	.062	.187	.078	.875	.718	1.375	.218	NA	NA	.048	.031	.875	.305	NA	.468	1.531	NA	NA	.078	.312	.187	NA		
	0446	.078	.093	NA	NA	1.125	.750	.593	.453	1.015	.062	.187	.078	.875	.718	1.375	.218	NA	NA	.048	.031	.875	.305	NA	.468	1.531	NA	NA	.078	.312	.187	NA		
	0448	.078	.093	NA	NA	1.125	.750	.593	.453	1.015	.062	.187	.078	.875	.718	1.375	.218	NA	NA	.048	.031	.875	.305	NA	.468	1.531	NA	NA	.078	.312	.187	NA		
	0331	.06	.093	100 104	.093	.858	.608	.484	.358	.733	.077	.116	.062	.937	.875	1.343	.125	.781	1.892	.046	NA	NA	.209	.093	.250	1.875	NA	1.840	.046	.23	.16	1.938		
125	0662	.12	.156		.125	1.625	1.140	.890	.640	1.390	.125	.171	.125	1.875	1.687	2.625	.250	1.562	3.843	.093	NA	NA	.359	.125	.437	3.688	NA	3.687	.093	.40	.25	3.875		
	0131	.06	.093	100 104	.093	.858	.608	.484	.358	.733	.077	.116	.062	.937	.875	1.343	.125	.781	1.892	.046	NA	NA	.209	.093	.250	1.875	NA	1.840	.046	.23	.16	1.938		
.125	0662	.188	.156	NA	NA	1.750	1.125	.906	.688	1.500	NA	.281	.125	NA	1.094	2.062	.312	NA	2.500	.062	.125	1.312	.469	NA	NA	NA	.156	NA	.125	.469	.344	NA		
93	0331	.06	.093	100 104	.093	.858	.608	.484	.358	.733	.077	.116	.062	.937	.875	1.343	.125	.781	1.892	.046	NA	NA	.209	.093	.250	1.875	NA	1.840	.046	.23	.16	1.938		
3	0331	.06	.093		.093	.858	.608	.484	.358	.733	.077	.116	.062	.937	.875	1.343	.125	.781	1.892	.046	NA	NA	.209	.093	.250	1.875	NA	1.840	.046	.23	.25	1.938		
093	0331	.06	.093		.093	.858	.608	.484	.358	.733	.077	.116	.062	.937	.875	1.343	.125	.781	1.892	.046	NA	NA	.209	.093	.250	1.875	NA	1.840	.046	.23	.16	1.938		
5	[illegible]	.12	.156		.125	1.625	1.140	.890	.640	1.390	.125	.171	.125	1.875	1.687	2.625	.250	1.562	3.843	.093	NA	NA	.359	.125	.437	3.688	NA	3.687	.093	.40	.25	3.875		
93	0331	.06	.093	100 104	.093	.858	.608	.484	.358	.733	.077	.116	.062	.937	.875	1.343	.125	.781	1.892	.046	NA	NA	.209	.093	.250	1.875	NA	1.840	.046	.23	.16	1.938		
	[illegible]	.078	.093	NA	NA	1.125	.750	.593	.453	1.015	.062	.187	.078	.875	.718	1.375	.218	NA	NA	.048	.031	.875	.305	.078	.531	1.906	.078	NA	.078	.531	.187	NA		
07	0448	.078	.093	NA	NA	1.125	.750	.593	.453	1.015	.062	.187	.078	.875	.718	1.375	.218	NA	NA	.048	.031	.875	.305	.078	.531	1.906	.078	NA	.078	.531	.187	NA		
	.0031	.06	.093	100 104	.093	.858	.608	.484	.358	.733	.077	.116	.062	.937	.875	1.343	.125	.781	1.892	.046	NA	NA	.209	.093	.250	1.875	NA	1.840	.046	.23	.16	1.938		
25	.0062	.12	.156		.125	1.625	1.140	.890	.640	1.390	.125	.171	.125	1.875	1.687	2.625	.250	1.562	3.843	.093	NA	NA	.359	.125	.437	3.688	NA	3.687	.093	.40	.25	3.875		
093	.0031	.06	.093	100 104	.093	.858	.608	.484	.358	.733	.077	.116	.062	.937	.875	1.343	.125	.781	1.892	.046	NA	NA	.209	.093	.250	1.875	NA	1.840	.046	.23	.16	1.938		
	0448	.078	.093	NA	NA	1.125	.750	.593	.453	1.015	.062	.187	.078	.875	.718	1.375	.218	NA	NA	.048	.031	.875	.305	.078	.531	1.906	.078	NA	.078	.531	.187	NA		
3	.0131	.06	.093	100 104	.093	.858	.608	.484	.358	.733	.077	.116	.062	.937	.875	1.343	.125	.781	1.892	.046	NA	NA	.209	.093	.250	1.875	NA	1.840	.046	.23	.16	1.938		
5	.0062	.12	.156		.125	1.625	1.140	.890	.640	1.390	.125	.171	.125	1.875	1.687	2.625	.250	1.562	3.843	.093	NA	NA	.359	.125	.437	3.688	NA	3.687	.093	.40	.25	3.875		
25	.0062	.12	.156		.125	1.625	1.140	.890	.640	1.390	.125	.171	.125	1.875	1.687	2.625	.250	1.562	3.843	.093	NA	NA	.359	.125	.437	3.688	NA	3.687	.093	.40	.25	3.875		
093	.0031	.06	.093		.093	.858	.608	.484	.358	.733	.077	.116	.062	.937	.875	1.343	.125	.781	1.892	.046	NA	NA	.209	.093	.250	1.875	NA	1.840	.046	.23	.16	1.938		
093	.0031	.06	.093	100 104	.093	.858	.608	.484	.358	.733	.077	.116	.062	.937	.875	1.343	.125	.781	1.892	.046	NA	NA	.209	.093	.250	1.875	NA	1.840	.046	.23	.16	1.938		
	VALUES BELOW																																	
	VALUES BELOW																																	
25	.0031	.125	.156	.125	.125	1.718	1.187	.968	.749	1.452	.093	.295	.090	1.312	1.00	2.000	.250	1.687	2.750	.062	NA	NA	.463	.125	.562	2.437	.140	2.562	.090	.468	.359	2.750		
093	.0031	.06	.093	NA	NA	.858	.608	.484	.358	.733	.062	.140	.062	NA	.968	1.450	.125	NA	1.720	.046	.03	NA	.210	NA	NA	NA	.070	NA	.046	.32	.16	NA		
	VALUES BELOW																																	
	VALUES BELOW																																	
	VALUES BELOW																																	
	VALUES BELOW																																	
	VALUES BELOW																																	
	VALUES BELOW																																	
	VALUES BELOW																																	
	VALUES BELOW																																	
	VALUES BELOW																																	
093	.031	.06	.093	100 104	.093	.858	.608	.484	.358	.733	.077	.116	.062	.937	.875	1.343	.125	.781	1.892	.046	NA	NA	.209	.093	.250	1.875	NA	1.840	.046	.23	.16	1.938		
	VALUES BELOW																																	
	VALUES BELOW																																	
	VALUES BELOW																																	
	VALUES BELOW																																	
078	.048	.078	.093	NA	NA	1.125	.750	.593	.453	1.015	.062	.187	.078	.875	.718	1.375	.218	NA	NA	.048	.031	.875	.305	.078	.531	1.906	.078	NA	.078	.531	.187	NA		
	VALUES BELOW																																	
.093	.031	.06	.093	100 104	.093	.858	.608	.484	.358	.733	.077	.116	.062	.937	.875	1.343	.125	.781	1.892	.046	NA	NA	.209	.093	.250	1.875	NA	1.840	.046	.23	.16	1.938		
093	.031	.06	.093		.093	.858	.608	.484	.358	.733	.077	.116	.062	.937	.875	1.343	.125	.781	1.892	.046	NA	NA	.209	.093	.250	1.875	NA	1.840	.046	.23	.16	1.938		
093	.031	.06	.093		.093	.858	.608	.484	.358	.733	.077	.116	.062	.937	.875	1.343	.125	.781	1.892	.046	NA	NA	.209	.093	.250	1.875	NA	1.840	.046	.23	.16	1.938		
093	.031	.06	.093		.093	.858	.608	.484	.358	.733	.077	.116	.062	.937	.875	1.343	.125	.781	1.892	.046	NA	NA	.209	.093	.250	1.875	NA	1.840	.046	.23	.16	1.938		
[illegible]	.031	.06	.093	100 104	.093	.858	.608	.484	.358	.733	.077	.116	.062	.937	.875	1.343	.125	.781	1.892	.046	NA	NA	.209	.093	.250	1.875	NA	1.840	.046	.23	.16	1.938		
	VALUES BELOW																																	
.12	.062	.12	.156	100 104	.125	1.625	1.140	.890	.640	1.390	.125	.171	.125	1.875	1.687	2.625	.250	1.562	3.843	.093	NA	NA	.359	.125	.437	3.688	NA	3.687	.093	.40	.25	3.875		

AC ELECTRONICS DASH NUMBERS

AS APPLICABLE	
NEXT ASSY	USED ON
APPLICATION	

UNLESS OTHERWISE SPECIFIED
DIMENSIONS ARE IN INCHES
TOLERANCES ON
2 PLACE DECIMALS ± 3 PLACE DECIMALS ± .005 ANGLES ± —
DO NOT SCALE THIS DRAWING
MATERIAL SEE NOTE 11
APPROVAL

MIT
INSTRUMENTATION LAB
CAMBRIDGE MASS
DWG NO CONTRACT
DRAWN R. A. JONES DATE 16 JUL 65
CHECKED
APPROVAL W. KUPFER 22 JUL 65
CONTRACT
NASA APPROVAL T. MICHAELS 22 JUL 65
MIT APPROVAL W. KUPFER 22 JUL 65

MANNED
SPACECRAFT CENTER
HOUSTON, TEXAS

NAMEPLATES,
APOLLO GEN - GSE
(STANDARDS)

SIZE J2 CODE IDENT NO. 80230 1004260
SCALE NONE SHEET 6 OF 6

1004260 DJ

1004260 D SHT 6

NOTICE — WHEN GOVERNMENT DRAWINGS, SPECIFICATIONS, OR OTHER DATA [illegible]

NOTES:

1. INTERPRET DRAWING IN ACCORDANCE WITH STANDARDS PRESCRIBED BY MIL-D-70327.
2. DIMENSIONS ON EACH VIEW APPLY TO ALL VIEWS (WITH THE EXCEPTION OF MOUNTING HOLES).
3. FORMATS ILLUSTRATED WILL BE APPLICABLE TO ALL ITEMS REQUIRING NAMEPLATES BELOW END ITEM DESIGNATION (SYSTEMS, ASSEMBLIES, ETC.)
4. PLATE BACKGROUND TO BE LUSTERLESS BLACK PER FED-STD-595, COLOR 37038. BORDER, MARKING AND LETTERING TO BE NATURAL METAL, (ANODIZED ALUMINUM).
5. MARKING METHOD TO BE DIE STAMPING, ETCHING OR ENGRAVING IN ACCORDANCE WITH MIL-P-19834.
6. LETTERING STYLE TO BE GOTHIC, (SANS SERIFS), AND NUMBERS TO BE ARABIC.
7. WHERE LOCATING DIMENSIONS ARE NOT SHOWN, CHARACTERS SHALL BE SYMMETRICALLY POSITIONED.
8. IDENTIFY WITH DRAWING NUMBER PER ND 1002019.
9. WHEN "AUTO MARK" METAL MARKING TYPEWRITER IS USED TO ADD DATA TO BLANK SPACES, TYPE SIZE IS TO BE SELECTED FROM DIMENSIONS U, AC, AND AM.
10. NASA SYMBOL IS TO BE PROPORTIONAL TO NAMEPLATE IN RATIO OF 1 TO 5 WITH DIMENSION A VALUE AND IS TO HAVE NATURAL BACKGROUND. NASA SYMBOL LETTERS LETTERING AND FEATHER TO BE BLACK, (OR WHITE FOR SILK SCREENING). WHERE BLACK FEATHER PROTRUDES INTO BLACK BACKGROUND, A MINIMUM OUTLINE OF NATURAL BACKGROUND SHALL EXIST.
11. NAMEPLATES WILL BE APPLIED BY METHODS LISTED BELOW, SHOWN IN ORDER OF PREFERENCE, (I.E., FOR RELIABILITY AND WEIGHT).
    - A - STENCIL OR SILK SCREEN DIRECTLY ON EQUIPMENT USING INK PER SCD 1010920, (WHITE OR BLACK).
    - B - ALUMINUM FOIL, (STYLE A OR B, TYPE I):
      FOIL SHALL BE .0030 ± .0005 THICK PER MIL-A-148.
      FOIL SHALL HAVE NO ADHESIVE BACKING.
      FOIL SHALL BE BONDED PER ND 1002219, (METHOD II).
      FOIL SHALL BE CLEAR ANODIZED PER MIL-A-8625, TYPE II.
    - C - PLATE, (STYLE A OR B, TYPE II):
      MATERIAL: QQ-A-250, TEMPER 0 OR H14, TYPE 1100, ALUMINUM ALLOY, .032 THICK. ANODIZE PER MIL-A-8625, TYPE II.
      ALUMINUM PLATE MUST BE FREE FROM BURRS AND SHARP CORNERS, MOUNTED WITH APPLICABLE SIZE FASTENERS.
12. NAMEPLATES SHALL BE CAPABLE OF MEETING APPLICABLE REQUIREMENTS OF MIL-M-13231.
13. ON DIMENSION TABLES SHOWN ON PAGES 2, 3, 4, 5, AND 6, NA MEANS, "NOT APPLICABLE".

SUGGESTED PROPORTIONS FOR NAMEPLATE DIMENSIONS.
1. SELECT NAMEPLATE LENGTH, DIMENSION "A", TO FIT DESIGN NEEDS.
2. DIMENSIONS B THRU AS ON LINE 1 BELOW ARE PROPORTIONAL TO "A" BY MULTIPLIERS SHOWN IN LINE 2 BELOW.

1.	A	B	C	D	E	F	G	H	J	K	L	M	N	P	R	S	T	U
2.	1.000A	.6563A	.8438A	.6875A	.0391A	.0240A	.0391A	.0469A	.0547A	.0469A	.5938A	.3750A	.2969A	.2187A	.5079A	.0313A	.0938A	.0391A

1.	V	W	Y	Z	AA	AB	AC	AD	AE	AF	AG	AH	AJ	AK	AL	AM	AN	AP	AR	AS
2.	.4375A	.3594A	.6875A	.1094A	.5781A	.9219A	.0240A	.0156A	.4375A	.1525A	.0391A	.1563A	.8438A	.0548A	.8659A	.0391A	.1563A	.0938A	.9219A	.0151A

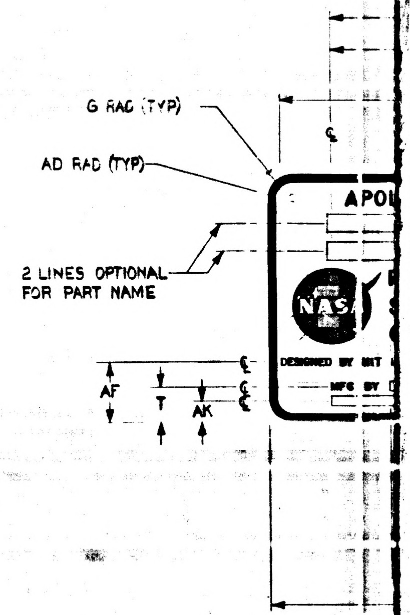

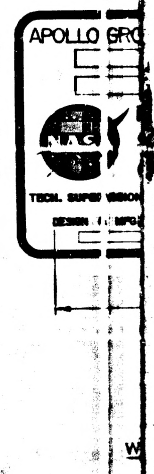

1004260 | DK | SHT 1

SYM	ZONE	DESCRIPTION	CHG NO	DATE	APPD
CL		REPLACES REV CK WITHOUT CHANGE PER TDRR 34365		9/28/67	JWL RWH
CM		REVISION STATUS CHANGED		18 OCT. 67	R.A.W.
CN		REVISION STATUS CHANGED		31 OCT 67	JRK
CP		REVISION STATUS CHANGED		6 NOV 67	EMS
CR		REVISION STATUS CHANGED		7 DEC 67	RWH
CS		REVISION STATUS CHANGED		3 JAN 68	J.W. EHW
CT		REVISION STATUS CHANGED		7 FEB 68	LK
CU		REVISION STATUS CHANGED		22 FEB 68	JRK
CV		REVISION STATUS CHANGED		27 FEB 68	LK
CW		REVISION STATUS CHANGED		[illegible] 68	
CY		REVISION STATUS CHANGED		16 APR 68	
CZ		REVISION STATUS CHANGED		23 MAY 68	
DA		REVISION STATUS CHANGED		[illegible] 68	
DB		REVISION STATUS CHANGED		[illegible]	
DC		REVISION STATUS CHANGED		16 DEC 68	LP
DD		REVISION STATUS CHANGED		30 DEC 68	
DE		REVISED PER TDRR 37251		[illegible]	
DF		REVISION STATUS CHANGED		27 [illegible] 69	
DG		REVISION STATUS CHANGED		[illegible]	
DH		REVISION STATUS CHANGED		29 SEP 69	CP
DJ		REVISION STATUS CHANGED		[illegible] 70	
DK		REVISION STATUS CHANGED		25 NOV 70	RP

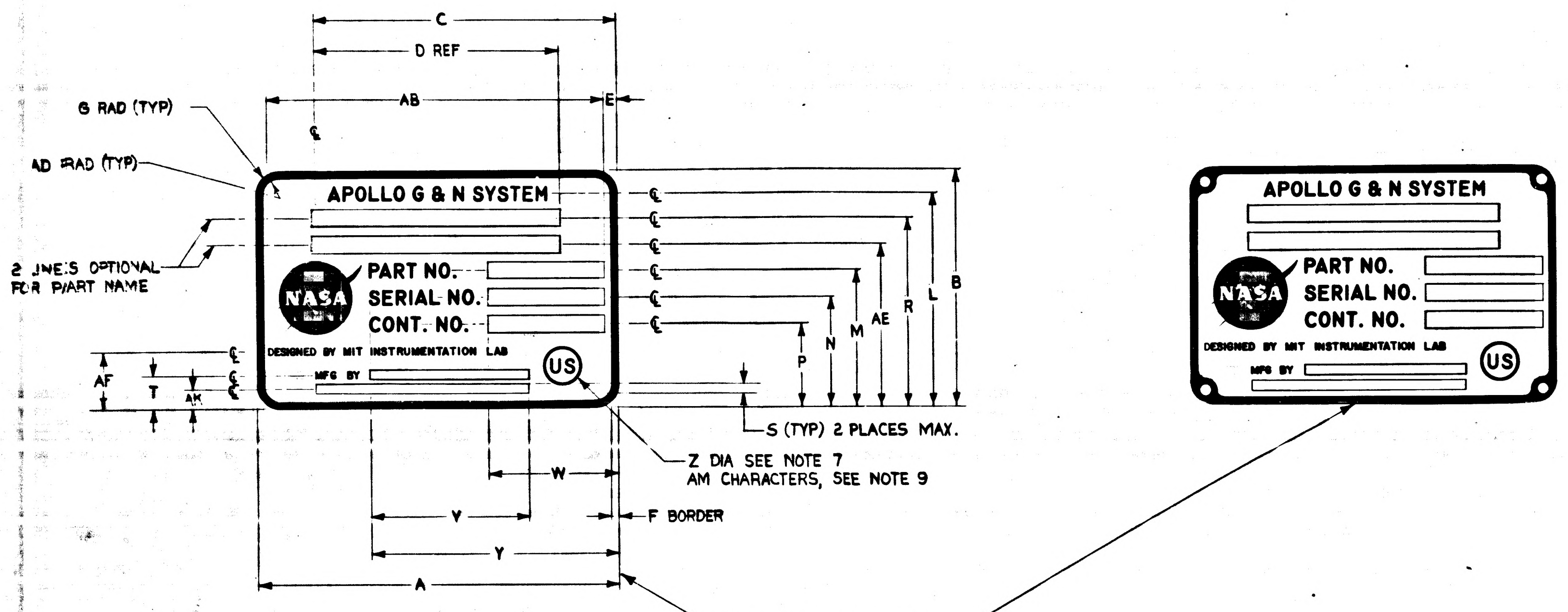

C
D REF
AB
E
G RAD (TYP)
AD RAD (TYP)
2 LINES OPTIONAL FOR PART NAME
APOLLO G & N SYSTEM
PART NO.
SERIAL NO.
CONT. NO.
NASA
DESIGNED BY MIT INSTRUMENTATION LAB
MFG BY
US
B
L
R
AE
M
N
P
AF
T
AK
S (TYP) 2 PLACES MAX.
Z DIA SEE NOTE 7
AM CHARACTERS, SEE NOTE 9
W
V
Y
F BORDER
A

FOR G AND N SYSTEM
STYLE A

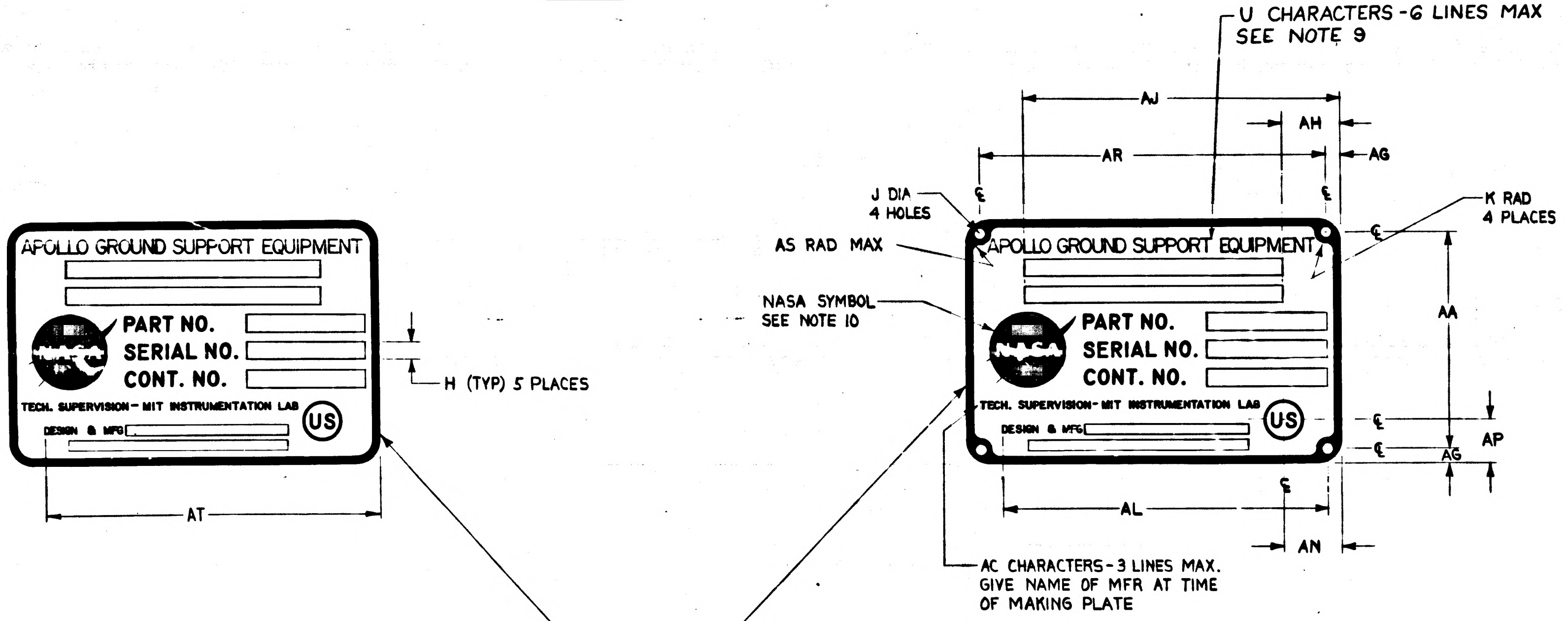

U CHARACTERS - 6 LINES MAX
SEE NOTE 9
AJ
AH
AR
AG
J DIA
4 HOLES
K RAD
4 PLACES
AS RAD MAX
NASA SYMBOL
SEE NOTE 10
APOLLO GROUND SUPPORT EQUIPMENT
PART NO.
SERIAL NO.
CONT. NO.
TECH. SUPERVISION - MIT INSTRUMENTATION LAB
DESIGN & MFG
US
H (TYP) 5 PLACES
AA
AP
AG
AT
AL
AN
AC CHARACTERS - 3 LINES MAX.
GIVE NAME OF MFR AT TIME
OF MAKING PLATE

WITHOUT MOUNTING HOLES
TYPE I

WITH MOUNTING HOLES
TYPE II

FOR GROUND SUPPORT EQUIPMENT
STYLE B

AS APPLICABLE	UNLESS OTHERWISE SPECIFIED DIMENSIONS ARE IN INCHES TOLERANCES ON 2 PLACE DECIMALS ± 3 PLACE DECIMALS ±.005 ANGLES ±	MIT INSTRUMENTATION LAB CAMBRIDGE MASS	MANNED SPACECRAFT CENTER HOUSTON, TEXAS	
NEXT ASSY / USED ON	DO NOT SCALE THIS DRAWING	DRAWN R.A. JONES DATE 16 JUL 65 CHECKED APPROVAL W. KUPFER 22 JUL 65 CONTRACT	NAMEPLATES, APOLLO G&N - GSE (STANDARDS)	
APPLICATION	MATERIAL SEE NOTE 11 APPROVAL	NASA APPROVAL T. MICHAELS 22 JUL 65 MIT APPROVAL W. KUPFER 22 JUL 65	SIZE J2 CODE IDENT NO. 80230 SCALE NONE	1004260 SHEET 1 OF 6

1004260 DK SHT 1

NOTICE – WHEN GOVERNMENT DRAWINGS, SPECIFICATIONS, OR OTHER DATA ARE USED FOR ANY PURPOSE OTHER THAN IN CONNECTION WITH A DEFINITELY RELATED GOVERNMENT PROCUREMENT OPERATION, THE UNITED STATES GOVERNMENT THEREBY INCURS NO RESPONSIBILITY NOR ANY OBLIGATION WHATSOEVER AND THE FACT THAT THE GOVERNMENT MAY HAVE FORMULATED, FURNISHED, OR IN ANY WAY SUPPLIED THE SAID DRAWINGS, SPECIFICATIONS OR OTHER DATA IS NOT TO BE REGARDED BY IMPLICATION OR OTHERWISE AS IN ANY MANNER LICENSING THE HOLDER OR ANY OTHER PERSON OR CORPORATION, OR CONVEYING ANY RIGHTS OR PERMISSION TO MANUFACTURE, USE, OR SELL ANY PATENTED INVENTION THAT MAY IN ANY WAY BE RELATED THERETO

DASH NO.	P/C	PART NAME	REMARKS	PART NUMBER	SER. NO.	CONT. NO.	STYLE	TYPE	MATERIAL	A	B	C	D	E	F	G	H	J	K	L	M
399	K																				
398	K																				
350	K	ALIGNMENT OPTICAL TELESCOPE (LEM)		NA	NA	NA	A	I	NOTE 11B	4.000	2.625	3.375	2.750	.156	.093	.156	.187	NA	NA	2.312	1.468
309	K																				
308	K																				
307	K						B	I	NOTE 11B	4.000	2.625	3.375	2.750	.156	.093	.156	.187	NA	NA	2.328	1.468
306	K						B	II	NOTE 11C	4.000	2.625	3.375	2.750	.156	.093	.156	.187	.125	.156	2.328	1.468
305	K						B	I	NOTE 11B	2.000	1.312	1.687	1.375	.078	.048	.078	.093	NA	NA	1.164	.734
304	K						B	II	NOTE 11C	2.000	1.312	1.687	1.375	.078	.048	.078	.093	.070	.078	1.164	.734
303	K																				
302	K																				
301	K																				
300	K	OPTICAL UNIT		NA	NA	NA	A	I	NOTE 11B	2.000	1.312	1.675	NA	NA	.048	.078	NA	NA	NA	1.090	.812
9	K	2 IN AUTOCOLLIMATOR		1001702			B	II	NOTE 11C	4.000	2.625	3.812	2.750	.156	.093	.156	.187	.125	.156	2.250	1.500
8	K	5 IN AUTOCOLLIMATOR		1017410			B	II	NOTE 11C	4.000	2.625	3.812	2.750	.156	.093	.156	.187	.125	.156	2.250	1.500
7	K	2-1/2 IN AUTOCOLLIMATOR (SCT)		1017435			B	II	NOTE 11C	4.000	2.625	3.812	2.750	.156	.093	.156	.187	.125	.156	2.250	1.500
6	K	2-1/2 IN AUTOCOLLIMATOR (SXT)		1017448			B	II	NOTE 11C	4.000	2.625	3.812	2.750	.156	.093	.156	.187	.125	.156	2.250	1.500
5	K	RETROREFLECTING PRISM ASSEMBLY		1019840			B	I	NOTE 11B	4.000	2.625	3.812	2.750	.156	.093	.156	.187	NA	NA	2.250	1.500
4	K	S/H SIMULATOR ASSEMBLY		1019896			B	I	NOTE 11B	4.000	2.625	3.812	2.750	.156	.093	.156	.187	NA	NA	2.250	1.500
3	K	REFERENCE MIRROR		1001767			B	I	NOTE 11B	2.000	1.312	1.906	1.375	.078	.048	.078	.093	NA	NA	1.125	.750
2	K	2 IN PLANE READING AUTOCOLLIMATOR		1017413			B	I	NOTE 11B	2.000	1.312	1.906	1.375	.078	.048	.078	.093	NA	NA	1.125	.750
1	K	2 IN AUTOCOLLIMATOR		1001702			B	I	NOTE 11B	2.000	1.312	1.906	1.375	.073	.048	.078	.093	NA	NA	1.125	.750

NOTES FOR TABLE

STYLE A IS FOR G & N SYSTEM
STYLE B IS FOR GROUND SUPPORT EQUIPMENT
TYPE I IS WITHOUT MOUNTING HOLES
TYPE II IS WITH MOUNTING HOLES

1004260	DK	SHT 2

REVISIONS					
SYM	ZONE	DESCRIPTION	CHG NO	DATE	APPD
CL		REPLACES REV CK WITHOUT CHANGE PER TDRR 34365		9/28/67	JWL RWH
CM		REVISION STATUS CHANGED		18 OCT 67	R.A.W.
CN		REVISION STATUS CHANGED		3 OCT 67	JRK
CP		REVISION STATUS CHANGED		6 NOV 67	EMS
CR		REVISION STATUS CHANGED		7 DEC 67	RWH
CS		REVISION STATUS CHANGED		3 JAN 68	J.W. EHW
CT		REVISION STATUS CHANGED		7 FEB 68	LK
CU		REVISION STATUS CHANGED		28 FEB 68	JRK
CV		REVISION STATUS CHANGED		[illegible] 68	LK
CW		REVISION STATUS CHANGED		8 APR 68	
CY		REVISION STATUS CHANGED		16 APR 68	A.N.
CZ		REVISION STATUS CHANGED		23 MAY 68	
DA		REVISION STATUS CHANGED		17 JUN 68	
DB		REVISION STATUS CHANGED		12 SEP 68	
DC		REVISION STATUS CHANGED		16 DEC 68	LK
DD		REVISION STATUS CHANGED		30 DEC 68	
DE		REVISION STATUS CHANGED		23 JAN 69	JW
DF		REVISION STATUS CHANGED		27 JAN 69	LK RWH
DG		REVISION STATUS CHANGED		26 SEP 69	DKD
DH		REVISION STATUS CHANGED		29 SEP 69	CP
DJ		REVISION STATUS CHANGED		11 SEP 70	JJJ
DK		REVISION STATUS CHANGED		25 NOV 70	RP

F	G	H	J	K	L	M	N	P	R	S	T	U	V	W	Y	Z	AA	AB	AC	AD	AE	AF	AG	AH	AJ	AK	AL	AM	AN	AP	AR
.09	.156	.187	NA	NA	2.312	1.468	1.187	.906	2.031	NA	.375	.156	NA	1.437	2.750	.437	NA	3.688	.062	.062	1.750	.593	NA	.625	3.375	.187	NA	.156	.531	.453	NA
.093	.156	.187	NA	NA	2.328	1.468	1.187	.906	2.031	.062	.375	.156	NA	1.437	2.750	.437	NA	3.687	.062	.062	1.750	.593	NA	NA	NA	NA	NA	NA	NA	NA	NA
.093	.156	.187	.125	.156	2.328	1.468	1.187	.906	2.031	.062	.375	.156	NA	1.437	2.750	.437	2.312	3.687	.062	NA	1.750	.593	NA	NA	NA	NA	NA	NA	NA	NA	NA
.048	.078	.093	NA	NA	1.164	.734	.593	.453	1.015	.048	.171	.078	NA	.718	1.375	.187	NA	NA	.048	.031	.875	.320	NA	NA	NA	NA	NA	NA	NA	NA	NA
.048	.078	.093	.070	.078	1.164	.734	.593	.453	1.015	.048	.171	.078	NA	.718	1.375	.187	.156	1.843	.048	NA	.875	.320	NA	NA	NA	NA	NA	NA	NA	NA	NA
.048	.078	NA	NA	NA	1.090	.812	.675	.540	.940	NA	.265	NA	NA	NA	1.375	.218	NA	NA	NA	NA	NA	.375	NA	NA	NA	.180	NA	.078	NA	NA	NA
.093	.156	.187	.125	.156	2.250	1.500	1.187	.906	2.031	.093	.375	.156	1.750	1.437	2.750	.437	2.312	3.687	.062	NA	1.750	.593	.156	1.062	3.812	.156	NA	.156	1.062	.375	3.687
.093	.156	.187	.125	.156	2.250	1.500	1.187	.906	2.031	.093	.375	.156	1.750	1.437	2.750	.437	2.312	3.687	.062	NA	1.750	.593	.156	1.062	3.812	.156	NA	.156	1.062	.375	3.687
.093	.156	.187	.125	.156	2.250	1.500	1.187	.906	2.031	.093	.375	.156	1.750	1.437	2.750	.437	2.312	3.687	.062	NA	1.750	.593	.156	1.062	3.812	.156	NA	.156	1.062	.375	3.687
.093	.156	.187	.125	.156	2.250	1.500	1.187	.906	2.031	.093	.375	.156	1.750	1.437	2.750	.437	2.312	3.687	.062	NA	1.750	.593	.156	1.062	3.812	.156	NA	.156	1.062	.375	3.687
.093	.156	.187	NA	NA	2.250	1.500	1.187	.906	2.031	.093	.375	.156	1.750	1.437	2.750	.437	NA	NA	.062	.062	1.750	.593	.156	1.062	3.812	.156	NA	.156	1.062	.375	NA
.093	.156	.187	NA	NA	2.250	1.500	1.187	.906	2.031	.093	.375	.156	1.750	1.437	2.750	.437	NA	NA	.062	.062	1.750	.593	.156	1.062	3.812	.156	NA	.156	1.062	.375	NA
.048	.078	.093	NA	NA	1.125	.750	.593	.453	1.015	.062	.187	.078	.875	.718	1.375	.218	NA	NA	.048	.031	.875	.305	.078	.531	1.906	.078	NA	.078	.531	.187	NA
.048	.078	.093	NA	NA	1.125	.750	.593	453	1.015	.062	.187	.078	.875	.718	1.375	.218	NA	NA	.048	.031	.875	.305	.078	.531	1.906	.078	NA	.078	.531	.187	NA
.048	.078	.093	NA	NA	1.125	.750	.593	.453	1.015	.062	.187	.078	.875	.718	1.375	.218	NA	NA	.048	.031	.875	.305	.078	.531	1.906	.078	NA	.078	.531	.187	NA

KOLLSMAN DASH NUMBERS

AS APPLICABLE
NEXT ASSY | USED ON
APPLICATION

UNLESS OTHERWISE SPECIFIED
DIMENSIONS ARE IN INCHES
TOLERANCES ON
2 PLACE DECIMALS ± 3 PLACE DECIMALS ± .005 ANGLES ± —
DO NOT SCALE THIS DRAWING
MATERIAL SEE NOTE 11
APPROVAL

M I T
INSTRUMENTATION LAB
Cambridge Mass
DRAWN R.A. JONES DATE 16 JUL 65
CHECKED
APPROVAL W. KUPFER 22 JUL 65
CONTRACT
NASA APPROVAL T. MICHAELS 22 JUL 65
MIT APPROVAL W. KUPFER 22 JUL 65

MANNED
SPACECRAFT CENTER
HOUSTON, TEXAS

NAMEPLATES,
APOLLO GEN - GSE
(STANDARDS)

SIZE J2 CODE IDENT NO. 80230 1004260
SCALE NONE SHEET 2 OF 6

1004260 DK

1004260

DASH NO.	P/C	PART NAME	REMARKS	PART NUMBER	SER. NO.	CONT. NO.	STYLE	TYPE	MATERIAL	A	B	C	D	E	F	G	H	J	K	L	M	N
299	R																					
298	R																					
293	R	COMPUTER TEST SET		2014042-081	NA	NAS-9-497	B	II	NOTE 11C	FOR DIMENSIONS SEE DASH 18 VALUES BELOW												
292	R	DRAWER ASSY PROGRAM & MONITOR		2014041-071	NA	NAS-9-497	B	I	NOTE 11B	FOR DIMENSIONS SEE DASH 17 VALUES BELOW												
291	R	BUFFER CIRCUIT ASSY		2014254-041	NA	NAS-9-497	B	I	NOTE 11B	FOR DIMENSIONS SEE DASH 15 VALUES BELOW												
290	R	LOGIC DRAWER ASSY NO. 2		2014037-051	NA	NAS-9-497	B	I	NOTE 11B	FOR DIMENSIONS SEE DASH 17 VALUES BELOW												
289	R	SELF TEST ASSY		2014392-021	NA	NAS-9-497	B	I	NOTE 11B	FOR DIMENSIONS SEE DASH 15 VALUES BELOW												
288	R	LOGIC DRAWER ASSY NO. 1		2014036-051	NA	NAS-9-497	B	I	NOTE 11B	FOR DIMENSIONS SEE DASH 17 VALUES BELOW												
287	R	COMPUTER TEST SET		2014042-071	NA	NAS-9-497	B	II	NOTE 11C	FOR DIMENSIONS SEE DASH 18 VALUES BELOW												
286	R	DRAWER ASSY-PROGRAM & MONITOR		2014041-061	NA	NAS-9-497	B	I	NOTE 11B	FOR DIMENSIONS SEE DASH 17 VALUES BELOW												
285	R	BUFFER CIRCUIT ASSY		2014254-031	NA	NAS-9-497	B	I	NOTE 11B	FOR DIMENSIONS SEE DASH 15 VALUES BELOW												
284	R	LOGIC DRAWER ASSY NO. 2		2014037-041	NA	NAS-9-497	B	I	NOTE 11B	FOR DIMENSIONS SEE DASH 17 VALUES BELOW												
283	R	DRAWER ASSY-PROGRAM & MONITOR		2014041-051	NA	NAS-9-497	B	I	NOTE 11B	FOR DIMENSIONS SEE DASH 17 VALUES BELOW												
282	R	COMPUTER TEST SET		2014042-061	NA	NAS-9-497	B	II	NOTE 11C	FOR DIMENSIONS SEE DASH 18 VALUES BELOW												
281	R	AGC HANDLING FIXTURE		2014282-031	NA	NAS-9-497	B	I	NOTE 11B	FOR DIMENSIONS SEE DASH 17 VALUES BELOW												
280	R	COMPUTER TEST SET		2014042-051	NA	NAS-9-497	B	II	NOTE 11C	FOR DIMENSIONS SEE DASH 18 VALUES BELOW												
279	R	SELF TEST ASSY		2014366-041	NA	NAS-9-497	B	I	NOTE 11B	FOR DIMENSIONS SEE DASH 15 VALUES BELOW												
278	R	LOGIC DRAWER ASSY NO. 1		2014036-041	NA	NAS-9-497	B	I	NOTE 11B	FOR DIMENSIONS SEE DASH 17 VALUES BELOW												
277	R	COMPUTER TEST SET		2014042-041	NA	NAS-9-497	B	II	NOTE 11C	FOR DIMENSIONS SEE DASH 18 VALUES BELOW												
276	R	DRAWER ASSY-PROGRAM & MONITOR		2014041-041	NA	NAS-9-497	B	I	NOTE 11B	FOR DIMENSIONS SEE DASH 17 VALUES BELOW												
275	R	DRAWER ASSY RDC INTERFACE		2014045-031	NA	NAS-9-497	B	I	NOTE 11B	FOR DIMENSIONS SEE DASH 15 VALUES BELOW												
274	R	SELF TEST ASSY		2014366-031	NA	NAS-9-497	B	I	NOTE 11B	FOR DIMENSIONS SEE DASH 15 VALUES BELOW												
273	R	LOGIC DRAWER ASSY NO. 2		2014037-031	NA	NAS-9-497	B	I	NOTE 11B	FOR DIMENSIONS SEE DASH 17 VALUES BELOW												
272	R	DRAWING ASSY PROGRAMMER & MONITOR		2014041-031	NA	NAS-9-497	B	I	NOTE 11B	FOR DIMENSIONS SEE DASH 17 VALUES BELOW												
271	R	LOGIC DRAWER ASSY NO. 1		2014036-031	NA	NAS-9-497	B	I	NOTE 11B	FOR DIMENSIONS SEE DASH 17 VALUES BELOW												
270	R	COMPUTER TEST SET		2014042-031	NA	NAS-9-497	B	II	NOTE 11C	FOR DIMENSIONS SEE DASH 18 VALUES BELOW												
269	R	POWER CONTROL ASSY		2014044-021	NA	NAS-9-497	B	I	NOTE 11B	FOR DIMENSIONS SEE DASH 17 VALUES BELOW												
268	R	SELF TEST ASSY		2014366-021	NA	NAS-9-497	B	I	NOTE 11B	FOR DIMENSIONS SEE DASH 15 VALUES BELOW												
267	R	AGC JUNCTION ASSY		2014341-021	NA	NAS-9-497	B	I	NOTE 11B	FOR DIMENSIONS SEE DASH 15 VALUES BELOW												
266	R	POWER CONTROL ASSY		2014079-021	NA	NAS-9-497	B	I	NOTE 11B	FOR DIMENSIONS SEE DASH 15 VALUES BELOW												
265	R	BUFFER CIRCUIT ASSY		2014254-021	NA	NAS-9-497	B	I	NOTE 11B	FOR DIMENSIONS SEE DASH 15 VALUES BELOW												
264	R	DRAWER ASSY X Y INTERFACE		2014040-021	NA	NAS-9-497	B	I	NOTE 11B	FOR DIMENSIONS SEE DASH 15 VALUES BELOW												
263	R	DRAWER ASSY RDC INTERFACE		2014045-021	NA	NAS-9-497	B	I	NOTE 11B	FOR DIMENSIONS SEE DASH 15 VALUES BELOW												
262	R	DRAWER ASSY PROGRAMMER & MONITOR		2014041-021	NA	NAS-9-497	B	I	NOTE 11B	FOR DIMENSIONS SEE DASH 17 VALUES BELOW												
261	R	LOGIC DRAWER ASSY NO. 2		2014037-021	NA	NAS-9-497	B	I	NOTE 11B	FOR DIMENSIONS SEE DASH 17 VALUES BELOW												
260	R	LOGIC DRAWER ASSY NO. 1		2014036-021	NA	NAS-9-497	B	I	NOTE 11B	FOR DIMENSIONS SEE DASH 17 VALUES BELOW												
259	R	OPERATION CONSOLE		2014024-021	NA	NAS-9-497	B	II	NOTE 11C	FOR DIMENSIONS SEE DASH 18 VALUES BELOW												
258	R	COMPUTER TEST SET		2014042-021	NA	NAS-9-497	B	II	NOTE 11C	FOR DIMENSIONS SEE DASH 18 VALUES BELOW												
257	R	AUXILIARY CALIBRATION CONSOLE		2014059-021	NA	NAS-9-497	B	II	NOTE 11C	FOR DIMENSIONS SEE DASH 18 VALUES BELOW												
256	R	AGC CALIBRATION CONSOLE		2014049-021	NA	NAS-9-497	B	II	NOTE 11C	FOR DIMENSIONS SEE DASH 18 VALUES BELOW												
255	R	AGC HANDLING FIXTURE		2014282-021	NA	NAS-9-497	B	I	NOTE 11B	FOR DIMENSIONS SEE DASH 17 VALUES BELOW												
254	R	DRAWER ASSY COMP. SIMULATOR		2014048-011	NA	NAS-9-497	B	II	NOTE 11C	FOR DIMENSIONS SEE DASH 18 VALUES BELOW												
253	R	SHIPPING KIT ASSY, NAV DSKY		2016312-011	NA	NAS-9-497	B	II	NOTE 11C	FOR DIMENSIONS SEE DASH 18 VALUES BELOW												
252	R	SHIPPING KIT ASSY, UNIVERSAL DSKY		2016316-011	NA	NAS-9-497	B	II	NOTE 11C	FOR DIMENSIONS SEE DASH 18 VALUES BELOW												
251	R	SHIPPING KIT ASSY, MAIN DSKY		2016313-011	NA	NAS-9-497	B	II	NOTE 11C	FOR DIMENSIONS SEE DASH 18 VALUES BELOW												
250	R	AMPLIFIER, REWORK		2014386	NA	NAS-9-497	B	I	NOTE 11B	FOR DIMENSIONS SEE DASH 15 VALUES BELOW												
249	R	TEMP MONITOR ASSY		2014313-011	NA	NAS-9-497	B	I	NOTE 11C	FOR DIMENSIONS SEE DASH 17 VALUES BELOW												
248	R	AGC JUNCTION ASSY		2014341-011	NA	NAS-9-497	B	I	NOTE 11B	FOR DIMENSIONS SEE DASH 15 VALUES BELOW												
247	R	AC INPUT PANEL ASSY		2014302-011	NA	NAS-9-497	B	I	NOTE 11B	FOR DIMENSIONS SEE DASH 15 VALUES BELOW												
246	R	SELF TEST ASSY		2014392-011	NA	NAS-9-497	B	I	NOTE 11B	FOR DIMENSIONS SEE DASH 15 VALUES BELOW												
245	R	TAPE PUNCH ASSEMBLY		2014039-011	NA	NAS-9-497	B	I	NOTE 11B	FOR DIMENSIONS SEE DASH 15 VALUES BELOW												
244	R	TAPE READER ASSEMBLY		2014038-011	NA	NAS-9-497	B	I	NOTE 11B	FOR DIMENSIONS SEE DASH 15 VALUES BELOW												
243																						
242																						
241	R	APOLLO GUIDANCE COMPUTER GROUP		6003001	NA	NAS-9-497	A	I	NOTE 11B	FOR DIMENSIONS SEE DASH 19 VALUES BELOW												
240	R	SELF TEST ASSEMBLY		2014366-011	NA	NAS-9-497	B	I	NOTE 11B	FOR DIMENSIONS SEE DASH 15 VALUES BELOW												
239	R	POWER SUPPLY ASSY-115V., 400 CYCLE		2014207-011	NA	NAS-9-497	B	I	NOTE 11B	FOR DIMENSIONS SEE DASH 17 VALUES BELOW												
238	R	AC INPUT PANEL ASSY		2014043-011	NA	NAS-9-497	B	I	NOTE 11B	FOR DIMENSIONS SEE DASH 17 VALUES BELOW												
237	R	POWER CONTROL ASSY		2014079-011	NA	NAS-9-497	B	I	NOTE 11B	FOR DIMENSIONS SEE DASH 15 VALUES BELOW												
236	R	DRAWER ASSY-X Y INTERFACE		2014040-011	NA	NAS-9-497	B	I	NOTE 11B	FOR DIMENSIONS SEE DASH 15 VALUES BELOW												
235	R	DRAWER ASSY RDC INTERFACE		2014045-011	NA	NAS-9-497	B	I	NOTE 11B	FOR DIMENSIONS SEE DASH 15 VALUES BELOW												
234	R	BUFFER CIRCUIT ASSY		2014254-011	NA	NAS-9-497	B	I	NOTE 11B	FOR DIMENSIONS SEE DASH 15 VALUES BELOW												
233	R	CONTROL & INTERFACE ASSY		2014204-011	NA	NAS-9-497	B	I	NOTE 11B	FOR DIMENSIONS SEE DASH 15 VALUES BELOW												
232	R	POWER CONTROL ASSY		2014044-011	NA	NAS-9-497	B	I	NOTE 11B	FOR DIMENSIONS SEE DASH 17 VALUES BELOW												
231	R	DRAWER ASSY, PROGRAMMER & MONITOR		2014041-011	NA	NAS-9-497	B	I	NOTE 11B	FOR DIMENSIONS SEE DASH 17 VALUES BELOW												
230	R	CONNECTOR INTERFACE ASSY		2014272-011	NA	NAS-9-497	B	I	NOTE 11B	FOR DIMENSIONS SEE DASH 15 VALUES BELOW												
229	R	CONNECTOR INTERFACE ASSY		2014047-011	NA	NAS-9-497	B	I	NOTE 11B	FOR DIMENSIONS SEE DASH 15 VALUES BELOW												
228	R	ANTENNA, TUNING CAPACITOR ASSY		2014209-011	NA	NAS-9-497	B	I	NOTE 11B	FOR DIMENSIONS SEE DASH 15 VALUES BELOW												
227	R	MOUNTING FIXTURE ASSY		2014006-011	NA	NAS-9-497	B	I	NOTE 11B	FOR DIMENSIONS SEE DASH 17 VALUES BELOW												
226	R	POWER SUPPLY ASSY 3 VDC		2014234-011	NA	NAS-9-497	B	I	NOTE 11B	FOR DIMENSIONS SEE DASH 15 VALUES BELOW												
225	R	PANEL ASSY—SIGNAL INTERFACE		2014010-011	NA	NAS-9-497	B	I	NOTE 11B	FOR DIMENSIONS SEE DASH 15 VALUES BELOW												
224	R	OSCILLOSCOPE ASSY		2014232-011	NA	NAS-9-497	B	I	NOTE 11B	FOR DIMENSIONS SEE DASH 15 VALUES BELOW												
223	R	AUXILIARY OUTLET ASSY		2014274-011	NA	NAS-9-497	B	I	NOTE 11B	FOR DIMENSIONS SEE DASH 15 VALUES BELOW												
222	R	FREQUENCY COUNTER		2014233-011	NA	NAS-9-497	B	I	NOTE 11B	FOR DIMENSIONS SEE DASH 15 VALUES BELOW												
221	R	POWER SUPPLY ASSY 10, 13, 28 VDC		2014235-011	NA	NAS-9-497	B	I	NOTE 11B	FOR DIMENSIONS SEE DASH 15 VALUES BELOW												
220	R	LOGIC DRAWER ASSY NO. 2		2014037-011	NA	NAS-9-497	B	I	NOTE 11B	FOR DIMENSIONS SEE DASH 17 VALUES BELOW												
219	R	LOGIC DRAWER ASSY NO. 1		2014036-011	NA	NAS-9-497	B	I	NOTE 11B	FOR DIMENSIONS SEE DASH 17 VALUES BELOW												
218	R	COUNTER, ELECTRICAL ASSY		2014288-011	NA	NAS-9-497	B	I	NOTE 11B	FOR DIMENSIONS SEE DASH 15 VALUES BELOW												
217	R	POWER SUPPLY ASSY		2014279-011	NA	NAS-9-497	B	I	NOTE 11B	FOR DIMENSIONS SEE DASH 15 VALUES BELOW												
216	R	TEST MOUNT ASSY		2014257-011	NA	NAS-9-497	B	I	NOTE 11B	FOR DIMENSIONS SEE DASH 15 VALUES BELOW												
215	R	UNIVERSAL DSKY PEDESTAL MOUNT		2014014-011	NA	NAS-9-497	B	I	NOTE 11B	FOR DIMENSIONS SEE DASH 17 VALUES BELOW												
214	R	MAIN DSKY PEDESTAL MOUNT		2014343	NA	NAS-9-497	B	I	NOTE 11B	FOR DIMENSIONS SEE DASH 17 VALUES BELOW												
213	R	SHIPPING CONTAINER, MAIN DSKY		1006229	NA	NAS-9-497	B	II	NOTE 11C	FOR DIMENSIONS SEE DASH 18 VALUES BELOW												
212	R	SHIPPING CONTAINER, NAV DSKY		1006231	NA	NAS-9-497	B	II	NOTE 11C	FOR DIMENSIONS SEE DASH 18 VALUES BELOW												
211	R	SHIPPING CONTAINER, AGC		1006230	NA	NAS-9-497	B	II	NOTE 11C	FOR DIMENSIONS SEE DASH 18 VALUES BELOW												
210	R	SHIPPING CONTAINER, UNIVERSAL DSKY		1006422	NA	NAS-9-497	B	II	NOTE 11C	FOR DIMENSIONS SEE DASH 18 VALUES BELOW												
209	R	SHIPPING CONTAINER, AGC		1006421	NA	NAS-9-497	B	II	NOTE 11C	FOR DIMENSIONS SEE DASH 18 VALUES BELOW												
208	R	UNIVERSAL DSKY HANDLING FIXTURE		2014013-011	NA	NAS-9 497	B	I	NOTE 11B	FOR DIMENSIONS SEE DASH 15 VALUES BELOW												
207	R	NAV DSKY HANDLING FIXTURE		1014377	NA	NAS-9-497	B	I	NOTE 11B	FOR DIMENSIONS SEE DASH 17 VALUES BELOW												
206	R	MAIN DSKY HANDLING FIXTURE		1014334	NA	NAS-9-497	B	I	NOTE 11B	FOR DIMENSIONS SEE DASH 17 VALUES BELOW												
205	R	AGC HANDLING FIXTURE		2014282-011	NA	NAS-9-497	B	I	NOTE 11B	FOR DIMENSIONS SEE DASH 17 VALUES BELOW												
204	R	OPERATION CONSOLE		2014024-011	NA	NAS-9-497	B	II	NOTE 11C	FOR DIMENSIONS SEE DASH 18 VALUES BELOW												
203	R	COMPUTER TEST SET		2014042-011	NA	NAS-9-497	B	II	NOTE 11C	FOR DIMENSIONS SEE DASH 18 VALUES BELOW												
202	R	DRAWER ASSY, COMPUTER SIMULATOR		2014048-011	NA	FNP-12775	B	II	NOTE 11C	FOR DIMENSIONS SEE DASH 18 VALUES BELOW												
201	R	AUXILIARY CALIBRATION CONSOLE		2014059-011	NA	NAS-9-497	B	II	NOTE 11C	FOR DIMENSIONS SEE DASH 18 VALUES BELOW												
200	R	AGC CALIBRATION CONSOLE		2014049-011	NA	NAS-9-497	B	II	NOTE 11C	FOR DIMENSIONS SEE DASH 18 VALUES BELOW												
21	R																					
20	R	NA		NA	NA	NA	A	II	NOTE 11C	2.000	1.312	1.687	1.375	.078	.031	.078	.093	[illegible]	.093	1.187	.750	.59
19	R	NA		NA	NA	NA	A	I	NOTE 11B	2.000	1.312	1.687	1.375	.078	.031	.078	.093	NA	NA	1.187	.750	.59
18	R	NA		NA	NA	NA	B	II	NOTE 11C	4.187	1.875	3.469	2.750	.156	.093	.156	.125	[illegible]	.125	1.625	1.032	.84
17	R	NA		NA	NA	NA	B	I	NOTE 11B	4.187	1.875	3.469	2.750	.156	.093	.156	.125	NA	NA	1.625	1.032	.84
16	R	NA		NA	NA	NA	B	II	NOTE 11C	2.000	1.312	1.687	1.375	.078	.031	.078	.093	[illegible]	.093	1.187	.750	.59
15	R	NA		NA	NA	NA	B	I	NOTE 11B	2.000	1.312	1.687	1.375	.078	.031	.078	.093	NA	NA	1.187	.750	.59

NOTES FOR TABLE

STYLE A IS FOR G & N SYSTEM
STYLE B IS FOR GROUND SUPPORT EQUIPMENT
TYPE I IS WITHOUT MOUNTING HOLES
TYPE II IS WITH MOUNTING HOLES

SYM	ZONE	REVISIONS DESCRIPTION	CHG NO	DATE	APPD
CL		REPLACES REV CK WITHOUT CHANGE PER TDRR 34365		9/28/67	JWL RWH
CM		REVISION STATUS CHANGED		18 OCT 67	RAW
CN		REVISION STATUS CHANGED		31 OCT 67	JRK
CP		REVISION STATUS CHANGED		6 NOV 67	EMS
CR		REVISION STATUS CHANGED		7 DEC 67	OKB RWH
CS		REVISION STATUS CHANGED		3 JAN 68	J.W EHW
CT		REVISED PER TDRR 35526		7 FEB 68	LK
CU		REVISION STATUS CHANGED		22 FEB 68	JRK
CV		REVISION STATUS CHANGED		27 FEB 68	LK
CW		REVISION STATUS CHANGED		3 APR 68	
CY		REVISED PER TDRR 36028		16 APR 68	+K.
CZ		REVISION STATUS CHANGED		23 MAY 68	
DA		REVISION STATUS CHANGED		17 JUN 68	
DB		REVISION STATUS CHANGED		13 SEP 68	
DC		REVISION STATUS CHANGED		16 DEC 68	LK
DD		REVISION STATUS CHANGED		30 DEC 68	
DE		REVISION STATUS CHANGED		23 JAN 69	
DF		REVISION STATUS CHANGED		27 JAN 69	LK
DG		REVISION STATUS CHANGED		26 SEP 69	DKC
DH		REVISION STATUS CHANGED		25 SEP 69	MY CP
DJ		REVISION STATUS CHANGED		11 SEP 70	JJJ
DK		REVISION STATUS CHANGED		25 NOV 70	

E	F	G	H	J	K	L	M	N	P	R	S	T	U	V	W	Y	Z	AA	AB	AC	AD	AE	AF	AG	AH	AJ	AK	AL	AM	AN	AP	AR
[illegible]	[illegible]	.078	.093	[illegible]	.093	1.187	.750	.593	.453	1.015	.062	.187	.078	.875	.718	1.375	.218	1.156	1.843	.048	NA	.875	.305	.078	.312	1.687	.078	NA	.078	.312	.187	1.843
[illegible]	.031	.078	.093	NA	NA	1.187	.750	.593	.453	1.015	.062	.187	.078	.875	.718	1.375	.218	NA	NA	.048	.031	.875	.305	.078	.312	1.687	.078	NA	.078	.312	.187	NA
[illegible]	[illegible]	.156	.125	[illegible]	.125	1.625	1.032	.844	.656	1.406	.093	.344	.156	1.781	1.531	2.844	.312	1.562	3.875	.062	NA	1.219	.500	.156	.719	3.469	.156	NA	.156	.719	.344	3.875
[illegible]	.093	.156	.125	NA	NA	1.625	1.032	.844	.656	1.406	.093	.344	.156	1.781	1.531	2.844	.312	NA	NA	.062	.062	1.219	.500	.156	.719	3.469	.156	NA	.156	.719	.344	NA
[illegible]	.031	.078	.093	[illegible]	.093	1.187	.750	.593	.453	1.015	.062	.187	.078	.875	.718	1.375	.218	1.156	1.843	.048	NA	.875	.305	.078	.312	1.687	.078	NA	.078	.312	.187	1.843
[illegible]	.031	.078	.093	NA	NA	1.187	.750	.593	.453	1.015	.062	.187	.078	.875	.718	1.375	.218	NA	NA	.048	.031	.875	.305	.078	.312	1.687	.078	NA	.078	.312	.187	NA

RAYTHEON DASH NUMBERS

AS APPLICABLE
NEXT ASSY | USED ON
APPLICATION

UNLESS OTHERWISE SPECIFIED
DIMENSIONS ARE IN INCHES
TOLERANCES ON
2 PLACE DECIMALS ± | 3 PLACE DECIMALS ± .005 | ANGLES ± —
DO NOT SCALE THIS DRAWING
MATERIAL SEE NOTE 11
APPROVAL

MIT INSTRUMENTATION LAB CAMBRIDGE MASS
DRAWN R.A. JONES DATE 16 JUL 65
CHECKED
APPROVAL W. KUPFER 22 JUL 65
CONTRACT
NASA APPROVAL T. MICHAELS 22 JUL 65
MIT APPROVAL W. KUPFER 22 JUL 65

MANNED SPACECRAFT CENTER
HOUSTON, TEXAS

NAMEPLATES,
APOLLO G&N - GSE
(STANDARDS)

SIZE J2 | CODE IDENT NO. 80230 | 1004260
SCALE NONE | SHEET 3 OF 6

NOTICE: WHEN GOVERNMENT DRAWINGS, SPECIFICATIONS, OR OTHER DATA ARE USED FOR ANY PURPOSE OTHER THAN IN CONNECTION WITH A DEFINITELY RELATED GOVERNMENT PROCUREMENT OPERATION, THE UNITED STATES GOVERNMENT THEREBY INCURS NO RESPONSIBILITY NOR ANY OBLIGATION WHATSOEVER; AND THE FACT THAT THE GOVERNMENT MAY HAVE FORMULATED, FURNISHED, OR IN ANY WAY SUPPLIED THE SAID DRAWINGS, SPECIFICATIONS, OR OTHER DATA IS NOT TO BE REGARDED BY IMPLICATION OR OTHERWISE AS IN ANY MANNER LICENSING THE HOLDER OR ANY OTHER PERSON OR CORPORATION, OR CONVEYING ANY RIGHTS OR PERMISSION TO MANUFACTURE, USE, OR SELL ANY PATENTED INVENTION THAT MAY IN ANY WAY BE RELATED THERETO.

AC DASH NUMBERS CONTINUED ON SHEET 6

DASH NO.	P/C	PART NAME	REMARKS	PART NUMBER	SER. NO.	CONT. NO.	STYLE	TYPE	MATERIAL	A	B	C	D	E	F	G	H	J	K	L	M	N	P
199	AC	EYEPIECE STOWAGE UNIT		2021255-011			A	I		FOR DIMENSIONS SEE DASH 100 VALUES BELOW													
198	AC	SIGNAL CONDITIONER ASSY C/M		2007234		NAS-9-497	A	I	NOTE 11B	FOR DIMENSIONS SEE DASH 100 VALUES BELOW													
197	AC	SIGNAL CONDITIONER ASSY C/M		2007235		NAS-9-497	A	I	NOTE 11B	FOR DIMENSIONS SEE DASH 100 VALUES BELOW													
196	AC	SIGNAL CONDITIONER ASSY LEM		6007010		NAS-9-497	A	I	NOTE 11B	FOR DIMENSIONS SEE DASH 100 VALUES BELOW													
195	AC	PSA & SIGNAL CONDITIONER ASSY		6007009		NAS-9-497	A	I	NOTE 11B	FOR DIMENSIONS SEE DASH 100 VALUES BELOW													
194	AC	PANEL, MONITOR		2900031-031		NAS-9-497	B	II	NOTE 11C	FOR DIMENSIONS SEE DASH 141 VALUES BELOW													
193	AC	DISTRIBUTION BOX, GSE		2900024-031		NAS-9-497	B	II	NOTE 11C	FOR DIMENSIONS SEE DASH 141 VALUES BELOW													
192	AC	ANALYZER, OPTICS-INERTIAL		2900023-031		NAS-9-497	B	II	NOTE 11C	FOR DIMENSIONS SEE DASH 144 VALUES BELOW													
191	AC	TEST CONTROL		2900027-031		NAS-9-497	B	II	NOTE 11C	FOR DIMENSIONS SEE DASH 141 VALUES BELOW													
190	AC	PANEL, PWR SUP AND LOAD		2900033-021		NAS-9-497	B	II	NOTE 11C	FOR DIMENSIONS SEE DASH 141 VALUES BELOW													
189	AC	ADPT MODULE, P.S.A.		6900088-011		NAS-9-497	B	II	NOTE 11C	FOR DIMENSIONS SEE DASH 141 VALUES BELOW													
188	AC	ADPT MODULE, P.S.A.		2901143-011		NAS-9-497	B	II	NOTE 11C	FOR DIMENSIONS SEE DASH 141 VALUES BELOW													
187	AC	FIXTURE, MTG, PTA/PEA		2900066-021		NAS-9-497	B	II	NOTE 11C	FOR DIMENSIONS SEE DASH 141 VALUES BELOW													
186	AC	ANNUNCIATOR PANEL & EYEPIECE STORAGE ASSEMBLY		1021255-021			A	I		FOR DIMENSIONS SEE DASH 100 VALUES BELOW													
185	AC	ANNUNCIATOR PANEL & EYEPIECE STORAGE ASSEMBLY		1021255-011			A	I		FOR DIMENSIONS SEE DASH 100 VALUES BELOW													
184	AC	FIX., HAND., G AND N HARNESS		1901846-041		NAS-9-497	B	II	NOTE 11C	FOR DIMENSIONS SEE DASH 144 VALUES BELOW													
183	AC	INSTALLING TOOL, ELEC, CONN		1902586-011		NAS-9-497	B	II	NOTE 11C	FOR DIMENSIONS SEE DASH 102 VALUES BELOW													
182	AC	ADPT MODULE, P.S.A.		6900088-011		NAS-9-497	B	II	NOTE 11C	FOR DIMENSIONS SEE DASH 141 VALUES BELOW													
181	AC	G & N INDICATOR CONTROL PANEL ASSY		2014578-011		NAS-9-497	A	I	NOTE 11B	3.000	1.938	2.437	NA	.125	.062	.188	.156	NA	NA	1.750	1.125	.906	.688
180	AC	ADPT MODULE, P.S.A.		1902431-031		NAS-9-497	B	II		FOR DIMENSIONS SEE DASH 121 VALUES BELOW													
179	AC	MOUNTING PLATE, IMU/PTA		6900083-011		NAS-9-497	B	II		FOR DIMENSIONS SEE DASH 144 VALUES BELOW													
178	AC	MOUNTING PLATE, COMPONENT		6900007-021		NAS-9-497	B	II		FOR DIMENSIONS SEE DASH 144 VALUES BELOW													
177	AC	FIX., MOUNTING, SUBSYSTEM		2900070-021		NAS-9-497	B	II		FOR DIMENSIONS SEE DASH 144 VALUES BELOW													
176	AC	FIX., MOUNTING, G & N		2900067-021		NAS-9-497	B	II		FOR DIMENSIONS SEE DASH 144 VALUES BELOW													
175	AC	CSL, COOL. AND PWR, G & N		1902134-031		NAS-9-497	B	II		FOR DIMENSIONS SEE DASH 144 VALUES BELOW													
174	AC	FIX., HAND., C/M AND LEM CDU		2900999-011		NAS-9-497	B	II	NOTE 11C	FOR DIMENSIONS SEE DASH 141 VALUES BELOW													
173	AC	FIX., HANDLING, C/M PSA		2900998-011		NAS-9-497	B	II	NOTE 11C	FOR DIMENSIONS SEE DASH 141 VALUES BELOW													
172	AC	CAGING ELECTRONICS, GYRO		2900029-021		NAS-9-497	B	II	NOTE 11C	FOR DIMENSIONS SEE DASH 141 VALUES BELOW													
171	AC	DISTRIBUTION BOX, GSE		2900024-021		NAS-9-497	B	II	NOTE 11C	FOR DIMENSIONS SEE DASH 141 VALUES BELOW													
170	AC	ANALYZER, OPTICS-INERTIAL		2900023-021		NAS-9-497	B	II	NOTE 11C	FOR DIMENSIONS SEE DASH 144 VALUES BELOW													
169	AC	ADPT, TESTPOINT, P.S.A.		2900037-021		NAS-9-497	B	II	NOTE 11C	FOR DIMENSIONS SEE DASH 141 VALUES BELOW													
168	AC	TEST SELECTOR		2900028-021		NAS-9-497	B	II	NOTE 11C	FOR DIMENSIONS SEE DASH 141 VALUES BELOW													
167	AC	TEST CONTROL		2900027-021		NAS-9-497	B	II	NOTE 11C	FOR DIMENSIONS SEE DASH 141 VALUES BELOW													
166	AC	PANEL, MONITOR		2900031-021		NAS-9-497	B	II	NOTE 11C	FOR DIMENSIONS SEE DASH 141 VALUES BELOW													
165	AC	TERM. BOARD STORAGE DRAWER		2900927-011		NAS-9-497	B	II	NOTE 11C	FOR DIMENSIONS SEE DASH 141 VALUES BELOW													
164	AC	INPUT/OUTPUT PANEL		2900926-011		NAS-9-497	B	II	NOTE 11C	FOR DIMENSIONS SEE DASH 141 VALUES BELOW													
163	AC	CONTROL PANEL		2900896-011		NAS-9-497	B	II	NOTE 11C	FOR DIMENSIONS SEE DASH 141 VALUES BELOW													
162	AC	CSL, CAL AND TEST, SCM/PSAAM		2900895-011		NAS-9-497	B	II	NOTE 11C	FOR DIMENSIONS SEE DASH 144 VALUES BELOW													
161	AC	FIX., LIFT AND HAND., IMU		1015462-011		NAS-9-497	B	II	NOTE 11C	FOR DIMENSIONS SEE DASH 141 VALUES BELOW													
160	AC	FIX., HAND., G & N HARNESS		1901846-031		NAS-9-497	B	II	NOTE 11C	FOR DIMENSIONS SEE DASH 144 VALUES BELOW													
159	AC	BATTERY POWER PACK		1900011-031		NAS-9-497	B	II	NOTE 11C	FOR DIMENSIONS SEE DASH 144 VALUES BELOW													
158	AC	COUPLING DATA UNIT ASSEMBLY C/M		2007222		NAS-9-497	A	I	NOTE 11B	FOR DIMENSIONS SEE DASH 100 VALUES BELOW													
157	AC	COUPLING DATA UNIT ASSEMBLY - LEM		2007222		NAS-9-497	A	I	NOTE 11B	FOR DIMENSIONS SEE DASH 100 VALUES BELOW													
156	AC	POWER & SERVO ASSEMBLY C/M		2007200		NAS-9-497	A	I	NOTE 11B	2.125	.968	1.718	NA	.093	.031	.06	.093	NA	NA	.858	.608	.484	.358
155	AC	PIPA ELECTRONICS ASSEMBLY		2007201		NAS-9-497	A	I	NOTE 11B	FOR DIMENSIONS SEE DASH 100 VALUES BELOW													
154	AC	PULSE TORQUE ASSEMBLY-LEM		6007000		NAS-9-497	A	I	NOTE 11B	FOR DIMENSIONS SEE DASH 100 VALUES BELOW													
153	AC	POWER & SERVO ASSEMBLY-LEM		6007200		NAS-9-497	A	I	NOTE 11B	FOR DIMENSIONS SEE DASH 100 VALUES BELOW													
152	AC	CONT PNL, RSVR CKT TESTER		2900770-011		NAS-9-497	B	II	NOTE 11C	FOR DIMENSIONS SEE DASH 141 VALUES BELOW													
151	AC	TESTER, RESOLVER CIRCUIT		2900708-011		NAS-9-497	B	II	NOTE 11C	FOR DIMENSIONS SEE DASH 141 VALUES BELOW													
150	AC	JUNCTION BOX, P.S.A./G.S.E.		1901933-021		NAS-9-497	B	II	NOTE 11C	FOR DIMENSIONS SEE DASH 144 VALUES BELOW													
149	AC	BATTERY PACK, LIFTING		2900812-011		NAS-9-497	B	II	NOTE 11C	FOR DIMENSIONS SEE DASH 141 VALUES BELOW													
148	AC	MOUNTING PLATE, COMPONENT		6900007-011		NAS-9-497	B	II	NOTE 11C	FOR DIMENSIONS SEE DASH 144 VALUES BELOW													
147	AC	MOUNTING PLATE, COMPONENT		2900677-011		NAS-9-497	B	II	NOTE 11C	FOR DIMENSIONS SEE DASH 144 VALUES BELOW													
146	AC	CART, TRANS, G & N		1900009-041		NAS-9-497	B	II	NOTE 11C	FOR DIMENSIONS SEE DASH 144 VALUES BELOW													
145	AC	CONTAINER, SHIPPING, IMU		1900010-021		NAS-9-497	B	II	NOTE 11C	FOR DIMENSIONS SEE DASH 144 VALUES BELOW													
144	AC	FIX., MOUNTING, G & N		1902204-021			B	II	NOTE 11C	4.125	1.812	3.250	NA	.125	.062	.12	.156		.125	1.625	1.140	.890	.640
143	AC	CSL, COOL. AND PWR, G & N		1902134-021			B	II	NOTE 11C	4.125	1.812	3.250	NA	.125	.062	.12	.156		.125	1.625	1.140	.890	.640
142	AC	ANALYZER, OPTICS-INERTIAL		2900023-011			B	II	NOTE 11C	4.125	1.812	3.250	NA	.125	.062	.12	.156		.125	1.625	1.140	.890	.640
141	AC	CONT, TEMP, PORTABLE		2900060-011			B	II	NOTE 11C	2.125	.968	1.718	NA	.093	.031	.06	.093		.093	.858	.608	.484	.358
140	AC	TESTER, CKT, IMU/CDU RSVR		2900286-011			B	II	NOTE 11C	4.125	1.812	3.250	NA	.125	.062	.12	.156		.125	1.625	1.140	.890	.640
139	AC	SIMULATOR, LD/SIG, CDU		2900285-011			B	II	NOTE 11C	4.125	1.812	3.250	NA	.125	.062	.12	.156		.125	1.625	1.140	.890	.640
138	AC	SIMULATOR, LD/SIG, OPTICS		1902023-021			B	II	NOTE 11C	4.125	1.812	3.250	NA	.125	.062	.12	.156		.125	1.625	1.140	.890	.640
137	AC	FIX., MOUNTING, IMU/NAV BASE		6900003-011			B	II	NOTE 11C	4.125	1.812	3.250	NA	.125	.062	.12	.156		.125	1.625	1.140	.890	.640
136	AC	FIXTURE, OPTICS/NAV BASE		2900072-011			B	II	NOTE 11C	4.125	1.812	3.250	NA	.125	.062	.12	.156		.125	1.625	1.140	.890	.640
135	AC	FIX., MOUNTING, SUB SYSTEM		2900070-011			B	II	NOTE 11C	4.125	1.812	3.250	NA	.125	.062	.12	.156		.125	1.625	1.140	.890	.640
134	AC	FIX., HAND., G & N HARNESS		2900069-011			B	II	NOTE 11C	4.125	1.812	3.250	NA	.125	.062	.12	.156		.125	1.625	1.140	.890	.640
133	AC	CNTR, SHIPPING, NAV BASE		2900068-011			B	II	NOTE 11C	4.125	1.812	3.250	NA	.125	.062	.12	.156		.125	1.625	1.140	.890	.640
132	AC	FIX., MOUNTING, G & N		2900067-011			B	II	NOTE 11C	4.125	1.812	3.250	NA	.125	.062	.12	.156		.125	1.625	1.140	.890	.640
131	AC	SIMULATOR, LD/SIG, IMU/CDU		2900062-011			B	II	NOTE 11C	4.125	1.812	3.250	NA	.125	.062	.12	.156		.125	1.625	1.140	.890	.640
130	AC	TESTER, GYRO WHEEL		2900061-011			B	II	NOTE 11C	4.125	1.812	3.250	NA	.125	.062	.12	.156		.125	1.625	1.140	.890	.640
129	AC	COOLANT SUPPLY		1902133-021			B	II	NOTE 11C	4.125	1.812	3.250	NA	.125	.062	.12	.156		.125	1.625	1.140	.890	.640
128	AC	TABLE, ROTARY		1900926-021			B	II	NOTE 11C	4.125	1.812	3.250	NA	.125	.062	.12	.156		.125	1.625	1.140	.890	.640
127	AC	FIX., HAND., OPTICS		2900074-011			B	II	NOTE 11C	2.125	.968	1.718	NA	.093	.031	.06	.093		.093	.858	.608	.484	.358
126	AC	FIXTURE, MTG, PTA/PEA.		2900066-011			B	II	NOTE 11C	2.125	.968	1.718	NA	.093	.031	.06	.093		.093	.858	.608	.484	.358
125	AC	CONT, TEMP, IMU LIFTING		2900063-011			B	II	NOTE 11C	2.125	.968	1.718	NA	.093	.031	.06	.093		.093	.858	.608	.484	.358
124	AC	FIXTURE, HANDLING, IMU		2900064-011			B	II	NOTE 11C	2.125	.968	1.718	NA	.093	.031	.06	.093		.093	.858	.608	.484	.358
123	AC	CONT, OPTICS, REMOTE		1902046-021			B	II	NOTE 11C	2.125	.968	1.718	NA	.093	.031	.06	.093		.093	.858	.608	.484	.358
122	AC	TEST CONTROL		1902009-021			B	II	NOTE 11C	2.125	.968	1.718	NA	.093	.031	.06	.093		.093	.858	.608	.484	.358
121	AC	ADPT MODULE, P.S.A.		1902431-021			B	II	NOTE 11C	2.125	.968	1.718	NA	.093	.031	.06	.093		.093	.858	.608	.484	.358
120	AC	BRIDGE, DECADE ERROR		2900128-011			B	II	NOTE 11C	2.125	.968	1.718	NA	.093	.031	.06	.093		.093	.858	.608	.484	.358
119	AC	PWR SUP, ELECTRONICS		2900012-011			B	II	NOTE 11C	2.125	.968	1.718	NA	.093	.031	.06	.093		.093	.858	.608	.484	.358
118	AC	PWR SUP, RELAY AND LAMP		1900049-031			B	II	NOTE 11C	2.125	.968	1.718	NA	.093	.031	.06	.093		.093	.858	.608	.484	.358
117	AC	CONSOLE, OSCILLOGRAPH		1900000-021			B	II	NOTE 11C	2.125	.968	1.718	NA	.093	.031	.06	.093		.093	.858	.608	.484	.358
116	AC	ADPT MODULE, P.S.A.		1902431-011			B	II	NOTE 11C	2.125	.968	1.718	NA	.093	.031	.06	.093		.093	.858	.608	.484	.358
115	AC	ADPT, TEST POINT, PTA/PEA.		2900145-011			B	II	NOTE 11C	2.125	.968	1.718	NA	.093	.031	.06	.093		.093	.858	.608	.484	.358
114	AC	ADPT, TEST POINT, P.S.A.		2900037-011			B	II	NOTE 11C	2.125	.968	1.718	NA	.093	.031	.06	.093		.093	.858	.608	.484	.358
113	AC	CONTROL, GIMBAL POSITION		2900036-011			B	II	NOTE 11C	2.125	.968	1.718	NA	.093	.031	.06	.093		.093	.858	.608	.484	.358
112	AC	SELECTOR, SIGNAL, PRIMARY		2900035-011			B	II	NOTE 11C	2.125	.968	1.718	NA	.093	.031	.06	.093		.093	.858	.608	.484	.358
111	AC	SEL, SIG, OSCILLOGRAPH		2900034-011			B	II	NOTE 11C	2.125	.968	1.718	NA	.093	.031	.06	.093		.093	.858	.608	.484	.358
110	AC	PANEL, PWR SUP AND LOAD		2900033-011			B	II	NOTE 11C	2.125	.968	1.718	NA	.093	.031	.06	.093		.093	.858	.608	.484	.358
109	AC	PANEL, MONITOR		2900031-011			B	II	NOTE 11C	2.125	.968	1.718	NA	.093	.031	.06	.093		.093	.858	.608	.484	.358
108	AC	PANEL, AUXILIARY INPUT		2900030-011			B	II	NOTE 11C	2.125	.968	1.718	NA	.093	.031	.06	.093		.093	.858	.608	.484	.358
107	AC	CAGING ELECTRONICS, GYRO		2900029-011			B	II	NOTE 11C	2.125	.968	1.718	NA	.093	.031	.06	.093		.093	.858	.608	.484	.358
106	AC	TEST SELECTOR		2900028-011			B	II	NOTE 11C	2.125	.968	1.718	NA	.093	.031	.06	.093		.093	.858	.608	.484	.358
105	AC	TEST CONTROL		2900027-011			B	II	NOTE 11C	2.125	.968	1.718	NA	.093	.031	.06	.093		.093	.858	.608	.484	.358
104	AC	MONITOR AND CONTROL, TEMP		2900026-011			B	II	NOTE 11C	2.125	.968	1.718	NA	.093	.031	.06	.093		.093	.858	.608	.484	.358
103	AC	DISTRIBUTION BOX, GSE		2900024-011			B	II	NOTE 11C	2.125	.968	1.718	NA	.093	.031	.06	.093		.093	.858	.608	.484	.358
102	AC	VOLTMETER, DIGITAL		2900007-011			B	II	NOTE 11C	2.125	.968	1.718	NA	.093	.031	.06	.093		.093	.858	.608	.484	.358
101	AC	NAVIGATION BASE ASSEMBLY-LEM		6899950		NAS-9-497	A	I	NOTE 11B	2.000	1.312	1.906	1.375	.078	.048	.078	.093	NA	NA	1.125	.750	.593	.453
100	AC	NAVIGATION BASE ASSEMBLY		2899982		NAS-9-497	A	I	NOTE 11B	2.000	1.312	1.906	1.375	.078	.048	.078	.093	NA	NA	1.125	.750	.593	.453

NOTES FOR TABLE

STYLE A IS FOR G & N SYSTEM
STYLE B IS FOR GROUND SUPPORT EQUIPMENT
TYPE I IS WITHOUT MOUNTING HOLES
TYPE II IS WITH MOUNTING HOLES

D	E	F	G	H	J	K	L	M	N	P	R	S	T	U	V	W	Y	Z	AA	AB	AC	AD	AE	AF	AG	AH	AJ	AK	AL	AM	AN	AP	AR
DASH 100 VALUES BELOW																																	
DASH 100 VALUES BELOW																																	
DASH 100 VALUES BELOW																																	
DASH 100 VALUES BELOW																																	
DASH 100 VALUES BELOW																																	
DASH 141 VALUES BELOW																																	
DASH 141 VALUES BELOW																																	
DASH 144 VALUES BELOW																																	
DASH 141 VALUES BELOW																																	
DASH 141 VALUES BELOW																																	
DASH 141 VALUES BELOW																																	
DASH 141 VALUES BELOW																																	
DASH 141 VALUES BELOW																																	
DASH 100 VALUES BELOW																																	
DASH 100 VALUES BELOW																																	
DASH 144 VALUES BELOW																																	
DASH 102 VALUES BELOW																																	
DASH 141 VALUES BELOW																																	
	.125	.06[illegible]	.188	.156	NA	NA	1.750	1.125	.906	.688	1.500	NA	.281	.125	NA	1.094	2.062	.312	NA	2.500	.062	.125	1.312	.469	NA	NA	NA	.156	NA	.125	.469	.344	NA
DASH 121 VALUES BELOW																																	
DASH 144 VALUES BELOW																																	
DASH 144 VALUES BELOW																																	
DASH 144 VALUES BELOW																																	
[illegible] VALUES BELOW																																	
DASH 144 VALUES BELOW																																	
DASH 141 VALUES BELOW																																	
[illegible] BELOW																																	
DASH 141 VALUES BELOW																																	
DASH 141 VALUES BELOW																																	
DASH 144 VALUES BELOW																																	
DASH 141 VALUES BELOW																																	
DASH 141 VALUES BELOW																																	
DASH 141 VALUES BELOW																																	
DASH 141 VALUES BELOW																																	
DASH 141 VALUES BELOW																																	
DASH 141 VALUES BELOW																																	
DASH 141 VALUES BELOW																																	
DASH 144 VALUES BELOW																																	
DASH 141 VALUES BELOW																																	
DASH 144 VALUES BELOW																																	
DASH 144 VALUES BELOW																																	
DASH 100 VALUES BELOW																																	
DASH 100 VALUES BELOW																																	
	.093	.031	.06	.093	NA	NA	.858	.608	.484	.358	.733	.062	.140	.062	NA	.968	1.450	.125	NA	1.720	.046	.03	NA	.210	NA	NA	NA	.070	NA	.046	.32	.16	NA
DASH 100 VALUES BELOW																																	
DASH 100 VALUES BELOW																																	
DASH 100 VALUES BELOW																																	
DASH 141 VALUES BELOW																																	
DASH 141 VALUES BELOW																																	
DASH 144 VALUES BELOW																																	
DASH 141 VALUES BELOW																																	
DASH 144 VALUES BELOW																																	
DASH 144 VALUES BELOW																																	
DASH 144 VALUES BELOW																																	
DASH 144 VALUES BELOW																																	
	.125	.062	.112	.156		.125	1.625	1.140	.890	.640	1.390	.125	.171	.125	1.875	1.687	2.625	.250	1.562	3.843	.093	NA	NA	.359	.125	.437	3.688	NA	3.687	.093	.40	.25	3.875
	.125	.062	.112	.156		.125	1.625	1.140	.890	.640	1.390	.125	.171	.125	1.875	1.687	2.625	.250	1.562	3.843	.093	NA	NA	.359	.125	.437	3.688	NA	3.687	.093	.40	.25	3.875
	.125	.062	.112	.156		.125	1.625	1.140	.890	.640	1.390	.125	.171	.125	1.875	1.687	2.625	.250	1.562	3.843	.093	NA	NA	.359	.125	.437	3.688	NA	3.687	.093	.40	.25	3.875
	.093	.031	.06	.093		.093	.858	.608	.484	.358	.733	.077	.116	.062	.937	.875	1.343	.125	.781	1.892	.046	NA	NA	.209	.093	.250	1.875	NA	1.840	.046	.23	.16	1.938
	.25	.062	.112	.156		.125	1.625	1.140	.890	.640	1.390	.125	.171	.125	1.875	1.687	2.625	.250	1.562	3.843	.093	NA	NA	.359	.125	.437	3.688	NA	3.687	.093	.40	.25	3.875
	.125	.062	.112	.156		.125	1.625	1.140	.890	.640	1.390	.125	.171	.125	1.875	1.687	2.625	.250	1.562	3.843	.093	NA	NA	.359	.125	.437	3.688	NA	3.687	.093	.40	.25	3.875
	.125	.062	.112	.156		.125	1.625	1.140	.890	.640	1.390	.125	.171	.125	1.875	1.687	2.625	.250	1.562	3.843	.093	NA	NA	.359	.125	.437	3.688	NA	3.687	.093	.40	.25	3.875
	.125	.062	.112	.156		.125	1.625	1.140	.890	.640	1.390	.125	.171	.125	1.875	1.687	2.625	.250	1.562	3.843	.093	NA	NA	.359	.125	.437	3.688	NA	3.687	.093	.40	.25	3.875
	.125	.062	.112	.156		.125	1.625	1.140	.890	.640	1.390	.125	.171	.125	1.875	1.687	2.625	.250	1.562	3.843	.093	NA	NA	.359	.125	.437	3.688	NA	3.687	.093	.40	.25	3.875
	.125	.062	.112	.156		.125	1.625	1.140	.890	.640	1.390	.125	.171	.125	1.875	1.687	2.625	.250	1.562	3.843	.093	NA	NA	.359	.125	.437	3.688	NA	3.687	.093	.40	.25	3.875
	.125	.062	.112	.156		.125	1.625	1.140	.890	.640	1.390	.125	.171	.125	1.875	1.687	2.625	.250	1.562	3.843	.093	NA	NA	.359	.125	.437	3.688	NA	3.687	.093	.40	.25	3.875
	.125	.062	.112	.156		.125	1.625	1.140	.890	.640	1.390	.125	.171	.125	1.875	1.687	2.625	.250	1.562	3.843	.093	NA	NA	.359	.125	.437	3.688	NA	3.687	.093	.40	.25	3.875
	.125	.062	.112	.156		.125	1.625	1.140	.890	.640	1.390	.125	.171	.125	1.875	1.687	2.625	.250	1.562	3.843	.093	NA	NA	.359	.125	.437	3.688	NA	3.687	.093	.40	.25	3.875
	.125	.062	.112	.156		.125	1.625	1.140	.890	.640	1.390	.125	.171	.125	1.875	1.687	2.625	.250	1.562	3.843	.093	NA	NA	.359	.125	.437	3.688	NA	3.687	.093	.40	.25	3.875
	.125	.062	.112	.156		.125	1.625	1.140	.890	.640	1.390	.125	.171	.125	1.875	1.687	2.625	.250	1.562	3.843	.093	NA	NA	.359	.125	.437	3.688	NA	3.687	.093	.40	.25	3.875
	.125	.062	.112	.156		.125	1.625	1.140	.890	.640	1.390	.125	.171	.125	1.875	1.687	2.625	.250	1.562	3.843	.093	NA	NA	.359	.125	.437	3.688	NA	3.687	.093	.40	.25	3.875
	.125	.062	.112	.156		.125	1.625	1.140	.890	.640	1.390	.125	.171	.125	1.875	1.687	2.625	.250	1.562	3.843	.093	NA	NA	.359	.125	.437	3.688	NA	3.687	.093	.40	.25	3.875
	.093	.031	.06	.093		.093	.858	.608	.484	.358	.733	.077	.116	.062	.937	.875	1.343	.125	.781	1.892	.046	NA	NA	.209	.093	.250	1.875	NA	1.840	.046	.23	.16	1.938
	.093	.031	.06	.093		.093	.858	.608	.484	.358	.733	.077	.116	.062	.937	.875	1.343	.125	.781	1.892	.046	NA	NA	.209	.093	.250	1.875	NA	1.840	.046	.23	.16	1.938
	.093	.031	.06	.093		.093	.858	.608	.484	.358	.733	.077	.116	.062	.937	.875	1.343	.125	.781	1.892	.046	NA	NA	.209	.093	.250	1.875	NA	1.840	.046	.23	.16	1.938
	.093	.031	.06	.093		.093	.858	.608	.484	.358	.733	.077	.116	.062	.937	.875	1.343	.125	.781	1.892	.046	NA	NA	.209	.093	.250	1.875	NA	1.840	.046	.23	.16	1.938
	.093	.031	.06	.093		.093	.858	.608	.484	.358	.733	.077	.116	.062	.937	.875	1.343	.125	.781	1.892	.046	NA	NA	.209	.093	.250	1.875	NA	1.840	.046	.23	.16	1.938
	.093	.031	.06	.093		.093	.858	.608	.484	.358	.733	.077	.116	.062	.937	.875	1.343	.125	.781	1.892	.046	NA	NA	.209	.093	.250	1.875	NA	1.840	.046	.23	.16	1.938
	.093	.031	.06	.093		.093	.858	.608	.484	.358	.733	.077	.116	.062	.937	.875	1.343	.125	.781	1.892	.046	NA	NA	.209	.093	.250	1.875	NA	1.840	.046	.23	.16	1.938
	.093	.031	.06	.093		.093	.858	.608	.484	.358	.733	.077	.116	.062	.937	.875	1.343	.125	.781	1.892	.046	NA	NA	.209	.093	.250	1.875	NA	1.840	.046	.23	.16	1.938
	.093	.031	.06	.093		.093	.858	.608	.484	.358	.733	.077	.116	.062	.937	.875	1.343	.125	.781	1.892	.046	NA	NA	.209	.093	.250	1.875	NA	1.840	.046	.23	.16	1.938
	.093	.031	.06	.093		.093	.858	.608	.484	.358	.733	.077	.116	.062	.937	.875	1.343	.125	.781	1.892	.046	NA	NA	.209	.093	.250	1.875	NA	1.840	.046	.23	.16	1.938
	.093	.031	.06	.093		.093	.858	.608	.484	.358	.733	.077	.116	.062	.937	.875	1.343	.125	.781	1.892	.046	NA	NA	.209	.093	.250	1.875	NA	1.840	.046	.23	.16	1.938
	.093	.031	.06	.093		.093	.858	.608	.484	.358	.733	.077	.116	.062	.937	.875	1.343	.125	.781	1.892	.046	NA	NA	.209	.093	.250	1.875	NA	1.840	.046	.23	.16	1.938
	.093	.031	.06	.093		.093	.858	.608	.484	.358	.733	.077	.116	.062	.937	.875	1.343	.125	.781	1.892	.046	NA	NA	.209	.093	.250	1.875	NA	1.840	.046	.23	.16	1.938
	.093	.031	.06	.093		.093	.858	.608	.484	.358	.733	.077	.116	.062	.937	.875	1.343	.125	.781	1.892	.046	NA	NA	.209	.093	.250	1.875	NA	1.840	.046	.23	.16	1.938
	.093	.031	.06	.093		.093	.858	.608	.484	.358	.733	.077	.116	.062	.937	.875	1.343	.125	.781	1.892	.046	NA	NA	.209	.093	.250	1.875	NA	1.840	.046	.23	.16	1.938
	.093	.031	.06	.093		.093	.858	.608	.484	.358	.733	.077	.116	.062	.937	.875	1.343	.125	.781	1.892	.046	NA	NA	.209	.093	.250	1.875	NA	1.840	.046	.23	.16	1.938
	.093	.031	.06	.093		.093	.858	.608	.484	.358	.733	.077	.116	.062	.937	.875	1.343	.125	.781	1.892	.046	NA	NA	.209	.093	.250	1.875	NA	1.840	.046	.23	.16	1.938
	.093	.031	.06	.093		.093	.858	.608	.484	.358	.733	.077	.116	.062	.937	.875	1.343	.125	.781	1.892	.046	NA	NA	.209	.093	.250	1.875	NA	1.840	.046	.23	.16	1.938
	.093	.031	.06	.093		.093	.858	.608	.484	.358	.733	.077	.116	.062	.937	.875	1.343	.125	.781	1.892	.046	NA	NA	.209	.093	.250	1.875	NA	1.840	.046	.23	.16	1.938
	.093	.031	.06	.093		.093	.858	.608	.484	.358	.733	.077	.116	.062	.937	.875	1.343	.125	.781	1.892	.046	NA	NA	.209	.093	.250	1.875	NA	1.840	.046	.23	.16	1.938
	.093	.031	.06	.093		.093	.858	.608	.484	.358	.733	.077	.116	.062	.937	.875	1.343	.125	.781	1.892	.046	NA	NA	.209	.093	.250	1.875	NA	1.840	.046	.23	.16	1.938
	.093	.031	.06	.093		.093	.858	.608	.484	.358	.733	.077	.116	.062	.937	.875	1.343	.125	.781	1.892	.046	NA	NA	.209	.093	.250	1.875	NA	1.840	.046	.23	.16	1.938
	.093	.031	.06	.093		.093	.858	.608	.484	.358	.733	.077	.116	.062	.937	.875	1.343	.125	.781	1.892	.046	NA	NA	.209	.093	.250	1.875	NA	1.840	.046	.23	.16	1.938
	.093	.031	.06	.093		.093	.858	.608	.484	.358	.733	.077	.116	.062	.937	.875	1.343	.125	.781	1.892	.046	NA	NA	.209	.093	.250	1.875	NA	1.840	.046	.23	.16	1.938
	.093	.031	.06	.093		.093	.858	.608	.484	.358	.733	.077	.116	.062	.937	.875	1.343	.125	.781	1.892	.046	NA	NA	.209	.093	.250	1.875	NA	1.840	.046	.23	.16	1.938
	.093	.031	.06	.093		.093	.858	.608	.484	.358	.733	.077	.116	.062	.937	.875	1.343	.125	.781	1.892	.046	NA	NA	.209	.093	.250	1.875	NA	1.840	.046	.23	.16	1.938
	.093	.031	.06	.093		.093	.858	.608	.484	.358	.733	.077	.116	.062	.937	.875	1.343	.125	.781	1.892	.046	NA	NA	.209	.093	.250	1.875	NA	1.840	.046	.23	.16	1.938
	.093	.031	.06	.093		.093	.858	.608	.484	.358	.733	.077	.116	.062	.937	.875	1.343	.125	.781	1.892	.046	NA	NA	.209	.093	.250	1.875	NA	1.840	.046	.23	.16	1.938
	.078	[illegible]	.078	.093	NA	NA	1.125	.750	.593	.453	1.015	.062	.187	.078	.875	.718	1.375	.218	NA	NA	.048	.031	.875	.305	.078	.531	1.906	.078	NA	.078	.531	.187	NA
	.078	[illegible]	.078	.093	NA	NA	1.125	.750	.593	.453	1.015	.062	.187	.078	.875	.718	1.375	.218	NA	NA	.048	.031	.875	.305	.078	.531	1.906	.078	NA	.078	.531	.187	NA

REVISIONS

SYM	ZONE	DESCRIPTION	CHG NO	DATE	APPD
CL		REPLACES REV CK WITHOUT CHANGE PER TDRR 34365		9/22/67	JWL RWH
CM		REVISION STATUS CHANGED		18 OCT 67	R.A.W.
CN		REVISION STATUS CHANGE		31 OCT 67	JRK
CP		REVISION STATUS CHANGE		6 NOV 67	ENS
CR		REVISION STATUS CHANGED		9 NOV 67	DVD RWH
CS		REVISION STATUS CHANGED		3 JAN 68	J.W. EHW
CT		REVISION STATUS CHANGED		7 FEB 68	LK
CU		REVISION STATUS CHANGED		22 FEB 68	JRK
CV		REVISION STATUS CHANGED		[illegible] 68	
CW		REVISION STATUS CHANGED		[illegible] 68	
CY		REVISION STATUS CHANGED		16 APR 68	A.N.
CZ		REVISION STATUS CHANGED		28 MAY 68	
DA		REVISION STATUS CHANGED		17 JUN 68	
DB		REVISION STATUS CHANGED		18 SEP 68	
DC		REVISION STATUS CHANGED		16 DEC 68	LK
DD		REVISION STATUS CHANGED		30 DEC 68	
DE		REVISION STATUS CHANGED		23 JAN 69	
DF		REVISION STATUS CHANGED		27 JAN 69	LK RWH
DG		REVISION STATUS CHANGED		26 SEP 69	
DH		REVISION STATUS CHANGED		29 SEP 69	CP
DJ		REVISION STATUS CHANGED		11 SEP 70	JJJ
DK		REVISION STATUS CHANGED		25 NOV 70	RP

AC ELECTRONICS DASH NUMBERS

AS APPLICABLE
NEXT ASSY
USED ON
APPLICATION

UNLESS OTHERWISE SPECIFIED
DIMENSIONS ARE IN INCHES
TOLERANCES ON
2 PLACE DECIMALS ±
3 PLACE DECIMALS ± .005
ANGLES ± —
DO NOT SCALE THIS DRAWING
MATERIAL SEE NOTE II
APPROVAL

MIT
INSTRUMENTATION LAB
CAMBRIDGE MASS
DRAWN R. A. JONES DATE 16 JUL 65
CHECKED
APPROVAL W. KUPFER 22 JUL 65
CONTRACT
NASA APPROVAL T. MICHAELS 22 JUL 65
MIT APPROVAL W. KUPFER 22 JUL 65

MANNED
SPACECRAFT CENTER
HOUSTON, TEXAS

NAMEPLATES,
APOLLO GEN - GSE
(STANDARDS)

SIZE J2
CODE IDENT NO. 80230
1004260
SCALE NONE
SHEET 4 OF 6

1004260 DK SHT 4

NOTICE — WHEN GOVERNMENT DRAWINGS, SPECIFICATIONS, OR OTHER DATA ARE USED FOR ANY PURPOSE OTHER THAN IN CONNECTION WITH A DEFINITELY RELATED GOVERNMENT PROCUREMENT OPERATION, THE UNITED STATES GOVERNMENT THEREBY INCURS NO RESPONSIBILITY NOR ANY OBLIGATION WHATSOEVER; AND THE FACT THAT THE GOVERNMENT MAY HAVE FORMULATED, FURNISHED, OR IN ANY WAY SUPPLIED THE SAID DRAWINGS, SPECIFICATIONS, OR OTHER DATA IS NOT TO BE REGARDED BY IMPLICATION OR OTHERWISE AS IN ANY MANNER LICENSING THE HOLDER OR ANY OTHER PERSON OR CORPORATION, OR CONVEYING ANY RIGHTS OR PERMISSION TO MANUFACTURE, USE, OR SELL ANY PATENTED INVENTION THAT MAY IN ANY WAY BE RELATED THERETO.

DASH NO.	P/C	PART NAME	REMARKS	PART NUMBER	SER. NO.	CONT. NO.	STYLE	TYPE	MATERIAL	A	B	C	D	E	F	G	H	J	K	L	M	N	P
401	MIT	COMPUTER ASSY		2003100		NAS-9-497	A	I	NOTE 11B	2,000	1,312	1,906	1,375	,078	,048	,078	,093	NA	NA	1,125	,750	,593	,453
400	MIT	LIFTING SLING-G&N INST.QUAL.FIX. & AZM.REF.FIX.		1021640		NAS-9-4065	B	II	NOTE 11C	2,000	1,312	1,687	1,375	,078	,048	,078	,093	[illegible]	,093	1,187	,750	,593	,453

NOTES FOR TABLE

STYLE A IS FOR G & N SYSTEM
STYLE B IS FOR GROUND SUPPORT EQUIPMENT
TYPE I IS WITHOUT MOUNTING HOLES
TYPE II IS WITH MOUNTING HOLES

1004260	DK	SHT 5

REVISIONS					
SYM	ZONE	DESCRIPTION	CHG NO	DATE	APPD
CL		REPLACES REV CX WITHOUT CHANGE PER TURR 34365		9 28 67	JWL RWH
CM		REVISION STATUS CHANGED		8 OCT 67	R.A.W.
CN		REVISION STATUS CHANGED		31 OCT 67	JRK
CP		REVISION STATUS CHANGED		6 NOV 67	EMS
CR		REVISION STATUS CHANGED		7 DEC 67	RWH
CS		REVISION STATUS CHANGED		9 JAN 68	EHA
CT		REVISION STATUS CHANGED		7 FEB 68	LK
CU		REVISION STATUS CHANGED		22 FEB 68	JRK
CV		REVISION STATUS CHANGED		27 FEB 68	LK
CW		REVISION STATUS CHANGED		[illegible] 68	
CY		REVISION STATUS CHANGED		16 APR 68	A.N.
CZ		REVISION STATUS CHANGED		23 MAY 68	
DA		REVISION STATUS CHANGED		[illegible] 68	
DB		REVISION STATUS CHANGED		18 SEP 68	
DC		REVISION STATUS CHANGED		16 DEC 68	LK
DD		REVISION STATUS CHANGED		30 DEC 68	
DE		REVISION STATUS CHANGED		23 JAN 69	
DF		REVISION STATUS CHANGED		27 JAN 69	LK RWH
DG		REVISION STATUS CHANGED		26 SEP 69	
DH		REVISION STATUS CHANGED		29 SEP 69	
DJ		REVISION STATUS CHANGED		1 SEP 70	
DK		REVISION STATUS CHANGED		25 NOV 70	RP

.078	[illegible]	.078	.093	NA	NA	1.125	.750	.593	.453	1.015	.062	.187	.078	.875	.718	1.375
.078	[illegible]	.078	.093	[illegible]	.093	1.187	.750	.593	.453	1.015	.062	.187	.078	.875	.718	1.375
E	F	G	H	J	K	L	M	N	P	R	S	T	U	V	W	Y

.218	NA	NA	.048	.031	.875	.305	.078	.531	1.906	.078	NA	.078	.531	.187	NA
.218	1.156	1.843	.048	NA	.875	.305	.078	.312	1.687	.110	1.830	.070	.275	.180	1.844
Z	AA	AB	AC	AD	AE	AF	AG	AH	AJ	AK	AL	AM	AN	AP	AR

MIT DASH NUMBERS

AS APPLICABLE		UNLESS OTHERWISE SPECIFIED DIMENSIONS ARE IN INCHES TOLERANCES ON 2 PLACE DECIMALS ± 3 PLACE DECIMALS ± .005 ANGLES ±	MIT INSTRUMENTATION LAB CAMBRIDGE MASS DWG NO / CONTRACT	MANNED SPACECRAFT CENTER HOUSTON, TEXAS
NEXT ASSY	USED ON	DO NOT SCALE THIS DRAWING	DRAWN R.A. JONES DATE 16 JUL 65 CHECKED W. KUPFER 22 JUL 65 APPROVAL CONTRACT	NAMEPLATES, APOLLO GEN - GSE (STANDARDS)
APPLICATION		MATERIAL SEE NOTE 11 APPROVAL	T. MICHAELS 22 JUL 65 NASA APPROVAL W. KUPFER 22 JUL 65 MIT APPROVAL	SIZE J2 CODE IDENT NO. 80230 1004260 SCALE NONE SHEET 5 OF 6

1004260 DK

1004260

1004260 DK SHT 5

2/1004260

DASH NO.	P/C	PART NAME	REMARKS	PART NUMBER	SER. NO.	CONT. NO.	STYLE	TYPE	MATERIAL	A	B	C	D	E	F	G	H	J	K	L	M
599	AC																				
598	AC																				
593		PSA ADAPTER MODULE (LEM)		6900088-041		NAS9-497	B	II	NOTE 11C	FOR DIMENSIONS SEE DASH [illegible]4 VALUES											
592	AC	CSL, COOL & PWR, G&N		1902134-041			B	II	NOTE 11C	FOR DIMENSIONS SEE DASH 586 VALUES											
591	AC	COOLANT SUPPLY		1902133-031			B	II	NOTE 11C	FOR DIMENSIONS SEE DASH 586 VALUES											
590		PSA ADAPTER MODULE (BLK II)		2901143-031		NAS9-497	B	II	NOTE 11C	FOR DIMENSIONS SEE DASH [illegible]4 VALUES											
589	AC	G&N INDICATOR CONTROL PANEL ASSY		2021290-061		FOR OTHER DATA SEE DASH 181															
588	AC	G&N INDICATOR CONTROL PANEL ASSY		2021290-051		FOR OTHER DATA SEE DASH 181															
587		AUXILIARY BATTERY PACK		1901492-051		FOR OTHER DATA SEE DASH 586															
586	AC	BATTERY POWER PACK		1900011-061		NAS-9-497	B	II	NOTE 11C	4.125	1.812	3.250	NA	.125	.062	.12	.156	[illegible]	.125	1.625	1.14
585		ANALYZER, OPTICS INERTIAL		2900023-051		FOR OTHER DATA SEE DASH 536															
584		ETHYLENE GLYCOL CLEANING KIT		2901630-011		NAS-9-497	B	I	NOTE 11B	4.000	2.625	3.380	NA	.260	.093	.156	.160	NA	NA	[illegible]	1.44
583		SWITCH CROSS BAR ASSY		1900048-021		FOR OTHER DATA SEE DASH 102															
582	AC	G&N INDICATOR CONTROL PANEL ASSY		2021290-041		FOR OTHER DATA SEE DASH 181															
581	AC	G&N INDICATOR CONTROL PANEL ASSY		2021323-021		FOR OTHER DATA SEE DASH 181															
580		AUXILIARY BATTERY PACK		1901492-041		FOR OTHER DATA SEE DASH 565															
579	AC	COMPUTER CONT & RETICLE DIMMER		6014512-081		FOR OTHER DATA SEE DASH 534															
578	AC	G&N INDICATOR CONTROL PANEL ASSY		2021290-031		FOR OTHER DATA SEE DASH 181															
577		BREAKOUT BOX, CABLE ADAPTER		2901011-021		FOR OTHER DATA SEE DASH 506															
576		FIX., MOUNTING G&N		2900067-061		FOR OTHER DATA SEE DASH 500															
575		CSL, CAL AND TEST, SCM/PSAAM		2900895-041		FOR DATA SEE DASH 559															
574		CONT., TEMP PORTABLE		2900060-031		NAS-9-497	B	II	NOTE 11C	FOR DIMENSIONS SEE DASH 535 VALUES											
573		BATTERY PACK LIFTING		2900812-031		NAS-9-497	B	II	NOTE 11C	FOR DIMENSIONS SEE DASH 542 VALUES											
572		FIX., MOUNTING G&N	(-144)	2900067-051		NAS-9-497	B	II	NOTE 11C	FOR DIMENSIONS SEE DASH 500 VALUES											
571		EYEPIECE STORAGE UNIT		2021382		FOR OTHER DATA SEE DASH 100															
570	AC	OPTICAL UNIT & BELLOWS ASSY				NAS-9-497	A	I	NOTE 11B	FOR DIMENSIONS SEE DASH 550 VALUES											
569	AC	G & N INDICATOR CONTROL PANEL ASSY		2021323-011		NAS-9-497	A	I	NOTE 11B	FOR DIMENSIONS SEE DASH 181											
568	AC	G & N INDICATOR CONTROL PANEL ASSY		2021290-021		NAS-9-497	A	I	NOTE 11B	FOR DIMENSIONS SEE DASH 181											
567	AC	G & N INDICATOR CONTROL PANEL ASSY		2021290011		NAS-9-497	A	I	NOTE 11B	FOR DIMENSIONS SEE DASH 181											
566	AC	COMPUTER CONT & RETICLE DIMMER		6014512-061		NAS-9-497	A	I	NOTE 11B	FOR DIMENSIONS SEE DASH 534											
565		AUXILIARY BATTERY PACK		1901492-031		NAS-9-497	B	II	NOTE 11C	FOR DIMENSIONS SEE DASH 500											
564		BATTERY POWER PACK		1900011-051		NAS-9-497	B	II	NOTE 11C	FOR DIMENSIONS SEE DASH 500											
563		PSA ADAPTER MODULE (LEM)		6900088-031		NAS-9-497	B	II	NOTE 11C	FOR DIMENSIONS SEE DASH 141 VALUES											
562	AC	COMPUTER CONT & RETICLE DIMMER		6014512-041		NAS-9-497	A	I	NOTE 11B	FOR DIMENSIONS SEE DASH 534 VALUES											
561	AC	G & N INDICATOR CONTROL PANEL ASSY		2014578-031		NAS-9-497	A	I	NOTE 11B	FOR DIMENSIONS SEE DASH 181 VALUES											
560		ADPT. MODULE, PSA		2901143-021		NAS-9-497	B	II	NOTE 11C	FOR DIMENSIONS SEE DASH 141 VALUES											
559		CSL. CAL AND TEST, SCM/PSAAM		2900895-031		FOR OTHER DATA SEE DASH 547															
558		PSA ADAPTER MODULE (LEM)		6900088-021		FOR OTHER DATA SEE DASH 189															
557		FIX., HANDLING, C/M PSA		2900998-021		NAS-9-497	B	II	NOTE 11C	FOR DIMENSIONS SEE DASH 141 VALUES											
556		FIX., MOUNTING G & N	(-144)	2900067-041		NAS-9-497	B	II	NOTE 11C	FOR DIMENSIONS SEE DASH 500 VALUES											
555	AC	OPTICAL UNIT ASSEMBLY		1021368-061		NAS-9-497	A	I	NOTE 11B	2.000	1.312	1.687	1.375	.078	.048	.078	.093	NA	NA	1.125	.750
554	AC	OPTICAL UNIT ASSEMBLY		1021368-041		NAS-9-497	A	I	NOTE 11B	2.000	1.312	1.687	1.375	.078	.048	.078	.093	NA	NA	1.125	.750
553	AC	OPTICAL UNIT AND BELLOWS ASSEMBLY		2010790-111		NAS-9-497	A	I	NOTE 11B	2.000	1.312	1.687	1.375	.078	.048	.078	.093	NA	NA	1.125	.750
552	AC	OPTICAL UNIT AND BELLOWS ASSEMBLY		2010790-081		NAS-9-497	A	I	NOTE 11B	2.000	1.312	1.687	1.375	.078	.048	.078	.093	NA	NA	1.125	.750
551	AC	OPTICAL UNIT AND BELLOWS ASSEMBLY		2010790-071		NAS-9-497	A	I	NOTE 11B	2.000	1.312	1.687	1.375	.078	.048	.078	.093	NA	NA	1.125	.750
550	AC	OPTICAL UNIT AND BELLOWS ASSEMBLY		2010790-061		NAS-9-497	A	I	NOTE 11B	2.000	1.312	1.687	1.375	.078	.048	.078	.093	NA	NA	1.125	.750
548		CAGING ELECTRONICS, GYRO		2900029-031		NAS-9-497	B	II	NOTE 11C	2.125	.968	1.718	NA	.093	.031	.06	.093	[illegible]	.093	.858	.608
547		CSL, CAL AND TEST, SCM/PSAAM		2900895-021		NAS-9-497	B	II	NOTE 11C	4.125	1.812	3.250	NA	.125	.062	.12	.156		.125	1.625	1.140
546		FIX., HAND., C/M AND LEM CDU		2900999-021		NAS-9-497	B	II	NOTE 11C	2.125	.968	1.718	NA	.093	.031	.06	.093	[illegible]	.093	.858	.608
545	AC	G & N INDICATOR CONTROL PANEL ASSY		2014578-021		NAS-9-497	A	I	NOTE 11B	3.000	1.938	2.437	NA	.125	.062	.188	.156	NA	NA	1.750	1.125
544		ADPT MODULE, P.S.A.		1902431-051		NAS-9-497	B	II	NOTE 11C	2.125	.968	1.718	NA	.093	.031	.06	.093	[illegible]	.093	.858	.608
543	AC	PANEL, MONITOR		2900031-041		NAS-9-497	B	II	NOTE 11C	2.125	.968	1.718	NA	.093	.031	.06	.093		.093	.858	.608
542	AC	BATTERY PACK, LIFTING		2900812-021		NAS-9-497	B	II	NOTE 11C	2.125	.968	1.718	NA	.093	.031	.06	.093		.093	.858	.608
541	AC	FIXTURE, MOUNTING, IMU		2900000-021		NAS-9-497	B	II	NOTE 11C	4.125	1.812	3.250	NA	.125	.062	.12	.156		.125	1.625	1.140
540	AC	ADPT, TEST POINT, P.S.A.		2900037-031		NAS-9-497	B	II	NOTE 11C	2.125	.968	1.718	NA	.093	.031	.06	.093	[illegible]	.093	.858	.608
539	AC	ANNUNCIATOR PANEL & EYEPIECE STORAGE ASSEMBLY		1021255-041		NAS-9-497	A	I	NOTE 11B	2.000	1.312	1.906	1.375	.078	.048	.078	.093	NA	NA	1.125	.750
538	AC	ANNUNCIATOR PANEL & EYEPIECE STORAGE ASSEMBLY		1021255-031		NAS-9-497	A	I	NOTE 11B	2.000	1.312	1.906	1.375	.078	.048	.078	.093	NA	NA	1.125	.750
537	AC	TEST SELECTOR		2900028-031		NAS-9-497	B	II	NOTE 11C	2.125	.968	1.718	NA	.093	.031	.06	.093	[illegible]	.093	.858	.608
536	AC	ANALYZER, OPTICS-INERTIAL		2900023-041		NAS-9-497	B	II	NOTE 11C	4.125	1.812	3.250	NA	.125	.062	.12	.156		.125	1.625	1.140
535	AC	CONT, TEMP, PORTABLE		2900060-021		NAS-9-497	B	II	NOTE 11C	2.125	.968	1.718	NA	.093	.031	.06	.093	[illegible]	.093	.858	.608
534	AC	COMPUTER CONT & RETICLE DIMMER		6014512-021		NAS-9-497	A	I	NOTE 11B	2.000	1.312	1.906	1.375	.078	.048	.078	.093	NA	NA	1.125	.750
533	AC	ADPT MODULE, P.S.A.		1902431-041		NAS-9-497	B	II	NOTE 11C	2.125	.968	1.718	NA	.093	.031	.06	.093	[illegible]	.093	.858	.608
532	AC	TRAY BREAKOUT, 105 PIN		1900807-021		NAS-9-497	B	II	NOTE 11C	4.125	1.812	3.250	NA	.125	.062	.12	.156		.125	1.625	1.140
531	AC	TRAY BREAKOUT, 84 PIN		1900806-021		NAS-9-497	B	II	NOTE 11C	4.125	1.812	3.250	NA	.125	.062	.12	.156		.125	1.625	1.140
530	AC	HEAT SINK-TRAY EXTENDER		1900808-021		NAS-9-497	B	II	NOTE 11C	2.125	.968	1.718	NA	.093	.031	.06	.093		.093	.858	.608
529	AC	TESTER, FAILURE INDICATOR		1900809-021		NAS-9-497	B	II	NOTE 11C	2.125	.968	1.718	NA	.093	.031	.06	.093	[illegible]	.093	.858	.608
527	AC	FIX., MOUNTING, G & N	(-144)	1902204-021		NAS-9-497	B	II	NOTE 11C	FOR DIMENSIONS SEE DASH 500 VALUES BELOW											
526	AC	FIX., MOUNTING, G & N	(-144)	2900067-031		NAS-9-497	B	II	NOTE 11C	FOR DIMENSIONS SEE DASH 500 VALUES BELOW											
525	AC	PORTABLE TEMP. CONTROLLER		1900496-021		NAS-9-497	B	II	NOTE 11C	3.000	1.937	2.437	2.312	.125	.031	.125	.156	.125	.125	1.718	1.187
524	AC	POWER, SERVO & THERMOCOUPLE ASSEMBLY C/M		2010743		NAS-9-497	A	I	NOTE 11B	2.125	.968	1.718	NA	.093	.031	.06	.093	NA	NA	.858	.608
523	AC	PULSE TORQUE AND THERMOCOUPLE ASSEMBLY-LEM		6010656		NAS-9-497	A	I	NOTE 11B	FOR DIMENSIONS SEE DASH 508 VALUES BELOW											
522	AC	COUPLING DATA UNIT & THERMOCOUPLE ASSEMBLY-LEM		2010744		NAS-9-497	A	I	NOTE 11B	FOR DIMENSIONS SEE DASH 508 VALUES BELOW											
521	AC	COUPLING DATA UNIT & THERMOCOUPLE ASSEMBLY-C/M		2010744		NAS-9-497	A	I	NOTE 11B	FOR DIMENSIONS SEE DASH 508 VALUES BELOW											
520	AC	PIPA ELECTRONICS AND THERMOCOUPLE ASSEMBLY		2010745		NAS-9-497	A	I	NOTE 11B	FOR DIMENSIONS SEE DASH 508 VALUES BELOW											
519	AC	FIXTURE, HANDLING, LEM-PSA	(-141)	6900129-011		NAS-9-497	B	II	NOTE 11C	FOR DIMENSIONS SEE DASH 504 VALUES BELOW											
518	AC	JUNCTION BOX, GSE-PSA	(-144)	1901933-031		NAS-9-497	B	II	NOTE 11C	FOR DIMENSIONS SEE DASH 500 VALUES BELOW											
517	AC	FIX., HAND., OPTICS INSTL.	(-141)	2901380-011		NAS-9-497	B	II	NOTE 11C	FOR DIMENSIONS SEE DASH 502 VALUES BELOW											
516	AC	POWER, SERVO AND THERMOCOUPLE ASSEMBLY-LEM		6010655		NAS-9-497	A	I	NOTE 11B	FOR DIMENSIONS SEE DASH 508 VALUES BELOW											
514	AC	SIGNAL COND. ASSY LEM OPER.	(-100)	6007013		NAS-9-497	A	I	NOTE 11B	FOR DIMENSIONS SEE DASH 508 VALUES BELOW											
513	AC	JUMPER, BY-PASS	(-141)	1021616		NAS-9-497	B	II	NOTE 11C	2.125	.968	1.718	NA	.093	.031	.06	.093	[illegible]	.093	.858	.608
512	AC	COUPLING DATA UNIT ASSEMBLY C/M	(-100)	2007322-011		NAS-9-497	A	I	NOTE 11B	FOR DIMENSIONS SEE DASH 508 VALUES BELOW											
511	AC	COUPLING DATA UNIT ASSEMBLY-LEM	(-100)	2007322-021		NAS-9-497	A	I	NOTE 11B	FOR DIMENSIONS SEE DASH 508 VALUES BELOW											
510	AC	BATTERY POWER PACK	(-144)	1900011-041		NAS-9-497	B	II	NOTE 11C	FOR DIMENSIONS SEE DASH 500 VALUES BELOW											
509	AC	JUNCTION BOX, P.S.A./G.S.E.	(-144)	1902195-021		NAS-9-497	B	II	NOTE 11C	FOR DIMENSIONS SEE DASH 500 VALUES BELOW											
508	AC	NAVIGATION BASE ASSEMBLY-LEM	(-101)	6899980		NAS-9-497	A	I	NOTE 11B	2.000	1.312	1.906	1.375	.078	.048	.078	.093	NA	NA	1.125	.750
507	AC	CSL, COOL, AND PWR, G AND N	(-144)	1902134-041		NAS-9-497	B	II	NOTE 11C	FOR DIMENSIONS SEE DASH 500 VALUES BELOW											
506	AC	BREAKOUT BOX, CABLE ADAPTER	(-141)	2901011-011		NAS-9-497	B	II	NOTE 11C	2.125	.968	1.718	NA	.093	.031	.06	.093	[illegible]	.093	.858	.608
505	AC	MONITOR AND CONTROL, TEMP	(-141)	2900026-021		NAS-9-497	B	II	NOTE 11C	2.125	.968	1.718	NA	.093	.031	.06	.093		.093	.858	.608
504	AC	PWR SUP, GUIDANCE SYSTEM	(-141)	1900033-021		NAS-9-497	B	II	NOTE 11C	2.125	.968	1.718	NA	.093	.031	.06	.093		.093	.858	.608
503	AC	CONTROL, GIMBAL POSITION	(-141)	2900036-021		NAS-9-497	B	II	NOTE 11C	2.125	.968	1.718	NA	.093	.031	.06	.093		.093	.858	.608
502	AC	ADPT, TEST POINT, PTA/PEA.	(-141)	2900145-021		NAS-9-497	B	II	NOTE 11C	2.125	.968	1.718	NA	.093	.031	.06	.093	[illegible]	.093	.858	.608
501	AC	MOUNTING PLATE, COMPONENT	(-144)	6900007-031		NAS-9-497	B	II	NOTE 11C	FOR DIMENSIONS SEE DASH 500 VALUES BELOW											
500	AC	MOUNTING PLATE, COMPONENT	(-144)	2900677-021		NAS-9-497	B	II	NOTE 11C	4.125	1.812	3.250	NA	.125	.062	.12	.156	[illegible]	.125	1.625	1.140

NOTES FOR TABLE

STYLE A IS FOR G & N SYSTEM
STYLE B IS FOR GROUND SUPPORT EQUIPMENT
TYPE I IS WITHOUT MOUNTING HOLES
TYPE II IS WITH MOUNTING HOLES

1004260	DK	SHT 6

1/1004260

REVISIONS					
SYM	ZONE	DESCRIPTION	CHG NO	DATE	APPD
CL		REPLACES REV CK WITH CHANGE PER TDRR 34365		9/28/67	JWL RWH
CM		REVISED PER TDRR 34395		17 OCT. 67	RAW.
CN		REVISED PER TDRR 34467		31 OCT 67	JRK
CP		REVISED PER TDRR 34855		6 NOV 67	EMS
CR		REVISED PER TDRR 35164		7 DEC 67	DKD RWH
CS		REVISED PER TDRR 35307		3 JAN 68	EHW
CT		REVISION STATUS CHANGED		9 FEB 68	LK RWH
CU		REVISED PER TDRR 35628		22 FEB 68	JRK
CV		REVISED PER TDRR 35675		27 FEB 68	LK
CW		REVISED PER TDRR 35970		5 APR 68	
CY		REVISION STATUS CHANGED		16 APR 68	A.N. BLP
CZ		REVISED PER TDRR 36245		23 MAY 68	
DA		REVISED PER TDRR 36324		17 JUN 68	
DB		REVISED PER TDRR 36742		12 SEP 68	
DC		REVISED PER TDRR 37114		16 DEC 68	LK
DD		REVISED PER TDRR 37146		30 DEC 68	
DE		REVISED PER TDRR 37251		23 JAN 69	
DF		REVISED PER TDRR 37262		27 JAN 69	LK RW
DG		REVISED PER TDRR 37811		26 SEP 69	
DH		REVISED PER TDRR 37820		29 SEP 69	
DJ		REVISED PER TDRR 38205		11 SEP 70	
DK		REVISED PER TDRR 38282		23 NOV 70	BLP

B	E	F	G	H	J	K	L	M	N	P	R	S	T	U	V	W	Y	Z	AA	AB	AC	AD	AE	AF	AG	AH	AJ	AK	AL	AM	AN	AP	AR	AS	AT
SEE DASH [illegible] VALUES																																			
SEE DASH [illegible] VALUES																																			
SEE DASH [illegible] VALUES																																			
SEE DASH [illegible] VALUES																																			
NA	.125	.062	.2	.156	.32	.25	.625	1.40	.890	.640	1.390	NA	NA	.125	1.875	1.650	2.625	.250	1.562	3.843	.093	NA	NA	.408	.125	.437	3.688	NA	3.687	.093	.625	.31	3.875	.062	NA
NA	.260	.093	.156	[illegible]	NA	NA	2.290	1.440	1.180	.940	1.900	NA	.375	.125	NA	1.790	2.760	.312	NA	3.590	.093	.062	NA	.525	NA	NA	NA	.275	NA	.093	.480	.430	NA	NA	3.670
SEE DASH 535 VALUES																																			
SEE DASH 542 VALUES																																			
SEE DASH 500 VALUES																																			
SEE DASH 550 VALUES																																			
SEE DASH 181																																			
SEE DASH 181																																			
SEE DASH 181																																			
SEE DASH 534																																			
SEE DASH 500																																			
SEE DASH 500																																			
SEE DASH 141 VALUES																																			
SEE DASH 534 VALUES																																			
SEE DASH 181 VALUES																																			
SEE DASH 141 VALUES																																			
SEE DASH 141 VALUES																																			
SEE DASH 500 VALUES																																			
1.375	.078	.0483	.078	.093	NA	NA	1.125	.750	.593	.453	1.015	.062	.187	.078	.875	.718	1.375	.218	NA	NA	.048	.031	.875	.305	NA	.468	1.531	NA	NA	.078	.312	.187	NA		
1.375	.078	.0483	.078	.093	NA	NA	1.125	.750	.593	.453	1.015	.062	.187	.078	.875	.718	1.375	.218	NA	NA	.048	.031	.875	.305	NA	.468	1.531	NA	NA	.078	.312	.187	NA		
1.375	.078	.0483	.078	.093	NA	NA	1.125	.750	.593	.453	1.015	.062	.187	.078	.875	.718	1.375	.218	NA	NA	.048	.031	.875	.305	NA	.468	1.531	NA	NA	.078	.312	.187	NA		
1.375	.078	.0483	.078	.093	NA	NA	1.125	.750	.593	.453	1.015	.062	.187	.078	.875	.718	1.375	.218	NA	NA	.048	.031	.875	.305	NA	.468	1.531	NA	NA	.078	.312	.187	NA		
1.375	.078	.0483	.078	.093	NA	NA	1.125	.750	.593	.453	1.015	.062	.187	.078	.875	.718	1.375	.218	NA	NA	.048	.031	.875	.305	NA	.468	1.531	NA	NA	.078	.312	.187	NA		
1.375	.078	.0483	.078	.093	NA	NA	1.125	.750	.593	.453	1.015	.062	.187	.078	.875	.718	1.375	.218	NA	NA	.048	.031	.875	.305	NA	.468	1.531	NA	NA	.078	.312	.187	NA		
NA	.093	.0311	.06	.093	.100 .104	.093	.858	.608	.484	.358	.733	.077	.116	.062	.937	.875	1.343	.125	.781	1.892	.046	NA	NA	.209	.093	.250	1.875	NA	1.840	.046	.23	.16	1.938		
NA	.125	.0622	.12	.156		.125	1.625	1.140	.890	.640	1.390	.125	.171	.125	1.875	1.687	2.625	.250	1.562	3.843	.093	NA	NA	.359	.125	.437	3.688	NA	3.687	.093	.40	.25	3.875		
NA	.093	.0311	.06	.093	.100 .104	.093	.858	.608	.484	.358	.733	.077	.116	.062	.937	.875	1.343	.125	.781	1.892	.046	NA	NA	.209	.093	.250	1.875	NA	1.840	.046	.23	.16	1.938		
NA	.125	.0622	.188	.156	NA	NA	1.750	1.125	.906	.688	1.500	NA	.281	.125	NA	1.094	2.062	.312	NA	2.500	.062	.125	1.312	.469	NA	NA	NA	.156	NA	.125	.469	.344	NA		
NA	.093	.0311	.06	.093	.100 .104	.093	.858	.608	.484	.358	.733	.077	.116	.062	.937	.875	1.343	.125	.781	1.892	.046	NA	NA	.209	.093	.250	1.875	NA	1.840	.046	.23	.16	1.938		
NA	.093	.0311	.06	.093		.093	.858	.608	.484	.358	.733	.077	.116	.062	.937	.875	1.343	.125	.781	1.892	.046	NA	NA	.209	.093	.250	1.875	NA	1.840	.046	.23	.25	1.938		
NA	.093	.0311	.06	.093		.093	.858	.608	.484	.358	.733	.077	.116	.062	.937	.875	1.343	.125	.781	1.892	.046	NA	NA	.209	.093	.250	1.875	NA	1.840	.046	.23	.16	1.938		
[illegible]	.125	.0622	.12	.156		.125	1.625	1.140	.890	.640	1.390	.125	.171	.125	1.875	1.687	2.625	.250	1.562	3.843	.093	NA	NA	.359	.125	.437	3.688	NA	3.687	.093	.40	.25	3.875		
[illegible]	.093	.0311	.06	.093	.100 .104	.093	.858	.608	.484	.358	.733	.077	.116	.062	.937	.875	1.343	.125	.781	1.892	.046	NA	NA	.209	.093	.250	1.875	NA	1.840	.046	.23	.16	1.938		
1.375	.078	.0488	.078	.093	NA	NA	1.125	.750	.593	.453	1.015	.062	.187	.078	.875	.718	1.375	.218	NA	NA	.048	.031	.875	.305	.078	.531	1.906	.078	NA	.078	.531	.187	NA		
1.375	.078	.0488	.078	.093	NA	NA	1.125	.750	.593	.453	1.015	.062	.187	.078	.875	.718	1.375	.218	NA	NA	.048	.031	.875	.305	.078	.531	1.906	.078	NA	.078	.531	.187	NA		
NA	.093	.0311	.06	.093	.100 .104	.093	.858	.608	.484	.358	.733	.077	.116	.062	.937	.875	1.343	.125	.781	1.892	.046	NA	NA	.209	.093	.250	1.875	NA	1.840	.046	.23	.16	1.938		
NA	.125	.0622	.12	.156		.125	1.625	1.140	.890	.640	1.390	.125	.171	.125	1.875	1.687	2.625	.250	1.562	3.843	.093	NA	NA	.359	.125	.437	3.688	NA	3.687	.093	.40	.25	3.875		
NA	.093	.0311	.06	.093	.100 .104	.093	.858	.608	.484	.358	.733	.077	.116	.062	.937	.875	1.343	.125	.781	1.892	.046	NA	NA	.209	.093	.250	1.875	NA	1.840	.046	.23	.16	1.938		
1.375	.078	.0468	.078	.093	NA	NA	1.125	.750	.593	.453	1.015	.062	.187	.078	.875	.718	1.375	.218	NA	NA	.048	.031	.875	.305	.078	.531	1.906	.078	NA	.078	.531	.187	NA		
NA	.093	.0311	.06	.093	.100 .104	.093	.858	.608	.484	.358	.733	.077	.116	.062	.937	.875	1.343	.125	.781	1.892	.046	NA	NA	.209	.093	.250	1.875	NA	1.840	.046	.23	.16	1.938		
NA	.125	.0622	.12	.156		.125	1.625	1.140	.890	.640	1.390	.125	.171	.125	1.875	1.687	2.625	.250	1.562	3.843	.093	NA	NA	.359	.125	.437	3.688	NA	3.687	.093	.40	.25	3.875		
NA	.125	.0622	.12	.156		.125	1.625	1.140	.890	.640	1.390	.125	.171	.125	1.875	1.687	2.625	.250	1.562	3.843	.093	NA	NA	.359	.125	.437	3.688	NA	3.687	.093	.40	.25	3.875		
NA	.093	.0311	.06	.093		.093	.858	.608	.484	.358	.733	.077	.116	.062	.937	.875	1.343	.125	.781	1.892	.046	NA	NA	.209	.093	.250	1.875	NA	1.840	.046	.23	.16	1.938		
NA	.093	.0311	.06	.093	.100 .104	.093	.858	.608	.484	.358	.733	.077	.116	.062	.937	.875	1.343	.125	.781	1.892	.046	NA	NA	.209	.093	.250	1.875	NA	1.840	.046	.23	.16	1.938		
SEE DASH 501 VALUES BELOW																																			
SEE DASH 501 VALUES BELOW																																			
2.312	.125	.0311	.125	.156	.125	.125	1.718	1.187	.968	.749	1.452	.093	.295	.090	1.312	1.00	2.000	.250	1.687	2.750	.062	NA	NA	.463	.125	.562	2.437	.140	2.562	.090	.468	.359	2.750		
NA	.093	.0311	.06	.093	NA	NA	.858	.608	.484	.358	.733	.062	.140	.062	NA	.968	1.450	.125	NA	1.720	.046	.03	NA	.210	NA	NA	NA	.070	NA	.046	.32	.16	NA		
SEE DASH 501 VALUES BELOW																																			
SEE DASH 501 VALUES BELOW																																			
SEE DASH 501 VALUES BELOW																																			
SEE DASH 501 VALUES BELOW																																			
SEE DASH 501 VALUES BELOW																																			
SEE DASH 501 VALUES BELOW																																			
SEE DASH 501 VALUES BELOW																																			
SEE DASH 501 VALUES BELOW																																			
SEE DASH 501 VALUES BELOW																																			
NA	.093	.031	.06	.093	.100 .104	.093	.858	.608	.484	.358	.733	.077	.116	.062	.937	.875	1.343	.125	.781	1.892	.046	NA	NA	.209	.093	.250	1.875	NA	1.840	.046	.23	.16	1.938		
SEE DASH 501 VALUES BELOW																																			
SEE DASH 501 VALUES BELOW																																			
SEE DASH 501 VALUES BELOW																																			
SEE DASH 501 VALUES BELOW																																			
1.375	.078	.048	.078	.093	NA	NA	1.125	.750	.593	.453	1.015	.062	.187	.078	.875	.718	1.375	.218	NA	NA	.048	.031	.875	.305	.078	.531	1.906	.078	NA	.078	.531	.187	NA		
SEE DASH 501 VALUES BELOW																																			
NA	.093	.031	.06	.093	.100 .104	.093	.858	.608	.484	.358	.733	.077	.116	.062	.937	.875	1.343	.125	.781	1.892	.046	NA	NA	.209	.093	.250	1.875	NA	1.840	.046	.23	.16	1.938		
NA	.093	.031	.06	.093		.093	.858	.608	.484	.358	.733	.077	.116	.062	.937	.875	1.343	.125	.781	1.892	.046	NA	NA	.209	.093	.250	1.875	NA	1.840	.046	.23	.16	1.938		
NA	.093	.031	.06	.093		.093	.858	.608	.484	.358	.733	.077	.116	.062	.937	.875	1.343	.125	.781	1.892	.046	NA	NA	.209	.093	.250	1.875	NA	1.840	.046	.23	.16	1.938		
NA	.093	.031	.06	.093		.093	.858	.608	.484	.358	.733	.077	.116	.062	.937	.875	1.343	.125	.781	1.892	.046	NA	NA	.209	.093	.250	1.875	NA	1.840	.046	.23	.16	1.938		
NA	.093	.031	.06	.093	.100 .104	.093	.858	.608	.484	.358	.733	.077	.116	.062	.937	.875	1.343	.125	.781	1.892	.046	NA	NA	.209	.093	.250	1.875	NA	1.840	.046	.23	.16	1.938		
SEE DASH 501 VALUES BELOW																																			
NA	.125	.062	.12	.156	.100 .104	.125	1.625	1.140	.890	.640	1.390	.125	.171	.125	1.875	1.687	2.625	.250	1.562	3.843	.093	NA	NA	.359	.125	.437	3.688	NA	3.687	.093	.40	.25	3.875		

AC ELECTRONICS DASH NUMBERS

UNLESS OTHERWISE SPECIFIED DIMENSIONS ARE IN INCHES TOLERANCES ON 2 PLACE DECIMALS ± 3 PLACE DECIMALS ± .005 ANGLES ±	M I T INSTRUMENTATION LAB CAMBRIDGE, MASS DRAWN R. A. JONES DATE 16 JUL 65 CHECKED W. KUPFER 22 JUL 65 APPROVAL	MANNED SPACECRAFT CENTER HOUSTON, TEXAS NAMEPLATES, APOLLO G&N - GSE (STANDARDS)
DO NOT SCALE THIS DRAWING MATERIAL SEE NOTE II	CONTRACT T. MICHAELS 22 JUL 65 NASA APPROVAL W. KUPFER 22 JUL 65 MIT APPROVAL	SIZE J2 CODE IDENT NO 80230 1004260 SCALE NONE SHEET 6 OF 6

AS APPLICABLE

NEXT ASSY	USED ON
APPLICATION	

REVISIONS TDRR 02768

Ⓜ

ZONE	SYM	DESCRIPTION	DATE	APPROVAL
	A	REVISE & REDRAWN PER TDRR 18087	4/1/65 6APR65	WK

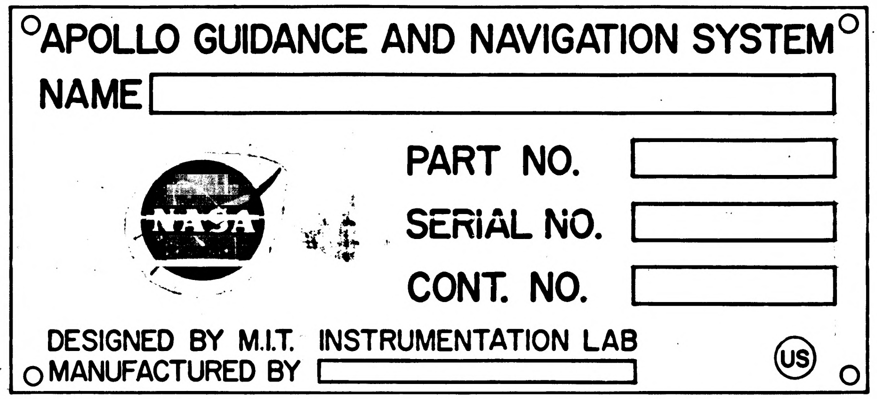

APOLLO GUIDANCE AND NAVIGATION SYSTEM
NAME
NASA
PART NO.
SERIAL NO.
CONT. NO.
DESIGNED BY M.I.T. INSTRUMENTATION LAB
MANUFACTURED BY
US

1004260-1

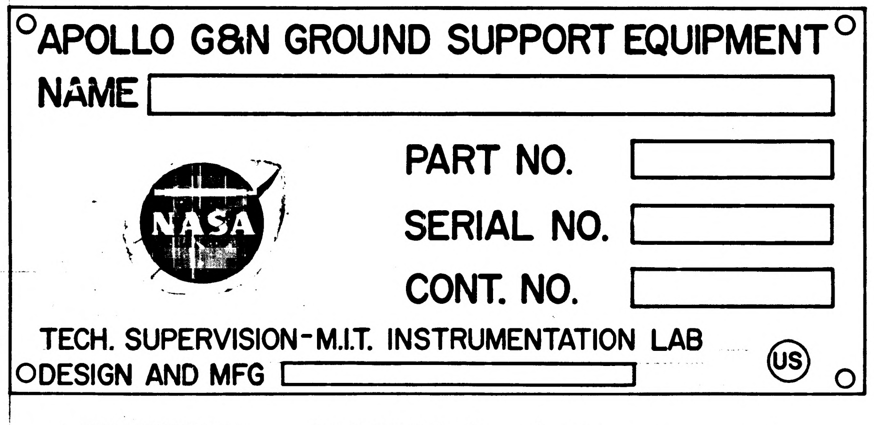

APOLLO G&N GROUND SUPPORT EQUIPMENT
NAME
NASA
PART NO.
SERIAL NO.
CONT. NO.
TECH. SUPERVISION-M.I.T. INSTRUMENTATION LAB
DESIGN AND MFG
US

1004260-2

NOTES:

1. NAMEPLATES TO CONFORM WITH MIL-M-13231.

MASTER

Ⓐ REPLACED WITH CHANGES BY REV B

QTY. REQD.	NOMENCLATURE OR DESCRIPTION	PART OR IDENTIFYING NO.	SPECIFICATION	MATERIAL OR NOTES	FIND NO.

LIST OF PARTS AND MATERIALS

NEXT ASSY	USED ON
APPLICATION	

UNLESS OTHERWISE SPECIFIED
DIMENSIONS ARE IN INCHES
TOLERANCES ON
FRACTIONS -//- DECIMALS -//- ANGLES -//-
DO NOT SCALE THIS DRAWING
MATERIAL: -//-

MIT INSTRUMENTATION LAB
CONTRACT NAS 9-153

		DATE
APPROVED	L. E. Larson	26Aug63
CHECKED	L E Larson	26Aug63
DRAWN	R LANDRY	26AUG63

APPROVED FOR MSC 8/28/63
MIT/IL APPROVAL DATE 8/28/63

NAMEPLATES,
APOLLO G&N
(STANDARDS)

SCALE	UNIT WT.	CODE IDENT.
NONE	—	

MIT
INSTRUMENTATION
LABORATORY
CAMBRIDGE, MASS.
DWG. NO.
MANNED
SPACECRAFT CENTER
HOUSTON TEXAS
NASA DRAWING NO.
1004260
SHEET 1 OF 1

8 7 6 5 4 3 2 1

NOTICE — WHEN GOVERNMENT DRAWINGS, SPECIFICATIONS, OR OTHER DATA ARE USED FOR ANY PURPOSE OTHER THAN IN CONNECTION WITH A DEFINITELY RELATED GOVERNMENT PROCUREMENT OPERATION, THE UNITED STATES GOVERNMENT THEREBY INCURS NO RESPONSIBILITY NOR ANY OBLIGATION WHATSOEVER; AND THE FACT THAT THE GOVERNMENT MAY HAVE FORMULATED, FURNISHED, OR IN ANY WAY SUPPLIED THE SAID DRAWINGS, SPECIFICATIONS OR OTHER DATA IS NOT TO BE REGARDED BY IMPLICATION OR OTHERWISE AS IN ANY MANNER LICENSING THE HOLDER OR ANY OTHER PERSON OR CORPORATION, OR CONVEYING ANY RIGHTS OR PERMISSION TO MANUFACTURE, USE, OR SELL ANY PATENTED INVENTION THAT MAY IN ANY WAY BE RELATED THERETO.

REVISIONS	INITIAL TDRR 02768		
SYM	DESCRIPTION	DATE	APPROVAL
B	REPLACES REV. A PER TDRR 18287	6Apr65	WK

NOTES:

1. INTERPRET DRAWING IN ACCORDANCE WITH STANDARDS PRESCRIBED IN MIL-D-70327.
2. DIMENSIONS ON EACH VIEW APPLY TO ALL VIEWS. (WITH THE EXCEPTION OF MOUNTING HOLES).
3. FORMATS ILLUSTRATED WILL BE APPLICABLE TO ALL ITEMS REQUIRING NAMEPLATES BELOW END ITEM DESIGNATION (SYSTEMS, ASSEMBLIES, ETC.)
4. PLATE BACKGROUND TO BE LUSTERLESS BLACK PER FED-STD-595 COLOR 37038. BORDER, MARKING, & LETTERING TO BE NATURAL METAL (ANODIZED ALUMINUM)
5. MARKING METHOD TO BE DIE STAMPING, ETCHING, OR ENGRAVING IN ACCORDANCE WITH MIL-P-19834
6. LETTERING STYLE TO BE GOTHIC (SANS SERIFS) AND NUMBERS TO BE ARABIC.
7. WHERE LOCATING DIMENSIONS ARE NOT SHOWN, CHARACTERS SHALL BE SYMMETRICALLY POSITIONED.
8. IDENTIFY USING NASA DRAWING NUMBER, REVISION LETTER & MANUFACTURER'S SYMBOL PER ND 1002019.
9. WHEN "AUTO MARK" METAL MARKING TYPEWRITER IS USED TO ADD DATA TO BLANK SPACES, TYPE SIZE IS TO BE SELECTED FROM DIMENSION AC AND U.
10. NASA SYMBOL IS TO BE PROPORTIONATE TO NAMEPLATE. NASA SYMBOL TO HAVE NATURAL BACKGROUND. NASA OUTLINE CIRCLE, LETTERING AND FEATHER TO BE BLACK, (OR WHITE FOR SILK SCREENING).
11. NAMEPLATES WILL APPLIED BY METHODS LISTED BELOW, SHOWN IN ORDER OF PREFERENCE (I.E., FOR RELIABILITY & WEIGHT):
    - A. STENCIL OR SILK SCREEN DIRECTLY ON EQUIPMENT. USING INK PER SCD 1010920, (WHITE OR BLACK).
    - B. ALUMINUM FOIL: (TYPE A):
      FOIL SHALL BE .0030 ± .0005 THICK PER MIL-A-148.
      FOIL SHALL HAVE NO ADHESIVE BACKING.
      FOIL SHALL BE APPLIED PER ND 1002219 (MODIFIED).
      FOIL SHALL BE CLEAR ANODIZED PER MIL-A-8625 TYPE II.
    - C. PLATE (TYPE B):
      MATERIAL: QQ-A-250, TEMPER 0 OR H14, TYPE 1100, ALUMINUM ALLOY .032 THICK.
      ANODIZE PER MIL-A-8625, TYPE II
      ALUMINUM PLATE MUST BE FREE FROM BURRS AND SHARP CORNERS.
      MOUNTED WITH APPLICABLE SIZE FASTENERS.
12. NAMEPLATES SHALL BE CAPABLE OF MEETING APPLICABLE REQUIREMENTS OF MIL-M-13231.

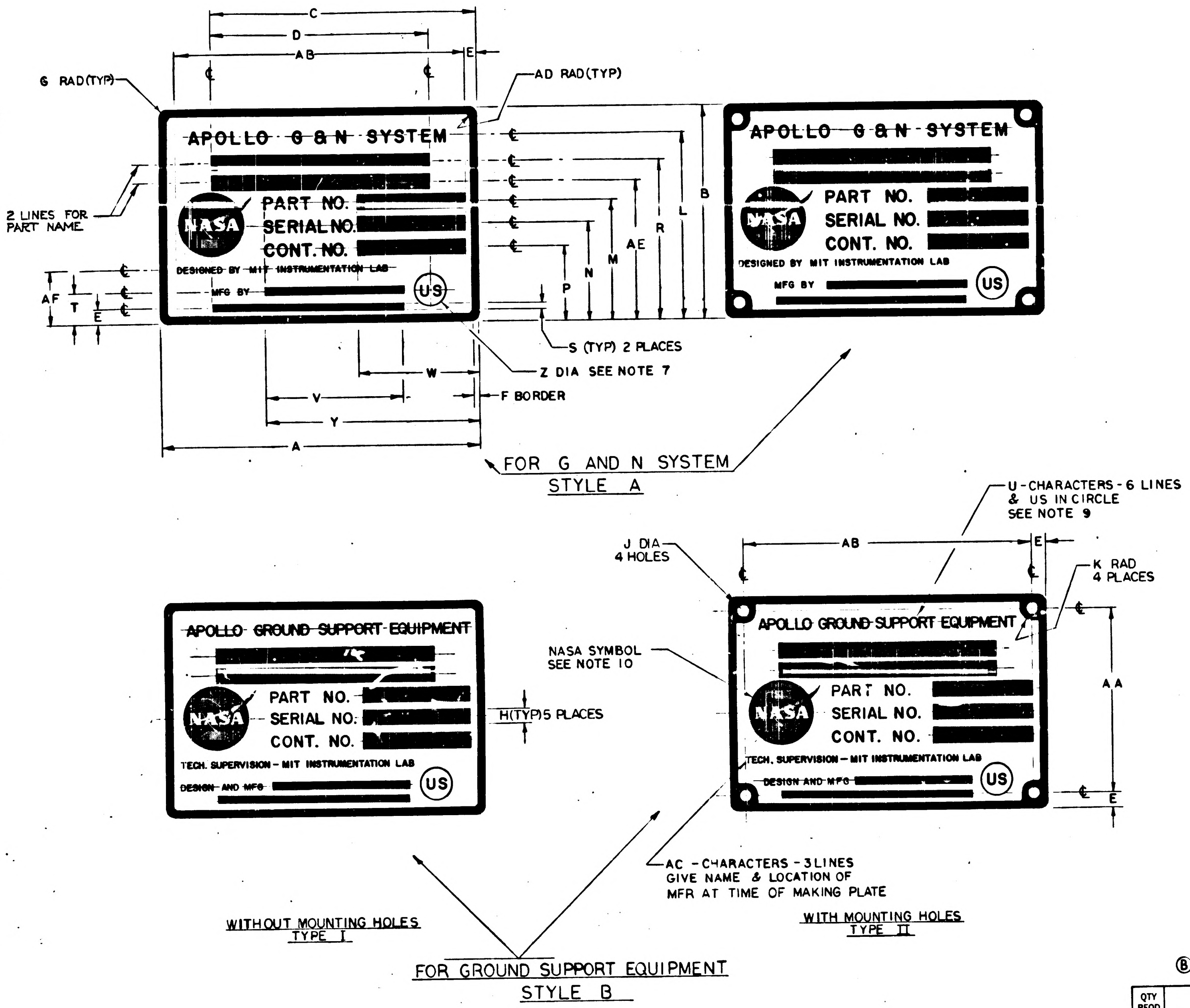
C
D
AB
E
6 RAD (TYP)
AD RAD (TYP)
APOLLO G & N SYSTEM
PART NO.
SERIAL NO.
CONT. NO.
NASA
DESIGNED BY MIT INSTRUMENTATION LAB
MFG BY
US
2 LINES FOR PART NAME
AF
T
E
B
L
R
AE
M
N
P
S (TYP) 2 PLACES
Z DIA SEE NOTE 7
W
V
F BORDER
Y
A
FOR G AND N SYSTEM
STYLE A
U-CHARACTERS-6 LINES & US IN CIRCLE SEE NOTE 9
J DIA 4 HOLES
K RAD 4 PLACES
APOLLO GROUND SUPPORT EQUIPMENT
H (TYP) 5 PLACES
NASA SYMBOL SEE NOTE 10
AA
TECH. SUPERVISION - MIT INSTRUMENTATION LAB
DESIGN AND MFG
AC - CHARACTERS - 3 LINES GIVE NAME & LOCATION OF MFR AT TIME OF MAKING PLATE
WITHOUT MOUNTING HOLES TYPE I
WITH MOUNTING HOLES TYPE II
FOR GROUND SUPPORT EQUIPMENT
STYLE B

Ⓑ REPLACES REV A WITH CHANGES

QTY REQD	PART OR IDENTIFYING NO.	NOMENCLATURE OR DESCRIPTION	FIND NO.
LIST OF MATERIALS			

NEXT ASSY	USED ON
APPLICATION	

UNLESS OTHERWISE SPECIFIED DIMENSIONS ARE IN INCHES
TOLERANCES ON
FRACTIONS ± — DECIMALS ±.005 ANGLES ± —
DO NOT SCALE THIS DRAWING
MATERIAL SEE NOTE 11
HEAT TREATMENT
FINAL FINISH

MIT INSTRUMENTATION LAB
CAMBRIDGE, MASS.
DWG. NO. CONTRACT
DRAWN R A Jones DATE 4-1-65
CHECKED 4-1-65
APPROVAL
APPROVAL
NASA APPROVAL W J R 4-6-65
MIT APPROVAL W Kupfer 6 Apr 65

MANNED SPACECRAFT CENTER
HOUSTON, TEXAS

NAMEPLATES,
APOLLO G&N/GSE
(STANDARDS)

CODE IDENT NO. SIZE D NASA DRAWING NO. 1004260
SCALE NONE WT SHEET 1 OF 2

8 7 6 5 4 3 2 1

NOTICE — WHEN GOVERNMENT DRAWINGS, SPECIFICATIONS, OR OTHER DATA ARE USED FOR ANY PURPOSE OTHER THAN IN CONNECTION WITH A DEFINITELY RELATED GOVERNMENT PROCUREMENT OPERATION, THE UNITED STATES GOVERNMENT THEREBY INCURS NO RESPONSIBILITY NOR ANY OBLIGATION WHATSOEVER; AND THE FACT THAT THE GOVERNMENT MAY HAVE FORMULATED, FURNISHED, OR IN ANY WAY SUPPLIED THE SAID DRAWINGS, SPECIFICATIONS OR OTHER DATA IS NOT TO BE REGARDED BY IMPLICATION OR OTHERWISE AS IN ANY MANNER LICENSING THE HOLDER OR ANY OTHER PERSON OR CORPORATION, OR CONVEYING ANY RIGHTS OR PERMISSION TO MANUFACTURE, USE, OR SELL ANY PATENTED INVENTION THAT MAY IN ANY WAY BE RELATED THERETO.

REVISIONS INITIAL TDRR 02768

SYM	DESCRIPTION	DATE	APPROVAL
B	REPLACES REV. A PER TDRR 18087	6Apr65	WK

DASH NO.	P/C	PART NAME	PART NO.	SERIAL NO.	CONT NO.	STYLE	TYPE	MATERIAL	A	B	C	D	E	F	G	H	J	K	L	M	N	P	R	S	T	U	V	W	Y	Z	AA	AB	AC	AD	AE	AF
9	K	2 IN AUTOCOLLIMATOR	1001702			B	II	NOTE11C	4.000	2.625	3.812	2.750	.156	.093	.156	.187	.125	.156	2.250	1.500	1.187	.906	2.031	.093	.375	.156	1.750	1.437	2.750	.437	2.312	3.687	.062	NA	1.750	.593
8	K	5 IN AUTOCOLLIMATOR	1017410			B	II	NOTE11C	4.000	2.625	3.812	2.750	.156	.093	.156	.187	.125	.156	2.250	1.500	1.187	.906	2.031	.093	.375	.156	1.750	1.437	2.750	.437	2.312	3.687	.062	NA	1.750	.593
7	K	2½ IN AUTOCOLLIMATOR (SCT)	1017435			B	II	NOTE11C	4.000	2.625	3.812	2.750	.156	.093	.156	.187	.125	.156	2.250	1.500	1.187	.906	2.031	.093	.375	.156	1.750	1.437	2.750	.437	2.312	3.687	.062	NA	1.750	.593
6	K	2½ IN AUTOCOLLIMATOR (SXT)	1017448			B	II	NOTE11C	4.000	2.625	3.812	2.750	.156	.093	.156	.187	.125	.156	2.250	1.500	1.187	.906	2.031	.093	.375	.156	1.750	1.437	2.750	.437	2.312	3.687	.062	NA	1.750	.593
5	K	RETROREFLECTING PRISM ASSEMBLY	1019840			B	I	NOTE11B	4.000	2.625	3.812	2.750	.156	.093	.156	.187	NA	NA	2.250	1.500	1.187	.906	2.031	.093	.375	.156	1.750	1.437	2.750	.437	NA	NA	.062	.062	1.750	.593
4	K	S/H SIMULATOR ASSEMBLY	1019836			B	I	NOTE11B	4.000	2.625	3.812	2.750	.156	.093	.156	.187	NA	NA	2.250	1.500	1.187	.906	2.031	.093	.375	.156	1.750	1.437	2.750	.437	NA	NA	.062	.062	1.750	.593
3	K	REFERENCE MIRROR	1001767			B	I	NOTE11B	2.000	1.312	1.906	1.375	.078	.048	.078	.093	NA	NA	1.125	.750	.593	.453	1.015	.062	.187	.078	.875	.718	1.375	.218	NA	NA	.048	.031	.875	.305
2	K	2 IN PLANE READING AUTOCOLLIMATOR	1017413			B	I	NOTE11B	2.000	1.312	1.906	1.375	.078	.048	.078	.093	NA	NA	1.125	.750	.593	.453	1.015	.062	.187	.078	.875	.718	1.375	.218	NA	NA	.048	.031	.875	.305
1	K	2 IN AUTOCOLLIMATOR	1001702			B	I	NOTE 11B	2.000	1.312	1.906	1.375	.078	.048	.078	.093	NA	NA	1.125	.750	.593	.453	1.015	.062	.187	.078	.875	.718	1.375	.218	NA	NA	.048	.031	.875	.305

Ⓑ REPLACES REV. A WITH CHANGES
THIS SHEET ADDED

NOTES FOR TABLE
STYLE A IS FOR G & N SYSTEM.
STYLE B IS FOR GROUND SUPPORT EQUIPMENT
TYPE I IS WITHOUT MOUNTING HOLES.
TYPE II IS WITH MOUNTING HOLES

QTY REQD	PART OR IDENTIFYING NO.	NOMENCLATURE OR DESCRIPTION	FIND NO.

LIST OF MATERIALS

NEXT ASSY	USED ON

APPLICATION

UNLESS OTHERWISE SPECIFIED
DIMENSIONS ARE IN INCHES
TOLERANCES ON
FRACTIONS ± — DECIMALS ±.005 ANGLES ± —
DO NOT SCALE THIS DRAWING

MATERIAL
SEE NOTE 11

HEAT TREATMENT

FINAL FINISH

MIT
INSTRUMENTATION LAB
CAMBRIDGE, MASS.
DWG. NO. CONTRACT

DRAWN R. a Jones DATE 4-1-65
CHECKED Fred Kraemer 4-1-65
APPROVAL E Larson by W. Kupfer
APPROVAL

NASA APPROVAL W J Rhine 4-6-65

MIT APPROVAL W Kupfer 6 Apr 65

MANNED SPACECRAFT CENTER
HOUSTON, TEXAS

NAMEPLATES,
APOLLO G&N/GSE
(STANDARDS)

CODE IDENT NO.
SIZE D
NASA DRAWING NO. 1004260

SCALE NONE
WT
SHEET 2 OF 2

NOTICE — WHEN GOVERNMENT DRAWINGS, SPECIFICATIONS, OR OTHER DATA ARE USED FOR ANY PURPOSE OTHER THAN IN CONNECTION WITH A DEFINITELY RELATED GOVERNMENT PROCUREMENT OPERATION, THE UNITED STATES GOVERNMENT THEREBY INCURS NO RESPONSIBILITY NOR ANY OBLIGATION WHATSOEVER; AND THE FACT THAT THE GOVERNMENT MAY HAVE FORMULATED, FURNISHED, OR IN ANY WAY SUPPLIED THE SAID DRAWINGS, SPECIFICATIONS OR OTHER DATA IS NOT TO BE REGARDED BY IMPLICATION OR OTHERWISE AS IN ANY MANNER LICENSING THE HOLDER OR ANY OTHER PERSON OR CORPORATION, OR CONVEYING ANY RIGHTS OR PERMISSION TO MANUFACTURE, USE, OR SELL ANY PATENTED INVENTION THAT MAY IN ANY WAY BE RELATED THERETO.

REVISIONS	INITIAL TDRR 02768		
SYM	DESCRIPTION	DATE	APPROVAL
B	REPLACES REV. A PER TDRR 18087	6 APR 65	WK
C	REVISED PER TDRR 19743	2 JUN 65	WK
D	REVISED PER TDRR 19901	8 June 65	WK
E	REVISED PER TDRR 19998	10 June 65	WK

NOTES:

1. INTERPRET DRAWING IN ACCORDANCE WITH STANDARDS PRESCRIBED IN MIL-D-70327.
2. DIMENSIONS ON EACH VIEW APPLY TO ALL VIEWS. (WITH THE EXCEPTION OF MOUNTING HOLES).
3. FORMATS ILLUSTRATED WILL BE APPLICABLE TO ALL ITEMS REQUIRING NAMEPLATES BELOW END ITEM DESIGNATION (SYSTEMS, ASSEMBLIES, ETC.)
4. PLATE BACKGROUND TO BE LUSTERLESS BLACK PER FED-STD-595 COLOR 37038. BORDER, MARKING, & LETTERING TO BE NATURAL METAL (ANODIZED ALUMINUM)
5. MARKING METHOD TO BE DIE STAMPING, ETCHING, OR ENGRAVING IN ACCORDANCE WITH MIL-P-19834
6. LETTERING STYLE TO BE GOTHIC (SANS SERIFS) AND NUMBERS TO BE ARABIC.
7. WHERE LOCATING DIMENSIONS ARE NOT SHOWN, CHARACTERS SHALL BE SYMMETRICALLY POSITIONED.
8. IDENTIFY WITH DRAWING NUMBER AND REVISION PER ND 1002019.
9. WHEN "AUTO MARK" METAL MARKING TYPEWRITER IS USED TO ADD DATA TO BLANK SPACES, TYPE SIZE IS TO BE SELECTED FROM DIMENSION AC AND U.
10. NASA SYMBOL IS TO BE PROPORTIONATE TO NAMEPLATE. NASA SYMBOL TO HAVE NATURAL BACKGROUND. NASA OUTLINE CIRCLE, LETTERING AND FEATHER TO BE BLACK, (OR WHITE FOR SILK SCREENING).
11. NAMEPLATES WILL APPLIED BY METHODS LISTED BELOW, SHOWN IN ORDER OF PREFERENCE (I.E., FOR RELIABILITY & WEIGHT):
    - A. STENCIL OR SILK SCREEN DIRECTLY ON EQUIPMENT. USING INK PER SCD1010920, (WHITE OR BLACK).
    - B. ALUMINUM FOIL: (TYPE I): FOIL SHALL BE .0030 ± .0005 THICK PER MIL-A-148. FOIL SHALL HAVE NO ADHESIVE BACKING. FOIL SHALL BE APPLIED PER ND 1002219 (MODIFIED). FOIL SHALL BE CLEAR ANODIZED PER MIL-A-8625 TYPE II.
    - C. PLATE (TYPE II): MATERIAL: QQ-A-250, TEMPER O OR H14, TYPE 1100, ALUMINUM ALLOY .032 THICK. ANODIZE PER MIL-A-8625, TYPE II ALUMINUM PLATE MUST BE FREE FROM BURRS AND SHARP CORNERS. MOUNTED WITH APPLICABLE SIZE FASTENERS.
12. NAMEPLATES SHALL BE CAPABLE OF MEETING APPLICABLE REQUIREMENTS OF MIL-M-13231.

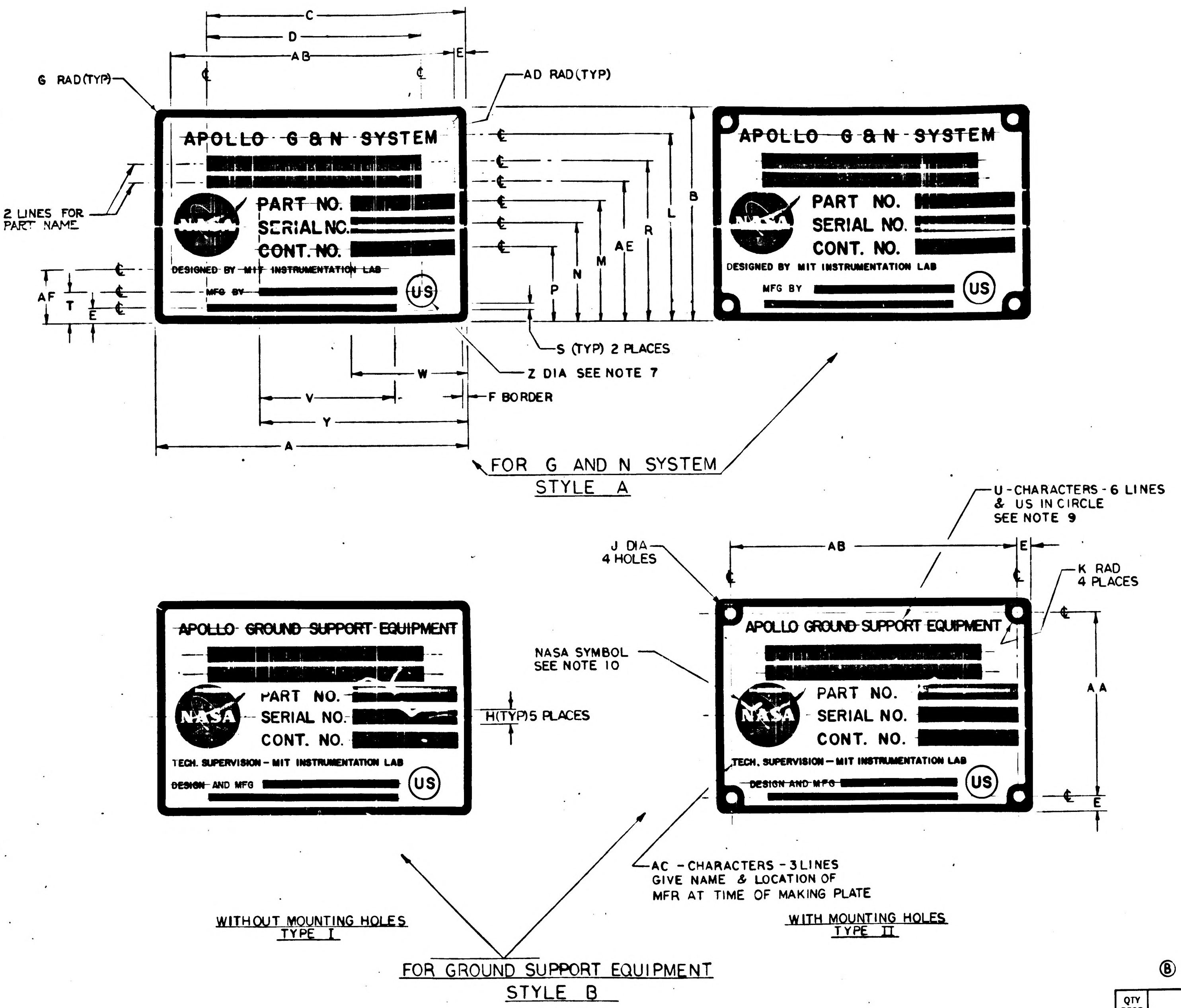
C
D
AB
E
G RAD(TYP)
AD RAD(TYP)
APOLLO G & N SYSTEM
PART NO.
SERIAL NO.
CONT. NO.
DESIGNED BY MIT INSTRUMENTATION LAB
MFG BY
US
2 LINES FOR PART NAME
AF
T
E
B
L
R
AE
M
N
P
S (TYP) 2 PLACES
Z DIA SEE NOTE 7
W
V
F BORDER
Y
A
U-CHARACTERS-6 LINES & US IN CIRCLE SEE NOTE 9
J DIA 4 HOLES
K RAD 4 PLACES
APOLLO GROUND SUPPORT EQUIPMENT
TECH. SUPERVISION – MIT INSTRUMENTATION LAB
DESIGN AND MFG
NASA
H(TYP)5 PLACES
NASA SYMBOL SEE NOTE 10
AA
AC - CHARACTERS - 3 LINES GIVE NAME & LOCATION OF MFR AT TIME OF MAKING PLATE

FOR G AND N SYSTEM
STYLE A

WITHOUT MOUNTING HOLES
TYPE I

WITH MOUNTING HOLES
TYPE II

FOR GROUND SUPPORT EQUIPMENT
STYLE B

Ⓑ REPLACES REV A WITH CHANGES

QTY REQD	PART OR IDENTIFYING NO.	NOMENCLATURE OR DESCRIPTION	FIND NO.
LIST OF MATERIALS			

UNLESS OTHERWISE SPECIFIED DIMENSIONS ARE IN INCHES TOLERANCES ON FRACTIONS ± — DECIMALS ±.005 ANGLES ± — DO NOT SCALE THIS DRAWING	MIT INSTRUMENTATION LAB CAMBRIDGE, MASS. DWG. NO. CONTRACT	MANNED SPACECRAFT CENTER HOUSTON, TEXAS	
MATERIAL SEE NOTE 11	DRAWN R A Jones DATE 4-1-65 CHECKED 4-2-65 APPROVAL APPROVAL	NAMEPLATES, APOLLO G&N/GSE (STANDARDS)	
HEAT TREATMENT	NASA APPROVAL W J 4-6-65	CODE IDENT NO. 80230	SIZE D
FINAL FINISH	MIT APPROVAL 6 Apr 65	SCALE NONE	WT

NASA DRAWING NO. 1004260

SHEET 1 OF 2

AS APPLICABLE	
NEXT ASSY	USED ON
APPLICATION	

NOTICE — WHEN GOVERNMENT DRAWINGS, SPECIFICATIONS, OR OTHER DATA ARE USED FOR ANY PURPOSE OTHER THAN IN CONNECTION WITH A DEFINITELY RELATED GOVERNMENT PROCUREMENT OPERATION, THE UNITED STATES GOVERNMENT THEREBY INCURS NO RESPONSIBILITY NOR ANY OBLIGATION WHATSOEVER; AND THE FACT THAT THE GOVERNMENT MAY HAVE FORMULATED, FURNISHED, OR IN ANY WAY SUPPLIED THE SAID DRAWINGS, SPECIFICATIONS OR OTHER DATA IS NOT TO BE REGARDED BY IMPLICATION OR OTHERWISE AS IN ANY MANNER LICENSING THE HOLDER OR ANY OTHER PERSON OR CORPORATION, OR CONVEYING ANY RIGHTS OR PERMISSION TO MANUFACTURE, USE, OR SELL ANY PATENTED INVENTION THAT MAY IN ANY WAY BE RELATED THERETO.

REVISIONS INITIAL TDRR 02768

SYM	DESCRIPTION	DATE	APPROVAL
B	REPLACES REV. A PER TDRR 18087	6 Apr 65	WK
C	REVISED PER TDRR 19743	2 JUN 65	WK
D	REVISED PER TDRR 19901	8 Jun 65	WK
E	REVISED PER TDRR 19998	10 Jun 65	WK

DASH NO.	P/C	PART NAME	PART NO.	SERIAL NO.	CONT NO.	STYLE	TYPE	MATERIAL	A	B	C	D	E	F	G	H	J	K	L	M	N	P	R	S	T	U	V	W	Y	Z	AA	AB	AC	AD	AE	AF
499	MIT																																		
	MIT																																		
	MIT																																		
	MIT																																		
	MIT																																		
	MIT																																		
	MIT																																		
	MIT																																		
	MIT																																		
400	MIT																																		
399	K																																		
	K																																		
	K																																		
	K																																		
	K																																		
	K																																		
	K																																		
	K																																		
300	K																																		
299	R																																		
	R																																		
	R																																		
	R																																		
	R																																		
	R																																		
	R																																		
	R																																		
200	R																																		
199	AC																																		
	AC																																		
	AC																																		
	AC																																		
	AC																																		
	AC																																		
	AC																																		
101	AC	NAVIGATION BASE ASSEMBLY - LEM	6899950		NAS 9-497	A	I	NOTE II B	2.000	1.312	1.906	1.375	.078	.048	.078	.093	NA	NA	1.125	.750	.593	.453	1.015	.062	.187	.078	.875	.718	1.375	.218	NA	NA	.048	.031	.875	.305
100	AC	NAVIGATION BASE ASSEMBLY	2899982		NAS 9-497	A	I	NOTE II B	2.000	1.312	1.906	1.375	.078	.048	.078	.093	NA	NA	1.125	.750	.593	.453	1.015	.062	.187	.078	.875	.718	1.375	.218	NA	NA	.048	.031	.875	.305
99																																			
22																																			
21																																			
20	R	NA	NA	NA	NA	A	II	NOTE II C	2.000	1.312	1.687	1.375	.078	.031	.078	.093	.106 .113	.093	1.187	.750	.593	.453	1.015	.062	.187	.078	.875	.718	1.375	.218	1.156	1.843	.048	NA	.875	.305
19	R	NA	NA	NA	NA	A	I	NOTE II B	2.000	1.312	1.687	1.375	.078	.031	.078	.093	NA	NA	1.187	.750	.593	.453	1.015	.062	.187	.078	.875	.718	1.375	.218	NA	NA	.048	.031	.875	.305
18	R	NA	NA	NA	NA	B	II	NOTE II C	4.187	1.875	3.469	2.750	.156	.093	.156	.125	.106 .113	.125	1.625	1.032	.844	.656	1.406	.093	.344	.156	1.781	1.531	2.844	.312	1.562	3.875	.062	NA	1.219	.500
17	R	NA	NA	NA	NA	B	I	NOTE II B	4.187	1.875	3.469	2.750	.156	.093	.156	.125	NA	NA	1.625	1.032	.844	.656	1.406	.093	.344	.156	1.781	1.531	2.844	.312	NA	NA	.062	.062	1.219	.500
16	R	NA	NA	NA	NA	B	II	NOTE II C	2.000	1.312	1.687	1.375	.078	.031	.078	.093	.106 .113	.093	1.187	.750	.593	.453	1.015	.062	.187	.078	.875	.718	1.375	.218	1.156	1.843	.048	NA	.875	.305
15	R	NA	NA	NA	NA	B	I	NOTE II B	2.000	1.312	1.687	1.375	.078	.031	.078	.093	NA	NA	1.187	.750	.593	.453	1.015	.062	.187	.078	.875	.718	1.375	.218	NA	NA	.048	.031	.875	.305
14																																			
13																																			
12																																			
11																																			
10																																			
9	K	2 IN AUTOCOLLIMATOR	1001702			B	II	NOTE11C	4.000	2.625	3.812	2.750	.156	.093	.156	.187	.125	.156	2.250	1.500	1.187	.906	2.031	.093	.375	.156	1.750	1.437	2.750	.437	2.312	3.687	.062	NA	1.750	.593
8	K	5 IN AUTOCOLLIMATOR	1017410			B	II	NOTE11C	4.000	2.625	3.812	2.750	.156	.093	.156	.187	.125	.156	2.250	1.500	1.187	.906	2.031	.093	.375	.156	1.750	1.437	2.750	.437	2.312	3.687	.062	NA	1.750	.593
7	K	2½ IN AUTOCOLLIMATOR (SCT)	1017435			B	II	NOTE11C	4.000	2.625	3.812	2.750	.156	.093	.156	.187	.125	.156	2.250	1.500	1.187	.906	2.031	.093	.375	.156	1.750	1.437	2.750	.437	2.312	3.687	.062	NA	1.750	.593
6	K	2½ IN AUTOCOLLIMATOR (SXT)	1017448			B	II	NOTE11C	4.000	2.625	3.812	2.750	.156	.093	.156	.187	.125	.156	2.250	1.500	1.187	.906	2.031	.093	.375	.156	1.750	1.437	2.750	.437	2.312	3.687	.062	NA	1.750	.593
5	K	RETROREFLECTING PRISM ASSEMBLY	1019840			B	I	NOTE11B	4.000	2.625	3.812	2.750	.156	.093	.156	.187	NA	NA	2.250	1.500	1.187	.906	2.031	.093	.375	.156	1.750	1.437	2.750	.437	NA	NA	.062	.062	1.750	.593
4	K	S/H SIMULATOR ASSEMBLY	1019836			B	I	NOTE11B	4.000	2.625	3.812	2.750	.156	.093	.156	.187	NA	NA	2.250	1.500	1.187	.906	2.031	.093	.375	.156	1.750	1.437	2.750	.437	NA	NA	.062	.062	1.750	.593
3	K	REFERENCE MIRROR	1001767			B	I	NOTE11B	2.000	1.312	1.906	1.375	.078	.048	.078	.093	NA	NA	1.125	.750	.593	.453	1.015	.062	.187	.078	.875	.718	1.375	.218	NA	NA	.048	.031	.875	.305
2	K	2 IN PLANE READING AUTOCOLLIMATOR	1017413			B	I	NOTE11B	2.000	1.312	1.906	1.375	.078	.048	.078	.093	NA	NA	1.125	.750	.593	.453	1.015	.062	.187	.078	.875	.718	1.375	.218	NA	NA	.048	.031	.875	.305
1	K	2 IN AUTOCOLLIMATOR	1001702			B	I	NOTE II B	2.000	1.312	1.906	1.375	.078	.048	.078	.093	NA	NA	1.125	.750	.593	.453	1.015	.062	.187	.078	.875	.718	1.375	.218	NA	NA	.048	.031	.875	.305

NOTES FOR TABLE

STYLE A IS FOR G & N SYSTEM.
STYLE B IS FOR GROUND SUPPORT EQUIPMENT
TYPE I IS WITHOUT MOUNTING HOLES.
TYPE II IS WITH MOUNTING HOLES

Ⓑ REPLACES REV. A WITH CHANGES THIS SHEET ADDED

QTY REQD	PART OR IDENTIFYING NO.	NOMENCLATURE OR DESCRIPTION	FIND NO.

LIST OF MATERIALS

AS APPLICABLE	
NEXT ASSY	USED ON

APPLICATION

UNLESS OTHERWISE SPECIFIED DIMENSIONS ARE IN INCHES
TOLERANCES ON
FRACTIONS ± — DECIMALS ±.005 ANGLES ± —
DO NOT SCALE THIS DRAWING
MATERIAL SEE NOTE 11
HEAT TREATMENT
FINAL FINISH

MIT INSTRUMENTATION LAB
CAMBRIDGE, MASS
DWG. NO. CONTRACT
DRAWN R. G. Jones DATE 4-1-65
CHECKED 4-1-65
APPROVAL by W. Kupfer
APPROVAL
NASA APPROVAL 4-6-65
MIT APPROVAL W Kupfer 7 Apr 65

MANNED SPACECRAFT CENTER
HOUSTON, TEXAS

NAMEPLATES,
APOLLO G&N/GSE
(STANDARDS)

CODE IDENT NO. 80230
SIZE D
NASA DRAWING NO. 1004260
SCALE NONE
WT
SHEET 2 OF 2

NOTICE — WHEN GOVERNMENT DRAWINGS, SPECIFICATIONS, OR OTHER DATA ARE USED FOR ANY PURPOSE OTHER THAN IN CONNECTION WITH A DEFINITELY RELATED GOVERNMENT PROCUREMENT OPERATION, THE UNITED STATES GOVERNMENT THEREBY INCURS NO RESPONSIBILITY NOR ANY OBLIGATION WHATSOEVER; AND THE FACT THAT THE GOVERNMENT MAY HAVE FORMULATED, FURNISHED, OR IN ANY WAY SUPPLIED THE SAID DRAWINGS, SPECIFICATIONS OR OTHER DATA IS NOT TO BE REGARDED BY IMPLICATION OR OTHERWISE AS IN ANY MANNER LICENSING THE HOLDER OR ANY OTHER PERSON OR CORPORATION, OR CONVEYING ANY RIGHTS OR PERMISSION TO MANUFACTURE, USE, OR SELL ANY PATENTED INVENTION THAT MAY IN ANY WAY BE RELATED THERETO.

NOTES:

1. INTERPRET DRAWING IN ACCORDANCE WITH STANDARDS PRESCRIBED IN MIL-D-70327.
2 DIMENSIONS ON EACH VIEW APPLY TO ALL VIEWS. (WITH THE EXCEPTION OF MOUNTING HOLES).
3. FORMATS ILLUSTRATED WILL BE APPLICABLE TO ALL ITEMS REQUIRING NAMEPLATES BELOW END ITEM DESIGNATION (SYSTEMS, ASSEMBLIES, ETC.)
4. PLATE BACKGROUND TO BE LUSTERLESS BLACK PER FED-STD-595 COLOR 37038. BORDER, MARKING, & LETTERING TO BE NATURAL METAL (ANODIZED ALUMINUM)
5 MARKING METHOD TO BE DIE STAMPING, ETCHING, OR ENGRAVING IN ACCORDANCE WITH MIL-P-19834
6 LETTERING STYLE TO BE GOTHIC (SANS SERIFS) AND NUMBERS TO BE ARABIC.
7. WHERE LOCATING DIMENSIONS ARE NOT SHOWN, CHARACTERS SHALL BE SYMMETRICALLY POSITIONED.

8. IDENTIFY WITH DRAWING NUMBER AND REVISION PER ND 1002019.

9 WHEN "AUTO MARK" METAL MARKING TYPEWRITER IS USED TO ADD DATA TO BLANK SPACES, TYPE SIZE IS TO BE SELECTED FROM DIMENSION AC AND U.
10 NASA SYMBOL IS TO BE PROPORTIONATE TO NAMEPLATE. NASA SYMBOL TO HAVE NATURAL BACKGROUND. NASA OUTLINE CIRCLE, LETTERING AND FEATHER TO BE BLACK, (OR WHITE FOR SILK SCREENING)
11 NAMEPLATES WILL APPLIED BY METHODS LISTED BELOW, SHOWN IN ORDER OF PREFERENCE (I.E., FOR RELIABILITY & WEIGHT):
   A STENCIL OR SILK SCREEN DIRECTLY ON EQUIPMENT. USING INK PER SCD1010920, (WHITE OR BLACK).
   B ALUMINUM FOIL: (TYPE I):
   FOIL SHALL BE .0030 ± .0005 THICK PER MIL-A-148.
   FOIL SHALL HAVE NO ADHESIVE BACKING.
   FOIL SHALL BE APPLIED PER ND 1002219 (MODIFIED).
   FOIL SHALL BE CLEAR ANODIZED PER MIL-A-8625 TYPE II.
   C PLATE (TYPE II):
   MATERIAL: QQ-A-250, TEMPER O OR H14, TYPE 1100,-
   ALUMINUM ALLOY .032 THICK.
   ANODIZE PER MIL-A-8625, TYPE II
   ALUMINUM PLATE MUST BE FREE FROM BURRS AND SHARP CORNERS.
   MOUNTED WITH APPLICABLE SIZE FASTENERS.
12 NAMEPLATES SHALL BE CAPABLE OF MEETING APPLICABLE REQUIREMENTS OF MIL-M-13231.

REVISIONS INITIAL TDRR 02768

SYM	DESCRIPTION	DATE	APPROVAL
B	REPLACES REV. A PER TDRR 18087	6 APR 65	WK
C	REVISED PER TDRR 19743	2 JUN 65	WK
D	REVISED PER TDRR 19901	8 June 65	WK
E	REVISED PER TDRR 19998	10 June 65	WK
F	REPLACED WITH CHANGE BY REV G PER TDRR 20854	22 July 65	WK

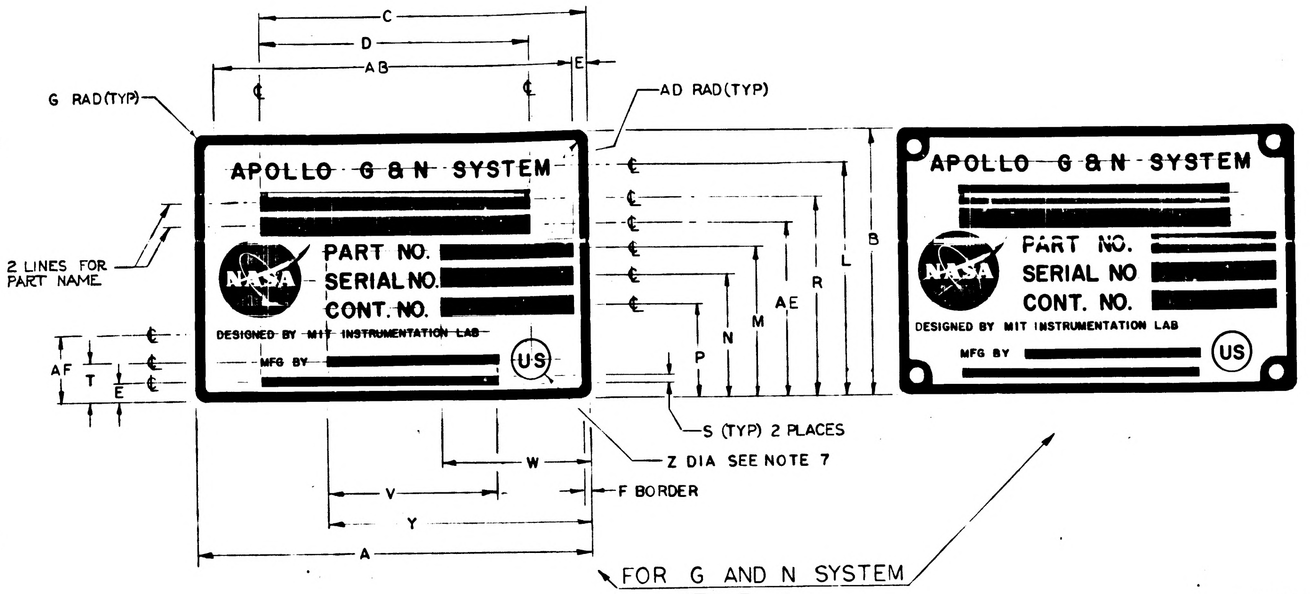
C
D
AB
E
G RAD(TYP)
AD RAD(TYP)
APOLLO G & N SYSTEM
PART NO.
SERIAL NO.
CONT. NO.
NASA
DESIGNED BY MIT INSTRUMENTATION LAB
MFG BY
US
2 LINES FOR PART NAME
AF
T
E
B
L
R
AE
M
N
P
S (TYP) 2 PLACES
Z DIA SEE NOTE 7
W
V
Y
A
F BORDER

FOR G AND N SYSTEM
STYLE A

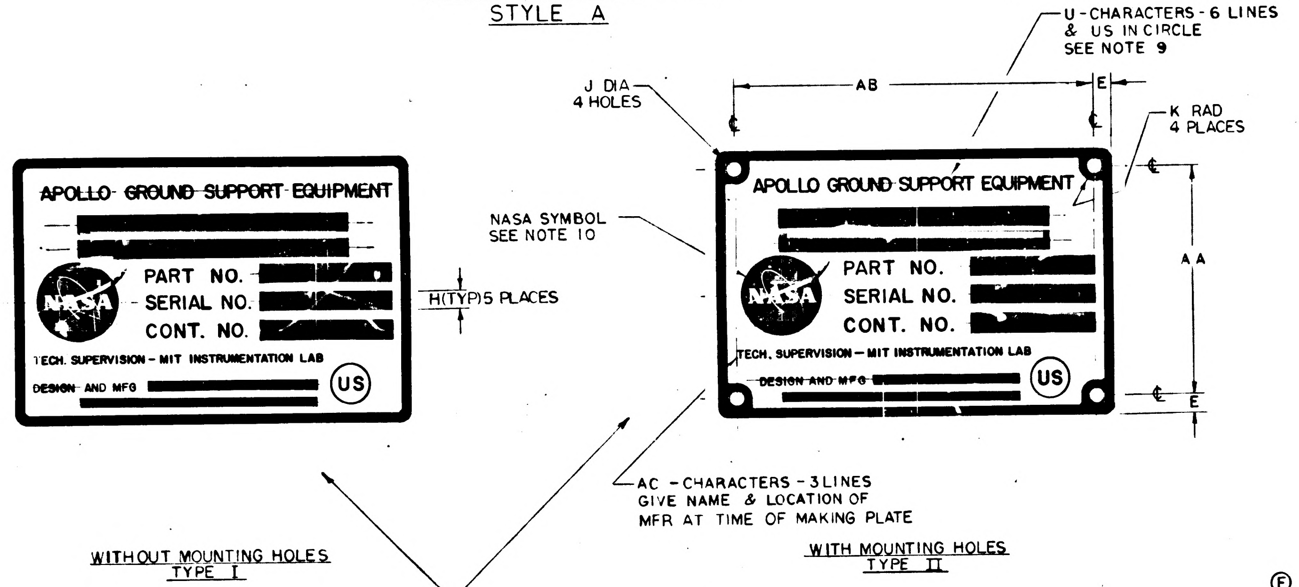
U-CHARACTERS-6 LINES & US IN CIRCLE SEE NOTE 9
AB
E
J DIA 4 HOLES
K RAD 4 PLACES
NASA SYMBOL SEE NOTE 10
APOLLO GROUND SUPPORT EQUIPMENT
PART NO.
SERIAL NO.
CONT. NO.
NASA
TECH. SUPERVISION – MIT INSTRUMENTATION LAB
DESIGN AND MFG
US
H(TYP)5 PLACES
AA
E
AC - CHARACTERS - 3 LINES GIVE NAME & LOCATION OF MFR AT TIME OF MAKING PLATE
WITHOUT MOUNTING HOLES TYPE I
WITH MOUNTING HOLES TYPE II

FOR GROUND SUPPORT EQUIPMENT
STYLE B

Ⓕ REPLACED WITH CHANGE BY REV G
Ⓑ REPLACES REV A WITH CHANGES

QTY REQD	PART OR IDENTIFYING NO.	NOMENCLATURE OR DESCRIPTION	FIND NO.

LIST OF MATERIALS

AS APPLICABLE	
NEXT ASSY	USED ON
APPLICATION	

UNLESS OTHERWISE SPECIFIED DIMENSIONS ARE IN INCHES
TOLERANCES ON
FRACTIONS ± — DECIMALS ±.005 ANGLES ± —
DO NOT SCALE THIS DRAWING
MATERIAL SEE NOTE 11
HEAT TREATMENT
FINAL FINISH

MIT INSTRUMENTATION LAB
CAMBRIDGE, MASS.
DWG. NO. CONTRACT
DRAWN R A Jones DATE 4-1-65
CHECKED 4-2-65
APPROVAL
APPROVAL
NASA APPROVAL 4-6-65
MIT APPROVAL 6 Apr 65

MANNED SPACECRAFT CENTER
HOUSTON, TEXAS

NAMEPLATES,
APOLLO G&N/GSE
(STANDARDS)

CODE IDENT NO. 80230 SIZE D NASA DRAWING NO. 1004260
SCALE NONE WT SHEET 1 OF 2

1004260 F

NOTICE — WHEN GOVERNMENT DRAWINGS SPECIFICATIONS OR OTHER DATA ARE USED FOR ANY PURPOSE OTHER THAN IN CONNECTION WITH A DEFINITELY RELATED GOVERNMENT PROCUREMENT OPERATION THE UNITED STATES GOVERNMENT THEREBY INCURS NO RESPONSIBILITY NOR ANY OBLIGATION WHATSOEVER AND THE FACT THAT THE GOVERNMENT MAY HAVE FORMULATED FURNISHED OR IN ANY WAY SUPPLIED THE SAID DRAWINGS SPECIFICATIONS OR OTHER DATA IS NOT TO BE REGARDED BY IMPLICATION OR OTHERWISE AS IN ANY MANNER LICENSING THE HOLDER OR ANY OTHER PERSON OR CORPORATION, OR CONVEYING ANY RIGHTS OR PERMISSION TO MANUFACTURE USE OR SELL ANY PATENTED INVENTION THAT MAY IN ANY WAY BE RELATED THERETO

REVISIONS INITIAL TDRR 02768

SYM	DESCRIPTION	DATE	APPROVAL
B	REPLACES REV. A PER TDRR 18087	[illegible] 65	WK
C	REVISED PER TDRR 19743	2 JUN 65	WK
D	REVISED PER TDRR 19901	8 Jun 65	WK
E	REVISED PER TDRR 19998	10 Jun 65	WK
F	REPLACED WITH CHANGE BY REV G PER TDRR 20854	22 Jul 65	WK

DASH NO	P/C	PART NAME	PART NO.	SERIAL NO.	CONT NO.	STYLE	TYPE	MATERIAL	A	B	C	D	E	F	G	H	J	K	L	M	N	P	R	S	T	U	V	W	Y	Z	AA	AB	AC	AD	AE	AF
499	MIT																																			
↑	MIT																																			
	MIT																																			
	MIT																																			
	MIT																																			
	MIT																																			
	MIT																																			
	MIT																																			
↓	MIT																																			
400	MIT																																			
399	K																																			
↑	K																																			
	K																																			
	K																																			
	K																																			
	K																																			
	K																																			
↓	K																																			
300	K																																			
299	R																																			
↑	R																																			
	R																																			
	R																																			
	R																																			
	R																																			
	R																																			
↓	R																																			
200	R																																			
199	AC																																			
↑	AC																																			
	AC																																			
	AC																																			
	AC																																			
	AC																																			
↓	AC																																			
101	AC	NAVIGATION BASE ASSEMBLY - LEM	6899950		NAS 9-497	A	I	NOTE II B	2.000	1.312	1.906	1.375	.078	.048	.078	.093	NA	NA	1.125	.750	.593	.453	1.015	.062	.187	.078	.875	.718	1.375	.218	NA	NA	.048	.031	.875	.305
100	AC	NAVIGATION BASE ASSEMBLY	2899982		NAS 9-497	A	I	NOTE II B	2.000	1.312	1.906	1.375	.078	.048	.078	.093	NA	NA	1.125	.750	.593	.453	1.015	.062	.187	.078	.875	.718	1.375	.218	NA	NA	.048	.031	.875	.305
99																																				
↑																																				
↓																																				
22																																				
21																																				
20	R	NA	NA	NA	NA	A	II	NOTE II C	2.000	1.312	1.687	1.375	.078	.031	.078	.093	.106 .113	.093	1.187	.750	.593	.453	1.015	.062	.187	.078	.875	.718	1.375	.218	1.156	1.843	.048	NA	.875	.305
19	P	NA	NA	NA	NA	A	I	NOTE II B	2.000	1.312	1.687	1.375	.078	.031	.078	.093	NA	NA	1.187	.750	.593	.453	1.015	.062	.187	.078	.875	.718	1.375	.218	NA	NA	.048	.031	.875	.305
18	R	NA	NA	NA	NA	B	II	NOTE II C	4.187	1.875	3.469	2.750	.156	.093	.156	.125	.106 .113	.125	1.625	1.032	.844	.656	1.406	.093	.344	.156	1.781	1.531	2.844	.312	1.562	3.875	.062	NA	1.219	.500
17	P	NA	NA	NA	NA	B	I	NOTE II B	4.187	1.875	3.469	2.750	.156	.093	.156	.125	NA	NA	1.625	1.032	.844	.656	1.406	.093	.344	.156	1.781	1.531	2.844	.312	NA	NA	.062	.062	1.219	.500
16	P	NA	NA	NA	NA	B	II	NOTE II C	2.000	1.312	1.687	1.375	.078	.031	.078	.093	.106 .113	.093	1.187	.750	.593	.453	1.015	.062	.187	.078	.875	.718	1.375	.218	1.156	1.843	.048	NA	.875	.305
15	R	NA	NA	NA	NA	B	I	NOTE II B	2.000	1.312	1.687	1.375	.078	.031	.078	.093	NA	NA	1.187	.750	.593	.453	1.015	.062	.187	.078	.875	.718	1.375	.218	NA	NA	.048	.031	.875	.305
14																																				
13																																				
12																																				
11																																				
10																																				
9	K	2 IN AUTOCOLLIMATOR	1001702			B	II	NOTE II C	4.000	2.625	3.812	2.750	.156	.093	.156	.187	.125	.156	2.250	1.500	1.187	.906	2.031	.093	.375	.156	1.750	1.437	2.750	.437	2.312	3.687	.062	NA	1.750	.593
8	K	5 IN AUTOCOLLIMATOR	1017410			B	II	NOTE II C	4.000	2.625	3.812	2.750	.156	.093	.156	.187	.125	.156	2.250	1.500	1.187	.906	2.031	.093	.375	.156	1.750	1.437	2.750	.437	2.312	3.687	.062	NA	1.750	.593
7	K	2½ IN AUTOCOLLIMATOR (SCT)	1017435			B	II	NOTE II C	4.000	2.625	3.812	2.750	.156	.093	.156	.187	.125	.156	2.250	1.500	1.187	.906	2.031	.093	.375	.156	1.750	1.437	2.750	.437	2.312	3.687	.062	NA	1.750	.593
6	K	2½ IN AUTOCOLLIMATOR (SXT)	1017448			B	II	NOTE II C	4.000	2.625	3.812	2.750	.156	.093	.156	.187	.125	.156	2.250	1.500	1.187	.906	2.031	.093	.375	.156	1.750	1.437	2.750	.437	2.312	3.687	.062	NA	1.750	.593
5	K	RETROREFLECTING PRISM ASSEMBLY	1019840			B	I	NOTE II B	4.000	2.625	3.812	2.750	.156	.093	.156	.187	NA	NA	2.250	1.500	1.187	.906	2.031	.093	.375	.156	1.750	1.437	2.750	.437	NA	NA	.062	.062	1.750	.593
4	K	S/H SIMULATOR ASSEMBLY	1019836			B	I	NOTE II B	4.000	2.625	3.812	2.750	.156	.093	.156	.187	NA	NA	2.250	1.500	1.187	.906	2.031	.093	.375	.156	1.750	1.437	2.750	.437	NA	NA	.062	.062	1.750	.593
3	K	REFERENCE MIRROR	1001767			B	I	NOTE II B	2.000	1.312	1.906	1.375	.078	.048	.078	.093	NA	NA	1.125	.750	.593	.453	1.015	.062	.187	.078	.875	.718	1.375	.218	NA	NA	.048	.031	.875	.305
2	K	2 IN PLANE READING AUTOCOLLIMATOR	1017413			B	I	NOTE II B	2.000	1.312	1.906	1.375	.078	.048	.078	.093	NA	NA	1.125	.750	.593	.453	1.015	.062	.187	.078	.875	.718	1.375	.218	NA	NA	.048	.031	.875	.305
1	K	2 IN AUTOCOLLIMATOR	1001702			B	I	NOTE II B	2.000	1.312	1.906	1.375	.078	.048	.078	.093	NA	NA	1.125	.750	.593	.453	1.015	.062	.187	.078	.875	.718	1.375	.218	NA	NA	.048	.031	.875	.305

NOTES FOR TABLE

STYLE A IS FOR G & N SYSTEM.
STYLE B IS FOR GROUND SUPPORT EQUIPMENT
TYPE I IS WITHOUT MOUNTING HOLES
TYPE II IS WITH MOUNTING HOLES

SUPERSEDED

Ⓕ REPLACED WITH CHANGE BY REV G.
Ⓑ REPLACES REV. A WITH CHANGES THIS SHEET ADDED

QTY REQD	PART OR IDENTIFYING NO.	NOMENCLATURE OR DESCRIPTION	FIND NO

LIST OF MATERIALS

AS APPLICABLE	
NEXT ASSY	USED ON

APPLICATION

UNLESS OTHERWISE SPECIFIED
DIMENSIONS ARE IN INCHES
TOLERANCES ON
FRACTIONS ± — DECIMALS ±.005 ANGLES ± —
DO NOT SCALE THIS DRAWING
MATERIAL SEE NOTE 11
HEAT TREATMENT
FINAL FINISH

MIT
INSTRUMENTATION LAB
CAMBRIDGE, MASS
DWG NO CONTRACT

DRAWN R. A. Jones DATE 4-1-65
CHECKED Fred Kraemer 4-1-65
APPROVAL J E [illegible] by W. Kupfer
APPROVAL
NASA APPROVAL W J [illegible] 4-6-65
MIT APPROVAL W Kupfer 7 Apr 65

MANNED SPACECRAFT CENTER
HOUSTON, TEXAS

NAMEPLATES,
APOLLO G&N/GSE
(STANDARDS)

CODE IDENT NO. 80230
SIZE D
NASA DRAWING NO. 1004260
SCALE NONE
WT
SHEET 2 OF 2

1004260 F

NOTICE - WHEN GOVERNMENT DRAWINGS, SPECIFICATIONS, OR OTHER DATA ARE USED FOR ANY PURPOSE OTHER THAN IN CONNECTION WITH A DEFINITELY RELATED GOVERNMENT PROCUREMENT OPERATION, THE UNITED STATES GOVERNMENT THEREBY INCURS NO RESPONSIBILITY NOR ANY OBLIGATION WHATSOEVER; AND THE FACT THAT THE GOVERNMENT MAY HAVE FORMULATED, FURNISHED, OR IN ANY WAY SUPPLIED THE SAID DRAWINGS, SPECIFICATIONS OR OTHER DATA IS NOT TO BE REGARDED BY IMPLICATION OR OTHERWISE AS IN ANY MANNER LICENSING THE HOLDER OR ANY OTHER PERSON OR CORPORATION, OR CONVEYING ANY RIGHTS OR PERMISSION TO MANUFACTURE, USE, OR SELL ANY PATENTED INVENTION THAT MAY IN ANY WAY BE RELATED THERETO.

REVISIONS						02768
SYM	ZONE	DESCRIPTION	DR	CHK	DATE	APPROVED
G		REPLACES REV F WITH CHANGE PER TDRR 20854			7/22/65	WJ

NOTES:

1. INTERPRET DRAWING IN ACCORDANCE WITH STANDARDS PRESCRIBED IN MIL-D-70327.
2. DIMENSIONS ON EACH VIEW APPLY TO ALL VIEWS. (WITH THE EXCEPTION OF MOUNTING HOLES).
3. FORMATS ILLUSTATED WILL BE APPLICABLE TO ALL ITEMS REQUIRING NAMEPLATES BELOW END ITEM DESIGNATION (SYSTEMS, ASSEMBLIES, ETC.)
4. PLATE BACKGROUND TO BE LUSTERLESS BLACK PER FED-STD-595, COLOR 37038. BORDER, MARKING AND LETTERING TO BE NATURAL METAL, (ANODIZED ALUMINUM).
5. MARKING METHOD TO BE DIE STAMPING, ETCHING OR ENGRAVING IN ACCORDANCE WITH MIL P 19834.
6. LETTERING STYLE TO BE GOTHIC, (SANS SERIFS), AND NUMBERS TO BE ARABIC.
7. WHERE LOCATING DIMENSIONS ARE NOT SHOWN, CHARACTERS SHALL BE SYMMETRICALLY POSITIONED.
8. IDENTIFY WITH DRAWING NUMBER AND REVISION PER ND 1002019.
9. WHEN AUTO MARK METAL MARKING TYPEWRITER IS USED TO ADD DATA TO BLANK SPACES, TYPE SIZE IS TO BE SELECTED FROM DIMENSIONS U, AC AND AM.
10. NASA SYMBOL IS TO BE PROPORTIONAL TO NAMEPLATE AND IS TO HAVE NATURAL BACKGROUND. NASA OUTLINE CIRCLE, LETTERING AND FEATHER TO BE BLACK, (OR WHITE FOR SILK SCREENING).
11. [illegible] BY METHODS LISTED BELOW, [illegible] (I.E., [illegible] ABILITY AND WEIGHT).
    - A. [illegible] DIRECTLY ON EQUIPMENT [illegible] WHITE OR BLACK).
    - B. [illegible] MIL-A-8625, TYPE II.
    - [illegible] ALUMINUM ALLOY, .032 THICK.
    - [illegible] BURRS AND SHARP CORNERS, [illegible]

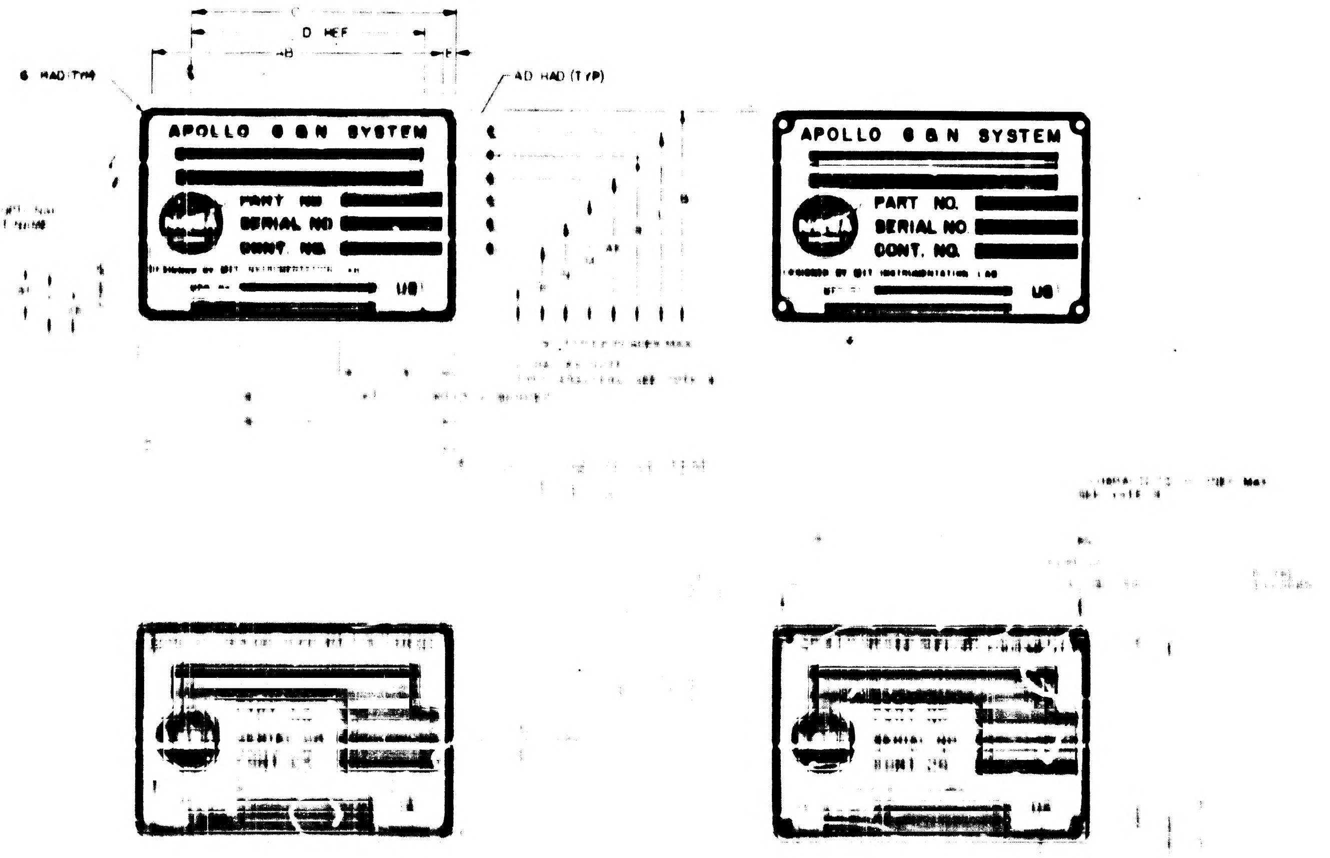

NOTICE – WHEN GOVERNMENT DRAWINGS, SPECIFICATIONS, OR OTHER DATA ARE USED FOR ANY PURPOSE OTHER THAN IN CONNECTION WITH A DEFINITELY RELATED GOVERNMENT PROCUREMENT OPERATION, THE UNITED STATES GOVERNMENT THEREBY INCURS NO RESPONSIBILITY NOR ANY OBLIGATION WHATSOEVER; AND THE FACT THAT THE GOVERNMENT MAY HAVE FORMULATED, FURNISHED, OR IN ANY WAY SUPPLIED THE SAID DRAWINGS, SPECIFICATIONS OR OTHER DATA IS NOT TO BE REGARDED BY IMPLICATION OR OTHERWISE AS IN ANY MANNER LICENSING THE HOLDER OR ANY OTHER PERSON OR CORPORATION, OR CONVEYING ANY RIGHTS OR PERMISSION TO MANUFACTURE, USE, OR SELL ANY PATENTED INVENTION THAT MAY IN ANY WAY BE RELATED THERETO.

REVISIONS						
SYM	ZONE	DESCRIPTION	DR	CHK	DATE	APPROVED
G		REPLACES REV F WITH CHANGE PER TDRR 20854.			7/22/65	WK

32768

(109)

DASH NO.	P/C	PART NAME	REMARKS	PART NO.	SER. NO.	CONT. NO.	STYLE	TYPE	MATERIAL	A	B	C	D	E	F	G	H	J	K	L	M	N	P	R	S	T	U	V	W	Y	Z	AA	AB	AC	AD	AE	AF	AG	AH	AJ	AK	AL	AM	AN	AP	AR
399	K																																													
308	K																																													
301	K																																													
300	K																																													
9	K	2 IN AUTOCOLLIMATOR		1001702			B	II	NOTE 11 C	4.000	2.625	3.812	2.750	.156	.093	.156	.187	.125	.156	2.250	1.500	1.187	.906	2.031	.093	.375	.156	1.750	1.437	2.750	.437	2.312	3.687	.062	NA	1.750	.593	.156	1.062	3.812	.156	NA	.156	1.062	.375	3.687
8	K	5 IN AUTOCOLLIMATOR		1017410			B	II	NOTE 11 C	4.000	2.625	3.812	2.750	.156	.093	.156	.187	.125	.156	2.250	1.500	1.187	.906	2.031	.093	.375	.156	1.750	1.437	2.750	.437	2.312	3.687	.062	NA	1.750	.593	.156	1.062	3.812	.156	NA	.156	1.062	.375	3.687
7	K	2½ IN AUTOCOLLIMATOR (SCT)		1017435			B	II	NOTE 11 C	4.000	2.625	3.812	2.750	.156	.093	.156	.187	.125	.156	2.250	1.500	1.187	.906	2.031	.093	.375	.156	1.750	1.437	2.750	.437	2.312	3.687	.062	NA	1.750	.593	.156	1.062	3.812	.156	NA	.156	1.062	.375	3.687
6	K	2½ IN AUTOCOLLIMATOR (SXT)		1017448			B	II	NOTE 11 C	4.000	2.625	3.812	2.750	.156	.093	.156	.187	.125	.156	2.250	1.500	1.187	.906	2.031	.093	.375	.156	1.750	1.437	2.750	.437	2.312	3.687	.062	NA	1.750	.593	.156	1.062	3.812	.156	NA	.156	1.062	.375	3.687
5	K	RETROREFLECTING PRISM ASSEMBLY		1019840			B	I	NOTE 11 B	4.000	2.625	3.812	2.750	.156	.093	.156	.187	NA	NA	2.250	1.500	1.187	.906	2.031	.093	.375	.156	1.750	1.437	2.750	.437	NA	NA	.062	.062	1.750	.593	.156	1.062	3.812	.156	NA	.156	1.062	.375	NA
4	K	S/H SIMULATOR ASSEMBLY		1019896			B	I	NOTE 11 B	4.000	2.625	3.812	2.750	.156	.093	.156	.187	NA	NA	2.250	1.500	1.187	.906	2.031	.093	.375	.156	1.750	1.437	2.750	.437	NA	NA	.062	.062	1.750	.593	.156	1.062	3.812	.156	NA	.156	1.062	.375	NA
3	K	REFERENCE MIRROR		1001767			B	I	NOTE 11 B	2.000	1.312	1.906	1.375	.078	.048	.078	.093	NA	NA	1.125	.750	.593	.453	1.015	.062	.187	.078	.875	.718	1.375	.218	NA	NA	.048	.031	.875	.305	.078	.531	1.906	.078	NA	.078	.531	.187	NA
2	K	2 IN PLANE READING AUTOCOLLIMATOR		1017413			B	I	NOTE 11 B	2.000	1.312	1.906	1.375	.078	.048	.078	.093	NA	NA	1.125	.750	.593	.453	1.015	.062	.187	.078	.875	.718	1.375	.218	NA	NA	.048	.031	.875	.305	.078	.531	1.906	.078	NA	.078	.531	.187	NA
1	K	2 IN AUTOCOLLIMATOR		1001702			B	I	NOTE 11 B	2.000	1.312	1.906	1.375	.078	.048	.078	.093	NA	NA	1.125	.750	.593	.453	1.015	.062	.187	.078	.875	.718	1.375	.218	NA	NA	.048	.031	.875	.305	.078	.531	1.906	.078	NA	.078	.531	.187	NA

NOTES FOR TABLE

STYLE A IS FOR G&N SYSTEM.
STYLE B IS FOR GROUND SUPPORT EQUIPMENT.
TYPE I IS WITHOUT MOUNTING HOLES.
TYPE II IS WITH MOUNTING HOLES.

Ⓖ REPLACES REV F WITH CHANGE

KOLLSMAN DASH NUMBERS

1004260 G

QTY REQD	PART OR IDENTIFYING NO.	MATERIAL OR NOTES	NOMENCLATURE OR DESCRIPTION	FIND NO

LIST OF MATERIALS

NEXT ASSY	USED ON
AS APPLICABLE	

APPLICATION

UNLESS OTHERWISE SPECIFIED
DIMENSIONS ARE IN INCHES
CAPACITOR VALUES ARE IN µf
RESISTOR VALUES ARE IN OHMS
TOLERANCES ON
FRACTIONS ± — DECIMALS ±.005 ANGLES ± —
DO NOT SCALE THIS DRAWING

MATERIAL
SEE NOTE 11

MIT
INSTRUMENTATION LAB
CAMBRIDGE, MASS.

DRAWN R. A. Jones 7-16-65
CHECKED 7-22-65
APPROVED
APPROVED 22 Jul 65
APPROVED MIT 22 Jul 65
APPROVED MSC 7/22/65
DATE

MANNED SPACECRAFT CENTER
HOUSTON, TEXAS

NAMEPLATES,
APOLLO G&N-GSE
(STANDANDS)

CODE IDENT NO. 80230
SIZE E
DRAWING NO. 1004260
SCALE NONE
SHEET 2 OF 5

NOTICE – WHEN GOVERNMENT DRAWINGS, SPECIFICATIONS, OR OTHER DATA ARE USED FOR ANY PURPOSE OTHER THAN IN CONNECTION WITH A DEFINITELY RELATED GOVERNMENT PROCUREMENT OPERATION, THE UNITED STATES GOVERNMENT THEREBY INCURS NO RESPONSIBILITY NOR ANY OBLIGATION WHATSOEVER, AND THE FACT THAT THE GOVERNMENT MAY HAVE FORMULATED, FURNISHED, OR IN ANY WAY SUPPLIED THE SAID DRAWINGS, SPECIFICATIONS OR OTHER DATA IS NOT TO BE REGARDED BY IMPLICATION OR OTHERWISE AS IN ANY MANNER LICENSING THE HOLDER OR ANY OTHER PERSON OR CORPORATION, OR CONVEYING ANY RIGHTS OR PERMISSION TO MANUFACTURE, USE, OR SELL ANY PATENTED INVENTION THAT MAY IN ANY WAY BE RELATED THERETO.

REVISIONS 02768

SYM	ZONE	DESCRIPTION	DR	CHK	DATE	APPROVED
G		REPLACES REV F WITH CHANGE PER TDRR 20854			7/22/65	WK

DASH NO.	P/C	PART NAME	REMARKS	PART NO.	SER. NO.	CONT. NO.	STYLE	TYPE	MATERIAL	A	B	C	D	E	F	G	H	J	K	L	M	N	P	R	S	T	U	V	W	Y	Z	AA	AB	AC	AD	AE	AF	AG	AH	AJ	AK	AL	AM	AN	AP	AR
299	R																																													
298	R																																													
201	R																																													
200	R																																													
21	R																																													
20	R	NA		NA	NA	NA	A	II	NOTE 11 C	2.000	1.312	1.687	1.375	.078	.031	.078	.093	.106 .113	.093	1.187	.750	.593	.453	1.015	.062	.187	.078	.875	.718	1.375	.218	1.156	1.843	.048	NA	.875	.305	.078	.312	1.687	.078	NA	.078	.312	.187	1.843
19	R	NA		NA	NA	NA	A	I	NOTE 11 B	2.000	1.312	1.687	1.375	.078	.031	.078	.093	NA	NA	1.187	.750	.593	.453	1.015	.062	.187	.078	.875	.718	1.375	.218	NA	NA	.048	.031	.875	.305	.078	.312	1.687	.078	NA	.078	.312	.187	NA
18	R	NA		NA	NA	NA	B	II	NOTE 11 C	4.187	1.875	3.469	2.750	.156	.093	.156	.125	.106 .113	.125	1.625	1.032	.844	.656	1.406	.093	.344	.156	1.781	1.531	2.844	.312	1.562	3.875	.062	NA	1.219	.500	.156	.719	3.469	.156	NA	.156	.719	.344	3.875
17	R	NA		NA	NA	NA	B	I	NOTE 11 B	4.187	1.875	3.469	2.750	.156	.093	.156	.125	NA	NA	1.625	1.032	.844	.656	1.406	.093	.344	.156	1.781	1.531	2.844	.312	NA	NA	.062	.062	1.219	.500	.156	.719	3.469	.156	NA	.156	.719	.344	NA
16	R	NA		NA	NA	NA	B	II	NOTE 11 C	2.000	1.312	1.687	1.375	.078	.031	.078	.093	.106 .113	.093	1.187	.750	.593	.453	1.015	.062	.187	.078	.875	.718	1.375	.218	1.156	1.843	.048	NA	.875	.305	.078	.312	1.687	.078	NA	.078	.312	.187	1.843
15	R	NA		NA	NA	NA	B	I	NOTE 11 B	2.000	1.312	1.687	1.375	.078	.031	.078	.093	NA	NA	1.187	.750	.593	.453	1.015	.062	.187	.078	.875	.718	1.375	.218	NA	NA	.048	.031	.875	.305	.078	.312	1.687	.078	NA	.078	.312	.187	NA

NOTES FOR TABLE

STYLE A IS FOR G & N SYSTEM
STYLE B IS FOR GROUND SUPPORT EQUIPMENT
TYPE I IS WITHOUT MOUNTING HOLES
TYPE II IS WITH MOUNTING HOLES

THIS SHEET ADDED

Ⓖ REPLACES REV F WITH CHANGE

RAYTHEON DASH NUMBERS

QTY REQD	PART OR IDENTIFYING NO.	MATERIAL OR NOTES	NOMENCLATURE OR DESCRIPTION	FIND NO.

LIST OF MATERIALS

NEXT ASSY	USED ON
AS APPLICABLE	

APPLICATION

UNLESS OTHERWISE SPECIFIED
DIMENSIONS ARE IN INCHES
CAPACITOR VALUES ARE IN μf
RESISTOR VALUES ARE IN OHMS
TOLERANCES ON
FRACTIONS ± — DECIMALS ±.005 ANGLES ± —
DO NOT SCALE THIS DRAWING

MATERIAL
SEE NOTE 11

MIT
INSTRUMENTATION LAB
CAMBRIDGE, MASS.

DRAWN R A Jones 7-16-65
CHECKED A. J. Lueg 7-22-65
APPROVED
APPROVED W Kupfer 22 Jul 65
APPROVED MIT W Kupfer 22 Jul 65
APPROVED MSC 7/2/6
DATE

MANNED SPACECRAFT CENTER
HOUSTON, TEXAS

NAMEPLATES,
APOLLO G&N-GSE
(STANDARDS)

CODE IDENT NO. 80230
SIZE E
DRAWING NO. 1004260
SCALE NONE
SHEET 3 OF 5

1004260 G

NOTICE – WHEN GOVERNMENT DRAWINGS, SPECIFICATIONS, OR OTHER DATA ARE USED FOR ANY PURPOSE OTHER THAN IN CONNECTION WITH A DEFINITELY RELATED GOVERNMENT PROCUREMENT OPERATION, THE UNITED STATES GOVERNMENT THEREBY INCURS NO RESPONSIBILITY NOR ANY OBLIGATION WHATSOEVER, AND THE FACT THAT THE GOVERNMENT MAY HAVE FORMULATED, FURNISHED, OR IN ANY WAY SUPPLIED THE SAID DRAWINGS, SPECIFICATIONS OR OTHER DATA IS NOT TO BE REGARDED BY IMPLICATION OR OTHERWISE AS IN ANY MANNER LICENSING THE HOLDER OR ANY OTHER PERSON OR CORPORATION, OR CONVEYING ANY RIGHTS OR PERMISSION TO MANUFACTURE, USE, OR SELL ANY PATENTED INVENTION THAT MAY IN ANY WAY BE RELATED THERETO.

REVISIONS 02768

SYM	ZONE	DESCRIPTION	DR	CHK	DATE	APPROVED
G		REPLACES REV F WITH CHANGE PER TDRR 20854.			7/22/65	WK

DASH NO.	P/C
199	AC
198	AC

DASH NO.	P/C	PART NAME	REMARKS	PART NO.	SER. NO.	CONT. NO.	STYLE	TYPE	MATERIAL	A	B	C	D	E	F	G	H	J	K	L	M	N	P	R	S	T	U	V	W	Y	Z	AA	AB	AC	AD	AE	AF	AG	AH	AJ	AK	AL	AM	AN	AP	AR
144	AC	FIX., MOUNTING, G AND N		1902204-021			B	II	NOTE 11 C	4.125	1.812	3.250	NA	.125	.062	.12	.156	.100 .104	.125	1.625	1.140	.890	.640	1.390	.125	.171	.125	1.875	1.687	2.625	.250	1.562	3.843	.093	NA	NA	.359	.125	.437	3.688	NA	3.687	.093	.40	.25	3.875
143	AC	CSL, COOL AND PWR, G AND N		1902134-021			↑	↑	↑	4.125	1.812	3.250	↑	.125	.062	.12	.156	↑	.125	1.625	1.140	.890	.640	1.390	.125	.171	.125	1.875	1.687	2.625	.250	1.562	3.843	.093	↑	↑	.359	.125	.437	3.688	↑	3.687	.093	.40	.25	3.875
142	AC	ANALYZER, OPTICS-INERTIAL		2900023-011						4.125	1.812	3.250		.125	.062	.12	.156		.125	1.625	1.140	.890	.640	1.390	.125	.171	.125	1.875	1.687	2.625	.250	1.562	3.843	.093			.359	.125	.437	3.688		3.687	.093	.40	.25	3.875
141	AC	CONT, TEMP, PORTABLE		2900060-011						2.125	.968	1.718		.093	.031	.06	.093		.093	.858	.608	.484	.358	.733	.077	.116	.062	.937	.875	1.343	.125	.781	1.892	.046			.209	.093	.250	1.875		1.840	.046	.23	.16	1.938
140	AC	TESTER, CKT, IMU/CDU RSVR		2900286-011						4.125	1.812	3.250		.125	.062	.12	.156		.125	1.625	1.140	.890	.640	1.390	.125	.171	.125	1.875	1.687	2.625	.250	1.562	3.843	.093			.359	.125	.437	3.688		3.687	.093	.40	.25	3.875
139	AC	SIMULATOR, LD/SIG, CDU		2900285-011						↑	↑	↑		↑	↑	↑	↑		↑	↑	↑	↑	↑	↑	↑	↑	↑	↑	↑	↑	↑	↑	↑	↑			↑	↑	↑	↑		↑	↑	↑	↑	↑
138	AC	SIMULATOR, LD/SIG, OPTICS		1902023-021																																										
137	AC	FIX., MOUNTING, IMU/NAV BASE		6900003-011																																										
136	AC	FIX., OPTICS/NAV BASE		2900072-011																																										
135	AC	FIX., MOUNTING, SUB SYSTEM		2900070-011																																										
134	AC	FIX., HAND., G AND N HARNESS		2900069-011																																										
133	AC	CNTR, SHIPPING, NAV BASE		2900068-011																																										
132	AC	FIX., MOUNTING, G AND N		2900067-011																																										
131	AC	SIMULATOR, LD/SIG, IMU/CDU		2900062-011																																										
130	AC	TESTOR, GYRO WHEEL		2900061-01																																										
129	AC	COOLANT SUPPLY		1902133-02						↓	↓	↓		↓	↓	↓	↓		↓	↓	↓	↓	↓	↓	↓	↓	↓	↓	↓	↓	↓	↓	↓	↓			↓	↓	↓	↓		↓	↓	↓	↓	↓
128	AC	TABLE, ROTARY		1900926-021						4.125	1.812	3.250		.125	.062	.12	.156		.125	1.625	1.140	.890	.640	1.390	.125	.171	.125	1.875	1.687	2.625	.250	1.562	3.843	.093			.359	.125	.437	3.688		3.687	.093	.40	.25	3.875
127	AC	FIX., HAND., OPTICS		2900074-011						2.125	.968	1.718	↑	.093	.031	.06	.093	↑	.093	.858	.608	.484	.358	.733	.077	.116	.062	.937	.875	1.343	.125	.781	1.892	.046	↑	↑	.209	.093	.250	1.875	↑	1.840	.046	.23	.16	1.938
126	AC	FIX., MTG, PTA / PEA		2900066-011						↑	↑	↑		↑	↑	↑	↑		↑	↑	↑	↑	↑	↑	↑	↑	↑	↑	↑	↑	↑	↑	↑	↑			↑	↑	↑	↑		↑	↑	↑	↑	↑
125	AC	CONT, TEMP, IMU LIFTING		2900063-011																																										
124	AC	FIX., HANDLING, IMU		2900064-011																																										
123	AC	CONT, OPTICS, REMOTE		1902046-021																																										
122	AC	TEST CONTROL		1902009-021																																										
121	AC	ADPT MODULE, P.S.A.		1902431-021																																										
120	AC	BRIDGE, DECADE ERROR		2900128-011																																										
119	AC	PWR SUP, ELECTRONICS		2900012-011																																										
118	AC	PWR SUP, RELAY AND LAMP		1900049-031																																										
117	AC	CONSOLE OSCILLOGRAPH		1900000-021																																										
116	AC	ADPT, MODULE, P.S.A.		1902431-011																																										
115	AC	ADPT, TEST POINT, PTA / PEA		2900145-011																																										
114	AC	ADPT, TEST POINT, P.S.A.		2900037-011																																										
113	AC	CONTROL, GIMBAL, POSITION		2900036-011																																										
112	AC	SELECTOR, SIGNAL, PRIMARY		2900035-01																																										
111	AC	SEL, SIG, OSCILLOGRAPH		2900034-011																																										
110	AC	PANEL, PWR SUP AND LOAD		2900033-011																																										
109	AC	PANEL, MONITOR		2900031-011																																										
108	AC	PANEL, AUXILIARY INPUT		2900030-011																																										
107	AC	CAGING ELECTRONICS, GYRO		2900029-011																																										
106	AC	TEST SELECTOR		2900028-011																																										
105	AC	TEST CONTROL		2900027-011																																										
104	AC	MONITOR AND CONTROL, TEMP		2900026-011																																										
103	AC	DISTRIBUTION BOX, GSE		2900024-011			↓	↓	↓	↓	↓	↓	↓	↓	↓	↓	↓	↓	↓	↓	↓	↓	↓	↓	↓	↓	↓	↓	↓	↓	↓	↓	↓	↓	↓	↓	↓	↓	↓	↓	↓	↓	↓	↓	↓	↓
102	AC	VOLTMETER, DIGITAL		2900007 011			B	II	NOTE 11 C	2.125	.968	1.718	NA	.093	.031	.06	.093	.100 .104	.093	.858	.608	.484	.358	.733	.077	.116	.062	.937	.875	1.343	.125	.781	1.892	.046	NA	NA	.209	.093	.250	1.875	NA	1.840	.046	.23	.16	1.938
101	AC	NAVIGATION BASE ASSEMBLY – LEM		6899950		NAS-9-497	A	I	NOTE 11 B	2.000	1.312	1.906	1.375	.078	.048	.078	.093	NA	NA	1.125	.750	.593	.453	1.015	.062	.187	.078	.875	.718	1.375	.218	NA	NA	.048	.031	.875	.305	.078	.531	1.906	.078	NA	.078	.531	.187	NA
100	AC	NAVIGATION BASE ASSEMBLY		2899982		NAS-9-497	A	I	NOTE 11 B	2.000	1.312	1.906	1.375	.078	.048	.078	.093	NA	NA	1.125	.750	.593	.453	1.015	.062	.187	.078	.875	.718	1.375	.218	NA	NA	.048	.031	.875	.305	.078	.531	1.906	.078	NA	.078	.531	.187	NA

AC SPARK PLUG DASH NUMBERS

THIS SHEET ADDED

Ⓖ REPLACES REV F WITH CHANGE

NOTES FOR TABLE

STYLE A IS FOR G&N SYSTEM
STYLE B IS FOR GROUND SUPPORT EQUIPMENT
TYPE I IS WITHOUT MOUNTING HOLES
TYPE II IS WITH MOUNTING HOLES

QTY REQD	PART OR IDENTIFYING NO.	MATERIAL OR NOTES	NOMENCLATURE OR DESCRIPTION	FIND NO.

LIST OF MATERIALS

NEXT ASSY	USED ON
AS APPLICABLE	

APPLICATION

UNLESS OTHERWISE SPECIFIED
DIMENSIONS ARE IN INCHES
CAPACITOR VALUES ARE IN μf
RESISTOR VALUES ARE IN OHMS
TOLERANCES ON
FRACTIONS ± — DECIMALS ±.005 ANGLES ± —
DO NOT SCALE THIS DRAWING

MATERIAL
SEE NOTE 11

MIT
INSTRUMENTATION LAB
CAMBRIDGE, MASS.

		DATE
DRAWN	R A Jones	7·16·65
CHECKED	A. J. Crocco	7-22-65
APPROVED		
APPROVED	W Kupfer	22 July 65
APPROVED MIT	W Kupfer	22 July 65
APPROVED MSC		7/22/65

MANNED SPACECRAFT CENTER
HOUSTON, TEXAS

NAMEPLATES,
APOLLO G&N-GSE
(STANDARDS)

CODE IDENT NO. 80230
SIZE E
DRAWING NO. 1004260
SCALE NONE
SHEET 4 OF 5

1004260 G

NOTICE – WHEN GOVERNMENT DRAWINGS, SPECIFICATIONS, OR OTHER DATA ARE USED FOR ANY PURPOSE OTHER THAN IN CONNECTION WITH A DEFINITELY RELATED GOVERNMENT PROCUREMENT OPERATION, THE UNITED STATES GOVERNMENT THEREBY INCURS NO RESPONSIBILITY NOR ANY OBLIGATION WHATSOEVER; AND THE FACT THAT THE GOVERNMENT MAY HAVE FORMULATED, FURNISHED, OR IN ANY WAY SUPPLIED THE SAID DRAWINGS, SPECIFICATIONS OR OTHER DATA IS NOT TO BE REGARDED BY IMPLICATION OR OTHERWISE AS IN ANY MANNER LICENSING THE HOLDER OR ANY OTHER PERSON OR CORPORATION, OR CONVEYING ANY RIGHTS OR PERMISSION TO MANUFACTURE, USE, OR SELL ANY PATENTED INVENTION THAT MAY IN ANY WAY BE RELATED THERETO.

REVISIONS 02768

SYM	ZONE	DESCRIPTION	DR	CHK	DATE	APPROVED
G		REPLACES REV F WITH CHANGE PER TDRR 20854			7/22/65	WK

DASH NO.	P/C	PART NAME	REMARKS	PART NO.	SER. NO.	CONT. NO.	STYLE	TYPE	MATERIAL	A	B	C	D	E	F	G	H	J	K	L	M	N	P	R	S	T	U	V	W	Y	Z	AA	AB	AC	AD	AE	AF	AG	AH	AJ	AK	AL	AM	AN	AP	AR
499	MIT																																													
498																																														
401																																														
400	MIT																																													

MIT DASH NUMBERS

THIS SHEET ADDED

Ⓖ REPLACES REV F WITH CHANGE

NOTES FOR TABLE

STYLE A IS FOR G & N SYSTEM

STYLE B IS FOR GROUND SUPPORT EQUIPMENT

TYPE I IS WITHOUT MOUNTING HOLES

TYPE II IS WITH MOUNTING HOLES

QTY REQD	PART OR IDENTIFYING NO.	MATERIAL OR NOTES	NOMENCLATURE OR DESCRIPTION	FIND NO.

LIST OF MATERIALS

NEXT ASSY	USED ON
AS APPLICABLE	

APPLICATION

UNLESS OTHERWISE SPECIFIED
DIMENSIONS ARE IN INCHES
CAPACITOR VALUES ARE IN μf
RESISTOR VALUES ARE IN OHMS
TOLERANCES ON
FRACTIONS ± — DECIMALS ±.005 ANGLES ± —
DO NOT SCALE THIS DRAWING

MATERIAL
SEE NOTE 11

MIT
INSTRUMENTATION LAB
CAMBRIDGE, MASS.

		DATE
DRAWN	R A Jones	7-16-65
CHECKED		7-22-65
APPROVED		
APPROVED	W Kupfer	22 Jul 65
APPROVED MIT	W Kupfer	22 Jul 65
APPROVED MSC		

MANNED SPACECRAFT CENTER
HOUSTON, TEXAS

NAMEPLATES,
APOLLO G & N-GSE
(STANDARDS)

CODE IDENT NO. 80230
SIZE E
DRAWING NO. 1004260
SCALE NONE
SHEET 5 OF 5

1004260 G

NOTICE – WHEN GOVERNMENT DRAWINGS, SPECIFICATIONS, OR OTHER DATA ARE USED FOR ANY PURPOSE OTHER THAN IN CONNECTION WITH A DEFINITELY RELATED GOVERNMENT PROCUREMENT OPERATION, THE UNITED STATES GOVERNMENT THEREBY INCURS NO RESPONSIBILITY NOR ANY OBLIGATION WHATSOEVER, AND THE FACT THAT THE GOVERNMENT MAY HAVE FORMULATED, FURNISHED, OR IN ANY WAY SUPPLIED THE SAID DRAWINGS, SPECIFICATIONS OR OTHER DATA IS NOT TO BE REGARDED BY IMPLICATION OR OTHERWISE AS IN ANY MANNER LICENSING THE HOLDER OR ANY OTHER PERSON OR CORPORATION, OR CONVEYING ANY RIGHTS OR PERMISSION TO MANUFACTURE, USE, OR SELL ANY PATENTED INVENTION THAT MAY IN ANY WAY BE RELATED THERETO.

NOTES:

1. INTERPRET DRAWING IN ACCORDANCE WITH STANDARDS PRESCRIBED IN MIL-D-70327.
2. DIMENSIONS ON EACH VIEW APPLY TO ALL VIEWS. (WITH THE EXCEPTION OF MOUNTING HOLES).
3. FORMATS ILLUSTATED WILL BE APPLICABLE TO ALL ITEMS REQUIRING NAMEPLATES BELOW END ITEM DESIGNATION (SYSTEMS, ASSEMBLIES, ETC.)
4. PLATE BACKGROUND TO BE LUSTERLESS BLACK PER FED-STD-595, COLOR 37038. BORDER, MARKING AND LETTERING TO BE NATURAL METAL,(ANODIZED ALUMINUM).
5. MARKING METHOD TO BE DIE STAMPING, ETCHING OR ENGRAVING IN ACCORDANCE WITH MIL P 19834.
6. LETTERING STYLE TO BE GOTHIC,(SANS SERIFS), AND NUMBERS TO BE ARABIC.
7. WHERE LOCATING DIMENSIONS ARE NOT SHOWN, CHARACTERS SHALL BE SYMMETRICALLY POSITIONED.
8. IDENTIFY WITH DRAWING NUMBER AND REVISION PER ND 1002019.
9. WHEN "AUTO MARK" METAL MARKING TYPEWRITER IS USED TO ADD DATA TO BLANK SPACES, TYPE SIZE IS TO BE SELECTED FROM DIMENSIONS U, AC AND AM.
10. NASA SYMBOL IS TO BE PROPORTIONAL TO NAMEPLATE AND IS TO HAVE NATURAL BACKGROUND. NASA OUTLINE CIRCLE, LETTERING AND FEATHER TO BE BLACK, (OR WHITE FOR SILK SCREENING).
11. NAMEPLATES WILL BE APPLIED BY METHODS LISTED BELOW, SHOWN IN ORDER OF PREFERENCE, (I.E., FOR RELIABILITY AND WEIGHT).
    - A - STENCIL OR SILK SCREEN DIRECTLY ON EQUIPMENT USING INK PER SCD 1010920,(WHITE OR BLACK).
    - B - ALUMINUM FOIL, (TYPE I); FOIL SHALL BE .0030 ± .0005 THICK PER MIL-A-148. FOIL SHALL HAVE NO ADHESIVE BACKING. FOIL SHALL BE APPLIED PER ND 1002219,(MODIFIED). FOIL SHALL BE CLEAR ANODIZED PER MIL-A-8625, TYPE II.
    - C - PLATE, (TYPE II); MATERIAL: QQ-A-250, TEMPER O OR H14, TYPE 1100, ALUMINUM ALLOY, .032 THICK. ANODIZE PER MIL-A-8625, TYPE II. ALUMINUM PLATE MUST BE FREE FROM BURRS AND SHARP CORNERS, MOUNTED WITH APPLICABLE SIZE FASTENERS.
12. NAMEPLATES SHALL BE CAPABLE OF MEETING APPLICABLE REQUIREMENTS OF MIL-M-13231.

REVISIONS

SYM	ZONE	DESCRIPTION	DR	CHK	DATE	APPROVED
G		REPLACES REV F WITH CHANGE PER TDRR 20854			7/22/65	WK
H		REVISED PER TDRR 20892			8/3/65	WK
J		REVISED PER TDRR 20904			8/3/65	WK

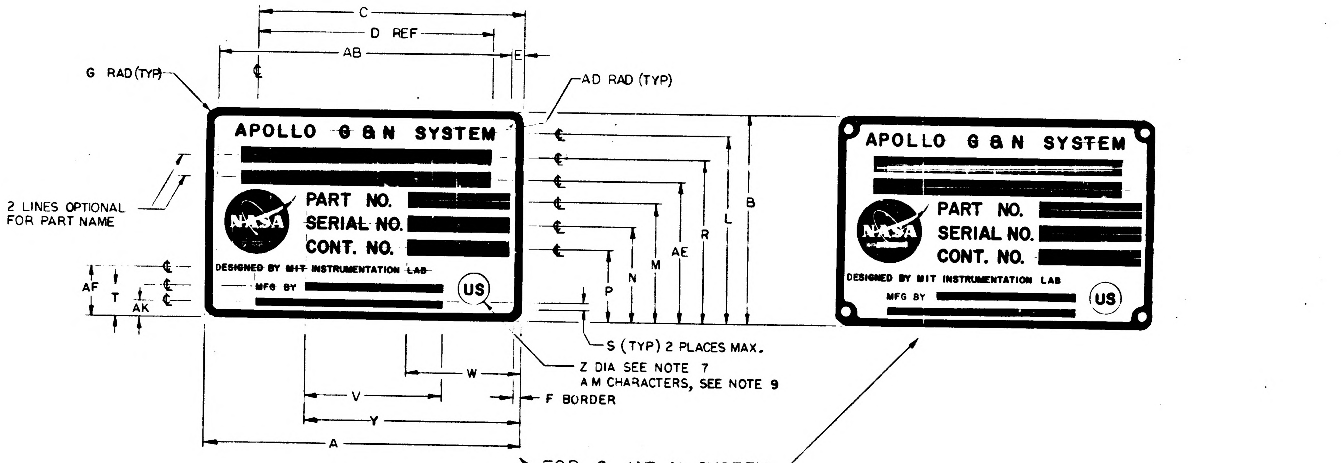
C
D REF
AB
E
G RAD (TYP)
AD RAD (TYP)
APOLLO G & N SYSTEM
PART NO.
SERIAL NO.
CONT. NO.
DESIGNED BY MIT INSTRUMENTATION LAB
MFG BY
US
NASA
2 LINES OPTIONAL FOR PART NAME
AF
T
AK
B
L
R
AE
M
N
P
S (TYP) 2 PLACES MAX.
Z DIA SEE NOTE 7
AM CHARACTERS, SEE NOTE 9
W
V
Y
F BORDER
A

FOR G AND N SYSTEM
STYLE A

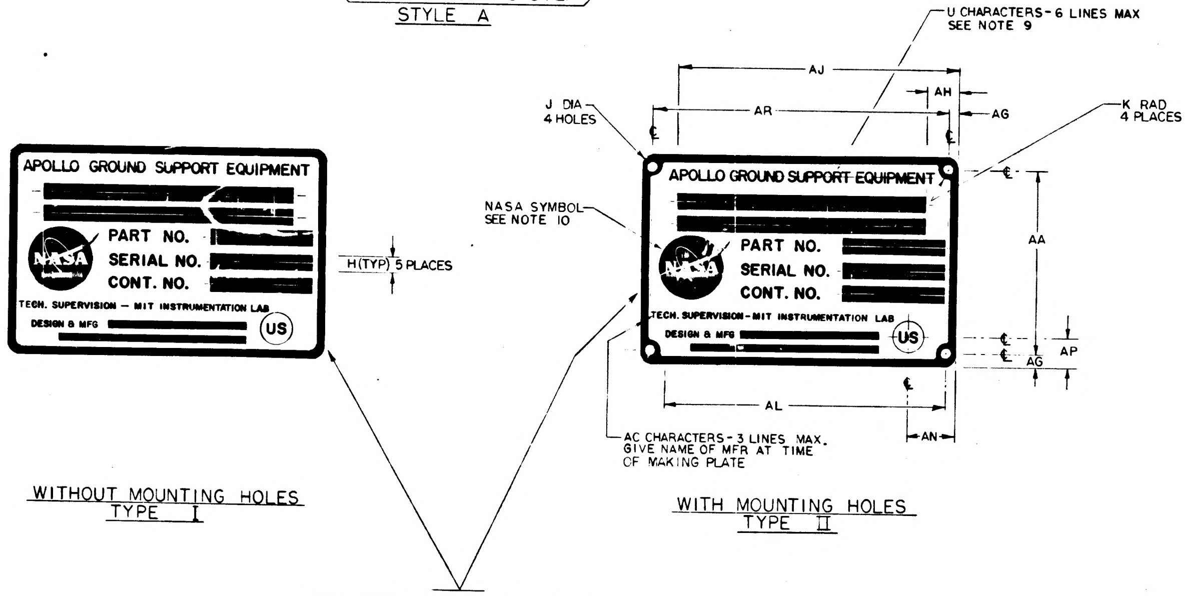
U CHARACTERS-6 LINES MAX SEE NOTE 9
AJ
AH
AR
AG
J DIA 4 HOLES
K RAD 4 PLACES
APOLLO GROUND SUPPORT EQUIPMENT
NASA SYMBOL SEE NOTE 10
PART NO.
SERIAL NO.
CONT. NO.
TECH. SUPERVISION – MIT INSTRUMENTATION LAB
DESIGN & MFG
US
NASA
H(TYP) 5 PLACES
AA
AP
AG
AL
AN
AC CHARACTERS - 3 LINES MAX. GIVE NAME OF MFR AT TIME OF MAKING PLATE

WITHOUT MOUNTING HOLES
TYPE I

WITH MOUNTING HOLES
TYPE II

FOR GROUND SUPPORT EQUIPMENT
STYLE B

1004260 J

Ⓖ REPLACES REV F WITH CHANGE

QTY REQD	PART OR IDENTIFYING NO.	MATERIAL OR NOTES	NOMENCLATURE OR DESCRIPTION	FIND NO.

LIST OF MATERIALS

NEXT ASSY	USED ON
AS APPLICABLE	

APPLICATION

UNLESS OTHERWISE SPECIFIED
DIMENSIONS ARE IN INCHES
CAPACITOR VALUES ARE IN μf
RESISTOR VALUES ARE IN OHMS
TOLERANCES ON
FRACTIONS ± — DECIMALS ±.005 ANGLES ± —
DO NOT SCALE THIS DRAWING

MATERIAL
SEE NOTE 11

MIT
INSTRUMENTATION LAB
CAMBRIDGE, MASS.

MANNED SPACECRAFT CENTER
HOUSTON, TEXAS

		DATE
DRAWN	R. A. Jones	7/16/65
CHECKED	A. J. Longo	7-22-65
APPROVED		
APPROVED	W. Kupfer	7/22/65
APPROVED MIT	W. Kupfer	7/22/65
APPROVED MSC		7/22/65

NAMEPLATES,
APOLLO G&N—GSE
(STANDARDS)

CODE IDENT NO. 80230
SIZE E
DRAWING NO. 1004260
SCALE NONE
SHEET 1 OF 5

NOTICE – WHEN GOVERNMENT DRAWINGS, SPECIFICATIONS, OR OTHER DATA ARE USED FOR ANY PURPOSE OTHER THAN IN CONNECTION WITH A DEFINITELY RELATED GOVERNMENT PROCUREMENT OPERATION, THE UNITED STATES GOVERNMENT THEREBY INCURS NO RESPONSIBILITY NOR ANY OBLIGATION WHATSOEVER; AND THE FACT THAT THE GOVERNMENT MAY HAVE FORMULATED, FURNISHED, OR IN ANY WAY SUPPLIED THE SAID DRAWINGS, SPECIFICATIONS OR OTHER DATA IS NOT TO BE REGARDED BY IMPLICATION OR OTHERWISE AS IN ANY MANNER LICENSING THE HOLDER OR ANY OTHER PERSON OR CORPORATION, OR CONVEYING ANY RIGHTS OR PERMISSION TO MANUFACTURE, USE, OR SELL ANY PATENTED INVENTION THAT MAY IN ANY WAY BE RELATED THERETO.

REVISIONS 02768

SYM	ZONE	DESCRIPTION	DR	CHK	DATE	APPROVED
G		REPLACES REV F WITH CHANGE PER TDRR 20854.			7/22/65	WK
H		REVISED PER TDRR 20892			8/3/65	WK
J		REVISED PER TDRR 20904			8/5/65	WK

(109)

DASH NO.	P/C	PART NAME	REMARKS	PART NO.	SER. NO.	CONT. NO.	STYLE	TYPE	MATERIAL	A	B	C	D	E	F	G	H	J	K	L	M	N	P	R	S	T	U	V	W	Y	Z	AA	AB	AC	AD	AE	AF	AG	AH	AJ	AK	AL	AM	AN	AP	AR
399	K																																													
398	K																																													
309	K																																													
308	K																																													
307	K																																													
306	K						B	I	NOTE 11 B	4.000	2.625	3.375	2.750	.156	.093	.156	.187	NA	NA	2.328	1.468	1.187	.906	2.031	.062	.375	.156	NA	1.437	2.750	.437	NA	3.687	.062	.062	1.750	.593	NA	NA	NA	NA	NA	NA	NA	NA	NA
305	K						B	II	NOTE 11 C	4.000	2.625	3.375	2.750	.156	.093	.156	.187	.125	.156	2.328	1.468	1.187	.906	2.031	.062	.375	.156	↕	1.437	2.750	.437	2.312	3.687	.062	NA	1.750	.593	↕	↕	↕	↕	↕	↕	↕	↕	↕
304	K						B	I	NOTE 11 B	2.000	1.312	1.687	1.375	.078	.048	.078	.093	NA	NA	1.164	.734	.593	.453	1.015	.048	.171	.078	↕	.718	1.375	.187	NA	NA	.048	.031	.875	.320	↕	↕	↕	↕	↕	↕	↕	↕	↕
303	K						B	II	NOTE 11 C	2.000	1.312	1.687	1.375	.078	.048	.078	.093	.070	.078	1.164	.734	.593	.453	1.015	.048	.171	.078	NA	.718	1.375	.187	.156	1.843	.048	NA	.875	.320	NA	NA	NA	NA	NA	NA	NA	NA	NA
302	K																																													
301	K																																													
300	K																																													
9	K	2 IN AUTOCOLLIMATOR		1001702			B	II	NOTE 11 C	4.000	2.625	3.812	2.750	.156	.093	.156	.187	.125	.156	2.250	1.500	1.187	.906	2.031	.093	.375	.156	1.750	1.437	2.750	.437	2.312	3.687	.062	NA	1.750	.593	.156	1.062	3.812	.156	NA	.156	1.062	.375	3.687
8	K	5 IN AUTOCOLLIMATOR		1017410			B	II	NOTE 11 C	4.000	2.625	3.812	2.750	.156	.093	.156	.187	.125	.156	2.250	1.500	1.187	.906	2.031	.093	.375	.156	1.750	1.437	2.750	.437	2.312	3.687	.062	NA	1.750	.593	.156	1.062	3.812	.156	NA	.156	1.062	.375	3.687
7	K	2½ IN AUTOCOLLIMATOR (SCT)		1017435			B	II	NOTE 11 C	4.000	2.625	3.812	2.750	.156	.093	.156	.187	.125	.156	2.250	1.500	1.187	.906	2.031	.093	.375	.156	1.750	1.437	2.750	.437	2.312	3.687	.062	NA	1.750	.593	.156	1.062	3.812	.156	NA	.156	1.062	.375	3.687
6	K	2½ IN AUTOCOLLIMATOR (SXT)		1017448			B	II	NOTE 11 C	4.000	2.625	3.812	2.750	.156	.093	.156	.187	.125	.156	2.250	1.500	1.187	.906	2.031	.093	.375	.156	1.750	1.437	2.750	.437	2.312	3.687	.062	NA	1.750	.593	.156	1.062	3.812	.156	NA	.156	1.062	.375	3.687
5	K	RETROREFLECTING PRISM ASSEMBLY		1019840			B	I	NOTE 11 B	4.000	2.625	3.812	2.750	.156	.093	.156	.187	NA	NA	2.250	1.500	1.187	.906	2.031	.093	.375	.156	1.750	1.437	2.750	.437	NA	NA	.062	.062	1.750	.593	.156	1.062	3.812	.156	NA	.156	1.062	.375	NA
4	K	S/H SIMULATOR ASSEMBLY		1019896			B	I	NOTE 11 B	4.000	2.625	3.812	2.750	.156	.093	.156	.187	NA	NA	2.250	1.500	1.187	.906	2.031	.093	.375	.156	1.750	1.437	2.750	.437	NA	NA	.062	.062	1.750	.593	.156	1.062	3.812	.156	NA	.156	1.062	.375	NA
3	K	REFERENCE MIRROR		1001767			B	I	NOTE 11 B	2.000	1.312	1.906	1.375	.078	.048	.078	.093	NA	NA	1.125	.750	.593	.453	1.015	.062	.187	.078	.875	.718	1.375	.218	NA	NA	.048	.031	.875	.305	.078	.531	1.906	.078	NA	.078	.531	.187	NA
2	K	2 IN PLANE READING AUTOCOLLIMATOR		1017413			B	I	NOTE 11 B	2.000	1.312	1.906	1.375	.078	.048	.078	.093	NA	NA	1.125	.750	.593	.453	1.015	.062	.187	.078	.875	.718	1.375	.218	NA	NA	.048	.031	.875	.305	.078	.531	1.906	.078	NA	.078	.531	.187	NA
1	K	2 IN AUTOCOLLIMATOR		1001702			B	I	NOTE 11 B	2.000	1.312	1.906	1.375	.078	.048	.078	.093	NA	NA	1.125	.750	.593	.453	1.015	.063	.187	.078	.875	.718	1.375	.218	NA	NA	.048	.031	.875	.305	.078	.531	1.906	.078	NA	.078	.531	.187	NA

NOTES FOR TABLE

STYLE A IS FOR G&N SYSTEM.
STYLE B IS FOR GROUND SUPPORT EQUIPMENT.
TYPE I IS WITHOUT MOUNTING HOLES.
TYPE II IS WITH MOUNTING HOLES.

Ⓖ REPLACES REV F WITH CHANGE

KOLLSMAN DASH NUMBERS

QTY REQD	PART OR IDENTIFYING NO.	MATERIAL OR NOTES	NOMENCLATURE OR DESCRIPTION	FIND NO.

LIST OF MATERIALS

AS APPLICABLE	
NEXT ASSY	USED ON
APPLICATION	

UNLESS OTHERWISE SPECIFIED
DIMENSIONS ARE IN INCHES
CAPACITOR VALUES ARE IN µf
RESISTOR VALUES ARE IN OHMS
TOLERANCES ON
FRACTIONS ± — DECIMALS ±.005 ANGLES ± —
DO NOT SCALE THIS DRAWING

MATERIAL
SEE NOTE 11

MIT
INSTRUMENTATION LAB
CAMBRIDGE, MASS.

DRAWN E. A. Jones 7-16-65
CHECKED 7-22-65
APPROVED
APPROVED 22 Jul 65
APPROVED MIT 22 Jul 65
APPROVED MSC 7/22/65
DATE

MANNED SPACECRAFT CENTER
HOUSTON, TEXAS

NAMEPLATES,
APPOLLO G&N-GSE
(STANDANDS)

CODE IDENT NO. 80230
SIZE E
DRAWING NO. 1004260
SCALE NONE
SHEET 2 OF 5

1004260 J

NOTICE – WHEN GOVERNMENT DRAWINGS, SPECIFICATIONS, OR OTHER DATA ARE USED FOR ANY PURPOSE OTHER THAN IN CONNECTION WITH A DEFINITELY RELATED GOVERNMENT PROCUREMENT OPERATION, THE UNITED STATES GOVERNMENT THEREBY INCURS NO RESPONSIBILITY NOR ANY OBLIGATION WHATSOEVER; AND THE FACT THAT THE GOVERNMENT MAY HAVE FORMULATED, FURNISHED, OR IN ANY WAY SUPPLIED THE SAID DRAWINGS, SPECIFICATIONS OR OTHER DATA IS NOT TO BE REGARDED BY IMPLICATION OR OTHERWISE AS IN ANY MANNER LICENSING THE HOLDER OR ANY OTHER PERSON OR CORPORATION, OR CONVEYING ANY RIGHTS OR PERMISSION TO MANUFACTURE, USE, OR SELL ANY PATENTED INVENTION THAT MAY IN ANY WAY BE RELATED THERETO.

REVISIONS 22768

SYM	ZONE	DESCRIPTION	DR	CHK	DATE	APPROVED
G		REPLACES REV F WITH CHANGE PER TDRR 20854			7/22/65	WK
H		REVISED PER TDRR 20892			8/3/65	WK
J		REVISED PER TDRR 20904			8/3/65	WK

DASH NO.	P/C	PART NAME	REMARKS	PART NO.	SER. NO.	CONT. NO.	STYLE	TYPE	MATERIAL	A	B	C	D	E	F	G	H	J	K	L	M	N	P	R	S	T	U	V	W	Y	Z	AA	AB	AC	AD	AE	AF	AG	AH	AJ	AK	AL	AM	AN	AP	AR
299	R																																													
298	R																																													
201	R																																													
200	R																																													
21	R																																													
20	R	NA		NA	NA	NA	A	II	NOTE 11 C	2.000	1.312	1.687	1.375	.078	.031	.078	.093	.106 .113	.093	1.187	.750	.593	.453	1.015	.062	.187	.078	.875	.718	1.375	.218	1.156	1.843	.048	NA	.875	.305	.078	.312	1.687	.078	NA	.078	.312	.187	1.843
19	R	NA		NA	NA	NA	A	I	NOTE 11 B	2.000	1.312	1.687	1.375	.078	.031	.078	.093	NA	NA	1.187	.750	.593	.453	1.015	.062	.187	.078	.875	.718	1.375	.218	NA	NA	.048	.031	.875	.305	.078	.312	1.687	.078	NA	.078	.312	.187	NA
18	R	NA		NA	NA	NA	B	II	NOTE 11 C	4.187	1.875	3.469	2.750	.156	.093	.156	.125	.106 .113	.125	1.625	1.032	.844	.656	1.406	.093	.344	.156	1.781	1.531	2.844	.312	1.562	3.875	.062	NA	1.219	.500	.156	.719	3.469	156	NA	.156	.719	.344	3.875
17	R	NA		NA	NA	NA	B	I	NOTE 11 B	4.187	1.875	3.469	2.750	.156	.093	.156	.125	NA	NA	1.625	1.032	.844	.656	1.406	.093	.344	.156	1.781	1.531	2.844	.312	NA	NA	.062	.062	1.219	.500	.156	.719	3.469	.156	NA	.156	.719	.344	NA
16	R	NA		NA	NA	NA	B	II	NOTE 11 C	2.000	1.312	1.687	1.375	.078	.031	.078	.093	.106 .113	.093	1.187	.750	.593	.453	1.015	.062	.187	.078	.875	.718	1.375	.218	1.156	1.843	.048	NA	.875	.305	.078	.312	1.687	.078	NA	.078	.312	.187	1.843
15	R	NA		NA	NA	NA	B	I	NOTE 11 B	2.000	1.312	1.687	1.375	.078	.031	.078	.093	NA	NA	1.187	.750	.593	.453	1.015	.062	.187	.078	.875	.718	1.375	.218	NA	NA	.048	.031	.875	.305	.078	.312	1.687	.078	NA	.078	.312	.187	NA

THIS SHEET ADDED

Ⓖ REPLACES REV F WITH CHANGE

RAYTHEON DASH NUMBERS

NOTES FOR TABLE

STYLE A IS FOR G & N SYSTEM
STYLE B IS FOR GROUND SUPPORT EQUIPMENT
TYPE I IS WITHOUT MOUNTING HOLES
TYPE II IS WITH MOUNTING HOLES

QTY REQD	PART OR IDENTIFYING NO.	MATERIAL OR NOTES	NOMENCLATURE OR DESCRIPTION	FIND NO.

LIST OF MATERIALS

NEXT ASSY	USED ON
AS APPLICABLE	

APPLICATION

UNLESS OTHERWISE SPECIFIED
DIMENSIONS ARE IN INCHES
CAPACITOR VALUES ARE IN µf
RESISTOR VALUES ARE IN OHMS
TOLERANCES ON
FRACTIONS ± — DECIMALS ±.005 ANGLES ± —
DO NOT SCALE THIS DRAWING

MATERIAL
SEE NOTE 11

MIT
INSTRUMENTATION LAB
CAMBRIDGE, MASS.

DRAWN R A Jones 7-16-65
CHECKED A. J. Lungo 7-22-65
APPROVED
APPROVED W Kupfer 7/22/65
APPROVED MIT W Kupfer 7/22/65
APPROVED MSC 7/24/—
DATE

MANNED SPACECRAFT CENTER
HOUSTON, TEXAS

NAMEPLATES,
APOLLO GEN-GSE
(STANDARDS)

CODE IDENT NO. 80230
SIZE E
DRAWING NO. 1004260
SCALE NONE
SHEET 3 OF 5

1004260 J

NOTICE – WHEN GOVERNMENT DRAWINGS, SPECIFICATIONS, OR OTHER DATA ARE USED FOR ANY PURPOSE OTHER THAN IN CONNECTION WITH A DEFINITELY RELATED GOVERNMENT PROCUREMENT OPERATION, THE UNITED STATES GOVERNMENT THEREBY INCURS NO RESPONSIBILITY NOR ANY OBLIGATION WHATSOEVER; AND THE FACT THAT THE GOVERNMENT MAY HAVE FORMULATED, FURNISHED, OR IN ANY WAY SUPPLIED THE SAID DRAWINGS, SPECIFICATIONS OR OTHER DATA IS NOT TO BE REGARDED BY IMPLICATION OR OTHERWISE AS IN ANY MANNER LICENSING THE HOLDER OR ANY OTHER PERSON OR CORPORATION, OR CONVEYING ANY RIGHTS OR PERMISSION TO MANUFACTURE, USE, OR SELL ANY PATENTED INVENTION THAT MAY IN ANY WAY BE RELATED THERETO.

REVISIONS 02768

SYM	ZONE	DESCRIPTION	DR	CHK	DATE	APPROVED
G		REPLACES REV F WITH CHANGE PER TDRR 20854.			7/22/65	WK
H		REVISED PER TDRR 20892			8/3/65	wk
J		REVISED PER TDRR 20904			8/3/65	wk

DASH NO.	P/C	PART NAME	REMARKS	PART NO.	SER. NO.	CONT. NO.	STYLE	TYPE	MATERIAL	A	B	C	D	E	F	G	H	J	K	L	M	N	P	R	S	T	U	V	W	Y	Z	AA	AB	AC	AD	AE	AF	AG	AH	AJ	AK	AL	AM	AN	AP	AR
199	AC																																													
198	AC																																													
144	AC	FIX., MOUNTING, G AND N		1902204-021			B	II	NOTE 11 C	4.125	1.812	3.250	NA	.125	.062	.12	.156	.188 .104	.125	1.625	1.140	.890	.640	1.390	.125	.171	.125	1.875	1.687	2.625	.250	1.562	3.843	.093	NA	NA	.359	.125	.437	3.688	NA	3.687	.093	.40	.25	3.875
143	AC	CSL, COOL AND PWR, G AND N		1902134-021			↑	↑	↑	4.125	1.812	3.250	↑	.125	.062	.12	.156	↑	.125	1.625	1.140	.890	.640	1.390	.125	.171	.125	1.875	1.687	2.625	.250	1.562	3.843	.093	↑	↑	.359	.125	.437	3.688	↑	3.687	.093	.40	.25	3.875
142	AC	ANALYZER, OPTICS-INERTIAL		2900023-011						4.125	1.812	3.250		.125	.062	.12	.156		.125	1.625	1.140	.890	.640	1.390	.125	.171	.125	1.875	1.687	2.625	.250	1.562	3.843	.093			.359	.125	.437	3.668		3.687	.093	.40	.25	3.875
141	AC	CONT, TEMP, PORTABLE		2900060-011						2.125	.968	1.718		.093	.031	.06	.093		.093	.858	.608	.484	.358	.733	.077	.116	.062	.937	.875	1.343	.125	.781	1.892	.046			.209	.093	.250	1.875		1.840	.046	.23	.16	1.938
140	AC	TESTER, CKT, IMU/CDU RSVR		2900286-011						4.125	1.812	3.250		.125	.062	.12	.156		.125	1.625	1.140	.890	.640	1.390	.125	.171	.125	1.875	1.687	2.625	.250	1.562	3.843	.093			.359	.125	.437	3.688		3.687	.093	.40	.25	3.875
139	AC	SIMULATOR, LD/SIG, CDU		2900285-011						↑	↑	↑		↑	↑	↑	↑		↑	↑	↑	↑	↑	↑	↑	↑	↑	↑	↑	↑	↑	↑	↑	↑			↑	↑	↑	↑		↑	↑	↑	↑	↑
138	AC	SIMULATOR, LD/SIG, OPTICS		1902023-021																																										
137	AC	FIX., MOUNTING, IMU/NAV BASE		6900003-011																																										
136	AC	FIX., OPTICS/NAV BASE		2900072-011																																										
135	AC	FIX., MOUNTING, SUB SYSTEM		2900070-011																																										
134	AC	FIX., HAND., G AND N HARNESS		2900069-011																																										
133	AC	CNTR, SHIPPING, NAV BASE		2900068-011																																										
132	AC	FIX., MOUNTING, G AND N		2900067-011																																										
131	AC	SIMULATOR, LD/SIG, IMU/CDU		2900062-011																																										
130	AC	TESTOR, GYRO WHEEL		2900061-011																																										
129	AC	COOLANT SUPPLY		1902133-021						↓	↓	↓		↓	↓	↓	↓		↓	↓	↓	↓	↓	↓	↓	↓	↓	↓	↓	↓	↓	↓	↓	↓			↓	↓	↓	↓		↓	↓	↓	↓	↓
128	AC	TABLE, ROTARY		1900926-021						4.125	1.812	3.250		.125	.062	.12	.156		.125	1.625	1.140	.890	.640	1.390	.125	.171	.125	1.875	1.687	2.625	.250	1.562	3.843	.093			.359	.125	.437	3.688		3.687	.093	.40	.25	3.875
127	AC	FIX., HAND., OPTICS		2900074-011						2.125	.968	1.718	↑	.093	.031	.06	.093	↑	.093	.858	.608	.484	.358	.733	.077	.116	.062	.937	.875	1.343	.125	.781	1.892	.046	↑	↑	.209	.093	.250	1.875	↑	1.840	.046	.23	.16	1.938
126	AC	FIX., MTG, PTA / PEA		2900066-011						↑	↑	↑		↑	↑	↑	↑		↑	↑	↑	↑	↑	↑	↑	↑	↑	↑	↑	↑	↑	↑	↑	↑			↑	↑	↑	↑		↑	↑	↑	↑	↑
125	AC	CONT, TEMP, IMU LIFTING		2900063-011																																										
124	AC	FIX., HANDLING, IMU		2900064-011																																										
123	AC	CONT, OPTICS, REMOTE		1902046-021																																										
122	AC	TEST CONTROL		1902009-021																																										
121	AC	ADPT MODULE, P.S.A.		1902431-021																																										
120	AC	BRIDGE, DECADE ERROR		2900128-011																																										
119	AC	PWR SUP, ELECTRONICS		2900012-011																																										
118	AC	PWR SUP, RELAY AND LAMP		1900049-031																																										
117	AC	CONSOLE OSCILLOGRAPH		1900000-021																																										
116	AC	ADPT, MODULE, P.S.A.		1902431-011																																										
115	AC	ADPT, TEST POINT, PTA / PEA		2900145-011																																										
114	AC	ADPT, TEST POINT, P.S.A.		2900037-011																																										
113	AC	CONTROL, GIMBAL, POSITION		2900036-011																																										
112	AC	SELECTOR, SIGNAL, PRIMARY		2900035-011																																										
111	AC	SEL, SIG, OSCILLOGRAPH		2900034-011																																										
110	AC	PANEL, PWR SUP AND LOAD		2900033-011																																										
109	AC	PANEL, MONITOR		2900031-011																																										
108	AC	PANEL, AUXILIARY INPUT		2900030-011																																										
107	AC	CAGING ELECTRONICS, GYRO		2900029-011																																										
106	AC	TEST SELECTOR		2900028-011																																										
105	AC	TEST CONTROL		2900027-011																																										
104	AC	MONITOR AND CONTROL, TEMP		2900026-011																																										
103	AC	DISTRIBUTION BOX, GSE		2900024-011			↓	↓	↓	↓	↓	↓	↓	↓	↓	↓	↓	↓	↓	↓	↓	↓	↓	↓	↓	↓	↓	↓	↓	↓	↓	↓	↓	↓	↓	↓	↓	↓	↓	↓	↓	↓	↓	↓	↓	↓
102	AC	VOLTMETER, DIGITAL		2900007 011			B	II	NOTE 11 C	2.125	.968	1.718	NA	.093	.031	.06	.093	.188 .104	.093	.858	.608	.484	.358	.733	.077	.116	.062	.937	.875	1.343	.125	.781	1.892	.046	NA	NA	.209	.093	.250	1.875	NA	1.840	.046	.23	.16	1.938
101	AC	NAVIGATION BASE ASSEMBLY – LEM		6899950		NAS-9-497	A	I	NOTE 11 B	2.000	1.312	1.906	1.375	.078	.048	.078	.093	NA	NA	1.125	.750	.593	.453	1.015	.062	.187	.078	.875	.718	1.375	.218	NA	NA	.048	.031	.875	.305	.078	.531	1.906	.078	NA	.078	.531	.187	NA
100	AC	NAVIGATION BASE ASSEMBLY		2899982		NAS-9-497	A	I	NOTE 11 B	2.000	1.312	1.906	1.375	.078	.048	.078	.093	NA	NA	1.125	.750	.593	.453	1.015	.062	.187	.078	.875	.718	1.375	.218	NA	NA	.048	.031	.875	.305	.078	.531	1.906	.078	NA	.078	.531	.187	NA

THIS SHEET ADDED

Ⓖ REPLACES REV F WITH CHANGE

AC SPARK PLUG DASH NUMBERS

NOTES FOR TABLE

STYLE A IS FOR G&N SYSTEM
STYLE B IS FOR GROUND SUPPORT EQUIPMENT
TYPE I IS WITHOUT MOUNTING HOLES
TYPE II IS WITH MOUNTING HOLES

QTY REQD	PART OR IDENTIFYING NO.	MATERIAL OR NOTES	NOMENCLATURE OR DESCRIPTION	FIND NO.

LIST OF MATERIALS

NEXT ASSY	USED ON
AS APPLICABLE	

APPLICATION

UNLESS OTHERWISE SPECIFIED
DIMENSIONS ARE IN INCHES
CAPACITOR VALUES ARE IN μf
RESISTOR VALUES ARE IN OHMS
TOLERANCES ON
FRACTIONS ± — DECIMALS ±.005 ANGLES ± —
DO NOT SCALE THIS DRAWING

MATERIAL
SEE NOTE 11

MIT
INSTRUMENTATION LAB
CAMBRIDGE, MASS.

MANNED SPACECRAFT CENTER
HOUSTON, TEXAS

		DATE
DRAWN	R A Jones	7 16 65
CHECKED		7-22-65
APPROVED		
APPROVED	W Kupfer	22 Jul 65
APPROVED MIT	W Kupfer	22 Jul 65
APPROVED MSC		7/22/65

NAMEPLATES,
APOLLO G&N-GSE
(STANDARDS)

CODE IDENT NO. 80230 SIZE E DRAWING NO. 1004260
SCALE NONE SHEET 4 OF 5

1004260 J

NOTICE – WHEN GOVERNMENT DRAWINGS, SPECIFICATIONS, OR OTHER DATA ARE USED FOR ANY PURPOSE OTHER THAN IN CONNECTION WITH A DEFINITELY RELATED GOVERNMENT PROCUREMENT OPERATION, THE UNITED STATES GOVERNMENT THEREBY INCURS NO RESPONSIBILITY NOR ANY OBLIGATION WHATSOEVER; AND THE FACT THAT THE GOVERNMENT MAY HAVE FORMULATED, FURNISHED, OR IN ANY WAY SUPPLIED THE SAID DRAWINGS, SPECIFICATIONS OR OTHER DATA IS NOT TO BE REGARDED BY IMPLICATION OR OTHERWISE AS IN ANY MANNER LICENSING THE HOLDER OR ANY OTHER PERSON OR CORPORATION, OR CONVEYING ANY RIGHTS OR PERMISSION TO MANUFACTURE, USE, OR SELL ANY PATENTED INVENTION THAT MAY IN ANY WAY BE RELATED THERETO.

REVISIONS 02768

SYM	ZONE	DESCRIPTION	DR	CHK	DATE	APPROVED
G		REPLACES REV F WITH CHANGE PER TDRR 20854			7/22/65	WK
H		REVISED PER TDRR 20892			8/3/65	WK
J		REVISED PER TDRR 20904			8/3/65	WK

DASH NO.	P/C	PART NAME	REMARKS	PART NO.	SER. NO.	CONT. NO.	STYLE	TYPE	MATERIAL
499	MIT								
498									
401									
-00	MIT	LIFTING SLING-G&N INST. QUAL. FIX. & AZM. REF. FIX.		1021640		NAS-9-4065	B	II	NOTE 11 C

DASH NO.	A	B	C	D	E	F	G	H	J	K	L	M	N	P	R	S	T	U	V	W	Y
-00	2.000	1.312	1.687	1.375	.078	.048	.078	.093	.106/.113	.093	1.187	.750	.593	.453	1.015	.062	.187	.078	.875	.718	1.375

DASH NO.	Z	AA	AB	AC	AD	AE	AF	AG	AH	AJ	AK	AL	AM	AN	AP	AR
-00	.218	1.156	1.843	.048	NA	.875	.305	NA	NA	NA	NA	NA	NA	NA	NA	NA

MIT DASH NUMBERS

NOTES FOR TABLE
STYLE A IS FOR G&N SYSTEM
STYLE B IS FOR GROUND SUPPORT EQUIPMENT
TYPE I IS WITHOUT MOUNTING HOLES
TYPE II IS WITH MOUNTING HOLES

THIS SHEET ADDED
Ⓖ REPLACES REV F WITH CHANGE

QTY REQD	PART OR IDENTIFYING NO.	MATERIAL OR NOTES	NOMENCLATURE OR DESCRIPTION	FIND NO.

LIST OF MATERIALS

NEXT ASSY	USED ON
AS APPLICABLE	

APPLICATION

UNLESS OTHERWISE SPECIFIED
DIMENSIONS ARE IN INCHES
CAPACITOR VALUES ARE IN μf
RESISTOR VALUES ARE IN OHMS
TOLERANCES ON
FRACTIONS ± — DECIMALS ±.005 ANGLES ± —
DO NOT SCALE THIS DRAWING

MATERIAL
SEE NOTE 11

MIT
INSTRUMENTATION LAB
CAMBRIDGE, MASS.

		DATE
DRAWN	R G Jones	7-16-65
CHECKED	A J Cargo	7-22-65
APPROVED		
APPROVED	W Kupfer	22/7/65
APPROVED MIT	W Kupfer	22/7/65
APPROVED MSC		7/22/65

MANNED SPACECRAFT CENTER
HOUSTON, TEXAS

NAMEPLATES,
APOLLO G&N-GSE
(STANDARDS)

CODE IDENT NO. 80230
SIZE E
DRAWING NO. 1004260
SCALE NONE
SHEET 5 OF 5

1004260 J

NOTICE – WHEN GOVERNMENT DRAWINGS, SPECIFICATIONS, OR OTHER DATA ARE USED FOR ANY PURPOSE OTHER THAN IN CONNECTION WITH A DEFINITELY RELATED GOVERNMENT PROCUREMENT OPERATION, THE UNITED STATES GOVERNMENT THEREBY INCURS NO RESPONSIBILITY NOR ANY OBLIGATION WHATSOEVER, AND THE FACT THAT THE GOVERNMENT MAY HAVE FORMULATED, FURNISHED, OR IN ANY WAY SUPPLIED THE SAID DRAWINGS, SPECIFICATIONS OR OTHER DATA IS NOT TO BE REGARDED BY IMPLICATION OR OTHERWISE AS IN ANY MANNER LICENSING THE HOLDER OR ANY OTHER PERSON OR CORPORATION, OR CONVEYING ANY RIGHTS OR PERMISSION TO MANUFACTURE, USE, OR SELL ANY PATENTED INVENTION THAT MAY IN ANY WAY BE RELATED THERETO.

NOTES:

1. INTERPRET DRAWING IN ACCORDANCE WITH STANDARDS PRESCRIBED IN MIL-D-70327.
2. DIMENSIONS ON EACH VIEW APPLY TO ALL VIEWS. (WITH THE EXCEPTION OF MOUNTING HOLES).
3. FORMATS ILLUSTATED WILL BE APPLICABLE TO ALL ITEMS REQUIRING NAMEPLATES BELOW END ITEM DESIGNATION (SYSTEMS, ASSEMBLIES, ETC.)
4. PLATE BACKGROUND TO BE LUSTERLESS BLACK PER FED-STD-595, COLOR 37038. BORDER, MARKING AND LETTERING TO BE NATURAL METAL,(ANODIZED ALUMINUM).
5. MARKING METHOD TO BE DIE STAMPING, ETCHING OR ENGRAVING IN ACCORDANCE WITH MIL P 19834.
6. LETTERING STYLE TO BE GOTHIC,(SANS SERIFS), AND NUMBERS TO BE ARABIC.
7. WHERE LOCATING DIMENSIONS ARE NOT SHOWN, CHARACTERS SHALL BE SYMMETRICALLY POSITIONED.
8. IDENTIFY WITH DRAWING NUMBER AND REVISION PER ND 1002019.
9. WHEN "AUTO MARK" METAL MARKING TYPEWRITER IS USED TO ADD DATA TO BLANK SPACES, TYPE SIZE IS TO BE SELECTED FROM DIMENSIONS U, AC AND AM.
10. NASA SYMBOL IS TO BE PROPORTIONAL TO NAMEPLATE AND IS TO HAVE NATURAL BACKGROUND. NASA OUTLINE CIRCLE, LETTERING AND FEATHER TO BE BLACK, (OR WHITE FOR SILK SCREENING).
11. NAMEPLATES WILL BE APPLIED BY METHODS LISTED BELOW, SHOWN IN ORDER OF PREFERENCE, (I.E., FOR RELIABILITY AND WEIGHT).
    - A - STENCIL OR SILK SCREEN DIRECTLY ON EQUIPMENT USING INK PER SCD 1010920,(WHITE OR BLACK).
    - B - ALUMINUM FOIL, (TYPE I);
      FOIL SHALL BE .0030 ± .0005 THICK PER MIL-A-148.
      FOIL SHALL HAVE NO ADHESIVE BACKING.
      FOIL SHALL BE APPLIED PER ND 1002219,(MODIFIED).
      FOIL SHALL BE CLEAR ANODIZED PER MIL-A-8625, TYPE II.
    - C - PLATE, (TYPE II);
      MATERIAL: QQ-A-250, TEMPER O OR H14, TYPE 1100, ALUMINUM ALLOY, .032 THICK.
      ANODIZE PER MIL-A-8625, TYPE II.
      ALUMINUM PLATE MUST BE FREE FROM BURRS AND SHARP CORNERS, MOUNTED WITH APPLICABLE SIZE FASTENERS.
12. NAMEPLATES SHALL BE CAPABLE OF MEETING APPLICABLE REQUIREMENTS OF MIL-M-13231.

REVISIONS 02768

SYM	ZONE	DESCRIPTION	DR	CHK	DATE	APPROVED
G		REPLACES REV F WITH CHANGE PER TDRR 20854			7/22/65	WH
H		REVISED PER TDRR 20892			8/3/65	WH
J		REVISED PER TDRR 20904			8/3/65	WH
K		REVISED PER TDRR 21379			5/6/65	WK

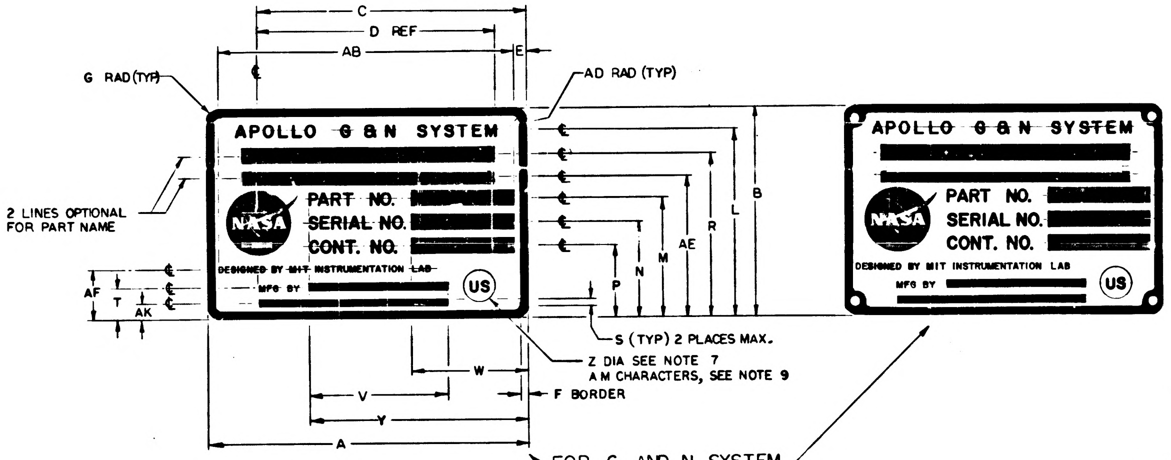
C
D REF
AB
E
G RAD (TYP)
AD RAD (TYP)
APOLLO G & N SYSTEM
PART NO.
SERIAL NO.
CONT. NO.
NASA
DESIGNED BY MIT INSTRUMENTATION LAB
MFG BY
US
2 LINES OPTIONAL FOR PART NAME
B
L
R
AE
M
N
P
AF
T
AK
S (TYP) 2 PLACES MAX.
Z DIA SEE NOTE 7
AM CHARACTERS, SEE NOTE 9
W
V
Y
F BORDER
A

FOR G AND N SYSTEM
STYLE A

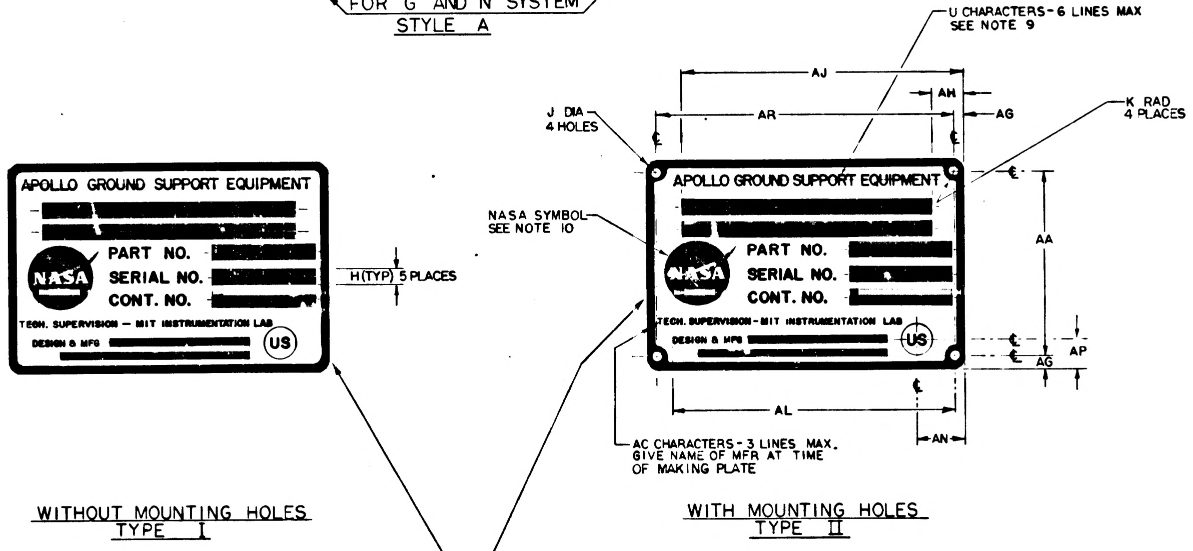
U CHARACTERS-6 LINES MAX SEE NOTE 9
AJ
AH
AR
AG
J DIA 4 HOLES
K RAD 4 PLACES
APOLLO GROUND SUPPORT EQUIPMENT
PART NO.
SERIAL NO.
CONT. NO.
NASA
NASA SYMBOL SEE NOTE 10
H(TYP) 5 PLACES
TECH. SUPERVISION – MIT INSTRUMENTATION LAB
DESIGN & MFG
US
AA
AP
AG
AL
AN
AC CHARACTERS-3 LINES MAX. GIVE NAME OF MFR AT TIME OF MAKING PLATE

WITHOUT MOUNTING HOLES
TYPE I

WITH MOUNTING HOLES
TYPE II

FOR GROUND SUPPORT EQUIPMENT
STYLE B

1004260 K

Ⓖ REPLACES REV F WITH CHANGE

QTY REQD	PART OR IDENTIFYING NO.	MATERIAL OR NOTES	NOMENCLATURE OR DESCRIPTION	FIND NO.

LIST OF MATERIALS

APPLICATION	
AS APPLICABLE	
NEXT ASSY	USED ON

UNLESS OTHERWISE SPECIFIED
DIMENSIONS ARE IN INCHES
CAPACITOR VALUES ARE IN µf
RESISTOR VALUES ARE IN OHMS
TOLERANCES ON
FRACTIONS ± — DECIMALS ±.005 ANGLES ± —
DO NOT SCALE THIS DRAWING

MATERIAL
SEE NOTE II

MIT
INSTRUMENTATION LAB
CAMBRIDGE, MASS.

MANNED SPACECRAFT CENTER
HOUSTON, TEXAS

		DATE
DRAWN	R A Jones	7/16/65
CHECKED	A. J.	7-22-65
APPROVED		
APPROVED	W Kupfer	7/22/65
APPROVED MIT	W Kupfer	7/22/65
APPROVED MSC		7/22/65

NAMEPLATES,
APOLLO G&N—GSE
(STANDARDS)

CODE IDENT NO. 80230
SIZE E
DRAWING NO. 1004260
SCALE NONE
SHEET 1 OF 5

NOTICE - WHEN GOVERNMENT DRAWINGS, SPECIFICATIONS, OR OTHER DATA ARE USED FOR ANY PURPOSE OTHER THAN IN CONNECTION WITH A DEFINITELY RELATED GOVERNMENT PROCUREMENT OPERATION, THE UNITED STATES GOVERNMENT THEREBY INCURS NO RESPONSIBILITY NOR ANY OBLIGATION WHATSOEVER; AND THE FACT THAT THE GOVERNMENT MAY HAVE FORMULATED, FURNISHED, OR IN ANY WAY SUPPLIED THE SAID DRAWINGS, SPECIFICATIONS OR OTHER DATA IS NOT TO BE REGARDED BY IMPLICATION OR OTHERWISE AS IN ANY MANNER LICENSING THE HOLDER OR ANY OTHER PERSON OR CORPORATION, OR CONVEYING ANY RIGHTS OR PERMISSION TO MANUFACTURE, USE, OR SELL ANY PATENTED INVENTION THAT MAY IN ANY WAY BE RELATED THERETO.

REVISIONS 02768

SYM	ZONE	DESCRIPTION	DR	CHK	DATE	APPROVED
G		REPLACES REV F WITH CHANGE PER TDRR 20854.			7/22/65	WR
H		REVISED PER TDRR 20892			8/3/65	WR
J		REVISED PER TDRR 20904			8/3/65	WR
K		REVISED PER TDRR 21379			9/9/65	WR

DASH NO.	P/C	PART NAME	REMARKS	PART NO.	SER. NO.	CONT. NO.	STYLE	TYPE	MATERIAL	A	B	C	D	E	F	G	H	J	K	L	M	N	P	R	S	T	U	V	W	Y	Z	AA	AB	AC	AD	AE	AF	AG	AH	AJ	AK	AL	AM	AN	AP	AR
399	K																																													
398	K																																													
309	K																																													
308	K																																													
307	K						B	I	NOTE 11 B	4.000	2.625	3.375	2.750	.156	.093	.156	.187	NA	NA	2.328	1.468	1.187	.906	2.031	.062	.375	.156	NA	1.437	2.750	.437	NA	3.687	.062	.062	1.750	.593	NA	NA	NA	NA	NA	NA	NA	NA	NA
306	K						B	II	NOTE 11 C	4.000	2.625	3.375	2.750	.156	.093	.156	.187	.125	.156	2.328	1.468	1.187	.906	2.031	.062	.375	.156	↕	1.437	2.750	.437	2.312	3.687	.062	NA	1.750	.593	↕	↕	↕	↕	↕	↕	↕	↕	↕
305	K						B	I	NOTE 11 B	2.000	1.312	1.687	1.375	.078	.048	.078	.093	NA	NA	1.164	.734	.593	.453	1.015	.048	.171	.078	↕	.718	1.375	.187	NA	NA	.048	.031	.875	.320	↕	↕	↕	↕	↕	↕	↕	↕	↕
304	K						B	II	NOTE 11 C	2.000	1.312	1.687	1.375	.078	.048	.078	.093	.070	.078	1.164	.734	.593	.453	1.015	.048	.171	.078	NA	.718	1.375	.187	.156	1.843	.048	NA	.875	.320	NA	NA	NA	NA	NA	NA	NA	NA	NA
303	K																																													
302	K																																													
301	K																																													
300	K																																													
9	K	2 IN AUTOCOLLIMATOR		1001702			B	II	NOTE 11 C	4.000	2.625	3.812	2.750	.156	.093	.156	.187	.125	.156	2.250	1.500	1.187	.906	2.031	.093	.375	.156	1.750	1.437	2.750	.437	2.312	3.687	.062	NA	1.750	.593	.156	1.062	3.812	.156	NA	.156	1.062	.375	3.687
8	K	5 IN AUTOCOLLIMATOR		1017410			B	II	NOTE 11 C	4.000	2.625	3.812	2.750	.156	.093	.156	.187	.125	.156	2.250	1.500	1.187	.906	2.031	.093	.375	.156	1.750	1.437	2.750	.437	2.312	3.687	.062	NA	1.750	.593	.156	1.062	3.812	.156	NA	.156	1.062	.375	3.687
7	K	2½ IN AUTOCOLLIMATOR (SCT)		1017435			B	II	NOTE 11 C	4.000	2.625	3.812	2.750	.156	.093	.156	.187	.125	.156	2.250	1.500	1.187	.906	2.031	.093	.375	.156	1.750	1.437	2.750	.437	2.312	3.687	.062	NA	1.750	.593	.156	1.062	3.812	.156	NA	.156	1.062	.375	3.687
6	K	2½ IN AUTOCOLLIMATOR (SXT)		1017448			B	II	NOTE 11 C	4.000	2.625	3.812	2.750	.156	.093	.156	.187	.125	.156	2.250	1.500	1.187	.906	2.031	.093	.375	.156	1.750	1.437	2.750	.437	2.312	3.687	.062	NA	1.750	.593	.156	1.062	3.812	.156	NA	.156	1.062	.375	3.687
5	K	RETROREFLECTING PRISM ASSEMBLY		1019840			B	I	NOTE 11 B	4.000	2.625	3.812	2.750	.156	.093	.156	.187	NA	NA	2.250	1.500	1.187	.906	2.031	.093	.375	.156	1.750	1.437	2.750	.437	NA	NA	.062	.062	1.750	.593	.156	1.062	3.812	.156	NA	.156	1.062	.375	NA
4	K	S/H SIMULATOR ASSEMBLY		1019896			B	I	NOTE 11 B	4.000	2.625	3.812	2.750	.156	.093	.156	.187	NA	NA	2.250	1.500	1.187	.906	2.031	.093	.375	.156	1.750	1.437	2.750	.437	NA	NA	.062	.062	1.750	.593	.156	1.062	3.812	.156	NA	.156	1.062	.375	NA
3	K	REFERENCE MIRROR		1001767			B	I	NOTE 11 B	2.000	1.312	1.906	1.375	.078	.048	.078	.093	NA	NA	1.125	.750	.593	.453	1.015	.062	.187	.078	.875	.718	1.375	.218	NA	NA	.048	.031	.875	.305	.078	.531	1.906	.078	NA	.078	.531	.187	NA
2	K	2 IN PLANE READING AUTOCOLLIMATOR		1017413			B	I	NOTE 11 B	2.000	1.312	1.906	1.375	.078	.048	.078	.093	NA	NA	1.125	.750	.593	.453	1.015	.062	.187	.078	.875	.718	1.375	.218	NA	NA	.048	.031	.875	.305	.078	.531	1.906	.078	NA	.078	.531	.187	NA
1	K	2 IN AUTOCOLLIMATOR		1001702			B	I	NOTE 11 B	2.000	1.312	1.906	1.375	.078	.048	.078	.093	NA	NA	1.125	.750	.593	.453	1.015	.062	.187	.078	.875	.718	1.375	.218	NA	NA	.048	.031	.875	.305	.078	.531	1.906	.078	NA	.078	.531	.187	NA

KOLLSMAN DASH NUMBERS

Ⓖ REPLACES REV F WITH CHANGE

NOTES FOR TABLE

STYLE A IS FOR G&N SYSTEM.
STYLE B IS FOR GROUND SUPPORT EQUIPMENT.
TYPE I IS WITHOUT MOUNTING HOLES.
TYPE II IS WITH MOUNTING HOLES.

MASTER

QTY REQD	PART OR IDENTIFYING NO.	MATERIAL OR NOTES	NOMENCLATURE OR DESCRIPTION	FIND NO

LIST OF MATERIALS

NEXT ASSY	USED ON
AS APPLICABLE	

APPLICATION

UNLESS OTHERWISE SPECIFIED
DIMENSIONS ARE IN INCHES
CAPACITOR VALUES ARE IN μf
RESISTOR VALUES ARE IN OHMS
TOLERANCES ON
FRACTIONS ± — DECIMALS ±.005 ANGLES ± —
DO NOT SCALE THIS DRAWING

MATERIAL
SEE NOTE 11

MIT
INSTRUMENTATION LAB
CAMBRIDGE, MASS.

MANNED SPACECRAFT CENTER
HOUSTON, TEXAS

		DATE
DRAWN	R. A. Jones	7-16-65
CHECKED		7-22-65
APPROVED		
APPROVED	W. Kupfer	7/22/65
APPROVED MIT	W. Kupfer	7/22/65
APPROVED MSC		7/28/65

NAMEPLATES,
APOLLO G&N-GSE
(STANDANDS)

CODE IDENT NO.	SIZE	DRAWING NO.
80230	E	1004260

SCALE NONE
SHEET 2 OF 5

1004260 K

NOTICE – WHEN GOVERNMENT DRAWINGS, SPECIFICATIONS, OR OTHER DATA ARE USED FOR ANY PURPOSE OTHER THAN IN CONNECTION WITH A DEFINITELY RELATED GOVERNMENT PROCUREMENT OPERATION, THE UNITED STATES GOVERNMENT THEREBY INCURS NO RESPONSIBILITY NOR ANY OBLIGATION WHATSOEVER; AND THE FACT THAT THE GOVERNMENT MAY HAVE FORMULATED, FURNISHED, OR IN ANY WAY SUPPLIED THE SAID DRAWINGS, SPECIFICATIONS OR OTHER DATA IS NOT TO BE REGARDED BY IMPLICATION OR OTHERWISE AS IN ANY MANNER LICENSING THE HOLDER OR ANY OTHER PERSON OR CORPORATION, OR CONVEYING ANY RIGHTS OR PERMISSION TO MANUFACTURE, USE, OR SELL ANY PATENTED INVENTION THAT MAY IN ANY WAY BE RELATED THERETO.

REVISIONS 02768

SYM	ZONE	DESCRIPTION	DR	CHK	DATE	APPROVED
G		REPLACES REV F WITH CHANGE PER TDRR 20854			7/22/65	WK
H		REVISED PER TDRR 20892			8/3/65	WK
J		REVISED PER TDRR 20904			8/3/65	WK
K		REVISED PER TDRR 21 379			8/6/65	WK

DASH NO.	P/C	PART NAME	REMARKS	PART NO.	SER. NO.	CONT. NO.	STYLE	TYPE	MATERIAL
299	R								
298	R								
250									
249									
248									
247									
246									
245	R	TAPE PUNCH ASSEMBLY		2014039-011	NA	FNP – 12775	B	I	NOTE 11B
244	R	TAPE READER ASSEMBLY		2014038-011	NA		B	I	NOTE 11B
243									
242									
241									
240	R	SELF TEST ASSEMBLY		2014366-011	NA	FNP – 12775	B	I	NOTE 11B
239		POWER SUPPLY ASSY-115V., 400 CYCLE		2014207-011					
238		AC INPUT PANEL ASSY-C.T.S.		2014043-011					
237		POWER CONTROL ASSY		2014079-011					
236		DRAWER ASSY-XY INTERFACE		2014040-011					
235		DRAWER ASSY RDC INTERFACE		2014045-011					
234		BUFFER CIRCUIT ASSY		2014254-011					
233		CONTROL & INTERFACE ASSY		2014204-011					
232		POWER CONTROL ASSY		2014044-011					
231		DRAWER ASSY, PROGRAMMER & MONITOR		2014041-011					
230		CONNECTOR INTERFACE ASSY		2014272-011					
229		CONNECTOR INTERFACE ASSY		2014047-011					
228		ANTENNA ,TUNING CAPACITOR ASSY		2014209-011					
227		MOUNTING FIXTURE ASSY		2014006-011					
226		POWER SUPPLY ASSY 3 VDC		2014234-011					
225		PANEL ASSY — SIGNAL INTERFACE		2014010-011					
224		OSCILLOSCOPE ASSY		2014232-011					
223		AUXILIARY OUTLET ASSY		2014274-011					
222		FREQUENCY COUNTER		2014233-011					
221		POWER SUPPLY ASSY 10,13, 28 VDC		2014235-011					
220		LOGIC DRAWER ASSY NO. 2		2014037-011					
219		LOGIC DRAWER ASSY NO. 1		2014036-011					
218		COUNTER, ELECTRICAL ASSY		2014288-011					
217		POWER SUPPLY ASSY		2014279-011					
216		TEST MOUNT ASSY		2014257-011					
215		UNIVERSAL DSKY PEDESTAL MOUNT, BLOCK II		2014014-011					
214		MAIN DSKY PEDESTAL MOUNT, BLOCK I & 100		2014343				I	NOTE 11B
213		SHIPPING CONTAINER, MAIN DSKY		1006229				II	NOTE 11C
212		NAV DSKY		1006231					
211		AGC, BLOCK I & 100		1006230					
210		UNIVERSAL DSKY		1006422					
209		SHIPPING CONTAINER, AGC BLOCK II		1006421				II	NOTE 11C
208		UNIVERSAL DSKY HANDLING FIXTURE		2014013-011				I	NOTE 11B
207		NAV DSKY HANDLING FIXTURE		1014377					
206		MAIN DSKY HANDLING FIXTURE		1014334					
205		AGC HANDLING FIXTURE		2014282-011				I	NOTE 11B
204		OPERATION CONSOLE		2014024-011				II	NOTE 11C
203		COMPUTER TEST SET		2014042-011					
202		DRAWER ASSY, COMPUTER SIMULATOR		2014048-011					
201		AUXILIARY CALIBRATION CONSOLE		2014059-011		FNP – 12775			
200	R	AGC CALIBRATION CONSOLE		2014049-011	NA		B	II	NOTE 11C
21	R								
20	R	NA		NA	NA	NA	A	II	NOTE 11C
19	R	NA		NA	NA	NA	A	I	NOTE 11B
18	R	NA		NA	NA	NA	B	II	NOTE 11C
17	R	NA		NA	NA	NA	B	I	NOTE 11B
16	R	NA		NA	NA	NA	B	II	NOTE 11C
15	R	NA		NA	NA	NA	B	I	NOTE 11B

DASH NO.	A	B	C	D	E	F	G	H	J	K	L	M	N	P	R	S	T	U	V	W	Y	Z	AA	AB	AC	AD	AE	AF	AG	AH	AJ	AK	AL	AM	AN	AP	AR
245	FOR DIMENSIONS,SEE DASH 15 VALUES BELOW																											NOT APPLICABLE									
244																																					
240	FOR DIMENSIONS, SEE DASH 15 VALUES BELOW																											NOT APPLICABLE									
239	FOR DIMENSIONS, SEE DASH 17 VALUES BELOW																																				
237	FOR DIMENSIONS, SEE DASH 15 VALUES BELOW																																				
232	FOR DIMENSIONS, SEE-DASH 17 VALUES BELOW																																				
230	FOR DIMENSIONS, SEE DASH 15 VALUES BELOW																																				
227	FOR DIMENSIONS, SEE DASH 17 VALUES BELOW																																				
226	FOR DIMENSIONS, SEE DASH 15 VALUES BELOW																																				
220	FOR DIMENSIONS, SEE DASH 17 VALUES BELOW																																				
218	FOR DIMENSIONS, SEE DASH 15 VALUES BELOW																																				
215	FOR DIMENSIONS, SEE DASH 17 VALUES BELOW																																				
213	FOR DIMENSIONS, SEE DASH 18 VALUES BELOW																																				
208	FOR DIMENSIONS, SEE DASH 15 VALUES BELOW																																				
207	FOR DIMENSIONS, SEE DASH 17 VALUES BELOW																																				
204	FOR DIMENSIONS, SEE DASH 18 VALUES BELOW																																				
21																																					
20	2.000	1.312	1.687	1.375	.078	.031	.078	.093	.106 .113	.093	1.187	.750	.593	.453	1.015	.062	.187	.078	.875	.718	1.375	.218	1.156	1.843	.048	NA	.875	.305	.078	.312	1.687	.078	NA	.078	.312	.187	1.843
19	2.000	1.312	1.687	1.375	.078	.031	.078	.093	NA	NA	1.187	.750	.593	.453	1.015	.062	.187	.078	.875	.718	1.375	.218	NA	NA	.048	.031	.875	.305	.078	.312	1.687	.078	NA	.078	.312	.187	NA
18	4.187	1.875	3.469	2.750	.156	.093	.156	.125	.106 .113	.125	1.625	1.032	.844	.656	1.406	.093	.344	.156	1.781	1.531	2.844	.312	1.562	3.875	.062	NA	1.219	.500	.156	.719	3.469	.156	NA	.156	.719	.344	3.875
17	4.187	1.875	3.469	2.750	.156	.093	.156	.125	NA	NA	1.625	1.032	.844	.656	1.406	.093	.344	.156	1.781	1.531	2.844	.312	NA	NA	.062	.062	1.219	.500	.156	.719	3.469	.156	NA	.156	.719	.344	NA
16	2.000	1.312	1.687	1.375	.078	.031	.078	.093	.106 .113	.093	1.187	.750	.593	.453	1.015	.062	.187	.078	.875	.718	1.375	.218	1.156	1.843	.048	NA	.875	.305	.078	.312	1.687	.078	NA	.078	.312	.187	1.843
15	2.000	1.312	1.687	1.375	.078	.031	.078	.093	NA	NA	1.187	.750	.593	.453	1.015	.062	.187	.078	.875	.718	1.375	.218	NA	NA	.048	.031	.875	.305	.078	.312	1.687	.078	NA	.078	.312	.187	NA

NOTES FOR TABLE
STYLE A IS FOR G & N SYSTEM
STYLE B IS FOR GROUND SUPPORT EQUIPMENT
TYPE I IS WITHOUT MOUNTING HOLES
TYPE II IS WITH MOUNTING HOLES

THIS SHEET ADDED

Ⓖ REPLACES REV F WITH CHANGE

RAYTHEON DASH NUMBERS

QTY REQD	PART OR IDENTIFYING NO.	MATERIAL OR NOTES	NOMENCLATURE OR DESCRIPTION	FIND NO.

LIST OF MATERIALS

NEXT ASSY	USED ON
AS APPLICABLE	

APPLICATION

UNLESS OTHERWISE SPECIFIED
DIMENSIONS ARE IN INCHES
CAPACITOR VALUES ARE IN μf
RESISTOR VALUES ARE IN OHMS
TOLERANCES ON
FRACTIONS ± — DECIMALS ±.005 ANGLES ± —
DO NOT SCALE THIS DRAWING

MATERIAL
SEE NOTE 11

MIT
INSTRUMENTATION LAB
CAMBRIDGE, MASS.

DRAWN R. A. Jones 7-16-65
CHECKED A. J. 7-22-65
APPROVED
APPROVED W Kupfer 7/22/65
APPROVED MIT W Kupfer 7/22/65
APPROVED MSC
DATE

MANNED SPACECRAFT CENTER
HOUSTON, TEXAS

NAMEPLATES,
APOLLO GEN-GSE
(STANDARDS)

CODE IDENT NO. 80230
SIZE E
DRAWING NO. 1004260
SCALE NONE
SHEET 3 OF 5

NOTICE – WHEN GOVERNMENT DRAWINGS, SPECIFICATIONS, OR OTHER DATA ARE USED FOR ANY PURPOSE OTHER THAN IN CONNECTION WITH A DEFINITELY RELATED GOVERNMENT PROCUREMENT OPERATION, THE UNITED STATES GOVERNMENT THEREBY INCURS NO RESPONSIBILITY NOR ANY OBLIGATION WHATSOEVER, AND THE FACT THAT THE GOVERNMENT MAY HAVE FORMULATED, FURNISHED, OR IN ANY WAY SUPPLIED THE SAID DRAWINGS, SPECIFICATIONS OR OTHER DATA IS NOT TO BE REGARDED BY IMPLICATION OR OTHERWISE AS IN ANY MANNER LICENSING THE HOLDER OR ANY OTHER PERSON OR CORPORATION, OR CONVEYING ANY RIGHTS OR PERMISSION TO MANUFACTURE, USE, OR SELL ANY PATENTED INVENTION THAT MAY IN ANY WAY BE RELATED THERETO.

REVISIONS 02768

SYM	ZONE	DESCRIPTION	DR	CHK	DATE	APPROVED
G		REPLACES REV F WITH CHANGE PER TDRR 20854.			7/22/65	WK
H		REVISED PER TDRR 20892			8/3/65	wk
J		REVISED PER TDRR 20904			8/3/65	wk
K		REVISED PER TDRR 21379			8/5/65	wk

DASH NO.	P/C	PART NAME	REMARKS	PART NO.	SER. NO.	CONT. NO.	STYLE	TYPE	MATERIAL	A	B	C	D	E	F	G	H	J	K	L	M	N	P	R	S	T	U	V	W	Y	Z	AA	AB	AC	AD	AE	AF	AG	AH	AJ	AK	AL	AM	AN	AP	AR
199	AC																																													
198	AC																																													
144	AC	FIX., MOUNTING, G AND N		1902204-021			B	II	NOTE 11 C	4.125	1.812	3.250	NA	.125	.062	.12	.156	.100 .104	.125	1.625	1.140	.890	.640	1.390	.125	.171	.125	1.875	1.687	2.625	.250	1.562	3.843	.093	NA	NA	.359	.125	.437	3.688	NA	3.687	.093	.40	.25	3.875
143	AC	CSL, COOL AND PWR, G AND N		1902134-021						4.125	1.812	3.250		.125	.062	.12	.156		.125	1.625	1.140	.890	.640	1.390	.125	.171	.125	1.875	1.687	2.625	.250	1.562	3.843	.093			.359	.125	.437	3.688		3.687	.093	.40	.25	3.875
142	AC	ANALYZER, OPTICS-INERTIAL		2900023-011			↑	↑	↑	4.125	1.812	3.250	↑	.125	.062	.12	.156	↑	.125	1.625	1.140	.890	.640	1.390	.125	.171	.125	1.875	1.687	2.625	.250	1.562	3.843	.093	↑	↑	.359	.125	.437	3.688	↑	3.687	.093	.40	.25	3.875
141	AC	CONT, TEMP, PORTABLE		2900060-011						2.125	.968	1.718		.093	.031	.06	.093		.093	.858	.608	.484	.358	.733	.077	.116	.062	.937	.875	1.343	.125	.781	1.892	.046			.209	.093	.250	1.875		1.840	.046	.23	.16	1.938
140	AC	TESTER, CKT, IMU/CDU RSVR		2900286-011						4.125	1.812	3.250		.125	.062	.12	.156		.125	1.625	1.140	.890	.640	1.390	.125	.171	.125	1.875	1.687	2.625	.250	1.562	3.843	.093			.359	.125	.437	3.688		3.687	.093	.40	.25	3.875
139	AC	SIMULATOR, LD/SIG, CDU		2900285-011						↑	↑	↑		↑	↑	↑	↑		↑	↑	↑	↑	↑	↑	↑	↑	↑	↑	↑	↑	↑	↑	↑	↑			↑	↑	↑	↑		↑	↑	↑	↑	↑
138	AC	SIMULATOR, LD/SIG, OPTICS		1902023-021																																										
137	AC	FIX., MOUNTING, IMU/NAV BASE		6900003-011																																										
136	AC	FIX., OPTICS/NAV BASE		2900072-011																																										
135	AC	FIX., MOUNTING, SUB SYSTEM		2900070-011																																										
134	AC	FIX., HAND., G AND N HARNESS		2900069-011																																										
133	AC	CNTR, SHIPPING, NAV BASE		2900068-011																																										
132	AC	FIX., MOUNTING, G AND N		2900067-011																																										
131	AC	SIMULATOR, LD/SIG, IMU/CDU		2900062-011																																										
130	AC	TESTOR, GYRO WHEEL		2900061-011						↓	↓	↓		↓	↓	↓	↓		↓	↓	↓	↓	↓	↓	↓	↓	↓	↓	↓	↓	↓	↓	↓	↓			↓	↓	↓	↓		↓	↓	↓	↓	↓
129	AC	COOLANT SUPPLY		1902133-021																																										
128	AC	TABLE, ROTARY		1900926-021						4.125	1.812	3.250		.125	.062	.12	.156		.125	1.625	1.140	.890	.640	1.390	.125	.171	.125	1.875	1.687	2.625	.250	1.562	3.843	.093			.359	.125	.437	3.688		3.687	.093	.40	.25	3.875
127	AC	FIX., HAND., OPTICS		2900074-011						2.125	.968	1.718	↑	.093	.031	.06	.093	↑	.093	.858	.608	.484	.358	.733	.077	.116	.062	.937	.875	1.343	.125	.781	1.892	.046	↑	↑	.209	.093	.250	1.875	↑	1.840	.046	.23	.16	1.938
126	AC	FIX., MTG, PTA / PEA		2900066-011						↑	↑	↑		↑	↑	↑	↑		↑	↑	↑	↑	↑	↑	↑	↑	↑	↑	↑	↑	↑	↑	↑	↑			↑	↑	↑	↑		↑	↑	↑	↑	↑
125	AC	CONT, TEMP, IMU LIFTING		2900063-011																																										
124	AC	FIX., HANDLING, IMU		2900064-011																																										
123	AC	CONT, OPTICS, REMOTE		1902046-021																																										
122	AC	TEST CONTROL		1902009-021																																										
121	AC	ADPT MODULE, P.S.A.		1902431-021																																										
120	AC	BRIDGE, DECADE ERROR		2900128-011																																										
119	AC	PWR SUP, ELECTRONICS		2900012-011																																										
118	AC	PWR SUP, RELAY AND LAMP		1900049-031																																										
117	AC	CONSOLE OSCILLOGRAPH		1900000-021																																										
116	AC	ADPT, MODULE, P.S.A.		1902431-011																																										
115	AC	ADPT, TEST POINT, PTA / PEA		2900145-011																																										
114	AC	ADPT, TEST POINT, P.S.A.		2900037-011																																										
113	AC	CONTROL, GIMBAL, POSITION		2900036-011																																										
112	AC	SELECTOR, SIGNAL, PRIMARY		2900035-011																																										
111	AC	SEL, SIG, OSCILLOGRAPH		2900034-011																																										
110	AC	PANEL, PWR SUP AND LOAD		2900033-011																																										
109	AC	PANEL, MONITOR		2900031-011																																										
108	AC	PANEL, AUXILIARY INPUT		2900030-011																																										
107	AC	CAGING ELECTRONICS, GYRO		2900029-011																																										
106	AC	TEST SELECTOR		2900028-011																																										
105	AC	TEST CONTROL		2900027-011																																										
104	AC	MONITOR AND CONTROL, TEMP		2900026-011			↓	↓	↓	↓	↓	↓	↓	↓	↓	↓	↓	↓	↓	↓	↓	↓	↓	↓	↓	↓	↓	↓	↓	↓	↓	↓	↓	↓	↓	↓	↓	↓	↓	↓	↓	↓	↓	↓	↓	↓
103	AC	DISTRIBUTION BOX, GSE		2900024-011																																										
102	AC	VOLTMETER, DIGITAL		2900007 011			B	II	NOTE 11 C	2.125	.968	1.718	NA	.093	.031	.06	.093	.100 .104	.093	.858	.608	.484	.358	.733	.077	.116	.062	.937	.875	1.343	.125	.781	1.892	.046	NA	NA	.209	.093	.250	1.875	NA	1.840	.046	.23	.16	1.938
101	AC	NAVIGATION BASE ASSEMBLY – LEM		6899950		NAS-9-497	A	I	NOTE 11 B	2.000	1.312	1.906	1.375	.078	.048	.078	.093	NA	NA	1.125	.750	.593	.453	1.015	.062	.187	.078	.875	.718	1.375	.218	NA	NA	.048	.031	.875	.305	.078	.531	1.906	.078	NA	.078	.531	.187	NA
100	AC	NAVIGATION BASE ASSEMBLY		2899982		NAS-9-497	A	I	NOTE 11 B	2.000	1.312	1.906	1.375	.078	.048	.078	.093	NA	NA	1.125	.750	.593	.453	1.015	.062	.187	.078	.875	.718	1.375	.218	NA	NA	.048	.031	.875	.305	.078	.531	1.906	.078	NA	.078	.531	.187	NA

A C SPARK PLUG DASH NUMBERS

THIS SHEET ADDED

Ⓖ REPLACES REV F WITH CHANGE

NOTES FOR TABLE

STYLE A IS FOR G&N SYSTEM
STYLE B IS FOR GROUND SUPPORT EQUIPMENT
TYPE I IS WITHOUT MOUNTING HOLES
TYPE II IS WITH MOUNTING HOLES

QTY REQD	PART OR IDENTIFYING NO.	MATERIAL OR NOTES	NOMENCLATURE OR DESCRIPTION	FIND NO.

LIST OF MATERIALS

NEXT ASSY	USED ON
AS APPLICABLE	

APPLICATION

UNLESS OTHERWISE SPECIFIED
DIMENSIONS ARE IN INCHES
CAPACITOR VALUES ARE IN μf
RESISTOR VALUES ARE IN OHMS
TOLERANCES ON
FRACTIONS ± — DECIMALS ±.005 ANGLES ± —
DO NOT SCALE THIS DRAWING

MATERIAL
SEE NOTE 11

MIT
INSTRUMENTATION LAB
CAMBRIDGE, MASS.

DRAWN R a Jones 7-16-65
CHECKED A. J. [illegible] 7-22-65
APPROVED
APPROVED W Kupfer 22 Jul 65
APPROVED MIT W Kupfer 22 Jul 65
APPROVED MSC [illegible] 7/24/65
DATE

MANNED SPACECRAFT CENTER
HOUSTON, TEXAS

NAMEPLATES,
APOLLO G&N-GSE
(STANDARDS)

CODE IDENT NO. 80230
SIZE E
DRAWING NO. 1004260
SCALE NONE
SHEET 4 OF 5

NOTICE – WHEN GOVERNMENT DRAWINGS, SPECIFICATIONS, OR OTHER DATA ARE USED FOR ANY PURPOSE OTHER THAN IN CONNECTION WITH A DEFINITELY RELATED GOVERNMENT PROCUREMENT OPERATION, THE UNITED STATES GOVERNMENT THEREBY INCURS NO RESPONSIBILITY NOR ANY OBLIGATION WHATSOEVER; AND THE FACT THAT THE GOVERNMENT MAY HAVE FORMULATED, FURNISHED, OR IN ANY WAY SUPPLIED THE SAID DRAWINGS, SPECIFICATIONS OR OTHER DATA IS NOT TO BE REGARDED BY IMPLICATION OR OTHERWISE AS IN ANY MANNER LICENSING THE HOLDER OR ANY OTHER PERSON OR CORPORATION, OR CONVEYING ANY RIGHTS OR PERMISSION TO MANUFACTURE, USE, OR SELL ANY PATENTED INVENTION THAT MAY IN ANY WAY BE RELATED THERETO.

REVISIONS 02768

SYM	ZONE	DESCRIPTION	DR	CHK	DATE	APPROVED
G		REPLACES REV F WITH CHANGE PER TDRR 20854			7/22/65	WK
H		REVISED PER TDRR 20892			8/3/65	wK
J		REVISED PER TDRR 20904			8/3/65	wK
K		REVISED PER TDRR 21379			8/6/65	wK

DASH NO.	P/C	PART NAME	REMARKS	PART NO.	SER. NO.	CONT. NO.	STYLE	TYPE	MATERIAL
499	MIT								
498									
40									
400	MIT	LIFTING SLING-G&N INST. QUAL. FIX. & AZM. REF. FIX.		1021640		NAS-9-4065	B	II	NOTE 11 C

DASH NO.	A	B	C	D	E	F	G	H	J	K	L	M	N	P	R	S	T
400	2,000	1.312	1.687	1.375	.078	.048	.078	.093	.106/.113	.093	1.187	.750	.593	.453	1.015	.062	.187

DASH NO.	U	V	W	Y	Z	AA	AB	AC	AD	AE	AF	AG	AH	AJ	AK	AL	AM	AN	AP	AR
400	.078	.875	.718	1.375	.218	1.156	1.843	.048	NA	.875	.305	NA	NA	NA	NA	NA	NA	NA	NA	NA

MIT DASH NUMBERS

THIS SHEET ADDED

Ⓖ REPLACES REV F WITH CHANGE

NOTES FOR TABLE

STYLE A IS FOR G&N SYSTEM
STYLE B IS FOR GROUND SUPPORT EQUIPMENT
TYPE I IS WITHOUT MOUNTING HOLES
TYPE II IS WITH MOUNTING HOLES

MASTER

QTY REQD	PART OR IDENTIFYING NO.	MATERIAL OR NOTES	NOMENCLATURE OR DESCRIPTION	FIND NO.

LIST OF MATERIALS

NEXT ASSY	USED ON
AS APPLICABLE	

APPLICATION

UNLESS OTHERWISE SPECIFIED
DIMENSIONS ARE IN INCHES
CAPACITOR VALUES ARE IN µf
RESISTOR VALUES ARE IN OHMS
TOLERANCES ON
FRACTIONS ± — DECIMALS ±.005 ANGLES ± —
DO NOT SCALE THIS DRAWING

MATERIAL
SEE NOTE 11

MIT
INSTRUMENTATION LAB
CAMBRIDGE, MASS.

DRAWN R A Jones 7-16-65
CHECKED 7-28-65
APPROVED
APPROVED 7/22/65
APPROVED MIT W Kupfer 7/22/65
APPROVED MSC 7/22/65
DATE

MANNED SPACECRAFT CENTER
HOUSTON, TEXAS

NAMEPLATES,
APOLLO G&N-GSE
(STANDARDS)

CODE IDENT NO. 80230
SIZE E
DRAWING NO. 1004260
SCALE NONE
SHEET 5 OF 5

1004260 K

NOTICE – WHEN GOVERNMENT DRAWINGS, SPECIFICATIONS, OR OTHER DATA ARE USED FOR ANY PURPOSE OTHER THAN IN CONNECTION WITH A DEFINITELY RELATED GOVERNMENT PROCUREMENT OPERATION, THE UNITED STATES GOVERNMENT THEREBY INCURS NO RESPONSIBILITY NOR ANY OBLIGATION WHATSOEVER; AND THE FACT THAT THE GOVERNMENT MAY HAVE FORMULATED, FURNISHED, OR IN ANY WAY SUPPLIED THE SAID DRAWINGS, SPECIFICATIONS, OR OTHER DATA IS NOT TO BE REGARDED BY IMPLICATION OR OTHERWISE AS IN ANY MANNER LICENSING THE HOLDER OR ANY OTHER PERSON OR CORPORATION, OR CONVEYING ANY RIGHTS OR PERMISSION TO MANUFACTURE, USE, OR SELL ANY PATENTED INVENTION THAT MAY IN ANY WAY BE RELATED THERETO.

REVISIONS						02768
SYM	ZONE	DESCRIPTION	DR	CHK	DATE	APPROVED
G		REPLACES REV F WITH CHANGE PER TDRR 20854			7/22/65	WK
H		REVISED PER TDRR 20892			8/3/65	WK
J		REVISED PER TDRR 20904			8/3/65	WK
K		REVISED PER TDRR 21379			8/6/65	WK
L		REVISED PER TDRR 21410			8/23/65	WK

NOTES:

1. INTERPRET DRAWING IN ACCORDANCE WITH STANDARDS PRESCRIBED IN MIL-D-70327.
2. DIMENSIONS ON EACH VIEW APPLY TO ALL VIEWS. (WITH THE EXCEPTION OF MOUNTING HOLES).
3. FORMATS ILLUSTATED WILL BE APPLICABLE TO ALL ITEMS REQUIRING NAMEPLATES BELOW END ITEM DESIGNATION (SYSTEMS, ASSEMBLIES, ETC.)
4. PLATE BACKGROUND TO BE LUSTERLESS BLACK PER FED-STD-595, COLOR 37038. BORDER, MARKING AND LETTERING TO BE NATURAL METAL,(ANODIZED ALUMINUM).
5. MARKING METHOD TO BE DIE STAMPING, ETCHING OR ENGRAVING IN ACCORDANCE WITH MIL P 19834.
6. LETTERING STYLE TO BE GOTHIC,(SANS SERIFS), AND NUMBERS TO BE ARABIC.
7. WHERE LOCATING DIMENSIONS ARE NOT SHOWN, CHARACTERS SHALL BE SYMMETRICALLY POSITIONED.
8. IDENTIFY WITH DRAWING NUMBER PER ND1002019.
9. WHEN "AUTO MARK" METAL MARKING TYPEWRITER IS USED TO ADD DATA TO BLANK SPACES, TYPE SIZE IS TO BE SELECTED FROM DIMENSIONS U, AC AND AM.
10. NASA SYMBOL IS TO BE PROPORTIONAL TO NAMEPLATE IN RATIO OF 1 TO 5 WITH DIMENSION A VALUE AND IS TO HAVE NATURAL BACKGROUND. NASA OUTLINE CIRCLE, LETTERING AND FEATHER TO BE BLACK,(OR WHITE FOR SILK SCREENING). WHERE BLACK FEATHER PROTRUDES INTO BLACK BACKGROUND, A MINIMUM OUTLINE OF NATURAL BACKGROUND SHALL EXIST.
11. NAMEPLATES WILL BE APPLIED BY METHODS LISTED BELOW, SHOWN IN ORDER OF PREFERENCE, (I.E., FOR RELIABILITY AND WEIGHT).
    A - STENCIL OR SILK SCREEN DIRECTLY ON EQUIPMENT USING INK PER SCD 1010920,(WHITE OR BLACK).
    B - ALUMINUM FOIL,(STYLE A OR B, TYPE I):
    FOIL SHALL BE .0030 ± .0005 THICK PER MIL-A-148.
    FOIL SHALL HAVE NO ADHESIVE BACKING.
    FOIL SHALL BE APPLIED PER ND 1002219,(MODIFIED).
    FOIL SHALL BE CLEAR ANODIZED PER MIL-A-8625, TYPE II.
    C - PLATE, (STYLE A OR B, TYPE II):
    MATERIAL: QQ-A-250, TEMPER O OR H14, TYPE 1100, ALUMINUM ALLOY, .032 THICK.
    ANODIZE PER MIL-A-8625, TYPE II.
    ALUMINUM PLATE MUST BE FREE FROM BURRS AND SHARP CORNERS, MOUNTED WITH APPLICABLE SIZE FASTENERS.
12. NAMEPLATES SHALL BE CAPABLE OF MEETING APPLICABLE REQUIREMENTS OF MIL-M-13231.
13. ON DIMENSION TABLES SHOWN ON PAGES 2, 3, 4 AND 5, NA MEANS, "NOT APPLICABLE".

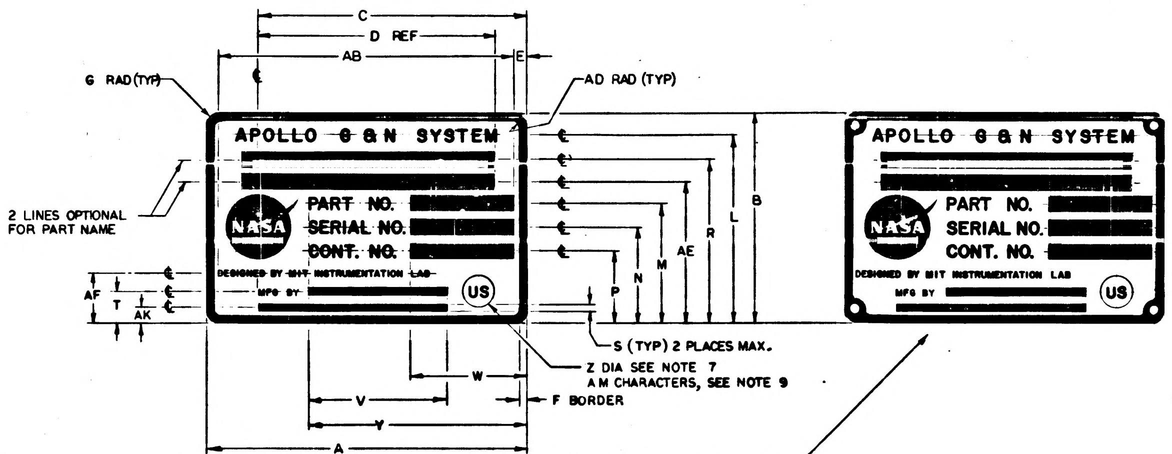
C
D REF
AB
E
G RAD(TYP)
AD RAD (TYP)
APOLLO G & N SYSTEM
PART NO.
SERIAL NO.
CONT. NO.
NASA
DESIGNED BY MIT INSTRUMENTATION LAB
MFG BY
US
2 LINES OPTIONAL FOR PART NAME
AF
T
AK
B
L
R
AE
M
N
P
S (TYP) 2 PLACES MAX.
Z DIA SEE NOTE 7
AM CHARACTERS, SEE NOTE 9
V
W
Y
A
F BORDER

FOR G AND N SYSTEM
STYLE A

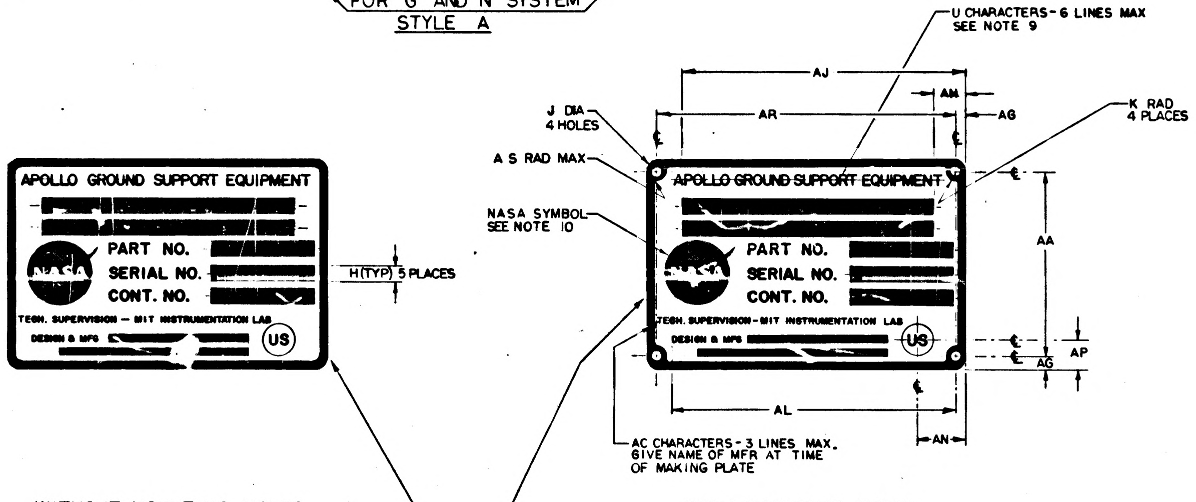
U CHARACTERS-6 LINES MAX
SEE NOTE 9
AJ
AM
AR
AG
J DIA-
4 HOLES
K RAD
4 PLACES
A S RAD MAX
NASA SYMBOL
SEE NOTE 10
APOLLO GROUND SUPPORT EQUIPMENT
PART NO.
SERIAL NO.
CONT. NO.
NASA
TECH. SUPERVISION – MIT INSTRUMENTATION LAB
DESIGN & MFG
US
H(TYP) 5 PLACES
AA
AP
AG
AL
AN
AC CHARACTERS-3 LINES MAX.
GIVE NAME OF MFR AT TIME
OF MAKING PLATE

WITHOUT MOUNTING HOLES
TYPE I

WITH MOUNTING HOLES
TYPE II

FOR GROUND SUPPORT EQUIPMENT
STYLE B

SUGGESTED PROPORTIONS FOR NAMEPLATE DIMENSIONS.
1. SELECT NAMEPLATE LENGTH, DIMENSION "A", TO FIT DESIGN NEEDS.
2. DIMENSIONS B THRU AS ON LINE 1 BELOW ARE PROPORTIONAL TO "A" BY MULTIPLIERS SHOWN IN LINE 2 BELOW.

1.	A	B	C	D	E	F	G	H	J	K	L	M	N	P	R	S	T
2.	1.000 A	.6563 A	.8438 A	.6875 A	.0391 A	.0240 A	.0391 A	.0469 A	.0547 A	.0469 A	.5938 A	.3750 A	.2969 A	.2187 A	.5079 A	.0313 A	.0938 A

1.	U	V	W	Y	Z	AA	AB	AC	AD	AE	AF	AG	AH	AJ	AK	AL	AM	AN	AP	AR	AS
2.	.0391 A	.4375 A	.3594 A	.6875 A	.1094 A	.5781 A	.9219 A	.0240 A	.0156 A	.4375 A	.1525 A	.0391 A	.1563 A	.8438 A	.0548 A	.8659 A	.0391 A	.1563 A	.0938 A	.9219 A	.0151 A

Ⓖ REPLACES REV F WITH CHANGE

QTY REQD	PART OR IDENTIFYING NO.	MATERIAL OR NOTES	NOMENCLATURE OR DESCRIPTION	FIND NO.

LIST OF MATERIALS

AS APPLICABLE	
NEXT ASSY	USED ON
APPLICATION	

UNLESS OTHERWISE SPECIFIED
DIMENSIONS ARE IN INCHES
CAPACITOR VALUES ARE IN µf
RESISTOR VALUES ARE IN OHMS
TOLERANCES ON
FRACTIONS ± — DECIMALS ± .005 ANGLES ± —
DO NOT SCALE THIS DRAWING

MATERIAL
SEE NOTE 11

MIT
INSTRUMENTATION LAB
CAMBRIDGE, MASS.

		DATE
DRAWN	R A Jones	7/16/65
CHECKED		7-22-65
APPROVED		
APPROVED		7/22/65
APPROVED MIT		7/22/65
APPROVED MSC		7/22/65

MANNED SPACECRAFT CENTER
HOUSTON, TEXAS

NAMEPLATES,
APOLLO G&N–GSE
(STANDARDS)

CODE IDENT NO.	SIZE	DRAWING NO.
80230	E	1004260
SCALE NONE		SHEET 1 OF 5

NOTICE - WHEN GOVERNMENT DRAWINGS, SPECIFICATIONS, OR OTHER DATA ARE USED FOR ANY PURPOSE OTHER THAN IN CONNECTION WITH A DEFINITELY RELATED GOVERNMENT PROCUREMENT OPERATION, THE UNITED STATES GOVERNMENT THEREBY INCURS NO RESPONSIBILITY NOR ANY OBLIGATION WHATSOEVER; AND THE FACT THAT THE GOVERNMENT MAY HAVE FORMULATED, FURNISHED, OR IN ANY WAY SUPPLIED THE SAID DRAWINGS, SPECIFICATIONS OR OTHER DATA IS NOT TO BE REGARDED BY IMPLICATION OR OTHERWISE AS IN ANY MANNER LICENSING THE HOLDER OR ANY OTHER PERSON OR CORPORATION, OR CONVEYING ANY RIGHTS OR PERMISSION TO MANUFACTURE, USE, OR SELL ANY PATENTED INVENTION THAT MAY IN ANY WAY BE RELATED THERETO.

REVISIONS 02768

SYM	ZONE	DESCRIPTION	DR	CHK	DATE	APPROVED
G		REPLACES REV F WITH CHANGE PER TDRR 20854.			7/22/65	WK
H		REVISED PER TDRR 20892			8/3/65	WK
J		REVISED PER TDRR 20904			8/3/65	WK
K		REVISED PER TDRR 21379			8/9/65	WK
L		REVISED PER TDRR 21410			8/23/65	WK.

DASH NO.	P/C	PART NAME	REMARKS	PART NO.	SER. NO.	CONT. NO.	STYLE	TYPE	MATERIAL	A	B	C	D	E	F	G	H	J	K	L	M	N	P	R	S	T	U	V	W	Y	Z	AA	AB	AC	AD	AE	AF	AG	AH	AJ	AK	AL	AM	AN	AP	AR
399	K																																													
398	K																																													
309	K																																													
308	K																																													
307	K						B	I	NOTE 11 B	4.000	2.625	3.375	2.750	.156	.093	.156	.187	NA	NA	2.328	1.468	1.187	.906	2.031	.062	.375	.156	NA	1.437	2.750	.437	NA	3.687	.062	.062	1.750	.593	NA	NA	NA	NA	NA	NA	NA	NA	NA
306	K						B	II	NOTE 11 C	4.000	2.625	3.375	2.750	.156	.093	.156	.187	.125	.156	2.328	1.468	1.187	.906	2.031	.062	.375	.156	↕	1.437	2.750	.437	2.312	3.687	.062	NA	1.750	.593	↕	↕	↕	↕	↕	↕	↕	↕	↕
305	K						B	I	NOTE 11 B	2.000	1.312	1.687	1.375	.078	.048	.078	.093	NA	NA	1.164	.734	.593	.453	1.015	.048	.171	.078	↕	.718	1.375	.187	NA	NA	.048	.031	.875	.320	↕	↕	↕	↕	↕	↕	↕	↕	↕
304	K						B	II	NOTE 11 C	2.000	1.312	1.687	1.375	.078	.048	.078	.093	.070	.078	1.164	.734	.593	.453	1.015	.048	.171	.078	NA	.718	1.375	.187	.156	1.843	.048	NA	.875	.320	NA	NA	NA	NA	NA	NA	NA	NA	NA
303	K																																													
302	K																																													
301	K																																													
300	K																																													
9	K	2 IN AUTOCOLLIMATOR		1001702			B	II	NOTE 11 C	4.000	2.625	3.812	2.750	.156	.093	.156	.187	.125	.156	2.250	1.500	1.187	.906	2.031	.093	.375	.156	1.750	1.437	2.750	.437	2.312	3.687	.062	NA	1.750	.593	.156	1.062	3.812	.156	NA	.156	1.062	.375	3.687
8	K	5 IN AUTOCOLLIMATOR		1017410			B	II	NOTE 11 C	4.000	2.625	3.812	2.750	.156	.093	.156	.187	.125	.156	2.250	1.500	1.187	.906	2.031	.093	.375	.156	1.750	1.437	2.750	.437	2.312	3.687	.062	NA	1.750	.593	.156	1.062	3.812	.156	NA	.156	1.062	.375	3.687
7	K	2½ IN AUTOCOLLIMATOR (SCT)		1017435			B	II	NOTE 11 C	4.000	2.625	3.812	2.750	.156	.093	.156	.187	.125	.156	2.250	1.500	1.187	.906	2.031	.093	.375	.156	1.750	1.437	2.750	.437	2.312	3.687	.062	NA	1.750	.593	.156	1.062	3.812	.156	NA	.156	1.062	.375	3.687
6	K	2½ IN AUTOCOLLIMATOR (SXT)		1017448			B	II	NOTE 11 C	4.000	2.625	3.812	2.750	.156	.093	.156	.187	.125	.156	2.250	1.500	1.187	.906	2.031	.093	.375	.156	1.750	1.437	2.750	.437	2.312	3.687	.062	NA	1.750	.593	.156	1.062	3.812	.156	NA	.156	1.062	.375	3.687
5	K	RETROREFLECTING PRISM ASSEMBLY		1019840			B	I	NOTE 11 B	4.000	2.625	3.812	2.750	.156	.093	.156	.187	NA	NA	2.250	1.500	1.187	.906	2.031	.093	.375	.156	1.750	1.437	2.750	.437	NA	NA	.062	.062	1.750	.593	.156	1.062	3.812	.156	NA	.156	1.062	.375	NA
4	K	S/H SIMULATOR ASSEMBLY		1019896			B	I	NOTE 11 B	4.000	2.625	3.812	2.750	.156	.093	.156	.187	NA	NA	2.250	1.500	1.187	.906	2.031	.093	.375	.156	1.750	1.437	2.750	.437	NA	NA	.062	.062	1.750	.593	.156	1.062	3.812	.156	NA	.156	1.062	.375	NA
3	K	REFERENCE MIRROR		1001767			B	I	NOTE 11 B	2.000	1.312	1.906	1.375	.078	.048	.078	.093	NA	NA	1.125	.750	.593	.453	1.015	.062	.187	.078	.875	.718	1.375	.218	NA	NA	.048	.031	.875	.305	.078	.531	1.906	.078	NA	.078	.531	.187	NA
2	K	2 IN PLANE READING AUTOCOLLIMATOR		1017413			B	I	NOTE 11 B	2.000	1.312	1.906	1.375	.078	.048	.078	.093	NA	NA	1.125	.750	.593	.453	1.015	.062	.187	.078	.875	.718	1.375	.218	NA	NA	.048	.031	.875	.305	.078	.531	1.906	.078	NA	.078	.531	.187	NA
1	K	2 IN AUTOCOLLIMATOR		1001702			B	I	NOTE 11 B	2.000	1.312	1.906	1.375	.078	.048	.078	.093	NA	NA	1.125	.750	.593	.453	1.015	.062	.187	.078	.875	.718	1.375	.218	NA	NA	.048	.031	.875	.305	.078	.531	1.906	.078	NA	.078	.531	.187	NA

Ⓖ REPLACES REV F WITH CHANGE

KOLLSMAN DASH NUMBERS

NOTES FOR TABLE

STYLE A IS FOR G&N SYSTEM.
STYLE B IS FOR GROUND SUPPORT EQUIPMENT.
TYPE I IS WITHOUT MOUNTING HOLES.
TYPE II IS WITH MOUNTING HOLES.

MASTER

QTY REQD	PART OR IDENTIFYING NO.	MATERIAL OR NOTES	NOMENCLATURE OR DESCRIPTION	FIND NO.

LIST OF MATERIALS

NEXT ASSY	USED ON
AS APPLICABLE	

APPLICATION

UNLESS OTHERWISE SPECIFIED
DIMENSIONS ARE IN INCHES
CAPACITOR VALUES ARE IN µf
RESISTOR VALUES ARE IN OHMS
TOLERANCES ON
FRACTIONS ± — DECIMALS ±.005 ANGLES ± —
DO NOT SCALE THIS DRAWING

MATERIAL
SEE NOTE 11

MIT
INSTRUMENTATION LAB
CAMBRIDGE, MASS

MANNED SPACECRAFT CENTER
HOUSTON, TEXAS

DRAWN	R. A. Jones	7-16-65
CHECKED	A. J. [illegible]	7-22-65
APPROVED		
APPROVED	W. Kupfer	7/22/65
APPROVED MIT	W. Kupfer	7/22/65
APPROVED MSC	[illegible]	
		DATE

NAMEPLATES,
APOLLO G&N-GSE
(STANDANDS)

CODE IDENT NO. 80230
SIZE E
DRAWING NO. 1004260
SCALE NONE
SHEET 2 OF 5

1004260

NOTICE – WHEN GOVERNMENT DRAWINGS, SPECIFICATIONS, OR OTHER DATA ARE USED FOR ANY PURPOSE OTHER THAN IN CONNECTION WITH A DEFINITELY RELATED GOVERNMENT PROCUREMENT OPERATION, THE UNITED STATES GOVERNMENT THEREBY INCURS NO RESPONSIBILITY NOR ANY OBLIGATION WHATSOEVER; AND THE FACT THAT THE GOVERNMENT MAY HAVE FORMULATED, FURNISHED, OR IN ANY WAY SUPPLIED THE SAID DRAWINGS, SPECIFICATIONS OR OTHER DATA IS NOT TO BE REGARDED BY IMPLICATION OR OTHERWISE AS IN ANY MANNER LICENSING THE HOLDER OR ANY OTHER PERSON OR CORPORATION, OR CONVEYING ANY RIGHTS OR PERMISSION TO MANUFACTURE, USE, OR SELL ANY PATENTED INVENTION THAT MAY IN ANY WAY BE RELATED THERETO.

REVISIONS 22768

SYM	ZONE	DESCRIPTION	DR	CHK	DATE	APPROVED
G		REPLACES REV F WITH CHANGE PER TDRR 20854			7/22/65	
H		REVISED PER TDRR 20892			8/3/65	
J		REVISED PER TDRR 20904			8/3/65	
K		REVISED PER TDRR 21379			8/9/65	
L		REVISED PER TDRR 21410				

DASH NO.	P/C	PART NAME	REMARKS	PART NO.	SER. NO.	CONT. NO.	STYLE	TYPE	MATERIAL	A	B	C	D	E	F	G	H	J	K	L	M	N	P	R	S	T	U	V	W	Y	Z	AA	AB	AC	AD	AE	AF	AG	AH	AJ	AK	AL	AM	AN	AP	AR
299	R																																													
298	R																																													
250																																														
249																																														
248																																														
247																																														
246																																														
245	R	TAPE PUNCH ASSEMBLY		2014039-011	NA	FNP-12775	B	I	NOTE 11B	FOR DIMENSIONS, SEE DASH 15 VALUES BELOW																											NOT APPLICABLE									
244	R	TAPE READER ASSEMBLY		2014038-011	NA		B	I	NOTE 11B																																					
243																																														
242																																														
241																																														
240	R	SELF TEST ASSEMBLY		2014366-011	NA	FNP-12775	B	I	NOTE 11B	FOR DIMENSIONS, SEE DASH 15 VALUES BELOW																											NOT APPLICABLE									
239		POWER SUPPLY ASSY-115V., 400 CYCLE		2014207-011						FOR DIMENSIONS, SEE DASH 17 VALUES BELOW																																				
238		AC INPUT PANEL ASSY-C.T.S.		2014043-011																																										
237		POWER CONTROL ASSY		2014079-011						FOR DIMENSIONS, SEE DASH 15 VALUES BELOW																																				
236		DRAWER ASSY-XY INTERFACE		2014040-011																																										
235		DRAWER ASSY RDC INTERFACE		2014045-011																																										
234		BUFFER CIRCUIT ASSY		2014254-011																																										
233		CONTROL & INTERFACE ASSY		2014204-011																																										
232		POWER CONTROL ASSY		2014044-011						FOR DIMENSIONS, SEE DASH 17 VALUES BELOW																																				
231		DRAWER ASSY, PROGRAMMER & MONITOR		2014041-011																																										
230		CONNECTOR INTERFACE ASSY		2014272-011						FOR DIMENSIONS, SEE DASH 15 VALUES BELOW																																				
229		CONNECTOR INTERFACE ASSY		2014047-011																																										
228		ANTENNA, TUNING CAPACITOR ASSY		2014209-011																																										
227		MOUNTING FIXTURE ASSY		2014006-011						FOR DIMENSIONS, SEE DASH 17 VALUES BELOW																																				
226		POWER SUPPLY ASSY 3 VDC		2014234-011						FOR DIMENSIONS, SEE DASH 15 VALUES BELOW																																				
225		PANEL ASSY – SIGNAL INTERFACE		2014010-011																																										
224		OSCILLOSCOPE ASSY		2014232-011																																										
223		AUXILIARY OUTLET ASSY		2014274-011																																										
222		FREQUENCY COUNTER		2014233-011																																										
221		POWER SUPPLY ASSY 10, 13, 28 VDC		2014235-011																																										
220		LOGIC DRAWER ASSY NO. 2		2014037-011						FOR DIMENSIONS, SEE DASH 17 VALUES BELOW																																				
219		LOGIC DRAWER ASSY NO. 1		2014036-011																																										
218		COUNTER, ELECTRICAL ASSY		2014288-011						FOR DIMENSIONS, SEE DASH 15 VALUES BELOW																																				
217		POWER SUPPLY ASSY		2014279-011																																										
216		TEST MOUNT ASSY		2014257-011																																										
215		UNIVERSAL DSKY PEDESTAL MOUNT, BLOCK II		2014014-011						FOR DIMENSIONS, SEE DASH 17 VALUES BELOW																																				
214		MAIN DSKY PEDESTAL MOUNT, BLOCK I & 100		2014343				I	NOTE 11B																																					
213		SHIPPING CONTAINER, MAIN DSKY		1006229				II	NOTE 11C	FOR DIMENSIONS, SEE DASH 18 VALUES BELOW																																				
212		NAV DSKY		1006231																																										
211		AGC, BLOCK I & 100		1006230																																										
210		UNIVERSAL DSKY		1006422																																										
209		SHIPPING CONTAINER, AGC BLOCK II		1006421				II	NOTE 11C																																					
208		UNIVERSAL DSKY HANDLING FIXTURE		2014013-011				I	NOTE 11B	FOR DIMENSIONS, SEE DASH 15 VALUES BELOW																																				
207		NAV DSKY HANDLING FIXTURE		1014377						FOR DIMENSIONS, SEE DASH 17 VALUES BELOW																																				
206		MAIN DSKY HANDLING FIXTURE		1014334																																										
205		AGC HANDLING FIXTURE		2014282-011				I	NOTE 11B																																					
204		OPERATION CONSOLE		2014024-011				II	NOTE 11C	FOR DIMENSIONS, SEE DASH 18 VALUES BELOW																																				
203		COMPUTER TEST SET		2014042-011																																										
202		DRAWER ASSY, COMPUTER SIMULATOR		2014048-011																																										
201		AUXILIARY CALIBRATION CONSOLE		2014059-011		FNP-12775																																								
200	R	AGC CALIBRATION CONSOLE		2014049-011	NA		B	II	NOTE 11C																																					
21	R																																													
20	R	NA		NA	NA	NA	A	II	NOTE 11C	2.000	1.312	1.687	1.375	.078	.031	.078	.093	.106 .113	.093	1.187	.750	.593	.453	1.015	.062	.187	.078	.875	.718	1.375	.218	1.156	1.843	.048	NA	.875	.305	.078	.312	1.687	.078	NA	.078	.312	.187	1.843
19	R	NA		NA	NA	NA	A	I	NOTE 11B	2.000	1.312	1.687	1.375	.078	.031	.078	.093	NA	NA	1.187	.750	.593	.453	1.015	.062	.187	.078	.875	.718	1.375	.218	NA	NA	.048	.031	.875	.305	.078	.312	1.687	.078	NA	.078	.312	.187	NA
18	R	NA		NA	NA	NA	B	II	NOTE 11C	4.187	1.875	3.469	2.750	.156	.093	.156	.125	.106 .113	.125	1.625	1.032	.844	.656	1.406	.093	.344	.156	1.781	1.531	2.844	.312	1.562	3.875	.062	NA	1.219	.500	.156	.719	3.469	.156	NA	.156	.719	.344	3.875
17	R	NA		NA	NA	NA	B	I	NOTE 11B	4.187	1.875	3.469	2.750	.156	.093	.156	.125	NA	NA	1.625	1.032	.844	.656	1.406	.093	.344	.156	1.781	1.531	2.844	.312	NA	NA	.062	.062	1.219	.500	.156	.719	3.469	.156	NA	.156	.719	.344	NA
16	R	NA		NA	NA	NA	B	II	NOTE 11C	2.000	1.312	1.687	1.375	.078	.031	.078	.093	.106 .113	.093	1.187	.750	.593	.453	1.015	.062	.187	.078	.875	.718	1.375	.218	1.156	1.843	.048	NA	.875	.305	.078	.312	1.687	.078	NA	.078	.312	.187	1.843
15	R	NA		NA	NA	NA	B	I	NOTE 11B	2.000	1.312	1.687	1.375	.078	.031	.078	.093	NA	NA	1.187	.750	.593	.453	1.015	.062	.187	.078	.875	.718	1.375	.218	NA	NA	.048	.031	.875	.305	.078	.312	1.687	.078	NA	.078	.312	.187	NA

THIS SHEET ADDED

Ⓖ REPLACES REV F WITH CHANGE

RAYTHEON DASH NUMBERS

NOTES FOR TABLE
STYLE A IS FOR G & N SYSTEM
STYLE B IS FOR GROUND SUPPORT EQUIPMENT
TYPE I IS WITHOUT MOUNTING HOLES
TYPE II IS WITH MOUNTING HOLES

QTY REQD	PART OR IDENTIFYING NO.	MATERIAL OR NOTES	NOMENCLATURE OR DESCRIPTION	FIND NO.

LIST OF MATERIALS

NEXT ASSY	USED ON
AS APPLICABLE	

APPLICATION

UNLESS OTHERWISE SPECIFIED
DIMENSIONS ARE IN INCHES
CAPACITOR VALUES ARE IN µf
RESISTOR VALUES ARE IN OHMS
TOLERANCES ON
FRACTIONS ± — DECIMALS ±.005 ANGLES ± —
DO NOT SCALE THIS DRAWING

MATERIAL
SEE NOTE 11

MIT
INSTRUMENTATION LAB
CAMBRIDGE, MASS.

DRAWN R A Jones 7-16-65
CHECKED A. J. 7-22-65
APPROVED
APPROVED 7/22/65
APPROVED MIT 7/22/65
APPROVED MSC
DATE

MANNED SPACECRAFT CENTER
HOUSTON, TEXAS

NAMEPLATES,
APOLLO GEN-GSE
(STANDARDS)

CODE IDENT NO. 80230
SIZE E
DRAWING NO. 1004260
SCALE NONE
SHEET 3 OF 5

MASTER

1004260

NOTICE – WHEN GOVERNMENT DRAWINGS, SPECIFICATIONS, OR OTHER DATA ARE USED FOR ANY PURPOSE OTHER THAN IN CONNECTION WITH A DEFINITELY RELATED GOVERNMENT PROCUREMENT OPERATION, THE UNITED STATES GOVERNMENT THEREBY INCURS NO RESPONSIBILITY NOR ANY OBLIGATION WHATSOEVER; AND THE FACT THAT THE GOVERNMENT MAY HAVE FORMULATED, FURNISHED, OR IN ANY WAY SUPPLIED THE SAID DRAWINGS, SPECIFICATIONS, OR OTHER DATA IS NOT TO BE REGARDED BY IMPLICATION OR OTHERWISE AS IN ANY MANNER LICENSING THE HOLDER OR ANY OTHER PERSON OR CORPORATION, OR CONVEYING ANY RIGHTS OR PERMISSION TO MANUFACTURE, USE, OR SELL ANY PATENTED INVENTION THAT MAY IN ANY WAY BE RELATED THERETO.

REVISIONS 02768

SYM	ZONE	DESCRIPTION	DR	CHK	DATE	APPROVED
G		REPLACES REV F WITH CHANGE PER TDRR 20854.			7/22/65	WK
H		REVISED PER TDRR 20892			8/2/65	wk
J		REVISED PER TDRR 20904			8/3/65	wk
K		REVISED PER TDRR 21379			8/5/65	wk
L		REVISED PER TDRR 21410			8/23/65	wk

DASH NO.	P/C	PART NAME	REMARKS	PART NO.	SER. NO.	CONT. NO.	STYLE	TYPE	MATERIAL	A	B	C	D	E	F	G	H	J	K	L	M	N	P	R	S	T	U	V	W	Y	Z	AA	AB	AC	AD	AE	AF	AG	AH	AJ	AK	AL	AM	AN	AP	AR
199	AC																																													
198	AC																																													
144	AC	FIX., MOUNTING, G AND N		1902204-021			B	II	NOTE 11 C	4.125	1.812	3.250	NA	.125	.062	.12	.156	.188 .194	.125	1.625	1.140	.890	.640	1.390	.125	.171	.125	1.875	1.687	2.625	.250	1.562	3.843	.093	NA	NA	.359	.125	.437	3.688	NA	3.687	.093	.40	.25	3.875
143	AC	CSL, COOL. AND PWR, G AND N		1902134-021						4.125	1.812	3.250		.125	.062	.12	.156		.125	1.625	1.140	.890	.640	1.390	.125	.171	.125	1.875	1.687	2.625	.250	1.562	3.843	.093			.359	.125	.437	3.688		3.687	.093	.40	.25	3.875
142	AC	ANALYZER, OPTICS-INERTIAL		2900023-011						4.125	1.812	3.250		.125	.062	.12	.156		.125	1.625	1.140	.890	.640	1.390	.125	.171	.125	1.875	1.687	2.625	.250	1.562	3.843	.093			.359	.125	.437	3.688		3.687	.093	.40	.25	3.875
141	AC	CONT, TEMP, PORTABLE		2900060-011						2.125	.968	1.718		.093	.031	.06	.093		.093	.858	.608	.484	.358	.733	.077	.116	.062	.937	.875	1.343	.125	.781	1.892	.046			.209	.093	.250	1.875		1.840	.046	.23	.16	1.938
140	AC	TESTER, CKT, IMU/CDU RSVR		2900286-011						4.125	1.812	3.250		.125	.062	.12	.156		.125	1.625	1.140	.890	.640	1.390	.125	.171	.125	1.875	1.687	2.625	.250	1.562	3.843	.093			.359	.125	.437	3.688		3.687	.093	.40	.25	3.875
139	AC	SIMULATOR, LD/SIG, CDU		2900285-011																																										
138	AC	SIMULATOR, LD/SIG, OPTICS		1902023-021																																										
137	AC	FIX., MOUNTING, IMU/NAV BASE		6900003-011																																										
136	AC	FIX., OPTICS/NAV BASE		2900072-011																																										
135	AC	FIX., MOUNTING, SUB SYSTEM		2900070-011																																										
134	AC	FIX., HAND., G AND N HARNESS		2900069-011																																										
133	AC	CNTR, SHIPPING, NAV BASE		2900068-011																																										
132	AC	FIX., MOUNTING, G AND N		2900067-011																																										
131	AC	SIMULATOR, LD/SIG, IMU/CDU		2900062-011																																										
130	AC	TESTOR, GYRO WHEEL		2900061-011																																										
129	AC	COOLANT SUPPLY		1902133-021																																										
128	AC	TABLE, ROTARY		1900926-021						4.125	1.812	3.250		.125	.062	.12	.156		.125	1.625	1.140	.890	.640	1.390	.125	.171	.125	1.875	1.687	2.625	.250	1.562	3.843	.093			.359	.125	.437	3.688		3.687	.093	.40	.25	3.875
127	AC	FIX., HAND., OPTICS		2900074-011						2.125	.968	1.718		.093	.031	.06	.093		.093	.858	.608	.484	.358	.733	.077	.116	.062	.937	.875	1.343	.125	.781	1.892	.046			.209	.093	.250	1.875		1.840	.046	.23	.16	1.938
126	AC	FIX., MTG, PTA / PEA		2900066-011																																										
125	AC	CONT, TEMP, IMU LIFTING		2900063-011																																										
124	AC	FIX., HANDLING, IMU		2900064-011																																										
123	AC	CONT, OPTICS, REMOTE		1902046-021																																										
122	AC	TEST CONTROL		1902009-021																																										
121	AC	ADPT MODULE, P.S.A.		1902431-021																																										
120	AC	BRIDGE, DECADE ERROR		2900128-011																																										
119	AC	PWR SUP, ELECTRONICS		2900012-011																																										
118	AC	PWR SUP, RELAY AND LAMP		1900049-031																																										
117	AC	CONSOLE OSCILLOGRAPH		1900000-021																																										
116	AC	ADPT, MODULE, P.S.A.		1902431-011																																										
115	AC	ADPT, TEST POINT, PTA/PEA		2900145-011																																										
114	AC	ADPT, TEST POINT, P.S.A.		2900037-011																																										
113	AC	CONTROL, GIMBAL, POSITION		2900036-011																																										
112	AC	SELECTOR, SIGNAL, PRIMARY		2900035-011																																										
111	AC	SEL, SIG, OSCILLOGRAPH		2900034-011																																										
110	AC	PANEL, PWR SUP AND LOAD		2900033-011																																										
109	AC	PANEL, MONITOR		2900031-011																																										
108	AC	PANEL, AUXILIARY INPUT		2900030-011																																										
107	AC	CAGING ELECTRONICS, GYRO		2900029-011																																										
106	AC	TEST SELECTOR		2900028-011																																										
105	AC	TEST CONTROL		2900027-011																																										
104	AC	MONITOR AND CONTROL, TEMP		2900026-011																																										
103	AC	DISTRIBUTION BOX, GSE		2900024-011																																										
102	AC	VOLTMETER, DIGITAL		2900007 011			B	II	NOTE 11 C	2.125	.968	1.718	NA	.093	.031	.06	.093	.188 .194	.093	.858	.608	.484	.358	.733	.077	.116	.062	.937	.875	1.343	.125	.781	1.892	.046	NA	NA	.209	.093	.250	1.875	NA	1.840	.046	.23	.16	1.938
101	AC	NAVIGATION BASE ASSEMBLY – LEM		6899950		NAS-9-497	A	I	NOTE 11 B	2.000	1.312	1.906	1.375	.078	.048	.078	.093	NA	NA	1.125	.750	.593	.453	1.015	.062	.187	.078	.875	.718	1.375	.218	NA	NA	.048	.031	.875	.305	.078	.531	1.906	.078	NA	.078	.531	.187	NA
100	AC	NAVIGATION BASE ASSEMBLY		2899982		NAS-9-497	A	I	NOTE 11 B	2.000	1.312	1.906	1.375	.078	.048	.078	.093	NA	NA	1.125	.750	.593	.453	1.015	.062	.187	.078	.875	.718	1.375	.218	NA	NA	.048	.031	.875	.305	.078	.531	1.906	.078	NA	.078	.531	.187	NA

A C ELECTRONICS DASH NUMBERS

THIS SHEET ADDED

Ⓖ REPLACES REV F WITH CHANGE

NOTES FOR TABLE

STYLE A IS FOR G&N SYSTEM
STYLE B IS FOR GROUND SUPPORT EQUIPMENT
TYPE I IS WITHOUT MOUNTING HOLES
TYPE II IS WITH MOUNTING HOLES

MASTER

QTY REQD	PART OR IDENTIFYING NO.	MATERIAL OR NOTES	NOMENCLATURE OR DESCRIPTION	FIND NO.

LIST OF MATERIALS

NEXT ASSY	USED ON
AS APPLICABLE	

APPLICATION

UNLESS OTHERWISE SPECIFIED
DIMENSIONS ARE IN INCHES
CAPACITOR VALUES ARE IN µf
RESISTOR VALUES ARE IN OHMS
TOLERANCES ON
FRACTIONS ± — DECIMALS ±.005 ANGLES ± —
DO NOT SCALE THIS DRAWING

MATERIAL
SEE NOTE 11

MIT
INSTRUMENTATION LAB
CAMBRIDGE, MASS.

MANNED SPACECRAFT CENTER
HOUSTON, TEXAS

DRAWN	R A Jones	7-16-65
CHECKED		7-22-65
APPROVED		
APPROVED	W Kupfer	22 Jul 65
APPROVED MIT	W Kupfer	22 Jul 65
APPROVED MSC		7/22/65
		DATE

NAMEPLATES,
APOLLO G&N-GSE
(STANDARDS)

CODE IDENT NO. 80230
SIZE E
DRAWING NO. 1004260
SCALE NONE
SHEET 4 OF 5

1004260

REVISIONS 02768

SYM	ZONE	DESCRIPTION	DR	CHK	DATE	APPROVED
G		REPLACES REV F WITH CHANGE PER TDRR 20854			7/26/65	WK
H		REVISED PER TDRR 20892			8/3/65	WK
J		REVISED PER TDRR 20904			8/3/65	WK
K		REVISED PER TDRR 21379			8/6/65	WK
L		REVISED PER TDRR 21410			[illegible]	WK

DASH NO.	P/C	PART NAME	REMARKS	PART NO.	SER. NO.	CONT. NO.	STYLE	TYPE	MATERIAL	A	B	C	D	E	F	G	H	J	K
499	MIT																		
498																			
401																			
400	MIT	LIFTING SLING-G&N INST. QUAL. FIX. & AZM. REF. FIX.		1021640		NAS-9-4065	B	II	NOTE 11 C	2.000	1.312	1.687	1.375	.078	.048	.078	.093	.106/.113	.093

DASH NO.	L	M	N	P	R	S	T	U	V	W	Y	Z	AA	AB	AC	AD	AE	AF	AG	AH	AJ	AK	AL	AM	AN	AP	AR
400	1.187	.750	.593	.453	1.015	.062	.187	.078	.875	.718	1.375	.218	1.156	1.843	.048	NA	.875	.305	NA	NA	NA	NA	NA	NA	NA	NA	NA

MIT DASH NUMBERS

THIS SHEET ADDED
Ⓖ REPLACES REV F WITH CHANGE

NOTES FOR TABLE
STYLE A IS FOR G&N SYSTEM
STYLE B IS FOR GROUND SUPPORT EQUIPMENT
TYPE I IS WITHOUT MOUNTING HOLES
TYPE II IS WITH MOUNTING HOLES

MASTER

QTY REQD	PART OR IDENTIFYING NO.	MATERIAL OR NOTES	NOMENCLATURE OR DESCRIPTION	FIND NO.

LIST OF MATERIALS

AS APPLICABLE
NEXT ASSY | USED ON
APPLICATION

UNLESS OTHERWISE SPECIFIED
DIMENSIONS ARE IN INCHES
CAPACITOR VALUES ARE IN µf
RESISTOR VALUES ARE IN OHMS
TOLERANCES ON
FRACTIONS ± — DECIMALS ±.005 ANGLES ± —
DO NOT SCALE THIS DRAWING

MATERIAL
SEE NOTE 11

MIT
INSTRUMENTATION LAB
CAMBRIDGE, MASS.

DRAWN R A Jones 7-16-65
CHECKED 7-23-65
APPROVED
APPROVED W Kupfer 7/22/65
APPROVED MIT W Kupfer 7/22/65
APPROVED MSC 7/26/65
DATE

MANNED SPACECRAFT CENTER
HOUSTON, TEXAS

NAMEPLATES,
APOLLO G&N-GSE
(STANDARDS)

CODE IDENT NO. 80230
SIZE E
DRAWING NO. 1004260
SCALE NONE
SHEET 5 OF 5

1004260

NOTICE - WHEN GOVERNMENT DRAWINGS, SPECIFICATIONS, OR OTHER DATA ARE USED FOR ANY PURPOSE OTHER THAN IN CONNECTION WITH A DEFINITELY RELATED GOVERNMENT PROCUREMENT OPERATION, THE UNITED STATES GOVERNMENT THEREBY INCURS NO RESPONSIBILITY NOR ANY OBLIGATION WHATSOEVER; AND THE FACT THAT THE GOVERNMENT MAY HAVE FORMULATED, FURNISHED, OR IN ANY WAY SUPPLIED THE SAID DRAWINGS, SPECIFICATIONS OR OTHER DATA IS NOT TO BE REGARDED BY IMPLICATION OR OTHERWISE AS IN ANY MANNER LICENSING THE HOLDER OR ANY OTHER PERSON OR CORPORATION, OR CONVEYING ANY RIGHTS OR PERMISSION TO MANUFACTURE, USE, OR SELL ANY PATENTED INVENTION THAT MAY IN ANY WAY BE RELATED THERETO.

NOTES:

1. INTERPRET DRAWING IN ACCORDANCE WITH STANDARDS PRESCRIBED IN MIL-D-70327.
2. DIMENSIONS ON EACH VIEW APPLY TO ALL VIEWS. (WITH THE EXCEPTION OF MOUNTING HOLES).
3. FORMATS ILLUSTATED WILL BE APPLICABLE TO ALL ITEMS REQUIRING NAMEPLATES BELOW END ITEM DESIGNATION (SYSTEMS, ASSEMBLIES, ETC.)
4. PLATE BACKGROUND TO BE LUSTERLESS BLACK PER FED-STD-595, COLOR 37038. BORDER, MARKING AND LETTERING TO BE NATURAL METAL, (ANODIZED ALUMINUM).
5. MARKING METHOD TO BE DIE STAMPING, ETCHING OR ENGRAVING IN ACCORDANCE WITH MIL P 19834.
6. LETTERING STYLE TO BE GOTHIC, (SANS SERIFS), AND NUMBERS TO BE ARABIC.
7. WHERE LOCATING DIMENSIONS ARE NOT SHOWN, CHARACTERS SHALL BE SYMMETRICALLY POSITIONED.
8. IDENTIFY WITH DRAWING NUMBER PER ND1002019.
9. WHEN "AUTO MARK" METAL MARKING TYPEWRITER IS USED TO ADD DATA TO BLANK SPACES, TYPE SIZE IS TO BE SELECTED FROM DIMENSIONS U, AC AND AM.
10. NASA SYMBOL IS TO BE PROPORTIONAL TO NAMEPLATE IN RATIO OF 1 TO 5 WITH DIMENSION A VALUE AND IS TO HAVE NATURAL BACKGROUND. NASA SYMBOL LETTERS LETTERING AND FEATHER TO BE BLACK, (OR WHITE FOR SILK SCREENING). WHERE BLACK FEATHER PROTRUDES INTO BLACK BACKGROUND, A MINIMUM OUTLINE OF NATURAL BACKGROUND SHALL EXIST.
11. NAMEPLATES WILL BE APPLIED BY METHODS LISTED BELOW, SHOWN IN ORDER OF PREFERENCE, (I.E., FOR RELIABILITY AND WEIGHT).
    - A - STENCIL OR SILK SCREEN DIRECTLY ON EQUIPMENT USING INK PER SCD 1010920, (WHITE OR BLACK).
    - B - ALUMINUM FOIL, (STYLE A OR B, TYPE I): FOIL SHALL BE .0030 ±.0005 THICK PER MIL-A-148. FOIL SHALL HAVE NO ADHESIVE BACKING. FOIL SHALL BE BONDED PER ND 1002219, (METHOD II). FOIL SHALL BE CLEAR ANODIZED PER MIL-A-8625, TYPE II.
    - C - PLATE, (STYLE A OR B, TYPE II): MATERIAL: QQ-A-250, TEMPER O OR H14, TYPE 1100, ALUMINUM ALLOY, .032 THICK. ANODIZE PER MIL-A-8625, TYPE II. ALUMINUM PLATE MUST BE FREE FROM BURRS AND SHARP CORNERS, MOUNTED WITH APPLICABLE SIZE FASTENERS.
12. NAMEPLATES SHALL BE CAPABLE OF MEETING APPLICABLE REQUIREMENTS OF MIL-M-13231.
13. ON DIMENSION TABLES SHOWN ON PAGES 2, 3, 4 AND 5, NA MEANS, "NOT APPLICABLE".

REVISIONS 02777

	SYM	ZONE	DESCRIPTION	DR	CHK	DATE	APPROVED
	G		REPLACES REV F WITH CHANGE PER TDRR 20854			7/26/65	WR
★	H		REVISED PER TDRR 20892			8/5/65	WR
	J		REVISED PER TDRR 20904			8/5/65	WR
	K		REVISED PER TDRR 21379			5/16/65	WR
	L		REVISED PER TDRR 21410			6/23/65	WR
★	M		REVISED PER TDRR 21993			10/	
★	N		REVISED PER TDRR 22621				
★	P		REVISED PER TDRR 22671			1/11/	
★	R		REVISED PER TDRR 22672				
★	S		REVISED PER TDRR 22750			65	WR
	T		REVISED PER TDRR 22823				

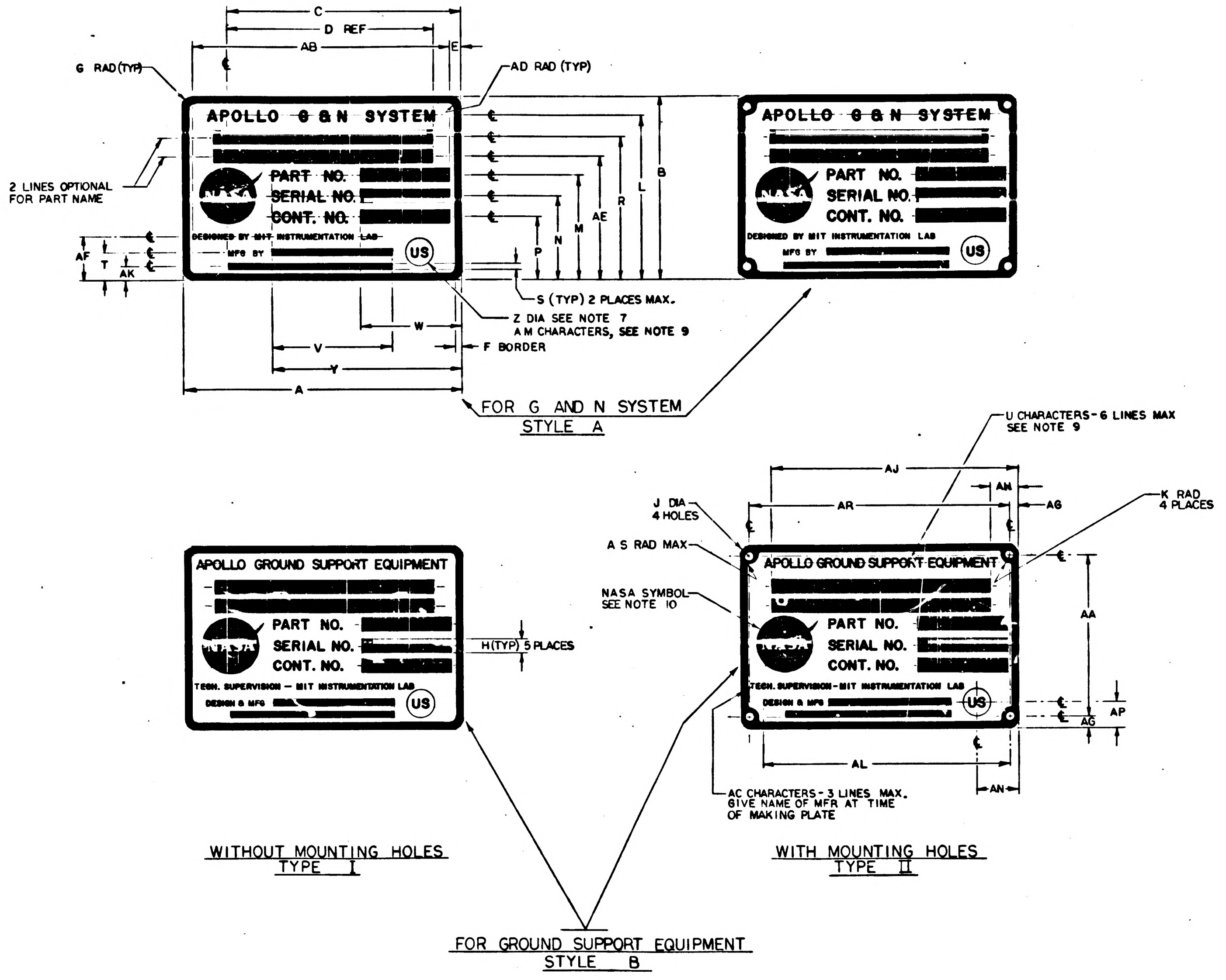
C
D REF
AB
E
G RAD (TYP)
AD RAD (TYP)
APOLLO G & N SYSTEM
PART NO.
SERIAL NO.
CONT. NO.
DESIGNED BY MIT INSTRUMENTATION LAB
MFG BY
US
2 LINES OPTIONAL FOR PART NAME
AF
T
AK
B
L
R
AE
M
N
P
S (TYP) 2 PLACES MAX.
Z DIA SEE NOTE 7
AM CHARACTERS, SEE NOTE 9
W
V
Y
F BORDER
A
FOR G AND N SYSTEM
STYLE A
U CHARACTERS - 6 LINES MAX
SEE NOTE 9
AJ
AH
AR
AG
J DIA 4 HOLES
K RAD 4 PLACES
A S RAD MAX
NASA SYMBOL SEE NOTE 10
APOLLO GROUND SUPPORT EQUIPMENT
TECH. SUPERVISION - MIT INSTRUMENTATION LAB
DESIGN & MFG
H (TYP) 5 PLACES
AA
AP
AL
AN
AC CHARACTERS - 3 LINES MAX. GIVE NAME OF MFR AT TIME OF MAKING PLATE
WITHOUT MOUNTING HOLES
TYPE I
WITH MOUNTING HOLES
TYPE II
FOR GROUND SUPPORT EQUIPMENT
STYLE B

SUGGESTED PROPORTIONS FOR NAMEPLATE DIMENSIONS.
1. SELECT NAMEPLATE LENGTH, DIMENSION "A", TO FIT DESIGN NEEDS.
2. DIMENSIONS B THRU AS ON LINE 1 BELOW ARE PROPORTIONAL TO "A" BY MULTIPLIERS SHOWN IN LINE 2 BELOW.

1	A	B	C	D	E	F	G	H	J	K	L	M	N	P	R	S	T	U	V	W	Y	Z	AA	AB	AC	AD	AE	AF	AG	AH	AJ	AK	AL	AM	AN	AP	AR	AS
2	1.000 A	.6563 A	.8438 A	.6875 A	.0391 A	.0240 A	.0391 A	.0469 A	.0547 A	.0469 A	.5938 A	.3750 A	.2969 A	.2187 A	.5079 A	.0313 A	.0938 A	.0391 A	.4375 A	.3594 A	.6875 A	.1094 A	.5781 A	.9219 A	.0240 A	.0156 A	.4375 A	.1525 A	.0391 A	.1563 A	.8438 A	.0548 A	.8659 A	.0391 A	.1563 A	.0938 A	.9219 A	.0151 A

Ⓖ REPLACES REV F WITH CHANGE

QTY REQD	PART OR IDENTIFYING NO.	MATERIAL OR NOTES	NOMENCLATURE OR DESCRIPTION	FIND NO.

LIST OF MATERIALS

AS APPLICABLE

NEXT ASSY | USED ON

APPLICATION

UNLESS OTHERWISE SPECIFIED
DIMENSIONS ARE IN INCHES
CAPACITOR VALUES ARE IN μf
RESISTOR VALUES ARE IN OHMS
TOLERANCES ON
FRACTIONS ± — DECIMALS ±.005 ANGLES ± —
DO NOT SCALE THIS DRAWING

MATERIAL
SEE NOTE 11

MIT
INSTRUMENTATION LAB
CAMBRIDGE, MASS.

DRAWN R A Jones 7/16/65
CHECKED A. J. 7-22-65
APPROVED
APPROVED 7/22/65
APPROVED MIT 7/23/65
APPROVED MSC 7/23/65
DATE

MANNED SPACECRAFT CENTER
HOUSTON, TEXAS

NAMEPLATES,
APOLLO G&N-GSE
(STANDARDS)

CODE IDENT NO. 80230
SIZE E
DRAWING NO. 1004260
SCALE NONE
SHEET 1 OF 5

MASTER

NOTICE - WHEN GOVERNMENT DRAWINGS, SPECIFICATIONS, OR OTHER DATA ARE USED FOR ANY PURPOSE OTHER THAN IN CONNECTION WITH A DEFINITELY RELATED GOVERNMENT PROCUREMENT OPERATION, THE UNITED STATES GOVERNMENT THEREBY INCURS NO RESPONSIBILITY NOR ANY OBLIGATION WHATSOEVER; AND THE FACT THAT THE GOVERNMENT MAY HAVE FORMULATED, FURNISHED, OR IN ANY WAY SUPPLIED THE SAID DRAWINGS, SPECIFICATIONS OR OTHER DATA IS NOT TO BE REGARDED BY IMPLICATION OR OTHERWISE AS IN ANY MANNER LICENSING THE HOLDER OR ANY OTHER PERSON OR CORPORATION, OR CONVEYING ANY RIGHTS OR PERMISSION TO MANUFACTURE, USE, OR SELL ANY PATENTED INVENTION THAT MAY IN ANY WAY BE RELATED THERETO.

REVISIONS 02768

SYM	ZONE	DESCRIPTION	DR	CHK	DATE	APPROVED
G		REPLACES REV F WITH CHANGE PER TDRR 20854.			7/22	WK
H		REVISED PER TDRR 20892			8/3/65	WK
J		REVISED PER TDRR 20904			8/3/65	WK
K		REVISED PER TDRR 21379			8/9/65	WK
L		REVISED PER TDRR 21410			8/23/65	WK
M		REVISED PER TDRR 21993				
N		REVISED PER TDRR 22621			10/	
P		REVISED PER TDRR 22671			/11/	
R		REVISED PER TDRR 22672				
S		REVISED PER TDRR 22750			/65	WK
T		REVISED PER TDRR 22823				

DASH NO.	P/C	PART NAME	REMARKS	PART NO.	SER. NO.	CONT. NO.	STYLE	TYPE	MATERIAL	A	B	C	D	E	F	G	H	J	K
399	K																		
398	K																		
309	K																		
308	K																		
307	K						B	I	NOTE 11 B	4.000	2.625	3.375	2.750	.156	.093	.156	.187	NA	NA
306	K						B	II	NOTE 11 C	4.000	2.625	3.375	2.750	.156	.093	.156	.187	.125	.156
305	K						B	I	NOTE 11 B	2.000	1.312	1.687	1.375	.078	.048	.078	.093	NA	NA
304	K						B	II	NOTE 11 C	2.000	1.312	1.687	1.375	.078	.048	.078	.093	.070	.078
303	K																		
302	K																		
301	K																		
300	K																		
9	K	2 IN AUTOCOLLIMATOR		1001702			B	II	NOTE 11 C	4.000	2.625	3.812	2.750	.156	.093	.156	.187	.125	.156
8	K	5 IN AUTOCOLLIMATOR		1017410			B	II	NOTE 11 C	4.000	2.625	3.812	2.750	.156	.093	.156	.187	.125	.156
7	K	2½ IN AUTOCOLLIMATOR (SCT)		1017435			B	II	NOTE 11 C	4.000	2.625	3.812	2.750	.156	.093	.156	.187	.125	.156
6	K	2½ IN AUTOCOLLIMATOR (SXT)		1017448			B	II	NOTE 11 C	4.000	2.625	3.812	2.750	.156	.093	.156	.187	.125	.156
5	K	RETROREFLECTING PRISM ASSEMBLY		1019840			B	I	NOTE 11 B	4.000	2.625	3.812	2.750	.156	.093	.156	.187	NA	NA
4	K	S/H SIMULATOR ASSEMBLY		1019896			B	I	NOTE 11 B	4.000	2.625	3.812	2.750	.156	.093	.156	.187	NA	NA
3	K	REFERENCE MIRROR		1001767			B	I	NOTE 11 B	2.000	1.312	1.906	1.375	.078	.048	.078	.093	NA	NA
2	K	2 IN PLANE READING AUTOCOLLIMATOR		1017413			B	I	NOTE 11 B	2.000	1.312	1.906	1.375	.078	.048	.078	.093	NA	NA
1	K	2 IN AUTOCOLLIMATOR		1001702			B	I	NOTE 11 B	2.000	1.312	1.906	1.375	.078	.048	.078	.093	NA	NA

DASH NO.	L	M	N	P	R	S	T	U	V	W	Y	Z	AA	AB	AC	AD	AE	AF	AG	AH	AJ	AK	AL	AM	AN	AP	AR
307	2.328	1.468	1.187	.906	2.031	.062	.375	.156	NA	1.437	2.750	.437	NA	3.687	.062	62	1.750	.593	NA	NA	NA	NA	NA	NA	NA	NA	NA
306	2.328	1.468	1.187	.906	2.031	.062	.375	.156		1.437	2.750	.437	2.312	3.687	.062	NA	1.750	.593									
305	1.164	.734	.593	.453	1.015	.048	.171	.078		.718	1.375	.187	NA	NA	.048	.031	.875	.320									
304	1.164	.734	.593	.453	1.015	.048	.171	.078	NA	.718	1.375	.187	.156	1.843	.048	NA	.875	.320	NA	NA	NA	NA	NA	NA	NA	NA	NA
9	2.250	1.500	1.187	.906	2.031	.093	.375	.156	1.750	1.437	2.750	.437	2.312	3.687	.062	NA	1.750	.593	.156	1.062	3.812	.156	NA	.156	1.062	.375	3.687
8	2.250	1.500	1.187	.906	2.031	.093	.375	.156	1.750	1.437	2.750	.437	2.312	3.687	.062	NA	1.750	.593	.156	1.062	3.812	.156	NA	.156	1.062	.375	3.687
7	2.250	1.500	1.187	.906	2.031	.093	.375	.156	1.750	1.437	2.750	.437	2.312	3.687	.062	NA	1.750	.593	.156	1.062	3.812	.156	NA	.156	1.062	.375	3.687
6	2.250	1.500	1.187	.906	2.031	.093	.375	.156	1.750	1.437	2.750	.437	2.312	3.687	.062	NA	1.750	.593	.156	1.062	3.812	.156	NA	.156	1.062	.375	3.687
5	2.250	1.500	1.187	.906	2.031	.093	.375	.156	1.750	1.437	2.750	.437	NA	NA	.062	.062	1.750	.593	.156	1.062	3.812	.156	NA	.156	1.062	.375	NA
4	2.250	1.500	1.187	.906	2.031	.093	.375	.156	1.750	1.437	2.750	.437	NA	NA	.062	.062	1.750	.593	.156	1.062	3.812	.156	NA	.156	1.062	.375	NA
3	1.125	.750	.593	.453	1.015	.062	.187	.078	.875	.718	1.375	.218	NA	NA	.048	.031	.875	.305	.078	.531	1.906	.078	NA	.078	.531	.187	NA
2	1.125	.750	.593	.453	1.015	.062	.187	.078	.875	.718	1.375	.218	NA	NA	.048	.031	.875	.305	.078	.531	1.906	.078	NA	.078	.531	.187	NA
1	1.125	.750	.593	.453	1.015	.062	.187	.078	.875	.718	1.375	.218	NA	NA	.048	.031	.875	.305	.078	.531	1.906	.078	NA	.078	.531	.187	NA

Ⓖ REPLACES REV F WITH CHANGE

KOLLSMAN DASH NUMBERS

NOTES FOR TABLE
STYLE A IS FOR G&N SYSTEM.
STYLE B IS FOR GROUND SUPPORT EQUIPMENT.
TYPE I IS WITHOUT MOUNTING HOLES.
TYPE II IS WITH MOUNTING HOLES.

MASTER

QTY REQD	PART OR IDENTIFYING NO.	MATERIAL OR NOTES	NOMENCLATURE OR DESCRIPTION	FIND NO.

LIST OF MATERIALS

NEXT ASSY	USED ON
AS APPLICABLE	

APPLICATION

UNLESS OTHERWISE SPECIFIED
DIMENSIONS ARE IN INCHES
CAPACITOR VALUES ARE IN µf
RESISTOR VALUES ARE IN OHMS
TOLERANCES ON
FRACTIONS ± — DECIMALS ±.005 ANGLES ± —
DO NOT SCALE THIS DRAWING

MATERIAL
SEE NOTE 11

MIT
INSTRUMENTATION LAB
CAMBRIDGE, MASS.

DRAWN E.Q. Jones 7-16-65
CHECKED 7-22-65
APPROVED
APPROVED W. Kupfer
APPROVED MIT W. Kupfer
APPROVED MSC
DATE

MANNED SPACECRAFT CENTER
HOUSTON, TEXAS

NAMEPLATES,
APOLLO G&N-GSE
(STANDANDS)

CODE IDENT NO. 80230
SIZE E
DRAWING NO. 1004260
SCALE NONE
SHEET 2 OF 5

NOTICE – WHEN GOVERNMENT DRAWINGS, SPECIFICATIONS, OR OTHER DATA ARE USED FOR ANY PURPOSE OTHER THAN IN CONNECTION WITH A DEFINITELY RELATED GOVERNMENT PROCUREMENT OPERATION, THE UNITED STATES GOVERNMENT THEREBY INCURS NO RESPONSIBILITY NOR ANY OBLIGATION WHATSOEVER; AND THE FACT THAT THE GOVERNMENT MAY HAVE FORMULATED, FURNISHED, OR IN ANY WAY SUPPLIED THE SAID DRAWINGS, SPECIFICATIONS OR OTHER DATA IS NOT TO BE REGARDED BY IMPLICATION OR OTHERWISE AS IN ANY MANNER LICENSING THE HOLDER OR ANY OTHER PERSON OR CORPORATION, OR CONVEYING ANY RIGHTS OR PERMISSION TO MANUFACTURE, USE, OR SELL ANY PATENTED INVENTION THAT MAY IN ANY WAY BE RELATED THERETO.

REVISIONS 02768

SYM	ZONE	DESCRIPTION	DR	CHK	DATE	APPROVED
G		REPLACES REV F WITH CHANGE PER TDRR 20854			7/23/65	
H		REVISED PER TDRR 20892				WR
J		REVISED PER TDRR 20904				WR
K		REVISED PER TDRR 21 379				WR
L		REVISED PER TDRR 21410				
M		REVISED PER TDRR 21993				
N		REVISED PER TDRR 22621				
P		REVISED PER TDRR 22671				
R		REVISED PER TDRR 22672				
S		REVISED PER TDRR 22750				
T		REVISED PER TDRR 22823			/65	WR

DASH NO.	P/C	PART NAME	REMARKS	PART NO.	SER. NO.	CONT. NO.	STYLE	TYPE	MATERIAL	A	AG
299	R										
298	R										
250											
249											
248											
247											
246											
245	R	TAPE PUNCH ASSEMBLY		2014039-011	NA	FNP – 12775	B	I	NOTE 11B	FOR DIMENSIONS,SEE DASH 15 VALUES BELOW	NOT APPLICABLE
244	R	TAPE READER ASSEMBLY		2014038-011	NA		B	I	NOTE 11B		
243											
242											
241											
240	R	SELF TEST ASSEMBLY		2014366-011	NA	FNP – 12775	B	I	NOTE 11B	FOR DIMENSIONS,SEE DASH 15 VALUES BELOW	NOT APPLICABLE
239		POWER SUPPLY ASSY-115V., 400CYCLE		2014207-011						FOR DIMENSIONS,SEE DASH 17 VALUES BELOW	
239		AC INPUT PANEL ASSY-C.T.S.		2014043-011						FOR DIMENSIONS, SEE DASH 15 VALUES BELOW	
237		POWER CONTROL ASSY		2014079-011							
236		DRAWER ASSY-X Y INTERFACE		2014040-011							
235		DRAWER ASSY R D C INTERFACE		2014045-011							
234		BUFFER CIRCUIT ASSY		2014254-011							
233		CONTROL & INTERFACE ASSY		2014204-011							
232		POWER CONTROL ASSY		2014044-011						FOR DIMENSIONS, SEE DASH 17 VALUES BELOW	
231		DRAWER ASSY, PROGRAMMER & MONITOR		2014041-011							
230		CONNECTOR INTERFACE ASSY		2014272-011						FOR DIMENSIONS, SEE DASH 15 VALUES BELOW	
229		CONNECTOR INTERFACE ASSY		2014047-011							
228		ANTENNA TUNING CAPACITOR ASSY		2014209-011							
227		MOUNTING FIXTURE ASSY		2014006-011						FOR DIMENSIONS, SEE DASH 17 VALUES BELOW	
226		POWER SUPPLY ASSY 3 VDC		2014234-011						FOR DIMENSIONS, SEE DASH 15 VALUES BELOW	
225		PANEL ASSY — SIGNAL INTERFACE		2014010-011							
224		OSCILLOSCOPE ASSY		2014232-011							
223		AUXILIARY OUTLET ASSY		2014274-011							
222		FREQUENCY COUNTER		2014233-011							
221		POWER SUPPLY ASSY 10, 13, 28 VDC		2014235-011							
220		LOGIC DRAWER ASSY NO. 2		2014037-011						FOR DIMENSIONS, SEE DASH 17 VALUES BELOW	
219		LOGIC DRAWER ASSY NO. 1		2014036-011							
218		COUNTER, ELECTRICAL ASSY		2014288-011						FOR DIMENSIONS, SEE DASH 15 VALUES BELOW	
217		POWER SUPPLY ASSY		2014279-011							
216		TEST MOUNT ASSY		2014257-011							
215		UNIVERSAL DSKY PEDESTAL MOUNT, BLOCK II		2014014-011						FOR DIMENSIONS, SEE DASH 17 VALUES BELOW	
214		MAIN DSKY PEDESTAL MOUNT, BLOCK I & 100		2014343				I	NOTE 11B		
213		SHIPPING CONTAINER, MAIN DSKY		1006229				II	NOTE 11C	FOR DIMENSIONS, SEE DASH 18 VALUES BELOW	
212		NAV DSKY		1006231							
211		AGC, BLOCK I & 100		1006230							
210		UNIVERSAL DSKY		1006422							
209		SHIPPING CONTAINER, AGC BLOCK II		1006421				II	NOTE 11C		
208		UNIVERSAL DSKY HANDLING FIXTURE		2014013-011				I	NOTE 11B	FOR DIMENSIONS, SEE DASH 15 VALUES BELOW	
207		NAV DSKY HANDLING FIXTURE		1014377						FOR DIMENSIONS, SEE DASH 17 VALUES BELOW	
206		MAIN DSKY HANDLING FIXTURE		1014334							
205		AGC HANDLING FIXTURE		2014282-011				I	NOTE 11B		
204		OPERATION CONSOLE		2014024-011				II	NOTE 11C	FOR DIMENSIONS, SEE DASH 18 VALUES BELOW	
203		COMPUTER TEST SET		2014042-011							
202		DRAWER ASSY, COMPUTER SIMULATOR		2014048-011							
201		AUXILIARY CALIBRATION CONSOLE		2014059-011							
200	R	AGC CALIBRATION CONSOLE		2014049-011	NA	FNP – 12775	B	II	NOTE 11C		

DASH NO.	P/C	PART NAME	REMARKS	PART NO.	SER. NO.	CONT. NO.	STYLE	TYPE	MATERIAL	A	B	C	D	E	F	G	H	J	K	L	M	N	P	R	S	T	U	V	W	Y	Z	AA	AB	AC	AD	AE	AF	AG	AH	AJ	AK	AL	AM	AN	AP	AR
21	R																																													
20	R	NA		NA	NA	NA	A	II	NOTE 11C	2.000	1.312	1.687	1.375	.078	.031	.078	.093	.106 .113	.093	1.187	.750	.593	.453	1.015	.062	.187	.078	.875	.718	1.375	.218	1.156	1.843	.048	NA	.875	.305	.078	.312	1.687	.078	NA	.078	.312	.187	1.843
19	R	NA		NA	NA	NA	A	I	NOTE 11B	2.000	1.312	1.687	1.375	.078	.031	.078	.093	NA	NA	1.187	.750	.593	.453	1.015	.062	.187	.078	.875	.718	1.375	.218	NA	NA	.048	.031	.875	.305	.078	.312	1.687	.078	NA	.078	.312	.187	NA
18	R	NA		NA	NA	NA	B	II	NOTE 11C	4.187	1.875	3.469	2.750	.156	.093	.156	.125	.106 .113	.125	1.625	1.032	.844	.656	1.406	.093	.344	.156	1.781	1.531	2.844	.312	1.562	3.875	.062	NA	1.219	.500	.156	.719	3.469	.156	NA	.156	.719	.344	3.875
17	R	NA		NA	NA	NA	B	I	NOTE 11B	4.187	1.875	3.469	2.750	.156	.093	.156	.125	NA	NA	1.625	1.032	.844	.656	1.406	.093	.344	.156	1.781	1.531	2.844	.312	NA	NA	.062	.062	1.219	.500	.156	.719	3.469	.156	NA	.156	.719	.344	NA
16	R	NA		NA	NA	NA	B	II	NOTE 11C	2.000	1.312	1.687	1.375	.078	.031	.078	.093	.106 .113	.093	1.187	.750	.593	.453	1.015	.062	.187	.078	.875	.718	1.375	.218	1.156	1.843	.048	NA	.875	.305	.078	.312	1.687	.078	NA	.078	.312	.187	1.843
15	R	NA		NA	NA	NA	B	I	NOTE 11B	2.000	1.312	1.687	1.375	.078	.031	.078	.093	NA	NA	1.187	.750	.593	.453	1.015	.062	.187	.078	.875	.718	1.375	.218	NA	NA	.048	.031	.875	.305	.078	.312	1.687	.078	NA	.078	.312	.187	NA

RAYTHEON DASH NUMBERS

THIS SHEET ADDED

Ⓖ REPLACES REV F WITH CHANGE

NOTES FOR TABLE
STYLE A IS FOR G & N SYSTEM
STYLE B IS FOR GROUND SUPPORT EQUIPMENT
TYPE I IS WITHOUT MOUNTING HOLES
TYPE II IS WITH MOUNTING HOLES

MASTER

QTY REQD	PART OR IDENTIFYING NO.	MATERIAL OR NOTES	NOMENCLATURE OR DESCRIPTION	FIND NO.

LIST OF MATERIALS

NEXT ASSY	USED ON
AS APPLICABLE	

APPLICATION

UNLESS OTHERWISE SPECIFIED
DIMENSIONS ARE IN INCHES
CAPACITOR VALUES ARE IN μf
RESISTOR VALUES ARE IN OHMS
TOLERANCES ON
FRACTIONS ± — DECIMALS ±.005 ANGLES ± —
DO NOT SCALE THIS DRAWING

MATERIAL
SEE NOTE 11

MIT
INSTRUMENTATION LAB
CAMBRIDGE, MASS.

DRAWN R. G. Jones 7-16-65
CHECKED 7-22-65
APPROVED
APPROVED
APPROVED MIT
APPROVED MSC
DATE

MANNED SPACECRAFT CENTER
HOUSTON, TEXAS

NAMEPLATES,
APOLLO GEN-GSE
(STANDARDS)

CODE IDENT NO 80230
SIZE E
DRAWING NO. 1004260
SCALE NONE
SHEET 3 OF 5

1004260 T

NOTICE - WHEN GOVERNMENT DRAWINGS, SPECIFICATIONS, OR OTHER DATA ARE USED FOR ANY PURPOSE OTHER THAN IN CONNECTION WITH A DEFINITELY RELATED GOVERNMENT PROCUREMENT OPERATION, THE UNITED STATES GOVERNMENT THEREBY INCURS NO RESPONSIBILITY NOR ANY OBLIGATION WHATSOEVER; AND THE FACT THAT THE GOVERNMENT MAY HAVE FORMULATED, FURNISHED, OR IN ANY WAY SUPPLIED THE SAID DRAWINGS, SPECIFICATIONS OR OTHER DATA IS NOT TO BE REGARDED BY IMPLICATION OR OTHERWISE AS IN ANY MANNER LICENSING THE HOLDER OR ANY OTHER PERSON OR CORPORATION, OR CONVEYING ANY RIGHTS OR PERMISSION TO MANUFACTURE, USE, OR SELL ANY PATENTED INVENTION THAT MAY IN ANY WAY BE RELATED THERETO.

REVISIONS 02768

SYM	ZONE	DESCRIPTION	DR	CHK	DATE	APPROVED
G		REPLACES REV F WITH CHANGE PER TDRR 20854.			7/22/65	WK
H		REVISED PER TDRR 20892			8/3/65	WK
J		REVISED PER TDRR 20904			8/3/65	WK
K		REVISED PER TDRR 21379			8/5/65	WK
L		REVISED PER TDRR 21410			8/23/65	WK
M		REVISED PER TDRR 21993				
N		REVISED PER TDRR 22621			10/	
P		REVISED PER TDRR 22671				
R		REVISED PER TDRR 22672				
S		REVISED PER TDRR 22750				
T		REVISED PER TDRR 22823			/65	WK

DASH NO.	P/C	PART NAME	REMARKS	PART NO.	SER. NO.	CONT. NO.	STYLE	TYPE	MATERIAL	A	B	C	D	E	F	G	H	J	K	L	M	N	P	R	S	T	U	V	W	Y	Z	AA	AB	AC	AD	AE	AF	AG	AH	AJ	AK	AL	AM	AN	AP	AR
199	AC																																													
198	AC																																													
158	AC	COUPLING DATA UNIT ASSEMBLY C/M		2007222-011			A	I	NOTE 11B	FOR DIMENSIONS, SEE DASH 100 VALUES BELOW																																				
157	AC	COUPLING DATA UNIT ASSEMBLY - LEM		2007222-021			↑	↑	↑																																					
156	AC	POWER & SERVO ASSEMBLY C/M		2007200-011																																										
155	AC	PIPA ELECTRONICS ASSEMBLY		2007201-011																																										
154	AC	PULSE TORQUE ASSEMBLY - LEM		6007000-011			↓	↓	↓																																					
153	AC	POWER & SERVO ASSEMBLY - LEM		6007200-011			A	I	NOTE 11B																																					
152	AC	CONT PNL, RSVR CKT TESTER		2900770-011		NAS-9-497	B	II	NOTE 11C	FOR DIMENSIONS, SEE DASH 141 VALUES BELOW																																				
151	AC	TESTER, RESOLVER CIRCUIT		2900708-011			↑	↑	↑																																					
150	AC	JUNCTION BOX, P.S.A./G.S.E.		1901933-021						FOR DIMENSIONS, SEE DASH 144 VALUES BELOW																																				
149	AC	BATTERY PACK, LIFTING		2900603-011						FOR DIMENSIONS, SEE DASH 141 VALUES BELOW																																				
148	AC	MOUNTING PLATE, COMPONENT		6900007-011			↓	↓	↓	FOR DIMENSIONS, SEE DASH 144 VALUES BELOW																																				
147	AC	MOUNTING PLATE, COMPONENT		2900677-011			B	II	NOTE 11C																																					
145	AC	CONTAINER, SHIPPING, IMU		1900010-021		NAS-9-497	B	II	NOTE 11C	FOR DIMENSIONS, SEE DASH 144 VALUES BELOW																																				
144	AC	FIX., MOUNTING, G AND N		1902204-021			B	II	NOTE 11C	4.125	1.812	3.250	NA	.125	.062	.12	.156	.188 .094	.125	1.625	1.140	.890	.640	1.390	.125	.171	.125	1.875	1.687	2.625	.250	1.562	3.843	.093	NA	NA	.359	.125	.437	3.688	NA	3.687	.093	.40	.25	3.875
143	AC	CSL, COOL.AND PWR, G AND N		1902134-021			↑	↑	↑	4.125	1.812	3.250	↑	.125	.062	.12	.156	↑	.125	1.625	1.140	.890	.640	1.390	.125	.171	.125	1.875	1.687	2.625	.250	1.562	3.843	.093	↑	↑	.359	.125	.437	3.688	↑	3.687	.093	.40	.25	3.875
142	AC	ANALYZER, OPTICS-INERTIAL		2900023-011						4.125	1.812	3.250		.125	.062	.12	.156		.125	1.625	1.140	.890	.640	1.390	.125	.171	.125	1.875	1.687	2.625	.250	1.562	3.843	.093			.359	.125	.437	3.688		3.687	.093	.40	.25	3.875
141	AC	CONT, TEMP, PORTABLE		2900060-011						2.125	.968	1.718		.093	.031	.06	.093		.093	.858	.608	.484	.358	.733	.077	.116	.062	.937	.875	1.343	.125	.781	1.892	.046			.209	.093	.250	1.875		1.840	.046	.23	.16	1.938
140	AC	TESTER, CKT, IMU/CDU RSVR		2900286-011						4.125	1.812	3.250		.125	.062	.12	.156		.125	1.625	1.140	.890	.640	1.390	.125	.171	.125	1.875	1.687	2.625	.250	1.562	3.843	.093			.359	.125	.437	3.688		3.687	.093	.40	.25	3.875
139	AC	SIMULATOR, LD/SIG, CDU		2900285-011						↑	↑	↑		↑	↑	↑	↑		↑	↑	↑	↑	↑	↑	↑	↑	↑	↑	↑	↑	↑	↑	↑	↑			↑	↑	↑	↑		↑	↑	↑	↑	↑
138	AC	SIMULATOR, LD/SIG, OPTICS		1902023-021																																										
137	AC	FIX., MOUNTING, IMU/NAV BASE		6900003-011																																										
136	AC	FIX., OPTICS/NAV BASE		2900072-011																																										
135	AC	FIX., MOUNTING, SUB SYSTEM		2900070-011																																										
134	AC	FIX., HAND., G AND N HARNESS		2900069-011																																										
133	AC	CNTR, SHIPPING, NAV BASE		2900068-011																																										
132	AC	FIX., MOUNTING, G AND N		2900067-011																																										
131	AC	SIMULATOR, LD/SIG, IMU/CDU		2900062-011																																										
130	AC	TESTOR, GYRO WHEEL		2900061-011																																										
129	AC	COOLANT SUPPLY		1902133-021						↓	↓	↓		↓	↓	↓	↓		↓	↓	↓	↓	↓	↓	↓	↓	↓	↓	↓	↓	↓	↓	↓	↓			↓	↓	↓	↓		↓	↓	↓	↓	↓
128	AC	TABLE, ROTARY		1900926-021						4.125	1.812	3.250		.125	.062	.12	.156		.125	1.625	1.140	.890	.640	1.390	.125	.171	.125	1.875	1.687	2.625	.250	1.562	3.843	.093			.359	.125	.437	3.688		3.687	.093	.40	.25	3.875
127	AC	FIX., HAND., OPTICS		2900074-011						2.125	.968	1.718	↑	.093	.031	.06	.093	↑	.093	.858	.608	.484	.358	.733	.077	.116	.062	.937	.875	1.343	.125	.781	1.892	.046	↑	↑	.209	.093	.250	1.875	↑	1.840	.046	.23	.16	1.938
126	AC	FIX., MTG, PTA / PEA		2900066-011						↑	↑	↑		↑	↑	↑	↑		↑	↑	↑	↑	↑	↑	↑	↑	↑	↑	↑	↑	↑	↑	↑	↑			↑	↑	↑	↑		↑	↑	↑	↑	↑
125	AC	CONT, TEMP, IMU LIFTING		2900063-011																																										
124	AC	FIX., HANDLING, IMU		2900064-011																																										
123	AC	CONT, OPTICS, REMOTE		1902046-021																																										
122	AC	TEST CONTROL		1902009-021																																										
121	AC	ADPT MODULE, P.S.A.		1902431-021																																										
120	AC	BRIDGE, DECADE ERROR		2900128-011																																										
119	AC	PWR SUP, ELECTRONICS		2900012-011																																										
118	AC	PWR SUP, RELAY AND LAMP		1900049-031																																										
117	AC	CONSOLE OSCILLOGRAPH		1900000-021																																										
116	AC	ADPT, MODULE, P.S.A.		1902431-011																																										
115	AC	ADPT, TEST POINT, PTA / PEA		2900145-011																																										
114	AC	ADPT, TEST POINT, P.S.A.		2900037-011																																										
113	AC	CONTROL, GIMBAL, POSITION		2900036-011																																										
112	AC	SELECTOR, SIGNAL, PRIMARY		2900035-011																																										
111	AC	SEL, SIG, OSCILLOGRAPH		2900034-011																																										
110	AC	PANEL, PWR SUP AND LOAD		2900033-011																																										
109	AC	PANEL, MONITOR		2900031-011																																										
108	AC	PANEL, AUXILIARY INPUT		2900030-011																																										
107	AC	CAGING ELECTRONICS, GYRO		2900029-011																																										
106	AC	TEST SELECTOR		2900028-011																																										
105	AC	TEST CONTROL		2900027-011																																										
104	AC	MONITOR AND CONTROL, TEMP		2900026-011																																										
103	AC	DISTRIBUTION BOX, GSE		2900024-011			↓	↓	↓	↓	↓	↓	↓	↓	↓	↓	↓	↓	↓	↓	↓	↓	↓	↓	↓	↓	↓	↓	↓	↓	↓	↓	↓	↓	↓	↓	↓	↓	↓	↓	↓	↓	↓	↓	↓	↓
102	AC	VOLTMETER, DIGITAL		2900007-011			B	II	NOTE 11 C	2.125	.968	1.718	NA	.093	.031	.06	.093	.188 .094	.093	.858	.608	.484	.358	.733	.077	.116	.062	.937	.875	1.343	.125	.781	1.892	.046	NA	NA	.209	.093	.250	1.875	NA	1.840	.046	.23	.16	1.938
101	AC	NAVIGATION BASE ASSEMBLY - LEM		6899950		NAS-9-497	A	I	NOTE 11 B	2.000	1.312	1.906	1.375	.078	.048	.078	.093	NA	NA	1.125	.750	.593	.453	1.015	.062	.187	.078	.875	.718	1.375	.218	NA	NA	.048	.031	.875	.305	.078	.531	1.906	.078	NA	.078	.531	.187	NA
100	AC	NAVIGATION BASE ASSEMBLY		2899982		NAS-9-497	A	I	NOTE 11 B	2.000	1.312	1.906	1.375	.078	.048	.078	.093	NA	NA	1.125	.750	.593	.453	1.015	.062	.187	.078	.875	.718	1.375	.218	NA	NA	.048	.031	.875	.305	.078	.531	1.906	.078	NA	.078	.531	.187	NA

AC ELECTRONICS DASH NUMBERS

THIS SHEET ADDED

Ⓖ REPLACES REV F WITH CHANGE

NOTES FOR TABLE

STYLE A IS FOR G&N SYSTEM
STYLE B IS FOR GROUND SUPPORT EQUIPMENT
TYPE I IS WITHOUT MOUNTING HOLES
TYPE II IS WITH MOUNTING HOLES

QTY REQD	PART OR IDENTIFYING NO.	MATERIAL OR NOTES	NOMENCLATURE OR DESCRIPTION	FIND NO.

LIST OF MATERIALS

NEXT ASSY	USED ON
AS APPLICABLE	

APPLICATION

UNLESS OTHERWISE SPECIFIED
DIMENSIONS ARE IN INCHES
CAPACITOR VALUES ARE IN µf
RESISTOR VALUES ARE IN OHMS
TOLERANCES ON
FRACTIONS ± — DECIMALS ±.005 ANGLES ± —
DO NOT SCALE THIS DRAWING

MATERIAL
SEE NOTE 11

MIT
INSTRUMENTATION LAB
CAMBRIDGE, MASS.

MANNED SPACECRAFT CENTER
HOUSTON, TEXAS

DRAWN 7-16-65
CHECKED 7-22-65
APPROVED
APPROVED
APPROVED MIT
APPROVED MSC
DATE

NAMEPLATES,
APOLLO G&N-GSE
(STANDARDS)

CODE IDENT NO. 80230
SIZE E
DRAWING NO. 1004260
SCALE NONE
SHEET 4 OF 5

MASTER

NOTICE – WHEN GOVERNMENT DRAWINGS, SPECIFICATIONS, OR OTHER DATA ARE USED FOR ANY PURPOSE OTHER THAN IN CONNECTION WITH A DEFINITELY RELATED GOVERNMENT PROCUREMENT OPERATION, THE UNITED STATES GOVERNMENT THEREBY INCURS NO RESPONSIBILITY NOR ANY OBLIGATION WHATSOEVER; AND THE FACT THAT THE GOVERNMENT MAY HAVE FORMULATED, FURNISHED, OR IN ANY WAY SUPPLIED THE SAID DRAWINGS, SPECIFICATIONS OR OTHER DATA IS NOT TO BE REGARDED BY IMPLICATION OR OTHERWISE AS IN ANY MANNER LICENSING THE HOLDER OR ANY OTHER PERSON OR CORPORATION, OR CONVEYING ANY RIGHTS OR PERMISSION TO MANUFACTURE, USE, OR SELL ANY PATENTED INVENTION THAT MAY IN ANY WAY BE RELATED THERETO.

REVISIONS 02768

SYM	ZONE	DESCRIPTION	DR	CHK	DATE	APPROVED
G		REPLACES REV F WITH CHANGE PER TDRR 20854			7/26/65	WK
H		REVISED PER TDRR 20892			8/3/65	WK
J		REVISED PER TDRR 20904			8/3/65	WK
K		REVISED PER TDRR 21379			[illegible]	WK
L		REVISED PER TDRR 21410			[illegible]	WK
M		REVISED PER TDRR 21993				
N		REVISED PER TDRR 22621			10/	
P		REVISED PER TDRR 22671			1/11/	
R		REVISED PER TDRR 22672				
S		REVISED PER TDRR 22750				WK
T		REVISED PER TDRR 22823			1/65	WK

DASH NO.	P/C	PART NAME	REMARKS	PART NO.	SER. NO.	CONT. NO.	STYLE	TYPE	MATERIAL
499	MIT								
498									
401	MIT	COMPUTER ASSY		2003100-001			A	I	NOTE 11 B
400	MIT	LIFTING SLING-G&N INST. QUAL. FIX. & AZM. REF. FIX.		1021640		NAS-9-4065	B	II	NOTE 11 C

DASH NO.	A	B	C	D	E	F	G	H	J	K	L	M	N	P	R	S	T
401	2.000	1.312	1.906	1.375	.078	.048	.078	.093	NA	NA	1.125	.750	.593	.453	1.015	.062	.187
400	2.000	1.312	1.687	1.375	.078	.048	.078	.093	[illegible]/.081	.093	1.187	.750	.593	.453	1.015	.062	.187

DASH NO.	U	V	W	Y	Z	AA	AB	AC	AD	AE	AF	AG	AH	AJ	AK	AL	AM	AN	AP	AR
401	.078	.875	.718	1.375	.218	NA	NA	.048	.031	.875	.305	.078	.531	1.906	.078	NA	.078	.531	.187	NA
400	.078	.875	.718	1.375	.218	1.156	1.843	.048	NA	.875	.305	.078	.312	1.687	.110	1.830	.070	.275	.180	1.844

MIT DASH NUMBERS

THIS SHEET ADDED

Ⓖ REPLACES REV F WITH CHANGE

NOTES FOR TABLE

STYLE A IS FOR G&N SYSTEM
STYLE B IS FOR GROUND SUPPORT EQUIPMENT
TYPE I IS WITHOUT MOUNTING HOLES
TYPE II IS WITH MOUNTING HOLES

MASTER

QTY REQD	PART OR IDENTIFYING NO.	MATERIAL OR NOTES	NOMENCLATURE OR DESCRIPTION	FIND NO.

LIST OF MATERIALS

NEXT ASSY	USED ON
AS APPLICABLE	

APPLICATION

UNLESS OTHERWISE SPECIFIED
DIMENSIONS ARE IN INCHES
CAPACITOR VALUES ARE IN µf
RESISTOR VALUES ARE IN OHMS
TOLERANCES ON
FRACTIONS ± — DECIMALS ±.005 ANGLES ± —
DO NOT SCALE THIS DRAWING

MATERIAL
SEE NOTE 11

MIT
INSTRUMENTATION LAB
CAMBRIDGE, MASS.

DRAWN R. A. Jones 7-16-65
CHECKED [illegible]
APPROVED
APPROVED W. [illegible]
APPROVED MIT W. [illegible]
APPROVED MSC [illegible]

MANNED SPACECRAFT CENTER
HOUSTON, TEXAS

NAMEPLATES,
APOLLO G&N-GSE
(STANDARDS)

CODE IDENT NO 80230
SIZE E
DRAWING NO. 1004260
SCALE NONE
SHEET 5 OF 5

NOTICE - WHEN GOVERNMENT DRAWINGS, SPECIFICATIONS, OR OTHER DATA ARE USED FOR ANY PURPOSE OTHER THAN IN CONNECTION WITH A DEFINITELY RELATED GOVERNMENT PROCUREMENT OPERATION, THE UNITED STATES GOVERNMENT THEREBY INCURS NO RESPONSIBILITY NOR ANY OBLIGATION WHATSOEVER; AND THE FACT THAT THE GOVERNMENT MAY HAVE FORMULATED, FURNISHED, OR IN ANY WAY SUPPLIED THE SAID DRAWINGS, SPECIFICATIONS, OR OTHER DATA IS NOT TO BE REGARDED BY IMPLICATION OR OTHERWISE AS IN ANY MANNER LICENSING THE HOLDER OR ANY OTHER PERSON OR CORPORATION, OR CONVEYING ANY RIGHTS OR PERMISSION TO MANUFACTURE, USE, OR SELL ANY PATENTED INVENTION THAT MAY IN ANY WAY BE RELATED THERETO.

NOTES:

1. INTERPRET DRAWING IN ACCORDANCE WITH STANDARDS PRESCRIBED IN MIL-D-70327.
2. DIMENSIONS ON EACH VIEW APPLY TO ALL VIEWS. (WITH THE EXCEPTION OF MOUNTING HOLES).
3. FORMATS ILLUSTATED WILL BE APPLICABLE TO ALL ITEMS REQUIRING NAMEPLATES BELOW END ITEM DESIGNATION (SYSTEMS, ASSEMBLIES, ETC.)
4. PLATE BACKGROUND TO BE LUSTERLESS BLACK PER FED-STD-595, COLOR 37038. BORDER, MARKING AND LETTERING TO BE NATURAL METAL,(ANODIZED ALUMINUM).
5. MARKING METHOD TO BE DIE STAMPING, ETCHING OR ENGRAVING IN ACCORDANCE WITH MIL P 19834.
6. LETTERING STYLE TO BE GOTHIC,(SANS SERIFS), AND NUMBERS TO BE ARABIC.
7. WHERE LOCATING DIMENSIONS ARE NOT SHOWN, CHARACTERS SHALL BE SYMMETRICALLY POSITIONED.
8. IDENTIFY WITH DRAWING NUMBER PER ND1002019.
9. WHEN "AUTO MARK" METAL MARKING TYPEWRITER IS USED TO ADD DATA TO BLANK SPACES, TYPE SIZE IS TO BE SELECTED FROM DIMENSIONS U, AC AND AM.
10. NASA SYMBOL IS TO BE PROPORTIONAL TO NAMEPLATE IN RATIO OF 1 TO 5 WITH DIMENSION A VALUE AND IS TO HAVE NATURAL BACKGROUND. NASA SYMBOL LETTERS LETTERING AND FEATHER TO BE BLACK,(OR WHITE FOR SILK SCREENING). WHERE BLACK FEATHER PROTRUDES INTO BLACK BACKGROUND, A MINIMUM OUTLINE OF NATURAL BACKGROUND SHALL EXIST.
11. NAMEPLATES WILL BE APPLIED BY METHODS LISTED BELOW, SHOWN IN ORDER OF PREFERENCE, (I.E., FOR RELIABILITY AND WEIGHT).
    A - STENCIL OR SILK SCREEN DIRECTLY ON EQUIPMENT USING INK PER SCD 1010920,(WHITE OR BLACK).
    B - ALUMINUM FOIL,(STYLE A OR B, TYPE I):
        FOIL SHALL BE .0030 ± .0005 THICK PER MIL-A-148.
        FOIL SHALL HAVE NO ADHESIVE BACKING.
        FOIL SHALL BE BONDED PER ND 1002219,(METHOD II).
        FOIL SHALL BE CLEAR ANODIZED PER MIL-A-8625, TYPE II.
    C - PLATE, (STYLE A OR B, TYPE II):
        MATERIAL: QQ-A-250, TEMPER O OR H14, TYPE 1100, ALUMINUM ALLOY, .032 THICK.
        ANODIZE PER MIL-A-8625, TYPE II.
        ALUMINUM PLATE MUST BE FREE FROM BURRS AND SHARP CORNERS, MOUNTED WITH APPLICABLE SIZE FASTENERS.
12. NAMEPLATES SHALL BE CAPABLE OF MEETING APPLICABLE REQUIREMENTS OF MIL-M-13231.
13. ON DIMENSION TABLES SHOWN ON PAGES 2,3,4 AND 5, NA MEANS, "NOT APPLICABLE".

REVISIONS 02768

	SYM	ZONE	DESCRIPTION	DR	CHK	DATE	APPROVED
	G		REPLACES REV F WITH CHANGE PER TDRR 20854			7/22/65	WR
★	H		REVISED PER TDRR 20892			8/5/65	WR
	J		REVISED PER TDRR 20904			8/13/65	WR
	K		REVISED PER TDRR 21379			8/6/65	WR
	L		REVISED PER TDRR 21410			8/23/65	WR
★	M		REVISED PER TDRR 21993			10/1/65	WR
★	N		REVISED PER TDRR 22621				
★	P		REVISED PER TDRR 22671				
★	R		REVISED PER TDRR 22672				
★	S		REVISED PER TDRR 22750				
	T		REVISED PER TDRR 22823				
★	U		REVISED PER TDRR 23072			11-23-65	H.G.M.
	V		REVISED PER TDRR 23521			10-27-66	

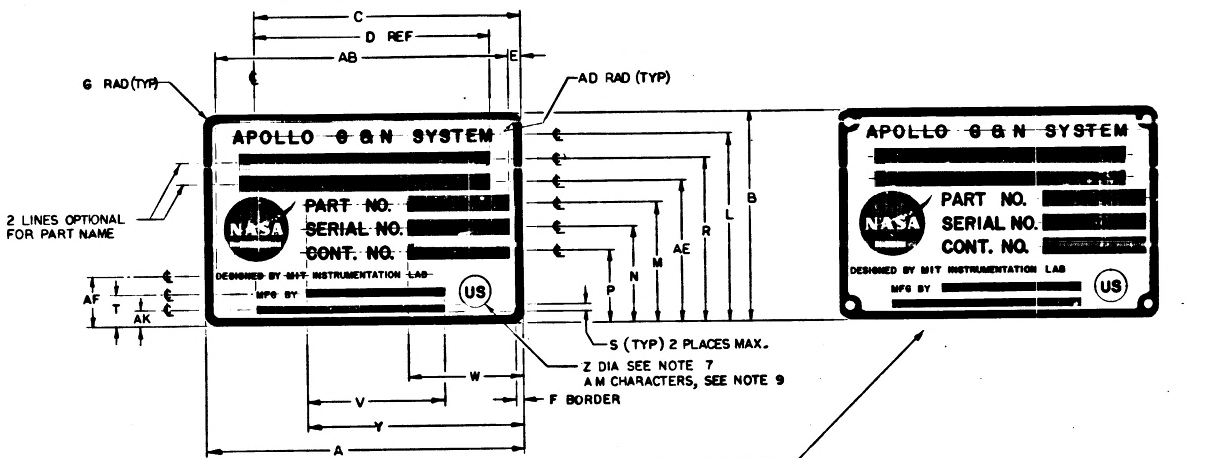
C
D REF
AB
E
G RAD (TYP)
AD RAD (TYP)
APOLLO G & N SYSTEM
PART NO.
SERIAL NO.
CONT. NO.
DESIGNED BY MIT INSTRUMENTATION LAB
MFG BY
US
NASA
2 LINES OPTIONAL FOR PART NAME
AF
T
AK
B
L
R
AE
M
N
P
S (TYP) 2 PLACES MAX.
Z DIA SEE NOTE 7
AM CHARACTERS, SEE NOTE 9
W
V
Y
F BORDER
A

FOR G AND N SYSTEM
STYLE A

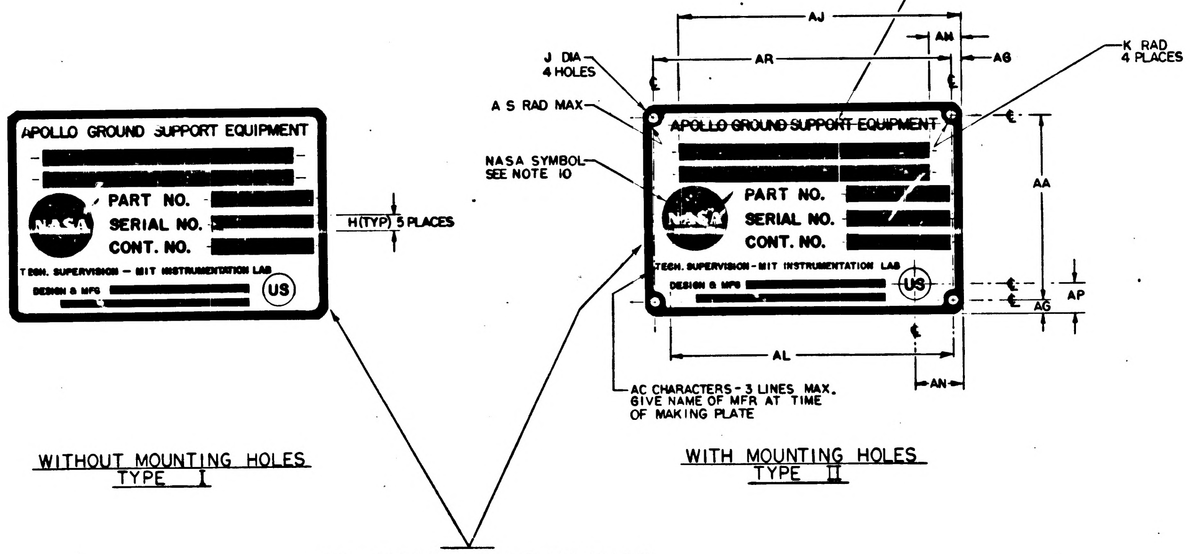
U CHARACTERS-6 LINES MAX
SEE NOTE 9
AJ
AM
AR
AG
J DIA
4 HOLES
K RAD
4 PLACES
A S RAD MAX
NASA SYMBOL
SEE NOTE 10
APOLLO GROUND SUPPORT EQUIPMENT
PART NO.
SERIAL NO.
CONT. NO.
TECH. SUPERVISION - MIT INSTRUMENTATION LAB
DESIGN & MFG
US
NASA
H(TYP) 5 PLACES
AA
AP
AG
AL
AN
AC CHARACTERS - 3 LINES MAX.
GIVE NAME OF MFR AT TIME
OF MAKING PLATE

WITHOUT MOUNTING HOLES
TYPE I

WITH MOUNTING HOLES
TYPE II

FOR GROUND SUPPORT EQUIPMENT
STYLE B

SUGGESTED PROPORTIONS FOR NAMEPLATE DIMENSIONS.
1. SELECT NAMEPLATE LENGTH, DIMENSION "A", TO FIT DESIGN NEEDS.
2. DIMENSIONS B THRU AS ON LINE 1 BELOW ARE PROPORTIONAL TO "A" BY MULTIPLIERS SHOWN IN LINE 2 BELOW.

1.	A	B	C	D	E	F	G	H	J	K	L	M	N	P	R	S	T	U	V	W	Y
2.	1.000 A	.6563 A	.8438 A	.6875 A	.0391 A	.0240 A	.0391 A	.0469 A	.0547 A	.0469 A	.5938 A	.3750 A	.2969 A	.2187 A	.5079 A	.0313 A	.0938 A	.0391 A	.4375 A	.3594 A	.6875 A

1.	Z	AA	AB	AC	AD	AE	AF	AG	AH	AJ	AK	AL	AM	AN	AP	AR	AS
2.	.1094 A	.5781 A	.9219 A	.0240 A	.0156 A	.4375 A	.1525 A	.0391 A	.1563 A	.8438 A	.0548 A	.8659 A	.0391 A	.1563 A	.0938 A	.9219 A	.0151 A

Ⓖ REPLACES REV F WITH CHANGE

QTY REQD	PART OR IDENTIFYING NO.	MATERIAL OR NOTES	NOMENCLATURE OR DESCRIPTION	FIND NO.

LIST OF MATERIALS

NEXT ASSY	USED ON
AS APPLICABLE	

APPLICATION

UNLESS OTHERWISE SPECIFIED
DIMENSIONS ARE IN INCHES
CAPACITOR VALUES ARE IN μf
RESISTOR VALUES ARE IN OHMS
TOLERANCES ON
FRACTIONS ± — DECIMALS ± .005 ANGLES ± —
DO NOT SCALE THIS DRAWING

MATERIAL
SEE NOTE 11

MIT
INSTRUMENTATION LAB
CAMBRIDGE, MASS.

MANNED SPACECRAFT CENTER
HOUSTON, TEXAS

DRAWN R. A. Jones 7/16/65
CHECKED A. J. 7-22-65
APPROVED
APPROVED W. Wrigley 7/22/65
APPROVED MIT W. Wrigley 7/22/65
APPROVED MSC 7/22/65
DATE

NAMEPLATES,
APOLLO G&N—GSE
(STANDARDS)

CODE IDENT NO. 80230
SIZE E
DRAWING NO. 1004260
SCALE NONE
SHEET 1 OF 5

MASTER

NOTICE – WHEN GOVERNMENT DRAWINGS, SPECIFICATIONS, OR OTHER DATA ARE USED FOR ANY PURPOSE OTHER THAN IN CONNECTION WITH A DEFINITELY RELATED GOVERNMENT PROCUREMENT OPERATION, THE UNITED STATES GOVERNMENT THEREBY INCURS NO RESPONSIBILITY NOR ANY OBLIGATION WHATSOEVER; AND THE FACT THAT THE GOVERNMENT MAY HAVE FORMULATED, FURNISHED, OR IN ANY WAY SUPPLIED THE SAID DRAWINGS, SPECIFICATIONS OR OTHER DATA IS NOT TO BE REGARDED BY IMPLICATION OR OTHERWISE AS IN ANY MANNER LICENSING THE HOLDER OR ANY OTHER PERSON OR CORPORATION, OR CONVEYING ANY RIGHTS OR PERMISSION TO MANUFACTURE, USE, OR SELL ANY PATENTED INVENTION THAT MAY IN ANY WAY BE RELATED THERETO.

REVISIONS 02768

SYM	ZONE	DESCRIPTION	DR	CHK	DATE	APPROVED
G		REPLACES REV F WITH CHANGE PER TDRR 20854.			7/22/65	WK
H		REVISED PER TDRR 20892			8/3/65	WK
J		REVISED PER TDRR 20904			8/5/65	WK
K		REVISED PER TDRR 21379			8/9/65	WK
L		REVISED PER TDRR 21410			8/23/65	WK
M		REVISED PER TDRR 21993				
N		REVISED PER TDRR 22621			10/	
P		REVISED PER TDRR 22671			11/	
R		REVISED PER TDRR 22672				
S		REVISED PER TDRR 22750				
T		REVISED PER TDRR 22823			65	WK
U		REVISED PER TDRR 23072			10-22-65	[illegible]
V		REVISED PER TDRR 23521			10-27-65	[illegible]

SH NO.	P/C	PART NAME	REMARKS	PART NO.	SER. NO.	CONT. NO.	STYLE	TYPE	MATERIAL	A	B	C	D	E	F	G	H	J	K	L	M	N	P	R	S	T	U	V	W	Y	Z	AA	AB	AC	AD	AE	AF	AG	AH	AJ	AK	AL	AM	AN	AP	AR
399	K																																													
398	K																																													
350	K	ALIGNMENT OPTICAL TELESCOPE (LEM)		NA	NA	NA	A	I	NOTE 11B	4.000	2.625	3.375	2.750	.156	.093	.156	.187	NA	NA	2.312	1.468	1.187	.906	2.031	NA	.375	.156	NA	1.437	2.750	.437	NA	3.688	.062	.062	1.750	.593	NA	.625	3.375	.187	NA	.156	.531	.453	NA
309	K																																													
308	K																																													
307	K						B	I	NOTE 11 B	4.000	2.625	3.375	2.750	.156	.093	.156	.187	NA	NA	2.328	1.468	1.187	.906	2.031	.062	.375	.156	NA	1.437	2.750	.437	NA	3.687	.062	.062	1.750	.593	NA	NA	NA	NA	NA	NA	NA	NA	NA
306	K						B	II	NOTE 11 C	4.000	2.625	3.375	2.750	.156	.093	.156	.187	.125	.156	2.328	1.468	1.187	.906	2.031	.062	.375	.156		1.437	2.750	.437	2.312	3.687	.062	NA	1.750	.593									
305	K						B	I	NOTE 11 B	2.000	1.312	1.687	1.375	.078	.048	.078	.093	NA	NA	1.164	.734	.593	.453	1.015	.048	.171	.078		.718	1.375	.187	NA	NA	.048	.031	.875	.320									
304	K						B	II	NOTE 11 C	2.000	1.312	1.687	1.375	.078	.048	.078	.093	.070	.078	1.164	.734	.593	.453	1.015	.048	.171	.078	NA	.718	1.375	.187	.156	1.843	.048	NA	.875	.320	NA	NA	NA	NA	NA	NA	NA	NA	NA
303	K																																													
302	K																																													
301	K																																													
300	K	OPTICAL UNIT		NA	NA	NA	A	I	NOTE 11 B	2.000	1.312	1.675	NA	NA	.048	.078	NA	NA	NA	1.090	.812	.675	.540	.940	NA	.265	NA	NA	NA	1.375	.218	NA	NA	NA	NA	NA	.375	NA	NA	NA	.180	NA	.078	NA	NA	NA
9	K	2 IN AUTOCOLLIMATOR		1001702			B	II	NOTE 11 C	4.000	2.625	3.812	2.750	.156	.093	.156	.187	.125	.156	2.250	1.500	1.187	.906	2.031	.093	.375	.156	1.750	1.437	2.750	.437	2.312	3.687	.062	NA	1.750	.593	.156	1.062	3.812	.156	NA	.156	1.062	.375	3.687
8	K	5 IN AUTOCOLLIMATOR		1017410			B	II	NOTE 11 C	4.000	2.625	3.812	2.750	.156	.093	.156	.187	.125	.156	2.250	1.500	1.187	.906	2.031	.093	.375	.156	1.750	1.437	2.750	.437	2.312	3.687	.062	NA	1.750	.593	.156	1.062	3.812	.156	NA	.156	1.062	.375	3.687
7	K	2½ IN AUTOCOLLIMATOR (SCT)		1017435			B	II	NOTE 11 C	4.000	2.625	3.812	2.750	.156	.093	.156	.187	.125	.156	2.250	1.500	1.187	.906	2.031	.093	.375	.156	1.750	1.437	2.750	.437	2.312	3.687	.062	NA	1.750	.593	.156	1.062	3.812	.156	NA	.156	1.062	.375	3.687
6	K	2½ IN AUTOCOLLIMATOR (SXT)		1017448			B	II	NOTE 11 C	4.000	2.625	3.812	2.750	.156	.093	.156	.187	.125	.156	2.250	1.500	1.187	.906	2.031	.093	.375	.156	1.750	1.437	2.750	.437	2.312	3.687	.062	NA	1.750	.593	.156	1.062	3.812	.156	NA	.156	1.062	.375	3.687
5	K	RETROREFLECTING PRISM ASSEMBLY		1019840			B	I	NOTE 11 B	4.000	2.625	3.812	2.750	.156	.093	.156	.187	NA	NA	2.250	1.500	1.187	.906	2.031	.093	.375	.156	1.750	1.437	2.750	.437	NA	NA	.062	.062	1.750	.593	.156	1.062	3.812	.156	NA	.156	1.062	.375	NA
4	K	S/H SIMULATOR ASSEMBLY		1019896			B	I	NOTE 11 B	4.000	2.625	3.812	2.750	.156	.093	.156	.187	NA	NA	2.250	1.500	1.187	.906	2.031	.093	.375	.156	1.750	1.437	2.750	.437	NA	NA	.062	.062	1.750	.593	.156	1.062	3.812	.156	NA	.156	1.062	.375	NA
3	K	REFERENCE MIRROR		1001767			B	I	NOTE 11 B	2.000	1.312	1.906	1.375	.078	.048	.078	.093	NA	NA	1.125	.750	.593	.453	1.015	.062	.187	.078	.875	.718	1.375	.218	NA	NA	.048	.031	.875	.305	.078	.531	1.906	.078	NA	.078	.531	.187	NA
2	K	2 IN PLANE READING AUTOCOLLIMATOR		1017413			B	I	NOTE 11 B	2.000	1.312	1.906	1.375	.078	.048	.078	.093	NA	NA	1.125	.750	.593	.453	1.015	.062	.187	.078	.875	.718	1.375	.218	NA	NA	.048	.031	.875	.305	.078	.531	1.906	.078	NA	.078	.531	.187	NA
1	K	2 IN AUTOCOLLIMATOR		1001702			B	I	NOTE 11 B	2.000	1.312	1.906	1.375	.078	.048	.078	.093	NA	NA	1.125	.750	.593	.453	1.015	.062	.187	.078	.875	.718	1.375	.218	NA	NA	.048	.031	.875	.305	.078	.531	1.906	.078	NA	.078	.531	.187	NA

KOLLSMAN DASH NUMBERS

Ⓖ REPLACES REV F WITH CHANGE

NOTES FOR TABLE

STYLE A IS FOR G & N SYSTEM.
STYLE B IS FOR GROUND SUPPORT EQUIPMENT.
TYPE I IS WITHOUT MOUNTING HOLES.
TYPE II IS WITH MOUNTING HOLES.

MASTER

QTY REQD	PART OR IDENTIFYING NO.	MATERIAL OR NOTES	NOMENCLATURE OR DESCRIPTION	FIND NO.

LIST OF MATERIALS

AS APPLICABLE
NEXT ASSY | USED ON
APPLICATION

UNLESS OTHERWISE SPECIFIED
DIMENSIONS ARE IN INCHES
CAPACITOR VALUES ARE IN µf
RESISTOR VALUES ARE IN OHMS
TOLERANCES ON
FRACTIONS ± — DECIMALS ±.005 ANGLES ± —
DO NOT SCALE THIS DRAWING
MATERIAL
SEE NOTE 11

MIT
INSTRUMENTATION LAB
CAMBRIDGE, MASS.

DRAWN R. A. Jones 7-16-65
CHECKED 7-22-65
APPROVED
APPROVED W. Kupfer 7/22/65
APPROVED MIT W. Kupfer 7/22/65
APPROVED MSC
DATE

MANNED SPACECRAFT CENTER
HOUSTON, TEXAS

NAMEPLATES,
APPOLLO G&N-GSE
(STANDANDS)

CODE IDENT NO. 80230
SIZE E
DRAWING NO. 1004260
SCALE NONE
SHEET 2 OF 5

1004260 V

NOTICE - WHEN GOVERNMENT DRAWINGS, SPECIFICATIONS, OR OTHER DATA ARE USED FOR ANY PURPOSE OTHER THAN IN CONNECTION WITH A DEFINITELY RELATED GOVERNMENT PROCUREMENT OPERATION, THE UNITED STATES GOVERNMENT THEREBY INCURS NO RESPONSIBILITY NOR ANY OBLIGATION WHATSOEVER; AND THE FACT THAT THE GOVERNMENT MAY HAVE FORMULATED, FURNISHED, OR IN ANY WAY SUPPLIED THE SAID DRAWINGS, SPECIFICATIONS OR OTHER DATA IS NOT TO BE REGARDED BY IMPLICATION OR OTHERWISE AS IN ANY MANNER LICENSING THE HOLDER OR ANY OTHER PERSON OR CORPORATION, OR CONVEYING ANY RIGHTS OR PERMISSION TO MANUFACTURE, USE, OR SELL ANY PATENTED INVENTION THAT MAY IN ANY WAY BE RELATED THERETO.

REVISIONS 02768

SYM	ZONE	DESCRIPTION	DR	CHK	DATE	APPROVED
G		REPLACES REV F WITH CHANGE PER TDRR 20854			7/22/65	
H		REVISED PER TDRR 20892				
J		REVISED PER TDRR 20904			8/3/65	
K		REVISED PER TDRR 21379				
L		REVISED PER TDRR 21410				
M		REVISED PER TDRR 21993				
N		REVISED PER TDRR 22621				
P		REVISED PER TDRR 22671				
R		REVISED PER TDRR 22672				
S		REVISED PER TDRR 22750				
T		REVISED PER TDRR 22823				
U		REVISED PER TDRR 23072				
V		REVISED PER TDRR 23521			10-26-65	

DASH NO.	P/C	PART NAME	REMARKS	PART NO.	SER. NO.	CONT. NO.	STYLE	TYPE	MATERIAL	
299	R									
298	R									
250										
249	R	TEST MONITOR ASSY		2014313-011	NA	FNP-12775	B	I	NOTE 11 C	FOR DIMENSIONS, SEE DASH 17 VALUES BELOW
248		AGC JUNCTION ASSY		2014341-011					NOTE 11 B	FOR DIMENSIONS, SEE DASH 15 VALUES BELOW
247		AC INPUT PANEL ASSY - O.C.		2014302-011						
246		SELF TEST ASSY, SUB-SYSTEM TEST		2014392-011						
245	R	TAPE PUNCH ASSEMBLY		2014039-011	NA	FNP - 12775	B	I	NOTE 11 B	FOR DIMENSIONS, SEE DASH 15 VALUES BELOW
244	R	TAPE READER ASSEMBLY		2014038-011	NA		B	I	NOTE 11 B	
243										
242										
241	R	APOLLO GUIDANCE COMPUTER GROUP		6003000-011	NA	FNP-12775	A	I	NOTE 11 B	FOR DIMENSIONS, SEE DASH 19 VALUES BELOW
240	R	SELF TEST ASSEMBLY		2014366-011	NA	FNP - 12775	B	I	NOTE 11 B	FOR DIMENSIONS, SEE DASH 15 VALUES BELOW
239		POWER SUPPLY ASSY-115V., 400 CYCLE		2014207-011						FOR DIMENSIONS, SEE DASH 17 VALUES BELOW
238		AC INPUT PANEL ASSY-C.T.S.		2014043-011						
237		POWER CONTROL ASSY		2014079-011						FOR DIMENSIONS, SEE DASH 15 VALUES BELOW
236		DRAWER ASSY-XY INTERFACE		2014040-011						
235		DRAWER ASSY RDC INTERFACE		2014045-011						
234		BUFFER CIRCUIT ASSY		2014254-011						
233		CONTROL & INTERFACE ASSY		2014204-011						
232		POWER CONTROL ASSY		2014044-011						FOR DIMENSIONS, SEE-DASH 17 VALUES BELOW
231		DRAWER ASSY, PROGRAMMER & MONITOR		2014041-011						
230		CONNECTOR INTERFACE ASSY		2014272-011						FOR DIMENSIONS, SEE DASH 15 VALUES BELOW
229		CONNECTOR INTERFACE ASSY		2014047-011						
228		ANTENNA, TUNING CAPACITOR ASSY		2014209-011						
227		MOUNTING FIXTURE ASSY		2014006-011						FOR DIMENSIONS, SEE DASH 17 VALUES BELOW
226		POWER SUPPLY ASSY 3 VDC		2014234-011						FOR DIMENSIONS, SEE DASH 15 VALUES BELOW
225		PANEL ASSY - SIGNAL INTERFACE		2014010-011						
224		OSCILLOSCOPE ASSY		2014232-011						
223		AUXILIARY OUTLET ASSY		2014274-011						
222		FREQUENCY COUNTER		2014233-011						
221		POWER SUPPLY ASSY 10, 13, 28 VDC		2014235-011						
220		LOGIC DRAWER ASSY NO. 2		2014037-011						FOR DIMENSIONS, SEE DASH 17 VALUES BELOW
219		LOGIC DRAWER ASSY NO. 1		2014036-011						
218		COUNTER, ELECTRICAL ASSY		2014288-011						FOR DIMENSIONS, SEE DASH 15 VALUES BELOW
217		POWER SUPPLY ASSY		2014279-011						
216		TEST MOUNT ASSY		2014257-011						
215		UNIVERSAL DSKY PEDESTAL MOUNT, BLOCK II		2014014-011						FOR DIMENSIONS, SEE DASH 17 VALUES BELOW
214		MAIN DSKY PEDESTAL MOUNT, BLOCK I & 100		2014343				I	NOTE 11B	
213		SHIPPING CONTAINER, MAIN DSKY		1006229				II	NOTE 11C	FOR DIMENSIONS, SEE DASH 18 VALUES BELOW
212		NAV DSKY		1006231						
211		AGC, BLOCK I & 100		1006230						
210		UNIVERSAL DSKY		1006422						
209		SHIPPING CONTAINER, AGC BLOCK II		1006421				II	NOTE 11C	
208		UNIVERSAL DSKY HANDLING FIXTURE		2014013-011				I	NOTE 11B	FOR DIMENSIONS, SEE DASH 15 VALUES BELOW
207		NAV DSKY HANDLING FIXTURE		1014377						FOR DIMENSIONS, SEE DASH 17 VALUES BELOW
206		MAIN DSKY HANDLING FIXTURE		1014334						
205		AGC HANDLING FIXTURE		2014282-011				I	NOTE 11B	
204		OPERATION CONSOLE		2014024-011				II	NOTE 11C	FOR DIMENSIONS, SEE DASH 18 VALUES BELOW
203		COMPUTER TEST SET		2014042-011						
202		DRAWER ASSY, COMPUTER SIMULATOR		2014048-011						
201		AUXILIARY CALIBRATION CONSOLE		2014059-011						
200	R	AGC CALIBRATION CONSOLE		2014049-011	NA	FNP - 12775	B	II	NOTE 11C	
21	R									
20	R	NA		NA	NA	NA	A	II	NOTE 11 C	
19	R	NA		NA	NA	NA	A	I	NOTE 11 B	
18	R	NA		NA	NA	NA	B	II	NOTE 11 C	
17	R	NA		NA	NA	NA	B	I	NOTE 11 B	
16	R	NA		NA	NA	NA	B	II	NOTE 11 C	
5	R	NA		NA	NA	NA	B	I	NOTE 11 B	

DASH NO.	A	B	C	D	E	F	G	H	J	K	L	M	N	P	R	S	T	U	V	W	Y	Z	AA	AB	AC	AD	AE	AF	AG	AH	AJ	AK	AL	AM	AN	AP	AR
21																																					
20	2.000	1.312	1.687	1.375	.078	.031	.078	.093	.106 .113	.093	1.187	.750	.593	.453	1.015	.062	.187	.078	.875	.718	1.375	.218	1.156	1.843	.048	NA	.875	.305	.078	.312	1.687	.078	NA	.078	.312	.187	1.843
19	2.000	1.312	1.687	1.375	.078	.031	.078	.093	NA	NA	1.187	.750	.593	.453	1.015	.062	.187	.078	.875	.718	1.375	.218	NA	NA	.048	.031	.875	.305	.078	.312	1.687	.078	NA	.078	.312	.187	NA
18	4.187	1.875	3.469	2.750	.156	.093	.156	.125	.106 .113	.125	1.625	1.032	.844	.656	1.406	.093	.344	.156	1.781	1.531	2.844	.312	1.562	3.875	.062	NA	1.219	.500	.156	.719	3.469	.156	NA	.156	.719	.344	3.875
17	4.187	1.875	3.469	2.750	.156	.093	.156	.125	NA	NA	1.625	1.032	.844	.656	1.406	.093	.344	.156	1.781	1.531	2.844	.312	NA	NA	.062	.062	1.219	.500	.156	.719	3.469	.156	NA	.156	.719	.344	NA
16	2.000	1.312	1.687	1.375	.078	.031	.078	.093	.106 .113	.093	1.187	.750	.593	.453	1.015	.062	.187	.078	.875	.718	1.375	.218	1.156	1.843	.048	NA	.875	.305	.078	.312	1.687	.078	NA	.078	.312	.187	1.843
5	2.000	1.312	1.687	1.375	.078	.031	.078	.093	NA	NA	1.187	.750	.593	.453	1.015	.062	.187	.078	.875	.718	1.375	.218	NA	NA	.048	.031	.875	.305	.078	.312	1.687	.078	NA	.078	.312	.187	NA

NOTES FOR TABLE

STYLE A IS FOR G & N SYSTEM
STYLE B IS FOR GROUND SUPPORT EQUIPMENT
TYPE I IS WITHOUT MOUNTING HOLES
TYPE II IS WITH MOUNTING HOLES

THIS SHEET ADDED

Ⓖ REPLACES REV F WITH CHANGE

RAYTHEON DASH NUMBERS

QTY REQD	PART OR IDENTIFYING NO.	MATERIAL OR NOTES	NOMENCLATURE OR DESCRIPTION	FIND NO.

LIST OF MATERIALS

NEXT ASSY	USED ON
AS APPLICABLE	

APPLICATION

UNLESS OTHERWISE SPECIFIED
DIMENSIONS ARE IN INCHES
CAPACITOR VALUES ARE IN μf
RESISTOR VALUES ARE IN OHMS
TOLERANCES ON
FRACTIONS ± — DECIMALS ±.005 ANGLES ± —
DO NOT SCALE THIS DRAWING

MATERIAL
SEE NOTE 11

MIT
INSTRUMENTATION LAB
CAMBRIDGE, MASS.

DRAWN R. Q. Jones 7-16-65
CHECKED 7-22-65
APPROVED
APPROVED
APPROVED MIT
APPROVED MSC
DATE

MANNED SPACECRAFT CENTER
HOUSTON, TEXAS

NAMEPLATES,
APOLLO GEN-GSE
(STANDARDS)

CODE IDENT NO. 80230
SIZE E
DRAWING NO. 1004260
SCALE NONE
SHEET 3 OF 5

MASTER

NOTICE - WHEN GOVERNMENT DRAWINGS, SPECIFICATIONS, OR OTHER DATA ARE USED FOR ANY PURPOSE OTHER THAN IN CONNECTION WITH A DEFINITELY RELATED GOVERNMENT PROCUREMENT OPERATION, THE UNITED STATES GOVERNMENT THEREBY INCURS NO RESPONSIBILITY NOR ANY OBLIGATION WHATSOEVER; AND THE FACT THAT THE GOVERNMENT MAY HAVE FORMULATED, FURNISHED, OR IN ANY WAY SUPPLIED THE SAID DRAWINGS, SPECIFICATIONS, OR OTHER DATA IS NOT TO BE REGARDED BY IMPLICATION OR OTHERWISE AS IN ANY MANNER LICENSING THE HOLDER OR ANY OTHER PERSON OR CORPORATION, OR CONVEYING ANY RIGHTS OR PERMISSION TO MANUFACTURE, USE, OR SELL ANY PATENTED INVENTION THAT MAY IN ANY WAY BE RELATED THERETO.

REVISIONS 02768

SYM	ZONE	DESCRIPTION	DR	CHK	DATE	APPROVED
G		REPLACES REV F WITH CHANGE PER TDRR 20854.			7/22/65	WK
H		REVISED PER TDRR 20892			8/3/65	wk
J		REVISED PER TDRR 20904			8/3/65	wk
K		REVISED PER TDRR 21379			8/16/65	wk
L		REVISED PER TDRR 21410			8/23/65	wk
M		REVISED PER TDRR 21993			[illegible]	
N		REVISED PER TDRR 22621				
P		REVISED PER TDRR 22671			[illegible]	
R		REVISED PER TDRR 22672				
S		REVISED PER TDRR 22750				WK
T		REVISED PER TDRR 22823			/65	
U		REVISED PER TDRR 23072			10-22-65	MGM
V		REVISED PER TDRR 23521			10-26-65	WK

DASH NO.	P/C	PART NAME	REMARKS	PART NO.	SER. NO.	CONT. NO.	STYLE	TYPE	MATERIAL	A	B	C	D	E	F	G	H	J	K	L	M	N	P	R	S	T	U	V	W	Y	Z	AA	AB	AC	AD	AE	AF	AG	AH	AJ	AK	AL	AM	AN	AP	AR
199	AC																																													
198	AC																																													
158	AC	COUPLING DATA UNIT ASSEMBLY C/M		2007222-011			A	I	NOTE 11B	FOR DIMENSIONS, SEE DASH 100 VALUES BELOW																																				
157	AC	COUPLING DATA UNIT ASSEMBLY - LEM		2007222-021			↑	↑	↑																																					
156	AC	POWER & SERVO ASSEMBLY C/M		2007200-011																																										
155	AC	PIPA ELECTRONICS ASSEMBLY		2007201-011																																										
154	AC	PULSE TORQUE ASSEMBLY - LEM		6007000-011			↓	↓	↓																																					
153	AC	POWER & SERVO ASSEMBLY - LEM		6007200-011			A	I	NOTE 11B																																					
152	AC	CONT PNL, RSVR CKT TESTER		2900770-011		NAS-9-497	B	II	NOTE 11C	FOR DIMENSIONS, SEE DASH 141 VALUES BELOW																																				
151	AC	TESTER, RESOLVER CIRCUIT		2900708-011			↑	↑	↑	FOR DIMENSIONS, SEE DASH 144 VALUES BELOW																																				
150	AC	JUNCTION BOX, P.S.A./G.S.E.		1901933-021						FOR DIMENSIONS, SEE DASH 141 VALUES BELOW																																				
149	AC	BATTERY PACK, LIFTING		2900603-011						FOR DIMENSIONS, SEE DASH 144 VALUES BELOW																																				
148	AC	MOUNTING PLATE, COMPONENT		6900007-011			↓	↓	↓																																					
147	AC	MOUNTING PLATE, COMPONENT		2900677-011			B	II	NOTE 11C																																					
145	AC	CONTAINER, SHIPPING, IMU		1900010-021		NAS-9-497	B	II	NOTE 11C	FOR DIMENSIONS, SEE DASH 144 VALUES BELOW																																				
144	AC	FIX., MOUNTING, G AND N		1902204-021			B	II	NOTE 11C	4.125	1.812	3.250	NA	.125	.062	.12	.156	.108 .104	.125	1.625	1.140	.890	.640	1.390	.125	.171	.125	1.875	1.687	2.625	.250	1.562	3.843	.093	NA	NA	.359	.125	.437	3.688	NA	3.687	.093	.40	.25	3.875
143	AC	CSL, COOL.AND PWR, G AND N		1902134-021			↑	↑	↑	4.125	1.812	3.250	↑	.125	.062	.12	.156	↑	.125	1.625	1.140	.890	.640	1.390	.125	.171	.125	1.875	1.687	2.625	.250	1.562	3.843	.093	↑	↑	.359	.125	.437	3.688	↑	3.687	.093	.40	.25	3.875
142	AC	ANALYZER, OPTICS-INERTIAL		2900023-011						4.125	1.812	3.250		.125	.062	.12	.156		.125	1.625	1.140	.890	.640	1.390	.125	.171	.125	1.875	1.687	2.625	.250	1.562	3.843	.093			.359	.125	.437	3.688		3.687	.093	.40	.25	3.875
141	AC	CONT, TEMP, PORTABLE		2900060-011						2.125	.968	1.718		.093	.031	.06	.093		.093	.858	.608	.484	.358	.733	.077	.116	.062	.937	.875	1.343	.125	.781	1.892	.046			.209	.093	.250	1.875		1.840	.046	.23	.16	1.938
140	AC	TESTER, CKT, IMU/CDU RSVR		2900286-011						4.125	1.812	3.250		.125	.062	.12	.156		.125	1.625	1.140	.890	.640	1.390	.125	.171	.125	1.875	1.687	2.625	.250	1.562	3.843	.093			.359	.125	.437	3.688		3.687	.093	.40	.25	3.875
139	AC	SIMULATOR, LD/SIG, CDU		2900285-011						↑	↑	↑		↑	↑	↑	↑		↑	↑	↑	↑	↑	↑	↑	↑	↑	↑	↑	↑	↑	↑	↑	↑			↑	↑	↑	↑		↑	↑	↑	↑	↑
138	AC	SIMULATOR, LD/SIG, OPTICS		1902023-021																																										
137	AC	FIX., MOUNTING, IMU/NAV BASE		6900003-011																																										
136	AC	FIX., OPTICS/NAV BASE		2900072-011																																										
135	AC	FIX., MOUNTING, SUB SYSTEM		2900070-011																																										
134	AC	FIX., HAND., G AND N HARNESS		2900069-011																																										
133	AC	CNTR, SHIPPING, NAV BASE		2900068-011																																										
132	AC	FIX., MOUNTING, G AND N		2900067-011																																										
131	AC	SIMULATOR, LD/SIG, IMU/CDU		2900062-011																																										
130	AC	TESTOR, GYRO WHEEL		2900061-011						↓	↓	↓		↓	↓	↓	↓		↓	↓	↓	↓	↓	↓	↓	↓	↓	↓	↓	↓	↓	↓	↓	↓			↓	↓	↓	↓		↓	↓	↓	↓	↓
129	AC	COOLANT SUPPLY		1902133-021						4.125	1.812	3.250		.125	.062	.12	.156		.125	1.625	1.140	.890	.640	1.390	.125	.171	.125	1.875	1.687	2.625	.250	1.562	3.843	.093			.359	.125	.437	3.688		3.687	.093	.40	.25	3.875
128	AC	TABLE, ROTARY		1900926-021						2.125	.968	1.718	↑	.093	.031	.06	.093	↑	.093	.858	.608	.484	.358	.733	.077	.116	.062	.937	.875	1.343	.125	.781	1.892	.046	↑	↑	.209	.093	.250	1.875	↑	1.840	.046	.23	.16	1.938
127	AC	FIX., HAND., OPTICS		2900074-011						↑	↑	↑		↑	↑	↑	↑		↑	↑	↑	↑	↑	↑	↑	↑	↑	↑	↑	↑	↑	↑	↑	↑			↑	↑	↑	↑		↑	↑	↑	↑	↑
126	AC	FIX., MTG, PTA / PEA		2900066-011																																										
125	AC	CONT, TEMP, IMU LIFTING		2900063-011																																										
124	AC	FIX., HANDLING, IMU		2900064-011																																										
123	AC	CONT, OPTICS, REMOTE		1902046-021																																										
122	AC	TEST CONTROL		1902009-021																																										
121	AC	ADPT MODULE, P.S.A.		1902431-021																																										
120	AC	BRIDGE, DECADE ERROR		2900128-011																																										
119	AC	PWR SUP, ELECTRONICS		2900012-011																																										
118	AC	PWR SUP, RELAY AND LAMP		1900049-031																																										
117	AC	CONSOLE OSCILLOGRAPH		1900000-021																																										
116	AC	ADPT, MODULE, P.S.A.		1902431-011																																										
115	AC	ADPT, TEST POINT, PTA / PEA		2900145-011																																										
114	AC	ADPT, TEST POINT, P.S.A.		2900037-011																																										
113	AC	CONTROL, GIMBAL, POSITION		2900036-011																																										
112	AC	SELECTOR, SIGNAL, PRIMARY		2900035-011																																										
111	AC	SEL, SIG, OSCILLOGRAPH		2900034-011																																										
110	AC	PANEL, PWR SUP AND LOAD		2900033-011																																										
109	AC	PANEL, MONITOR		2900031-011																																										
108	AC	PANEL, AUXILIARY INPUT		2900030-011																																										
107	AC	CAGING ELECTRONICS, GYRO		2900029-011																																										
106	AC	TEST SELECTOR		2900028-011																																										
105	AC	TEST CONTROL		2900027-011																																										
104	AC	MONITOR AND CONTROL, TEMP		2900026-011																																										
103	AC	DISTRIBUTION BOX, GSE		2900024-011			↓	↓	↓	↓	↓	↓	↓	↓	↓	↓	↓	↓	↓	↓	↓	↓	↓	↓	↓	↓	↓	↓	↓	↓	↓	↓	↓	↓	↓	↓	↓	↓	↓	↓	↓	↓	↓	↓	↓	↓
102	AC	VOLTMETER, DIGITAL		2900007 011			B	II	NOTE 11C	2.125	.968	1.718	NA	.093	.031	.06	.093	.108 .104	.093	.858	.608	.484	.358	.733	.077	.116	.062	.937	.875	1.343	.125	.781	1.892	.046	NA	NA	.209	.093	.250	1.875	NA	1.840	.046	.23	.16	1.938
101	AC	NAVIGATION BASE ASSEMBLY - LEM		6899950		NAS-9-497	A	I	NOTE 11B	2.000	1.312	1.906	1.375	.078	.048	.078	.093	NA	NA	1.125	.750	.593	.453	1.015	.062	.187	.078	.875	.718	1.375	.218	NA	NA	.048	.031	.875	.305	.078	.531	1.906	.078	NA	.078	.531	.187	NA
100	AC	NAVIGATION BASE ASSEMBLY		2899982		NAS-9-497	A	I	NOTE 11B	2.000	1.312	1.906	1.375	.078	.048	.078	.093	NA	NA	1.125	.750	.593	.453	1.015	.062	.187	.078	.875	.718	1.375	.218	NA	NA	.048	.031	.875	.305	.078	.531	1.906	.078	NA	.078	.531	.187	NA

THIS SHEET ADDED

Ⓖ REPLACES REV F WITH CHANGE

AC ELECTRONICS DASH NUMBERS

NOTES FOR TABLE

STYLE A IS FOR G&N SYSTEM

STYLE B IS FOR GROUND SUPPORT EQUIPMENT

TYPE I IS WITHOUT MOUNTING HOLES

TYPE II IS WITH MOUNTING HOLES

QTY REQD	PART OR IDENTIFYING NO.	MATERIAL OR NOTES	NOMENCLATURE OR DESCRIPTION	FIND NO.

LIST OF MATERIALS

NEXT ASSY	USED ON
AS APPLICABLE	

APPLICATION

UNLESS OTHERWISE SPECIFIED
DIMENSIONS ARE IN INCHES
CAPACITOR VALUES ARE IN μf
RESISTOR VALUES ARE IN OHMS
TOLERANCES ON
FRACTIONS ± — DECIMALS ±.005 ANGLES ± —
DO NOT SCALE THIS DRAWING

MATERIAL
SEE NOTE 11

MIT
INSTRUMENTATION LAB
CAMBRIDGE, MASS.

MANNED SPACECRAFT CENTER
HOUSTON, TEXAS

		DATE
DRAWN	R A Jones	7-16-65
CHECKED	A. J. [illegible]	7-22-65
APPROVED		
APPROVED	W Kupfer	[illegible]
APPROVED MIT	W Kupfer	[illegible]
APPROVED MSC	[illegible]	7/26/65

NAMEPLATES,
APOLLO G&N-GSE
(STANDARDS)

CODE IDENT NO. 80230
SIZE E
DRAWING NO. 1004260
SCALE NONE
SHEET 4 OF 5

MASTER

NOTICE - WHEN GOVERNMENT DRAWINGS, SPECIFICATIONS, OR OTHER DATA ARE USED FOR ANY PURPOSE OTHER THAN IN CONNECTION WITH A DEFINITELY RELATED GOVERNMENT PROCUREMENT OPERATION, THE UNITED STATES GOVERNMENT THEREBY INCURS NO RESPONSIBILITY NOR ANY OBLIGATION WHATSOEVER; AND THE FACT THAT THE GOVERNMENT MAY HAVE FORMULATED, FURNISHED, OR IN ANY WAY SUPPLIED THE SAID DRAWINGS, SPECIFICATIONS OR OTHER DATA IS NOT TO BE REGARDED BY IMPLICATION OR OTHERWISE AS IN ANY MANNER LICENSING THE HOLDER OR ANY OTHER PERSON OR CORPORATION, OR CONVEYING ANY RIGHTS OR PERMISSION TO MANUFACTURE, USE, OR SELL ANY PATENTED INVENTION THAT MAY IN ANY WAY BE RELATED THERETO.

REVISIONS 02768

SYM	ZONE	DESCRIPTION	DR	CHK	DATE	APPROVED
G		REPLACES REV F WITH CHANGE PER TDRR 20854			7/22/65	WK
H		REVISED PER TDRR 20892			8/3/65	WK
J		REVISED PER TDRR 20904			8/3/65	WK
K		REVISED PER TDRR 21379			8/6/65	WK
L		REVISED PER TDRR 21410			8/23/65	WK
M		REVISED PER TDRR 21993				
N		REVISED PER TDRR 22621			10/	
P		REVISED PER TDRR 22671			/11/	
R		REVISED PER TDRR 22672				
S		REVISED PER TDRR 22750			/65	WK
T		REVISED PER TDRR 22823				
U		REVISED PER TDRR 23072			10-22-65	
V		REVISED PER TDRR 23521			10-26-65	WK

THIS SHEET ADDED

Ⓖ REPLACES REV F WITH CHANGE

MIT DASH NUMBERS

DASH NO.	P/C	PART NAME	REMARKS	PART NO.	SER. NO.	CONT. NO.	STYLE	TYPE	MATERIAL	A	B	C	D	E	F	G	H	J	K	L	M	N	P	R	S	T	U	V	W	Y	Z	AA	AB	AC	AD	AE	AF	AG	AH	AJ	AK	AL	AM	AN	AP	AR
499	MIT																																													
498																																														
40	MIT	COMPUTER ASSY		2003100-001			A	I	NOTE 11 B	2.000	1.312	1.906	1.375	.078	.048	.078	.093	NA	NA	1.125	.750	.593	.453	1.015	.062	.187	.078	.875	.718	1.375	.218	NA	NA	.048	.031	.875	.305	.078	.531	1.906	.078	NA	.078	.531	.187	NA
400	MIT	LIFTING SLING-G&N INST. QUAL. FIX. & AZM. REF. FIX.		1021640		NAS-9-4065	B	II	NOTE 11 C	2.000	1.312	1.687	1.375	.078	.048	.078	.093	[illegible]	.093	1.187	.750	.593	.453	1.015	.062	.187	.078	.875	.718	1.375	.218	1.156	1.843	.048	NA	.875	.305	.078	.312	1.687	.110	1.830	.070	.275	.180	1.844

NOTES FOR TABLE

STYLE A IS FOR G&N SYSTEM

STYLE B IS FOR GROUND SUPPORT EQUIPMENT

TYPE I IS WITHOUT MOUNTING HOLES

TYPE II IS WITH MOUNTING HOLES

MASTER

QTY REQD	PART OR IDENTIFYING NO.	MATERIAL OR NOTES	NOMENCLATURE OR DESCRIPTION	FIND NO

LIST OF MATERIALS

NEXT ASSY	USED ON
AS APPLICABLE	

APPLICATION

UNLESS OTHERWISE SPECIFIED
DIMENSIONS ARE IN INCHES
CAPACITOR VALUES ARE IN µf
RESISTOR VALUES ARE IN OHMS
TOLERANCES ON
FRACTIONS ± — DECIMALS ±.005 ANGLES ± —
DO NOT SCALE THIS DRAWING

MATERIAL
SEE NOTE 11

MIT
INSTRUMENTATION LAB
CAMBRIDGE, MASS.

MANNED SPACECRAFT CENTER
HOUSTON, TEXAS

		DATE
DRAWN	R A Jones	7-16-65
CHECKED		7-28-65
APPROVED		
APPROVED	W Kupfer	7/28/65
APPROVED MIT	W Kupfer	7/28/65
APPROVED MSC		

NAMEPLATES,
APOLLO G&N-GSE
(STANDARDS)

CODE IDENT NO. 80230
SIZE E
DRAWING NO. 1004260
SCALE NONE
SHEET 5 OF 5

REVISIONS TDRR 02768				
ZONE	SYM	DESCRIPTION	DATE	APPROVAL

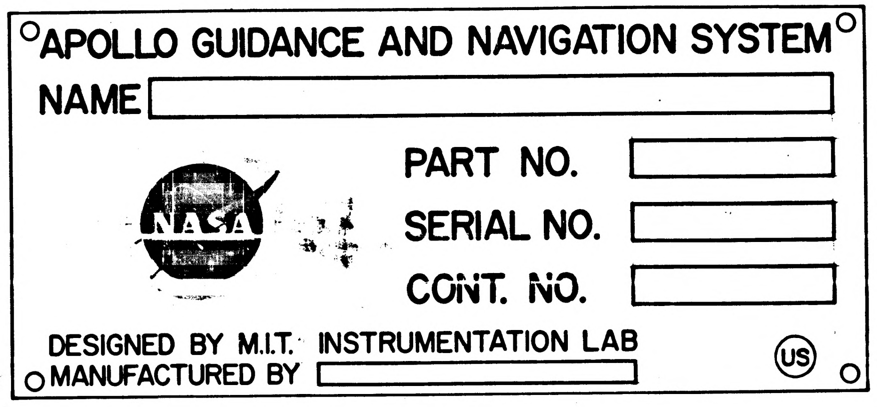
APOLLO GUIDANCE AND NAVIGATION SYSTEM
NAME
NASA
PART NO.
SERIAL NO.
CONT. NO.
DESIGNED BY M.I.T. INSTRUMENTATION LAB
MANUFACTURED BY
US

1004260-1

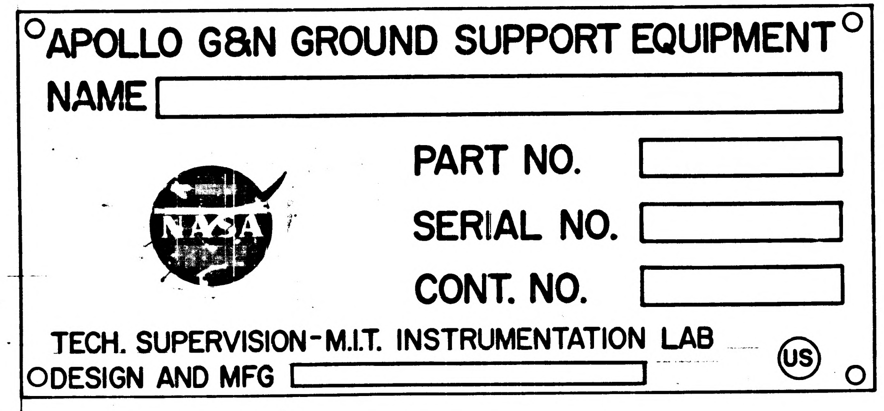
APOLLO G&N GROUND SUPPORT EQUIPMENT
NAME
NASA
PART NO.
SERIAL NO.
CONT. NO.
TECH. SUPERVISION-M.I.T. INSTRUMENTATION LAB
DESIGN AND MFG
US

1004260-2

1004260

NOTES:
1. NAMEPLATES TO CONFORM WITH MIL-M-13231.

QTY. REQD.	NOMENCLATURE OR DESCRIPTION	PART OR IDENTIFYING NO.	SPECIFICATION	MATERIAL OR NOTES	FIND NO.

LIST OF PARTS AND MATERIALS

NEXT ASSY	USED ON
APPLICATION	

UNLESS OTHERWISE SPECIFIED
DIMENSIONS ARE IN INCHES
TOLERANCES ON
FRACTIONS — DECIMALS — ANGLES
DO NOT SCALE THIS DRAWING
MATERIAL:

MIT INSTRUMENTATION LAB
CONTRACT
NAS 9-153

		DATE
APPROVED	L. Elarson	26 Aug 63
CHECKED	L. Elarson	26 Aug 63
DRAWN	R. LANDEY	26 AUG 63
APPROVED FOR MSC		8/28/63
MIT/IL APPROVAL		8/28/63

NAMEPLATES,
APOLLO G&N
(STANDARDS)

SCALE	UNIT WT.	CODE IDENT.
NONE	—	

MIT INSTRUMENTATION LABORATORY
CAMBRIDGE, MASS.
DWG. NO.
MANNED SPACECRAFT CENTER
HOUSTON TEXAS
NASA DRAWING NO.
1004260
SHEET 1 OF 1

MASTER

INCHES
0 1 2
PHOTOGRAPHIC SCALE ONLY

1004261

REVISIONS 031 39

SYM	DESCRIPTION	DATE	APPROVAL

NOTICE — WHEN GOVERNMENT DRAWINGS, SPECIFICATIONS, OR OTHER DATA ARE USED FOR ANY PURPOSE OTHER THAN IN CONNECTION WITH A DEFINITELY RELATED GOVERNMENT PROCUREMENT OPERATION, THE UNITED STATES GOVERNMENT THEREBY INCURS NO RESPONSIBILITY NOR ANY OBLIGATION WHATSOEVER; AND THE FACT THAT THE GOVERNMENT MAY HAVE FORMULATED, FURNISHED, OR IN ANY WAY SUPPLIED THE SAID DRAWINGS, SPECIFICATIONS OR OTHER DATA IS NOT TO BE REGARDED BY IMPLICATION OR OTHERWISE AS IN ANY MANNER LICENSING THE HOLDER OR ANY OTHER PERSON OR CORPORATION, OR CONVEYING ANY RIGHTS OR PERMISSION TO MANUFACTURE, USE, OR SELL ANY PATENTED INVENTION THAT MAY IN ANY WAY BE RELATED THERETO.

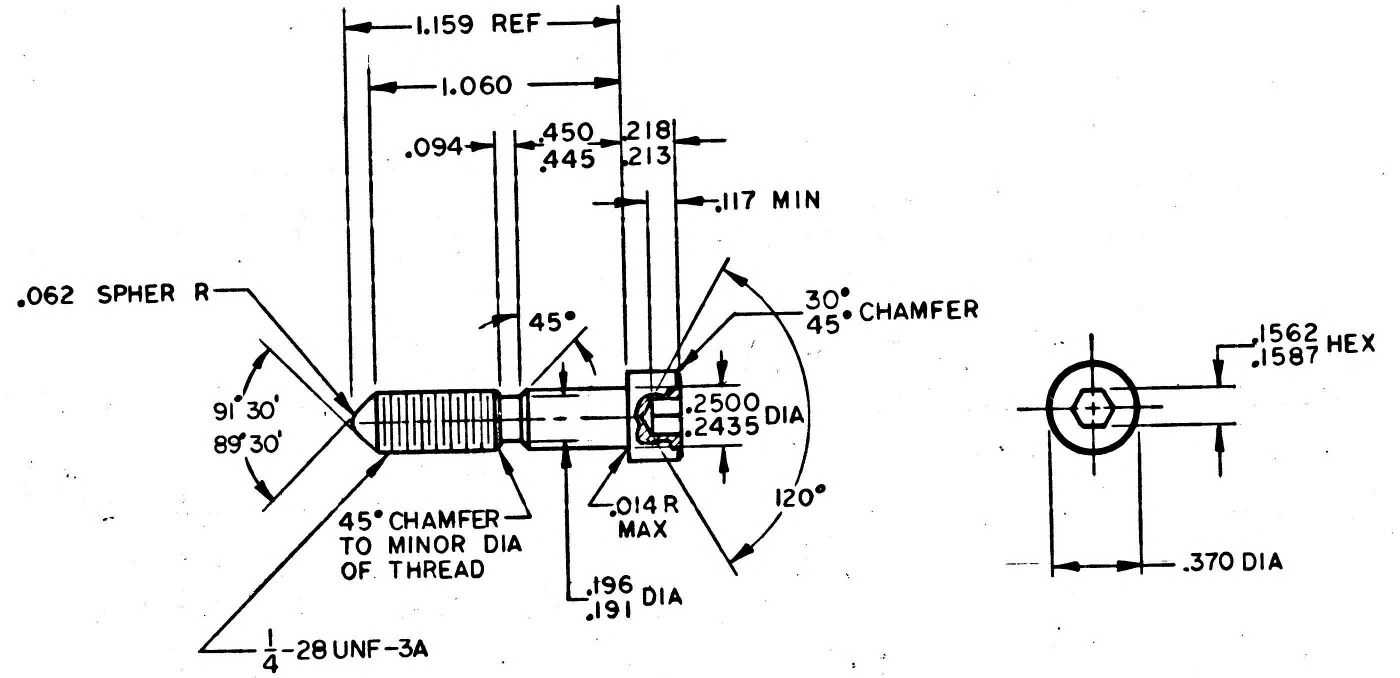

NOTES:

1. INTERPRET DRAWING IN ACCORDANCE WITH STANDARDS PRESCRIBED BY MIL-D-70327.
2. MATERIAL: MAKE FROM SHOULDER SCREW, UNKNURLED HEAD/ MS-16637-15 OR 416 CRES/QQ-S-763
3. FINISH: PASSIVATE/ MIL-F-14072 E300.
4. 63√ ALL OVER UNLESS OTHERWISE SPECIFIED.
5. BREAK SHARP EDGES $^{.005}_{.015}$

QTY REQD	PART OR IDENTIFYING NO.	NOMENCLATURE OR DESCRIPTION	FIND NO.

LIST OF MATERIALS

NEXT ASSY	USED ON

APPLICATION

UNLESS OTHERWISE SPECIFIED DIMENSIONS ARE IN INCHES
TOLERANCES ON
FRACTIONS ± — DECIMALS ± XXX±.005 ANGLES ± 1°
DO NOT SCALE THIS DRAWING

MATERIAL SEE NOTE 2

HEAT TREATMENT R_C 37 TO R_C 40

FINAL FINISH SEE NOTE 3

MIT
INSTRUMENTATION LAB
CAMBRIDGE, MASS.
DWG. NO. CONTRACT

DRAWN E. Gross DATE 26 AUG 63
CHECKED 11 Sep 63
APPROVAL WB 10 SEP 63
APPROVAL
NASA APPROVAL 9/12/63
MIT APPROVAL 12 Sep 63

MANNED SPACECRAFT CENTER
HOUSTON, TEXAS

SCREW, JACK

CODE IDENT NO.
SIZE C
NASA DRAWING NO. 1004261
SCALE 2/1
WT
SHEET 1 OF 1

MASTER

INCHES
0 1 2
PHOTOGRAPHIC SCALE ONLY

NOTICE — WHEN GOVERNMENT DRAWINGS, SPECIFICATIONS, OR OTHER DATA ARE USED FOR ANY PURPOSE OTHER THAN IN CONNECTION WITH A DEFINITELY RELATED GOVERNMENT PROCUREMENT OPERATION, THE UNITED STATES GOVERNMENT THEREBY INCURS NO RESPONSIBILITY NOR ANY OBLIGATION WHATSOEVER, AND THE FACT THAT THE GOVERNMENT MAY HAVE FORMULATED, FURNISHED, OR IN ANY WAY SUPPLIED THE SAID DRAWINGS, SPECIFICATIONS OR OTHER DATA IS NOT TO BE REGARDED BY IMPLICATION OR OTHERWISE AS IN ANY MANNER LICENSING THE HOLDER OR ANY OTHER PERSON OR CORPORATION, OR CONVEYING ANY RIGHTS OR PERMISSION TO MANUFACTURE, USE, OR SELL ANY PATENTED INVENTION THAT MAY IN ANY WAY BE RELATED THERETO.

1004262 A

REVISIONS 03/39

SYM	DESCRIPTION	DATE	APPROVAL
A	REVISED PER TDRR 05639	1/7/64	

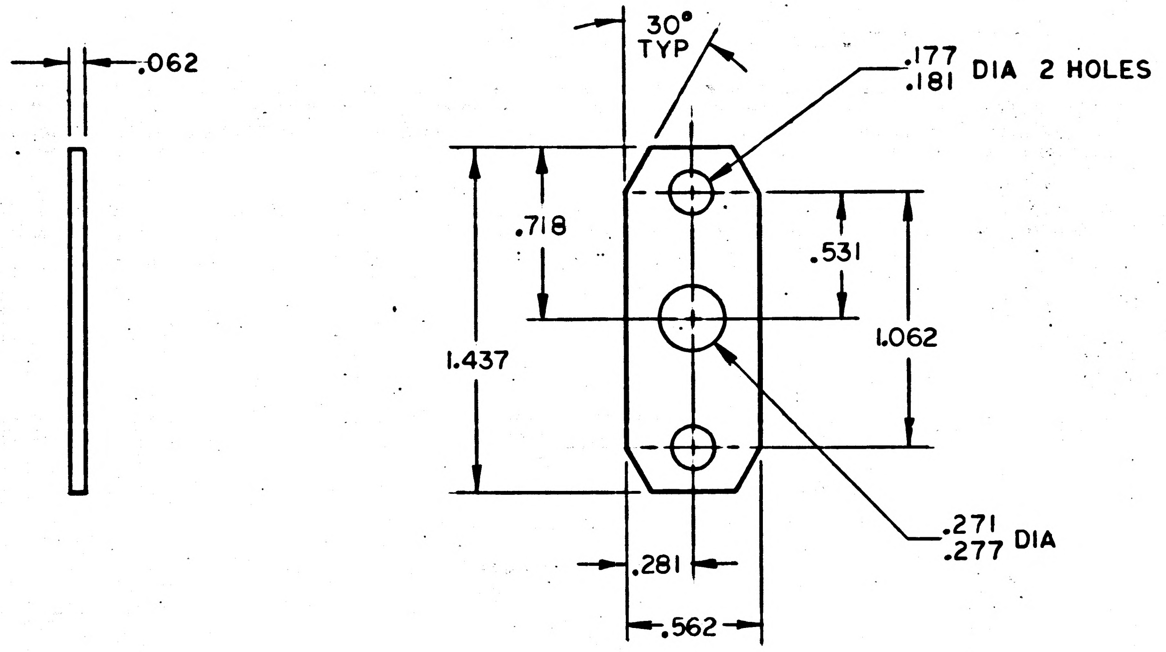

NOTES:

1. INTERPRET DRAWING IN ACCORDANCE WITH STANDARDS PRESCRIBED BY MIL-D-70327.
2. MATERIAL: 410 CRES/QQ-S-766 CLASS 410
3. PASSIVATE/MIL-F-14072, E300
4. BREAK SHARP EDGES $^{.005}_{.015}$

MASTER

QTY REQD	PART OR IDENTIFYING NO.	NOMENCLATURE OR DESCRIPTION	FIND NO.

LIST OF MATERIALS

NEXT ASSY	USED ON
APPLICATION	

UNLESS OTHERWISE SPECIFIED
DIMENSIONS ARE IN INCHES
TOLERANCES ON
FRACTIONS ± — DECIMALS XXX ± .005 ANGLES ±2°
DO NOT SCALE THIS DRAWING

MATERIAL
SEE NOTE 2

HEAT TREATMENT
R_C 37 TO R_C 40

FINAL FINISH
SEE NOTE 3

MIT
INSTRUMENTATION LAB
CAMBRIDGE, MASS.
DWG. NO. CONTRACT

DRAWN E. Gross DATE 27 AUG 63
CHECKED 10 Sep 63
APPROVAL W B Turner 10 SEP63
APPROVAL
NASA APPROVAL 9/12/63
MIT APPROVAL 12 Sep 63

MANNED SPACECRAFT CENTER
HOUSTON, TEXAS

PLATE, BACKING

CODE IDENT NO.
SIZE C
NASA DRAWING NO. 1004262
SCALE 2/1
WT
SHEET 1 OF 1

NOTICE — WHEN GOVERNMENT DRAWINGS, SPECIFICATIONS, OR OTHER DATA ARE USED FOR ANY PURPOSE OTHER THAN IN CONNECTION WITH A DEFINITELY RELATED GOVERNMENT PROCUREMENT OPERATION, THE UNITED STATES GOVERNMENT THEREBY INCURS NO RESPONSIBILITY NOR ANY OBLIGATION WHATSOEVER; AND THE FACT THAT THE GOVERNMENT MAY HAVE FORMULATED, FURNISHED, OR IN ANY WAY SUPPLIED THE SAID DRAWINGS, SPECIFICATIONS OR OTHER DATA IS NOT TO BE REGARDED BY IMPLICATION OR OTHERWISE AS IN ANY MANNER LICENSING THE HOLDER OR ANY OTHER PERSON OR CORPORATION, OR CONVEYING ANY RIGHTS OR PERMISSION TO MANUFACTURE, USE, OR SELL ANY PATENTED INVENTION THAT MAY IN ANY WAY BE RELATED THERETO.

1004262

REVISIONS 031 39			
SYM	DESCRIPTION	DATE	APPROVAL

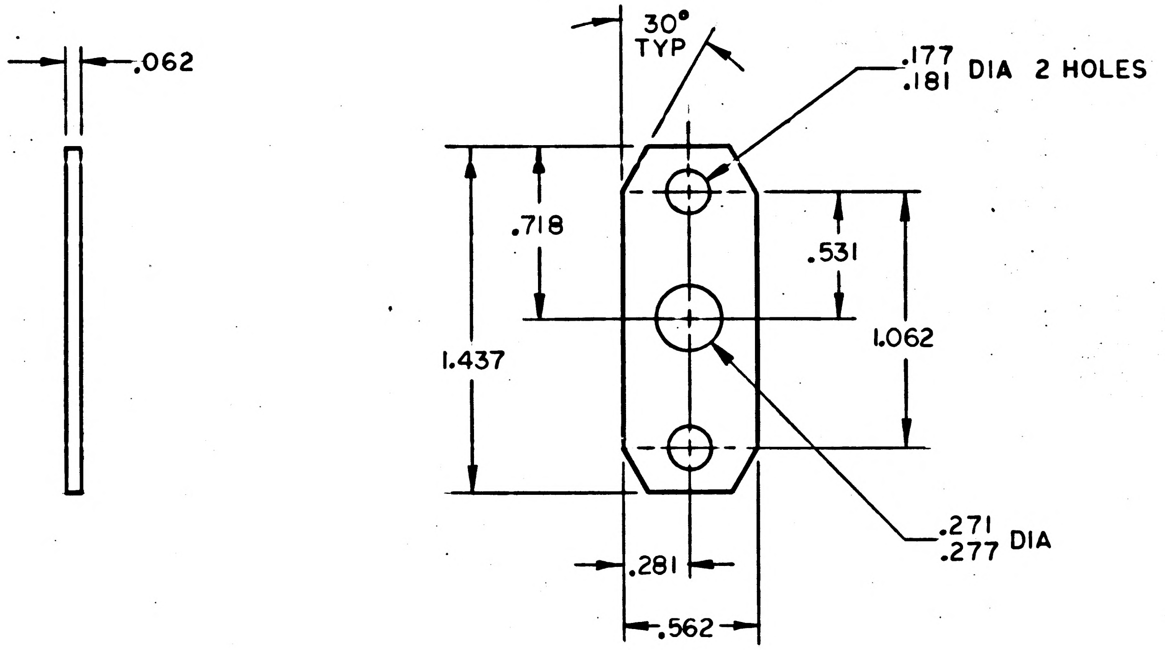

NOTES:

1. INTERPRET DRAWING IN ACCORDANCE WITH STANDARDS PRESCRIBED BY MIL-D-70327.
2. MATERIAL: 416 CRES/QQ-S-763
3. PASSIVATE/MIL-F-14072, E300
4. BREAK SHARP EDGES $^{.005}_{.015}$

MASTER

QTY REQD	PART OR IDENTIFYING NO.	NOMENCLATURE OR DESCRIPTION	FIND NO.

LIST OF MATERIALS

NEXT ASSY	USED ON
APPLICATION	

UNLESS OTHERWISE SPECIFIED
DIMENSIONS ARE IN INCHES
TOLERANCES ON
FRACTIONS ±— DECIMALS XXX±.005 ANGLES ±1°
DO NOT SCALE THIS DRAWING
MATERIAL SEE NOTE 2
HEAT TREATMENT R_C 37 TO R_C 40
FINAL FINISH SEE NOTE 3

MIT
INSTRUMENTATION LAB
CAMBRIDGE, MASS.
DWG. NO. CONTRACT
DRAWN E. Gross DATE 27 AUG 63
CHECKED R.P. Kincaid 10 Sep 63
APPROVAL W.B. [illegible] 10 SEP 63
APPROVAL
NASA APPROVAL W. S. [illegible] 9/12/63
MIT APPROVAL W Kupfer 12 Sep 63

MANNED SPACECRAFT CENTER
HOUSTON, TEXAS

PLATE, BACKING

CODE IDENT NO.
SIZE C
NASA DRAWING NO. 1004262
SCALE 2/1
WT
SHEET 1 OF 1

INCHES
0 1 2
PHOTOGRAPHIC SCALE ONLY

1004262

NOTICE — WHEN GOVERNMENT DRAWINGS, SPECIFICATIONS OR OTHER DATA ARE USED FOR ANY PURPOSE OTHER THAN IN CONNECTION WITH A DEFINITELY RELATED GOVERNMENT PROCUREMENT OPERATION, THE UNITED STATES GOVERNMENT THEREBY INCURS NO RESPONSIBILITY NOR ANY OBLIGATION WHATSOEVER, AND THE FACT THAT THE GOVERNMENT MAY HAVE FORMULATED, FURNISHED OR IN ANY WAY SUPPLIED THE SAID DRAWINGS, SPECIFICATIONS OR OTHER DATA IS NOT TO BE REGARDED BY IMPLICATION OR OTHERWISE AS IN ANY MANNER LICENSING THE HOLDER OR ANY OTHER PERSON OR CORPORATION, OR CONVEYING ANY RIGHTS OR PERMISSION TO MANUFACTURE, USE, OR SELL ANY PATENTED INVENTION THAT MAY IN ANY WAY BE RELATED THERETO.

REVISIONS 03225			
SYM	DESCRIPTION	DATE	APPROVAL
A	REVISED PER TDRR 04017	10-17-65	WK

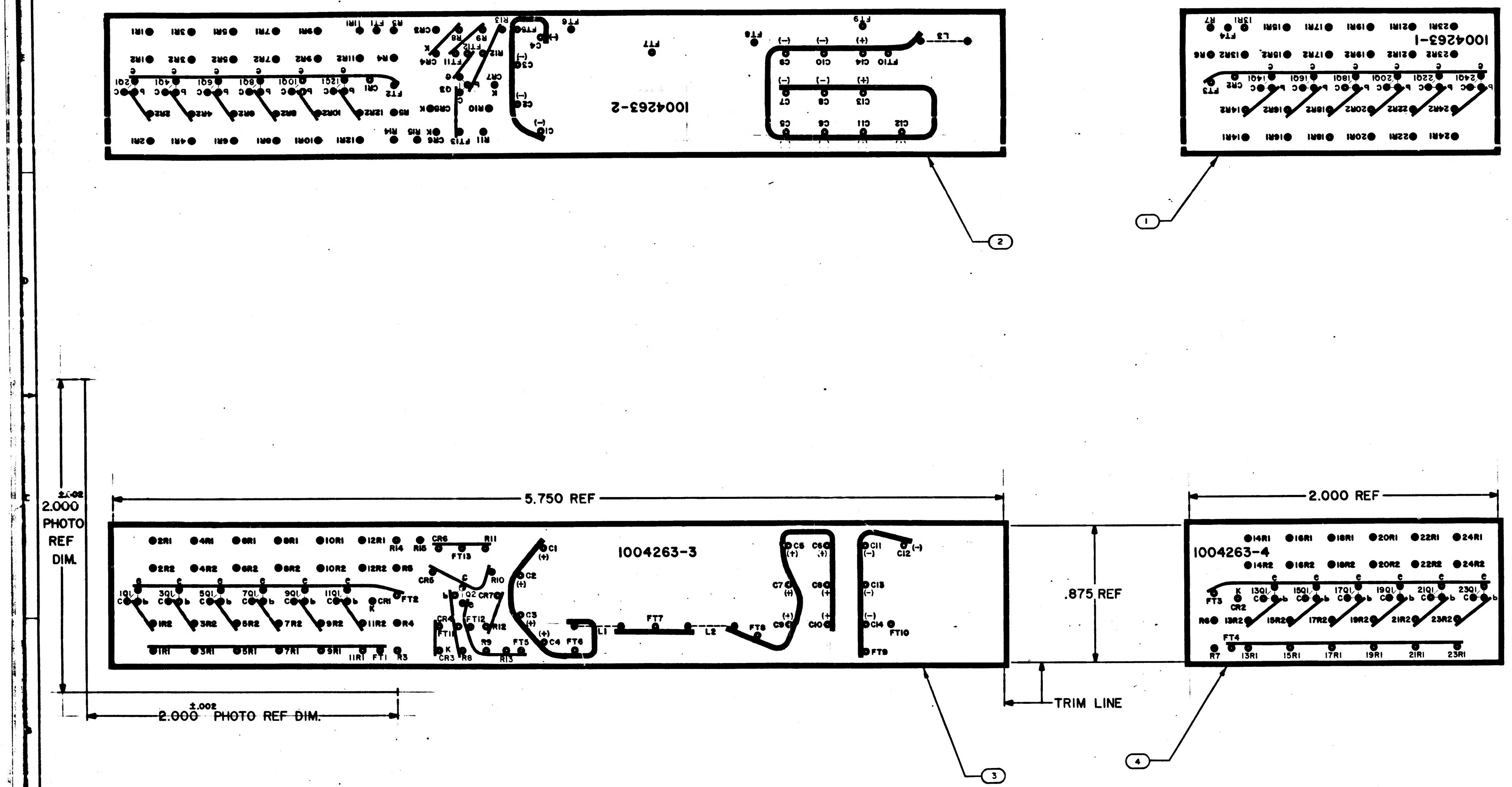
1004263-2
1004263-1
1004263-3
1004263-4
5.750 REF
2.000 REF
.875 REF
±.002 2.000 PHOTO REF DIM.
TRIM LINE
①
②
③
④
2R1 4R1 6R1 8R1 10R1 12R1
2R2 4R2 6R2 8R2 10R2 12R2
1Q1 3Q1 5Q1 7Q1 9Q1 11Q1
1R1 3R1 5R1 7R1 9R1 11R1
1R2 3R2 5R2 7R2 9R2 11R2
CR1 CR2 CR3 CR4 CR5 CR6 CR7 CR8
R1 R2 R3 R4 R5 R6 R7 R8 R9 R10 R11 R12 R13 R14 R15
FT1 FT2 FT3 FT4 FT5 FT6 FT7 FT8 FT9 FT10 FT11 FT12 FT13
C1 C2 C3 C4 C5 C6 C7 C8 C9 C10 C11 C12 C13 C14
L1 L2 L3
Q1 Q2
14R1 16R1 18R1 20R1 22R1 24R1
14R2 16R2 18R2 20R2 22R2 24R2
13Q1 15Q1 17Q1 19Q1 21Q1 23Q1
13R1 15R1 17R1 19R1 21R1 23R1
13R2 15R2 17R2 19R2 21R2 23R2
(+)
(−)
c b e K

NOTES

1. INTERPRET DRAWING IN ACCORDANCE WITH STANDARDS PRESCRIBED BY MIL-D-70327
2. ORIGINAL OF THIS DRAWING OR REPRODUCTION MADE BY PROCESS OR METHOD SHALL INSURE DIMENSIONAL STABILITY. DIMENSIONAL STABILITY SHALL NOT EXCEED .001 INCH PER INCH
3. CUT TO WITHIN .010 OF TRIMLINE
4. MAKE MASTER PATTERN POSITIVE FILM TO DIMENSIONS SHOWN
5. MATERIAL: FILM .006/.008 PER L-F-340, TYPE IB, CLASS 2, STYLE IA
6. ● .045/.050 DIA PUNCH ALL HOLES

MASTER

QTY REQD	PART OR IDENTIFYING NO.	NOMENCLATURE OR DESCRIPTION	FIND NO.
1	1004263-4	INSULATOR	4
1	1004263-3	INSULATOR	3
1	1004263-2	INSULATOR	2
1	1004263-1	INSULATOR	1

LIST OF MATERIALS

NEXT ASSY	USED ON
1003173	

APPLICATION

UNLESS OTHERWISE SPECIFIED DIMENSIONS ARE IN INCHES
TOLERANCES ON
FRACTIONS ± — DECIMALS ± — ANGLES ± —
DO NOT SCALE THIS DRAWING
MATERIAL
SEE NOTE 5
HEAT TREATMENT —
FINAL FINISH —

M I T
INSTRUMENTATION LAB
CAMBRIDGE, MASS.
DWG NO CONTRACT
DRAWN DATE
CHECKED
APPROVAL 19 SEP 63
APPROVAL
NASA APPROVAL W. J. Rhine 9-19-63
MIT APPROVAL

MANNED SPACECRAFT CENTER
HOUSTON, TEXAS

INSULATOR
PHOTOGRAPHIC MASTER
DRIVER SERVICE MODULE

CODE IDENT NO. —
SIZE E
NASA DRAWING NO. 1004263
SCALE 4/1
WT
SHEET 1 OF 1

INCHES
PHOTOGRAPHIC SCALE ONLY

NOTICE — WHEN GOVERNMENT DRAWINGS, SPECIFICATIONS, OR OTHER DATA ARE USED FOR ANY PURPOSE OTHER THAN IN CONNECTION WITH A DEFINITELY RELATED GOVERNMENT PROCUREMENT OPERATION, THE UNITED STATES GOVERNMENT THEREBY INCURS NO RESPONSIBILITY NOR ANY OBLIGATION WHATSOEVER; AND THE FACT THAT THE GOVERNMENT MAY HAVE FORMULATED, FURNISHED, OR IN ANY WAY SUPPLIED THE SAID DRAWINGS, SPECIFICATIONS, OR OTHER DATA IS NOT TO BE REGARDED BY IMPLICATION OR OTHERWISE AS IN ANY MANNER LICENSING THE HOLDER OR ANY OTHER PERSON OR CORPORATION, OR CONVEYING ANY RIGHTS OR PERMISSION TO MANUFACTURE, USE, OR SELL ANY PATENTED INVENTION THAT MAY IN ANY WAY BE RELATED THERETO

REVISIONS 03225

SYM	DESCRIPTION	DATE	APPROVAL
A	REVISED PER TDRR 03017	10-17-63	
B	REVISED PER TDRR DR CHK 07263	3/20/64	

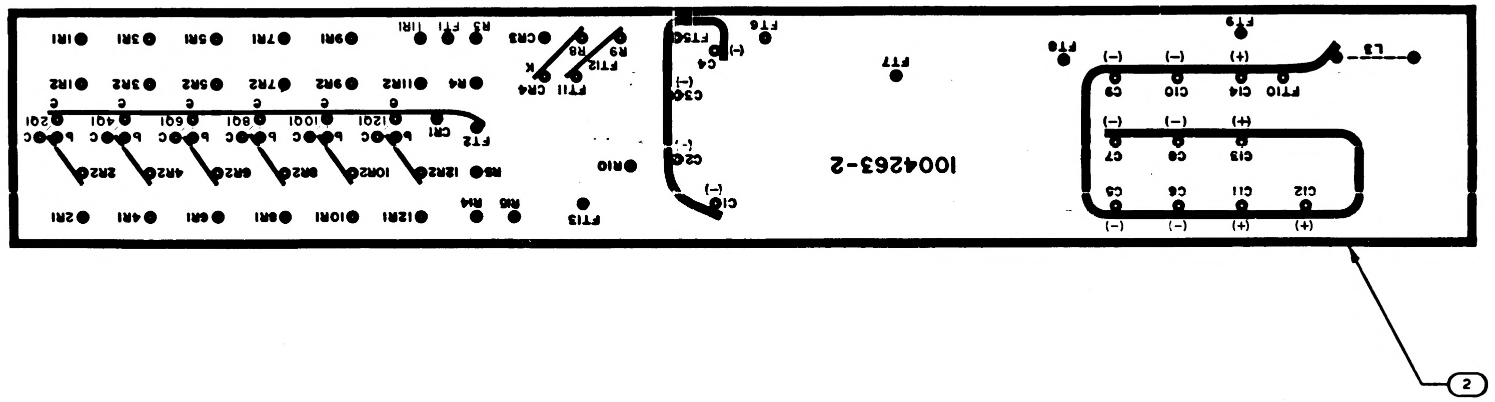

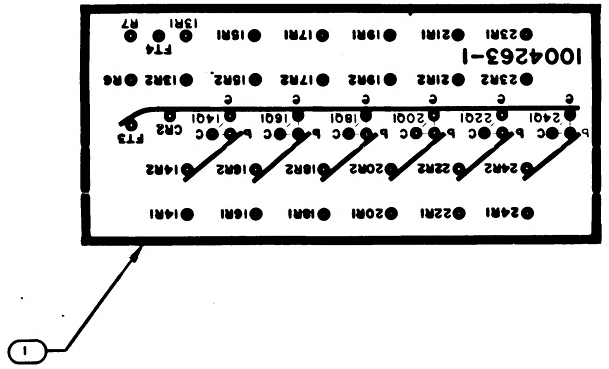

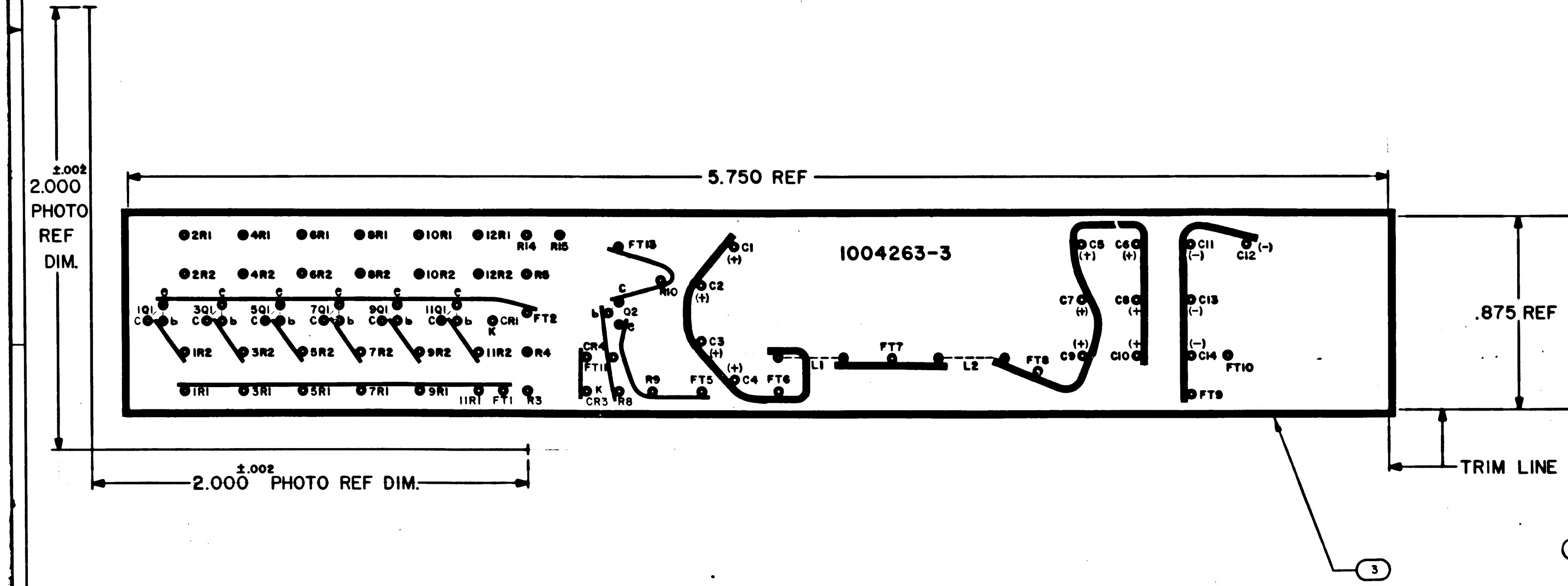
5.750 REF
±.002
2.000
PHOTO
REF
DIM.
±.002
2.000 PHOTO REF DIM.
.875 REF
TRIM LINE
1004263-3
2R1
4R1
6R1
8R1
10R1
12R1
R14
R15
2R2
4R2
6R2
8R2
10R2
12R2
R5
1Q1
3Q1
5Q1
7Q1
9Q1
11Q1
c
C
b
CR1
K
FT2
1R2
3R2
5R2
7R2
9R2
11R2
R4
1R1
3R1
5R1
7R1
9R1
11R1
FT1
R3
FT13
C1
(+)
C2
(+)
C3
(+)
C4
(+)
R10
Q2
CR4
FT11
K
CR3
R8
R9
FT5
FT6
L1
FT7
L2
FT8
C5
C6
C7
C8
C9
C10
C11
C12
C13
C14
(−)
FT10
FT9
3

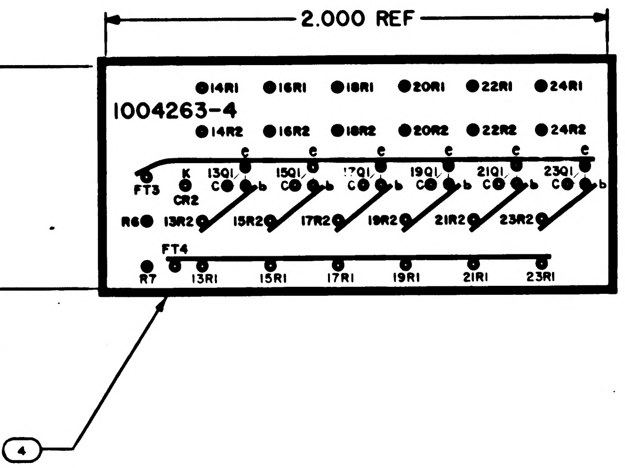
2.000 REF
1004263-4
14R1
16R1
18R1
20R1
22R1
24R1
14R2
16R2
18R2
20R2
22R2
24R2
e
13Q1
15Q1
17Q1
19Q1
21Q1
23Q1
C
b
K
FT3
CR2
R6
13R2
15R2
17R2
19R2
21R2
23R2
FT4
R7
13R1
15R1
17R1
19R1
21R1
23R1
4

NOTES
1. INTERPRET DRAWING IN ACCORDANCE WITH STANDARDS PRESCRIBED BY MIL-D-70327
2. ORIGINAL OF THIS DRAWING OR REPRODUCTION MADE BY PROCESS OR METHOD SHALL INSURE DIMENSIONAL STABILITY. DIMENSIONAL STABILITY SHALL NOT EXCEED .001 INCH PER INCH
3. CUT TO WITHIN .010 OF TRIMLINE
4. MAKE MASTER PATTERN POSITIVE FILM TO DIMENSIONS SHOWN
5. MATERIAL: FILM .006/.008 PER L-F-340, TYPE IB, CLASS 2, STYLE IA
6. ● .045/.050 DIA PUNCH ALL HOLES

QTY REQD	PART OR IDENTIFYING NO.	NOMENCLATURE OR DESCRIPTION	FIND NO.
1	1004263-4	INSULATOR	4
1	1004263-3	INSULATOR	3
1	1004263-2	INSULATOR	2
1	1004263-1	INSULATOR	1

LIST OF MATERIALS

NEXT ASSY	USED ON
1003173	1003400

APPLICATION

UNLESS OTHERWISE SPECIFIED
DIMENSIONS ARE IN INCHES
TOLERANCES ON
FRACTIONS ± — DECIMALS ± — ANGLES ± —
DO NOT SCALE THIS DRAWING
MATERIAL
SEE NOTE 5
HEAT TREATMENT —
FINAL FINISH —

MIT
INSTRUMENTATION LAB
CAMBRIDGE, MASS
DRAWN DATE
CHECKED
APPROVAL 19 SEP 63
APPROVAL
NASA APPROVAL 6-16-63
MIT APPROVAL

MANNED SPACECRAFT CENTER
HOUSTON, TEXAS

INSULATOR
PHOTOGRAPHIC MASTER
DRIVER SERVICE MODULE

CODE IDENT NO.	SIZE	NASA DRAWING NO.
—	E	1004263

SCALE 4/1 WT SHEET 1 OF 1

NOTICE – WHEN GOVERNMENT DRAWINGS, SPECIFICATIONS, OR OTHER DATA ARE USED FOR ANY PURPOSE OTHER THAN IN CONNECTION WITH A DEFINITELY RELATED GOVERNMENT PROCUREMENT OPERATION, THE UNITED STATES GOVERNMENT THEREBY INCURS NO RESPONSIBILITY NOR ANY OBLIGATION WHATSOEVER; AND THE FACT THAT THE GOVERNMENT MAY HAVE FORMULATED, FURNISHED, OR IN ANY WAY SUPPLIED THE SAID DRAWINGS, SPECIFICATIONS, OR OTHER DATA IS NOT TO BE REGARDED BY IMPLICATION OR OTHERWISE AS IN ANY MANNER LICENSING THE HOLDER OR ANY OTHER PERSON OR CORPORATION, OR CONVEYING ANY RIGHTS OR PERMISSION TO MANUFACTURE, USE, OR SELL ANY PATENTED INVENTION THAT MAY IN ANY WAY BE RELATED THERETO.

REVISIONS 03235

SYM	DESCRIPTION	DATE	APPROVAL
A	REVISED PER TDRR 04017	10-17-63	WK
B	REVISED PER TDRR 07263 DR CHK	4/64	
C	REVISED PER TDRR 10738 DR P. Edwards CHK 9.7.R. RTM	9/4/64	

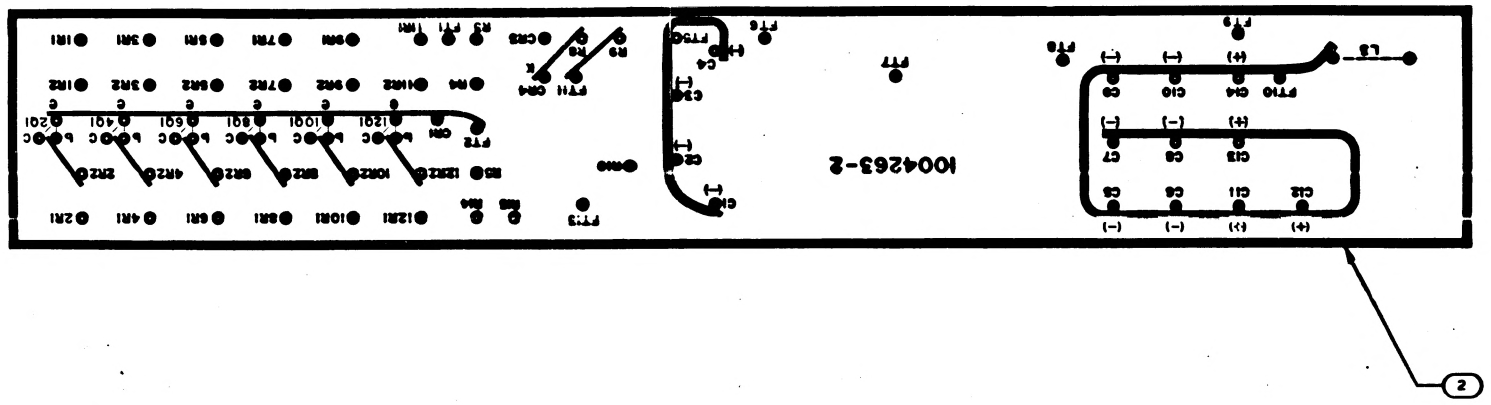

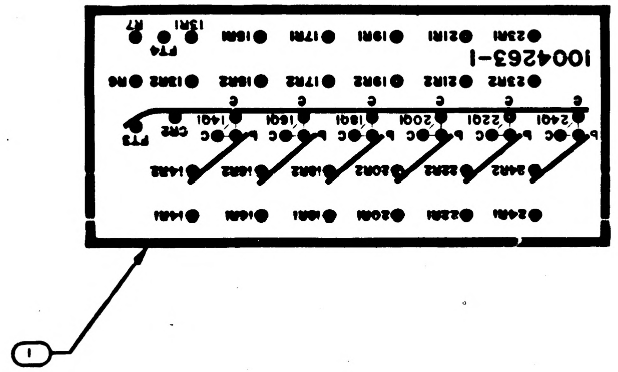

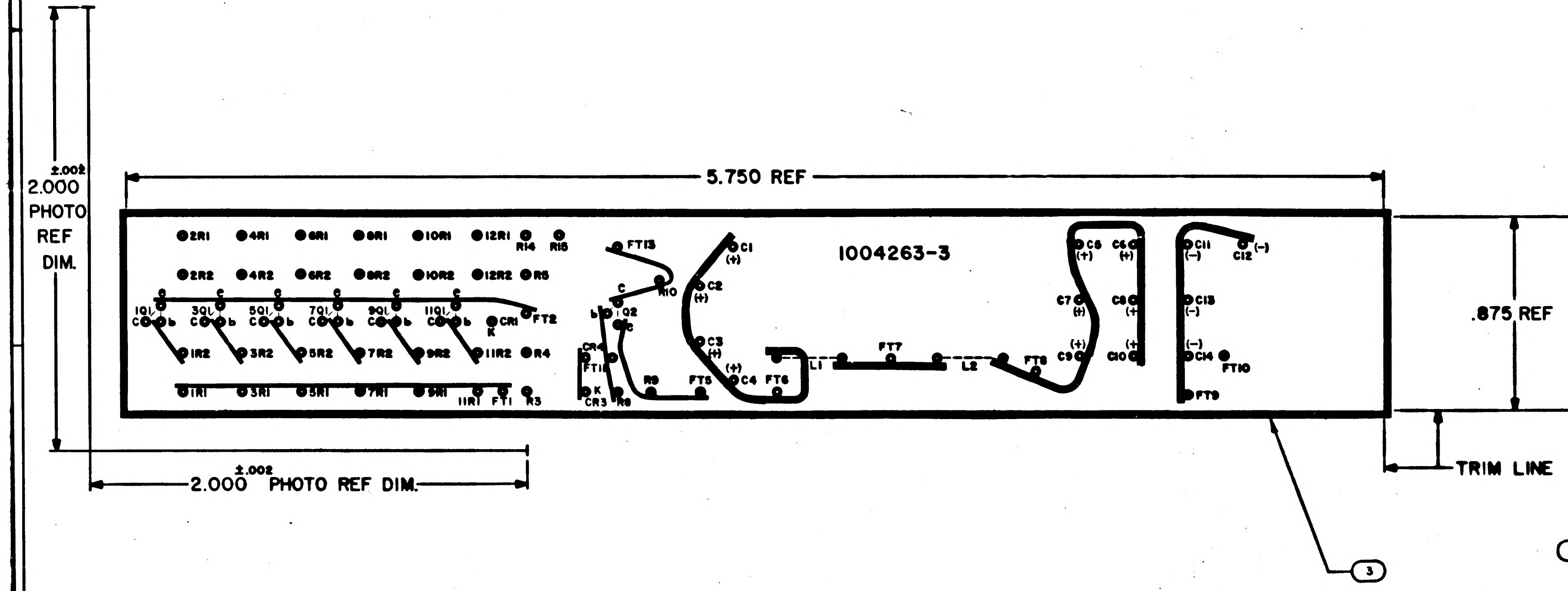

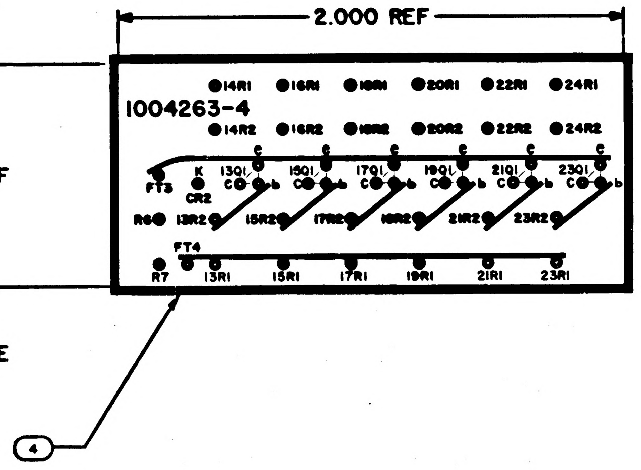

NOTES

1. INTERPRET DRAWING IN ACCORDANCE WITH STANDARDS PRESCRIBED BY MIL-D-70327
2. ORIGINAL OF THIS DRAWING OR REPRODUCTION MADE BY PROCESS OR METHOD SHALL INSURE DIMENSIONAL STABILITY. DIMENSIONAL STABILITY SHALL NOT EXCEED .001 INCH PER INCH
3. CUT TO WITHIN .010 OF TRIMLINE
4. MAKE MASTER PATTERN POSITIVE FILM TO DIMENSIONS SHOWN
5. MATERIAL: FILM .006/.008 PER L-F-340, TYPE IB, CLASS 2, STYLE IA
6. ● .045/.050 DIA PUNCH ALL HOLES

QTY REQD	PART OR IDENTIFYING NO.	NOMENCLATURE OR DESCRIPTION	FIND NO
1	1004263-4	INSULATOR	4
1	1004263-3	INSULATOR	3
1	1004263-2	INSULATOR	2
1	1004263-1	INSULATOR	1

LIST OF MATERIALS

1003173	1003400
NEXT ASSY	USED ON
APPLICATION	

UNLESS OTHERWISE SPECIFIED
DIMENSIONS ARE IN INCHES
TOLERANCES ON
FRACTIONS ± — DECIMALS ± — ANGLES ± —
DO NOT SCALE THIS DRAWING
MATERIAL
SEE NOTE 5
HEAT TREATMENT —
FINAL FINISH —

MIT
INSTRUMENTATION LAB
CAMBRIDGE, MASS.
DWG. NO. CONTRACT
DRAWN Ed Parsons DATE 16 Sept 63
CHECKED
APPROVAL 12/16/63
APPROVAL
NASA APPROVAL 6-18-63
MIT APPROVAL

MANNED SPACECRAFT CENTER
HOUSTON, TEXAS

INSULATOR PHOTOGRAPHIC MASTER

DRIVER SERVICE MODULE

CODE IDENT NO. —
SIZE E
NASA DRAWING NO. 1004263
SCALE 4/1
WT
SHEET 1 OF 1

NOTICE — WHEN GOVERNMENT DRAWINGS, SPECIFICATIONS, OR OTHER DATA ARE USED FOR ANY PURPOSE OTHER THAN IN CONNECTION WITH A DEFINITELY RELATED GOVERNMENT PROCUREMENT OPERATION, THE UNITED STATES GOVERNMENT THEREBY INCURS NO RESPONSIBILITY NOR ANY OBLIGATION WHATSOEVER; AND THE FACT THAT THE GOVERNMENT MAY HAVE FORMULATED, FURNISHED, OR IN ANY WAY SUPPLIED THE SAID DRAWINGS, SPECIFICATIONS, OR OTHER DATA IS NOT TO BE REGARDED BY IMPLICATION OR OTHERWISE AS IN ANY MANNER LICENSING THE HOLDER OR ANY OTHER PERSON OR CORPORATION, OR CONVEYING ANY RIGHTS OR PERMISSION TO MANUFACTURE, USE, OR SELL ANY PATENTED INVENTION THAT MAY IN ANY WAY BE RELATED THERETO.

REVISIONS 03225

SYM	DESCRIPTION	DATE	APPROVAL

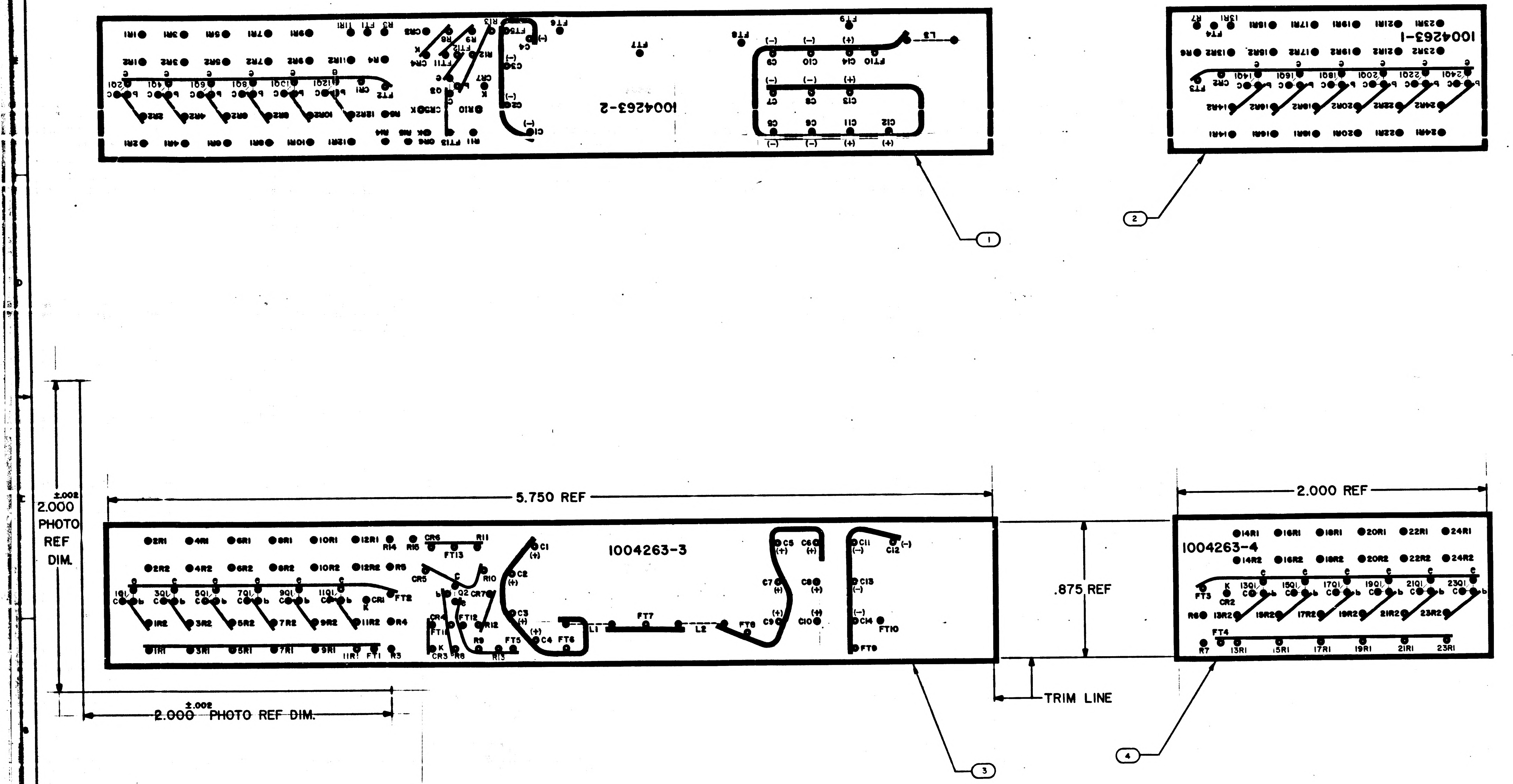
1004263-2
1004263-1
1004263-3
1004263-4
5.750 REF
2.000 REF
.875 REF
TRIM LINE
±.002
2.000
PHOTO
REF
DIM.
±.002
2.000 PHOTO REF DIM.
1
2
3
4
2R1 4R1 6R1 8R1 10R1 12R1 R14 R15
2R2 4R2 6R2 8R2 10R2 12R2 R5
1Q1 3Q1 5Q1 7Q1 9Q1 11Q1
c b
CR1 K FT2
1R2 3R2 5R2 7R2 9R2 11R2 R4
1R1 3R1 5R1 7R1 9R1 11R1 FT1 R3
CR6 FT13 R11
CR5 R10 Q2 CR7
CR4 FT11 FT12 R12
K CR3 R8 R9 R13 FT5
C1 (+) C2 (+) C3 (+) C4 (+) FT6
L1 FT7 L2 FT8
C5 (+) C6 (+) C7 (+) C8 (+) C9 (+) C10 (+)
C11 (−) C12 (−) C13 (−) C14 (−)
FT10 FT9
14R1 16R1 18R1 20R1 22R1 24R1
14R2 16R2 18R2 20R2 22R2 24R2
13Q1 15Q1 17Q1 19Q1 21Q1 23Q1
FT3 K CR2
R6 13R2 15R2 17R2 19R2 21R2 23R2
FT4
R7 13R1 15R1 17R1 19R1 21R1 23R1

NOTES

1. INTERPRET DRAWING IN ACCORDANCE WITH STANDARDS PRESCRIBED BY MIL-D-70327
2. ORIGINAL OF THIS DRAWING OR REPRODUCTION MADE BY PROCESS OR METHOD SHALL INSURE DIMENSIONAL STABILITY. DIMENSIONAL STABILITY SHALL NOT EXCEED .001 INCH PER INCH
3. CUT TO WITHIN .010 OF TRIMLINE
4. MAKE MASTER PATTERN POSITIVE FILM TO DIMENSIONS SHOWN
5. MATERIAL: FILM .006/.008 PER L-F-340, TYPE 3B, CLASS 2, STYLE 1A
6. ● .046/.050 DIA PUNCH ALL HOLES

MASTER

QTY REQD	PART OR IDENTIFYING NO.	NOMENCLATURE OR DESCRIPTION	FIND NO.
1	1004263-4	INSULATOR	4
1	1004263-3	INSULATOR	3
1	1004263-2	INSULATOR	2
1	1004263-1	INSULATOR	1

LIST OF MATERIALS

NEXT ASSY	USED ON
1003173	

APPLICATION

UNLESS OTHERWISE SPECIFIED DIMENSIONS ARE IN INCHES
TOLERANCES ON
FRACTIONS ± — DECIMALS ± — ANGLES ± —
DO NOT SCALE THIS DRAWING
MATERIAL: SEE NOTE 5
HEAT TREATMENT: —
FINAL FINISH: —

MIT INSTRUMENTATION LAB
CAMBRIDGE, MASS.
DWG. NO. — CONTRACT

DRAWN Sal Pomeroy DATE 18 Sept 63
CHECKED 18 Sept 63
APPROVAL 19 SEP 63
APPROVAL
NASA APPROVAL 9-19-63
MIT APPROVAL

MANNED SPACECRAFT CENTER
HOUSTON, TEXAS

INSULATOR
PHOTOGRAPHIC MASTER
DRIVER SERVICE MODULE

CODE IDENT NO. — SIZE E — NASA DRAWING NO. 1004263
SCALE 4/1 — WT — SHEET 1 OF 1

INCHES
PHOTOGRAPHIC SCALE ONLY

NOTICE — WHEN GOVERNMENT DRAWINGS, SPECIFICATIONS, OR OTHER DATA ARE USED FOR ANY PURPOSE OTHER THAN IN CONNECTION WITH A DEFINITELY RELATED GOVERNMENT PROCUREMENT OPERATION, THE UNITED STATES GOVERNMENT THEREBY INCURS NO RESPONSIBILITY NOR ANY OBLIGATION WHATSOEVER; AND THE FACT THAT THE GOVERNMENT MAY HAVE FORMULATED, FURNISHED, OR IN ANY WAY SUPPLIED THE SAID DRAWINGS, SPECIFICATIONS OR OTHER DATA IS NOT TO BE REGARDED BY IMPLICATION OR OTHERWISE AS IN ANY MANNER LICENSING THE HOLDER OR ANY OTHER PERSON OR CORPORATION, OR CONVEYING ANY RIGHTS OR PERMISSION TO MANUFACTURE, USE, OR SELL ANY PATENTED INVENTION THAT MAY IN ANY WAY BE RELATED THERETO.

SYM	DESCRIPTION	DATE	APPROVAL
A	REVISED PER TDRR 04928	31 MAR 64	

REVISIONS 04197

HOLE IDENT	X BASIC DIM.	Y BASIC DIM.	⌖ DIA	HOLE DIA	QTY
A1	.000	.000	.010	.100 .104	48
A2	.000	.280			
A3	.000	.410			
A4	.000	.545			
A5	.135	.480			
A6	.225	.385			
A7	.320	.560			
A8	.390	.285			
A9	.515	.320			
A10	.565	.450			
A11	.700	.000			
A12	.700	.280			
A13	.700	.410			
A14	.700	.545			
A15	.835	.480			
A16	.925	.385			
A17	1.020	.560			
A18	1.090	.285			
A19	1.215	.320			
A20	1.265	.450			
A21	1.400	.000			
A22	1.400	.280			
A23	1.400	.410			
A24	1.400	.545			
A25	1.535	.480			
A26	1.625	.385			
A27	1.720	.560			
A28	1.790	.285			
A29	1.915	.320			
A30	1.965	.450			
A31	2.310	.545			
A32	2.375	.000			
A33	2.375	.130			
A34	2.375	.765			
A35	2.485	.265			
A36	2.510	.000			
A37	2.505	.130			
A38	2.515	.765			
A39	2.555	.515			
A40	2.640	.000			
A41	2.660	.765			
A42	2.710	.570			
A43	2.910	.380			
A44	2.950	.255			
A45	2.950	.505			
A46	2.510	.390			
A47	2.380	.420			
A48	2.760	.190			
B1	.115	.315	.010	.081 .085	11
B2	.260	.270			
B3	.335	.440			
B4	.815	.315			
B5	.960	.270			
B6	1.035	.440			
B7	1.515	.315			
B8	1.660	.270			
B9	1.735	.440			
B10	2.280	.225			
B11	2.370	.295			

HOLE IDENT	X BASIC DIM	Y BASIC DIM	⌖ DIA	HOLE DIA	QTY
C1	.425	.390	.010	.023 .027	5
C2	1.125	.390			
C3	1.825	.390			
C4	2.980	.800			
C5	2.455	.495			
D1	.195	.030	.010	SEE DETAIL A	18
D2	.155	.685			
D3	.895	.080			
D4	.855	.685			
D5	1.595	.080			
D6	1.555	.685			
D7	.505	.110			
D8	.505	.685			
D9	1.205	.110			
D10	1.205	.685			
D11	1.905	.110			
D12	1.905	.685			
D13	2.190	.065			
D14	2.190	.385			
D15	2.190	.700			
D16	2.705	.375			
D17	2.845	.710			
D18	2.895	.055			
E1	2.640	.135	.010	.108 .112	2
E2	2.600	.645			
F1	2.440	.625	.010	.153 .157	1

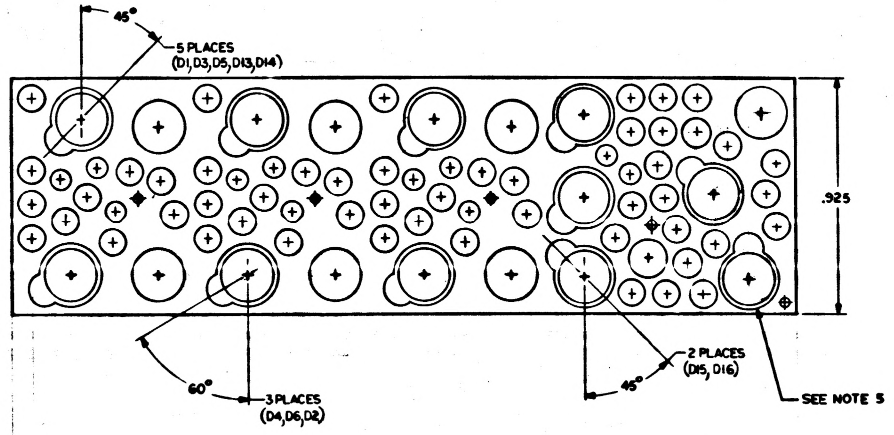

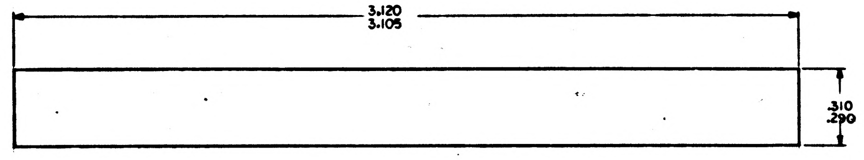

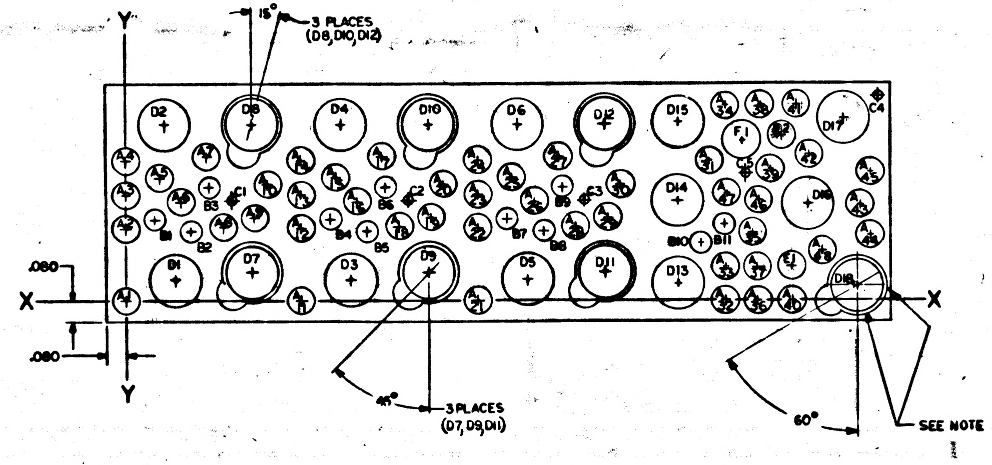

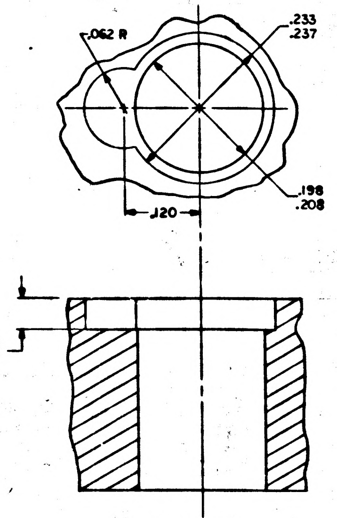

DETAIL A
SCALE 10/1
"D" HOLES, 18 PLACES
SEE TOP AND BOTTOM VIEWS FOR TAB ORIENTATION

NOTES
1. INTERPRET DRAWING IN ACCORDANCE WITH STANDARDS PRESCRIBED BY MIL-D-70327
2. MATERIAL: PLASTIC ACRYLIC PER MIL-P-5425, FINISH B ALT. MIL-P-8184 FINISH B
3. TRUE POSITIONING AS SHOWN IN CHART
4. BREAK ALL SHARP EDGES
5. BREAKOUT ALLOWED BETWEEN COUNTERBORE OF HOLES D17 AND D18 AND EDGE OF BLOCK

QTY REQD	PART OR IDENTIFYING NO.	NOMENCLATURE OR DESCRIPTION	FIND NO.

LIST OF MATERIALS

1003166		UNLESS OTHERWISE SPECIFIED DIMENSIONS ARE IN INCHES TOLERANCES ON FRACTIONS ± DECIMALS ±.005 ANGLES ±3° DO NOT SCALE THIS DRAWING	MIT INSTRUMENTATION LAB CAMBRIDGE, MASS	MANNED SPACECRAFT CENTER HOUSTON, TEXAS
NEXT ASSY	USED ON	MATERIAL SEE NOTE 2	DRAWN DATE 25 SEP 63 CHECKED C.P. Kingsbury APPROVAL 23 Oct 63 APPROVAL	HOLDER, COMPONENT STRAND GATE MODULE
APPLICATION		HEAT TREATMENT FINAL FINISH	NASA APPROVAL MIT APPROVAL	CODE IDENT NO. — SIZE E NASA DRAWING NO. 1004264 SCALE 4/1 WT SHEET 1 OF 1

1004264 A

NOTICE — WHEN GOVERNMENT DRAWINGS, SPECIFICATIONS, OR OTHER DATA ARE USED FOR ANY PURPOSE OTHER THAN IN CONNECTION WITH A DEFINITELY RELATED GOVERNMENT PROCUREMENT OPERATION, THE UNITED STATES GOVERNMENT THEREBY INCURS NO RESPONSIBILITY NOR ANY OBLIGATION WHATSOEVER, AND THE FACT THAT THE GOVERNMENT MAY HAVE FORMULATED, FURNISHED, OR IN ANY WAY SUPPLIED THE SAID DRAWINGS, SPECIFICATIONS OR OTHER DATA IS NOT TO BE REGARDED BY IMPLICATION OR OTHERWISE AS IN ANY MANNER LICENSING THE HOLDER OR ANY OTHER PERSON OR CORPORATION, OR CONVEYING ANY RIGHTS OR PERMISSION TO MANUFACTURE, USE, OR SELL ANY PATENTED INVENTION THAT MAY IN ANY WAY BE RELATED THERETO.

REVISIONS 04797			
SYM	DESCRIPTION	DATE	APPROVAL

HOLE IDENT	X BASIC DIM.	Y BASIC DIM.	⌖ DIA	HOLE DIA	QTY
A1	.000	.000	.006	.100 .104	48
A2	.000	.280			
A3	.000	.410			
A4	.000	.545			
A5	.135	.480			
A6	.225	.385			
A7	.320	.560			
A8	.390	.285			
A9	.515	.320			
A10	.565	.450			
A11	.700	.000			
A12	.700	.280			
A13	.700	.410			
A14	.700	.545			
A15	.835	.480			
A16	.925	.385			
A17	1.020	.560			
A18	1.090	.285			
A19	1.215	.320			
A20	1.265	.450			
A21	1.400	.000			
A22	1.400	.280			
A23	1.400	.410			
A24	1.400	.545			
A25	1.535	.480			
A26	1.625	.385			
A27	1.720	.560			
A28	1.790	.285			
A29	1.915	.320			
A30	1.965	.450			
A31	2.310	.545			
A32	2.375	.000			
A33	2.375	.130			
A34	2.375	.765			
A35	2.485	.265			
A36	2.510	.000			
A37	2.505	.130			
A38	2.515	.765			
A39	2.555	.515			
A40	2.640	.000			
A41	2.660	.765			
A42	2.710	.570			
A43	2.910	.380			
A44	2.950	.255			
A45	2.950	.505			
A46	2.510	.390			
A47	2.380	.420			
A48	2.760	.190			
B1	.115	.315	.006	.081 .085	11
B2	.260	.270			
B3	.335	.440			
B4	.815	.315			
B5	.960	.270			
B6	1.035	.440			
B7	1.515	.315			
B8	1.660	.270			
B9	1.735	.440			
B10	2.280	.225			
B11	2.370	.295			

HOLE IDENT	X BASIC DIM	Y BASIC DIM	⌖ DIA	HOLE DIA	QTY
C1	.425	.390	.006	.023 .027	5
C2	1.125	.390			
C3	1.825	.390			
C4	2.980	.800			
C5	2.455	.495			
D1	.195	.080	.006	SEE DETAIL A	18
D2	.155	.685			
D3	.895	.080			
D4	.855	.685			
D5	1.595	.080			
D6	1.555	.685			
D7	.505	.110			
D8	.505	.685			
D9	1.205	.110			
D10	1.205	.685			
D11	1.905	.110			
D12	1.905	.685			
D13	2.190	.065			
D14	2.190	.385			
D15	2.190	.700			
D16	2.705	.375			
D17	2.845	.710			
D18	2.895	.055			
E1	2.640	.135	.006	.108 .112	2
E2	2.600	.645			
F1	2.440	.625	.006	.153 .157	1

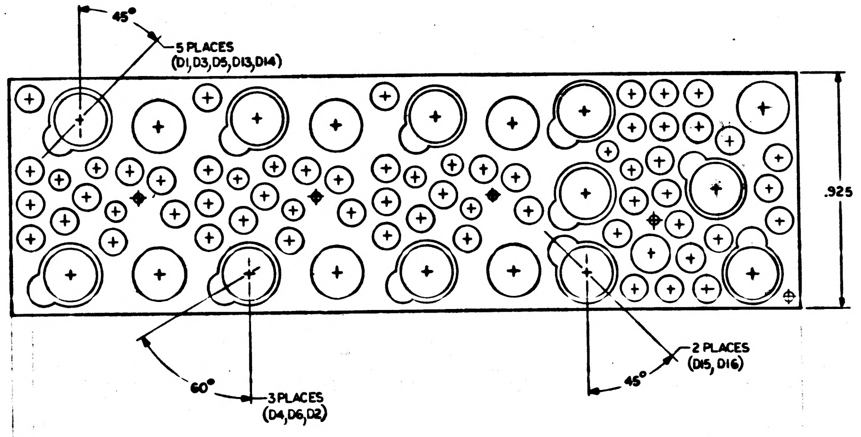

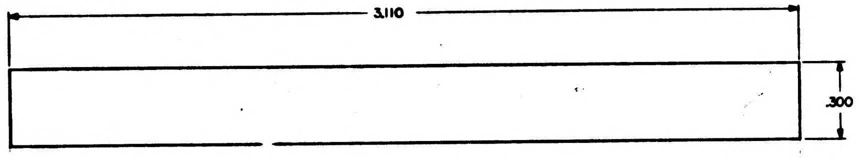

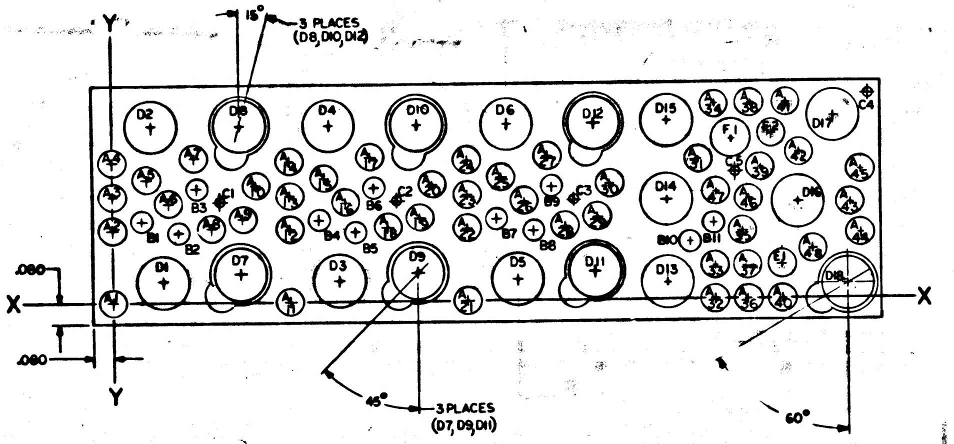

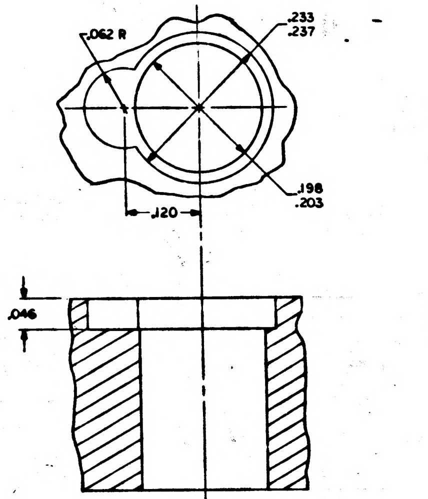

DETAIL A
SCALE 10/1
"D" HOLES, 18 PLACES
SEE TOP AND BOTTOM VIEWS FOR TAB ORIENTATION

NOTES

1. INTERPRET DRAWING IN ACCORDANCE WITH STANDARDS PRESCRIBED BY MIL-D-70327
2. MATERIAL: PLASTIC ACRYLIC PER MIL-P-5425, FINISH A
3. TRUE POSITIONING AS SHOWN IN CHART
4. BREAK ALL SHARP EDGES

1403158

QTY REQD	PART OR IDENTIFYING NO.	NOMENCLATURE OR DESCRIPTION	FIND NO.

LIST OF MATERIALS

1003166	
NEXT ASSY	USED ON
APPLICATION	

UNLESS OTHERWISE SPECIFIED
DIMENSIONS ARE IN INCHES
TOLERANCES ON
FRACTIONS ± DECIMALS ±.005 ANGLES ± 1°
DO NOT SCALE THIS DRAWING
MATERIAL SEE NOTE 2
HEAT TREATMENT
FINAL FINISH

MIT
INSTRUMENTATION LAB
CAMBRIDGE, MASS
DWG. NO. CONTRACT
DRAWN Tom [illegible] DATE 25 SEP 63
CHECKED C. P. [illegible]
APPROVAL [illegible] 23 Oct 63
APPROVAL
NASA APPROVAL W. J. [illegible]
MIT APPROVAL [illegible]

MANNED SPACECRAFT CENTER
HOUSTON, TEXAS

HOLDER, COMPONENT
STRAND GATE MODULE

CODE IDENT NO. SIZE E NASA DRAWING NO. 1004264
SCALE 4/1 WT SHEET 1 OF 1

NOTICE — WHEN GOVERNMENT DRAWINGS, SPECIFICATIONS, OR OTHER DATA ARE USED FOR ANY PURPOSE OTHER THAN IN CONNECTION WITH A DEFINITELY RELATED GOVERNMENT PROCUREMENT OPERATION, THE UNITED STATES GOVERNMENT THEREBY INCURS NO RESPONSIBILITY NOR ANY OBLIGATION WHATSOEVER, AND THE FACT THAT THE GOVERNMENT MAY HAVE FORMULATED, FURNISHED, OR IN ANY WAY SUPPLIED THE SAID DRAWINGS, SPECIFICATIONS OR OTHER DATA IS NOT TO BE REGARDED BY IMPLICATION OR OTHERWISE AS IN ANY MANNER LICENSING THE HOLDER OR ANY OTHER PERSON OR CORPORATION, OR CONVEYING ANY RIGHTS OR PERMISSION TO MANUFACTURE, USE, OR SELL ANY PATENTED INVENTION THAT MAY IN ANY WAY BE RELATED THERETO.

1004266

REVISIONS 04/47			
SYM	DESCRIPTION	DATE	APPROVAL

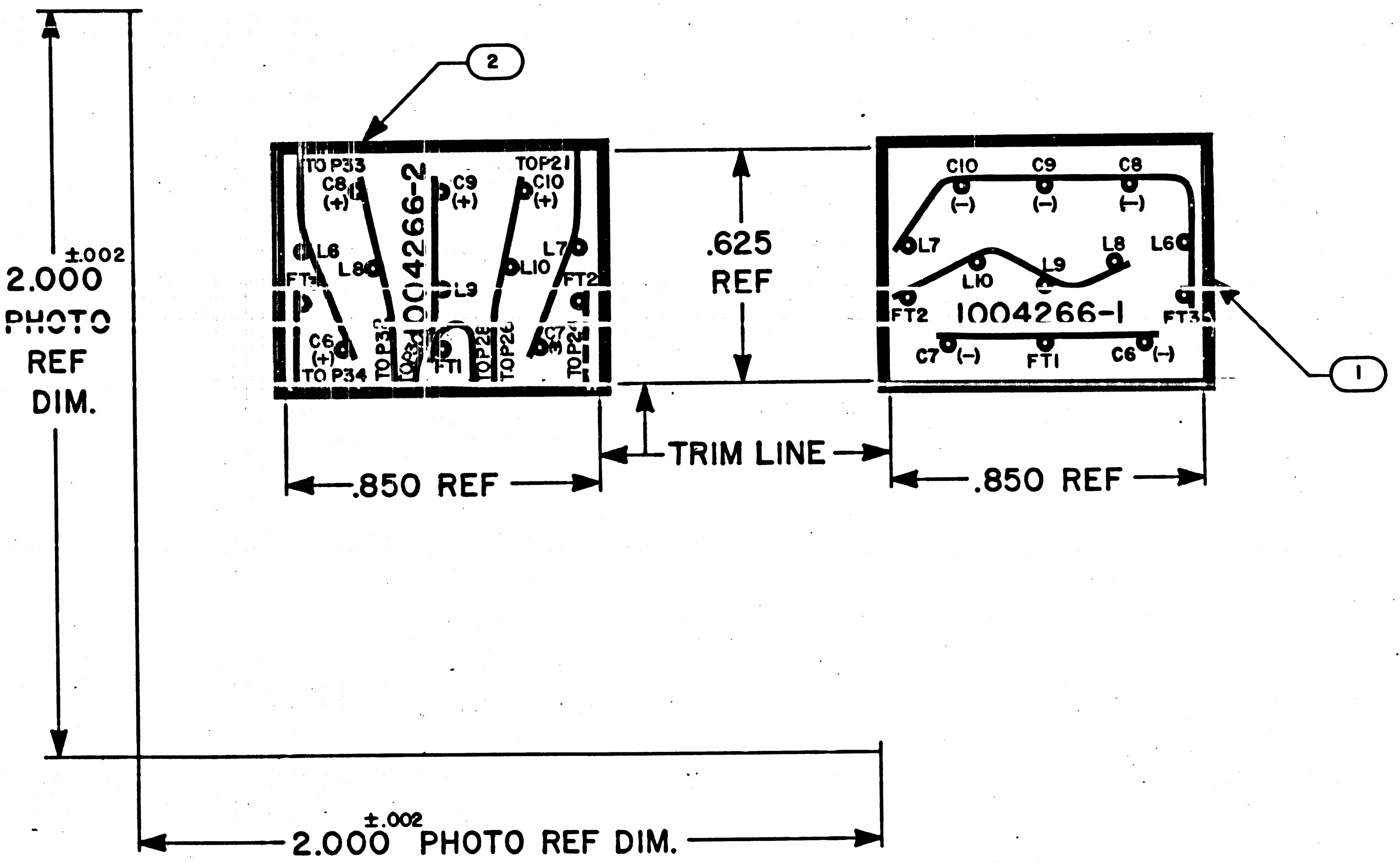
2
TO P33
C8 (+)
1004266-2
C9 (+)
TOP21
C10 (+)
L6
L8
L7
FT3
L9
L10
FT2
C6 (+)
TO P34
TOP32
TOP31
FT1
TOP28
TOP26
TOP24
C7
2.000 ±.002 PHOTO REF DIM.
.625 REF
C10 (–)
C9 (–)
C8 (–)
L7
L10
L9
L8
L6
FT2
1004266-1
FT3
C7 (–)
FT1
C6 (–)
1
.850 REF
TRIM LINE
.850 REF
2.000 ±.002 PHOTO REF DIM.

NOTES
1. INTERPRET DRAWING IN ACCORDANCE WITH STANDARDS PRESCRIBED BY MIL-D-70327
2. ORIGINAL OF THIS DRAWING OR REPRODUCTION MADE BY PROCESS OR METHOD SHALL INSURE DIMENSIONAL STABILITY. DIMENSIONAL STABILITY SHALL NOT EXCEED .001 INCH PER INCH
3. MATERIAL: FILM .006/.008 THICK PER L-F-340, TYPE IB, CLASS 2, STYLE IA
4. MAKE MASTER PATTERN POSITIVE FILMS TO DIMENSIONS SHOWN
5. CUT WITHIN .010 OF TRIM LINE
6. ● .045/.050 DIA PUNCH ALL HOLES

QTY REQD	PART OR IDENTIFYING NO.	NOMENCLATURE OR DESCRIPTION	FIND NO.
1	1004266-2	INSULATOR	2
1	1004266-1	INSULATOR	1

LIST OF MATERIALS

NEXT ASSY	USED ON
1003171	

APPLICATION

UNLESS OTHERWISE SPECIFIED DIMENSIONS ARE IN INCHES
TOLERANCES ON
FRACTIONS ± DECIMALS ± ANGLES ±
DO NOT SCALE THIS DRAWING
MATERIAL SEE NOTE 3
HEAT TREATMENT
FINAL FINISH

MIT
INSTRUMENTATION LAB
CAMBRIDGE, MASS.
DWG. NO. CONTRACT
DRAWN C.A. Fiesta DATE 9-9-63
CHECKED R.P. [illegible] 22 Oct 63
APPROVAL W.B. [illegible] 23 OCT 63
APPROVAL
NASA APPROVAL W. J. [illegible] 10/24/63
MIT APPROVAL [illegible] 24 Oct 63

MANNED SPACECRAFT CENTER
HOUSTON, TEXAS

INSULATOR
PHOTOGRAPHIC MASTER
STRAND GATE MODULE

CODE IDENT NO.
SIZE C
NASA DRAWING NO. 1004266
SCALE 4/1
WT
SHEET 1 OF 1

MASTER

INCHES
0 1 2
PHOTOGRAPHIC SCALE ONLY

1004266

NOTICE — WHEN GOVERNMENT DRAWINGS, SPECIFICATIONS, OR OTHER DATA ARE USED FOR ANY PURPOSE OTHER THAN IN CONNECTION WITH A DEFINITELY RELATED GOVERNMENT PROCUREMENT OPERATION, THE UNITED STATES GOVERNMENT THEREBY INCURS NO RESPONSIBILITY NOR ANY OBLIGATION WHATSOEVER; AND THE FACT THAT THE GOVERNMENT MAY HAVE FORMULATED, FURNISHED, OR IN ANY WAY SUPPLIED THE SAID DRAWINGS, SPECIFICATIONS OR OTHER DATA IS NOT TO BE REGARDED BY IMPLICATION OR OTHERWISE AS IN ANY MANNER LICENSING THE HOLDER OR ANY OTHER PERSON OR CORPORATION, OR CONVEYING ANY RIGHTS OR PERMISSION TO MANUFACTURE, USE, OR SELL ANY PATENTED INVENTION THAT MAY IN ANY WAY BE RELATED THERETO.

1004267 A

REVISIONS 04147

SYM	DESCRIPTION	DATE	APPROVAL
A	REVISED PER TDRR 04941	11-19-63	

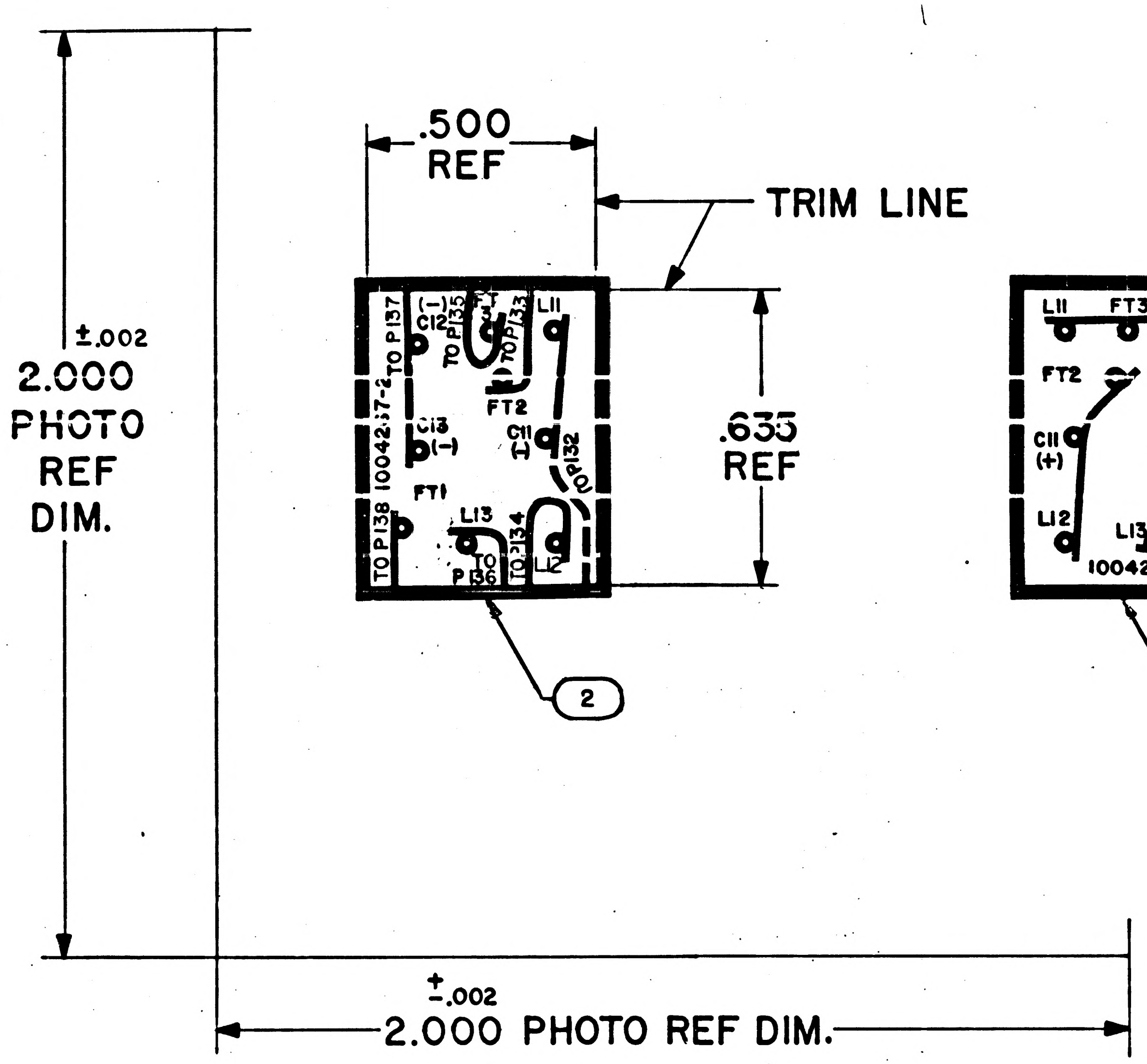

NOTES:

1. INTERPRET DRAWING IN ACCORDANCE WITH STANDARDS PRESCRIBED BY MIL-D-70327
2. ORIGINAL OF THIS DRAWING OR REPRODUCTION MADE BY PROCESS OR METHOD SHALL INSURE DIMENSIONAL STABILITY. DIMENSIONAL STABILITY SHALL NOT EXCEED .001 INCH PER INCH
3. CUT TO WITHIN .010 OF TRIMLINE
4. MAKE MASTER PATTERN POSITIVE FILMS TO DIMENSIONS SHOWN
5. MATERIAL: FILM .006/.008 THICK PER L-F-340, TYPE IB, CLASS 2, STYLE IA
6. ● .045/.050 DIA PUNCH ALL HOLES

QTY REQD	PART OR IDENTIFYING NO.	NOMENCLATURE OR DESCRIPTION	FIND NO.
1	1004267-2	INSULATOR	2
1	1004267-1	INSULATOR	1

LIST OF MATERIALS

NEXT ASSY	USED ON
1003172	

APPLICATION

UNLESS OTHERWISE SPECIFIED DIMENSIONS ARE IN INCHES
TOLERANCES ON
FRACTIONS ± DECIMALS ± ANGLES ±
DO NOT SCALE THIS DRAWING
MATERIAL SEE NOTE 5
HEAT TREATMENT
FINAL FINISH

MIT
INSTRUMENTATION LAB
CAMBRIDGE, MASS.
DWG. NO. CONTRACT
DRAWN N. Horgan DATE 9-6-63
CHECKED R.P. Kingsbury 22 OCT 63
APPROVAL W B Turner 23 OCT 63
APPROVAL
NASA APPROVAL 10/24/63
MIT APPROVAL

MANNED SPACECRAFT CENTER
HOUSTON, TEXAS

INSULATOR
PHOTOGRAPHIC MASTER
STRAND GATE MODULE, B31

CODE IDENT NO.	SIZE	NASA DRAWING NO.
—	C	1004267

SCALE 4/1 WT SHEET 1 OF 1

INCHES
0 1 2
PHOTOGRAPHIC SCALE ONLY

NOTICE — WHEN GOVERNMENT DRAWINGS, SPECIFICATIONS, OR OTHER DATA ARE USED FOR ANY PURPOSE OTHER THAN IN CONNECTION WITH A DEFINITELY RELATED GOVERNMENT PROCUREMENT OPERATION, THE UNITED STATES GOVERNMENT THEREBY INCURS NO RESPONSIBILITY NOR ANY OBLIGATION WHATSOEVER; AND THE FACT THAT THE GOVERNMENT MAY HAVE FORMULATED, FURNISHED, OR IN ANY WAY SUPPLIED THE SAID DRAWINGS, SPECIFICATIONS OR OTHER DATA IS NOT TO BE REGARDED BY IMPLICATION OR OTHERWISE AS IN ANY MANNER LICENSING THE HOLDER OR ANY OTHER PERSON OR CORPORATION, OR CONVEYING ANY RIGHTS OR PERMISSION TO MANUFACTURE, USE, OR SELL ANY PATENTED INVENTION THAT MAY IN ANY WAY BE RELATED THERETO.

1004267 B

REVISIONS 04147

SYM	DESCRIPTION	DATE	APPROVAL
A	REVISED PER TDRR 04741	11-19-63	
B	REVISED PER TDRR 06430	2/18/64	

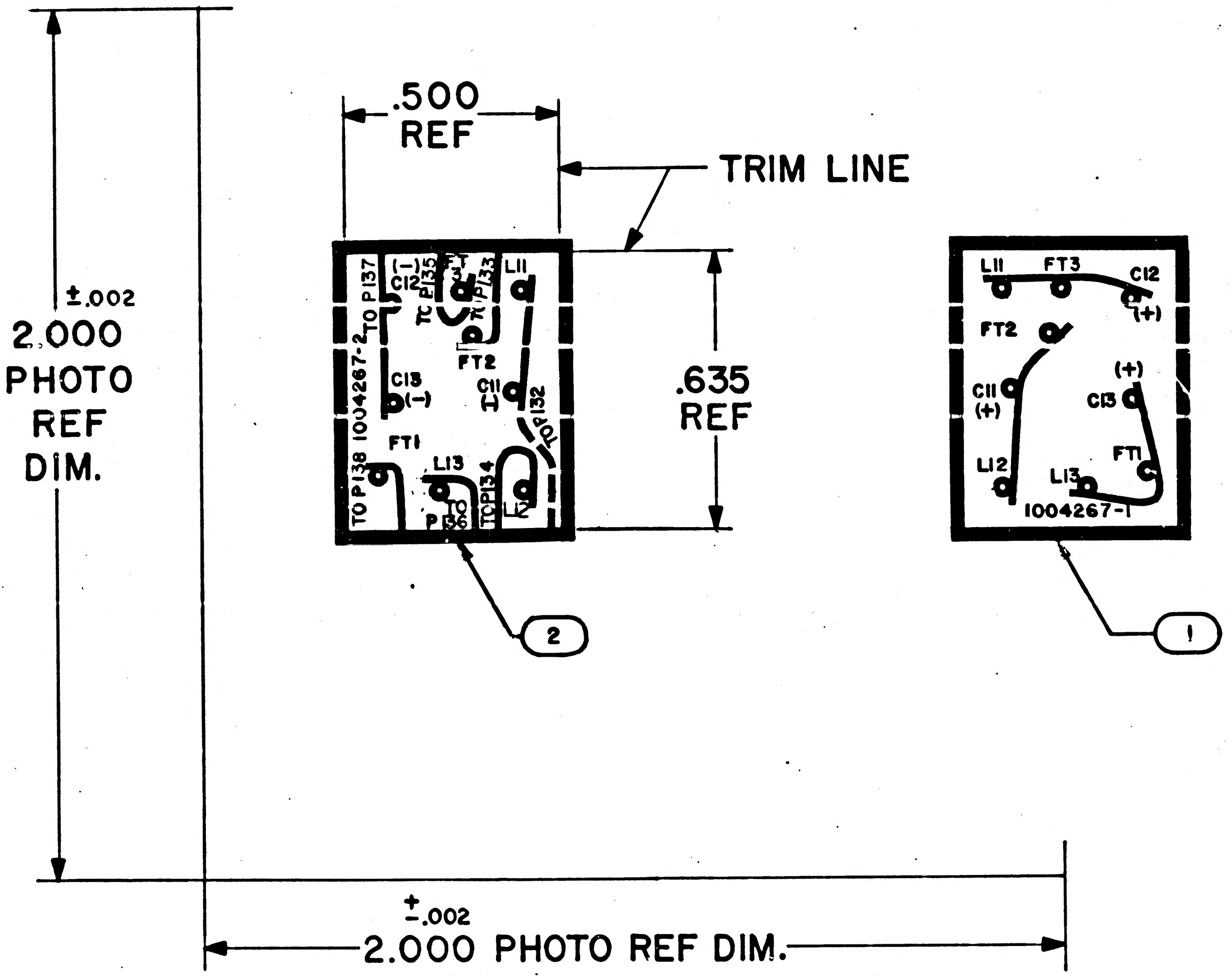

NOTES:

1. INTERPRET DRAWING IN ACCORDANCE WITH STANDARDS PRESCRIBED BY MIL-D-70327
2. ORIGINAL OF THIS DRAWING OR REPRODUCTION MADE BY PROCESS OR METHOD SHALL INSURE DIMENSIONAL STABILITY. DIMENSIONAL STABILITY SHALL NOT EXCEED .001 INCH PER INCH
3. CUT TO WITHIN .010 OF TRIMLINE
4. MAKE MASTER PATTERN POSITIVE FILMS TO DIMENSIONS SHOWN
5. MATERIAL: FILM .006/.008 THICK PER L-F-340, TYPE IB, CLASS 2, STYLE IA
6. ● .045/.050 DIA PUNCH ALL HOLES

QTY REQD	PART OR IDENTIFYING NO.	NOMENCLATURE OR DESCRIPTION	FIND NO.
1	1004267-2	INSULATOR	2
1	1004267-1	INSULATOR	1

LIST OF MATERIALS

NEXT ASSY	USED ON
1003172	

APPLICATION

UNLESS OTHERWISE SPECIFIED
DIMENSIONS ARE IN INCHES
TOLERANCES ON
FRACTIONS ± DECIMALS ± ANGLES ±
DO NOT SCALE THIS DRAWING

MATERIAL
SEE NOTE 5

HEAT TREATMENT

FINAL FINISH

MIT
INSTRUMENTATION LAB
CAMBRIDGE, MASS.
DWG. NO. CONTRACT

DRAWN W. Horgan DATE 9-6-63
CHECKED R. P. Kingsbury 22 Oct 63
APPROVAL W B Turner 23 Oct 63
APPROVAL
NASA APPROVAL 10/24/63
MIT APPROVAL 24 Oct 63

MANNED SPACECRAFT CENTER
HOUSTON, TEXAS

INSULATOR
PHOTOGRAPHIC MASTER
STRAND GATE MODULE, B31

CODE IDENT NO.	SIZE	NASA DRAWING NO.
—	C	1004267

SCALE 4/1 WT SHEET 1 OF 1

MASTER

INCHES
0 1 2
PHOTOGRAPHIC SCALE ONLY

1004267

REVISIONS 04147			
SYM	DESCRIPTION	DATE	APPROVAL

NOTICE — WHEN GOVERNMENT DRAWINGS, SPECIFICATIONS, OR OTHER DATA ARE USED FOR ANY PURPOSE OTHER THAN IN CONNECTION WITH A DEFINITELY RELATED GOVERNMENT PROCUREMENT OPERATION, THE UNITED STATES GOVERNMENT THEREBY INCURS NO RESPONSIBILITY NOR ANY OBLIGATION WHATSOEVER; AND THE FACT THAT THE GOVERNMENT MAY HAVE FORMULATED, FURNISHED, OR IN ANY WAY SUPPLIED THE SAID DRAWINGS, SPECIFICATIONS OR OTHER DATA IS NOT TO BE REGARDED BY IMPLICATION OR OTHERWISE AS IN ANY MANNER LICENSING THE HOLDER OR ANY OTHER PERSON OR CORPORATION, OR CONVEYING ANY RIGHTS OR PERMISSION TO MANUFACTURE, USE, OR SELL ANY PATENTED INVENTION THAT MAY IN ANY WAY BE RELATED THERETO.

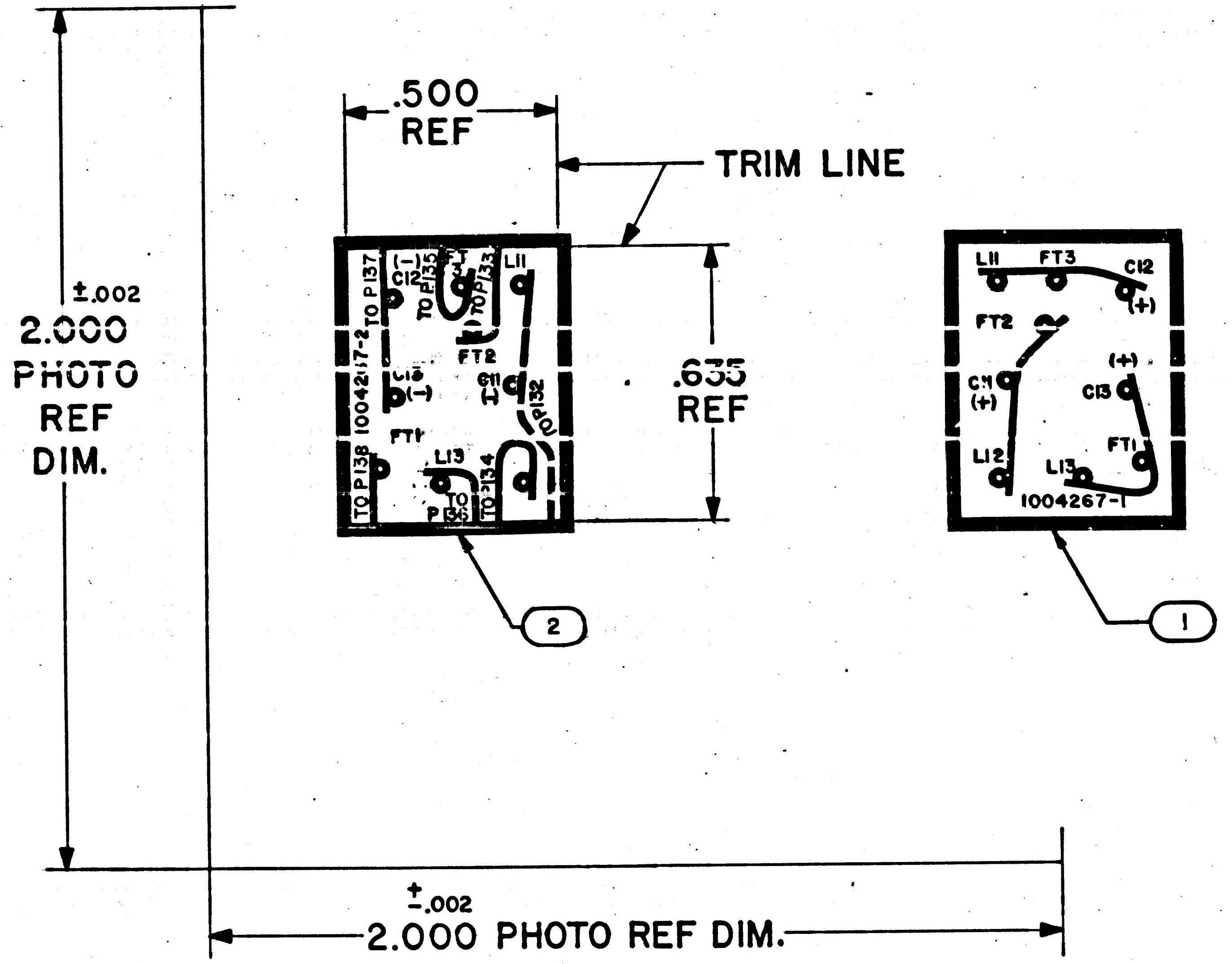

NOTES:

1. INTERPRET DRAWING IN ACCORDANCE WITH STANDARDS PRESCRIBED BY MIL-D-70327
2. ORIGINAL OF THIS DRAWING OR REPRODUCTION MADE BY PROCESS OR METHOD SHALL INSURE DIMENSIONAL STABILITY. DIMENSIONAL STABILITY SHALL NOT EXCEED .001 INCH PER INCH
3. CUT TO WITHIN .010 OF TRIMLINE
4. MAKE MASTER PATTERN POSITIVE FILMS TO DIMENSIONS SHOWN
5. MATERIAL: FILM .006/.008 THICK PER L-F-340, TYPE IB, CLASS 2, STYLE IA
6. ◎ .045/.050 DIA PUNCH ALL HOLES

1	1004267-2	INSULATOR	2
1	1004267-1	INSULATOR	1
QTY REQD	PART OR IDENTIFYING NO.	NOMENCLATURE OR DESCRIPTION	FIND NO.
LIST OF MATERIALS			

1003172	
NEXT ASSY	USED ON
APPLICATION	

UNLESS OTHERWISE SPECIFIED
DIMENSIONS ARE IN INCHES
TOLERANCES ON
FRACTIONS ± DECIMALS ± ANGLES ±
DO NOT SCALE THIS DRAWING
MATERIAL SEE NOTE 5
HEAT TREATMENT
FINAL FINISH

MIT
INSTRUMENTATION LAB
CAMBRIDGE, MASS.
DWG. NO.
CONTRACT

DRAWN W. Horgan DATE 9-6-63
CHECKED R.P. Kingsbury 22 Oct 63
APPROVAL W.B. Turner 23 Oct 63
APPROVAL
NASA APPROVAL W.S. Dwight 10/24/63
MIT APPROVAL 24 Oct 63

MANNED SPACECRAFT CENTER
HOUSTON, TEXAS

INSULATOR PHOTOGRAPHIC MASTER
STRAND GATE MODULE

CODE IDENT NO.
SIZE C
NASA DRAWING NO. 1004267
SCALE 4/1
WT
SHEET 1 OF 1

MASTER

INCHES
0 1 2
PHOTOGRAPHIC SCALE ONLY

NOTICE — WHEN GOVERNMENT DRAWINGS, SPECIFICATIONS, OR OTHER DATA ARE USED FOR ANY PURPOSE OTHER THAN IN CONNECTION WITH A DEFINITELY RELATED GOVERNMENT PROCUREMENT OPERATION, THE UNITED STATES GOVERNMENT THEREBY INCURS NO RESPONSIBILITY NOR ANY OBLIGATION WHATSOEVER, AND THE FACT THAT THE GOVERNMENT MAY HAVE FORMULATED, FURNISHED, OR IN ANY WAY SUPPLIED THE SAID DRAWINGS, SPECIFICATIONS OR OTHER DATA IS NOT TO BE REGARDED BY IMPLICATION OR OTHERWISE AS IN ANY MANNER LICENSING THE HOLDER OR ANY OTHER PERSON OR CORPORATION, OR CONVEYING ANY RIGHTS OR PERMISSION TO MANUFACTURE, USE, OR SELL ANY PATENTED INVENTION THAT MAY IN ANY WAY BE RELATED THERETO.

REVISIONS 04147

SYM	DESCRIPTION	DATE	APPROVAL
A	REVISED PER TDRR 07269 DR D.A. Clermont CHK aw	3/27/64	

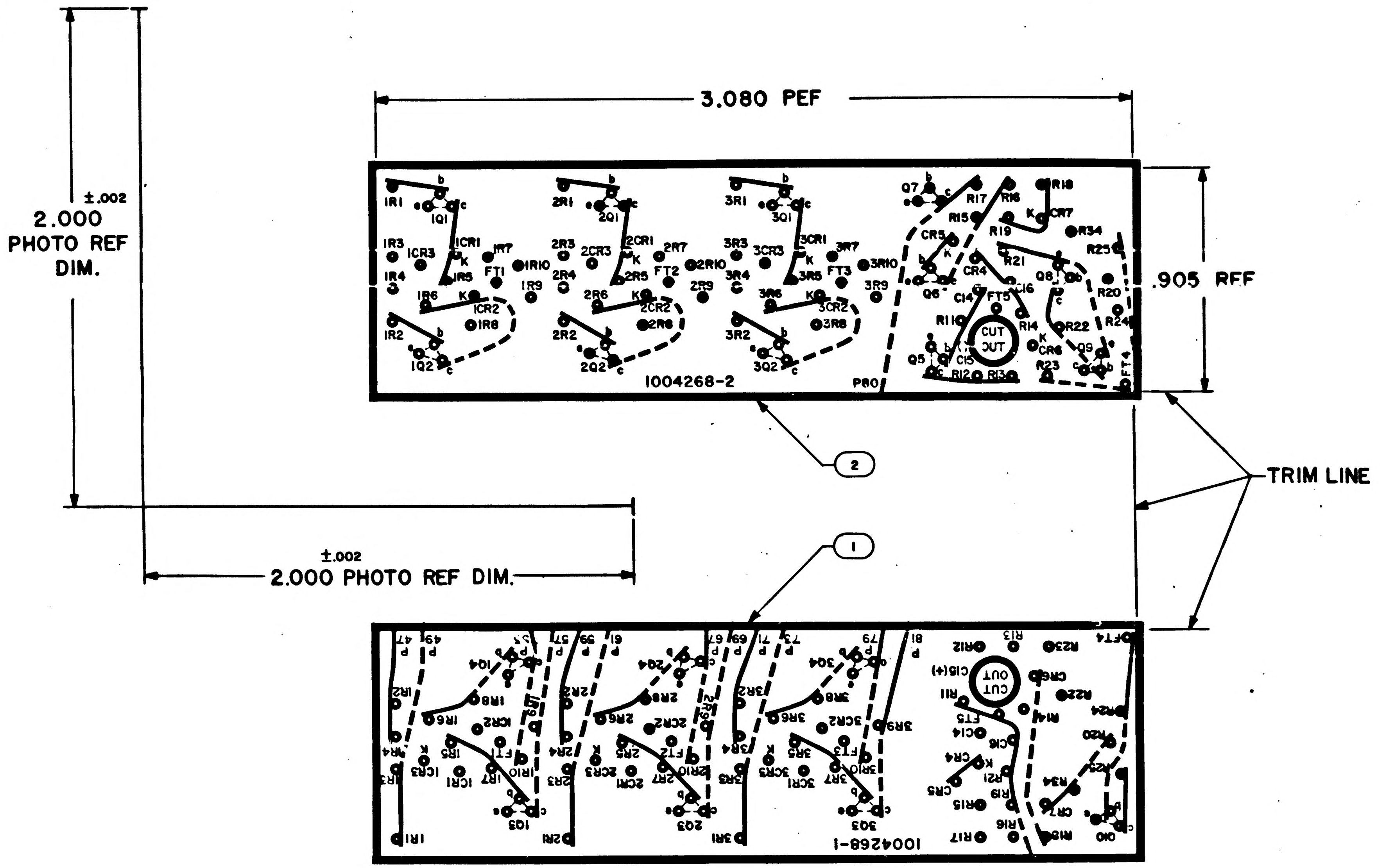
3.080 PEF
.905 REF
±.002
2.000
PHOTO REF
DIM.
±.002
2.000 PHOTO REF DIM.
TRIM LINE
1004268-2
1004268-1
2
1
CUT OUT
P80
IR1
IQ1
IR3
ICR3
ICR1
IR7
IR4
IR5
FT1
IR10
IR9
IR6
ICR2
IR8
IR2
IQ2
2R1
2Q1
2R3
2CR3
2CR1
2R7
2R4
2R5
FT2
2R10
2R9
2R6
2CR2
2R8
2R2
2Q2
3R1
3Q1
3R3
3CR3
3CR1
3R7
3R4
3R5
FT3
3R10
3R9
3R6
3CR2
3R8
3R2
3Q2
Q7
R17
R16
R18
R15
CR7
R19
R34
CR5
R25
R21
CR4
Q8
Q6
C14
FT5
C16
R20
R11
R14
R22
R24
CR6
Q5
C15
R23
Q9
R12
R13
FT4
b
c
e
K

NOTES:

1. INTERPRET DRAWING IN ACCORDANCE WITH STANDARDS PRESCRIBED BY MIL-D-70327
2. MATL: FILM .006/.008 THICK PER L-F-340, TYPE IB, CLASS 2, STYLE IA
3. ORIGINAL OF THIS DRAWING OR REPRODUCTION MADE BY PROCESS OR METHOD SHALL INSURE DIMENSIONAL STABILITY. DIMENSIONAL STABILITY SHALL NOT EXCEED .001 INCH PER INCH
4. MAKE MASTER PATTERN POSITIVE FILMS TO DIMENSIONS SHOWN
5. CUT WITHIN .010 OF TRIM LINE
6. ● .045/.050 DIA PUNCH ALL HOLES

QTY REQD	PART OR IDENTIFYING NO.	NOMENCLATURE OR DESCRIPTION	FIND NO.
1	1004268-2	INSULATOR	2
1	1004268-1	INSULATOR	1

LIST OF MATERIALS

NEXT ASSY	USED ON
1003166	

APPLICATION

UNLESS OTHERWISE SPECIFIED DIMENSIONS ARE IN INCHES
TOLERANCES ON
FRACTIONS ± DECIMALS ± ANGLES ±
DO NOT SCALE THIS DRAWING
MATERIAL SEE NOTE 2
HEAT TREATMENT
FINAL FINISH

MIT INSTRUMENTATION LAB
CAMBRIDGE, MASS
DWG. NO. CONTRACT
DRAWN [illegible] DATE [illegible]
CHECKED R P Kingsbury 22 oct 63
APPROVAL [illegible] 23 oct 63
APPROVAL [illegible]
NASA APPROVAL [illegible]
MIT APPROVAL [illegible]

MANNED SPACECRAFT CENTER
HOUSTON, TEXAS

INSULATOR
PHOTOGRAPHIC MASTER
STRAND GATE MODULE

CODE IDENT NO. —
SIZE D
NASA DRAWING NO. 1004268
SCALE 4/1
WT
SHEET 1 OF 1

NOTICE — WHEN GOVERNMENT DRAWINGS, SPECIFICATIONS, OR OTHER DATA ARE USED FOR ANY PURPOSE OTHER THAN IN CONNECTION WITH A DEFINITELY RELATED GOVERNMENT PROCUREMENT OPERATION, THE UNITED STATES GOVERNMENT THEREBY INCURS NO RESPONSIBILITY NOR ANY OBLIGATION WHATSOEVER; AND THE FACT THAT THE GOVERNMENT MAY HAVE FORMULATED, FURNISHED, OR IN ANY WAY SUPPLIED THE SAID DRAWINGS, SPECIFICATIONS OR OTHER DATA IS NOT TO BE REGARDED BY IMPLICATION OR OTHERWISE AS IN ANY MANNER LICENSING THE HOLDER OR ANY OTHER PERSON OR CORPORATION, OR CONVEYING ANY RIGHTS OR PERMISSION TO MANUFACTURE, USE, OR SELL ANY PATENTED INVENTION THAT MAY IN ANY WAY BE RELATED THERETO.

REVISIONS 04147			
SYM	DESCRIPTION	DATE	APPROVAL

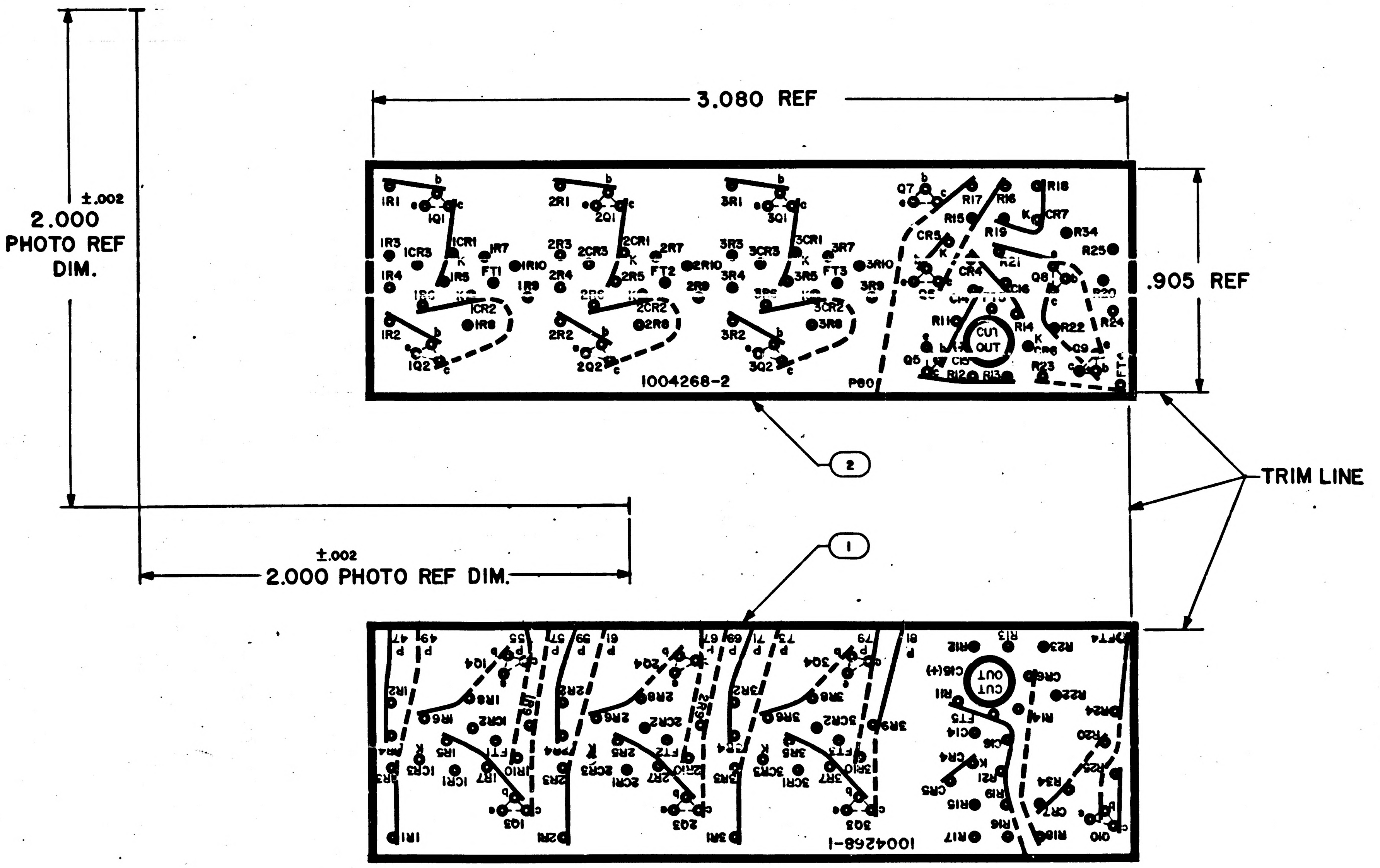
3.080 REF
.905 REF
±.002
2.000
PHOTO REF
DIM.
±.002
2.000 PHOTO REF DIM.
TRIM LINE
2
1
1004268-2
1004268-1
CUT OUT
CUT OUT C16(+)
IR1
IQ1
IR3
ICR3
ICR1
IR7
IR4
IR5
FT1
IR10
IR9
ICR2
IR8
IR2
IQ2
2R1
2Q1
2R3
2CR3
2CR1
2R7
2R4
2R5
FT2
2R10
2R9
2CR2
2R8
2R2
2Q2
3R1
3Q1
3R3
3CR3
3CR1
3R7
3R4
3R5
FT3
3R10
3R9
3CR2
3R8
3R2
3Q2
Q7
R17
R16
R18
CR7
R15
R19
R34
CR5
R25
R21
CR4
Q8
R20
R24
R11
R14
R22
CR6
C9
Q5
C15
R12
R13
R23
FT4
P80

NOTES:
1. INTERPRET DRAWING IN ACCORDANCE WITH STANDARDS PRESCRIBED BY MIL-D-70327
2. MATL: FILM .006/.008 THICK PER L-F-340, TYPE IB, CLASS 2, STYLE IA
3. ORIGINAL OF THIS DRAWING OR REPRODUCTION MADE BY PROCESS OR METHOD SHALL INSURE DIMENSIONAL STABILITY. DIMENSIONAL STABILITY SHALL NOT EXCEED .001 INCH PER INCH
4. MAKE MASTER PATTERN POSITIVE FILMS TO DIMENSIONS SHOWN
5. CUT WITHIN .010 OF TRIM LINE
6. ● .045/.050 DIA PUNCH ALL HOLES

QTY REQD	PART OR IDENTIFYING NO.	NOMENCLATURE OR DESCRIPTION	FIND NO.
1	1004268-2	INSULATOR	2
1	1004268-1	INSULATOR	1

LIST OF MATERIALS

NEXT ASSY	USED ON
1003166	

APPLICATION

UNLESS OTHERWISE SPECIFIED DIMENSIONS ARE IN INCHES
TOLERANCES ON
FRACTIONS ± DECIMALS ± ANGLES ±
DO NOT SCALE THIS DRAWING
MATERIAL SEE NOTE 2
HEAT TREATMENT
FINAL FINISH

MIT
INSTRUMENTATION LAB
CAMBRIDGE, MASS.
DWG. NO. CONTRACT
DRAWN D. L. Gilson DATE 10/18/63
CHECKED L. P. Kingsbury 22 Oct 63
APPROVAL W. D. Turner 23 Oct 63
APPROVAL
NASA APPROVAL 1/12/64
MIT APPROVAL 24 Oct 63

MANNED SPACECRAFT CENTER
HOUSTON, TEXAS

INSULATOR
PHOTOGRAPHIC MASTER
STRAND GATE MODULE

CODE IDENT NO. | SIZE D | NASA DRAWING NO. 1004268
SCALE 4/1 | WT | SHEET 1 OF 1

MASTER

INCHES
0 1 2
PHOTOGRAPHIC SCALE ONLY

1004268

REVISIONS 03449			
SYM	DESCRIPTION	DATE	APPROVAL
A	REVISED PER TDRR 04167	10-24-63	

1004269 A

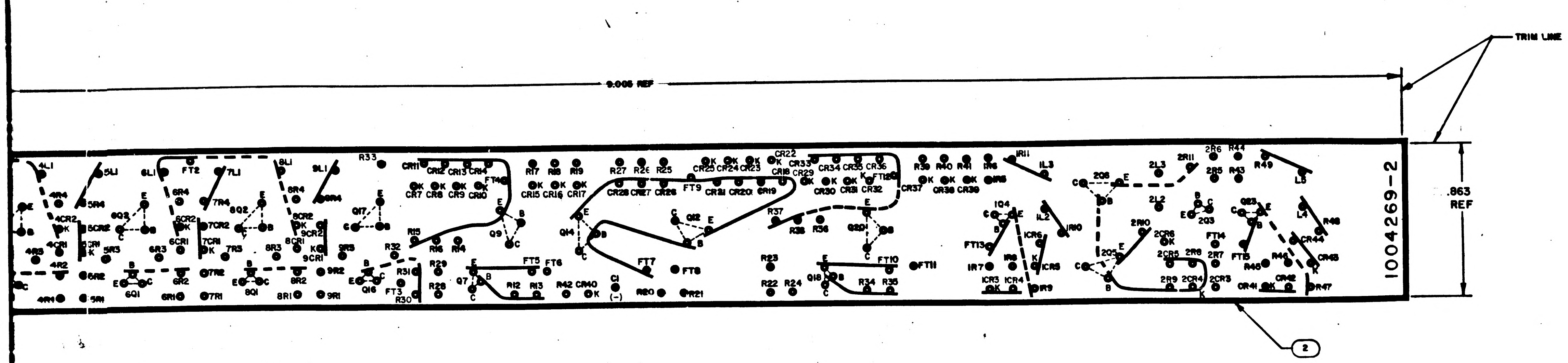

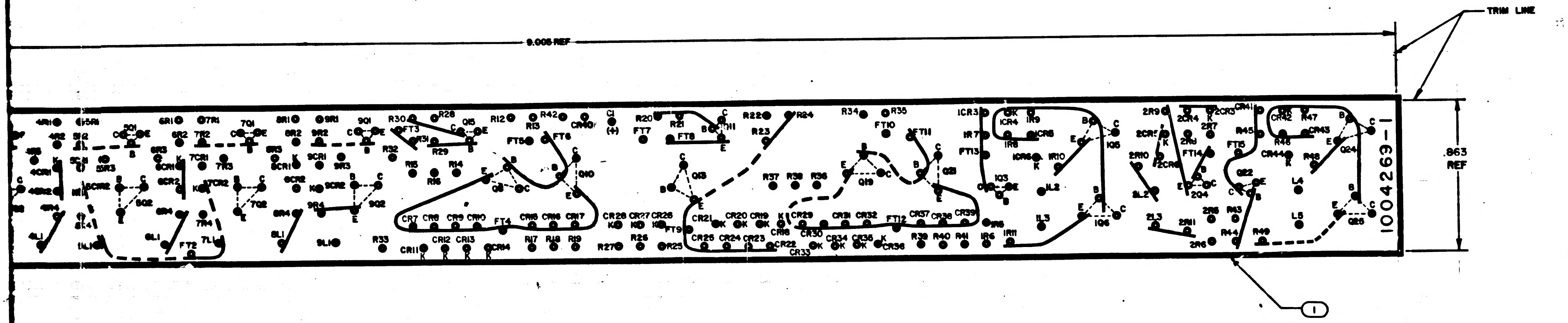

MASTER

QTY REQD	PART OR IDENTIFYING NO.	NOMENCLATURE OR DESCRIPTION	FIND NO.
1	1004269-2	INSULATOR	2
1	1004269-1	INSULATOR	1

LIST OF MATERIALS

1003178		
NEXT ASSY	USED ON	
APPLICATION		

UNLESS OTHERWISE SPECIFIED
DIMENSIONS ARE IN INCHES
TOLERANCES ON
FRACTIONS ± DECIMALS ± ANGLES ±
DO NOT SCALE THIS DRAWING
MATERIAL SEE NOTE 3
HEAT TREATMENT
FINAL FINISH

MIT INSTRUMENTATION LAB
CAMBRIDGE, MASS
DRAWN R. Machado DATE 9-9-63
CHECKED R.P. Kingsbury 30 Sep 63
APPROVAL W.B. Tyrrell 2 Oct 63
APPROVAL
NASA APPROVAL W.J. Rhine 10-7-63
MIT APPROVAL 3 Oct 63

MANNED SPACECRAFT CENTER
HOUSTON, TEXAS

INSULATOR PHOTOGRAPHIC MASTER
ROPE DRIVER

CODE IDENT NO.	SIZE	NASA DRAWING NO.
—	J	1004269

SCALE 4/1 WT SHEET 1 OF 1

1004269 A

INCHES
0 1
PHOTOGRAPHIC SCALE ONLY

NOTICE — WHEN GOVERNMENT DRAWINGS, SPECIFICATIONS, OR OTHER DATA ARE USED FOR ANY PURPOSE OTHER THAN IN CONNECTION WITH A DEFINITELY RELATED GOVERNMENT PROCUREMENT OPERATION, THE UNITED STATES GOVERNMENT THEREBY INCURS NO RESPONSIBILITY NOR ANY OBLIGATION WHATSOEVER AND THE FACT THAT THE GOVERNMENT MAY HAVE FORMULATED, FURNISHED, OR IN ANY WAY SUPPLIED THE SAID DRAWINGS, SPECIFICATIONS OR OTHER DATA IS NOT TO BE REGARDED BY IMPLICATION OR OTHERWISE AS IN ANY MANNER LICENSING THE HOLDER OR ANY OTHER PERSON OR CORPORATION, OR CONVEYING ANY RIGHTS OR PERMISSION TO MANUFACTURE, USE, OR SELL ANY PATENTED INVENTION THAT MAY IN ANY WAY BE RELATED THERETO.

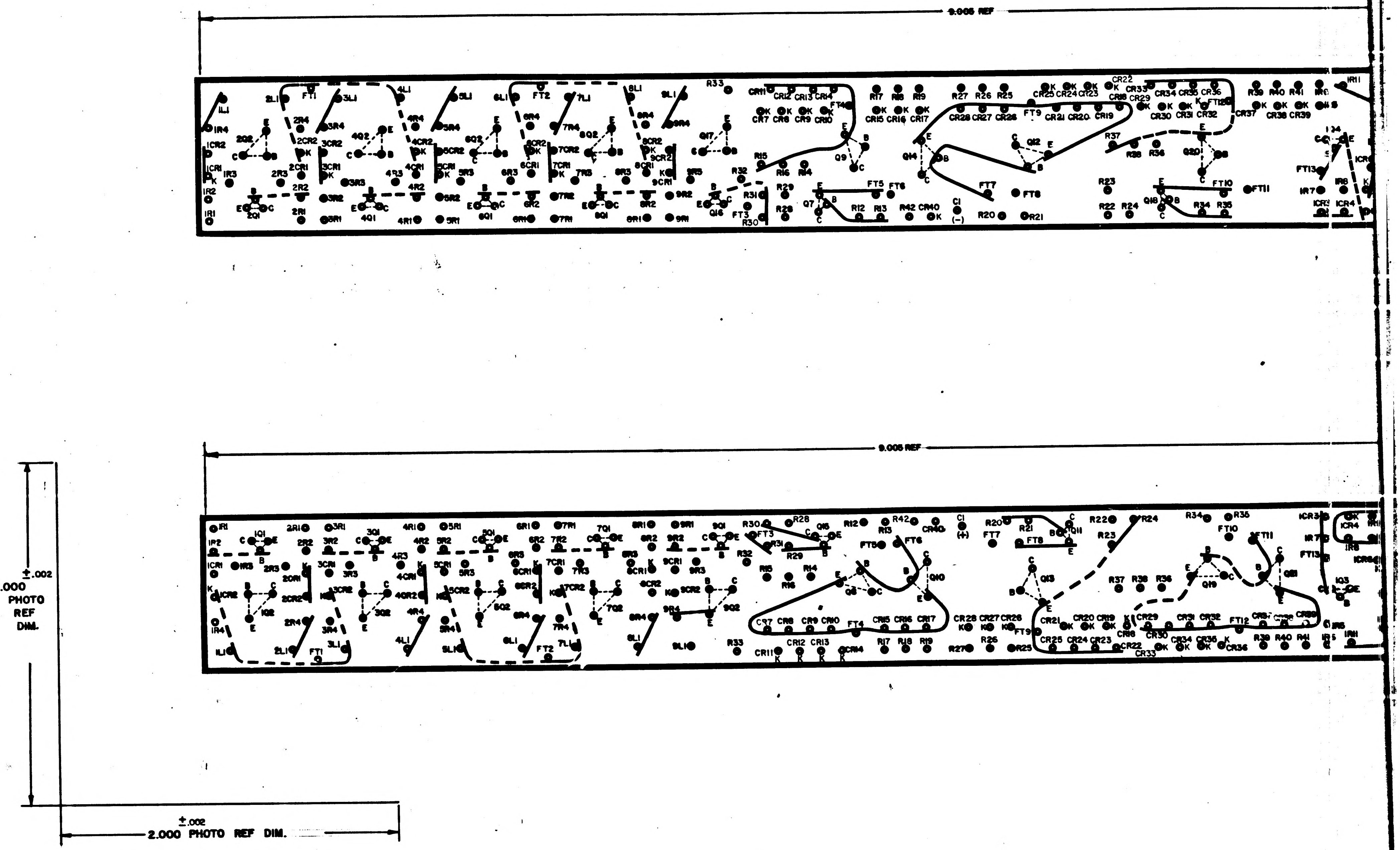

NOTES

1. INTERPRET DRAWING IN ACCORDANCE WITH STANDARDS PRESCRIBED BY MIL-D-70327
2. ORIGINAL OF THIS DRAWING OR REPRODUCTION MADE BY PROCESS OR METHOD SHALL INSURE DIMENSIONAL STABILITY, DIMENSIONAL STABILITY SHALL NOT EXCEED .001 INCH PER INCH
3. MATERIAL: FILM .006/.008 THICK PER L-F-340, TYPE IB, CLASS 2, STYLE IA
4. MAKE MASTER PATTERN POSITIVE FILMS TO DIMENSIONS SHOWN
5. CUT TO WITHIN .010 OF TRIM LINE
6. ● .046/.050 DIA PUNCH ALL HOLES

REVISIONS 0349			
SYM	DESCRIPTION	DATE	APPROVAL
A	REVISED PER TDRR 04167	10-24-63	
B	REVISED PER TDRR		

1004269 B

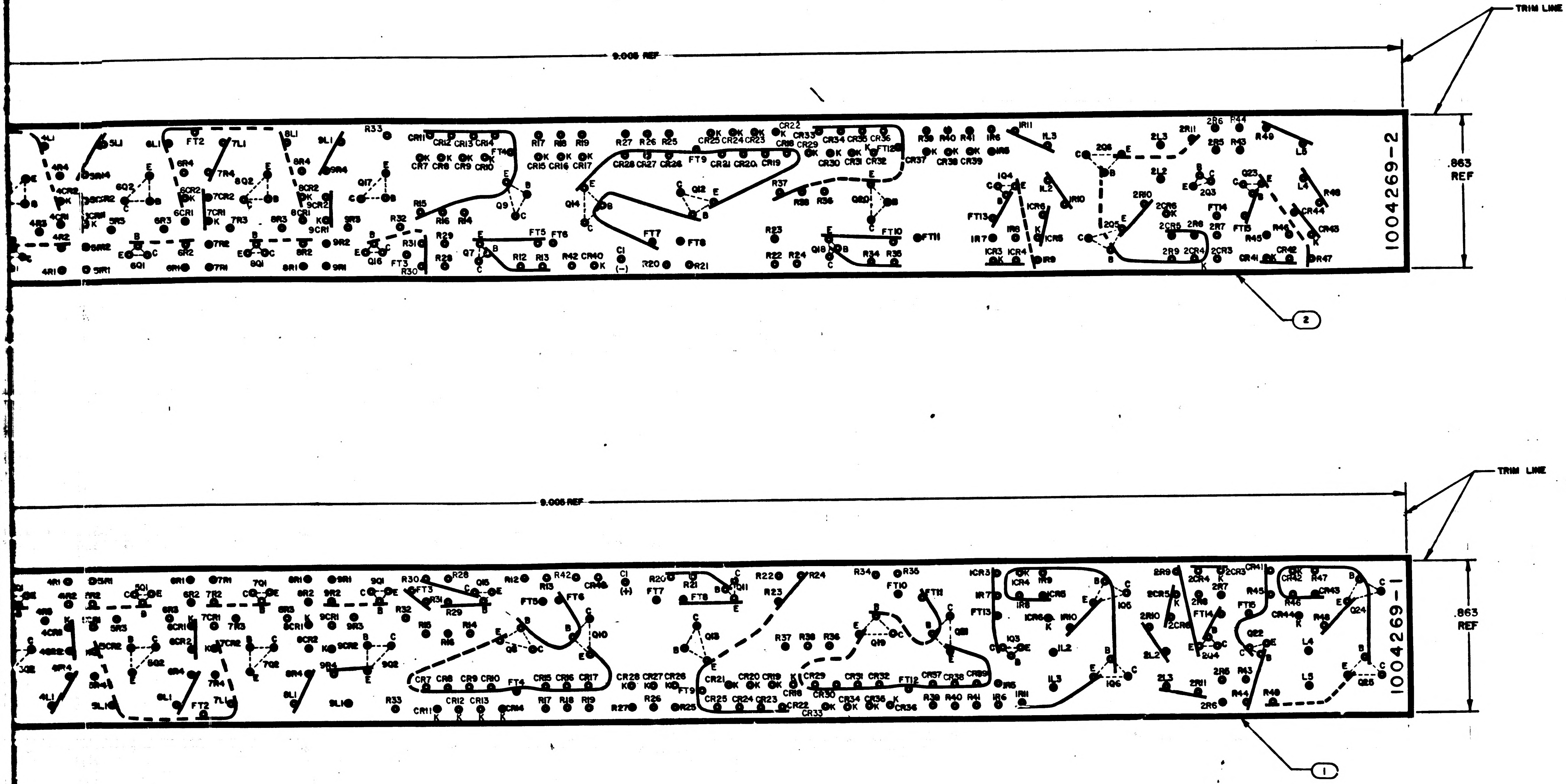

1	1004269-2	INSULATOR	2
1	1004269-1	INSULATOR	1
QTY REQD	PART OR IDENTIFYING NO.	NOMENCLATURE OR DESCRIPTION	FIND NO.

LIST OF MATERIALS

1003178	
NEXT ASSY	USED ON

APPLICATION

UNLESS OTHERWISE SPECIFIED
DIMENSIONS ARE IN INCHES
TOLERANCES ON
FRACTIONS ± DECIMALS ± ANGLES ±
DO NOT SCALE THIS DRAWING
MATERIAL
SEE NOTE 3
HEAT TREATMENT
FINAL FINISH

MIT
INSTRUMENTATION LAB
CAMBRIDGE, MASS
DRAWN L. Machado DATE 9-9-63
CHECKED 30 Sep 63
APPROVAL 2 Oct 63
APPROVAL
NASA APPROVAL 10-7-63
MIT APPROVAL 3 Oct 63

MANNED SPACECRAFT CENTER
HOUSTON, TEXAS

INSULATOR
PHOTOGRAPHIC MASTER
ROPE DRIVER

CODE IDENT NO. —
SIZE J
NASA DRAWING NO. 1004269
SCALE 4/1
WT
SHEET 1 OF 1

1004269 B

MASTER

INCHES
0 1 2
PHOTOGRAPHIC SCALE ONLY

F-2

NOTICE — WHEN GOVERNMENT DRAWINGS, SPECIFICATIONS, OR OTHER DATA ARE USED FOR ANY PURPOSE OTHER THAN IN CONNECTION WITH A DEFINITELY RELATED GOVERNMENT PROCUREMENT OPERATION, THE UNITED STATES GOVERNMENT THEREBY INCURS NO RESPONSIBILITY NOR ANY OBLIGATION WHATSOEVER; AND THE FACT THAT THE GOVERNMENT MAY HAVE FORMULATED, FURNISHED, OR IN ANY WAY SUPPLIED THE SAID DRAWINGS, SPECIFICATIONS, OR OTHER DATA IS NOT TO BE REGARDED BY IMPLICATION OR OTHERWISE AS IN ANY MANNER LICENSING THE HOLDER OR ANY OTHER PERSON OR CORPORATION, OR CONVEYING ANY RIGHTS OR PERMISSION TO MANUFACTURE, USE, OR SELL ANY PATENTED INVENTION THAT MAY IN ANY WAY BE RELATED THERETO.

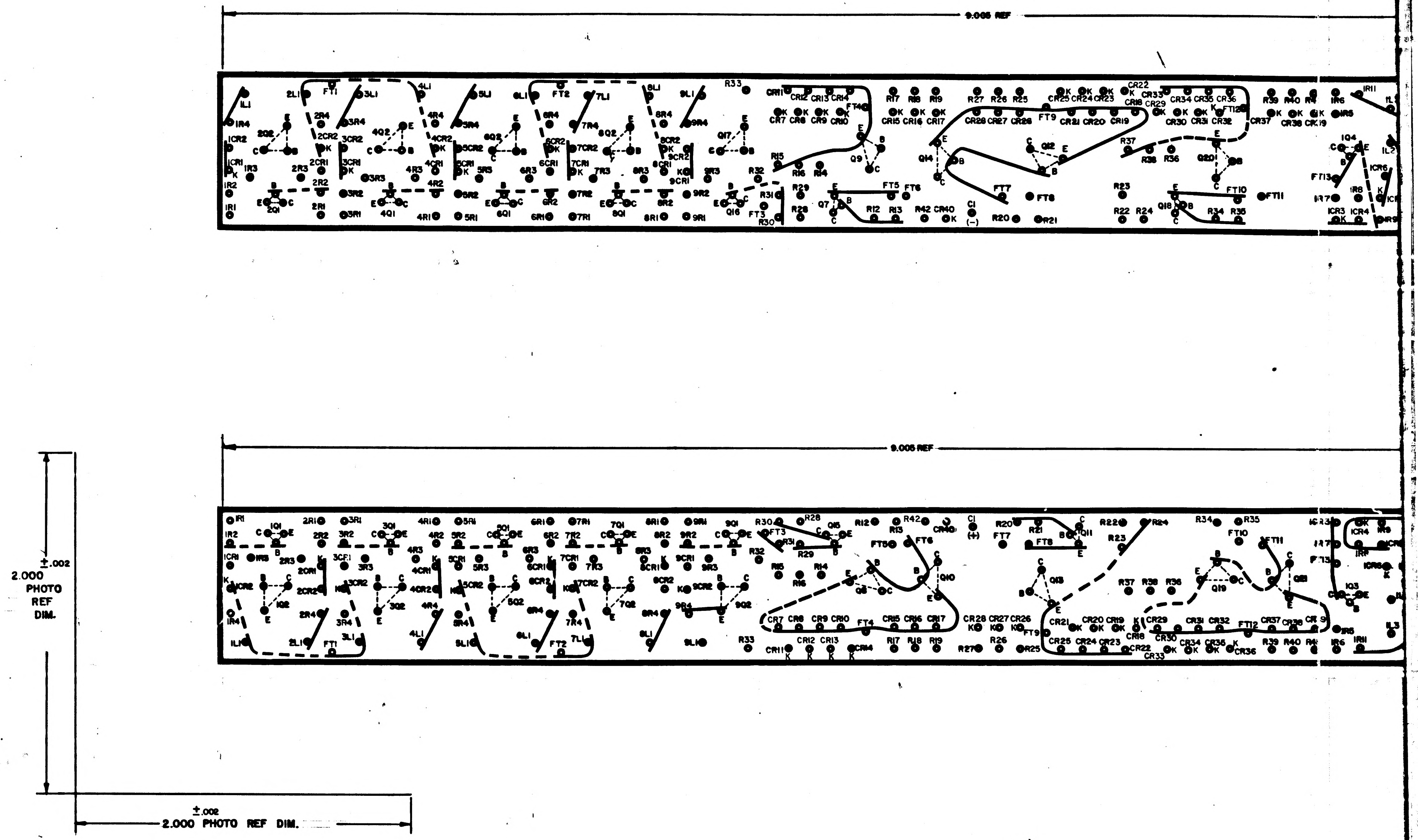

NOTES

1. INTERPRET DRAWING IN ACCORDANCE WITH STANDARDS PRESCRIBED BY MIL-D-70327
2. ORIGINAL OF THIS DRAWING OR REPRODUCTION MADE BY PROCESS OR METHOD SHALL INSURE DIMENSIONAL STABILITY, DIMENSIONAL STABILITY SHALL NOT EXCEED .001 INCH PER INCH
3. MATERIAL: FILM .006/.008 THICK PER L-F-340, TYPE IB, CLASS 2, STYLE IA
4. MAKE MASTER PATTERN POSITIVE FILMS TO DIMENSIONS SHOWN
5. CUT TO WITHIN .010 OF TRIM LINE
6. ● .046/.050 DIA PUNCH ALL HOLES

INCHES 0 1 2
PHOTOGRAPHIC SCALE ONLY

1004269 C

SYM	DESCRIPTION	DATE	APPROVAL
	REVISIONS		
A	REVISED PER TDRR [illegible]	[illegible]	[illegible]
B	REVISED PER TDRR [illegible]	[illegible]	[illegible]
C	REVISED PER TDRR 05385	12-19-63	[illegible]

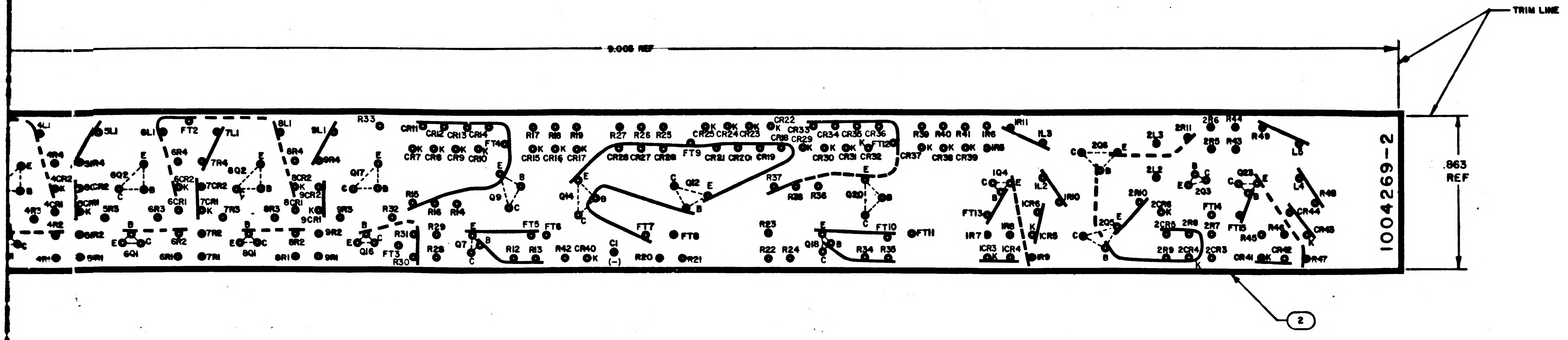

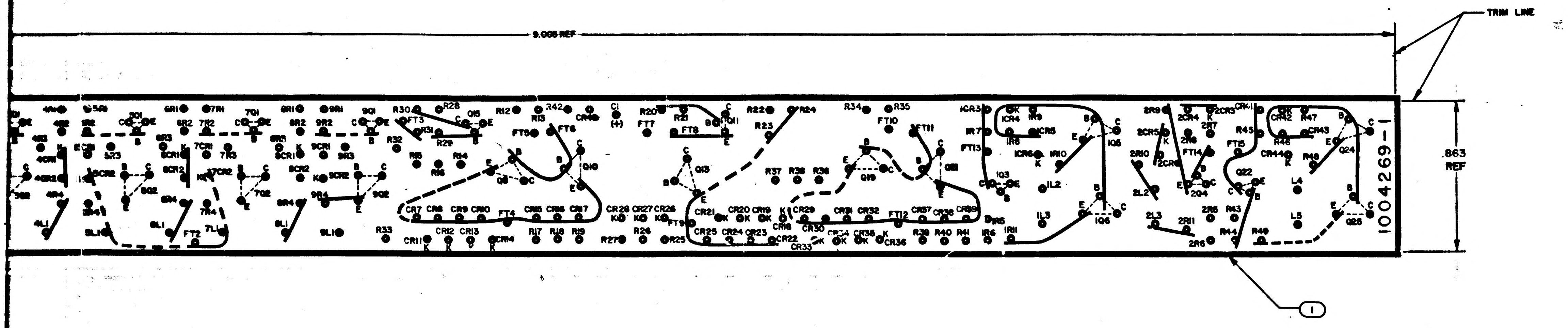

QTY REQD	PART OR IDENTIFYING NO.	NOMENCLATURE OR DESCRIPTION	FIND NO.
1	1004269-2	INSULATOR	2
1	1004269-1	INSULATOR	1

LIST OF MATERIALS

1003178	
NEXT ASSY	USED ON
APPLICATION	

UNLESS OTHERWISE SPECIFIED DIMENSIONS ARE IN INCHES
TOLERANCES ON
FRACTIONS ± DECIMALS ± ANGLES ±
DO NOT SCALE THIS DRAWING
MATERIAL
SEE NOTE 3
HEAT TREATMENT
FINAL FINISH

MIT INSTRUMENTATION LAB
CAMBRIDGE, MASS
DRAWN [illegible] DATE 9-9-63
CHECKED R.P. Kingsbury 3 Oct 63
APPROVAL [illegible] 2 Oct 63
APPROVAL [illegible]
NASA APPROVAL W.J. [illegible] 10-3-63
MIT APPROVAL [illegible] 3 Oct 63

MANNED SPACECRAFT CENTER
HOUSTON, TEXAS

INSULATOR PHOTOGRAPHIC MASTER
ROPE DRIVER

CODE IDENT NO. —
SIZE J
NASA DRAWING NO. 1004269
SCALE 4/1
WT
SHEET 1 OF 1

1004269 C

NOTICE — WHEN GOVERNMENT DRAWINGS, SPECIFICATIONS, OR OTHER DATA ARE USED FOR ANY PURPOSE OTHER THAN IN CONNECTION WITH A DEFINITELY RELATED GOVERNMENT PROCUREMENT OPERATION, THE UNITED STATES GOVERNMENT THEREBY INCURS NO RESPONSIBILITY NOR ANY OBLIGATION WHATSOEVER; AND THE FACT THAT THE GOVERNMENT MAY HAVE FORMULATED, FURNISHED, OR IN ANY WAY SUPPLIED THE SAID DRAWINGS, SPECIFICATIONS, OR OTHER DATA IS NOT TO BE REGARDED BY IMPLICATION OR OTHERWISE AS IN ANY MANNER LICENSING THE HOLDER OR ANY OTHER PERSON OR CORPORATION, OR CONVEYING ANY RIGHTS OR PERMISSION TO MANUFACTURE, USE, OR SELL ANY PATENTED INVENTION THAT MAY IN ANY WAY BE RELATED THERETO.

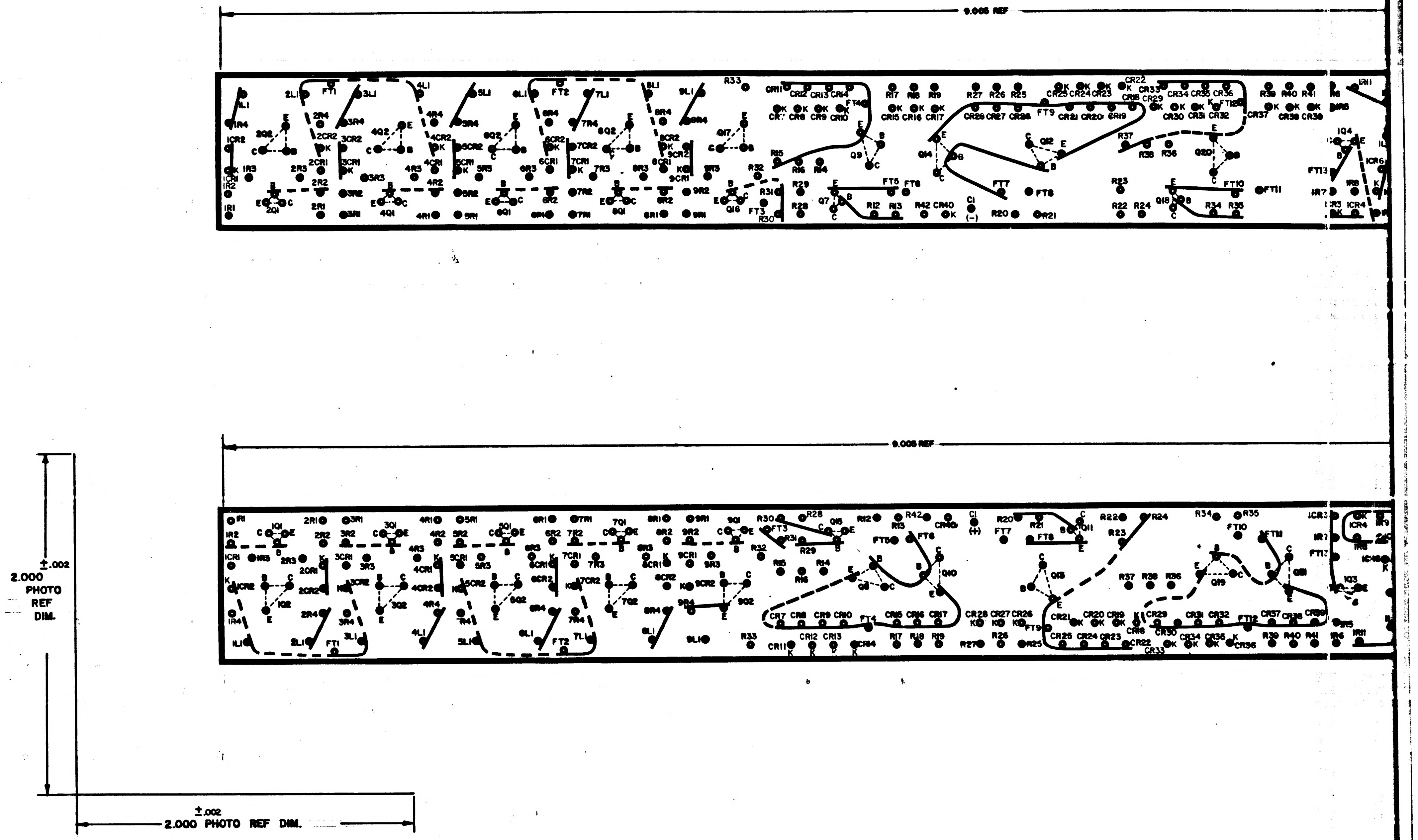
9.005 REF
9.005 REF
2.000 ±.002 PHOTO REF DIM.
±.002 2.000 PHOTO REF DIM.
1Q1
2Q1
3Q1
4Q1
5Q1
6Q1
7Q1
8Q1
9Q1
Q7
Q8
Q9
Q10
Q11
Q12
Q13
Q14
Q16
Q17
Q18
Q19
Q20
FT1
FT2
FT3
FT4
FT5
FT6
FT7
FT8
FT9
FT10
FT11
FT12
FT13
C1
R33

NOTES

1. INTERPRET DRAWING IN ACCORDANCE WITH STANDARDS PRESCRIBED BY MIL—D—70327
2. ORIGINAL OF THIS DRAWING OR REPRODUCTION MADE BY PROCESS OR METHOD SHALL INSURE DIMENSIONAL STABILITY, DIMENSIONAL STABILITY SHALL NOT EXCEED .001 INCH PER INCH
3. MATERIAL: FILM .006/.008 THICK PER L-F-340, TYPE IB, CLASS 2, STYLE IA
4. MAKE MASTER PATTERN POSITIVE FILMS TO DIMENSIONS SHOWN
5. CUT TO WITHIN .010 OF TRIM LINE
6. ● .045/.050 DIA PUNCH ALL HOLES

SYM	DESCRIPTION	DATE	APPROVAL
A	REVISED PER TDRR 04467		
B	REVISED PER TDRR		
C	REVISED PER TDRR 05385		
D	REVISED PER TDRR 07264 DR CHK APPD	3/23/64	

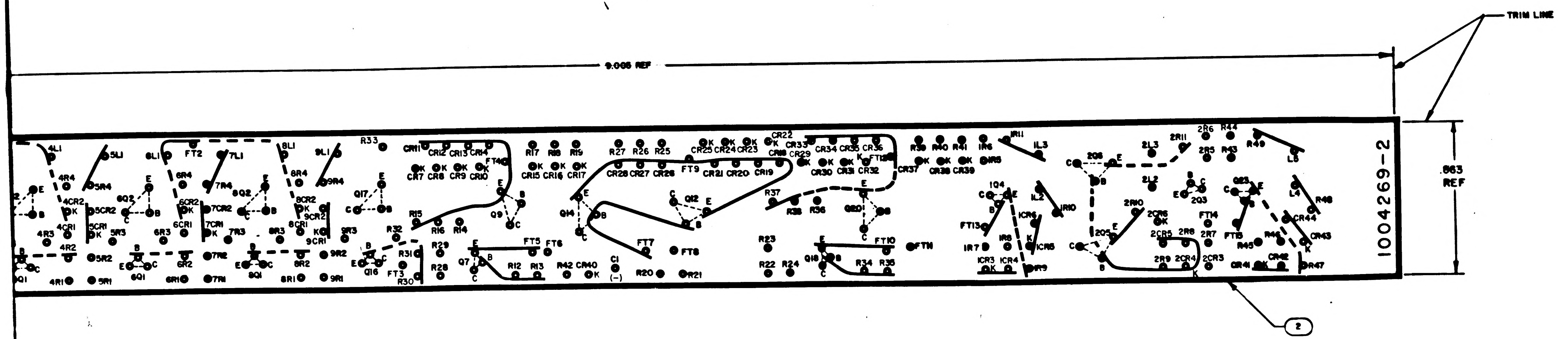

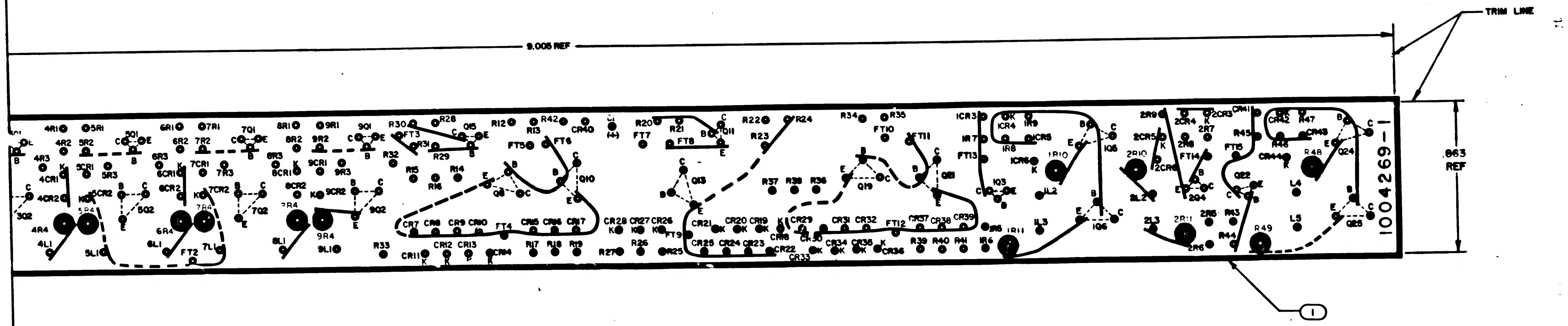

QTY REQD	PART OR IDENTIFYING NO.	NOMENCLATURE OR DESCRIPTION	FIND NO.
1	1004269-2	INSULATOR	2
1	1004269-1	INSULATOR	1

LIST OF MATERIALS

NEXT ASSY	USED ON
1003178	

APPLICATION

UNLESS OTHERWISE SPECIFIED
DIMENSIONS ARE IN INCHES
TOLERANCES ON
FRACTIONS ± DECIMALS ± ANGLES ±
DO NOT SCALE THIS DRAWING

MATERIAL
SEE NOTE 3

HEAT TREATMENT

FINAL FINISH

MIT
INSTRUMENTATION LAB
CAMBRIDGE, MASS
DRAWN DATE 9-9-63
CHECKED
APPROVAL
APPROVAL
NASA APPROVAL 10-3-63
MIT APPROVAL

MANNED SPACECRAFT CENTER
HOUSTON, TEXAS

INSULATOR
PHOTOGRAPHIC MASTER
ROPE DRIVER

CODE IDENT NO. —
SIZE J
NASA DRAWING NO. 1004269
SCALE 4/1
WT
SHEET 1 OF 1

NOTICE — WHEN GOVERNMENT DRAWINGS, SPECIFICATIONS, OR OTHER DATA ARE USED FOR ANY PURPOSE OTHER THAN IN CONNECTION WITH A DEFINITELY RELATED GOVERNMENT PROCUREMENT OPERATION, THE UNITED STATES GOVERNMENT THEREBY INCURS NO RESPONSIBILITY NOR ANY OBLIGATION WHATSOEVER; AND THE FACT THAT THE GOVERNMENT MAY HAVE FORMULATED, FURNISHED, OR IN ANY WAY SUPPLIED THE SAID DRAWINGS, SPECIFICATIONS, OR OTHER DATA IS NOT TO BE REGARDED BY IMPLICATION OR OTHERWISE AS IN ANY MANNER LICENSING THE HOLDER OR ANY OTHER PERSON OR CORPORATION, OR CONVEYING ANY RIGHTS OR PERMISSION TO MANUFACTURE, USE, OR SELL ANY PATENTED INVENTION THAT MAY IN ANY WAY BE RELATED THERETO.

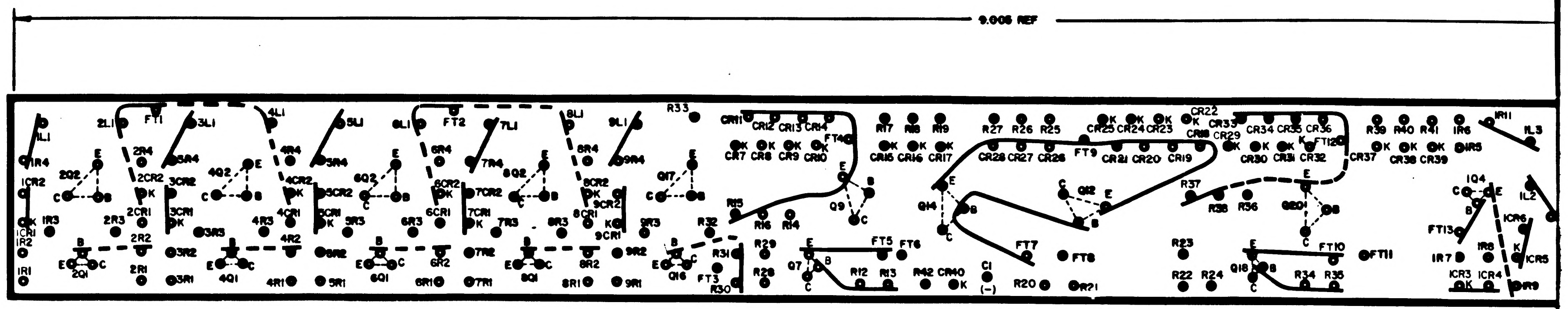

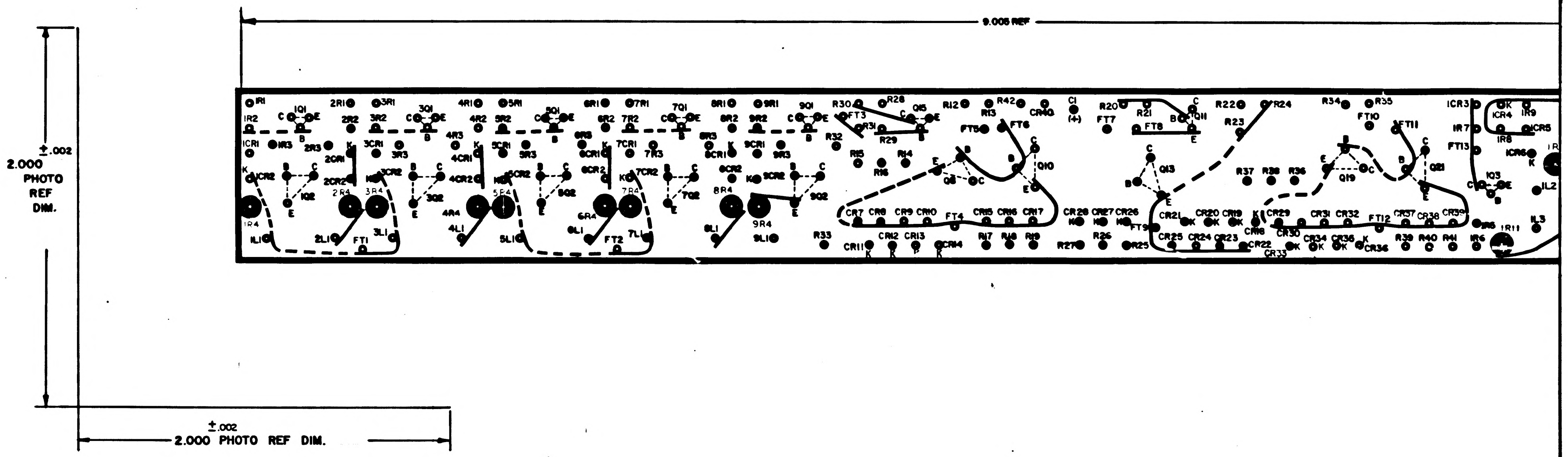

NOTES
1. INTERPRET DRAWING IN ACCORDANCE WITH STANDARDS PRESCRIBED BY MIL-D-70327
2. ORIGINAL OF THIS DRAWING OR REPRODUCTION MADE BY PROCESS OR METHOD SHALL INSURE DIMENSIONAL STABILITY, DIMENSIONAL STABILITY SHALL NOT EXCEED .001 INCH PER INCH
3. MATERIAL: FILM .006/.008 THICK PER L-F-340, TYPE IB, CLASS 2, STYLE IA
4. MAKE MASTER PATTERN POSITIVE FILMS TO DIMENSIONS SHOWN
5. CUT TO WITHIN .010 OF TRIM LINE
6. ● .045/.050 DIA PUNCH
7. ● .111/.121 DIA PUNCH

1004269 E

REV	DESCRIPTION	DATE	
A	REVISED PER TDRR 3467		
B	REVISED PER TDRR		
C	REVISED PER TDRR 05305		
D	REVISED PER TDRR 07264 DR CHK APPD		
E	REVISED PER TDRR 09108 DR CHK		

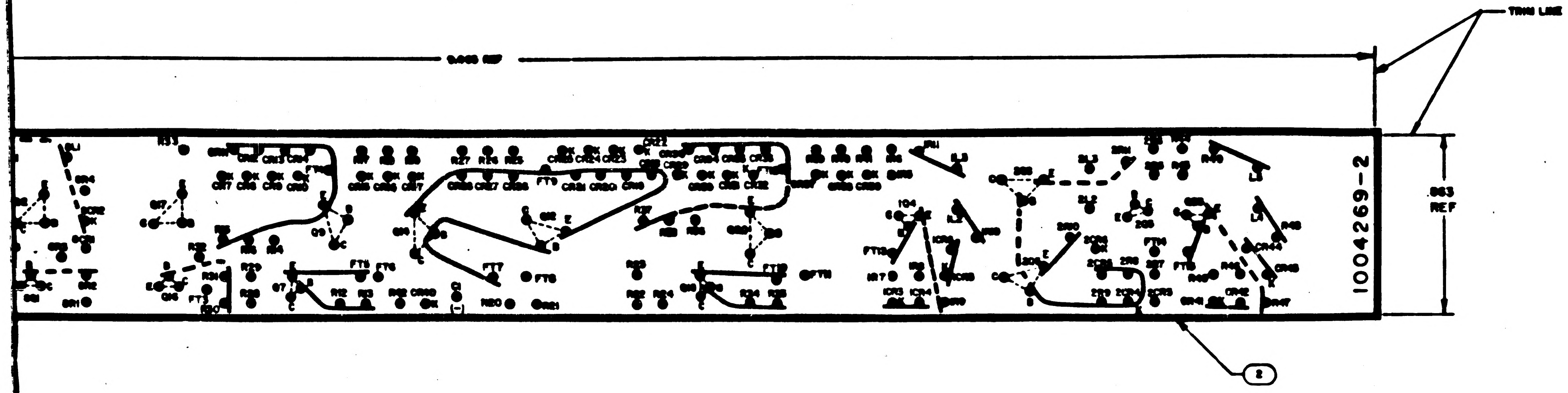

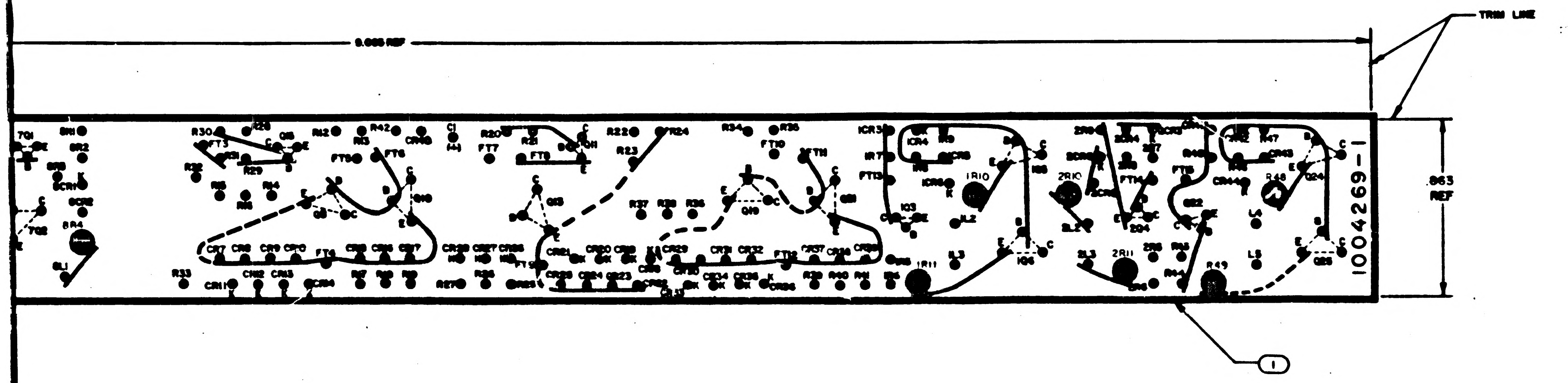

QTY REQD	PART OR IDENTIFYING NO	NOMENCLATURE OR DESCRIPTION
1	1004269-2	INSULATOR
1	1004269-1	INSULATOR

LIST OF MATERIALS

NEXT ASSY	USED ON
1003178	

APPLICATION

UNLESS OTHERWISE SPECIFIED DIMENSIONS ARE IN INCHES
TOLERANCES ON
FRACTIONS DECIMALS ANGLES
DO NOT SCALE THIS DRAWING
MATERIAL
SEE NOTE 3
HEAT TREATMENT
FINAL FINISH

MIT
INSTRUMENTATION LAB
DRAWN DATE 3-3-64
CHECKED
APPROVAL
APPROVAL
NASA APPROVAL
APPROVAL

MANNED SPACECRAFT CENTER
HOUSTON, TEXAS

INSULATOR
PHOTOGRAPHIC MASTER
ROPE DRIVER

CODE IDENT NO	SIZE	NASA DRAWING NO
—	J	1004269

SCALE 4/1 WT SHEET 1

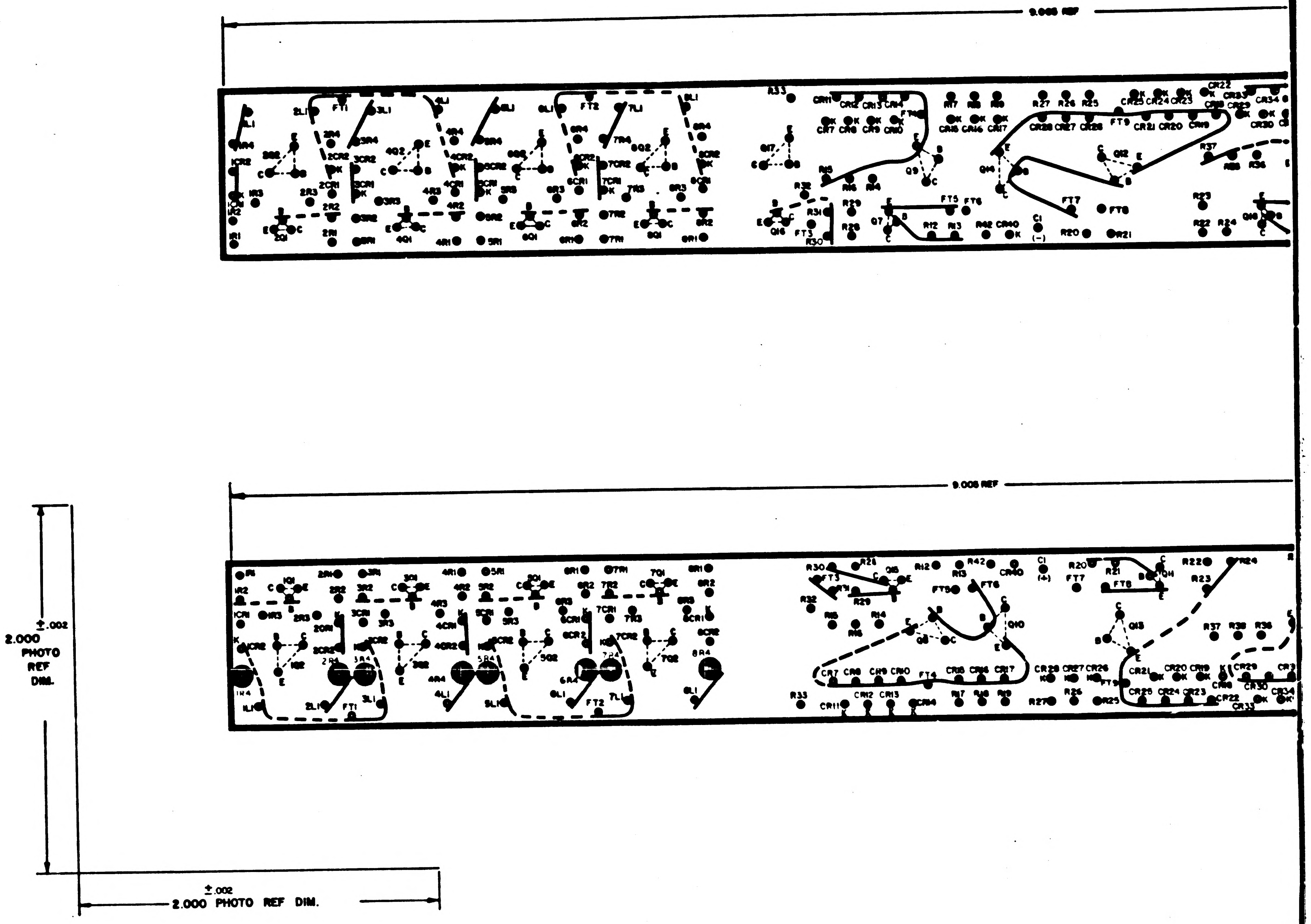
9.008 REF
9.008 REF
2.000 ±.002 PHOTO REF DIM.
±.002 2.000 PHOTO REF DIM.

NOTES
1. INTERPRET DRAWING IN ACCORDANCE WITH STANDARDS PRESCRIBED BY MIL-D-70327
2. ORIGINAL OF THIS DRAWING OR REPRODUCTION MADE BY PROCESS OR METHOD SHALL INSURE DIMENSIONAL STABILITY. DIMENSIONAL STABILITY SHALL NOT EXCEED .001 INCH PER INCH
3. MATERIAL FILM .006/.008 THICK PER L-F-340, TYPE IB, CLASS 2, STYLE IA
4. MAKE MASTER PATTERN POSITIVE FILMS TO DIMENSIONS SHOWN
5. CUT TO WITHIN .010 OF TRIM LINE
6. ● .048/.050 DIA PUNCH
7. ● .111/.121 DIA PUNCH

1004269	REVISIONS		
SYM	DESCRIPTION	DATE	APPROVAL

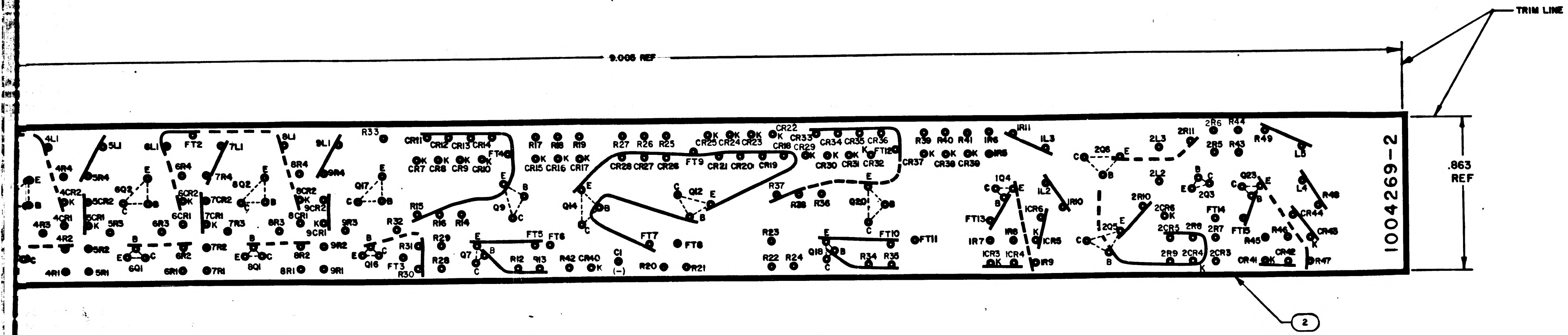

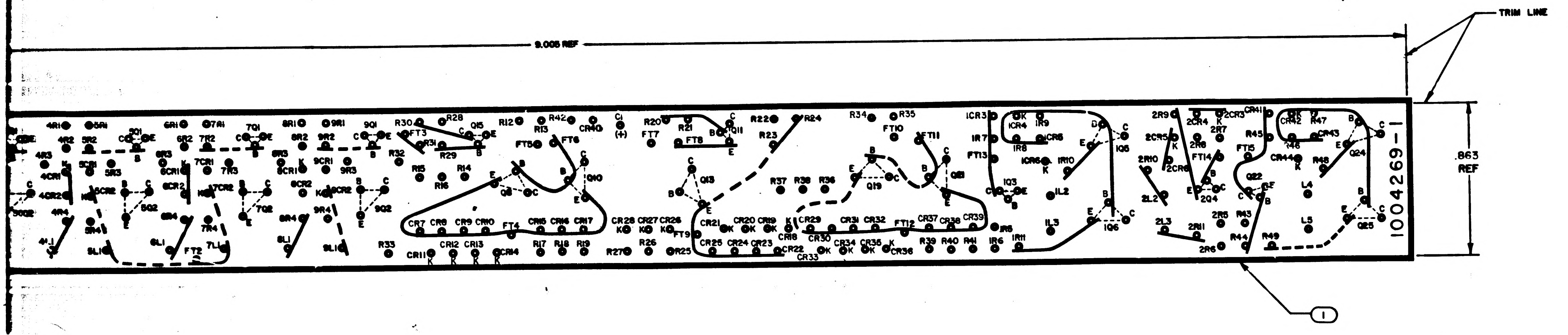

1004269

QTY REQD	PART OR IDENTIFYING NO.	NOMENCLATURE OR DESCRIPTION	FIND NO.
1	1004269-2	INSULATOR	2
1	1004269-1	INSULATOR	1

LIST OF MATERIALS

NEXT ASSY	USED ON
1003178	

APPLICATION

UNLESS OTHERWISE SPECIFIED
DIMENSIONS ARE IN INCHES
TOLERANCES ON
FRACTIONS ± DECIMALS ± ANGLES ±
DO NOT SCALE THIS DRAWING
MATERIAL SEE NOTE 3
HEAT TREATMENT
FINAL FINISH

MIT
INSTRUMENTATION LAB
CAMBRIDGE, MASS
DWG NO
CONTRACT
DRAWN DATE 9-9-63
CHECKED 3 Oct 63
APPROVAL 2 Oct 63
APPROVAL
NASA APPROVAL 10-3-63
MIT APPROVAL 3 Oct 63

MANNED SPACECRAFT CENTER
HOUSTON, TEXAS

INSULATOR
PHOTOGRAPHIC MASTER
ROPE DRIVER

CODE IDENT NO.
SIZE J
NASA DRAWING NO. 1004269
SCALE 4/1
WT
SHEET 1 OF 1

1004269

NOTICE — WHEN GOVERNMENT DRAWINGS, SPECIFICATIONS, OR OTHER DATA ARE USED FOR ANY PURPOSE OTHER THAN IN CONNECTION WITH A DEFINITELY RELATED GOVERNMENT PROCUREMENT OPERATION, THE UNITED STATES GOVERNMENT THEREBY INCURS NO RESPONSIBILITY NOR ANY OBLIGATION WHATSOEVER; AND THE FACT THAT THE GOVERNMENT MAY HAVE FORMULATED, FURNISHED, OR IN ANY WAY SUPPLIED THE SAID DRAWINGS, SPECIFICATIONS, OR OTHER DATA IS NOT TO BE REGARDED BY IMPLICATION OR OTHERWISE AS IN ANY MANNER LICENSING THE HOLDER OR ANY OTHER PERSON OR CORPORATION, OR CONVEYING ANY RIGHTS OR PERMISSION TO MANUFACTURE, USE, OR SELL ANY PATENTED INVENTION THAT MAY IN ANY WAY BE RELATED THERETO.

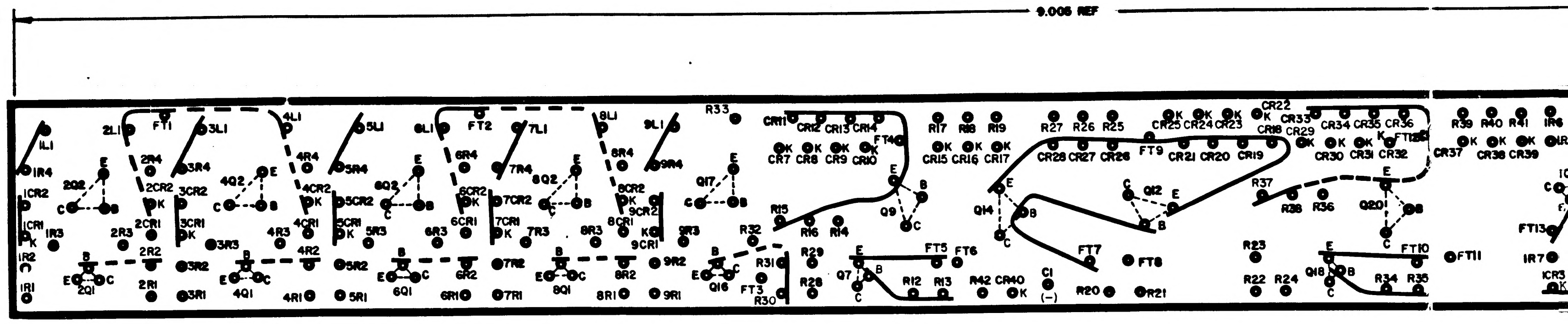

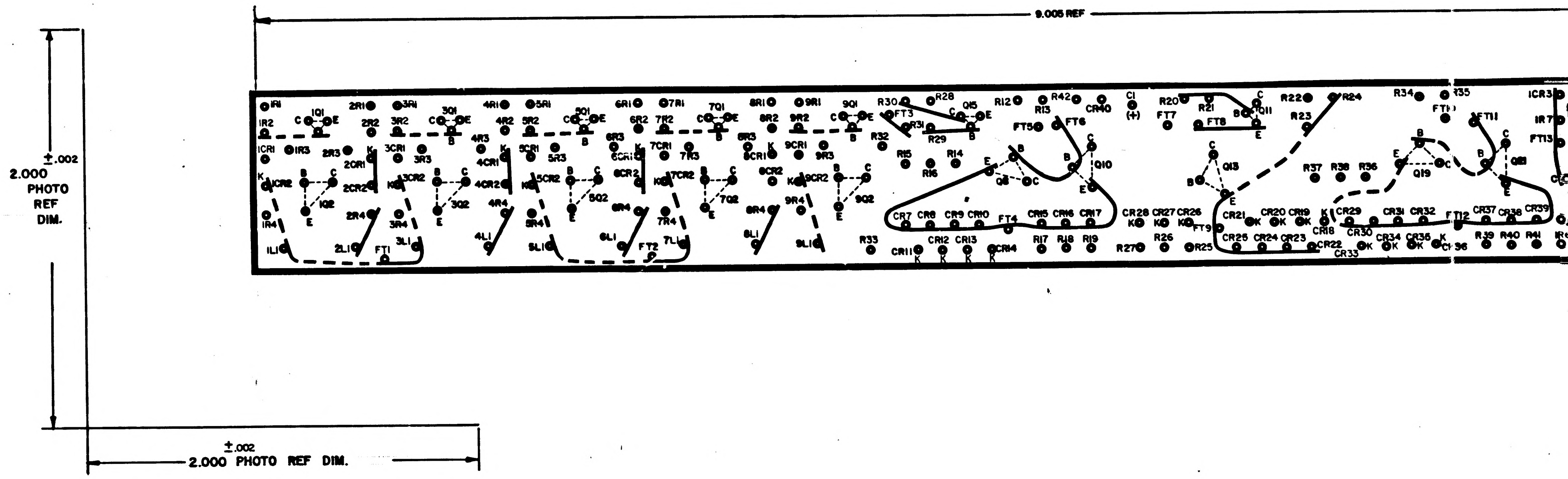

NOTES

1. INTERPRET DRAWING IN ACCORDANCE WITH STANDARDS PRESCRIBED BY MIL-D-70327
2. ORIGINAL OF THIS DRAWING OR REPRODUCTION MADE BY PROCESS OR METHOD SHALL INSURE DIMENSIONAL STABILITY, DIMENSIONAL STABILITY SHALL NOT EXCEED .001 INCH PER INCH
3. MATERIAL: FILM .006/.008 THICK PER L-F-340, TYPE IB, CLASS 2, STYLE IA
4. MAKE MASTER PATTERN POSITIVE FILMS TO DIMENSIONS SHOWN
5. CUT TO WITHIN .010 OF TRIM LINE
6. ● .045/.050 DIA PUNCH ALL HOLES

NOTICE — WHEN GOVERNMENT DRAWINGS, SPECIFICATIONS, OR OTHER DATA ARE USED FOR ANY PURPOSE OTHER THAN IN CONNECTION WITH A DEFINITELY RELATED GOVERNMENT PROCUREMENT OPERATION, THE UNITED STATES GOVERNMENT THEREBY INCURS NO RESPONSIBILITY NOR ANY OBLIGATION WHATSOEVER; AND THE FACT THAT THE GOVERNMENT MAY HAVE FORMULATED, FURNISHED, OR IN ANY WAY SUPPLIED THE SAID DRAWINGS, SPECIFICATIONS OR OTHER DATA IS NOT TO BE REGARDED BY IMPLICATION OR OTHERWISE AS IN ANY MANNER LICENSING THE HOLDER OR ANY OTHER PERSON OR CORPORATION, OR CONVEYING ANY RIGHTS OR PERMISSION TO MANUFACTURE, USE, OR SELL ANY PATENTED INVENTION THAT MAY IN ANY WAY BE RELATED THERETO.

1004270

REVISIONS 04147			
SYM	DESCRIPTION	DATE	APPROVAL

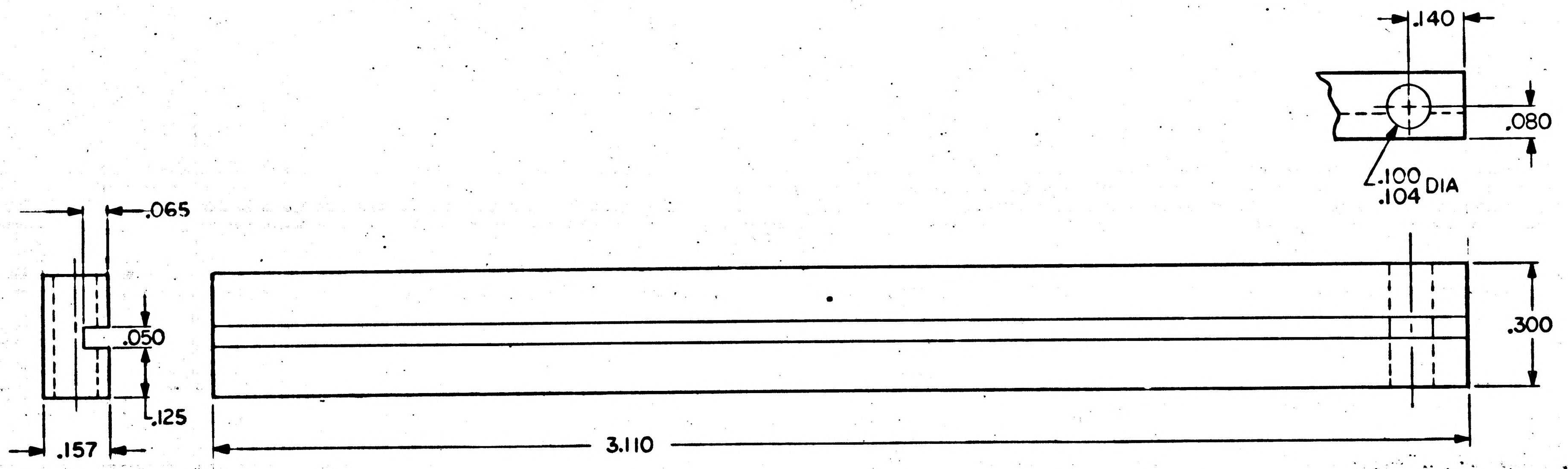

NOTES

1. INTERPRET DRAWING IN ACCORDANCE WITH STANDARDS PRESCRIBED BY MIL-D-70327
2. MAT'L: PLASTIC, ACRYLIC PER MIL-P-5425 FINISH A
3. BREAK SHARP EDGES

MASTER

QTY REQD	PART OR IDENTIFYING NO.	NOMENCLATURE OR DESCRIPTION	FIND NO.

LIST OF MATERIALS

1003182	
NEXT ASSY	USED ON
APPLICATION	

UNLESS OTHERWISE SPECIFIED
DIMENSIONS ARE IN INCHES
TOLERANCES ON
FRACTIONS ± DECIMALS ±.005 ANGLES ±
DO NOT SCALE THIS DRAWING
MATERIAL SEE NOTE 2
HEAT TREATMENT
FINAL FINISH

MIT
INSTRUMENTATION LAB
CAMBRIDGE, MASS.
DWG. NO. CONTRACT

DRAWN R. Butler DATE 16 SEP 63
CHECKED 22 OCT 63
APPROVAL 23 OCT 63
APPROVAL
NASA APPROVAL 10/24/63
MIT APPROVAL 24 Oct 63

MANNED SPACECRAFT CENTER
HOUSTON, TEXAS

BLOCK, SPACER
STRAND GATE MODULE

CODE IDENT NO. | SIZE C | NASA DRAWING NO. 1004270
SCALE 4/1 | WT | SHEET 1 OF 1

INCHES
0 1 2
PHOTOGRAPHIC SCALE ONLY

NOTICE — WHEN GOVERNMENT DRAWINGS, SPECIFICATIONS, OR OTHER DATA ARE USED FOR ANY PURPOSE OTHER THAN IN CONNECTION WITH A DEFINITELY RELATED GOVERNMENT PROCUREMENT OPERATION, THE UNITED STATES GOVERNMENT THEREBY INCURS NO RESPONSIBILITY NOR ANY OBLIGATION WHATSOEVER; AND THE FACT THAT THE GOVERNMENT MAY HAVE FORMULATED, FURNISHED, OR IN ANY WAY SUPPLIED THE SAID DRAWINGS, SPECIFICATIONS, OR OTHER DATA IS NOT TO BE REGARDED BY IMPLICATION OR OTHERWISE AS IN ANY MANNER LICENSING THE HOLDER OR ANY OTHER PERSON OR CORPORATION, OR CONVEYING ANY RIGHTS OR PERMISSION TO MANUFACTURE, USE, OR SELL ANY PATENTED INVENTION THAT MAY IN ANY WAY BE RELATED THERETO.

REVISIONS 03649			
SYM	DESCRIPTION	DATE	APPROVAL
A	REVISED PER TDRR 04506	11-6-63	

GUIDANCE COMPUTER INTERFACE CONNECTOR 05A4J5, VIEWED FROM THE PIN SIDE OF THE MALE CONNECTOR, OR THE WIRING SIDE OF THE FEMALE

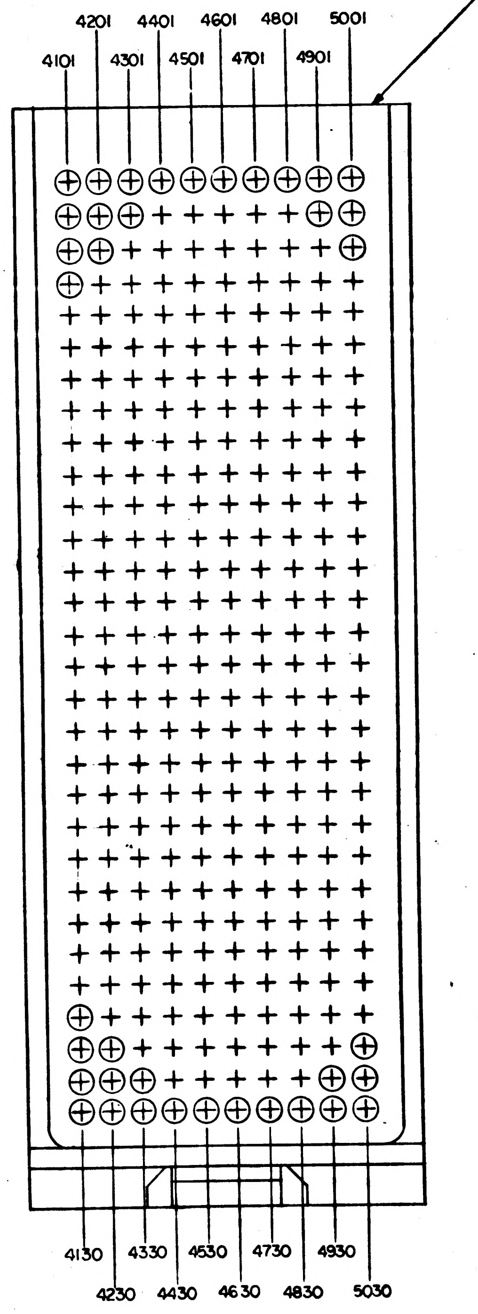

4101		4201	167	4301	167	4401	169	4501	169	4601		4701	170	4801	170	4901	168	5001	168
4102		4202	239	4302	001 S	4402	126 S	4502	126 R	4602		4702	149 S	4802	149 R	4902	150 S	5002	150 R
4103		4203	239	4303	001 R	4403	127 S	4503	127 R	4603	166	4703	151 S	4803	151 R	4903	152 S	5003	152 R
4104		4204	240	4304	171	4404	128 S	4504	128 R	4604	175	4704	153 S	4804	153 R	4904	154 S	5004	154 R
4105		4205	241	4305	172	4405	129 S	4505	129 R	4605	176	4705	155 S	4805	155 R	4905	156 S	5005	156 R
4106		4206	243	4306	173	4406	130 S	4506	130 R	4606	177	4706	114 S	4806	114 R	4906	115 S	5006	115 R
4107		4207	139 S	4307	139 R	4407	131 S	4507	131 R	4607	101	4707	116 S	4807	116 R	4907	117 S	5007	117 R
4108		4208	140 S	4308	140 R	4408	145 S	4508	145 R	4608	164	4708	102	4808	103	4908	104	5008	105
4109		4209	142 S	4309	142 R	4409	146 S	4509	146 R	4609	178	4709	106	4809	107	4909	158	5009	159
4110		4210	143 S	4310	143 R	4410	147 S	4510	147 R	4610	165	4710	160	4810	161	4910	162	5010	163
4111		4211	144 S	4311	144 R	4411	148 S	4511	148 R	4611	181 note 4	4711	214	4811	215	4911	216	5011	217
4112		4212	118 S	4312	118 R	4412	119 S	4512	119 R	4612	026 C	4712	218	4812	219	4912	220	5012	221
4113		4213	120 S	4313	120 R	4413	121 S	4513	121 R	4613	026 S	4713	222	4813	223	4913	224	5013	225
4114		4214	122 S	4314	122 R	4414	123 S	4514	123 R	4614	245	4714	226	4814	227	4914	228	5014	229
4115		4215	124 S	4315	124 R	4415	132 S	4515	132 R	4615	179	4715	230	4815	231	4915	232	5015	233
4116		4216	133 S	4316	133 R	4416	134 S	4516	134 R	4616	157 C	4716	234	4816	235	4916	236	5016	237
4117		4217	135 S	4317	135 R	4417	136 S	4517	136 R	4617	157 S	4717	212	4817	238	4917	242	5017	244
4118		4218	137 S	4318	137 R	4418	138 S	4518	138 R	4618	330 note 2	4718	201	4818	202	4918	203	5018	204
4119		4219	141 S	4319	141 R	4419	108 S	4519	108 R	4619	250	4719	205	4819	206	4919	207	5019	208
4120		4220	109 S	4320	109 R	4420	110 S	4520	110 R	4620	434 note 3	4720	209	4820	210	4920	246	5020	211
4121		4221	111 S	4321	111 R	4421	112 S	4521	112 R	4621	213	4721	027 S	4821	027 R	4921	028 S	5021	028 R
4122		4222	004 S	4322	004 R	4422	005 S	4522	005 R	4622	040 S	4722	029 S	4822	029 R	4922	030 S	5022	030 R
4123		4223	006 S	4323	006 R	4423	007 S	4523	007 R	4623	040 R	4723	031 S	4823	031 R	4923	032 S	5023	032 R
4124		4224	014 S	4324	014 R	4424	015 S	4524	015 R	4624	247	4724	033 S	4824	033 R	4924	035 S	5024	035 R
4125	CNSHLD	4225	016 S	4325	016 R	4425	024 S	4525	024 R	4625	017 S	4725	036 S	4825	036 R	4925	037 S	5025	037 R
4126	CNTRL 1	4226	025 S	4326	025 R	4426	008 S	4526	008 R	4626	017 R	4726	038 S	4826	038 R	4926	039 S	5026	039 R
4127	CNTRL 2	4227	009 S	4327	009 R	4427	010 S	4527	010 R	4627	248	4727	041 S	4827	041 R	4927	042 S	5027	042 R
4128	MT SHLD	4228	011 S	4328	011 R	4428	012 S	4528	012 R	4628	050 S	4728	043 S	4828	043 R	4928	044 S	5028	044 R
4129	MTHI	4229	013 S	4329	013 R	4429	054 S	4529	054 R	4629	050 R	4729	045 S	4829	045 R	4929	046 S	5029	046 R
4130	MTLO	4230	056 S	4330	056 R	4430	057 S	4530	057 R	4630	249	4730	047 S	4830	047 R	4930	048 S	5030	048 R

NOTES:
1. INTERPRET DRAWING IN ACCORDANCE WITH STANDARDS PRESCRIBED BY MIL-D-70327
2. THE RETURNS OF ALL SIGNALS TO THE NAV DSKY ARE COMMONED UP AND BROUGHT IN ON PIN NO. 4618
3. THE RETURNS OF ALL SIGNALS TO THE MAIN DSKY ARE COMMONED UP AND BROUGHT IN ON PIN NO. 4620
4. THE RETURNS OF THE MODE SWITCHING SIGNALS ARE COMMONED UP AND BROUGHT IN ON PIN NO. 4611

MASTER

QTY REQD	PART OR IDENTIFYING NO.	NOMENCLATURE OR DESCRIPTION	FIND NO.
LIST OF MATERIALS			

NEXT ASSY	USED ON
APPLICATION	

UNLESS OTHERWISE SPECIFIED DIMENSIONS ARE IN INCHES
TOLERANCES ON
FRACTIONS ± — DECIMALS ± — ANGLES ± —
DO NOT SCALE THIS DRAWING
MATERIAL —
HEAT TREATMENT —
FINAL FINISH —

MIT INSTRUMENTATION LAB
CAMBRIDGE, MASS
DWG. NO. CONTRACT
DRAWN J. Cowley DATE 9-18-63
CHECKED BF Moore 9-19-63
APPROVAL D.J. Bowler 2 Oct 63
APPROVAL E. [illegible] 2 Oct 63
NASA APPROVAL W. J. Rhine 10-9-63
MIT APPROVAL 30 Oct 63

MANNED SPACECRAFT CENTER
HOUSTON, TEXAS

SIGNAL PIN ASSIGNMENT AGC INTERFACE CONNECTOR

CODE IDENT NO.
SIZE D
NASA DRAWING NO. 1004271
SCALE
WT
SHEET OF

INCHES 0 1 2
PHOTOGRAPHIC SCALE ONLY

NOTICE — WHEN GOVERNMENT DRAWINGS, SPECIFICATIONS, OR OTHER DATA ARE USED FOR ANY PURPOSE OTHER THAN IN CONNECTION WITH A DEFINITELY RELATED GOVERNMENT PROCUREMENT OPERATION, THE UNITED STATES GOVERNMENT THEREBY INCURS NO RESPONSIBILITY NOR ANY OBLIGATION WHATSOEVER; AND THE FACT THAT THE GOVERNMENT MAY HAVE FORMULATED, FURNISHED, OR IN ANY WAY SUPPLIED THE SAID DRAWINGS, SPECIFICATIONS, OR OTHER DATA IS NOT TO BE REGARDED BY IMPLICATION OR OTHERWISE AS IN ANY MANNER LICENSING THE HOLDER OR ANY OTHER PERSON OR CORPORATION, OR CONVEYING ANY RIGHTS OR PERMISSION TO MANUFACTURE, USE, OR SELL ANY PATENTED INVENTION THAT MAY IN ANY WAY BE RELATED THERETO.

REVISIONS 03649

SYM	DESCRIPTION	DATE	APPROVAL

GUIDANCE COMPUTER INTERFACE CONNECTOR 05A4J5, VIEWED FROM THE PIN SIDE OF THE MALE CONNECTOR, OR THE WIRING SIDE OF THE FEMALE

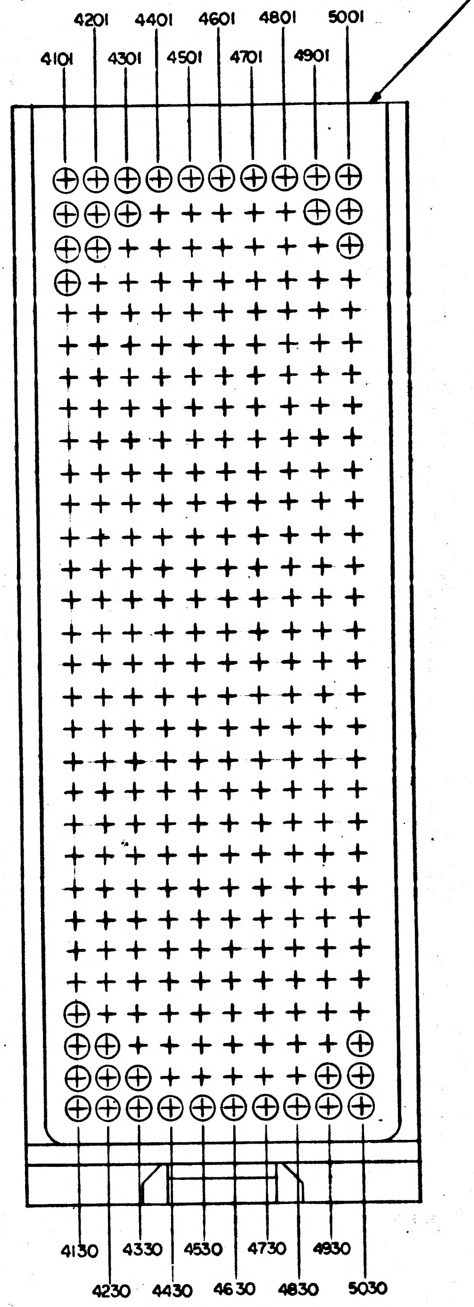

4101		4201	167	4301	167	4401	169	4501	169	4601		4701	170	4801	170	4901	168	5001	168
4102		4202	239	4302	001 S	4402	126 S	4502	126 R	4602		4702	149 S	4802	149 R	4902	150 S	5002	150 R
4103		4203	239	4303	001 R	4403	127 S	4503	127 R	4603	166	4703	151 S	4803	151 R	4903	152 S	5003	152 R
4104		4204	240	4304	171	4404	128 S	4504	128 R	4604	175	4704	153 S	4804	153 R	4904	154 S	5004	154 R
4105		4205	241	4305	172	4405	129 S	4505	129 R	4605	176	4705	155 S	4805	155 R	4905	156 S	5005	156 R
4106		4206	243	4306	173	4406	130 S	4506	130 R	4606	177	4706	114 S	4806	114 R	4906	115 S	5006	115 R
4107		4207	139 S	4307	139 R	4407	131 S	4507	131 R	4607	101	4707	116 S	4807	116 R	4907	117 S	5007	117 R
4108		4208	140 S	4308	140 R	4408	145 S	4508	145 R	4608	164	4708	102	4808	103	4908	104	5008	105
4109		4209	142 S	4309	142 R	4409	146 S	4509	146 R	4609	178	4709	106	4809	107	4909	158	5009	159
4110		4210	143 S	4310	143 R	4410	147 S	4510	147 R	4610	165	4710	160	4810	161	4910	162	5010	163
4111		4211	144 S	4311	144 R	4411	148 S	4511	148 R	4611	181 note 4	4711	214	4811	215	4911	216	5011	217
4112		4212	118 S	4312	118 R	4412	119 S	4512	119 R	4612	026 C	4712	218	4812	219	4912	220	5012	221
4113		4213	120 S	4313	120 R	4413	121 S	4513	121 R	4613	026 S	4713	222	4813	223	4913	224	5013	225
4114		4214	122 S	4314	122 R	4414	123 S	4514	123 R	4614	245	4714	226	4814	227	4914	228	5014	229
4115		4215	124 S	4315	124 R	4415	132 S	4515	132 R	4615	179	4715	230	4815	231	4915	232	5015	233
4116		4216	133 S	4316	133 R	4416	134 S	4516	134 R	4616	157C	4716	234	4816	235	4916	236	5016	237
4117		4217	135 S	4317	135 R	4417	136 S	4517	136 R	4617	157S	4717	212	4817	238	4917	242	5017	244
4118		4218	137 S	4318	137 R	4418	138 S	4518	138 R	4618	330 note 2	4718	201	4818	202	4918	203	5018	204
4119		4219	141 S	4319	141 R	4419	108 S	4519	108 R	4619	250	4719	205	4819	206	4919	207	5019	208
4120		4220	109 S	4320	109 R	4420	110 S	4520	110 R	4620	434 note 3	4720	209	4820	210	4920	246	5020	211
4121		4221	111 S	4321	111 R	4421	112 S	4521	112 R	4621	213	4721	027 S	4821	027 R	4921	028 S	5021	028 R
4122		4222	004 S	4322	004 R	4422	005 S	4522	005 R	4622	040 S	4722	029 S	4822	029 R	4922	030 S	5022	030 R
4123		4223	006 S	4323	006 R	4423	007 S	4523	007 R	4623	040 R	4723	031 S	4823	031 R	4923	032 S	5023	032 R
4124		4224	014 S	4324	014 R	4424	015 S	4524	015 R	4624	247	4724	033 S	4824	033 R	4924	035 S	5024	035 R
4125		4225	016 S	4325	016 R	4425	024 S	4525	024 R	4625	017 S	4725	036 S	4825	036 R	4925	037 S	5025	037 R
4126		4226	025 S	4326	025 R	4426	008 S	4526	008 R	4626	017 R	4726	038 S	4826	038 R	4926	039 S	5026	039 R
4127		4227	009 S	4327	009 R	4427	010 S	4527	010 R	4627	248	4727	041 S	4827	041 R	4927	042 S	5027	042 R
4128		4228	011 S	4328	011 R	4428	012 S	4528	012 R	4628	050 S	4728	043 S	4828	043 R	4928	044 S	5028	044 R
4129		4229	013 S	4329	013 R	4429	054 S	4529	054 R	4629	050 R	4729	045 S	4829	045 R	4929	046 S	5029	046 R
4130		4230	056 S	4330	056 R	4430	057 S	4530	057 R	4630	249	4730	047 S	4830	047 R	4930	048 S	5030	048 R

NOTES:

1. INTERPRET DRAWING IN ACCORDANCE WITH STANDARDS PRESCRIBED BY MIL-D-70327
2. THE RETURNS OF ALL SIGNALS TO THE NAV DSKY ARE COMMONED UP AND BROUGHT IN ON PIN NO. 4618
3. THE RETURNS OF ALL SIGNALS TO THE MAIN DSKY ARE COMMONED UP AND BROUGHT IN ON PIN NO. 4620
4. THE RETURNS OF THE MODE SWITCHING SIGNALS ARE COMMONED UP AND BROUGHT IN ON PIN NO. 4611

QTY REQD	PART OR IDENTIFYING NO.	NOMENCLATURE OR DESCRIPTION	FIND NO.

LIST OF MATERIALS

NEXT ASSY	USED ON
APPLICATION	

UNLESS OTHERWISE SPECIFIED DIMENSIONS ARE IN INCHES
TOLERANCES ON
FRACTIONS ± DECIMALS ± ANGLES ±
DO NOT SCALE THIS DRAWING
MATERIAL
HEAT TREATMENT
FINAL FINISH

MIT INSTRUMENTATION LAB
CAMBRIDGE, MASS.
DWG. NO. CONTRACT
DRAWN J. Cowley DATE 9-18-63
CHECKED BF Morse 9-19-63
APPROVAL DJ. Bowler 2 Oct 63
APPROVAL 2 Oct 63
NASA APPROVAL W J Rhine 10-3-63
MIT APPROVAL 3 Oct 63

MANNED SPACECRAFT CENTER
HOUSTON, TEXAS

SIGNAL PIN ASSIGNMENT AGC INTERFACE CONNECTOR

CODE IDENT NO.
SIZE D
NASA DRAWING NO. 1004271
SCALE
WT
SHEET OF

MASTER

NOTICE — WHEN GOVERNMENT DRAWINGS, SPECIFICATIONS, OR OTHER DATA ARE USED FOR ANY PURPOSE OTHER THAN IN CONNECTION WITH A DEFINITELY RELATED GOVERNMENT PROCUREMENT OPERATION, THE UNITED STATES GOVERNMENT THEREBY INCURS NO RESPONSIBILITY NOR ANY OBLIGATION WHATSOEVER; AND THE FACT THAT THE GOVERNMENT MAY HAVE FORMULATED, FURNISHED, OR IN ANY WAY SUPPLIED THE SAID DRAWINGS, SPECIFICATIONS, OR OTHER DATA IS NOT TO BE REGARDED BY IMPLICATION OR OTHERWISE AS IN ANY MANNER LICENSING THE HOLDER OR ANY OTHER PERSON OR CORPORATION, OR CONVEYING ANY RIGHTS OR PERMISSION TO MANUFACTURE, USE, OR SELL ANY PATENTED INVENTION THAT MAY IN ANY WAY BE RELATED THERETO.

REVISIONS 04609			
SYM	DESCRIPTION	DATE	APPROVAL

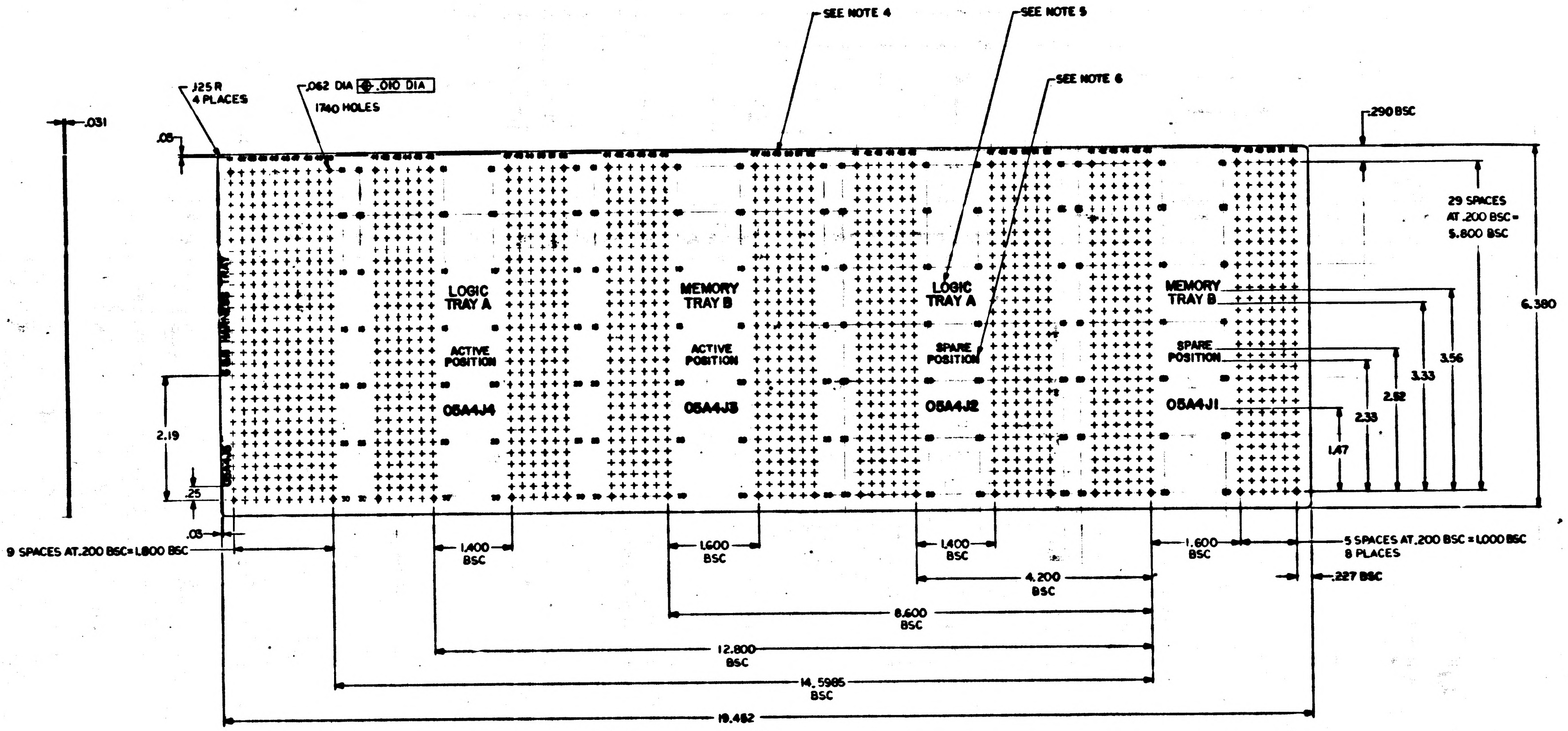
SEE NOTE 4
SEE NOTE 5
SEE NOTE 6
.125 R
4 PLACES
.062 DIA ⌖ .010 DIA
1740 HOLES
.031
.05
.290 BSC
29 SPACES
AT .200 BSC=
5.800 BSC
6.380
LOGIC
TRAY A
ACTIVE
POSITION
05A4J4
MEMORY
TRAY B
ACTIVE
POSITION
05A4J3
LOGIC
TRAY A
SPARE
POSITION
05A4J2
MEMORY
TRAY B
SPARE
POSITION
05A4J1
3.56
3.33
2.92
2.33
1.47
2.19
.25
.03
9 SPACES AT .200 BSC=1.800 BSC
1.400
BSC
1.600
BSC
1.400
BSC
1.600
BSC
5 SPACES AT .200 BSC = 1.000 BSC
8 PLACES
.227 BSC
4.200
BSC
8.600
BSC
12.800
BSC
14.5985
BSC
19.482

NOTES

1. INTERPRET DRAWING IN ACCORDANCE WITH STANDARDS PRESCRIBED BY MIL-D-70327
2. MAT'L: PLASTIC SHEET, LAMINATED PER MIL-P-18177 TYPE GEB
3. REMOVE BURRS AND BREAK SHARP EDGES
4. MARK $\frac{.100}{.080}$ HIGH WHITE PER ND1002019
5. MARK $\frac{.170}{.150}$ HIGH WHITE PER ND1002019
6. MARK $\frac{.135}{.115}$ HIGH WHITE PER ND1002019

MASTER

QTY REQD	PART OR IDENTIFYING NO.	NOMENCLATURE OR DESCRIPTION	FIND NO.
	LIST OF MATERIALS		

NEXT ASSY	USED ON
APPLICATION	

UNLESS OTHERWISE SPECIFIED
DIMENSIONS ARE IN INCHES
TOLERANCES ON
FRACTIONS DECIMALS ANGLES
XXX= ±.005
XX= ±.02
DO NOT SCALE THIS DRAWING
MATERIAL SEE NOTE 2
HEAT TREATMENT
FINAL FINISH

MIT
INSTRUMENTATION LAB
CAMBRIDGE, MASS
DWG. NO. CONTRACT
DRAWN [illegible] DATE 12-5-63
CHECKED [illegible] 63
APPROVAL [illegible] 13 [illegible] 63
APPROVAL [illegible]
NASA APPROVAL [illegible]
MIT APPROVAL [illegible]

MANNED SPACECRAFT CENTER
HOUSTON, TEXAS

PIN IDENTIFICATION BOARD
COMPUTER END

CODE IDENT NO.
SIZE E
NASA DRAWING NO. 1004273
SCALE 1/1
WT
SHEET 1 OF 1

1004273

INCHES
PHOTOGRAPHIC SCALE ONLY

NOTICE — WHEN GOVERNMENT DRAWINGS, SPECIFICATIONS, OR OTHER DATA ARE USED FOR ANY PURPOSE OTHER THAN IN CONNECTION WITH A DEFINITELY RELATED GOVERNMENT PROCUREMENT OPERATION, THE UNITED STATES GOVERNMENT THEREBY INCURS NO RESPONSIBILITY NOR ANY OBLIGATION WHATSOEVER, AND THE FACT THAT THE GOVERNMENT MAY HAVE FORMULATED, FURNISHED, OR IN ANY WAY SUPPLIED THE SAID DRAWINGS, SPECIFICATIONS OR OTHER DATA IS NOT TO BE REGARDED BY IMPLICATION OR OTHERWISE AS IN ANY MANNER LICENSING THE HOLDER OR ANY OTHER PERSON OR CORPORATION, OR CONVEYING ANY RIGHTS OR PERMISSION TO MANUFACTURE, USE, OR SELL ANY PATENTED INVENTION THAT MAY IN ANY WAY BE RELATED THERETO.

REVISIONS 04147

SYM	DESCRIPTION	DATE	APPROVAL
A	REVISED PER TDRR 08411 DR B Jensen CHK A.P.B.	9/7/64	

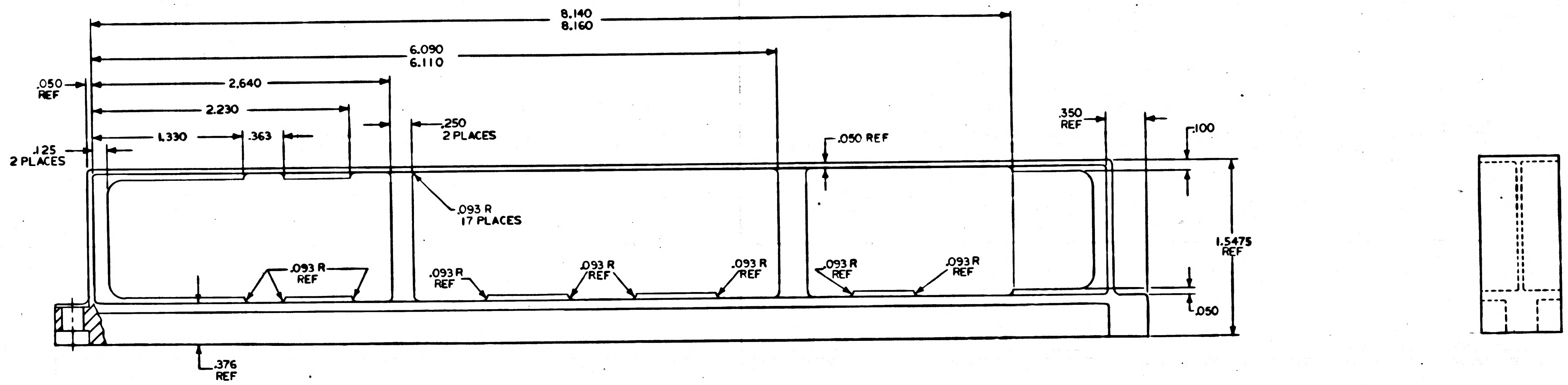

NOTES:
1. INTERPRET DRAWING IN ACCORDANCE WITH STANDARDS PRESCRIBED BY MIL-D-70327
2. MATERIAL: MAKE FROM 1004201
3. FINISH: ANODIZE PER MIL-M-45202, TYPE II, CLASS C
4. UNLESS OTHERWISE SPECIFIED 125/ ALL OVER
5. UNLESS OTHERWISE SPECIFIED ALL FILLETS AND RADII .005/.020
6. REMOVE ALL BURRS AND BREAK SHARP EDGES .005-.015

QTY REQD	PART OR IDENTIFYING NO.	NOMENCLATURE OR DESCRIPTION	FIND NO.

LIST OF MATERIALS

NEXT ASSY	USED ON
1003175	

APPLICATION

UNLESS OTHERWISE SPECIFIED
DIMENSIONS ARE IN INCHES
TOLERANCES ON
FRACTIONS ± DECIMALS XXX ±.005 XX ±.02 ANGLES ±
DO NOT SCALE THIS DRAWING

MATERIAL SEE NOTE 2
HEAT TREATMENT
FINAL FINISH SEE NOTE 3

MIT
INSTRUMENTATION LAB
CAMBRIDGE, MASS
DWG. NO. CONTRACT

DRAWN J.T. Walsh DATE 10/21/63
CHECKED
APPROVAL
APPROVAL
NASA APPROVAL
MIT APPROVAL

MANNED SPACECRAFT CENTER
HOUSTON, TEXAS

HEADER HOUSING
STRAND GATE MODULE

CODE IDENT NO. —
SIZE D
NASA DRAWING NO. 1004274
SCALE 2/1
WT
SHEET 1 OF 1

REVISIONS 04147			
SYM	DESCRIPTION	DATE	APPROVAL

NOTICE — WHEN GOVERNMENT DRAWINGS, SPECIFICATIONS, OR OTHER DATA ARE USED FOR ANY PURPOSE OTHER THAN IN CONNECTION WITH A DEFINITELY RELATED GOVERNMENT PROCUREMENT OPERATION, THE UNITED STATES GOVERNMENT THEREBY INCURS NO RESPONSIBILITY NOR ANY OBLIGATION WHATSOEVER; AND THE FACT THAT THE GOVERNMENT MAY HAVE FORMULATED, FURNISHED, OR IN ANY WAY SUPPLIED THE SAID DRAWINGS, SPECIFICATIONS OR OTHER DATA IS NOT TO BE REGARDED BY IMPLICATION OR OTHERWISE AS IN ANY MANNER LICENSING THE HOLDER OR ANY OTHER PERSON OR CORPORATION, OR CONVEYING ANY RIGHTS OR PERMISSION TO MANUFACTURE, USE, OR SELL ANY PATENTED INVENTION THAT MAY IN ANY WAY BE RELATED THERETO.

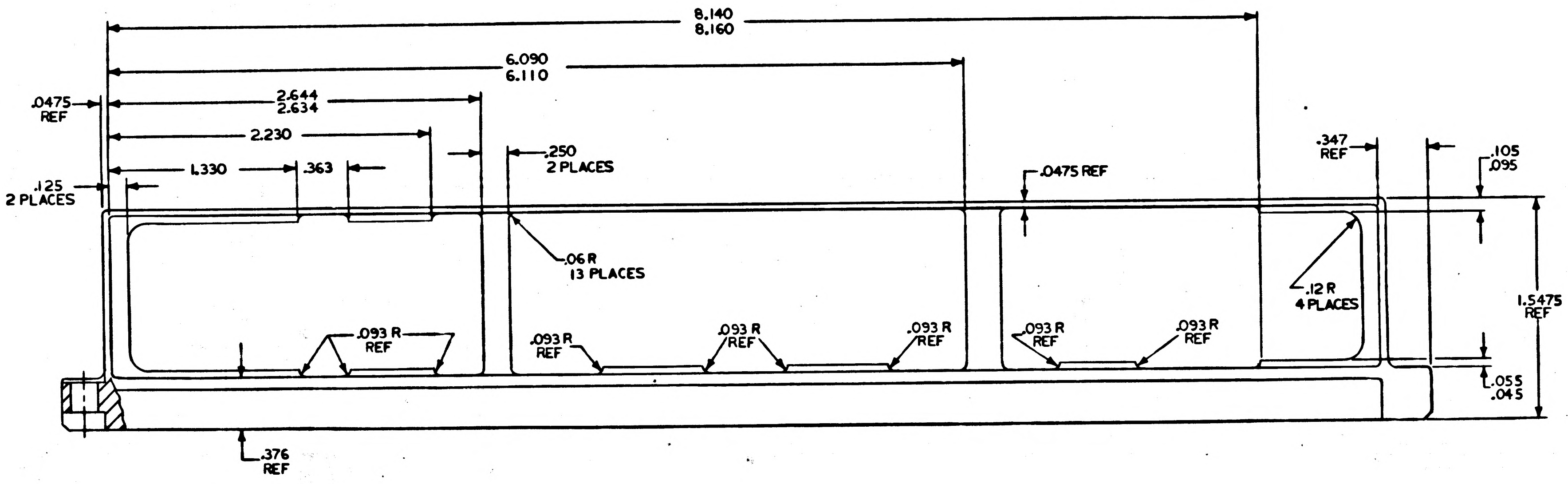
8.140
8.160
6.090
6.110
2.644
2.634
.0475 REF
2.230
1.330
.363
.125 2 PLACES
.250 2 PLACES
.0475 REF
.347 REF
.105
.095
.06 R 13 PLACES
.12 R 4 PLACES
.093 R REF
.093 R REF
.093 R REF
.093 R REF
.093 R REF
.093 R REF
1.5475 REF
.055
.045
.376 REF

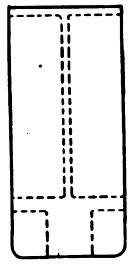

NOTES:

1. INTERPRET DRAWING IN ACCORDANCE WITH STANDARDS PRESCRIBED BY MIL-D-70327
2. MATERIAL: MAKE FROM 1004201
3. FINISH: ANODIZE PER MIL-M-3171 TYPE IV
4. UNLESS OTHERWISE SPECIFIED 125/ ALL OVER
5. UNLESS OTHERWISE SPECIFIED ALL FILLETS AND RADII .005/.020
6. REMOVE ALL BURRS AND BREAK SHARP EDGES .005-.015

MASTER

QTY REQD	PART OR IDENTIFYING NO.	NOMENCLATURE OR DESCRIPTION	FIND NO.
LIST OF MATERIALS			

1003175	
NEXT ASSY	USED ON
APPLICATION	

UNLESS OTHERWISE SPECIFIED
DIMENSIONS ARE IN INCHES
TOLERANCES ON
FRACTIONS ± DECIMALS XXX±.005 XX±.02 ANGLES ±2°
DO NOT SCALE THIS DRAWING

MATERIAL
SEE NOTE 2

HEAT TREATMENT

FINAL FINISH
SEE NOTE 3

MIT
INSTRUMENTATION LAB
CAMBRIDGE, MASS.
DWG. NO. CONTRACT

DRAWN J.F. Walsh DATE 10/21/63
CHECKED 22 Oct 63
APPROVAL 23 OCT 63
APPROVAL
NASA APPROVAL 10/24/63
MIT APPROVAL 24 Oct

MANNED SPACECRAFT CENTER
HOUSTON, TEXAS

HEADER HOUSING
STRAND GATE MODULE

CODE IDENT NO.	SIZE	NASA DRAWING NO.
	D	1004274
SCALE 2/1	WT	SHEET 1 OF 1

1004274

INCHES
0 1 2
PHOTOGRAPHIC SCALE ONLY

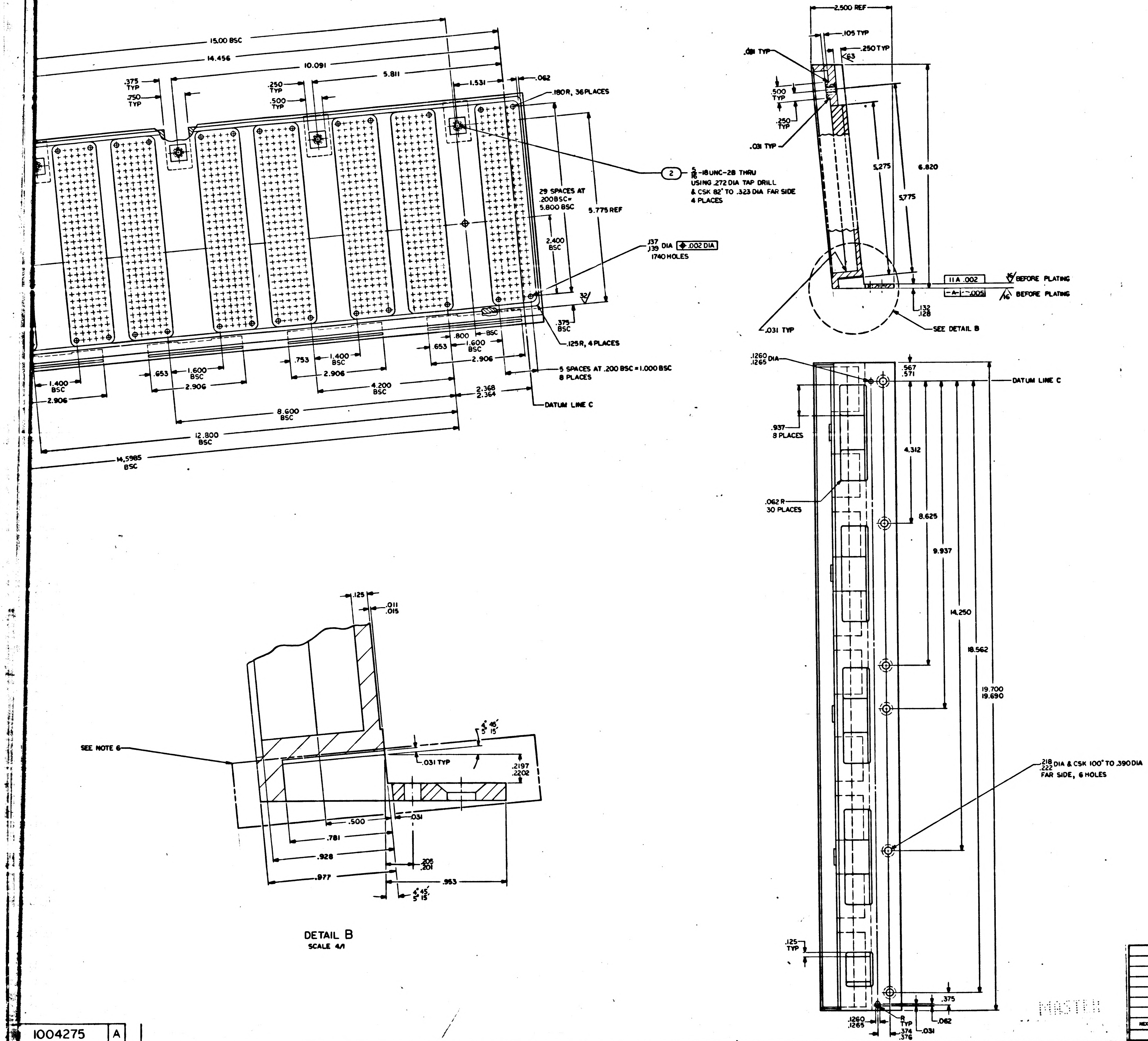
15.00 BSC
14.456
10.091
5.811
1.531
.062
.375 TYP
.750 TYP
.250 TYP
.500 TYP
.180R, 36 PLACES
2
$\frac{5}{16}$-18UNC-2B THRU
USING .272 DIA TAP DRILL
& CSK 82° TO .323 DIA FAR SIDE
4 PLACES
29 SPACES AT .200 BSC= 5.800 BSC
5.775 REF
2.400 BSC
.137 .139 DIA ◆ .002 DIA
1740 HOLES
32
.375 BSC
.125R, 4 PLACES
.800
BSC
.653
1.600 BSC
2.906
.753
1.400 BSC
2.906
.653
1.600 BSC
2.906
1.400 BSC
2.906
4.200 BSC
2.368 2.364
5 SPACES AT .200 BSC = 1.000 BSC
8 PLACES
DATUM LINE C
8.600 BSC
12.800 BSC
14.5985 BSC
2.500 REF
.105 TYP
.250 TYP
63
.031 TYP
.500 TYP
.250 TYP
.031 TYP
5.275
5.775
6.820
11 A .002
16 BEFORE PLATING
-A- .005
16 BEFORE PLATING
.132 .128
.031 TYP
SEE DETAIL B
.1260 .1265 DIA
.567 .571
DATUM LINE C
.937 8 PLACES
4.312
.062 R 30 PLACES
8.625
9.937
14.250
18.562
19.700 19.690
.218 .222 DIA & CSK 100° TO .390 DIA
FAR SIDE, 6 HOLES
.125 TYP
.375
R TYP
.062
.1260 .1265
.374 .376
.031
.125
.011 .015
SEE NOTE 6
4° 45′ 5° 15′
.031 TYP
.2197 .2202
.500
.031
.781
.928
.205 .201
.977
.953
4° 45′ 5° 15′
DETAIL B
SCALE 4/1

QTY REQD	PART OR IDENTIFYING NO.	NOMENCLATURE OR DESCRIPTION	FIND NO.
4	NAS1394CA-3L	INSERT, SELF-LOCKING	2
1	1004275-1	CONNECTOR, COMPUTER END	1

LIST OF MATERIALS

NEXT ASSY	USED ON
APPLICATION	

UNLESS OTHERWISE SPECIFIED
DIMENSIONS ARE IN INCHES
TOLERANCES ON
FRACTIONS ± — DECIMALS ±.005 ANGLES ± $\frac{1}{2}$
DO NOT SCALE THIS DRAWING
MATERIAL SEE NOTE 2
HEAT TREATMENT —
FINAL FINISH SEE NOTE 6

MIT
INSTRUMENTATION LAB
CAMBRIDGE, MASS

DRAWN C.A. Bazter DATE 9-26-63
CHECKED
APPROVAL 12 OCT 63
APPROVAL
NASA APPROVAL
MIT APPROVAL 17 Oct 63

MANNED SPACECRAFT CENTER
HOUSTON, TEXAS

CONNECTOR,
COMPUTER END

CODE IDENT NO. SIZE J NASA DRAWING NO. 1004275
SCALE 1/1 WT SHEET 1 OF 1

1004275 A

MASTER

INCHES 0 1 2 PHOTOGRAPHIC SCALE ONLY

F-2

NOTICE — WHEN GOVERNMENT OR OTHER DRAWINGS, SPECIFICATIONS, OR OTHER DATA ARE USED FOR ANY PURPOSE OTHER THAN IN CONNECTION WITH A DEFINITELY RELATED GOVERNMENT PROCUREMENT OPERATION, THE UNITED STATES GOVERNMENT THEREBY INCURS NO RESPONSIBILITY NOR ANY OBLIGATION WHATSOEVER; AND THE FACT THAT THE GOVERNMENT MAY HAVE FORMULATED, FURNISHED, OR IN ANY WAY SUPPLIED THE SAID DRAWINGS, SPECIFICATIONS OR OTHER DATA IS NOT TO BE REGARDED BY IMPLICATION OR OTHERWISE AS IN ANY MANNER LICENSING THE HOLDER OR ANY OTHER PERSON OR CORPORATION, OR CONVEYING ANY RIGHTS OR PERMISSION TO MANUFACTURE, USE, OR SELL ANY PATENTED INVENTION THAT MAY IN ANY WAY BE RELATED THERETO.

D

C

B

A

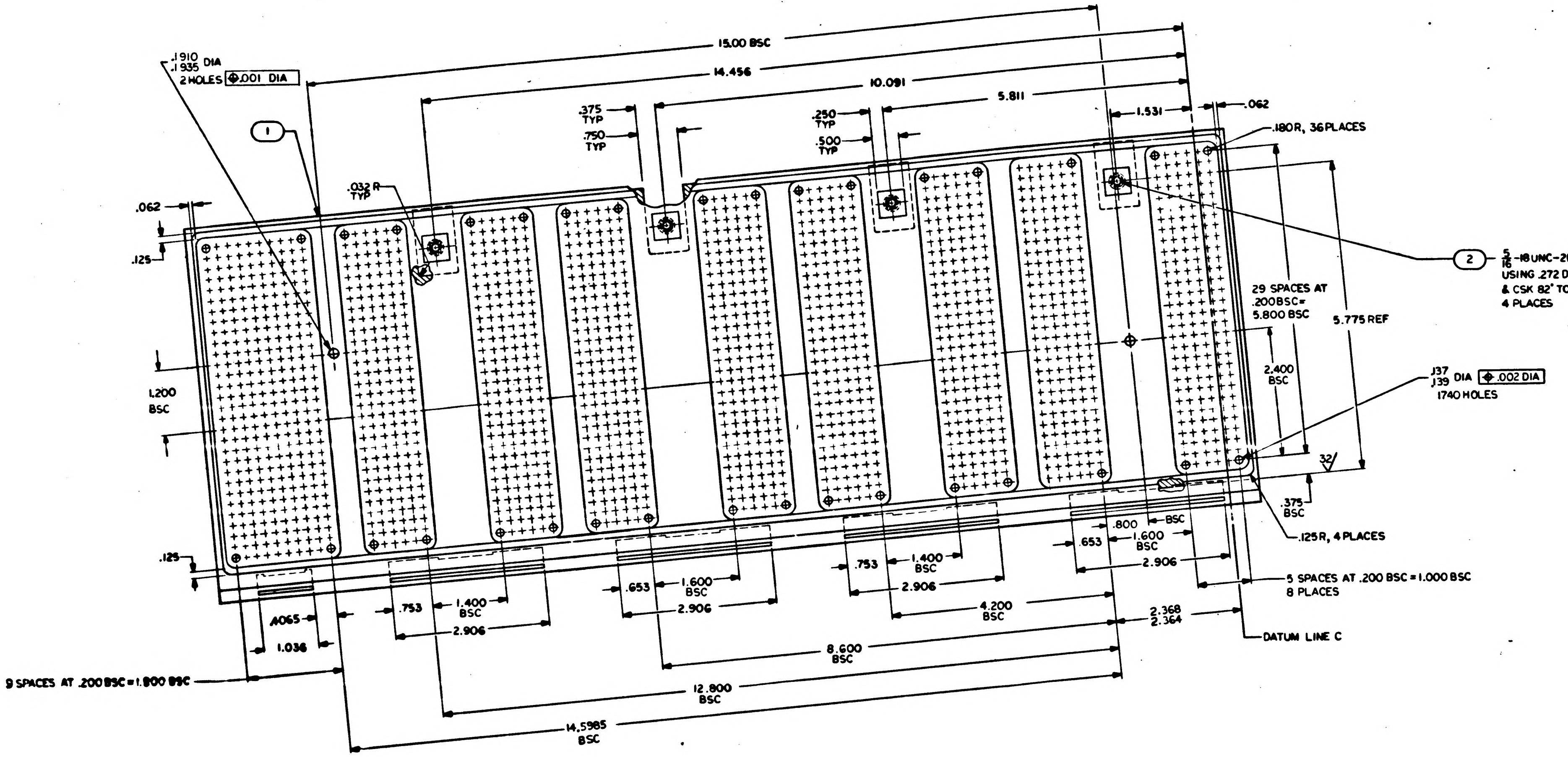
.1910
.1935 DIA
2 HOLES ⌖ .001 DIA
①
15.00 BSC
14.456
10.091
5.811
.375 TYP
.750 TYP
.250 TYP
.500 TYP
1.531
.062
.180R, 36 PLACES
.032 R TYP
.062
.125
1.200 BSC
.125
② 5/16-18UNC-2B THRU
USING .272 DIA TAP DRILL
& CSK 82° TO .323 DIA FAR SIDE
4 PLACES
29 SPACES AT .200BSC= 5.800 BSC
5.775 REF
2.400 BSC
.137
.139 DIA ⌖ .002 DIA
1740 HOLES
32
.375 BSC
.125R, 4 PLACES
.800
BSC
.653
1.600 BSC
2.906
.753
1.400 BSC
2.906
.653
1.600 BSC
2.906
.4065
1.036
.753
1.400 BSC
2.906
4.200 BSC
2.368
2.364
5 SPACES AT .200 BSC = 1.000 BSC
8 PLACES
DATUM LINE C
8.600 BSC
12.800 BSC
14.5985 BSC
9 SPACES AT .200 BSC = 1.800 BSC

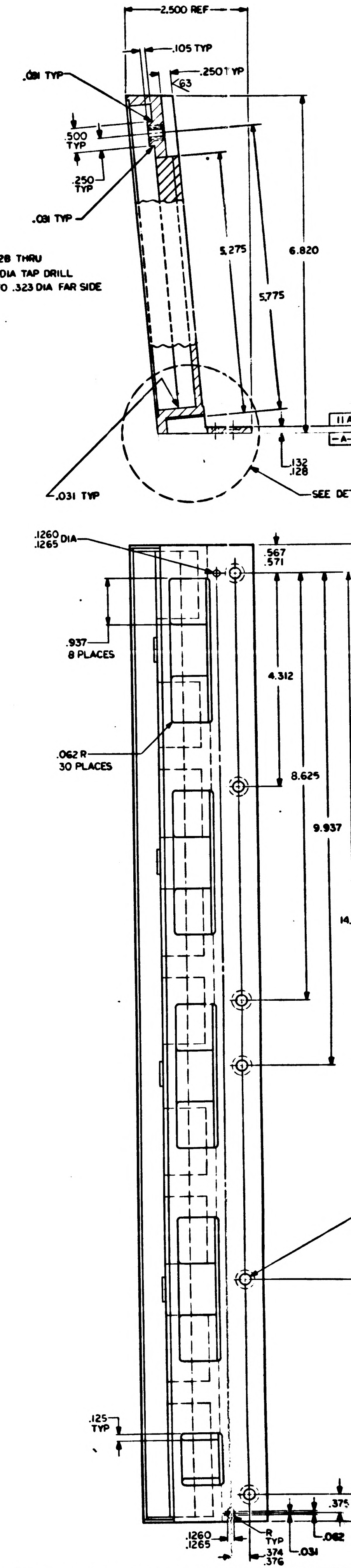
2.500 REF
.105 TYP
.250 TYP
63
.031 TYP
.500 TYP
.250 TYP
.031 TYP
5.275
6.820
5.775
.031 TYP
.132
.128
SEE DET
.1260
.1265 DIA
.567
.571
.937
8 PLACES
4.312
.062 R
30 PLACES
8.625
9.937
.125 TYP
.1260
.1265
R TYP
.374
.376
.031
.062
.375

NOTES -

1. INTERPRET DRAWING IN ACCORDANCE WITH STANDARDS PRESCRIBED BY MIL-D-70327
2. MATL: 6061-T6 AL PER QQ-A-325,
3. REMOVE BURRS & SHARP EDGES .005/.015
4. 125/ ALL OVER UNLESS OTHERWISE SPECIFIED
5. FINISH SEE NOTE 6 FOR PLATED AREAS. ALL NONPLATED SURFACES TO BE ANODIZED PER MIL-A-8625, TYPE II, DYED BLACK PLUG ALL DOWEL HOLES BEFORE ANODIZING
6. PHANTOM LINES INDICATE SURFACES TO BE FREE FROM ANODIZE AND PLATED. PLATE (ELECTRODEPOSITED) PER QQ-C-320 CLASS II, TYPE II, $^{.0002}_{.0004}$ THICK, C70-72 ROCKWELL HARDNESS. DIMENSIONS APPLY AFTER PLATING. FINISH 32/ AFTER PLATING

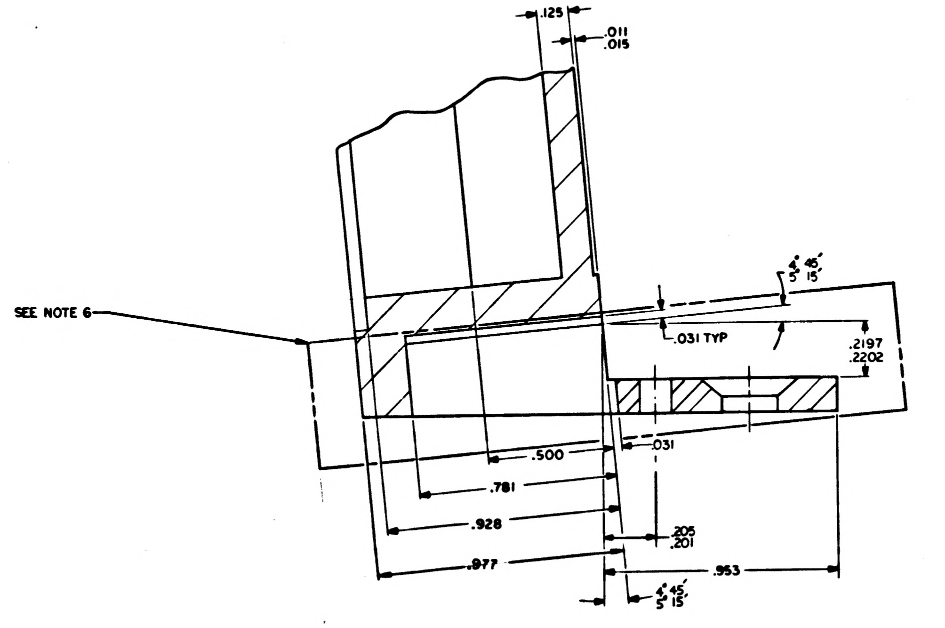
.125
.011
.015
SEE NOTE 6
4° 45'
5° 15'
.031 TYP
.2197
.2202
.500
.031
.781
.928
.205
.201
.977
.953
4° 45'
5° 15'

DETAIL B
SCALE 4/1

1004275	A

6 5 4 3

INCHES
0 1 2
PHOTOGRAPHIC SCALE ONLY

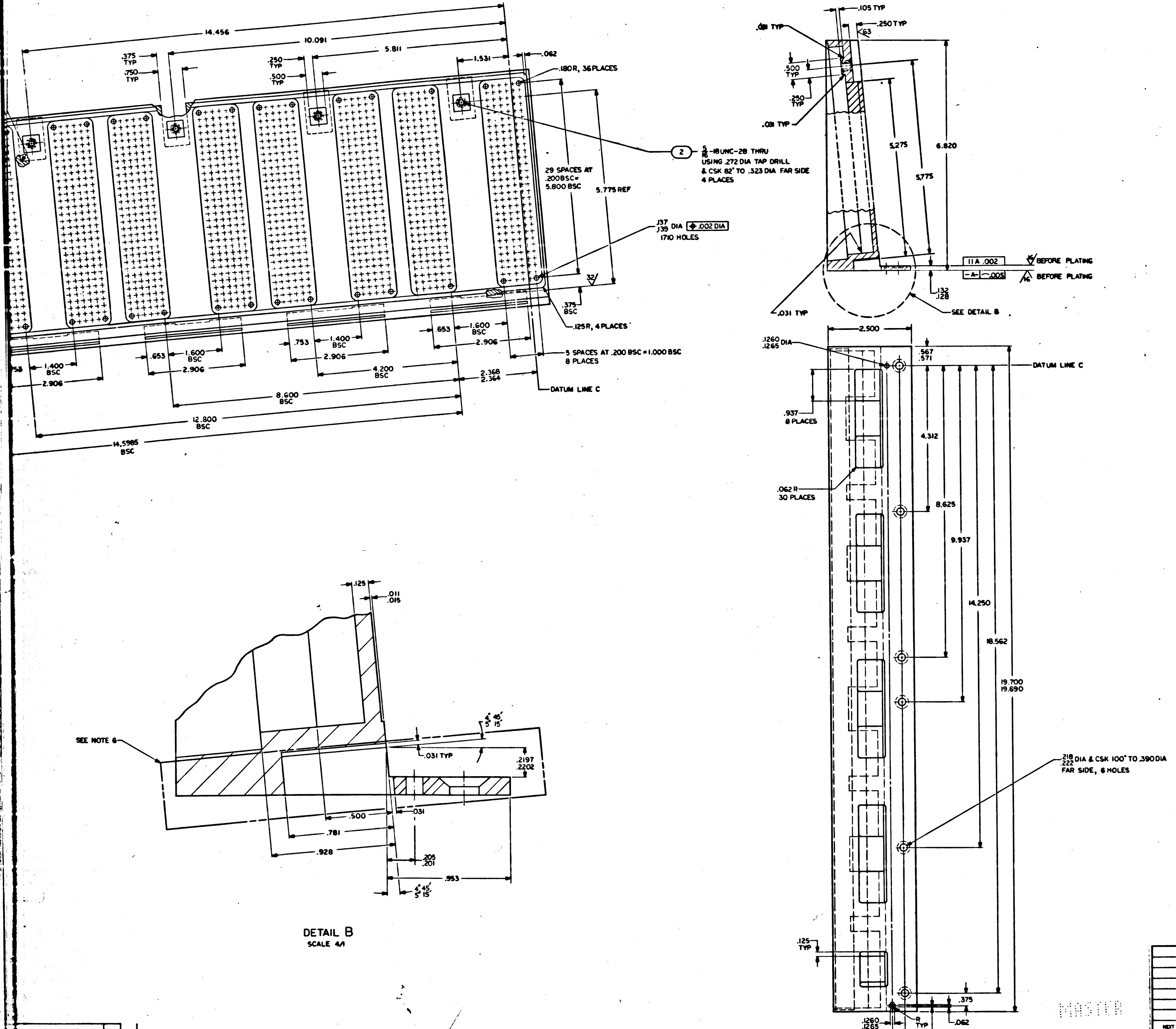
14.456
10.091
5.811
1.531
.062
.375 TYP
.750 TYP
.250 TYP
.500 TYP
.180R, 36 PLACES
(2) 5/16-18UNC-2B THRU USING .272 DIA TAP DRILL & CSK 82° TO .323 DIA FAR SIDE 4 PLACES
29 SPACES AT .200BSC= 5.800 BSC
5.775 REF
.137 .139 DIA ⌖ .002 DIA 1710 HOLES
32
.375 BSC
.125R, 4 PLACES
1.400 BSC
2.906
.653
1.600 BSC
.753
4.200 BSC
1.600 BSC
5 SPACES AT .200 BSC = 1.000 BSC 8 PLACES
2.368 2.364
DATUM LINE C
8.600 BSC
12.800 BSC
14.5985 BSC
.105 TYP
.031 TYP
.250 TYP
63
.500 TYP
.250 TYP
5.275
6.820
5.775
11 A .002
16 BEFORE PLATING
-A- .005
16 BEFORE PLATING
.132 .128
SEE DETAIL B
2.500
.1260 .1265 DIA
.567 .571
DATUM LINE C
.937 8 PLACES
4.312
.062 R 30 PLACES
8.625
9.937
14.250
18.562
19.700 19.690
.218 .222 DIA & CSK 100° TO .390 DIA FAR SIDE, 6 HOLES
.125 TYP
.375
.062
.1260 .1265
R TYP
.374 .376
.031
.125
.011 .015
5° 45' 5° 15'
SEE NOTE 6
.031 TYP
.2197 .2202
.500
.031
.781
.928
.205 .201
.953
DETAIL B
SCALE 4/1

QTY REQD	PART OR IDENTIFYING NO.	NOMENCLATURE OR DESCRIPTION	FIND NO.
4	NAS1394CA-3L	INSERT, SELF-LOCKING	2
1	1004275-1	CONNECTOR, COMPUTER END	1

LIST OF MATERIALS

NEXT ASSY	USED ON

APPLICATION

UNLESS OTHERWISE SPECIFIED
DIMENSIONS ARE IN INCHES
TOLERANCES ON
FRACTIONS ± — DECIMALS ±.005 ANGLES ± 1/2°
DO NOT SCALE THIS DRAWING

MATERIAL
SEE NOTE 2

HEAT TREATMENT
—

FINAL FINISH
SEE NOTE 6

MIT
INSTRUMENTATION LAB
CAMBRIDGE, MASS
DWG. NO. CONTRACT

DRAWN C.A. Bester DATE 9-26-63
CHECKED
APPROVAL 1 Oct 63
APPROVAL

NASA APPROVAL

MIT APPROVAL

MANNED SPACECRAFT CENTER
HOUSTON, TEXAS

CONNECTOR, COMPUTER END

CODE IDENT NO.
SIZE J
NASA DRAWING NO. 1004275
SCALE 1/1
WT
SHEET 1 OF 1

MASTER

INCHES
PHOTOGRAPHIC SCALE ONLY

E 2

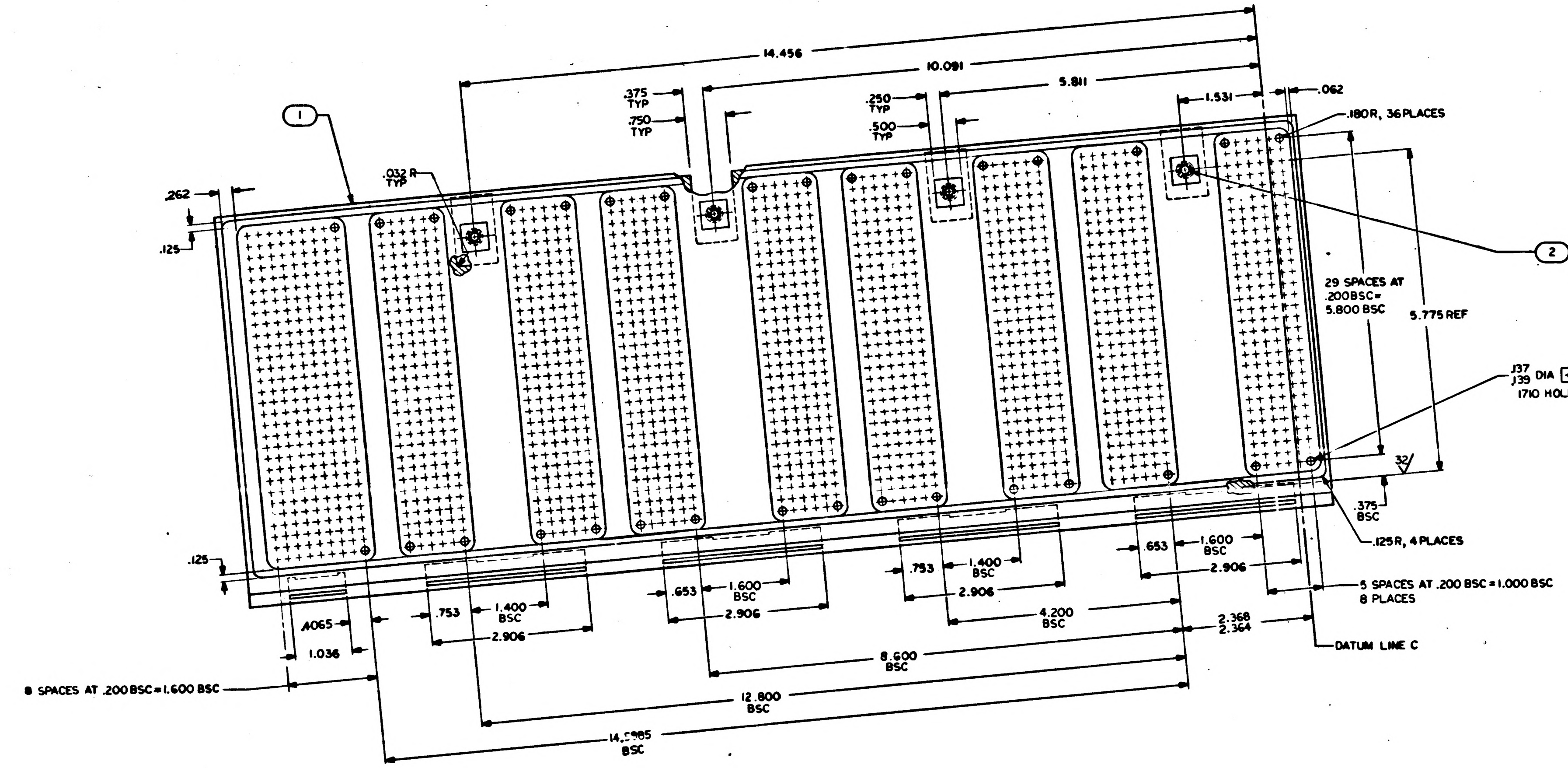
14.456
10.091
5.811
1.531
.062
.375 TYP
.750 TYP
.250 TYP
.500 TYP
.180R, 36 PLACES
.262
.125
.032 R TYP
1
2
5/16-18UNC-2B THRU USING .272 DIA TAP DRILL & CSK 82° TO .323 DIA FAR SIDE 4 PLACES
29 SPACES AT .200 BSC= 5.800 BSC
5.775 REF
.137 .139 DIA ⌖ .002 DIA
1710 HOLES
32
.375 BSC
.125R, 4 PLACES
.125
.4065
1.036
.753
1.400 BSC
2.906
.653
1.600 BSC
2.906
.753
1.400 BSC
2.906
4.200 BSC
.653
1.600 BSC
2.906
2.368 2.364
5 SPACES AT .200 BSC = 1.000 BSC 8 PLACES
DATUM LINE C
8.600 BSC
12.800 BSC
14.5985 BSC
8 SPACES AT .200 BSC=1.600 BSC

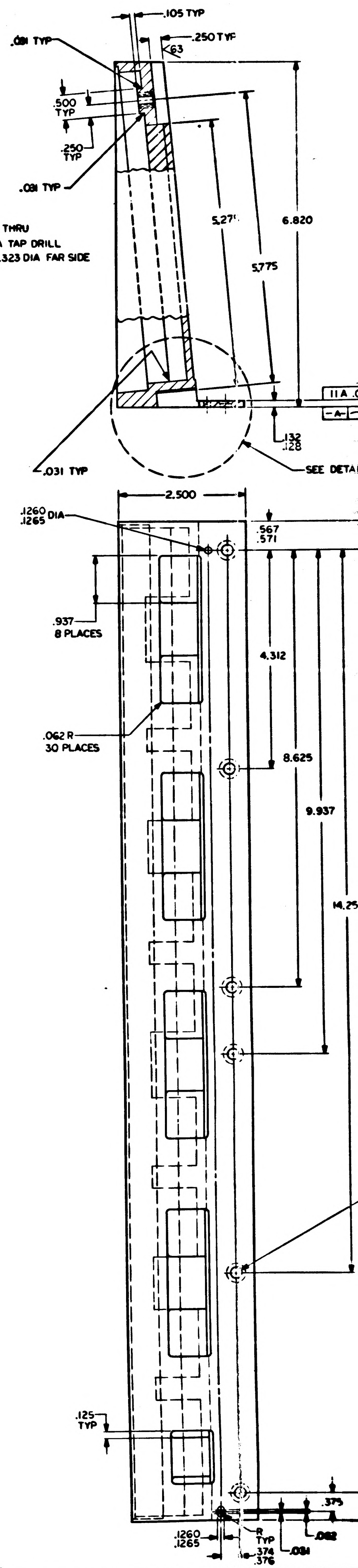
.105 TYP
.250 TYP
.031 TYP
.500 TYP
.250 TYP
.031 TYP
63
5.275
5.775
6.820
.132 .128
.031 TYP
SEE DETAIL
2.500
.1260 .1265 DIA
.567 .571
.937 8 PLACES
4.312
.062 R 30 PLACES
8.625
9.937
14.25
.125 TYP
.1260 .1265
.375
.082
.374 .376
.084

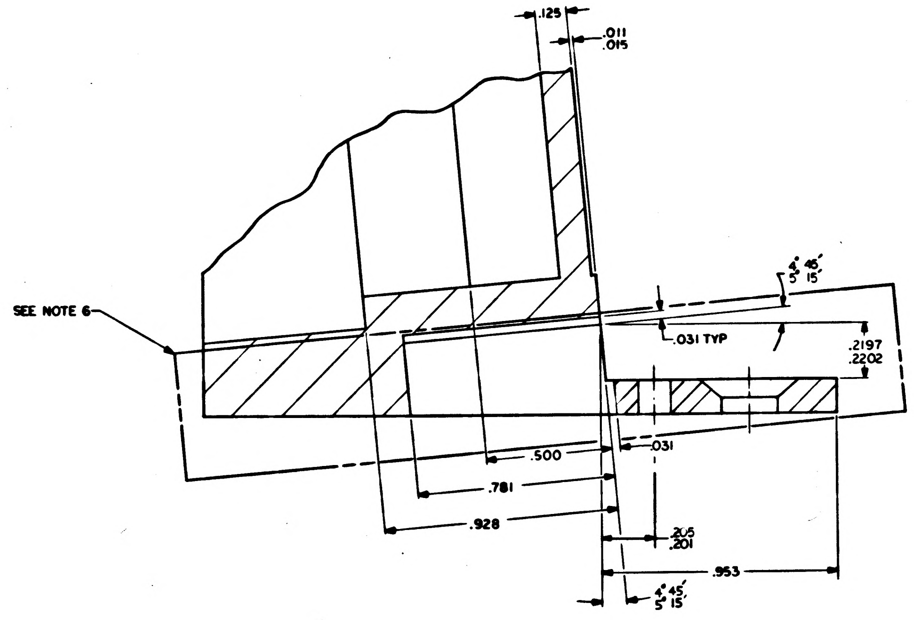
.125
.011 .015
SEE NOTE 6
4° 45' 5° 15'
.031 TYP
.2197 .2202
.500
.031
.781
.928
.205 .201
.953
4° 45' 5° 15'

DETAIL B
SCALE 4/1

NOTES -

1. INTERPRET DRAWING IN ACCORDANCE WITH STANDARDS PRESCRIBED BY MIL-D-70327
2. MATL: 6061-T6 AL PER QQ-A-325,
3. REMOVE BURRS & SHARP EDGES .005/.015
4. 125/ ALL OVER UNLESS OTHERWISE SPECIFIED
5. FINISH SEE NOTE 6 FOR PLATED AREAS. ALL NONPLATED SURFACES TO BE ANODIZED PER MIL-A-8625, TYPE II, DYED BLACK PLUG ALL DOWEL HOLES BEFORE ANODIZING
6. PHANTOM LINES INDICATE SURFACES TO BE FREE FROM ANODIZE AND PLATED. PLATE (ELETRODEPOSITED) PER QQ-C-320 CLASS II, TYPE II, DIMENSIONS APPLY AFTER PLATING FINISH 32/ AFTER PLATING

INCHES
PHOTOGRAPHIC SCALE ONLY

NOTICE — WHEN GOVERNMENT DRAWINGS, SPECIFICATIONS, OR OTHER DATA ARE USED FOR ANY PURPOSE OTHER THAN IN CONNECTION WITH A DEFINITELY RELATED GOVERNMENT PROCUREMENT OPERATION, THE UNITED STATES GOVERNMENT THEREBY INCURS NO RESPONSIBILITY NOR ANY OBLIGATION WHATSOEVER; AND THE FACT THAT THE GOVERNMENT MAY HAVE FORMULATED, FURNISHED, OR IN ANY WAY SUPPLIED THE SAID DRAWINGS, SPECIFICATIONS OR OTHER DATA IS NOT TO BE REGARDED BY IMPLICATION OR OTHERWISE AS IN ANY MANNER LICENSING THE HOLDER OR ANY OTHER PERSON OR CORPORATION, OR CONVEYING ANY RIGHTS OR PERMISSION TO MANUFACTURE, USE, OR SELL ANY PATENTED INVENTION THAT MAY IN ANY WAY BE RELATED THERETO.

1004276 A

Ⓜ

REVISIONS 03649

SYM	DESCRIPTION	DATE	APPROVAL
A	REVISED PER TDRR 04008	10-16-63	RK WK

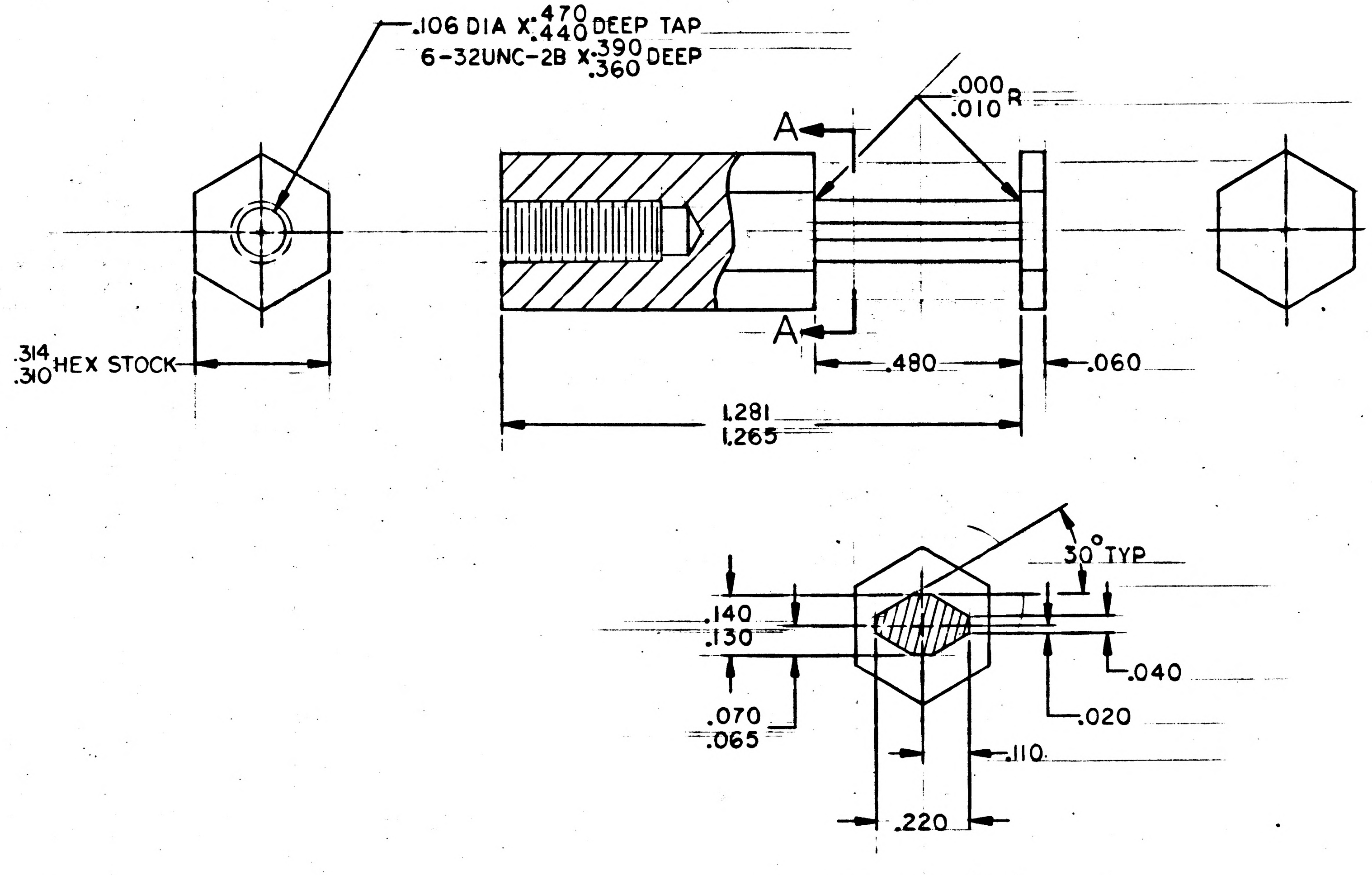

SECTION A-A

NOTES
1 INTERPRET DRAWING IN ACCORDANCE WITH STANDARDS PRESCRIBED BY MIL-D-70327
2 MATL : CRES PER QQ-S-763, CLASS 303, COND A
3 REMOVE BURRS AND BREAK SHARP EDGES
4 125/ FINISH ALL OVER
5 PASSIVATE PER MIL-F-14072, FINISH E300, TYPE I.

MASTER

QTY REQD	PART OR IDENTIFYING NO.	NOMENCLATURE OR DESCRIPTION	FIND NO.

LIST OF MATERIALS

NEXT ASSY	USED ON
1003155	

APPLICATION

UNLESS OTHERWISE SPECIFIED
DIMENSIONS ARE IN INCHES
TOLERANCES ON
FRACTIONS ± DECIMALS ±.005 ANGLES ±1°
DO NOT SCALE THIS DRAWING
MATERIAL SEE NOTE 2
HEAT TREATMENT
FINAL FINISH SEE NOTE 5

MIT
INSTRUMENTATION LAB
CAMBRIDGE, MASS.
DWG. NO.
CONTRACT
DRAWN Ed Powers DATE 30 Sept 63
CHECKED
APPROVAL W B Turner 2 OCT 63
APPROVAL E J Duggan 10/2/63
NASA APPROVAL W J Rhine 10-3-63
MIT APPROVAL W Kupfer 3 Oct 63

MANNED SPACECRAFT CENTER
HOUSTON, TEXAS

SPACER , SPECIAL

6+N HARNESS CONN PLATE

CODE IDENT NO. —
SIZE C
NASA DRAWING NO. 1004276
SCALE 4/1
WT
SHEET 1 OF 1

INCHES
0 1 2
PHOTOGRAPHIC SCALE ONLY

NOTICE — WHEN GOVERNMENT DRAWINGS, SPECIFICATIONS, OR OTHER DATA ARE USED FOR ANY PURPOSE OTHER THAN IN CONNECTION WITH A DEFINITELY RELATED GOVERNMENT PROCUREMENT OPERATION, THE UNITED STATES GOVERNMENT THEREBY INCURS NO RESPONSIBILITY NOR ANY OBLIGATION WHATSOEVER; AND THE FACT THAT THE GOVERNMENT MAY HAVE FORMULATED, FURNISHED, OR IN ANY WAY SUPPLIED THE SAID DRAWINGS, SPECIFICATIONS OR OTHER DATA IS NOT TO BE REGARDED BY IMPLICATION OR OTHERWISE AS IN ANY MANNER LICENSING THE HOLDER OR ANY OTHER PERSON OR CORPORATION, OR CONVEYING ANY RIGHTS OR PERMISSION TO MANUFACTURE, USE, OR SELL ANY PATENTED INVENTION THAT MAY IN ANY WAY BE RELATED THERETO.

1004276

REVISIONS 03649			
SYM	DESCRIPTION	DATE	APPROVAL

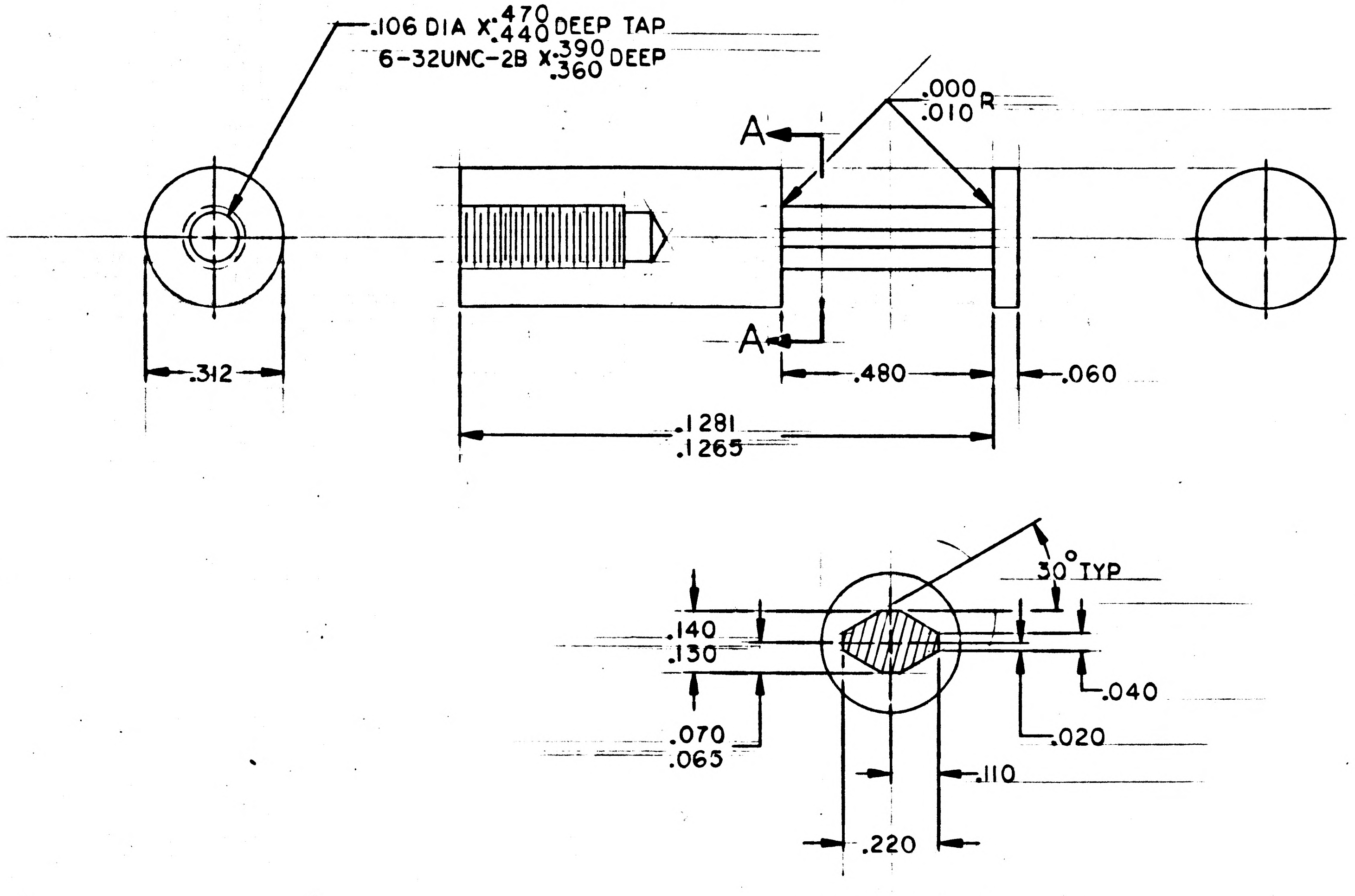

SECTION A-A

NOTES
1 INTERPRET DRAWING IN ACCORDANCE WITH STANDARDS PRESCRIBED BY MIL-D-70327
2 MATL: CRES PER QQ-S-763, CLASS 303, COND A
3 REMOVE BURRS AND BREAK SHARP EDGES

MASTER

QTY REQD	PART OR IDENTIFYING NO.	NOMENCLATURE OR DESCRIPTION	FIND NO.

LIST OF MATERIALS

1003155	
NEXT ASSY	USED ON
APPLICATION	

UNLESS OTHERWISE SPECIFIED DIMENSIONS ARE IN INCHES
TOLERANCES ON
FRACTIONS ± DECIMALS ±.005 ANGLES ±1°
DO NOT SCALE THIS DRAWING
MATERIAL SEE NOTE 2
HEAT TREATMENT
FINAL FINISH

MIT INSTRUMENTATION LAB
CAMBRIDGE, MASS.
DWG. NO. CONTRACT
DRAWN Ed Powers DATE 30 Sept 63
CHECKED
APPROVAL W B Turner 2 OCT 63
APPROVAL E J Duggan 10/2/63
NASA APPROVAL W J Rhine 10-3-63
MIT APPROVAL W Kupfer 3 Oct 63

MANNED SPACECRAFT CENTER
HOUSTON, TEXAS

SPACER , SPECIAL
6+N HARNESS CONN PLATE

CODE IDENT NO.	SIZE	NASA DRAWING NO.
	C	1004276
SCALE 4/1	WT	SHEET 1 OF 1

NOTICE — WHEN GOVERNMENT DRAWINGS, SPECIFICATIONS, OR OTHER DATA ARE USED FOR ANY PURPOSE OTHER THAN IN CONNECTION WITH A DEFINITELY RELATED GOVERNMENT PROCUREMENT OPERATION, THE UNITED STATES GOVERNMENT THEREBY INCURS NO RESPONSIBILITY NOR ANY OBLIGATION WHATSOEVER; AND THE FACT THAT THE GOVERNMENT MAY HAVE FORMULATED, FURNISHED, OR IN ANY WAY SUPPLIED THE SAID DRAWINGS, SPECIFICATIONS OR OTHER DATA IS NOT TO BE REGARDED BY IMPLICATION OR OTHERWISE AS IN ANY MANNER LICENSING THE HOLDER OR ANY OTHER PERSON OR CORPORATION, OR CONVEYING ANY RIGHTS OR PERMISSION TO MANUFACTURE, USE, OR SELL ANY PATENTED INVENTION THAT MAY IN ANY WAY BE RELATED THERETO.

REVISIONS 04009

SYM	DESCRIPTION	DATE	APPROVAL
A	REVISED PER TDRR 04497	11-6-63	RDK WK

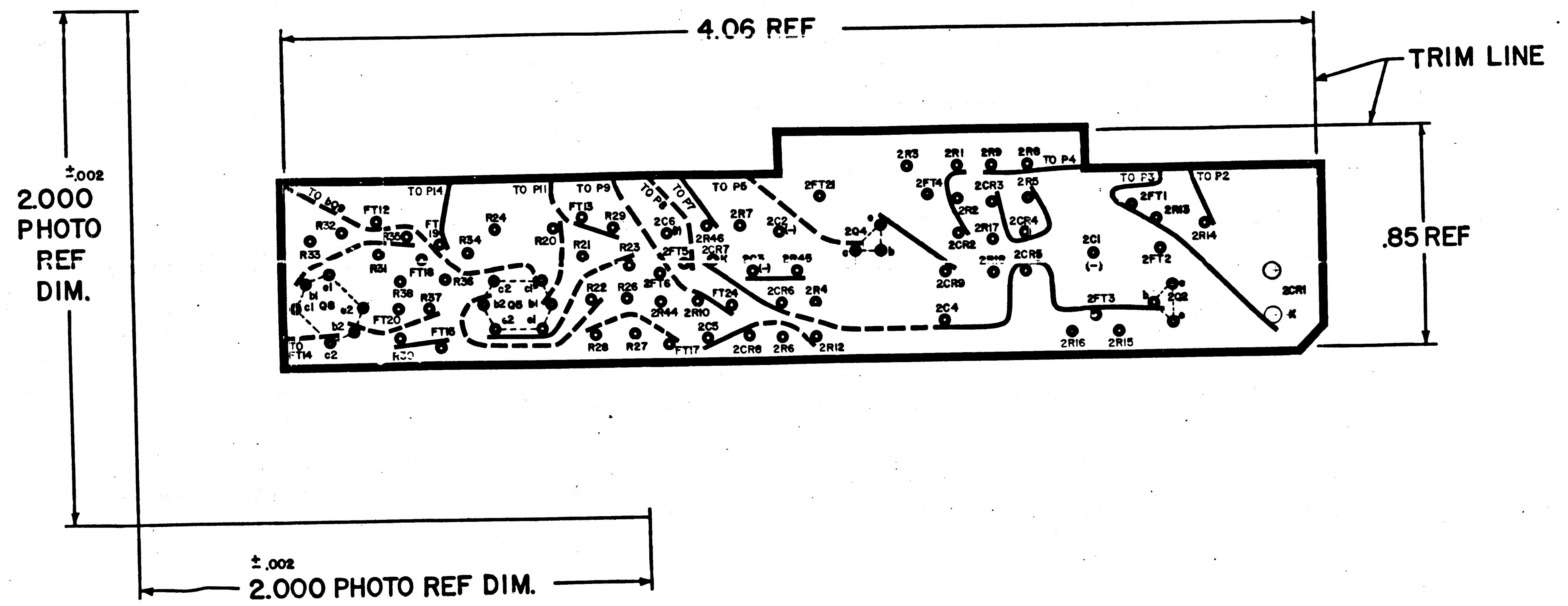
4.06 REF
TRIM LINE
.85 REF
±.002
2.000
PHOTO
REF
DIM.
±.002
2.000 PHOTO REF DIM.
TO bQ9
TO P14
TO P11
TO P9
TO P8
TO P7
TO P5
TO P4
TO P3
TO P2
TO FT14
FT12
FT19
FT13
FT18
FT20
FT16
FT17
FT24
R32
R33
R35
R31
R34
R24
R20
R21
R29
R23
R36
R38
R37
R22
R26
R28
R27
R30
c1
b1
e1
Q8
e2
b2
c2
Q5
2C6
2R46
2CR7
2FT5
2FT6
2R44
2R10
2C5
2CR8
2R6
2R12
2R7
2C2
2C3
2R45
2CR6
2R4
2FT21
2Q4
2CR9
2C4
2R3
2R1
2R9
2R8
2FT4
2R2
2CR2
2CR3
2R5
2CR4
2R17
2R18
2CR5
2C1
(−)
2FT1
2R13
2R14
2FT2
2FT3
2Q2
2R16
2R15
2CR1
K

NOTES
1. INTERPRET DRAWING IN ACCORDANCE WITH STANDARDS PRESCRIBED BY MIL-D-70327
2. ORIGINAL OF THIS DRAWING OR REPRODUCTION MADE BY PROCESS OR METHOD SHALL INSURE DIMENSIONAL STABILITY. DIMENSIONAL STABILITY SHALL NOT EXCEED .001 INCH PER INCH
3. CUT TO WITHIN .010 OF TRIM LINE
4. MAKE MASTER PATTERN POSITIVE FILMS TO DIMENSIONS SHOWN
5. MATERIAL: FILM .006/.008 THK PER L-F-340, TYPE IB, CL 2, STYLE IA
6. ● .035/.045 DIA PUNCH
7. BROKEN LINES DENOTE SLEEVING
8. ○ .057/.067 DIA PUNCH

QTY REQD	PART OR IDENTIFYING NO.	NOMENCLATURE OR DESCRIPTION	FIND NO.

LIST OF MATERIALS

NEXT ASSY	USED ON
1003150	

APPLICATION

UNLESS OTHERWISE SPECIFIED DIMENSIONS ARE IN INCHES
TOLERANCES ON
FRACTIONS ± DECIMALS ± ANGLES ±
DO NOT SCALE THIS DRAWING
MATERIAL SEE NOTE 5
HEAT TREATMENT
FINAL FINISH

M I T
INSTRUMENTATION LAB
CAMBRIDGE, MASS.
DWG. NO. CONTRACT
DRAWN R.D. Sullivan DATE 26 Apr 62
CHECKED
APPROVAL W.B. Farmer 10-16-62
APPROVAL
NASA APPROVAL 1/4/63
MIT APPROVAL W.K. 17 Oct 63

MANNED SPACECRAFT CENTER
HOUSTON, TEXAS

INSULATOR PHOTOGRAPHIC MASTER
CONTROL MODULE

CODE IDENT NO.
SIZE D
NASA DRAWING NO. 1004277
SCALE 4/1
WT
SHEET 1 OF 1

1004277

1004277 A

INCHES
0 1 2
PHOTOGRAPHIC SCALE ONLY

NOTICE — WHEN GOVERNMENT DRAWINGS, SPECIFICATIONS, OR OTHER DATA ARE USED FOR ANY PURPOSE OTHER THAN IN CONNECTION WITH A DEFINITELY RELATED GOVERNMENT PROCUREMENT OPERATION, THE UNITED STATES GOVERNMENT THEREBY INCURS NO RESPONSIBILITY NOR ANY OBLIGATION WHATSOEVER; AND THE FACT THAT THE GOVERNMENT MAY HAVE FORMULATED, FURNISHED, OR IN ANY WAY SUPPLIED THE SAID DRAWINGS, SPECIFICATIONS, OR OTHER DATA IS NOT TO BE REGARDED BY IMPLICATION OR OTHERWISE AS IN ANY MANNER LICENSING THE HOLDER OR ANY OTHER PERSON OR CORPORATION, OR CONVEYING ANY RIGHTS OR PERMISSION TO MANUFACTURE, USE, OR SELL ANY PATENTED INVENTION THAT MAY IN ANY WAY BE RELATED THERETO.

REVISIONS 04009

SYM	DESCRIPTION	DATE	APPROVAL
A	REVISED PER TDRR 04497	11-6-63	ERK WK
B	REVISED PER TDRR 05194	17 Dec 63	ERK WK

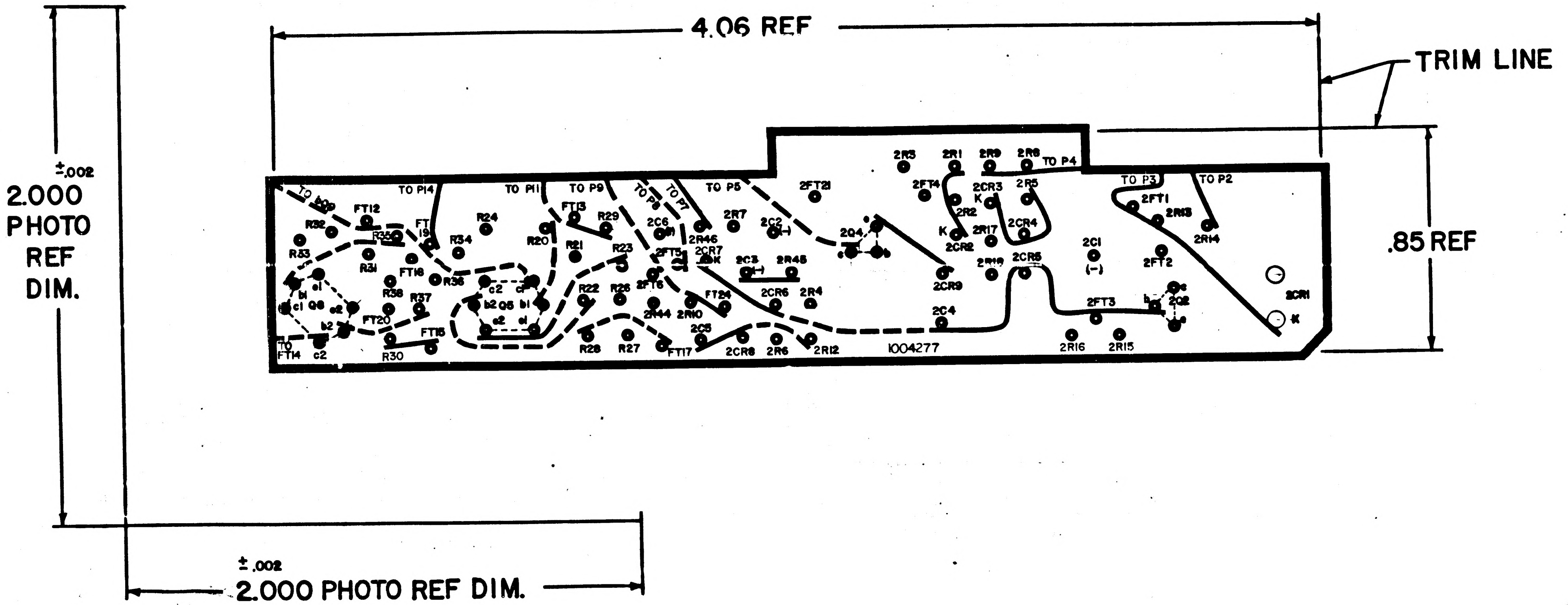
4.06 REF
TRIM LINE
.85 REF
±.002
2.000
PHOTO
REF
DIM.
±.002
2.000 PHOTO REF DIM.
TO P10
TO P14
TO P11
TO P9
TO P8
TO P7
TO P5
TO P4
TO P3
TO P2
TO FT14
FT12
FT19
FT13
FT16
FT18
FT20
FT15
FT17
FT24
R32
R33
R31
R35
R34
R24
R20
R21
R29
R23
R22
R26
R28
R27
R36
R38
R37
R30
Q8
Q5
b1
b2
c1
c2
e1
e2
2C6
2C2 (−)
2C3 (−)
2C5
2C4
2C1 (−)
2R7
2R46
2R45
2R44
2R10
2R4
2R6
2R12
2R3
2R1
2R9
2R8
2R5
2R2
2R17
2R18
2R13
2R14
2R16
2R15
2CR7
2CR6
2CR8
2CR3
2CR4
2CR2
2CR5
2CR9
2CR1
K
2FT5
2FT6
2FT21
2FT4
2FT1
2FT2
2FT3
2Q4
2Q2
1004277

NOTES
1. INTERPRET DRAWING IN ACCORDANCE WITH STANDARDS PRESCRIBED BY MIL-D-70327
2. ORIGINAL OF THIS DRAWING OR REPRODUCTION MADE BY PROCESS OR METHOD SHALL INSURE DIMENSIONAL STABILITY. DIMENSIONAL STABILITY SHALL NOT EXCEED .001 INCH PER INCH
3. CUT TO WITHIN .010 OF TRIM LINE
4. MAKE MASTER PATTERN POSITIVE FILMS TO DIMENSIONS SHOWN
5. MATERIAL: FILM .006/.008 THK PER L-F-340, TYPE IB, CL 2, STYLE IA
6. ● .035/.045 DIA PUNCH
7. BROKEN LINES DENOTE SLEEVING
8. ○ .057/.067 DIA PUNCH

QTY REQD	PART OR IDENTIFYING NO.	NOMENCLATURE OR DESCRIPTION	FIND NO.

LIST OF MATERIALS

NEXT ASSY	USED ON
1003150	

APPLICATION

UNLESS OTHERWISE SPECIFIED DIMENSIONS ARE IN INCHES
TOLERANCES ON
FRACTIONS ± DECIMALS ± ANGLES ±
DO NOT SCALE THIS DRAWING
MATERIAL SEE NOTE 5
HEAT TREATMENT
FINAL FINISH

MIT
INSTRUMENTATION LAB
CAMBRIDGE, MASS.
DWG. NO. CONTRACT
DRAWN R D Sullivan DATE 10/4/63
CHECKED
APPROVAL W B Tarmon 10-4-63
APPROVAL
NASA APPROVAL 10/11/63
MIT APPROVAL W Kupfer 17 Oct 63

MANNED SPACECRAFT CENTER
HOUSTON, TEXAS

INSULATOR
PHOTOGRAPHIC MASTER
CONTROL MODULE

CODE IDENT NO.
SIZE D
NASA DRAWING NO. 1004277
SCALE 4/1
WT
SHEET 1 OF 1

1004277

INCHES
0 1 2
PHOTOGRAPHIC SCALE ONLY

1004277 B

NOTICE — WHEN GOVERNMENT DRAWINGS, SPECIFICATIONS, OR OTHER DATA ARE USED FOR ANY PURPOSE OTHER THAN IN CONNECTION WITH A DEFINITELY RELATED GOVERNMENT PROCUREMENT OPERATION, THE UNITED STATES GOVERNMENT THEREBY INCURS NO RESPONSIBILITY NOR ANY OBLIGATION WHATSOEVER; AND THE FACT THAT THE GOVERNMENT MAY HAVE FORMULATED, FURNISHED OR IN ANY WAY SUPPLIED THE SAID DRAWINGS, SPECIFICATIONS OR OTHER DATA IS NOT TO BE REGARDED BY IMPLICATION OR OTHERWISE AS IN ANY MANNER LICENSING THE HOLDER OR ANY OTHER PERSON OR CORPORATION, OR CONVEYING ANY RIGHTS OR PERMISSION TO MANUFACTURE, USE, OR SELL ANY PATENTED INVENTION THAT MAY IN ANY WAY BE RELATED THERETO.

REVISIONS 04009

SYM	DESCRIPTION	DATE	APPROVAL

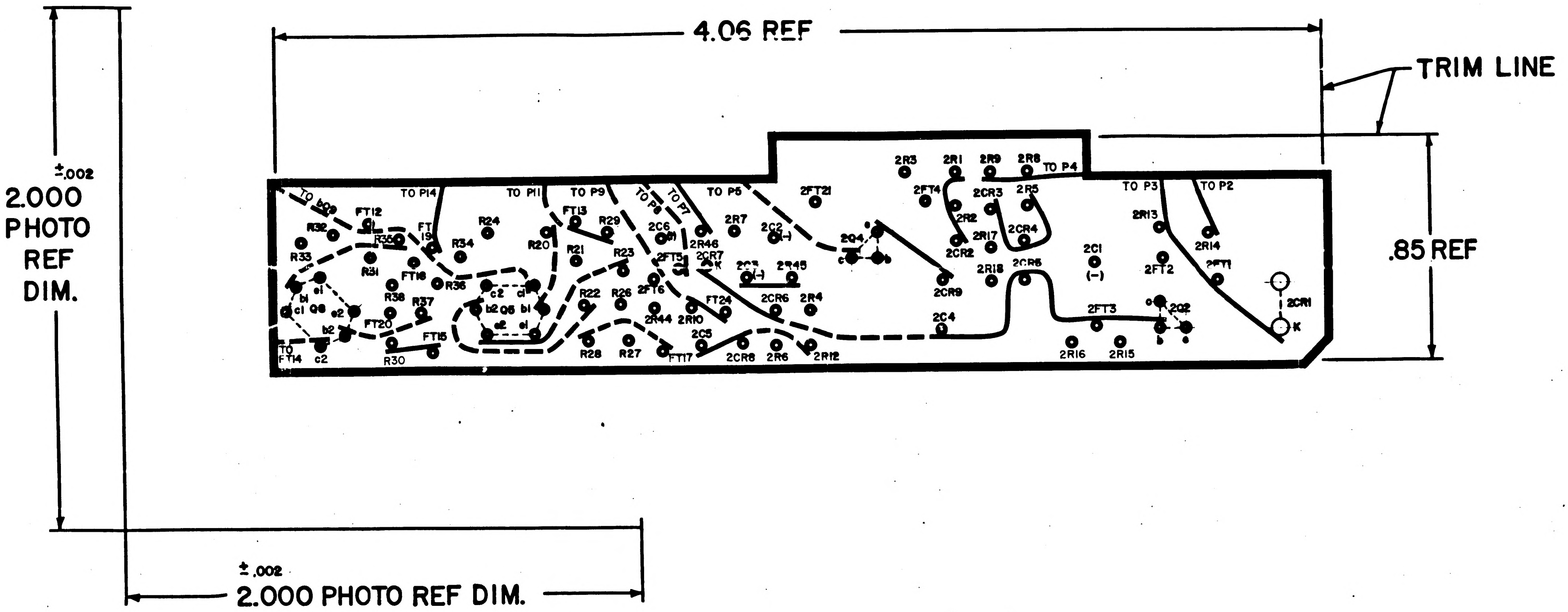
4.06 REF
TRIM LINE
.85 REF
±.002
2.000
PHOTO
REF
DIM.
±.002
2.000 PHOTO REF DIM.
TO b09
TO P14
TO P11
TO P9
TO P8
TO P7
TO P5
TO P4
TO P3
TO P2
TO FT14
FT12
R32
R33
R35
FT19
R31
R34
R24
R20
FT13
R29
R21
R23
FT16
R36
R38
R37
FT20
FT15
R30
c2
b1
c1
Q8
e1
e2
b2
c2
c1
b2
Q5
b1
e2
e1
R22
R26
R28
R27
FT17
2C6
2R46
2FT5
2CR7
K
2FT6
2R44
2R10
FT24
2C5
2CR8
2R6
2R12
2R7
2C2
(-)
2C3
(-)
2R45
2CR6
2R4
2FT21
2Q4
c
e
b
2CR9
2C4
2R3
2R1
2R9
2R8
2FT4
2R2
2CR2
2CR3
2R17
2R18
2R5
2CR4
2CR5
2C1
(-)
2FT3
2R16
2R15
2R13
2FT2
2R14
2FT1
2Q2
c
b
e
2CR1
K

NOTES

1. INTERPRET DRAWING IN ACCORDANCE WITH STANDARDS PRESCRIBED BY MIL-D-70327
2. ORIGINAL OF THIS DRAWING OR REPRODUCTION MADE BY PROCESS OR METHOD SHALL INSURE DIMENSIONAL STABILITY. DIMENSIONAL STABILITY SHALL NOT EXCEED .001 INCH PER INCH
3. CUT TO WITHIN .010 OF TRIM LINE
4. MAKE MASTER PATTERN POSITIVE FILMS TO DIMENSIONS SHOWN
5. MATERIAL: FILM .006/.008 THK PER L-F-340, TYPE IB, CL 2, STYLE IA
6. ● .036/.046 DIA PUNCH
7. BROKEN LINES DENOTE SLEEVING
8. ○ .057/.067 DIA PUNCH

QTY REQD	PART OR IDENTIFYING NO.	NOMENCLATURE OR DESCRIPTION	FIND NO.

LIST OF MATERIALS

NEXT ASSY	USED ON

APPLICATION

UNLESS OTHERWISE SPECIFIED
DIMENSIONS ARE IN INCHES
TOLERANCES ON
FRACTIONS ± DECIMALS ± ANGLES ±
DO NOT SCALE THIS DRAWING
MATERIAL SEE NOTE 5
HEAT TREATMENT
FINAL FINISH

MIT
INSTRUMENTATION LAB
CAMBRIDGE, MASS.
DWG. NO. CONTRACT
DRAWN R D Sullivan DATE 10 Apr 63
CHECKED
APPROVAL W B Varnum 10-4-63
APPROVAL
NASA APPROVAL 12/17/63
MIT APPROVAL W Kupfer 17 Oct 63

MANNED SPACECRAFT CENTER
HOUSTON, TEXAS

INSULATOR PHOTOGRAPHIC MASTER
CONTROL MODULE

CODE IDENT NO.
SIZE D
NASA DRAWING NO. 1004277
SCALE 4/1 WT SHEET 1 OF 1

1004277

INCHES
0 1 2
PHOTOGRAPHIC SCALE ONLY

NOTICE — WHEN GOVERNMENT DRAWINGS, SPECIFICATIONS, OR OTHER DATA ARE USED FOR ANY PURPOSE OTHER THAN IN CONNECTION WITH A DEFINITELY RELATED GOVERNMENT PROCUREMENT OPERATION, THE UNITED STATES GOVERNMENT THEREBY INCURS NO RESPONSIBILITY NOR ANY OBLIGATION WHATSOEVER; AND THE FACT THAT THE GOVERNMENT MAY HAVE FORMULATED, FURNISHED, OR IN ANY WAY SUPPLIED THE SAID DRAWINGS, SPECIFICATIONS OR OTHER DATA IS NOT TO BE REGARDED BY IMPLICATION OR OTHERWISE AS IN ANY MANNER LICENSING THE HOLDER OR ANY OTHER PERSON OR CORPORATION, OR CONVEYING ANY RIGHTS OR PERMISSION TO MANUFACTURE, USE, OR SELL ANY PATENTED INVENTION THAT MAY IN ANY WAY BE RELATED THERETO.

1004279

REVISIONS 04147			
SYM	DESCRIPTION	DATE	APPROVAL

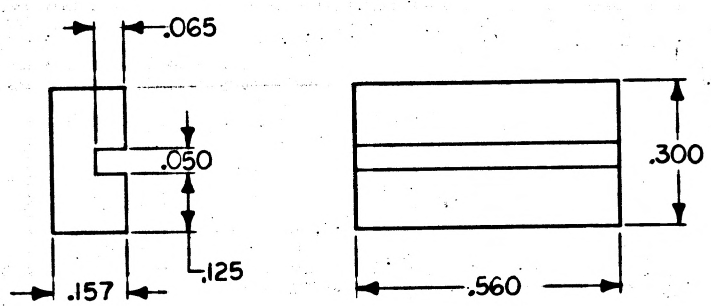

NOTES

1. INTERPRET DRAWING IN ACCORDANCE WITH STANDARDS PRESCRIBED BY MIL-D-70327
2. MAT'L: PLASTIC, ACRYLIC PER MIL-P-5425 FINISH A
3. BREAK SHARP EDGES

MASTER

QTY REQD	PART OR IDENTIFYING NO.	NOMENCLATURE OR DESCRIPTION	FIND NO.
LIST OF MATERIALS			

NEXT ASSY	USED ON
1003167	
APPLICATION	

UNLESS OTHERWISE SPECIFIED DIMENSIONS ARE IN INCHES
TOLERANCES ON
FRACTIONS ± DECIMALS ±.005 ANGLES ±
DO NOT SCALE THIS DRAWING
MATERIAL SEE NOTE 2
HEAT TREATMENT
FINAL FINISH

MIT INSTRUMENTATION LAB
CAMBRIDGE, MASS.
DWG. NO. CONTRACT
DRAWN R. Butler DATE 2 Oct 63
CHECKED R.P. Kingsbury 22 Oct 63
APPROVAL W.B. Kernel 23 Oct 63
APPROVAL
NASA APPROVAL 10/24/63
MIT APPROVAL 24 Oct 63

MANNED SPACECRAFT CENTER
HOUSTON, TEXAS

BLOCK, SPACER
STRAND GATE MODULE

CODE IDENT NO. SIZE C NASA DRAWING NO. 1004279
SCALE 4/1 WT SHEET 1 OF 1

1004279

INCHES
0 1 2
PHOTOGRAPHIC SCALE ONLY

NOTICE — WHEN GOVERNMENT DRAWINGS, SPECIFICATIONS, OR OTHER DATA ARE USED FOR ANY PURPOSE OTHER THAN IN CONNECTION WITH A DEFINITELY RELATED GOVERNMENT PROCUREMENT OPERATION, THE UNITED STATES GOVERNMENT THEREBY INCURS NO RESPONSIBILITY NOR ANY OBLIGATION WHATSOEVER; AND THE FACT THAT THE GOVERNMENT MAY HAVE FORMULATED, FURNISHED, OR IN ANY WAY SUPPLIED THE SAID DRAWINGS, SPECIFICATIONS OR OTHER DATA IS NOT TO BE REGARDED BY IMPLICATION OR OTHERWISE AS IN ANY MANNER LICENSING THE HOLDER OR ANY OTHER PERSON OR CORPORATION, OR CONVEYING ANY RIGHTS OR PERMISSION TO MANUFACTURE, USE, OR SELL ANY PATENTED INVENTION THAT MAY IN ANY WAY BE RELATED THERETO.

1004280

REVISIONS 04/47			
SYM	DESCRIPTION	DATE	APPROVAL
A	REVISED PER TDRR 04380	5 Nov 63	WK.

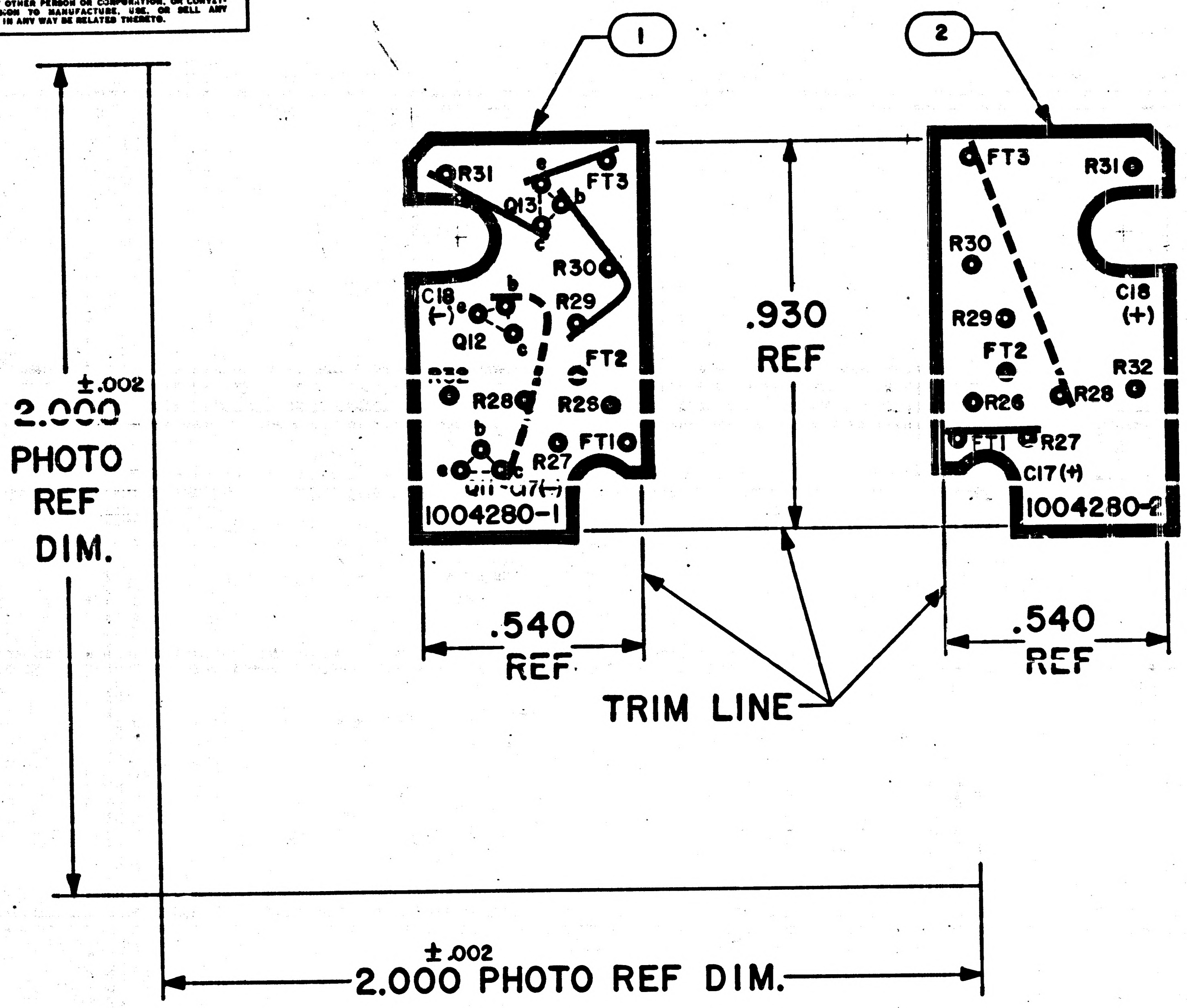

NOTES:

1. INTERPRET DRAWING IN ACCORDANCE WITH STANDARDS PRESCRIBED BY MIL-D-70327
2. ORIGINAL OF THIS DRAWING OR REPRODUCTION MADE BY PROCESS OR METHOD SHALL INSURE DIMENSIONAL STABILITY. DIMENSIONAL STABILITY SHALL NOT EXCEED .001 INCH PER INCH
3. MATERIAL: FILM .006/.008 THICK PER L-F-340, TYPE IB, CLASS 2, STYLE IA
4. MAKE MASTER PATTERN POSITIVE FILMS TO DIMENSIONS SHOWN
5. CUT WITHIN .010 OF TRIM LINE
6. ◉ .045/.050 DIA PUNCH ALL HOLES

1	1004280-2	INSULATOR	2
1	1004280-1	INSULATOR	1
QTY REQD	PART OR IDENTIFYING NO.	NOMENCLATURE OR DESCRIPTION	FIND NO.

LIST OF MATERIALS

1003183	
NEXT ASSY	USED ON
APPLICATION	

UNLESS OTHERWISE SPECIFIED DIMENSIONS ARE IN INCHES
TOLERANCES ON
FRACTIONS ± DECIMALS ± ANGLES ±
DO NOT SCALE THIS DRAWING
MATERIAL SEE NOTE 3
HEAT TREATMENT
FINAL FINISH

MIT INSTRUMENTATION LAB
CAMBRIDGE, MASS.
DWG. NO.
CONTRACT
DRAWN DATE Oct 3, 63
CHECKED C. P. Kingsbury 22 Oct 63
APPROVAL 23 Oct 63
APPROVAL
NASA APPROVAL 10/21/63
MIT APPROVAL 24 Oct 63

MANNED SPACECRAFT CENTER
HOUSTON, TEXAS

INSULATOR
PHOTOGRAPHIC MASTER
STRAND GATE MODULE

CODE IDENT NO.
SIZE C
NASA DRAWING NO. 1004280
SCALE 4/1
WT
SHEET 1 OF 1

MASTER

INCHES
0 1 2
PHOTOGRAPHIC SCALE ONLY

1004280

SYM	REVISIONS 04/47 DESCRIPTION	DATE	APPROVAL

NOTICE — WHEN GOVERNMENT DRAWINGS, SPECIFICATIONS, OR OTHER DATA ARE USED FOR ANY PURPOSE OTHER THAN IN CONNECTION WITH A DEFINITELY RELATED GOVERNMENT PROCUREMENT OPERATION, THE UNITED STATES GOVERNMENT THEREBY INCURS NO RESPONSIBILITY NOR ANY OBLIGATION WHATSOEVER; AND THE FACT THAT THE GOVERNMENT MAY HAVE FORMULATED, FURNISHED, OR IN ANY WAY SUPPLIED THE SAID DRAWINGS, SPECIFICATIONS OR OTHER DATA IS NOT TO BE REGARDED BY IMPLICATION OR OTHERWISE AS IN ANY MANNER LICENSING THE HOLDER OR ANY OTHER PERSON OR CORPORATION, OR CONVEYING ANY RIGHTS OR PERMISSION TO MANUFACTURE, USE, OR SELL ANY PATENTED INVENTION THAT MAY IN ANY WAY BE RELATED THERETO.

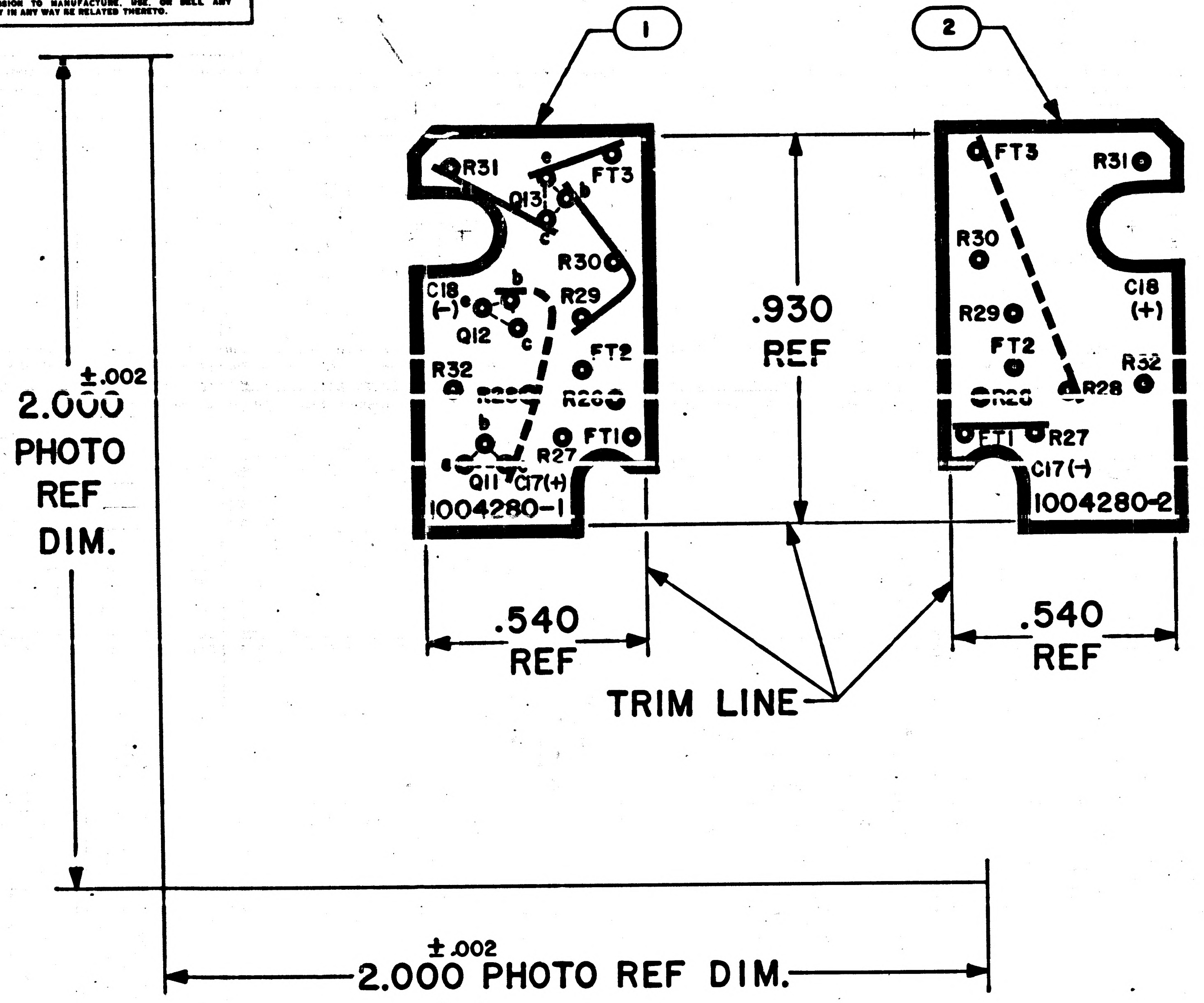

NOTES:

1. INTERPRET DRAWING IN ACCORDANCE WITH STANDARDS PRESCRIBED BY MIL-D-70327
2. ORIGINAL OF THIS DRAWING OR REPRODUCTION MADE BY PROCESS OR METHOD SHALL INSURE DIMENSIONAL STABILITY. DIMENSIONAL STABILITY SHALL NOT EXCEED .001 INCH PER INCH
3. MATERIAL: FILM .006/.008 THICK PER L-F-340, TYPE IB, CLASS 2, STYLE IA
4. MAKE MASTER PATTERN POSITIVE FILMS TO DIMENSIONS SHOWN
5. CUT WITHIN .010 OF TRIM LINE
6. ● .045/.050 DIA PUNCH ALL HOLES

QTY REQD	PART OR IDENTIFYING NO.	NOMENCLATURE OR DESCRIPTION	FIND NO.
1	1004280-2	INSULATOR	2
1	1004280-1	INSULATOR	1

LIST OF MATERIALS

NEXT ASSY	USED ON
1003183	

APPLICATION

UNLESS OTHERWISE SPECIFIED DIMENSIONS ARE IN INCHES
TOLERANCES ON
FRACTIONS ± DECIMALS ± ANGLES ±
DO NOT SCALE THIS DRAWING
MATERIAL SEE NOTE 3
HEAT TREATMENT
FINAL FINISH

MIT INSTRUMENTATION LAB
CAMBRIDGE, MASS.
DWG. NO. CONTRACT

DRAWN E.L. Goldman DATE Oct 3, 63
CHECKED L. P. Kingsbury 22 Oct 63
APPROVAL 23 OCT 63
APPROVAL
NASA APPROVAL 10/27/63
MIT APPROVAL 24 Oct 63

MANNED SPACECRAFT CENTER
HOUSTON, TEXAS

INSULATOR
PHOTOGRAPHIC MASTER
STRAND GATE MODULE

CODE IDENT NO.
SIZE C
NASA DRAWING NO. 1004280
SCALE 4/1
WT
SHEET 1 OF 1

MASTER

INCHES
0 1 2
PHOTOGRAPHIC SCALE ONLY

NOTICE — WHEN GOVERNMENT DRAWINGS, SPECIFICATIONS, OR OTHER DATA ARE USED FOR ANY PURPOSE OTHER THAN IN CONNECTION WITH A DEFINITELY RELATED GOVERNMENT PROCUREMENT OPERATION, THE UNITED STATES GOVERNMENT THEREBY INCURS NO RESPONSIBILITY NOR ANY OBLIGATION WHATSOEVER; AND THE FACT THAT THE GOVERNMENT MAY HAVE FORMULATED, FURNISHED, OR IN ANY WAY SUPPLIED THE SAID DRAWINGS, SPECIFICATIONS OR OTHER DATA IS NOT TO BE REGARDED BY IMPLICATION OR OTHERWISE AS IN ANY MANNER LICENSING THE HOLDER OR ANY OTHER PERSON OR CORPORATION, OR CONVEYING ANY RIGHTS OR PERMISSION TO MANUFACTURE, USE OR SELL ANY PATENTED INVENTION THAT MAY IN ANY WAY BE RELATED THERETO.

REVISIONS 04/47			
SYM	DESCRIPTION	DATE	APPROVAL

HOLE IDENT	BASIC X DIM	BASIC Y DIM.	⌖ DIA	HOLE DIA	QTY
A1	.000	.000	.006	SEE DETAIL A	3
A2	.043	.350			
A3	.158	.635			
B1	.295	-.052	.006	.153 .157	2
B2	-.050	.558			
C1	.190	.062	.006	.100 .104	7
C2	.320	.150			
C3	.110	.165			
C4	-.075	.180			
C5	.240	.350			
C6	.320	.480			
C7	-.075	.712			
D1	.360	.062	.006	.023 .027	3
D2	.240	.222			
D3	.320	.740			

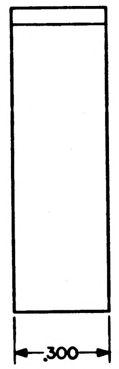

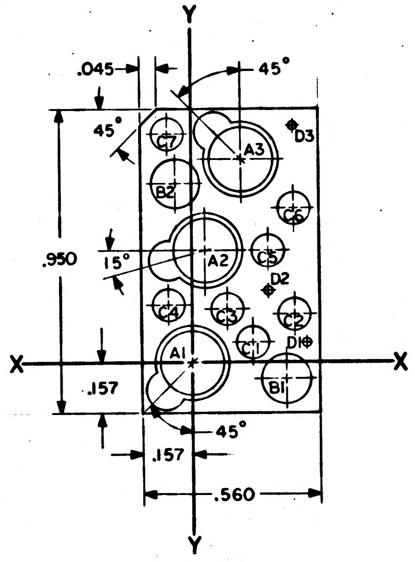

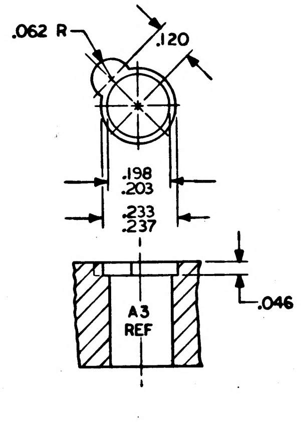

DETAIL A
SCALE 4/1
3 PLACES

NOTES
1. INTERPRET DRAWING IN ACCORDANCE WITH STANDARDS PRESCRIBED BY MIL-D-70327
2. MATL: PLASTIC, ACRYLIC PER MIL-P-5425, FINISH A
3. TRUE POSITION AS SHOWN IN CHART
4. BREAK ALL SHARP EDGES

MASTER

QTY REQD	PART OR IDENTIFYING NO.	NOMENCLATURE OR DESCRIPTION	FIND NO.

LIST OF MATERIALS

1003183	
NEXT ASSY	USED ON
APPLICATION	

UNLESS OTHERWISE SPECIFIED DIMENSIONS ARE IN INCHES
TOLERANCES ON
FRACTIONS ±
DECIMALS ±.005
ANGLES ±0°30'
DO NOT SCALE THIS DRAWING
MATERIAL SEE NOTE 2
HEAT TREATMENT
FINAL FINISH

MIT INSTRUMENTATION LAB
CAMBRIDGE, MASS.
DWG. NO.
CONTRACT
DRAWN S. L. Allison DATE Oct 1, 63
CHECKED R. Kingsbury 22 Oct 63
APPROVAL W. Turnel 23 Oct 63
APPROVAL
NASA APPROVAL W. J. Sword
MIT APPROVAL 24 Oct 63

MANNED SPACECRAFT CENTER
HOUSTON, TEXAS

HOLDER, COMPONENT
STRAND GATE MODULE

CODE IDENT NO.
SIZE D
NASA DRAWING NO. 1004281
SCALE 4/1
WT
SHEET 1 OF 1

1004281

INCHES
0 1 2
PHOTOGRAPHIC SCALE ONLY

NOTICE — WHEN GOVERNMENT DRAWINGS, SPECIFICATIONS, OR OTHER DATA ARE USED FOR ANY PURPOSE OTHER THAN IN CONNECTION WITH A DEFINITELY RELATED GOVERNMENT PROCUREMENT OPERATION, THE UNITED STATES GOVERNMENT THEREBY INCURS NO RESPONSIBILITY NOR ANY OBLIGATION WHATSOEVER; AND THE FACT THAT THE GOVERNMENT MAY HAVE FORMULATED, FURNISHED, OR IN ANY WAY SUPPLIED THE SAID DRAWINGS, SPECIFICATIONS OR OTHER DATA IS NOT TO BE REGARDED BY IMPLICATION OR OTHERWISE AS IN ANY MANNER LICENSING THE HOLDER OR ANY OTHER PERSON OR CORPORATION, OR CONVEYING ANY RIGHTS OR PERMISSION TO MANUFACTURE, USE, OR SELL ANY PATENTED INVENTION THAT MAY IN ANY WAY BE RELATED THERETO.

1004283

SYM	DESCRIPTION	DATE	APPROVAL

REVISIONS 07670

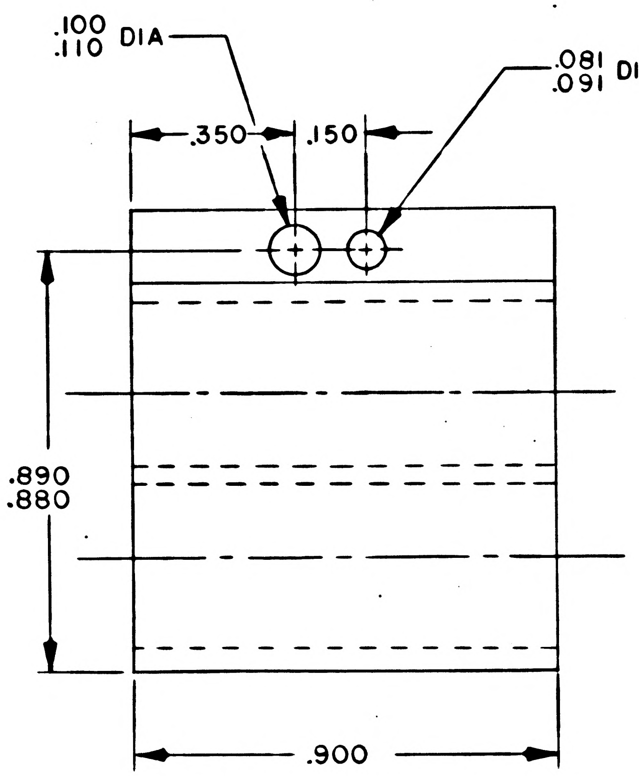

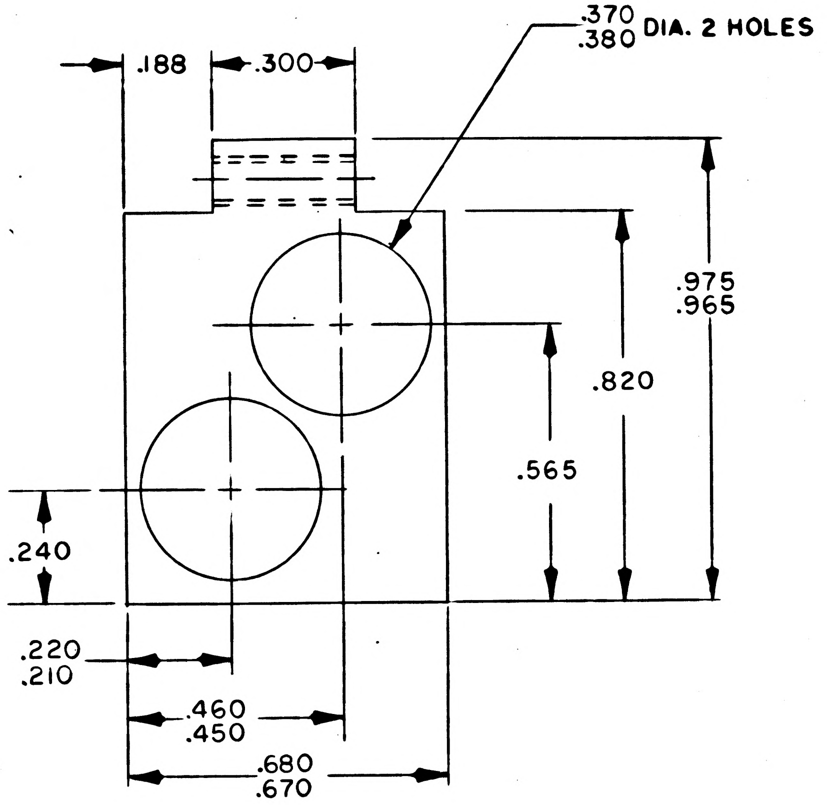

NOTES:

1. INTERPRET DRAWING IN ACCORDANCE WITH STANDARDS PRESCRIBED BY MIL-D-70327
2. MAT'L: PLASTIC ACRYLIC PER MIL-P-5425 FINISH B ALT; MIL-P-8184 FINISH B
3. BREAK SHARP EDGES

QTY REQD	PART OR IDENTIFYING NO.	NOMENCLATURE OR DESCRIPTION	FIND NO.

LIST OF MATERIALS

1003206	1003167
NEXT ASSY	USED ON
APPLICATION	

UNLESS OTHERWISE SPECIFIED DIMENSIONS ARE IN INCHES
TOLERANCES ON
FRACTIONS ± # DECIMALS ±.010 ANGLES ± #
DO NOT SCALE THIS DRAWING
MATERIAL SEE NOTE 2
HEAT TREATMENT
FINAL FINISH

MIT
INSTRUMENTATION LAB
CAMBRIDGE, MASS.
DWG. NO. CONTRACT
DRAWN J Brigham DATE 3/3/64
CHECKED Adrian 18APR64
APPROVAL
APPROVAL Ellen C Hall 28 Apr 64
NASA APPROVAL 4/21/64
MIT APPROVAL W Keffer 28 Apr 64

MANNED SPACECRAFT CENTER
HOUSTON, TEXAS

HOLDER, COMPONENT
STRAND GATE MODULE

CODE IDENT NO. —
SIZE C
NASA DRAWING NO. 1004283
SCALE 4/1
WT
SHEET 1 OF 1

NOTICE — WHEN GOVERNMENT DRAWINGS, SPECIFICATIONS, OR OTHER DATA ARE USED FOR ANY PURPOSE OTHER THAN IN CONNECTION WITH A DEFINITELY RELATED GOVERNMENT PROCUREMENT OPERATION, THE UNITED STATES GOVERNMENT THEREBY INCURS NO RESPONSIBILITY NOR ANY OBLIGATION WHATSOEVER; AND THE FACT THAT THE GOVERNMENT MAY HAVE FORMULATED, FURNISHED, OR IN ANY WAY SUPPLIED THE SAID DRAWINGS, SPECIFICATIONS OR OTHER DATA IS NOT TO BE REGARDED BY IMPLICATION OR OTHERWISE AS IN ANY MANNER LICENSING THE HOLDER OR ANY OTHER PERSON OR CORPORATION, OR CONVEYING ANY RIGHTS OR PERMISSION TO MANUFACTURE, USE, OR SELL ANY PATENTED INVENTION THAT MAY IN ANY WAY BE RELATED THERETO.

REVISIONS 15103						
SYM	ZONE	DESCRIPTION	DR	CHK	DATE	APPROVED

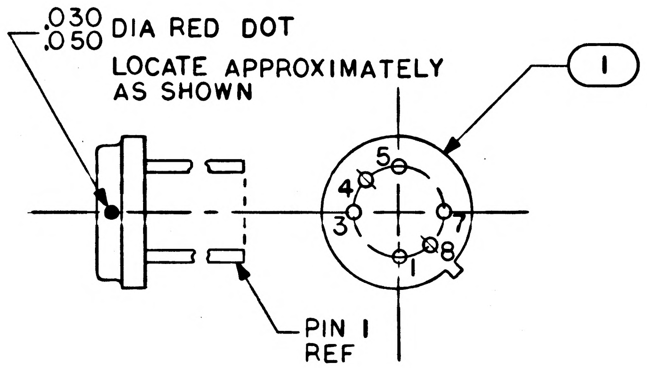

GENERAL REQUIREMENT

UPON COMPLETION OF ALL REQUIREMENTS AS SPECIFIED IN ND 1002238, THE NOR-GATES FROM LOTS WHICH QUALIFY FOR FLIGHT HARDWARE UNDER THE PROVISIONS OF ND 1002238 SHALL BE MARKED IN RED AS INDICATED IN THIS DOCUMENT.

NOTES

1. INTERPRET DRAWING IN ACCORDANCE WITH STANDARDS PRESCRIBED BY MIL-D-70327
2. IDENTIFY PER ND 1002019
3. MATERIAL: MAKE FROM FIND NO. 1

MASTER

1	1006771		MICRO-NOR GATE (TO 47 SIZE)	1
QTY REQD	PART OR IDENTIFYING NO.	MATERIAL OR NOTES	NOMENCLATURE OR DESCRIPTION	FIND NO.

LIST OF MATERIALS

NEXT ASSY	USED ON
APPLICATION	

UNLESS OTHERWISE SPECIFIED
DIMENSIONS ARE IN INCHES
CAPACITOR VALUES ARE IN µf
RESISTOR VALUES ARE IN OHMS
TOLERANCES ON
FRACTIONS ± — DECIMALS ± — ANGLES ± —
DO NOT SCALE THIS DRAWING

MATERIAL
SEE NOTE 3

MIT
INSTRUMENTATION LAB
CAMBRIDGE, MASS.

MANNED SPACECRAFT CENTER
HOUSTON, TEXAS

DRAWN	C. Addario Jr.	10 DEC 64
CHECKED		
APPROVED		
APPROVED	Eldon C Hall	18 Dec 64
APPROVED MIT	W Kupfer	23 Dec 64
APPROVED MSC	W J Rhine	12-23-64
		DATE

MICRO-NOR GATE (TO 47)
(FLIGHT QUALIFIED)

CODE IDENT NO.	SIZE	DRAWING NO.
—	C	1004300
SCALE 5/1		SHEET 1 OF 1

NOTICE – WHEN GOVERNMENT DRAWINGS, SPECIFICATIONS, OR OTHER DATA ARE USED FOR ANY PURPOSE OTHER THAN IN CONNECTION WITH A DEFINITELY RELATED GOVERNMENT PROCUREMENT OPERATION, THE UNITED STATES GOVERNMENT THEREBY INCURS NO RESPONSIBILITY NOR ANY OBLIGATION WHATSOEVER; AND THE FACT THAT THE GOVERNMENT MAY HAVE FORMULATED, FURNISHED, OR IN ANY WAY SUPPLIED THE SAID DRAWINGS, SPECIFICATIONS OR OTHER DATA IS NOT TO BE REGARDED BY IMPLICATION OR OTHERWISE AS IN ANY MANNER LICENSING THE HOLDER OR ANY OTHER PERSON OR CORPORATION, OR CONVEYING ANY RIGHTS OR PERMISSION TO MANUFACTURE, USE, OR SELL ANY PATENTED INVENTION THAT MAY IN ANY WAY BE RELATED THERETO.

REVISIONS						
SYM	ZONE	DESCRIPTION	DR	CHK	DATE	APPROVED
	—	INITIAL RELEASE CLASS A PER TDRR 18113			1Apr65	WK.
A		REVISED PER TDRR 21433			28Sep65	WK

PART NO.	SCD NO.	MARKING INK
1004301–001	1006321	1006271–8

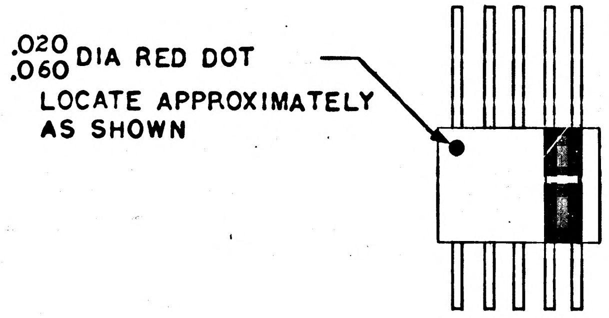

GENERAL REQUIREMENT
UPON COMPLETION OF ALL REQUIREMENTS AS SPECIFIED IN ND 1002248, THE NOR GATES WHICH QUALIFY FOR FLIGHT HARDWARE UNDER THE PROVISIONS OF ND 1002248 SHALL BE MARKED IN RED AS INDICATED IN THIS DOCUMENT.

NOTES
1. INTERPRET DRAWING IN ACCORDANCE WITH STANDARDS PRESCRIBED BY MIL-D-70327
2. IDENTIFY WITH PART NO. PER ND 1002019

MASTER

QTY REQD	PART OR IDENTIFYING NO.	MATERIAL OR NOTES	NOMENCLATURE OR DESCRIPTION	FIND NO.

LIST OF MATERIALS

NEXT ASSY	USED ON

APPLICATION

UNLESS OTHERWISE SPECIFIED
DIMENSIONS ARE IN INCHES
CAPACITOR VALUES ARE IN μf
RESISTOR VALUES ARE IN OHMS
TOLERANCES ON
FRACTIONS DECIMALS ANGLES
± — ± — ± —
DO NOT SCALE THIS DRAWING

MATERIAL
SEE NOTE 3

MIT
INSTRUMENTATION LAB
CAMBRIDGE, MASS.

DRAWN A. Addario Jr. 11DEC.64
CHECKED L. D. Hanley 28Dec64
APPROVED L. D. Hanley 28Dec64
APPROVED Eldon C Hall 28Dec64
APPROVED MIT W Kupfer 1Apr65
APPROVED MSC W J Rhine 12-28-64
DATE

MANNED SPACECRAFT CENTER
HOUSTON, TEXAS

DUAL NOR GATE (FLAT PACK)
(FLIGHT QUALIFIED)

CODE IDENT NO. ———
SIZE C
DRAWING NO. 1004301
SCALE 5/1
SHEET 1 OF 1

NOTICE – WHEN GOVERNMENT DRAWINGS, SPECIFICATIONS, OR OTHER DATA ARE USED FOR ANY PURPOSE OTHER THAN IN CONNECTION WITH A DEFINITELY RELATED GOVERNMENT PROCUREMENT OPERATION, THE UNITED STATES GOVERNMENT THEREBY INCURS NO RESPONSIBILITY NOR ANY OBLIGATION WHATSOEVER; AND THE FACT THAT THE GOVERNMENT MAY HAVE FORMULATED, FURNISHED, OR IN ANY WAY SUPPLIED THE SAID DRAWINGS, SPECIFICATIONS OR OTHER DATA IS NOT TO BE REGARDED BY IMPLICATION OR OTHERWISE AS IN ANY MANNER LICENSING THE HOLDER OR ANY OTHER PERSON OR CORPORATION, OR CONVEYING ANY RIGHTS OR PERMISSION TO MANUFACTURE, USE, OR SELL ANY PATENTED INVENTION THAT MAY IN ANY WAY BE RELATED THERETO.

REVISIONS						
SYM	ZONE	DESCRIPTION	DR	CHK	DATE	APPROVED
	–	INITIAL RELEASE CLASS A PER TDRR 18118			1Apr65	W.K.
A		REVISED PER TDRR 21433			28Sept65	
B		REVISED PER TDRR 26875	KB		3/28/66	

PART NO.	SCD NO.	MARKING INK
1004301–001	1006321	1006271–8
1004301–002	1006394	1006271–8

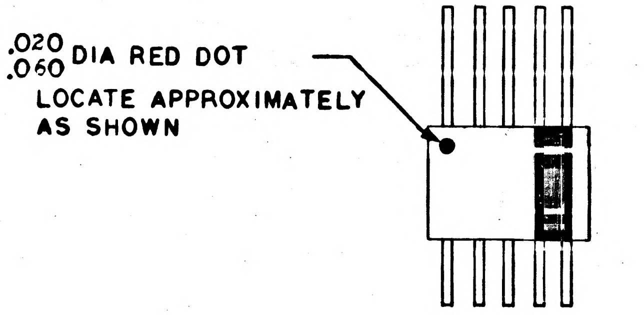

GENERAL REQUIREMENT

UPON COMPLETION OF ALL REQUIREMENTS AS SPECIFIED IN ND 1002248, THE NOR GATES WHICH QUALIFY FOR FLIGHT HARDWARE UNDER THE PROVISIONS OF ND 1002248 SHALL BE MARKED IN RED AS INDICATED IN THIS DOCUMENT.

NOTES

1. INTERPRET DRAWING IN ACCORDANCE WITH STANDARDS PRESCRIBED BY MIL-D-70327
2. IDENTIFY WITH PART NO. PER ND 1002019

QTY REQD	PART OR IDENTIFYING NO.	MATERIAL OR NOTES	NOMENCLATURE OR DESCRIPTION	FIND NO.

LIST OF MATERIALS

NEXT ASSY	USED ON
APPLICATION	

UNLESS OTHERWISE SPECIFIED
DIMENSIONS ARE IN INCHES
CAPACITOR VALUES ARE IN µf
RESISTOR VALUES ARE IN OHMS
TOLERANCES ON
FRACTIONS ± — DECIMALS ± — ANGLES ± —
DO NOT SCALE THIS DRAWING

MATERIAL

MIT
INSTRUMENTATION LAB
CAMBRIDGE, MASS.

		DATE
DRAWN	A. Alvarez Jr.	11DEC.64
CHECKED	P. D. Hanley	28Dec64
APPROVED	P. D. Hanley	28Dec64
APPROVED	Eldon C Hall	30Dec64
APPROVED MIT	W Kupfer	1Apr65
APPROVED MSC	W J Rhine	12-28-64

MANNED SPACECRAFT CENTER
HOUSTON, TEXAS

DUAL NOR GATE (FLAT PACK)
(FLIGHT QUALIFIED)

CODE IDENT NO.	SIZE	DRAWING NO.
80230	C	1004301
SCALE 5/1		SHEET 1 OF 1

1004301 B

NOTICE – WHEN GOVERNMENT DRAWINGS, SPECIFICATIONS, OR OTHER DATA ARE USED FOR ANY PURPOSE OTHER THAN IN CONNECTION WITH A DEFINITELY RELATED GOVERNMENT PROCUREMENT OPERATION, THE UNITED STATES GOVERNMENT THEREBY INCURS NO RESPONSIBILITY NOR ANY OBLIGATION WHATSOEVER; AND THE FACT THAT THE GOVERNMENT MAY HAVE FORMULATED, FURNISHED, OR IN ANY WAY SUPPLIED THE SAID DRAWINGS, SPECIFICATIONS OR OTHER DATA IS NOT TO BE REGARDED BY IMPLICATION OR OTHERWISE AS IN ANY MANNER LICENSING THE HOLDER OR ANY OTHER PERSON OR CORPORATION, OR CONVEYING ANY RIGHTS OR PERMISSION TO MANUFACTURE, USE, OR SELL ANY PATENTED INVENTION THAT MAY IN ANY WAY BE RELATED THERETO.

REVISIONS

SYM	ZONE	DESCRIPTION	DR	CHK	DATE	APPROVED
	—	INITIAL RELEASE CLASS A PER TDRR 18118			1 Apr 65	WK.

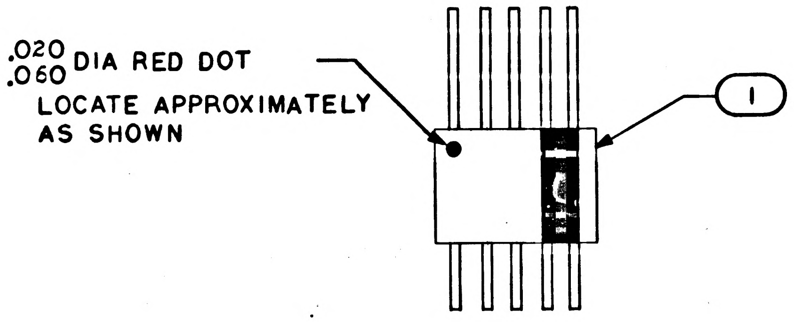

GENERAL REQUIREMENT

UPON COMPLETION OF ALL REQUIREMENTS AS SPECIFIED IN ND 1002248, THE NOR GATES WHICH QUALIFY FOR FLIGHT HARDWARE UNDER THE PROVISIONS OF ND 1002248 SHALL BE MARKED IN RED AS INDICATED IN THIS DOCUMENT.

NOTES

1. INTERPRET DRAWING IN ACCORDANCE WITH STANDARDS PRESCRIBED BY MIL-D-70327
2. IDENTIFY PER ND 1002019
3. MATERIAL: MAKE FROM FIND NO. 1

QTY REQD	PART OR IDENTIFYING NO.	MATERIAL OR NOTES	NOMENCLATURE OR DESCRIPTION	FIND NO.
1	1006321		DUAL NOR GATE (FLAT PACK)	1

LIST OF MATERIALS

NEXT ASSY	USED ON

APPLICATION

UNLESS OTHERWISE SPECIFIED
DIMENSIONS ARE IN INCHES
CAPACITOR VALUES ARE IN μf
RESISTOR VALUES ARE IN OHMS
TOLERANCES ON
FRACTIONS ± — DECIMALS ± — ANGLES ± —
DO NOT SCALE THIS DRAWING

MATERIAL
SEE NOTE 3

MIT
INSTRUMENTATION LAB
CAMBRIDGE, MASS.

MANNED SPACECRAFT CENTER
HOUSTON, TEXAS

		DATE
DRAWN		11 DEC. 64
CHECKED	L. D. Hanley	28 Dec. 64
APPROVED	L. D. Hanley	28 Dec. 64
APPROVED	Eldon C Hall	28 Dec 64
APPROVED MIT	W Kupfer	1 Apr 65
APPROVED MSC	W J Rhine	12-28-64

DUAL NOR GATE (FLAT PACK)
(FLIGHT QUALIFIED)

CODE IDENT NO.	SIZE	DRAWING NO.
—	C	1004301

SCALE 5/1 SHEET 1 OF 1

MASTER

NOTICE - WHEN GOVERNMENT DRAWINGS, SPECIFICATIONS, OR OTHER DATA ARE USED FOR ANY PURPOSE OTHER THAN IN CONNECTION WITH A DEFINITELY RELATED GOVERNMENT PROCUREMENT OPERATION, THE UNITED STATES GOVERNMENT THEREBY INCURS NO RESPONSIBILITY NOR ANY OBLIGATION WHATSOEVER; AND THE FACT THAT THE GOVERNMENT MAY HAVE FORMULATED, FURNISHED, OR IN ANY WAY SUPPLIED THE SAID DRAWINGS, SPECIFICATIONS OR OTHER DATA IS NOT TO BE REGARDED BY IMPLICATION OR OTHERWISE AS IN ANY MANNER LICENSING THE HOLDER OR ANY OTHER PERSON OR CORPORATION, OR CONVEYING ANY RIGHTS OR PERMISSION TO MANUFACTURE, USE, OR SELL ANY PATENTED INVENTION THAT MAY IN ANY WAY BE RELATED THERETO.

REVISIONS						
SYM	ZONE	DESCRIPTION	DR	CHK	DATE	APPROVED
A		REPLACE REV - WITH CHANGES PER TDRR 21558			9/7/65	wH

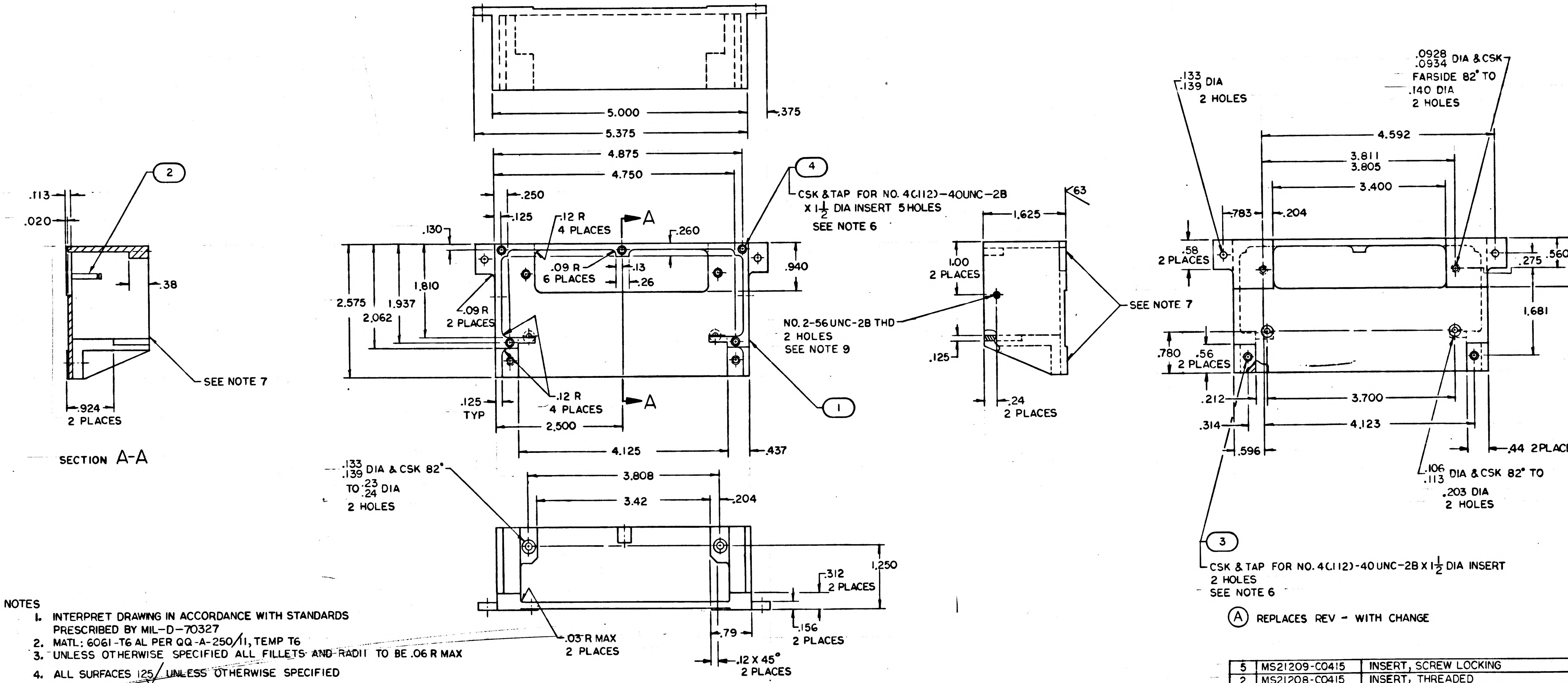
5.000
5.375
.375
4.875
4.750
.250
.125
.12 R
4 PLACES
A
.260
.09 R
6 PLACES
.13
.26
.940
.130
2.575
1.937
1.810
2.062
.09 R
2 PLACES
.125
TYP
2.500
4.125
.437
.12 R
4 PLACES
A
4
CSK & TAP FOR NO. 4(.112)-40UNC-2B X 1½ DIA INSERT 5 HOLES
SEE NOTE 6
1
2
.113
.020
.38
.924
2 PLACES
SEE NOTE 7
SECTION A-A
63
1.625
1.00
2 PLACES
NO. 2-56 UNC-2B THD
2 HOLES
SEE NOTE 9
.125
.24
2 PLACES
SEE NOTE 7
.133
.139 DIA
2 HOLES
.0928
.0934 DIA & CSK
FARSIDE 82° TO
.140 DIA
2 HOLES
4.592
3.811
3.805
3.400
.783
.204
.58
2 PLACES
.275
.560
.94
2 PLACES
1.681
.780
.56
2 PLACES
.212
3.700
.314
4.123
.596
.44 2PLACES
.106
.113 DIA & CSK 82° TO
.203 DIA
2 HOLES
3
CSK & TAP FOR NO. 4(.112)-40 UNC-2B X 1½ DIA INSERT
2 HOLES
SEE NOTE 6
.133
.139 DIA & CSK 82°
TO .23
.24 DIA
2 HOLES
3.808
3.42
.204
1.250
.312
2 PLACES
.156
2 PLACES
.79
.12 X 45°
2 PLACES
.03 R MAX
2 PLACES

Ⓐ REPLACES REV - WITH CHANGE

NOTES
1. INTERPRET DRAWING IN ACCORDANCE WITH STANDARDS PRESCRIBED BY MIL-D-70327
2. MATL: 6061-T6 AL PER QQ-A-250/11, TEMP T6
3. UNLESS OTHERWISE SPECIFIED ALL FILLETS AND RADII TO BE .06 R MAX
4. ALL SURFACES 125√ UNLESS OTHERWISE SPECIFIED
5. REMOVE BURRS & SHARP EDGES .005/.020
6. INSTALL FIND NO.3 & FIND NO. 4 PER MS33646
7. THESE SURFACES TO BE CHROMATE PER MIL-C-5541 TYPE II, CLASS 3 BEFORE INSTALLATION OF FIND NO.3 & FIND NO.4
8. ANODIZE PER MIL-A-8625 TYPE I, DYED BLACK
9. THESE HOLES TO BE FREE OF ANODIZE
10. IDENTIFY WITH DRAWING NO. & REVISION PER ND1002019

QTY REQD	PART OR IDENTIFYING NO.	NOMENCLATURE OR DESCRIPTION	FIND NO.
5	MS21209-C0415	INSERT, SCREW LOCKING	4
2	MS21208-C0415	INSERT, THREADED	3
2	1004867	PIN, GUIDE	2
1	1004315-001	FRAME	1
-011	LIST OF MATERIALS		

1003220	
NEXT ASSY	USED ON
APPLICATION	

UNLESS OTHERWISE SPECIFIED
DIMENSIONS ARE IN INCHES
CAPACITOR VALUES ARE IN μf
RESISTOR VALUES ARE IN OHMS
TOLERANCES ON
FRACTIONS ± DECIMALS XX±.01 XXX±.005 ANGLES ±0°30'
DO NOT SCALE THIS DRAWING

MATERIAL
SEE NOTE 2

MIT
INSTRUMENTATION LAB
CAMBRIDGE, MASS.

MANNED SPACECRAFT CENTER
HOUSTON, TEXAS

DRAWN B Jones 29 JUL 65
CHECKED T. Dowd 30 Jul 65
APPROVED Albert Hopkins 30 Jul 65
APPROVED
APPROVED MIT W Kupfer 3 Aug 65
APPROVED MSC 8/3/65
DATE

FRAME
G & N FAILURE DETECT

CODE IDENT NO. 80230
SIZE D
DRAWING NO. 1004315
SCALE 1/1
SHEET 1 OF 1

1004315 A

NOTICE - WHEN GOVERNMENT DRAWINGS, SPECIFICATIONS, OR OTHER DATA ARE USED FOR ANY PURPOSE OTHER THAN IN CONNECTION WITH A DEFINITELY RELATED GOVERNMENT PROCUREMENT OPERATION, THE UNITED STATES GOVERNMENT THEREBY INCURS NO RESPONSIBILITY NOR ANY OBLIGATION WHATSOEVER; AND THE FACT THAT THE GOVERNMENT MAY HAVE FORMULATED, FURNISHED, OR IN ANY WAY SUPPLIED THE SAID DRAWINGS, SPECIFICATIONS, OR OTHER DATA IS NOT TO BE REGARDED BY IMPLICATION OR OTHERWISE AS IN ANY MANNER LICENSING THE HOLDER OR ANY OTHER PERSON OR CORPORATION, OR CONVEYING ANY RIGHTS OR PERMISSION TO MANUFACTURE, USE, OR SELL ANY PATENTED INVENTION THAT MAY IN ANY WAY BE RELATED THERETO.

REVISIONS						
SYM	ZONE	DESCRIPTION	DR	CHK	DATE	APPROVED
A		REPLACE REV - WITH CHANGES PER TDRR 21558			9/7/65	WH
B		REVISED PER TDRR 22168			7/13/66	

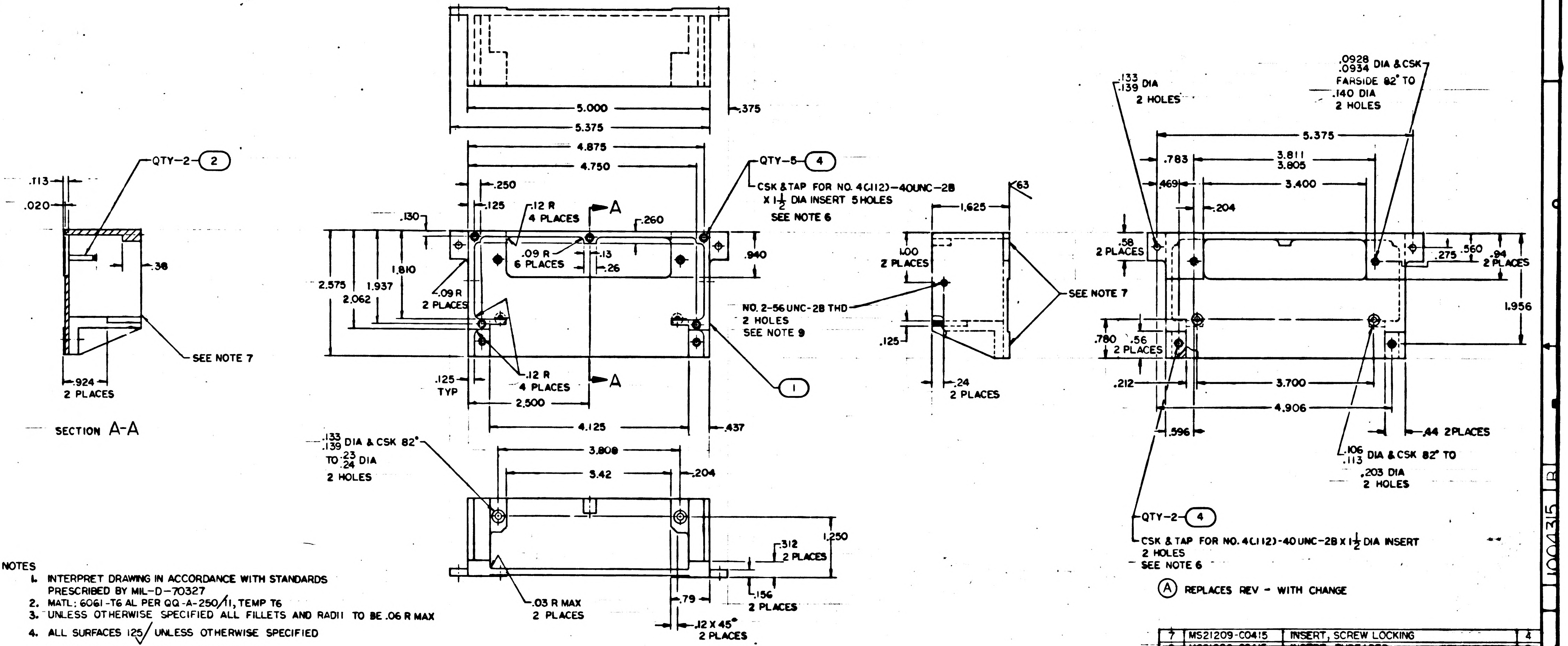

5.000
.375
5.375
4.875
4.750
QTY-2-(2)
QTY-5-(4)
CSK & TAP FOR NO. 4(.112)-40UNC-2B X 1 1/2 DIA INSERT 5 HOLES
SEE NOTE 6
.113
.020
.38
SEE NOTE 7
.924
2 PLACES
SECTION A-A
.250
.125
.12 R
4 PLACES
A
.130
.260
.09 R
6 PLACES
.13
.26
.940
2.575
1.937
1.810
2.062
.09 R
2 PLACES
.12 R
4 PLACES
A
.125
TYP
2.500
4.125
.437
1
.133/.139 DIA & CSK 82°
TO .23/.24 DIA
2 HOLES
3.808
3.42
.204
1.250
.312
2 PLACES
.156
2 PLACES
.79
.12 X 45°
2 PLACES
.03 R MAX
2 PLACES
1.625
63
.100
2 PLACES
NO. 2-56 UNC-2B THD
2 HOLES
SEE NOTE 9
.125
.24
2 PLACES
SEE NOTE 7
.133/.139 DIA
2 HOLES
.0928/.0934 DIA & CSK
FARSIDE 82° TO
.140 DIA
2 HOLES
5.375
.783
3.811/3.805
.469
3.400
.204
.58
2 PLACES
.275
.560
.94
2 PLACES
1.956
.780
.56
2 PLACES
.212
3.700
4.906
.596
.44 2 PLACES
.106/.113 DIA & CSK 82° TO
.203 DIA
2 HOLES
QTY-2-(4)
CSK & TAP FOR NO. 4(.112)-40UNC-2B X 1 1/2 DIA INSERT
2 HOLES
SEE NOTE 6

(A) REPLACES REV - WITH CHANGE

NOTES
1. INTERPRET DRAWING IN ACCORDANCE WITH STANDARDS PRESCRIBED BY MIL-D-70327
2. MATL: 6061-T6 AL PER QQ-A-250/11, TEMP T6
3. UNLESS OTHERWISE SPECIFIED ALL FILLETS AND RADII TO BE .06 R MAX
4. ALL SURFACES 125√ UNLESS OTHERWISE SPECIFIED
5. REMOVE BURRS & SHARP EDGES .005/.020
6. INSTALL FIND NO.3 & FIND NO. 4 PER MS33646
7. THESE SURFACES TO BE CHROMATE PER MIL-C-5541 TYPE II, CLASS 3 BEFORE INSTALLATION OF FIND NO.3 & FIND NO.4
8. ANODIZE PER MIL-A-8625 TYPE I, DYED BLACK
9. THESE HOLES TO BE FREE OF ANODIZE
10. IDENTIFY WITH DRAWING NO. & REVISION PER ND1002019

7	MS21209-C0415	INSERT, SCREW LOCKING	4
~~2~~	~~MS21208-C0415~~	~~INSERT, THREADED~~	~~3~~
2	1004867	PIN, GUIDE	2
1	1004315-001	FRAME	1
QTY REQD	PART OR IDENTIFYING NO.	NOMENCLATURE OR DESCRIPTION	FIND NO.
-011	LIST OF MATERIALS		

1003220	
NEXT ASSY	USED ON
APPLICATION	

UNLESS OTHERWISE SPECIFIED
DIMENSIONS ARE IN INCHES
CAPACITOR VALUES ARE IN µf
RESISTOR VALUES ARE IN OHMS
TOLERANCES ON
FRACTIONS ± DECIMALS .XX ± .01 .XXX ± .005 ANGLES ± 0°30'
DO NOT SCALE THIS DRAWING

MATERIAL
SEE NOTE 2

MIT
INSTRUMENTATION LAB
CAMBRIDGE, MASS.

DRAWN 29JUL65
CHECKED
APPROVED
APPROVED
APPROVED MIT
APPROVED MSC
DATE

MANNED SPACECRAFT CENTER
HOUSTON, TEXAS

FRAME
G & N FAILURE DETECT

CODE IDENT NO. 80230
SIZE D
DRAWING NO. 1004315
SCALE 1/1
SHEET 1 OF 1

1004315 B

NOTICE - WHEN GOVERNMENT DRAWINGS, SPECIFICATIONS, OR OTHER DATA ARE USED FOR ANY PURPOSE OTHER THAN IN CONNECTION WITH A DEFINITELY RELATED GOVERNMENT PROCUREMENT OPERATION, THE UNITED STATES GOVERNMENT THEREBY INCURS NO RESPONSIBILITY NOR ANY OBLIGATION WHATSOEVER; AND THE FACT THAT THE GOVERNMENT MAY HAVE FORMULATED, FURNISHED, OR IN ANY WAY SUPPLIED THE SAID DRAWINGS, SPECIFICATIONS OR OTHER DATA IS NOT TO BE REGARDED BY IMPLICATION OR OTHERWISE AS IN ANY MANNER LICENSING THE HOLDER OR ANY OTHER PERSON OR CORPORATION, OR CONVEYING ANY RIGHTS OR PERMISSION TO MANUFACTURE, USE, OR SELL ANY PATENTED INVENTION THAT MAY IN ANY WAY BE RELATED THERETO.

REVISIONS

SYM	ZONE	DESCRIPTION	DR	CHK	DATE	APPROVED
A		REPLACE REV - WITH CHANGES PER TDRR 21558			9/7/65	WH
B		REVISED PER TDRR 22168			9/13/65	
C		REVISED PER TDRR 24217	EAU		12/7/65	

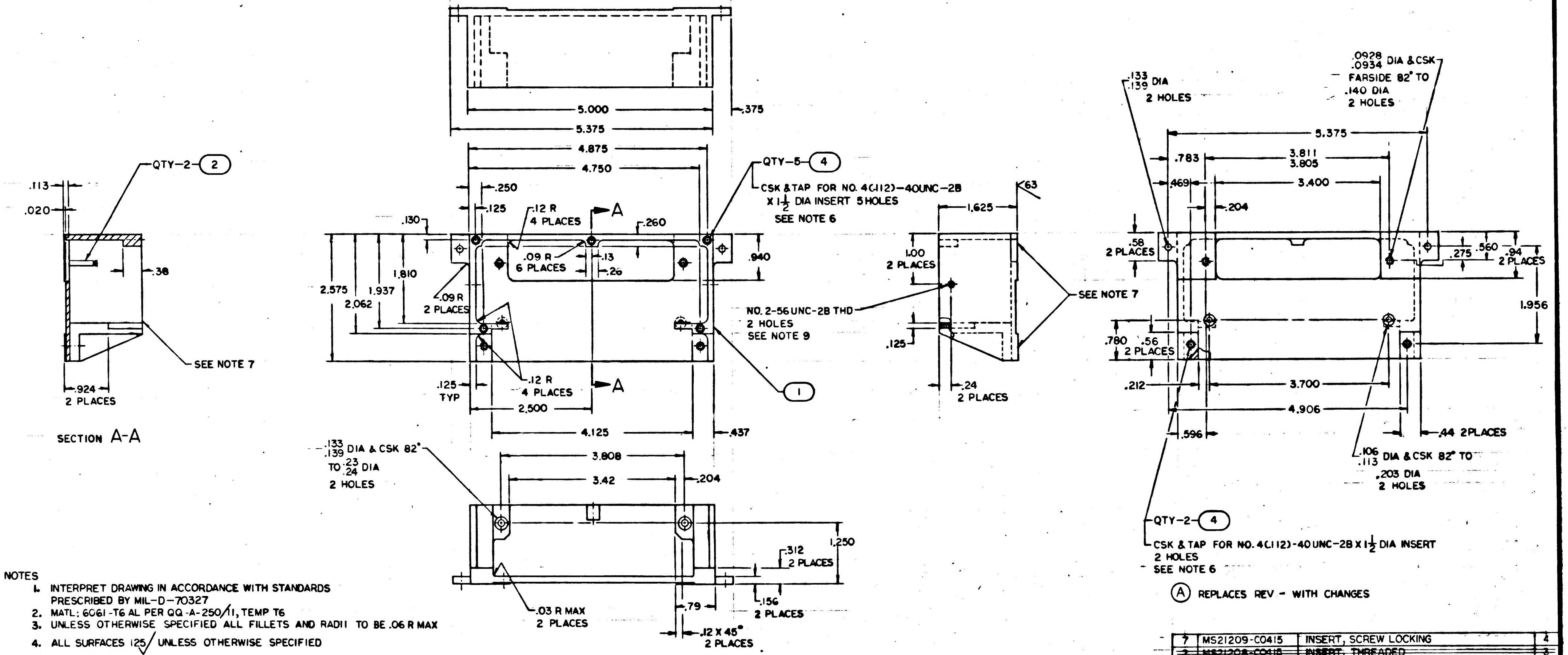
5.000
5.375
.375
4.875
4.750
.250
.125
.12 R 4 PLACES
A
.260
.130
.09 R 6 PLACES
.13
.26
.940
2.575
1.937
2.062
1.810
.09 R 2 PLACES
.125 TYP
.12 R 4 PLACES
2.500
4.125
.437
QTY-5-4
CSK & TAP FOR NO. 4(.112)-40UNC-2B X 1 1/2 DIA INSERT 5 HOLES
SEE NOTE 6
1
QTY-2-2
.113
.020
.38
.924 2 PLACES
SEE NOTE 7
SECTION A-A
.133 .139 DIA & CSK 82° TO .23 .24 DIA 2 HOLES
3.808
3.42
.204
1.250
.312 2 PLACES
.156 2 PLACES
.79
.12 X 45° 2 PLACES
.03 R MAX 2 PLACES
1.625
63
1.00 2 PLACES
NO. 2-56 UNC-2B THD 2 HOLES SEE NOTE 9
SEE NOTE 7
.125
.24 2 PLACES
.133 .139 DIA 2 HOLES
.0928 .0934 DIA & CSK FARSIDE 82° TO .140 DIA 2 HOLES
5.375
.783
3.811 3.805
.469
3.400
.204
.58 2 PLACES
.275
.560
.94 2 PLACES
1.956
.780
.56 2 PLACES
.212
3.700
4.906
.596
.44 2 PLACES
.106 .113 DIA & CSK 82° TO .203 DIA 2 HOLES
QTY-2-4
CSK & TAP FOR NO. 4(.112)-40UNC-2B X 1 1/2 DIA INSERT 2 HOLES SEE NOTE 6

NOTES
1. INTERPRET DRAWING IN ACCORDANCE WITH STANDARDS PRESCRIBED BY MIL-D-70327
2. MATL: 6061-T6 AL PER QQ-A-250/11, TEMP T6
3. UNLESS OTHERWISE SPECIFIED ALL FILLETS AND RADII TO BE .06 R MAX
4. ALL SURFACES 125√ UNLESS OTHERWISE SPECIFIED
5. REMOVE BURRS & SHARP EDGES .005/.020
6. INSTALL FIND NO. 3 & FIND NO. 4 PER MS33646
7. THESE SURFACES TO BE CHROMATE PER MIL-C-5541 TYPE II, CLASS 3 BEFORE INSTALLATION OF FIND NO. 3 & FIND NO. 4
8. ANODIZE PER MIL-A-8625 TYPE I, DYED BLACK UNLESS OTHERWISE SPECIFIED
9. THESE HOLES TO BE FREE OF ANODIZE
10. IDENTIFY WITH PART NO. PER ND1002019

Ⓐ REPLACES REV - WITH CHANGES

QTY REQD	PART OR IDENTIFYING NO.	NOMENCLATURE OR DESCRIPTION	FIND NO.
7	MS21209-C0415	INSERT, SCREW LOCKING	4
~~2~~	~~MS21208-C0415~~	~~INSERT, THREADED~~	~~3~~
2	1004867	PIN, GUIDE	2
1	1004315-001	FRAME	1

LIST OF MATERIALS

NEXT ASSY	USED ON
1003220	

APPLICATION

UNLESS OTHERWISE SPECIFIED
DIMENSIONS ARE IN INCHES
CAPACITOR VALUES ARE IN µf
RESISTOR VALUES ARE IN OHMS
TOLERANCES ON
FRACTIONS ± DECIMALS XX ±.01 XXX ±.005 ANGLES ±0°30'
DO NOT SCALE THIS DRAWING

MATERIAL
SEE NOTE 2

MIT
INSTRUMENTATION LAB
CAMBRIDGE, MASS.

DRAWN 29 JUL 65
CHECKED
APPROVED Albert Hopkins
APPROVED
APPROVED MIT
APPROVED MSC
DATE

MANNED SPACECRAFT CENTER
HOUSTON, TEXAS

FRAME
G & N FAILURE DETECT

CODE IDENT NO. 80230
SIZE D
DRAWING NO. 1004315
SCALE 1/1
SHEET 1 OF 1

NOTICE – WHEN GOVERNMENT DRAWINGS, SPECIFICATIONS, OR OTHER DATA ARE USED FOR ANY PURPOSE OTHER THAN IN CONNECTION WITH A DEFINITELY RELATED GOVERNMENT PROCUREMENT OPERATION, THE UNITED STATES GOVERNMENT THEREBY INCURS NO RESPONSIBILITY NOR ANY OBLIGATION WHATSOEVER; AND THE FACT THAT THE GOVERNMENT MAY HAVE FORMULATED, FURNISHED, OR IN ANY WAY SUPPLIED THE SAID DRAWINGS, SPECIFICATIONS OR OTHER DATA IS NOT TO BE REGARDED BY IMPLICATION OR OTHERWISE AS IN ANY MANNER LICENSING THE HOLDER OR ANY OTHER PERSON OR CORPORATION, OR CONVEYING ANY RIGHTS OR PERMISSION TO MANUFACTURE, USE, OR SELL ANY PATENTED INVENTION THAT MAY IN ANY WAY BE RELATED THERETO.

REVISIONS 20274

SYM	ZONE	DESCRIPTION	DR	CHK	DATE	APPROVED

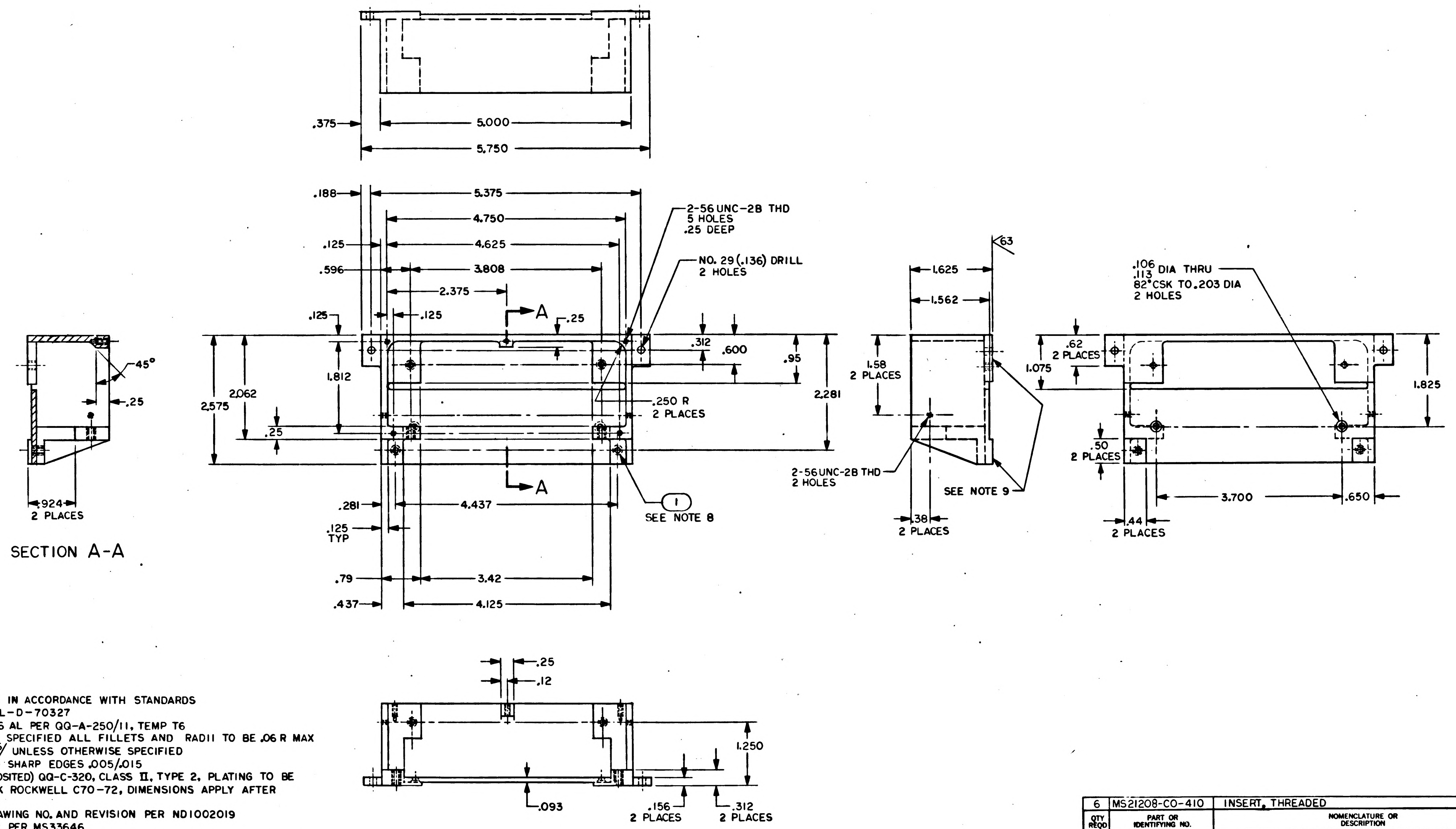

.375
5.000
5.750
.188
5.375
4.750
.125
4.625
.596
3.808
2.375
.125
.125
A
.25
2-56 UNC-2B THD
5 HOLES
.25 DEEP
NO. 29 (.136) DRILL
2 HOLES
.312
.600
.95
2.281
1.812
2.062
2.575
.25
.250 R
2 PLACES
A
.281
4.437
.125
TYP
1
SEE NOTE 8
.79
3.42
.437
4.125
45°
.25
.924
2 PLACES
SECTION A-A
63
1.625
1.562
1.58
2 PLACES
1.075
2-56 UNC-2B THD
2 HOLES
SEE NOTE 9
.38
2 PLACES
.106
.113 DIA THRU
82° CSK TO .203 DIA
2 HOLES
.62
2 PLACES
1.825
.50
2 PLACES
3.700
.650
.44
2 PLACES
.25
.12
1.250
.093
.156
2 PLACES
.312
2 PLACES

NOTES:

1. INTERPRET DRAWING IN ACCORDANCE WITH STANDARDS PRESCRIBED BY MIL-D-70327
2. MATERIAL: 6061-T6 AL PER QQ-A-250/11, TEMP T6
3. UNLESS OTHERWISE SPECIFIED ALL FILLETS AND RADII TO BE .06 R MAX
4. ALL SURFACES 125√ UNLESS OTHERWISE SPECIFIED
5. REMOVE BURRS AND SHARP EDGES .005/.015
6. PLATE (ELECTRODEPOSITED) QQ-C-320, CLASS II, TYPE 2, PLATING TO BE .0004/.0002 THICK ROCKWELL C70-72, DIMENSIONS APPLY AFTER PLATING
7. IDENTIFY WITH DRAWING NO. AND REVISION PER ND1002019
8. INSTALL FIND NO. 1 PER MS33646
9. THESE SURFACES TO BE CHROMATE PER MIL-C-5541, TYPE II, CLASS I BEFORE INSTALLATION OF FIND NO. 1 (INSERTS)

QTY REQD	PART OR IDENTIFYING NO.	NOMENCLATURE OR DESCRIPTION	FIND NO.
6	MS21208-CO-410	INSERT, THREADED	1

LIST OF MATERIALS

NEXT ASSY	USED ON
1003220	

APPLICATION

UNLESS OTHERWISE SPECIFIED
DIMENSIONS ARE IN INCHES
CAPACITOR VALUES ARE IN μf
RESISTOR VALUES ARE IN OHMS
TOLERANCES ON
FRACTIONS ± — DECIMALS XX ±.01 XXX ±.005 ANGLES ± —
DO NOT SCALE THIS DRAWING

MATERIAL
SEE NOTE 2

MIT
INSTRUMENTATION LAB
CAMBRIDGE, MASS.

DRAWN Edw. Gross 9 JUN 65
CHECKED
APPROVED
APPROVED Eldon C Hall 6/18/65
APPROVED MIT WKapfer 22 Jun 65
APPROVED MSC 6/22/65
DATE

MANNED SPACECRAFT CENTER
HOUSTON, TEXAS

FRAME
G & N FAILURE DETECT

CODE IDENT NO. 80230
SIZE D
DRAWING NO. 1004315
SCALE 1/1
SHEET 1 OF 1

1004315

NOTICE – WHEN GOVERNMENT DRAWINGS, SPECIFICATIONS, OR OTHER DATA ARE USED FOR ANY PURPOSE OTHER THAN IN CONNECTION WITH A DEFINITELY RELATED GOVERNMENT PROCUREMENT OPERATION, THE UNITED STATES GOVERNMENT THEREBY INCURS NO RESPONSIBILITY NOR ANY OBLIGATION WHATSOEVER; AND THE FACT THAT THE GOVERNMENT MAY HAVE FORMULATED, FURNISHED, OR IN ANY WAY SUPPLIED THE SAID DRAWINGS, SPECIFICATIONS OR OTHER DATA IS NOT TO BE REGARDED BY IMPLICATION OR OTHERWISE AS IN ANY MANNER LICENSING THE HOLDER OR ANY OTHER PERSON OR CORPORATION, OR CONVEYING ANY RIGHTS OR PERMISSION TO MANUFACTURE, USE, OR SELL ANY PATENTED INVENTION THAT MAY IN ANY WAY BE RELATED THERETO.

REVISIONS

SYM	ZONE	DESCRIPTION	DR	CHK	DATE	APPROVED
A		REPLACE REV – WITH CHANGES PER TDRR 21558			8/17/65	

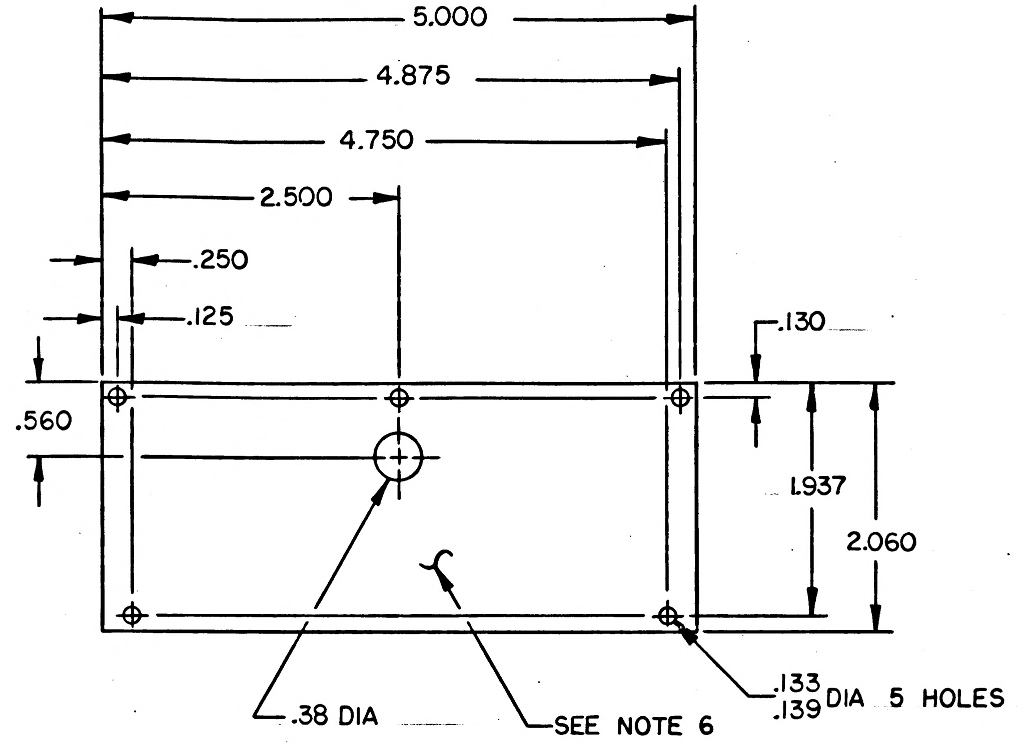

NOTES
1. INTERPRET DRAWING IN ACCORDANCE WITH STANDARDS PRESCRIBED BY MIL-D-70327
2. MATERIAL: 6061-T6 AL PER QQ-A-250/11 TEMP 6, .062 THK
3. REMOVE BURRS AND SHARP EDGES .005/.020
4. IDENTIFY WITH DRAWING NO. AND REVISION PER ND1002019
5. ANODIZE PER MIL-A-8625 TYPE I, DYED BLACK
6. CHROMATE SURFACE PER MIL-C-5541 TYPE II, CLASS 3

Ⓐ REPLACES REV-WITH CHANGE

QTY REQD	PART OR IDENTIFYING NO.	NOMENCLATURE OR DESCRIPTION	FIND NO.

LIST OF MATERIALS

1003220	
NEXT ASSY	USED ON
APPLICATION	

UNLESS OTHERWISE SPECIFIED
DIMENSIONS ARE IN INCHES
CAPACITOR VALUES ARE IN µf
RESISTOR VALUES ARE IN OHMS
TOLERANCES ON
FRACTIONS ± DECIMALS XX ±.01 XXX ±.005 ANGLES ±
DO NOT SCALE THIS DRAWING

MATERIAL
SEE NOTE 2

MIT
INSTRUMENTATION LAB
CAMBRIDGE, MASS.

DRAWN 29 JUL 65
CHECKED R.F. Baker 30 Jul 65
APPROVED Albert Hopkins 30 Jul 65
APPROVED
APPROVED MIT 3 Aug 65
APPROVED MSC 8/7/65
DATE

MANNED SPACECRAFT CENTER
HOUSTON, TEXAS

COVER, TOP
G & N FAILURE DETECT

CODE IDENT NO. 80230
SIZE C
DRAWING NO. 1004316
SCALE 1/1
SHEET 1 OF 1

NOTICE – WHEN GOVERNMENT DRAWINGS, SPECIFICATIONS, OR OTHER DATA ARE USED FOR ANY PURPOSE OTHER THAN IN CONNECTION WITH A DEFINITELY RELATED GOVERNMENT PROCUREMENT OPERATION, THE UNITED STATES GOVERNMENT THEREBY INCURS NO RESPONSIBILITY NOR ANY OBLIGATION WHATSOEVER; AND THE FACT THAT THE GOVERNMENT MAY HAVE FORMULATED, FURNISHED, OR IN ANY WAY SUPPLIED THE SAID DRAWINGS, SPECIFICATIONS OR OTHER DATA IS NOT TO BE REGARDED BY IMPLICATION OR OTHERWISE AS IN ANY MANNER LICENSING THE HOLDER OR ANY OTHER PERSON OR CORPORATION, OR CONVEYING ANY RIGHTS OR PERMISSION TO MANUFACTURE, USE, OR SELL ANY PATENTED INVENTION THAT MAY IN ANY WAY BE RELATED THERETO.

REVISIONS 20274

SYM	ZONE	DESCRIPTION	DR	CHK	DATE	APPROVED

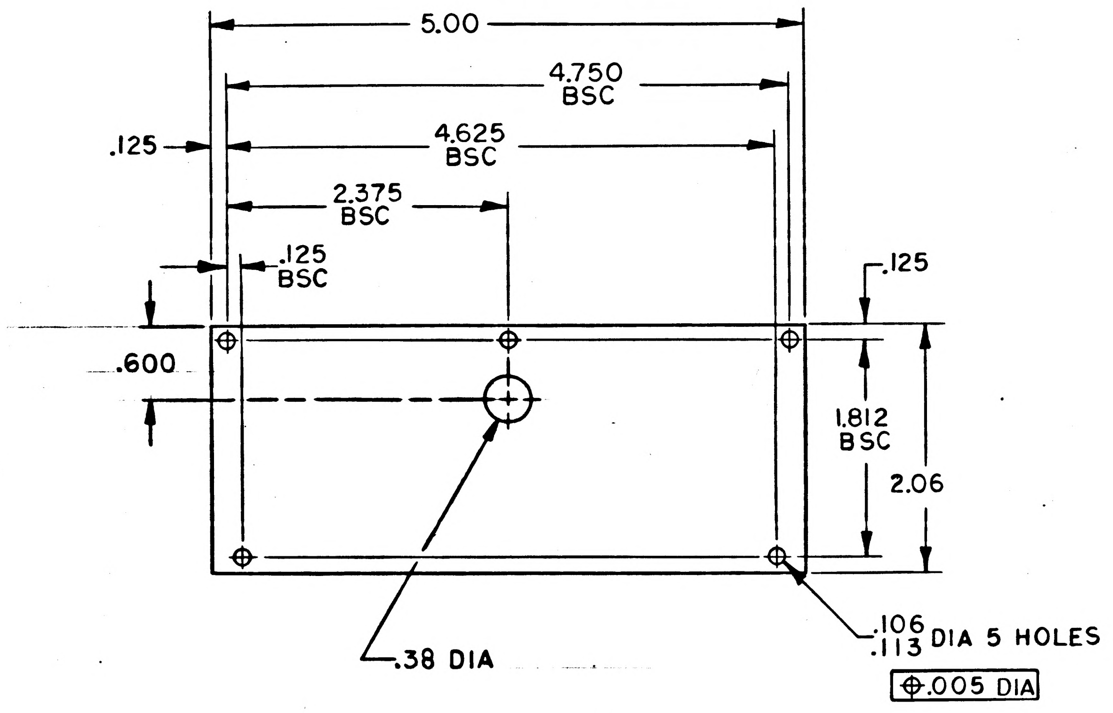

NOTES
1. INTERPRET DRAWING IN ACCORDANCE WITH STANDARDS PRESCRIBED BY MIL-D-70327
2. MATERIAL: 6061-T6 AL PER QQ-A-250/11, TEMP 6, .062 THK
3. REMOVE BURRS AND SHARP EDGES .005/.015
4. IDENTIFY WITH DRAWING NO. AND REVISION PER ND1002019
5. PLATE (ELECTRODEPOSITED) PER QQ-C-320, CLASS II, TYPE 2, PLATING TO BE .0004/.0002 THICK. ROCKWELL C70-72. DIMENSIONS APPLY AFTER PLATING. FINISH 32√ AFTER PLATING

MASTER

QTY REQD	PART OR IDENTIFYING NO.	MATERIAL OR NOTES	NOMENCLATURE OR DESCRIPTION	FIND NO.

LIST OF MATERIALS

1003220	
NEXT ASSY	USED ON
APPLICATION	

UNLESS OTHERWISE SPECIFIED
DIMENSIONS ARE IN INCHES
CAPACITOR VALUES ARE IN μf
RESISTOR VALUES ARE IN OHMS
TOLERANCES ON
FRACTIONS ± — DECIMALS .XX ± .01 .XXX ± .005 ANGLES ± —
DO NOT SCALE THIS DRAWING

MATERIAL

MIT
INSTRUMENTATION LAB
CAMBRIDGE, MASS.

DRAWN E W Johansen 6/15/65
CHECKED
APPROVED
APPROVED Eldon C Hall 6/18/65
APPROVED MIT W Kupfer 22 Jun 65
APPROVED MSC 6/22/65
DATE

MANNED SPACECRAFT CENTER
HOUSTON, TEXAS

COVER TOP
G & N FAILURE DETECT

CODE IDENT NO. 80230
SIZE C
DRAWING NO. 1004316
SCALE FULL
SHEET 1 OF 1

NOTICE – WHEN GOVERNMENT DRAWINGS, SPECIFICATIONS, OR OTHER DATA ARE USED FOR ANY PURPOSE OTHER THAN IN CONNECTION WITH A DEFINITELY RELATED GOVERNMENT PROCUREMENT OPERATION, THE UNITED STATES GOVERNMENT THEREBY INCURS NO RESPONSIBILITY NOR ANY OBLIGATION WHATSOEVER; AND THE FACT THAT THE GOVERNMENT MAY HAVE FORMULATED, FURNISHED, OR IN ANY WAY SUPPLIED THE SAID DRAWINGS, SPECIFICATIONS OR OTHER DATA IS NOT TO BE REGARDED BY IMPLICATION OR OTHERWISE AS IN ANY MANNER LICENSING THE HOLDER OR ANY OTHER PERSON OR CORPORATION, OR CONVEYING ANY RIGHTS OR PERMISSION TO MANUFACTURE, USE, OR SELL ANY PATENTED INVENTION THAT MAY IN ANY WAY BE RELATED THERETO.

REVISIONS 20407

SYM	ZONE	DESCRIPTION	DR	CHK	DATE	APPROVED
A		REVISED PER TDRR 21345	RPZ			R.F.B

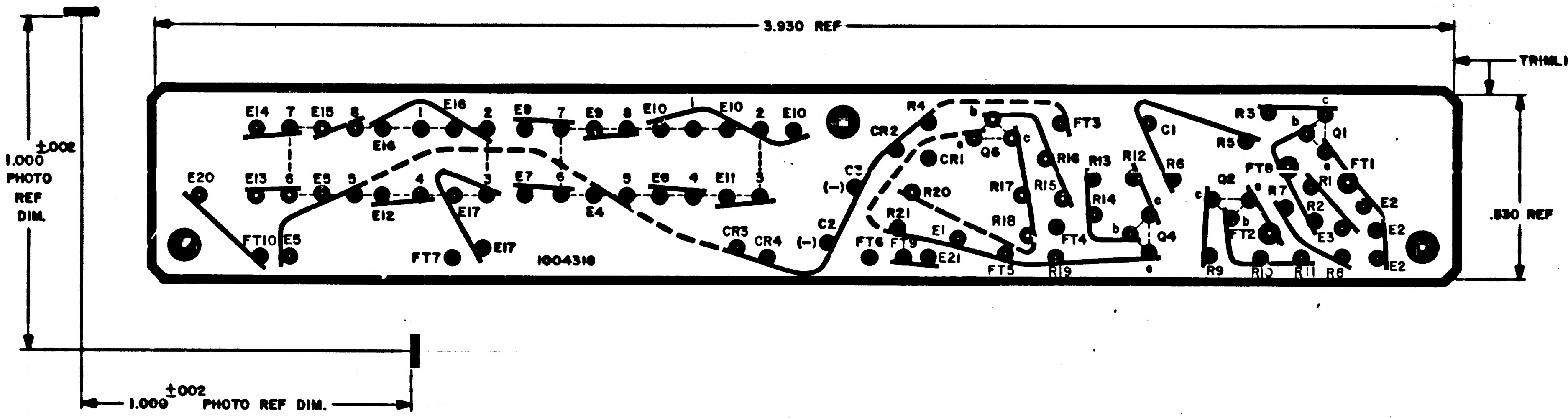
3.930 REF
TRIMLINE
1.000 ±.002 PHOTO REF DIM.
1.000 ±.002 PHOTO REF DIM.
.830 REF
E14
7
E15
8
1
E16
2
E8
7
E9
8
E10
1
E10
2
E10
E16
E20
E13
6
E5
5
4
3
E7
6
5
E6
4
E11
3
E12
E17
E4
FT10
E5
FT7
E17
1004318
CR3
CR4
(–)
C2
C3
(–)
CR2
R4
b
e
CR1
Q6
c
FT3
R16
R13
R12
C1
R6
R3
b
c
Q1
R5
FT1
R20
R17
R15
R14
c
Q2
FT8
e
R7
R1
R2
E2
R21
E1
R18
FT4
b
Q4
b
FT2
E3
E2
FT6
FT9
E21
FT5
R19
e
R9
R10
R11
R8
E2

NOTES
1. INTERPRET DRAWING IN ACCORDANCE WITH STANDARDS PRESCRIBED BY MIL-D-70327
2. ORIGINAL OF THIS DRAWING OR REPRODUCTION MADE BY A PROCESS OR METHOD SHALL INSURE DIMENSIONAL STABILITY
3. MAKE MASTER PATTERN POSITIVE FILM TO DIMENSIONS SHOWN
4. CUT TO WITHIN .010 OF TRIMLINE

QTY REQD	PART OR IDENTIFYING NO.	MATERIAL OR NOTES	NOMENCLATURE OR DESCRIPTION	FIND NO.

LIST OF MATERIALS

NEXT ASSY	USED ON
1004318	

APPLICATION

UNLESS OTHERWISE SPECIFIED
DIMENSIONS ARE IN INCHES
CAPACITOR VALUES ARE IN µf
RESISTOR VALUES ARE IN OHMS
TOLERANCES ON
FRACTIONS ± DECIMALS ± ANGLES ±
DO NOT SCALE THIS DRAWING
MATERIAL

MIT
INSTRUMENTATION LAB
CAMBRIDGE, MASS.

MANNED SPACECRAFT CENTER
HOUSTON, TEXAS

DRAWN	Ed Powers	29 Jun 65
CHECKED	L. Norton	6-25-65
APPROVED		
APPROVED	Eldon C. Hall	25 Jun 65
APPROVED MIT		6-28-65
APPROVED MSC		

PHOTOGRAPHIC MASTER
WIRING BOARD, A
G & N FAILURE DETECT

CODE IDENT NO	SIZE	DRAWING NO.
80230	D	1004317

SCALE 5/1
SHEET 1 OF 1

NOTICE: WHEN GOVERNMENT DRAWINGS, SPECIFICATIONS, OR OTHER DATA ARE USED FOR ANY PURPOSE OTHER THAN IN CONNECTION WITH A DEFINITELY RELATED GOVERNMENT PROCUREMENT OPERATION, THE UNITED STATES GOVERNMENT THEREBY INCURS NO RESPONSIBILITY NOR ANY OBLIGATION WHATSOEVER; AND THE FACT THAT THE GOVERNMENT MAY HAVE FORMULATED, FURNISHED, OR IN ANY WAY SUPPLIED THE SAID DRAWINGS, SPECIFICATIONS OR OTHER DATA IS NOT TO BE REGARDED BY IMPLICATION OR OTHERWISE AS IN ANY MANNER LICENSING THE HOLDER OR ANY OTHER PERSON OR CORPORATION, OR CONVEYING ANY RIGHTS OR PERMISSION TO MANUFACTURE, USE, OR SELL ANY PATENTED INVENTION THAT MAY IN ANY WAY BE RELATED THERETO.

REVISIONS 20407

SYM	ZONE	DESCRIPTION	DR	CHK	DATE	APPROVED
A		REVISED PER TDRR 21345	RPZ			R.F.
B		REVISED PER TDRR 22459			/65	

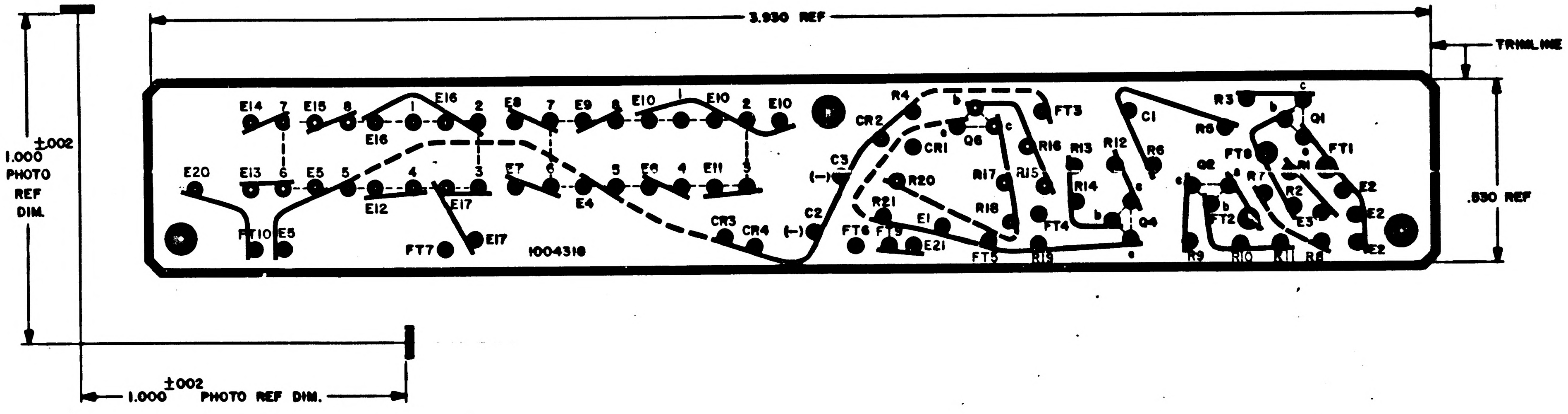
3.930 REF
TRIMLINE
.530 REF
1.000 ±.002 PHOTO REF DIM.
1.000 ±.002 PHOTO REF DIM.
E14
7
E15
8
E16
1
E16
2
E8
7
E9
8
E10
1
E10
2
E10
E20
E13
6
E5
5
4
3
E7
6
5
E6
4
E11
3
E12
E17
E4
FT10
E5
FT7
E17
1004318
CR3
CR4
(–)
C2
C3
(–)
CR2
R4
b
CR1
e
Q6
c
FT3
R16
R13
R12
R17
R15
R14
R20
R21
E1
R18
FT6
FT9
E21
FT5
R19
FT4
b
c
Q4
e
C1
R6
R3
R5
c
b
Q1
FT1
FT8
e
R1
Q2
e
b
R7
R2
FT2
E3
E2
E2
E2
R9
R10
R11
R8

NOTES

1. INTERPRET DRAWING IN ACCORDANCE WITH STANDARDS PRESCRIBED BY MIL-D-70327
2. ORIGINAL OF THIS DRAWING OR REPRODUCTION MADE BY A PROCESS OR METHOD SHALL INSURE DIMENSIONAL STABILITY
3. MAKE MASTER PATTERN POSITIVE FILM TO DIMENSIONS SHOWN
4. CUT TO WITHIN .010 OF TRIMLINE

MASTER

QTY REQD	PART OR IDENTIFYING NO.	MATERIAL OR NOTES	NOMENCLATURE OR DESCRIPTION	FIND NO.

LIST OF MATERIALS

NEXT ASSY	USED ON
1004318	

APPLICATION

UNLESS OTHERWISE SPECIFIED
DIMENSIONS ARE IN INCHES
CAPACITOR VALUES ARE IN µf
RESISTOR VALUES ARE IN OHMS
TOLERANCES ON
FRACTIONS ± DECIMALS ± ANGLES ±
DO NOT SCALE THIS DRAWING
MATERIAL

MIT
INSTRUMENTATION LAB
CAMBRIDGE, MASS.

DRAWN Ed Powers 29 Jun 65
CHECKED [illegible] Norton 6-25-65
APPROVED
APPROVED [illegible] 25 Jun 65
APPROVED MIT [illegible] 6-28-65
APPROVED MSC [illegible] 6/28/65
DATE

MANNED SPACECRAFT CENTER
HOUSTON, TEXAS

PHOTOGRAPHIC MASTER
WIRING BOARD, A
G & N FAILURE DETECT

CODE IDENT NO. 80230
SIZE D
DRAWING NO. 1004317
SCALE 5/1
SHEET 1 OF 1

NOTICE - WHEN GOVERNMENT DRAWINGS, SPECIFICATIONS, OR OTHER DATA ARE USED FOR ANY PURPOSE OTHER THAN IN CONNECTION WITH A DEFINITELY RELATED GOVERNMENT PROCUREMENT OPERATION, THE UNITED STATES GOVERNMENT THEREBY INCURS NO RESPONSIBILITY NOR ANY OBLIGATION WHATSOEVER; AND THE FACT THAT THE GOVERNMENT MAY HAVE FORMULATED, FURNISHED, OR IN ANY WAY SUPPLIED THE SAID DRAWINGS, SPECIFICATIONS OR OTHER DATA IS NOT TO BE REGARDED BY IMPLICATION OR OTHERWISE AS IN ANY MANNER LICENSING THE HOLDER OR ANY OTHER PERSON OR CORPORATION, OR CONVEYING ANY RIGHTS OR PERMISSION TO MANUFACTURE, USE, OR SELL ANY PATENTED INVENTION THAT MAY IN ANY WAY BE RELATED THERETO.

REVISIONS 20407

SYM	ZONE	DESCRIPTION	DR	CHK	DATE	APPROVED

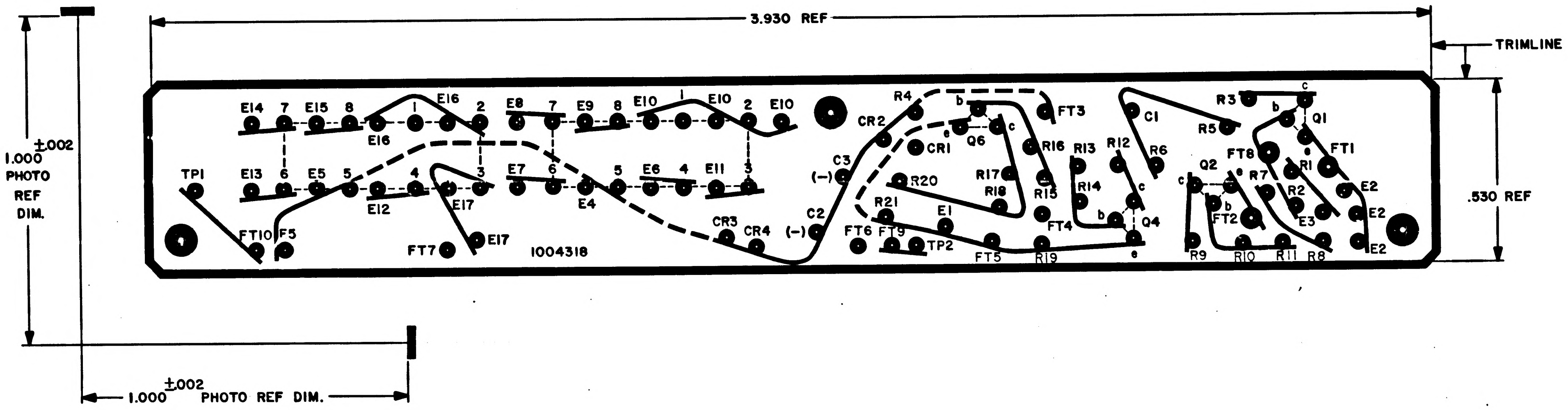
3.930 REF
TRIMLINE
.530 REF
1.000 ±.002 PHOTO REF DIM.
1.000 ±.002 PHOTO REF DIM.
E14
7
E15
8
E16
1
2
E8
7
E9
8
E10
1
E10
2
E10
E16
TP1
E13
6
E5
5
4
3
E7
6
5
E6
4
E11
3
E12
E17
E4
FT10
F5
FT7
E17
1004318
CR3
CR4
(−)
C2
C3
(−)
CR2
R4
b
e
c
Q6
CR1
FT3
R16
R13
R12
C1
R6
R5
R3
b
c
Q1
FT1
FT8
R1
e
Q2
c
e
R7
R2
E2
R20
R21
E1
R17
R18
R15
R14
c
b
Q4
FT4
FT6
FT9
TP2
FT5
R19
e
b
FT2
E3
E2
E2
R9
R10
R11
R8

NOTES
1. INTERPRET DRAWING IN ACCORDANCE WITH STANDARDS PRESCRIBED BY MIL-D-70327
2. ORIGINAL OF THIS DRAWING OR REPRODUCTION MADE BY A PROCESS OR METHOD SHALL INSURE DIMENSIONAL STABILITY
3. MAKE MASTER PATTERN POSITIVE FILM TO DIMENSIONS SHOWN
4. CUT TO WITHIN .010 OF TRIMLINE

QTY REQD	PART OR IDENTIFYING NO.	MATERIAL OR NOTES	NOMENCLATURE OR DESCRIPTION	FIND NO.

LIST OF MATERIALS

NEXT ASSY	USED ON
1004318	

APPLICATION

UNLESS OTHERWISE SPECIFIED
DIMENSIONS ARE IN INCHES
CAPACITOR VALUES ARE IN μf
RESISTOR VALUES ARE IN OHMS
TOLERANCES ON
FRACTIONS ± DECIMALS ± ANGLES ±
DO NOT SCALE THIS DRAWING

MATERIAL

MIT
INSTRUMENTATION LAB
CAMBRIDGE, MASS.

DRAWN	Ed Powers	29 Jun 65
CHECKED	L. Morton	6-25-65
APPROVED		
APPROVED	Eldon C Hall	25 Jun 65
APPROVED MIT	M G Mundy	6-28-65
APPROVED MSC		6/21/65
		DATE

MANNED SPACECRAFT CENTER
HOUSTON, TEXAS

PHOTOGRAPHIC MASTER
WIRING BOARD, A
G & N FAILURE DETECT

CODE IDENT NO.	SIZE	DRAWING NO.
80230	D	1004317

SCALE 5/1
SHEET 1 OF 1

1004317

NOTICE – WHEN GOVERNMENT DRAWINGS, SPECIFICATIONS, OR OTHER DATA ARE USED FOR ANY PURPOSE OTHER THAN IN CONNECTION WITH A DEFINITELY RELATED GOVERNMENT PROCUREMENT OPERATION, THE UNITED STATES GOVERNMENT THEREBY INCURS NO RESPONSIBILITY NOR ANY OBLIGATION WHATSOEVER; AND THE FACT THAT THE GOVERNMENT MAY HAVE FORMULATED, FURNISHED, OR IN ANY WAY SUPPLIED THE SAID DRAWINGS, SPECIFICATIONS, OR OTHER DATA IS NOT TO BE REGARDED BY IMPLICATION OR OTHERWISE AS IN ANY MANNER LICENSING THE HOLDER OR ANY OTHER PERSON OR CORPORATION, OR CONVEYING ANY RIGHTS OR PERMISSION TO MANUFACTURE, USE, OR SELL ANY PATENTED INVENTION THAT MAY IN ANY WAY BE RELATED THERETO.

REVISIONS						
SYM	ZONE	DESCRIPTION	DR	CHK	DATE	APPROVED
A		REVISED PER TDRR 21345	RDG		8/26/65	

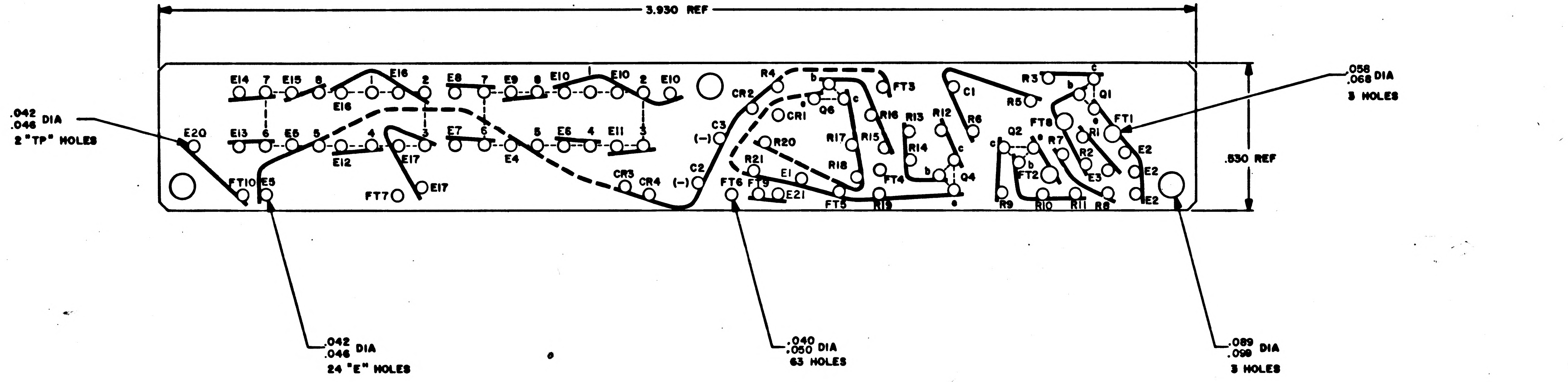
3.930 REF
.530 REF
.042 .046 DIA 2 "TP" HOLES
.058 .068 DIA 3 HOLES
.042 .046 DIA 24 "E" HOLES
.040 .050 DIA 63 HOLES
.089 .099 DIA 3 HOLES
E14 7 E15 8 1 E16 2 E8 7 E9 8 E10 1 E10 2 E10
E16
E20 E13 6 E5 5 4 3 E7 6 5 E6 4 E11 3
E12 E17 E4
FT10 E5 FT7 E17
CR3 CR4 (–) C2 (–) C3 CR2 R4
FT6 FT9 E1 E21 R21 R20 CR1 Q6 b e c
R17 R15 R18 R16 FT3 FT4 FT5 R19
R13 R12 R14 R6 C1 Q4 b c e
R3 R5 Q1 b c e FT8 FT1 R1 R2 R7 Q2 c b e FT2
E2 E2 E2 E3 R9 R10 R11 R8

NOTES

1. INTERPRET DRAWING IN ACCORDANCE WITH STANDARDS PRESCRIBED BY MIL-D-70327
2. MATERIAL: PLASTIC SHEET .031 THICK PER MIL-P-18177 TYPE GEE
3. PREPARE ~~BOARD~~ FOR PHOTOGRAPHY PER ND 1002133
4. ~~MARK BLACK CHARACTERS PER ND1002010~~
5. BROKEN LINE DENOTES SLEEVING
6. IDENTIFY WITH DRAWING NO. AND REVISION PER ND1002019

REF: DRAWING NO. 1004317 FOR PHOTOGRAPHIC MASTER

MASTER

QTY REQD	PART OR IDENTIFYING NO.	MATERIAL OR NOTES	NOMENCLATURE OR DESCRIPTION	FIND NO.

LIST OF MATERIALS

1003218	
NEXT ASSY	USED ON

APPLICATION

UNLESS OTHERWISE SPECIFIED
DIMENSIONS ARE IN INCHES
CAPACITOR VALUES ARE IN µf
RESISTOR VALUES ARE IN OHMS
TOLERANCES ON
FRACTIONS ± DECIMALS ± ANGLES ±
DO NOT SCALE THIS DRAWING

MATERIAL
SEE NOTE 2

MIT
INSTRUMENTATION LAB
CAMBRIDGE, MASS.

MANNED SPACECRAFT CENTER
HOUSTON, TEXAS

DRAWN Ed Powers 2 Apr 65
CHECKED 6-25-65
APPROVED
APPROVED Eldon C. Hall 25 June 65
APPROVED MIT 6-28-65
APPROVED MSC
DATE

WIRING BOARD, A
G & N FAILURE DETECT

CODE IDENT NO. 80230
SIZE D
DRAWING NO. 1004318
SCALE 5/1
SHEET 1 OF 1

NOTICE: WHEN GOVERNMENT DRAWINGS, SPECIFICATIONS, OR OTHER DATA ARE USED FOR ANY PURPOSE OTHER THAN IN CONNECTION WITH A DEFINITELY RELATED GOVERNMENT PROCUREMENT OPERATION, THE UNITED STATES GOVERNMENT THEREBY INCURS NO RESPONSIBILITY NOR ANY OBLIGATION WHATSOEVER; AND THE FACT THAT THE GOVERNMENT MAY HAVE FORMULATED, FURNISHED, OR IN ANY WAY SUPPLIED THE SAID DRAWINGS, SPECIFICATIONS, OR OTHER DATA IS NOT TO BE REGARDED BY IMPLICATION OR OTHERWISE AS IN ANY MANNER LICENSING THE HOLDER OR ANY OTHER PERSON OR CORPORATION, OR CONVEYING ANY RIGHTS OR PERMISSION TO MANUFACTURE, USE, OR SELL ANY PATENTED INVENTION THAT MAY IN ANY WAY BE RELATED THERETO.

REVISIONS 20407

SYM	ZONE	DESCRIPTION	DR	CHK	DATE	APPROVED
A		REVISED PER TDRR 21345	RDS		8/20/65	
B		REVISED PER TDRR 22459	KWD			

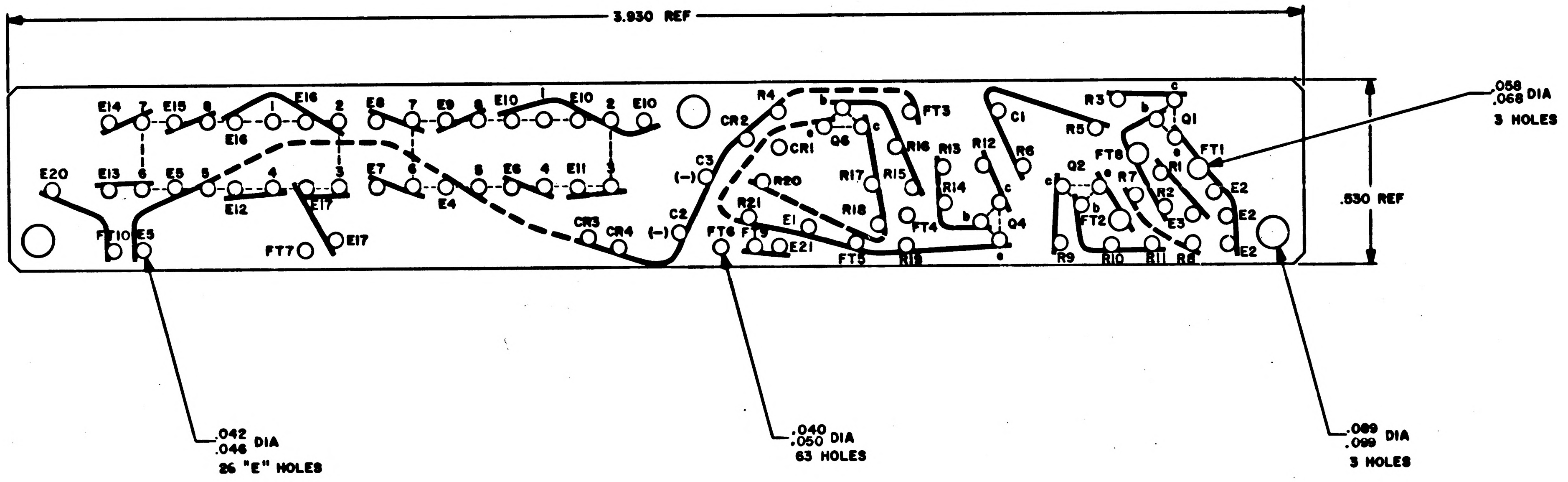
3.930 REF
.530 REF
.058 .068 DIA 3 HOLES
.042 .046 DIA 26 "E" HOLES
.040 .050 DIA 63 HOLES
.089 .099 DIA 3 HOLES
E14 7 E15 8 1 E16 2 E8 7 E9 8 E10 1 E10 2 E10
E16
E20 E13 6 E5 5 4 3 E7 6 5 E6 4 E11 3
E12 E17 E4
FT10 E5 FT7 E17
CR3 CR4 (–) C2 (–) C3 CR2 R4 b c e Q6 CR1 FT3
R20 R21 E1 E21 FT6 FT9 FT5 R19
R17 R15 R16 R18 FT4 R13 R14 R12 b c e Q4
C1 R6 R3 R5 c b e Q1 FT1 FT8 Q2 c b e R7 R1 R2 E3 FT2
E2 E2 E2
R9 R10 R11 R8

NOTES

1. INTERPRET DRAWING IN ACCORDANCE WITH STANDARDS PRESCRIBED BY MIL-D-70327
2. MATERIAL: PLASTIC SHEET .031 THICK PER MIL-P-18177 TYPE GEE
3. ~~PREPARE BOARD FOR PHOTOGRAPHY PER ND 1002133~~
4. ~~MARK BLACK CHARACTERS PER ND1002018~~
5. BROKEN LINE DENOTES SLEEVING
6. IDENTIFY WITH DRAWING NO. AND REVISION PER ND1002019

REF: DRAWING NO. 1004317 FOR PHOTOGRAPHIC MASTER

MASTER

QTY REQD	PART OR IDENTIFYING NO.	MATERIAL OR NOTES	NOMENCLATURE OR DESCRIPTION	FIND NO.

LIST OF MATERIALS

NEXT ASSY	USED ON
1003218	

APPLICATION

UNLESS OTHERWISE SPECIFIED
DIMENSIONS ARE IN INCHES
CAPACITOR VALUES ARE IN µf
RESISTOR VALUES ARE IN OHMS
TOLERANCES ON
FRACTIONS ± DECIMALS ± ANGLES ±
DO NOT SCALE THIS DRAWING

MATERIAL
SEE NOTE 2

MIT
INSTRUMENTATION LAB
CAMBRIDGE, MASS.

DRAWN	Ed Tompkins	29 Jun 65
CHECKED		6-25-65
APPROVED		
APPROVED	Eldon C. Hall	25 June 65
APPROVED MIT		6-28-65
APPROVED MSC		
		DATE

MANNED SPACECRAFT CENTER
HOUSTON, TEXAS

WIRING BOARD, A
G & N FAILURE DETECT

CODE IDENT NO.	SIZE	DRAWING NO.
80230	D	1004318

SCALE 5/1 SHEET 1 OF 1

NOTICE WHEN GOVERNMENT DRAWINGS, SPECIFICATIONS, OR OTHER DATA ARE USED FOR ANY PURPOSE OTHER THAN IN CONNECTION WITH A DEFINITELY RELATED GOVERNMENT PROCUREMENT OPERATION, THE UNITED STATES GOVERNMENT THEREBY INCURS NO RESPONSIBILITY NOR ANY OBLIGATION WHATSOEVER AND THE FACT THAT THE GOVERNMENT MAY HAVE FORMULATED, FURNISHED, OR IN ANY WAY SUPPLIED THE SAID DRAWINGS, SPECIFICATIONS, OR OTHER DATA IS NOT TO BE REGARDED BY IMPLICATION OR OTHERWISE AS IN ANY MANNER LICENSING THE HOLDER OR ANY OTHER PERSON OR CORPORATION, OR CONVEYING ANY RIGHTS OR PERMISSION TO MANUFACTURE, USE, OR SELL ANY PATENTED INVENTION THAT MAY IN ANY WAY BE RELATED THERETO.

REVISIONS 20407						
SYM	ZONE	DESCRIPTION	DR	CHK	DATE	APPROVED

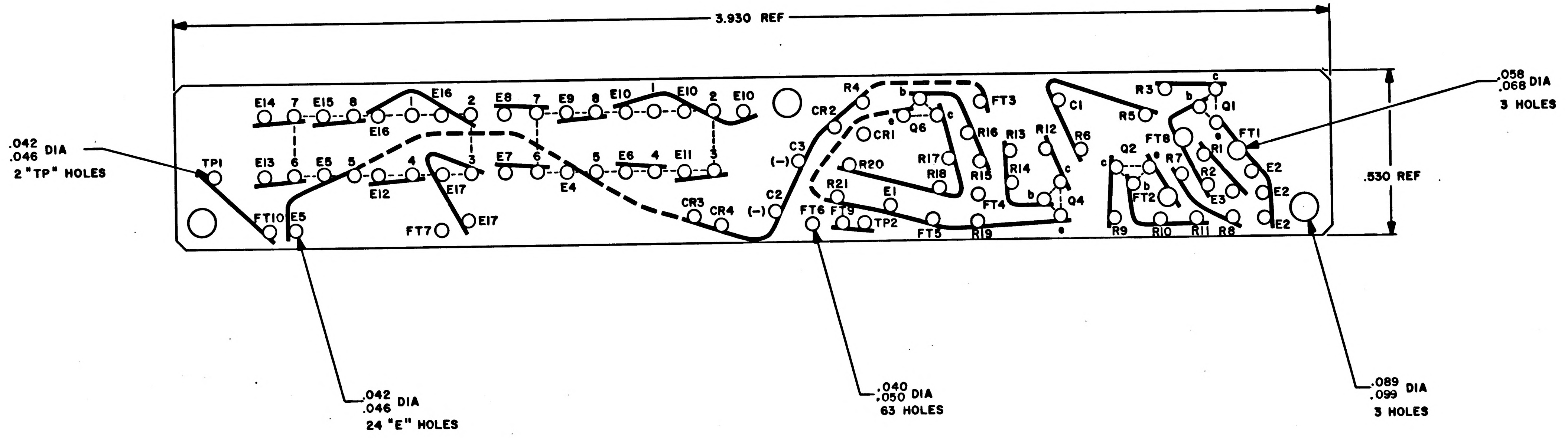
3.930 REF
.042
.046 DIA
2 "TP" HOLES
TP1
E14 7 E15 8 1 E16 2
E16
E13 6 E5 5 4 3
E12
E17
E17
FT7
FT10 E5
E8 7 E9 8 E10 1 E10 2 E10
E7 6 5 E6 4 E11 3
E4
CR3 CR4 (−) C2
C3 (−)
CR2
R4
b c e Q6
CR1
R20
R17
R18
R21
E1
FT6 FT9 TP2
FT5 R19
FT3
R16
R15
FT4
R13 R12 R14
c b Q4 e
C1 R6
R3 c b Q1 R5
e
FT8 FT1
Q2 c e b
R7 R1 R2
FT2
E3
E2 E2 E2
R9 R10 R11 R8
.058
.068 DIA
3 HOLES
.530 REF
.042
.046 DIA
24 "E" HOLES
.040
.050 DIA
63 HOLES
.089
.099 DIA
3 HOLES

NOTES

1. INTERPRET DRAWING IN ACCORDANCE WITH STANDARDS PRESCRIBED BY MIL-D-70327
2. MATERIAL: PLASTIC SHEET .031 THICK PER MIL-P-188177 TYPE GEE
3. PREPARE BOARD FOR PHOTOGRAPHY PER ND 1002133
4. MARK BLACK CHARACTERS PER ND 1002019

REF: DRAWING NO. 1004317 FOR PHOTOGRAPHIC MASTER

QTY REQD	PART OR IDENTIFYING NO.	MATERIAL OR NOTES	NOMENCLATURE OR DESCRIPTION	FIND NO.

LIST OF MATERIALS

NEXT ASSY	USED ON
1003218	

APPLICATION

UNLESS OTHERWISE SPECIFIED
DIMENSIONS ARE IN INCHES
CAPACITOR VALUES ARE IN μf
RESISTOR VALUES ARE IN OHMS
TOLERANCES ON
FRACTIONS ± DECIMALS ± ANGLES ±
DO NOT SCALE THIS DRAWING

MATERIAL
SEE NOTE 2

MIT
INSTRUMENTATION LAB
CAMBRIDGE, MASS.

DRAWN Ed Powers 29 Jun 65
CHECKED 6-25-65
APPROVED
APPROVED Eldon C. Hall 25 June 65
APPROVED MIT 6-28-65
APPROVED MSC 7/28/65
DATE

MANNED SPACECRAFT CENTER
HOUSTON, TEXAS

WIRING BOARD, A
G & N FAILURE DETECT

CODE IDENT NO. 80230
SIZE D
DRAWING NO. 1004318
SCALE 5/1
SHEET 1 OF 1

NOTICE – WHEN GOVERNMENT DRAWINGS, SPECIFICATIONS, OR OTHER DATA ARE USED FOR ANY PURPOSE OTHER THAN IN CONNECTION WITH A DEFINITELY RELATED GOVERNMENT PROCUREMENT OPERATION, THE UNITED STATES GOVERNMENT THEREBY INCURS NO RESPONSIBILITY NOR ANY OBLIGATION WHATSOEVER; AND THE FACT THAT THE GOVERNMENT MAY HAVE FORMULATED, FURNISHED, OR IN ANY WAY SUPPLIED THE SAID DRAWINGS, SPECIFICATIONS OR OTHER DATA IS NOT TO BE REGARDED BY IMPLICATION OR OTHERWISE AS IN ANY MANNER LICENSING THE HOLDER OR ANY OTHER PERSON OR CORPORATION, OR CONVEYING ANY RIGHTS OR PERMISSION TO MANUFACTURE, USE, OR SELL ANY PATENTED INVENTION THAT MAY IN ANY WAY BE RELATED THERETO.

REVISIONS 20407

SYM	ZONE	DESCRIPTION	DR	CHK	DATE	APPROVED
A		REVISED PER TDRR 21345	R.D.S.			

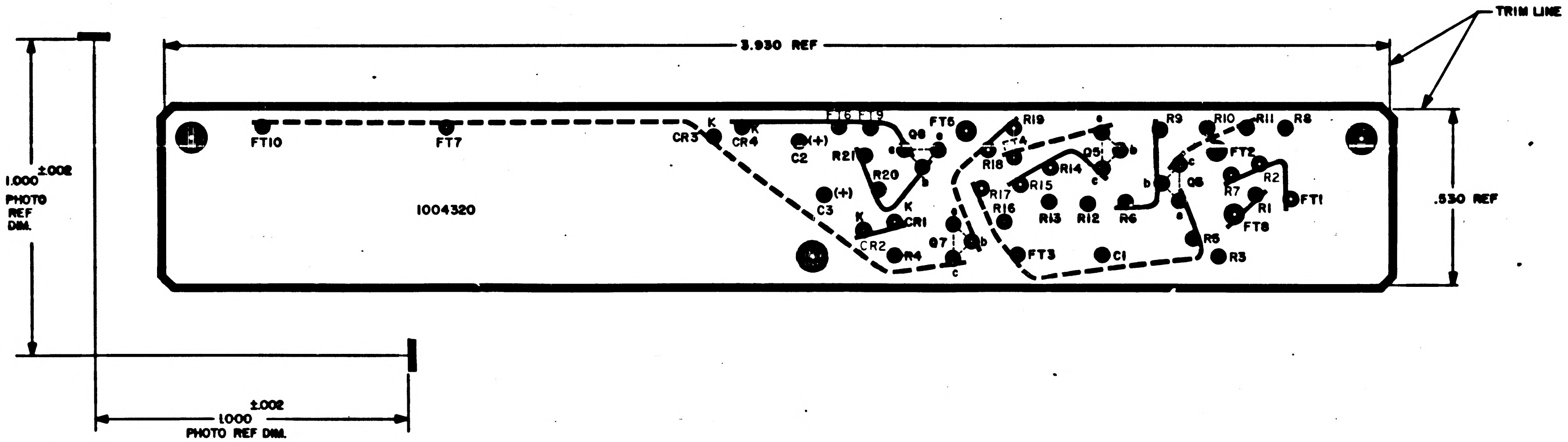
TRIM LINE
3.930 REF
.530 REF
1.000 ±.002 PHOTO REF DIM.
±.002 1.000 PHOTO REF DIM.
1004320
FT10
FT7
CR3
K
CR4
K
C2
(+)
FT6
FT9
Q8
e
b
R21
R20
C3
(+)
K
CR1
CR2
K
R4
Q7
e
b
c
FT5
R19
FT4
R18
R17
R16
R15
R14
Q5
e
b
c
R13
R12
FT3
C1
R9
R6
b
Q6
c
e
R5
R3
R10
R11
R8
FT2
R7
R2
R1
FT1
FT8

NOTES

1. INTERPRET DRAWING IN ACCORDANCE WITH STANDARDS PRESCRIBED BY MIL-D-70327
2. ORIGINAL OF THIS DRAWING OR REPRODUCTION MADE BY A PROCESS OR METHOD SHALL INSURE DIMENSIONAL STABILITY
3. MAKE MASTER PATTERN POSITIVE FILM TO DIMENSIONS SHOWN
4. CUT TO WITHIN .010 OF TRIM LINE

QTY REQD	PART OR IDENTIFYING NO.	MATERIAL OR NOTES	NOMENCLATURE OR DESCRIPTION	FIND NO.

LIST OF MATERIALS

NEXT ASSY	USED ON

APPLICATION

UNLESS OTHERWISE SPECIFIED
DIMENSIONS ARE IN INCHES
CAPACITOR VALUES ARE IN µf
RESISTOR VALUES ARE IN OHMS
TOLERANCES ON
FRACTIONS ± DECIMALS ± ANGLES ±
DO NOT SCALE THIS DRAWING

MATERIAL

MIT
INSTRUMENTATION LAB
CAMBRIDGE, MASS.

DRAWN		
CHECKED		6-25-65
APPROVED		
APPROVED	Eldon C Hall	
APPROVED MIT	MG Mushy	6-28-65
APPROVED MSC		DATE

MANNED SPACECRAFT CENTER
HOUSTON, TEXAS

PHOTOGRAPHIC MASTER
WIRING BOARD, B
G&N FAILURE DETECT

CODE IDENT NO.	SIZE	DRAWING NO.
80230	D	1004319
SCALE 5/1		SHEET 1 OF 1

NOTICE WHEN GOVERNMENT DRAWINGS, SPECIFICATIONS, OR OTHER DATA ARE USED FOR ANY PURPOSE OTHER THAN IN CONNECTION WITH A DEFINITELY RELATED GOVERNMENT PROCUREMENT OPERATION, THE UNITED STATES GOVERNMENT THEREBY INCURS NO RESPONSIBILITY NOR ANY OBLIGATION WHATSOEVER; AND THE FACT THAT THE GOVERNMENT MAY HAVE FORMULATED, FURNISHED, OR IN ANY WAY SUPPLIED THE SAID DRAWINGS, SPECIFICATIONS, OR OTHER DATA IS NOT TO BE REGARDED BY IMPLICATION OR OTHERWISE AS IN ANY MANNER LICENSING THE HOLDER OR ANY OTHER PERSON OR CORPORATION, OR CONVEYING ANY RIGHTS OR PERMISSION TO MANUFACTURE, USE, OR SELL ANY PATENTED INVENTION THAT MAY IN ANY WAY BE RELATED THERETO.

REVISIONS 20407

SYM	ZONE	DESCRIPTION	DR	CHK	DATE	APPROVED
A		REVISED PER TDRR 21345	R.A.G.			
B		REVISED PER TDRR 22459	KWD			

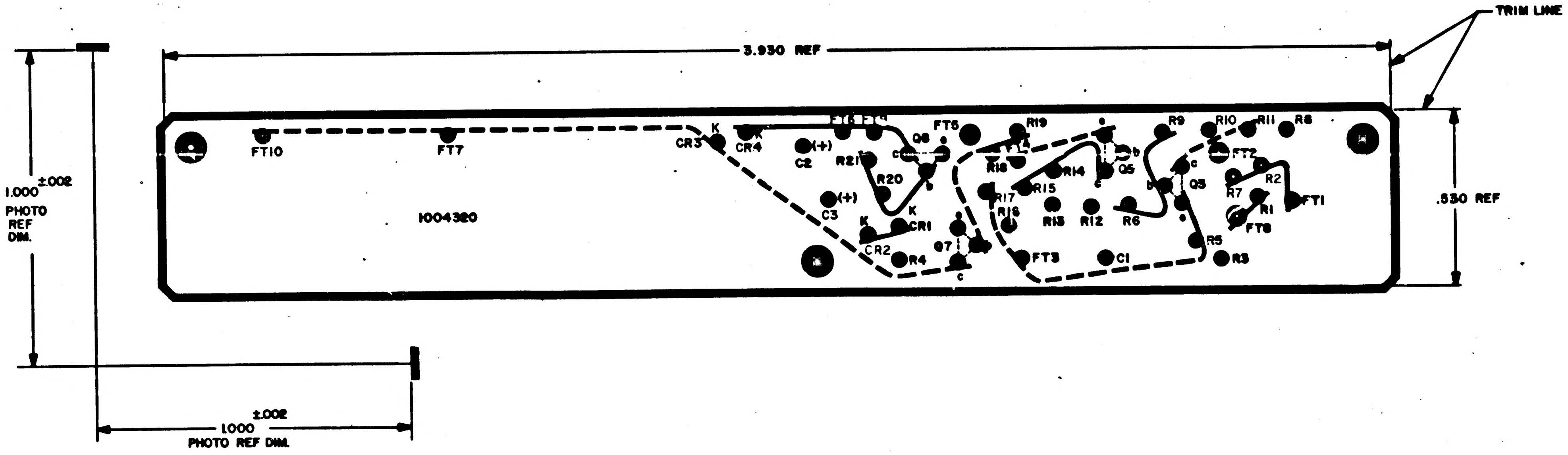
TRIM LINE
3.930 REF
.530 REF
1.000 ±.002 PHOTO REF DIM.
±.002 1.000 PHOTO REF DIM.
1004320
FT10
FT7
CR3
K
CR4
K
C2
(+)
C3
(+)
FT6
FT9
Q8
c
e
b
R21
R20
K
CR1
K
CR2
R4
Q7
c
FT5
R19
FT4
R18
R17
R16
R15
R14
R13
R12
FT3
C1
Q5
e
b
c
R6
R9
Q3
b
c
e
R5
R3
R10
R11
R8
FT2
R7
R2
R1
FT8
FT1

NOTES
1. INTERPRET DRAWING IN ACCORDANCE WITH STANDARDS PRESCRIBED BY MIL-D-70327
2. ORIGINAL OF THIS DRAWING OR REPRODUCTION MADE BY A PROCESS OR METHOD SHALL INSURE DIMENSIONAL STABILITY
3. MAKE MASTER PATTERN POSITIVE FILM TO DIMENSIONS SHOWN
4. CUT TO WITHIN .010 OF TRIM LINE

MASTER

QTY REQD	PART OR IDENTIFYING NO.	MATERIAL OR NOTES	NOMENCLATURE OR DESCRIPTION	FIND NO.

LIST OF MATERIALS

NEXT ASSY	USED ON
APPLICATION	

UNLESS OTHERWISE SPECIFIED
DIMENSIONS ARE IN INCHES
CAPACITOR VALUES ARE IN µf
RESISTOR VALUES ARE IN OHMS
TOLERANCES ON
FRACTIONS ± DECIMALS ± ANGLES ±
DO NOT SCALE THIS DRAWING

MATERIAL

MIT
INSTRUMENTATION LAB
CAMBRIDGE, MASS.

MANNED SPACECRAFT CENTER
HOUSTON, TEXAS

DRAWN		
CHECKED		6-25-65
APPROVED		
APPROVED	Eldon C. Hall	
APPROVED MIT		6-28-65
APPROVED MSC		
		DATE

PHOTOGRAPHIC MASTER
WIRING BOARD, B
G&N FAILURE DETECT

CODE IDENT NO.	SIZE	DRAWING NO.
80230	D	1004319
SCALE 5/1		SHEET 1 OF 1

NOTICE — WHEN GOVERNMENT DRAWINGS, SPECIFICATIONS, OR OTHER DATA ARE USED FOR ANY PURPOSE OTHER THAN IN CONNECTION WITH A DEFINITELY RELATED GOVERNMENT PROCUREMENT OPERATION, THE UNITED STATES GOVERNMENT THEREBY INCURS NO RESPONSIBILITY NOR ANY OBLIGATION WHATSOEVER, AND THE FACT THAT THE GOVERNMENT MAY HAVE FORMULATED, FURNISHED, OR IN ANY WAY SUPPLIED THE SAID DRAWINGS, SPECIFICATIONS OR OTHER DATA IS NOT TO BE REGARDED BY IMPLICATION OR OTHERWISE AS IN ANY MANNER LICENSING THE HOLDER OR ANY OTHER PERSON OR CORPORATION, OR CONVEYING ANY RIGHTS OR PERMISSION TO MANUFACTURE, USE, OR SELL ANY PATENTED INVENTION THAT MAY IN ANY WAY BE RELATED THERETO.

REVISIONS 20407

SYM	ZONE	DESCRIPTION	DR	CHK	DATE	APPROVED

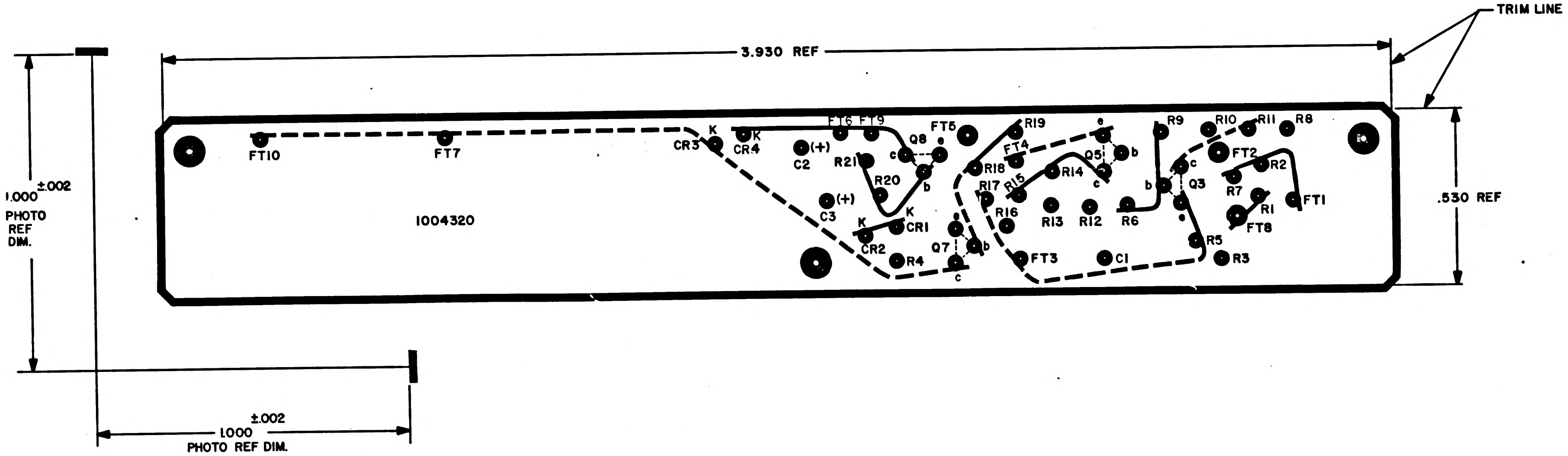
3.930 REF
TRIM LINE
1.000 ±.002 PHOTO REF DIM.
.530 REF
1.000 ±.002 PHOTO REF DIM.
1004320
FT10
FT7
CR3
K
CR4
K
C2
(+)
C3
(+)
FT6
FT9
Q8
c
e
b
R21
R20
FT5
K
CR1
K
CR2
R4
Q7
e
b
c
R19
FT4
R18
R17
R15
R16
FT3
Q5
e
b
c
R14
R13
R12
R6
C1
R9
b
c
Q3
e
R5
R10
R11
R8
FT2
R2
R7
R1
FT1
FT8
R3

NOTES
1. INTERPRET DRAWING IN ACCORDANCE WITH STANDARDS PRESCRIBED BY MIL-D-70327
2. ORIGINAL OF THIS DRAWING OR REPRODUCTION MADE BY A PROCESS OR METHOD SHALL INSURE DIMENSIONAL STABILITY
3. MAKE MASTER PATTERN POSITIVE FILM TO DIMENSIONS SHOWN
4. CUT TO WITHIN .010 OF TRIM LINE

QTY REQD	PART OR IDENTIFYING NO.	MATERIAL OR NOTES	NOMENCLATURE OR DESCRIPTION	FIND NO.

LIST OF MATERIALS

NEXT ASSY	USED ON

APPLICATION

UNLESS OTHERWISE SPECIFIED
DIMENSIONS ARE IN INCHES
CAPACITOR VALUES ARE IN µf
RESISTOR VALUES ARE IN OHMS
TOLERANCES ON
FRACTIONS ± DECIMALS ± ANGLES ±
DO NOT SCALE THIS DRAWING

MATERIAL

MIT
INSTRUMENTATION LAB
CAMBRIDGE, MASS.

DRAWN	R. Romey	29 June 65
CHECKED	J. Morton	6-25-65
APPROVED		
APPROVED	Eldon C Hall	25 June 65
APPROVED MIT	MG Mursley	6 28 65
APPROVED MSC		6/21/65
		DATE

MANNED SPACECRAFT CENTER
HOUSTON, TEXAS

PHOTOGRAPHIC MASTER
WIRING BOARD, B
G&N FAILURE DETECT

CODE IDENT NO.	SIZE	DRAWING NO.
80230	D	1004319

SCALE 5/1 SHEET 1 OF 1

1004319

NOTICE: WHEN GOVERNMENT DRAWINGS, SPECIFICATIONS, OR OTHER DATA ARE USED FOR ANY PURPOSE OTHER THAN IN CONNECTION WITH A DEFINITELY RELATED GOVERNMENT PROCUREMENT OPERATION, THE UNITED STATES GOVERNMENT THEREBY INCURS NO RESPONSIBILITY NOR ANY OBLIGATION WHATSOEVER; AND THE FACT THAT THE GOVERNMENT MAY HAVE FORMULATED, FURNISHED, OR IN ANY WAY SUPPLIED THE SAID DRAWINGS, SPECIFICATIONS, OR OTHER DATA IS NOT TO BE REGARDED BY IMPLICATION OR OTHERWISE AS IN ANY MANNER LICENSING THE HOLDER OR ANY OTHER PERSON OR CORPORATION, OR CONVEYING ANY RIGHTS OR PERMISSION TO MANUFACTURE, USE, OR SELL ANY PATENTED INVENTION THAT MAY IN ANY WAY BE RELATED THERETO.

REVISIONS 204c7

SYM	ZONE	DESCRIPTION	DR	CHK	DATE	APPROVED
A		REVISED PER TDRR 21345				

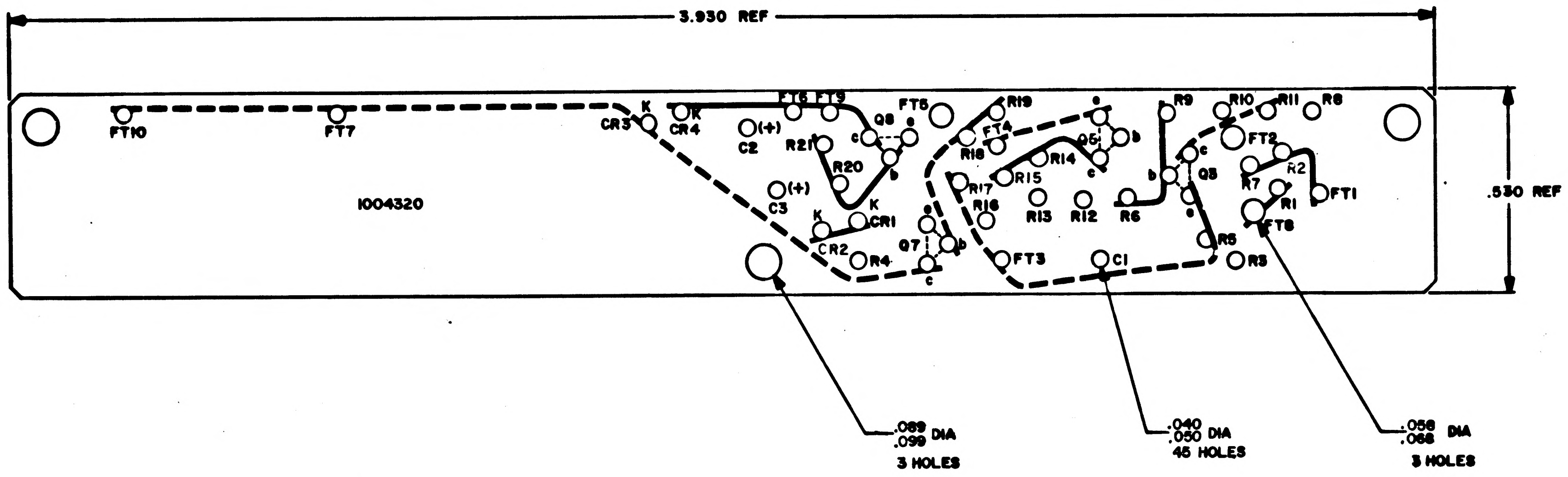
3.930 REF
.530 REF
1004320
FT10
FT7
CR3
K
CR4
K
C2
(+)
FT6
FT9
Q8
c
e
b
R21
R20
C3
(+)
K
CR1
K
CR2
R4
Q7
e
b
c
FT5
R19
FT4
R18
R17
R16
R15
R14
Q5
e
b
c
R13
R12
FT3
C1
R9
R6
b
c
Q3
e
R5
R3
R10
R11
R8
FT2
R7
R2
R1
FT1
FT8
.089
.099 DIA
3 HOLES
.040
.050 DIA
45 HOLES
.058
.068 DIA
3 HOLES

NOTES

1. INTERPRET DRAWING IN ACCORDANCE WITH STANDARDS PRESCRIBED BY MIL-D-70327
2. MATERIAL: PLASTIC SHEET .031 THICK PER MIL-P-18177 TYPE GEE
3. PREPARE BOARD FOR PHOTOGRAPHY PER ND1002133
4. ~~MARK BLACK CHARACTERS PER ND1002019~~
5. BROKEN LINES DENOTES SLEEVING
6. IDENTIFY WITH DRAWING NO. AND REVISION PER ND1002019

REF: DRAWING NO. 1004319 FOR
PHOTOGRAPHIC MASTER

QTY REQD	PART OR IDENTIFYING NO.	MATERIAL OR NOTES	NOMENCLATURE OR DESCRIPTION	FIND NO.

LIST OF MATERIALS

UNLESS OTHERWISE SPECIFIED
DIMENSIONS ARE IN INCHES
CAPACITOR VALUES ARE IN µf
RESISTOR VALUES ARE IN OHMS
TOLERANCES ON
FRACTIONS DECIMALS ANGLES
± ± ±
DO NOT SCALE THIS DRAWING

MATERIAL
SEE NOTE 2

NEXT ASSY	USED ON
1003217	

APPLICATION

MIT
INSTRUMENTATION LAB
CAMBRIDGE, MASS

MANNED SPACECRAFT CENTER
HOUSTON, TEXAS

DRAWN
CHECKED
APPROVED
APPROVED 25 Jun 65
APPROVED MIT 6-28-65
APPROVED MSC
DATE

WIRING BOARD, B
G&N FAILURE DETECT

CODE IDENT NO. 80230
SIZE D
DRAWING NO. 1004320
SCALE 5/1
SHEET 1 OF 1

MASTER

NOTICE: WHEN GOVERNMENT DRAWINGS, SPECIFICATIONS, OR OTHER DATA ARE USED FOR ANY PURPOSE OTHER THAN IN CONNECTION WITH A DEFINITELY RELATED GOVERNMENT PROCUREMENT OPERATION, THE UNITED STATES GOVERNMENT THEREBY INCURS NO RESPONSIBILITY NOR ANY OBLIGATION WHATSOEVER; AND THE FACT THAT THE GOVERNMENT MAY HAVE FORMULATED, FURNISHED, OR IN ANY WAY SUPPLIED THE SAID DRAWINGS, SPECIFICATIONS, OR OTHER DATA IS NOT TO BE REGARDED BY IMPLICATION OR OTHERWISE AS IN ANY MANNER LICENSING THE HOLDER OR ANY OTHER PERSON OR CORPORATION, OR CONVEYING ANY RIGHTS OR PERMISSION TO MANUFACTURE, USE, OR SELL ANY PATENTED INVENTION THAT MAY IN ANY WAY BE RELATED THERETO.

REVISIONS 2047

SYM	ZONE	DESCRIPTION	DR	CHK	DATE	APPROVED
A		REVISED PER TDRR 21345	[illegible]	[illegible]	8/20/65	[illegible]
B		REVISED PER TDRR 22459	KWJ	[illegible]	9/16/65	[illegible]

Ⓜ

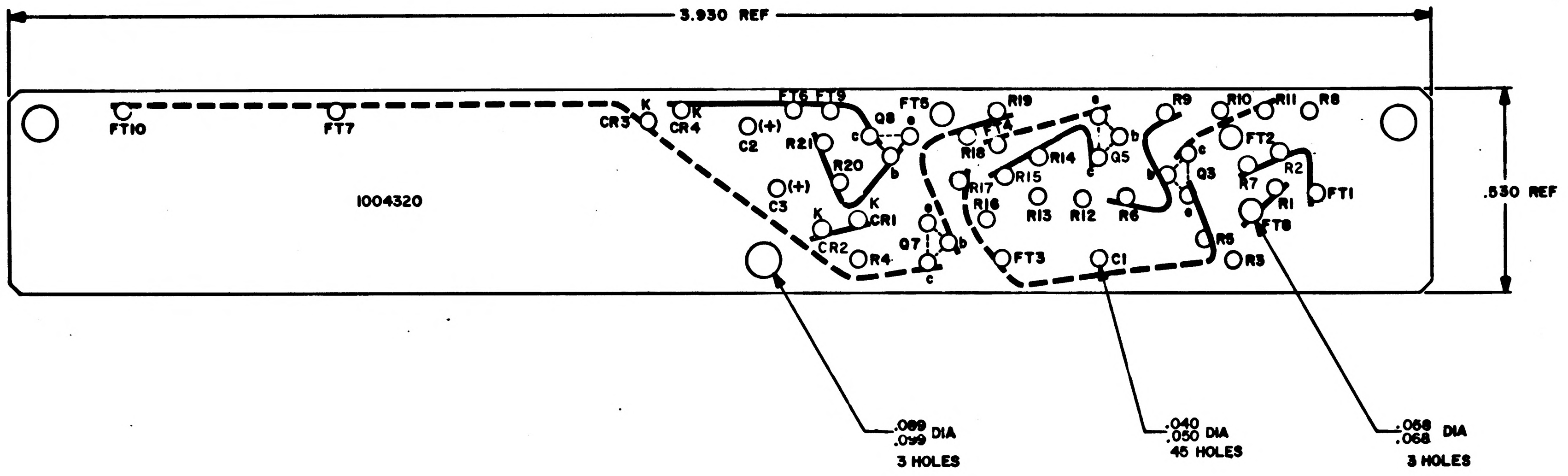
3.930 REF
.530 REF
1004320
FT10
FT7
CR3
K
CR4
K
C2
(+)
C3
(+)
FT6
FT9
Q8
c
e
b
R21
R20
K
CR1
K
CR2
R4
Q7
e
b
c
FT5
R19
FT4
R18
R17
R16
R15
R14
R13
R12
FT3
Q5
e
b
c
C1
R9
R6
Q3
c
b
e
R5
R10
R11
R8
FT2
R2
R7
R1
FT1
FT8
R3
.089
.099 DIA
3 HOLES
.040
.050 DIA
45 HOLES
.058
.068 DIA
3 HOLES

NOTES
1. INTERPRET DRAWING IN ACCORDANCE WITH STANDARDS PRESCRIBED BY MIL-D-70327
2. MATERIAL: PLASTIC SHEET .031 THICK PER MIL-P-18177 TYPE GEE
3. PREPARE BOARD FOR PHOTOGRAPHY PER ND1002133
4. ~~MARK BLACK CHARACTERS PER ND1002019~~
5. BROKEN LINES DENOTES SLEEVING
6. IDENTIFY WITH DRAWING NO. AND REVISION PER ND1002019

REF: DRAWING NO. 1004319 FOR
PHOTOGRAPHIC MASTER

QTY REQD	PART OR IDENTIFYING NO.	MATERIAL OR NOTES	NOMENCLATURE OR DESCRIPTION	FIND NO.

LIST OF MATERIALS

NEXT ASSY	USED ON
1003217	

APPLICATION

UNLESS OTHERWISE SPECIFIED
DIMENSIONS ARE IN INCHES
CAPACITOR VALUES ARE IN μf
RESISTOR VALUES ARE IN OHMS
TOLERANCES ON
FRACTIONS ± DECIMALS ± ANGLES ±
DO NOT SCALE THIS DRAWING

MATERIAL
SEE NOTE 2

MIT
INSTRUMENTATION LAB
CAMBRIDGE, MASS.

DRAWN R. Romney 17 June 65
CHECKED J. Marini 6-2-65
APPROVED
APPROVED Eldon C. Hall 25 Jun 65
APPROVED MIT M G Mudry 6-28-65
APPROVED MSC [illegible] 6/21/65
DATE

MANNED SPACECRAFT CENTER
HOUSTON, TEXAS

WIRING BOARD, B
G&N FAILURE DETECT

CODE IDENT NO. 80230
SIZE D
DRAWING NO. 1004320
SCALE 5/1
SHEET 1 OF 1

MASTER

NOTICE WHEN GOVERNMENT DRAWINGS, SPECIFICATIONS, OR OTHER DATA ARE USED FOR ANY PURPOSE OTHER THAN IN CONNECTION WITH A DEFINITELY RELATED GOVERNMENT PROCUREMENT OPERATION, THE UNITED STATES GOVERNMENT THEREBY INCURS NO RESPONSIBILITY NOR ANY OBLIGATION WHATSOEVER; AND THE FACT THAT THE GOVERNMENT MAY HAVE FORMULATED, FURNISHED, OR IN ANY WAY SUPPLIED THE SAID DRAWINGS, SPECIFICATIONS, OR OTHER DATA IS NOT TO BE REGARDED BY IMPLICATION OR OTHERWISE AS IN ANY MANNER LICENSING THE HOLDER OR ANY OTHER PERSON OR CORPORATION, OR CONVEYING ANY RIGHTS OR PERMISSION TO MANUFACTURE, USE, OR SELL ANY PATENTED INVENTION THAT MAY IN ANY WAY BE RELATED THERETO.

REVISIONS 20407

SYM	ZONE	DESCRIPTION	DR	CHK	DATE	APPROVED

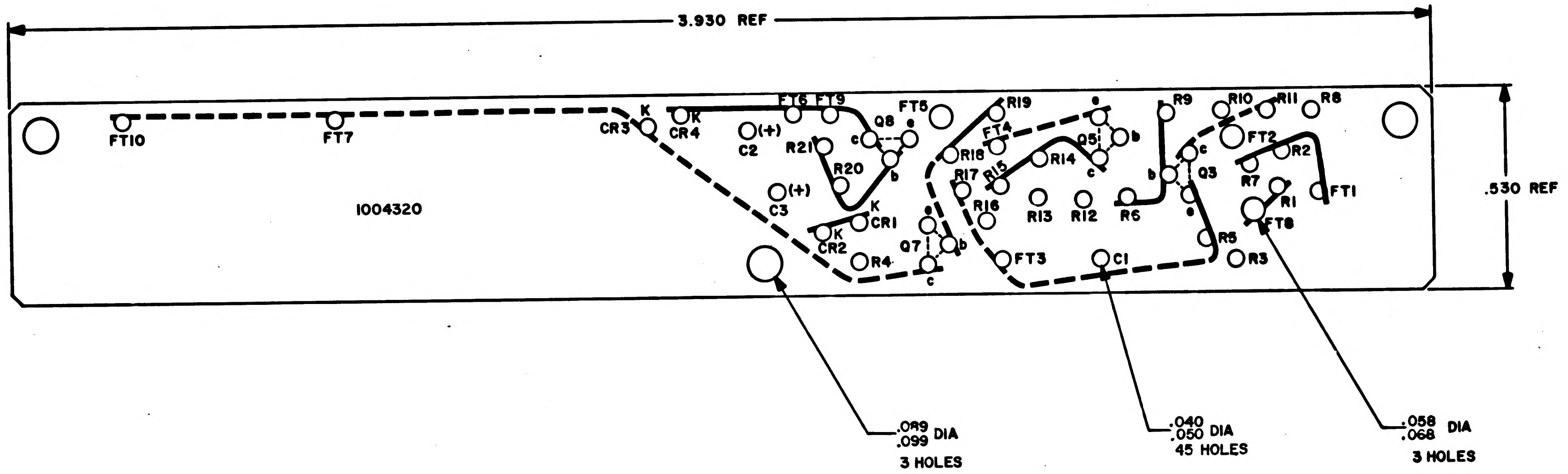

3.930 REF
.530 REF
1004320
FT10
FT7
CR3
K
CR4
FT6
FT9
FT5
C2
(+)
R21
R20
Q8
c
e
b
C3
CR1
CR2
R4
Q7
R19
FT4
R18
R17
R15
R16
R14
Q5
R13
R12
R6
FT3
C1
R9
R10
R11
R8
FT2
R2
Q3
R7
R1
FT1
FT8
R5
R3
.089 .099 DIA 3 HOLES
.040 .050 DIA 45 HOLES
.058 .068 DIA 3 HOLES

NOTES

1. INTERPRET DRAWING IN ACCORDANCE WITH STANDARDS PRESCRIBED BY MIL-D-70327
2. MATERIAL: PLASTIC SHEET .031 THICK PER MIL-P-18177 TYPE GEE
3. PREPARE BOARD FOR PHOTOGRAPHY PER ND1002133
4. MARK BLACK CHARACTERS PER ND1002019

REF: DRAWING NO. 1004319 FOR
PHOTOGRAPHIC MASTER

QTY REQD	PART OR IDENTIFYING NO.	MATERIAL OR NOTES	NOMENCLATURE OR DESCRIPTION	FIND NO.

LIST OF MATERIALS

NEXT ASSY	USED ON
1003217	

APPLICATION

UNLESS OTHERWISE SPECIFIED
DIMENSIONS ARE IN INCHES
CAPACITOR VALUES ARE IN µf
RESISTOR VALUES ARE IN OHMS
TOLERANCES ON
FRACTIONS ± DECIMALS ± ANGLES ±
DO NOT SCALE THIS DRAWING

MATERIAL
SEE NOTE 2

MIT
INSTRUMENTATION LAB
CAMBRIDGE, MASS.

		DATE
DRAWN	R. Roney	25 June 65
CHECKED	J. Martin	6-25-65
APPROVED		
APPROVED	Eldon C. Hall	25 June 65
APPROVED MIT	M G Murdy	6-28-65
APPROVED MSC		6/21/65

MANNED SPACECRAFT CENTER
HOUSTON, TEXAS

WIRING BOARD, B
G&N FAILURE DETECT

CODE IDENT NO. 80230
SIZE D
DRAWING NO. 1004320
SCALE 5/1
SHEET 1 OF 1

NOTICE – WHEN GOVERNMENT DRAWINGS, SPECIFICATIONS, OR OTHER DATA ARE USED FOR ANY PURPOSE OTHER THAN IN CONNECTION WITH A DEFINITELY RELATED GOVERNMENT PROCUREMENT OPERATION, THE UNITED STATES GOVERNMENT THEREBY INCURS NO RESPONSIBILITY NOR ANY OBLIGATION WHATSOEVER; AND THE FACT THAT THE GOVERNMENT MAY HAVE FORMULATED, FURNISHED, OR IN ANY WAY SUPPLIED THE SAID DRAWINGS, SPECIFICATIONS OR OTHER DATA IS NOT TO BE REGARDED BY IMPLICATION OR OTHERWISE AS IN ANY MANNER LICENSING THE HOLDER OR ANY OTHER PERSON OR CORPORATION, OR CONVEYING ANY RIGHTS OR PERMISSION TO MANUFACTURE, USE, OR SELL ANY PATENTED INVENTION THAT MAY IN ANY WAY BE RELATED THERETO.

REVISIONS TDRR 32254

SYM	ZONE	DESCRIPTION	DR	CHK	DATE	APPROVED

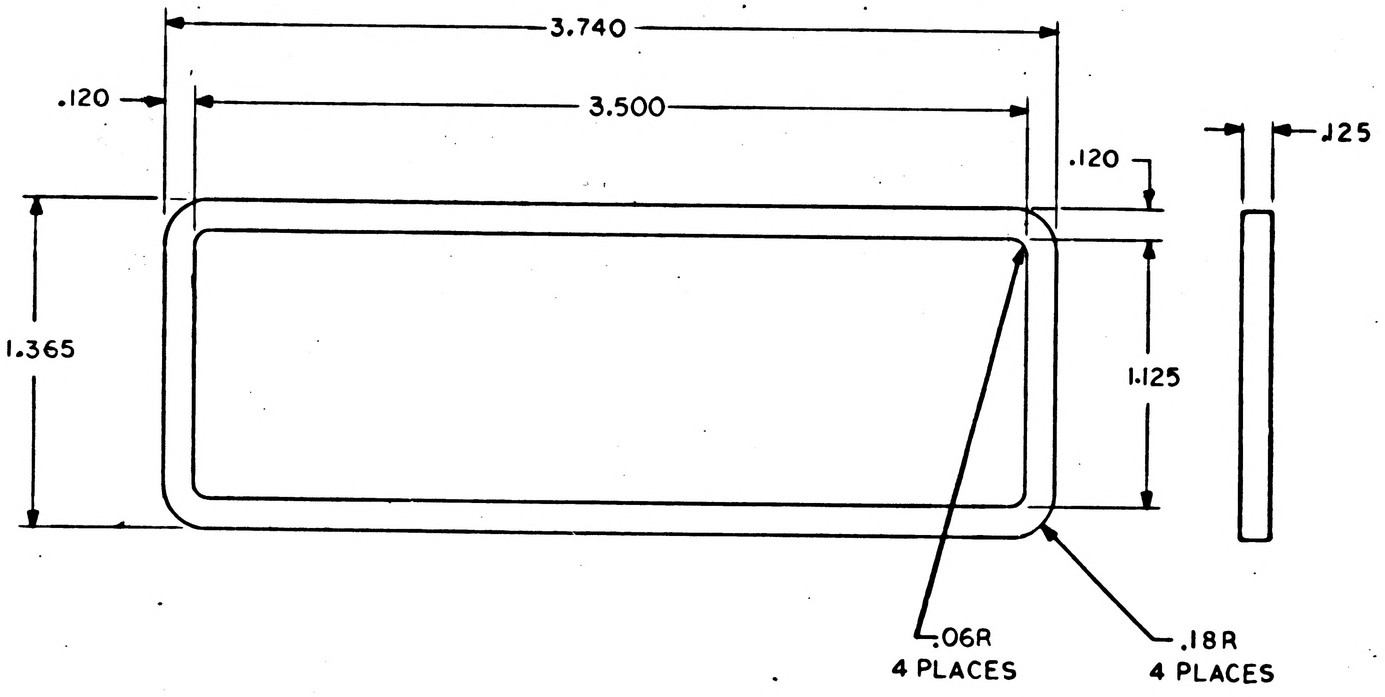

NOTES:

1. INTERPRET DRAWING IN ACCORDANCE WITH STANDARDS PRESCRIBED BY MIL-D-70327
2. MATERIAL: WHITE SILICONE RUBBER PER MIL-R-5847, CLASS II, GRADE 50
3. IDENTIFY WITH PART NO. PER ND1002019

QTY REQD	PART OR IDENTIFYING NO.	MATERIAL OR NOTES	NOMENCLATURE OR DESCRIPTION	FIND NO.

LIST OF MATERIALS

NEXT ASSY	USED ON
1003230	

APPLICATION

UNLESS OTHERWISE SPECIFIED
DIMENSIONS ARE IN INCHES
CAPACITOR VALUES ARE IN μf
RESISTOR VALUES ARE IN OHMS
TOLERANCES ON
FRACTIONS ± — DECIMALS .XXX ±.010 .XX ±.02 ANGLES ± —
DO NOT SCALE THIS DRAWING

MATERIAL
SEE NOTE 2

MIT
INSTRUMENTATION LAB
CAMBRIDGE, MASS.

DRAWN A. Addarij Jr 5 OCT. 66
CHECKED C. Kingsbury 11 OCT 66
APPROVED
APPROVED Eldon C Hall 21 Oct 66
APPROVED CC[redacted]
APPROVED MSC R.C. [illegible] 10/25/66
DATE

MANNED SPACECRAFT CENTER
HOUSTON, TEXAS

GASKET
TEST CONNECTOR

CODE IDENT NO. 80230
SIZE C
DRAWING NO. 1004322
SCALE 2/1
SHEET 1 OF 1

1004322 - 1

NOTICE - WHEN GOVERNMENT DRAWINGS, SPECIFICATIONS, OR OTHER DATA ARE USED FOR ANY PURPOSE OTHER THAN IN CONNECTION WITH A DEFINITELY RELATED GOVERNMENT PROCUREMENT OPERATION, THE UNITED STATES GOVERNMENT THEREBY INCURS NO RESPONSIBILITY NOR ANY OBLIGATION WHATSOEVER, AND THE FACT THAT THE GOVERNMENT MAY HAVE FORMULATED, FURNISHED, OR IN ANY WAY SUPPLIED THE SAID DRAWINGS, SPECIFICATIONS OR OTHER DATA IS NOT TO BE REGARDED BY IMPLICATION OR OTHERWISE AS IN ANY MANNER LICENSING THE HOLDER OR ANY OTHER PERSON OR CORPORATION, OR CONVEYING ANY RIGHTS OR PERMISSION TO MANUFACTURE, USE, OR SELL ANY PATENTED INVENTION THAT MAY IN ANY WAY BE RELATED THERETO.

REVISIONS TPRR 32251

SYM	ZONE	DESCRIPTION	DR	CHK	DATE	APPROVED

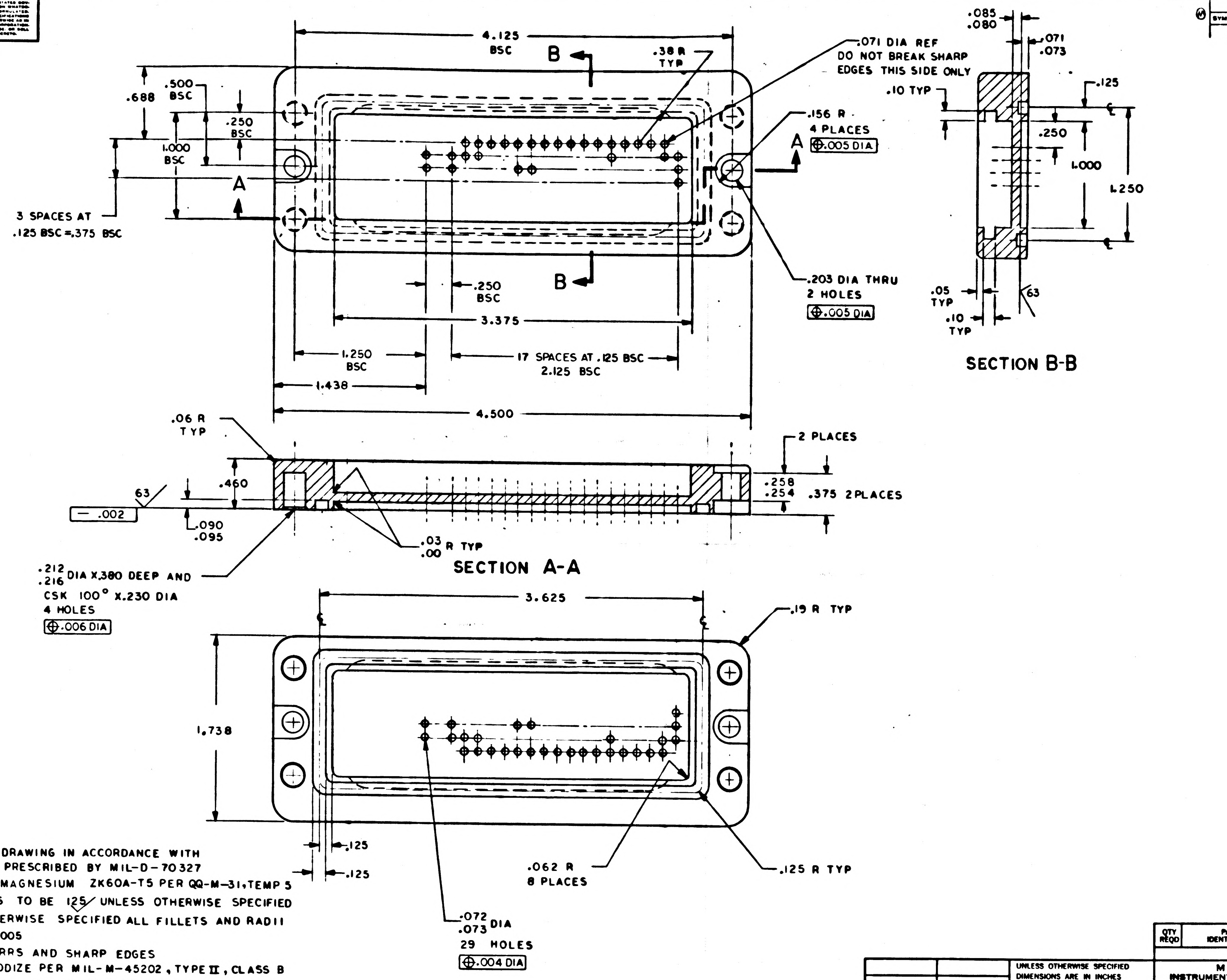
4.125 BSC
B
.38 R TYP
.071 DIA REF
DO NOT BREAK SHARP EDGES THIS SIDE ONLY
.500 BSC
.688
.250 BSC
1.000 BSC
A
3 SPACES AT .125 BSC =.375 BSC
.156 R 4 PLACES
A
⌖.005 DIA
.203 DIA THRU 2 HOLES
⌖.005 DIA
.250 BSC
B
3.375
1.250 BSC
17 SPACES AT .125 BSC 2.125 BSC
1.438
4.500
.085
.080
.071
.073
.10 TYP
.125
.250
1.000
1.250
.05 TYP
.10 TYP
63
.06 R TYP
.460
63
— .002
.090
.095
2 PLACES
.258
.254
.375 2PLACES
.03
.00 R TYP
.212
.216 DIA X.380 DEEP AND CSK 100° X.230 DIA
4 HOLES
⌖.006 DIA
3.625
.19 R TYP
1.738
.125
.125
.062 R 8 PLACES
.125 R TYP
.072
.073 DIA
29 HOLES
⌖.004 DIA

SECTION B-B

SECTION A-A

NOTES:

1. INTERPRET DRAWING IN ACCORDANCE WITH STANDARDS PRESCRIBED BY MIL-D-70327
2. MATERIAL: MAGNESIUM ZK60A-T5 PER QQ-M-31, TEMP 5
3. ALL SURFACES TO BE 125✓ UNLESS OTHERWISE SPECIFIED
4. UNLESS OTHERWISE SPECIFIED ALL FILLETS AND RADII TO BE .015/.005
5. REMOVE BURRS AND SHARP EDGES
6. FINISH: ANODIZE PER MIL-M-45202, TYPE II, CLASS B
7. IDENTIFY WITH PART NO. PER ND 1002019

QTY REQD	PART OR IDENTIFYING NO.	MATERIAL OR NOTES	NOMENCLATURE OR DESCRIPTION	FIND NO

LIST OF MATERIALS

1003231	
NEXT ASSY	USED ON
APPLICATION	

UNLESS OTHERWISE SPECIFIED
DIMENSIONS ARE IN INCHES
CAPACITOR VALUES ARE IN μf
RESISTOR VALUES ARE IN OHMS
TOLERANCES ON
FRACTIONS ± DECIMALS ±.005 ANGLES ±
DO NOT SCALE THIS DRAWING

MATERIAL
SEE NOTE 2

MIT
INSTRUMENTATION LAB
CAMBRIDGE, MASS.

DRAWN J.L. Eckert 10-5-66
CHECKED R.P. Krayenbring 11 oct 66
APPROVED
APPROVED Eldon C Hall
APPROVED CCB
APPROVED MSC 10/21/66
DATE

MANNED SPACECRAFT CENTER
HOUSTON, TEXAS

FRAME
TEST CONNECTOR

CODE IDENT NO. 80230
SIZE D
DRAWING NO. 1004323
SCALE 2/1
SHEET 1 OF 1

1004323

ANY USE OF THIS DOCUMENT FOR OTHER THAN GOVERNMENTAL PURPOSES IS SUBJECT TO PRIOR WRITTEN CONSENT OF RAYTHEON CO.

1004500

REVISIONS	TDRR 02098		
SYM	DESCRIPTION	DATE	APPROVED
A	REVISED PER TDRR 02702	8,2,6	

HOLE IDENT	XI BASIC DIM.	YI BASIC DIM.
A1	.000	.000
A2	.410	.000
A3	.820	.000
A4	1.120	.280
A5	1.483	.000
A6	1.893	.000
A7	2.303	.000
A8	2.603	.280
A9	2.966	.000
A10	3.376	.000
A11	3.786	.000
A12	4.086	.280
A13	4.449	.000
A14	4.859	.000
A15	5.269	.000
A16	5.569	.280
A17	5.932	.000
A18	6.342	.000
A19	6.752	.000
A20	7.052	.280
A21	7.415	.000
A22	7.825	.000
A23	8.235	.000
A24	8.535	.280
B1	-.087	.272
B2	-.087	.414
B3	.820	.272
B4	.820	.414
B5	1.396	.272
B6	1.396	.414
B7	2.303	.272
B8	2.303	.414
B9	2.879	.272
B10	2.879	.414
B11	3.786	.272
B12	3.786	.414
B13	4.362	.272
B14	4.362	.414
B15	5.269	.272
B16	5.269	.414
B17	5.845	.272
B18	5.845	.414
B19	6.752	.272
B20	6.752	.414
B21	7.328	.272
B22	7.328	.414
B23	8.235	.272
B24	8.235	.414

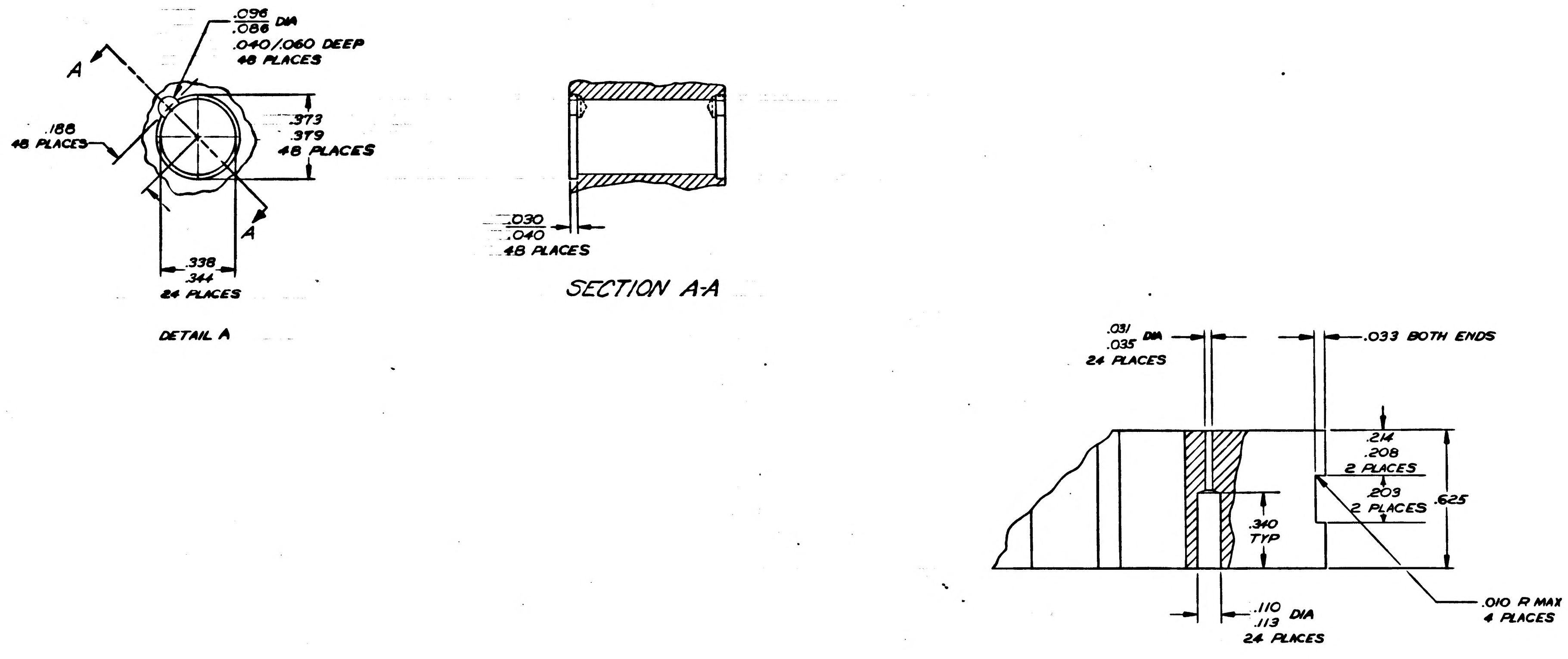

.096
.086 DIA
.040/.060 DEEP
48 PLACES
A
.188
48 PLACES
.373
.379
48 PLACES
A
.338
.344
24 PLACES
DETAIL A
.030
.040
48 PLACES
SECTION A-A
.031
.035 DIA
24 PLACES
.033 BOTH ENDS
.214
.208
2 PLACES
.209
2 PLACES
.625
.340
TYP
.110
.113 DIA
24 PLACES
.010 R MAX
4 PLACES

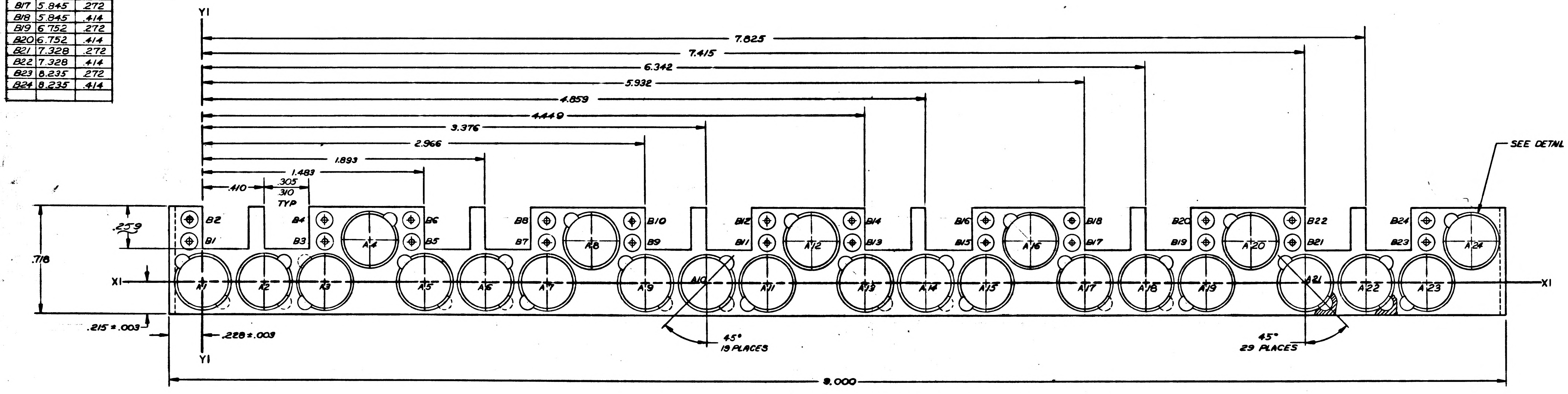

YI
7.825
7.415
6.342
5.932
4.859
4.449
3.376
2.966
1.893
1.483
.410
.305
.310
TYP
SEE DETAIL A
.259
.718
B2
B1
B4
B3
B6
B5
B8
B7
B10
B9
B12
B11
B14
B13
B16
B15
B18
B17
B20
B19
B22
B21
B24
B23
A1
A2
A3
A4
A5
A6
A7
A8
A9
A10
A11
A12
A13
A14
A15
A16
A17
A18
A19
A20
A21
A22
A23
A24
XI
XI
.215 ±.003
.228 ±.003
YI
45°
19 PLACES
45°
29 PLACES
8.000

NOTES

1. MATL: PLASTIC CLEAR ACRYLIC PER MIL-P-8184 FINISH B.
2. ALL HOLES ⌖ .010 DIA
3. INTERPRET DRAWING IN ACCORDANCE WITH STANDARDS PRESCRIBED BY MIL-D-7032T.
4. REMOVE ALL BURRS AND SHARP EDGES.

INTERPRET DRAWING IN ACCORDANCE WITH STANDARDS PRESCRIBED BY MIL-D-70327

QTY REQD	PART OR IDENTIFYING NO.	NOMENCLATURE OR DESCRIPTION	FIND NO

LIST OF MATERIALS

1003152	
NEXT ASSY	USED ON
APPLICATION	

UNLESS OTHERWISE SPECIFIED DIMENSIONS ARE IN INCHES
TOLERANCES ON
FRACTIONS ± DECIMALS ±.005 ANGLES ±1°
DO NOT SCALE THIS DRAWING
MATERIAL SEE NOTE 1
HEAT TREATMENT NONE
FINAL FINISH NONE

MIT INSTRUMENTATION LAB
CAMBRIDGE, MASS
DRAWN BL Parker DATE 6/6/63
CHECKED
APPROVAL
APPROVAL
APPROVAL
NASA APPROVAL W J
MIT APPROVAL
MIT APPROVAL J Hazel

MANNED SPACECRAFT CENTER
HOUSTON, TEXAS

COMPONENT HOLDER
CURRENT SWITCH

CODE IDENT NO. —
SIZE J
NASA DRAWING NO. 1004500
SCALE 4/1
WT
SHEET 1 OF 1

1004500 A

1004500

ANY USE OF THIS DOCUMENT FOR OTHER THAN GOVERNMENTAL PURPOSES IS

REVISIONS	
SYM	DESCRIPTION
A	REVISED PER TDRR C…

NOTICE — WHEN GOVERNMENT DRAWINGS, SPECIFICATIONS, OR OTHER DATA ARE USED FOR ANY PURPOSE OTHER THAN IN CONNECTION WITH A DEFINITELY RELATED GOVERNMENT PROCUREMENT OPERATION, THE UNITED STATES GOVERNMENT THEREBY INCURS NO RESPONSIBILITY NOR ANY OBLIGATION WHATSOEVER; AND THE FACT THAT THE GOVERNMENT MAY HAVE FORMULATED, FURNISHED, OR IN ANY WAY SUPPLIED THE SAID DRAWINGS, SPECIFICATIONS OR OTHER DATA IS NOT TO BE REGARDED BY IMPLICATION OR OTHERWISE AS IN ANY MANNER LICENSING THE HOLDER OR ANY OTHER PERSON OR CORPORATION, OR CONVEYING ANY RIGHTS OR PERMISSION TO MANUFACTURE, USE, OR SELL ANY PATENTED INVENTION THAT MAY IN ANY WAY BE RELATED THERETO.

HOLE IDENT	XI BASIC DIM.	YI BASIC DIM.
A1	.000	.000
A2	.410	.000
A3	.820	.000
A4	1.120	.280
A5	1.483	.000
A6	1.893	.000
A7	2.303	.000
A8	2.603	.280
A9	2.966	.000
A10	3.376	.000
A11	3.786	.000
A12	4.086	.280
A13	4.449	.000
A14	4.859	.000
A15	5.269	.000
A16	5.569	.280
A17	5.932	.000
A18	6.342	.000
A19	6.752	.000
A20	7.052	.280
A21	7.415	.000
A22	7.825	.000
A23	8.235	.000
A24	8.535	.280
B1	-.087	.272
B2	-.087	.414
B3	.820	.272
B4	.820	.414
B5	1.396	.272
B6	1.396	.414
B7	2.303	.272
B8	2.303	.414
B9	2.879	.272
B10	2.879	.414
B11	3.786	.272
B12	3.786	.414
B13	4.362	.272
B14	4.362	.414
B15	5.269	.272
B16	5.269	.414
B17	5.845	.272
B18	5.845	.414
B19	6.752	.272
B20	6.752	.414
B21	7.328	.272
B22	7.328	.414
B23	8.235	.272
B24	8.235	.414

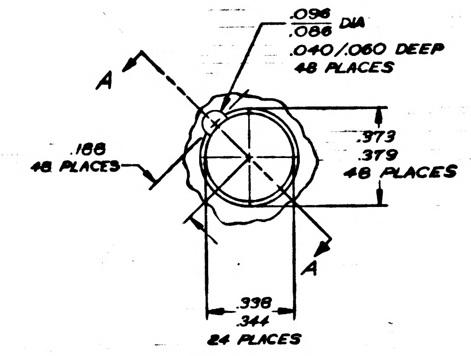

.096
.086 DIA
.040/.060 DEEP
48 PLACES
A
.188
48 PLACES
.373
.379
48 PLACES
A
.338
.344
24 PLACES

DETAIL A

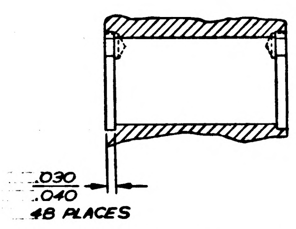

.030
.040
48 PLACES

SECTION A-A

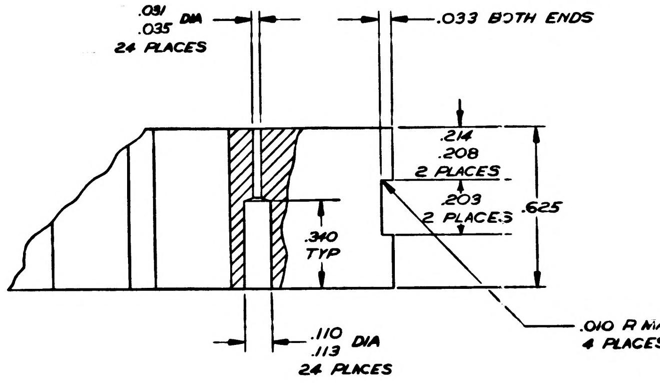

.031
.035 DIA
24 PLACES
.033 BOTH ENDS
.214
.208
2 PLACES
.203
2 PLACES
.625
.340
TYP
.110
.113 DIA
24 PLACES
.010 R MA
4 PLACES

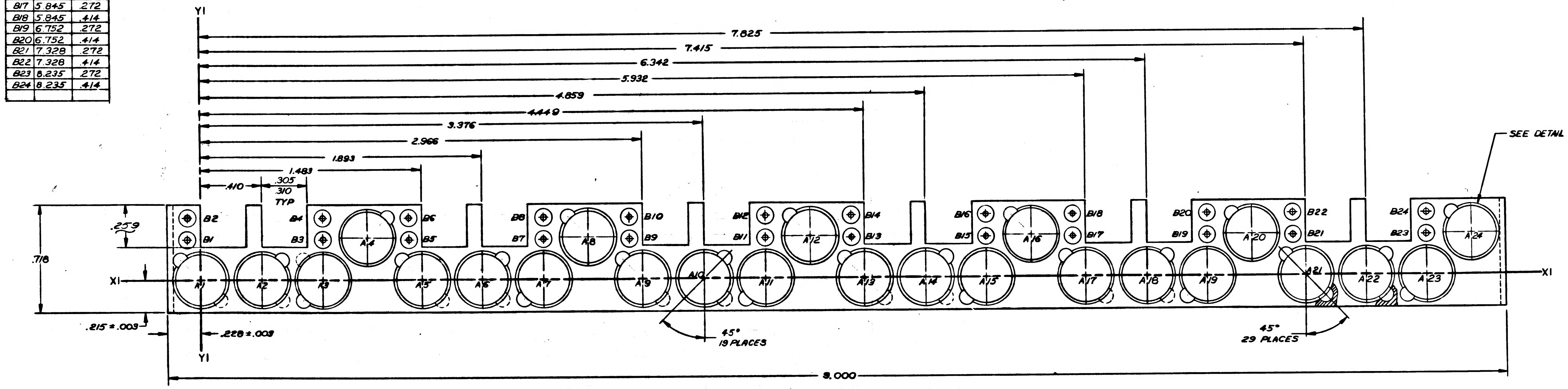

YI
7.825
7.415
6.342
5.932
4.859
4.449
3.376
2.966
1.893
1.483
.410
.305
.310
TYP
SEE DETAIL A
.259
.718
XI
XI
B2
B1
B4
B3
A4
B6
B5
B8
B7
A8
B10
B9
B12
B11
A12
B14
B13
B16
B15
A16
B18
B17
B20
B19
A20
B22
B21
B24
B23
A24
A1
A2
A3
A5
A6
A7
A9
A10
A11
A13
A14
A15
A17
A18
A19
A21
A22
A23
.215 ±.003
.228 ±.003
YI
45°
19 PLACES
45°
29 PLACES
8.000

NOTES
1. MATL: PLASTIC CLEAR ACRYLIC PER MIL-P-8184 FINISH B.
2. ALL HOLES ⌖ .010 DIA
3. INTERPRET DRAWING IN ACCORDANCE WITH STANDARDS PRESCRIBED BY MIL-D-70327.
4. REMOVE ALL BURRS AND SHARP EDGES.

INTERPRET DRAWING IN ACCORDANCE WITH STANDARDS PRESCRIBED BY MIL-D-70327

QTY REQD	PART OR IDENTIFYING NO	
		LIST OF MATERIAL

1003152	
NEXT ASSY	USED ON
APPLICATION	

UNLESS OTHERWISE SPECIFIED DIMENSIONS ARE IN INCHES
TOLERANCES ON
FRACTIONS ± DECIMALS ±.005 ANGLES ±1°
DO NOT SCALE THIS DRAWING
MATERIAL SEE NOTE 1
HEAT TREATMENT NONE
FINAL FINISH NONE

MIT
INSTRUMENTATION LAB
CAMBRIDGE MASS
DWG. NO. CONTRACT
DRAWN B L Parker DATE 6/5/63
CHECKED
APPROVAL
APPROVAL
APPROVAL
NASA APPROVAL W J
MIT APPROVAL
MIT APPROVAL

MANNED
COMPONENT
CURRENT
CODE IDENT NO
J
SCALE 4/1

1004500A

INCHES
0 1 2
PHOTOGRAPHIC SCALE ONLY

ANY USE OF THIS DOCUMENT FOR OTHER THAN GOVERNMENTAL PURPOSES IS SUBJECT TO PRIOR WRITTEN CONSENT OF RAYTHEON CO.

REVISIONS TDRR 02097

SYM	DESCRIPTION	DATE	APPROVED
A	REVISED PER TDRR 02702		
B	REVISED PER TDRR 04459		

HOLE IDENT	XI BAS DIM
A1	.00
A2	.41
A3	.82
A4	1.12
A5	1.48
A6	1.89
A7	2.303
A8	2.60
A9	2.966
A10	3.376
A11	3.786
A12	4.086
A13	4.449
A14	4.859
A15	5.269
A16	5.569
A17	5.932
A18	6.342
A19	6.752
A20	7.052
A21	415
A22	7.825
A23	8.235
A24	8.535
B1	-.087
B2	-.087
B3	.820
B4	.820
B5	1.396
B6	1.396
B7	2.303
B8	2.303
B9	2.879
B10	2.879
B11	3.786
B12	3.786
B13	4.362
B14	4.362
B15	5.269
B16	5.269
B17	5.845
B18	5.845
B19	6.752
B20	6.752
B21	7.328
B22	7.328
B23	8.235
B24	8.235

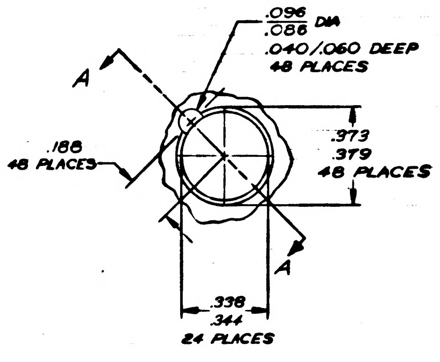
.096
.086 DIA
.040/.060 DEEP
48 PLACES
A
.188
48 PLACES
.373
.379
48 PLACES
A
.338
.344
24 PLACES

DETAIL A

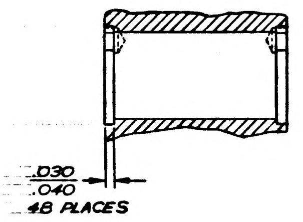
.030
.040
48 PLACES

SECTION A-A

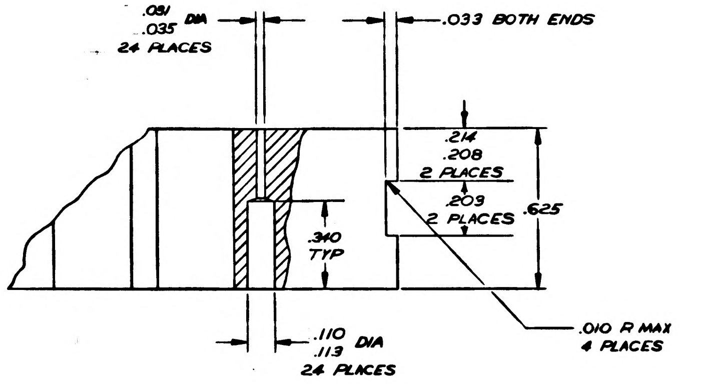
.031
.035 DIA
24 PLACES
.033 BOTH ENDS
.214
.208
2 PLACES
.209
2 PLACES
.625
.340
TYP
.110
.113 DIA
24 PLACES
.010 R MAX
4 PLACES

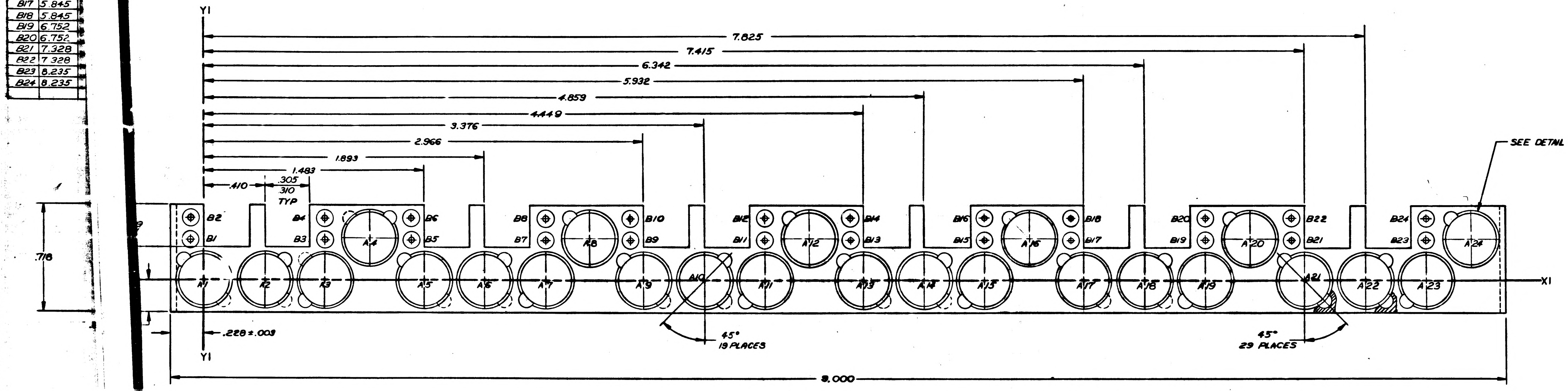
Y1
7.825
7.415
6.342
5.932
4.859
4.449
3.376
2.966
1.893
1.483
.410
.305
.310
TYP
SEE DETAIL A
.718
B2
B1
B4
B3
A4
B6
B5
B8
B7
A8
B10
B9
B12
B11
A12
B14
B13
B16
B15
A16
B18
B17
B20
B19
A20
B22
B21
B24
B23
A24
A1
A2
A3
A5
A6
A7
A9
A10
A11
A13
A14
A15
A17
A18
A19
A21
A22
A23
X1
.228 ± .003
Y1
45°
19 PLACES
45°
29 PLACES
8.000

NOTES

1. MATL: PL AR ACRYLIC PER MIL-P-8184 FINISH B,
   ALT. MIL- FINISH B.
2. ALL HOL DIA
3. INTERP AWING IN ACCORDANCE WITH STANDARDS
   PRESCR MIL-D-70327.
4. REMOVE RRS AND SHARP EDGES.

QTY REQD	PART OR IDENTIFYING NO.	NOMENCLATURE OR DESCRIPTION	FIND NO

LIST OF MATERIALS

1003152	
NEXT ASSY	USED ON

APPLICATION

UNLESS OTHERWISE SPECIFIED
DIMENSIONS ARE IN INCHES
TOLERANCES ON
FRACTIONS ± DECIMALS ±.005 ANGLES ±3°
DO NOT SCALE THIS DRAWING
MATERIAL SEE NOTE 1
HEAT TREATMENT NONE
FINAL FINISH NONE

MIT
INSTRUMENTATION LAB
CAMBRIDGE, MASS
DWG. NO. CONTRACT
DRAWN BL Parker DATE
CHECKED
APPROVAL
APPROVAL
APPROVAL
NASA APPROVAL
MIT APPROVAL
MIT APPROVAL

MANNED SPACECRAFT CENTER
HOUSTON, TEXAS

COMPONENT HOLDER
CURRENT SWITCH

CODE IDENT NO. ——
SIZE J
NASA DRAWING NO 1004500
SCALE 4/1
WT
SHEET 1 OF 1

INTERPRET DRAWING IN ACCORDANCE WITH STANDARDS PRESCRIBED BY MIL-D-70327

INCHES
0 1 2
PHOTOGRAPHIC SCALE ONLY

NOTICE — WHEN GOVERNMENT DRAWINGS, SPECIFICATIONS, OR OTHER DATA ARE USED FOR ANY PURPOSE OTHER THAN IN CONNECTION WITH A DEFINITELY RELATED GOVERNMENT PROCUREMENT OPERATION, THE UNITED STATES GOVERNMENT THEREBY INCURS NO RESPONSIBILITY NOR ANY OBLIGATION WHATSOEVER; AND THE FACT THAT THE GOVERNMENT MAY HAVE FORMULATED, FURNISHED, OR IN ANY WAY SUPPLIED THE SAID DRAWINGS, SPECIFICATIONS OR OTHER DATA IS NOT TO BE REGARDED BY IMPLICATION OR OTHERWISE AS IN ANY MANNER LICENSING THE HOLDER OR ANY OTHER PERSON OR CORPORATION, OR CONVEYING ANY RIGHTS OR PERMISSION TO MANUFACTURE, USE, OR SELL ANY PATENTED INVENTION THAT MAY IN ANY WAY BE RELATED THERETO.

ANY USE OF THIS DOCUMENT FOR OTHER THAN GOVERNMENTAL PURPOSES

REVISIONS	
SYM	DESCRIPTION
A	REVISED PER TDRR
B	REVISED PER TDRR

HOLE IDENT	XI BASIC DIM.	YI BASIC DIM.
A1	.000	.000
A2	.410	.000
A3	.820	.000
A4	1.120	.280
A5	1.483	.000
A6	1.893	.000
A7	2.303	.000
A8	2.603	.280
A9	2.966	.000
A10	3.376	.000
A11	3.786	.000
A12	4.086	.280
A13	4.449	.000
A14	4.859	.000
A15	5.269	.000
A16	5.569	.280
A17	5.932	.000
A18	6.342	.000
A19	6.752	.000
A20	7.052	.280
A21	7.415	.000
A22	7.825	.000
A23	8.235	.000
A24	8.535	.280
B1	-.087	.272
B2	-.087	.414
B3	.820	.272
B4	.820	.414
B5	1.396	.272
B6	1.396	.414
B7	2.303	.272
B8	2.303	.414
B9	2.879	.272
B10	2.879	.414
B11	3.786	.272
B12	3.786	.414
B13	4.362	.272
B14	4.362	.414
B15	5.269	.272
B16	5.269	.414
B17	5.845	.272
B18	5.845	.414
B19	6.752	.272
B20	6.752	.414
B21	7.328	.272
B22	7.328	.414
B23	8.235	.272
B24	8.235	.414

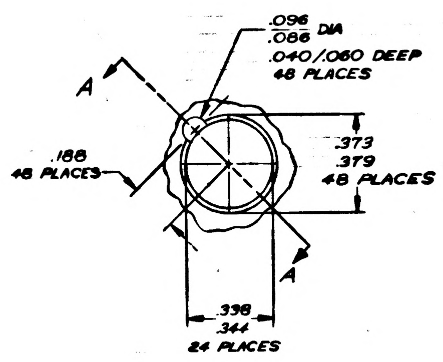
.096
.086 DIA
.040/.060 DEEP
48 PLACES
A
.188
48 PLACES
.373
.379
48 PLACES
A
.338
.344
24 PLACES

DETAIL A

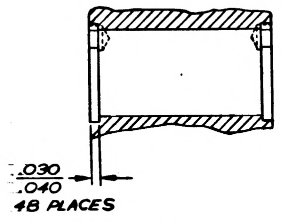
.030
.040
48 PLACES

SECTION A-A

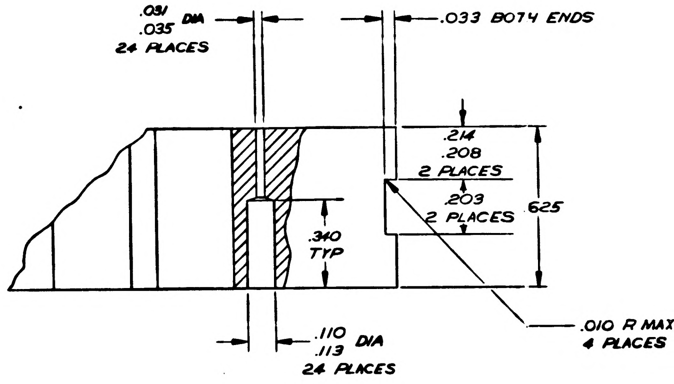
.031
.035 DIA
24 PLACES
.033 BOTH ENDS
.214
.208
2 PLACES
.203
2 PLACES
.625
.340
TYP
.010 R MAX
4 PLACES
.110
.113 DIA
24 PLACES

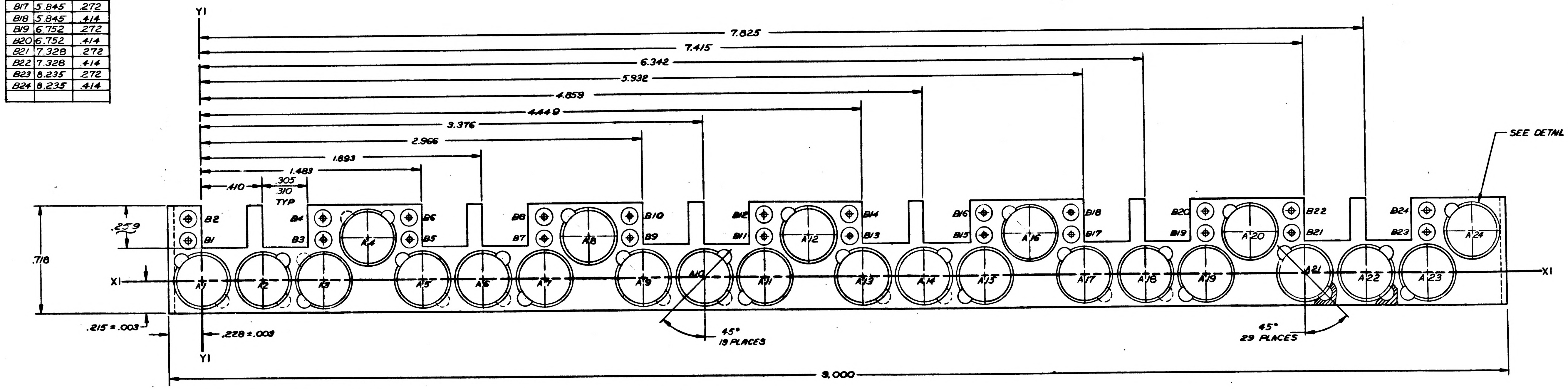
YI
7.825
7.415
6.342
5.932
4.859
4.449
3.376
2.966
1.893
1.483
.410
.305
.310
TYP
SEE DETAIL A
.259
.718
XI
B2
B1
B4
B3
A4
B6
B5
B8
B7
A8
B10
B9
B12
B11
A12
B14
B13
B16
B15
A16
B18
B17
B20
B19
A20
B22
B21
B24
B23
A24
A1
A2
A3
A5
A6
A7
A9
A10
A11
A13
A14
A15
A17
A18
A19
A21
A22
A23
XI
.215 ± .003
.228 ± .003
YI
45°
19 PLACES
45°
29 PLACES
9.000

NOTES
1. MATL: PLASTIC CLEAR ACRYLIC PER MIL-P-8184 FINISH B, ALT. MIL-P-5425B FINISH B.
2. ALL HOLES $\boxed{\oplus .010 \text{ DIA}}$
3. INTERPRET DRAWING IN ACCORDANCE WITH STANDARDS PRESCRIBED BY MIL-D-70327.
4. REMOVE ALL BURRS AND SHARP EDGES.

INTERPRET DRAWING IN ACCORDANCE WITH STANDARDS PRESCRIBED BY MIL-D-70327

QTY REQD	PART OR IDENTIFYING NO

LIST OF MATERIALS

1003152	
NEXT ASSY	USED ON
APPLICATION	

UNLESS OTHERWISE SPECIFIED
DIMENSIONS ARE IN INCHES
TOLERANCES ON
FRACTIONS ± DECIMALS ±.005 ANGLES ±3°
DO NOT SCALE THIS DRAWING
MATERIAL SEE NOTE 1
HEAT TREATMENT NONE
FINAL FINISH NONE

MIT
INSTRUMENTATION LAB
CAMBRIDGE, MASS
DWG NO CONTRACT
DRAWN BL Parker DATE 6/6/63
CHECKED
APPROVAL
APPROVAL
APPROVAL
NASA APPROVAL
MIT APPROVAL
MIT APPROVAL

MANNED SPACE
COMPONENT
CURRENT
CODE IDENT NO
SIZE J
SCALE 4/1

INCHES
0 1 2
PHOTOGRAPHIC SCALE ONLY

REVISIONS			
SYM	DESCRIPTION	DATE	APPROVED

TDRR 12098

HOLE IDENT	XI BASIC DIM.	YI BASIC DIM.
A1	.000	.000
A2	.410	.000
A3	.820	.000
A4	1.120	.280
A5	1.483	.000
A6	1.893	.000
A7	2.303	.000
A8	2.603	.280
A9	2.966	.000
A10	3.376	.000
A11	3.786	.000
A12	4.086	.280
A13	4.449	.000
A14	4.859	.000
A15	5.269	.000
A16	5.569	.280
A17	5.932	.000
A18	6.342	.000
A19	6.752	000
A20	7.052	.280
A21	7.415	.000
A22	7.825	.000
A23	8.235	.000
A24	8.535	.280
B1	-.087	.272
B2	-.087	.414
B3	.820	.272
B4	.820	.414
B5	1.396	.272
B6	1.396	.414
B7	2.303	.272
B8	2.303	.414
B9	2.879	.272
B10	2.879	.414
B11	3.786	.272
B12	3.786	.414
B13	4.362	.272
B14	4.362	.414
B15	5.269	.272
B16	5.269	.414
B17	5.845	.272
B18	5.845	.414
B19	6.752	.272
B20	6.752	.414
B21	7.328	.272
B22	7.328	.414
B23	8.235	.272
B24	8.235	.414
C1	1.843	.440
C2	3.326	.440
C3	4.809	.440
C4	6.292	.440
C5	7.775	.440

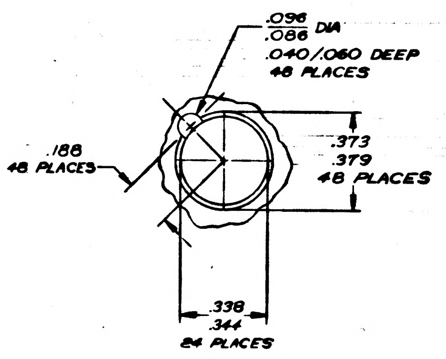

.096
.086 DIA
.040/.060 DEEP
48 PLACES
.188
48 PLACES
.373
.379
48 PLACES
.338
.344
24 PLACES

DETAIL A

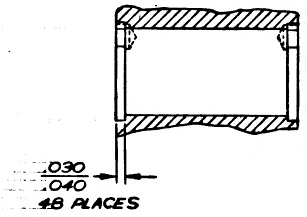

.030
.040
48 PLACES

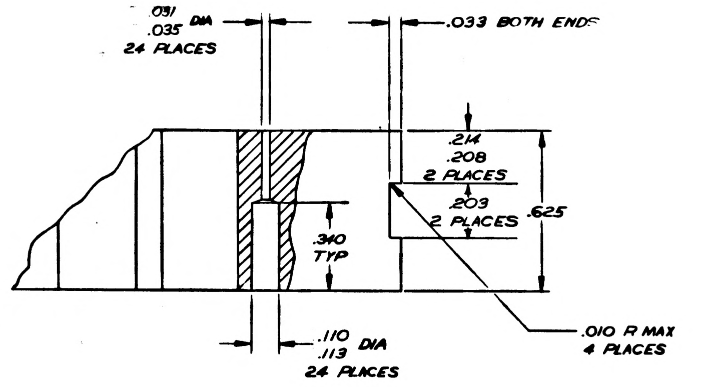

.031
.035 DIA
24 PLACES
.033 BOTH ENDS
.214
.208
2 PLACES
.209
2 PLACES
.625
.340
TYP
.110
.113 DIA
24 PLACES
.010 R MAX
4 PLACES

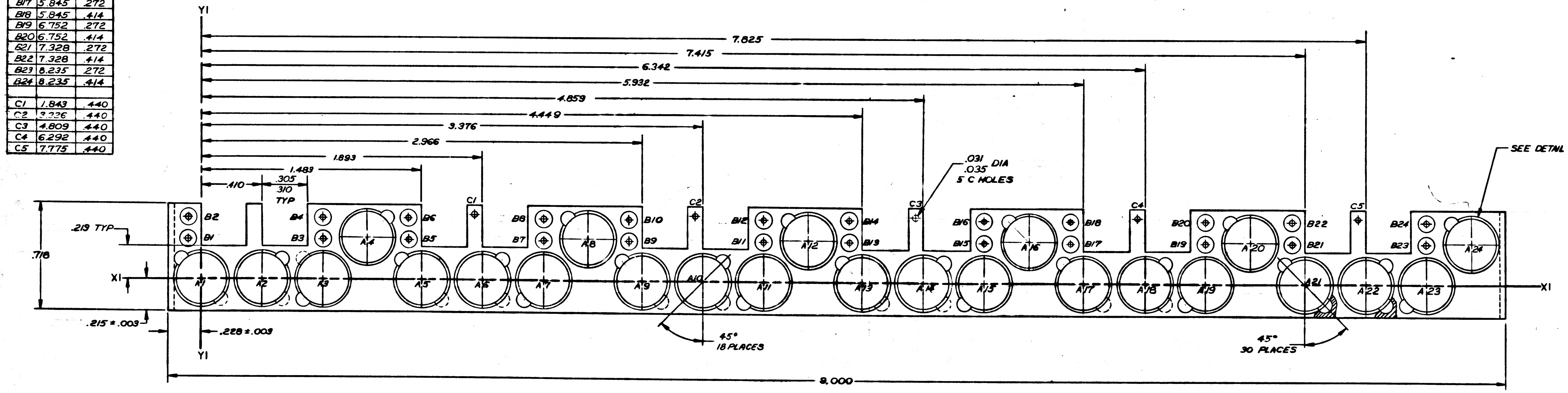

YI
7.825
7.415
6.342
5.932
4.859
4.449
3.376
2.966
1.893
1.483
.410
.305
.310
TYP
.031
.035 DIA
5 C HOLES
SEE DETAIL A
C1
C2
C3
C4
C5
B1
B2
B3
B4
B5
B6
B7
B8
B9
B10
B11
B12
B13
B14
B15
B16
B17
B18
B19
B20
B21
B22
B23
B24
A1
A2
A3
A4
A5
A6
A7
A8
A9
A10
A11
A12
A13
A14
A15
A16
A17
A18
A19
A20
A21
A22
A23
A24
.219 TYP
.718
XI
XI
.215 ± .003
.228 ± .003
YI
45°
18 PLACES
45°
30 PLACES
8.000

NOTES
1. MATL: PLASTIC CLEAR ACRYLIC PER MIL-P-8184 FINISH B.
2. ALL HOLES ⌖ .010 DIA
3. INTERPRET DRAWING IN ACCORDANCE WITH STANDARDS PRESCRIBED BY MIL-D-70327.
4. REMOVE ALL BURRS AND SHARP EDGES.

INTERPRET DRAWING IN ACCORDANCE WITH STANDARDS PRESCRIBED BY MIL-D-70327

QTY REQD	PART OR IDENTIFYING NO.	NOMENCLATURE OR DESCRIPTION	FIND NO

LIST OF MATERIALS

NEXT ASSY	USED ON
1003500	

APPLICATION

UNLESS OTHERWISE SPECIFIED
DIMENSIONS ARE IN INCHES
TOLERANCES ON
FRACTIONS ± DECIMALS ±.005 ANGLES ±1°
DO NOT SCALE THIS DRAWING
MATERIAL SEE NOTE 1
HEAT TREATMENT NONE
FINAL FINISH NONE

MIT
INSTRUMENTATION LAB
CAMBRIDGE, MASS
DRAWN B L Parker DATE 6/15/63
CHECKED
APPROVAL
APPROVAL
APPROVAL
NASA APPROVAL W J Wh
MIT APPROVAL
MIT APPROVAL J Hazel

MANNED SPACECRAFT CENTER
HOUSTON, TEXAS

COMPONENT HOLDER
CURRENT SWITCH

CODE IDENT NO
SIZE J
NASA DRAWING NO 1004500
SCALE 4/1
WT
SHEET 1 OF 1

INCHES
PHOTOGRAPHIC SCALE ONLY

REVISIONS

SYM	DESCRIPTION

HOLE IDENT	XI BASIC DIM.	YI BASIC DIM.
A1	.000	.000
A2	.410	.000
A3	.820	.000
A4	1.120	.280
A5	1.483	.000
A6	1.893	.000
A7	2.303	.000
A8	2.603	.280
A9	2.966	.000
A10	3.376	.000
A11	3.786	.000
A12	4.086	.280
A13	4.449	.000
A14	4.859	.000
A15	5.269	.000
A16	5.569	.280
A17	5.932	.000
A18	6.342	.000
A19	6.752	.000
A20	7.052	.280
A21	7.415	.000
A22	7.825	.000
A23	8.235	.000
A24	8.535	.280
B1	-.087	.272
B2	-.087	.414
B3	.820	.272
B4	.820	.414
B5	1.396	.272
B6	1.396	.414
B7	2.303	.272
B8	2.303	.414
B9	2.879	.272
B10	2.879	.414
B11	3.786	.272
B12	3.786	.414
B13	4.362	.272
B14	4.362	.414
B15	5.269	.272
B16	5.269	.414
B17	5.845	.272
B18	5.845	.414
B19	6.752	.272
B20	6.752	.414
B21	7.328	.272
B22	7.328	.414
B23	8.235	.272
B24	8.235	.414
C1	1.843	.440
C2	3.326	.440
C3	4.809	.440
C4	6.292	.440
C5	7.775	.440

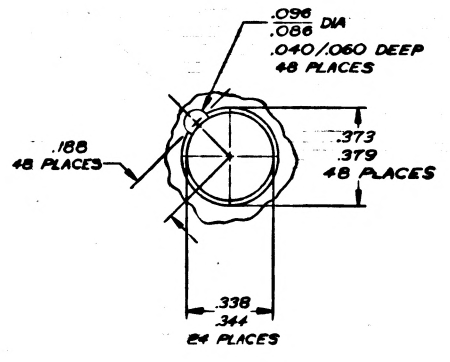
.096
.086 DIA
.040/.060 DEEP
48 PLACES
.188
48 PLACES
.373
.379
48 PLACES
.338
.344
24 PLACES

DETAIL A

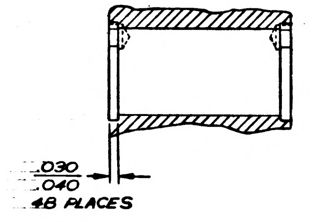
.030
.040
48 PLACES

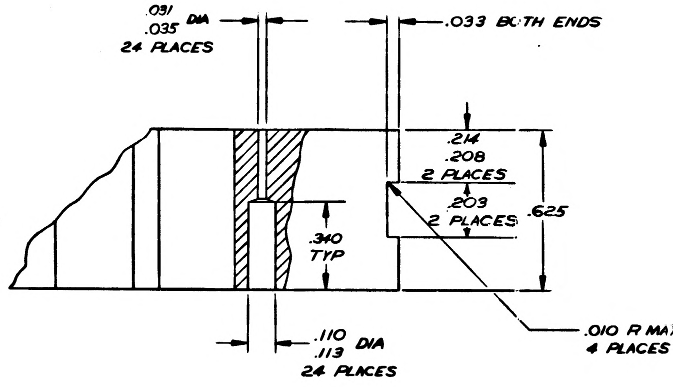
.031
.035 DIA
24 PLACES
.033 BOTH ENDS
.214
.208
2 PLACES
.203
2 PLACES
.625
.340
TYP
.110
.113 DIA
24 PLACES
.010 R MA
4 PLACES

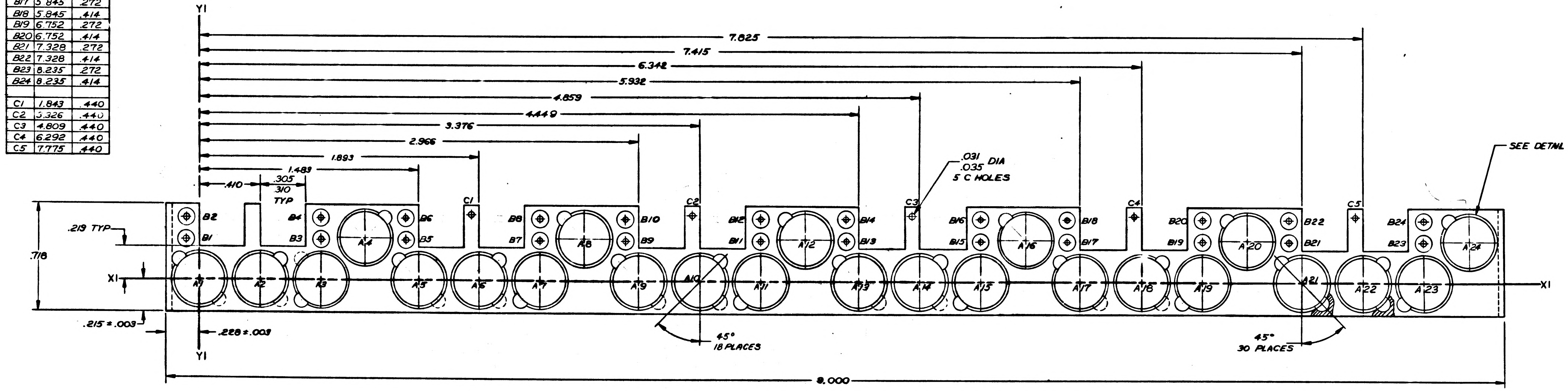
YI
7.825
7.415
6.342
5.932
4.859
4.449
3.376
2.966
1.893
1.483
.410
.305
.310
TYP
.031
.035 DIA
5 C HOLES
SEE DETAIL A
C1
C2
C3
C4
C5
B1
B2
B3
B4
B5
B6
B7
B8
B9
B10
B11
B12
B13
B14
B15
B16
B17
B18
B19
B20
B21
B22
B23
B24
A1
A2
A3
A4
A5
A6
A7
A8
A9
A10
A11
A12
A13
A14
A15
A16
A17
A18
A19
A20
A21
A22
A23
A24
.219 TYP
.718
XI
XI
.215 ± .003
.228 ± .003
YI
45°
18 PLACES
45°
30 PLACES
8.000

NOTES

1. MATL: PLASTIC CLEAR ACRYLIC PER MIL-P-8184 FINISH B.
2. ALL HOLES $\boxed{\oplus .010 \text{ DIA}}$
3. INTERPRET DRAWING IN ACCORDANCE WITH STANDARDS PRESCRIBED BY MIL-D-70327.
4. REMOVE ALL BURRS AND SHARP EDGES.

QTY REQD	PART OR IDENTIFYING NO.	NOMEN

IST OF MATERIALS

1003500	
NEXT ASSY	USED ON
APPLICATION	

UNLESS OTHERWISE SPECIFIED
DIMENSIONS ARE IN INCHES
TOLERANCES ON
FRACTIONS ± DECIMALS ±.005 ANGLES ±1°
DO NOT SCALE THIS DRAWING
MATERIAL SEE NOTE 1
HEAT TREATMENT NONE
FINAL FINISH NONE

MIT
INSTRUMENTATION LAB
CAMBRIDGE, MASS.
DWG. NO. CONTRACT
DRAWN B L Parker DATE 6/15/63
CHECKED
APPROVAL
APPROVAL
APPROVAL
NASA APPROVAL
MIT APPROVAL
MIT APPROVAL

MANNED SPACE
HOUST

COMPONENT
CURRENT S

CODE IDENT NO
SIZE J
SCALE 8/1
WT

INTERPRET DRAWING IN ACCORDANCE WITH STANDARDS PRESCRIBED BY MIL-D-70327

INCHES
PHOTOGRAPHIC SCALE ONLY

NOTICE — WHEN GOVERNMENT DRAWINGS, SPECIFICATIONS, OR OTHER DATA ARE USED FOR ANY PURPOSE OTHER THAN IN CONNECTION WITH A DEFINITELY RELATED GOVERNMENT PROCUREMENT OPERATION, THE UNITED STATES GOVERNMENT THEREBY INCURS NO RESPONSIBILITY NOR ANY OBLIGATION WHATSOEVER; AND THE FACT THAT THE GOVERNMENT MAY HAVE FORMULATED, FURNISHED, OR IN ANY WAY SUPPLIED THE SAID DRAWINGS, SPECIFICATIONS OR OTHER DATA IS NOT TO BE REGARDED BY IMPLICATION OR OTHERWISE AS IN ANY MANNER LICENSING THE HOLDER OR ANY OTHER PERSON OR CORPORATION, OR CONVEYING ANY RIGHTS OR PERMISSION TO MANUFACTURE, USE, OR SELL ANY PATENTED INVENTION THAT MAY IN ANY WAY BE RELATED THERETO.

ANY USE OF THIS DOCUMENT FOR OTHER THAN GOVERNMENTAL PURPOSES IS SUBJECT TO PRIOR WRITTEN CONSENT OF RAYTHEON CO.

REVISIONS 02-55

SYM	DESCRIPTION	DATE	APPROVED
A	REVISED PER TDRR 03458	9-26-63	

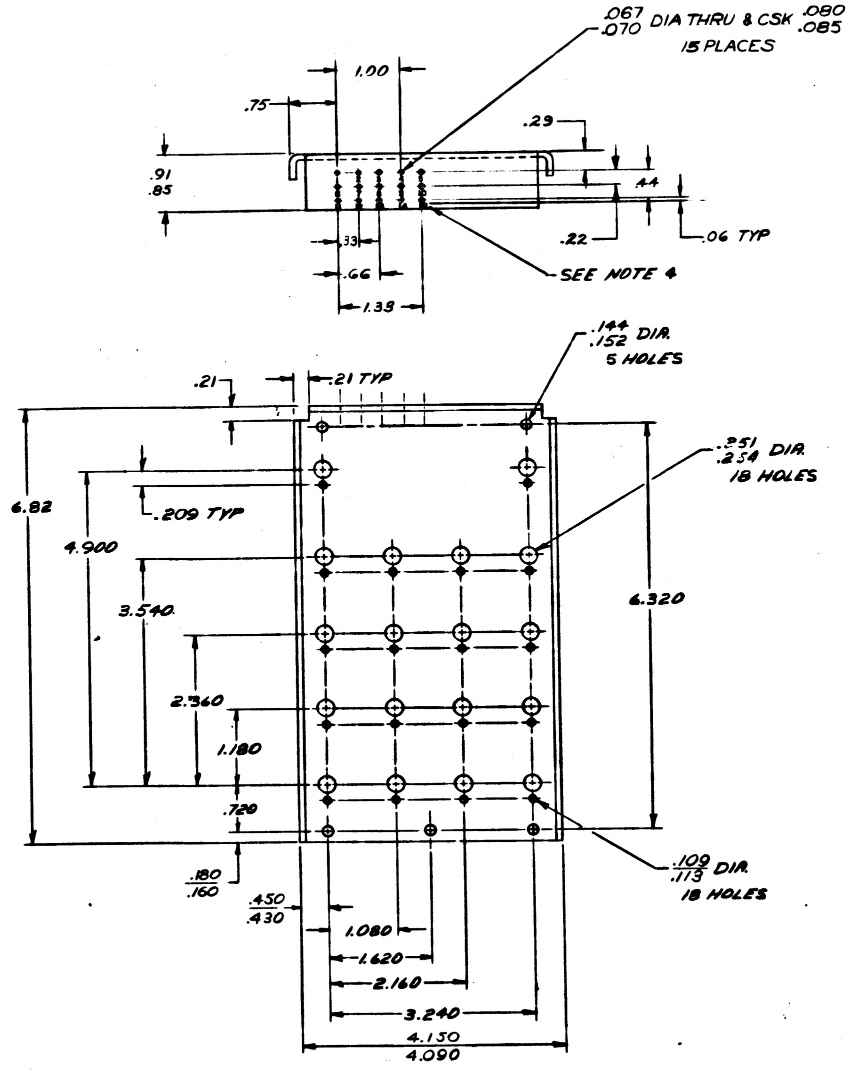
.067
.070 DIA THRU & CSK .080
.085 DIA X 62°
58°
15 PLACES
1.00
.75
.29
.91
.85
.44
.06 TYP
.22
.33
.66
1.33
SEE NOTE 4
.144
.152 DIA.
5 HOLES
.21
.21 TYP
.251
.254 DIA.
18 HOLES
6.82
.209 TYP
4.900
3.540
6.320
2.360
1.180
.720
.109
.113 DIA.
18 HOLES
.180
.160
.450
.430
1.080
1.620
2.160
3.240
4.150
4.090

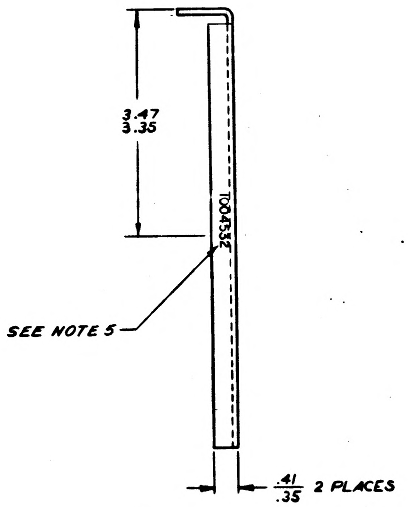
3.47
3.35
1004532
SEE NOTE 5
.41
.35 2 PLACES

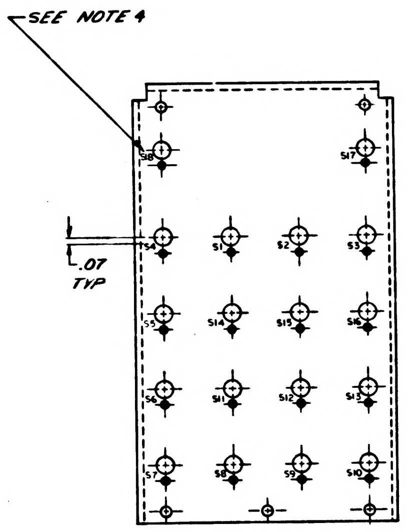
SEE NOTE 4
S18
S17
.07
TYP
S4
S1
S2
S3
S5
S14
S15
S16
S6
S11
S12
S13
S7
S8
S9
S10

NOTES:
1. MATL: .063 THK AL 5052-H32 PER QQ-A-318, TEMPER H32
2. REMOVE BURRS & SHARP EDGES
3. ANODIZE PER MIL-A-8625 TYPE II DYED BLACK
4. MARK .08 HIGH WHITE PER ND1002019 APPROX WHERE SHOWN
5. MARK .12 HIGH WHITE PER ND1002019
6. ALL BEND R $^{.047}_{.093}$

QTY REQD	PART OR IDENTIFYING NO.	NOMENCLATURE OR DESCRIPTION	FIND NO

LIST OF MATERIALS

NEXT ASSY	USED ON
1003097	

APPLICATION

UNLESS OTHERWISE SPECIFIED
DIMENSIONS ARE IN INCHES
TOLERANCES ON
FRACTIONS ± DECIMALS ±.02 .005 ANGLES ±
DO NOT SCALE THIS DRAWING

MATERIAL
SEE NOTE 1

HEAT TREATMENT

FINAL FINISH
SEE NOTE 3

MIT
INSTRUMENTATION LAB
CAMBRIDGE, MASS

DRAWN D.Q. Claremont DATE 5-16-63
CHECKED 6 Aug 63
APPROVAL
APPROVAL
APPROVAL 13 Aug 63
NASA APPROVAL 1963
MIT APPROVAL
MIT APPROVAL Aug 63

MANNED SPACECRAFT CENTER
HOUSTON, TEXAS

PANEL FRONT
KEYBOARD PLATE ASSY
AGC KEYBOARD

CODE IDENT NO —
SIZE F
NASA DRAWING NO 1004532
SCALE 1/1
WT
SHEET 1 OF 1

INTERPRET DRAWING IN ACCORDANCE WITH STANDARDS PRESCRIBED BY MIL-D-70327

1004532

INCHES
PHOTOGRAPHIC SCALE ONLY

ANY USE OF THIS DOCUMENT FOR OTHER THAN GOVERNMENTAL PURPOSES IS SUBJECT TO PRIOR WRITTEN CONSENT OF RAYTHEON CO.

REVISIONS 02555			
SYM	DESCRIPTION	DATE	APPROVED
A	REVISED PER TDRR 03458	9-26-63	
B	REVISED PER TDRR 04319	Oct 63	

NOTICE — WHEN GOVERNMENT DRAWINGS, SPECIFICATIONS, OR OTHER DATA ARE USED FOR ANY PURPOSE OTHER THAN IN CONNECTION WITH A DEFINITELY RELATED GOVERNMENT PROCUREMENT OPERATION, THE UNITED STATES GOVERNMENT THEREBY INCURS NO RESPONSIBILITY NOR ANY OBLIGATION WHATSOEVER; AND THE FACT THAT THE GOVERNMENT MAY HAVE FORMULATED, FURNISHED, OR IN ANY WAY SUPPLIED THE SAID DRAWINGS, SPECIFICATIONS OR OTHER DATA IS NOT TO BE REGARDED BY IMPLICATION OR OTHERWISE AS IN ANY MANNER LICENSING THE HOLDER OR ANY OTHER PERSON OR CORPORATION, OR CONVEYING ANY RIGHTS OR PERMISSION TO MANUFACTURE, USE, OR SELL ANY PATENTED INVENTION THAT MAY IN ANY WAY BE RELATED THERETO.

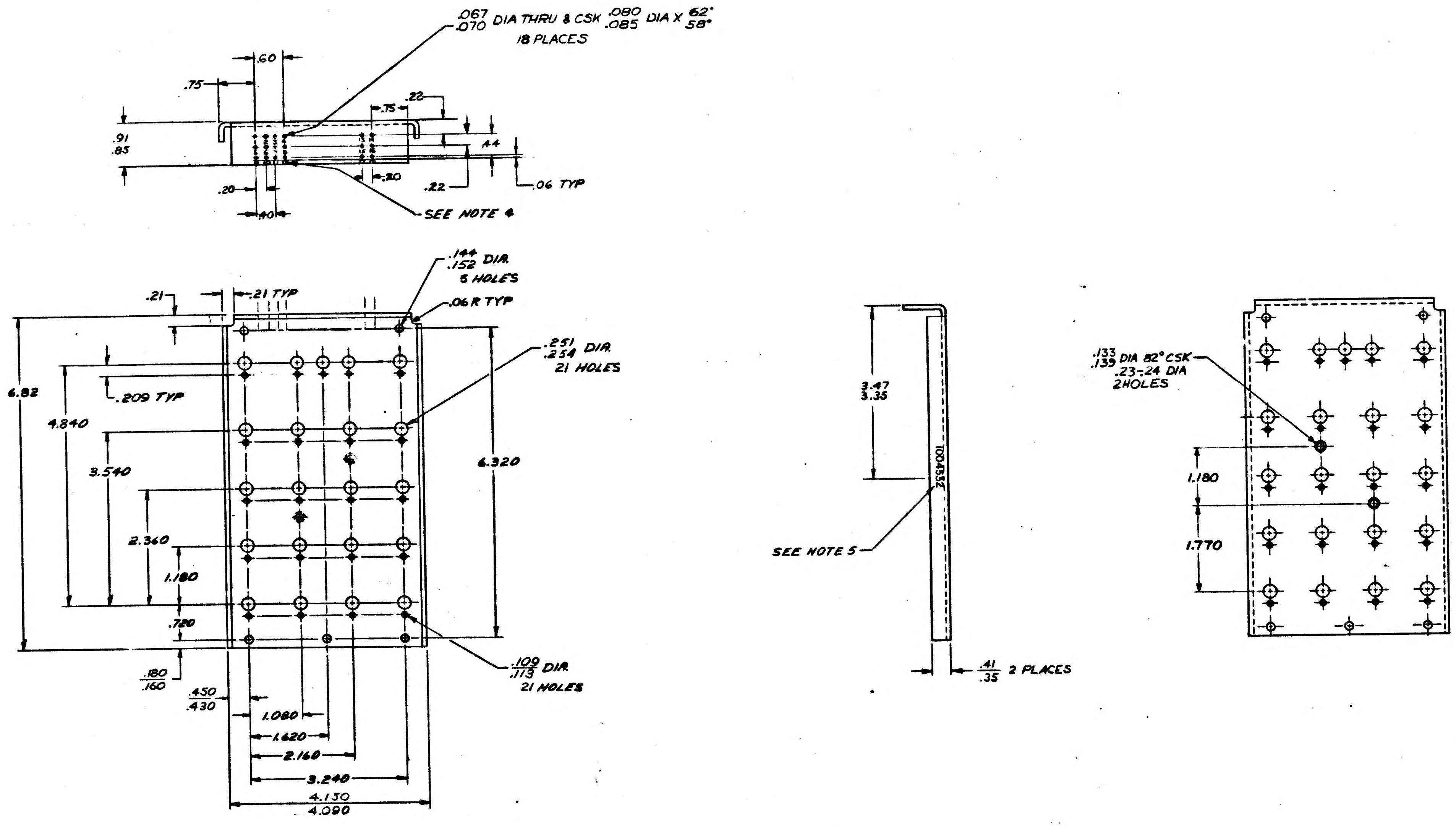

.067 .070 DIA THRU & CSK .080 .085 DIA X 62° 58°
18 PLACES
.60
.75
.22
.75
.91 .85
.44
.20
.22
.06 TYP
.20
.40
SEE NOTE 4
.144 .152 DIA.
5 HOLES
.21
.21 TYP
.06 R TYP
.251 .254 DIA.
21 HOLES
6.82
4.840
.209 TYP
3.540
2.360
1.180
.720
6.320
.180 .160
.450 .430
1.080
1.620
2.160
3.240
4.150 4.090
.109 .113 DIA.
21 HOLES
3.47 3.35
1004532
SEE NOTE 5
.41 .35 2 PLACES
.133 .139 DIA 82° CSK
.23-.24 DIA
2HOLES
1.180
1.770

NOTES:

1. MATL: .090 THK AL 5052-H32 PER QQ-A-318, TEMPER H32
2. REMOVE BURRS & SHARP EDGES
3. ANODIZE PER MIL-A-8625 TYPE II DYED BLACK
4. MARK .08 HIGH WHITE PER ND1002019 APPROX WHERE SHOWN
5. MARK .12 HIGH WHITE PER ND1002019
6. ALL BEND R $^{.05}_{.09}$

QTY REQD	PART OR IDENTIFYING NO.	NOMENCLATURE OR DESCRIPTION	FIND NO

LIST OF MATERIALS

NEXT ASSY	USED ON
1003097	

APPLICATION

UNLESS OTHERWISE SPECIFIED
DIMENSIONS ARE IN INCHES
TOLERANCES ON
FRACTIONS ± DECIMALS ±.02 .005 ANGLES ±
DO NOT SCALE THIS DRAWING

MATERIAL SEE NOTE 1

HEAT TREATMENT

FINAL FINISH SEE NOTE 3

MIT INSTRUMENTATION LAB
CAMBRIDGE, MASS

DRAWN D.Q. Claymont DATE 5-16-63
CHECKED 6 Aug 63
APPROVAL
APPROVAL
APPROVAL 13 Aug 63
NASA APPROVAL 1963
MIT APPROVAL
MIT APPROVAL Aug 63

MANNED SPACECRAFT CENTER
HOUSTON, TEXAS

PANEL, FRONT
KEYBOARD MODULE
AGC, DSKY NAV & MAIN

CODE IDENT NO.	SIZE	NASA DRAWING NO.
—	F	1004532

SCALE 1/1 WT SHEET 1 OF 1

INTERPRET DRAWING IN ACCORDANCE WITH STANDARDS PRESCRIBED BY MIL-D-70327

NOTICE – WHEN GOVERNMENT DRAWINGS, SPECIFICATIONS, OR OTHER DATA ARE USED FOR ANY PURPOSE OTHER THAN IN CONNECTION WITH A DEFINITELY RELATED GOVERNMENT PROCUREMENT OPERATION, THE UNITED STATES GOVERNMENT THEREBY INCURS NO RESPONSIBILITY NOR ANY OBLIGATION WHATSOEVER; AND THE FACT THAT THE GOVERNMENT MAY HAVE FORMULATED, FURNISHED, OR IN ANY WAY SUPPLIED THE SAID DRAWINGS, SPECIFICATIONS OR OTHER DATA IS NOT TO BE REGARDED BY IMPLICATION OR OTHERWISE AS IN ANY MANNER LICENSING THE HOLDER OR ANY OTHER PERSON OR CORPORATION, OR CONVEYING ANY RIGHTS OR PERMISSION TO MANUFACTURE, USE, OR SELL ANY PATENTED INVENTION THAT MAY IN ANY WAY BE RELATED THERETO.

ANY USE OF THIS DOCUMENT FOR OTHER THAN GOVERNMENTAL PURPOSES IS SUBJECT TO PRIOR WRITTEN CONSENT OF RAYTHEON CO.

REVISIONS 02555

SYM	DESCRIPTION	DATE	APPROVED
A	REVISED PER TDRR 03458	9-26-63	
B	REVISED PER TDRR 04319	30 Oct 63	
C	REVISED PER TDRR 05188		

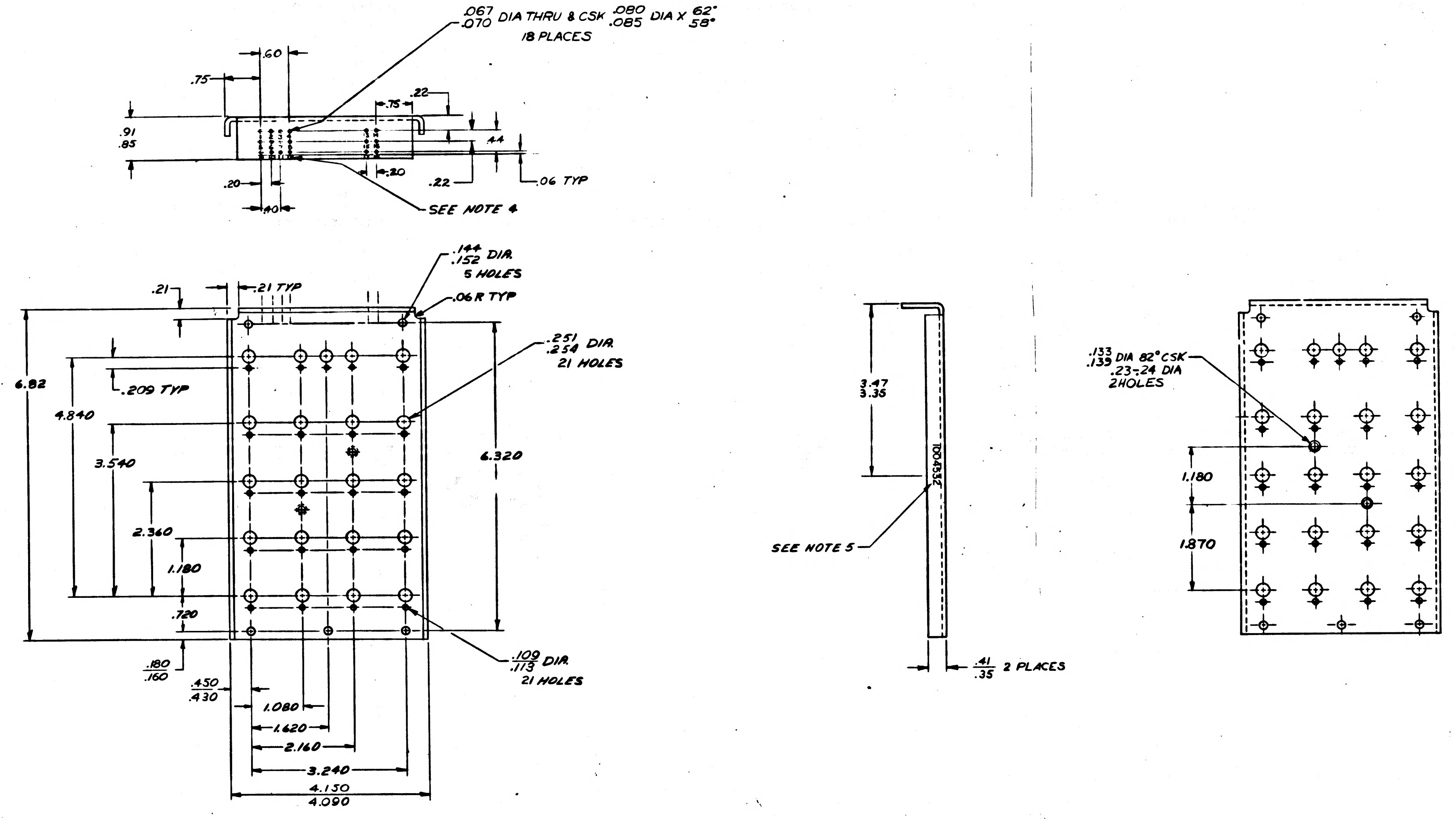
.067 .070 DIA THRU & CSK .080 .085 DIA X 62° 58°
18 PLACES
.60
.75
.75
.22
.91 .85
.44
.20
.20
.22
.22
.06 TYP
.40
SEE NOTE 4
.21
.21 TYP
.144 .152 DIA 5 HOLES
.06 R TYP
.251 .254 DIA 21 HOLES
6.82
.209 TYP
4.840
3.540
6.320
2.360
1.180
.720
.109 .113 DIA 21 HOLES
.180 .160
.450 .430
1.080
1.620
2.160
3.240
4.150 4.090
3.47 3.35
1004532
SEE NOTE 5
.41 .35 2 PLACES
.133 .139 DIA 82° CSK
.23-.24 DIA
2HOLES
1.180
1.870

NOTES:
1. MATL: .090 THK AL 5052-H32
PER QQ-A-318, TEMPER H32
2. REMOVE BURRS & SHARP EDGES
3. ANODIZE PER MIL-A-8625 TYPE II DYED BLACK
4. MARK .08 HIGH WHITE PER ND1002019 APPROX WHERE SHOWN
5. MARK .12 HIGH WHITE PER ND1002019
6. ALL BEND R $^{.05}_{.09}$

QTY REQD	PART OR IDENTIFYING NO.	NOMENCLATURE OR DESCRIPTION	FIND NO

LIST OF MATERIALS

NEXT ASSY	USED ON
1003097	

APPLICATION

UNLESS OTHERWISE SPECIFIED
DIMENSIONS ARE IN INCHES
TOLERANCES ON
FRACTIONS ± DECIMALS ±.02 .005 ANGLES ±
DO NOT SCALE THIS DRAWING
MATERIAL SEE NOTE 1
HEAT TREATMENT
FINAL FINISH SEE NOTE 3

MIT
INSTRUMENTATION LAB
CAMBRIDGE, MASS
DWG. NO. CONTRACT
DRAWN D.Q. Claymont DATE 5-16-63
CHECKED 6 Aug 63
APPROVAL
APPROVAL
APPROVAL 13 Aug 63
NASA APPROVAL 8-14-63
MIT APPROVAL
MIT APPROVAL 14 Aug 63

MANNED SPACECRAFT CENTER
HOUSTON, TEXAS

PANEL, FRONT
KEYBOARD MODULE
AGC, DSKY NAV & MAIN

CODE IDENT NO. —— SIZE F NASA DRAWING NO 1004532
SCALE 1/1 WT SHEET 1 OF 1

INTERPRET DRAWING IN ACCORDANCE WITH STANDARDS PRESCRIBED BY MIL-D-70327

C 1004532

INCHES
PHOTOGRAPHIC SCALE ONLY

NOTICE — WHEN GOVERNMENT DRAWINGS SPECIFICATIONS OR OTHER DATA ARE USED FOR ANY PURPOSE OTHER THAN IN CONNECTION WITH A DEFINITELY RELATED GOVERNMENT PROCUREMENT OPERATION THE UNITED STATES GOVERNMENT THEREBY INCURS NO RESPONSIBILITY NOR ANY OBLIGATION WHATSOEVER: AND THE FACT THAT THE GOVERNMENT MAY HAVE FORMULATED, FURNISHED, OR IN ANY WAY SUPPLIED THE SAID DRAWINGS, SPECIFICATIONS OR OTHER DATA IS NOT TO BE REGARDED BY IMPLICATION OR OTHERWISE AS IN ANY MANNER LICENSING THE HOLDER OR ANY OTHER PERSON OR CORPORATION, OR CONVEYING ANY RIGHTS OR PERMISSION TO MANUFACTURE, USE, OR SELL ANY PATENTED INVENTION THAT MAY IN ANY WAY BE RELATED THERETO.

ANY USE OF THIS DOCUMENT FOR OTHER THAN GOVERNMENTAL PURPOSES IS SUBJECT TO PRIOR WRITTEN CONSENT OF RAYTHEON CO.

REVISIONS 02.55

SYM	DESCRIPTION	DATE	APPROVED

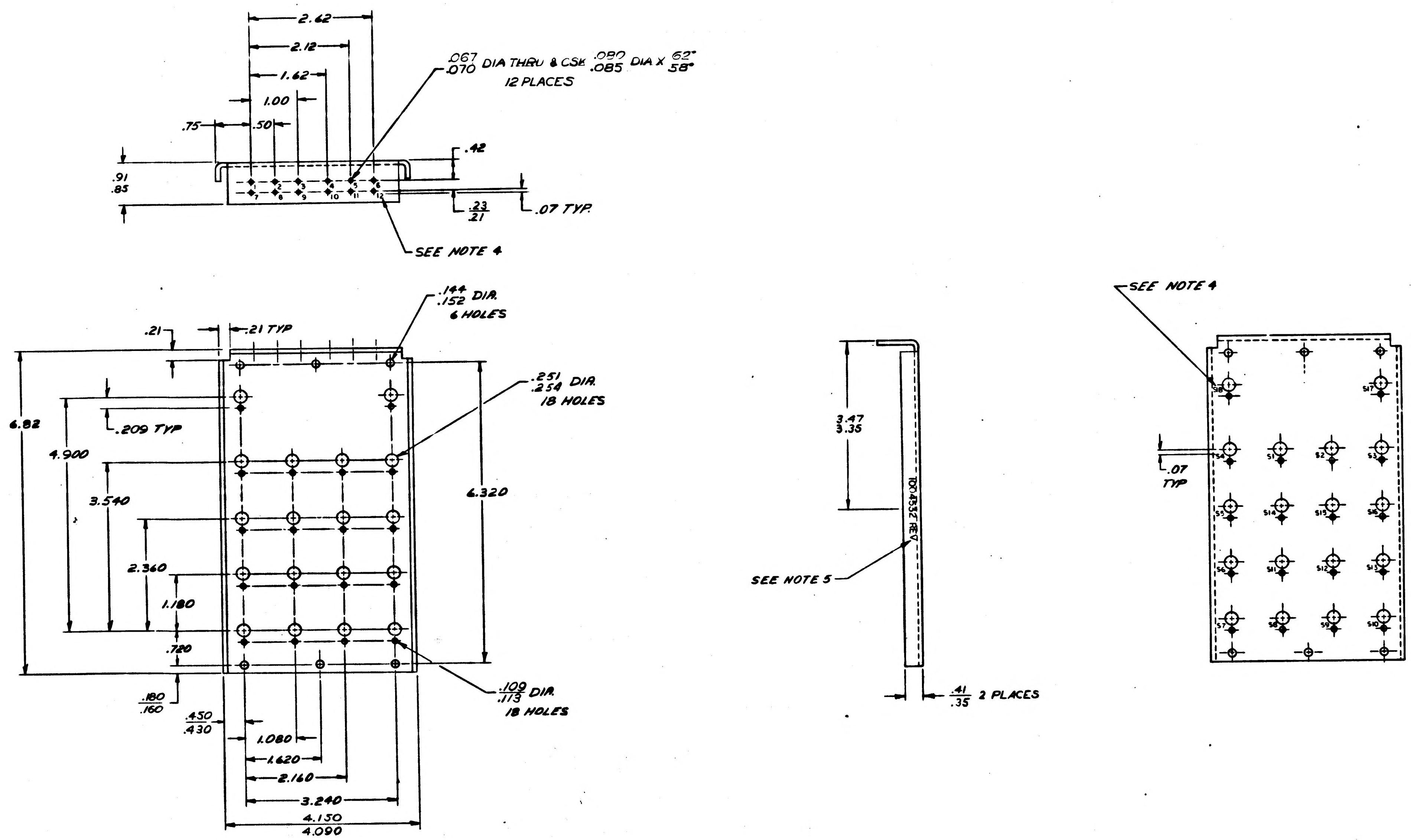
2.62
2.12
1.62
1.00
.75
.50
.067 .070 DIA THRU & CSK .080 .085 DIA X 62° 58°
12 PLACES
.42
.91 .85
1 2 3 4 5 6
7 8 9 10 11 12
.23 .21
.07 TYP.
SEE NOTE 4
.144 .152 DIA.
6 HOLES
.21
.21 TYP
.251 .254 DIA.
18 HOLES
6.82
4.900
.209 TYP
3.540
2.360
1.180
.720
6.320
.109 .113 DIA.
18 HOLES
.180 .160
.450 .430
1.080
1.620
2.160
3.240
4.150 4.090
3.47 3.35
1004532 REV
SEE NOTE 5
.41 .35 2 PLACES
SEE NOTE 4
.07 TYP
S18
S17
S4
S1
S2
S3
S5
S14
S15
S16
S6
S11
S12
S13
S7
S8
S9
S10

NOTES:

1. MATL: .090 THK AL 5052-H32
   PER QQ-A-318, TEMPER H32
2. REMOVE BURRS & SHARP EDGES
3. ANODIZE PER MIL-A-8625 TYPE II DYED BLACK
4. MARK .08 HIGH WHITE PER ND1002019 APPROX WHERE SHOWN
5. MARK .12 HIGH WHITE PER ND1002019
6. ALL BEND R $^{.047}_{.093}$

QTY REQD	PART OR IDENTIFYING NO.	NOMENCLATURE OR DESCRIPTION	FIND NO.

LIST OF MATERIALS

NEXT ASSY	USED ON
1003097	

APPLICATION

UNLESS OTHERWISE SPECIFIED
DIMENSIONS ARE IN INCHES
TOLERANCES ON
FRACTIONS ± DECIMALS ± .02 .005 ANGLES ±
DO NOT SCALE THIS DRAWING
MATERIAL
SEE NOTE 1
HEAT TREATMENT
FINAL FINISH
SEE NOTE 3

MIT
INSTRUMENTATION LAB
CAMBRIDGE, MASS.
REQ. NO. CONTRACT
DRAWN D.Q. Clermont DATE 5-16-63
CHECKED 6 Aug 63
APPROVAL
APPROVAL
APPROVAL 13 Aug 63
NASA APPROVAL W. J. 8-14-63
MIT APPROVAL
MIT APPROVAL Aug 63

MANNED SPACECRAFT CENTER
HOUSTON, TEXAS

PANEL, FRONT
KEYBOARD PLATE ASSY

CODE IDENT NO. ———
SIZE F
NASA DRAWING NO. 1004532
SCALE 1/1
WT
SHEET 1 OF 1

INTERPRET DRAWING IN ACCORDANCE WITH STANDARDS PRESCRIBED BY MIL-D-70327

INCHES
0 1 2
PHOTOGRAPHIC SCALE ONLY

NOTICE — WHEN GOVERNMENT DRAWINGS, SPECIFICATIONS, OR OTHER DATA ARE USED FOR ANY PURPOSE OTHER THAN IN CONNECTION WITH A DEFINITELY RELATED GOVERNMENT PROCUREMENT OPERATION, THE UNITED STATES GOVERNMENT THEREBY INCURS NO RESPONSIBILITY NOR ANY OBLIGATION WHATSOEVER; AND THE FACT THAT THE GOVERNMENT MAY HAVE FORMULATED, FURNISHED, OR IN ANY WAY SUPPLIED THE SAID DRAWINGS, SPECIFICATIONS OR OTHER DATA IS NOT TO BE REGARDED BY IMPLICATION OR OTHERWISE AS IN ANY MANNER LICENSING THE HOLDER OR ANY OTHER PERSON OR CORPORATION, OR CONVEYING ANY RIGHTS OR PERMISSION TO MANUFACTURE, USE, OR SELL ANY PATENTED INVENTION THAT MAY IN ANY WAY BE RELATED THERETO.

1004533

REVISIONS

SYM	DESCRIPTION	DATE	APPROVAL
—	CLASS A RELEASE PER TDRR 02918	9/5/63	JW

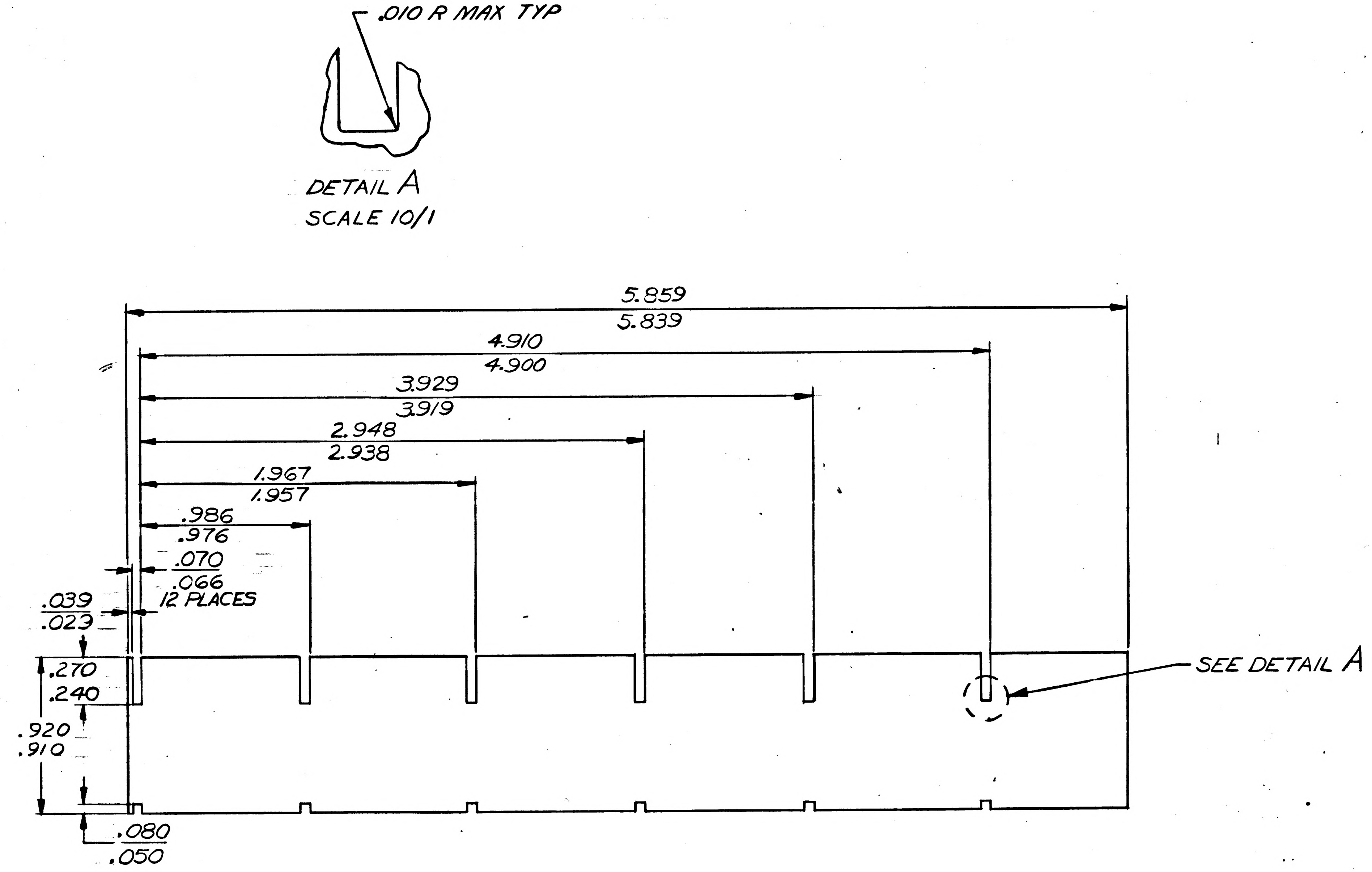

NOTES
1. MATL: .015 THICK PLASTIC SHEET, PER MIL-P-18177 TYPE GEE, EXCEPT THICKNESS TOL ±.003
2. REMOVE BURRS AND SHARP EDGES
3. INTERPRET DRAWING IN ACCORDANCE WITH STANDARDS PRESCRIBED BY MIL-D-70327

MASTER

QTY REQD	PART OR IDENTIFYING NO.	NOMENCLATURE OR DESCRIPTION	FIND NO.

LIST OF MATERIALS

NEXT ASSY	USED ON
1003098	

APPLICATION

UNLESS OTHERWISE SPECIFIED DIMENSIONS ARE IN INCHES
TOLERANCES ON
FRACTIONS ± DECIMALS ± ANGLES ±
DO NOT SCALE THIS DRAWING
MATERIAL SEE NOTE 1
HEAT TREATMENT NONE
FINAL FINISH NONE

MIT INSTRUMENTATION LAB
CAMBRIDGE, MASS.
DWG. NO. CONTRACT
DRAWN DATE 20 AUG 63
CHECKED 26 Aug 63
APPROVAL 28 Aug 63
APPROVAL Eldon C Hall 5 Sept 63
NASA APPROVAL 9/5/63
MIT APPROVAL
MIT APPROVAL 9/5/63

MANNED SPACECRAFT CENTER
HOUSTON, TEXAS

STRIP, BACKING
RELAY MODULE ASSEMBLY

CODE IDENT NO. —
SIZE C
NASA DRAWING NO. 1004533
SCALE 2/1
WT
SHEET 1 OF 1

INCHES
0 1 2
PHOTOGRAPHIC SCALE ONLY

SPECIFICATIONS, OR OTHER DATA IN CONNECTION WITH A DEFINITELY ATION THE UNITED STATES GOVERN- NOR ANY OBLIGATION WHATSOEVER HAVE FORMULATED, FURNISHED OR SPECIFICATIONS OR OTHER DATA IS OTHERWISE AS IN ANY MANNER RSON OR CORPORATION OR CONVEY- ANUFACTURE USE, OR SELL ANY BE RELATED THERETO.

ANY USE OF THIS DOCUMENT FOR OTHER THAN GOVERNMENTAL PURPOSES IS SUBJECT TO PRIOR WRITTEN CONSENT OF RAYTHEON CO.

REVISIONS			
SYM	DESCRIPTION	DATE	APPROVED
—	CLASS A RELEASE PER TDRR 03139		

HOLE IDENT	XI BASIC DIM.	YI BASIC DIM.	⊕ DIA	HOLE DIA
A1	-.070	.650	.010	.375
B1	.414	.532		.204 .210
B2	.414	.766		
C1	.000	.000		SEE SECTION B-B
C2	.297	.000		
C3	.524	.000		
C4	.820	.000		
C5	.000	.313		
C6	.297	.313		
C7	.524	.313		
C8	.820	.313		
C9	.211	.492		
C10	.618	.492		
C11	.211	.650		
C12	.211	.805		
C13	.618	.805		
D1	.149	.156		SEE DETAIL B
D2	.672	.156		
D3	.756	.650		
E1	.414	.156		SEE DET A
F1	.414	.000		.029 .035
F2	.414	.363		
F3	.524	.650	.010	

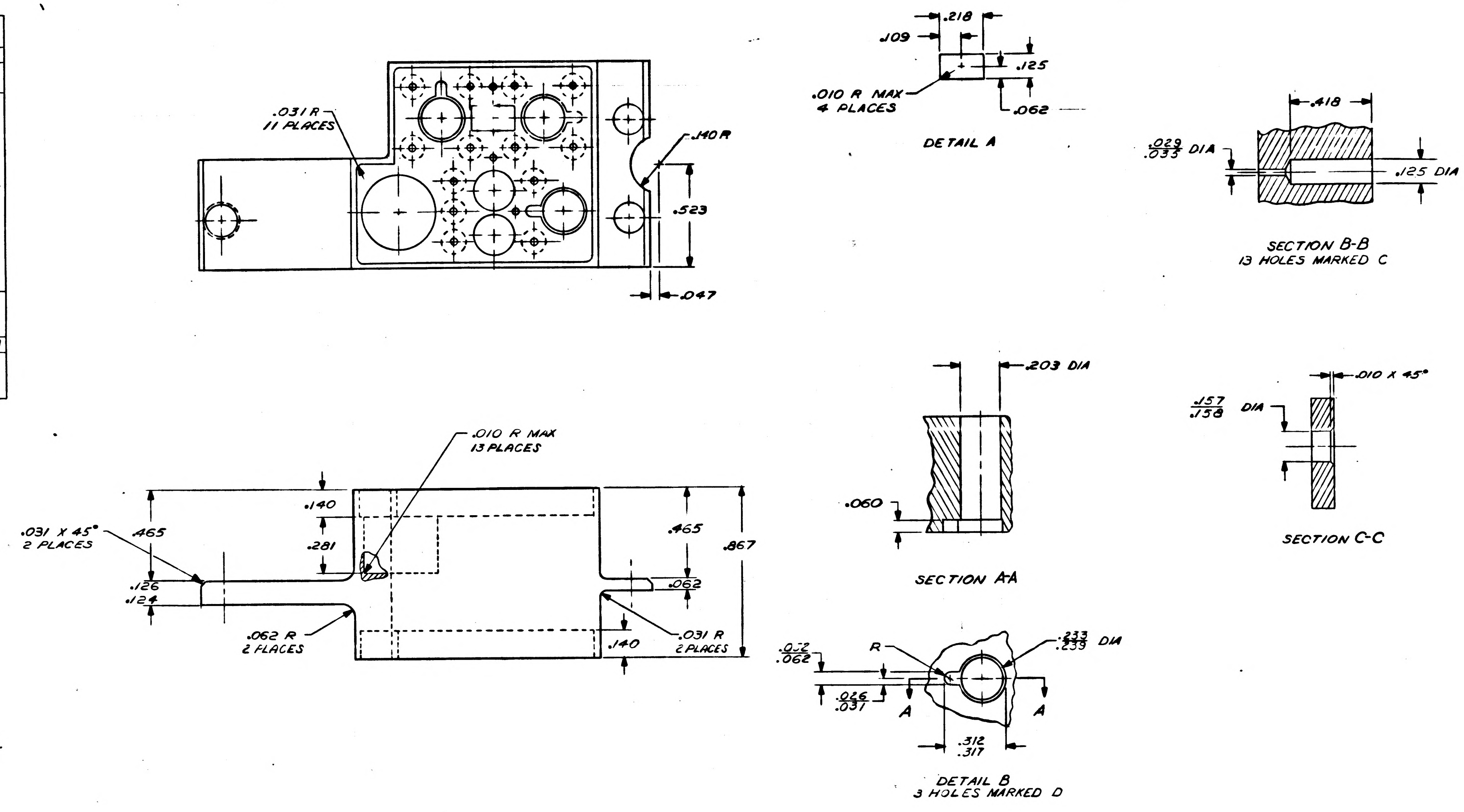
.031 R
11 PLACES
.140 R
.523
.047
.218
.109
.125
.010 R MAX
4 PLACES
.062
DETAIL A
.418
.029
.033 DIA
.125 DIA
SECTION B-B
13 HOLES MARKED C
.203 DIA
.060
SECTION A-A
.157
.158 DIA
.010 X 45°
SECTION C-C
.010 R MAX
13 PLACES
.031 X 45°
2 PLACES
.465
.140
.281
.126
.124
.062 R
2 PLACES
.465
.867
.062
.031 R
2 PLACES
.140
.072
.062
R
.026
.031
A
A
.233
.235 DIA
.312
.317
DETAIL B
3 HOLES MARKED D

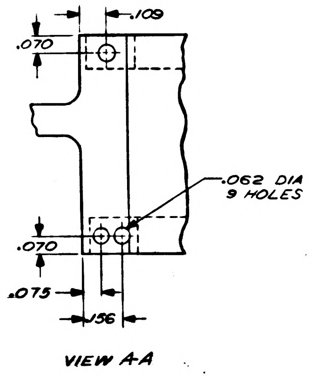
.109
.070
.062 DIA
3 HOLES
.070
.075
.156
VIEW A-A

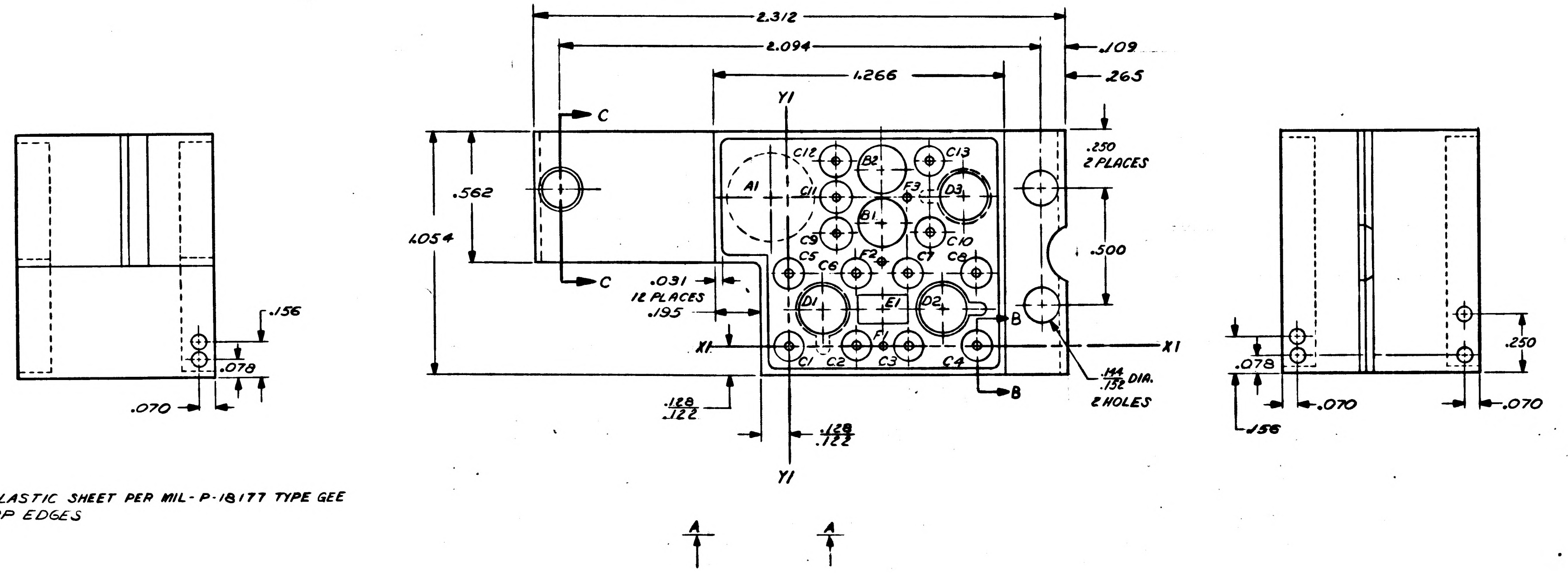
2.312
2.094
.109
1.266
.265
Y1
C
C
.562
1.054
.250
2 PLACES
.500
C12
B2
C13
A1
C11
F3
D3
B1
C9
C10
C5
C6
F2
C7
C8
D1
E1
D2
F1
C1
C2
C3
C4
.031
12 PLACES
.195
X1
X1
B
B
.144
.132 DIA.
2 HOLES
.128
.122
.128
.122
Y1
.156
.078
.070
.250
.078
.156
.070
.070
A
A

NOTES

1. MATL: G-10 PLASTIC SHEET PER MIL-P-18177 TYPE GEE
2. REMOVE SHARP EDGES

QTY REQD	PART OR IDENTIFYING NO.	NOMENCLATURE OR DESCRIPTION	FIND NO

LIST OF MATERIALS

NEXT ASSY	USED ON

APPLICATION

UNLESS OTHERWISE SPECIFIED
DIMENSIONS ARE IN INCHES
TOLERANCES ON
FRACTIONS ± DECIMALS ±.005 ANGLES ±0°30'
DO NOT SCALE THIS DRAWING

MATERIAL
SEE NOTE 1

HEAT TREATMENT
NONE

FINAL FINISH
NONE

MIT
INSTRUMENTATION LAB
CAMBRIDGE, MASS
DWG. NO. CONTRACT

DRAWN R. DiGlio DATE 19 AUG 63
CHECKED R. Edwards 29 Aug 63
APPROVAL [illegible]
APPROVAL [illegible] Hall 9 Sep 63
APPROVAL
NASA APPROVAL [illegible] 9/12/63
MIT APPROVAL
MIT APPROVAL W. Kupfer 12/9/63

MANNED SPACECRAFT CENTER
HOUSTON, TEXAS

HOLDER, COMPONENT
AGC POWER STAGE OSCILLATOR

CODE IDENT NO. —
SIZE J
NASA DRAWING NO. 1004534
SCALE 4/1
WT
SHEET 1 OF 1

INTERPRET DRAWING IN ACCORDANCE WITH STANDARDS PRESCRIBED BY MIL-D-70327

1004534

INCHES
0 1 2
PHOTOGRAPHIC SCALE ONLY

F-2

NOTICE — WHEN GOVERNMENT DRAWINGS, SPECIFICATIONS, OR OTHER DATA ARE USED FOR ANY PURPOSE OTHER THAN IN CONNECTION WITH A DEFINITELY RELATED GOVERNMENT PROCUREMENT OPERATION, THE UNITED STATES GOVERNMENT THEREBY INCURS NO RESPONSIBILITY NOR ANY OBLIGATION WHATSOEVER; AND THE FACT THAT THE GOVERNMENT MAY HAVE FORMULATED, FURNISHED OR IN ANY WAY SUPPLIED THE SAID DRAWINGS, SPECIFICATIONS OR OTHER DATA IS NOT TO BE REGARDED BY IMPLICATION OR OTHERWISE AS IN ANY MANNER LICENSING THE HOLDER OR ANY OTHER PERSON OR CORPORATION, OR CONVEYING ANY RIGHTS OR PERMISSION TO MANUFACTURE, USE, OR SELL ANY PATENTED INVENTION THAT MAY IN ANY WAY BE RELATED THERETO.

1004734

ANY USE OF THIS DOCUMENT FOR OTHER THAN GOVERNMENTAL PURPOSES IS

REVISIONS	
SYM	DESCRIPTION
—	CLASS A RELEASE PER TDRR .

HOLE IDENT	XI BASIC DIM.	YI BASIC DIM.	⌖ DIA	HOLE DIA
A1	-.070	.650	.010	.375
B1	.414	.532	↑	.204 .210
B2	.414	.766		
C1	.000	.000		SEE SECTION B-B
C2	.297	.000		
C3	.524	.000		
C4	.820	.000		
C5	.000	.313		
C6	.297	.313		
C7	.524	.313		
C8	.820	.313		
C9	.211	.492		
C10	.618	.492		
C11	.211	.650		
C12	.211	.805		
C13	.618	.805		
D1	.149	.156		SEE DETAIL B
D2	.672	.156		
D3	.756	.650		
E1	.414	.156		SEE DET A
F1	.414	.000		.029 .035
F2	.414	.363	↓	
F3	.524	.650	.010	

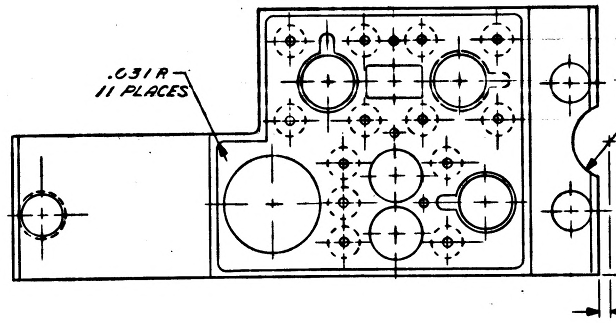
.031 R
11 PLACES
.140 R
.523
.047

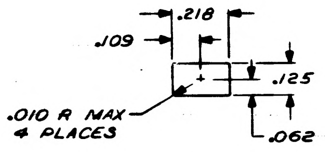
.218
.109
.125
.010 R MAX
4 PLACES
.062

DETAIL A

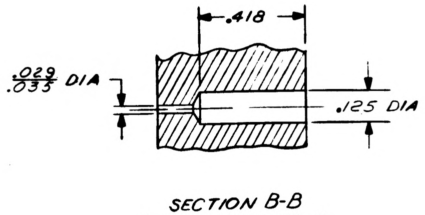
.418
.029
.033 DIA
.125 DIA

SECTION B-B
13 HOLES MARKED C

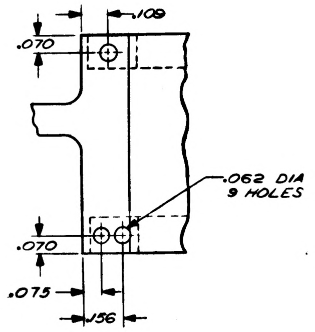
.109
.070
.062 DIA
9 HOLES
.070
.075
.156

VIEW A-A

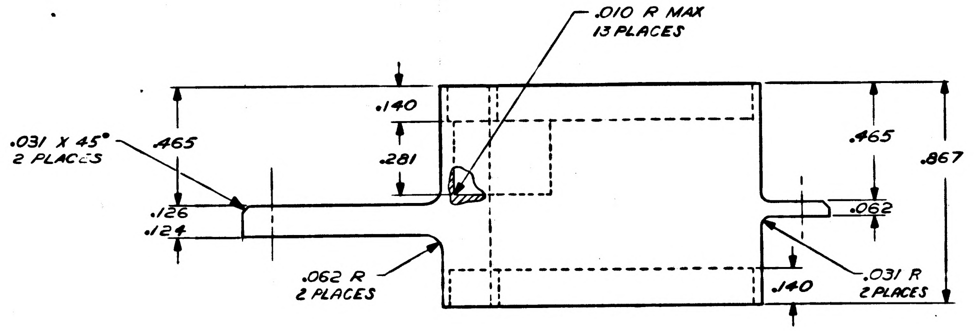
.010 R MAX
13 PLACES
.031 X 45°
2 PLACES
.465
.140
.281
.126
.124
.062 R
2 PLACES
.465
.867
.062
.031 R
2 PLACES
.140

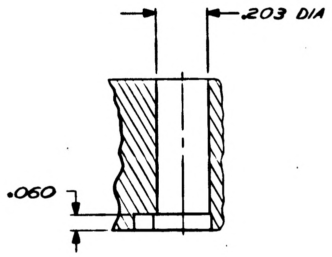

SECTION A-A

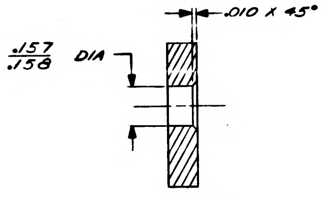
.010 X 45°
.157
.158 DIA

SECTION C-C

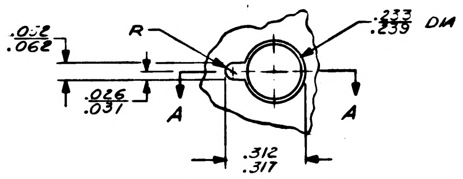
R
.233
.239 DIA
.052
.062
.026
.031
A
A
.312
.317

DETAIL B
3 HOLES MARKED D

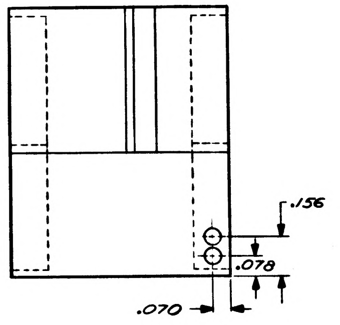

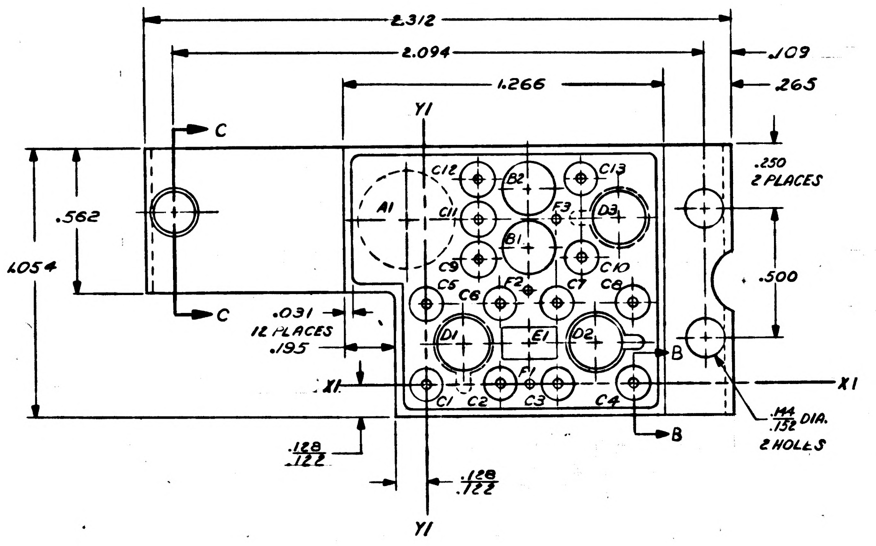
2.312
2.094
1.266
.109
.265
Y1
C
C
.562
1.054
.250
2 PLACES
.500
A1
B2
B1
C12
C13
C11
F3
D3
C5
C9
C10
C6
F2
C7
C8
D1
E1
D2
F1
C1
C2
C3
C4
.031
12 PLACES
.195
X1
X1
B
B
.144
.132 DIA.
2 HOLES
.128
.122
.128
.122
Y1

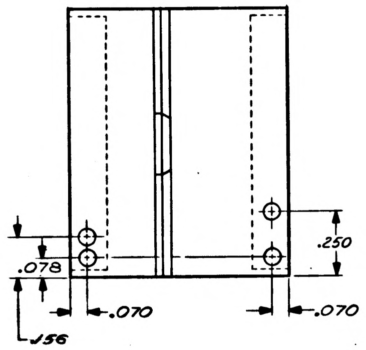
.250
.078
.070
.070
.156

NOTES
1. MATL: G-10 PLASTIC SHEET PER MIL-P-18177 TYPE GEE
2. REMOVE SHARP EDGES

A
A

INTERPRET DRAWING IN ACCORDANCE WITH STANDARDS PRESCRIBED BY MIL-D-70327

QTY REQD	PART OR IDENTIFYING NO.	NOMENCLATU DESCRIPTI		
LIST OF MATERIALS				

NEXT ASSY	USED ON	UNLESS OTHERWISE SPECIFIED DIMENSIONS ARE IN INCHES TOLERANCES ON FRACTIONS ± DECIMALS ±.005 ANGLES ±0°30' DO NOT SCALE THIS DRAWING	MIT INSTRUMENTATION LAB CAMBRIDGE MASS	MANNED SPACECR HOUSTON T
APPLICATION		MATERIAL SEE NOTE 1	DRAWN R. W. D. Glas DATE 19 AUG 63 CHECKED R. Edwards 29 Aug 63 APPROVAL APPROVAL APPROVAL	HOLDER, CO AGC POWER STA
		HEAT TREATMENT NONE	NASA APPROVAL MIT APPROVAL	CODE IDENT NO —— SIZE J 10
		FINAL FINISH NONE	MIT APPROVAL	SCALE 2/1 WT

ANY USE OF THIS DOCUMENT FOR OTHER THAN GOVERNMENTAL PURPOSES IS SUBJECT TO PRIOR WRITTEN CONSENT OF RAYTHEON CO.

NOTICE – WHEN GOVERNMENT DRAWINGS, SPECIFICATIONS, OR OTHER DATA ARE USED FOR ANY PURPOSE OTHER THAN IN CONNECTION WITH A DEFINITELY RELATED GOVERNMENT PROCUREMENT OPERATION, THE UNITED STATES GOVERNMENT THEREBY INCURS NO RESPONSIBILITY NOR ANY OBLIGATION WHATSOEVER; AND THE FACT THAT THE GOVERNMENT MAY HAVE FORMULATED, FURNISHED, OR IN ANY WAY SUPPLIED THE SAID DRAWINGS, SPECIFICATIONS OR OTHER DATA IS NOT TO BE REGARDED BY IMPLICATION OR OTHERWISE AS IN ANY MANNER LICENSING THE HOLDER OR ANY OTHER PERSON OR CORPORATION, OR CONVEYING ANY RIGHTS OR PERMISSION TO MANUFACTURE, USE, OR SELL ANY PATENTED INVENTION THAT MAY IN ANY WAY BE RELATED THERETO.

REVISIONS 63621

SYM	DESCRIPTION	DATE	APPROVED
A	REVISED PER TDRR 04324	10-30-63	

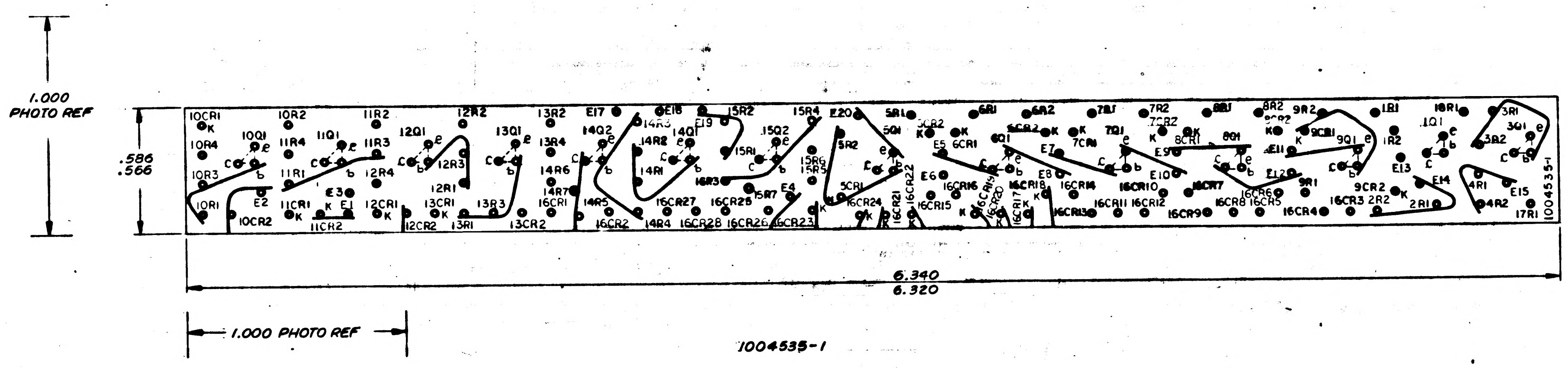

1004535-1

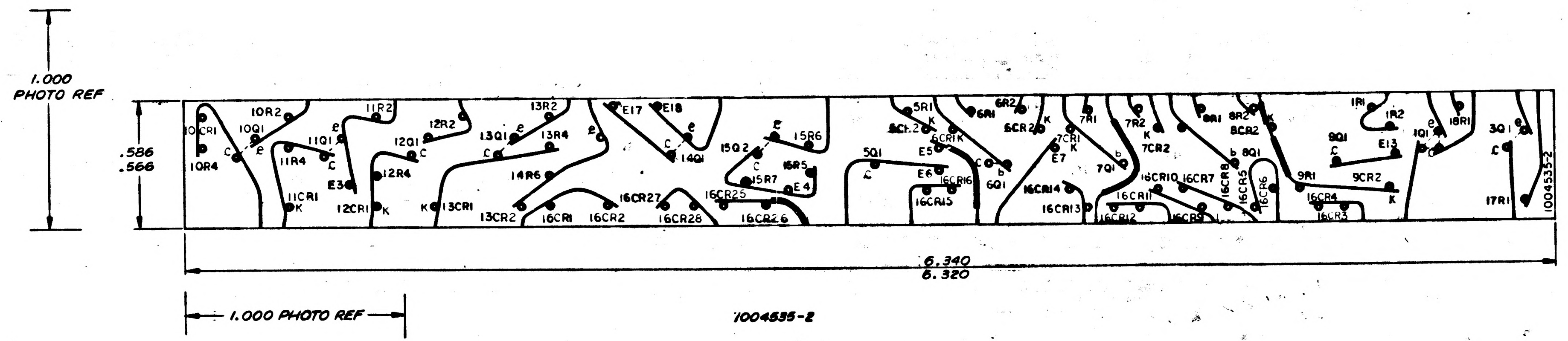

1004535-2

NOTES
1. MATL: .006/.008 THICK PLASTIC SHEET, SENSITIZED DIMENSIONALLY STABLE PER L-F-340 TYPE IB, CLASS II, STYLE IA
2. MAKE MASTER PATTERN POSITIVE FILMS TO DIMENSIONS SHOWN
3. ORIGINAL OF THIS DRAWING OR REPRODUCTION MADE BY PROCESS OR METHOD SHALL INSURE DIMENSIONAL STABILITY. DIMENSIONAL VARIATIONS SHALL NOT EXCEED .001 INCH PER FOOT
4. ● DENOTES $\frac{.038}{.042}$ DIA HOLES THRU PLASTIC SHEET

QTY REQD	PART OR IDENTIFYING NO.	NOMENCLATURE OR DESCRIPTION	FIND NO.

LIST OF MATERIALS

1003530	
NEXT ASSY	USED ON
APPLICATION	

UNLESS OTHERWISE SPECIFIED DIMENSIONS ARE IN INCHES
TOLERANCES ON
FRACTIONS ± — DECIMALS ± — ANGLES ± —
DO NOT SCALE THIS DRAWING
MATERIAL: SEE NOTE 1
HEAT TREATMENT: NONE
FINAL FINISH: NONE

MIT INSTRUMENTATION LAB
CAMBRIDGE, MASS.
DRAWN A. Hutchinson DATE 20 XI 63
CHECKED A. R. Bogan 26 XI 63
APPROVAL T. J. Lawton 1 Jan 64
APPROVAL W. B. Tanner 2 Jan 64
APPROVAL
NASA APPROVAL W. J. Wilson 10-3-63
MIT APPROVAL
MIT APPROVAL W. Lapp 3 Jan 63

MANNED SPACECRAFT CENTER
HOUSTON, TEXAS

INSULATOR
DECODING MODULE
AGC DSKY NAV & MAIN

CODE IDENT NO. —
SIZE F
NASA DRAWING NO. 1004535
SCALE 4/1
WT
SHEET 1 OF 1

INTERPRET DRAWING IN ACCORDANCE WITH STANDARDS PRESCRIBED BY MIL-D-70327

INCHES
PHOTOGRAPHIC SCALE ONLY

ANY USE OF THIS DOCUMENT FOR OTHER THAN GOVERNMENTAL PURPOSES IS SUBJECT TO PRIOR WRITTEN CONSENT OF RAYTHEON CO.

NOTICE — WHEN GOVERNMENT DRAWINGS, SPECIFICATIONS, OR OTHER DATA ARE USED FOR ANY PURPOSE OTHER THAN IN CONNECTION WITH A DEFINITELY RELATED GOVERNMENT PROCUREMENT OPERATION, THE UNITED STATES GOVERNMENT THEREBY INCURS NO RESPONSIBILITY NOR ANY OBLIGATION WHATSOEVER; AND THE FACT THAT THE GOVERNMENT MAY HAVE FORMULATED, FURNISHED, OR IN ANY WAY SUPPLIED THE SAID DRAWINGS, SPECIFICATIONS OR OTHER DATA IS NOT TO BE REGARDED BY IMPLICATION OR OTHERWISE AS IN ANY MANNER LICENSING THE HOLDER OR ANY OTHER PERSON OR CORPORATION OR CONVEYING ANY RIGHTS OR PERMISSION TO MANUFACTURE, USE, OR SELL ANY PATENTED INVENTION THAT MAY IN ANY WAY BE RELATED THERETO.

REVISIONS 63621

SYM	DESCRIPTION	DATE	APPROVED
A	REVISED PER TDRR 04324	10-30-63	W.
B	REVISED PER TDRR 05778	1-24-64	WK

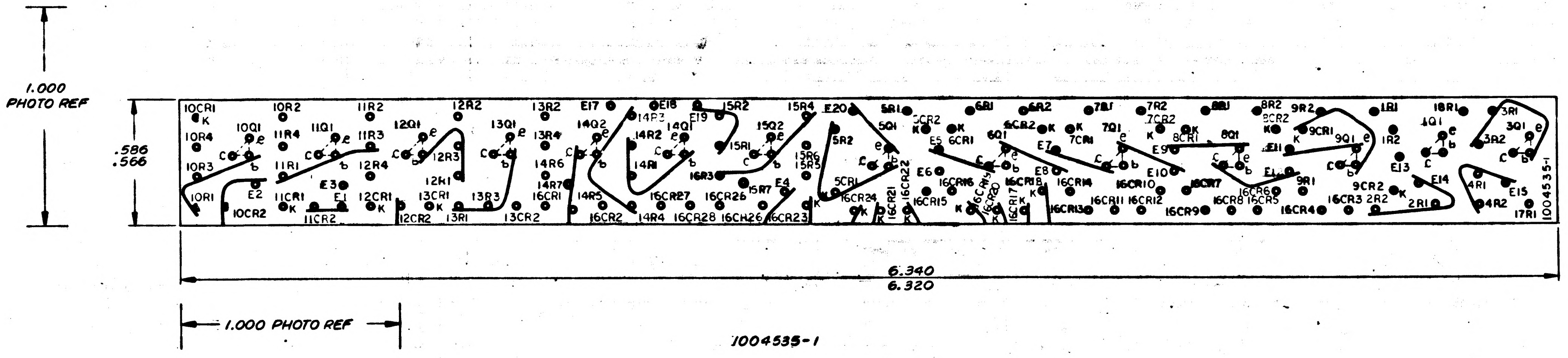
1.000 PHOTO REF
.586
.566
10CR1
K
10R4
10R2
10Q1
e
C
b
10R3
10R1
10CR2
E2
11R4
11Q1
11R2
11R3
11R1
11CR1
E3
E1
11CR2
12Q1
12R2
12R3
12R4
12R1
12CR1
12CR2
13Q1
13R2
13R4
13R3
13R1
13CR1
13CR2
E17
14Q2
14R3
14R6
14R7
14R5
16CR1
16CR2
14R4
E18
E19
14R2
14Q1
14R1
16CR27
16CR28
15R2
15R1
15Q2
16R3
15R7
16CR26
16CH26
16CR23
15R4
15R6
15R5
E4
E20
5R2
5R1
5Q1
5CR1
16CR24
16CR21
16CR22
5CR2
E5
6CR1
E6
16CR16
16CR15
6R1
6Q1
6R2
6CR2
16CR19
16CR20
16CR17
16CR18
E7
E8
7R1
7Q1
7CR1
7R2
7CR2
16CR14
16CR13
E9
E10
8CR1
8R1
8Q1
16CR10
16CR11
16CR12
16CR9
16CR7
16CR8
8R2
8CR2
E11
E12
16CR6
16CR5
9R2
9CR1
9Q1
9R1
9CR2
16CR4
16CR3
1R1
1R2
E13
2R2
2R1
18R1
1Q1
E14
4R1
4R2
3R1
3R2
3Q1
E15
17R1
1004535-1
6.340
6.320
1.000 PHOTO REF

1004535-1

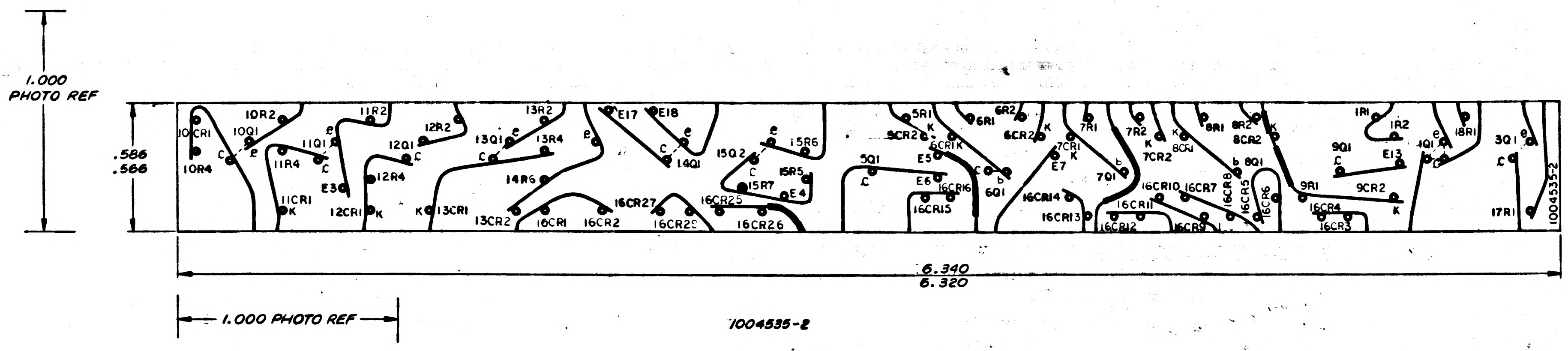
1.000
PHOTO REF
.586
.566
10CR1
10R4
10R2
10Q1
C
e
11R4
11Q1
11R2
11CR1
K
E3
12CR1
12R4
12Q1
12R2
K
13CR1
13CR2
13Q1
13R2
13R4
14R6
16CR1
16CR2
E17
E18
14Q1
16CR27
16CR29
15Q2
15R6
15R5
15R7
E4
16CR25
16CR26
5Q1
5R1
5CR2
6CR1K
E5
E6
16CR16
16CR15
6R1
6Q1
6R2
6CR2
7CR1
E7
7R1
7Q1
16CR14
16CR13
7R2
7CR2
8CR1
8R1
8R2
8CR2
8Q1
16CR10
16CR7
16CR11
16CR12
16CR9
16CR8
16CR5
16CR6
9Q1
9R1
9CR2
16CR4
16CR3
1R1
1R2
E13
1Q1
18R1
3Q1
17R1
1004535-2
6.340
6.320
1.000 PHOTO REF

1004535-2

NOTES
1. MATL: .006/.008 THICK PLASTIC SHEET, SENSITIZED DIMENSIONALLY STABLE PER L-F-340 TYPE IB, CLASS II, STYLE IA
2. MAKE MASTER PATTERN POSITIVE FILMS TO DIMENSIONS SHOWN
3. ORIGINAL OF THIS DRAWING OR REPRODUCTION MADE BY PROCESS OR METHOD SHALL INSURE DIMENSIONAL STABILITY. DIMENSIONAL VARIATIONS SHALL NOT EXCEED .001 INCH PER FOOT
4. ● DENOTES $\frac{.038}{.042}$ DIA HOLES THRU PLASTIC SHEET

QTY REQD	PART OR IDENTIFYING NO.	NOMENCLATURE OR DESCRIPTION	FIND NO

LIST OF MATERIALS

1003530	
NEXT ASSY	USED ON
APPLICATION	

UNLESS OTHERWISE SPECIFIED
DIMENSIONS ARE IN INCHES
TOLERANCES ON
FRACTIONS ± — DECIMALS ± — ANGLES ± —
DO NOT SCALE THIS DRAWING
MATERIAL SEE NOTE 1
HEAT TREATMENT NONE
FINAL FINISH NONE

MIT
INSTRUMENTATION LAB
CAMBRIDGE, MASS.
DRAWN [illegible] DATE 20JUL63
CHECKED A.R. [illegible]
APPROVAL T. J. [illegible]
APPROVAL W. B. [illegible]
APPROVAL
NASA APPROVAL W. J. [illegible] 10-3-63
MIT APPROVAL
MIT APPROVAL W. [illegible] 3 Oct 63

MANNED SPACECRAFT CENTER
HOUSTON, TEXAS

INSULATOR
DECODING MODULE
AGC DSKY NAV & MAIN

CODE IDENT NO. — SIZE F NASA DRAWING NO. 1004535
SCALE 4/1 WT SHEET 1 OF 1

INTERPRET DRAWING IN ACCORDANCE WITH STANDARDS PRESCRIBED BY MIL-D-70327

1004535 C 2

ANY USE OF THIS DOCUMENT FOR OTHER THAN GOVERNMENTAL PURPOSES IS SUBJECT TO PRIOR WRITTEN CONSENT OF RAYTHEON CO.

NOTICE — WHEN GOVERNMENT DRAWINGS, SPECIFICATIONS, OR OTHER DATA ARE USED FOR ANY PURPOSE OTHER THAN IN CONNECTION WITH A DEFINITELY RELATED GOVERNMENT PROCUREMENT OPERATION, THE UNITED STATES GOVERNMENT THEREBY INCURS NO RESPONSIBILITY NOR ANY OBLIGATION WHATSOEVER; AND THE FACT THAT THE GOVERNMENT MAY HAVE FORMULATED, FURNISHED, OR IN ANY WAY SUPPLIED THE SAID DRAWINGS, SPECIFICATIONS, OR OTHER DATA IS NOT TO BE REGARDED BY IMPLICATION OR OTHERWISE AS IN ANY MANNER LICENSING THE HOLDER OR ANY OTHER PERSON OR CORPORATION, OR CONVEYING ANY RIGHTS OR PERMISSION TO MANUFACTURE, USE, OR SELL ANY PATENTED INVENTION THAT MAY IN ANY WAY BE RELATED THERETO.

REVISIONS 63631			
SYM	DESCRIPTION	DATE	APPROVED
A	REVISED PER TDRR 04224	10-30-63	
B	REVISED PER TDRR 05778	1-28-64	
C	REVISED PER TDRR 07498 DR Economou CHK R.H. Edwards	4/2/64	

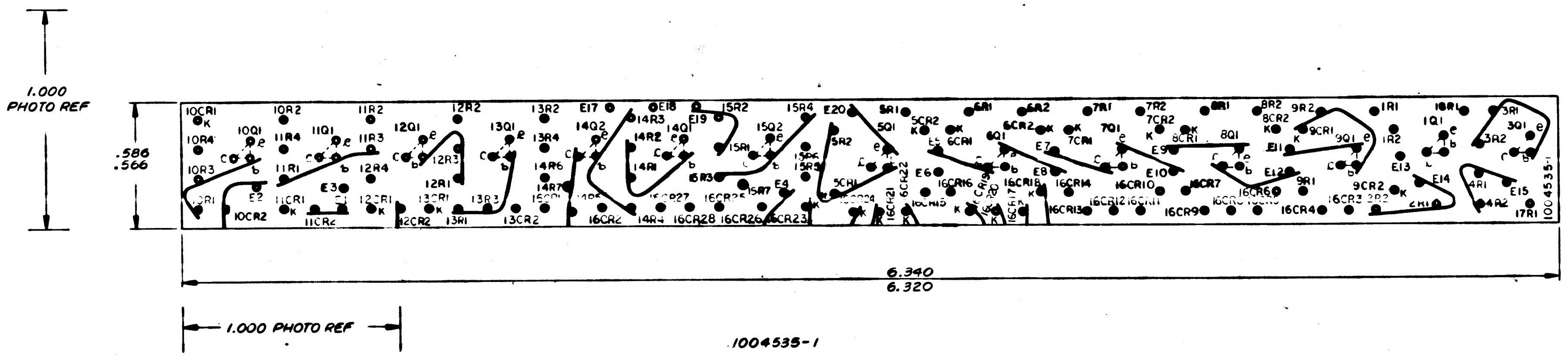
1.000
PHOTO REF
.586
.566
6.340
6.320
1.000 PHOTO REF
10CR1
10R2
11R2
12R2
13R2
E17
E18
E19
15R2
15R4
E20
5R1
6R1
6R2
7R1
7R2
8R1
8R2
9R2
1R1
18R1
3R1
10R4
10Q1
11R4
11Q1
11R3
12Q1
13Q1
13R4
14Q2
14R3
14Q1
14R2
15Q2
5R2
5Q1
5CR2
6CR2
6CR1
6Q1
7CR1
7Q1
7CR2
8CR1
8Q1
8CR2
9CR1
9Q1
1R2
1Q1
3Q1
3R2
10R3
11R1
12R4
12R3
14R6
14R1
15R1
15R6
15R5
15R3
E3
E4
E5
E6
E7
E8
E9
E10
E11
E12
E13
E14
E15
9R1
9CR2
4R1
4R2
17R1
10CR2
11CR1
11CR2
12CR1
12CR2
12R1
13R1
13R3
13CR1
13CR2
14R7
14R4
16CR2
16CR28
16CR26
16CR23
16CR27
16CR16
16CR18
16CR14
16CR15
16CR13
16CR12
16CR10
16CR11
16CR7
16CR9
16CR6
16CR4
16CR3
1004535-1

1004535-1

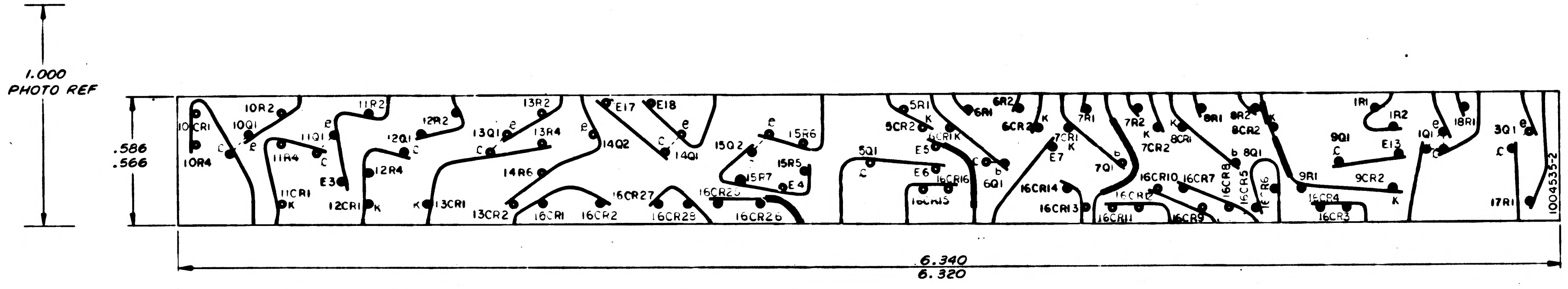
1.000
PHOTO REF
.586
.566
6.340
6.320
1.000 PHOTO REF
10CR1
10R2
10Q1
10R4
11R2
11Q1
11R4
11CR1
E3
12R2
12Q1
12R4
12CR1
13R2
13Q1
13R4
13CR1
13CR2
14R6
14Q2
14Q1
E17
E18
15Q2
15R6
15R5
15R7
E4
5R1
5CR2
5Q1
E5
E6
6R1
6R2
6CR1
6CR2
6Q1
7R1
7CR1
7Q1
7R2
7CR2
E7
8R1
8R2
8CR1
8CR2
8Q1
9Q1
9R1
9CR2
1R1
1R2
1Q1
E13
18R1
3Q1
17R1
16CR1
16CR2
16CR27
16CR25
16CR26
16CR16
16CR15
16CR14
16CR13
16CR10
16CR7
16CR8
16CR5
16CR11
16CR9
16CR4
16CR3
1004535-2

1004535-2

NOTES

1. MATL: .006/.008 THICK PLASTIC SHEET, SENSITIZED DIMENSIONALLY STABLE PER L-F-340 TYPE IB, CLASS II, STYLE IA
2. MAKE MASTER PATTERN POSITIVE FILMS TO DIMENSIONS SHOWN
3. ORIGINAL OF THIS DRAWING OR REPRODUCTION MADE BY PROCESS OR METHOD SHALL INSURE DIMENSIONAL STABILITY. DIMENSIONAL VARIATIONS SHALL NOT EXCEED .001 INCH PER FOOT
4. ● DENOTES $\frac{.038}{.042}$ DIA HOLES THRU PLASTIC SHEET

QTY REQD	PART OR IDENTIFYING NO.	NOMENCLATURE OR DESCRIPTION	FIND NO

LIST OF MATERIALS

1003530	
NEXT ASSY	USED ON
APPLICATION	

UNLESS OTHERWISE SPECIFIED
DIMENSIONS ARE IN INCHES
TOLERANCES ON
FRACTIONS ± — DECIMALS ± — ANGLES ± —
DO NOT SCALE THIS DRAWING
MATERIAL SEE NOTE 1
HEAT TREATMENT NONE
FINAL FINISH NONE

MIT INSTRUMENTATION LAB
CAMBRIDGE, MASS.
DRAWN A. Hathaway DATE 20JUL63
CHECKED A.R. Bergen 26JUL1963
APPROVAL T.J. Flanner 1Aug1/63
APPROVAL W.B. Turner 2OCT63
APPROVAL
NASA APPROVAL W.J. Rhine 10-3-63
MIT APPROVAL
MIT APPROVAL 3 Oct 63

MANNED SPACECRAFT CENTER
HOUSTON, TEXAS

INSULATOR
DECODING MODULE
AGC DSKY NAV & MAIN

CODE IDENT NO. —— SIZE F NASA DRAWING NO 1004535
SCALE 4/1 WT SHEET 1 OF 1

INTERPRET DRAWING IN ACCORDANCE WITH STANDARDS PRESCRIBED BY MIL-D-70327

1004535 C

1004535

ANY USE OF THIS DOCUMENT FOR OTHER THAN GOVERNMENTAL PURPOSES IS SUBJECT TO PRIOR WRITTEN CONSENT OF RAYTHEON CO.

REVISIONS 63621			
SYM	DESCRIPTION	DATE	APPROVED

NOTICE — WHEN GOVERNMENT DRAWINGS, SPECIFICATIONS, OR OTHER DATA ARE USED FOR ANY PURPOSE OTHER THAN IN CONNECTION WITH A DEFINITELY RELATED GOVERNMENT PROCUREMENT OPERATION, THE UNITED STATES GOVERNMENT THEREBY INCURS NO RESPONSIBILITY NOR ANY OBLIGATION WHATSOEVER; AND THE FACT THAT THE GOVERNMENT MAY HAVE FORMULATED, FURNISHED, OR IN ANY WAY SUPPLIED THE SAID DRAWINGS, SPECIFICATIONS OR OTHER DATA IS NOT TO BE REGARDED BY IMPLICATION OR OTHERWISE AS IN ANY MANNER LICENSING THE HOLDER OR ANY OTHER PERSON OR CORPORATION OR CONVEYING ANY RIGHTS OR PERMISSION TO MANUFACTURE, USE, OR SELL ANY PATENTED INVENTION THAT MAY IN ANY WAY BE RELATED THERETO.

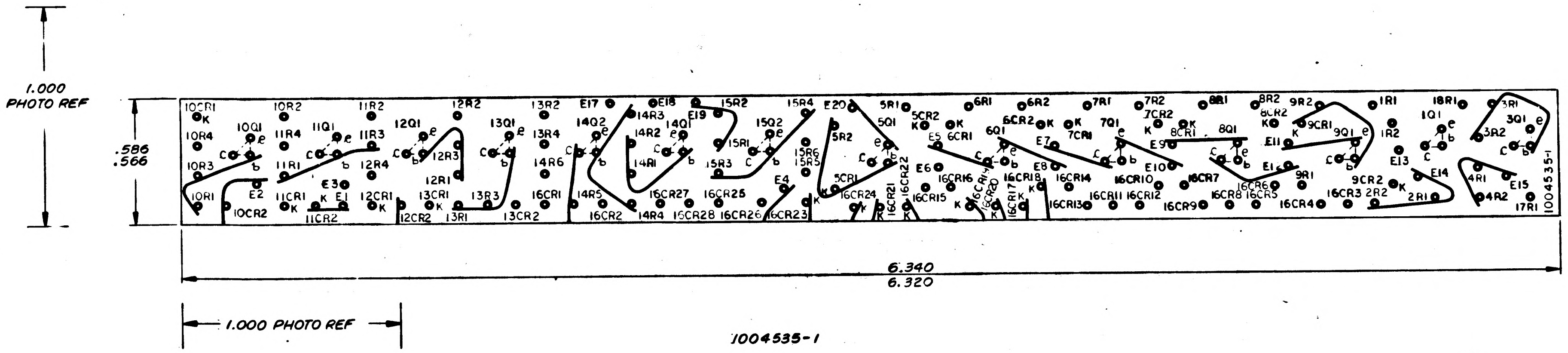
1.000 PHOTO REF
.586
.566
6.340
6.320
1.000 PHOTO REF
1004535-1
10CR1
10R2
11R2
12R2
13R2
E17
E18
15R2
15R4
E20
5R1
6R1
6R2
7R1
7R2
8R1
8R2
9R2
1R1
18R1
3R1
3Q1
10Q1
11Q1
12Q1
13Q1
14Q2
14Q1
15Q2
5Q1
6Q1
7Q1
8Q1
9Q1
1Q1
E1
E2
E3
E4
E5
E6
E7
E8
E9
E10
E11
E13
E14
E15
17R1
16CR23
16CR24
16CR25
16CR26
16CR27
16CR28

1004535-1

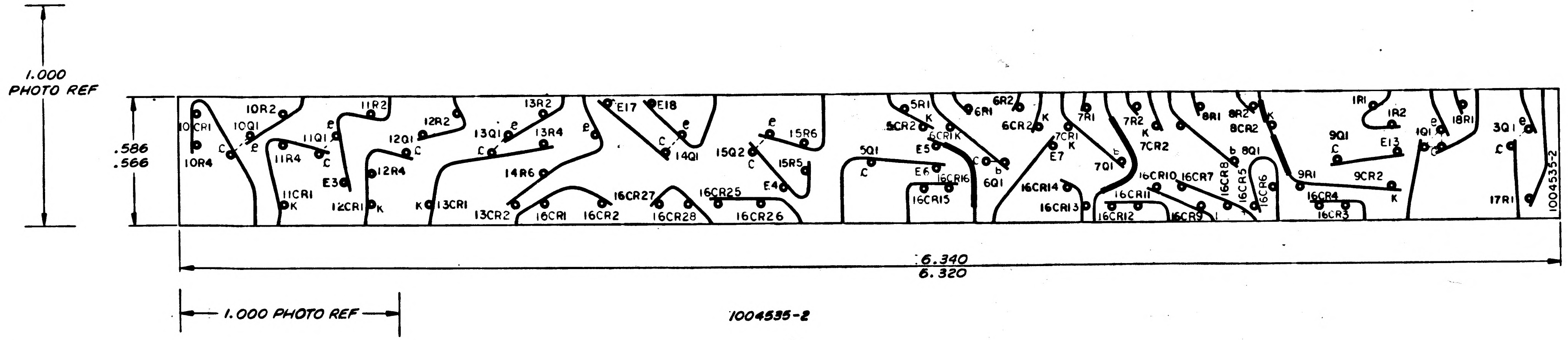
1.000 PHOTO REF
.586
.566
6.340
6.320
1.000 PHOTO REF
1004535-2
10CR1
10R2
10Q1
10R4
11Q1
11R2
11R4
11CR1
12R2
12Q1
12R4
12CR1
13R2
13Q1
13R4
13CR1
13CR2
E17
E18
14Q1
14R6
15Q2
15R6
15R5
5R1
5CR2
6R1
6R2
6CR2
7R1
7R2
7CR2
8R1
8R2
8CR2
8Q1
9Q1
9R1
9CR2
1R1
1R2
1Q1
18R1
3Q1
17R1
E3
E4
E5
E6
E7
E13
16CR1
16CR2
16CR25
16CR26
16CR27
16CR28
16CR14
16CR13
16CR12
16CR15
16CR16
16CR10
16CR7
16CR4
16CR3

1004535-2

NOTES
1. MATL: .006/.008 THICK PLASTIC SHEET, SENSITIZED DIMENSIONALLY STABLE PER L-F-340 TYPE IB, CLASS II, STYLE IA
2. MAKE MASTER PATTERN POSITIVE FILMS TO DIMENSIONS SHOWN
3. ORIGINAL OF THIS DRAWING OR REPRODUCTION MADE BY PROCESS OR METHOD SHALL INSURE DIMENSIONAL STABILITY. DIMENSIONAL VARIATIONS SHALL NOT EXCEED .001 INCH PER FOOT
4. ● DENOTES $\frac{.038}{.042}$ DIA HOLES THRU PLASTIC SHEET

QTY REQD	PART OR IDENTIFYING NO.	NOMENCLATURE OR DESCRIPTION	FIND NO
LIST OF MATERIALS			

1003530	
NEXT ASSY	USED ON
APPLICATION	

UNLESS OTHERWISE SPECIFIED DIMENSIONS ARE IN INCHES
TOLERANCES ON
FRACTIONS ± — DECIMALS ± — ANGLES ± —
DO NOT SCALE THIS DRAWING
MATERIAL SEE NOTE 1
HEAT TREATMENT NONE
FINAL FINISH NONE

MIT INSTRUMENTATION LAB CAMBRIDGE MASS
DWG. NO.
CONTRACT
DRAWN A. Hutchinson DATE 20 XI 63
CHECKED A.R. Bogan 26 XI 63
APPROVAL T. J. Thomas 1 Oct 63
APPROVAL W.B. Turner 2 Oct 63
APPROVAL
NASA APPROVAL W.J. Rhine 10-9-63
MIT APPROVAL
MIT APPROVAL W. Kupfer 3 Oct 63

MANNED SPACECRAFT CENTER
HOUSTON, TEXAS

INSULATOR
DECODING MODULE

CODE IDENT NO.	SIZE	NASA DRAWING NO.
—	F	1004535
SCALE 4/1	WT	SHEET 1 OF 1

INTERPRET DRAWING IN ACCORDANCE WITH STANDARDS PRESCRIBED BY MIL-D-70327

1004535

1004536|A

ANY USE OF THIS DOCUMENT FOR OTHER THAN GOVERNMENTAL PURPOSES IS SUBJECT TO PRIOR WRITTEN CONSENT OF RAYTHEON CO.

REVISIONS 03621			
SYM	DESCRIPTION	DATE	APPROVED
A	REVISED PER TDRR 04324	10-30-63	RPK

NOTICE — WHEN GOVERNMENT DRAWINGS, SPECIFICATIONS, OR OTHER DATA ARE USED FOR ANY PURPOSE OTHER THAN IN CONNECTION WITH A DEFINITELY RELATED GOVERNMENT PROCUREMENT OPERATION, THE UNITED STATES GOVERNMENT THEREBY INCURS NO RESPONSIBILITY NOR ANY OBLIGATION WHATSOEVER; AND THE FACT THAT THE GOVERNMENT MAY HAVE FORMULATED, FURNISHED, OR IN ANY WAY SUPPLIED THE SAID DRAWINGS, SPECIFICATIONS OR OTHER DATA IS NOT TO BE REGARDED BY IMPLICATION OR OTHERWISE AS IN ANY MANNER LICENSING THE HOLDER OR ANY OTHER PERSON OR CORPORATION, OR CONVEYING ANY RIGHTS OR PERMISSION TO MANUFACTURE, USE, OR SELL ANY PATENTED INVENTION THAT MAY IN ANY WAY BE RELATED THERETO.

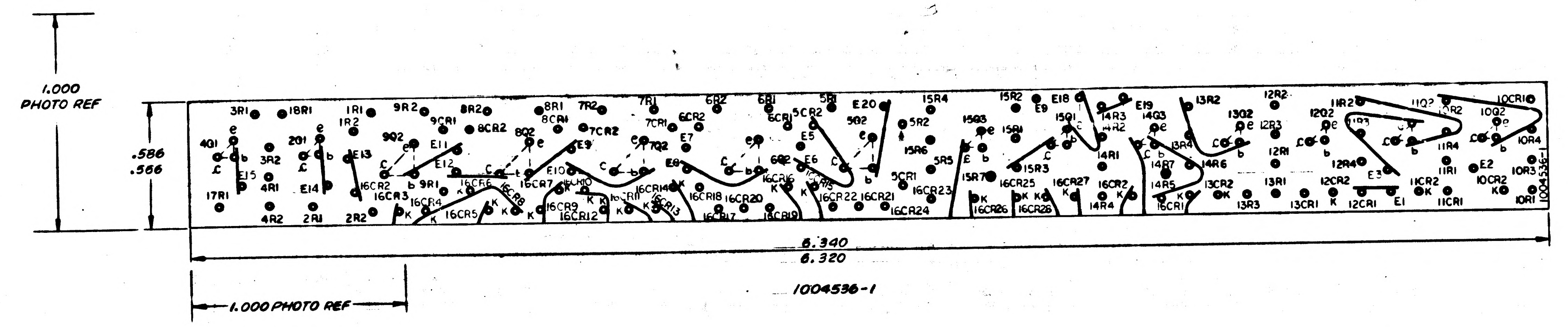
1.000
PHOTO REF
.586
.566
3R1
18R1
1R1
1R2
9R2
9CR1
8R2
8CR2
8R1
8CR1
7R2
7CR2
7R1
7CR1
6CR2
6R2
6R1
6CR1
5CR2
5R1
5Q2
E20
5R2
15R4
15R6
5R5
5CR1
15R2
E9
E18
15Q3
15R1
15Q1
14R3
14R2
E19
14Q3
13R2
13Q2
12R3
12R2
12Q2
11R2
11R3
11Q2
10R2
10Q2
10CR1
10R4
4Q1
E15
3R2
2Q1
4R1
E14
E13
9Q2
E11
E12
8Q2
E10
E9
7Q2
E7
E8
E5
E6
6Q2
17R1
4R2
2R1
2R2
16CR2
16CR3
9R1
16CR4
16CR5
16CR6
16CR8
16CR7
16CR9
16CR10
16CR11
16CR12
16CR13
16CR14
16CR17
16CR18
16CR20
16CR19
16CR16
16CR15
16CR22
16CR21
16CR24
16CR23
15R7
15R3
16CR25
16CR26
16CR28
16CR27
16CR2
14R1
14R4
14R7
14R5
14R6
13R4
16CR1
13CR2
13R3
13R1
13CR1
12R1
12CR2
12R4
12CR1
E3
E1
11CR2
11R4
11R1
11CR1
E2
10CR2
10R3
10R1
e
b
c
K
1004536-1
6.340
6.320
1.000 PHOTO REF

1004536-1

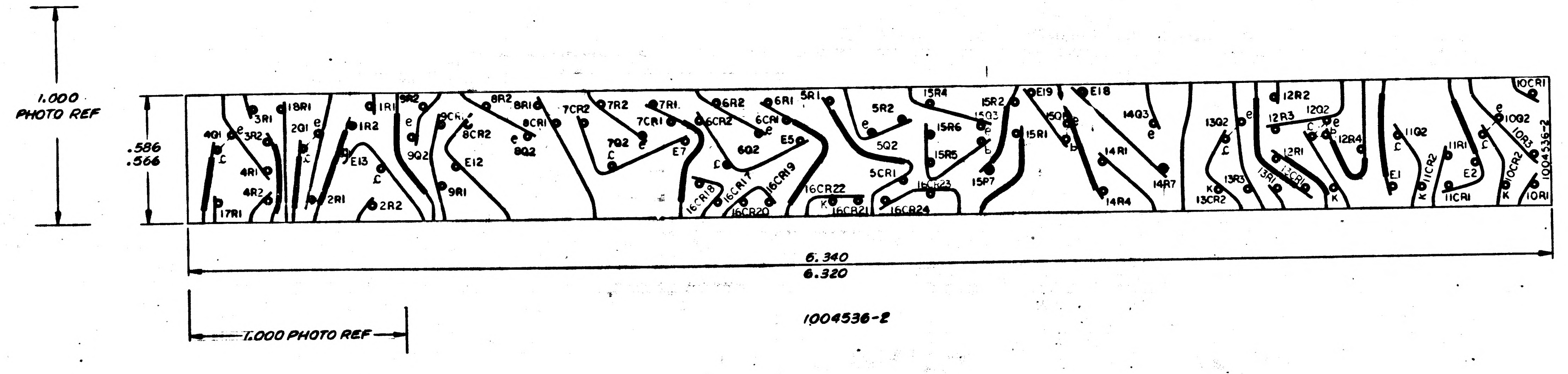
1.000
PHOTO REF
.586
.566
4Q1
3R1
18R1
3R2
2Q1
1R1
1R2
9R2
9Q2
9CR1
8CR2
8R2
8R1
8CR1
8Q2
7CR2
7R2
7R1
7CR1
7Q2
E7
6CR2
6R2
6R1
6CR1
6Q2
E5
5R1
5R2
5Q2
5CR1
15R4
15R6
15R5
15Q3
15R2
15P7
15R1
15Q1
E19
E18
14Q3
14R1
14R4
14R7
13Q2
13R3
13CR2
13R1
13CR1
12R2
12R3
12Q2
12R1
12R4
11Q2
E1
11CR2
11R1
E2
11CR1
10CR1
10Q2
10R3
10CR2
10R1
4R1
4R2
17R1
E13
2R1
2R2
E12
9R1
16CR18
16CR17
16CR19
16CR20
16CR22
16CR21
16CR23
16CR24
e
b
c
K
1004536-2
6.340
6.320
1.000 PHOTO REF

1004536-2

NOTES

1. MATL: .006/.008 THICK PLASTIC SHEET, SENSITIZED DIMENSIONALLY STABLE PER L-F-340 TYPE IB, CLASS II, STYLE IA
2. MAKE MASTER PATTERN POSITIVE FILMS TO DIMENSIONS SHOWN
3. ORIGINAL OF THIS DRAWING OR REPRODUCTION MADE BY PROCESS OR METHOD SHALL INSURE DIMENSIONAL STABILITY. DIMENSIONAL VARIATIONS SHALL NOT EXCEED .001 INCH PER FOOT
4. ● DENOTES $\frac{.038}{.042}$ DIA HOLES THRU PLASTIC SHEET

QTY REQD	PART OR IDENTIFYING NO.	NOMENCLATURE OR DESCRIPTION	FIND NO

LIST OF MATERIALS

NEXT ASSY	USED ON
1003530	

APPLICATION

UNLESS OTHERWISE SPECIFIED DIMENSIONS ARE IN INCHES
TOLERANCES ON
FRACTIONS ± DECIMALS ± ANGLES ±
DO NOT SCALE THIS DRAWING
MATERIAL SEE NOTE 1
HEAT TREATMENT NONE
FINAL FINISH NONE

MIT INSTRUMENTATION LAB
CAMBRIDGE, MASS
DRAWN PS Drury DATE
CHECKED 26AUG63
APPROVAL
APPROVAL
APPROVAL
NASA APPROVAL 10-3-63
MIT APPROVAL
MIT APPROVAL 3 Oct 63

MANNED SPACECRAFT CENTER
HOUSTON, TEXAS

INSULATOR
DECODING MODULE
AGC DSKY, NAV & MAIN

CODE IDENT NO. —
SIZE F
NASA DRAWING NO. 1004536
SCALE 4/1
WT
SHEET 1 OF 1

INTERPRET DRAWING IN ACCORDANCE WITH STANDARDS PRESCRIBED BY MIL-D-70327

1004536 A

INCHES
PHOTOGRAPHIC SCALE ONLY

1004536 B

NOTICE — WHEN GOVERNMENT DRAWINGS, SPECIFICATIONS, OR OTHER DATA ARE USED FOR ANY PURPOSE OTHER THAN IN CONNECTION WITH A DEFINITELY RELATED GOVERNMENT PROCUREMENT OPERATION, THE UNITED STATES GOVERNMENT THEREBY INCURS NO RESPONSIBILITY NOR ANY OBLIGATION WHATSOEVER; AND THE FACT THAT THE GOVERNMENT MAY HAVE FORMULATED, FURNISHED, OR IN ANY WAY SUPPLIED THE SAID DRAWINGS, SPECIFICATIONS OR OTHER DATA IS NOT TO BE REGARDED BY IMPLICATION OR OTHERWISE AS IN ANY MANNER LICENSING THE HOLDER OR ANY OTHER PERSON OR CORPORATION OR CONVEYING ANY RIGHTS OR PERMISSION TO MANUFACTURE, USE, OR SELL ANY PATENTED INVENTION THAT MAY IN ANY WAY BE RELATED THERETO.

ANY USE OF THIS DOCUMENT FOR OTHER THAN GOVERNMENTAL PURPOSES IS SUBJECT TO PRIOR WRITTEN CONSENT OF RAYTHEON CO.

REVISIONS 03621			
SYM	DESCRIPTION	DATE	APPROVED
A	REVISED PER TDRR 04344	10-30-63	a.B.Q. RPK
B	REVISED PER TDRR 05767	1-21-64	L.F.B.

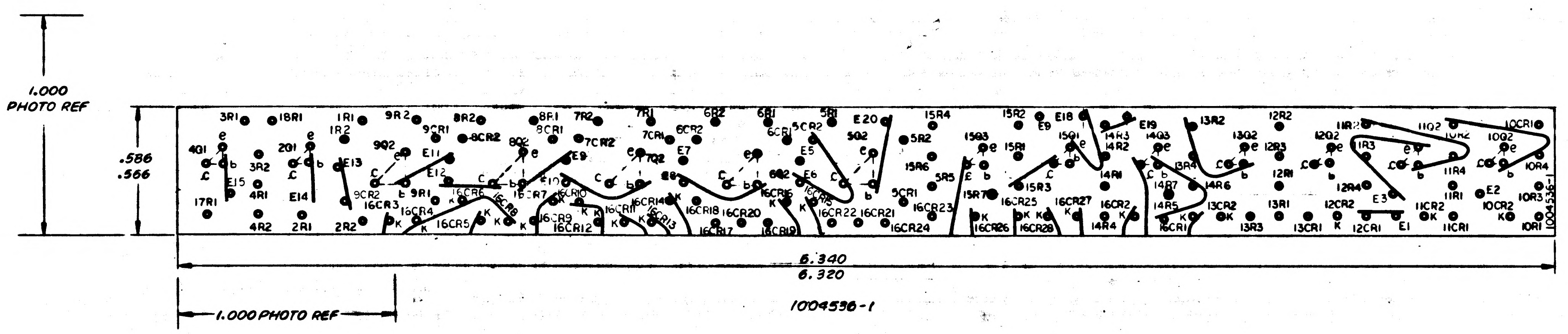

1.000 PHOTO REF
.586
.566
6.340
6.320
1.000 PHOTO REF
3R1
18R1
1R1
9R2
8R2
8R1
7R2
7R1
6R2
6R1
5R1
E20
15R4
15R2
E18
E19
13R2
12R2
11R2
11Q2
10CR1
4Q1
2Q1
3R2
4R1
E15
E14
17R1
4R2
2R1
2R2
9Q2
E13
E11
E12
9CR2
9R1
16CR3
16CR4
16CR5
8CR2
8Q2
8CR1
E10
16CR7
16CR9
16CR12
7CR2
7CR1
7Q2
E9
E8
E7
16CR14
16CR11
16CR13
16CR18
16CR20
16CR17
16CR19
6CR2
6CR1
6Q2
E6
E5
5CR2
5Q2
5R2
5R6
5R5
5CR1
16CR16
16CR22
16CR21
16CR23
16CR24
15Q3
15R1
15Q1
15R6
15R7
15R3
16CR25
16CR26
16CR28
16CR27
14R3
14Q3
14R2
14R1
14R7
14R6
14R5
14R4
16CR2
16CR1
13Q2
13R4
13CR2
13R1
13R3
13CR1
12R3
12Q2
12R1
12R4
12CR2
12CR1
E1
E3
11R3
11R4
11R1
11CR2
11CR1
10Q2
10R4
E2
10CR2
10R3
10R1
1004536-1

1004536-1

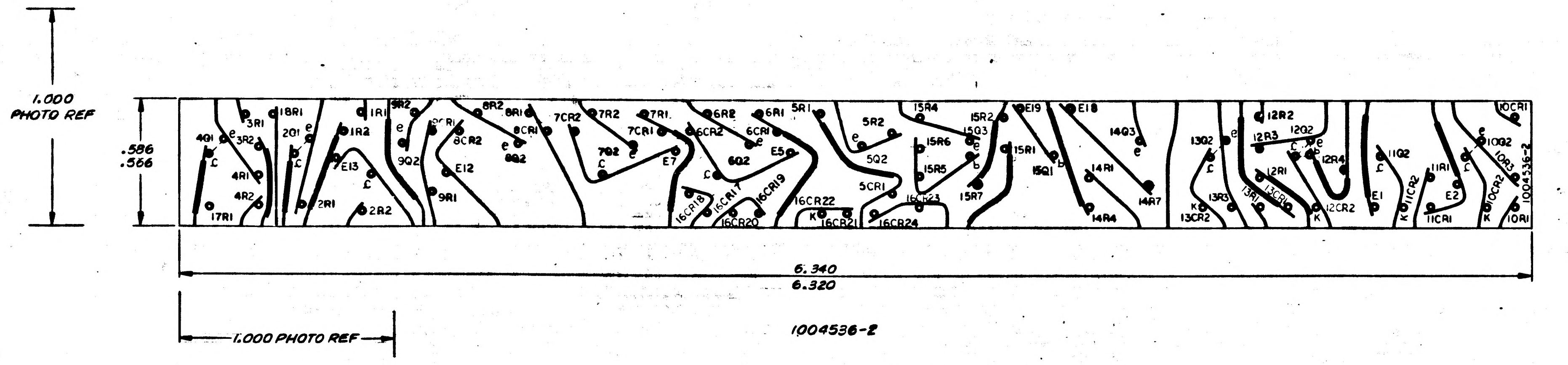

1.000 PHOTO REF
.586
.566
6.340
6.320
1.000 PHOTO REF
4Q1
3R1
3R2
18R1
2Q1
1R2
1R1
9R2
9Q2
E13
E12
9R1
2R1
2R2
4R1
4R2
17R1
8R2
8R1
8CR1
8CR2
8Q2
7CR2
7R2
7R1
7CR1
7Q2
E7
6CR2
6R2
6R1
6CR1
6Q2
E5
5R1
5R2
5Q2
5CR1
16CR18
16CR17
16CR19
16CR20
16CR22
16CR21
16CR23
16CR24
15R4
15R2
15Q3
15R6
15R5
15R7
15R1
15Q1
E19
E18
14Q3
14R1
14R7
14R4
13Q2
13R3
13CR2
12R2
12R3
12Q2
12R1
12R4
12CR2
E1
11Q2
11CR2
11R1
11CR1
E2
10CR1
10Q2
10R3
10CR2
10R1
1004536-2

1004536-2

NOTES
1. MATL: .006/.008 THICK PLASTIC SHEET, SENSITIZED DIMENSIONALLY STABLE PER L-F-340 TYPE IB, CLASS II, STYLE IA
2. MAKE MASTER PATTERN POSITIVE FILMS TO DIMENSIONS SHOWN
3. ORIGINAL OF THIS DRAWING OR REPRODUCTION MADE BY PROCESS OR METHOD SHALL INSURE DIMENSIONAL STABILITY. DIMENSIONAL VARIATIONS SHALL NOT EXCEED .001 INCH PER FOOT
4. ● DENOTES $\frac{.038}{.042}$ DIA HOLES THRU PLASTIC SHEET

QTY REQD	PART OR IDENTIFYING NO.	NOMENCLATURE OR DESCRIPTION	FIND NO

LIST OF MATERIALS

1003530	
NEXT ASSY	USED ON
APPLICATION	

UNLESS OTHERWISE SPECIFIED
DIMENSIONS ARE IN INCHES
TOLERANCES ON
FRACTIONS ± DECIMALS ± ANGLES ±
DO NOT SCALE THIS DRAWING
MATERIAL SEE NOTE 1
HEAT TREATMENT NONE
FINAL FINISH NONE

MIT
INSTRUMENTATION LAB
CAMBRIDGE, MASS.

DRAWN PS Davy DATE
CHECKED Boggi 26AU663
APPROVAL 3Sep63
APPROVAL WBTrumen 29Jul63
APPROVAL
NASA APPROVAL 10-3-63
MIT APPROVAL
MIT APPROVAL 3Oct63

MANNED SPACECRAFT CENTER
HOUSTON, TEXAS

INSULATOR
DECODING MODULE
AGC DSKY, NAV & MAIN

CODE IDENT NO. —
SIZE F
NASA DRAWING NO 1004536
SCALE 4/1
WT
SHEET 1 OF 1

INTERPRET DRAWING IN ACCORDANCE WITH STANDARDS PRESCRIBED BY MIL-D-70327

1004536 B

NOTICE — WHEN GOVERNMENT DRAWINGS, SPECIFICATIONS, OR OTHER DATA ARE USED FOR ANY PURPOSE OTHER THAN IN CONNECTION WITH A DEFINITELY RELATED GOVERNMENT PROCUREMENT OPERATION, THE UNITED STATES GOVERNMENT THEREBY INCURS NO RESPONSIBILITY NOR ANY OBLIGATION WHATSOEVER; AND THE FACT THAT THE GOVERNMENT MAY HAVE FORMULATED, FURNISHED, OR IN ANY WAY SUPPLIED THE SAID DRAWINGS, SPECIFICATIONS, OR OTHER DATA IS NOT TO BE REGARDED BY IMPLICATION OR OTHERWISE AS IN ANY MANNER LICENSING THE HOLDER OR ANY OTHER PERSON OR CORPORATION, OR CONVEYING ANY RIGHTS OR PERMISSION TO MANUFACTURE, USE, OR SELL ANY PATENTED INVENTION THAT MAY IN ANY WAY BE RELATED THERETO.

ANY USE OF THIS DOCUMENT FOR OTHER THAN GOVERNMENTAL PURPOSES IS SUBJECT TO PRIOR WRITTEN CONSENT OF RAYTHEON CO.

REVISIONS 03621

SYM	DESCRIPTION	DATE	APPROVED
A	REVISED PER TDRR 04321	10-30-63	
B	REVISED PER TDRR 05767	1-21-64	
C	REVISED PER TDRR 07498 DR ~~Economou~~ CHK R. F. Edwards	4/2/64	

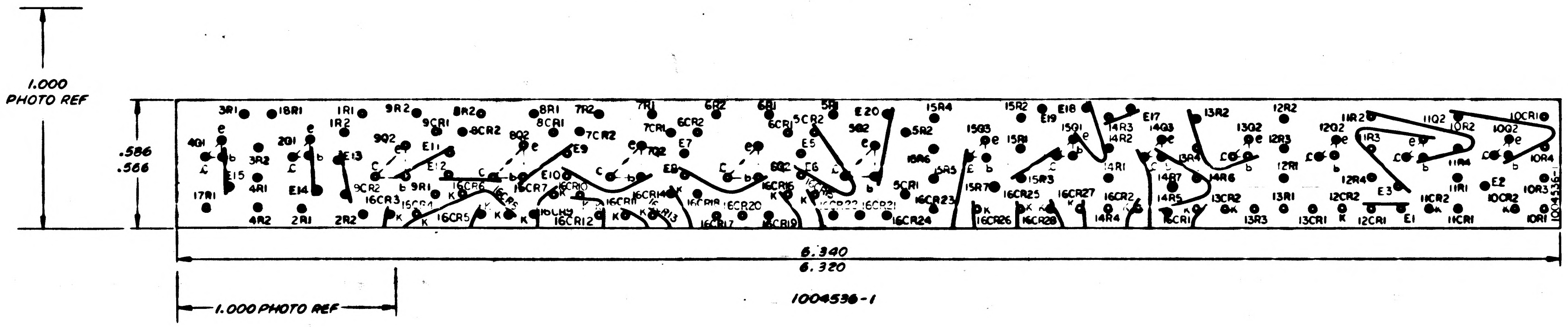
1.000 PHOTO REF
.586
.566
3R1
18R1
1R1
1R2
9R2
9CR1
8R2
8CR2
8R1
8CR1
7R2
7CR2
7R1
7CR1
6R2
6CR2
6R1
6CR1
5CR2
5R1
E20
5Q2
5R2
15R4
15R2
E19
E18
15Q3
15R1
15Q1
14R3
14R2
E17
14Q3
13R2
13Q2
12R2
12R3
12Q2
11R2
11R3
11Q2
10R2
10Q2
10CR1
4Q1
e
b
c
E15
3R2
2Q1
E13
9Q2
E11
E12
8Q2
E9
E10
7Q2
E7
E8
6Q2
E5
E6
15R6
15R5
5CR1
15R7
15R3
14R1
14R7
14R6
13R4
12R1
12R4
E3
11R4
11R1
E2
10R4
10R3
17R1
4R1
E14
9CR2
9R1
16CR3
16CR4
16CR5
16CR6
16CR7
16CR9
16CR10
16CR11
16CR12
16CR13
16CR14
16CR15
16CR16
16CR17
16CR18
16CR19
16CR20
16CR21
16CR22
16CR23
16CR24
16CR25
16CR26
16CR27
16CR28
16CR2
16CR1
14R5
14R4
13CR2
13R1
13R3
13CR1
12CR2
12CR1
E1
11CR2
11CR1
10CR2
10R1
4R2
2R1
2R2
K
1004536-1
6.340
6.320
1.000 PHOTO REF

1004536-1

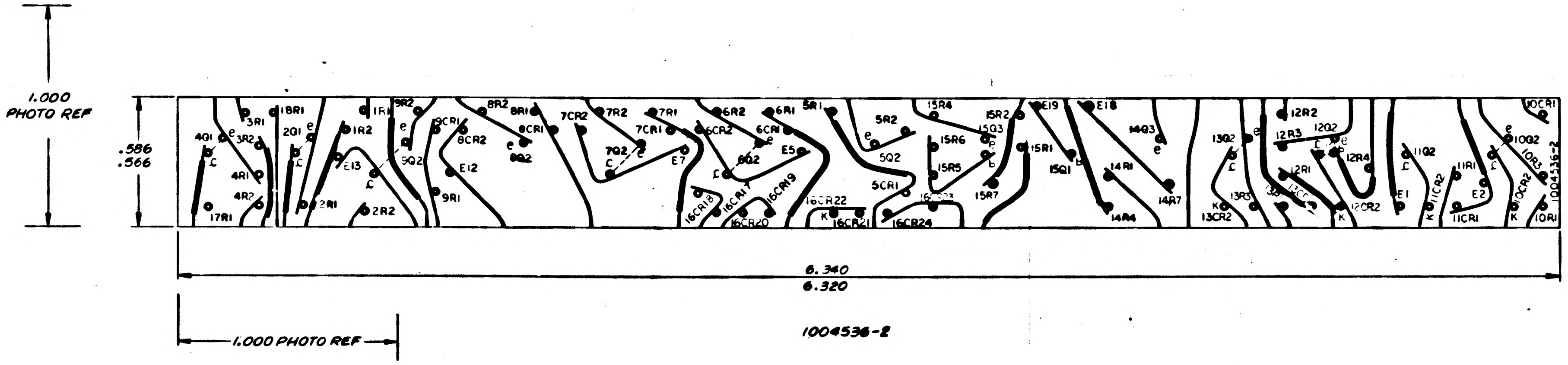
1.000 PHOTO REF
.586
.566
4Q1
3R1
18R1
3R2
2Q1
1R1
1R2
9R2
9Q2
9CR1
8CR2
8R2
8R1
8CR1
8Q2
7CR2
7R2
7R1
7CR1
7Q2
6R2
6CR2
6R1
6CR1
6Q2
E5
E7
5R1
5R2
5Q2
5CR1
15R4
15R2
15Q3
15R6
15R5
15R7
15R1
15Q1
E19
E18
14Q3
14R1
14R7
14R4
13Q2
13R3
13CR2
12R2
12R3
12Q2
12R4
12R1
12CR2
11Q2
11CR2
11R1
11CR1
E1
E2
10CR1
10Q2
10R3
10CR2
10R1
4R1
4R2
17R1
2R1
2R2
E13
E12
9R1
16CR18
16CR17
16CR19
16CR20
16CR22
16CR21
16CR23
16CR24
e
b
c
K
1004536-2
6.340
6.320
1.000 PHOTO REF

1004536-2

NOTES

1. MATL: .006/.008 THICK PLASTIC SHEET, SENSITIZED DIMENSIONALLY STABLE PER L-F-340 TYPE IB, CLASS II, STYLE IA
2. MAKE MASTER PATTERN POSITIVE FILMS TO DIMENSIONS SHOWN
3. ORIGINAL OF THIS DRAWING OR REPRODUCTION MADE BY PROCESS OR METHOD SHALL INSURE DIMENSIONAL STABILITY. DIMENSIONAL VARIATIONS SHALL NOT EXCEED .001 INCH PER FOOT
4. ● DENOTES $\frac{.038}{.042}$ DIA HOLES THRU PLASTIC SHEET

QTY REQD	PART OR IDENTIFYING NO.	NOMENCLATURE OR DESCRIPTION	FIND NO

LIST OF MATERIALS

NEXT ASSY	USED ON
1003530	

APPLICATION

UNLESS OTHERWISE SPECIFIED
DIMENSIONS ARE IN INCHES
TOLERANCES ON
FRACTIONS ± DECIMALS ± ANGLES ±
DO NOT SCALE THIS DRAWING

MATERIAL SEE NOTE 1
HEAT TREATMENT NONE
FINAL FINISH NONE

MIT
INSTRUMENTATION LAB
CAMBRIDGE, MASS

DRAWN PS Tracy
CHECKED 26 Jul 63
APPROVAL
APPROVAL W.B. Trueman 26 Jul 63
APPROVAL
NASA APPROVAL 10-3-63
MIT APPROVAL
MIT APPROVAL 3 Oct 63

MANNED SPACECRAFT CENTER
HOUSTON, TEXAS

INSULATOR
DECODING MODULE
AGC DSKY, NAV & MAIN

CODE IDENT NO. —
SIZE F
NASA DRAWING NO. 1004536
SCALE 4/1
WT
SHEET 1 OF 1

INTERPRET DRAWING IN ACCORDANCE WITH STANDARDS PRESCRIBED BY MIL-D-70327

NOTICE — WHEN GOVERNMENT DRAWINGS, SPECIFICATIONS, OR OTHER DATA ARE USED FOR ANY PURPOSE OTHER THAN IN CONNECTION WITH A DEFINITELY RELATED GOVERNMENT PROCUREMENT OPERATION, THE UNITED STATES GOVERNMENT THEREBY INCURS NO RESPONSIBILITY NOR ANY OBLIGATION WHATSOEVER; AND THE FACT THAT THE GOVERNMENT MAY HAVE FORMULATED, FURNISHED, OR IN ANY WAY SUPPLIED THE SAID DRAWINGS, SPECIFICATIONS, OR OTHER DATA IS NOT TO BE REGARDED BY IMPLICATION OR OTHERWISE AS IN ANY MANNER LICENSING THE HOLDER OR ANY OTHER PERSON OR CORPORATION, OR CONVEYING ANY RIGHTS OR PERMISSION TO MANUFACTURE, USE, OR SELL ANY PATENTED INVENTION THAT MAY IN ANY WAY BE RELATED THERETO.

1004536 D

REVISIONS 03621

SYM	DESCRIPTION	DATE	APPROVED
A	REVISED PER TDRR 04324	10-30-63	WC
B	REVISED PER TDRR 05767	1-21-64	WH
C	REVISED PER TDRR 07498 DR Economon CHK R. F. Edwards	4/2/64	MC
D	REVISED PER TDRR 13114 DR [illegible] CHK [illegible]	[illegible]	[illegible]

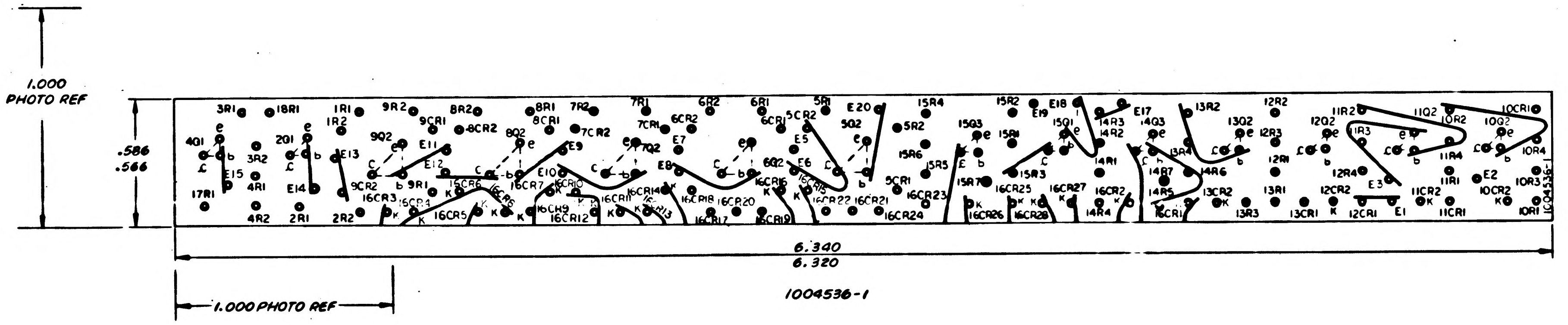

1004536-1

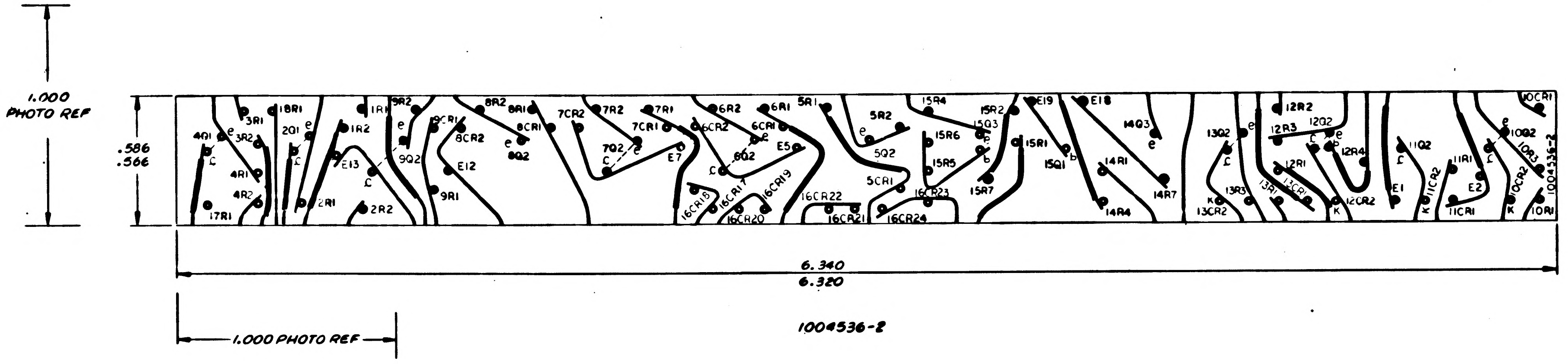

1004536-2

NOTES

1. MATL: .006/.008 THICK PLASTIC SHEET, SENSITIZED DIMENSIONALLY STABLE PER L-F-340 TYPE IB, CLASS II, STYLE IA
2. MAKE MASTER PATTERN POSITIVE FILMS TO DIMENSIONS SHOWN
3. ORIGINAL OF THIS DRAWING OR REPRODUCTION MADE BY PROCESS OR METHOD SHALL INSURE DIMENSIONAL STABILITY. DIMENSIONAL VARIATIONS SHALL NOT EXCEED .001 INCH PER FOOT
4. ● DENOTES $\frac{.038}{.042}$ DIA HOLES THRU PLASTIC SHEET

QTY REQD	PART OR IDENTIFYING NO.	NOMENCLATURE OR DESCRIPTION	FIND NO

LIST OF MATERIALS

1003530		UNLESS OTHERWISE SPECIFIED DIMENSIONS ARE IN INCHES TOLERANCES ON FRACTIONS ± DECIMALS ± ANGLES ± DO NOT SCALE THIS DRAWING	MIT INSTRUMENTATION LAB CAMBRIDGE, MASS.	MANNED SPACECRAFT CENTER HOUSTON, TEXAS	
NEXT ASSY	USED ON	MATERIAL SEE NOTE 1	DRAWN P.S. Darcy DATE 29 AUG 63 CHECKED C.R. Bogni 26 AUG 63 APPROVAL [illegible] 9/11/63 APPROVAL WBT 20 OCT 63 APPROVAL	INSULATOR DECODING MODULE AGC DSKY, NAV & MAIN	
APPLICATION		HEAT TREATMENT NONE	NASA APPROVAL W J [illegible] 10-3-63	CODE IDENT NO. —	SIZE F
		FINAL FINISH NONE	MIT APPROVAL MIT APPROVAL W Kupfer 30 Oct 63	SCALE 4/1	NASA DRAWING NO. 1004536 WT SHEET 1 OF 1

INTERPRET DRAWING IN ACCORDANCE WITH STANDARDS PRESCRIBED BY MIL-D-70327

1004536 D

NOTICE — WHEN GOVERNMENT DRAWINGS, SPECIFICATIONS, OR OTHER DATA ARE USED FOR ANY PURPOSE OTHER THAN IN CONNECTION WITH A DEFINITELY RELATED GOVERNMENT PROCUREMENT OPERATION, THE UNITED STATES GOVERNMENT THEREBY INCURS NO RESPONSIBILITY NOR ANY OBLIGATION WHATSOEVER; AND THE FACT THAT THE GOVERNMENT MAY HAVE FORMULATED, FURNISHED, OR IN ANY WAY SUPPLIED THE SAID DRAWINGS, SPECIFICATIONS OR OTHER DATA IS NOT TO BE REGARDED BY IMPLICATION OR OTHERWISE AS IN ANY MANNER LICENSING THE HOLDER OR ANY OTHER PERSON OR CORPORATION, OR CONVEYING ANY RIGHTS OR PERMISSION TO MANUFACTURE, USE, OR SELL ANY PATENTED INVENTION THAT MAY IN ANY WAY BE RELATED THERETO.

1004536

ANY USE OF THIS DOCUMENT FOR OTHER THAN GOVERNMENTAL PURPOSES IS SUBJECT TO PRIOR WRITTEN CONSENT OF RAYTHEON CO.

REVISIONS 03621			
SYM	DESCRIPTION	DATE	APPROVED

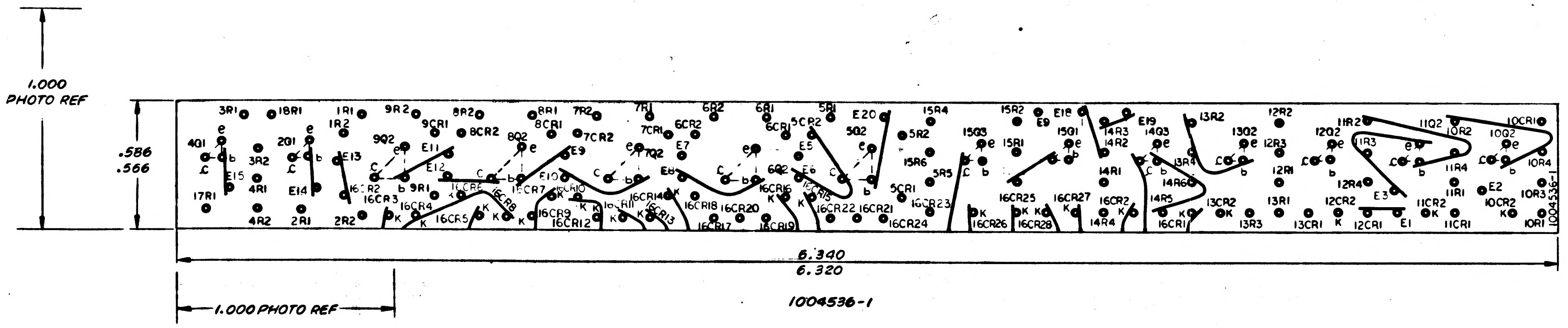

1004536-1

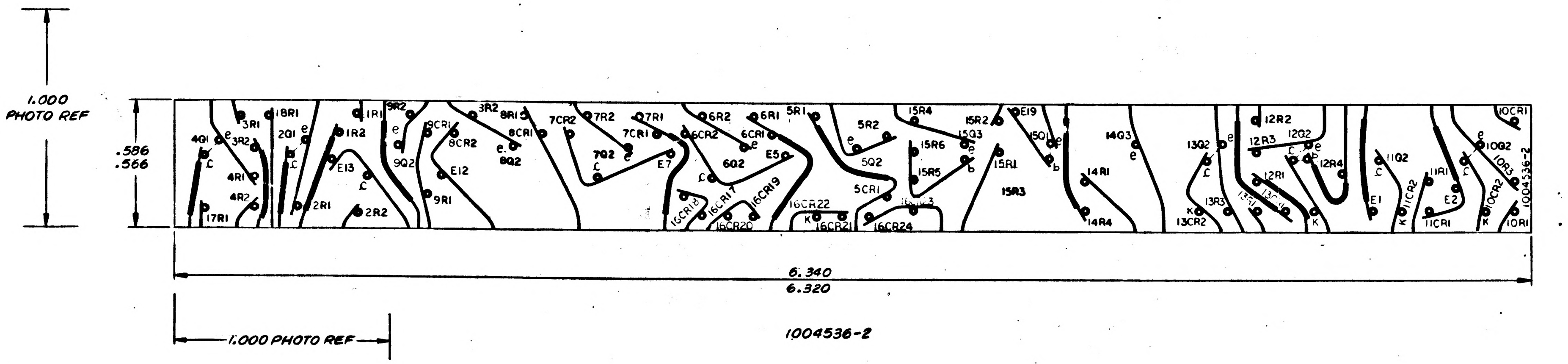

1004536-2

NOTES
1. MATL: .006/.008 THICK PLASTIC SHEET, SENSITIZED DIMENSIONALLY STABLE PER L-F-340 TYPE IB, CLASS II, STYLE IA
2. MAKE MASTER PATTERN POSITIVE FILMS TO DIMENSIONS SHOWN
3. ORIGINAL OF THIS DRAWING OR REPRODUCTION MADE BY PROCESS OR METHOD SHALL INSURE DIMENSIONAL STABILITY. DIMENSIONAL VARIATIONS SHALL NOT EXCEED .001 INCH PER FOOT
4. ● DENOTES $\frac{.038}{.042}$ DIA HOLES THRU PLASTIC SHEET

QTY REQD	PART OR IDENTIFYING NO.	NOMENCLATURE OR DESCRIPTION	FIND NO
LIST OF MATERIALS			

1003530	
NEXT ASSY	USED ON
APPLICATION	

UNLESS OTHERWISE SPECIFIED DIMENSIONS ARE IN INCHES
TOLERANCES ON
FRACTIONS ± DECIMALS ± ANGLES ±
DO NOT SCALE THIS DRAWING
MATERIAL SEE NOTE 1
HEAT TREATMENT NONE
FINAL FINISH NONE

MIT INSTRUMENTATION LAB
CAMBRIDGE, MASS
DWG. NO. CONTRACT
DRAWN P.S. Tracy DATE 29 AUG 63
CHECKED O.R. Rogers 26AUG63
APPROVAL 3 Sept 63
APPROVAL W.B. Turner 2 Oct 63
APPROVAL
NASA APPROVAL W.J. Rhine 10-3-63
MIT APPROVAL
MIT APPROVAL 3 Oct 63

MANNED SPACECRAFT CENTER
HOUSTON, TEXAS

INSULATOR
DECODING MODULE

CODE IDENT NO.	SIZE	NASA DRAWING NO
—	F	1004536
SCALE 4/1	WT	SHEET 1 OF 1

INTERPRET DRAWING IN ACCORDANCE WITH STANDARDS PRESCRIBED BY MIL-D-70327

1004536

NOTICE — WHEN GOVERNMENT DRAWINGS, SPECIFICATIONS, OR OTHER DATA ARE USED FOR ANY PURPOSE OTHER THAN IN CONNECTION WITH A DEFINITELY RELATED GOVERNMENT PROCUREMENT OPERATION, THE UNITED STATES GOVERNMENT THEREBY INCURS NO RESPONSIBILITY NOR ANY OBLIGATION WHATSOEVER AND THE FACT THAT THE GOVERNMENT MAY HAVE FORMULATED, FURNISHED, OR IN ANY WAY SUPPLIED THE SAID DRAWINGS, SPECIFICATIONS OR OTHER DATA IS NOT TO BE REGARDED BY IMPLICATION OR OTHERWISE AS IN ANY MANNER LICENSING THE HOLDER OR ANY OTHER PERSON OR CORPORATION, OR CONVEYING ANY RIGHTS OR PERMISSION TO MANUFACTURE, USE, OR SELL ANY PATENTED INVENTION THAT MAY IN ANY WAY BE RELATED THERETO.

ANY USE OF THIS DOCUMENT FOR OTHER THAN GOVERNMENTAL PURPOSES IS SUBJECT TO PRIOR WRITTEN CONSENT OF RAYTHEON CO.

REVISIONS			
SYM	DESCRIPTION	DATE	APPROVED
–	CLASS A RELEASE PER TDRR [illegible]	[illegible]	[illegible]
A	REV A REDRAWN & REPLACED BY REV B PER TDRR 05377	[illegible]	[illegible]

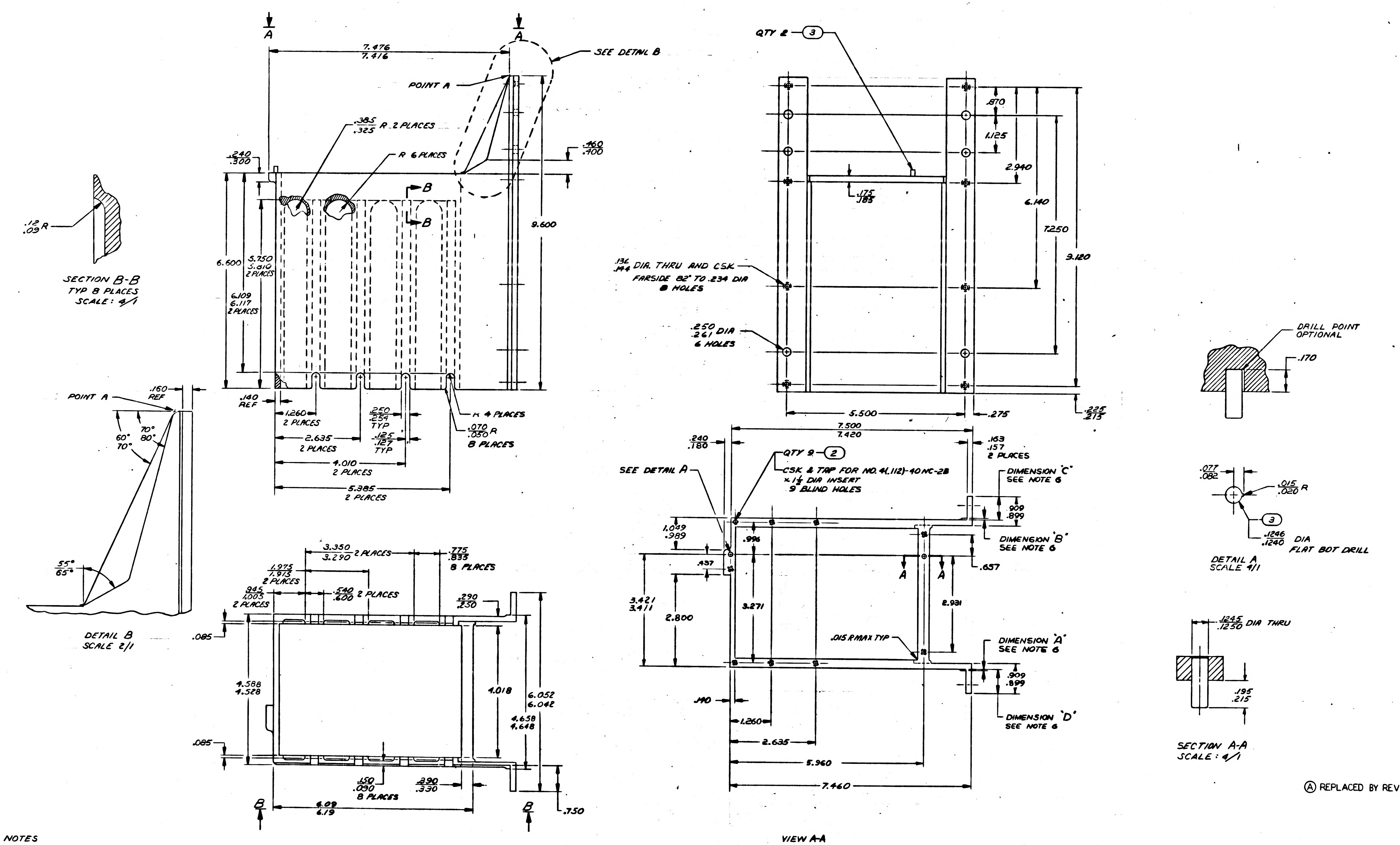
A
A
7.476
7.416
SEE DETAIL B
POINT A
.385
.325 R 2 PLACES
R 6 PLACES
.240
.300
.460
.400
B
B
9.600
6.600
5.750
5.810
2 PLACES
6.109
6.117
2 PLACES
.140 REF
1.260
2 PLACES
.250
.254
TYP
.125
.127
TYP
R 4 PLACES
.070
.050 R
8 PLACES
2.635
2 PLACES
4.010
2 PLACES
5.385
2 PLACES
.12
.09 R
SECTION B-B
TYP 8 PLACES
SCALE: 4/1
POINT A
.160
REF
70°
80°
60°
70°
55°
65°
DETAIL B
SCALE 2/1
3.350
3.290 2 PLACES
.775
.835
8 PLACES
1.975
1.915
2 PLACES
.945
1.005
2 PLACES
.540
.600 2 PLACES
.290
.250
.085
4.588
4.528
4.018
6.052
6.042
4.658
4.648
.085
.150
.090
8 PLACES
.290
.330
B
6.09
6.19
B
.750
QTY 2 — ③
.870
1.125
2.940
.175
.185
6.140
7.250
9.120
.136
.144 DIA. THRU AND CSK
FARSIDE 82° TO .234 DIA
8 HOLES
.250
.261 DIA
6 HOLES
5.500
.275
.225
.213
7.500
7.420
.240
.180
.163
.157
2 PLACES
SEE DETAIL A
QTY 9 — ②
CSK & TAP FOR NO. 4(.112)-40NC-2B
× 1½ DIA INSERT
9 BLIND HOLES
DIMENSION "C"
SEE NOTE 6
.909
.899
1.049
.989
.996
DIMENSION "B"
SEE NOTE 6
.437
A
A
.657
3.421
3.411
2.800
3.271
2.931
.015 R MAX TYP
DIMENSION "A"
SEE NOTE 6
.909
.899
.140
DIMENSION "D"
SEE NOTE 6
1.260
2.635
5.960
7.460
VIEW A-A
DRILL POINT
OPTIONAL
.170
.077
.082
.015
.020 R
③
.1246
.1240 DIA
FLAT BOT DRILL
DETAIL A
SCALE 4/1
.1245
.1250 DIA THRU
.195
.215
SECTION A-A
SCALE: 4/1

Ⓐ REPLACED BY REV Ⓑ WITH CHANGES

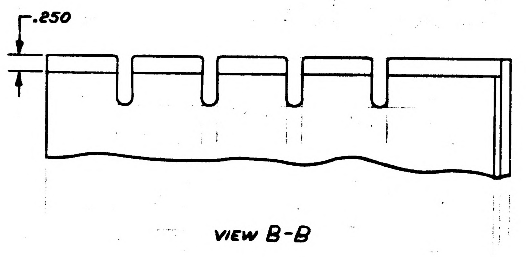

NOTES
1. MATERIAL: CAST 356-T6 ALUMINUM ALLOY TEMP T6, CLASS 3M, CONDITION T6, PER QQ-A-601
2. AS CAST SURFACE QUALITY 200✓
3. MACHINED SURFACE QUALITY 125✓, UNLESS OTHERWISE SPECIFIED
4. BLACK ANODIZE, PER MIL-A-8625
5. ALL FILLETS AND ROUNDS .12 R
6. DIMENSION "A" TO BE EQUAL TO DIMENSION "B" AND DIMENSION "C" TO BE EQUAL TO DIMENSION "D" WITHIN .060

QTY REQD	PART OR IDENTIFYING NO.	NOMENCLATURE OR DESCRIPTION	FIND NO
2	AN122692	PIN, DOWEL	3
9	MS21209-C0415	INSERT, SCREW THREAD LOCKING	2
1	1004539-1	HOUSING, RELAY RACK	1

LIST OF MATERIALS

1003524	
NEXT ASSY	USED ON
APPLICATION	

UNLESS OTHERWISE SPECIFIED
DIMENSIONS ARE IN INCHES
TOLERANCES ON
FRACTIONS ± DECIMALS ±.005 .02 ANGLES ±
DO NOT SCALE THIS DRAWING
MATERIAL SEE NOTE 1
HEAT TREATMENT NONE
FINAL FINISH SEE NOTE

MIT INSTRUMENTATION LAB
CAMBRIDGE, MASS
DRAWN P.S. [illegible] DATE 5 AUG 63
CHECKED [illegible] 26 Aug 63
APPROVAL [illegible] Aug 28 63
APPROVAL [illegible] 3 Sept 63
APPROVAL
NASA APPROVAL [illegible]
MIT APPROVAL
MIT APPROVAL [illegible] 9/5/63

MANNED SPACECRAFT CENTER
HOUSTON, TEXAS

HOUSING, RELAY RACK
AGC KEYBOARD

CODE IDENT NO —
SIZE J
NASA DRAWING NO 1004539
SCALE 1/1
WT
SHEET 1 OF 1

INTERPRET DRAWING IN ACCORDANCE WITH STANDARDS PRESCRIBED BY MIL-D-70327

SYM	DESCRIPTION	DATE	APPROVAL
B	REDRAW REPLACES REV A WITH CHANGES PER TDRR 05377	27 [illegible] 63	[illegible]

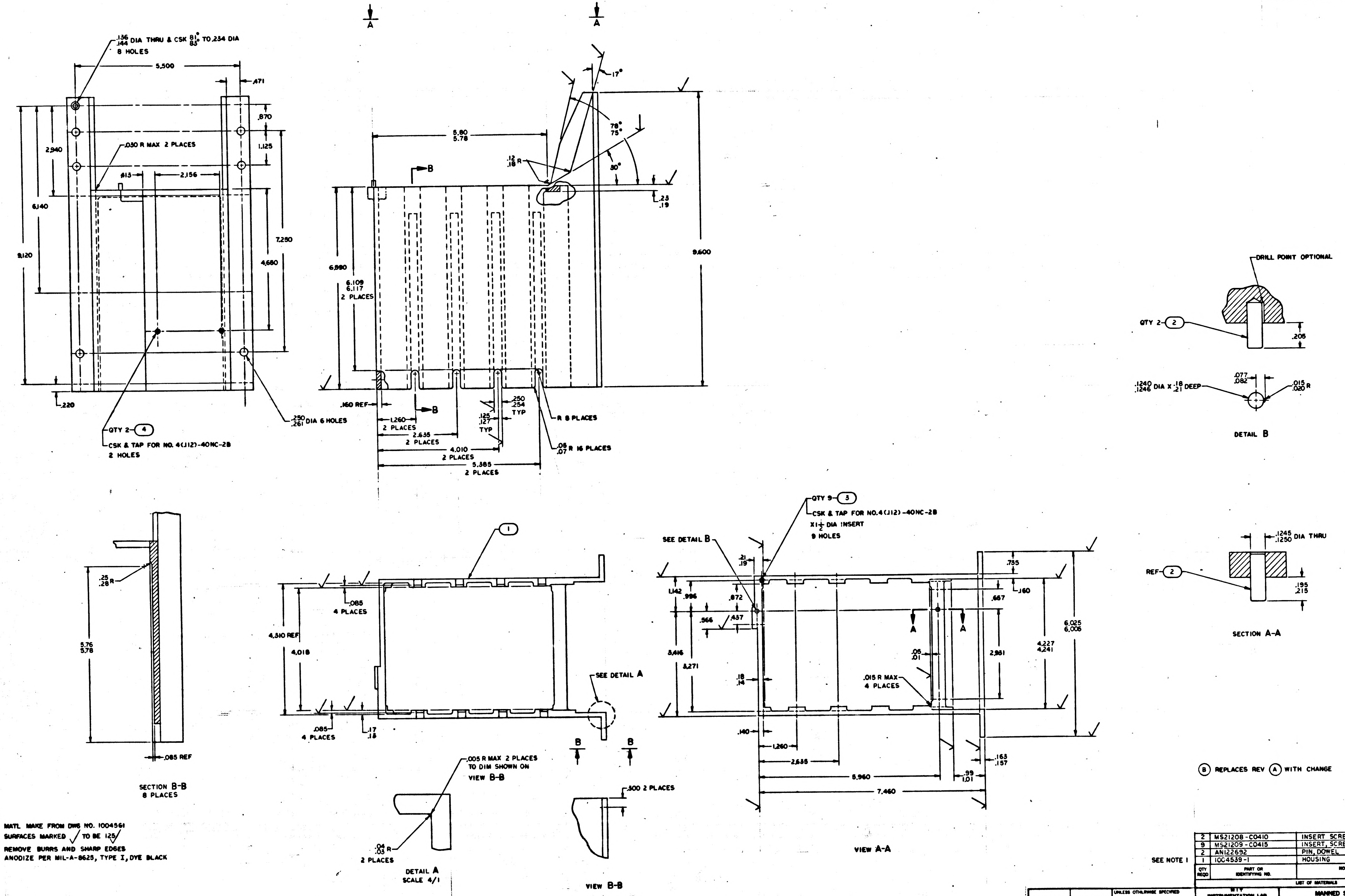
A
.136 .144 DIA THRU & CSK 81° 83° TO .234 DIA
8 HOLES
5.500
.471
.870
1.125
2.940
.030 R MAX 2 PLACES
.813
2.156
6.140
9.120
7.250
4.660
.220
QTY 2-④
CSK & TAP FOR NO. 4(.112)-40NC-2B
2 HOLES
.250 .261 DIA 6 HOLES
17°
5.80 5.78
78° 75°
.12 .18 R
B
50°
.25 .19
6.980
6.109 6.117
2 PLACES
9.600
.160 REF
1.260
2 PLACES
2.635
2 PLACES
4.010
2 PLACES
5.385
2 PLACES
.125 .127 TYP
.250 .254 TYP
R 8 PLACES
.06 .07 R 16 PLACES
DRILL POINT OPTIONAL
QTY 2-②
.205
.1240 .1246 DIA X .18 .21 DEEP
.077 .082
.015 .020 R
DETAIL B
5.76 5.78
.25 .28 R
.085 REF
SECTION B-B
8 PLACES
①
.085
4 PLACES
4.510 REF
4.018
.17 .13
SEE DETAIL A
QTY 9-③
CSK & TAP FOR NO. 4(.112)-40NC-2B
X 1½ DIA INSERT
9 HOLES
SEE DETAIL B
.21 .19
1.142
.996
.872
.566
.437
3.416
3.271
.18 .14
.05 .01
.015 R MAX
4 PLACES
.755
.160
.667
2.981
4.227 4.241
6.025 6.005
.140
1.260
2.635
5.960
7.460
.99 1.01
.163 .157
REF-②
.1245 .1250 DIA THRU
.195 .215
SECTION A-A
.005 R MAX 2 PLACES
TO DIM SHOWN ON
VIEW B-B
.04 .03 R
2 PLACES
DETAIL A
SCALE 4/1
.300 2 PLACES
VIEW B-B
VIEW A-A

Ⓑ REPLACES REV Ⓐ WITH CHANGE

NOTES
1. MATL MAKE FROM DWG NO. 1004561
2. SURFACES MARKED √ TO BE 125√
3. REMOVE BURRS AND SHARP EDGES
4. ANODIZE PER MIL-A-8625, TYPE I, DYE BLACK

SEE NOTE 1

QTY REQD	PART OR IDENTIFYING NO.	NOMENCLATURE OR DESCRIPTION	FIND NO.
2	MS21208-C0410	INSERT SCREW THREAD	4
9	MS21209-C0415	INSERT, SCREW THREAD LOCKING	3
2	AN122692	PIN, DOWEL	2
1	1004539-1	HOUSING	1

LIST OF MATERIALS

1003524	
NEXT ASSY	USED ON
APPLICATION	

UNLESS OTHERWISE SPECIFIED DIMENSIONS ARE IN INCHES
TOLERANCES ON
FRACTIONS ± DECIMALS ±.005 ANGLES ±2°0′
DO NOT SCALE THIS DRAWING
MATERIAL SEE NOTE 1
HEAT TREATMENT NONE
FINAL FINISH SEE NOTE 4

MIT INSTRUMENTATION LAB
CAMBRIDGE, MASS.
DRAWN B. Jansen DATE 5DEC63
CHECKED [illegible] 12 Dec 63
APPROVAL
APPROVAL [illegible]
NASA APPROVAL [illegible]
MIT APPROVAL
MIT APPROVAL [illegible]

MANNED SPACECRAFT CENTER
HOUSTON, TEXAS

HOUSING, RELAY MODULE
AGC DSKY, NAV

CODE IDENT NO. ——— SIZE J NASA DRAWING NO. 1004539
SCALE 1/1 WT SHEET 1 OF 1

1004539

MASTER

PHOTOGRAPHIC SCALE ONLY
INCHES

REVISIONS			
SYM	DESCRIPTION	DATE	APPROVAL
B	REDRAW REPLACES REV A WITH CHANGES PER TDRR 05377	27 Dec 63	WK
C	REVISED PER TDRR 0539		

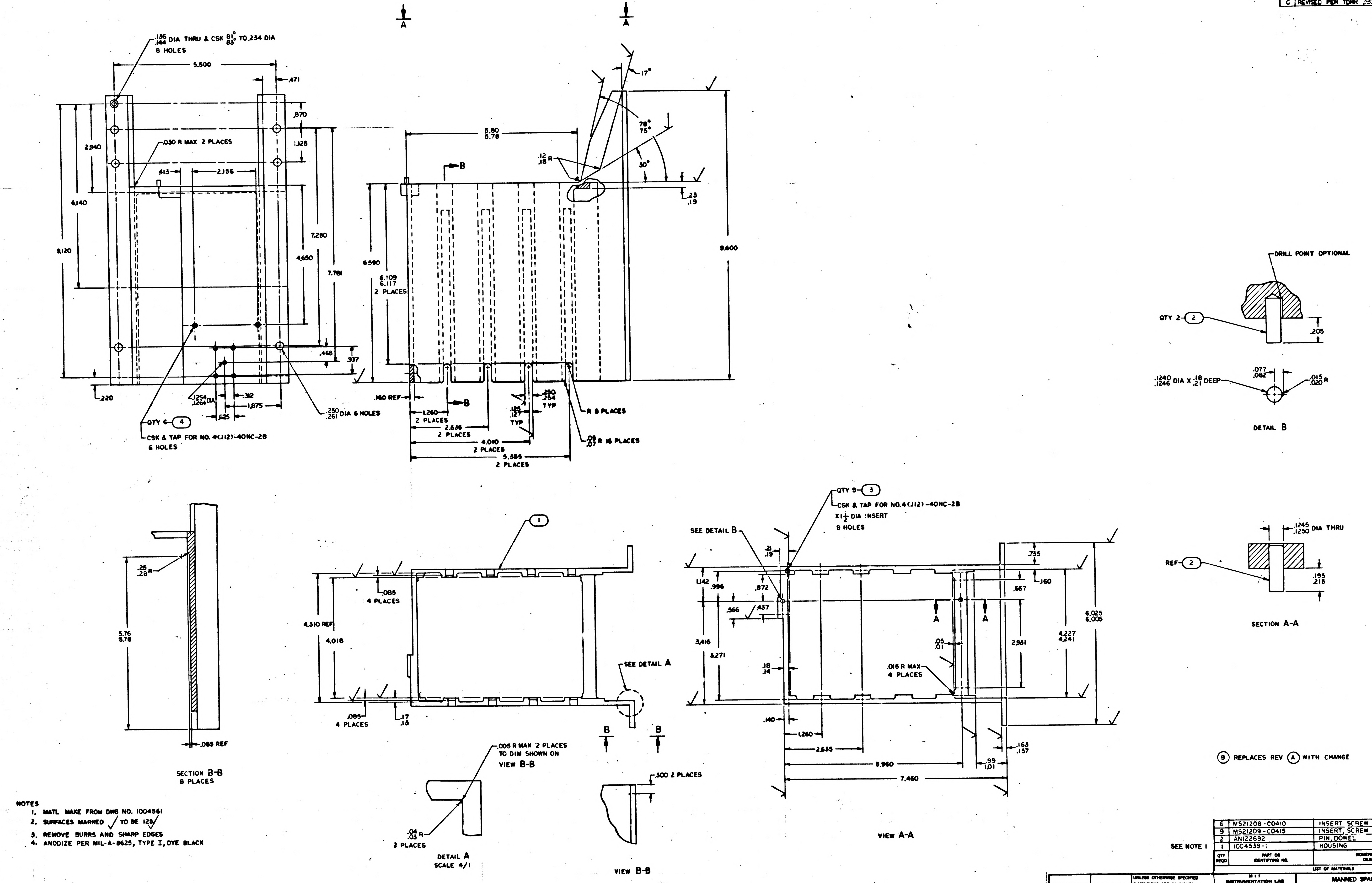
.136 .144 DIA THRU & CSK 81° 83° TO .234 DIA 8 HOLES
5.500
.471
.870
1.125
2.940
.030 R MAX 2 PLACES
.413
2.156
6.140
9.120
7.250
4.660
7.781
.468
.937
.220
.1254 .1264 DIA
.312
1.875
.625
QTY 6 ④
CSK & TAP FOR NO. 4(.112)-40NC-2B 6 HOLES
.250 .261 DIA 6 HOLES
A
5.80 5.78
B
6.590
6.109 6.117 2 PLACES
.12 .18 R
17°
78° 75°
30°
.23 .19
9.600
.160 REF
1.260 2 PLACES
2.636 2 PLACES
4.010 2 PLACES
5.386 2 PLACES
.126 .127 TYP
.250 .254 TYP
R 8 PLACES
.08 .07 R 16 PLACES
DRILL POINT OPTIONAL
QTY 2 ②
.205
.1240 .1246 DIA X .18 .21 DEEP
.077 .082
.015 .020 R
DETAIL B
.25 .28 R
5.76 5.78
.085 REF
SECTION B-B
8 PLACES
①
.085 4 PLACES
4.310 REF
4.018
.17 .13
SEE DETAIL A
.005 R MAX 2 PLACES TO DIM SHOWN ON VIEW B-B
.04 .03 R 2 PLACES
DETAIL A
SCALE 4/1
.300 2 PLACES
VIEW B-B
QTY 9 ③
CSK & TAP FOR NO.4(.112)-40NC-2B X1½ DIA INSERT 9 HOLES
SEE DETAIL B
.21 .19
1.142
.996
.872
.566
.437
3.416
3.271
.18 .14
.140
1.260
2.635
5.960
7.460
.05 .01
.015 R MAX 4 PLACES
.735
.160
.657
2.931
4.227 4.241
6.025 6.005
.163 .157
.99 1.01
VIEW A-A
.1245 .1250 DIA THRU
REF ②
.195 .215
SECTION A-A

Ⓑ REPLACES REV Ⓐ WITH CHANGE

NOTES
1. MATL MAKE FROM DWG NO. 1004561
2. SURFACES MARKED √ TO BE 125√
3. REMOVE BURRS AND SHARP EDGES
4. ANODIZE PER MIL-A-8625, TYPE I, DYE BLACK

SEE NOTE 1

QTY REQD	PART OR IDENTIFYING NO.	NOMENCLATURE OR DESCRIPTION	FIND NO.
6	MS21208-C0410	INSERT SCREW THREAD	4
9	MS21209-C0415	INSERT, SCREW THREAD LOCKING	3
2	AN122692	PIN, DOWEL	2
1	1004539-1	HOUSING	1

LIST OF MATERIALS

1003524	
NEXT ASSY	USED ON
APPLICATION	

UNLESS OTHERWISE SPECIFIED DIMENSIONS ARE IN INCHES
TOLERANCES ON
FRACTIONS ± DECIMALS ±.005 ANGLES ±2°0'
DO NOT SCALE THIS DRAWING
MATERIAL SEE NOTE 1
HEAT TREATMENT NONE
FINAL FINISH SEE NOTE 4

MIT INSTRUMENTATION LAB
CAMBRIDGE, MASS
DRAWN B. Jensen DATE 5DEC63
CHECKED 12 Dec 63
APPROVAL
APPROVAL
NASA APPROVAL 12/27/63
MIT APPROVAL
MIT APPROVAL

MANNED SPACECRAFT CENTER
HOUSTON, TEXAS

HOUSING, RELAY MODULE
AGC DSKY, NAV

CODE IDENT NO. ——— SIZE J NASA DRAWING NO. 1004539
SCALE 1/1 WT SHEET 1 OF 1

1004539 C

MASTER

SYM	DESCRIPTION	DATE	APPROVAL
B	REDRAW REPLACES REV A WITH CHANGES PER TDRR 05377	27Dec63	
C	REVISED PER TDRR 0539	27Dec63	
D	REVISED PER TDRR 06146	5/4/64	

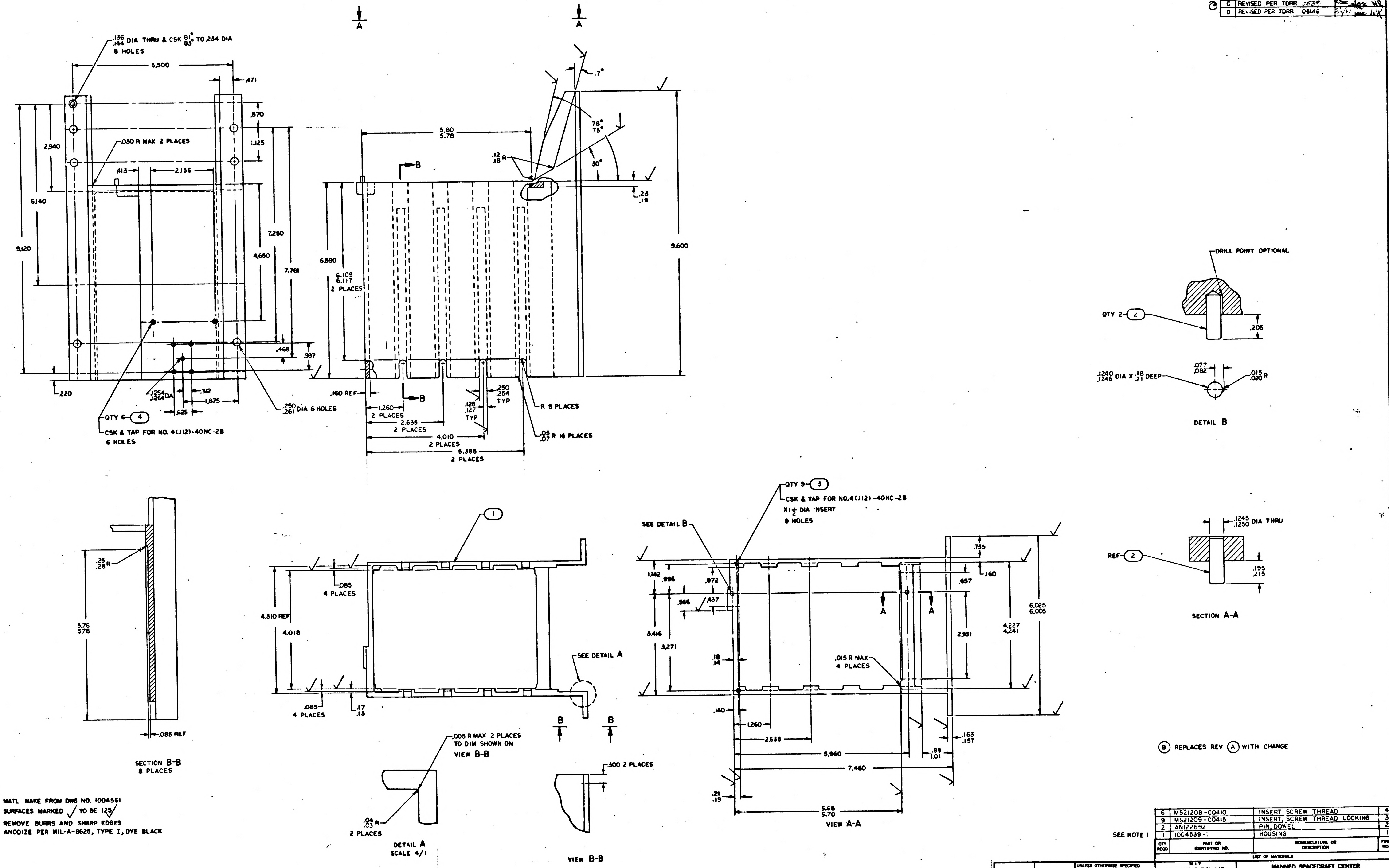

.136 .144 DIA THRU & CSK 81° 83° TO .234 DIA
8 HOLES
5.500
.471
.870
1.125
2.940
.030 R MAX 2 PLACES
.813
2.156
6.140
9.120
7.250
4.650
7.781
.468
.937
.220
.1254 .1264 DIA
.312
1.875
.625
QTY 6 ④
CSK & TAP FOR NO. 4(.112)-40NC-2B
6 HOLES
.250 .261 DIA 6 HOLES
A
5.80 5.78
.12 .18 R
17°
78° 75°
30°
.23 .19
9.600
6.590
6.109 6.117 2 PLACES
.160 REF
1.260 2 PLACES
2.635 2 PLACES
4.010 2 PLACES
5.385 2 PLACES
.125 .127 TYP
.250 .254 TYP
R 8 PLACES
.08 .07 R 16 PLACES
B
DRILL POINT OPTIONAL
QTY 2 ②
.205
.1240 .1246 DIA X .18 .21 DEEP
.077 .082
.015 .020 R
DETAIL B
.25 .28 R
5.76 5.78
.085 REF
SECTION B-B
8 PLACES
①
.085 4 PLACES
4.310 REF
4.018
.17 .13
SEE DETAIL A
QTY 9 ③
CSK & TAP FOR NO.4(.112)-40NC-2B
X1½ DIA INSERT
9 HOLES
SEE DETAIL B
1.142
.996
.872
.566
.437
3.416
3.271
.18 .14
.140
.755
.160
.667
2.931
4.227 4.241
6.025 6.005
.015 R MAX 4 PLACES
1.260
2.635
5.960
7.460
.99 1.01
.163 .157
.21 .19
5.68 5.70
VIEW A-A
.1245 .1250 DIA THRU
REF ②
.195 .215
SECTION A-A
.005 R MAX 2 PLACES
TO DIM SHOWN ON
VIEW B-B
.04 .03 R
2 PLACES
DETAIL A
SCALE 4/1
.300 2 PLACES
VIEW B-B
Ⓑ REPLACES REV Ⓐ WITH CHANGE

NOTES
1. MATL MAKE FROM DWG NO. 1004561
2. SURFACES MARKED √ TO BE 125√
3. REMOVE BURRS AND SHARP EDGES
4. ANODIZE PER MIL-A-8625, TYPE I, DYE BLACK

SEE NOTE 1

QTY REQD	PART OR IDENTIFYING NO.	NOMENCLATURE OR DESCRIPTION	FIND NO.
6	MS21208-C0410	INSERT SCREW THREAD	4
9	MS21209-C0415	INSERT, SCREW THREAD LOCKING	3
2	AN122692	PIN, DOWEL	2
1	1004539-1	HOUSING	1

LIST OF MATERIALS

1003524	
NEXT ASSY	USED ON
APPLICATION	

UNLESS OTHERWISE SPECIFIED
DIMENSIONS ARE IN INCHES
TOLERANCES ON
FRACTIONS ± DECIMALS ±.005 ANGLES ±2°0'
DO NOT SCALE THIS DRAWING
MATERIAL SEE NOTE 1
HEAT TREATMENT NONE
FINAL FINISH SEE NOTE 4

MIT
INSTRUMENTATION LAB
CAMBRIDGE, MASS
DWG NO. CONTRACT
DRAWN B. Jensen DATE 5DEC63
CHECKED 12Dec63
APPROVAL
APPROVAL
NASA APPROVAL
MIT APPROVAL
MIT APPROVAL

MANNED SPACECRAFT CENTER
HOUSTON, TEXAS

HOUSING, RELAY MODULE
AGC DSKY, NAV

CODE IDENT NO. —— SIZE J NASA DRAWING NO. 1004539
SCALE 1/1 WT SHEET 1 OF 1

1004539 D

MASTER

INCHES
0 1 2
PHOTOGRAPHIC SCALE ONLY

SYM	DESCRIPTION	DATE	APPR	
B	REDRAW REPLACES REV A WITH CHANGES PER TDRR 05377			
C	REVISED PER TDRR 0536			
D	REVISED PER TDRR 06142			
E	REVISED PER TDRR 07839 DR R.W. DePont Jr. CHK Q.F.B.	4/10/64		

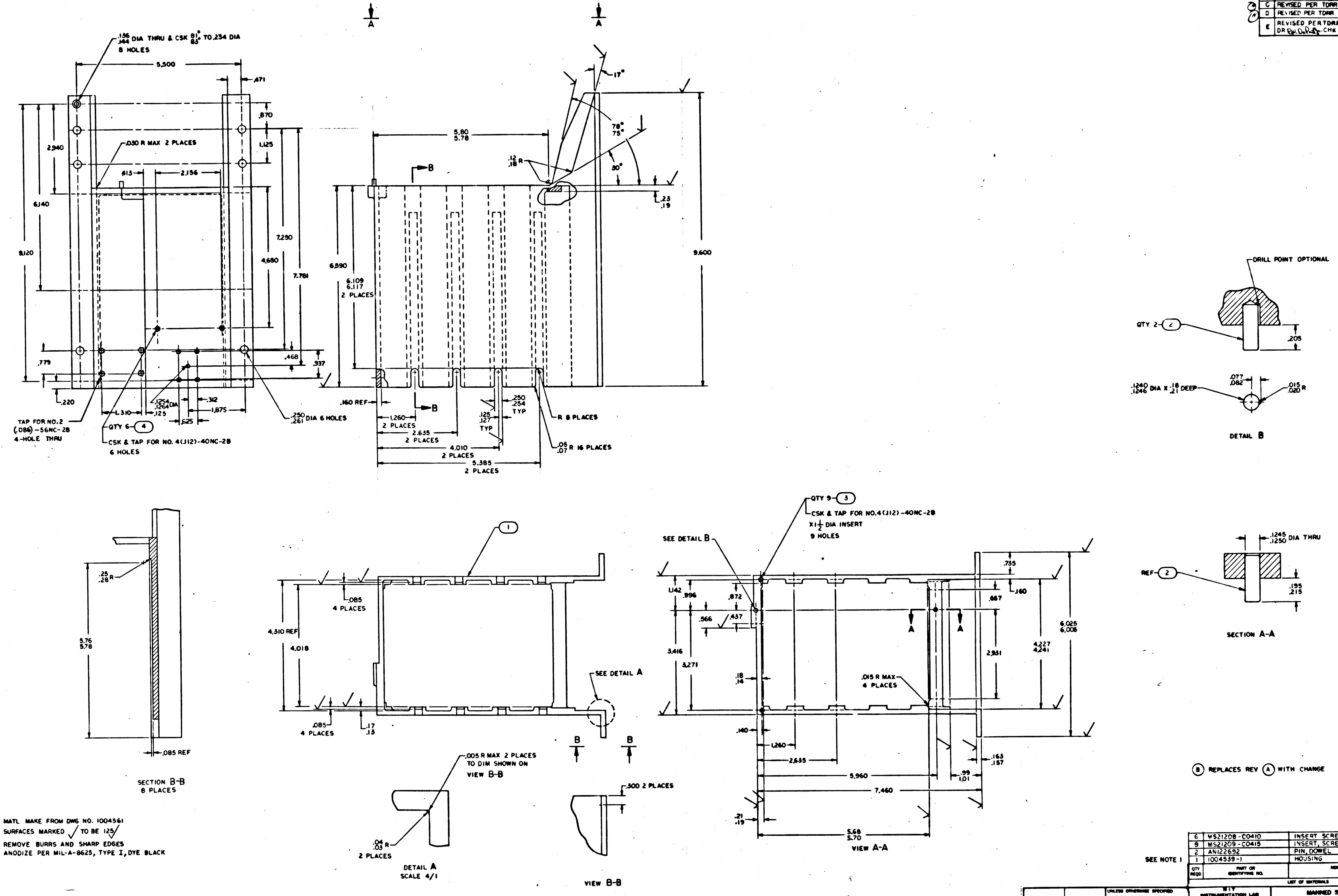
.136 .144 DIA THRU & CSK 91° 85° TO .234 DIA
8 HOLES
5.500
.471
.870
1.125
2.940
.030 R MAX 2 PLACES
.615
2.156
6.140
9.120
7.250
4.660
7.781
.779
.468
.937
.220
TAP FOR NO. 2 (.086)-56NC-2B 4-HOLE THRU
QTY 6-④
.1254 .1264 DIA
.125
.312
1.310
.625
1.875
.250 .261 DIA 6 HOLES
CSK & TAP FOR NO. 4 (.112)-40NC-2B
6 HOLES
A
A
5.80 5.78
B
.12 .18 R
17°
78° 75°
30°
.23 .19
9.600
6.590
6.109 6.117 2 PLACES
.160 REF
1.260 2 PLACES
2.635 2 PLACES
4.010 2 PLACES
5.385 2 PLACES
.125 .127 TYP
.250 .254 TYP
R 8 PLACES
.05 .07 R 16 PLACES
DRILL POINT OPTIONAL
QTY 2-②
.205
.1240 .1246 DIA X .18 .21 DEEP
.077 .082
.015 .020 R
DETAIL B
.25 .28 R
5.76 5.78
.085 REF
SECTION B-B
8 PLACES
①
.085 4 PLACES
4.310 REF
4.018
SEE DETAIL A
.085 4 PLACES
.17 .13
B
B
.005 R MAX 2 PLACES TO DIM SHOWN ON VIEW B-B
.04 .03 R 2 PLACES
DETAIL A
SCALE 4/1
.300 2 PLACES
VIEW B-B
QTY 9-③
CSK & TAP FOR NO. 4 (.112)-40NC-2B
X 1½ DIA INSERT
9 HOLES
SEE DETAIL B
1.142
.996
.872
.566
.437
3.416
3.271
.18 .14
.140
1.260
2.635
5.960
7.460
5.68 5.70
.015 R MAX 4 PLACES
A
A
.735
.160
.667
2.931
4.227 4.241
6.025 6.005
.163 .157
.99 1.01
VIEW A-A
.1245 .1250 DIA THRU
REF-②
.195 .215
SECTION A-A
Ⓑ REPLACES REV Ⓐ WITH CHANGE

NOTES
1. MATL MAKE FROM DWG NO. 1004561
2. SURFACES MARKED √ TO BE 125√
3. REMOVE BURRS AND SHARP EDGES
4. ANODIZE PER MIL-A-8625, TYPE I, DYE BLACK

SEE NOTE 1

QTY REQD	PART OR IDENTIFYING NO.	NOMENCLATURE OR DESCRIPTION	FIND NO.
6	MS21208-C0410	INSERT SCREW THREAD	4
9	MS21209-C0415	INSERT, SCREW THREAD LOCKING	3
2	AN122692	PIN, DOWEL	2
1	1004539-1	HOUSING	1

LIST OF MATERIALS

1003524	
NEXT ASSY	USED ON
APPLICATION	

UNLESS OTHERWISE SPECIFIED
DIMENSIONS ARE IN INCHES
TOLERANCES ON
FRACTIONS ± DECIMALS ±.005 ANGLES ±2°0'
DO NOT SCALE THIS DRAWING
MATERIAL SEE NOTE 1
HEAT TREATMENT NONE
FINAL FINISH SEE NOTE 4

MIT
INSTRUMENTATION LAB
CAMBRIDGE, MASS
DRAWN B. Jansen DATE 5 DEC 63
CHECKED 12 Dec 63
APPROVAL
APPROVAL
NASA APPROVAL
MIT APPROVAL
MIT APPROVAL

MANNED SPACECRAFT CENTER
HOUSTON, TEXAS

HOUSING, RELAY MODULE
AGC DSKY, NAV

CODE IDENT NO. —— SIZE J NASA DRAWING NO. 1004539
SCALE 1/1 WT SHEET 1 OF 1

1004539 E

MASTER

ANY USE OF THIS DOCUMENT FOR OTHER THAN GOVERNMENTAL PURPOSES IS SUBJECT TO PRIOR WRITTEN CONSENT OF RAYTHEON CO.

REVISIONS

SYM	DESCRIPTION	DATE	APPROVED
–	CLASS A RELEASE PER TDRR [illegible]	[illegible]	[illegible]

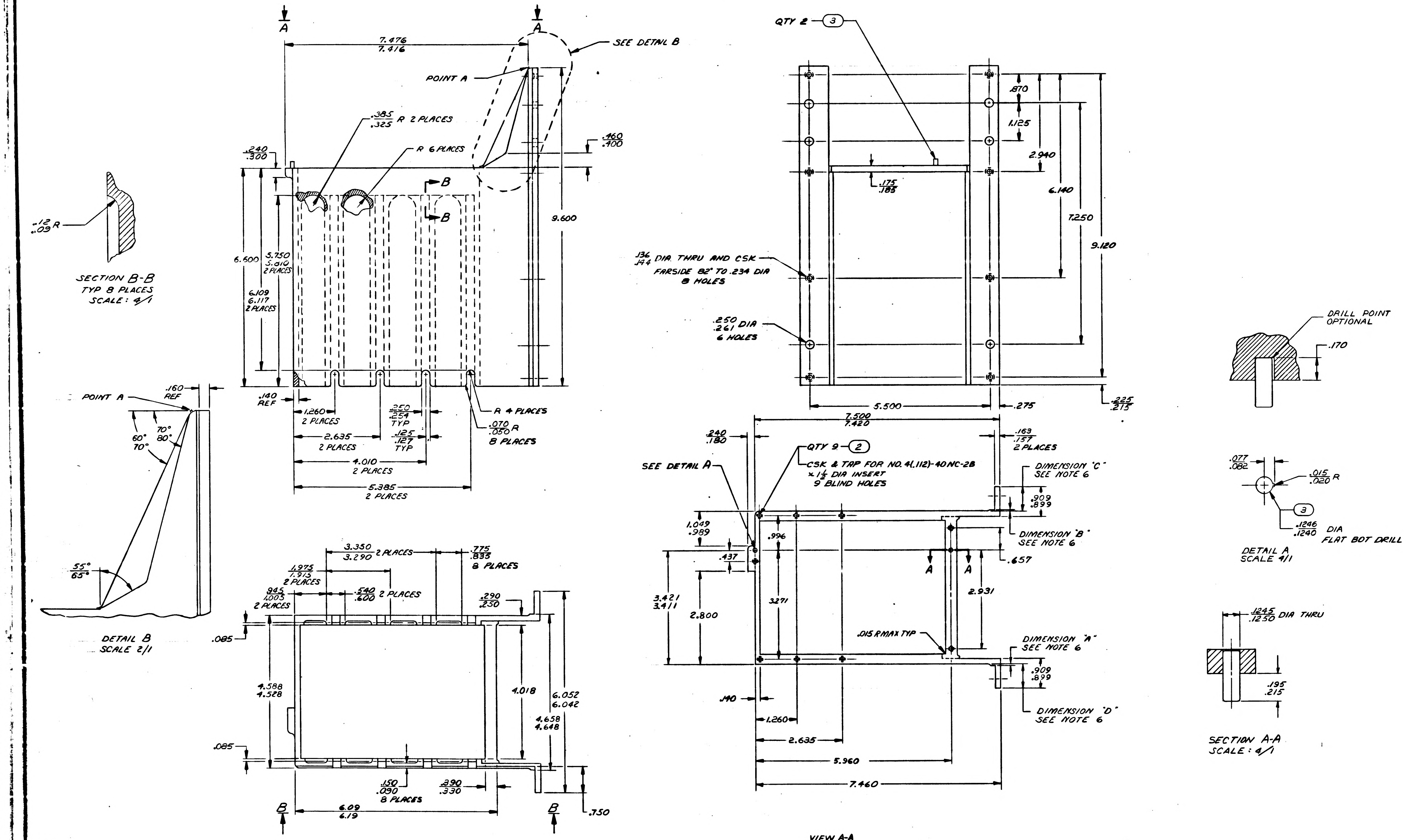
A
A
7.476
7.416
SEE DETAIL B
POINT A
.385
.325 R 2 PLACES
R 6 PLACES
B
B
.460
.400
.240
.300
9.600
6.500
5.750
5.810
2 PLACES
6.109
6.117
2 PLACES
.160
REF
.140
REF
1.260
2 PLACES
2.635
2 PLACES
.250
.254
TYP
.125
.127
TYP
4.010
2 PLACES
5.385
2 PLACES
R 4 PLACES
.070
.050 R
8 PLACES
.12
.09 R
SECTION B-B
TYP 8 PLACES
SCALE: 4/1
POINT A
60°
70°
70°
80°
55°
65°
DETAIL B
SCALE 2/1
3.350
3.290 2 PLACES
.775
.833
8 PLACES
1.975
1.915
2 PLACES
.945
1.005
2 PLACES
.540
.600 2 PLACES
.290
.250
.085
4.588
4.528
4.018
6.052
6.042
4.658
4.648
.085
.150
.090
8 PLACES
.390
.330
B
6.09
6.19
B
.750
QTY 2
3
.870
1.125
2.940
.175
.185
6.140
7.250
9.120
.136
.144 DIA THRU AND CSK
FARSIDE 82° TO .234 DIA
8 HOLES
.250
.261 DIA
6 HOLES
5.500
.275
.225
.215
7.500
7.420
.240
.180
.163
.157
2 PLACES
QTY 9
2
SEE DETAIL A
CSK & TAP FOR NO. 4(.112)-40NC-2B
× 1½ DIA INSERT
9 BLIND HOLES
DIMENSION "C"
SEE NOTE 6
.909
.899
DIMENSION "B"
SEE NOTE 6
.657
1.049
.989
.996
.437
A
A
3.421
3.411
2.800
3.271
2.931
.015 R MAX TYP
DIMENSION "A"
SEE NOTE 6
.909
.899
.140
1.260
2.635
5.960
7.460
DIMENSION "D"
SEE NOTE 6
VIEW A-A
DRILL POINT
OPTIONAL
.170
.077
.082
.015
.020 R
3
.1246
.1240 DIA
FLAT BOT DRILL
DETAIL A
SCALE 4/1
.1245
.1250 DIA THRU
.195
.215
SECTION A-A
SCALE: 4/1

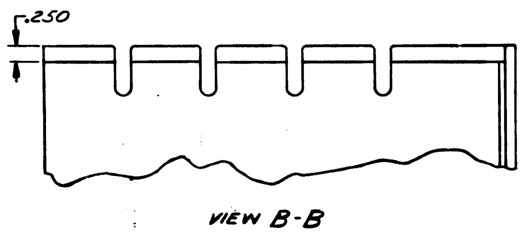

VIEW B-B

NOTES

1. MATERIAL: CAST 356-T6 ALUMINUM ALLOY TEMP T6, CLASS 3M, CONDITION T6, PER QQ-A-601
2. AS CAST SURFACE QUALITY 200/
3. MACHINED SURFACE QUALITY 125/, UNLESS OTHERWISE SPECIFIED
4. BLACK ANODIZE, PER MIL-A-8625
5. ALL FILLETS AND ROUNDS .12 R
6. DIMENSION "A" TO BE EQUAL TO DIMENSION "B" AND DIMENSION "C" TO BE EQUAL TO DIMENSION "D" WITHIN .060

QTY REQD	PART OR IDENTIFYING NO.	NOMENCLATURE OR DESCRIPTION	FIND NO
2	AN122692	PIN, DOWEL	3
9	MS21209-C0415	INSERT, SCREW THREAD LOCKING	2
1	1004539-1	HOUSING, RELAY RACK	1

LIST OF MATERIALS

1003524	
NEXT ASSY	USED ON
APPLICATION	

UNLESS OTHERWISE SPECIFIED
DIMENSIONS ARE IN INCHES
TOLERANCES ON
FRACTIONS ± DECIMALS ±.005 .02 ANGLES ±
DO NOT SCALE THIS DRAWING
MATERIAL SEE NOTE 1
HEAT TREATMENT NONE
FINAL FINISH SEE NOTE

MIT
INSTRUMENTATION LAB
CAMBRIDGE, MASS
DWG. NO. CONTRACT

DRAWN P.S. [illegible] DATE 5 AUG 63
CHECKED [illegible] 26 Aug 63
APPROVAL [illegible] Aug 28 63
APPROVAL [illegible] 5 Sept 63
APPROVAL
NASA APPROVAL [illegible]
MIT APPROVAL
MIT APPROVAL [illegible] 9/5/63

MANNED SPACECRAFT CENTER
HOUSTON, TEXAS

HOUSING, RELAY RACK
AGC KEYBOARD

CODE IDENT NO —
SIZE J
NASA DRAWING NO 1004539
SCALE 1/1
WT
SHEET 1 OF 1

INTERPRET DRAWING IN ACCORDANCE WITH STANDARDS PRESCRIBED BY MIL-D-70327

INCHES
PHOTOGRAPHIC SCALE ONLY

ANY USE OF THIS DOCUMENT FOR OTHER THAN GOVERNMENTAL PURPOSES IS SUBJ

SYM	DESCRIPTION
	REVISIONS
–	CLASS A RELEASE PER TDRR

NOTICE – WHEN GOVERNMENT DRAWINGS, SPECIFICATIONS, OR OTHER DATA ARE USED FOR ANY PURPOSE OTHER THAN IN CONNECTION WITH A DEFINITELY RELATED GOVERNMENT PROCUREMENT OPERATION, THE UNITED STATES GOVERNMENT THEREBY INCURS NO RESPONSIBILITY NOR ANY OBLIGATION WHATSOEVER; AND THE FACT THAT THE GOVERNMENT MAY HAVE FORMULATED, FURNISHED, OR IN ANY WAY SUPPLIED THE SAID DRAWINGS, SPECIFICATIONS OR OTHER DATA IS NOT TO BE REGARDED BY IMPLICATION OR OTHERWISE AS IN ANY MANNER LICENSING THE HOLDER OR ANY OTHER PERSON OR CORPORATION, OR CONVEYING ANY RIGHTS OR PERMISSION TO MANUFACTURE, USE, OR SELL ANY PATENTED INVENTION THAT MAY IN ANY WAY BE RELATED THERETO.

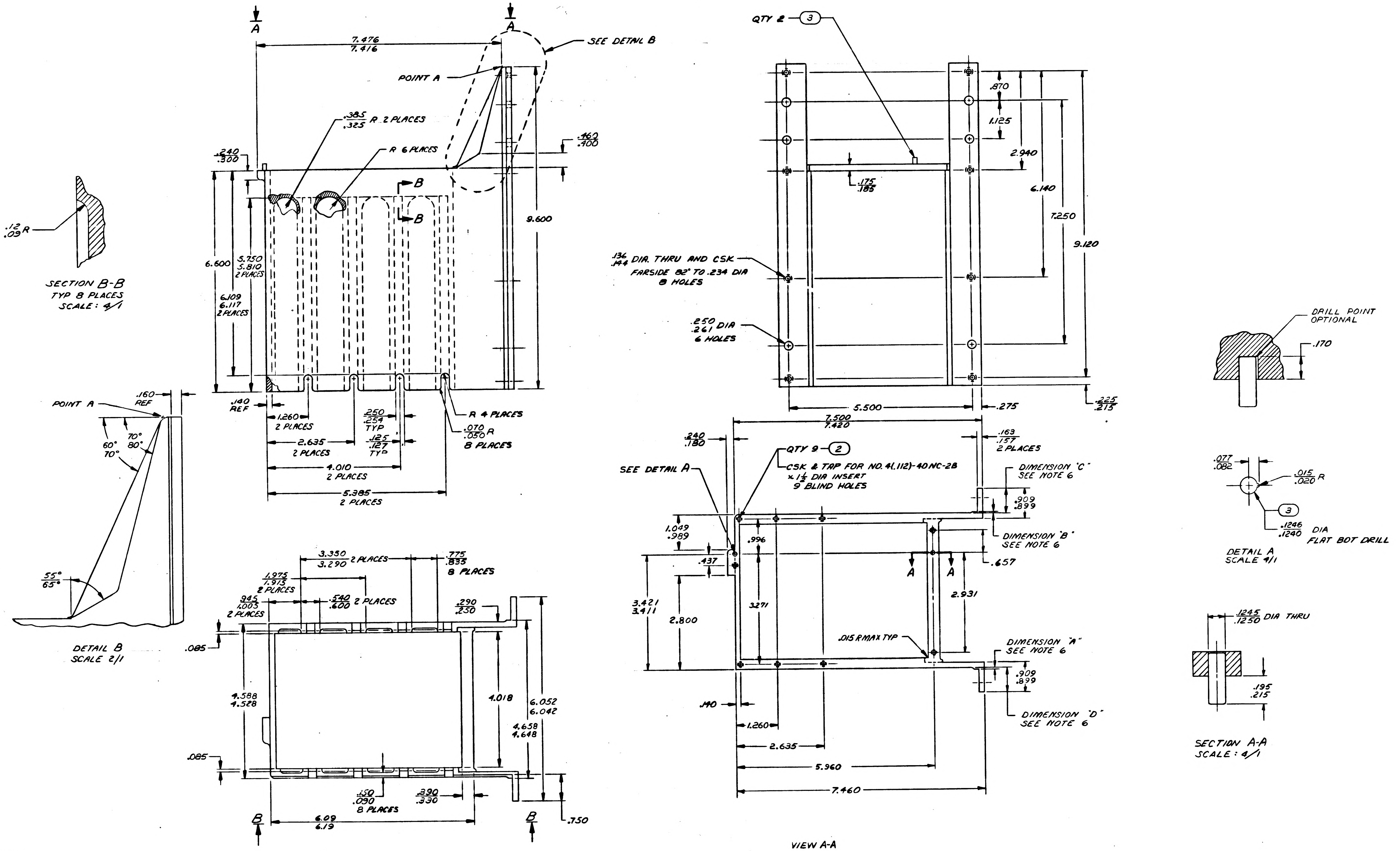
A
A
SEE DETAIL B
7.476
7.416
POINT A
.385
.325 R 2 PLACES
R 6 PLACES
.460
.400
.240
.300
B
B
9.600
6.600
5.750
5.810
2 PLACES
6.109
6.117
2 PLACES
.140
REF
1.260
2 PLACES
2.635
2 PLACES
.250
.254
TYP
.125
.127
TYP
4.010
2 PLACES
5.385
2 PLACES
R 4 PLACES
.070
.050 R
8 PLACES
.12
.09 R
SECTION B-B
TYP 8 PLACES
SCALE: 4/1
POINT A
.160
REF
70°
80°
60°
70°
55°
65°
DETAIL B
SCALE 2/1
3.350
3.290 2 PLACES
.775
.835
8 PLACES
1.975
1.915
2 PLACES
.945
1.005
2 PLACES
.540
.600 2 PLACES
.290
.230
.085
4.588
4.528
4.018
6.052
6.042
4.658
4.648
.085
.150
.090
8 PLACES
.390
.330
B
6.09
6.19
B
.750
QTY 2 – 3
.870
1.125
2.940
6.140
7.250
9.120
.175
.185
.136
.144 DIA THRU AND CSK
FARSIDE 82° TO .234 DIA
8 HOLES
.250
.261 DIA
6 HOLES
5.500
.275
.225
.215
7.500
7.420
.163
.157
2 PLACES
.240
.180
QTY 9 – 2
CSK & TAP FOR NO. 4(.112)-40NC-2B
x 1½ DIA INSERT
9 BLIND HOLES
SEE DETAIL A
DIMENSION "C"
SEE NOTE 6
.909
.899
DIMENSION "B"
SEE NOTE 6
.657
1.049
.989
.996
.437
A
A
3.421
3.411
2.800
3.271
2.931
.015 R MAX TYP
DIMENSION "A"
SEE NOTE 6
.909
.899
DIMENSION "D"
SEE NOTE 6
.140
1.260
2.635
5.960
7.460
VIEW A-A
DRILL POINT
OPTIONAL
.170
.077
.082
.015
.020 R
3
.1246
.1240 DIA
FLAT BOT DRILL
DETAIL A
SCALE 4/1
.1245
.1250 DIA THRU
.195
.215
SECTION A-A
SCALE: 4/1

NOTES

1. MATERIAL: CAST 356-T6 ALUMINUM ALLOY TEMP T6, CLASS 3M, CONDITION T6, PER QQ-A-601
2. AS CAST SURFACE QUALITY 200/
3. MACHINED SURFACE QUALITY 125/, UNLESS OTHERWISE SPECIFIED
4. BLACK ANODIZE, PER MIL-A-8625
5. ALL FILLETS AND ROUNDS .12 R
6. DIMENSION "A" TO BE EQUAL TO DIMENSION "B" AND DIMENSION "C" TO BE EQUAL TO DIMENSION "D" WITHIN .060

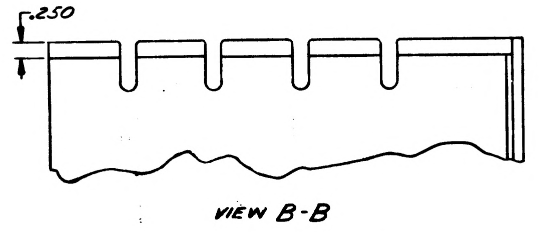

VIEW B-B

QTY REQD	PART OR IDENTIFYING NO	NOM
2	AN122692	PIN, DOWE
9	MS21209-C0415	INSERT, SCR
1	1004539-1	HOUSING, R

LIST OF MATERIAL

1003524	
NEXT ASSY	USED ON
APPLICATION	

UNLESS OTHERWISE SPECIFIED
DIMENSIONS ARE IN INCHES
TOLERANCES ON
FRACTIONS ± DECIMALS ±.005 .02 ANGLES ±
DO NOT SCALE THIS DRAWING
MATERIAL SEE NOTE 1
HEAT TREATMENT NONE
FINAL FINISH SEE NOTE

MIT
INSTRUMENTATION LAB
CAMBRIDGE, MASS
DWG. NO. CONTRACT
DRAWN P.S. Tracy DATE 5 AUG 63
CHECKED R.F. Bunker 26 Aug 63
APPROVAL
APPROVAL
APPROVAL
NASA APPROVAL
MIT APPROVAL
MIT APPROVAL

MANNED SP
HOUSING,
AGC

CODE IDENT NO
SIZE J
SCALE 1/1
WT

INTERPRET DRAWING IN ACCORDANCE WITH STANDARDS PRESCRIBED BY MIL-D-70327

NOTICE — WHEN GOVERNMENT DRAWINGS, SPECIFICATIONS, OR OTHER DATA ARE USED FOR ANY PURPOSE OTHER THAN IN CONNECTION WITH A DEFINITELY RELATED GOVERNMENT PROCUREMENT OPERATION, THE UNITED STATES GOVERNMENT THEREBY INCURS NO RESPONSIBILITY NOR ANY OBLIGATION WHATSOEVER; AND THE FACT THAT THE GOVERNMENT MAY HAVE FORMULATED, FURNISHED, OR IN ANY WAY SUPPLIED THE SAID DRAWINGS, SPECIFICATIONS OR OTHER DATA IS NOT TO BE REGARDED BY IMPLICATION OR OTHERWISE AS IN ANY MANNER LICENSING THE HOLDER OR ANY OTHER PERSON OR CORPORATION, OR CONVEYING ANY RIGHTS OR PERMISSION TO MANUFACTURE, USE, OR SELL ANY PATENTED INVENTION THAT MAY IN ANY WAY BE RELATED THERETO.

1004540

REVISIONS

SYM	DESCRIPTION	DATE	APPROVAL
—	CLASS A RELEASE PER TDRR 0298	9/5/63	

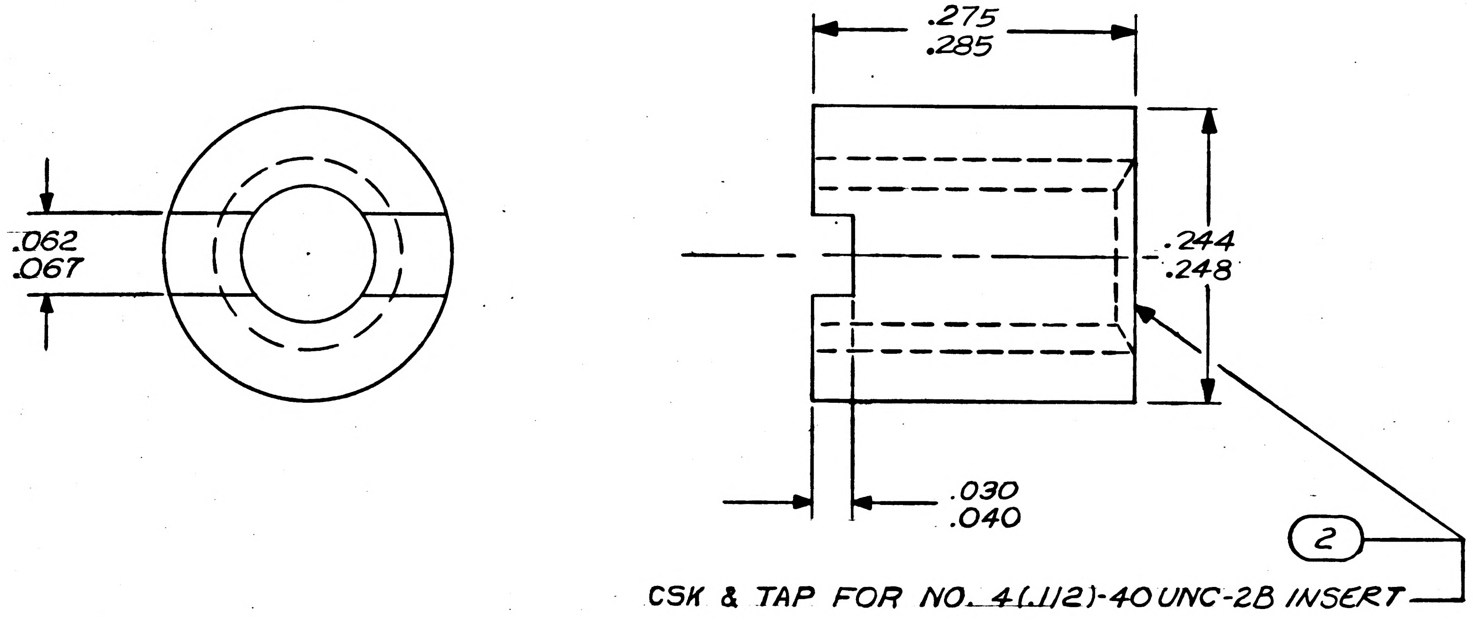

NOTES

1. MATL: 5052-H32 AL PER QQ-A-318 TEMP-H32
2. REMOVE SHARP EDGES
3. INTERPRET DRAWING IN ACCORDANCE WITH STANDARDS PRESCRIBED BY MIL-D-70327
4. ANODIZE PER MIL-A-8625 TYPE II DYED BLACK

QTY REQD	PART OR IDENTIFYING NO.	NOMENCLATURE OR DESCRIPTION	FIND NO.
1	MS 21209-C0415	INSERT, SCREW THREAD, LOCKING	2
1	1004540-1	PIN, STOP	1

LIST OF MATERIALS

MASTER

NEXT ASSY	USED ON
1003098	

APPLICATION

UNLESS OTHERWISE SPECIFIED
DIMENSIONS ARE IN INCHES
TOLERANCES ON
FRACTIONS ± DECIMALS ± ANGLES ±
DO NOT SCALE THIS DRAWING

MATERIAL SEE NOTE 1
HEAT TREATMENT NONE
FINAL FINISH SEE NOTE 4

MIT
INSTRUMENTATION LAB
CAMBRIDGE, MASS.
DWG. NO. CONTRACT

DRAWN D. McKenny DATE 12 Aug 63
CHECKED R.F. 26 Aug 63
APPROVAL Aug 28/63
APPROVAL Eldon C Hall 5 Sept 63
NASA APPROVAL 9/5/63
MIT APPROVAL
MIT APPROVAL 9/5/63

MANNED SPACECRAFT CENTER
HOUSTON, TEXAS

PIN, STOP
RELAY MODULE ASSEMBLY

CODE IDENT NO. —
SIZE C
NASA DRAWING NO. 1004540
SCALE 10/1
WT
SHEET 1 OF 1

INCHES
0 1 2
PHOTOGRAPHIC SCALE ONLY

NOTICE — WHEN GOVERNMENT DRAWINGS, SPECIFICATIONS, OR OTHER DATA ARE USED FOR ANY PURPOSE OTHER THAN IN CONNECTION WITH A DEFINITELY RELATED GOVERNMENT PROCUREMENT OPERATION, THE UNITED STATES GOVERNMENT THEREBY INCURS NO RESPONSIBILITY NOR ANY OBLIGATION WHATSOEVER; AND THE FACT THAT THE GOVERNMENT MAY HAVE FORMULATED, FURNISHED, OR IN ANY WAY SUPPLIED THE SAID DRAWINGS, SPECIFICATIONS OR OTHER DATA IS NOT TO BE REGARDED BY IMPLICATION OR OTHERWISE AS IN ANY MANNER LICENSING THE HOLDER OR ANY OTHER PERSON OR CORPORATION, OR CONVEYING ANY RIGHTS OR PERMISSION TO MANUFACTURE, USE, OR SELL ANY PATENTED INVENTION THAT MAY IN ANY WAY BE RELATED THERETO.

1004541 A

REVISIONS 03453

SYM	DESCRIPTION	DATE	APPROVAL
A	REVISED PER TDRR 05774	1-21-64	WK

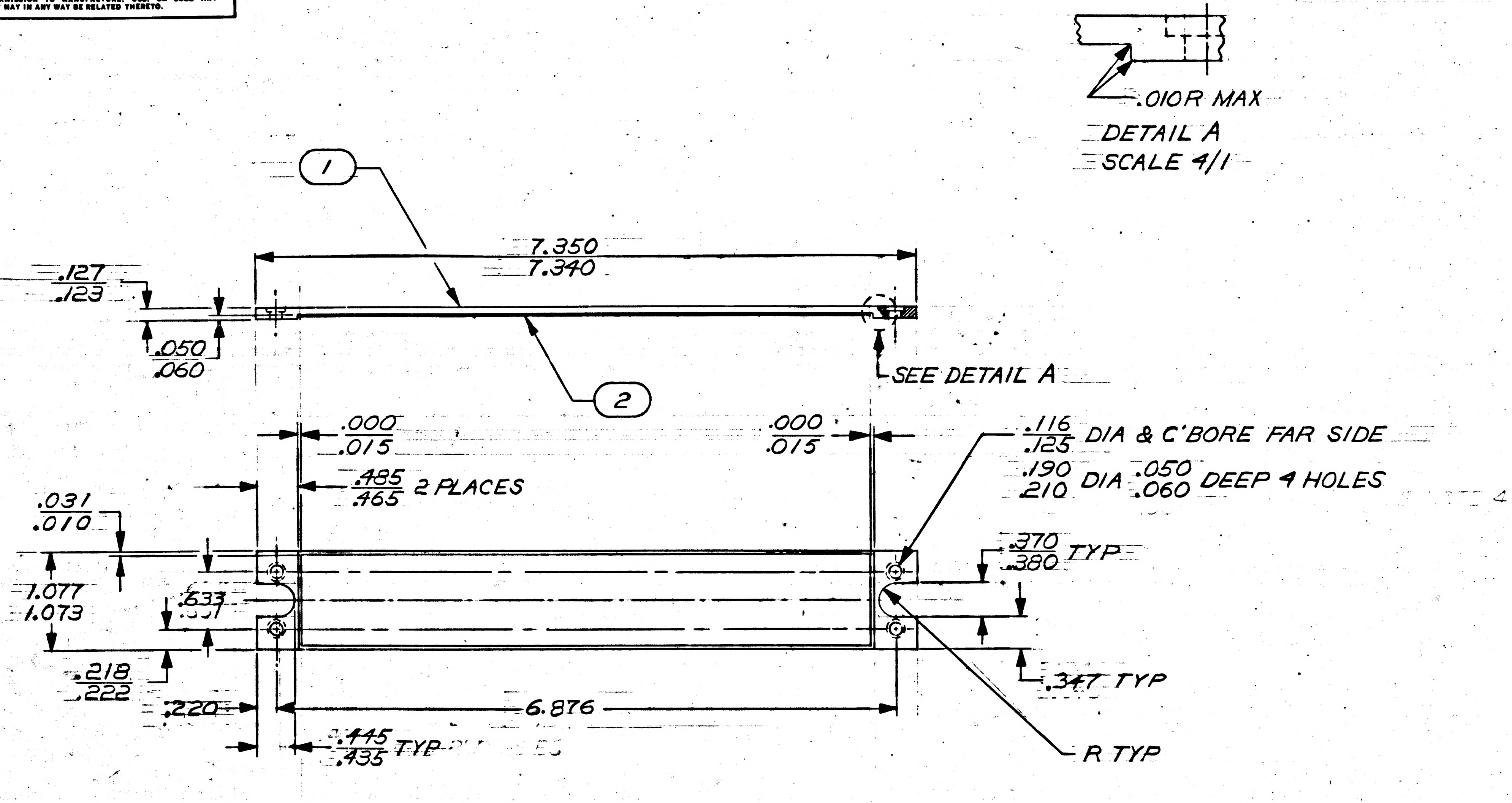
.010R MAX
DETAIL A
SCALE 4/1
①
②
7.350
7.340
.127
.123
.050
.060
SEE DETAIL A
.000
.015
.000
.015
.116
.125 DIA & C'BORE FAR SIDE
.190
.210 DIA .050
.060 DEEP 4 HOLES
.485
.465 2 PLACES
.031
.010
1.077
1.073
.633
.218
.222
.220
6.876
.445
.435 TYP
.370
.380 TYP
.347 TYP
R TYP

NOTES

1. MATERIAL: MAGNESIUM ALLOY AZ31B-H24 PER QQ-M-44
2. ALL SURFACES 125/ UNLESS OTHERWISE SPECIFIED
3. REMOVE ALL BURRS AND BREAK SHARP EDGES .005-.015
4. AR DENOTES AS REQUIRED
5. FINISH: ANODIZE PER MIL-M-3171, TYPE IV
6. INTERPRET DRAWING IN ACCORDANCE WITH STANDARDS PRESCRIBED BY MIL-D-70327

QTY REQD	PART OR IDENTIFYING NO.	NOMENCLATURE OR DESCRIPTION	FIND NO.
AR	1006849-10	INSULATION TAPE, ELEC	2
1	1004541-1	COVER	1

LIST OF MATERIALS

MASTER

NEXT ASSY	USED ON
1003530	

APPLICATION

UNLESS OTHERWISE SPECIFIED
DIMENSIONS ARE IN INCHES
TOLERANCES ON
FRACTIONS ± DECIMALS ± ANGLES ±
DO NOT SCALE THIS DRAWING
MATERIAL SEE NOTE 1
HEAT TREATMENT NONE
FINAL FINISH SEE NOTE 5

MIT
INSTRUMENTATION LAB
CAMBRIDGE, MASS.
DWG. NO. CONTRACT

DRAWN F. Mehan DATE 26 Aug 63
CHECKED Q. R. Bogin 27 AUG 63
APPROVAL J. Shannon 5 Sept 63
APPROVAL Eldon C Hall 9 Sept 63
NASA APPROVAL 9/4/63
MIT APPROVAL
MIT APPROVAL 9/26/63

MANNED SPACECRAFT CENTER
HOUSTON, TEXAS

COVER
DECODING MODULE ASSEMBLY
AGC DSKY, NAV & MAIN

CODE IDENT NO. —
SIZE C
NASA DRAWING NO. 1004541
SCALE 1/1
WT
SHEET 1 OF 1

NOTICE — WHEN GOVERNMENT DRAWINGS, SPECIFICATIONS, OR OTHER DATA ARE USED FOR ANY PURPOSE OTHER THAN IN CONNECTION WITH A DEFINITELY RELATED GOVERNMENT PROCUREMENT OPERATION, THE UNITED STATES GOVERNMENT THEREBY INCURS NO RESPONSIBILITY NOR ANY OBLIGATION WHATSOEVER; AND THE FACT THAT THE GOVERNMENT MAY HAVE FORMULATED, FURNISHED, OR IN ANY WAY SUPPLIED THE SAID DRAWINGS, SPECIFICATIONS OR OTHER DATA IS NOT TO BE REGARDED BY IMPLICATION OR OTHERWISE AS IN ANY MANNER LICENSING THE HOLDER OR ANY OTHER PERSON OR CORPORATION, OR CONVEYING ANY RIGHTS OR PERMISSION TO MANUFACTURE, USE, OR SELL ANY PATENTED INVENTION THAT MAY IN ANY WAY BE RELATED THERETO.

1004541 B

REVISIONS 03453

SYM	DESCRIPTION	DATE	APPROVAL
A	REVISED PER TDRR 05774	1-21-64	WH
B	REVISED PER TDRR 06432	7/18/64	

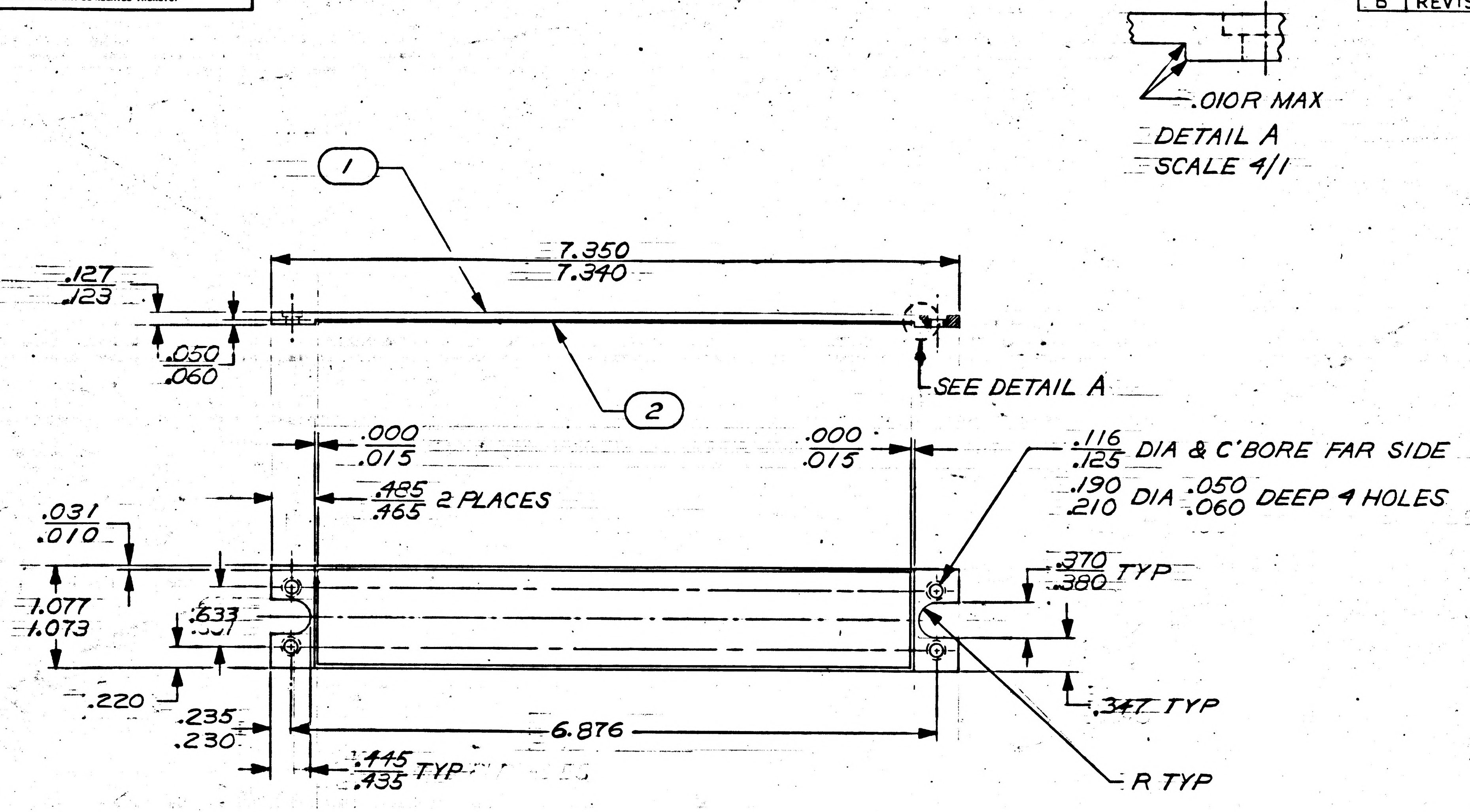

.010R MAX
DETAIL A
SCALE 4/1
1
2
7.350
7.340
.127
.123
.050
.060
SEE DETAIL A
.000
.015
.000
.015
.485
.465
2 PLACES
.116
.125
DIA & C'BORE FAR SIDE
.190
.210
DIA
.050
.060
DEEP 4 HOLES
.031
.010
.370
.380
TYP
1.077
1.073
.633
.631
.220
.235
.230
.347 TYP
6.876
.445
.435
TYP
R TYP

NOTES
1. MATERIAL: MAGNESIUM ALLOY AZ31B-H24 PER QQ-M-44
2. ALL SURFACES 125/ UNLESS OTHERWISE SPECIFIED
3. REMOVE ALL BURRS AND BREAK SHARP EDGES .005-.015
4. AR DENOTES AS REQUIRED
5. FINISH: ANODIZE PER MIL-M-3171, TYPE IV
6. INTERPRET DRAWING IN ACCORDANCE WITH STANDARDS PRESCRIBED BY MIL-D-70327

QTY REQD	PART OR IDENTIFYING NO.	NOMENCLATURE OR DESCRIPTION	FIND NO.
AR	1006849-10	INSULATION TAPE, ELEC	2
1	1004541-1	COVER	1

LIST OF MATERIALS

MASTER

NEXT ASSY	USED ON
1003530	

APPLICATION

UNLESS OTHERWISE SPECIFIED
DIMENSIONS ARE IN INCHES
TOLERANCES ON
FRACTIONS ±
DECIMALS ±.005
ANGLES ±
DO NOT SCALE THIS DRAWING
MATERIAL SEE NOTE 1
HEAT TREATMENT NONE
FINAL FINISH SEE NOTE 5

MIT
INSTRUMENTATION LAB
CAMBRIDGE, MASS.
DWG. NO.
CONTRACT
DRAWN F. Mehan DATE 26 Aug 63
CHECKED A.R. Bogin 27 AUG 63
APPROVAL J. Shamas 5 Sept 63
APPROVAL Eldon C Hall 9 Sept 63
NASA APPROVAL 9/4/63
MIT APPROVAL
MIT APPROVAL 9/26/63

MANNED SPACECRAFT CENTER
HOUSTON, TEXAS

COVER
DECODING MODULE ASSEMBLY
AGC DSKY, NAV & MAIN

CODE IDENT NO. —
SIZE C
NASA DRAWING NO. 1004541
SCALE 1/1
WT
SHEET 1 OF 1

INCHES
0 1 2
PHOTOGRAPHIC SCALE ONLY

NOTICE — WHEN GOVERNMENT DRAWINGS, SPECIFICATIONS, OR OTHER DATA ARE USED FOR ANY PURPOSE OTHER THAN IN CONNECTION WITH A DEFINITELY RELATED GOVERNMENT PROCUREMENT OPERATION, THE UNITED STATES GOVERNMENT THEREBY INCURS NO RESPONSIBILITY NOR ANY OBLIGATION WHATSOEVER; AND THE FACT THAT THE GOVERNMENT MAY HAVE FORMULATED, FURNISHED, OR IN ANY WAY SUPPLIED THE SAID DRAWINGS, SPECIFICATIONS OR OTHER DATA IS NOT TO BE REGARDED BY IMPLICATION OR OTHERWISE AS IN ANY MANNER LICENSING THE HOLDER OR ANY OTHER PERSON OR CORPORATION, OR CONVEYING ANY RIGHTS OR PERMISSION TO MANUFACTURE, USE, OR SELL ANY PATENTED INVENTION THAT MAY IN ANY WAY BE RELATED THERETO.

1004541 C

REVISIONS 03453

SYM	DESCRIPTION	DATE	APPROVAL
A	REVISED PER TDRR 05774	1-21-64	WH
B	REVISED PER TDRR 06432	3/18/64	
C	REVISED PER TDRR 09796 DR D.A. Clermont CHK G.R.B.	5/28/64	

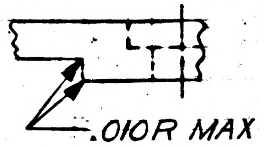

DETAIL A
SCALE 4/1

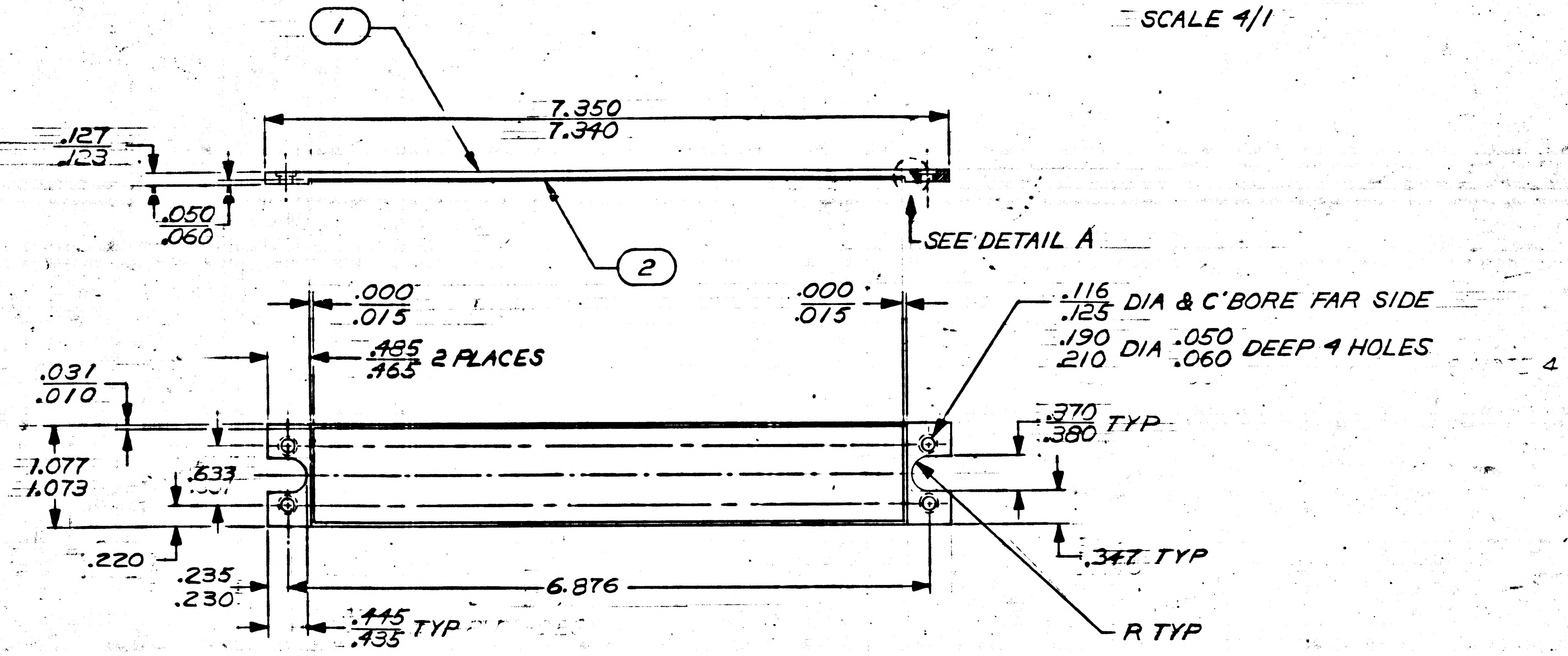

NOTES

1. MATERIAL: MAGNESIUM ALLOY AZ31B-H24 PER QQ-M-44
2. ALL SURFACES 125√ UNLESS OTHERWISE SPECIFIED
3. REMOVE ALL BURRS AND BREAK SHARP EDGES .005-.015
4. AR DENOTES AS REQUIRED
5. ~~FINISH: ANODIZE PER MIL-M-3171, TYPE IV~~
6. INTERPRET DRAWING IN ACCORDANCE WITH STANDARDS PRESCRIBED BY MIL-D-70327
7. FINISH: ANODIZE PER MIL-M-45202A, TYPE I, CLASS C, PREPICKLE PER PAR. 3.32 OF MIL-M-3171A

QTY REQD	PART OR IDENTIFYING NO.	NOMENCLATURE OR DESCRIPTION	FIND NO.
AR	1006849-10	INSULATION TAPE, ELEC	2
1	1004541-1	COVER	1

LIST OF MATERIALS

NEXT ASSY	USED ON
1003530	

APPLICATION

UNLESS OTHERWISE SPECIFIED DIMENSIONS ARE IN INCHES
TOLERANCES ON
FRACTIONS ± DECIMALS ±.005 ANGLES ±
DO NOT SCALE THIS DRAWING
MATERIAL SEE NOTE 7
HEAT TREATMENT NONE
FINAL FINISH SEE NOTE 7

MIT INSTRUMENTATION LAB
CAMBRIDGE, MASS.
DWG. NO.
CONTRACT

DRAWN F. Mehan DATE 26 Aug 63
CHECKED G.R. Bogin 27 AUG 63
APPROVAL J. Sherman 5 Sept 63
APPROVAL Eldon C. Hall 9 Sept 63
NASA APPROVAL
MIT APPROVAL
MIT APPROVAL

MANNED SPACECRAFT CENTER
HOUSTON, TEXAS

COVER
DECODING MODULE ASSEMBLY
AGC DSKY, NAV & MAIN

CODE IDENT NO.	SIZE	NASA DRAWING NO.
—	C	1004541

SCALE 1/1 WT SHEET 1 OF 1

MASTER

NOTICE — WHEN GOVERNMENT DRAWINGS, SPECIFICATIONS, OR OTHER DATA ARE USED FOR ANY PURPOSE OTHER THAN IN CONNECTION WITH A DEFINITELY RELATED GOVERNMENT PROCUREMENT OPERATION, THE UNITED STATES GOVERNMENT THEREBY INCURS NO RESPONSIBILITY NOR ANY OBLIGATION WHATSOEVER; AND THE FACT THAT THE GOVERNMENT MAY HAVE FORMULATED, FURNISHED, OR IN ANY WAY SUPPLIED THE SAID DRAWINGS, SPECIFICATIONS OR OTHER DATA IS NOT TO BE REGARDED BY IMPLICATION OR OTHERWISE AS IN ANY MANNER LICENSING THE HOLDER OR ANY OTHER PERSON OR CORPORATION, OR CONVEYING ANY RIGHTS OR PERMISSION TO MANUFACTURE, USE, OR SELL ANY PATENTED INVENTION THAT MAY IN ANY WAY BE RELATED THERETO.

1004541 D

REVISIONS 03453

SYM	DESCRIPTION	DATE	APPROVAL
A	REVISED PER TDRR 05774	1-21-64	WH
B	REVISED PER TDRR 06432	3/18/64	
C	REVISED PER TDRR 09796 DR D.A.Clermont CHK Q.R.B.	5/28/69	Hue
D	REVISED PER TDRR 10383 DR P. Boudreau CHK Q.R.B.	6/22/6	Hue

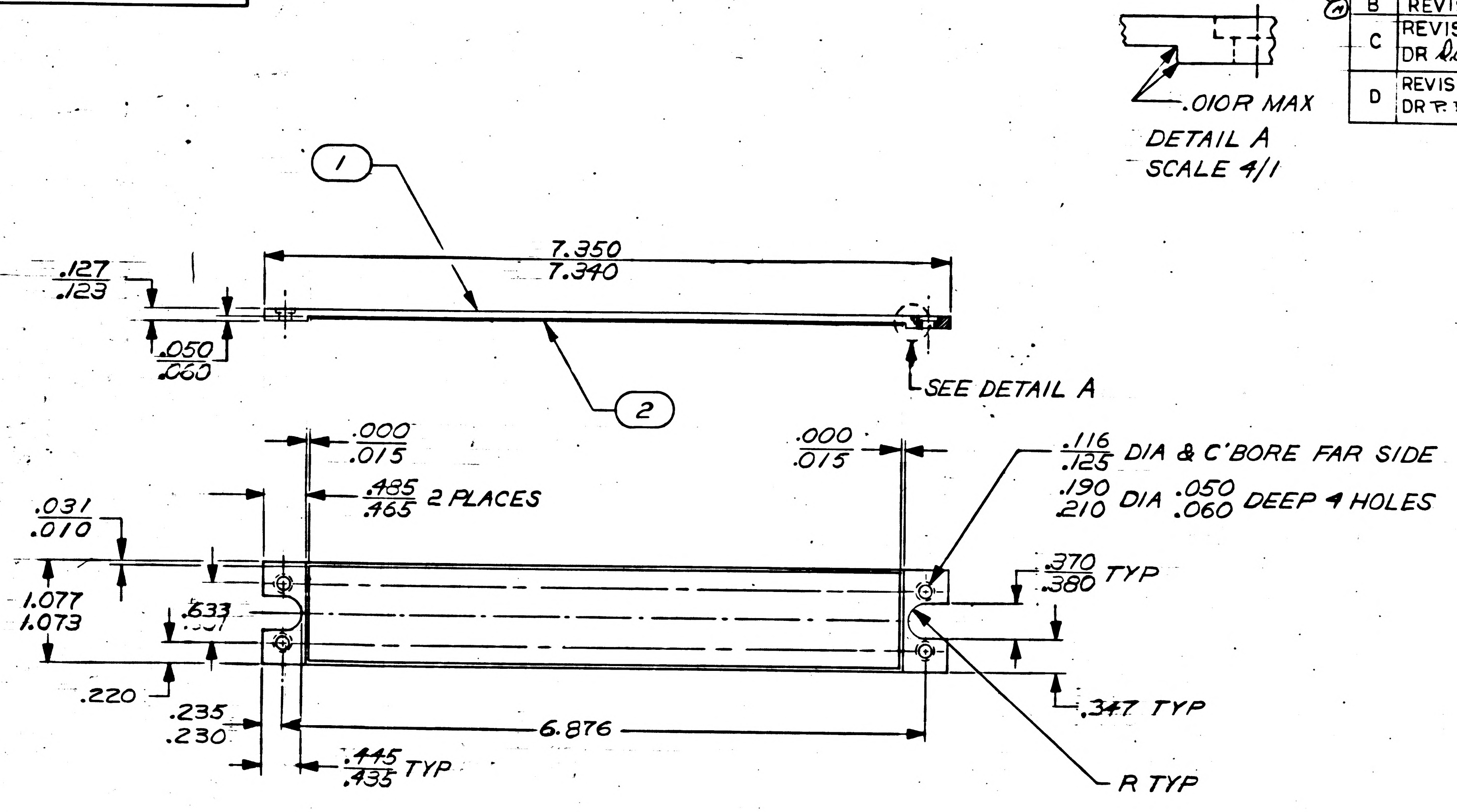

NOTES

1. MATERIAL: MAGNESIUM ALLOY AZ31B-H24 PER QQ-M-44
2. ALL SURFACES 125/ UNLESS OTHERWISE SPECIFIED
3. REMOVE ALL BURRS AND BREAK SHARP EDGES .005-.015
4. AR DENOTES AS REQUIRED
5. FINISH: ANODIZE PER MIL-M-3171, TYPE IV AND PROCESS ENTIRE SURFACE PER ND1002040
6. INTERPRET DRAWING IN ACCORDANCE WITH STANDARDS PRESCRIBED BY MIL-D-70327
7. ~~FINISH: ANODIZE PER MIL-M-45202A, TYPE I, CLASS C, PREPICKLE PER PAR. 3.32 OF MIL-M-3171A~~

QTY REQD	PART OR IDENTIFYING NO.	NOMENCLATURE OR DESCRIPTION	FIND NO.
AR	1006849-10	INSULATION TAPE, ELEC	2
1	1004541-1	COVER	1

LIST OF MATERIALS

NEXT ASSY	USED ON
1003530	
APPLICATION	

UNLESS OTHERWISE SPECIFIED DIMENSIONS ARE IN INCHES
TOLERANCES ON
FRACTIONS ± DECIMALS ±.005 ANGLES ±
DO NOT SCALE THIS DRAWING

MATERIAL SEE NOTE 1
HEAT TREATMENT NONE
FINAL FINISH SEE NOTE 5

MIT
INSTRUMENTATION LAB
CAMBRIDGE, MASS.
DWG. NO. CONTRACT

DRAWN F. Mehan DATE 26 Aug 63
CHECKED Q.R. Bogin 27 AUG 63
APPROVAL J. Shamon 5/(?)/63
APPROVAL Eldon C. Hall 9 Sept 63
NASA APPROVAL
MIT APPROVAL
MIT APPROVAL 9/26/63

MANNED SPACECRAFT CENTER
HOUSTON, TEXAS

COVER
DECODING MODULE ASSEMBLY
AGC DSKY, NAV & MAIN

CODE IDENT NO. —
SIZE C
NASA DRAWING NO. 1004541
SCALE 1/1
WT
SHEET 1 OF 1

NOTICE — WHEN GOVERNMENT DRAWINGS, SPECIFICATIONS, OR OTHER DATA ARE USED FOR ANY PURPOSE OTHER THAN IN CONNECTION WITH A DEFINITELY RELATED GOVERNMENT PROCUREMENT OPERATION, THE UNITED STATES GOVERNMENT THEREBY INCURS NO RESPONSIBILITY NOR ANY OBLIGATION WHATSOEVER; AND THE FACT THAT THE GOVERNMENT MAY HAVE FORMULATED, FURNISHED, OR IN ANY WAY SUPPLIED THE SAID DRAWINGS, SPECIFICATIONS OR OTHER DATA IS NOT TO BE REGARDED BY IMPLICATION OR OTHERWISE AS IN ANY MANNER LICENSING THE HOLDER OR ANY OTHER PERSON OR CORPORATION, OR CONVEYING ANY RIGHTS OR PERMISSION TO MANUFACTURE, USE, OR SELL ANY PATENTED INVENTION THAT MAY IN ANY WAY BE RELATED THERETO.

1004541 E

REVISIONS 03453

SYM	DESCRIPTION	DATE	APPROVAL
A	REVISED PER TDRR 05774	1-21-64	WH
B	REVISED PER TDRR 06432	3/18/64	
C	REVISED PER TDRR 09796 DR D.A. Clermont CHK Q.R.B.	5/28/64	HWC
D	REVISED PER TDRR 10383 DR P. Boudreau CHK Q.R.B.	6/22/64	HWC
E	REVISED PER TDRR 10731 DR A.A. Wheeler CHK A.R.B.	7/2/64	HWC

R-10771

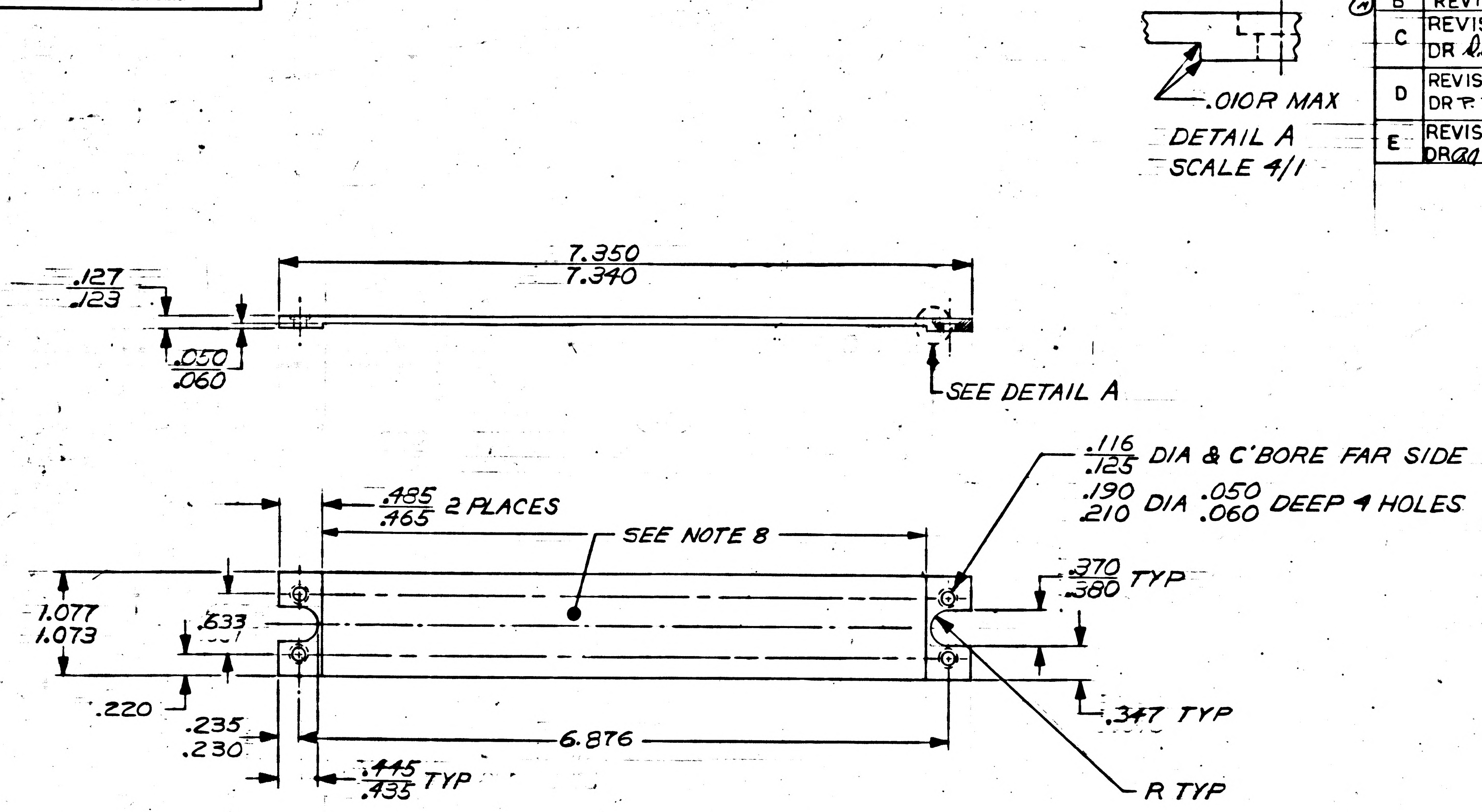

NOTES

1. MATERIAL: MAGNESIUM ALLOY AZ31B-H24 PER QQ-M-44
2. ALL SURFACES 125/ UNLESS OTHERWISE SPECIFIED
3. REMOVE ALL BURRS AND BREAK SHARP EDGES .005-.015
4. AR DENOTES AS REQUIRED
5. FINISH: ANODIZE PER MIL-M-3171, TYPE IV AND PROCESS ENTIRE SURFACE PER ND1002040
6. INTERPRET DRAWING IN ACCORDANCE WITH STANDARDS PRESCRIBED BY MIL-D-70327
7. ~~FINISH: ANODIZE PER MIL-M-45202A, TYPE I, CLASS C, PREPICKLE PER PAR. 3.32 OF MIL-M-3171A~~
8. SPRAY COAT INDICATED SURFACE WITH CLEAR EPOXY PER ND 1002035, EXCEPT TO .005-.015 DEPTH

QTY REQD	PART OR IDENTIFYING NO.	NOMENCLATURE OR DESCRIPTION	FIND NO.
~~AR~~	~~1006849-10~~	~~INSULATION TAPE, ELEC~~	~~2~~
~~1~~	~~1004541-1~~	~~COVER~~	~~1~~

LIST OF MATERIALS

NEXT ASSY	USED ON
1003530	

APPLICATION

UNLESS OTHERWISE SPECIFIED
DIMENSIONS ARE IN INCHES
TOLERANCES ON
FRACTIONS ± DECIMALS ±.005 ANGLES ±
DO NOT SCALE THIS DRAWING

MATERIAL: SEE NOTE 1
HEAT TREATMENT: NONE
FINAL FINISH: SEE NOTE 5

MIT
INSTRUMENTATION LAB
CAMBRIDGE, MASS.
DWG. NO. CONTRACT

DRAWN F. Mehan DATE 26Aug63
CHECKED Q.R. Bogin 27AUG63
APPROVAL J. Shannon 5/Sept/63
APPROVAL Eldon C Hall 9 Sept 63
NASA APPROVAL
MIT APPROVAL
MIT APPROVAL

MANNED SPACECRAFT CENTER
HOUSTON, TEXAS

COVER
DECODING MODULE ASSEMBLY
AGC DSKY, NAV & MAIN

CODE IDENT NO. —
SIZE C
NASA DRAWING NO. 1004541
SCALE 1/1
WT
SHEET 1 OF 1

NOTICE — WHEN GOVERNMENT DRAWINGS, SPECIFICATIONS, OR OTHER DATA ARE USED FOR ANY PURPOSE OTHER THAN IN CONNECTION WITH A DEFINITELY RELATED GOVERNMENT PROCUREMENT OPERATION, THE UNITED STATES GOVERNMENT THEREBY INCURS NO RESPONSIBILITY NOR ANY OBLIGATION WHATSOEVER; AND THE FACT THAT THE GOVERNMENT MAY HAVE FORMULATED, FURNISHED, OR IN ANY WAY SUPPLIED THE SAID DRAWINGS, SPECIFICATIONS OR OTHER DATA IS NOT TO BE REGARDED BY IMPLICATION OR OTHERWISE AS IN ANY MANNER LICENSING THE HOLDER OR ANY OTHER PERSON OR CORPORATION, OR CONVEYING ANY RIGHTS OR PERMISSION TO MANUFACTURE, USE, OR SELL ANY PATENTED INVENTION THAT MAY IN ANY WAY BE RELATED THERETO.

D 1004543

(M)

REVISIONS 03453

SYM	DESCRIPTION	DATE	APPROVAL
A	REVISED PER TDRR 05754	1/14/64	WK

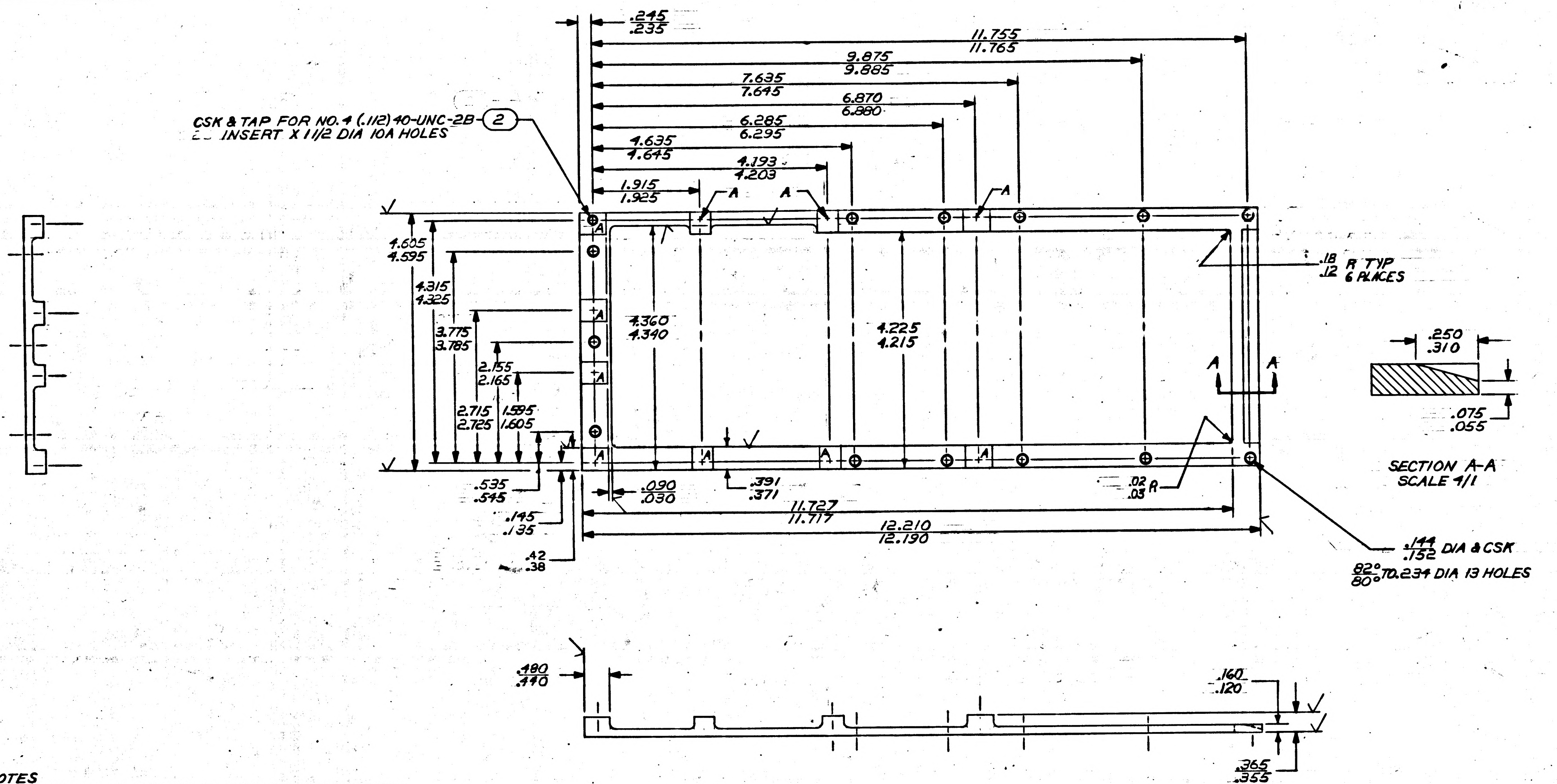

.245
.235
11.755
11.765
9.875
9.885
7.635
7.645
6.870
6.880
6.285
6.295
4.635
4.645
4.193
4.203
1.915
1.925
CSK & TAP FOR NO.4 (.112) 40-UNC-2B (2) INSERT X 1 1/2 DIA 10A HOLES
A
4.605
4.595
4.315
4.325
3.775
3.785
2.155
2.165
2.715
2.725
1.595
1.605
4.360
4.340
4.225
4.215
.535
.545
.145
.135
.42
.38
.090
.030
.391
.371
11.727
11.717
12.210
12.190
.02
.03 R
.18
.12 R TYP 6 PLACES
.250
.310
.075
.055
SECTION A-A
SCALE 4/1
.144
.152 DIA & CSK
82°
80° TO .234 DIA 13 HOLES
.480
.440
.160
.120
.365
.355

NOTES

1. MAKE FROM DWG NO. 1004567
2. MACHINED SURFACE QUALITY 125√ UNLESS OTHERWISE SPECIFIED
3. ~~CAST SURFACE QUALITY 200√~~
4. MASK ALL TAPPED HOLES BEFORE ANODIZING
5. ANODIZE PER MIL-A-8625, TYPE II DYED BLACK
6. INTERPRET DRAWING IN ACCORDANCE WITH STANDARDS PRESCRIBED BY MIL-D-70327
7. INSTALL FIND NO 2 PER MS33646
8. COAT THREADS AND FIND NO. 2 WITH MIL-P-8585 WET ZINC CHROMATE PRIMER

MASTER

10	MS21209-C0415	INSERT, HELICAL	2
1	1004543-1	HOUSING	1
QTY REQD	PART OR IDENTIFYING NO.	NOMENCLATURE OR DESCRIPTION	FIND NO.

LIST OF MATERIALS

NEXT ASSY	USED ON
1003524	

APPLICATION

UNLESS OTHERWISE SPECIFIED
DIMENSIONS ARE IN INCHES
TOLERANCES ON
FRACTIONS ± DECIMALS ± ANGLES ±
DO NOT SCALE THIS DRAWING

MATERIAL SEE NOTE 1
HEAT TREATMENT NONE
FINAL FINISH SEE NOTES 5

MIT
INSTRUMENTATION LAB
CAMBRIDGE, MASS.
DWG. NO. CONTRACT

DRAWN P.S. Tracy DATE 7 JUN 63
CHECKED A.R. Bogu 5 SEP 63
APPROVAL Jensen Sept 19/63
APPROVAL Eldon C Hall 20 Sept 63

NASA APPROVAL 7/2/64
MIT APPROVAL
MIT APPROVAL 9/26/63

MANNED SPACECRAFT CENTER
HOUSTON, TEXAS

PLATE EL HOLD DOWN
AGC DSKY NAV

CODE IDENT NO. —
SIZE D
NASA DRAWING NO. 1004543
SCALE 1/1
WT
SHEET 1 OF 1

D 1004543 A

NOTICE — WHEN GOVERNMENT DRAWINGS SPECIFICATIONS OR OTHER DATA ARE USED FOR ANY PURPOSE OTHER THAN IN CONNECTION WITH A DEFINITELY RELATED GOVERNMENT PROCUREMENT OPERATION THE UNITED STATES GOVERNMENT THEREBY INCURS NO RESPONSIBILITY NOR ANY OBLIGATION WHATSOEVER AND THE FACT THAT THE GOVERNMENT MAY HAVE FORMULATED, FURNISHED, OR IN ANY WAY SUPPLIED THE SAID DRAWINGS, SPECIFICATIONS OR OTHER DATA IS NOT TO BE REGARDED BY IMPLICATION OR OTHERWISE AS IN ANY MANNER LICENSING THE HOLDER OR ANY OTHER PERSON OR CORPORATION, OR CONVEYING ANY RIGHTS OR PERMISSION TO MANUFACTURE, USE, OR SELL ANY PATENTED INVENTION THAT MAY IN ANY WAY BE RELATED THERETO.

1004543 B

REVISIONS 03453

SYM	DESCRIPTION	DATE	APPROVAL
A	REVISED PER TDRR 05754	1/14/64	L.J.B. WK
B	REVISED PER TDRR 08401 DR P. Buchanan CHK R.H.E.	5/1/69	HWK

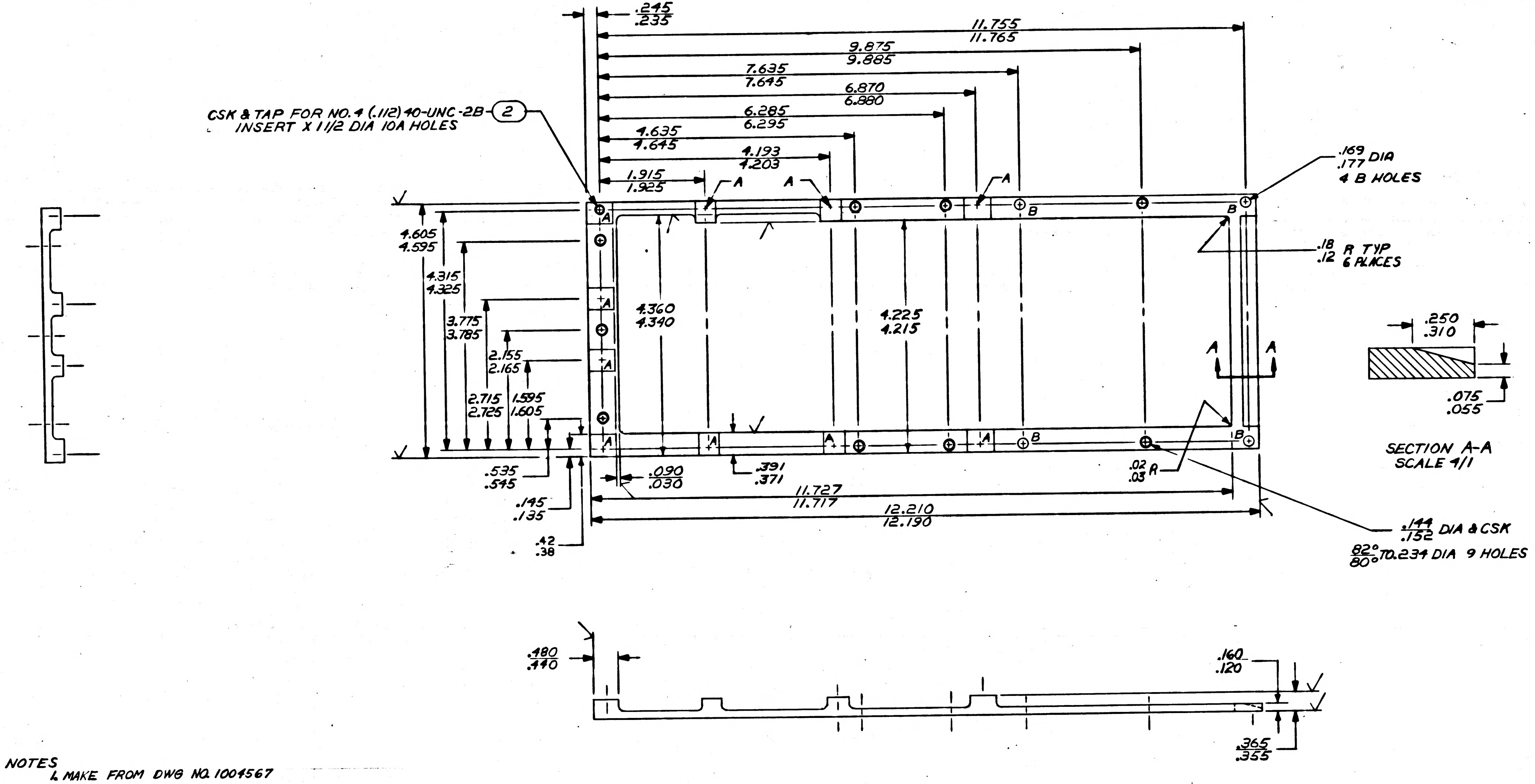

.245
.235
11.755
11.765
9.875
9.885
7.635
7.645
6.870
6.880
6.285
6.295
4.635
4.645
4.193
4.203
1.915
1.925
CSK & TAP FOR NO. 4 (.112) 40-UNC-2B ② INSERT X 1 1/2 DIA 10A HOLES
A
B
.169
.177 DIA
4 B HOLES
.18
.12 R TYP
6 PLACES
4.605
4.595
4.315
4.325
3.775
3.785
2.155
2.165
2.715
2.725
1.595
1.605
4.360
4.340
4.225
4.215
.535
.545
.145
.135
.42
.38
.090
.030
.391
.371
11.727
11.717
12.210
12.190
.02
.03 R
.144
.152 DIA & CSK
82°
80° TO .234 DIA 9 HOLES
.250
.310
.075
.055
SECTION A-A
SCALE 4/1
.480
.440
.160
.120
.365
.355

NOTES
1. MAKE FROM DWG NO. 1004567
2. MACHINED SURFACE QUALITY 125√ UNLESS OTHERWISE SPECIFIED
~~3. CAST SURFACE QUALITY 200√~~
4. MASK ALL TAPPED HOLES BEFORE ANODIZING
5. ANODIZE PER MIL-A-8625, TYPE II DYED BLACK
6. INTERPRET DRAWING IN ACCORDANCE WITH STANDARDS PRESCRIBED BY MIL-D-70327
7. INSTALL FIND NO 2 PER MS33646
8. COAT THREADS AND FIND NO. 2 WITH MIL-P-8585 WET ZINC CHROMATE PRIMER

QTY REQD	PART OR IDENTIFYING NO.	NOMENCLATURE OR DESCRIPTION	FIND NO.
10	MS21209-C0415	INSERT, HELICAL	2
1	1004543-1	PLATE	1

LIST OF MATERIALS

NEXT ASSY	USED ON
1003458	
1003524	

APPLICATION

UNLESS OTHERWISE SPECIFIED
DIMENSIONS ARE IN INCHES
TOLERANCES ON
FRACTIONS ± DECIMALS ± ANGLES ±
DO NOT SCALE THIS DRAWING
MATERIAL SEE NOTE 1
HEAT TREATMENT NONE
FINAL FINISH SEE NOTES 5

MIT
INSTRUMENTATION LAB
CAMBRIDGE, MASS.
DWG. NO.
CONTRACT
DRAWN P.S. Tracy DATE 7 JUN 63
CHECKED A.R. Bogen 5 SEP 63
APPROVAL Jensen Sept 19 63
APPROVAL Eldon C Hall 20 Sept 63
NASA APPROVAL
MIT APPROVAL
MIT APPROVAL

MANNED SPACECRAFT CENTER
HOUSTON, TEXAS

PLATE, EL HOLD DOWN AGC DSKY, NAV

CODE IDENT NO. ——
SIZE D
NASA DRAWING NO. 1004543
SCALE 1/1
WT
SHEET 1 OF 1

NOTICE — WHEN GOVERNMENT DRAWINGS, SPECIFICATIONS, OR OTHER DATA ARE USED FOR ANY PURPOSE OTHER THAN IN CONNECTION WITH A DEFINITELY RELATED GOVERNMENT PROCUREMENT OPERATION, THE UNITED STATES GOVERNMENT THEREBY INCURS NO RESPONSIBILITY NOR ANY OBLIGATION WHATSOEVER; AND THE FACT THAT THE GOVERNMENT MAY HAVE FORMULATED, FURNISHED, OR IN ANY WAY SUPPLIED THE SAID DRAWINGS, SPECIFICATIONS OR OTHER DATA IS NOT TO BE REGARDED BY IMPLICATION OR OTHERWISE AS IN ANY MANNER LICENSING THE HOLDER OR ANY OTHER PERSON OR CORPORATION, OR CONVEYING ANY RIGHTS OR PERMISSION TO MANUFACTURE, USE, OR SELL ANY PATENTED INVENTION THAT MAY IN ANY WAY BE RELATED THERETO.

D1004543

REVISIONS 03453			
SYM	DESCRIPTION	DATE	APPROVAL

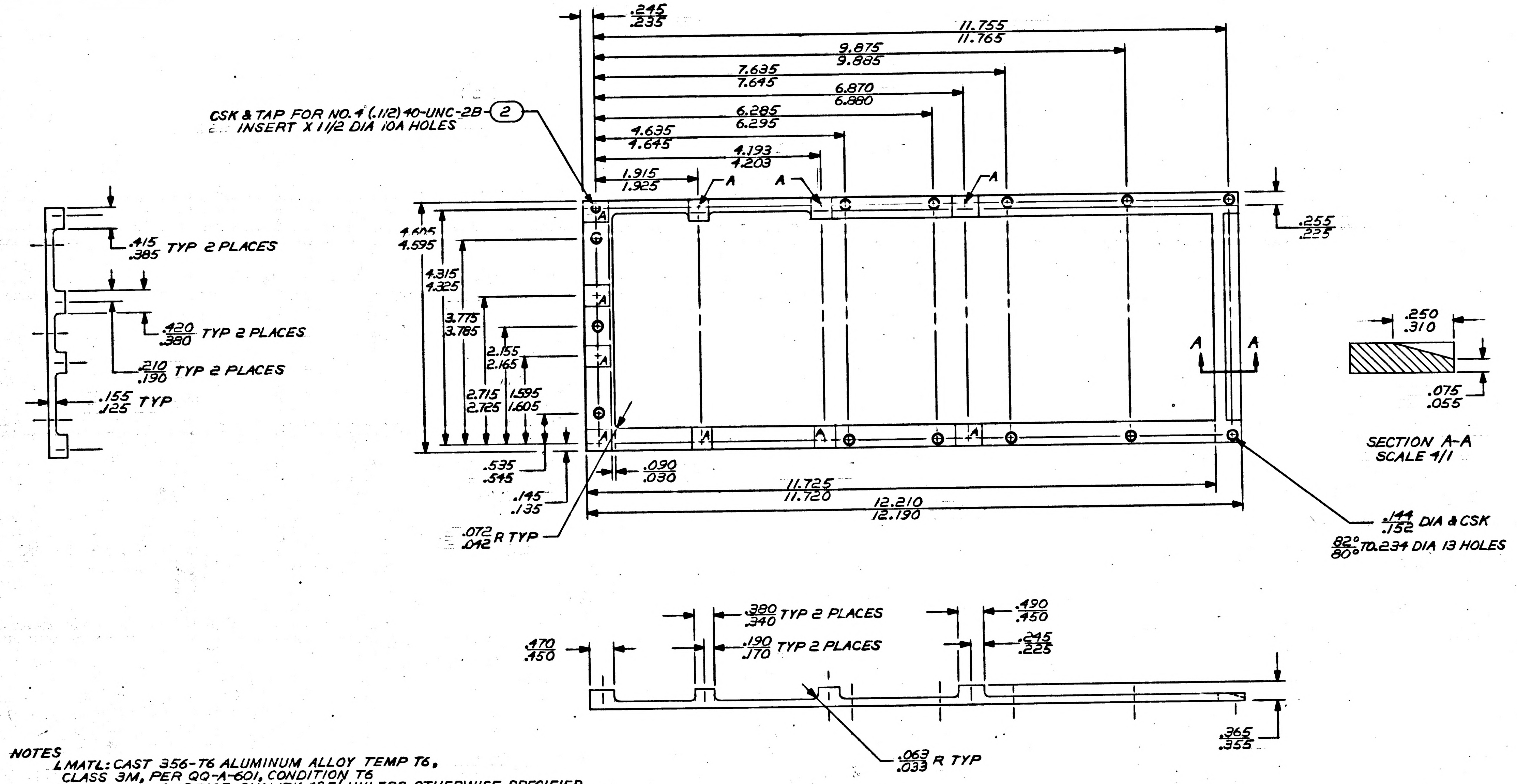
.245
.235
11.755
11.765
9.875
9.885
7.635
7.645
6.870
6.880
6.285
6.295
4.635
4.645
4.193
4.203
1.915
1.925
CSK & TAP FOR NO.4 (.112) 40-UNC-2B ② INSERT X 11/2 DIA 10A HOLES
A
.255
.225
4.605
4.595
4.315
4.325
3.775
3.785
2.155
2.165
2.715
2.725
1.595
1.605
.535
.545
.145
.135
.072
.042 R TYP
.090
.030
11.725
11.720
12.210
12.190
.415
.385 TYP 2 PLACES
.420
.380 TYP 2 PLACES
.210
.190 TYP 2 PLACES
.155
.125 TYP
.250
.310
.075
.055
SECTION A-A
SCALE 4/1
.144
.152 DIA & CSK
82°
80° TO .234 DIA 13 HOLES
.380
.340 TYP 2 PLACES
.190
.170 TYP 2 PLACES
.490
.450
.245
.225
.470
.450
.063
.033 R TYP
.365
.355

NOTES

1. MATL: CAST 356-T6 ALUMINUM ALLOY TEMP T6, CLASS 3M, PER QQ-A-601, CONDITION T6
2. MACHINED SURFACE QUALITY 125/ UNLESS OTHERWISE SPECIFIED
3. CAST SURFACE QUALITY 200/
4. MASK ALL TAPPED & CSK HOLES BEFORE ANODIZING
5. ANODIZE PER MIL-A-8625, TYPE II DYED BLACK
6. INTERPRET DRAWING IN ACCORDANCE WITH STANDARDS PRESCRIBED BY MIL-D-70327
7. INSTALL FIND NO 2 PER MS33646
8. COAT THREADS AND FIND NO. 2 WITH MIL-P-8585 WET ZINC CHROMATE PRIMER

QTY REQD	PART OR IDENTIFYING NO.	NOMENCLATURE OR DESCRIPTION	FIND NO.
10	MS21209-C0415	INSERT, HELICAL	2
1	1004543-1	HOUSING	1

LIST OF MATERIALS

MASTER

1003524	
NEXT ASSY	USED ON
APPLICATION	

UNLESS OTHERWISE SPECIFIED DIMENSIONS ARE IN INCHES
TOLERANCES ON
FRACTIONS ± DECIMALS ± ANGLES ±
DO NOT SCALE THIS DRAWING
MATERIAL: SEE NOTE 1
HEAT TREATMENT: NONE
FINAL FINISH: SEE NOTES 5

MIT INSTRUMENTATION LAB
CAMBRIDGE, MASS.
DWG. NO.
CONTRACT
DRAWN P.S. Tracy DATE 21JUN63
CHECKED A.R. Bogu 5SEP63
APPROVAL Jensen Sept 19/63
APPROVAL Eldon C Hall 20 Sept 63
NASA APPROVAL 7/6/6
MIT APPROVAL
MIT APPROVAL 9/26/63

MANNED SPACECRAFT CENTER
HOUSTON, TEXAS

PLATE, ELECTRO-LUMINESCENT
AGC KEYBOARD

CODE IDENT NO. —
SIZE D
NASA DRAWING NO. 1004543
SCALE 1/1
WT
SHEET 1 OF 1

INCHES 0 1 2
PHOTOGRAPHIC SCALE ONLY

NOTICE — WHEN GOVERNMENT DRAWINGS, SPECIFICATIONS, OR OTHER DATA ARE USED FOR ANY PURPOSE OTHER THAN IN CONNECTION WITH A DEFINITELY RELATED GOVERNMENT PROCUREMENT OPERATION, THE UNITED STATES GOVERNMENT THEREBY INCURS NO RESPONSIBILITY NOR ANY OBLIGATION WHATSOEVER; AND THE FACT THAT THE GOVERNMENT MAY HAVE FORMULATED, FURNISHED, OR IN ANY WAY SUPPLIED THE SAID DRAWINGS, SPECIFICATIONS OR OTHER DATA IS NOT TO BE REGARDED BY IMPLICATION OR OTHERWISE AS IN ANY MANNER LICENSING THE HOLDER OR ANY OTHER PERSON OR CORPORATION, OR CONVEYING ANY RIGHTS OR PERMISSION TO MANUFACTURE, USE, OR SELL ANY PATENTED INVENTION THAT MAY IN ANY WAY BE RELATED THERETO.

1004545

REVISIONS 03453

SYM	DESCRIPTION	DATE	APPROVAL

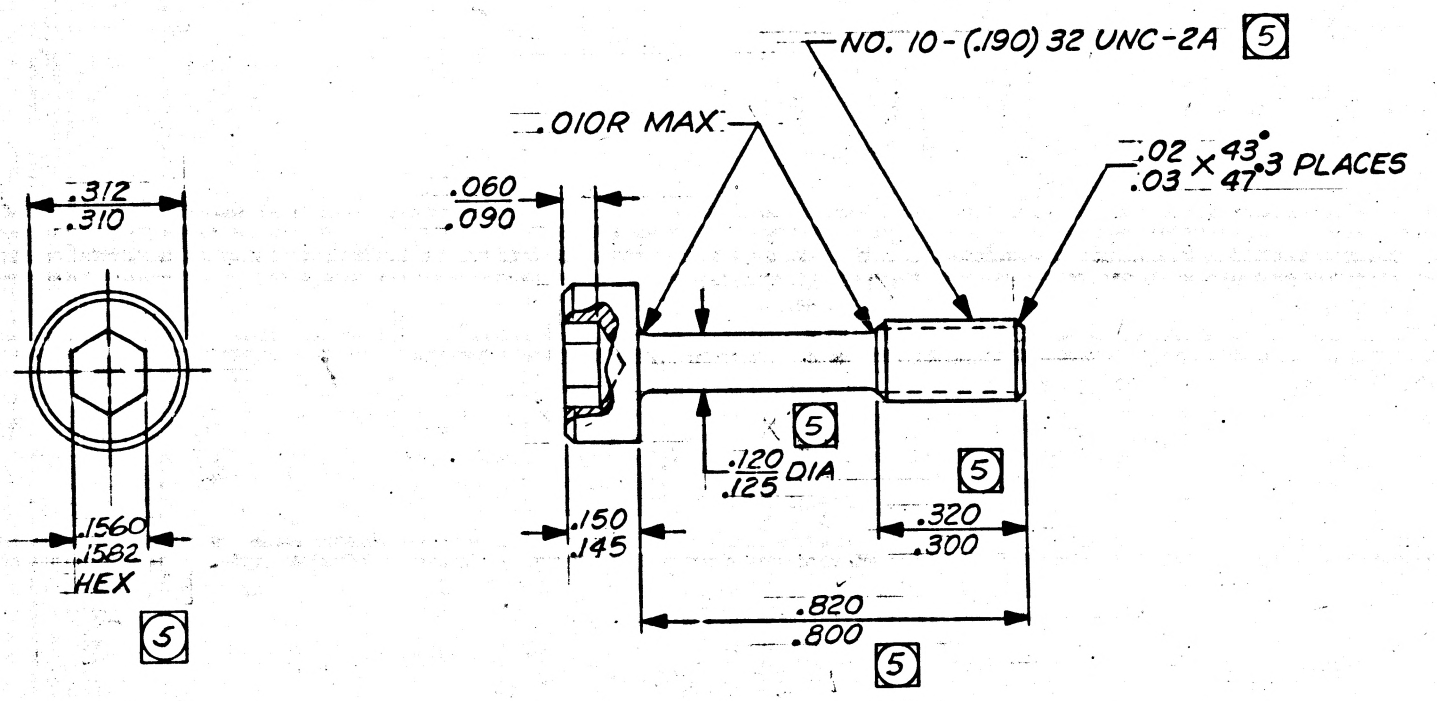

NOTES
1. MATL: 303 CRES PER QQ-S-763 CLASS 303 COND A
2. REMOVE ALL BURRS & SHARP EDGES
3. PASSIVATE PER MIL-F-14072, TYPE I, FIN. E-300
4. INTERPRET DRAWING IN ACCORDANCE WITH STANDARDS PRESCRIBED BY MIL-D-70327
$\boxed{5}$ DIMENSIONS ARE CONTROLLED BY ICD MH01-01004-116

QTY REQD	PART OR IDENTIFYING NO.	NOMENCLATURE OR DESCRIPTION	FIND NO.

LIST OF MATERIALS

MASTER

NEXT ASSY	USED ON
1003524	

APPLICATION

UNLESS OTHERWISE SPECIFIED DIMENSIONS ARE IN INCHES
TOLERANCES ON
FRACTIONS ± DECIMALS ± ANGLES ±
DO NOT SCALE THIS DRAWING
MATERIAL SEE NOTE 1
HEAT TREATMENT NONE
FINAL FINISH SEE NOTE 3

MIT
INSTRUMENTATION LAB
CAMBRIDGE, MASS.
DWG. NO. CONTRACT
DRAWN H. Carison DATE 6SEP63
CHECKED R F Burke 6 Sep 63
APPROVAL Klemsen Sept 19/63
APPROVAL Eldon C Hall 20 Sept 63
NASA APPROVAL 7/24/64
MIT APPROVAL
MIT APPROVAL 9/26/63

MANNED SPACECRAFT CENTER
HOUSTON, TEXAS

SCREW, CAPTIVE
AGC DISPLAY AND KEYBOARD

CODE IDENT NO. —
SIZE C
NASA DRAWING NO. 1004545
SCALE 4/1
WT
SHEET 1 OF 1

INCHES
0 1 2
PHOTOGRAPHIC SCALE ONLY

NOTICE — WHEN GOVERNMENT DRAWINGS, SPECIFICATIONS, OR OTHER DATA ARE USED FOR ANY PURPOSE OTHER THAN IN CONNECTION WITH A DEFINITELY RELATED GOVERNMENT PROCUREMENT OPERATION, THE UNITED STATES GOVERNMENT THEREBY INCURS NO RESPONSIBILITY NOR ANY OBLIGATION WHATSOEVER; AND THE FACT THAT THE GOVERNMENT MAY HAVE FORMULATED, FURNISHED, OR IN ANY WAY SUPPLIED THE SAID DRAWINGS, SPECIFICATIONS OR OTHER DATA IS NOT TO BE REGARDED BY IMPLICATION OR OTHERWISE AS IN ANY MANNER LICENSING THE HOLDER OR ANY OTHER PERSON OR CORPORATION, OR CONVEYING ANY RIGHTS OR PERMISSION TO MANUFACTURE, USE, OR SELL ANY PATENTED INVENTION THAT MAY IN ANY WAY BE RELATED THERETO.

1004546 | A

Ⓜ

REVISIONS

SYM	DESCRIPTION	DATE	APPROVAL
—	CLASS A RELEASE PER TDRR 02918	9/5/63	
A	REVISED PER TDRR 04739	11-19-63	

PART NO.	DIM. A		DIM. B		DIM. C	
	MAX	MIN	MAX	MIN	MAX	MIN
-1	.200	.190	.299	.295	.022	.018
-2	.154	.146	.312	.302	.034	.026
-3	.176	.168	.299	.295	.022	.018

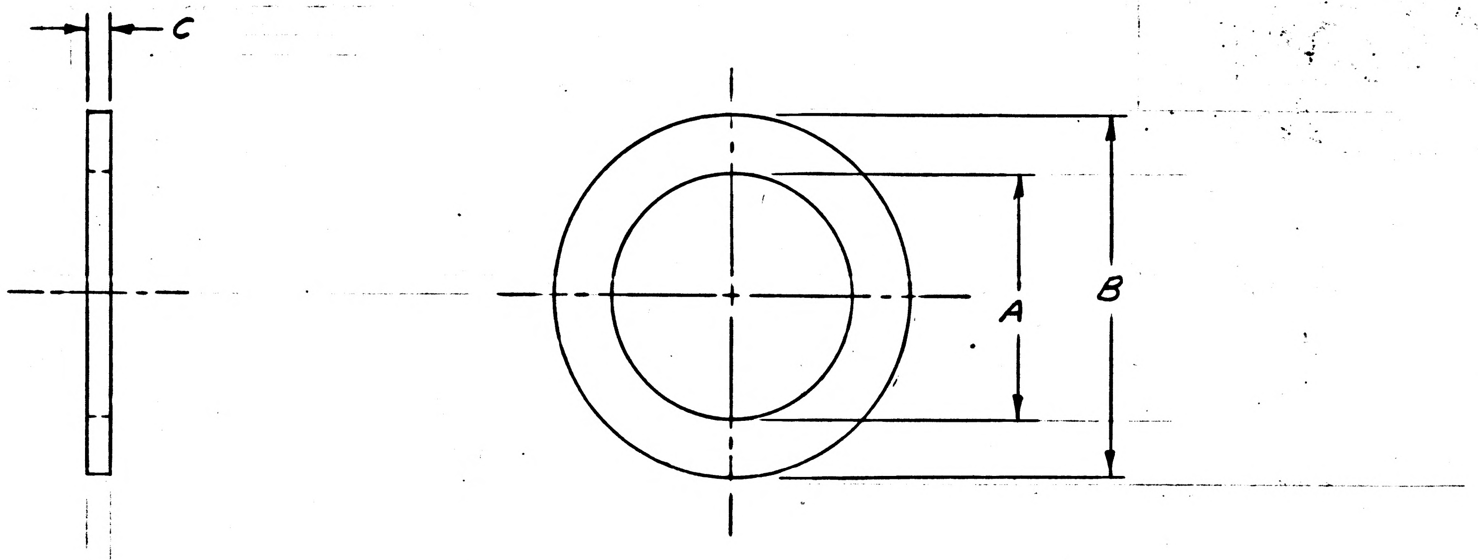

NOTES
1. MAT'L : 303 CRES CLASS 303 COND A PER QQ-S-763
2. PASSIVATE PER MIL-F-14072 FINISH E300 TYPE I
3. SURFACE QUALITY 63/
4. REMOVE ALL BURRS & SHARP EDGES
5. INTERPRET DRAWING IN ACCORDANCE WITH STANDARDS PRESCRIBED BY MIL-D-70327

MASTER

QTY REQD	PART OR IDENTIFYING NO.	NOMENCLATURE OR DESCRIPTION	FIND NO.

LIST OF MATERIALS

NEXT ASSY	USED ON
APPLICATION	

UNLESS OTHERWISE SPECIFIED
DIMENSIONS ARE IN INCHES
TOLERANCES ON
FRACTIONS ± DECIMALS ±.005 ANGLES ±
DO NOT SCALE THIS DRAWING
MATERIAL SEE NOTE 1
HEAT TREATMENT NONE
FINAL FINISH SEE NOTE 2

MIT
INSTRUMENTATION LAB
CAMBRIDGE, MASS.
DWG. NO. CONTRACT
DRAWN F. Mehan DATE 22 Aug 63
CHECKED R. F. Bowden 26 Aug 63
APPROVAL V. Jensen Aug 28/63
APPROVAL E. C. Hall 5 Sept 63
NASA APPROVAL 9/1/63
MIT APPROVAL
MIT APPROVAL 9/5/63

MANNED SPACECRAFT CENTER
HOUSTON, TEXAS

WASHER, FLAT

CODE IDENT NO. —
SIZE C
NASA DRAWING NO. 1004546
SCALE 10/1
WT
SHEET 1 OF 1

INCHES
0 1 2
PHOTOGRAPHIC SCALE ONLY

NOTICE — WHEN GOVERNMENT DRAWINGS, SPECIFICATIONS, OR OTHER DATA ARE USED FOR ANY PURPOSE OTHER THAN IN CONNECTION WITH A DEFINITELY RELATED GOVERNMENT PROCUREMENT OPERATION, THE UNITED STATES GOVERNMENT THEREBY INCURS NO RESPONSIBILITY NOR ANY OBLIGATION WHATSOEVER; AND THE FACT THAT THE GOVERNMENT MAY HAVE FORMULATED, FURNISHED, OR IN ANY WAY SUPPLIED THE SAID DRAWINGS, SPECIFICATIONS OR OTHER DATA IS NOT TO BE REGARDED BY IMPLICATION OR OTHERWISE AS IN ANY MANNER LICENSING THE HOLDER OR ANY OTHER PERSON OR CORPORATION, OR CONVEYING ANY RIGHTS OR PERMISSION TO MANUFACTURE, USE, OR SELL ANY PATENTED INVENTION THAT MAY IN ANY WAY BE RELATED THERETO.

1004546 B

PART NO.	DIM. A		DIM. B		DIM. C	
	MAX	MIN	MAX	MIN	MAX	MIN
-1	.208	.203	.299	.295	.022	.018
-2	.154	.146	.312	.302	.034	.026
-3	.181	.176	.299	.295	.022	.018

REVISIONS			
SYM	DESCRIPTION	DATE	APPROVAL
—	CLASS A RELEASE PER TDRR 02918	9/5/63	
A	REVISED PER TDRR 04739	11-19-63	
B	REVISED PER TDRR 05770	1-21-64	

Ⓜ
Ⓐ

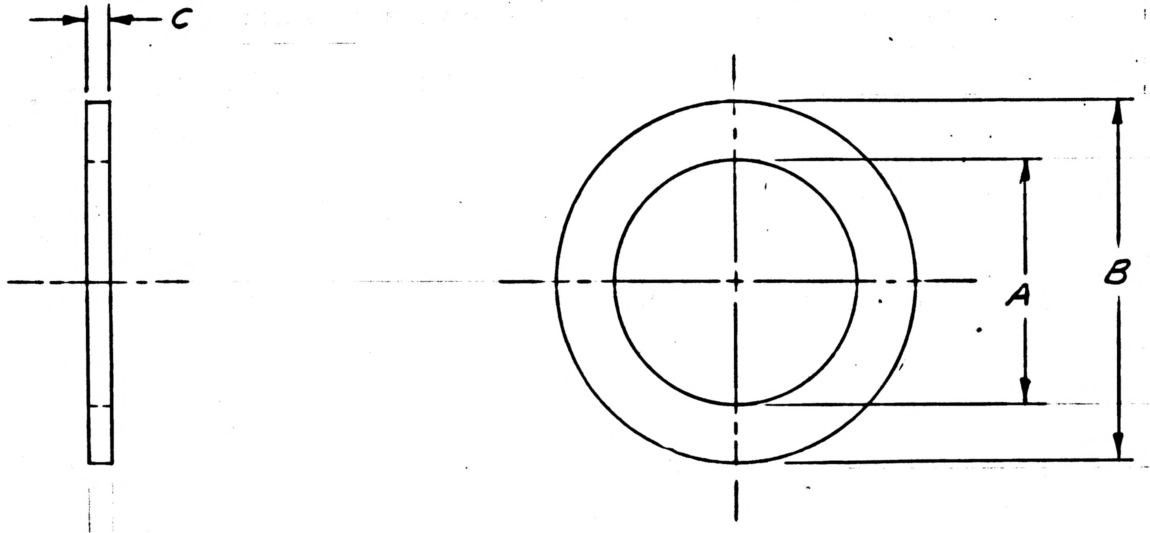

NOTES
1. MAT'L : 303 CRES CLASS 303 COND A PER QQ-S-763
2. PASSIVATE PER MIL-F-14072 FINISH E300 TYPE I
3. SURFACE QUALITY $\sqrt{63}$
4. REMOVE ALL BURRS & SHARP EDGES
5. INTERPRET DRAWING IN ACCORDANCE WITH STANDARDS PRESCRIBED BY MIL-D-70327

QTY REQD	PART OR IDENTIFYING NO.	NOMENCLATURE OR DESCRIPTION	FIND NO.

LIST OF MATERIALS

NEXT ASSY	USED ON
APPLICATION	

UNLESS OTHERWISE SPECIFIED
DIMENSIONS ARE IN INCHES
TOLERANCES ON
FRACTIONS ± DECIMALS ±.005 ANGLES ±
DO NOT SCALE THIS DRAWING
MATERIAL SEE NOTE 1
HEAT TREATMENT NONE
FINAL FINISH SEE NOTE 2

MIT
INSTRUMENTATION LAB
CAMBRIDGE, MASS.
DWG. NO. CONTRACT
DRAWN F. Mehan DATE 22 Aug 63
CHECKED 26 Aug 63
APPROVAL Jensen Aug 28/63
APPROVAL
NASA APPROVAL 9/5/63
MIT APPROVAL
MIT APPROVAL 9/5/63

MANNED SPACECRAFT CENTER
HOUSTON, TEXAS

WASHER, FLAT

CODE IDENT NO. —
SIZE C
NASA DRAWING NO. 1004546
SCALE 10/1
WT
SHEET 1 OF 1

MASTER

NOTICE — WHEN GOVERNMENT DRAWINGS, SPECIFICATIONS, OR OTHER DATA ARE USED FOR ANY PURPOSE OTHER THAN IN CONNECTION WITH A DEFINITELY RELATED GOVERNMENT PROCUREMENT OPERATION, THE UNITED STATES GOVERNMENT THEREBY INCURS NO RESPONSIBILITY NOR ANY OBLIGATION WHATSOEVER; AND THE FACT THAT THE GOVERNMENT MAY HAVE FORMULATED, FURNISHED, OR IN ANY WAY SUPPLIED THE SAID DRAWINGS, SPECIFICATIONS OR OTHER DATA IS NOT TO BE REGARDED BY IMPLICATION OR OTHERWISE AS IN ANY MANNER LICENSING THE HOLDER OR ANY OTHER PERSON OR CORPORATION, OR CONVEYING ANY RIGHTS OR PERMISSION TO MANUFACTURE, USE, OR SELL ANY PATENTED INVENTION THAT MAY IN ANY WAY BE RELATED THERETO.

1004546 C

PART NO.	DIM. A		DIM. B		DIM. C	
	MAX	MIN	MAX	MIN	MAX	MIN
-1	.208	.203	.299	.295	.022	.018
-2	.154	.146	.312	.302	.034	.026
-3	.181	.176	.299	.295	.022	.018

REVISIONS

SYM	DESCRIPTION	DATE	APPROVAL
—	CLASS A RELEASE PER TDRR 02918	9/5/63	
A	REVISED PER TDRR 04739	11-19-63	
B	REVISED PER TDRR 05770	1-21-64	
C	REVISED PER TDRR 12092 DRM. RIPLEY CHK [illegible] RTM	8/21/64	

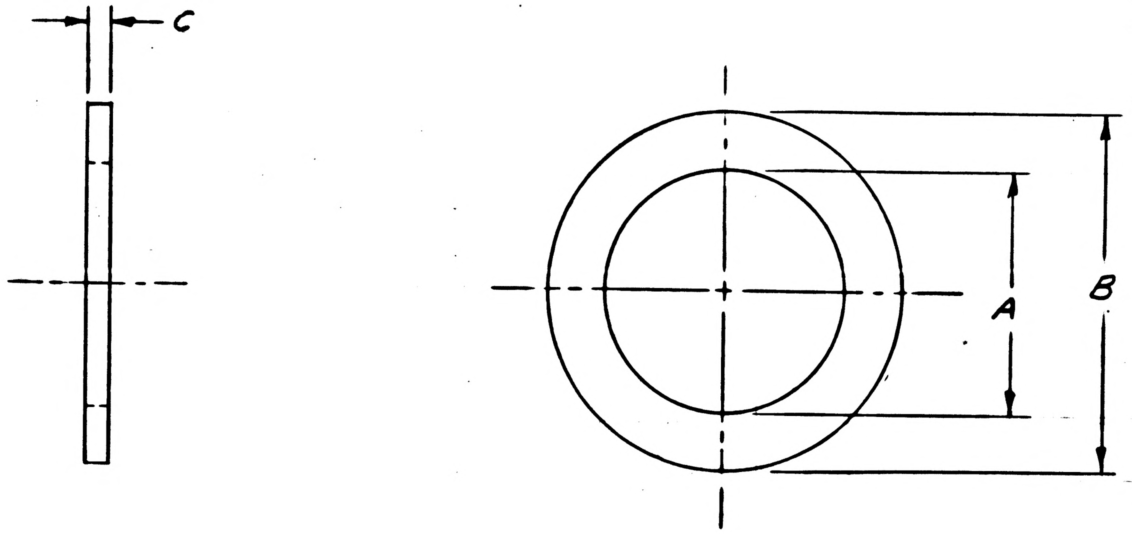

NOTES
1. MAT'L 303 CRES CLASS 303 COND A PER QQ-S-763
   ALT: 302 CRES CLASS 303 COND A PER QQ-S-763
2. PASSIVATE PER MIL-F-14072 FINISH E300 TYPE I
3. SURFACE QUALITY 63/
4. REMOVE ALL BURRS & SHARP EDGES
5. INTERPRET DRAWING IN ACCORDANCE WITH STANDARDS PRESCRIBED BY MIL-D-70327

QTY REQD	PART OR IDENTIFYING NO.	NOMENCLATURE OR DESCRIPTION	FIND NO.

LIST OF MATERIALS

NEXT ASSY	USED ON
1003074	
1003174	

APPLICATION

UNLESS OTHERWISE SPECIFIED
DIMENSIONS ARE IN INCHES
TOLERANCES ON
FRACTIONS ± DECIMALS ±.005 ANGLES ±
DO NOT SCALE THIS DRAWING
MATERIAL SEE NOTE 1
HEAT TREATMENT NONE
FINAL FINISH SEE NOTE 2

MIT
INSTRUMENTATION LAB
CAMBRIDGE, MASS.
DWG. NO.
CONTRACT
DRAWN F. Mehan DATE 22 Aug 63
CHECKED
APPROVAL
APPROVAL
NASA APPROVAL
MIT APPROVAL
MIT APPROVAL 9/5/63

MANNED SPACECRAFT CENTER
HOUSTON, TEXAS

WASHER, FLAT

CODE IDENT NO. —
SIZE C
NASA DRAWING NO. 1004546
SCALE 10/1
WT
SHEET 1 OF 1

NOTICE — WHEN GOVERNMENT DRAWINGS, SPECIFICATIONS, OR OTHER DATA ARE USED FOR ANY PURPOSE OTHER THAN IN CONNECTION WITH A DEFINITELY RELATED GOVERNMENT PROCUREMENT OPERATION, THE UNITED STATES GOVERNMENT THEREBY INCURS NO RESPONSIBILITY NOR ANY OBLIGATION WHATSOEVER; AND THE FACT THAT THE GOVERNMENT MAY HAVE FORMULATED, FURNISHED, OR IN ANY WAY SUPPLIED THE SAID DRAWINGS, SPECIFICATIONS OR OTHER DATA IS NOT TO BE REGARDED BY IMPLICATION OR OTHERWISE AS IN ANY MANNER LICENSING THE HOLDER OR ANY OTHER PERSON OR CORPORATION, OR CONVEYING ANY RIGHTS OR PERMISSION TO MANUFACTURE, USE, OR SELL ANY PATENTED INVENTION THAT MAY IN ANY WAY BE RELATED THERETO.

1004546 D

PART NO.	DIM. A		DIM. B		DIM. C	
	MAX	MIN	MAX	MIN	MAX	MIN
-1	.208	.203	.299	.295	.022	.018
-2	.154	.146	.312	.302	.034	.026
-3	.181	.176	.299	.295	.022	.018
-4	.164	.158	.292	.288	.022	.018

REVISIONS

	SYM	DESCRIPTION	DATE	APPROVAL
Ⓜ	—	CLASS A RELEASE PER TDRR 02918	7/5/63	
Ⓜ	A	REVISED PER TDRR 04739	11-19-63	
Ⓜ	B	REVISED PER TDRR 05770	1-21-64	
Ⓜ	C	REVISED PER TDRR 12092 DR M. RIPLEY CHK [illegible] RTM	8/21/64	
Ⓜ	D	REVISED PER TDRR 19013 DR J. P. [illegible] CHK [illegible]	5/20/65	

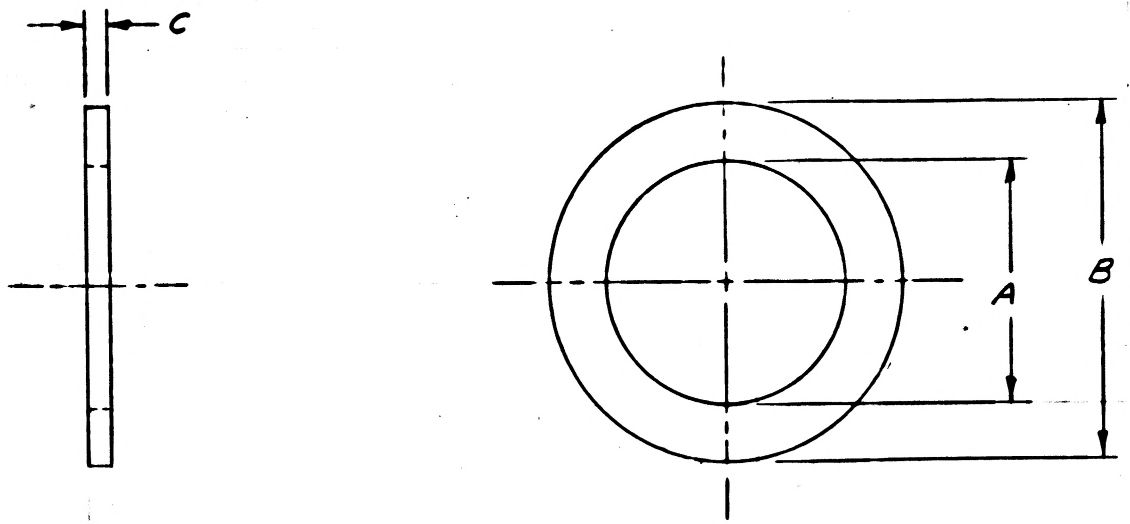

NOTES
1. MAT'L 303 CRES CLASS 303 COND A PER QQ-S-763
ALT: 302 CRES CLASS 303 COND A PER QQ-S-763
2. PASSIVATE PER MIL-F-14072 FINISH E300. TYPE I
3. SURFACE QUALITY 63/
4. REMOVE ALL BURRS & SHARP EDGES
5. INTERPRET DRAWING IN ACCORDANCE WITH STANDARDS PRESCRIBED BY MIL-D-70327

QTY REQD	PART OR IDENTIFYING NO.	NOMENCLATURE OR DESCRIPTION	FIND NO.

LIST OF MATERIALS

NEXT ASSY	USED ON
2003909	
1003074	
1003174	

APPLICATION

UNLESS OTHERWISE SPECIFIED DIMENSIONS ARE IN INCHES
TOLERANCES ON
FRACTIONS ± DECIMALS ±.005 ANGLES ±
DO NOT SCALE THIS DRAWING
MATERIAL SEE NOTE 1
HEAT TREATMENT NONE
FINAL FINISH SEE NOTE 2

MIT
INSTRUMENTATION LAB
CAMBRIDGE, MASS.
DWG. NO. CONTRACT
DRAWN F. Mehan DATE 22 Aug 63
CHECKED R. F. [illegible] 26 Aug 63
APPROVAL [illegible] Aug 28/63
APPROVAL [illegible]
NASA APPROVAL [illegible]
MIT APPROVAL
MIT APPROVAL [illegible] 9/3/63

MANNED SPACECRAFT CENTER
HOUSTON, TEXAS

WASHER, FLAT

CODE IDENT NO. —
SIZE C
NASA DRAWING NO. 1004546
SCALE 10/1
WT
SHEET 1 OF 1

1004546 E

NOTICE — WHEN GOVERNMENT DRAWINGS, SPECIFICATIONS, OR OTHER DATA ARE USED FOR ANY PURPOSE OTHER THAN IN CONNECTION WITH A DEFINITELY RELATED GOVERNMENT PROCUREMENT OPERATION, THE UNITED STATES GOVERNMENT THEREBY INCURS NO RESPONSIBILITY NOR ANY OBLIGATION WHATSOEVER; AND THE FACT THAT THE GOVERNMENT MAY HAVE FORMULATED, FURNISHED, OR IN ANY WAY SUPPLIED THE SAID DRAWINGS, SPECIFICATIONS OR OTHER DATA IS NOT TO BE REGARDED BY IMPLICATION OR OTHERWISE AS IN ANY MANNER LICENSING THE HOLDER OR ANY OTHER PERSON OR CORPORATION, OR CONVEYING ANY RIGHTS OR PERMISSION TO MANUFACTURE, USE, OR SELL ANY PATENTED INVENTION THAT MAY IN ANY WAY BE RELATED THERETO.

REVISIONS

SYM	DESCRIPTION	DATE	APPROVAL
—	CLASS A RELEASE PER TDRR 02918	7/5/63	
A	REVISED PER TDRR 04739	11-19-63	
B	REVISED PER TDRR 05770	1-21-64	
C	REVISED PER TDRR 12092 DR M. RIPLEY CHK [illegible] RTM	8/21/64	
D	REVISED PER TDRR 19013 DR J.P. Leonard CHK Flager BM	5/20/65	
E	REVISED PER TDRR 21334 DR B Jensen CHK Flager BM	8/13/65	

PART NO.	DIM. A		DIM. B		DIM. C	
	MAX	MIN	MAX	MIN	MAX	MIN
-1	.208	.203	.299	.295	.022	.018
-2	.154	.146	.312	.302	.034	.026
-3	.181	.176	.299	.295	.022	.018
-4	.164	.158	.292	.288	.022	.018
-5	1.145	1.135	1.500	1.475	.034	.026

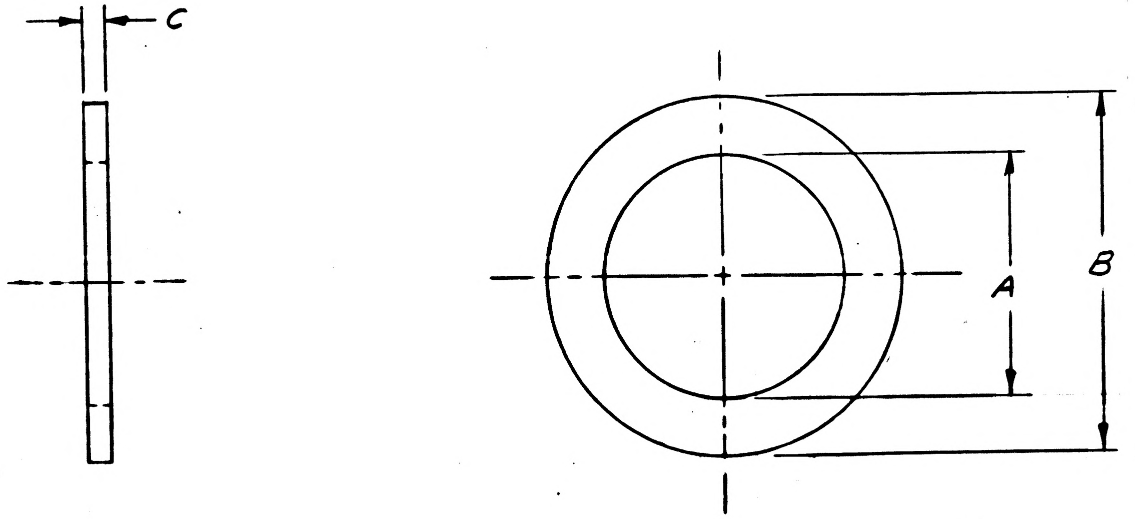

NOTES
1. MAT'L 303 CRES CLASS 303 COND A PER QQ-S-763
   ALT: 302 CRES CLASS 303 COND A PER QQ-S-763
2. PASSIVATE PER MIL-F-14072 FINISH E300 TYPE I
3. SURFACE QUALITY 63/
4. REMOVE ALL BURRS & SHARP EDGES
5. INTERPRET DRAWING IN ACCORDANCE WITH STANDARDS PRESCRIBED BY MIL-D-70327

QTY REQD	PART OR IDENTIFYING NO.	NOMENCLATURE OR DESCRIPTION	FIND NO.

LIST OF MATERIALS

NEXT ASSY	USED ON
2003909	
1003074	
1003174	

APPLICATION

UNLESS OTHERWISE SPECIFIED DIMENSIONS ARE IN INCHES
TOLERANCES ON
FRACTIONS ± DECIMALS ±.005 ANGLES ±
DO NOT SCALE THIS DRAWING
MATERIAL SEE NOTE 1
HEAT TREATMENT NONE
FINAL FINISH SEE NOTE 2

MIT
INSTRUMENTATION LAB
CAMBRIDGE, MASS.
DWG. NO. CONTRACT

DRAWN F. Mehan DATE 22 Aug 63
CHECKED R.F. Bunker 26 Aug 63
APPROVAL J. Jensen Aug 28/63
APPROVAL [illegible]
NASA APPROVAL [illegible]
MIT APPROVAL
MIT APPROVAL D. Hatzel 9/5/63

MANNED SPACECRAFT CENTER
HOUSTON, TEXAS

WASHER, FLAT

CODE IDENT NO. —
SIZE C
NASA DRAWING NO. 1004546
SCALE 10/1
WT
SHEET 1 OF 1

NOTICE — WHEN GOVERNMENT DRAWINGS, SPECIFICATIONS, OR OTHER DATA ARE USED FOR ANY PURPOSE OTHER THAN IN CONNECTION WITH A DEFINITELY RELATED GOVERNMENT PROCUREMENT OPERATION, THE UNITED STATES GOVERNMENT THEREBY INCURS NO RESPONSIBILITY NOR ANY OBLIGATION WHATSOEVER; AND THE FACT THAT THE GOVERNMENT MAY HAVE FORMULATED, FURNISHED, OR IN ANY WAY SUPPLIED THE SAID DRAWINGS, SPECIFICATIONS OR OTHER DATA IS NOT TO BE REGARDED BY IMPLICATION OR OTHERWISE AS IN ANY MANNER LICENSING THE HOLDER OR ANY OTHER PERSON OR CORPORATION, OR CONVEYING ANY RIGHTS OR PERMISSION TO MANUFACTURE, USE, OR SELL ANY PATENTED INVENTION THAT MAY IN ANY WAY BE RELATED THERETO.

1004546

REVISIONS

SYM	DESCRIPTION	DATE	APPROVAL
—	CLASS A RELEASE PER TDRR 02918	9/5/63	

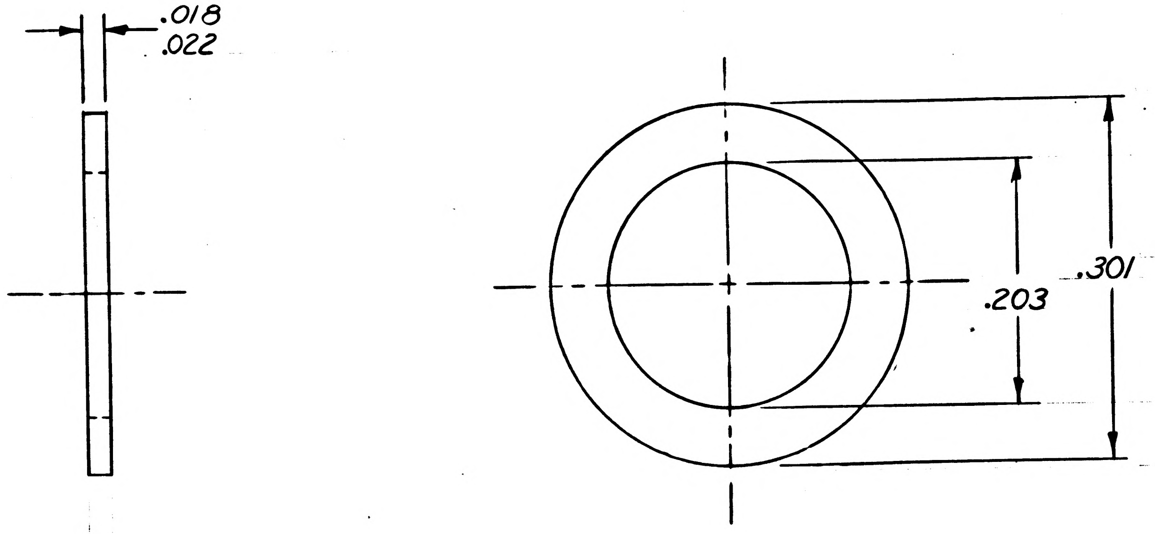

NOTES
1. MAT'L : 303 CRES CLASS 303 COND A PER QQ-S-763
2. PASSIVATE PER MIL-F-14072 FINISH E300 TYPE I
3. SURFACE QUALITY 63√
4. REMOVE ALL BURRS & SHARP EDGES
5. INTERPRET DRAWING IN ACCORDANCE WITH STANDARDS PRESCRIBED BY MIL-D-70327

MASTER

QTY REQD	PART OR IDENTIFYING NO.	NOMENCLATURE OR DESCRIPTION	FIND NO.

LIST OF MATERIALS

NEXT ASSY	USED ON
1003524	

APPLICATION

UNLESS OTHERWISE SPECIFIED
DIMENSIONS ARE IN INCHES
TOLERANCES ON
FRACTIONS ± DECIMALS ±.005 ANGLES ±
DO NOT SCALE THIS DRAWING
MATERIAL SEE NOTE 1
HEAT TREATMENT NONE
FINAL FINISH SEE NOTE 2

MIT
INSTRUMENTATION LAB
CAMBRIDGE, MASS.
DWG. NO. CONTRACT
DRAWN F. Mehan DATE 22 Aug 63
CHECKED 26 Aug 63
APPROVAL Jensen Aug 28/63
APPROVAL Eldon C Hall 5 Sept 63
NASA APPROVAL 9/5/63
MIT APPROVAL
MIT APPROVAL 9/5/63

MANNED SPACECRAFT CENTER
HOUSTON, TEXAS

WASHER, FLAT
AGC KEYBOARD AND DISPLAY

CODE IDENT NO. —
SIZE C
NASA DRAWING NO. 1004546
SCALE 10/1
WT
SHEET 1 OF 1

INCHES
0 1 2
PHOTOGRAPHIC SCALE ONLY

NOTICE — WHEN GOVERNMENT DRAWINGS, SPECIFICATIONS, OR OTHER DATA ARE USED FOR ANY PURPOSE OTHER THAN IN CONNECTION WITH A DEFINITELY RELATED GOVERNMENT PROCUREMENT OPERATION, THE UNITED STATES GOVERNMENT THEREBY INCURS NO RESPONSIBILITY NOR ANY OBLIGATION WHATSOEVER; AND THE FACT THAT THE GOVERNMENT MAY HAVE FORMULATED, FURNISHED, OR IN ANY WAY SUPPLIED THE SAID DRAWINGS, SPECIFICATIONS OR OTHER DATA IS NOT TO BE REGARDED BY IMPLICATION OR OTHERWISE AS IN ANY MANNER LICENSING THE HOLDER OR ANY OTHER PERSON OR CORPORATION, OR CONVEYING ANY RIGHTS OR PERMISSION TO MANUFACTURE, USE, OR SELL ANY PATENTED INVENTION THAT MAY IN ANY WAY BE RELATED THERETO.

1004547 A

REVISIONS 03453

SYM	DESCRIPTION	DATE	APPROVAL
A	REVISED PER TDRR 06016	29 Jan 69	2/4/69

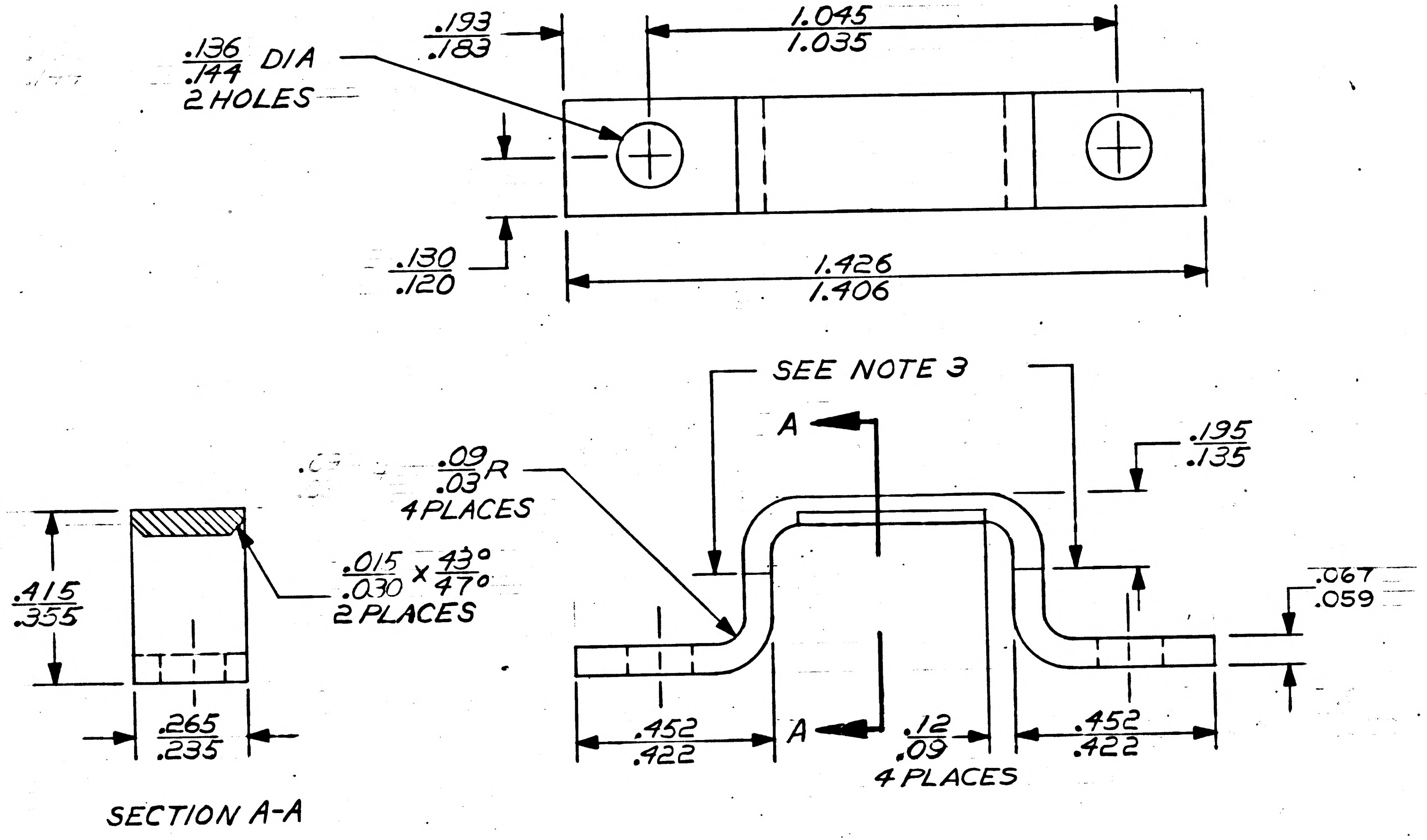

NOTES
1. MATL: 5052-H32 ALUMINUM PER QQ-A-318 TEMP H32
2. ANODIZE PER MIL-A-8625 TYPE II DYED BLACK
3. EPOXY COAT ALL FOUR SIDES OF INDICATED AREA PER ND 1002035
4. REMOVE BURRS AND SHARP EDGES
5. INTERPRET DRAWING IN ACCORDANCE WITH STANDARDS PRESCRIBED BY MIL-D-70327

QTY REQD	PART OR IDENTIFYING NO.	NOMENCLATURE OR DESCRIPTION	FIND NO.

LIST OF MATERIALS

1003524	
NEXT ASSY	USED ON
APPLICATION	

UNLESS OTHERWISE SPECIFIED DIMENSIONS ARE IN INCHES
TOLERANCES ON
FRACTIONS ± DECIMALS ± ANGLES ±
DO NOT SCALE THIS DRAWING
MATERIAL SEE NOTE 1
HEAT TREATMENT NONE
FINAL FINISH SEE NOTE 2

MIT
INSTRUMENTATION LAB
CAMBRIDGE, MASS.
DWG. NO. CONTRACT
DRAWN P.S. Tracy DATE ~~10 Sept 63~~
CHECKED R.F. [illegible] 12 Sep 63
APPROVAL K. Jensen Sept 19/63.
APPROVAL Eldon C. Hall 20 Sept 63
NASA APPROVAL [illegible] 9/24/63
MIT APPROVAL
MIT APPROVAL [illegible] 9/26/63

MANNED SPACECRAFT CENTER
HOUSTON, TEXAS

BRACKET, CABLE SUPPORT
AGC DISPLAY AND KEYBOARD

CODE IDENT NO. ——
SIZE C
NASA DRAWING NO. 1004547
SCALE 4/1
WT
SHEET 1 OF 1

MASTER

NOTICE — WHEN GOVERNMENT DRAWINGS, SPECIFICATIONS, OR OTHER DATA ARE USED FOR ANY PURPOSE OTHER THAN IN CONNECTION WITH A DEFINITELY RELATED GOVERNMENT PROCUREMENT OPERATION, THE UNITED STATES GOVERNMENT THEREBY INCURS NO RESPONSIBILITY NOR ANY OBLIGATION WHATSOEVER; AND THE FACT THAT THE GOVERNMENT MAY HAVE FORMULATED, FURNISHED, OR IN ANY WAY SUPPLIED THE SAID DRAWINGS, SPECIFICATIONS OR OTHER DATA IS NOT TO BE REGARDED BY IMPLICATION OR OTHERWISE AS IN ANY MANNER LICENSING THE HOLDER OR ANY OTHER PERSON OR CORPORATION, OR CONVEYING ANY RIGHTS OR PERMISSION TO MANUFACTURE, USE, OR SELL ANY PATENTED INVENTION THAT MAY IN ANY WAY BE RELATED THERETO.

1004547

REVISIONS 03453

SYM	DESCRIPTION	DATE	APPROVAL

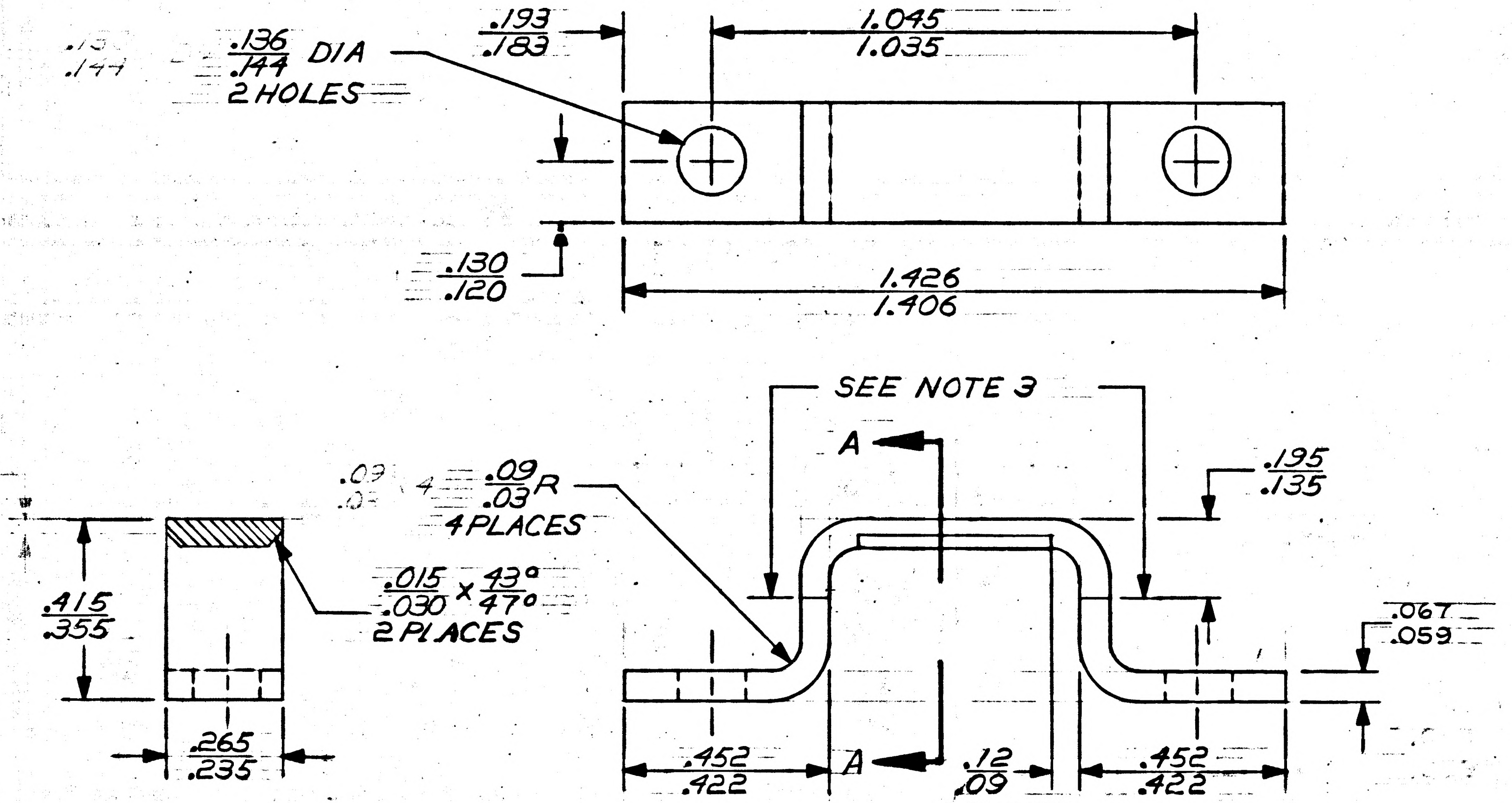

SECTION A-A

NOTES
1. MATL: 5052-H32 ALUMINUM PER QQ-A-318 TEMP H32
2. ANODIZE PER MIL-A-8625 TYPE II DYED BLACK
3. EPOXY COAT INDICATED AREA PER ND1002035
4. REMOVE BURRS AND SHARP EDGES
5. INTERPRET DRAWING IN ACCORDANCE WITH STANDARDS PRESCRIBED BY MIL-D-70327

QTY REQD	PART OR IDENTIFYING NO.	NOMENCLATURE OR DESCRIPTION	FIND NO.

LIST OF MATERIALS

NEXT ASSY	USED ON
1003524	

APPLICATION

UNLESS OTHERWISE SPECIFIED DIMENSIONS ARE IN INCHES
TOLERANCES ON
FRACTIONS ± DECIMALS ± ANGLES ±
DO NOT SCALE THIS DRAWING
MATERIAL SEE NOTE 1
HEAT TREATMENT NONE
FINAL FINISH SEE NOTE 2

MIT INSTRUMENTATION LAB
CAMBRIDGE, MASS.
DWG. NO. CONTRACT
DRAWN P.S. Tracy DATE 10Sept63
CHECKED R.F. Bien 12 Sep 63
APPROVAL K. Jensen Sept 19/63.
APPROVAL Eldon C Hall 20Sept63
NASA APPROVAL
MIT APPROVAL
MIT APPROVAL R Walzel 9/26/63

MANNED SPACECRAFT CENTER
HOUSTON, TEXAS

BRACKET, CABLE SUPPORT
AGC DISPLAY AND KEYBOARD

CODE IDENT NO. ——
SIZE C
NASA DRAWING NO. 1004547
SCALE 4/1
WT
SHEET 1 OF 1

MASTER

INCHES
0 2
PHOTOGRAPHIC SCALE ONLY

NOTICE — WHEN GOVERNMENT DRAWINGS, SPECIFICATIONS, OR OTHER DATA ARE USED FOR ANY PURPOSE OTHER THAN IN CONNECTION WITH A DEFINITELY RELATED GOVERNMENT PROCUREMENT OPERATION, THE UNITED STATES GOVERNMENT THEREBY INCURS NO RESPONSIBILITY NOR ANY OBLIGATION WHATSOEVER; AND THE FACT THAT THE GOVERNMENT MAY HAVE FORMULATED, FURNISHED, OR IN ANY WAY SUPPLIED THE SAID DRAWINGS, SPECIFICATIONS, OR OTHER DATA IS NOT TO BE REGARDED BY IMPLICATION OR OTHERWISE AS IN ANY MANNER LICENSING THE HOLDER OR ANY OTHER PERSON OR CORPORATION, OR CONVEYING ANY RIGHTS OR PERMISSION TO MANUFACTURE, USE, OR SELL ANY PATENTED INVENTION THAT MAY IN ANY WAY BE RELATED THERETO.

REVISIONS 03139

SYM	DESCRIPTION	DATE	APPROVAL
A	REVISED PER TDRR 03455	8-26-63	JW

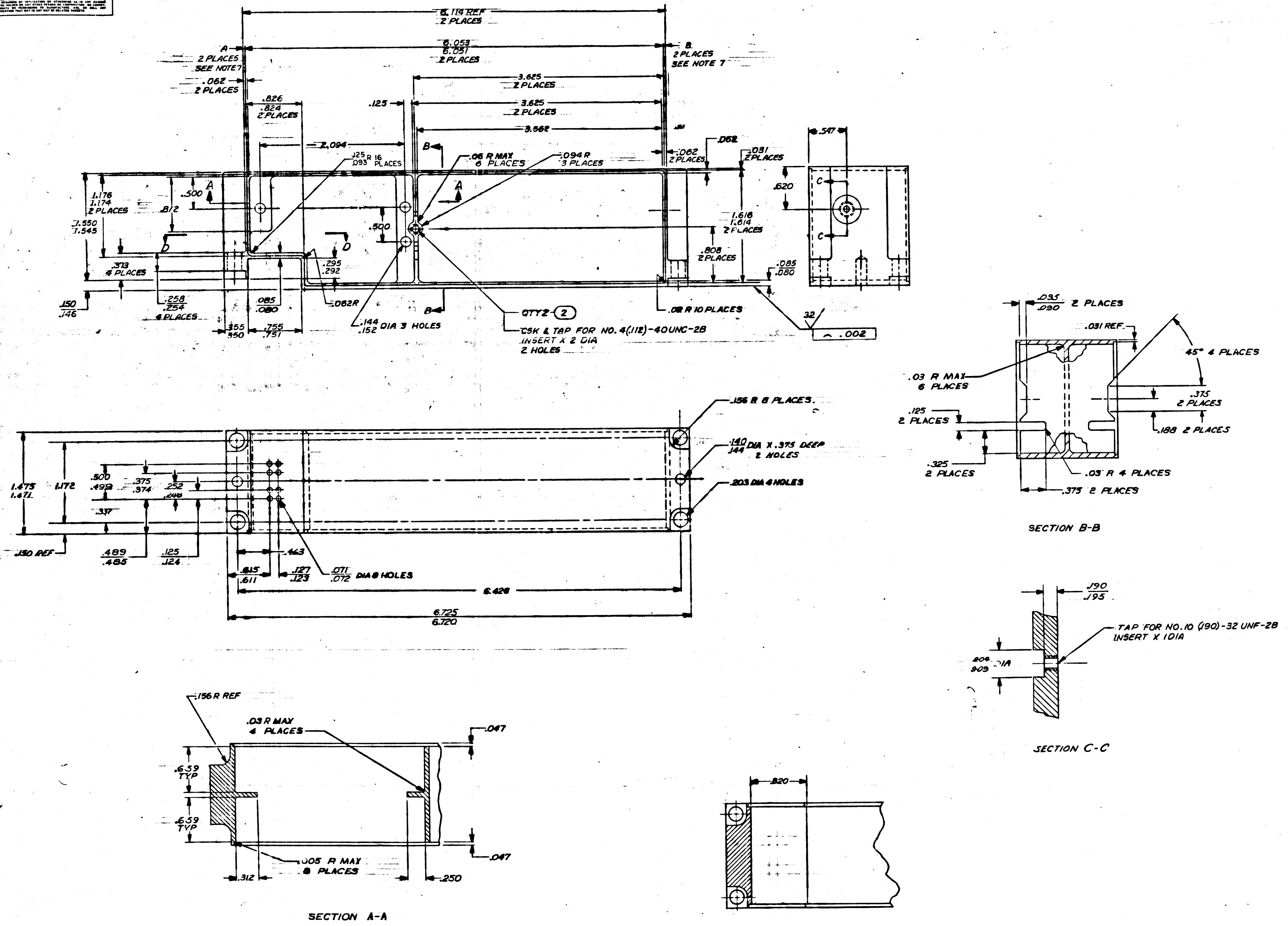

6.114 REF 2 PLACES
A 2 PLACES SEE NOTE 7
6.053 / 6.051 2 PLACES
B 2 PLACES SEE NOTE 7
.062 2 PLACES
3.625 2 PLACES
3.625 2 PLACES
3.562
.826 / .824 2 PLACES
.125
2.094
.125 / .093 R 16 PLACES
.06 R MAX 6 PLACES
.094 R 3 PLACES
.062 2 PLACES
.062
.031 2 PLACES
1.176 / 1.174 2 PLACES
.500
.812
1.550 / 1.545
.500
1.616 / 1.614 2 PLACES
.808 2 PLACES
.085 / .080
.313 4 PLACES
.295 / .292
.062R
.150 / .146
.258 / .254 4 PLACES
.085 / .080
.355 / .350
.755 / .751
.144 / .152 DIA 3 HOLES
QTY 2 ②
CSK & TAP FOR NO. 4(.112)-40UNC-2B INSERT X 2 DIA 2 HOLES
.02 R 10 PLACES
32
⌒ .002
.547
.620
C
.156 R 8 PLACES
.140 / .144 DIA X .375 DEEP 2 HOLES
.203 DIA 4 HOLES
1.475 / 1.471
1.172
.500 / .498
.375 / .374
.252 / .248
.337
.150 REF
.489 / .485
.125 / .124
.615 / .611
.463
.127 / .123
.071 / .072 DIA 8 HOLES
6.426
6.725 / 6.720
.095 / .090 2 PLACES
.031 REF
45° 4 PLACES
.03 R MAX 6 PLACES
.375 2 PLACES
.125 2 PLACES
.188 2 PLACES
.325 2 PLACES
.03 R 4 PLACES
.375 2 PLACES
SECTION B-B
.190 / .195
TAP FOR NO.10 (.190)-32 UNF-2B INSERT X 1 DIA
.204 / .209 DIA
SECTION C-C
.156 R REF
.03 R MAX 4 PLACES
.047
.659 TYP
.659 TYP
.005 R MAX 8 PLACES
.047
.312
.250
SECTION A-A
.820
SECTION D-D

NOTES:

1. MATL: 2024-T4 AL PER QQ-A-268 TEMP T4
2. REMOVE ALL BURRS AND SHARP EDGES
3. ANODIZE / MIL-A-8625 TYPE I DYED BLACK

4. INTERPRET DRAWING IN ACCORDANCE WITH STANDARDS PRESCRIBED BY MIL-D-70327
5. 63/ UNLESS OTHERWISE SPECIFIED
6. UNLESS OTHERWISE SPECIFIED ALL FILLETS & RADII TO BE .010 MAX
7. A & B DIMENSIONS TO BE EQUAL WITHIN .005

MASTER

QTY REQD	PART OR IDENTIFYING NO.	NOMENCLATURE OR DESCRIPTION	FIND NO.
2	MS21209-C0420	INSERT, HELICAL COIL	2
1	1004548-1	HEADER HOUSING	1

LIST OF MATERIALS

NEXT ASSY	USED ON	UNLESS OTHERWISE SPECIFIED DIMENSIONS ARE IN INCHES TOLERANCES ON FRACTIONS ± DECIMALS ±.005 .01 ANGLES ±2° DO NOT SCALE THIS DRAWING	MIT INSTRUMENTATION LAB CAMBRIDGE MASS DWG NO. CONTRACT	MANNED SPACECRAFT CENTER HOUSTON, TEXAS
APPLICATION		MATERIAL SEE NOTE 1	DRAWN J. Spinney DATE 28 11 63 CHECKED R. Edwards 29 Aug 63 APPROVAL APPROVAL	HEADER HOUSING AGC CLOCK OSCILLATOR
		HEAT TREATMENT NONE	NASA APPROVAL	CODE IDENT NO. — SIZE E NASA DRAWING NO. 1004548
		FINAL FINISH SEE NOTE 3	MIT APPROVAL	SCALE 2/1 WT SHEET 1 OF 1

INCHES

PHOTOGRAPHIC SCALE ONLY

NOTICE — WHEN GOVERNMENT DRAWINGS, SPECIFICATIONS, OR OTHER DATA ARE USED FOR ANY PURPOSE OTHER THAN IN CONNECTION WITH A DEFINITELY RELATED GOVERNMENT PROCUREMENT OPERATION, THE UNITED STATES GOVERNMENT THEREBY INCURS NO RESPONSIBILITY NOR ANY OBLIGATION WHATSOEVER, AND THE FACT THAT THE GOVERNMENT MAY HAVE FORMULATED, FURNISHED, OR IN ANY WAY SUPPLIED THE SAID DRAWINGS, SPECIFICATIONS, OR OTHER DATA IS NOT TO BE REGARDED BY IMPLICATION OR OTHERWISE AS IN ANY MANNER LICENSING THE HOLDER OR ANY OTHER PERSON OR CORPORATION, OR CONVEYING ANY RIGHTS OR PERMISSION TO MANUFACTURE, USE, OR SELL ANY PATENTED INVENTION THAT MAY IN ANY WAY BE RELATED THERETO.

REVISIONS 03 39			
SYM	DESCRIPTION	DATE	APPROVAL
A	REVISED PER TDRR 03455	8-26-6	
B	REVISED PER TDRR 03626	10-3-6	

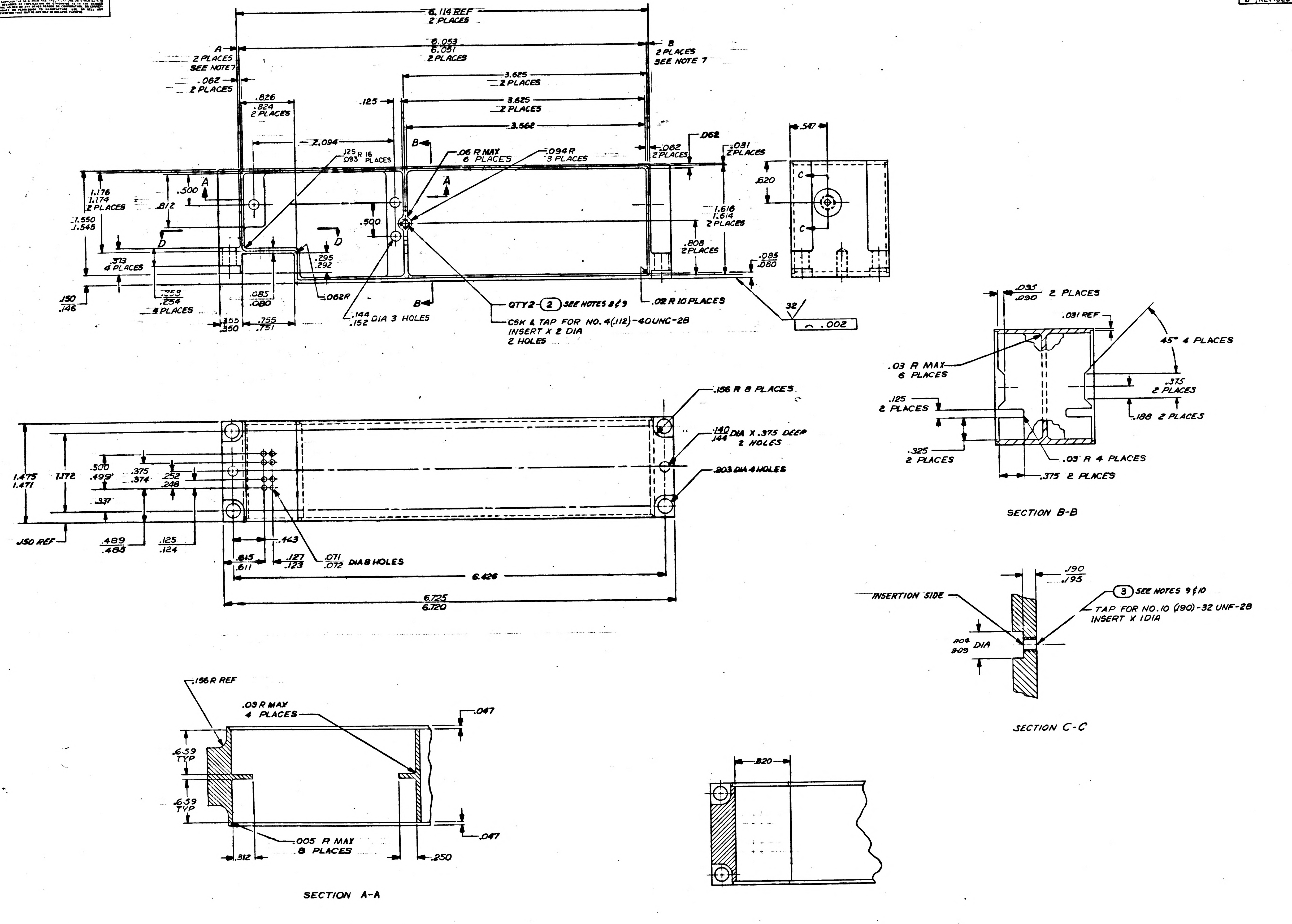
6.114 REF
2 PLACES
6.053
6.031
2 PLACES
A
2 PLACES
SEE NOTE 7
B
2 PLACES
SEE NOTE 7
.062
2 PLACES
.826
.824
2 PLACES
.125
3.625
2 PLACES
3.625
2 PLACES
3.562
2.094
.125 R 16
.093 PLACES
B
.06 R MAX
6 PLACES
.094 R
3 PLACES
.062
2 PLACES
.062
.031
2 PLACES
.547
.620
C
C
1.176
1.174
2 PLACES
.500
A
.812
1.550
1.545
.500
A
1.618
1.614
2 PLACES
.808
2 PLACES
D
D
.373
4 PLACES
.295
.292
.085
.080
.062R
.085
.080
.150
.146
.258
.254
4 PLACES
.355
.350
.755
.751
.144
.152 DIA 3 HOLES
B
QTY 2-(2) SEE NOTES 8 & 9
CSK & TAP FOR NO. 4(.112)-40UNC-2B
INSERT X 2 DIA
2 HOLES
.02 R 10 PLACES
32
.002
.156 R 8 PLACES
.140
.144 DIA X .375 DEEP
2 HOLES
.203 DIA 4 HOLES
1.475
1.471
1.172
.500
.499
.375
.374
.252
.248
.337
.150 REF
.489
.485
.125
.124
.463
.615
.611
.127
.123
.071
.072 DIA 8 HOLES
6.426
6.725
6.720
.035
.030 2 PLACES
.031 REF
45° 4 PLACES
.03 R MAX
6 PLACES
.375
2 PLACES
.125
2 PLACES
.188 2 PLACES
.325
2 PLACES
.03 R 4 PLACES
.375 2 PLACES
SECTION B-B
.190
.195
(3) SEE NOTES 9 & 10
INSERTION SIDE
TAP FOR NO.10 (.190)-32 UNF-2B
INSERT X 1 DIA
.808
.809 DIA
SECTION C-C
.156 R REF
.03 R MAX
4 PLACES
.047
.659
TYP
.659
TYP
.005 R MAX
8 PLACES
.047
.312
.250
SECTION A-A
.820
SECTION D-D

NOTES:

1. MATL: 2024-T4 AL PER QQ-A-268 TEMP T4
2. REMOVE ALL BURRS AND SHARP EDGES
3. ANODIZE / MIL-A-8625 TYPE I DYED BLACK

4. INTERPRET DRAWING IN ACCORDANCE WITH STANDARDS PRESCRIBED BY MIL-D-70327
5. 63/ UNLESS OTHERWISE SPECIFIED
6. UNLESS OTHERWISE SPECIFIED ALL FILLETS & RADII TO BE .010 MAX
7. A & B DIMENSIONS TO BE EQUAL WITHIN .005
8. INSTALL FIND NO. 2 PER MS 33646
9. COAT THREADS & FIND NUMBERS 2 & 3 WITH MIL-P-8585 WET ZINC CHROMATE PRIMER
10. INSTALL FIND NO. 3 PER MS 33646 BREAK OFF DRIVING TANG

MASTER

QTY REQD	PART OR IDENTIFYING NO.	NOMENCLATURE OR DESCRIPTION	FIND NO.
1	MS21208-F1-10	INSERT, HELICAL COIL	3
2	MS21209-C0420	INSERT, HELICAL COIL	2
1	1004548-1	HEADER HOUSING	1

LIST OF MATERIALS

NEXT ASSY	USED ON
APPLICATION	

UNLESS OTHERWISE SPECIFIED
DIMENSIONS ARE IN INCHES
TOLERANCES ON
FRACTIONS ± DECIMALS ± .005 .01 ANGLES ± 2°
DO NOT SCALE THIS DRAWING
MATERIAL SEE NOTE 1
HEAT TREATMENT NONE
FINAL FINISH SEE NOTE 3

MIT
INSTRUMENTATION LAB
CAMBRIDGE, MASS
DWG NO. CONTRACT
DRAWN J. Spinney DATE 28 Jul 63
CHECKED R. Edwards 29 Aug 63
APPROVAL
APPROVAL
NASA APPROVAL
MIT APPROVAL

MANNED SPACECRAFT CENTER
HOUSTON, TEXAS

HEADER HOUSING
AGC CLOCK OSCILLATOR

CODE IDENT NO. ——— SIZE E NASA DRAWING NO. 1004548
SCALE 2/1 WT SHEET 1 OF 1

NOTICE — WHEN GOVERNMENT DRAWINGS, SPECIFICATIONS, OR OTHER DATA ARE USED FOR ANY PURPOSE OTHER THAN IN CONNECTION WITH A DEFINITELY RELATED GOVERNMENT PROCUREMENT OPERATION, THE UNITED STATES GOVERNMENT THEREBY INCURS NO RESPONSIBILITY NOR ANY OBLIGATION WHATSOEVER AND THE FACT THAT THE GOVERNMENT MAY HAVE FORMULATED, FURNISHED OR IN ANY WAY SUPPLIED THE SAID DRAWINGS, SPECIFICATIONS OR OTHER DATA IS NOT TO BE REGARDED BY IMPLICATION OR OTHERWISE AS IN ANY MANNER LICENSING THE HOLDER OR ANY OTHER PERSON OR CORPORATION, OR CONVEYING ANY RIGHTS OR PERMISSION TO MANUFACTURE, USE, OR SELL ANY PATENTED INVENTION THAT MAY IN ANY WAY BE RELATED THERETO

1004548

REVISIONS 03139			
SYM	DESCRIPTION	DATE	APPROVAL
A	REVISED PER TDRR 03455	8-26-63	JU
B	REVISED PER TDRR 26	10-3-63	WH
C	REVISED PER TDRR 08411 DR B Jensen CHK A.F.B.	9/7/64	

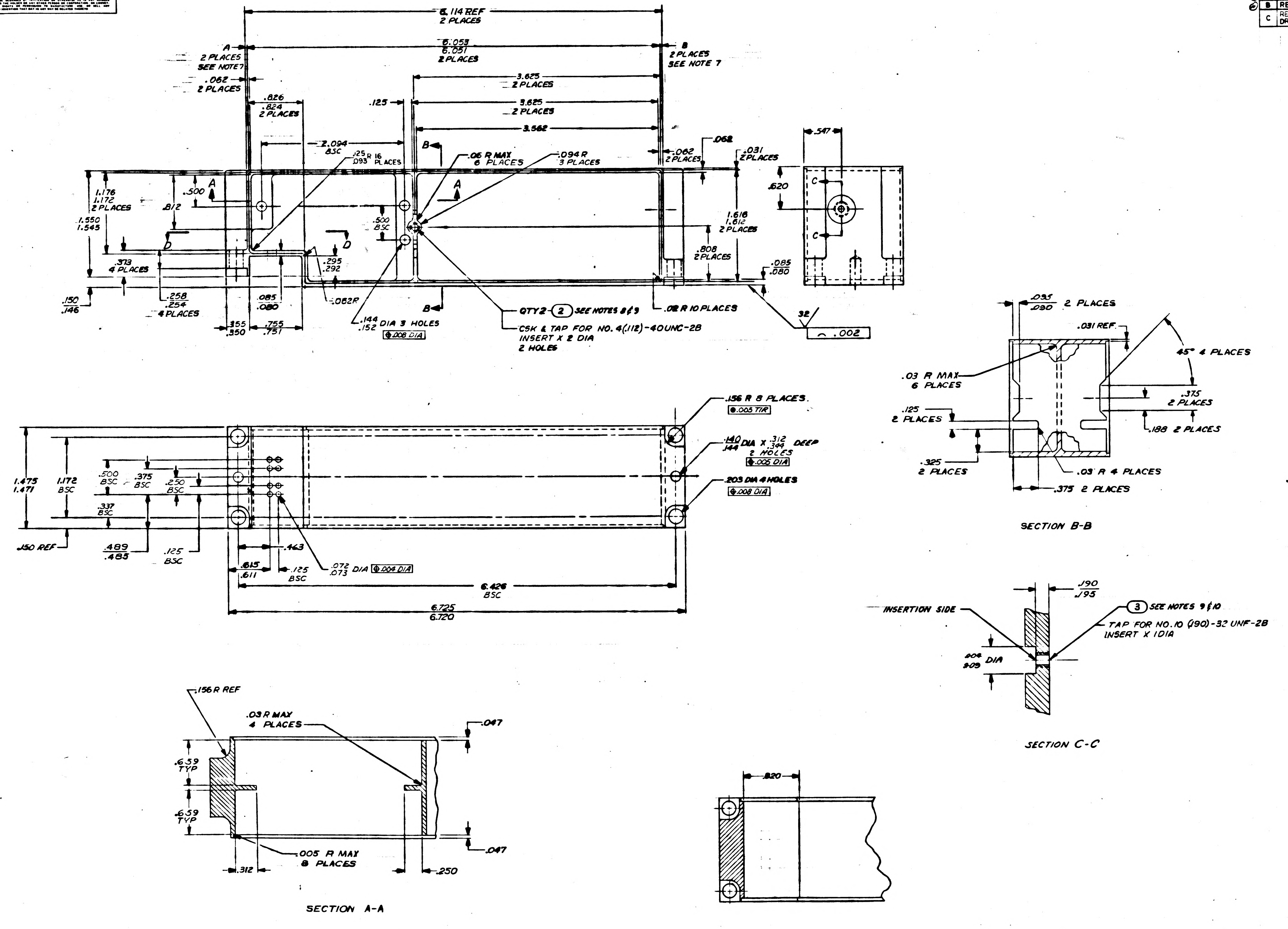
6.114 REF
2 PLACES
6.053
6.051
2 PLACES
A
2 PLACES
SEE NOTE 7
B
2 PLACES
SEE NOTE 7
.062
2 PLACES
.826
.824
2 PLACES
.125
3.625
2 PLACES
3.625
2 PLACES
3.562
2.094
BSC
.125 R 16
.093 PLACES
.06 R MAX
6 PLACES
.094 R
3 PLACES
.062
2 PLACES
.062
.031
2 PLACES
.547
.620
C
1.176
1.172
2 PLACES
1.550
1.545
.500
.812
.500
BSC
1.616
1.612
2 PLACES
.808
2 PLACES
D
.313
4 PLACES
.295
.292
.085
.080
.258
.254
4 PLACES
.150
.146
.085
.080
.062R
.355
.350
.755
.751
.144
.152 DIA 3 HOLES
.008 DIA
QTY 2 ② SEE NOTES 8 & 9
CSK & TAP FOR NO. 4(.112)-40UNC-2B
INSERT X 2 DIA
2 HOLES
.02 R 10 PLACES
32
.002
.156 R 8 PLACES
.005 TIR
.140
.144 DIA X .312
.344 DEEP
2 HOLES
.005 DIA
.203 DIA 4 HOLES
.008 DIA
1.475
1.471
1.172
BSC
.500
BSC
.375
BSC
.250
BSC
.337
BSC
.150 REF
.489
.485
.125
BSC
.463
.615
.611
.125
BSC
.072
.073 DIA
.004 DIA
6.426
BSC
6.725
6.720
.035
.030 2 PLACES
.031 REF
45° 4 PLACES
.03 R MAX
6 PLACES
.375
2 PLACES
.125
2 PLACES
.188 2 PLACES
.325
2 PLACES
.03 R 4 PLACES
.375 2 PLACES
SECTION B-B
.190
.195
INSERTION SIDE
③ SEE NOTES 9 & 10
TAP FOR NO. 10 (.190)-32 UNF-2B
INSERT X 1 DIA
.204
.209 DIA
SECTION C-C
.156 R REF
.03 R MAX
4 PLACES
.047
.659
TYP
.659
TYP
.005 R MAX
8 PLACES
.047
.312
.250
SECTION A-A
.820
SECTION D-D

NOTES:

1. MATL: 2024-T4 AL PER QQ-A-268 TEMP T4
2. REMOVE ALL BURRS AND SHARP EDGES
3. ANODIZE / MIL-A-8625 TYPE I DYED BLACK
4. INTERPRET DRAWING IN ACCORDANCE WITH STANDARDS PRESCRIBED BY MIL-D-70327
5. 63√ UNLESS OTHERWISE SPECIFIED
6. UNLESS OTHERWISE SPECIFIED ALL FILLETS & RADII TO BE .010 MAX
7. A & B DIMENSIONS TO BE EQUAL WITHIN .005
8. INSTALL FIND NO. 2 PER MS 33646
9. COAT THREADS & FIND NUMBERS 2 & 3 WITH MIL-P-8585 WET ZINC CHROMATE PRIMER
10. INSTALL FIND NO. 3 PER MS 33646 BREAK OFF DRIVING TANG

QTY REQD	PART OR IDENTIFYING NO.	NOMENCLATURE OR DESCRIPTION	FIND NO.
1	MS21208-F1-10	INSERT, HELICAL COIL	3
2	MS21209-C0420	INSERT, HELICAL COIL	2
1	1004548-1	HEADER HOUSING	1

LIST OF MATERIALS

1003537	
NEXT ASSY	USED ON
APPLICATION	

UNLESS OTHERWISE SPECIFIED DIMENSIONS ARE IN INCHES
TOLERANCES ON
FRACTIONS ± DECIMALS .XXX ± .005 .XX ± .02 ANGLES ± 3°
DO NOT SCALE THIS DRAWING
MATERIAL SEE NOTE 1
HEAT TREATMENT NONE
FINAL FINISH SEE NOTE 3

MIT
INSTRUMENTATION LAB
CAMBRIDGE, MASS.

DRAWN J. Spinney DATE 28 Jul 63
CHECKED R. Edwards 30 Aug 63
APPROVAL
APPROVAL
NASA APPROVAL
MIT APPROVAL
MIT APPROVAL

MANNED SPACECRAFT CENTER
HOUSTON, TEXAS

HEADER HOUSING
AGC CLOCK OSCILLATOR

CODE IDENT NO. ——
SIZE E
NASA DRAWING NO. 1004548
SCALE 2/1
WT
SHEET

NOTICE — WHEN GOVERNMENT DRAWINGS, SPECIFICATIONS, OR OTHER DATA ARE USED FOR ANY PURPOSE OTHER THAN IN CONNECTION WITH A DEFINITELY RELATED GOVERNMENT PROCUREMENT OPERATION, THE UNITED STATES GOVERNMENT THEREBY INCURS NO RESPONSIBILITY NOR ANY OBLIGATION WHATSOEVER; AND THE FACT THAT THE GOVERNMENT MAY HAVE FORMULATED, FURNISHED, OR IN ANY WAY SUPPLIED THE SAID DRAWINGS, SPECIFICATIONS, OR OTHER DATA IS NOT TO BE REGARDED BY IMPLICATION OR OTHERWISE AS IN ANY MANNER LICENSING THE HOLDER OR ANY OTHER PERSON OR CORPORATION, OR CONVEYING ANY RIGHTS OR PERMISSION TO MANUFACTURE, USE, OR SELL ANY PATENTED INVENTION THAT MAY IN ANY WAY BE RELATED THERETO.

SYM	DESCRIPTION	DATE	APPROVAL

REVISIONS 03139

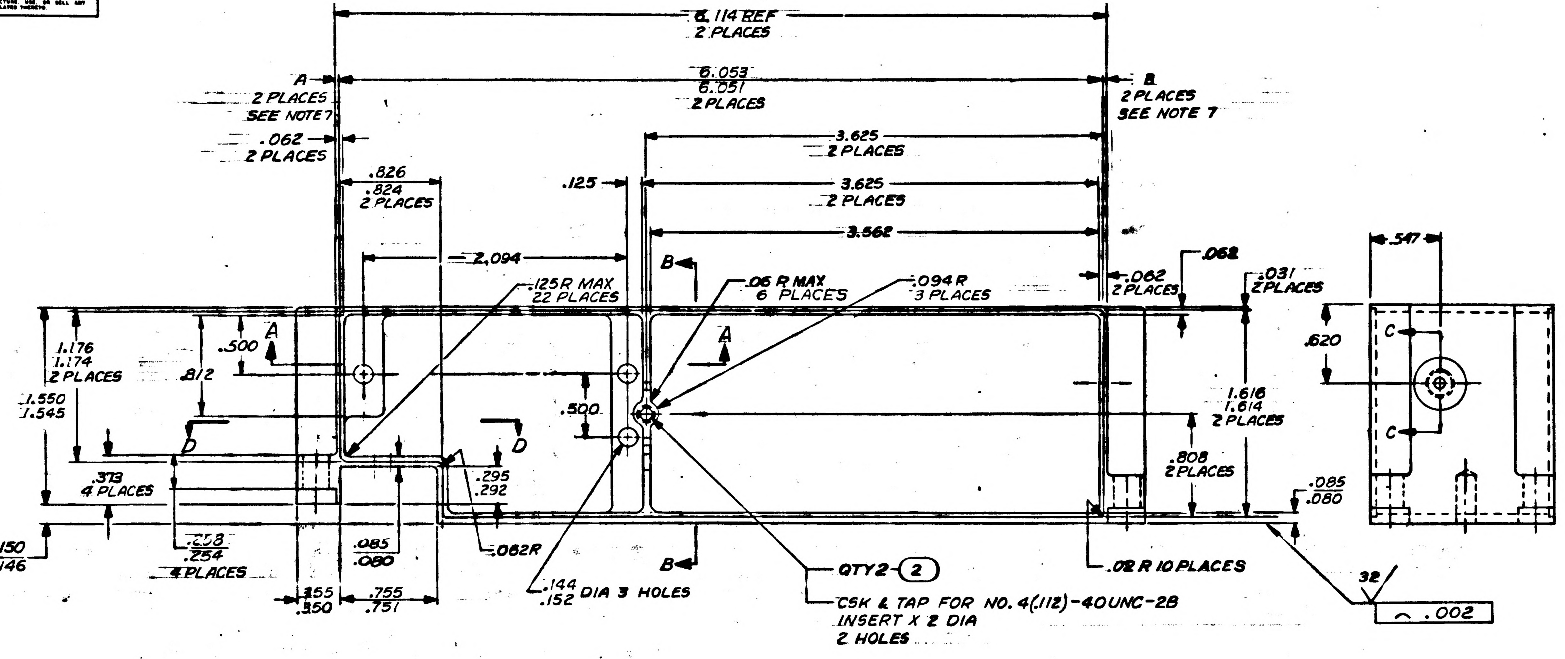
6.114 REF 2 PLACES
6.053 6.051 2 PLACES
A 2 PLACES SEE NOTE 7
B 2 PLACES SEE NOTE 7
.062 2 PLACES
3.625 2 PLACES
3.625 2 PLACES
3.562
.826 .824 2 PLACES
.125
2.094
B
A
.125 R MAX 22 PLACES
.06 R MAX 6 PLACES
.094 R 3 PLACES
.062 2 PLACES
.062
.031 2 PLACES
.547
.620
C
C
1.176 1.174 2 PLACES
.500
.812
1.550 1.545
.500
D
D
.313 4 PLACES
.295 .292
1.616 1.614 2 PLACES
.808 2 PLACES
.085 .080
.150 .146
.258 .254 4 PLACES
.085 .080
.082R
B
.355 .350
.755 .751
.144 .152 DIA 3 HOLES
QTY 2 ②
CSK & TAP FOR NO. 4 (.112)-40UNC-2B INSERT X 2 DIA 2 HOLES
.02 R 10 PLACES
32
⌒ .002

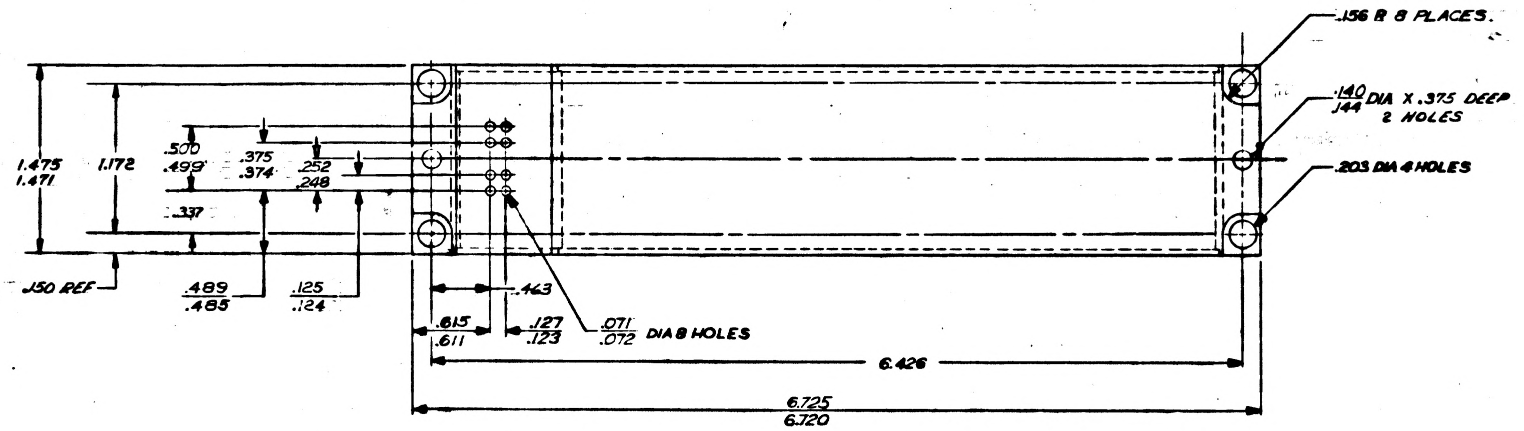
.156 R 8 PLACES
.140 .144 DIA X .375 DEEP 2 HOLES
.203 DIA 4 HOLES
1.475 1.471
1.172
.500 .499
.375 .374
.252 .248
.337
.150 REF
.489 .485
.125 .124
.463
.615 .611
.127 .123
.071 .072 DIA 8 HOLES
6.426
6.725 6.720

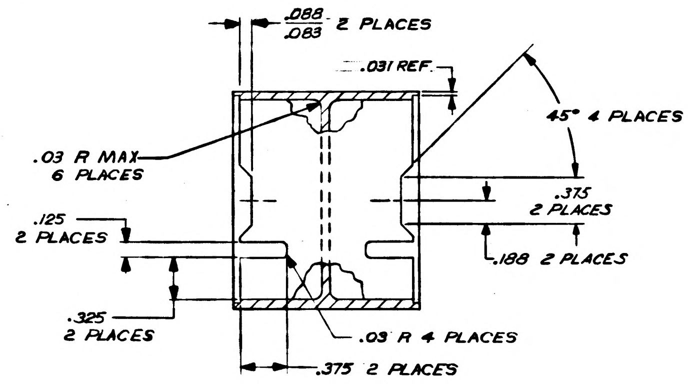
.088 .083 2 PLACES
.031 REF.
45° 4 PLACES
.03 R MAX 6 PLACES
.375 2 PLACES
.125 2 PLACES
.188 2 PLACES
.325 2 PLACES
.03 R 4 PLACES
.375 2 PLACES

SECTION B-B

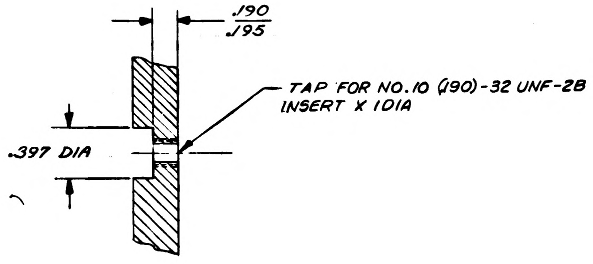
.190 .195
TAP FOR NO. 10 (.190)-32 UNF-2B INSERT X 1 DIA
.397 DIA

SECTION C-C

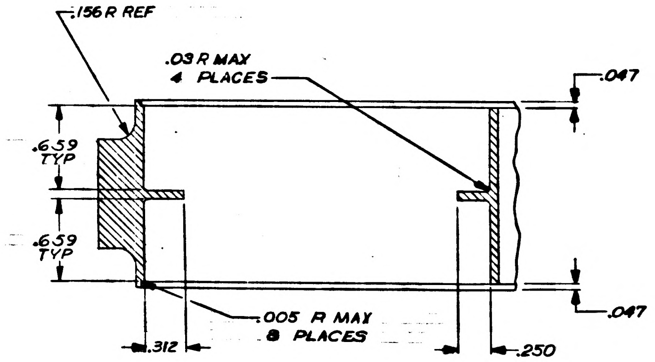
.156 R REF
.03 R MAX 4 PLACES
.047
.659 TYP
.659 TYP
.005 R MAX 8 PLACES
.047
.312
.250

SECTION A-A

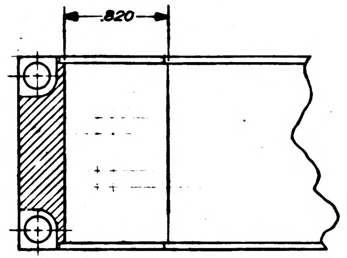

SECTION D-D

NOTES:

1. MATL: 2024-T4 AL PER QQ-A-268 TEMP T4
2. REMOVE ALL BURRS AND SHARP EDGES
3. BRIGHT NICKEL PLATE PER QQ-N-290, CLASS 2 .00125 THK (.00025 THK COPPER; .001 THK NICKEL)
4. INTERPRET DRAWING IN ACCORDANCE WITH STANDARDS PRESCRIBED BY MIL-D-70327
5. 63√ UNLESS OTHERWISE SPECIFIED
6. UNLESS OTHERWISE SPECIFIED ALL FILLETS & RADII TO BE .010 MAX
7. A & B DIMENSIONS TO BE EQUAL WITHIN .005

MASTER

QTY REQD	PART OR IDENTIFYING NO.	NOMENCLATURE OR DESCRIPTION	FIND NO.
2	MS21209-C0420	INSERT, HELICAL COIL	2
1	1004548-1	HEADER HOUSING	1

LIST OF MATERIALS

NEXT ASSY	USED ON	UNLESS OTHERWISE SPECIFIED DIMENSIONS ARE IN INCHES TOLERANCES ON FRACTIONS ± DECIMALS ±.005 .01 ANGLES ± 2° DO NOT SCALE THIS DRAWING	MIT INSTRUMENTATION LAB CAMBRIDGE, MASS	MANNED SPACECRAFT CENTER HOUSTON, TEXAS
APPLICATION		MATERIAL SEE NOTE 1	DRAWN J. Spinney DATE 28 JUL 63 CHECKED R. Edwards 29 Aug 63 APPROVAL APPROVAL	HEADER HOUSING AGC CLOCK OSCILLATOR
		HEAT TREATMENT NONE	NASA APPROVAL	CODE IDENT NO. —— SIZE E NASA DRAWING NO. 1004548
		FINAL FINISH SEE NOTE 3	MIT APPROVAL MIT APPROVAL	SCALE 2/1 WT SHEET 1 OF 1

1004548

INCHES 0 1 2 PHOTOGRAPHIC SCALE ONLY

NOTICE — WHEN GOVERNMENT DRAWINGS, SPECIFICATIONS, OR OTHER DATA ARE USED FOR ANY PURPOSE OTHER THAN IN CONNECTION WITH A DEFINITELY RELATED GOVERNMENT PROCUREMENT OPERATION, THE UNITED STATES GOVERNMENT THEREBY INCURS NO RESPONSIBILITY NOR ANY OBLIGATION WHATSOEVER; AND THE FACT THAT THE GOVERNMENT MAY HAVE FORMULATED, FURNISHED, OR IN ANY WAY SUPPLIED THE SAID DRAWINGS, SPECIFICATIONS OR OTHER DATA IS NOT TO BE REGARDED BY IMPLICATION OR OTHERWISE AS IN ANY MANNER LICENSING THE HOLDER OR ANY OTHER PERSON OR CORPORATION, OR CONVEYING ANY RIGHTS OR PERMISSION TO MANUFACTURE, USE, OR SELL ANY PATENTED INVENTION THAT MAY IN ANY WAY BE RELATED THERETO.

1004553

SYM	DESCRIPTION	DATE	APPROVAL
	REVISIONS 03453		

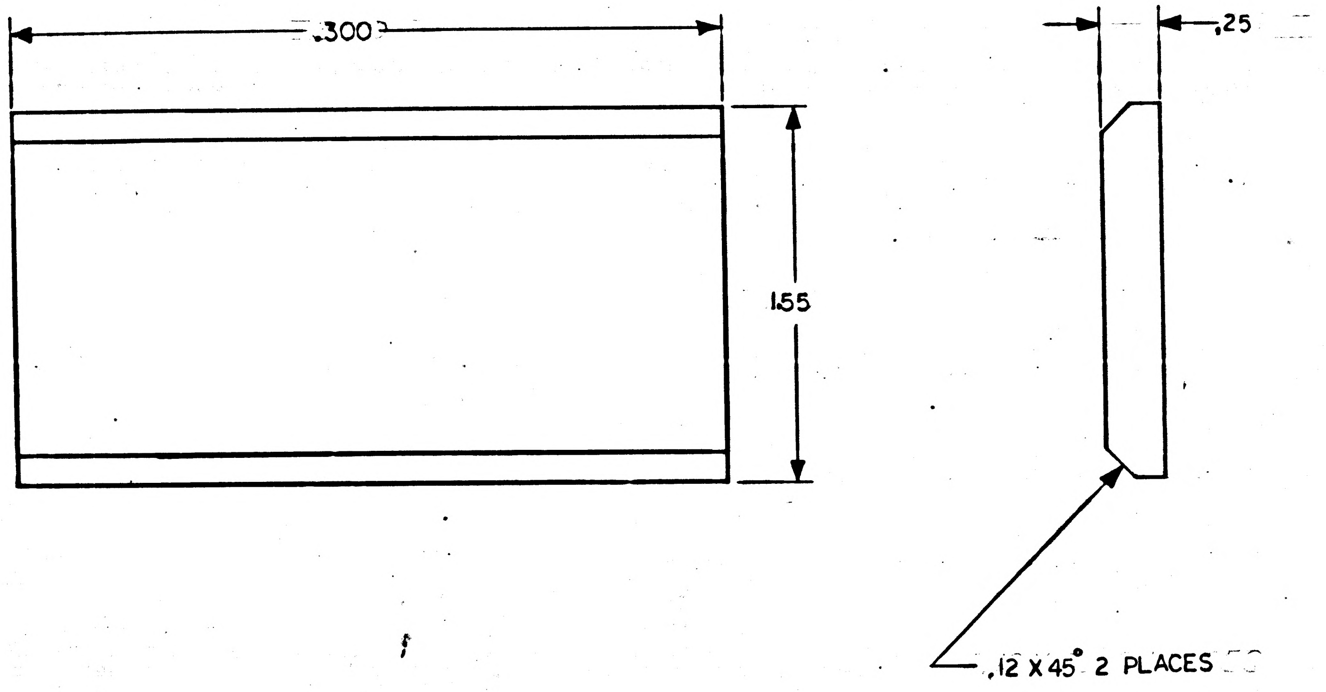

NOTES:-
1. INTERPRET DRAWING IN ACCORDANCE WITH STANDARDS PRESCRIBED BY MIL D 70327
2. MAT'L MAKE FROM DRAWING NO 1006729

QTY REQD	PART OR IDENTIFYING NO.	NOMENCLATURE OR DESCRIPTION	FIND NO.

LIST OF MATERIALS

NEXT ASSY	USED ON
1003527	

APPLICATION

UNLESS OTHERWISE SPECIFIED DIMENSIONS ARE IN INCHES TOLERANCES ON

FRACTIONS	DECIMALS	ANGLES
±	± .02	± 5°

DO NOT SCALE THIS DRAWING

MATERIAL SEE NOTE 2

HEAT TREATMENT NONE

FINAL FINISH NONE

MIT INSTRUMENTATION LAB
CAMBRIDGE, MASS.
DWG. NO. CONTRACT

DRAWN J.C. Crammer DATE Sept 5 63
CHECKED R. Edward 5 Sept 63
APPROVAL WBTurner 25SEP63
APPROVAL E. J. Duggan 9/26/63
NASA APPROVAL 9/26/63
MIT APPROVAL
MIT APPROVAL D. Walsh 9/26/63

MANNED SPACECRAFT CENTER
HOUSTON, TEXAS

INSULATOR, SIDE
AGC OSCILLATOR

CODE IDENT NO.	SIZE	NASA DRAWING NO.
——	C	1004553

SCALE 2/1 WT SHEET 1 OF 1

MASTER

INCHES
0 1 2
PHOTOGRAPHIC SCALE ONLY

NOTICE — WHEN GOVERNMENT DRAWINGS, SPECIFICATIONS, OR OTHER DATA ARE USED FOR ANY PURPOSE OTHER THAN IN CONNECTION WITH A DEFINITELY RELATED GOVERNMENT PROCUREMENT OPERATION, THE UNITED STATES GOVERNMENT THEREBY INCURS NO RESPONSIBILITY NOR ANY OBLIGATION WHATSOEVER; AND THE FACT THAT THE GOVERNMENT MAY HAVE FORMULATED, FURNISHED, OR IN ANY WAY SUPPLIED THE SAID DRAWINGS, SPECIFICATIONS OR OTHER DATA IS NOT TO BE REGARDED BY IMPLICATION OR OTHERWISE AS IN ANY MANNER LICENSING THE HOLDER OR ANY OTHER PERSON OR CORPORATION, OR CONVEYING ANY RIGHTS OR PERMISSION TO MANUFACTURE, USE, OR SELL ANY PATENTED INVENTION THAT MAY IN ANY WAY BE RELATED THERETO.

1004554 A

REVISIONS 03453

SYM	DESCRIPTION	DATE	APPROVAL
A	REVISED PER TDRR 05779	1-21-64	L.J.B., W

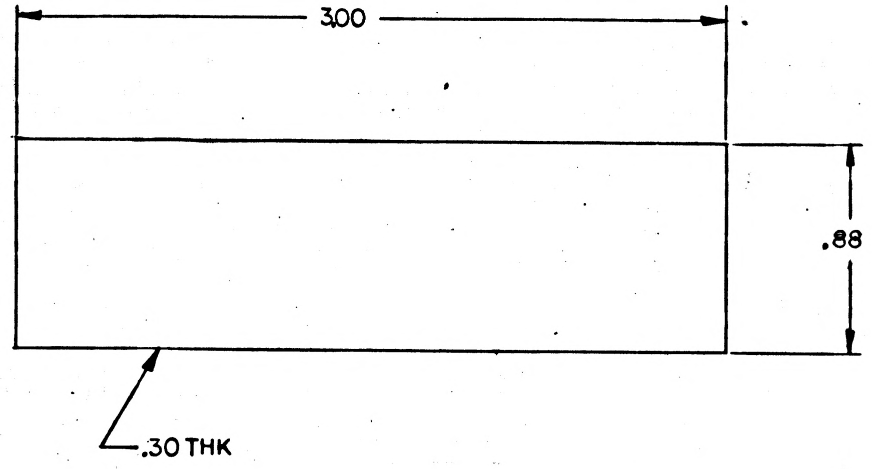

NOTES:-
1. INTERPRET DRAWING IN ACCORDANCE WITH STANDARDS PRESCRIBED BY MIL-D-70327
2. MAT L: MAKE FROM DRAWING NO. 1006729

MASTER

QTY REQD	PART OR IDENTIFYING NO.	NOMENCLATURE OR DESCRIPTION	FIND NO.

LIST OF MATERIALS

1003527	
NEXT ASSY	USED ON
APPLICATION	

UNLESS OTHERWISE SPECIFIED
DIMENSIONS ARE IN INCHES
TOLERANCES ON

FRACTIONS	DECIMALS	ANGLES
±	± .02	±

DO NOT SCALE THIS DRAWING

MATERIAL SEE NOTE 2

HEAT TREATMENT —

FINAL FINISH —

MIT
INSTRUMENTATION LAB
CAMBRIDGE, MASS.
DWG. NO. CONTRACT

MANNED SPACECRAFT CENTER
HOUSTON, TEXAS

DRAWN B. Bennett DATE 13 Aug 63
CHECKED R. Edwards 9 Sept 63
APPROVAL W B Turner 25 SEP 63
APPROVAL E. J. Duggan 9/26/63

INSULATOR
AGC OSCILLATOR

NASA APPROVAL 9/24/63
MIT APPROVAL —
MIT APPROVAL J. Hazel 9/26/63

CODE IDENT NO.	SIZE	NASA DRAWING NO.
—	C	1004554
SCALE 2/1	WT	SHEET 1 OF 1

NOTICE — WHEN GOVERNMENT DRAWINGS, SPECIFICATIONS, OR OTHER DATA ARE USED FOR ANY PURPOSE OTHER THAN IN CONNECTION WITH A DEFINITELY RELATED GOVERNMENT PROCUREMENT OPERATION, THE UNITED STATES GOVERNMENT THEREBY INCURS NO RESPONSIBILITY NOR ANY OBLIGATION WHATSOEVER; AND THE FACT THAT THE GOVERNMENT MAY HAVE FORMULATED, FURNISHED, OR IN ANY WAY SUPPLIED THE SAID DRAWINGS, SPECIFICATIONS OR OTHER DATA IS NOT TO BE REGARDED BY IMPLICATION OR OTHERWISE AS IN ANY MANNER LICENSING THE HOLDER OR ANY OTHER PERSON OR CORPORATION, OR CONVEYING ANY RIGHTS OR PERMISSION TO MANUFACTURE, USE, OR SELL ANY PATENTED INVENTION THAT MAY IN ANY WAY BE RELATED THERETO.

1004554

REVISIONS 03453

SYM	DESCRIPTION	DATE	APPROVAL

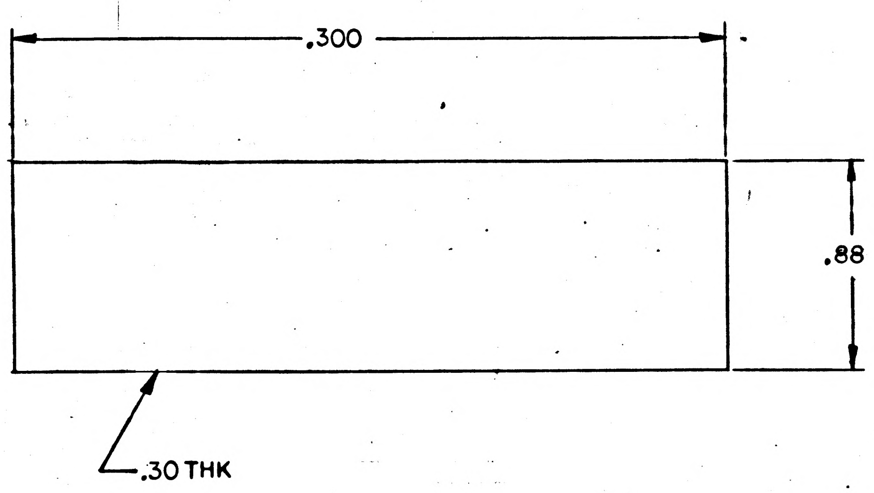

NOTES:-
1. INTERPRET DRAWING IN ACCORDANCE WITH STANDARDS PRESCRIBED BY MIL-D-70327
2. MAT L MAKE FROM DRAWING NO 1006729

MASTER

QTY REQD	PART OR IDENTIFYING NO.	NOMENCLATURE OR DESCRIPTION	FIND NO.

LIST OF MATERIALS

NEXT ASSY	USED ON
1003527	

APPLICATION

UNLESS OTHERWISE SPECIFIED
DIMENSIONS ARE IN INCHES
TOLERANCES ON
FRACTIONS ± DECIMALS ± ANGLES ±
DO NOT SCALE THIS DRAWING
MATERIAL
SEE NOTE 2
HEAT TREATMENT
FINAL FINISH

MIT
INSTRUMENTATION LAB
CAMBRIDGE, MASS.
DWG. NO. CONTRACT

DRAWN D. Bennett DATE 13Aug63
CHECKED R. Edwards 9 Sept 63
APPROVAL W.B. Turner 25 SEP 63
APPROVAL E.J. Duggan 9/26/63
NASA APPROVAL 9/24/63
MIT APPROVAL
MIT APPROVAL 9/26/63

MANNED SPACECRAFT CENTER
HOUSTON, TEXAS

INSULATOR

AGC OSCILLATOR

CODE IDENT NO. SIZE C NASA DRAWING NO. 1004554

SCALE 2/1 WT SHEET 1 OF 1

INCHES
0 1 2
PHOTOGRAPHIC SCALE ONLY

NOTICE — WHEN GOVERNMENT DRAWINGS, SPECIFICATIONS, OR OTHER DATA ARE USED FOR ANY PURPOSE OTHER THAN IN CONNECTION WITH A DEFINITELY RELATED GOVERNMENT PROCUREMENT OPERATION, THE UNITED STATES GOVERNMENT THEREBY INCURS NO RESPONSIBILITY NOR ANY OBLIGATION WHATSOEVER; AND THE FACT THAT THE GOVERNMENT MAY HAVE FORMULATED, FURNISHED, OR IN ANY WAY SUPPLIED THE SAID DRAWINGS, SPECIFICATIONS OR OTHER DATA IS NOT TO BE REGARDED BY IMPLICATION OR OTHERWISE AS IN ANY MANNER LICENSING THE HOLDER OR ANY OTHER PERSON OR CORPORATION, OR CONVEYING ANY RIGHTS OR PERMISSION TO MANUFACTURE, USE, OR SELL ANY PATENTED INVENTION THAT MAY IN ANY WAY BE RELATED THERETO.

1004555

REVISIONS 03453			
SYM	DESCRIPTION	DATE	APPROVAL

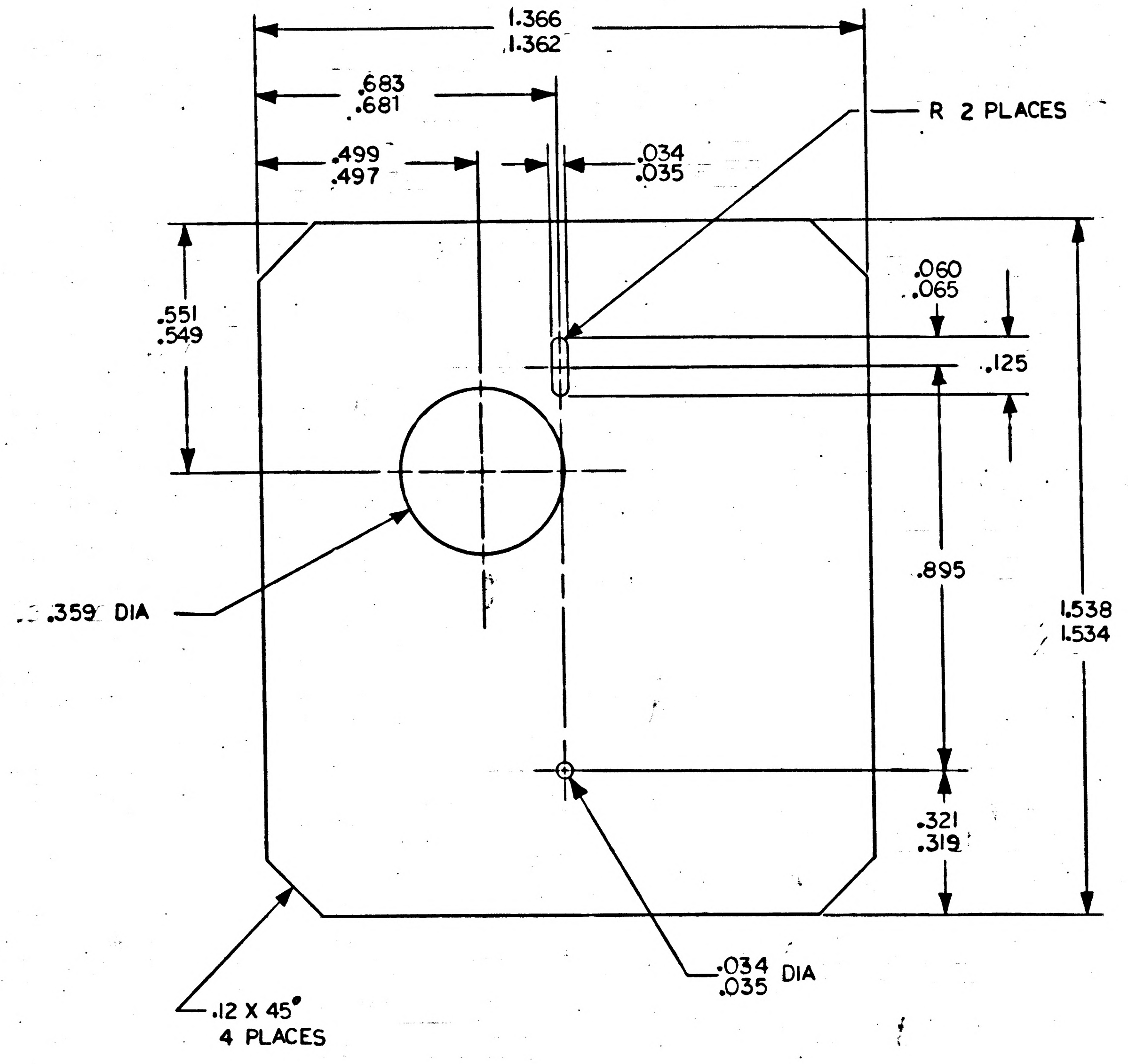

NOTES:-
1. INTERPRET DRAWING IN ACCORDANCE WITH STANDARDS PRESCRIBED BY MIL-D-70327
2. MAT'L .031 THK G10 PLASTIC PER MIL-P-18177, TYPE GEE
3. REMOVE BURRS AND SHARP EDGES

MASTER

QTY REQD	PART OR IDENTIFYING NO.	NOMENCLATURE OR DESCRIPTION	FIND NO.

LIST OF MATERIALS

NEXT ASSY	USED ON
1003527	

APPLICATION

UNLESS OTHERWISE SPECIFIED
DIMENSIONS ARE IN INCHES
TOLERANCES ON
FRACTIONS ± DECIMALS ±.02 .005 ANGLES ±
DO NOT SCALE THIS DRAWING
MATERIAL SEE NOTE 2
HEAT TREATMENT —
FINAL FINISH —

MIT
INSTRUMENTATION LAB
CAMBRIDGE, MASS.
DWG. NO. CONTRACT

DRAWN DATE 5 Sept 63
CHECKED 25 SEPT 63
APPROVAL W B Turner 25 SEP 63
APPROVAL 9/26/63
NASA APPROVAL 9/24/63
MIT APPROVAL
MIT APPROVAL 9/26/63

MANNED SPACECRAFT CENTER
HOUSTON, TEXAS

END PLATE, RIGHT
AGC OSCILLATOR

CODE IDENT NO. —
SIZE C
NASA DRAWING NO. 1004555
SCALE 4/1
WT
SHEET 1 OF 1

INCHES
0 1 2
PHOTOGRAPHIC SCALE ONLY

1004555

NOTICE — WHEN GOVERNMENT DRAWINGS, SPECIFICATIONS, OR OTHER DATA ARE USED FOR ANY PURPOSE OTHER THAN IN CONNECTION WITH A DEFINITELY RELATED GOVERNMENT PROCUREMENT OPERATION, THE UNITED STATES GOVERNMENT THEREBY INCURS NO RESPONSIBILITY NOR ANY OBLIGATION WHATSOEVER; AND THE FACT THAT THE GOVERNMENT MAY HAVE FORMULATED, FURNISHED, OR IN ANY WAY SUPPLIED THE SAID DRAWINGS, SPECIFICATIONS OR OTHER DATA IS NOT TO BE REGARDED BY IMPLICATION OR OTHERWISE AS IN ANY MANNER LICENSING THE HOLDER OR ANY OTHER PERSON OR CORPORATION, OR CONVEYING ANY RIGHTS OR PERMISSION TO MANUFACTURE, USE, OR SELL ANY PATENTED INVENTION THAT MAY IN ANY WAY BE RELATED THERETO.

REVISIONS 03453

SYM	DESCRIPTION	DATE	APPROVAL
A	REVISED PER TDRR #4490	11-5-63	

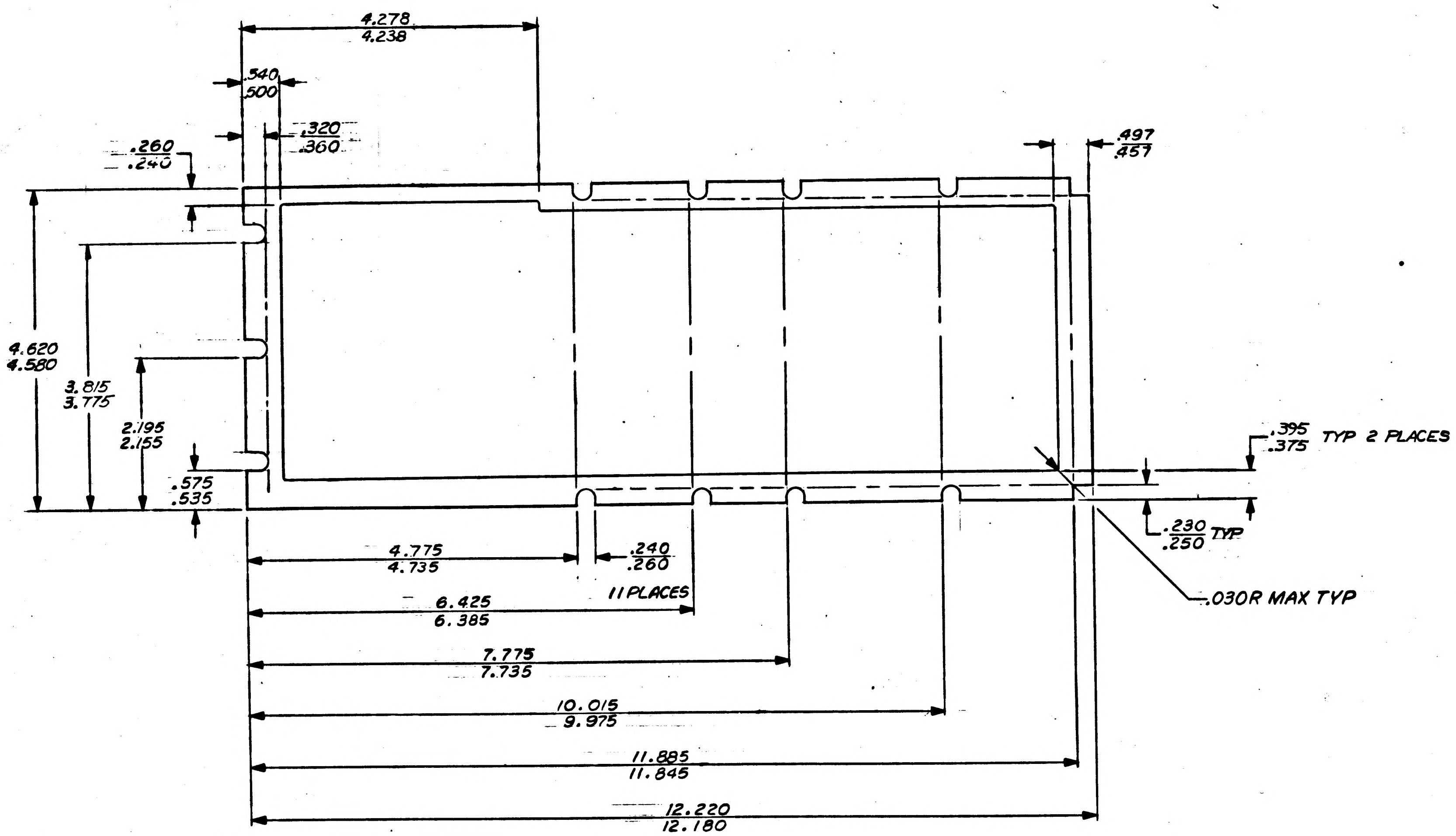

4.278
4.238
.540
.500
.320
.360
.260
.240
.497
.457
4.620
4.580
3.815
3.775
2.195
2.155
.575
.535
.395
.375 TYP 2 PLACES
.230
.250 TYP
.030R MAX TYP
4.775
4.735
.240
.260
11 PLACES
6.425
6.385
7.775
7.735
10.015
9.975
11.885
11.845
12.220
12.180

OTES

1. MATL: .060/.090 THICK NEOPRENE RUBBER PER MIL-R-6855 CLASS II, HARDNESS 40 DUROMETER
2. INTERPRET DRAWING IN ACCORDANCE WITH STANDARDS PRESCRIBED BY MIL-D-70327

MASTER

QTY REQD	PART OR IDENTIFYING NO.	NOMENCLATURE OR DESCRIPTION	FIND NO.

LIST OF MATERIALS

NEXT ASSY	USED ON
1003534	

APPLICATION

UNLESS OTHERWISE SPECIFIED DIMENSIONS ARE IN INCHES
TOLERANCES ON
FRACTIONS ± DECIMALS ± ANGLES ±
DO NOT SCALE THIS DRAWING
MATERIAL SEE NOTE 1
HEAT TREATMENT NONE
FINAL FINISH NONE

MIT INSTRUMENTATION LAB
CAMBRIDGE, MASS.
DWG. NO. CONTRACT
DRAWN H. Carlson DATE 7SEPT63
CHECKED A.R. Bogni 9SEP63
APPROVAL Sept 19/63
APPROVAL Elton C Hall 20 Sept 63
NASA APPROVAL
MIT APPROVAL
MIT APPROVAL

MANNED SPACECRAFT CENTER
HOUSTON, TEXAS

GASKET
AGC DSKY & NAV

CODE IDENT NO. —
SIZE D
NASA DRAWING NO. 1004559
SCALE 1/1
WT
SHEET 1 OF 1

1004559 A

INCHES
0 1 2
PHOTOGRAPHIC SCALE ONLY

1004559

NOTICE — WHEN GOVERNMENT DRAWINGS, SPECIFICATIONS, OR OTHER DATA ARE USED FOR ANY PURPOSE OTHER THAN IN CONNECTION WITH A DEFINITELY RELATED GOVERNMENT PROCUREMENT OPERATION, THE UNITED STATES GOVERNMENT THEREBY INCURS NO RESPONSIBILITY NOR ANY OBLIGATION WHATSOEVER; AND THE FACT THAT THE GOVERNMENT MAY HAVE FORMULATED, FURNISHED, OR IN ANY WAY SUPPLIED THE SAID DRAWINGS, SPECIFICATIONS OR OTHER DATA IS NOT TO BE REGARDED BY IMPLICATION OR OTHERWISE AS IN ANY MANNER LICENSING THE HOLDER OR ANY OTHER PERSON OR CORPORATION, OR CONVEYING ANY RIGHTS OR PERMISSION TO MANUFACTURE, USE, OR SELL ANY PATENTED INVENTION THAT MAY IN ANY WAY BE RELATED THERETO.

REVISIONS 03453

SYM	DESCRIPTION	DATE	APPROVAL

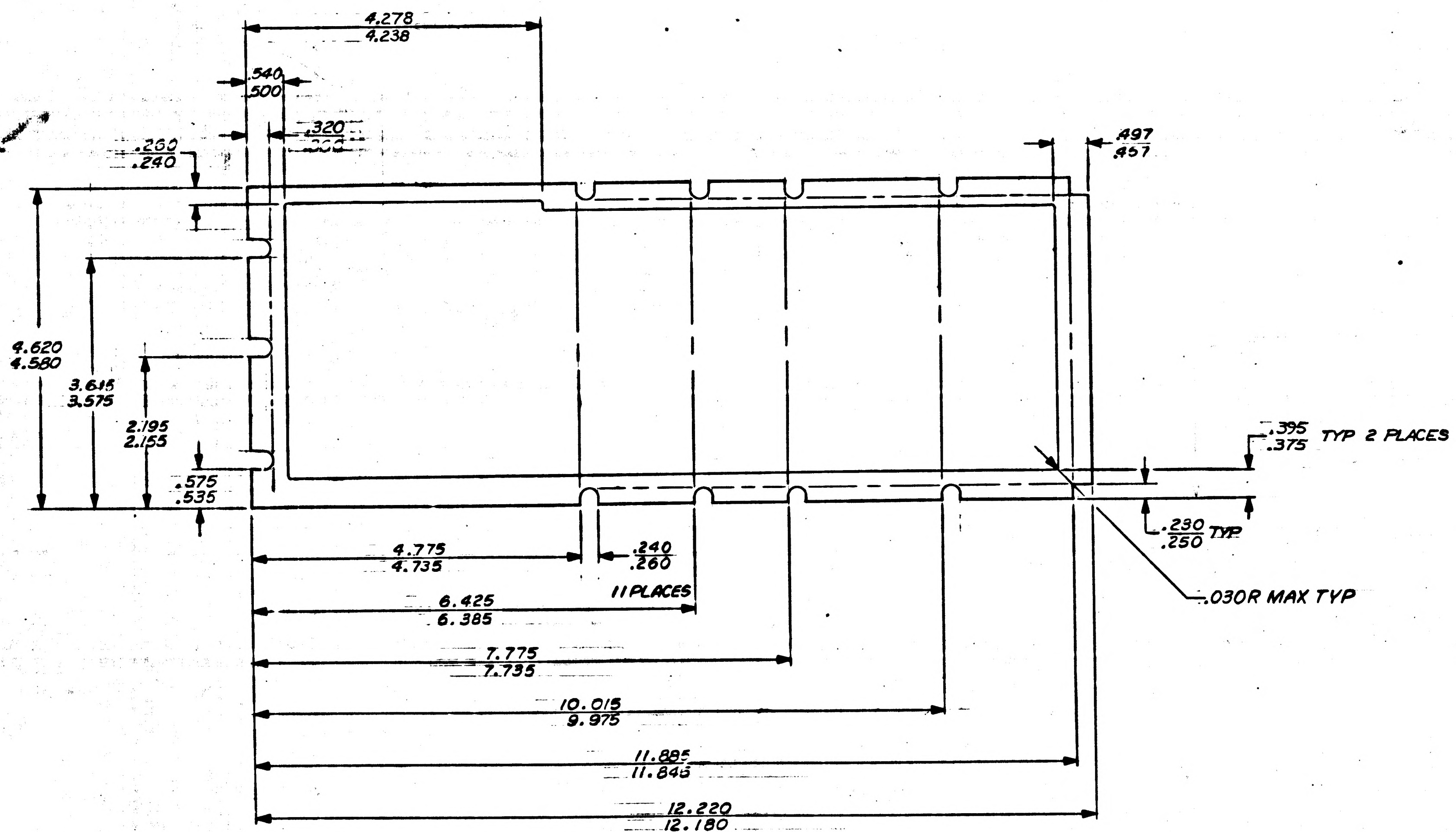
4.278
4.238
.540
.500
.320
.300
.260
.240
4.620
4.580
3.615
3.575
2.195
2.155
.575
.535
4.775
4.735
.240
.260
11 PLACES
6.425
6.385
7.775
7.735
10.015
9.975
11.885
11.845
12.220
12.180
.497
.457
.395
.375
TYP 2 PLACES
.230
.250
TYP
.030R MAX TYP

NOTES
1. MATL: .060/.090 THICK NEOPRENE RUBBER PER MIL-R-6855 CLASS II, HARDNESS 40 DUROMETER
2. INTERPRET DRAWING IN ACCORDANCE WITH STANDARDS PRESCRIBED BY MIL-D-70327

QTY REQD	PART OR IDENTIFYING NO.	NOMENCLATURE OR DESCRIPTION	FIND NO.

LIST OF MATERIALS

NEXT ASSY	USED ON
1003534	

APPLICATION

UNLESS OTHERWISE SPECIFIED DIMENSIONS ARE IN INCHES
TOLERANCES ON
FRACTIONS ± DECIMALS ± ANGLES ±
DO NOT SCALE THIS DRAWING
MATERIAL SEE NOTE 1
HEAT TREATMENT NONE
FINAL FINISH NONE

MIT INSTRUMENTATION LAB
CAMBRIDGE, MASS.
DWG. NO. CONTRACT
DRAWN H. Carlson DATE 7SEPT63
CHECKED A.R. Bogni 9SEP63
APPROVAL Sept 19/63
APPROVAL Elton C Hall 20 Sept 63
NASA APPROVAL
MIT APPROVAL
MIT APPROVAL

MANNED SPACECRAFT CENTER
HOUSTON, TEXAS

GASKET
AGC DISPLAY AND KEYBOARD

CODE IDENT NO. —
SIZE D
NASA DRAWING NO. 1004559
SCALE 1/1
WT
SHEET 1 OF 1

MASTER

INCHES
0 1 2
PHOTOGRAPHIC SCALE ONLY

1004559

NOTICE — WHEN GOVERNMENT DRAWINGS, SPECIFICATIONS, OR OTHER DATA ARE USED FOR ANY PURPOSE OTHER THAN IN CONNECTION WITH A DEFINITELY RELATED GOVERNMENT PROCUREMENT OPERATION, THE UNITED STATES GOVERNMENT THEREBY INCURS NO RESPONSIBILITY NOR ANY OBLIGATION WHATSOEVER; AND THE FACT THAT THE GOVERNMENT MAY HAVE FORMULATED, FURNISHED, OR IN ANY WAY SUPPLIED THE SAID DRAWINGS, SPECIFICATIONS, OR OTHER DATA IS NOT TO BE REGARDED BY IMPLICATION OR OTHERWISE AS IN ANY MANNER LICENSING THE HOLDER OR ANY OTHER PERSON OR CORPORATION, OR CONVEYING ANY RIGHTS OR PERMISSION TO MANUFACTURE, USE, OR SELL ANY PATENTED INVENTION THAT MAY IN ANY WAY BE RELATED THERETO.

REVISIONS 33-53			
SYM	DESCRIPTION	DATE	APPR
A	REVISED PER TDRR 06018		

HOLE IDENT	XI BASIC DIM.	YI BASIC DIM.	⊕ DIA	HOLE DIA
A1	2.143	−0.067	.002	SEE SECTION A-A
A2	2.301	−0.067		
A3	2.449	−0.067		
A4	2.593	−0.067		
A5	0.610	−0.047		
A6	0.000	0.000		
A7	2.449	0.105		
A8	2.593	0.105		
A9	0.610	0.109		
A10	0.000	0.188		
A11	0.156	0.188		
A12	2.301	0.277		
A13	2.449	0.277		
A14	2.593	0.277		
A15	0.313	0.312		
A16	0.469	0.312		
A17	0.625	0.312		
A18	0.000	0.359		
A19	0.156	0.359		
A20	0.695	0.484	.002	
B1	2.301	0.105	.002	SEE SECTION B-B
C1	2.235	0.191	.002	.021 .024
C2	2.375	0.191		
C3	0.078	0.273		
C4	0.547	0.382		
C5	0.695	0.382		
C6	0.172	0.468	.002	
D1	2.047	−0.031	.002	.021 .024 X.203 DEEP NEARSIDE
D2	2.520	0.019		
D3	0.520	0.031		
D4	2.520	0.191		
D5	2.047	−0.031		.021 .024 X.203 DEEP FARSIDE
D6	2.520	0.019		
D7	0.520	0.031		
D8	2.520	0.191	.002	
E1	1.943	0.261	.002	.123/.129
F1	2.141	0.540	.002	.375 X.281 DEEP FARSIDE
G1	0.695	0.660	.002	SEE SECTION C-C
H1	1.250	0.531	.002	SEE DETAIL A
H2	0.062	0.594	.002	
J1	0.959	0.531	.002	SEE DETAIL B
J2	1.559	0.531	.002	
K1	0.189	−0.007	.002	.204/.210

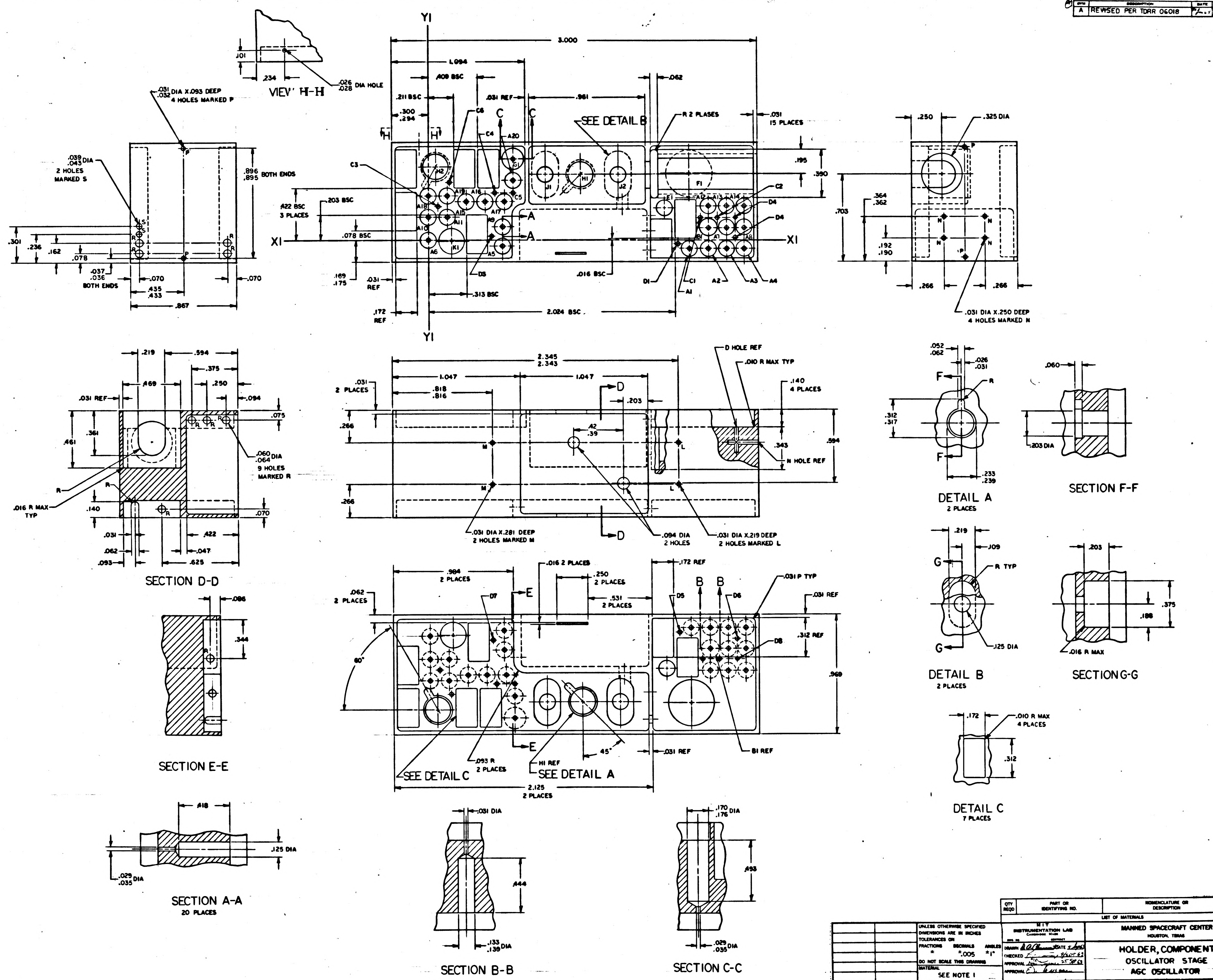
VIEW H-H
.101
.234
.026 .028 DIA HOLE
.031 .032 DIA X.093 DEEP 4 HOLES MARKED P
.039 .043 DIA 2 HOLES MARKED S
.896 .895 BOTH ENDS
.301
.236
.162
.078
.037 .036 BOTH ENDS
.070
.435 .433
.867
YI
3.000
1.094
.409 BSC
.031 REF
.961
.062
.211 BSC
.300 .294
SEE DETAIL B
R 2 PLACES
.031 15 PLACES
.422 BSC 3 PLACES
.203 BSC
.078 BSC
XI
.195
.390
.169 .175
.031 REF
.172 REF
.313 BSC
.016 BSC
2.024 BSC
.250
.325 DIA
.364 .362
.703
.192 .190
.266
.031 DIA X.250 DEEP 4 HOLES MARKED N
SECTION D-D
.219
.594
.469
.375
.250
.094
.075
.031 REF
.361
.461
.060 .064 DIA 9 HOLES MARKED R
.016 R MAX TYP
.140
.031
.062
.093
.422
.047
.625
.070
2.345 2.343
1.047
1.047
.818 .816
.031 2 PLACES
.203
.42 .39
.266
.594
.343
D HOLE REF
.010 R MAX TYP
.140 4 PLACES
N HOLE REF
.031 DIA X.281 DEEP 2 HOLES MARKED M
.094 DIA 2 HOLES
.031 DIA X.219 DEEP 2 HOLES MARKED L
DETAIL A
2 PLACES
.052 .062
.026 .031
.312 .317
.233 .239
SECTION F-F
.060
.203 DIA
DETAIL B
2 PLACES
.219
.109
R TYP
.125 DIA
SECTION G-G
.203
.375
.188
.016 R MAX
SECTION E-E
.086
.344
.984 2 PLACES
.016 2 PLACES
.250 2 PLACES
.531 2 PLACES
.172 REF
.031 P TYP
.031 REF
.062 2 PLACES
.312 REF
60°
.969
45°
.093 R 2 PLACES
H1 REF
B1 REF
SEE DETAIL C
SEE DETAIL A
2.125 2 PLACES
DETAIL C
7 PLACES
.172
.010 R MAX 4 PLACES
.312
SECTION A-A
20 PLACES
.418
.125 DIA
.029 .035 DIA
SECTION B-B
.031 DIA
.444
.133 .139 DIA
SECTION C-C
.170 .176 DIA
.493
.029 .035 DIA

NOTES
1. MATL: G10 PLASTIC SHEET PER MIL-P-18177, TYPE GEE
2. REMOVE BURRS AND BREAK SHARP EDGES
3. ALL BASIC DIMENSIONS TO BE ⊕ .002

QTY REQD	PART OR IDENTIFYING NO.	NOMENCLATURE OR DESCRIPTION	FIND NO

LIST OF MATERIALS

NEXT ASSY	USED ON
1003526	

APPLICATION

UNLESS OTHERWISE SPECIFIED
DIMENSIONS ARE IN INCHES
TOLERANCES ON
FRACTIONS ± DECIMALS ±.005 ANGLES ±1°
DO NOT SCALE THIS DRAWING
MATERIAL SEE NOTE 1
HEAT TREATMENT NONE
FINAL FINISH NONE

MIT
INSTRUMENTATION LAB
CAMBRIDGE, MASS
DWG. NO. CONTRACT
DRAWN D.A. Clemmer DATE 5 Aug 63
CHECKED 9/Sept 63
APPROVAL 25 Sep 63
APPROVAL
NASA APPROVAL
MSFT APPROVAL
MIT APPROVAL

MANNED SPACECRAFT CENTER
HOUSTON, TEXAS

HOLDER, COMPONENT
OSCILLATOR STAGE
AGC OSCILLATOR

CODE IDENT NO. —— SIZE J NASA DRAWING NO. 1004560
SCALE 4/1 WT SHEET 1

REV	DESCRIPTION	DATE	APPROVAL
A	REVISED PER TDRR 06018		
B	REVISED PER TDRR 07261 DR Carlson CHK	3/23/	

HOLE IDENT	X1 BASIC DIM.	Y1 BASIC DIM.	⊕ DIA	HOLE DIA
A1	2.143	-0.067	.002	SEE SECTION A-A
A2	2.301	-0.067		
A3	2.449	-0.067		
A4	2.593	-0.067		
A5	0.610	-0.047		
A6	0.000	0.000		
A7	2.449	0.105		
A8	2.593	0.105		
A9	0.610	0.109		
A10	0.000	0.188		
A11	0.156	0.188		
A12	2.301	0.277		
A13	2.449	0.277		
A14	2.593	0.277		
A15	0.313	0.312		
A16	0.469	0.312		
A17	0.625	0.312		
A18	0.000	0.359		
A19	0.156	0.359		
A20	0.695	0.484	.002	
B1	2.301	0.105	.002	SEE SECTION B-B
C1	2.235	0.191	.002	.021 .024
C2	2.375	0.191		
C3	0.078	0.273		
C4	0.547	0.382		
C5	0.695	0.382		
C6	0.172	0.468	.002	
D1	2.047	-0.031	.002	.021 .024 X.203 DEEP NEARSIDE
D2	2.520	0.019		
D3	0.520	0.031		
D4	2.520	0.191		
D5	2.047	-0.031		.021 .024 X.203 DEEP FARSIDE
D6	2.520	0.019		
D7	0.520	0.031		
D8	2.520	0.191	.002	
E1	1.943	0.261	.002	.123/.129
F1	2.141	0.540	.002	.375 X.281 DEEP FARSIDE
G1	0.695	0.660	.002	SEE SECTION C-C
H1	1.250	0.531	.002	SEE DETAIL A
H2	0.062	0.594	.002	
J1	0.959	0.531	.002	SEE DETAIL B
J2	1.559	0.531	.002	
K1	0.189	-0.007	.002	.204/.210

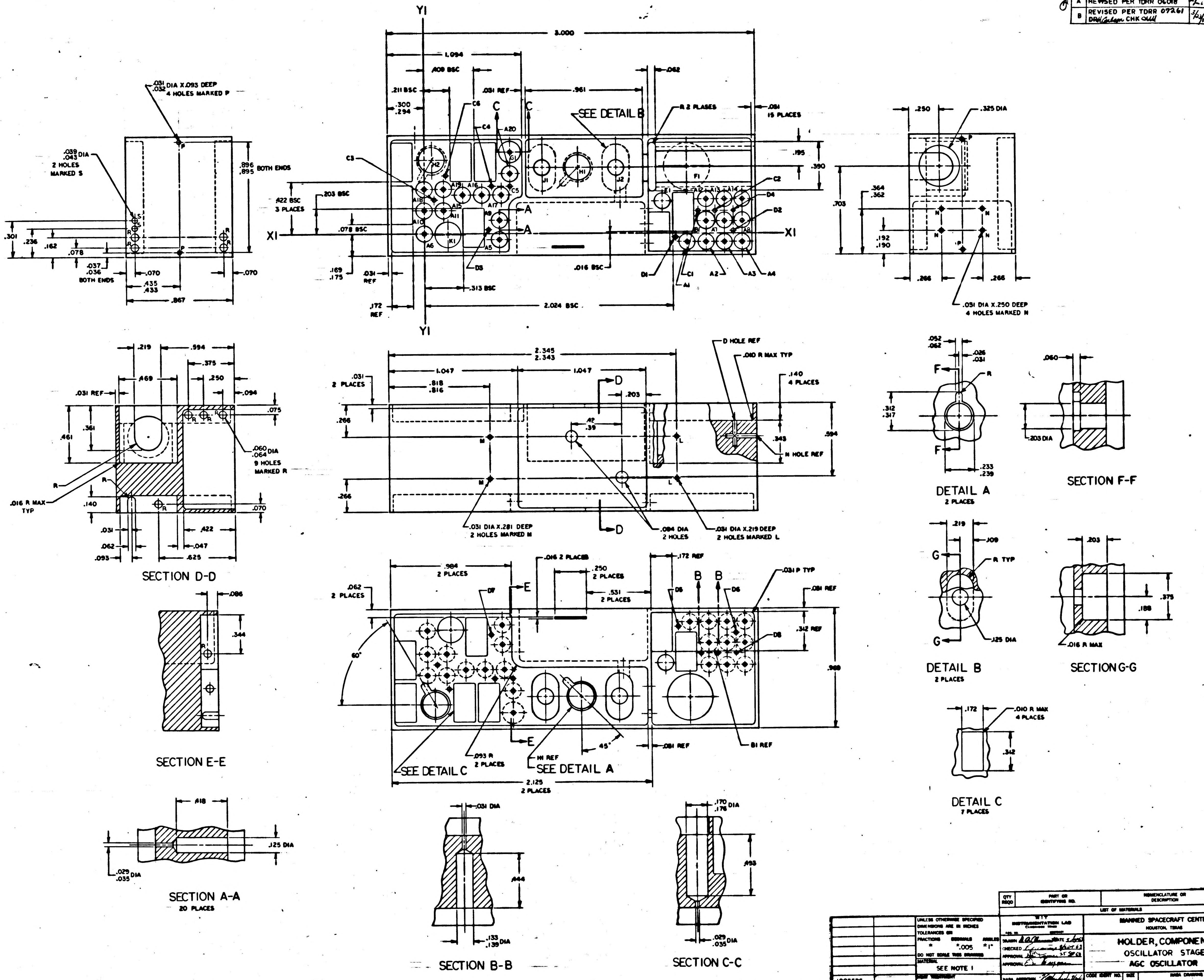

Y1
X1
3.000
1.094
.409 BSC
.211 BSC
.300
.294
.031 REF
.961
.062
R 2 PLACES
.031 15 PLACES
SEE DETAIL B
C
C
A
A
.195
.390
.422 BSC 3 PLACES
.203 BSC
.078 BSC
.169
.175
.031 REF
.313 BSC
.016 BSC
.172 REF
2.024 BSC
.031 DIA X.093 DEEP 4 HOLES MARKED P
.039 DIA .043 2 HOLES MARKED S
.896 .895 BOTH ENDS
.301
.236
.162
.078
.037 .036 BOTH ENDS
.070
.435 .433
.867
.250
.325 DIA
.364 .362
.703
.192 .190
.266
.266
.031 DIA X.250 DEEP 4 HOLES MARKED N
2.345 2.343
1.047
1.047
.031 2 PLACES
.818 .816
.266
.266
D
D
.203
.42 .39
D HOLE REF
.010 R MAX TYP
.140 4 PLACES
.343
H HOLE REF
.594
.031 DIA X.281 DEEP 2 HOLES MARKED M
.094 DIA 2 HOLES
.031 DIA X.219 DEEP 2 HOLES MARKED L
SECTION D-D
.219
.594
.375
.469
.250
.031 REF
.094
.075
.461
.361
.060 DIA .064 9 HOLES MARKED R
.016 R MAX TYP
.140
.070
.031
.062
.093
.422
.047
.625
SECTION E-E
.086
.344
.984 2 PLACES
.062 2 PLACES
.016 2 PLACES
.250 2 PLACES
.531 2 PLACES
.172 REF
B B
.031 P TYP
.081 REF
.312 REF
.969
E
E
60°
45°
.093 R 2 PLACES
H1 REF
.081 REF
B1 REF
SEE DETAIL C
SEE DETAIL A
2.125 2 PLACES
DETAIL A 2 PLACES
.052 .062
.026 .031
F
F
.312 .317
.233 .239
SECTION F-F
.060
.203 DIA
DETAIL B 2 PLACES
.219
.109
G
G
R TYP
.125 DIA
SECTION G-G
.203
.375
.188
.016 R MAX
DETAIL C 7 PLACES
.172
.010 R MAX 4 PLACES
.312
SECTION A-A 20 PLACES
.418
.125 DIA
.029 .035 DIA
SECTION B-B
.031 DIA
.444
.133 .139 DIA
SECTION C-C
.170 .176 DIA
.453
.029 .035 DIA

NOTES
1. MATL: G10 PLASTIC SHEET PER MIL-P-18177, TYPE GEE
2. REMOVE BURRS AND BREAK SHARP EDGES
3. ALL BASIC DIMENSIONS TO BE ⊕ .002

QTY REQD	PART OR IDENTIFYING NO.	NOMENCLATURE OR DESCRIPTION	FIND NO.

LIST OF MATERIALS

UNLESS OTHERWISE SPECIFIED DIMENSIONS ARE IN INCHES
TOLERANCES ON
FRACTIONS ± DECIMALS ±.005 ANGLES ±1°
DO NOT SCALE THIS DRAWING
MATERIAL SEE NOTE 1
HEAT TREATMENT NONE
FINAL FINISH NONE

1003526 NEXT ASSY | USED ON
APPLICATION

MIT INSTRUMENTATION LAB CAMBRIDGE MASS
DRAWN DATE
CHECKED
APPROVAL 25 SEP 63
APPROVAL
NASA APPROVAL
MIT APPROVAL

MANNED SPACECRAFT CENTER
HOUSTON, TEXAS

HOLDER, COMPONENT
OSCILLATOR STAGE
AGC OSCILLATOR

CODE IDENT NO. | SIZE J | NASA DRAWING NO. 1004560
SCALE 4/1 | WT | SHEET 1 OF 1

HOLE IDENT	X1 BASIC DIM.	Y1 BASIC DIM.	⊕ DIA	HOLE DIA
A1	2.143	−0.067	.002	SEE SECTION A-A
A2	2.301	−0.067		
A3	2.449	−0.067		
A4	2.593	−0.067		
A5	0.610	−0.047		
A6	0.000	0.000		
A7	2.449	0.105		
A8	2.593	0.105		
A9	0.610	0.109		
A10	0.000	0.188		
A11	0.156	0.188		
A12	2.301	0.277		
A13	2.449	0.277		
A14	2.593	0.277		
A15	0.313	0.312		
A16	0.469	0.312		
A17	0.625	0.312		
A18	0.000	0.359		
A19	0.156	0.359		
A20	0.695	0.484	.002	
B1	2.301	0.105	.002	SEE SECTION B-B
C1	2.235	0.191	.002	.021 .024
C2	2.375	0.191		
C3	0.078	0.273		
C4	0.547	0.382		
C5	0.695	0.382		
C6	0.172	0.468	.002	
D1	2.047	−0.031	.002	.021 .024 X.203 DEEP NEARSIDE
D2	2.520	0.019		
D3	0.520	0.031		
D4	2.520	0.191		
D5	2.047	−0.031		.021 .024 X.203 DEEP FARSIDE
D6	2.520	0.019		
D7	0.520	0.031		
D8	2.520	0.191	.002	
E1	1.943	0.261	.002	.123/.129
F1	2.141	0.540	.002	.375 X.281 DEEP FARSIDE
G1	0.695	0.660	.002	SEE SECTION C-C
H1	1.250	0.531	.002	SEE DETAIL A
H2	0.062	0.594	.002	
J1	0.959	0.531	.002	SEE DETAIL B
J2	1.559	0.531	.002	
K1	0.189	−0.007	.002	.204/.210

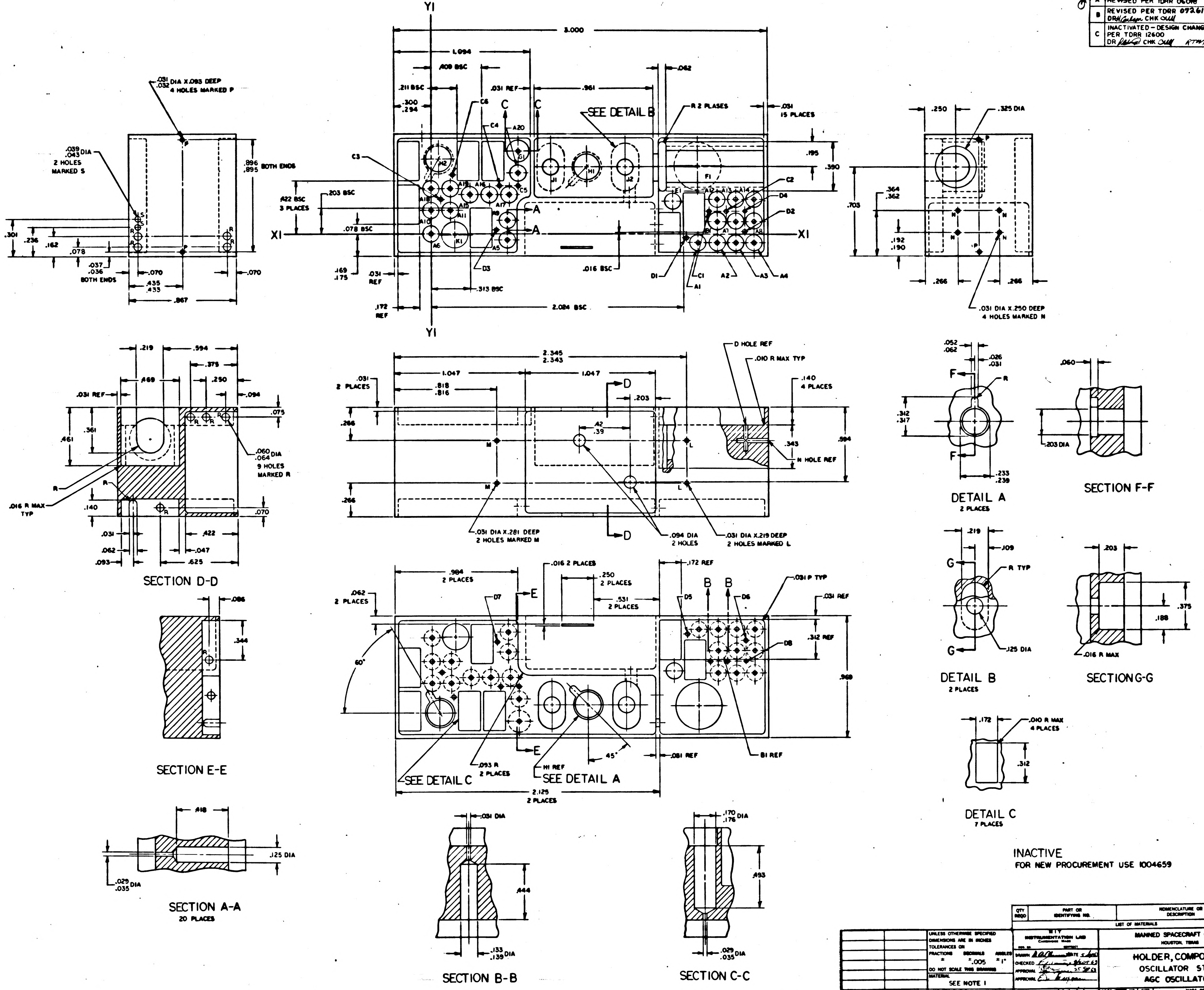

Y1
X1
3.000
1.094
.609 BSC
.211 BSC
.300
.294
.031 REF
.961
.062
R 2 PLACES
.031 15 PLACES
SEE DETAIL B
C
A
.195
.390
.703
A22 BSC 3 PLACES
.203 BSC
.078 BSC
.169
.175
.031 REF
.172 REF
.313 BSC
.016 BSC
2.084 BSC
.031 DIA X.093 DEEP 4 HOLES MARKED P
.039
.043 DIA 2 HOLES MARKED S
.896
.895 BOTH ENDS
.301
.236
.162
.078
.037
.036 BOTH ENDS
.070
.435
.433
.867
.250
.325 DIA
.364
.362
.192
.190
.266
.031 DIA X.250 DEEP 4 HOLES MARKED N
2.345
2.343
1.047
.818
.816
.031 2 PLACES
.203
.42
.39
.140 4 PLACES
D HOLE REF
.010 R MAX TYP
N HOLE REF
.343
.594
.266
.031 DIA X.281 DEEP 2 HOLES MARKED M
.094 DIA 2 HOLES
.031 DIA X.219 DEEP 2 HOLES MARKED L
SECTION D-D
.219
.594
.375
.469
.250
.031 REF
.094
.075
.461
.361
.060
.064 DIA 9 HOLES MARKED R
.016 R MAX TYP
.140
.070
.031
.062
.093
.422
.047
.625
SECTION E-E
.086
.344
.984 2 PLACES
.016 2 PLACES
.250 2 PLACES
.531 2 PLACES
.172 REF
.031 P TYP
.031 REF
.312 REF
.969
.062 2 PLACES
60°
45°
SEE DETAIL C
.093 R 2 PLACES
H1 REF
SEE DETAIL A
.081 REF
B1 REF
2.125 2 PLACES
SECTION A-A 20 PLACES
.418
.125 DIA
.029
.035 DIA
SECTION B-B
.031 DIA
.444
.133
.139 DIA
SECTION C-C
.170
.176 DIA
.493
.029
.035 DIA
DETAIL A 2 PLACES
.052
.062
.026
.031
.312
.317
.233
.239
SECTION F-F
.060
.203 DIA
DETAIL B 2 PLACES
.219
.109
R TYP
.125 DIA
SECTION G-G
.203
.375
.188
.016 R MAX
DETAIL C 7 PLACES
.172
.010 R MAX 4 PLACES
.312

NOTES
1. MATL: G10 PLASTIC SHEET PER MIL-P-18177, TYPE GEE
2. REMOVE BURRS AND BREAK SHARP EDGES
3. ALL BASIC DIMENSIONS TO BE ⊕ .002

REVISIONS			
SYM	DESCRIPTION	DATE	APPROVAL
A	REVISED PER TDRR 06018		
B	REVISED PER TDRR 07261 DR H Carlson CHK		
C	INACTIVATED — DESIGN CHANGE PER TDRR 12600 DR CHK RTM		

INACTIVE
FOR NEW PROCUREMENT USE 1004659

QTY REQD	PART OR IDENTIFYING NO.	NOMENCLATURE OR DESCRIPTION	FIND NO.

LIST OF MATERIALS

1003526	
NEXT ASSY	USED ON
APPLICATION	

UNLESS OTHERWISE SPECIFIED
DIMENSIONS ARE IN INCHES
TOLERANCES ON
FRACTIONS ± DECIMALS ±.005 ANGLES ±1°
DO NOT SCALE THIS DRAWING
MATERIAL SEE NOTE 1
HEAT TREATMENT NONE
FINAL FINISH NONE

MIT
INSTRUMENTATION LAB
CAMBRIDGE MASS
DRAWN DATE
CHECKED
APPROVAL 25 SEP 63
APPROVAL
NASA APPROVAL
MIT APPROVAL

MANNED SPACECRAFT CENTER
HOUSTON, TEXAS

HOLDER, COMPONENT
OSCILLATOR STAGE
AGC OSCILLATOR

CODE IDENT NO. —
SIZE J
NASA DRAWING NO. 1004560
SCALE 4/1
WT
SHEET 1 OF 1

HOLE IDENT	X1 BASIC DIM.	Y1 BASIC DIM.	⊕ DIA	HOLE DIA
A1	2.143	−0.067	.002	SEE SECTION A-A
A2	2.301	−0.067		
A3	2.449	−0.067		
A4	2.593	−0.067		
A5	0.610	−0.047		
A6	0.000	0.000		
A7	2.449	0.105		
A8	2.593	0.105		
A9	0.610	0.109		
A10	0.000	0.188		
A11	0.156	0.188		
A12	2.301	0.277		
A13	2.449	0.277		
A14	2.593	0.277		
A15	0.313	0.312		
A16	0.469	0.312		
A17	0.625	0.312		
A18	0.000	0.359		
A19	0.156	0.359		
A20	0.695	0.484	.002	
B1	2.301	0.105	.002	SEE SECTION B-B
C1	2.235	0.191	.002	.031
C2	2.375	0.191		
C3	0.078	0.273		
C4	0.547	0.382		
C5	0.695	0.382		
C6	0.172	0.468	.002	.031
D1	2.047	−0.031	.002	.026/.028 X.203 DEEP NEARSIDE
D2	2.520	0.019		
D3	0.520	0.031		
D4	2.520	0.191		
D5	2.047	−0.031		.026/.028 X.203 DEEP FARSIDE
D6	2.520	0.019		
D7	0.520	0.031		
D8	2.520	0.191	.002	
E1	1.943	0.261	.002	.123/.129
F1	2.141	0.540	.002	.375 X.281 DEEP FARSIDE
G1	0.695	0.660	.002	SEE SECTION C-C
H1	1.250	0.531	.002	SEE DETAIL A
H2	0.062	0.594	.002	
J1	0.959	0.531	.002	SEE DETAIL B
J2	1.559	0.531	.002	
K1	0.189	−0.007	.002	.204/.210

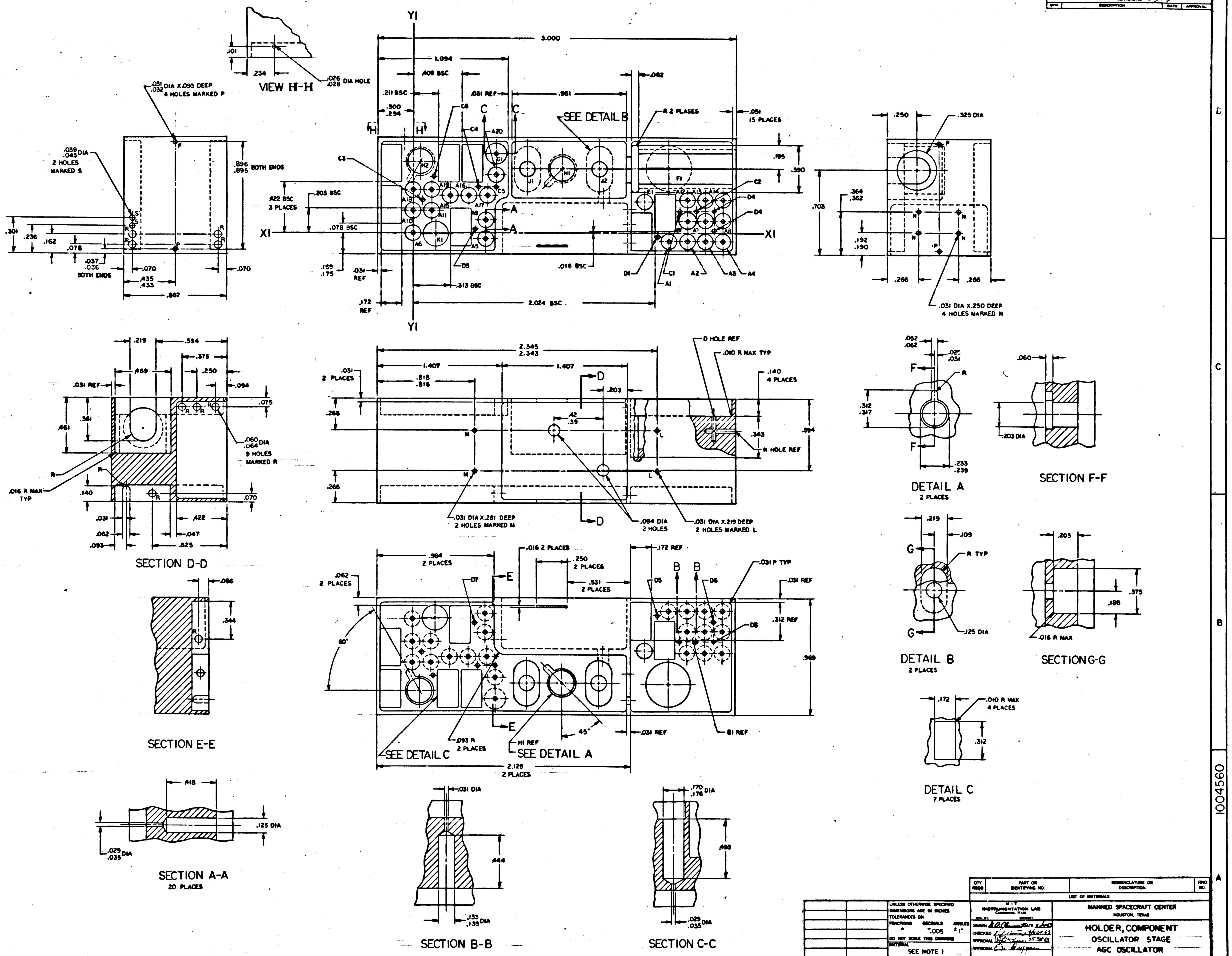

VIEW H-H
.101
.234
.026/.028 DIA HOLE
.031/.032 DIA X.093 DEEP 4 HOLES MARKED P
.039/.043 DIA 2 HOLES MARKED S
.896/.895 BOTH ENDS
.301
.236
.162
.078
.037/.036 BOTH ENDS
.070
.435/.433
.867
Y1
X1
3.000
1.094
.409 BSC
.211 BSC
.300/.294
.031 REF
.961
.062
SEE DETAIL B
R 2 PLACES
.081 15 PLACES
.195
.390
.422 BSC 3 PLACES
.203 BSC
.078 BSC
.169/.175
.031 REF
.172 REF
.313 BSC
.016 BSC
2.024 BSC
.250
.325 DIA
.703
.364/.362
.192/.190
.266
.031 DIA X.250 DEEP 4 HOLES MARKED N
SECTION D-D
.219
.594
.375
.469
.250
.094
.075
.031 REF
.361
.461
.060/.064 DIA 9 HOLES MARKED R
.016 R MAX TYP
.140
.031
.062
.093
.422
.047
.625
.070
2.345/2.343
1.407
.818/.816
.031 2 PLACES
.203
.42/.39
D HOLE REF
.010 R MAX TYP
.140 4 PLACES
.266
.343
.594
N HOLE REF
.031 DIA X.281 DEEP 2 HOLES MARKED M
.094 DIA 2 HOLES
.031 DIA X.219 DEEP 2 HOLES MARKED L
DETAIL A 2 PLACES
.052/.062
.025/.031
.312/.317
.233/.239
SECTION F-F
.060
.203 DIA
DETAIL B 2 PLACES
.219
.109
R TYP
.125 DIA
SECTION G-G
.203
.375
.188
.016 R MAX
SECTION E-E
.086
.344
.984 2 PLACES
.016 2 PLACES
.250 2 PLACES
.531 2 PLACES
.172 REF
.031 P TYP
.031 REF
.312 REF
.969
.062 2 PLACES
60°
45°
.093 R 2 PLACES
H1 REF
B1 REF
SEE DETAIL C
SEE DETAIL A
2.125 2 PLACES
DETAIL C 7 PLACES
.172
.010 R MAX 4 PLACES
.312
SECTION A-A 20 PLACES
.418
.125 DIA
.029/.035 DIA
SECTION B-B
.031 DIA
.444
.133/.139 DIA
SECTION C-C
.170/.176 DIA
.493
.029/.035 DIA

NOTES:
1. MATL: G10 PLASTIC SHEET PER MIL-P-18177, TYPE GEE
2. REMOVE BURRS AND BREAK SHARP EDGES
3. ALL BASIC DIMENSIONS TO BE ⊕ .002

QTY REQD	PART OR IDENTIFYING NO.	NOMENCLATURE OR DESCRIPTION	FIND NO.

LIST OF MATERIALS

NEXT ASSY	USED ON
1003526	

APPLICATION

UNLESS OTHERWISE SPECIFIED
DIMENSIONS ARE IN INCHES
TOLERANCES ON
FRACTIONS ± DECIMALS ±.005 ANGLES ±1°
DO NOT SCALE THIS DRAWING
MATERIAL SEE NOTE 1
HEAT TREATMENT NONE
FINAL FINISH NONE

MIT
INSTRUMENTATION LAB
CAMBRIDGE, MASS
DRAWN D.A. Clement DATE 5 Aug 63
CHECKED 9 Sept 63
APPROVAL 25 Sep 63
APPROVAL
NASA APPROVAL
MIT APPROVAL

MANNED SPACECRAFT CENTER
HOUSTON, TEXAS

HOLDER, COMPONENT
OSCILLATOR STAGE
AGC OSCILLATOR

CODE IDENT NO.
SIZE J
NASA DRAWING NO. 1004560
SCALE 4/1
WT
SHEET 1 OF 1

MASTER

INCHES
PHOTOGRAPHIC SCALE ONLY

NOTICE — WHEN GOVERNMENT DRAWINGS, SPECIFICATIONS, OR OTHER DATA ARE USED FOR ANY PURPOSE OTHER THAN IN CONNECTION WITH A DEFINITELY RELATED GOVERNMENT PROCUREMENT OPERATION, THE UNITED STATES GOVERNMENT THEREBY INCURS NO RESPONSIBILITY NOR ANY OBLIGATION WHATSOEVER; AND THE FACT THAT THE GOVERNMENT MAY HAVE FORMULATED, FURNISHED, OR IN ANY WAY SUPPLIED THE SAID DRAWINGS, SPECIFICATIONS, OR OTHER DATA IS NOT TO BE REGARDED BY IMPLICATION OR OTHERWISE AS IN ANY MANNER LICENSING THE HOLDER OR ANY OTHER PERSON OR CORPORATION, OR CONVEYING ANY RIGHTS OR PERMISSION TO MANUFACTURE, USE, OR SELL ANY PATENTED INVENTION THAT MAY IN ANY WAY BE RELATED THERETO.

HOLE IDENT	X1 BASIC DIM.	Y1 BASIC DIM.	⌖ DIA	HOLE DIA
A1	2.143	-0.067	.002	SEE SECTION A-A
A2	2.301	-0.067		
A3	2.449	-0.067		
A4	2.593	-0.067		
A5	0.610	-0.047		
A6	0.000	0.000		
A7	2.449	0.105		
A8	2.593	0.105		
A9	0.610	0.109		
A10	0.000	0.188		
A11	0.156	0.188		
A12	2.301	0.277		
A13	2.449	0.277		
A14	2.593	0.277		
A15	0.313	0.312		
A16	0.469	0.312		
A17	0.625	0.312		
A18	0.000	0.359		
A19	0.156	0.359		
A20	0.695	0.484	.002	
B1	2.301	0.105	.002	SEE SECTION B-B
C1	2.235	0.191	.002	.031
C2	2.375	0.191		
C3	0.078	0.273		
C4	0.547	0.382		
C5	0.695	0.382		
C6	0.172	0.468	.002	.031
D1	2.047	-0.031	.002	.026 .028 X.203 DEEP NEARSIDE
D2	2.520	0.019		
D3	0.520	0.031		
D4	2.520	0.191		
D5	2.047	-0.031		.026 .028 X.203 DEEP FARSIDE
D6	2.520	0.019		
D7	0.520	0.031		
D8	2.520	0.191	.002	
E1	1.943	0.261	.002	.123/.129
F1	2.141	0.540	.002	.375 X.281 DEEP FARSIDE
G1	0.695	0.660	.002	SEE SECTION C-C
H1	1.250	0.531	.002	SEE DETAIL A
H2	0.062	0.594	.002	
J1	0.959	0.531	.002	SEE DETAIL B
J2	1.559	0.531	.002	
K1	0.189	-0.007	.002	.204/.210

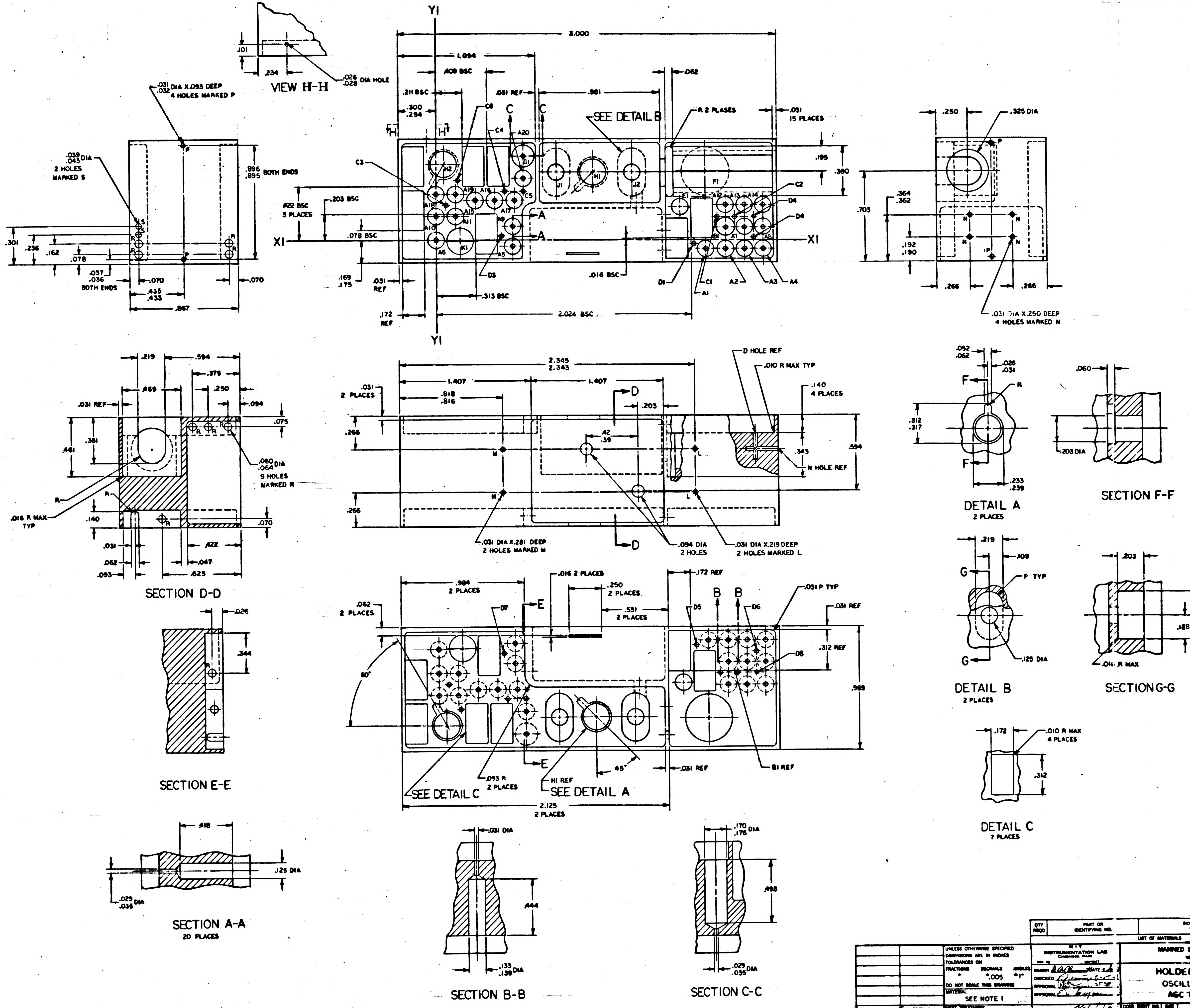
VIEW H-H
.026
.028 DIA HOLE
.101
.234
.031
.032 DIA X.093 DEEP
4 HOLES MARKED P
.039
.043 DIA
2 HOLES
MARKED S
.896
.895 BOTH ENDS
.301
.236
.162
.078
.037
.036
BOTH ENDS
.070
.435
.433
.867
Y1
X1
3.000
1.094
.409 BSC
.211 BSC
.300
.294
.031 REF
.981
.062
SEE DETAIL B
R 2 PLASES
.031
15 PLACES
.195
.390
.703
.A22 BSC
3 PLACES
.203 BSC
.078 BSC
.169
.175
.031
REF
.172
REF
.313 BSC
.016 BSC
2.024 BSC
C3
C4
C5
C6
A20
H1
H2
J1
J2
F1
E1
C2
D4
A1
A2
A3
A4
C1
D1
D3
A5
A6
K1
.250
.325 DIA
.364
.362
.192
.190
.266
.031 DIA X.250 DEEP
4 HOLES MARKED N
SECTION D-D
.219
.594
.375
.250
.469
.031 REF
.094
.075
.361
.461
.060
.064 DIA
9 HOLES
MARKED R
.016 R MAX
TYP
.140
.070
.031
.A22
.062
.047
.093
.625
2.345
2.343
1.407
.818
.816
.031
2 PLACES
.203
.42
.39
D HOLE REF
.010 R MAX TYP
.140
4 PLACES
.343
N HOLE REF
.594
.266
.031 DIA X.281 DEEP
2 HOLES MARKED M
.094 DIA
2 HOLES
.031 DIA X.219 DEEP
2 HOLES MARKED L
DETAIL A
2 PLACES
.052
.062
.026
.031
.312
.317
.233
.239
SECTION F-F
.060
.203 DIA
.984
2 PLACES
.016 2 PLACES
.250
2 PLACES
.531
2 PLACES
.172 REF
.031 P TYP
.031 REF
.062
2 PLACES
.312 REF
.969
60°
45°
.093 R
2 PLACES
H1 REF
SEE DETAIL C
SEE DETAIL A
2.125
2 PLACES
B1 REF
D5
D6
D7
D8
DETAIL B
2 PLACES
.219
.109
P TYP
.125 DIA
SECTION G-G
.203
.188
.01 R MAX
.172
.010 R MAX
4 PLACES
.312
DETAIL C
7 PLACES
SECTION E-E
.026
.344
SECTION A-A
20 PLACES
.418
.125 DIA
.029
.035 DIA
.031 DIA
.444
.133
.139 DIA
SECTION B-B
.170
.176 DIA
.493
.029
.035 DIA
SECTION C-C

NOTES

1. MATL: 610 PLASTIC SHEET PER MIL-P-18177, TYPE GEE
2. REMOVE BURRS AND BREAK SHARP EDGES
3. ALL BASIC DIMENSIONS TO BE ⌖ .002

QTY REQD	PART OR IDENTIFYING NO.		
LIST OF MATERIALS			

UNLESS OTHERWISE SPECIFIED
DIMENSIONS ARE IN INCHES
TOLERANCES ON
FRACTIONS ± DECIMALS ±.005 ANGLES ±1°
DO NOT SCALE THIS DRAWING
MATERIAL SEE NOTE 1
HEAT TREATMENT NONE
FINAL FINISH NONE

1003526	
NEXT ASSY	USED ON
APPLICATION	

M I T
INSTRUMENTATION LAB
CAMBRIDGE, MASS.
DRAWN R.A. Chenau DATE 5
CHECKED
APPROVAL
APPROVAL E. Kingsm
NASA APPROVAL
MIT APPROVAL

MANNED S
HOLDE
OSCIL
AGC T
CODE IDENT NO. SIZE J
SCALE 4/1

MASTER

INCHES
PHOTOGRAPHIC SCALE ONLY

NOTICE — WHEN GOVERNMENT DRAWINGS, SPECIFICATIONS, OR OTHER DATA ARE USED FOR ANY PURPOSE OTHER THAN IN CONNECTION WITH A DEFINITELY RELATED GOVERNMENT PROCUREMENT OPERATION, THE UNITED STATES GOVERNMENT THEREBY INCURS NO RESPONSIBILITY NOR ANY OBLIGATION WHATSOEVER; AND THE FACT THAT THE GOVERNMENT MAY HAVE FORMULATED, FURNISHED, OR IN ANY WAY SUPPLIED THE SAID DRAWINGS, SPECIFICATIONS, OR OTHER DATA IS NOT TO BE REGARDED BY IMPLICATION OR OTHERWISE AS IN ANY MANNER LICENSING THE HOLDER OR ANY OTHER PERSON OR CORPORATION, OR CONVEYING ANY RIGHTS OR PERMISSION TO MANUFACTURE, USE, OR SELL ANY PATENTED INVENTION THAT MAY IN ANY WAY BE RELATED THERETO.

REVISIONS 04735			
SYM	DESCRIPTION	DATE	APPROVAL

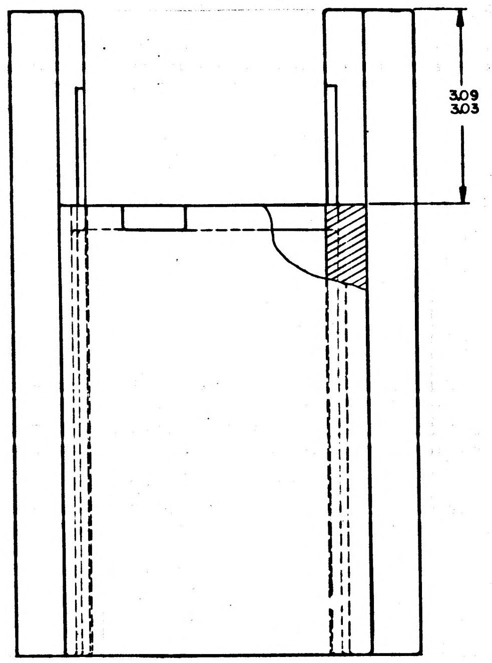

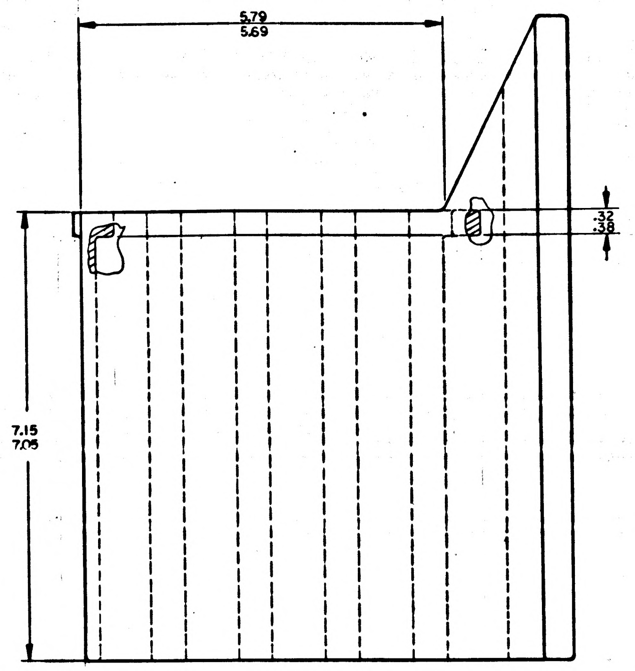
5.79
5.69
.32
.38
7.15
7.05

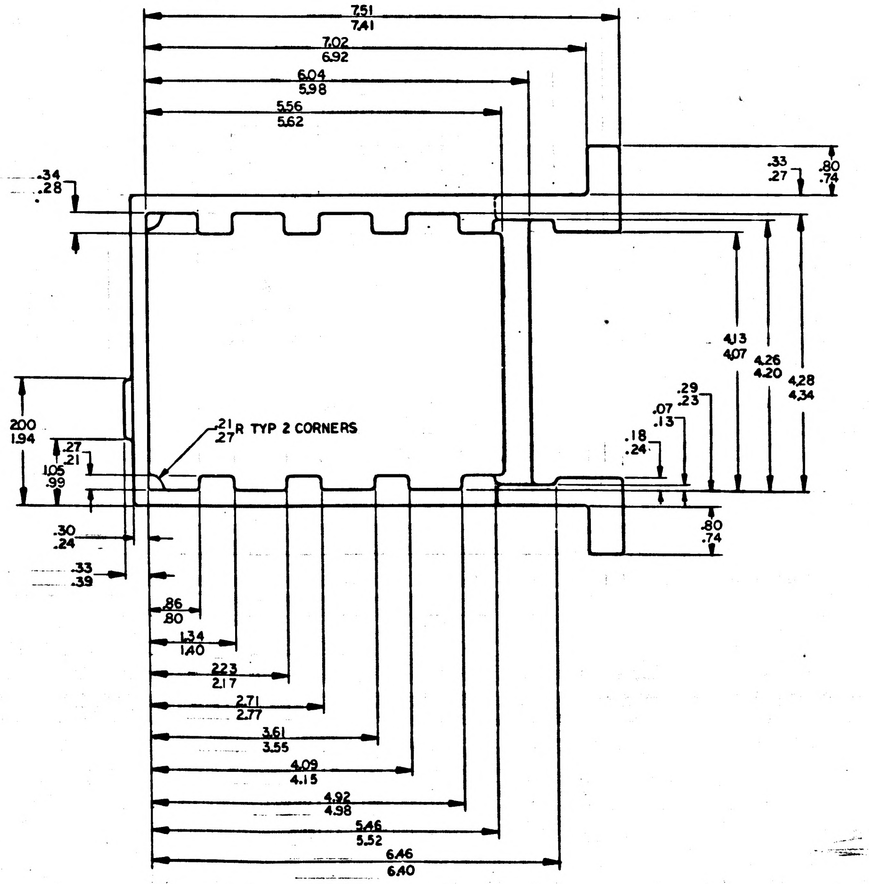
7.51
7.41
7.02
6.92
6.04
5.98
5.56
5.62
.34
.28
.33
.27
.80
.74
4.13
4.07
4.26
4.20
4.28
4.34
.29
.23
.07
.13
.18
.24
2.00
1.94
.27
.21
1.05
.99
.21
.27R TYP 2 CORNERS
.80
.74
.30
.24
.33
.39
.86
.80
1.34
1.40
2.23
2.17
2.71
2.77
3.61
3.55
4.09
4.15
4.92
4.98
5.46
5.52
6.46
6.40

NOTES:
1. MATL: CAST 356-T6 ALUMINUM, TEMP T6, CLASS 3M, CONDITION T6, PER QQ-A-601
2. CLASSIFICATION OF CASTING PER MIL-C-6021, CLASS IIA
3. SURFACE QUALITY 250√
4. FILLETS AND ROUNDS TO BE .06 R
5. INTERPRET DRAWING IN ACCORDANCE WITH STANDARDS PRESCRIBED BY MIL-D-70327

MASTER

QTY REQD	PART OR IDENTIFYING NO.	NOMENCLATURE OR DESCRIPTION	FIND NO.
LIST OF MATERIALS			

1004569	
1004539	
NEXT ASSY	USED ON
APPLICATION	

UNLESS OTHERWISE SPECIFIED
DIMENSIONS ARE IN INCHES
TOLERANCES ON
FRACTIONS ± DECIMALS ± ANGLES ±
DO NOT SCALE THIS DRAWING

MATERIAL
SEE NOTE 1

HEAT TREATMENT
NONE

FINAL FINISH
NONE

MIT
INSTRUMENTATION LAB
CAMBRIDGE, MASS
DWG. NO. CONTRACT

DRAWN DATE
CHECKED
APPROVAL
APPROVAL Eldon C Hall 15 Nov 63
NASA APPROVAL
MIT APPROVAL
MIT APPROVAL 11/19/63

MANNED SPACECRAFT CENTER
HOUSTON, TEXAS

CASTING
RELAY HOUSING
AGC DSKY, NAV & MAIN

CODE IDENT NO. —
SIZE E
NASA DRAWING NO. 1004561
SCALE 1/1
WT
SHEET 1 OF 1

INCHES
PHOTOGRAPHIC SCALE ONLY

NOTICE — WHEN GOVERNMENT DRAWINGS, SPECIFICATIONS, OR OTHER DATA ARE USED FOR ANY PURPOSE OTHER THAN IN CONNECTION WITH A DEFINITELY RELATED GOVERNMENT PROCUREMENT OPERATION, THE UNITED STATES GOVERNMENT THEREBY INCURS NO RESPONSIBILITY NOR ANY OBLIGATION WHATSOEVER, AND THE FACT THAT THE GOVERNMENT MAY HAVE FORMULATED, FURNISHED, OR IN ANY WAY SUPPLIED THE SAID DRAWINGS, SPECIFICATIONS OR OTHER DATA IS NOT TO BE REGARDED BY IMPLICATION OR OTHERWISE AS IN ANY MANNER LICENSING THE HOLDER OR ANY OTHER PERSON OR CORPORATION, OR CONVEYING ANY RIGHTS OR PERMISSION TO MANUFACTURE, USE, OR SELL ANY PATENTED INVENTION THAT MAY IN ANY WAY BE RELATED THERETO.

REVISIONS			
SYM	DESCRIPTION	DATE	APPROVAL

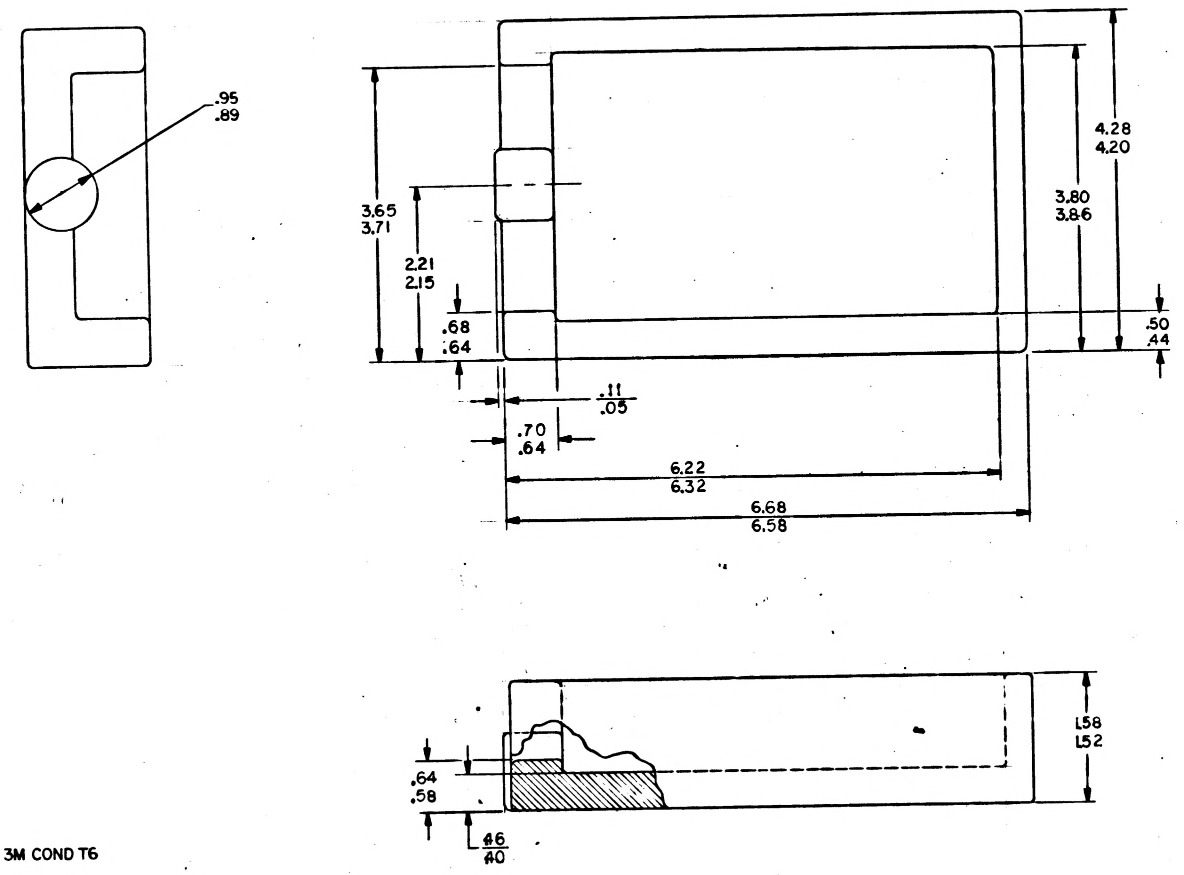

NOTES
1. MATL CAST 356-T6 ALUMINUM TEMP T6 CLASS 3M COND T6 PER QQ-A-601.
2. CLASSIFICATION OF CASTING PER MIL-C-6021 CLASS 2A.
3. SURFACE QUALITY $\overset{250}{\surd}$
4. FILLETS AND ROUNDS TO BE .12R.
5. INTERPRET DRAWING IN ACCORDANCE WITH STANDARDS PRESCRIBED BY MIL-D-70327.

MASTER

QTY REQD	PART OR IDENTIFYING NO.	NOMENCLATURE OR DESCRIPTION	FIND NO.

LIST OF MATERIALS

1004113	
NEXT ASSY	USED ON
APPLICATION	

UNLESS OTHERWISE SPECIFIED DIMENSIONS ARE IN INCHES
TOLERANCES ON
FRACTIONS ± DECIMALS ± ANGLES ±
DO NOT SCALE THIS DRAWING
MATERIAL SEE NOTE 1
HEAT TREATMENT NONE
FINAL FINISH NONE

MIT INSTRUMENTATION LAB
CAMBRIDGE, MASS.
DWG. NO. CONTRACT
DRAWN DATE 9-19-63
CHECKED 2 OCT 63
APPROVAL Jensen OCT 31 63.
APPROVAL
NASA APPROVAL
MIT APPROVAL
MIT APPROVAL 5 Nov 63

MANNED SPACECRAFT CENTER
HOUSTON, TEXAS

CASTING
HEADER ASSY RELAY MODULE
AGC DSKY, NAV & MAIN

CODE IDENT NO. —— SIZE D NASA DRAWING NO. 1004562
SCALE 1/1 WT SHEET 1 OF 1

INCHES
0 1 2
PHOTOGRAPHIC SCALE ONLY

1004562

NOTICE — WHEN GOVERNMENT DRAWINGS, SPECIFICATIONS, OR OTHER DATA ARE USED FOR ANY PURPOSE OTHER THAN IN CONNECTION WITH A DEFINITELY RELATED GOVERNMENT PROCUREMENT OPERATION, THE UNITED STATES GOVERNMENT THEREBY INCURS NO RESPONSIBILITY NOR ANY OBLIGATION WHATSOEVER AND THE FACT THAT THE GOVERNMENT MAY HAVE FORMULATED, FURNISHED, OR IN ANY WAY SUPPLIED THE SAID DRAWINGS, SPECIFICATIONS OR OTHER DATA IS NOT TO BE REGARDED BY IMPLICATION OR OTHERWISE AS IN ANY MANNER LICENSING THE HOLDER OR ANY OTHER PERSON OR CORPORATION, OR CONVEYING ANY RIGHTS OR PERMISSION TO MANUFACTURE, USE, OR SELL ANY PATENTED INVENTION THAT MAY IN ANY WAY BE RELATED THERETO.

REVISIONS 04735			
SYM	DESCRIPTION	DATE	APPROVAL

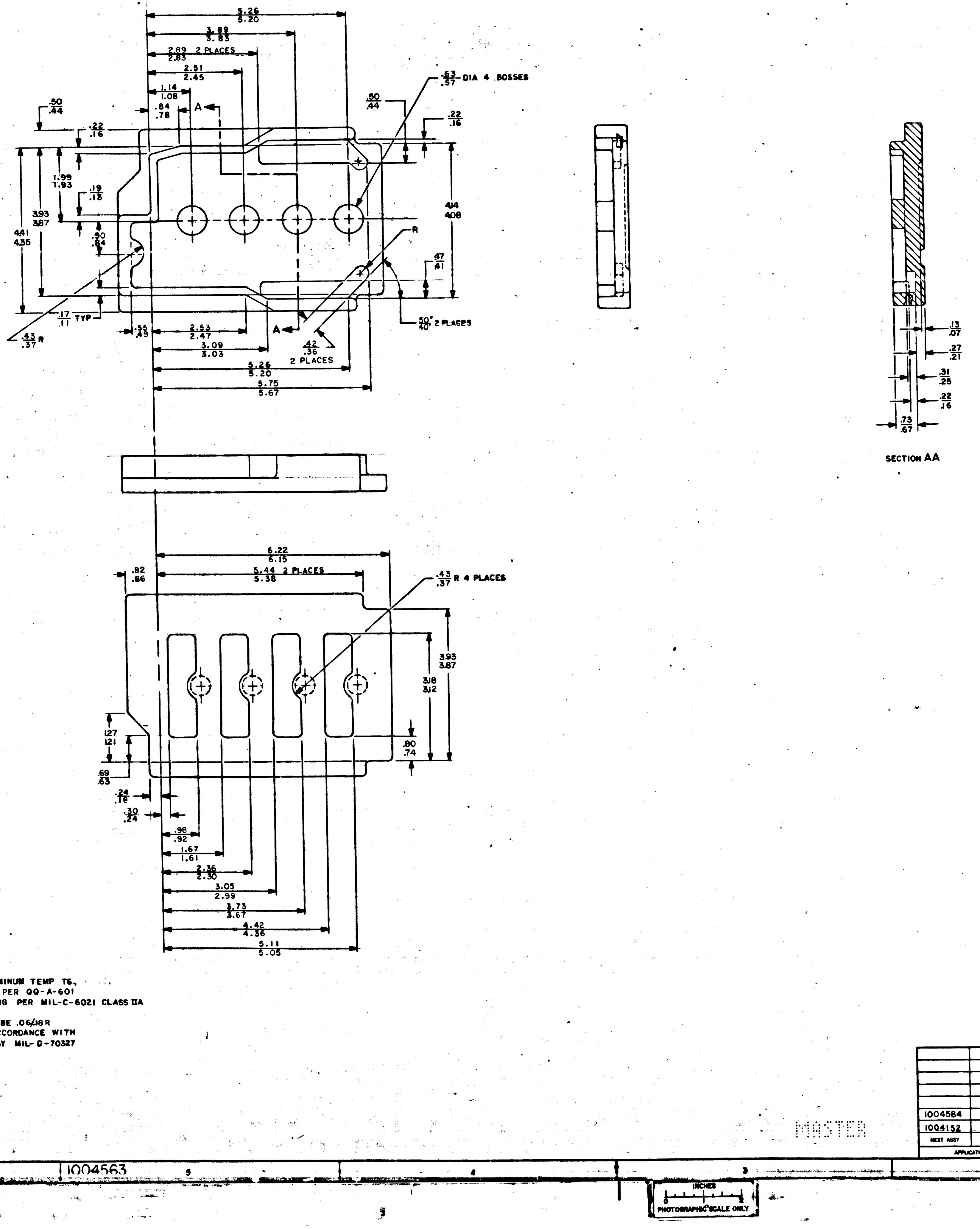
5.26 / 5.20
3.89 / 3.83
2.89 / 2.83 2 PLACES
2.51 / 2.45
1.14 / 1.08
.84 / .78
A
.63 / .57 DIA 4 BOSSES
.50 / .44
.22 / .16
.50 / .44
.22 / .16
1.99 / 1.93
.19 / .13
3.93 / 3.87
4.41 / 4.35
.90 / .84
4.14 / 4.08
R
.47 / .41
.17 / .11 TYP
.43 / .37 R
.55 / .49
2.53 / 2.47
3.09 / 3.03
A
.42 / .36 2 PLACES
50° / 40° 2 PLACES
5.26 / 5.20
5.75 / 5.67
.13 / .07
.27 / .21
.31 / .25
.22 / .16
.73 / .67
SECTION AA
6.22 / 6.15
.92 / .86
5.44 / 5.38 2 PLACES
.43 / .37 R 4 PLACES
3.93 / 3.87
3.18 / 3.12
1.27 / 1.21
.80 / .74
.69 / .63
.24 / .18
.30 / .24
.98 / .92
1.67 / 1.61
2.36 / 2.30
3.05 / 2.99
3.73 / 3.67
4.42 / 4.36
5.11 / 5.05

NOTES
1. MATL: CAST 356-T6 ALUMINUM TEMP T6, CLASS 3M, CONDITION T6, PER QQ-A-601
2. CLASSIFICATION OF CASTING PER MIL-C-6021 CLASS IIA
3. SURFACE QUALITY 250✓
4. FILLETS AND ROUNDS TO BE .06/.18R
5. INTERPRET DRAWING IN ACCORDANCE WITH STANDARDS PRESCRIBED BY MIL-D-70327

QTY REQD	PART OR IDENTIFYING NO.	NOMENCLATURE OR DESCRIPTION	FIND NO.

LIST OF MATERIALS

NEXT ASSY	USED ON
1004584	
1004152	

APPLICATION

UNLESS OTHERWISE SPECIFIED DIMENSIONS ARE IN INCHES
TOLERANCES ON
FRACTIONS ± DECIMALS ± ANGLES ±
DO NOT SCALE THIS DRAWING
MATERIAL SEE NOTE 1
HEAT TREATMENT NONE
FINAL FINISH NONE

MIT INSTRUMENTATION LAB
CAMBRIDGE, MASS
DRAWN H. Golson DATE
CHECKED
APPROVAL
APPROVAL
NASA APPROVAL
MIT APPROVAL
MIT APPROVAL

MANNED SPACECRAFT CENTER
HOUSTON, TEXAS

CASTING
CONNECTOR PLATE
AGC, DSKY, NAV & MAIN

CODE IDENT NO.
SIZE E
NASA DRAWING NO. 1004563
SCALE 1/1
WT
SHEET 1 OF 1

MASTER

INCHES
PHOTOGRAPHIC SCALE ONLY

NOTICE — WHEN GOVERNMENT DRAWINGS, SPECIFICATIONS, OR OTHER DATA ARE USED FOR ANY PURPOSE OTHER THAN IN CONNECTION WITH A DEFINITELY RELATED GOVERNMENT PROCUREMENT OPERATION, THE UNITED STATES GOVERNMENT THEREBY INCURS NO RESPONSIBILITY NOR ANY OBLIGATION WHATSOEVER; AND THE FACT THAT THE GOVERNMENT MAY HAVE FORMULATED, FURNISHED, OR IN ANY WAY SUPPLIED THE SAID DRAWINGS, SPECIFICATIONS OR OTHER DATA IS NOT TO BE REGARDED BY IMPLICATION OR OTHERWISE AS IN ANY MANNER LICENSING THE HOLDER OR ANY OTHER PERSON OR CORPORATION, OR CONVEYING ANY RIGHTS OR PERMISSION TO MANUFACTURE, USE, OR SELL ANY PATENTED INVENTION THAT MAY IN ANY WAY BE RELATED THERETO.

1004564 A

REVISIONS 03631

SYM	DESCRIPTION	DATE	APPROVAL
A	REVISED PER TDRR 07261 DR H. Carlson CHK	3/23/64	

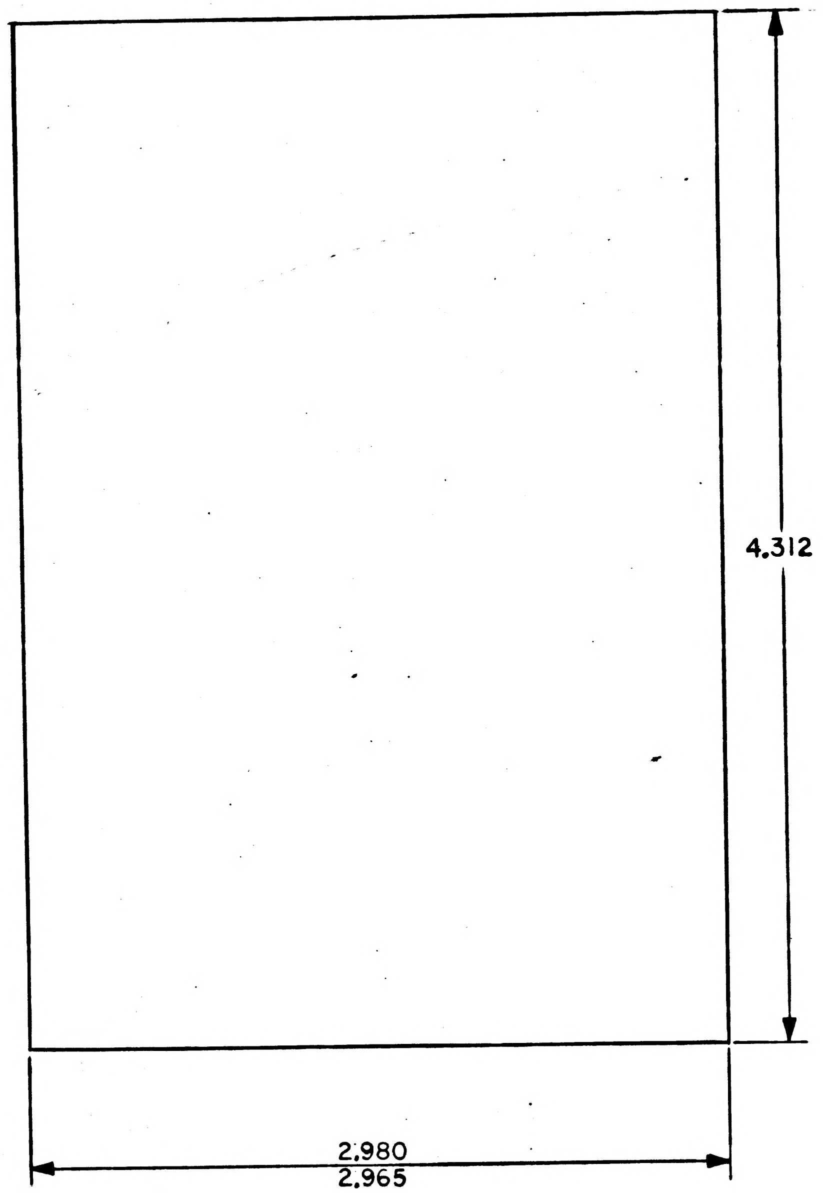

NOTES
1. MATL: 004 THK SHEET, COPPER SOFT ANNEALED, COLD ROLLED PER QQ-C-576
2. SILVER PLATE PER QQ-S-365, TYPE III GRADE A
3. INTERPRET DRAWING IN ACCORDANCE WITH STANDARDS PRESCRIBED BY MIL-D-70327

QTY REQD	PART OR IDENTIFYING NO.	NOMENCLATURE OR DESCRIPTION	FIND NO.

LIST OF MATERIALS

NEXT ASSY	USED ON
1003526	

APPLICATION

UNLESS OTHERWISE SPECIFIED DIMENSIONS ARE IN INCHES
TOLERANCES ON
FRACTIONS ± DECIMALS ±.016 ANGLES ±
DO NOT SCALE THIS DRAWING
MATERIAL SEE NOTE 1
HEAT TREATMENT NONE
FINAL FINISH SEE NOTE 2

MIT INSTRUMENTATION LAB
CAMBRIDGE, MASS.
DWG. NO. CONTRACT

DRAWN DATE 23 Sep 63
CHECKED R. Edwards 24 Sep 63
APPROVAL W. B. Turner 2 OCT 63
APPROVAL 10/2/63
NASA APPROVAL W. J. Rhine 10-7-63
MIT APPROVAL
MIT APPROVAL 3 Oct 63

MANNED SPACECRAFT CENTER
HOUSTON, TEXAS

SHIELD
AGC OSCILLATOR

CODE IDENT NO. ——
SIZE C
NASA DRAWING NO. 1004564
SCALE 2/1
WT
SHEET 1 OF 1

NOTICE — WHEN GOVERNMENT DRAWINGS, SPECIFICATIONS, OR OTHER DATA ARE USED FOR ANY PURPOSE OTHER THAN IN CONNECTION WITH A DEFINITELY RELATED GOVERNMENT PROCUREMENT OPERATION, THE UNITED STATES GOVERNMENT THEREBY INCURS NO RESPONSIBILITY NOR ANY OBLIGATION WHATSOEVER; AND THE FACT THAT THE GOVERNMENT MAY HAVE FORMULATED, FURNISHED, OR IN ANY WAY SUPPLIED THE SAID DRAWINGS, SPECIFICATIONS OR OTHER DATA IS NOT TO BE REGARDED BY IMPLICATION OR OTHERWISE AS IN ANY MANNER LICENSING THE HOLDER OR ANY OTHER PERSON OR CORPORATION, OR CONVEYING ANY RIGHTS OR PERMISSION TO MANUFACTURE, USE, OR SELL ANY PATENTED INVENTION THAT MAY IN ANY WAY BE RELATED THERETO.

1004564

REVISIONS 03631			
SYM	DESCRIPTION	DATE	APPROVAL

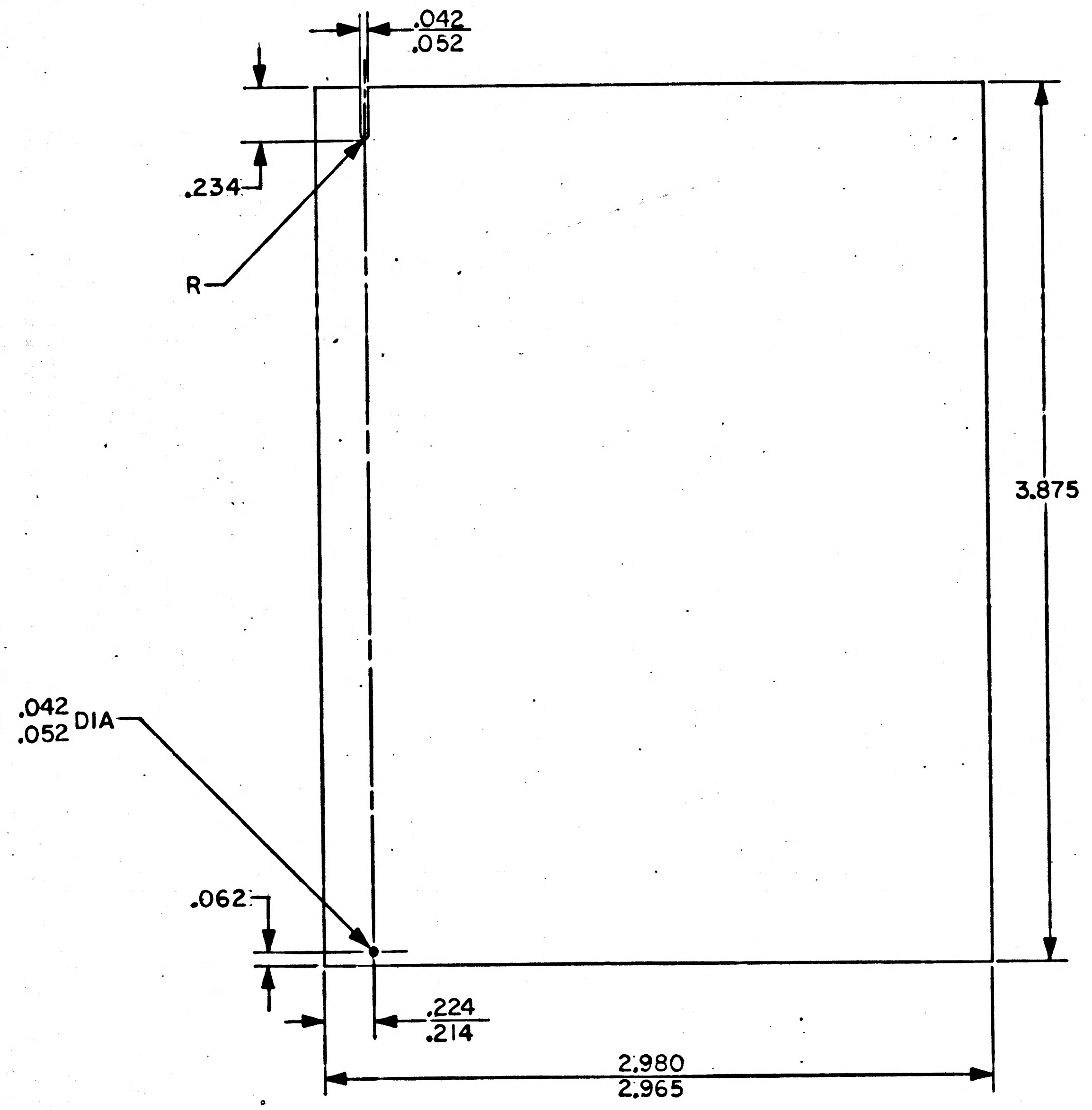

NOTES
1. MATL: 004 THK SHEET, COPPER SOFT ANNEALED, COLD ROLLED PER QQ-C-576
2. SILVER PLATE PER QQ-S-365, TYPE III GRADE A
3. INTERPRET DRAWING IN ACCORDANCE WITH STANDARDS PRESCRIBED BY MIL-D-70327

QTY REQD	PART OR IDENTIFYING NO.	NOMENCLATURE OR DESCRIPTION	FIND NO.

LIST OF MATERIALS

1003526	
NEXT ASSY	USED ON
APPLICATION	

UNLESS OTHERWISE SPECIFIED DIMENSIONS ARE IN INCHES
TOLERANCES ON
FRACTIONS ± DECIMALS ±.016 ANGLES ±
DO NOT SCALE THIS DRAWING
MATERIAL SEE NOTE 1
HEAT TREATMENT NONE
FINAL FINISH SEE NOTE 2

MIT
INSTRUMENTATION LAB
CAMBRIDGE, MASS.
DWG. NO. CONTRACT

DRAWN DATE 23 Sep 63
CHECKED R. Edwards 24 Sep 63
APPROVAL W B Turner 2 OCT 63
APPROVAL 10/2/63
NASA APPROVAL W J Rhine 10-7-63
MIT APPROVAL
MIT APPROVAL 30 Oct 63

MANNED SPACECRAFT CENTER
HOUSTON, TEXAS

SHIELD
AGC OSCILLATOR

CODE IDENT NO. ——— SIZE C NASA DRAWING NO. 1004564
SCALE 2/1 WT SHEET 1 OF 1

MASTER

NOTICE — WHEN GOVERNMENT DRAWINGS, SPECIFICATIONS, OR OTHER DATA ARE USED FOR ANY PURPOSE OTHER THAN IN CONNECTION WITH A DEFINITELY RELATED GOVERNMENT PROCUREMENT OPERATION, THE UNITED STATES GOVERNMENT THEREBY INCURS NO RESPONSIBILITY NOR ANY OBLIGATION WHATSOEVER; AND THE FACT THAT THE GOVERNMENT MAY HAVE FORMULATED, FURNISHED, OR IN ANY WAY SUPPLIED THE SAID DRAWINGS, SPECIFICATIONS OR OTHER DATA IS NOT TO BE REGARDED BY IMPLICATION OR OTHERWISE AS IN ANY MANNER LICENSING THE HOLDER OR ANY OTHER PERSON OR CORPORATION, OR CONVEYING ANY RIGHTS OR PERMISSION TO MANUFACTURE, USE, OR SELL ANY PATENTED INVENTION THAT MAY IN ANY WAY BE RELATED THERETO

1004566

REVISIONS 03621

SYM	DESCRIPTION	DATE	APPROVAL
A	REVISED PER TDRR 04176	10-24-67	

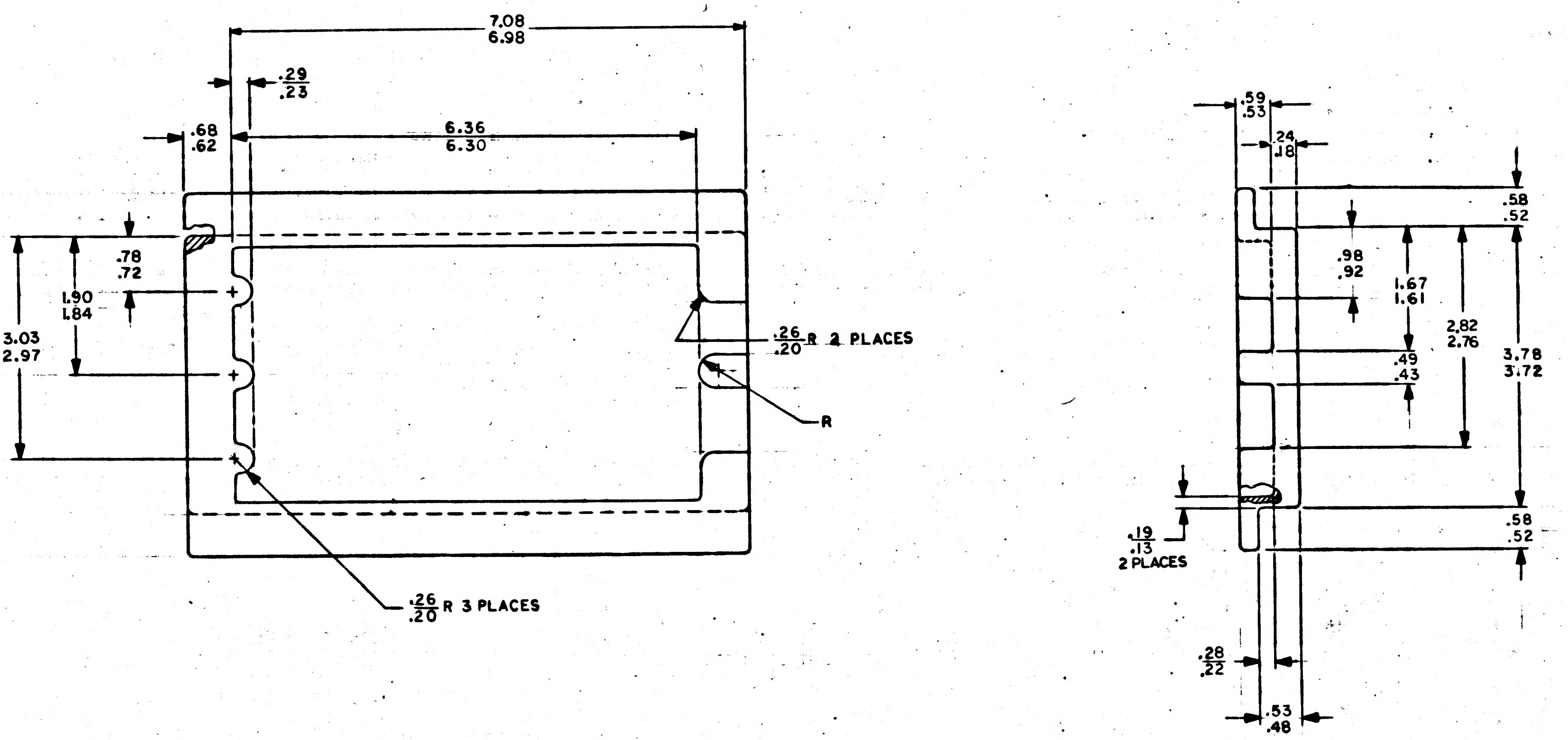

NOTES
1. MATL: CAST 356-T6 ALUMINUM ALLOY TEMP T6, CLASS 3M, CONDITION T6, PER QQ-A-601
2. CLASSIFICATION OF CASTING PER MIL-C-6021 CLASS IA
3. SURFACE QUALITY 250/
4. FILLETS AND ROUNDS TO BE .06/.12 R
5. INTERPRET DRAWING IN ACCORDANCE WITH STANDARDS PRESCRIBED BY MIL-D-70327

MASTER

QTY REQD	PART OR IDENTIFYING NO.	NOMENCLATURE OR DESCRIPTION	FIND NO.

LIST OF MATERIALS

NEXT ASSY	USED ON
1004154	

APPLICATION

UNLESS OTHERWISE SPECIFIED DIMENSIONS ARE IN INCHES
TOLERANCES ON
FRACTIONS ± DECIMALS ± ANGLES ±
DO NOT SCALE THIS DRAWING
MATERIAL SEE NOTE 1
HEAT TREATMENT NONE
FINAL FINISH NONE

MIT INSTRUMENTATION LAB
CAMBRIDGE, MASS.
DWG. NO.
CONTRACT
DRAWN H. Carlson DATE 27SEPT63
CHECKED G.R. Rogers 28SEP63
APPROVAL E.W. Duggan 30/63
APPROVAL Eldon C. Hall 30Sept63
NASA APPROVAL W.J. Rhine 10-3-63
MIT APPROVAL
MIT APPROVAL W. Weiffer 30Sept63

MANNED SPACECRAFT CENTER
HOUSTON, TEXAS

CASTING CONNECTOR PLATE
DECODING MODULE
AGC DSKY NAV & MAIN

CODE IDENT NO. —
SIZE D
NASA DRAWING NO. 1004566
SCALE 1/1
WT
SHEET 1 OF 1

INCHES
0 1 2
PHOTOGRAPHIC SCALE ONLY

1004566 A

1004566

NOTICE — WHEN GOVERNMENT DRAWINGS, SPECIFICATIONS, OR OTHER DATA ARE USED FOR ANY PURPOSE OTHER THAN IN CONNECTION WITH A DEFINITELY RELATED GOVERNMENT PROCUREMENT OPERATION, THE UNITED STATES GOVERNMENT THEREBY INCURS NO RESPONSIBILITY NOR ANY OBLIGATION WHATSOEVER; AND THE FACT THAT THE GOVERNMENT MAY HAVE FORMULATED, FURNISHED, OR IN ANY WAY SUPPLIED THE SAID DRAWINGS, SPECIFICATIONS OR OTHER DATA IS NOT TO BE REGARDED BY IMPLICATION OR OTHERWISE AS IN ANY MANNER LICENSING THE HOLDER OR ANY OTHER PERSON OR CORPORATION, OR CONVEYING ANY RIGHTS OR PERMISSION TO MANUFACTURE, USE, OR SELL ANY PATENTED INVENTION THAT MAY IN ANY WAY BE RELATED THERETO.

REVISIONS 03621

SYM	DESCRIPTION	DATE	APPROVAL
A	REVISED PER TDRR 04176	10-24-63	
B	REVISED PER TDRR 04740	1-17-63	

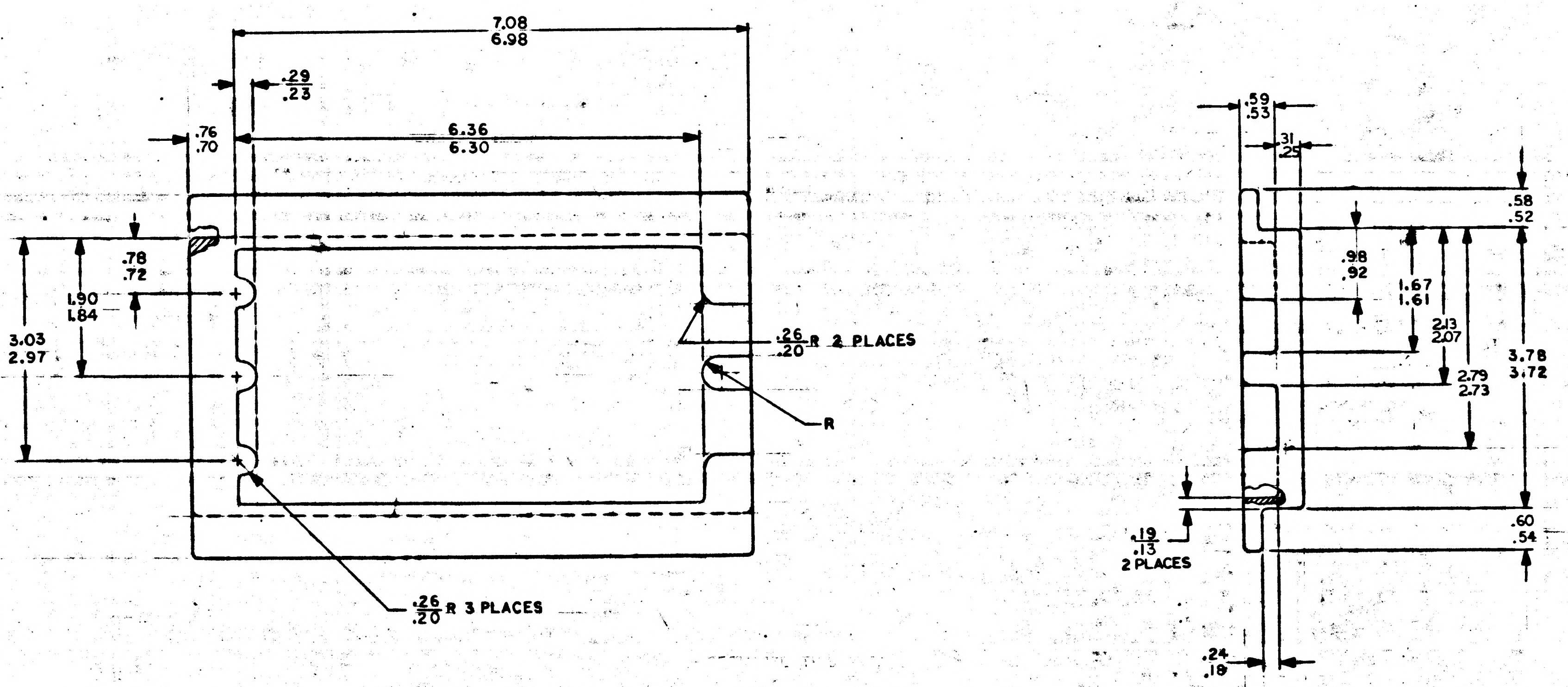

NOTES

1. MATL: CAST 356-T6 ALUMINUM ALLOY TEMP T6, CLASS 3M, CONDITION T6, PER QQ-A-601
2. CLASSIFICATION OF CASTING PER MIL-C-6021 CLASS IIA
3. SURFACE QUALITY 250√
4. FILLETS AND ROUNDS TO BE .06/.12 R
5. INTERPRET DRAWING IN ACCORDANCE WITH STANDARDS PRESCRIBED BY MIL-D-70327

MASTER

QTY REQD	PART OR IDENTIFYING NO.	NOMENCLATURE OR DESCRIPTION	FIND NO.

LIST OF MATERIALS

NEXT ASSY	USED ON
1004154	

APPLICATION

UNLESS OTHERWISE SPECIFIED
DIMENSIONS ARE IN INCHES
TOLERANCES ON
FRACTIONS ± DECIMALS ± ANGLES ±
DO NOT SCALE THIS DRAWING
MATERIAL SEE NOTE 1
HEAT TREATMENT NONE
FINAL FINISH NONE

MIT
INSTRUMENTATION LAB
CAMBRIDGE, MASS
DWG. NO. CONTRACT
DRAWN H. Carlson DATE 27SEP63
CHECKED O.R. Rogers 28SEP63
APPROVAL E. Duncan 10/63
APPROVAL 30Sept63
NASA APPROVAL W.J. 10-3-63
MIT APPROVAL
MIT APPROVAL 30Oct63

MANNED SPACECRAFT CENTER
HOUSTON, TEXAS

CASTING CONNECTOR PLATE
DECODING MODULE
AGC DSKY NAV & MAIN

CODE IDENT NO. —— SIZE D NASA DRAWING NO. 1004566
SCALE 1/1 WT SHEET 1 OF 1

1004566 B

INCHES
0 1 2
PHOTOGRAPHIC SCALE ONLY

1004566

NOTICE — WHEN GOVERNMENT DRAWINGS, SPECIFICATIONS, OR OTHER DATA ARE USED FOR ANY PURPOSE OTHER THAN IN CONNECTION WITH A DEFINITELY RELATED GOVERNMENT PROCUREMENT OPERATION, THE UNITED STATES GOVERNMENT THEREBY INCURS NO RESPONSIBILITY NOR ANY OBLIGATION WHATSOEVER; AND THE FACT THAT THE GOVERNMENT MAY HAVE FORMULATED, FURNISHED, OR IN ANY WAY SUPPLIED THE SAID DRAWINGS, SPECIFICATIONS OR OTHER DATA IS NOT TO BE REGARDED BY IMPLICATION OR OTHERWISE AS IN ANY MANNER LICENSING THE HOLDER OR ANY OTHER PERSON OR CORPORATION, OR CONVEYING ANY RIGHTS OR PERMISSION TO MANUFACTURE, USE, OR SELL ANY PATENTED INVENTION THAT MAY IN ANY WAY BE RELATED THERETO.

REVISIONS 0362/

SYM	DESCRIPTION	DATE	APPROVAL

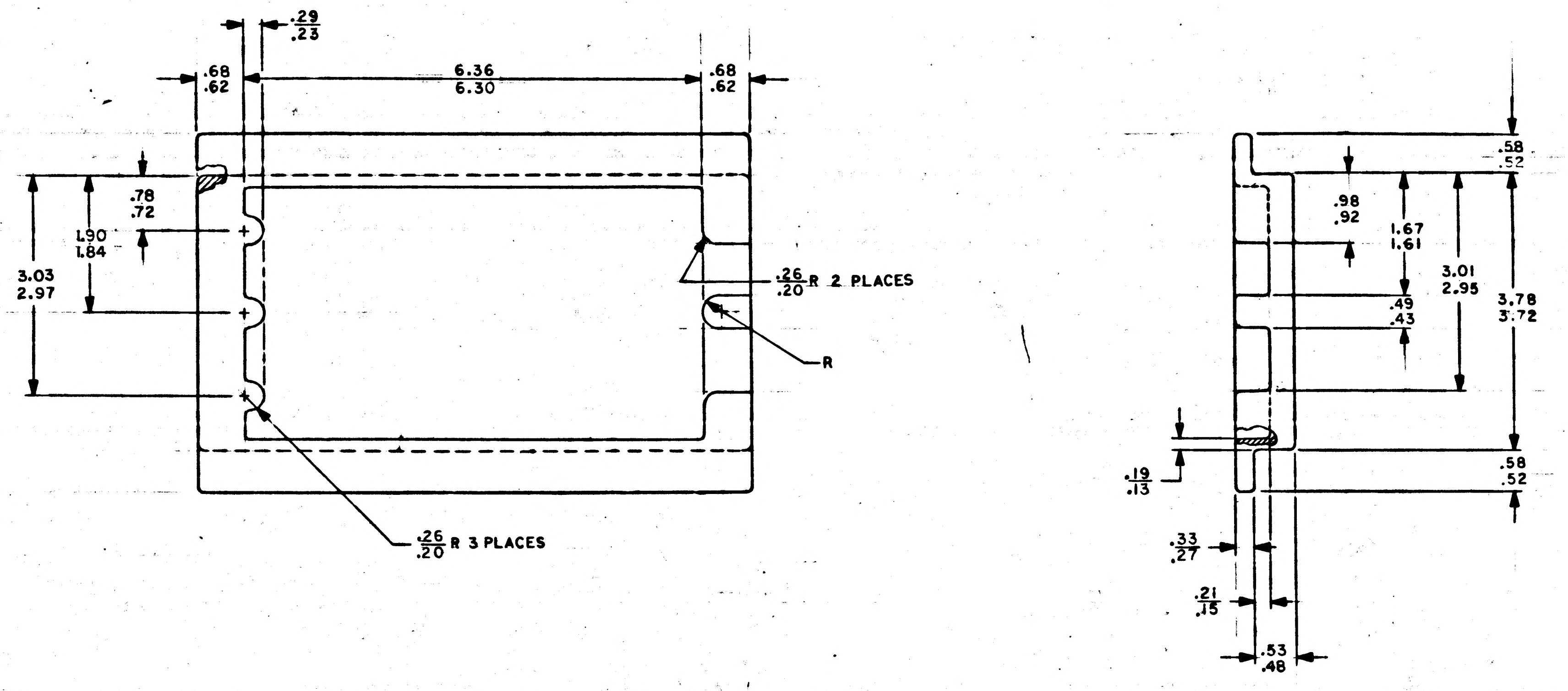

NOTES
1. MATL: CAST 356-T6 ALUMINUM ALLOY TEMP T6, CLASS 3M, CONDITION T6, PER QQ-A-601
2. CLASSIFICATION OF CASTING PER MIL-C-6021 CLASS IA
3. SURFACE QUALITY 250√
4. FILLETS AND ROUNDS TO BE .06/.12 R
5. INTERPRET DRAWING IN ACCORDANCE WITH STANDARDS PRESCRIBED BY MIL-D-70327

MASTER

QTY REQD	PART OR IDENTIFYING NO.	NOMENCLATURE OR DESCRIPTION	FIND NO.

LIST OF MATERIALS

1004154	
NEXT ASSY	USED ON
APPLICATION	

UNLESS OTHERWISE SPECIFIED DIMENSIONS ARE IN INCHES
TOLERANCES ON
FRACTIONS ± DECIMALS ± ANGLES ±
DO NOT SCALE THIS DRAWING
MATERIAL SEE NOTE 1
HEAT TREATMENT NONE
FINAL FINISH NONE

MIT INSTRUMENTATION LAB
CAMBRIDGE, MASS.
DWG. NO.
CONTRACT
DRAWN H. Carlson DATE 27SEPT63
CHECKED G.R. Rogni 28SEP63
APPROVAL E.C. Duncan 10/2/63
APPROVAL Eldon C. Hall 30Sept63
NASA APPROVAL W.J. Rhine 10-2-63
MIT APPROVAL
MIT APPROVAL 30Oct63

MANNED SPACECRAFT CENTER
HOUSTON, TEXAS

CASTING PLATE,
DECODING MODULE
AGC KEYBOARD

CODE IDENT NO. —
SIZE D
NASA DRAWING NO. 1004566
SCALE 1/1
WT
SHEET 1 OF 1

1004566

1004567

SYM	DESCRIPTION	DATE	APPROVAL

REVISIONS 07735

NOTICE — WHEN GOVERNMENT DRAWINGS, SPECIFICATIONS, OR OTHER DATA ARE USED FOR ANY PURPOSE OTHER THAN IN CONNECTION WITH A DEFINITELY RELATED GOVERNMENT PROCUREMENT OPERATION, THE UNITED STATES GOVERNMENT THEREBY INCURS NO RESPONSIBILITY NOR ANY OBLIGATION WHATSOEVER; AND THE FACT THAT THE GOVERNMENT MAY HAVE FORMULATED, FURNISHED, OR IN ANY WAY SUPPLIED THE SAID DRAWINGS, SPECIFICATIONS OR OTHER DATA IS NOT TO BE REGARDED BY IMPLICATION OR OTHERWISE AS IN ANY MANNER LICENSING THE HOLDER OR ANY OTHER PERSON OR CORPORATION, OR CONVEYING ANY RIGHTS OR PERMISSION TO MANUFACTURE, USE, OR SELL ANY PATENTED INVENTION THAT MAY IN ANY WAY BE RELATED THERETO.

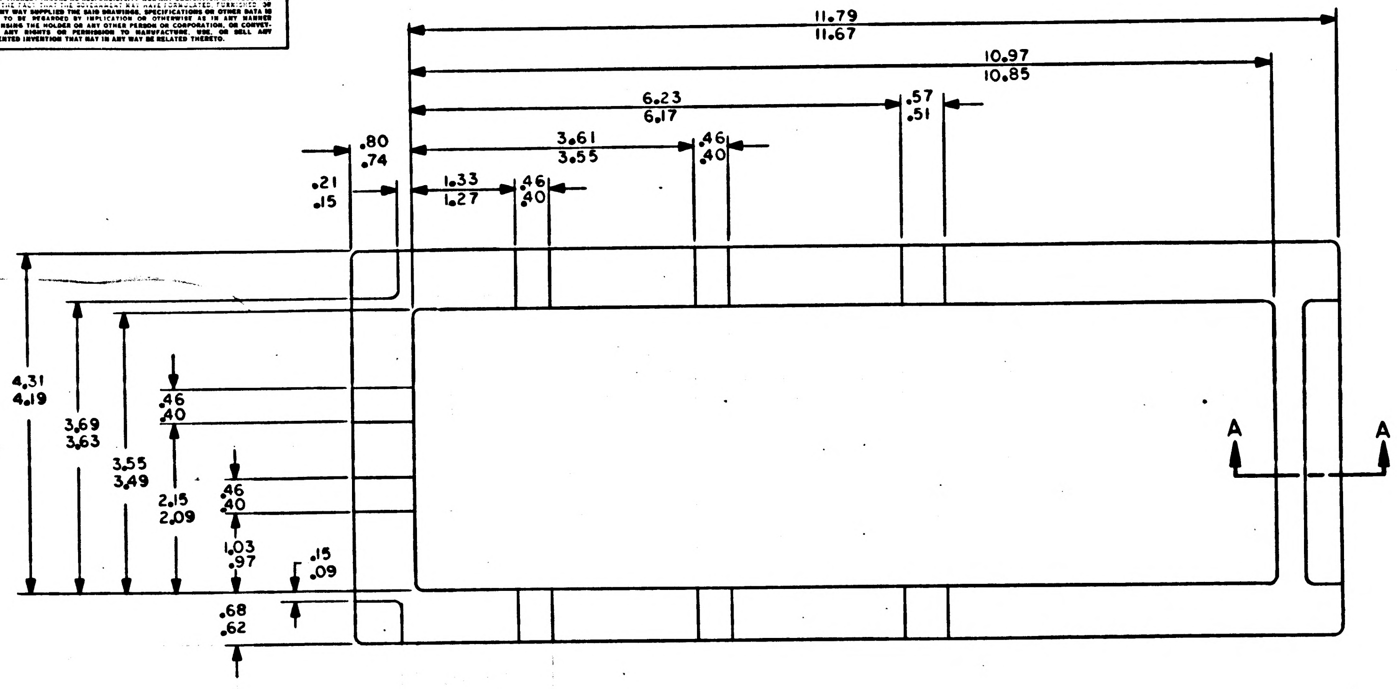

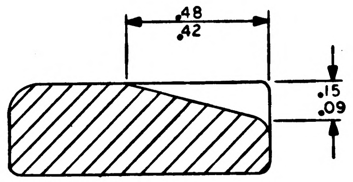

SECTION A-A
SCALE 4/1

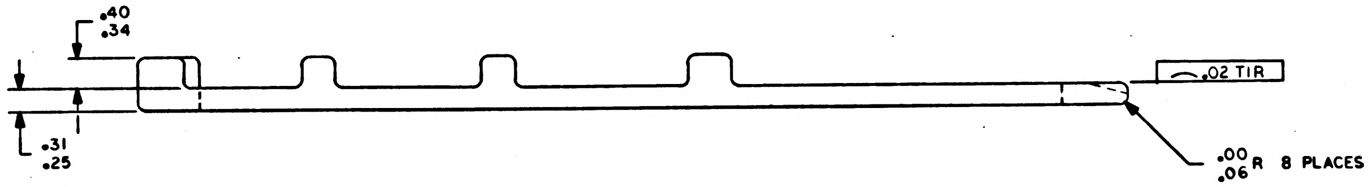

NOTES
1. MATL: CAST 356-T6 ALUMINUM, TEMP T6, CLASS 3M, CONDITION T6, PER QQ-A-601
2. CLASSIFICATION OF CASTING PER MIL-C-6021 CLASS 1A
3. SURFACE QUALITY 250/
4. FILLETS AND ROUNDS TO BE .06/.12 R UNLESS OTHERWISE SPECIFIED
5. INTERPRET DRAWING IN ACCORDANCE WITH STANDARDS PRESCRIBED BY MIL-D-70327

MASTER

QTY REQD	PART OR IDENTIFYING NO.	NOMENCLATURE OR DESCRIPTION	FIND NO.

LIST OF MATERIALS

1004543	
NEXT ASSY	USED ON

APPLICATION

UNLESS OTHERWISE SPECIFIED DIMENSIONS ARE IN INCHES
TOLERANCES ON
FRACTIONS ± DECIMALS ± ANGLES ±
DO NOT SCALE THIS DRAWING
MATERIAL SEE NOTE 1
HEAT TREATMENT NONE
FINAL FINISH NONE

MIT INSTRUMENTATION LAB
CAMBRIDGE, MASS.
DWG. NO. CONTRACT
DRAWN W. Jackson DATE 13Nov63
CHECKED S. E. Smith 13Nov63
APPROVAL E. J. Duggan 11-14-63
APPROVAL Eldon C. Hall 15Nov63
NASA APPROVAL
MIT APPROVAL
MIT APPROVAL 11/19/63

MANNED SPACECRAFT CENTER
HOUSTON, TEXAS

CASTING PLATE
ELECTRO LUMINESCENT
A G C KEYBOARD

CODE IDENT NO. —
SIZE D
NASA DRAWING NO. 1004567
SCALE 1/1
WT
SHEET 1 OF 1

INCHES
0 1 2
PHOTOGRAPHIC SCALE ONLY

1004567

NOTICE — WHEN GOVERNMENT DRAWINGS, SPECIFICATIONS, OR OTHER DATA ARE USED FOR ANY PURPOSE OTHER THAN IN CONNECTION WITH A DEFINITELY RELATED GOVERNMENT PROCUREMENT OPERATION, THE UNITED STATES GOVERNMENT THEREBY INCURS NO RESPONSIBILITY NOR ANY OBLIGATION WHATSOEVER; AND THE FACT THAT THE GOVERNMENT MAY HAVE FORMULATED, FURNISHED, OR IN ANY WAY SUPPLIED THE SAID DRAWINGS, SPECIFICATIONS, OR OTHER DATA IS NOT TO BE REGARDED BY IMPLICATION OR OTHERWISE AS IN ANY MANNER LICENSING THE HOLDER OR ANY OTHER PERSON OR CORPORATION, OR CONVEYING ANY RIGHTS OR PERMISSION TO MANUFACTURE, USE, OR SELL ANY PATENTED INVENTION THAT MAY IN ANY WAY BE RELATED THERETO.

1004569

REVISIONS 04735			
SYM	DESCRIPTION	DATE	APPROVAL
A	REVISED PER TDRR 05113	10 Dec 63	

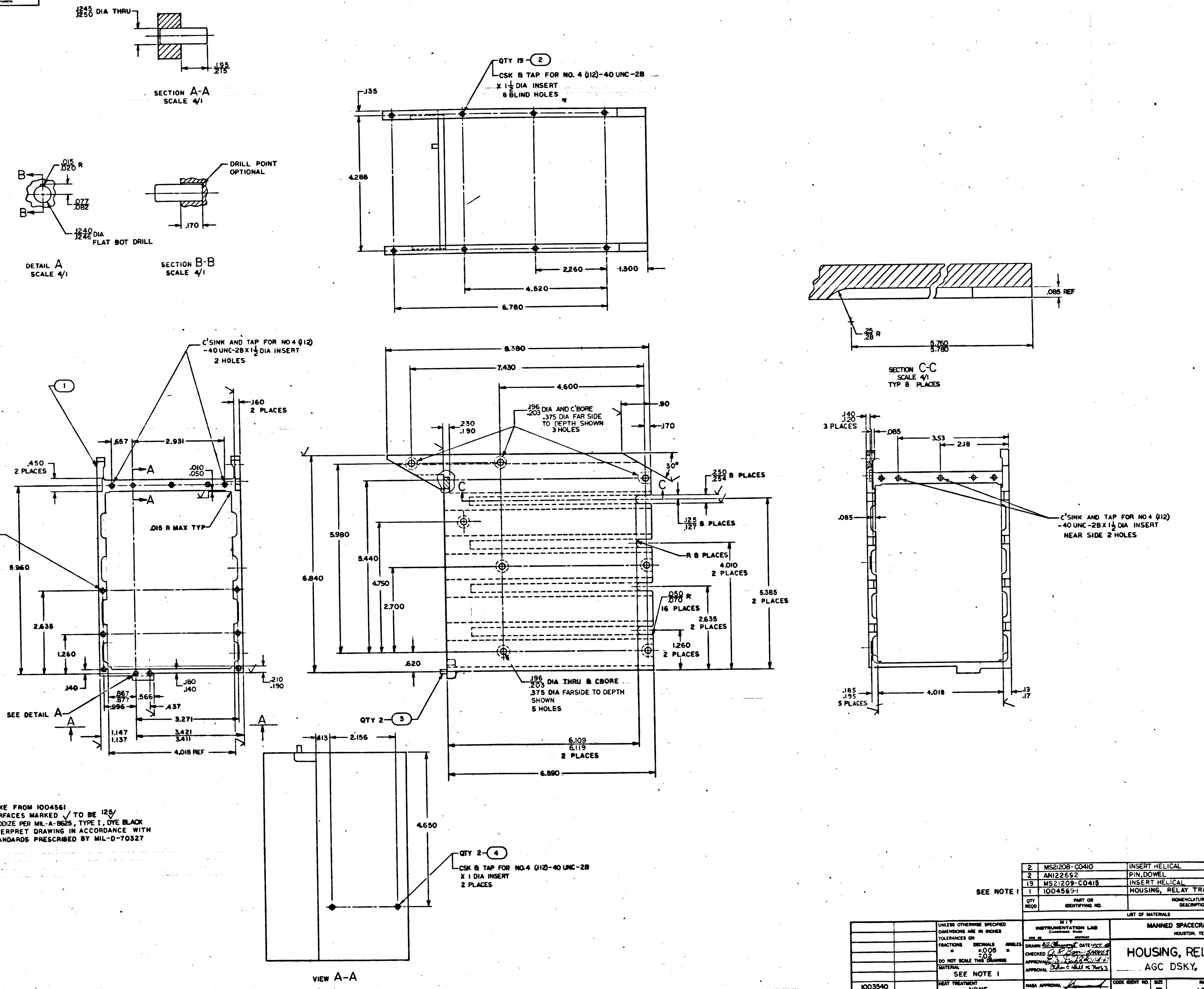

.1245 .1250 DIA THRU
.195 .215
SECTION A-A
SCALE 4/1
.015 .020 R
B
B
.077 .082
.1240 .1246 DIA
FLAT BOT DRILL
DETAIL A
SCALE 4/1
DRILL POINT OPTIONAL
.170
SECTION B-B
SCALE 4/1
QTY 19 ②
CSK & TAP FOR NO. 4 (.112)-40 UNC-2B
X 1½ DIA INSERT
8 BLIND HOLES
.135
4.288
2.260
1.300
4.520
6.780
.085 REF
.25 .28 R
5.760 5.780
SECTION C-C
SCALE 4/1
TYP 8 PLACES
C'SINK AND TAP FOR NO 4 (.112)
-40 UNC-2B X 1½ DIA INSERT
2 HOLES
①
.160
2 PLACES
.657
2.931
.450
2 PLACES
A
.010 .050
A
.015 R MAX TYP
CSK AND TAP FOR
NO 4 (.112)-40UNC-2B
X 1½ DIA INSERT
7 BLIND HOLES
5.960
2.635
1.260
.140
.180 .140
.210 .190
SEE DETAIL A
.867 .877
.566
.996
.437
3.271
A
A
1.147 1.137
3.421 3.411
4.018 REF
8.380
7.430
4.600
.196 .203 DIA AND C'BORE
.375 DIA FAR SIDE
TO DEPTH SHOWN
3 HOLES
.90
.170
.230 .190
30°
.250 .254 8 PLACES
C
C
.125 .127 8 PLACES
5.980
5.440
4.750
2.700
6.840
R 8 PLACES
4.010
2 PLACES
.050 .070 R
16 PLACES
2.635
2 PLACES
5.385
2 PLACES
1.260
2 PLACES
.620
.196 .203 DIA THRU & CBORE
.375 DIA FARSIDE TO DEPTH
SHOWN
5 HOLES
QTY 2 ③
6.109 6.119
2 PLACES
6.590
.413
2.156
4.650
QTY 2 ④
CSK & TAP FOR NO.4 (.112)-40 UNC-2B
X 1 DIA INSERT
2 PLACES
VIEW A-A
.140 .120
3 PLACES
.085
3.53
2.18
.085
C'SINK AND TAP FOR NO 4 (.112)
-40 UNC-2B X 1½ DIA INSERT
NEAR SIDE 2 HOLES
.185 .195
5 PLACES
4.018
.13 .17

NOTES
1. MAKE FROM 1004561
2. SURFACES MARKED √ TO BE 125√
3. ANODIZE PER MIL-A-8625, TYPE I, DYE BLACK
4. INTERPRET DRAWING IN ACCORDANCE WITH STANDARDS PRESCRIBED BY MIL-D-70327

SEE NOTE 1

QTY REQD	PART OR IDENTIFYING NO.	NOMENCLATURE OR DESCRIPTION	FIND NO.
2	MS21208-C0410	INSERT HELICAL	4
2	AN122692	PIN, DOWEL	3
19	MS21209-C0415	INSERT HELICAL	2
1	1004569-1	HOUSING, RELAY TRAY	1

LIST OF MATERIALS

NEXT ASSY	1003540
USED ON	
APPLICATION	

UNLESS OTHERWISE SPECIFIED
DIMENSIONS ARE IN INCHES
TOLERANCES ON
FRACTIONS ± DECIMALS ±.005 ±.02 ANGLES ±
DO NOT SCALE THIS DRAWING
MATERIAL SEE NOTE 1
HEAT TREATMENT NONE
FINAL FINISH SEE NOTE 3

MIT
INSTRUMENTATION LAB
CAMBRIDGE, MASS
DRAWN D.O. Clermont DATE Oct 63
CHECKED A. R. Bogni 5 Nov 63
APPROVAL E. D. Duggan 14-6-63
APPROVAL Eldon C Hall 15 Nov 63
NASA APPROVAL
MIT APPROVAL
MIT APPROVAL 11/19/63

MANNED SPACECRAFT CENTER
HOUSTON, TEXAS

HOUSING, RELAY TRAY
AGC DSKY, MAIN

CODE IDENT NO. — SIZE E NASA DRAWING NO. 1004569
SCALE 1/1 WT SHEET 1 OF 1

MASTER

		REVISIONS 04735	
SYM	DESCRIPTION	DATE	APPROVAL
A	REVISED PER TDRR 05113		
B	REVISED PER TDRR 05773	1-21-64	

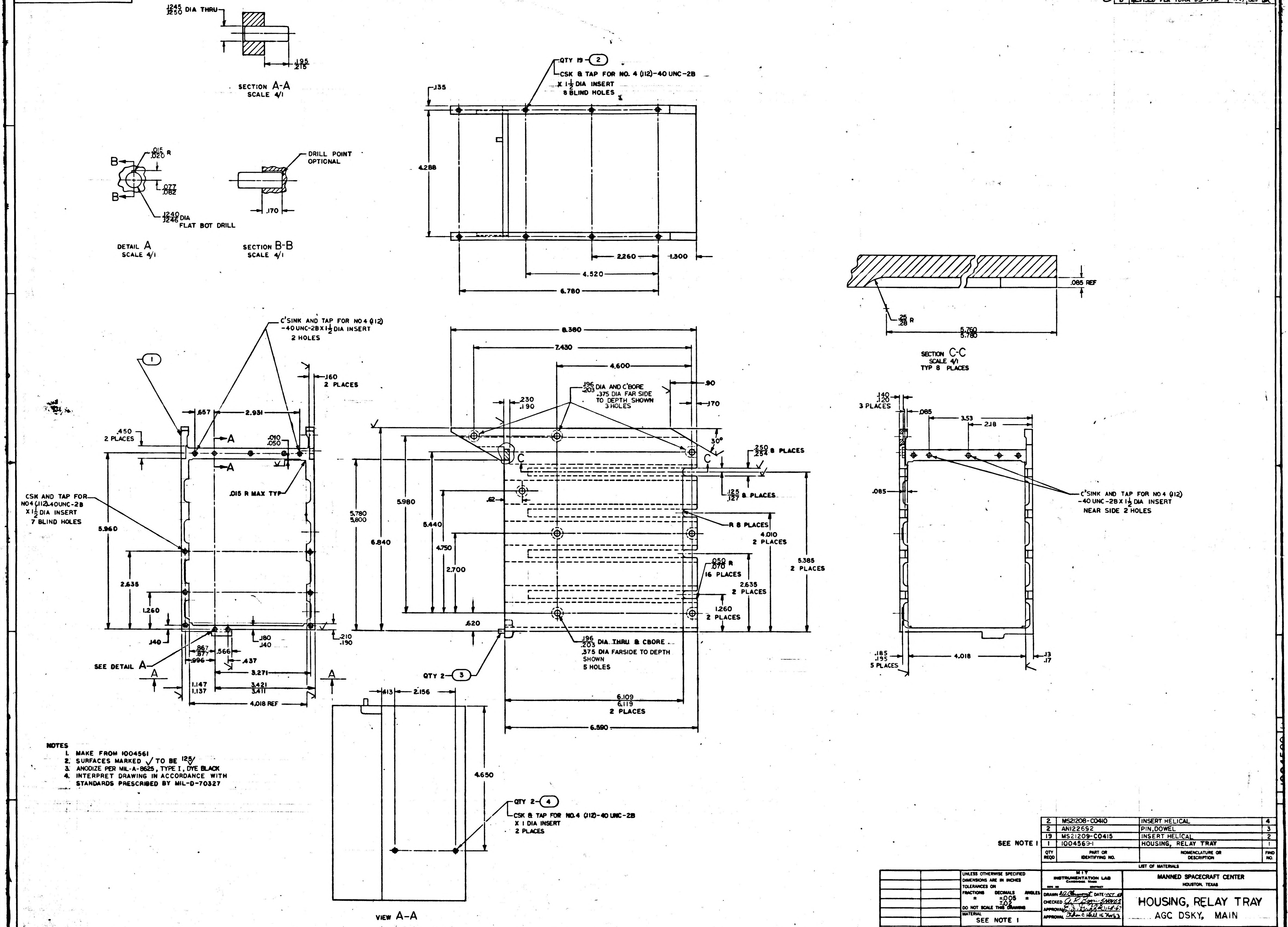

.1245 .1250 DIA THRU
.195 .215
SECTION A-A SCALE 4/1
.015 .020 R
.077 .082
.1240 .1246 DIA FLAT BOT DRILL
DETAIL A SCALE 4/1
DRILL POINT OPTIONAL
.170
SECTION B-B SCALE 4/1
QTY 19 - 2
CSK & TAP FOR NO. 4 (.112)-40 UNC-2B X 1½ DIA INSERT 8 BLIND HOLES
.135
4.288
2.260
1.300
4.520
6.780
.085 REF
.25 .28 R
5.760 5.780
SECTION C-C SCALE 4/1 TYP 8 PLACES
C'SINK AND TAP FOR NO 4 (.112) -40 UNC-2B X 1½ DIA INSERT 2 HOLES
1
.160 2 PLACES
.657
2.931
.450 2 PLACES
.010 .050
.015 R MAX TYP
CSK AND TAP FOR NO 4 (.112) 40 UNC-2B X 1½ DIA INSERT 7 BLIND HOLES
5.960
2.635
1.260
.140
.867 .877
.996
.566
.437
.180 .140
.210 .190
3.271
3.421 3.411
1.147 1.137
4.018 REF
SEE DETAIL A
8.380
7.430
4.600
.196 .203 DIA AND C'BORE .375 DIA FAR SIDE TO DEPTH SHOWN 3 HOLES
.230 .190
.90
.170
30°
.250 .254 8 PLACES
.125 .127 8 PLACES
.62
R 8 PLACES
4.010 2 PLACES
.050 .070 R 16 PLACES
2.635 2 PLACES
1.260 2 PLACES
5.385 2 PLACES
5.780 5.800
5.980
6.840
5.440
4.750
2.700
.620
.196 .203 DIA THRU & CBORE .375 DIA FARSIDE TO DEPTH SHOWN 5 HOLES
QTY 2 - 3
6.109 6.119 2 PLACES
6.590
.140 .120 3 PLACES
.085
3.53
2.18
C'SINK AND TAP FOR NO 4 (.112) -40 UNC-2B X 1½ DIA INSERT NEAR SIDE 2 HOLES
.185 .195 5 PLACES
4.018
.13 .17
.413
2.156
4.650
QTY 2 - 4
CSK & TAP FOR NO.4 (.112)-40 UNC-2B X 1 DIA INSERT 2 PLACES
VIEW A-A

NOTES
1. MAKE FROM 1004561
2. SURFACES MARKED √ TO BE 125√
3. ANODIZE PER MIL-A-8625, TYPE I, DYE BLACK
4. INTERPRET DRAWING IN ACCORDANCE WITH STANDARDS PRESCRIBED BY MIL-D-70327

SEE NOTE 1

QTY REQD	PART OR IDENTIFYING NO.	NOMENCLATURE OR DESCRIPTION	FIND NO.
2	MS21208-C0410	INSERT HELICAL	4
2	AN122692	PIN, DOWEL	3
19	MS21209-C0415	INSERT HELICAL	2
1	1004569-1	HOUSING, RELAY TRAY	1

LIST OF MATERIALS

1003540	
NEXT ASSY	USED ON
APPLICATION	

UNLESS OTHERWISE SPECIFIED DIMENSIONS ARE IN INCHES
TOLERANCES ON
FRACTIONS ± DECIMALS ±.005 ±.02 ANGLES ±
DO NOT SCALE THIS DRAWING
MATERIAL SEE NOTE 1
HEAT TREATMENT NONE
FINAL FINISH SEE NOTE 3

MIT INSTRUMENTATION LAB
CAMBRIDGE, MASS
DRAWN D.Q. Clermont DATE OCT 63
CHECKED A.R. Bogni 5NOV63
APPROVAL E.J. Bugg 11-8-63
APPROVAL Eldon C Hall 15 Nov63
NASA APPROVAL
MIT APPROVAL
MIT APPROVAL D Hoag 11/19/63

MANNED SPACECRAFT CENTER
HOUSTON, TEXAS

HOUSING, RELAY TRAY
AGC DSKY, MAIN

CODE IDENT NO. ——
SIZE E
NASA DRAWING NO. 1004569
SCALE 1/1
WT
SHEET 1 OF 1

MASTER

NOTICE — WHEN GOVERNMENT DRAWINGS, SPECIFICATIONS, OR OTHER DATA ARE USED FOR ANY PURPOSE OTHER THAN IN CONNECTION WITH A DEFINITELY RELATED GOVERNMENT PROCUREMENT OPERATION, THE UNITED STATES GOVERNMENT THEREBY INCURS NO RESPONSIBILITY NOR ANY OBLIGATION WHATSOEVER; AND THE FACT THAT THE GOVERNMENT MAY HAVE FORMULATED, FURNISHED, OR IN ANY WAY SUPPLIED THE SAID DRAWINGS, SPECIFICATIONS, OR OTHER DATA IS NOT TO BE REGARDED BY IMPLICATION OR OTHERWISE AS IN ANY MANNER LICENSING THE HOLDER OR ANY OTHER PERSON OR CORPORATION, OR CONVEYING ANY RIGHTS OR PERMISSION TO MANUFACTURE, USE, OR SELL ANY PATENTED INVENTION THAT MAY IN ANY WAY BE RELATED THERETO

1004569 C

REVISIONS 04735

SYM	DESCRIPTION	DATE	APPROVAL
A	REVISED PER TDRR 05113		
B	REVISED PER TDRR 05773	1-31-64	
C	REVISED PER TDRR 07644 DR H. Carison CHK	4/30/64	

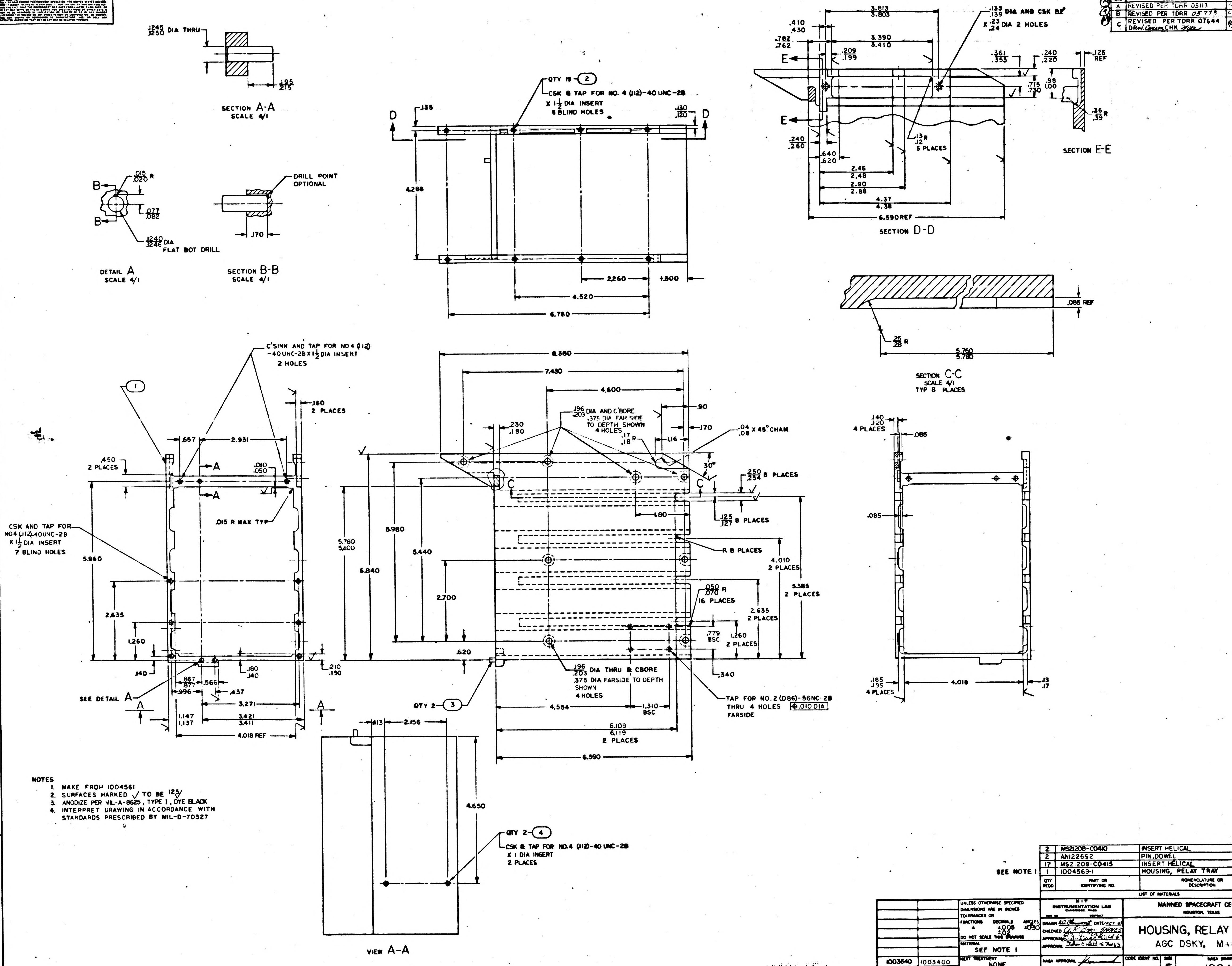

.1245 .1250 DIA THRU
.195 .215
SECTION A-A SCALE 4/1
B
B
.015 .020 R
.077 .082
.1240 .1246 DIA FLAT BOT DRILL
DETAIL A SCALE 4/1
DRILL POINT OPTIONAL
.170
SECTION B-B SCALE 4/1
QTY 19 ②
CSK & TAP FOR NO. 4 (.112)-40 UNC-2B X 1½ DIA INSERT 8 BLIND HOLES
D
D
.135
.130 .120
4.288
2.260
1.300
4.520
6.780
3.813 3.803
.133 .139 DIA AND CSK 82° X .23 .24 DIA 2 HOLES
.410 .430
.782 .762
3.390 3.410
.209 .199
E
E
.361 .353
.240 .220
.125 REF
.98 1.00
.715 .730
.36 .39 R
SECTION E-E
.13 .12 R 5 PLACES
.240 .260
.640 .620
2.46 2.48
2.90 2.88
4.37 4.38
6.590 REF
SECTION D-D
.085 REF
.25 .28 R
5.760 5.780
SECTION C-C SCALE 4/1 TYP 8 PLACES
C'SINK AND TAP FOR NO 4 (.112) -40 UNC-2B X 1½ DIA INSERT 2 HOLES
①
.160 2 PLACES
.450 2 PLACES
.657
2.931
A
A
.010 .050
.015 R MAX TYP
CSK AND TAP FOR NO 4 (.112)-40UNC-2B X 1½ DIA INSERT 7 BLIND HOLES
5.960
2.635
1.260
.140
.867 .87
.566
.996
.437
.180 .140
.210 .190
SEE DETAIL A
3.271
1.147 1.137
3.421 3.411
4.018 REF
A
A
8.380
7.430
4.600
.196 .203 DIA AND C'BORE .375 DIA FAR SIDE TO DEPTH SHOWN 4 HOLES
.90
.230 .190
.170
.04 .08 X 45° CHAM
.17 .18 R
1.16
30°
.250 .254 8 PLACES
C
C
.125 .127 8 PLACES
1.80
R 8 PLACES
5.780 5.800
5.980
6.840
5.440
2.700
4.010 2 PLACES
5.385 2 PLACES
.050 .070 R 16 PLACES
2.635 2 PLACES
.779 BSC
1.260 2 PLACES
.620
.196 .203 DIA THRU & CBORE .375 DIA FARSIDE TO DEPTH SHOWN 4 HOLES
.340
QTY 2 ③
TAP FOR NO. 2 (.086)-56NC-2B THRU 4 HOLES ⊕ .010 DIA FARSIDE
4.554
1.310 BSC
6.109 6.119 2 PLACES
6.590
.140 .120 4 PLACES
.085
.085
.185 .195 4 PLACES
4.018
.13 .17
.613
2.156
4.650
QTY 2 ④
CSK & TAP FOR NO.4 (.112)-40 UNC-2B X 1 DIA INSERT 2 PLACES
VIEW A-A

NOTES
1. MAKE FROM 1004561
2. SURFACES MARKED √ TO BE 125√
3. ANODIZE PER MIL-A-8625, TYPE I, DYE BLACK
4. INTERPRET DRAWING IN ACCORDANCE WITH STANDARDS PRESCRIBED BY MIL-D-70327

SEE NOTE 1

QTY REQD	PART OR IDENTIFYING NO.	NOMENCLATURE OR DESCRIPTION	FIND NO
2	MS21208-C0410	INSERT HELICAL	4
2	AN122692	PIN, DOWEL	3
17	MS21209-C0415	INSERT HELICAL	2
1	1004569-1	HOUSING, RELAY TRAY	1

LIST OF MATERIALS

1003540	1003400
NEXT ASSY	USED ON
APPLICATION	

UNLESS OTHERWISE SPECIFIED DIMENSIONS ARE IN INCHES
TOLERANCES ON
FRACTIONS ± DECIMALS ±.005 ±.02 ANGLES ±0°30'
DO NOT SCALE THIS DRAWING
MATERIAL SEE NOTE 1
HEAT TREATMENT NONE
FINAL FINISH SEE NOTE 3

MIT INSTRUMENTATION LAB
CAMBRIDGE, MASS
DRAWN A.Q. Clermont DATE 1 OCT 63
CHECKED A. P. Boga 5 NOV 63
APPROVAL
APPROVAL Eldon C Hall 15 Nov 63
NASA APPROVAL
MIT APPROVAL
MIT APPROVAL 11/19/63

MANNED SPACECRAFT CENTER
HOUSTON, TEXAS

HOUSING, RELAY TRAY
AGC DSKY, MAIN

CODE IDENT NO. ——
SIZE E
NASA DRAWING NO. 1004569
SCALE 1/1
WT
SHEET 1 OF 1

1004569

SYM	DESCRIPTION	DATE	APPROVAL

REVISIONS 24735

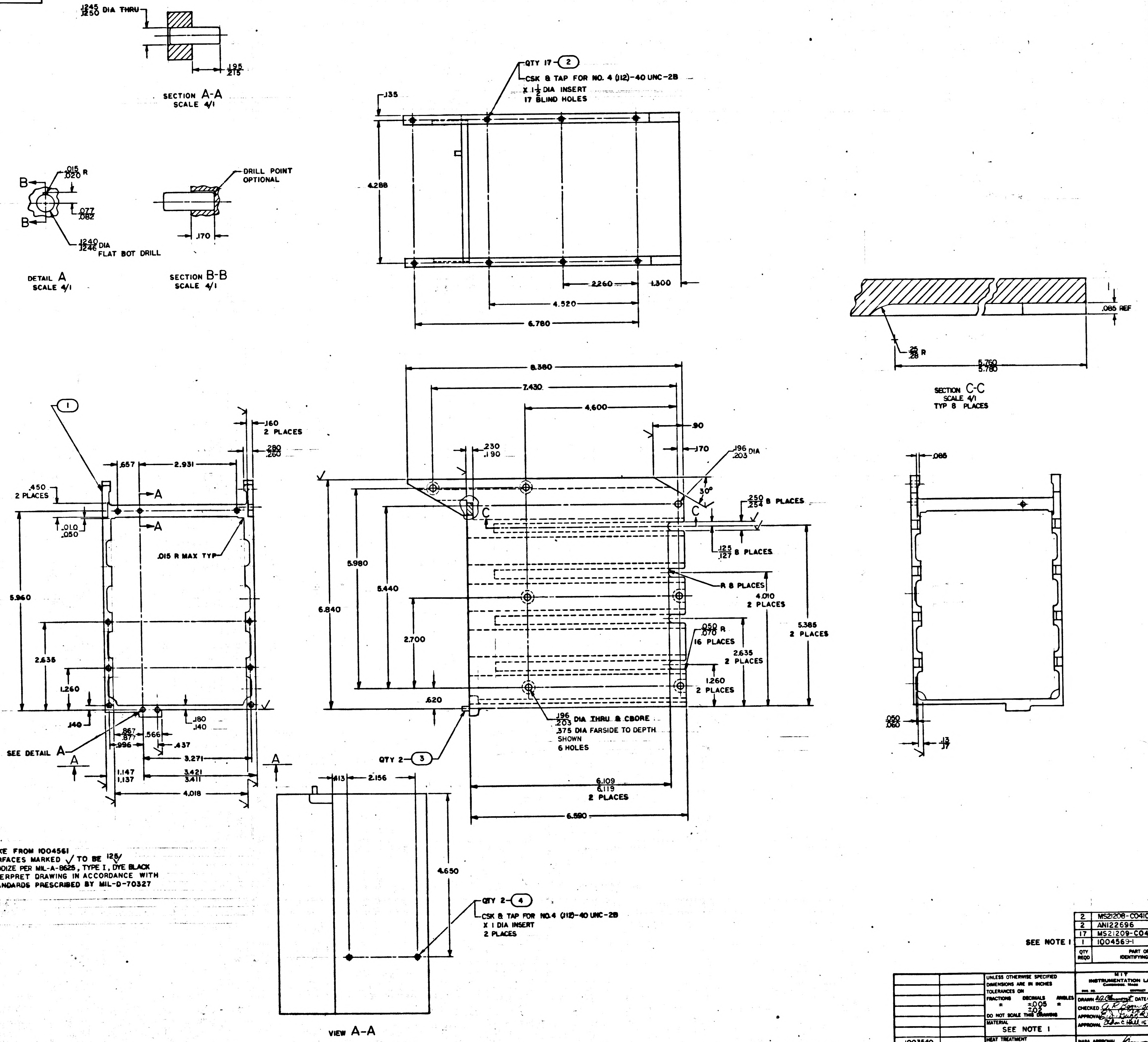

.1245
.1250 DIA THRU
.195
.215
SECTION A-A
SCALE 4/1
.015
.020 R
B
B
.077
.082
.1240
.1246 DIA
FLAT BOT DRILL
DETAIL A
SCALE 4/1
DRILL POINT
OPTIONAL
.170
SECTION B-B
SCALE 4/1
QTY 17 2
CSK & TAP FOR NO. 4 (.112)-40 UNC-2B
X 1 1/2 DIA INSERT
17 BLIND HOLES
.135
4.288
2.260
1.300
4.520
6.780
.085 REF
.25
.28 R
5.760
5.780
SECTION C-C
SCALE 4/1
TYP 8 PLACES
1
.160
2 PLACES
.280
.260
.657
2.931
.450
2 PLACES
A
A
.010
.050
.015 R MAX TYP
5.960
2.635
1.260
.140
.180
.140
.867
.877
.566
.996
.437
3.271
SEE DETAIL A
A
A
1.147
1.137
3.421
3.411
4.018
8.380
7.430
4.600
.90
.230
.190
.170
.196
.203 DIA
30°
C
C
.250
.254 8 PLACES
.125
.127 8 PLACES
R 8 PLACES
4.010
2 PLACES
5.385
2 PLACES
.050
.070 R
16 PLACES
2.635
2 PLACES
1.260
2 PLACES
5.980
5.440
6.840
2.700
.620
.196
.203 DIA THRU & CBORE
.375 DIA FARSIDE TO DEPTH
SHOWN
6 HOLES
QTY 2 3
6.109
6.119
2 PLACES
6.590
.085
.050
.060
.13
.17
.413
2.156
4.650
QTY 2 4
CSK & TAP FOR NO.4 (.112)-40 UNC-2B
X 1 DIA INSERT
2 PLACES
VIEW A-A

NOTES
1. MAKE FROM 1004561
2. SURFACES MARKED √ TO BE 125√
3. ANODIZE PER MIL-A-8625, TYPE I, DYE BLACK
4. INTERPRET DRAWING IN ACCORDANCE WITH STANDARDS PRESCRIBED BY MIL-D-70327

SEE NOTE 1

QTY REQD	PART OR IDENTIFYING NO.	NOMENCLATURE OR DESCRIPTION	FIND NO.
2	MS21208-C0410	INSERT HELICAL	4
2	AN122696	PIN, DOWEL	3
17	MS21209-C0415	INSERT HELICAL	2
1	1004569-1	HOUSING, RELAY TRAY	1

LIST OF MATERIALS

1003540	
NEXT ASSY	USED ON
APPLICATION	

UNLESS OTHERWISE SPECIFIED
DIMENSIONS ARE IN INCHES
TOLERANCES ON
FRACTIONS ± DECIMALS ±.005 ±.02 ANGLES ±
DO NOT SCALE THIS DRAWING

MATERIAL SEE NOTE 1
HEAT TREATMENT NONE
FINAL FINISH SEE NOTE 3

MIT
INSTRUMENTATION LAB
CAMBRIDGE, MASS

DRAWN A.Q. Clermont DATE OCT 63
CHECKED A. R. Bogan 5NOV63
APPROVAL Ed. Duggan 11-8-63
APPROVAL Eldon C Hall 15 Nov 63
NASA APPROVAL
MIT APPROVAL
MIT APPROVAL D Hoag 11/19/63

MANNED SPACECRAFT CENTER
HOUSTON, TEXAS

HOUSING, RELAY TRAY
AGC DSKY, MAIN

CODE IDENT NO. — SIZE E NASA DRAWING NO. 1004569
SCALE 1/1 WT SHEET 1 OF

MASTER

INCHES
PHOTOGRAPHIC SCALE ONLY

1004569

NOTICE — WHEN GOVERNMENT DRAWINGS, SPECIFICATIONS, OR OTHER DATA ARE USED FOR ANY PURPOSE OTHER THAN IN CONNECTION WITH A DEFINITELY RELATED GOVERNMENT PROCUREMENT OPERATION, THE UNITED STATES GOVERNMENT THEREBY INCURS NO RESPONSIBILITY NOR ANY OBLIGATION WHATSOEVER; AND THE FACT THAT THE GOVERNMENT MAY HAVE FORMULATED, FURNISHED, OR IN ANY WAY SUPPLIED THE SAID DRAWINGS, SPECIFICATIONS OR OTHER DATA IS NOT TO BE REGARDED BY IMPLICATION OR OTHERWISE AS IN ANY MANNER LICENSING THE HOLDER OR ANY OTHER PERSON OR CORPORATION, OR CONVEYING ANY RIGHTS OR PERMISSION TO MANUFACTURE, USE, OR SELL ANY PATENTED INVENTION THAT MAY IN ANY WAY BE RELATED THERETO.

1004570

REVISIONS 04/54			
SYM	DESCRIPTION	DATE	APPROVAL

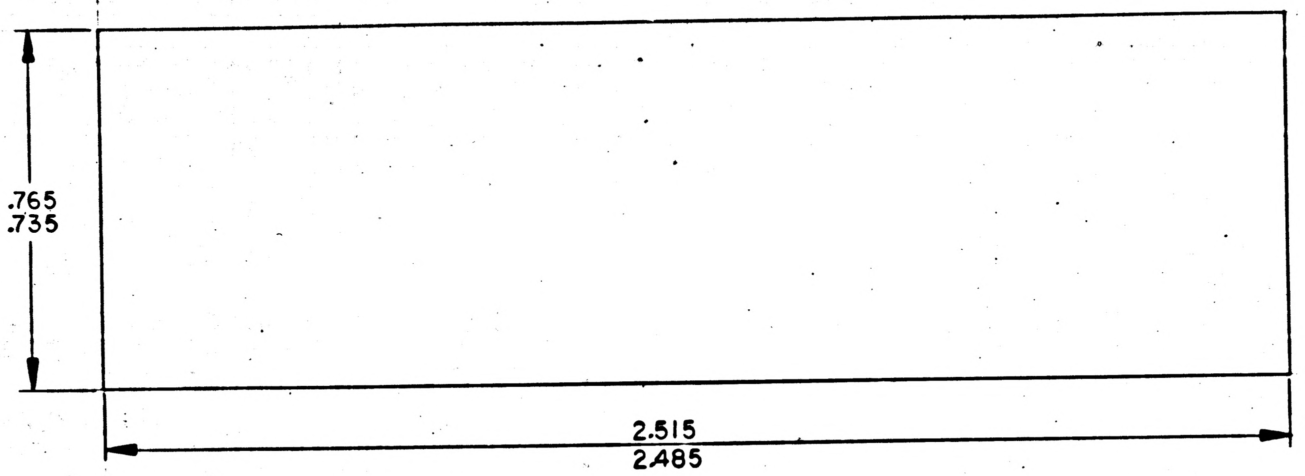

NOTES
1. MATL: PER MIL-T-11291
2. INTERPRET DRAWING IN ACCORDANCE WITH STANDARDS PRESCRIBED BY MIL-D-70327

MASTER

QTY REQD	PART OR IDENTIFYING NO.	NOMENCLATURE OR DESCRIPTION	FIND NO.

LIST OF MATERIALS

NEXT ASSY	USED ON
1003526	

APPLICATION

UNLESS OTHERWISE SPECIFIED DIMENSIONS ARE IN INCHES TOLERANCES ON
FRACTIONS ± DECIMALS ± ANGLES ±
DO NOT SCALE THIS DRAWING
MATERIAL SEE NOTE 1
HEAT TREATMENT NONE
FINAL FINISH NONE

MIT INSTRUMENTATION LAB
CAMBRIDGE, MASS.
DWG. NO. CONTRACT

DRAWN DATE 2 Oct 63
CHECKED S. Smith 2 Oct 63
APPROVAL 11 OCT 63
APPROVAL Eldon C Hall 11 Oct 63
NASA APPROVAL 10/24/63
MIT APPROVAL
MIT APPROVAL 24 Oct 63

MANNED SPACECRAFT CENTER
HOUSTON, TEXAS

TAPE, ADHESIVE
ALUMINUM BACKED
AGC OSCILLATOR

CODE IDENT NO. ——
SIZE C
NASA DRAWING NO. 1004570
SCALE 4/1
WT
SHEET 1 OF 1

INCHES
0 1 2
PHOTOGRAPHIC SCALE ONLY

NOTICE — WHEN GOVERNMENT DRAWINGS, SPECIFICATIONS, OR OTHER DATA ARE USED FOR ANY PURPOSE OTHER THAN IN CONNECTION WITH A DEFINITELY RELATED GOVERNMENT PROCUREMENT OPERATION, THE UNITED STATES GOVERNMENT THEREBY INCURS NO RESPONSIBILITY NOR ANY OBLIGATION WHATSOEVER; AND THE FACT THAT THE GOVERNMENT MAY HAVE FORMULATED, FURNISHED, OR IN ANY WAY SUPPLIED THE SAID DRAWINGS, SPECIFICATIONS OR OTHER DATA IS NOT TO BE REGARDED BY IMPLICATION OR OTHERWISE AS IN ANY MANNER LICENSING THE HOLDER OR ANY OTHER PERSON OR CORPORATION, OR CONVEYING ANY RIGHTS OR PERMISSION TO MANUFACTURE, USE, OR SELL ANY PATENTED INVENTION THAT MAY IN ANY WAY BE RELATED THERETO.

1004571 A

REVISIONS 04735

SYM	DESCRIPTION	DATE	APPROVAL
A2	REVISE PER TDRR 06050	2/10/64	

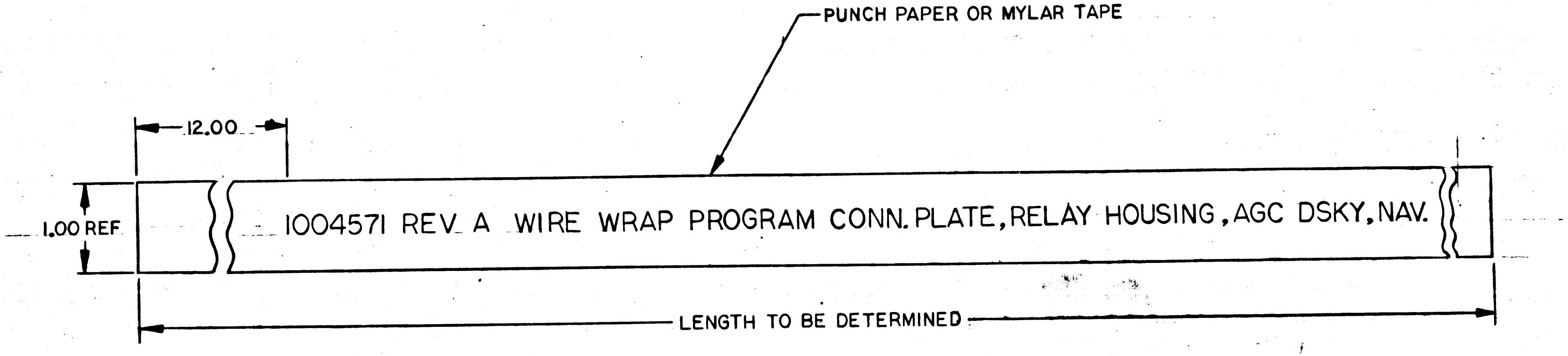
PUNCH PAPER OR MYLAR TAPE
12.00
1.00 REF
1004571 REV. A WIRE WRAP PROGRAM CONN. PLATE, RELAY HOUSING, AGC DSKY, NAV.
LENGTH TO BE DETERMINED

REFERENCES
1. WIRE WRAP ASSY
1003535
2. INTERCONN DIAGRAM
1006164

NOTE
1. INTERPRET DRAWING IN ACCORDANCE WITH STANDARDS PRESCRIBED BY MIL-D-70327

QTY REQD	PART OR IDENTIFYING NO.	NOMENCLATURE OR DESCRIPTION	FIND NO.

LIST OF MATERIALS

NEXT ASSY	USED ON
APPLICATION	

UNLESS OTHERWISE SPECIFIED DIMENSIONS ARE IN INCHES
TOLERANCES ON
FRACTIONS ± DECIMALS ±.10 ANGLES ±
DO NOT SCALE THIS DRAWING
MATERIAL
HEAT TREATMENT
FINAL FINISH

MIT INSTRUMENTATION LAB
CAMBRIDGE, MASS.
DWG. NO. CONTRACT
DRAWN J. C. Emmons DATE Nov 13 63
CHECKED S. F. Smith 13 Nov 63
APPROVAL E. J. Duggan 11-18-63
APPROVAL Ellen C Hall 15 Nov 63
NASA APPROVAL
MIT APPROVAL
MIT APPROVAL D. Hazel 11/19/63

MANNED SPACECRAFT CENTER
HOUSTON, TEXAS

WIRE WRAP PROGRAM
CONN. PLATE, RELAY HOUSING, AGC DSKY, NAV.

CODE IDENT NO. —
SIZE C
NASA DRAWING NO. 1004571
SCALE 1/1
WT
SHEET 1 OF 1

MASTER

INCHES
0 1 2
PHOTOGRAPHIC SCALE ONLY

NOTICE — WHEN GOVERNMENT DRAWINGS, SPECIFICATIONS, OR OTHER DATA ARE USED FOR ANY PURPOSE OTHER THAN IN CONNECTION WITH A DEFINITELY RELATED GOVERNMENT PROCUREMENT OPERATION, THE UNITED STATES GOVERNMENT THEREBY INCURS NO RESPONSIBILITY NOR ANY OBLIGATION WHATSOEVER; AND THE FACT THAT THE GOVERNMENT MAY HAVE FORMULATED, FURNISHED, OR IN ANY WAY SUPPLIED THE SAID DRAWINGS, SPECIFICATIONS OR OTHER DATA IS NOT TO BE REGARDED BY IMPLICATION OR OTHERWISE AS IN ANY MANNER LICENSING THE HOLDER OR ANY OTHER PERSON OR CORPORATION, OR CONVEYING ANY RIGHTS OR PERMISSION TO MANUFACTURE, USE, OR SELL ANY PATENTED INVENTION THAT MAY IN ANY WAY BE RELATED THERETO.

1004571

SYM	DESCRIPTION	DATE	APPROVAL

REVISIONS 04735

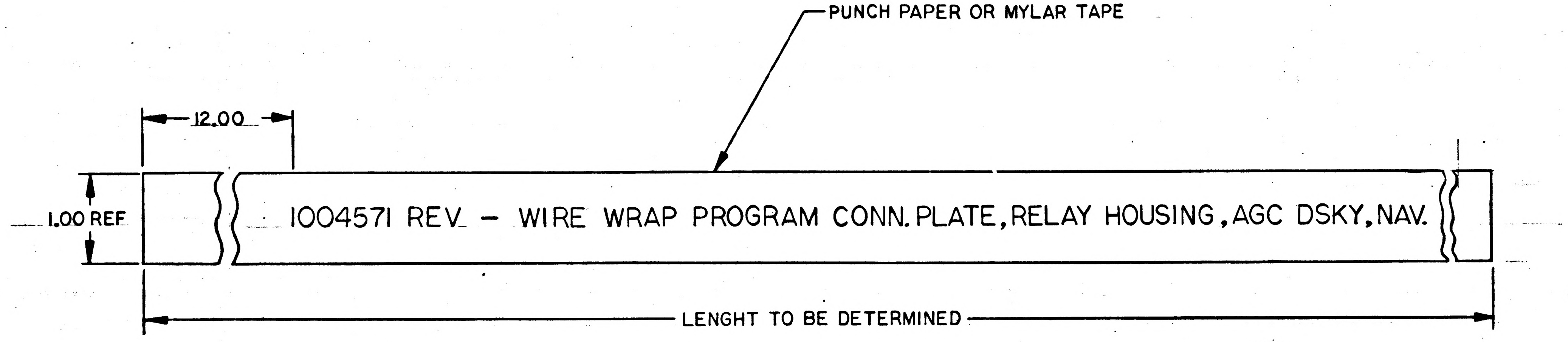

PUNCH PAPER OR MYLAR TAPE
12.00
1.00 REF
1004571 REV. – WIRE WRAP PROGRAM CONN. PLATE, RELAY HOUSING, AGC DSKY, NAV.
LENGHT TO BE DETERMINED

REFERENCES
1. WIRE WRAP ASSY
1003544
2. INTERCONN DIAGRAM
1006164

NOTE
1. INTERPRET DRAWING IN ACCORDANCE WITH STANDARDS PRESCRIBED BY MIL-D-70327

MASTER

QTY REQD	PART OR IDENTIFYING NO.	NOMENCLATURE OR DESCRIPTION	FIND NO.

LIST OF MATERIALS

NEXT ASSY	USED ON

APPLICATION

UNLESS OTHERWISE SPECIFIED DIMENSIONS ARE IN INCHES
TOLERANCES ON
FRACTIONS ± DECIMALS ±.10 ANGLES ±
DO NOT SCALE THIS DRAWING
MATERIAL
HEAT TREATMENT
FINAL FINISH

MIT
INSTRUMENTATION LAB
CAMBRIDGE, MASS.
DWG. NO. CONTRACT
DRAWN J.C. [illegible] DATE Nov 13 63
CHECKED S.F. Smith 13 Nov 63
APPROVAL E.J. Duggan 11-18-63
APPROVAL Eldon C Hall 15 Nov 63
NASA APPROVAL
MIT APPROVAL
MIT APPROVAL D. Hazel 11/19/63

MANNED SPACECRAFT CENTER
HOUSTON, TEXAS

WIRE WRAP PROGRAM
CONN. PLATE, RELAY HOUSING, AGC DSKY, NAV.

CODE IDENT NO. —
SIZE C
NASA DRAWING NO. 1004571
SCALE 1/1
WT
SHEET 1 OF 1

INCHES
0 1 2
PHOTOGRAPHIC SCALE ONLY

NOTICE — WHEN GOVERNMENT DRAWINGS, SPECIFICATIONS, OR OTHER DATA ARE USED FOR ANY PURPOSE OTHER THAN IN CONNECTION WITH A DEFINITELY RELATED GOVERNMENT PROCUREMENT OPERATION, THE UNITED STATES GOVERNMENT THEREBY INCURS NO RESPONSIBILITY NOR ANY OBLIGATION WHATSOEVER; AND THE FACT THAT THE GOVERNMENT MAY HAVE FORMULATED, FURNISHED, OR IN ANY WAY SUPPLIED THE SAID DRAWINGS, SPECIFICATIONS OR OTHER DATA IS NOT TO BE REGARDED BY IMPLICATION OR OTHERWISE AS IN ANY MANNER LICENSING THE HOLDER OR ANY OTHER PERSON OR CORPORATION, OR CONVEYING ANY RIGHTS OR PERMISSION TO MANUFACTURE, USE, OR SELL ANY PATENTED INVENTION THAT MAY IN ANY WAY BE RELATED THERETO.

1004572

REVISIONS 04935

SYM	DESCRIPTION	DATE	APPROVAL

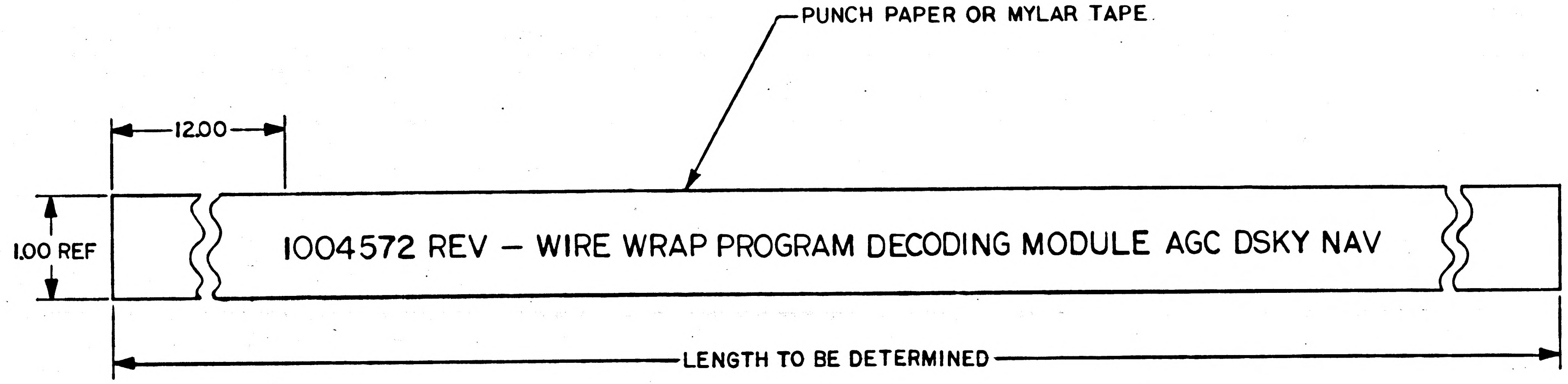
PUNCH PAPER OR MYLAR TAPE
12.00
1.00 REF
1004572 REV — WIRE WRAP PROGRAM DECODING MODULE AGC DSKY NAV
LENGTH TO BE DETERMINED

REFERENCES
1. WIRE WRAP ASSY
1003531
2. INTERCONN DIAGRAM
1006164

NOTE
1. INTERPRET DRAWING IN ACCORDANCE WITH STANDARDS PRESCRIBED BY MIL-D-70327

MASTER

QTY REQD	PART OR IDENTIFYING NO.	NOMENCLATURE OR DESCRIPTION	FIND NO.

LIST OF MATERIALS

NEXT ASSY	USED ON

APPLICATION

UNLESS OTHERWISE SPECIFIED
DIMENSIONS ARE IN INCHES
TOLERANCES ON
FRACTIONS ± DECIMALS ±.10 ANGLES ±
DO NOT SCALE THIS DRAWING
MATERIAL
HEAT TREATMENT
FINAL FINISH

MIT
INSTRUMENTATION LAB
CAMBRIDGE, MASS.
DWG. NO. CONTRACT

DRAWN P. Rossen DATE 14 NOV 63
CHECKED S. F. Smith 14 Nov 63
APPROVAL E. J. Duggan 11-18-63
APPROVAL Eldon C. Hall 15 Nov 63
NASA APPROVAL
MIT APPROVAL
MIT APPROVAL 11/19/63

MANNED SPACECRAFT CENTER
HOUSTON, TEXAS

WIRE WRAP PROGRAM
DECODING MODULE
AGC DSKY, NAV

CODE IDENT NO. —
SIZE C
NASA DRAWING NO. 1004572
SCALE 1/1
WT
SHEET 1 OF 1

INCHES
0 1 2
PHOTOGRAPHIC SCALE ONLY

NOTICE — WHEN GOVERNMENT DRAWINGS, SPECIFICATIONS, OR OTHER DATA ARE USED FOR ANY PURPOSE OTHER THAN IN CONNECTION WITH A DEFINITELY RELATED GOVERNMENT PROCUREMENT OPERATION, THE UNITED STATES GOVERNMENT THEREBY INCURS NO RESPONSIBILITY NOR ANY OBLIGATION WHATSOEVER; AND THE FACT THAT THE GOVERNMENT MAY HAVE FORMULATED, FURNISHED, OR IN ANY WAY SUPPLIED THE SAID DRAWINGS, SPECIFICATIONS OR OTHER DATA IS NOT TO BE REGARDED BY IMPLICATION OR OTHERWISE AS IN ANY MANNER LICENSING THE HOLDER OR ANY OTHER PERSON OR CORPORATION, OR CONVEYING ANY RIGHTS OR PERMISSION TO MANUFACTURE, USE, OR SELL ANY PATENTED INVENTION THAT MAY IN ANY WAY BE RELATED THERETO.

1004575 A

REVISIONS 04735

SYM	DESCRIPTION	DATE	APPROVAL
A	REVISED PER TDRR 05187	17 Dec 63	WR

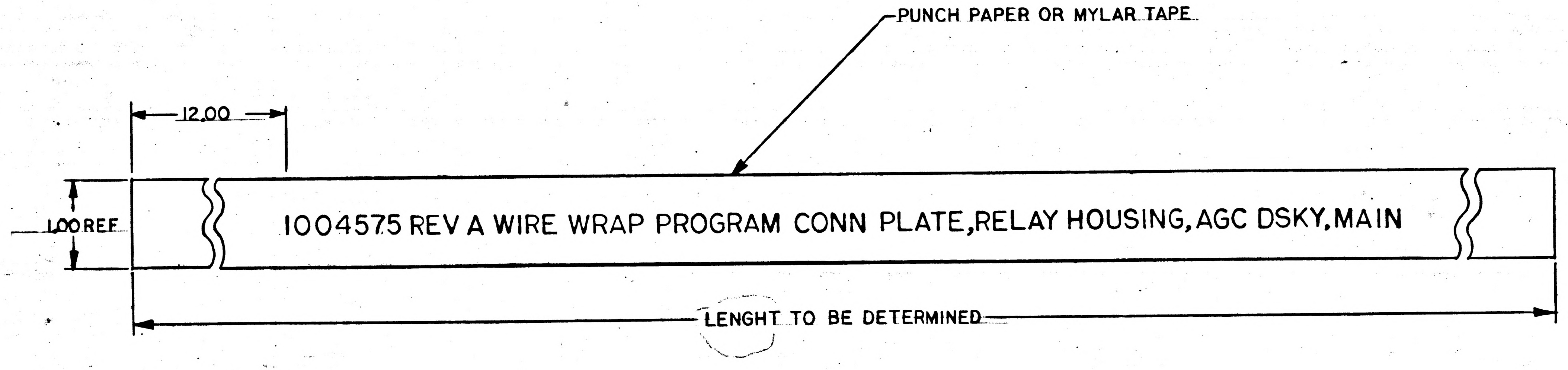
PUNCH PAPER OR MYLAR TAPE
12.00
1.00 REF
1004575 REV A WIRE WRAP PROGRAM CONN PLATE, RELAY HOUSING, AGC DSKY, MAIN
LENGHT TO BE DETERMINED

NOTE

1. INTERPRET DRAWING IN ACCORDANCE WITH STANDARDS PRESCRIBED BY MIL-D-70327

REFERENCES

1. WIRE WRAP ASSY 1003544
2. INTERCONN DIAGRAM 1006165

MASTER

QTY REQD	PART OR IDENTIFYING NO.	NOMENCLATURE OR DESCRIPTION	FIND NO.

LIST OF MATERIALS

NEXT ASSY	USED ON
APPLICATION	

UNLESS OTHERWISE SPECIFIED DIMENSIONS ARE IN INCHES
TOLERANCES ON
FRACTIONS ± DECIMALS ±.10 ANGLES ±
DO NOT SCALE THIS DRAWING
MATERIAL
HEAT TREATMENT
FINAL FINISH

MIT INSTRUMENTATION LAB
CAMBRIDGE, MASS.
DWG. NO. CONTRACT

DRAWN [illegible] DATE 15 Nov 63
CHECKED [illegible] 14 Nov 63
APPROVAL E.J. Duggan 11-18-63
APPROVAL Eldon C. Hall 15 Nov 63
NASA APPROVAL [illegible]
MIT APPROVAL
MIT APPROVAL [illegible] 11/19/63

MANNED SPACECRAFT CENTER
HOUSTON, TEXAS

WIRE WRAP PROGRAM
CONN.PLATE, RELAY HOUSING,
AGC DSKY, MAIN

CODE IDENT NO. ———
SIZE C
NASA DRAWING NO. 1004575
SCALE 1/1
WT
SHEET 1 OF 1

INCHES
0 1 2
PHOTOGRAPHIC SCALE ONLY

NOTICE — WHEN GOVERNMENT DRAWINGS, SPECIFICATIONS, OR OTHER DATA ARE USED FOR ANY PURPOSE OTHER THAN IN CONNECTION WITH A DEFINITELY RELATED GOVERNMENT PROCUREMENT OPERATION, THE UNITED STATES GOVERNMENT THEREBY INCURS NO RESPONSIBILITY NOR ANY OBLIGATION WHATSOEVER; AND THE FACT THAT THE GOVERNMENT MAY HAVE FORMULATED, FURNISHED, OR IN ANY WAY SUPPLIED THE SAID DRAWINGS, SPECIFICATIONS OR OTHER DATA IS NOT TO BE REGARDED BY IMPLICATION OR OTHERWISE AS IN ANY MANNER LICENSING THE HOLDER OR ANY OTHER PERSON OR CORPORATION, OR CONVEYING ANY RIGHTS OR PERMISSION TO MANUFACTURE, USE, OR SELL ANY PATENTED INVENTION THAT MAY IN ANY WAY BE RELATED THERETO.

1004575

REVISIONS 04735			
SYM	DESCRIPTION	DATE	APPROVAL

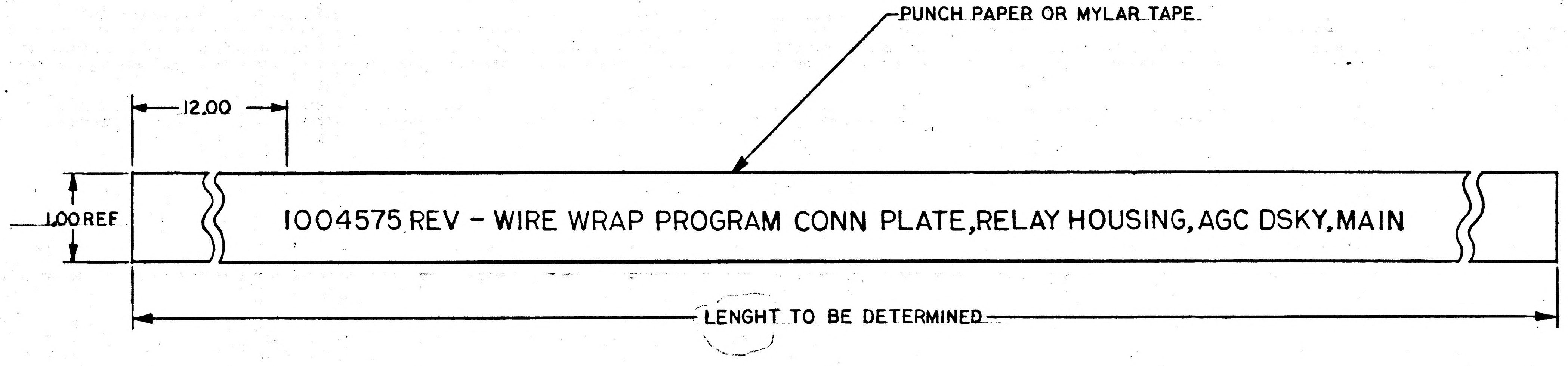
PUNCH PAPER OR MYLAR TAPE
12.00
1.00 REF
1004575 REV - WIRE WRAP PROGRAM CONN PLATE, RELAY HOUSING, AGC DSKY, MAIN
LENGHT TO BE DETERMINED

NOTE
1. INTERPRET DRAWING IN ACCORDANCE WITH STANDARDS PRESCRIBED BY MIL-D-70327

REFERENCES
1. WIRE WRAP ASSY 1003544
2 INTERCONN DIAGRAM 1006165

QTY REQD	PART OR IDENTIFYING NO.	NOMENCLATURE OR DESCRIPTION	FIND NO.

LIST OF MATERIALS

MASTER

NEXT ASSY	USED ON
APPLICATION	

UNLESS OTHERWISE SPECIFIED DIMENSIONS ARE IN INCHES
TOLERANCES ON
FRACTIONS ± DECIMALS ±.10 ANGLES ±
DO NOT SCALE THIS DRAWING
MATERIAL
HEAT TREATMENT
FINAL FINISH

MIT INSTRUMENTATION LAB
CAMBRIDGE, MASS.
DWG. NO. CONTRACT

DRAWN DATE 15 Nov 63
CHECKED L.F. Smith 14 Nov 63
APPROVAL E.J. Duggan 11-18-63
APPROVAL Eldon C. Hall 15 Nov 63
NASA APPROVAL
MIT APPROVAL
MIT APPROVAL 11/19/63

MANNED SPACECRAFT CENTER
HOUSTON, TEXAS

WIRE WRAP PROGRAM
CONN.PLATE, RELAY HOUSING,
AGC DSKY, MAIN

CODE IDENT NO. ———
SIZE C
NASA DRAWING NO. 1004575
SCALE 1/1
WT
SHEET 1 OF 1

INCHES
0 1 2
PHOTOGRAPHIC SCALE ONLY

NOTICE — WHEN GOVERNMENT DRAWINGS, SPECIFICATIONS, OR OTHER DATA ARE USED FOR ANY PURPOSE OTHER THAN IN CONNECTION WITH A DEFINITELY RELATED GOVERNMENT PROCUREMENT OPERATION, THE UNITED STATES GOVERNMENT THEREBY INCURS NO RESPONSIBILITY NOR ANY OBLIGATION WHATSOEVER; AND THE FACT THAT THE GOVERNMENT MAY HAVE FORMULATED, FURNISHED, OR IN ANY WAY SUPPLIED THE SAID DRAWINGS, SPECIFICATIONS OR OTHER DATA IS NOT TO BE REGARDED BY IMPLICATION OR OTHERWISE AS IN ANY MANNER LICENSING THE HOLDER OR ANY OTHER PERSON OR CORPORATION, OR CONVEYING ANY RIGHTS OR PERMISSION TO MANUFACTURE, USE, OR SELL ANY PATENTED INVENTION THAT MAY IN ANY WAY BE RELATED THERETO.

1004576

REVISIONS 04735			
SYM	DESCRIPTION	DATE	APPROVAL

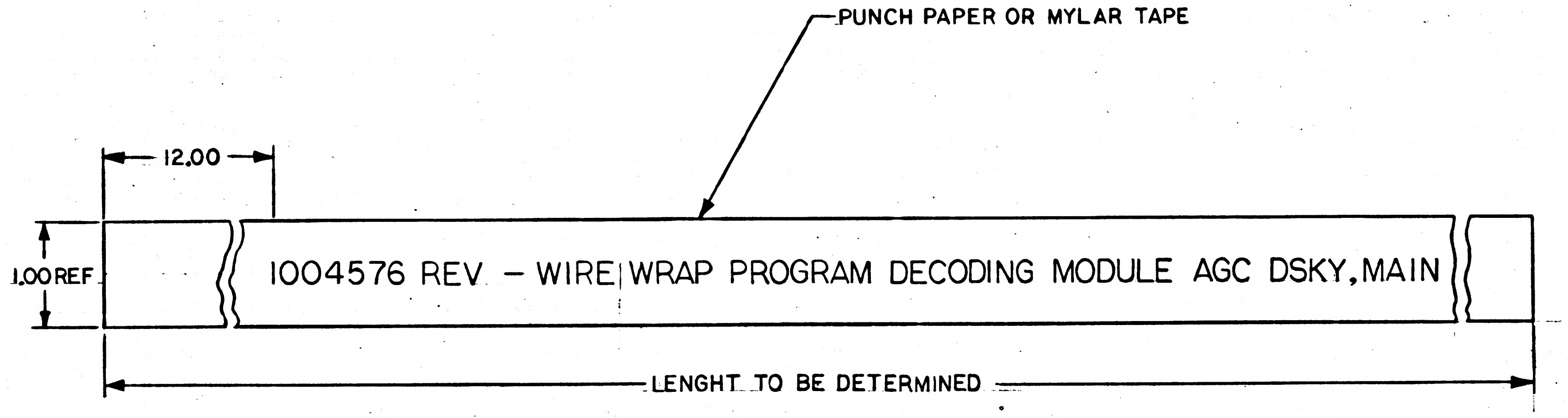
PUNCH PAPER OR MYLAR TAPE
12.00
1.00 REF
1004576 REV – WIRE WRAP PROGRAM DECODING MODULE AGC DSKY, MAIN
LENGHT TO BE DETERMINED

NOTE
1. INTERPRET DRAWING IN ACCORDANCE WITH STANDARDS PRESCRIBED BY MIL-D-70327

REFERENCES
1. WIRE WRAP ASSY 1003547
2. INTERCONN DIAGRAM 1006165

QTY REQD	PART OR IDENTIFYING NO.	NOMENCLATURE OR DESCRIPTION	FIND NO.

LIST OF MATERIALS

NEXT ASSY	USED ON
APPLICATION	

UNLESS OTHERWISE SPECIFIED DIMENSIONS ARE IN INCHES
TOLERANCES ON
FRACTIONS ± DECIMALS ±.10 ANGLES ±
DO NOT SCALE THIS DRAWING
MATERIAL
HEAT TREATMENT
FINAL FINISH

MIT
INSTRUMENTATION LAB
CAMBRIDGE, MASS.
DWG. NO. CONTRACT

DRAWN DATE 4 Nov 63
CHECKED S F Smith 15 Nov 63
APPROVAL E J Duggan 11-18-63
APPROVAL Eldon C Hall 15 Nov 63
NASA APPROVAL
MIT APPROVAL
MIT APPROVAL 11/19/63

MANNED SPACECRAFT CENTER
HOUSTON, TEXAS

WIRE WRAP PROGRAM
DECODING MODULE,
AGC DSKY, MAIN

CODE IDENT NO. —— SIZE C NASA DRAWING NO. 1004576
SCALE 1/1 WT SHEET 1 OF 1

MASTER

INCHES
0 1 2
PHOTOGRAPHIC SCALE ONLY

1004576

SYM	DESCRIPTION	DATE	APPROVAL
A	REVISED PER TDRR 05640	7 Jan 64	

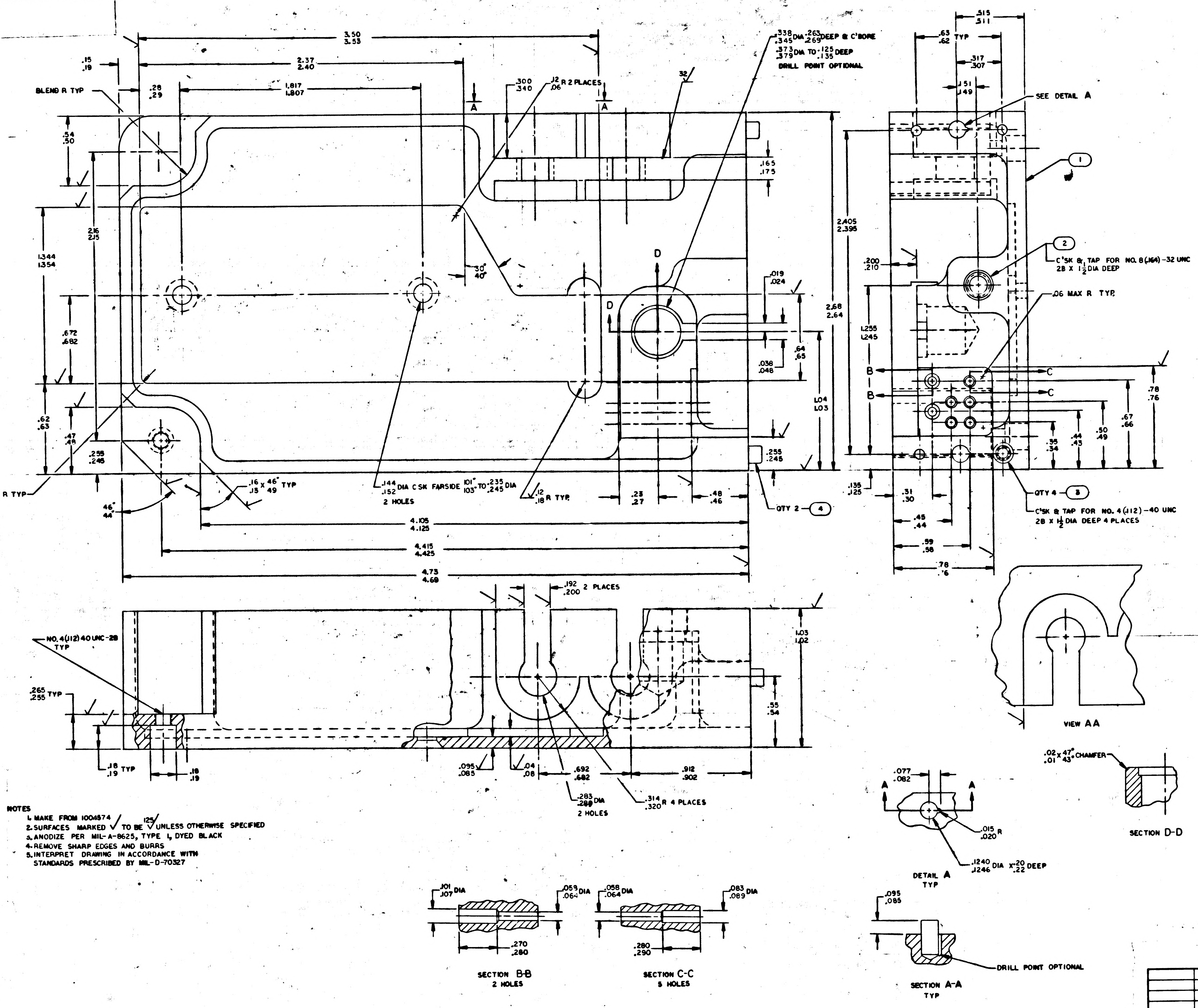

3.50 3.53
2.37 2.40
1.817 1.807
BLEND R TYP
.300 .340
.12 .06 R 2 PLACES
32
.338 .345 DIA .263 .269 DEEP & C'BORE
.373 .379 DIA TO .125 .135 DEEP
DRILL POINT OPTIONAL
.165 .175
2.16 2.15
1.344 1.354
.672 .682
.62 .63
.47 .48
.255 .245
30° 40°
.019 .024
.038 .048
.64 .65
1.04 1.03
2.68 2.64
2.405 2.395
.255 .245
.06 .03 R TYP
46° 44°
.16 .15 X 46° 49 TYP
.144 .152 DIA CSK FARSIDE 101° 103° TO .235 .245 DIA
2 HOLES
.12 .18 R TYP
.23 .27
.48 .46
QTY 2 ④
4.105 4.125
4.415 4.425
4.73 4.69
.515 .511
.63 .62 TYP
.317 .307
.151 .149
SEE DETAIL A
①
②
C'SK & TAP FOR NO. 8(.164)-32 UNC 2B X 1½ DIA DEEP
.06 MAX R TYP
.200 .210
1.255 1.245
.78 .76
.67 .66
.50 .49
.44 .43
.35 .34
.135 .125
.31 .30
.45 .44
.59 .58
.78 .76
QTY 4 ③
C'SK & TAP FOR NO. 4(.112)-40 UNC 2B X ½ DIA DEEP 4 PLACES
A
D
B
C
.192 .200 2 PLACES
NO. 4(.112) 40 UNC-2B TYP
.265 .255 TYP
1.03 1.02
.55 .54
.18 .19 TYP
.18 .19
.095 .085
.04 .08
.692 .682
.283 .289 DIA 2 HOLES
.314 .320 R 4 PLACES
.912 .902
VIEW AA
.02 .01 X 47° 43° CHAMFER
SECTION D-D
.077 .082
.015 .020 R
.1240 .1246 DIA X .20 .22 DEEP
DETAIL A TYP
.095 .085
DRILL POINT OPTIONAL
SECTION A-A TYP
.101 .107 DIA
.059 .064 DIA
.270 .280
SECTION B-B 2 HOLES
.058 .064 DIA
.083 .089 DIA
.280 .290
SECTION C-C 5 HOLES

NOTES
1. MAKE FROM 1004574
2. SURFACES MARKED √ TO BE 125√ UNLESS OTHERWISE SPECIFIED
3. ANODIZE PER MIL-A-8625, TYPE I, DYED BLACK
4. REMOVE SHARP EDGES AND BURRS
5. INTERPRET DRAWING IN ACCORDANCE WITH
STANDARDS PRESCRIBED BY MIL-D-70327

SEE NOTE 1

QTY REQD	PART OR IDENTIFYING NO.	NOMENCLATURE OR DESCRIPTION	FIND NO.
2	AN122691	PIN, DOWEL	4
4	MS21209-C0415	INSERT, HELICAL	3
1	MS21209-C0815	INSERT, HELICAL	2
1	1004577-1	HOUSING	1

LIST OF MATERIALS

NEXT ASSY	USED ON
1003532	

APPLICATION

UNLESS OTHERWISE SPECIFIED DIMENSIONS ARE IN INCHES
TOLERANCES ON
FRACTIONS ± DECIMALS ± ANGLES ±
DO NOT SCALE THIS DRAWING
MATERIAL SEE NOTE 1
HEAT TREATMENT
FINAL FINISH SEE NOTE 3

MIT INSTRUMENTATION LAB
CAMBRIDGE, MASS
DRAWN
CHECK A.R. Bogan 3DEC63
APPROVAL
APPROVAL R. J. Dunegan
NASA APPROVAL
MIT APPROVAL
MIT APPROVAL

MANNED SPACECRAFT CENTER
HOUSTON, TEXAS

HOUSING, MACHINED POWER SUPPLY AGC DSKY MAIN & NAV

CODE IDENT NO. —
SIZE J
NASA DRAWING NO. 1004577
SCALE 4/1
WT
SHEET 1 OF 1

1004577A

MASTER

SYM	DESCRIPTION	DATE	APPROVAL
A	REVISED PER TDRR 05640	7 Jan 64	
B	REVISED PER TDRR 05787	31 Jan 64	

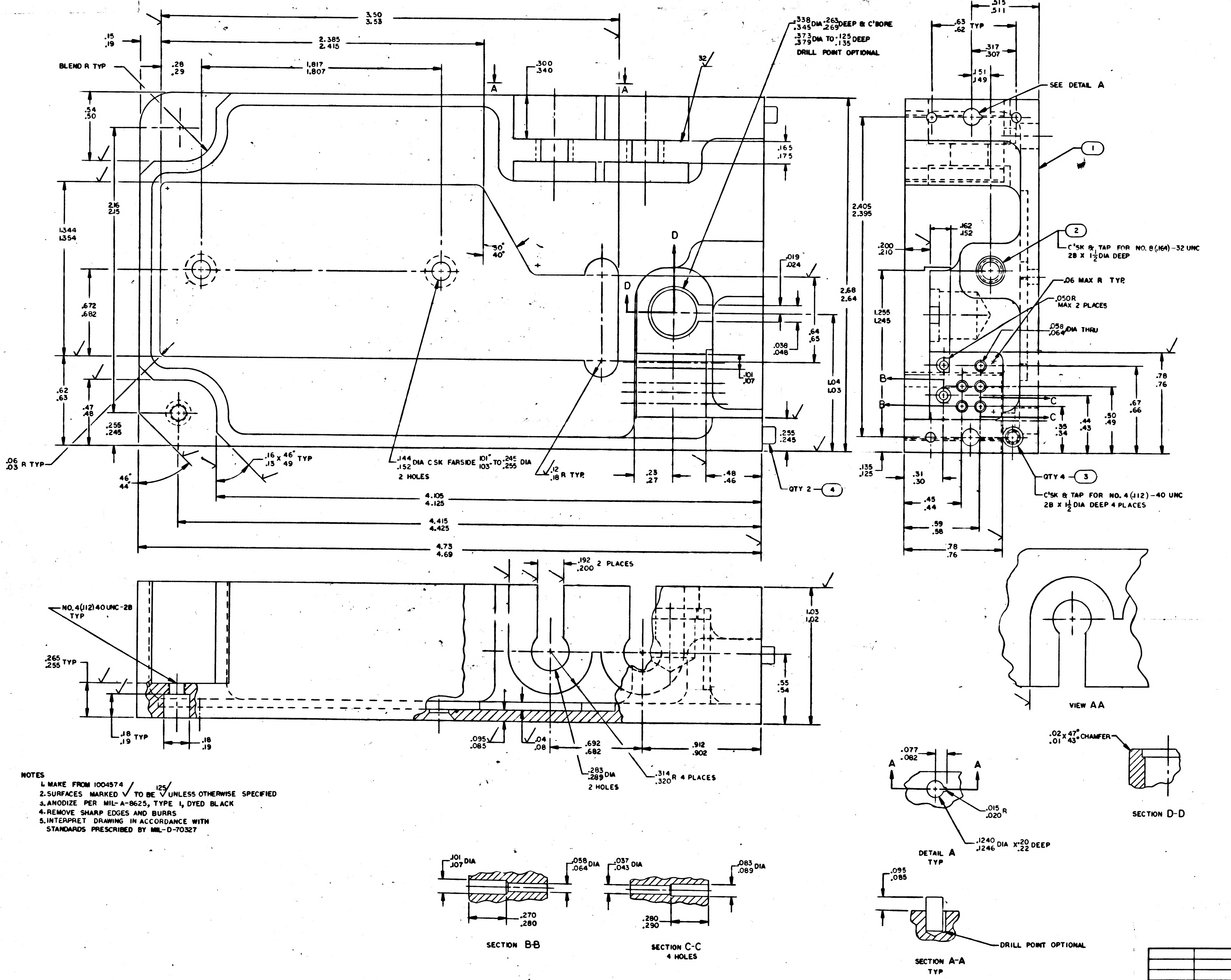

3.50 / 3.53
2.385 / 2.415
1.817 / 1.807
BLEND R TYP
.300 / .340
32
.338 / .345 DIA .263 / .269 DEEP & C'BORE
.373 / .379 DIA TO .125 / .135 DEEP
DRILL POINT OPTIONAL
.165 / .175
30° / 40°
.019 / .024
.038 / .048
.101 / .107
.64 / .65
2.405 / 2.395
2.68 / 2.64
1.04 / 1.03
.06 / .03 R TYP
.16 / .13 x 46° / 49 TYP
46° / 44°
.144 / .152 DIA CSK FARSIDE 101° / 103° TO .245 / .255 DIA
2 HOLES
.12 / .18 R TYP
.23 / .27
.48 / .46
.255 / .245
QTY 2 ④
4.105 / 4.125
4.415 / 4.425
4.73 / 4.69
.515 / .511
.63 / .62 TYP
.317 / .307
.151 / .149
SEE DETAIL A
①
②
C'SK & TAP FOR NO. 8 (.164)-32 UNC 2B X 1½ DIA DEEP
.06 MAX R TYP.
.050R MAX 2 PLACES
.058 / .064 DIA THRU
.78 / .76
.67 / .66
.50 / .49
.44 / .43
.35 / .34
QTY 4 ③
C'SK & TAP FOR NO. 4 (.112)-40 UNC 2B X 1½ DIA DEEP 4 PLACES
.192 / .200 2 PLACES
NO. 4 (.112) 40 UNC-2B TYP
.265 / .255 TYP
.18 / .19 TYP
1.03 / 1.02
.55 / .54
.095 / .085
.04 / .08
.692 / .682
.912 / .902
.283 / .289 DIA 2 HOLES
.314 / .320 R 4 PLACES
VIEW AA
.02 / .01 x 47° / 43° CHAMFER
SECTION D-D
.077 / .062
.015 / .020 R
.1240 / .1246 DIA x .20 / .22 DEEP
DETAIL A TYP
.095 / .085
DRILL POINT OPTIONAL
SECTION A-A TYP
.101 / .107 DIA
.058 / .064 DIA
.270 / .280
SECTION B-B
.037 / .043 DIA
.083 / .089 DIA
.280 / .290
SECTION C-C 4 HOLES

NOTES

1. MAKE FROM 1004574
2. SURFACES MARKED √ TO BE 125√ UNLESS OTHERWISE SPECIFIED
3. ANODIZE PER MIL-A-8625, TYPE I, DYED BLACK
4. REMOVE SHARP EDGES AND BURRS
5. INTERPRET DRAWING IN ACCORDANCE WITH STANDARDS PRESCRIBED BY MIL-D-70327

SEE NOTE 1

QTY REQD	PART OR IDENTIFYING NO.	NOMENCLATURE OR DESCRIPTION	FIND NO
2	AN122691	PIN, DOWEL	4
4	MS21209-C0415	INSERT, HELICAL	3
1	MS21209-C0815	INSERT, HELICAL	2
1	1004577-1	HOUSING	1

LIST OF MATERIALS

NEXT ASSY	USED ON
1003532	

APPLICATION

UNLESS OTHERWISE SPECIFIED DIMENSIONS ARE IN INCHES
TOLERANCES ON
FRACTIONS ± DECIMALS ± ANGLES ±
DO NOT SCALE THIS DRAWING
MATERIAL: SEE NOTE 1
HEAT TREATMENT
FINAL FINISH: SEE NOTE 3

MIT INSTRUMENTATION LAB
CAMBRIDGE, MASS.
CONTRACT
DRAWN: DATE 19 NOV 63
CHECKED: A.P. Bogni 3 DEC 63
APPROVAL
APPROVAL: R. J. Duggan
NASA APPROVAL
MIT APPROVAL
MIT APPROVAL

MANNED SPACECRAFT CENTER
HOUSTON, TEXAS

HOUSING, MACHINED
POWER SUPPLY
AGC DSKY MAIN & NAV

CODE IDENT NO. —
SIZE J
NASA DRAWING NO. 1004577
SCALE 4/1
WT
SHEET 1 OF 1

MASTER

SYM	DESCRIPTION	DATE	APPROVAL
A	REVISED PER TDRR 05640		
B	REVISED PER TDRR 05787		
C	REVISED PER TDRR 06958 DR CHK	3	

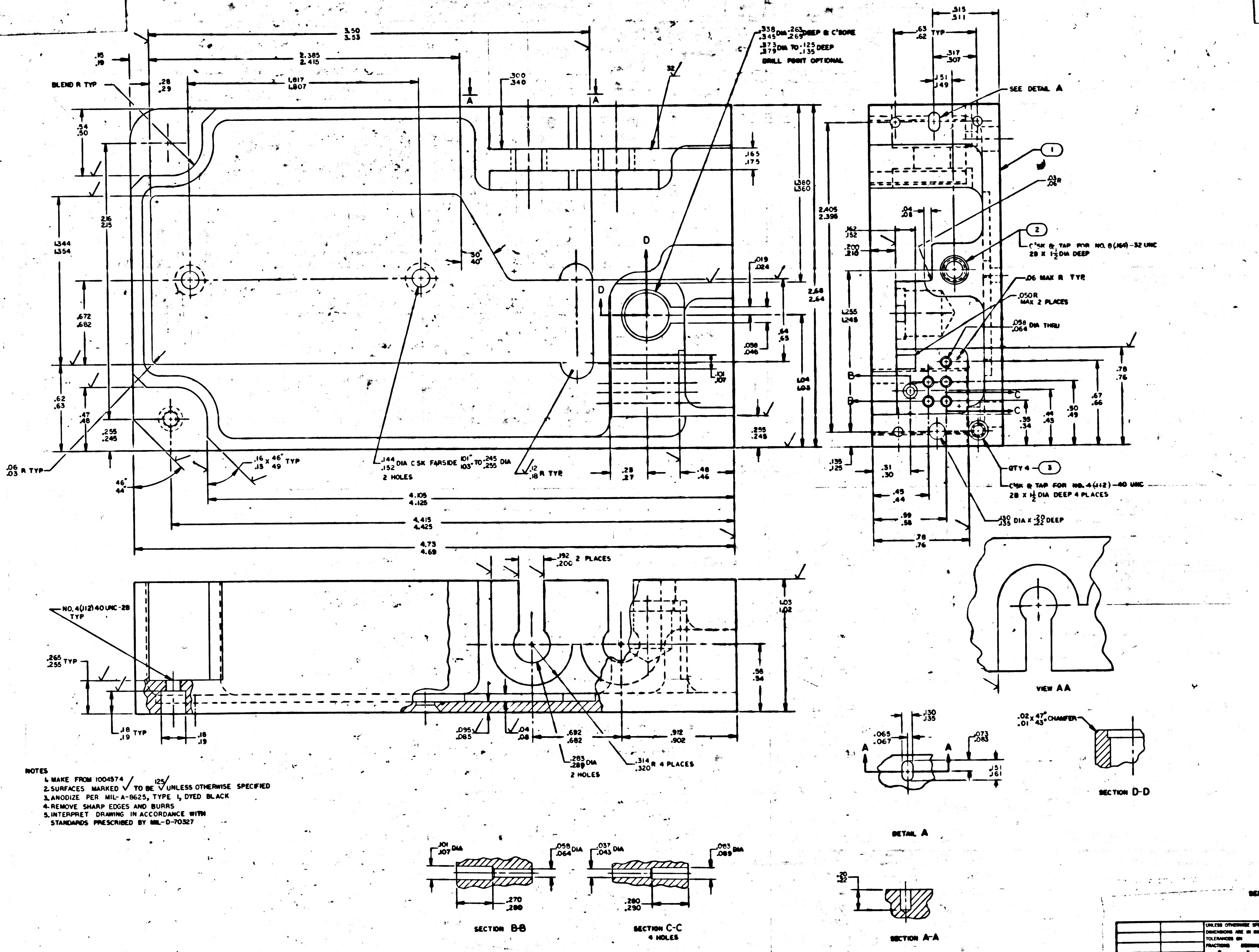

BLEND R TYP
3.50 3.53
2.385 2.415
1.817 1.807
.300 .340
A
A
32
.338 .345 DIA .263 .269 DEEP & C'BORE
.373 .379 DIA TO .125 .135 DEEP
DRILL POINT OPTIONAL
.15 .19
.28 .29
.34 .50
.165 .175
1.380 1.360
2.405 2.396
2.16 2.15
1.344 1.354
30° 40°
D
D
.019 .024
2.68 2.64
.672 .682
.038 .046
.64 .65
.101 .107
1.04 1.03
.62 .63
.47 .48
.255 .245
.255 .245
.06 .03 R TYP
.16 .15 X 46° 49 TYP
46° 44
.144 .152 DIA C'SK FARSIDE 101° 103° TO .245 .255 DIA
2 HOLES
.12 .18 R TYP
.28 .27
.48 .46
4.105 4.125
4.415 4.425
4.73 4.69
.315 .311
.63 .62 TYP
.317 .307
.151 .149
SEE DETAIL A
①
.03 .06 R
.04 .08
.162 .152
.200 .210
②
C'SK & TAP FOR NO. 8 (.164)-32 UNC
2B X 1½ DIA DEEP
.06 MAX R TYP
.050R MAX 2 PLACES
.058 .064 DIA THRU
1.255 1.245
B
B
C
C
.78 .76
.67 .66
.50 .49
.44 .43
.35 .34
.135 .125
.31 .30
.45 .44
.59 .58
.78 .76
QTY 4 ③
C'SK & TAP FOR NO. 4 (.112)-40 UNC
2B X 1½ DIA DEEP 4 PLACES
.130 .135 DIA X .20 .22 DEEP
VIEW AA
.192 .200 2 PLACES
NO. 4 (.112) 40 UNC-2B TYP
.265 .255 TYP
1.03 1.02
.56 .54
.18 .19 TYP
.18 .19
.095 .085
.04 .08
.692 .682
.912 .902
.283 .289 DIA
2 HOLES
.314 .320 R 4 PLACES
.130 .135
.065 .067
.073 .083
A
A
.151 .161
DETAIL A
.02 .01 X 47° 43° CHAMFER
SECTION D-D
.101 .107 DIA
.058 .064 DIA
.270 .280
SECTION B-B
.037 .043 DIA
.083 .089 DIA
.280 .290
SECTION C-C
4 HOLES
.20 .22
SECTION A-A

NOTES
1. MAKE FROM 1004574
2. SURFACES MARKED √ TO BE 125√ UNLESS OTHERWISE SPECIFIED
3. ANODIZE PER MIL-A-8625, TYPE I, DYED BLACK
4. REMOVE SHARP EDGES AND BURRS
5. INTERPRET DRAWING IN ACCORDANCE WITH STANDARDS PRESCRIBED BY MIL-D-70327

SEE NOTE 1

QTY REQD	PART OR IDENTIFYING NO.	NOMENCLATURE OR DESCRIPTION	FIND NO.
~~2~~	~~AN122681~~	~~PIN, DOWEL~~	~~4~~
4	MS21209-C0415	INSERT, HELICAL	3
1	MS21209-C0816	INSERT, HELICAL	2
1	1004577-1	HOUSING	1

LIST OF MATERIALS

1003532		UNLESS OTHERWISE SPECIFIED DIMENSIONS ARE IN INCHES TOLERANCES ON FRACTIONS ± DECIMALS ± ANGLES ± DO NOT SCALE THIS DRAWING	MIT INSTRUMENTATION LAB CAMBRIDGE, MASS DRAWN CHECKED A.R. Bagai 3DEC63 APPROVAL APPROVAL R. J.	MANNED SPACECRAFT CENTER HOUSTON, TEXAS HOUSING, MACHINED POWER SUPPLY AGC DSKY MAIN & NAV
NEXT ASSY	USED ON	MATERIAL SEE NOTE 1 HEAT TREATMENT	NASA APPROVAL	CODE IDENT NO. — SIZE J NASA DRAWING NO. 1004577
APPLICATION		FINAL FINISH SEE NOTE 3	MIT APPROVAL MIT APPROVAL	SCALE 4/1 WT SHEET 1 OF 1

NOTICE: WHEN GOVERNMENT DRAWINGS, SPECIFICATIONS, OR OTHER DATA ARE USED FOR ANY PURPOSE OTHER THAN IN CONNECTION WITH A DEFINITELY RELATED GOVERNMENT PROCUREMENT OPERATION, THE UNITED STATES GOVERNMENT THEREBY INCURS NO RESPONSIBILITY NOR ANY OBLIGATION WHATSOEVER; AND THE FACT THAT THE GOVERNMENT MAY HAVE FORMULATED, FURNISHED, OR IN ANY WAY SUPPLIED THE SAID DRAWINGS, SPECIFICATIONS, OR OTHER DATA IS NOT TO BE REGARDED BY IMPLICATION OR OTHERWISE AS IN ANY MANNER LICENSING THE HOLDER OR ANY OTHER PERSON OR CORPORATION, OR CONVEYING ANY RIGHTS OR PERMISSION TO MANUFACTURE, USE, OR SELL ANY PATENTED INVENTION THAT MAY IN ANY WAY BE RELATED THERETO.

REVISIONS			
SYM	DESCRIPTION	DATE	APPROVAL
A	REVISED PER TDRR 05640	7 Jan 64	
B	REVISED PER TDRR 05787	31 Jan 64	
C	REVISED PER TDRR 06953 DR CHK	3 [illegible] 64	
D	REVISED PER TDRR 07831 DR CHK A.R.B.	4/14/64	

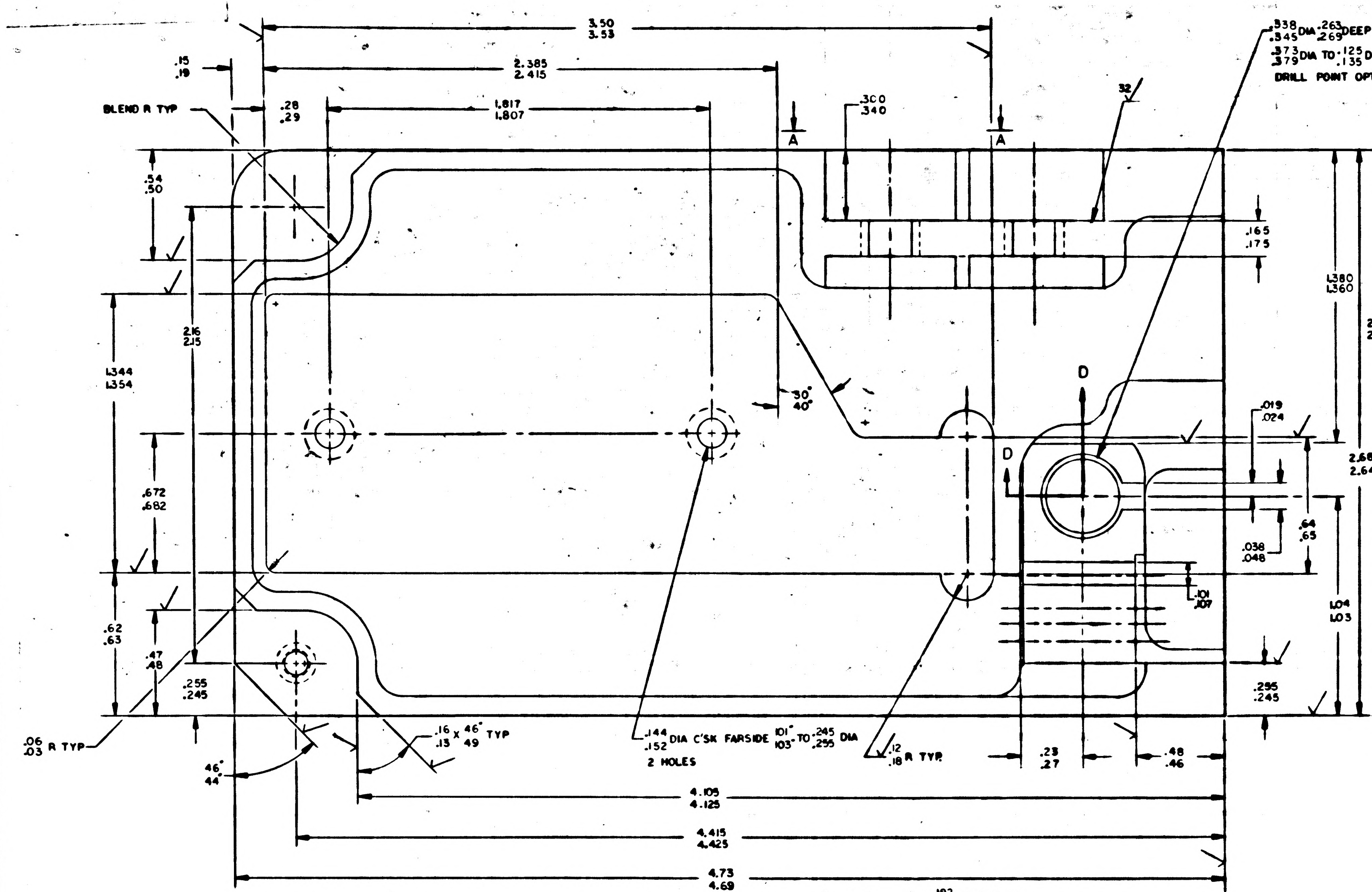

3.50 / 3.53
2.385 / 2.415
1.817 / 1.807
.15 / .19
.28 / .29
BLEND R TYP
.300 / .340
A
A
32
.338 / .345 DIA .263 / .269 DEEP & C'BORE
.373 / .379 DIA TO .125 / .135 DEEP
DRILL POINT OPTIONAL
.54 / .50
.165 / .175
1.380 / 1.360
2.16 / 2.15
1.344 / 1.354
30° / 40°
D
D
.019 / .024
2.405 / 2.395
2.68 / 2.64
.672 / .682
.038 / .048
.64 / .65
.101 / .107
1.04 / 1.03
.62 / .63
.47 / .48
.255 / .245
.295 / .245
.06 / .03 R TYP
46° / 44°
.16 / .13 X 46° / 49 TYP
.144 / .152 DIA C'SK FARSIDE 101° / 103° TO .245 / .255 DIA
2 HOLES
.12 / .18 R TYP
.23 / .27
.48 / .46
4.105 / 4.125
4.415 / 4.425
4.73 / 4.69

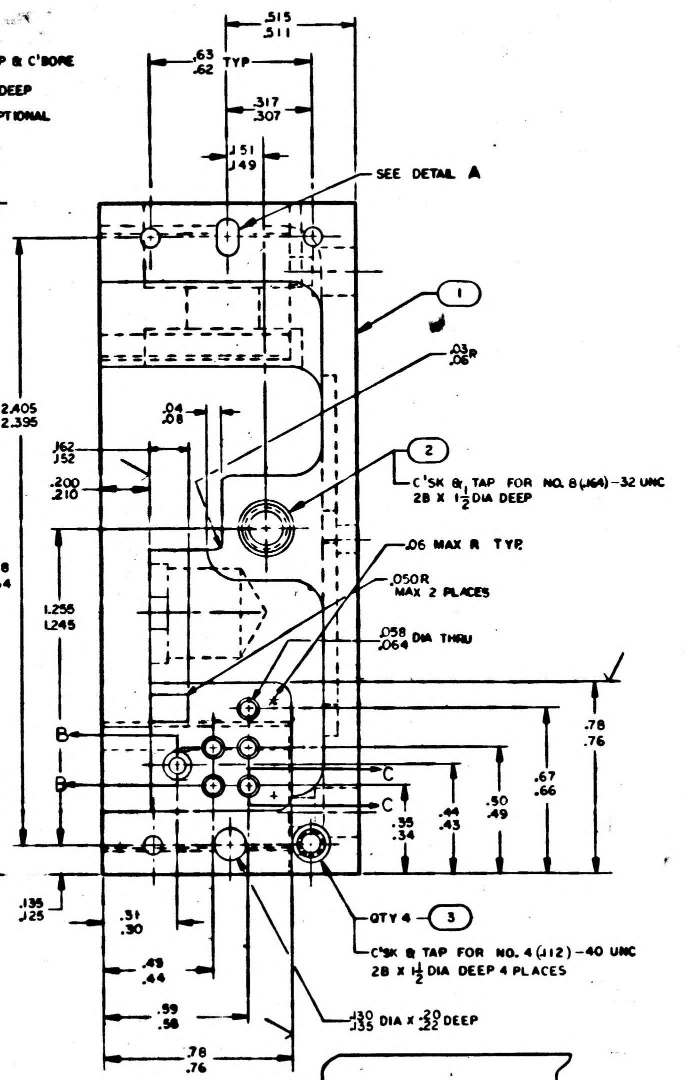

.515 / .511
.63 / .62 TYP
.317 / .307
.151 / .149
SEE DETAIL A
1
.03 / .06 R
.04 / .08
.162 / .152
.200 / .210
2
C'SK & TAP FOR NO. 8 (.164)-32 UNC
2B X 1 1/2 DIA DEEP
.06 MAX R TYP
.050R MAX 2 PLACES
1.255 / 1.245
.058 / .064 DIA THRU
.78 / .76
B
B
C
C
.67 / .66
.50 / .49
.44 / .43
.35 / .34
.135 / .125
.31 / .30
QTY 4
3
C'SK & TAP FOR NO. 4 (.112)-40 UNC
2B X 1 1/2 DIA DEEP 4 PLACES
.49 / .44
.59 / .56
.130 / .135 DIA X .20 / .22 DEEP
.78 / .76

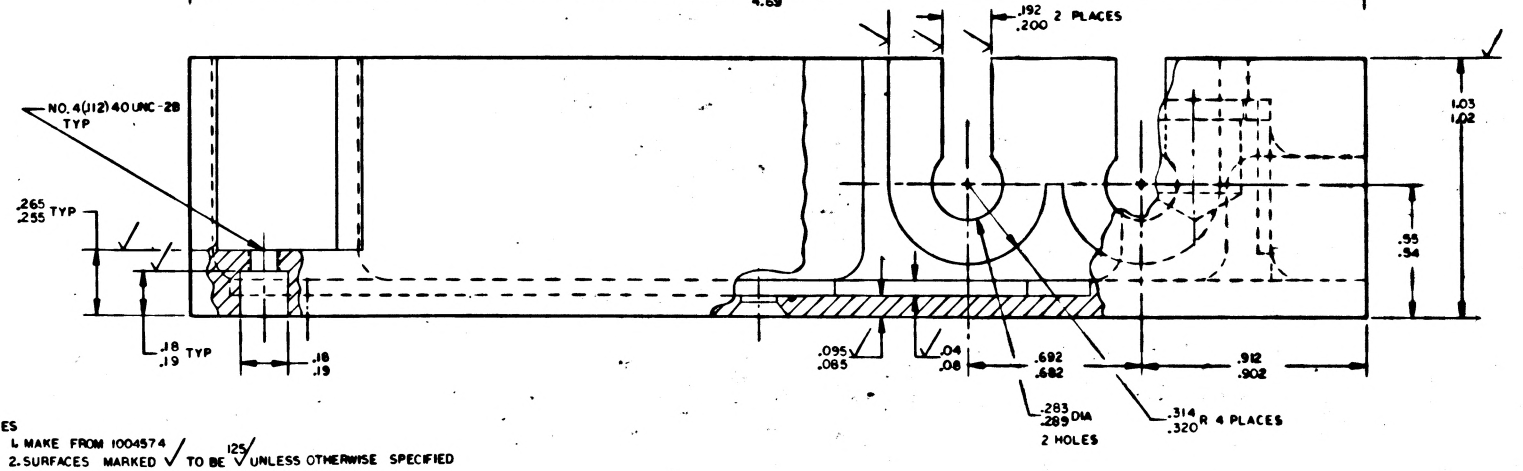

.192 / .200 2 PLACES
NO. 4 (.112) 40 UNC-2B TYP
.265 / .255 TYP
1.03 / 1.02
.55 / .54
.18 / .19 TYP
.18 / .19
.095 / .085
.04 / .08
.692 / .682
.912 / .902
.283 / .289 DIA
2 HOLES
.314 / .320 R 4 PLACES

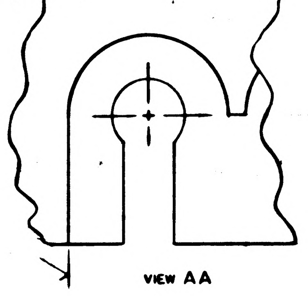

VIEW AA

NOTES
1. MAKE FROM 1004574
2. SURFACES MARKED √ TO BE 125√ UNLESS OTHERWISE SPECIFIED
3. ANODIZE PER MIL-A-8625, TYPE I; DYED BLACK
4. REMOVE SHARP EDGES AND BURRS
5. INTERPRET DRAWING IN ACCORDANCE WITH STANDARDS PRESCRIBED BY MIL-D-70327

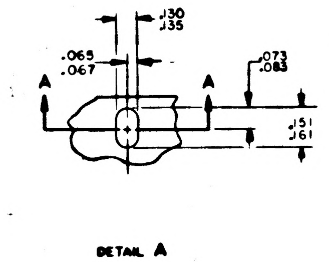

.130 / .135
.065 / .067
.073 / .083
A
A
.151 / .161

DETAIL A

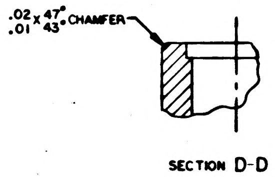

.02 / .01 X 47° / 43° CHAMFER

SECTION D-D

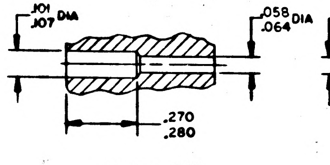

.101 / .107 DIA
.270 / .280

SECTION B-B

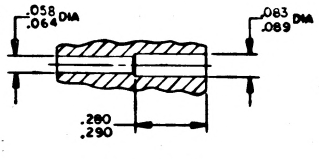

.058 / .064 DIA
.058 / .064 DIA
.083 / .089 DIA
.280 / .290

SECTION C-C
4 HOLES

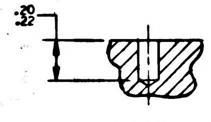

SECTION A-A

SEE NOTE 1

QTY REQD	PART OR IDENTIFYING NO.	NOMENCLATURE OR DESCRIPTION	FIND NO
~~2~~	~~AN122691~~	~~PIN, DOWEL~~	~~4~~
4	MS21209-C0415	INSERT, HELICAL	3
1	MS21209-C0815	INSERT, HELICAL	2
1	1004577-1	HOUSING	1

LIST OF MATERIALS

1003532	
NEXT ASSY	USED ON
APPLICATION	

UNLESS OTHERWISE SPECIFIED
DIMENSIONS ARE IN INCHES
TOLERANCES ON
FRACTIONS ± DECIMALS ± ANGLES ±
DO NOT SCALE THIS DRAWING
MATERIAL: SEE NOTE 1
HEAT TREATMENT
FINAL FINISH: SEE NOTE 3

MIT INSTRUMENTATION LAB
CAMBRIDGE, MASS.
DRAWN
CHECKED Q.R.Bogan 3DEC63
APPROVAL
APPROVAL
NASA APPROVAL
MIT APPROVAL
MIT APPROVAL

MANNED SPACECRAFT CENTER
HOUSTON, TEXAS

HOUSING, MACHINED
POWER SUPPLY
AGC DSKY MAIN & NAV

CODE IDENT NO. —
SIZE J
NASA DRAWING NO. 1004577
SCALE 4/1
WT
SHEET 1 OF 1

SYM	DESCRIPTION	DATE	APPROVAL
A	REVISED PER TDRR 05640	7 Jan 64	
B	REVISED PER TDRR 05787	Jan 64	
C	REVISED PER TDRR 06953 DR CHK	3 64	
D	REVISED PER TDRR 07831 DR CHK A.R.B.	9/14/64	HWC
E	REVISED PER TDRR 08400 DR CHK R.H.E.	5/7/64	HWC

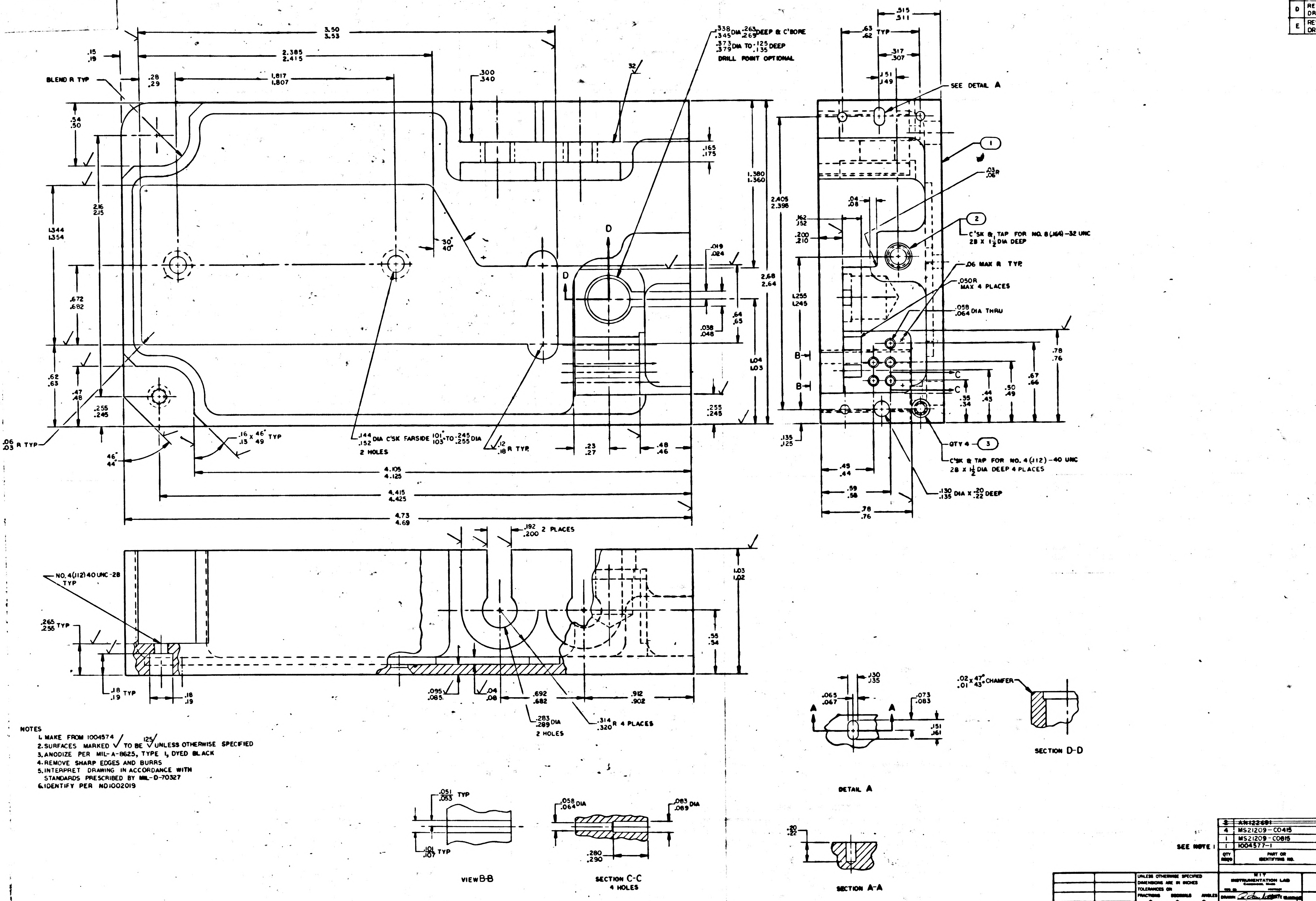
3.50
3.53
2.385
2.415
1.817
1.807
.15
.19
.28
.29
BLEND R TYP
.300
.340
32
.338 DIA .263 DEEP & C'BORE
.345 .269
.373 DIA TO .125 DEEP
.379 .135
DRILL POINT OPTIONAL
.54
.50
.165
.175
2.16
2.15
1.344
1.354
30°
40°
D
.019
.024
1.380
1.360
2.405
2.398
2.68
2.64
.672
.682
.038
.048
.64
.65
1.04
1.03
.62
.63
.47
.48
.255
.245
.06
.03 R TYP
46°
44°
.16 X 46° TYP
.13 49
.144 DIA C'SK FARSIDE 101° TO .245 DIA
.152 103° .255
2 HOLES
.12
.18 R TYP
.23
.27
.48
.46
4.105
4.125
4.415
4.425
4.73
4.69
.515
.511
.63
.62 TYP
.317
.307
.151
.149
SEE DETAIL A
1
.03
.06 R
.04
.08
.162
.152
.200
.210
2
C'SK & TAP FOR NO. 8 (.164)-32 UNC
2B X 1½ DIA DEEP
.06 MAX R TYP
.050 R
MAX 4 PLACES
.058
.064 DIA THRU
1.255
1.245
B
C
.78
.76
.67
.66
.50
.49
.44
.43
.35
.34
.135
.125
QTY 4 3
C'SK & TAP FOR NO. 4 (.112)-40 UNC
2B X 1½ DIA DEEP 4 PLACES
.130 DIA X .20 DEEP
.135 .22
.45
.44
.59
.58
.78
.76
.192
.200 2 PLACES
NO. 4 (.112) 40 UNC-2B
TYP
.265
.255 TYP
1.03
1.02
.55
.54
.18
.19 TYP
.18
.19
.095
.085
.04
.08
.692
.682
.283
.289 DIA
2 HOLES
.314
.320 R 4 PLACES
.912
.902
.130
.135
.065
.067
A
.073
.083
.151
.161
DETAIL A
.02 X 47° CHAMFER
.01 43°
SECTION D-D
.051
.053 TYP
.101
.107 TYP
VIEW B-B
.058
.064 DIA
.083
.089 DIA
.280
.290
SECTION C-C
4 HOLES
.20
.22
SECTION A-A

NOTES
1. MAKE FROM 1004574
2. SURFACES MARKED √ TO BE 125√ UNLESS OTHERWISE SPECIFIED
3. ANODIZE PER MIL-A-8625, TYPE I, DYED BLACK
4. REMOVE SHARP EDGES AND BURRS
5. INTERPRET DRAWING IN ACCORDANCE WITH STANDARDS PRESCRIBED BY MIL-D-70327
6. IDENTIFY PER ND1002019

SEE NOTE 1

QTY REQD	PART OR IDENTIFYING NO.	NOMENCLATURE OR DESCRIPTION	FIND NO.
~~2~~	~~AN122681~~	~~PIN, DOWEL~~	~~4~~
4	MS21209-C0415	INSERT, HELICAL	3
1	MS21209-C0815	INSERT, HELICAL	2
1	1004577-1	HOUSING	1

LIST OF MATERIALS

NEXT ASSY	USED ON
1003532	1003524

APPLICATION

UNLESS OTHERWISE SPECIFIED
DIMENSIONS ARE IN INCHES
TOLERANCES ON
FRACTIONS ± DECIMALS ± ANGLES ±
DO NOT SCALE THIS DRAWING
MATERIAL
SEE NOTE 1
HEAT TREATMENT
FINAL FINISH
SEE NOTE 3

MIT
INSTRUMENTATION LAB
CAMBRIDGE, MASS.
DRAWN
CHECKED A.R.Bogan 3DEC63
APPROVAL
APPROVAL R. J. Duggan
NASA APPROVAL
MIT APPROVAL
MIT APPROVAL

MANNED SPACECRAFT CENTER
HOUSTON, TEXAS

HOUSING, MACHINED
POWER SUPPLY
AGC DSKY MAIN & NAV

CODE IDENT NO. —
SIZE J
NASA DRAWING NO. 1004577
SCALE 4/1
WT
SHEET 1 OF 1

1004577 E

SYM	DESCRIPTION	DATE	APPROVAL

REVISIONS

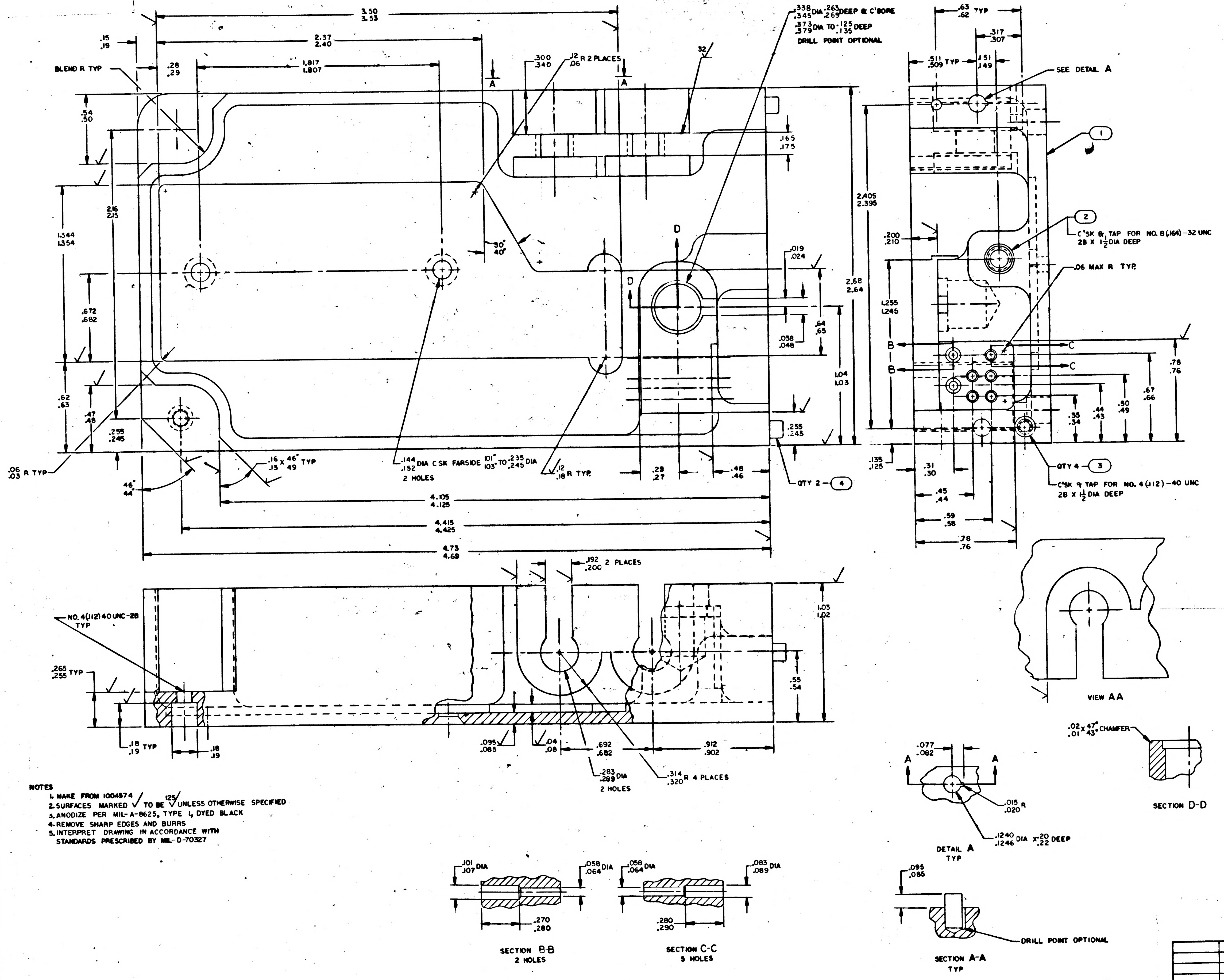

BLEND R TYP
3.50 / 3.53
2.37 / 2.40
1.817 / 1.807
.300 / .340
.12 / .06 R 2 PLACES
32
.338 / .345 DIA .263 / .269 DEEP & C'BORE
.373 / .379 DIA TO .125 / .135 DEEP
DRILL POINT OPTIONAL
.165 / .175
2.405 / 2.395
2.68 / 2.64
.019 / .024
.038 / .048
.64 / .65
1.04 / 1.03
.255 / .245
QTY 2 — 4
.144 / .152 DIA CSK FARSIDE 101° / 103° TO .235 / .245 DIA
2 HOLES
.12 / .18 R TYP
.16 / .13 x 46° / 49 TYP
.06 / .03 R TYP
46° / 44°
30° / 40°
.28 / .27
.48 / .46
4.105 / 4.125
4.415 / 4.425
4.73 / 4.69
.15 / .19
.28 / .29
.54 / .50
1.344 / 1.354
2.16 / 2.15
.672 / .682
.62 / .63
.47 / .48
.255 / .245
A
D
.63 / .62 TYP
.317 / .307
.511 / .509 TYP
.151 / .149
SEE DETAIL A
1
2
C'SK & TAP FOR NO. 8 (.164)-32 UNC 2B x 1 1/2 DIA DEEP
.06 MAX R TYP
.200 / .210
1.255 / 1.245
B
C
.78 / .76
.67 / .66
.50 / .49
.44 / .43
.35 / .34
.135 / .125
.31 / .30
.45 / .44
.59 / .58
.78 / .76
QTY 4 — 3
C'SK & TAP FOR NO. 4 (.112)-40 UNC 2B x 1 1/2 DIA DEEP
.192 / .200 2 PLACES
NO. 4 (.112) 40 UNC-2B TYP
.265 / .255 TYP
.18 / .19 TYP
.18 / .19
1.03 / 1.02
.55 / .54
.095 / .085
.04 / .08
.692 / .682
.283 / .289 DIA 2 HOLES
.314 / .320 R 4 PLACES
.912 / .902
VIEW AA
.02 / .01 x 47° / 43° CHAMFER
SECTION D-D
.077 / .082
.015 / .020 R
.1240 / .1246 DIA x .20 / .22 DEEP
DETAIL A TYP
.095 / .085
DRILL POINT OPTIONAL
SECTION A-A TYP
.101 / .107 DIA
.058 / .064 DIA
.270 / .280
SECTION B-B 2 HOLES
.058 / .064 DIA
.083 / .089 DIA
.280 / .290
SECTION C-C 5 HOLES

NOTES
1. MAKE FROM 1004574
2. SURFACES MARKED √ TO BE 125√ UNLESS OTHERWISE SPECIFIED
3. ANODIZE PER MIL-A-8625, TYPE I, DYED BLACK
4. REMOVE SHARP EDGES AND BURRS
5. INTERPRET DRAWING IN ACCORDANCE WITH STANDARDS PRESCRIBED BY MIL-D-70327

SEE NOTE 1

QTY REQD	PART OR IDENTIFYING NO.	NOMENCLATURE OR DESCRIPTION	FIND NO.
2	AN122691	PIN, DOWEL	4
4	MS21209-C0415	INSERT, HELICAL	3
1	MS21209-C0815	INSERT, HELICAL	2
1	1004577-1	HOUSING	1

LIST OF MATERIALS

NEXT ASSY	USED ON
1003532	

APPLICATION

UNLESS OTHERWISE SPECIFIED
DIMENSIONS ARE IN INCHES
TOLERANCES ON
FRACTIONS ± DECIMALS ± ANGLES ±
DO NOT SCALE THIS DRAWING
MATERIAL SEE NOTE 1
HEAT TREATMENT
FINAL FINISH SEE NOTE 3

MIT
INSTRUMENTATION LAB
CAMBRIDGE, MASS
DRAWN
CHECKED A.P. Bogar 3 DEC 63
APPROVAL
APPROVAL R. J. Duggan
NASA APPROVAL
MIT APPROVAL
MIT APPROVAL

MANNED SPACECRAFT CENTER
HOUSTON, TEXAS

HOUSING, MACHINED POWER SUPPLY AGC DSKY MAIN & NAV

CODE IDENT NO. —
SIZE J
NASA DRAWING NO. 1004577
SCALE 4/1
WT
SHEET 1 OF 1

MASTER

NOTICE — WHEN GOVERNMENT DRAWINGS, SPECIFICATIONS, OR OTHER DATA ARE USED FOR ANY PURPOSE OTHER THAN IN CONNECTION WITH A DEFINITELY RELATED GOVERNMENT PROCUREMENT OPERATION, THE UNITED STATES GOVERNMENT THEREBY INCURS NO RESPONSIBILITY NOR ANY OBLIGATION WHATSOEVER; AND THE FACT THAT THE GOVERNMENT MAY HAVE FORMULATED, FURNISHED, OR IN ANY WAY SUPPLIED THE SAID DRAWINGS, SPECIFICATIONS OR OTHER DATA IS NOT TO BE REGARDED BY IMPLICATION OR OTHERWISE AS IN ANY MANNER LICENSING THE HOLDER OR ANY OTHER PERSON OR CORPORATION, OR CONVEYING ANY RIGHTS OR PERMISSION TO MANUFACTURE, USE, OR SELL ANY PATENTED INVENTION THAT MAY IN ANY WAY BE RELATED THERETO.

1004579 A

REVISIONS 84749

SYM	DESCRIPTION	DATE	APPROVAL
A	REVISED PER TDRR 05050	10 DEC 63	JFW 12/17/63

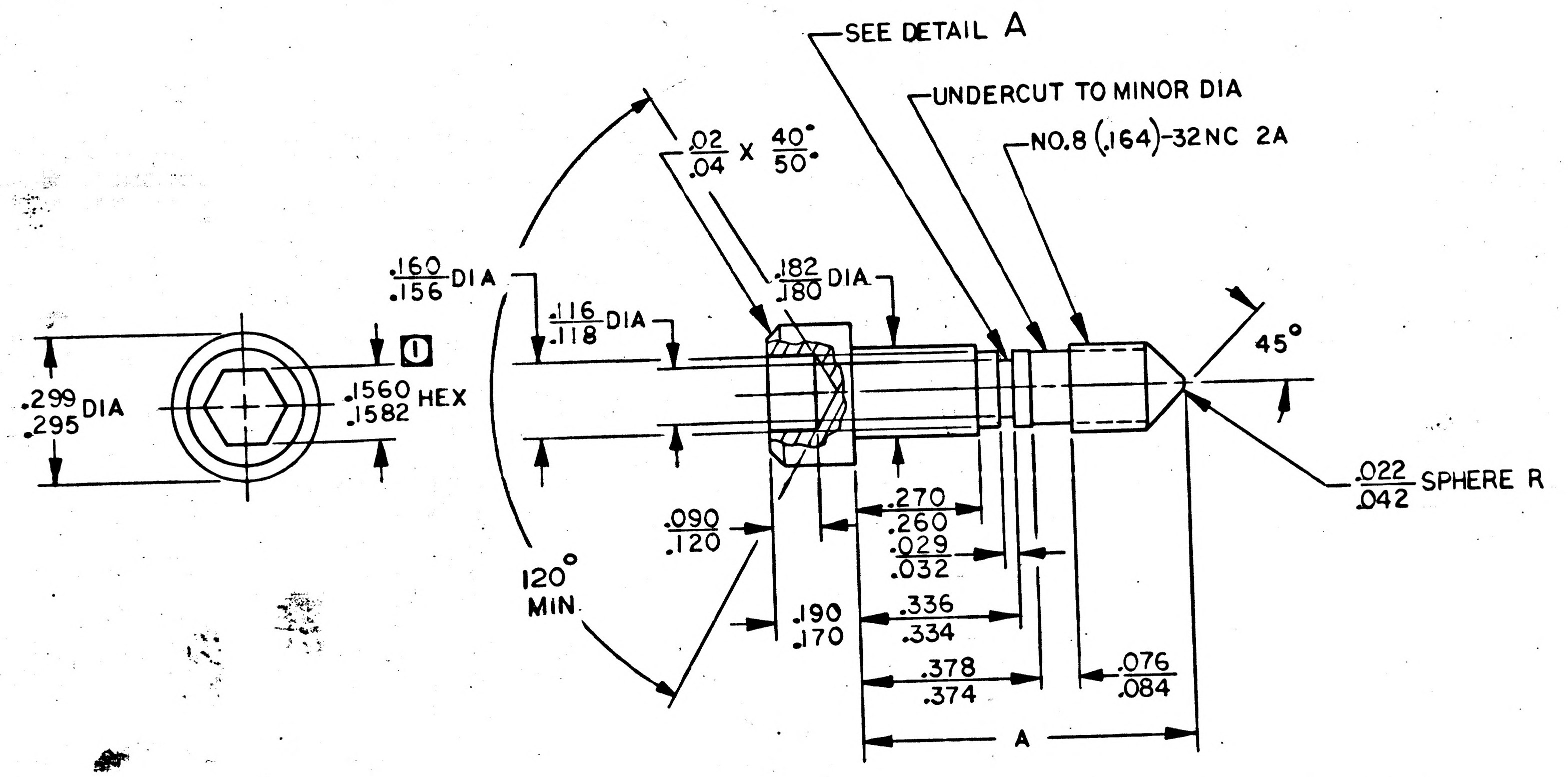
SEE DETAIL A
UNDERCUT TO MINOR DIA
NO.8 (.164)-32NC 2A
.02/.04 X 40°/50°
.160/.156 DIA
.182/.180 DIA
.116/.118 DIA
1
.299/.295 DIA
.1560/.1582 HEX
45°
.022/.042 SPHERE R
.270/.260
.029/.032
.090/.120
120° MIN.
.190/.170
.336/.334
.378/.374
.076/.084
A

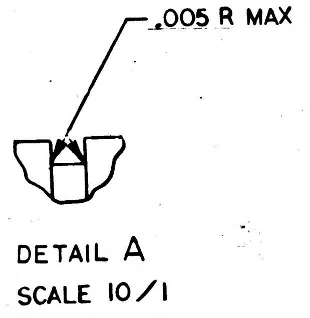

DETAIL A
SCALE 10/1

PART NO.	DIM A ±.005
1004579-1	.700
1004579-2	.875

NOTES

1. MATL: 416 SE CRES, CLASS 416 SE, COND H, PER QQ-S-763
2. REMOVE BURRS AND SHARP EDGES
3. PASSIVATE PER MIL-F-14072, FINISH E 300, TYPE I
4. INTERPRET DRAWING IN ACCORDANCE WITH STANDARDS PRESCRIBED BY MIL-D-70327
5. $\boxed{1}$ DIMENSION CONTROLLED BY ICD MH01-01002-116
6. REMOVE BURRS & CHIPS FROM BOTTOM OF BROACHED HOLE

MASTER

QTY REQD	PART OR IDENTIFYING NO.	NOMENCLATURE OR DESCRIPTION	FIND NO.

LIST OF MATERIALS

NEXT ASSY	USED ON
APPLICATION	

UNLESS OTHERWISE SPECIFIED
DIMENSIONS ARE IN INCHES
TOLERANCES ON
FRACTIONS ± DECIMALS ± ANGLES ± 2°
DO NOT SCALE THIS DRAWING

MATERIAL SEE NOTE 1
HEAT TREATMENT NONE
FINAL FINISH SEE NOTE 3

MIT
INSTRUMENTATION LAB
CAMBRIDGE, MASS.
DWG. NO. CONTRACT

DRAWN Emmons DATE Oct 3 63
CHECKED H Smith cc 4 Oct 63
APPROVAL
APPROVAL E. J. Duggan 11-19-63
NASA APPROVAL
MIT APPROVAL
MIT APPROVAL L Halzel 11/19/63

MANNED SPACECRAFT CENTER
HOUSTON, TEXAS

SCREW, JACKING

CODE IDENT NO. —
SIZE C
NASA DRAWING NO. 1004579
SCALE 4/1
WT
SHEET 1 OF 1

INCHES
0 1 2
PHOTOGRAPHIC SCALE ONLY

1004579 A

NOTICE — WHEN GOVERNMENT DRAWINGS, SPECIFICATIONS, OR OTHER DATA ARE USED FOR ANY PURPOSE OTHER THAN IN CONNECTION WITH A DEFINITELY RELATED GOVERNMENT PROCUREMENT OPERATION, THE UNITED STATES GOVERNMENT THEREBY INCURS NO RESPONSIBILITY NOR ANY OBLIGATION WHATSOEVER; AND THE FACT THAT THE GOVERNMENT MAY HAVE FORMULATED, FURNISHED, OR IN ANY WAY SUPPLIED THE SAID DRAWINGS, SPECIFICATIONS OR OTHER DATA IS NOT TO BE REGARDED BY IMPLICATION OR OTHERWISE AS IN ANY MANNER LICENSING THE HOLDER OR ANY OTHER PERSON OR CORPORATION, OR CONVEYING ANY RIGHTS OR PERMISSION TO MANUFACTURE, USE, OR SELL ANY PATENTED INVENTION THAT MAY IN ANY WAY BE RELATED THERETO.

1004579 B

REVISIONS 64749

SYM	DESCRIPTION	DATE	APPROVAL
A	REVISED PER TDRR 05050	10 DEC 63	JFW 12/17/63 EPK
B	REVISED PER TDRR 05189	12 DEC 63	TD EPK

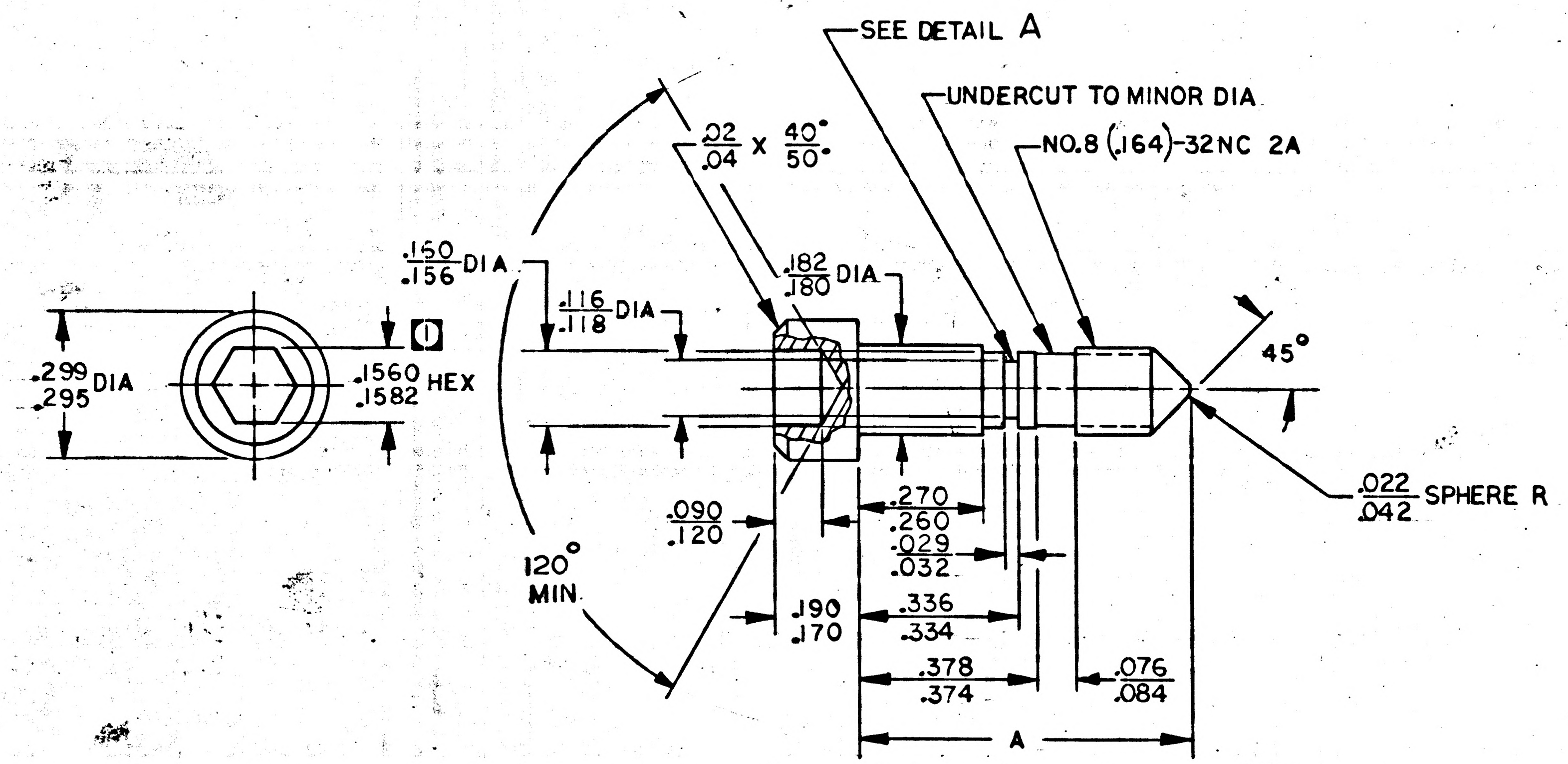
SEE DETAIL A
UNDERCUT TO MINOR DIA
NO.8 (.164)-32NC 2A
.02/.04 X 40°/50°
.160/.156 DIA
.182/.180 DIA
.116/.118 DIA
.299/.295 DIA
.1560/.1582 HEX
①
45°
.022/.042 SPHERE R
.270/.260
.029/.032
.090/.120
120° MIN
.190/.170
.336/.334
.378/.374
.076/.084
A

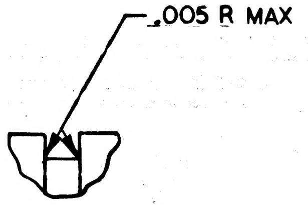

DETAIL A
SCALE 10/1

PART NO.	DIM A ±.005
1004579-1	.700
1004579-2	.875

NOTES

1. MATL: 416 CRES, CLASS 416, COND. H, PER QQ-S-763
2. REMOVE BURRS AND SHARP EDGES
3. PASSIVATE PER MIL-F-14072, FINISH E 300, TYPE I
4. INTERPRET DRAWING IN ACCORDANCE WITH STANDARDS PRESCRIBED BY MIL-D-70327
5. ① DIMENSION CONTROLLED BY ICD MH01-01002-116
6. REMOVE BURRS & CHIPS FROM BOTTOM OF BROACHED HOLE

MASTER

QTY REQD	PART OR IDENTIFYING NO.	NOMENCLATURE OR DESCRIPTION	FIND NO.

LIST OF MATERIALS

NEXT ASSY	USED ON
APPLICATION	

UNLESS OTHERWISE SPECIFIED DIMENSIONS ARE IN INCHES
TOLERANCES ON
FRACTIONS ± DECIMALS ± ANGLES ± 2°
DO NOT SCALE THIS DRAWING
MATERIAL SEE NOTE 1
HEAT TREATMENT NONE
FINAL FINISH SEE NOTE 3

MIT
INSTRUMENTATION LAB
CAMBRIDGE, MASS.
DWG. NO. CONTRACT

DRAWN [illegible] DATE Oct 3 63
CHECKED H Smith 4 Oct 63
APPROVAL
APPROVAL E. D. Duggan 11-21-63
NASA APPROVAL [illegible]
MIT APPROVAL
MIT APPROVAL L Holzel 11/19/63

MANNED SPACECRAFT CENTER
HOUSTON, TEXAS

SCREW, JACKING

CODE IDENT NO.	SIZE	NASA DRAWING NO.
—	C	1004579
SCALE 4/1	WT	SHEET 1 OF 1

NOTICE — WHEN GOVERNMENT DRAWINGS, SPECIFICATIONS, OR OTHER DATA ARE USED FOR ANY PURPOSE OTHER THAN IN CONNECTION WITH A DEFINITELY RELATED GOVERNMENT PROCUREMENT OPERATION, THE UNITED STATES GOVERNMENT THEREBY INCURS NO RESPONSIBILITY NOR ANY OBLIGATION WHATSOEVER; AND THE FACT THAT THE GOVERNMENT MAY HAVE FORMULATED, FURNISHED, OR IN ANY WAY SUPPLIED THE SAID DRAWINGS, SPECIFICATIONS OR OTHER DATA IS NOT TO BE REGARDED BY IMPLICATION OR OTHERWISE AS IN ANY MANNER LICENSING THE HOLDER OR ANY OTHER PERSON OR CORPORATION, OR CONVEYING ANY RIGHTS OR PERMISSION TO MANUFACTURE, USE, OR SELL ANY PATENTED INVENTION THAT MAY IN ANY WAY BE RELATED THERETO.

1004579 C

REVISIONS 04749

SYM	DESCRIPTION	DATE	APPROVAL
A	REVISED PER TDRR 05050	10 DEC 63	JFW 12/17/63 EPK
B	REVISED PER TDRR 05189	12 DEC 63	EPK
C	REVISED PER TDRR 05771	22 Jan 64	

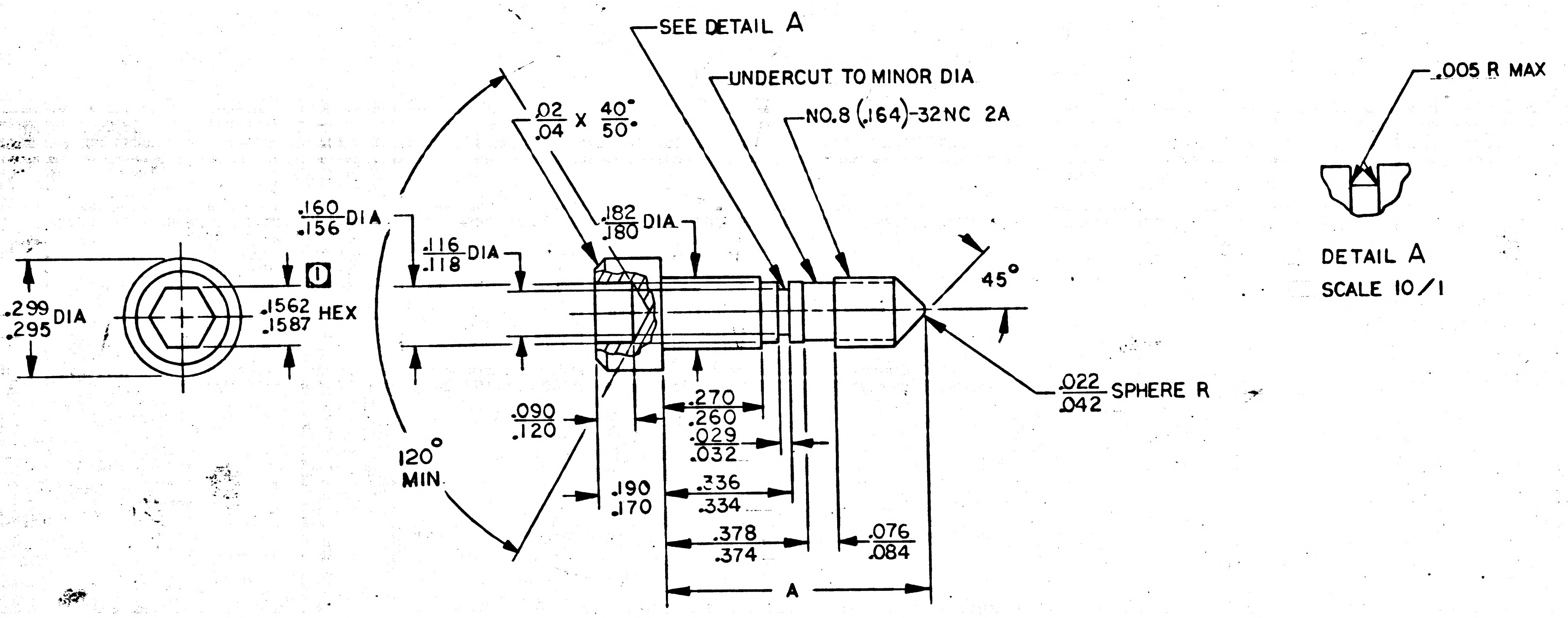
SEE DETAIL A
UNDERCUT TO MINOR DIA
NO.8 (.164)-32NC 2A
.02/.04 X 40°/50°
.160/.156 DIA
.116/.118 DIA
.182/.180 DIA
.299/.295 DIA
.1562/.1587 HEX
1
45°
.022/.042 SPHERE R
.090/.120
.270/.260
.029/.032
120° MIN
.190/.170
.336/.334
.378/.374
.076/.084
A
.005 R MAX
DETAIL A
SCALE 10/1

PART NO.	DIM A ±.005
1004579-1	.700
1004579-2	.875

NOTES
1. MATL: 416 CRES, CLASS 416, COND. H, PER QQ-S-763
2. REMOVE BURRS AND SHARP EDGES
3. PASSIVATE PER MIL-F-14072, FINISH E 300, TYPE I
4. INTERPRET DRAWING IN ACCORDANCE WITH STANDARDS PRESCRIBED BY MIL-D-70327
5. 1 DIMENSION CONTROLLED BY ICD MH01-01002-116
6. REMOVE BURRS & CHIPS FROM BOTTOM OF BROACHED HOLE

MASTER

QTY REQD	PART OR IDENTIFYING NO.	NOMENCLATURE OR DESCRIPTION	FIND NO.

LIST OF MATERIALS

NEXT ASSY	USED ON
APPLICATION	

UNLESS OTHERWISE SPECIFIED DIMENSIONS ARE IN INCHES
TOLERANCES ON
FRACTIONS ±
DECIMALS ±
ANGLES ± 2°
DO NOT SCALE THIS DRAWING
MATERIAL SEE NOTE 1
HEAT TREATMENT NONE
FINAL FINISH SEE NOTE 3

MIT INSTRUMENTATION LAB
CAMBRIDGE, MASS.
DWG. NO.
CONTRACT
DRAWN DATE Oct 3 63
CHECKED Smith 4 Oct 63
APPROVAL
APPROVAL 11-13-63
NASA APPROVAL
MIT APPROVAL
MIT APPROVAL 11/19/63

MANNED SPACECRAFT CENTER
HOUSTON, TEXAS

SCREW, JACKING

CODE IDENT NO. —
SIZE C
NASA DRAWING NO. 1004579
SCALE 4/1
WT
SHEET 1 OF 1

NOTICE — WHEN GOVERNMENT DRAWINGS, SPECIFICATIONS, OR OTHER DATA ARE USED FOR ANY PURPOSE OTHER THAN IN CONNECTION WITH A DEFINITELY RELATED GOVERNMENT PROCUREMENT OPERATION, THE UNITED STATES GOVERNMENT THEREBY INCURS NO RESPONSIBILITY NOR ANY OBLIGATION WHATSOEVER; AND THE FACT THAT THE GOVERNMENT MAY HAVE FORMULATED, FURNISHED, OR IN ANY WAY SUPPLIED THE SAID DRAWINGS, SPECIFICATIONS OR OTHER DATA IS NOT TO BE REGARDED BY IMPLICATION OR OTHERWISE AS IN ANY MANNER LICENSING THE HOLDER OR ANY OTHER PERSON OR CORPORATION, OR CONVEYING ANY RIGHTS OR PERMISSION TO MANUFACTURE, USE, OR SELL ANY PATENTED INVENTION THAT MAY IN ANY WAY BE RELATED THERETO.

D 1004579

REVISIONS 64749

SYM	DESCRIPTION	DATE	APPROVAL
A	REVISED PER TDRR 05050	10 DEC 63	SFW 12/17/63 RPK
B	REVISED PER TDRR 05189	12 DEC 63	RPK
C	REVISED PER TDRR 05771	22 JAN 64	
D	REVISED PER TDRR 07258 DR. CHK APPD	18 MAR 64 3/22/64	

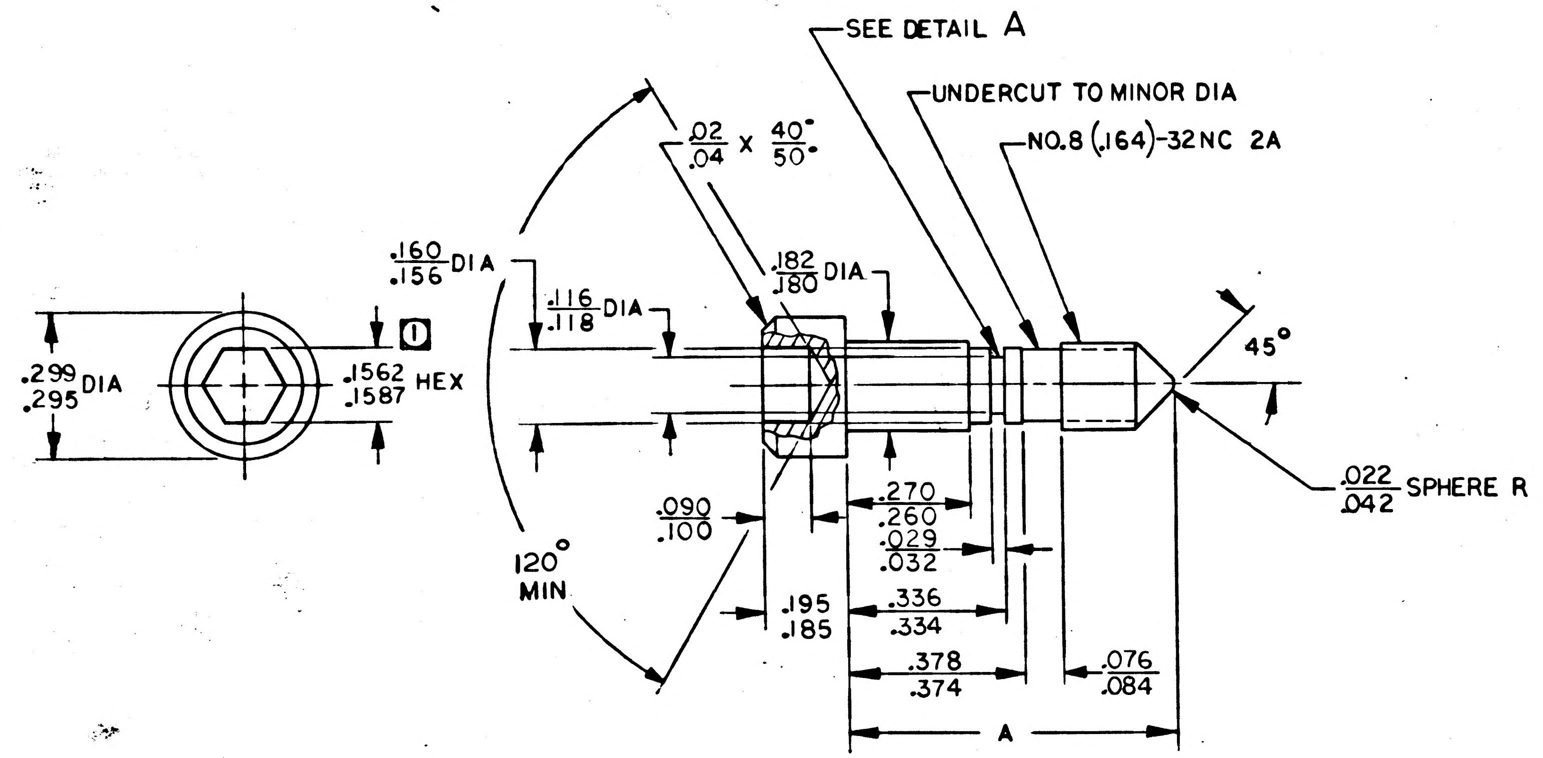

SEE DETAIL A
UNDERCUT TO MINOR DIA
NO.8 (.164)-32NC 2A
.02/.04 X 40°/50°
.160/.156 DIA
.116/.118 DIA
.182/.180 DIA
.299/.295 DIA
.1562/.1587 HEX
1
45°
.022/.042 SPHERE R
.090/.100
120° MIN
.270/.260
.029/.032
.195/.185
.336/.334
.378/.374
.076/.084
A

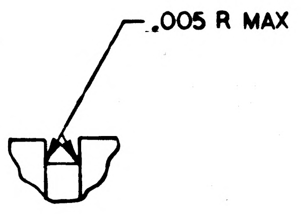

DETAIL A
SCALE 10/1

PART NO.	DIM A ±.005
1004579-1	.700
1004579-2	.875

NOTES

1. MATL: 416 CRES, CLASS 416, COND. A PER QQ-S-763 (HEAD TO BE COLD FORMED)
2. REMOVE BURRS AND SHARP EDGES
3. PASSIVATE PER MIL-F-14072, FINISH E 300, TYPE I
4. INTERPRET DRAWING IN ACCORDANCE WITH STANDARDS PRESCRIBED BY MIL-D-70327
5. 1 DIMENSION CONTROLLED BY ICD MH01-01002-116

MASTER

QTY REQD	PART OR IDENTIFYING NO.	NOMENCLATURE OR DESCRIPTION	FIND NO.

LIST OF MATERIALS

NEXT ASSY	USED ON
APPLICATION	

UNLESS OTHERWISE SPECIFIED DIMENSIONS ARE IN INCHES
TOLERANCES ON
FRACTIONS ± DECIMALS ± ANGLES ± 2°
DO NOT SCALE THIS DRAWING
MATERIAL SEE NOTE 1
HEAT TREATMENT RC 36-43
FINAL FINISH SEE NOTE 3

MIT
INSTRUMENTATION LAB
CAMBRIDGE, MASS.
DWG. NO. CONTRACT

DRAWN DATE Oct 3 63
CHECKED 4 Oct 63
APPROVAL
APPROVAL 11-19-63
NASA APPROVAL
MIT APPROVAL
MIT APPROVAL 11/19/63

MANNED SPACECRAFT CENTER
HOUSTON, TEXAS

SCREW, JACKING

CODE IDENT NO. —
SIZE C
NASA DRAWING NO. 1004579
SCALE 4/1
WT
SHEET 1 OF 1

NOTICE — WHEN GOVERNMENT DRAWINGS, SPECIFICATIONS, OR OTHER DATA ARE USED FOR ANY PURPOSE OTHER THAN IN CONNECTION WITH A DEFINITELY RELATED GOVERNMENT PROCUREMENT OPERATION, THE UNITED STATES GOVERNMENT THEREBY INCURS NO RESPONSIBILITY NOR ANY OBLIGATION WHATSOEVER; AND THE FACT THAT THE GOVERNMENT MAY HAVE FORMULATED, FURNISHED, OR IN ANY WAY SUPPLIED THE SAID DRAWINGS, SPECIFICATIONS OR OTHER DATA IS NOT TO BE REGARDED BY IMPLICATION OR OTHERWISE AS IN ANY MANNER LICENSING THE HOLDER OR ANY OTHER PERSON OR CORPORATION, OR CONVEYING ANY RIGHTS OR PERMISSION TO MANUFACTURE, USE, OR SELL ANY PATENTED INVENTION THAT MAY IN ANY WAY BE RELATED THERETO.

1004579 E

REVISIONS 84749			
SYM	DESCRIPTION	DATE	APPROVAL
A	REVISED PER TDRR 05050	10 DEC 63	JFW 12/17/63
B	REVISED PER TDRR 05189	12 DEC 63	
C	REVISED PER TDRR 05771	22 Nov 64	
D	REVISED PER TDRR 07258 DR P.V. DuPont CHK APPD	18 MAR 69 3/22/69	
E	REVISED PER TDRR 08013 DR W. Bennett CHK R.A.E.	6/27/69	

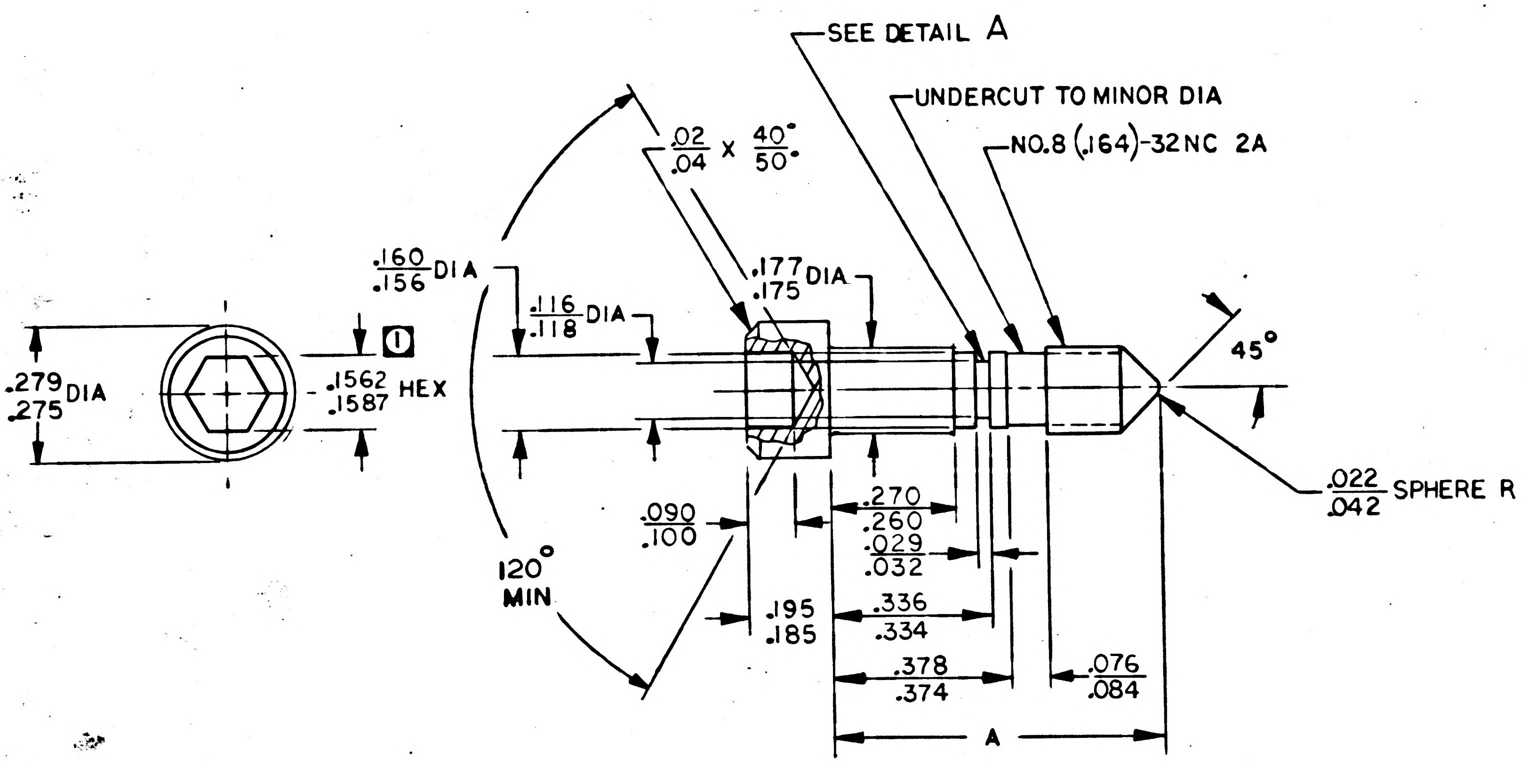

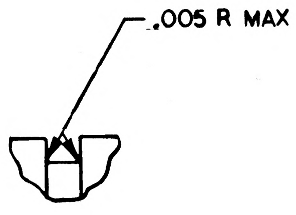

DETAIL A
SCALE 10/1

PART NO.	DIM A ±.005
1004579-1	.700
1004579-2	.875

NOTES

1. MATL: 416 CRES, CLASS 416, COND. A PER QQ-S-763 (HEAD TO BE COLD FORMED)
2. REMOVE BURRS AND SHARP EDGES
3. PASSIVATE PER MIL-F-14072, FINISH E 300, TYPE I
4. INTERPRET DRAWING IN ACCORDANCE WITH STANDARDS PRESCRIBED BY MIL-D-70327
5. $\boxed{1}$ DIMENSION CONTROLLED BY ICD MH01-01002-116
6. CONCENTRICITY: ALL DIAMETERS MUST BE WITHIN .005 T.I.R.
7. IDENTIFY PER ND 1002019

QTY REQD	PART OR IDENTIFYING NO.	NOMENCLATURE OR DESCRIPTION	FIND NO.

LIST OF MATERIALS

1003133	1003184
NEXT ASSY	USED ON
APPLICATION	

UNLESS OTHERWISE SPECIFIED DIMENSIONS ARE IN INCHES
TOLERANCES ON
FRACTIONS ± DECIMALS ± ANGLES ± 2°
DO NOT SCALE THIS DRAWING
MATERIAL SEE NOTE 1
HEAT TREATMENT RC 36-43
FINAL FINISH SEE NOTE 3

MIT
INSTRUMENTATION LAB
CAMBRIDGE, MASS.
DWG. NO. CONTRACT
DRAWN DATE Oct 3 63
CHECKED 4 Oct 63
APPROVAL
APPROVAL 11-13-63
NASA APPROVAL
MIT APPROVAL
MIT APPROVAL 11/19/63

MANNED SPACECRAFT CENTER
HOUSTON, TEXAS

SCREW, JACKING

CODE IDENT NO. —
SIZE C
NASA DRAWING NO. 1004579
SCALE 4/1
WT
SHEET 1 OF 1

NOTICE — WHEN GOVERNMENT DRAWINGS, SPECIFICATIONS, OR OTHER DATA ARE USED FOR ANY PURPOSE OTHER THAN IN CONNECTION WITH A DEFINITELY RELATED GOVERNMENT PROCUREMENT OPERATION, THE UNITED STATES GOVERNMENT THEREBY INCURS NO RESPONSIBILITY NOR ANY OBLIGATION WHATSOEVER; AND THE FACT THAT THE GOVERNMENT MAY HAVE FORMULATED, FURNISHED, OR IN ANY WAY SUPPLIED THE SAID DRAWINGS, SPECIFICATIONS OR OTHER DATA IS NOT TO BE REGARDED BY IMPLICATION OR OTHERWISE AS IN ANY MANNER LICENSING THE HOLDER OR ANY OTHER PERSON OR CORPORATION, OR CONVEYING ANY RIGHTS OR PERMISSION TO MANUFACTURE, USE, OR SELL ANY PATENTED INVENTION THAT MAY IN ANY WAY BE RELATED THERETO.

1004579 F

REVISIONS 04749

SYM	DESCRIPTION	DATE	APPROVAL
A	REVISED PER TDRR 05050	10 DEC 63	JFW 12/17/63
B	REVISED PER TDRR 05189	63	
C	REVISED PER TDRR 05771	22 64	
D	REVISED PER TDRR 07258 DR CHK APPD	18 3/22/64	
E	REVISED PER TDRR 08013 DR CHK R.H.E.	8/27/64	
F	REVISED PER TDRR 13223 DR R. CHK RTM	10/8/64	

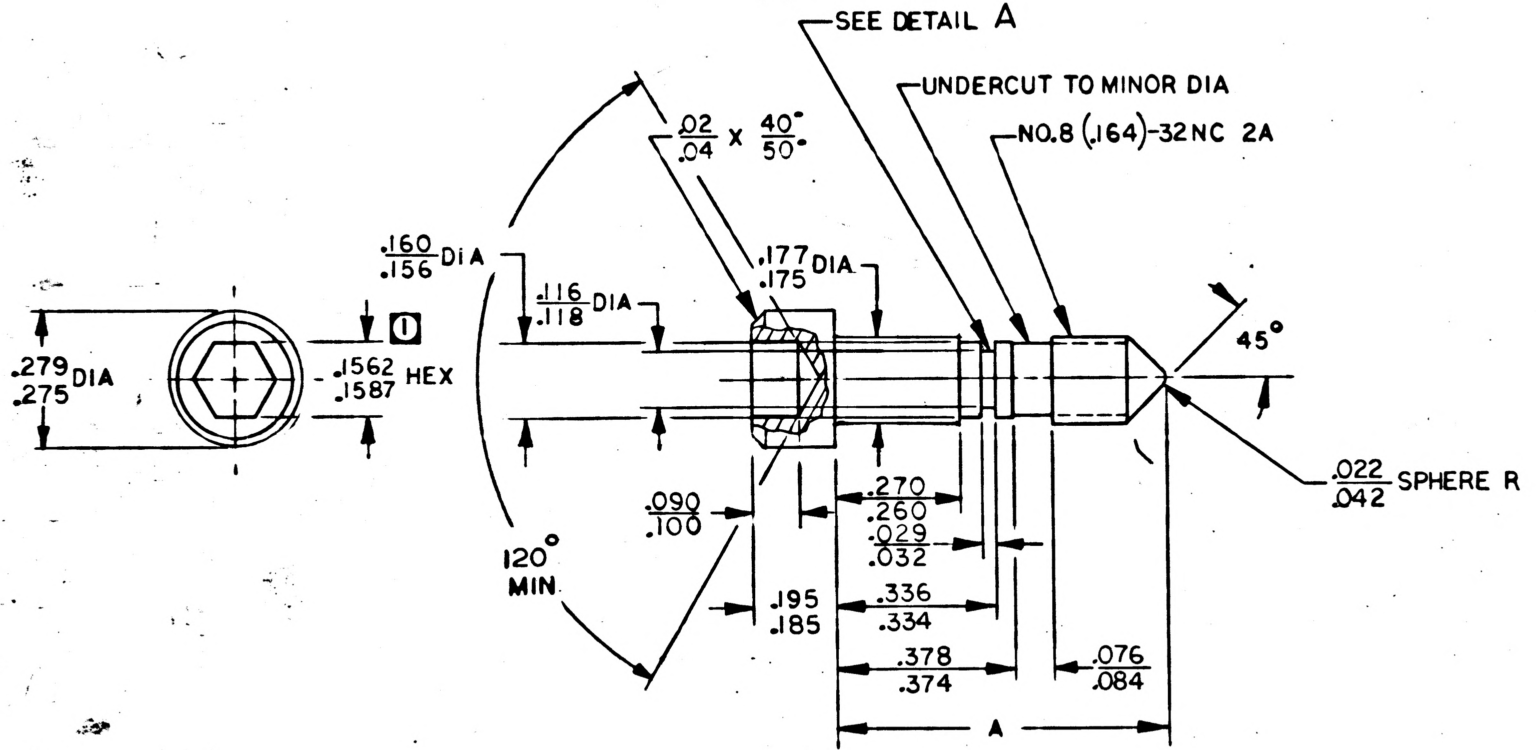

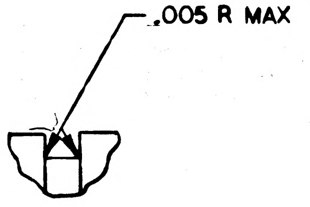

DETAIL A
SCALE 10/1

PART NO.	DIM A ±.005
1004579-1	.700
1004579-2	.875

NOTES

1. MATL: 410 CRES, CLASS 410, COND. A, PER QQ-S-763 (HEAD TO BE COLD FORMED)
2. REMOVE BURRS AND SHARP EDGES
3. PASSIVATE PER MIL-F-14072, FINISH E 300, TYPE I
4. INTERPRET DRAWING IN ACCORDANCE WITH STANDARDS PRESCRIBED BY MIL-D-70327
5. ① DIMENSION CONTROLLED BY ICD MH01-01002-116
6. CONCENTRICITY: ALL DIAMETERS MUST BE WITHIN .005 T.I.R.
7. IDENTIFY PER ND 1002019

QTY REQD	PART OR IDENTIFYING NO.	NOMENCLATURE OR DESCRIPTION	FIND NO.

LIST OF MATERIALS

NEXT ASSY	USED ON
1003133	1003184

APPLICATION

UNLESS OTHERWISE SPECIFIED DIMENSIONS ARE IN INCHES
TOLERANCES ON
FRACTIONS ± DECIMALS ± ANGLES ± 2°
DO NOT SCALE THIS DRAWING
MATERIAL: SEE NOTE 1
HEAT TREATMENT: RC 36-43
FINAL FINISH: SEE NOTE 3

MIT
INSTRUMENTATION LAB
CAMBRIDGE, MASS.
DWG. NO.
CONTRACT
DRAWN DATE Oct 3 63
CHECKED 4 Oct 63
APPROVAL
APPROVAL 11-18-63
NASA APPROVAL
MIT APPROVAL
MIT APPROVAL 11/19/63

MANNED SPACECRAFT CENTER
HOUSTON, TEXAS

SCREW, JACKING

CODE IDENT NO. —
SIZE C
NASA DRAWING NO. 1004579
SCALE 4/1
WT
SHEET 1 OF 1

NOTICE — WHEN GOVERNMENT DRAWINGS, SPECIFICATIONS, OR OTHER DATA ARE USED FOR ANY PURPOSE OTHER THAN IN CONNECTION WITH A DEFINITELY RELATED GOVERNMENT PROCUREMENT OPERATION, THE UNITED STATES GOVERNMENT THEREBY INCURS NO RESPONSIBILITY NOR ANY OBLIGATION WHATSOEVER; AND THE FACT THAT THE GOVERNMENT MAY HAVE FORMULATED, FURNISHED, OR IN ANY WAY SUPPLIED THE SAID DRAWINGS, SPECIFICATIONS OR OTHER DATA IS NOT TO BE REGARDED BY IMPLICATION OR OTHERWISE AS IN ANY MANNER LICENSING THE HOLDER OR ANY OTHER PERSON OR CORPORATION, OR CONVEYING ANY RIGHTS OR PERMISSION TO MANUFACTURE, USE, OR SELL ANY PATENTED INVENTION THAT MAY IN ANY WAY BE RELATED THERETO.

1004579 G

REVISIONS 84749

SYM	DESCRIPTION	DATE	APPROVAL
A	REVISED PER TDRR 05050	10 DEC 63	JFW 12/17/63
B	REVISED PER TDRR 05189	17 DEC 63	
C	REVISED PER TDRR 05771	22 Jan 64	
D	REVISED PER TDRR 07258 DR P.D. DuBois CHK APPD	18 MAR 64 3/23/64	
E	REVISED PER TDRR 08013 DR CHK R.A.E.	6/27/64	
F	REVISED PER TDRR 13223 DR CHK RTM	10/8/64	
G	REVISED PER TDRR 23440 DR G.P. CHK. APPD	11/11/65	

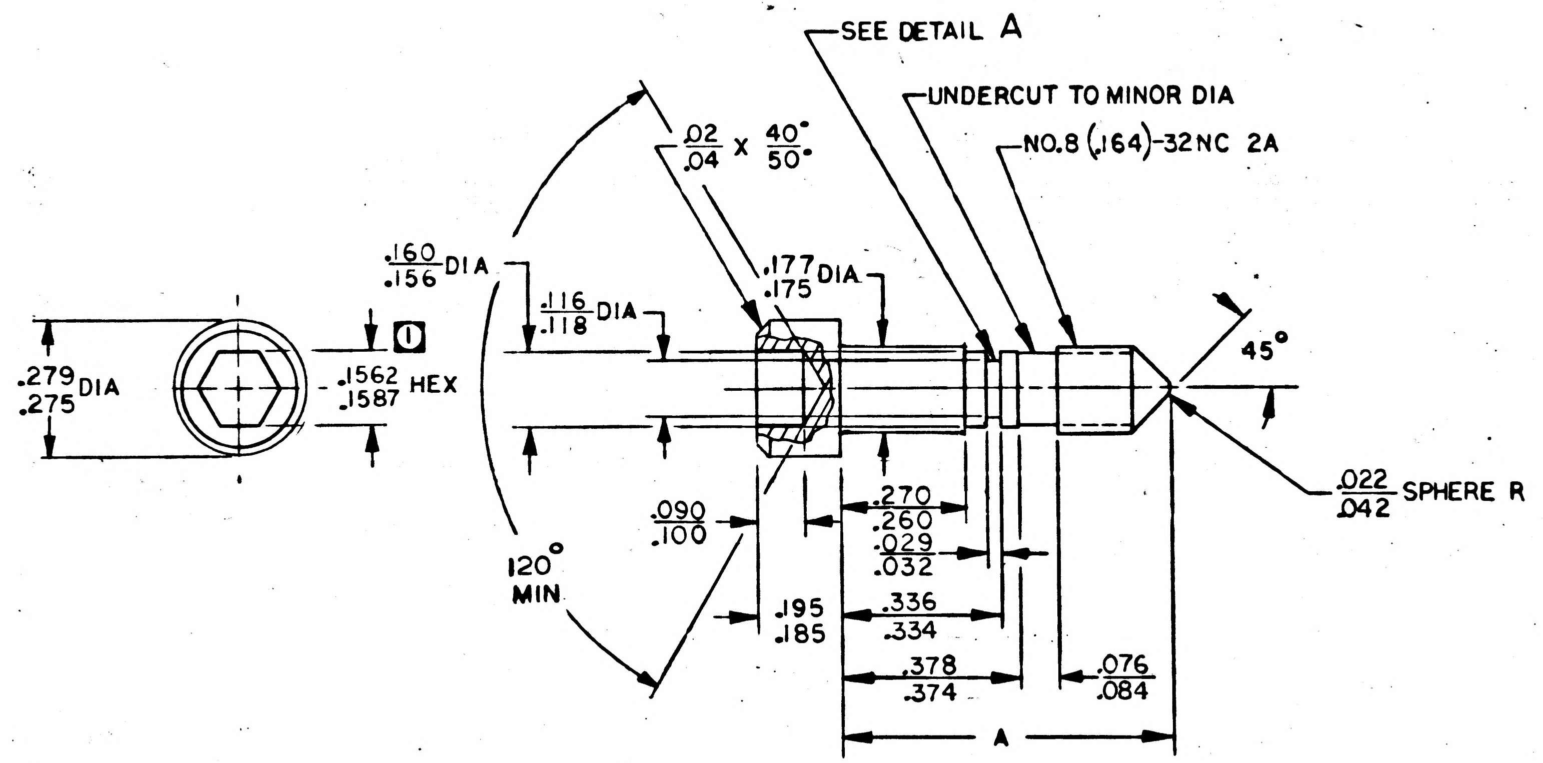

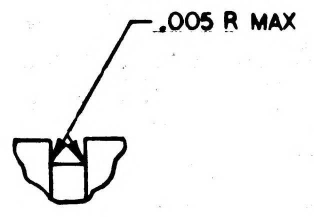

DETAIL A
SCALE 10/1

PART NO.	DIM A ±.005
1004579-1	.700
1004579-2	.875
1004579-3	.800

NOTES

1. MATL: 410 CRES, CLASS 410, COND. A PER QQ-S-763 (HEAD TO BE COLD FORMED)
2. REMOVE BURRS AND SHARP EDGES
3. PASSIVATE PER MIL-F-14072, FINISH E 300, TYPE I
4. INTERPRET DRAWING IN ACCORDANCE WITH STANDARDS PRESCRIBED BY MIL-D-70327
5. ① DIMENSION CONTROLLED BY ICD MH01-01002-116
6. CONCENTRICITY: ALL DIAMETERS MUST BE WITHIN .005 T.I.R.
7. IDENTIFY PER ND 1002019

QTY REQD	PART OR IDENTIFYING NO.	NOMENCLATURE OR DESCRIPTION	FIND NO.

LIST OF MATERIALS

NEXT ASSY	USED ON
1003133	1003184

APPLICATION

UNLESS OTHERWISE SPECIFIED
DIMENSIONS ARE IN INCHES
TOLERANCES ON
FRACTIONS ± DECIMALS ± ANGLES ±2°
DO NOT SCALE THIS DRAWING

MATERIAL
SEE NOTE 1

HEAT TREATMENT
RC 36-43

FINAL FINISH
SEE NOTE 3

MIT
INSTRUMENTATION LAB
CAMBRIDGE, MASS.
DWG. NO. CONTRACT

DRAWN DATE Oct 3 63
CHECKED 4 Oct 63
APPROVAL
APPROVAL 11-19-63
NASA APPROVAL
MIT APPROVAL
MIT APPROVAL 11/19/63

MANNED SPACECRAFT CENTER
HOUSTON, TEXAS

SCREW, JACKING

CODE IDENT NO. —
SIZE C
NASA DRAWING NO. 1004579
SCALE 4/1
WT
SHEET 1 OF 1

NOTICE — WHEN GOVERNMENT DRAWINGS, SPECIFICATIONS, OR OTHER DATA ARE USED FOR ANY PURPOSE OTHER THAN IN CONNECTION WITH A DEFINITELY RELATED GOVERNMENT PROCUREMENT OPERATION, THE UNITED STATES GOVERNMENT THEREBY INCURS NO RESPONSIBILITY NOR ANY OBLIGATION WHATSOEVER; AND THE FACT THAT THE GOVERNMENT MAY HAVE FORMULATED, FURNISHED, OR IN ANY WAY SUPPLIED THE SAID DRAWINGS, SPECIFICATIONS OR OTHER DATA IS NOT TO BE REGARDED BY IMPLICATION OR OTHERWISE AS IN ANY MANNER LICENSING THE HOLDER OR ANY OTHER PERSON OR CORPORATION, OR CONVEYING ANY RIGHTS OR PERMISSION TO MANUFACTURE, USE, OR SELL ANY PATENTED INVENTION THAT MAY IN ANY WAY BE RELATED THERETO.

1004579

REVISIONS 04749

SYM	DESCRIPTION	DATE	APPROVAL

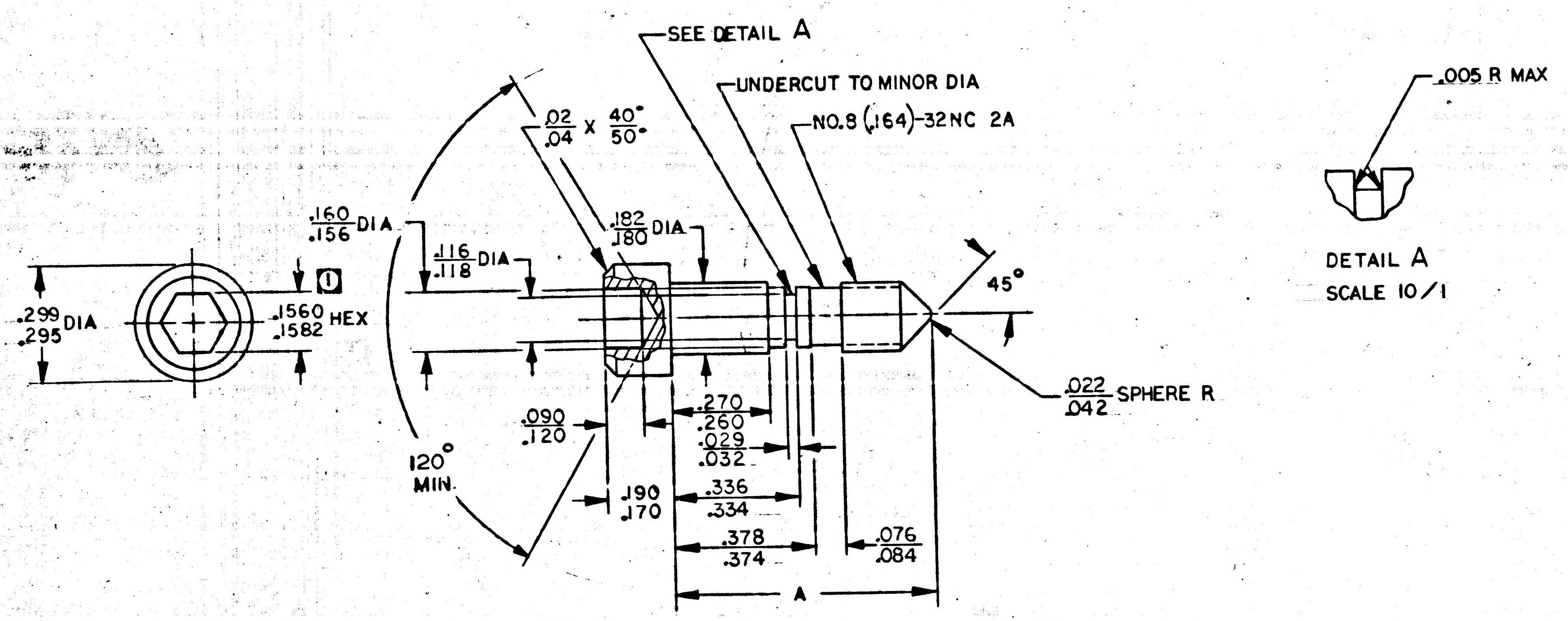
SEE DETAIL A
UNDERCUT TO MINOR DIA
NO.8 (.164)-32NC 2A
.02/.04 X 40°/50°
.160/.156 DIA
.182/.180 DIA
.116/.118 DIA
.299/.295 DIA
.1560/.1582 HEX
①
45°
.022/.042 SPHERE R
.090/.120
120° MIN.
.270/.260
.029/.032
.190/.170
.336/.334
.378/.374
.076/.084
A
.005 R MAX
DETAIL A
SCALE 10/1

PART NO.	DIM A ±.005
1004579-1	.700
1004579-2	.875

NOTES

1. MATL: 303 CRES, CLASS 303, COND A PER QQ-S-763
2. REMOVE BURRS AND SHARP EDGES
3. PASSIVATE PER MIL-F-14072, FINISH E 300, TYPE I
4. INTERPRET DRAWING IN ACCORDANCE WITH STANDARDS PRESCRIBED BY MIL-D-70327
5. ① DIMENSION CONTROLLED BY ICD MH01-01002-116

MASTER

QTY REQD	PART OR IDENTIFYING NO.	NOMENCLATURE OR DESCRIPTION	FIND NO.

LIST OF MATERIALS

NEXT ASSY	USED ON
APPLICATION	

UNLESS OTHERWISE SPECIFIED DIMENSIONS ARE IN INCHES
TOLERANCES ON
FRACTIONS ± DECIMALS ± ANGLES ±2°
DO NOT SCALE THIS DRAWING
MATERIAL SEE NOTE 1
HEAT TREATMENT NONE
FINAL FINISH SEE NOTE 3

MIT INSTRUMENTATION LAB
CAMBRIDGE, MASS.
DWG. NO. CONTRACT
DRAWN DATE Oct 3 63
CHECKED H Smith 4 Oct 63
APPROVAL
APPROVAL 11-?-63
NASA APPROVAL
MIT APPROVAL
MIT APPROVAL 11/19/63

MANNED SPACECRAFT CENTER
HOUSTON, TEXAS

SCREW, JACKING

CODE IDENT NO. —
SIZE C
NASA DRAWING NO. 1004579
SCALE 4/1
WT
SHEET 1 OF 1

INCHES
0 1 2
PHOTOGRAPHIC SCALE ONLY

1004581

SYM	REVISIONS 04486 DESCRIPTION	DATE	APPROVAL

NOTICE — WHEN GOVERNMENT DRAWINGS, SPECIFICATIONS, OR OTHER DATA ARE USED FOR ANY PURPOSE OTHER THAN IN CONNECTION WITH A DEFINITELY RELATED GOVERNMENT PROCUREMENT OPERATION, THE UNITED STATES GOVERNMENT THEREBY INCURS NO RESPONSIBILITY NOR ANY OBLIGATION WHATSOEVER; AND THE FACT THAT THE GOVERNMENT MAY HAVE FORMULATED, FURNISHED, OR IN ANY WAY SUPPLIED THE SAID DRAWINGS, SPECIFICATIONS OR OTHER DATA IS NOT TO BE REGARDED BY IMPLICATION OR OTHERWISE AS IN ANY MANNER LICENSING THE HOLDER OR ANY OTHER PERSON OR CORPORATION, OR CONVEYING ANY RIGHTS OR PERMISSION TO MANUFACTURE, USE, OR SELL ANY PATENTED INVENTION THAT MAY IN ANY WAY BE RELATED THERETO.

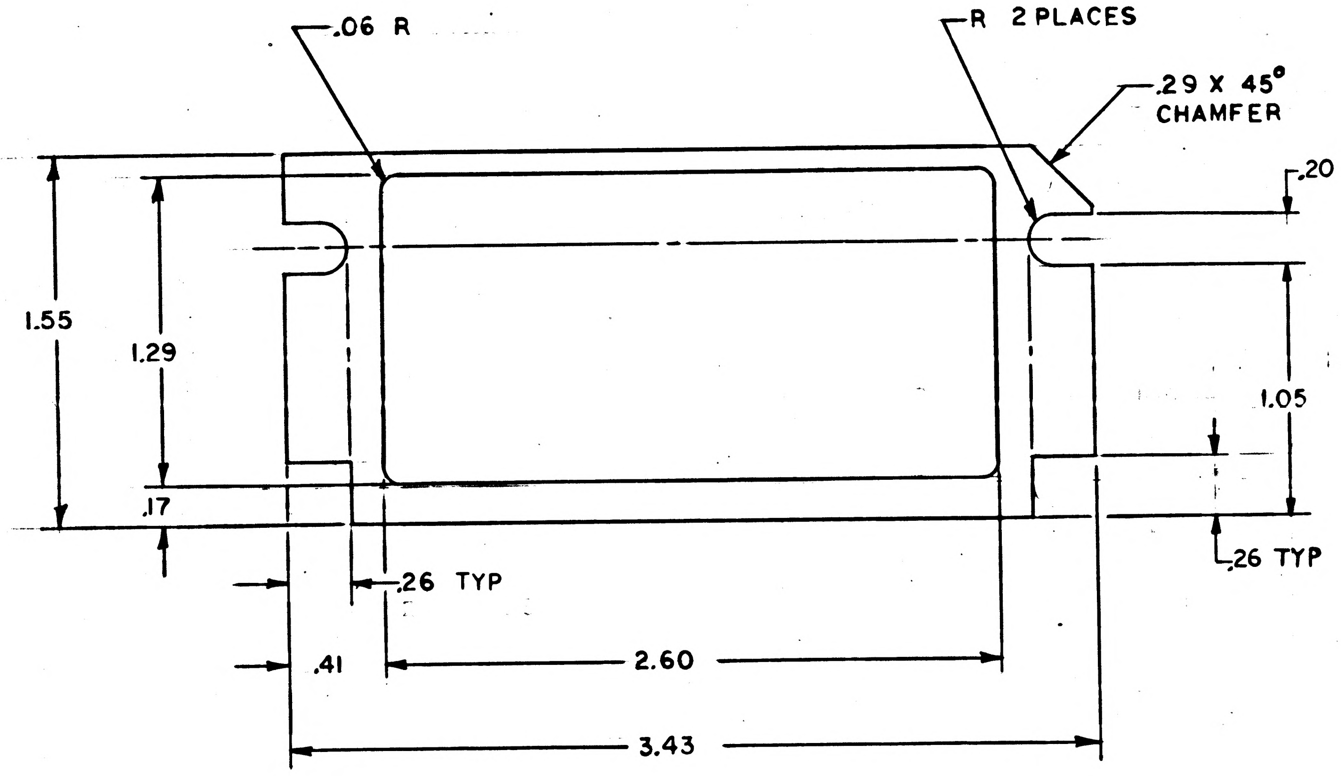

NOTES
1. MATL: .06 /.09 THK NEOPRENE RUBBER PER MIL-R-6855, CLASS II, HARDNESS 40 DUROMETER
2. INTERPRET DRAWING IN ACCORDANCE WITH STANDARDS PRESCRIBED BY MIL-D-70327

MASTER

QTY REQD	PART OR IDENTIFYING NO.	NOMENCLATURE OR DESCRIPTION	FIND NO.

LIST OF MATERIALS

NEXT ASSY	USED ON
1003543	

APPLICATION

UNLESS OTHERWISE SPECIFIED DIMENSIONS ARE IN INCHES
TOLERANCES ON
FRACTIONS ± DECIMALS ±.02 ANGLES ±
DO NOT SCALE THIS DRAWING
MATERIAL SEE NOTE 1
HEAT TREATMENT NONE
FINAL FINISH NONE

INSTRU ATION LAB
CAMBRIDGE, MASS.
DWG. NO. CONTRACT
DRAWN S.Q. Clement DATE 8 OCT '63
CHECKED A.R. Bogni 29 OCT 63
APPROVAL OCT. 30/63.
APPROVAL 1 Nov 63
NASA APPROVAL
MIT APPROVAL
MIT APPROVAL W Kupfer 5 Nov 63

MANNED SPACECRAFT CENTER
HOUSTON, TEXAS

GASKET
INDICATOR DISPLAY
AGC DSKY MAIN

CODE IDENT NO. —
SIZE C
NASA DRAWING NO. 1004581
SCALE 2/1
WT
SHEET 1 OF 1

INCHES
0 1 2
PHOTOGRAPHIC SCALE ONLY

NOTICE — WHEN GOVERNMENT DRAWINGS, SPECIFICATIONS, OR OTHER DATA ARE USED FOR ANY PURPOSE OTHER THAN IN CONNECTION WITH A DEFINITELY RELATED GOVERNMENT PROCUREMENT OPERATION, THE UNITED STATES GOVERNMENT THEREBY INCURS NO RESPONSIBILITY NOR ANY OBLIGATION WHATSOEVER; AND THE FACT THAT THE GOVERNMENT MAY HAVE FORMULATED, FURNISHED, OR IN ANY WAY SUPPLIED THE SAID DRAWINGS, SPECIFICATIONS OR OTHER DATA IS NOT TO BE REGARDED BY IMPLICATION OR OTHERWISE AS IN ANY MANNER LICENSING THE HOLDER OR ANY OTHER PERSON OR CORPORATION, OR CONVEYING ANY RIGHTS OR PERMISSION TO MANUFACTURE, USE, OR SELL ANY PATENTED INVENTION THAT MAY IN ANY WAY BE RELATED THERETO.

1004583

REVISIONS 05/78			
SYM	DESCRIPTION	DATE	APPROVAL

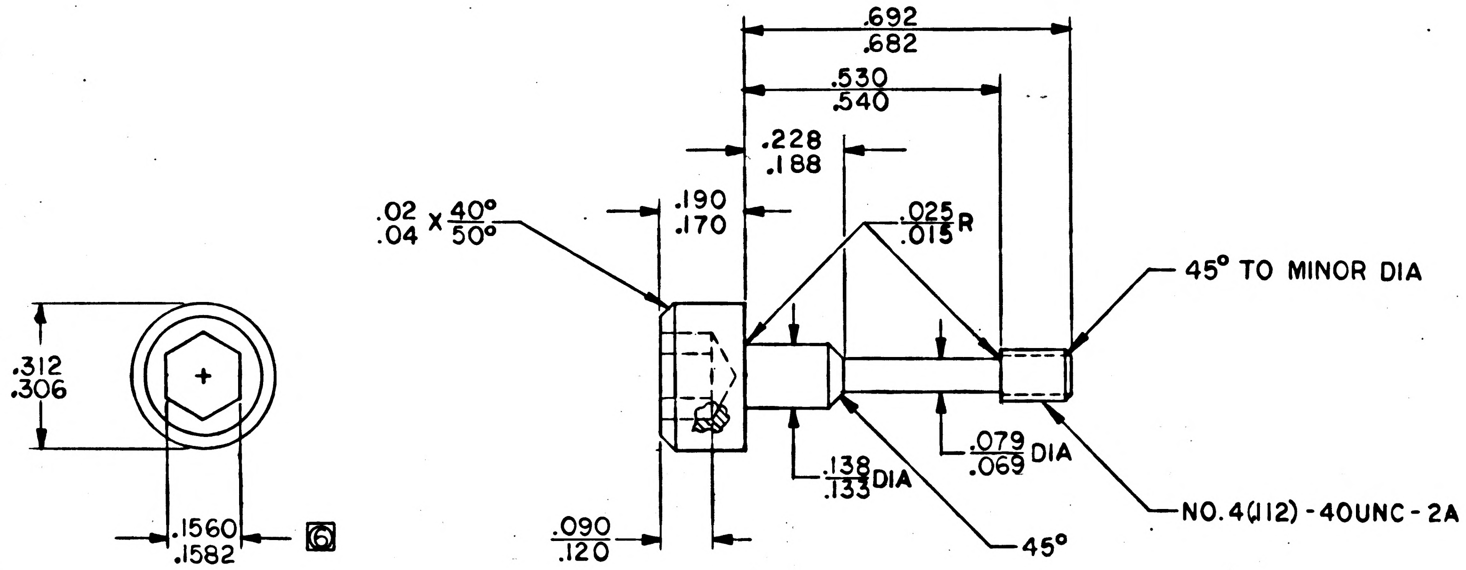

NOTES

1. MATERIAL: 416 CRES, CLASS 416, COND H, PER QQ-S-763
2. FINISH: PASSIVATE PER MIL-F-14072
3. INTERPRET DRAWING IN ACCORDANCE WITH STANDARDS PRESCRIBED BY MIL-D-70327
4. REMOVE ALL BURRS AND SHARP EDGES
5. REMOVE BURRS FROM BOTTOM OF BROACHED HOLE
6. 6 DIMENSION CONTROLLED BY ICDMH01-01005-116

MASTER

QTY REQD	PART OR IDENTIFYING NO.	NOMENCLATURE OR DESCRIPTION	FIND NO.
LIST OF MATERIALS			

1003532	
NEXT ASSY	USED ON
APPLICATION	

UNLESS OTHERWISE SPECIFIED DIMENSIONS ARE IN INCHES
TOLERANCES ON
FRACTIONS ± DECIMALS ± ANGLES ±
DO NOT SCALE THIS DRAWING
MATERIAL SEE NOTE 1
HEAT TREATMENT NONE
FINAL FINISH SEE NOTE 2

MIT
INSTRUMENTATION LAB
CAMBRIDGE, MASS.
DWG. NO. CONTRACT

DRAWN DATE 12 NOV 63
CHECKED A.R. Bogni 25NOV63
APPROVAL
APPROVAL E.D. Duggan 12-16-63
NASA APPROVAL 12/11/63
MIT APPROVAL
MIT APPROVAL 12/17/63

MANNED SPACECRAFT CENTER
HOUSTON, TEXAS

SCREW, CAPTIVE
POWER SUPPLY
AGC DSKY NAV & MAIN

CODE IDENT NO. —
SIZE C
NASA DRAWING NO. 1004583
SCALE 4/1
WT
SHEET 1 OF 1

INCHES
0 1 2
PHOTOGRAPHIC SCALE ONLY

SYM	DESCRIPTION	DATE	APPROVAL
A	REVISED PER TDRR 05160	[illegible] 63	[illegible]

REVISIONS 08435

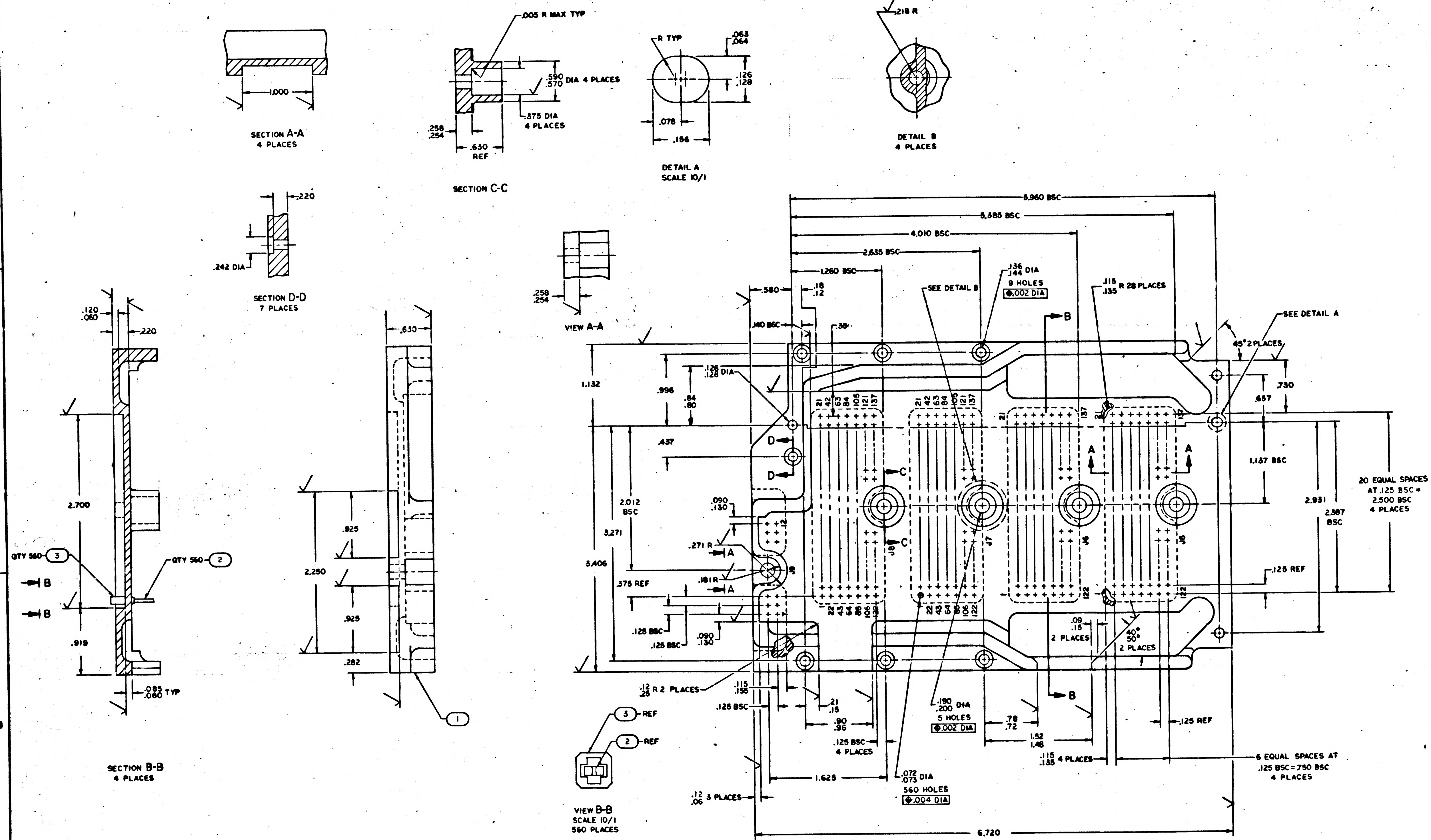

SECTION A-A
4 PLACES
1.000
.005 R MAX TYP
.590 .570 DIA 4 PLACES
.375 DIA 4 PLACES
.258 .254
.630 REF
SECTION C-C
R TYP
.063 .064
.126 .128
.078
.156
DETAIL A
SCALE 10/1
.218 R
DETAIL B
4 PLACES
.220
.242 DIA
SECTION D-D
7 PLACES
.258 .254
VIEW A-A
.120 .060
.220
2.700
QTY 560 3
QTY 560 2
B
B
.919
.085 .080 TYP
SECTION B-B
4 PLACES
.630
.925
2.250
.925
.282
1
5.960 BSC
5.385 BSC
4.010 BSC
2.635 BSC
1.260 BSC
.580
.18 .12
.136 .144 DIA 9 HOLES
.002 DIA
SEE DETAIL B
.115 .135 R 28 PLACES
SEE DETAIL A
45° 2 PLACES
.140 BSC
.38
.126 .128 DIA
1.132
.996
.84 .80
.457
.730
.657
1.137 BSC
20 EQUAL SPACES AT .125 BSC = 2.500 BSC 4 PLACES
2.931
2.587 BSC
2.012 BSC
3.271
3.406
.090 .130
.271 R
.181 R
.375 REF
.125 BSC
.125 BSC
.090 .130
.125 REF
D
D
C
C
A
A
A
A
B
B
J8
J7
J6
J5
.09 .15 2 PLACES
40° 50° 2 PLACES
.12 .25 R 2 PLACES
.115 .155
.125 BSC
.21 .15
.90 .96
.125 BSC 4 PLACES
.190 .200 DIA 5 HOLES
.002 DIA
.78 .72
1.52 1.48
.115 .135 4 PLACES
.125 REF
6 EQUAL SPACES AT .125 BSC = .750 BSC 4 PLACES
.072 .073 DIA 560 HOLES
.004 DIA
1.625
.12 .06 3 PLACES
6.720
3 REF
2 REF
VIEW B-B
SCALE 10/1
560 PLACES

NOTES
1. MAKE FROM DRAWING NO. 1004563
2. SURFACES MARKED √ TO BE 125√
3. ANODIZE PER MIL-A-8625, TYPE I, DYED BLACK
4. REMOVE BURRS & SHARP EDGES
5. INSTALL FIND NO. 2 & 3 PER ND1002136
6. MARK .06 HIGH WHITE CHARACTERS APPROX WHERE SHOWN PER ND1002019

SEE NOTE 1

QTY REQD	PART OR IDENTIFYING NO.	NOMENCLATURE OR DESCRIPTION	FIND NO.
560	1006774	INSULATOR, WRAPOST, FEMALE	3
560	1006781-4	CONTACT, WRAPOST, FEMALE	2
1	1004584-1	PLATE	1

LIST OF MATERIALS

1003584	
NEXT ASSY	USED ON
APPLICATION	

UNLESS OTHERWISE SPECIFIED DIMENSIONS ARE IN INCHES
TOLERANCES ON
FRACTIONS ± DECIMALS ±.005 .02 ANGL ±
DO NOT SCALE THIS DRAWING
MATERIAL SEE NOTE 1
HEAT TREATMENT NONE
FINAL FINISH SEE NOTE 3

MIT INSTRUMENTATION LAB
CAMBRIDGE, MASS
DRAWN [illegible] DATE 16 OCT 63
CHECKED J. R. Bogan 4 NOV 63
APPROVAL [illegible]
APPROVAL [illegible]
NASA APPROVAL
MIT APPROVAL
MIT APPROVAL [illegible]

MANNED SPACECRAFT CENTER
HOUSTON, TEXAS

PLATE, CONN.
RELAY HOUSING
AGC DSKY MAIN

CODE IDENT NO. —— SIZE J NASA DRAWING NO. 1004584
SCALE 2/1 WT SHEET 1 OF 1

1004584 A

MASTER

SYM	DESCRIPTION	DATE	APPROVAL
A	REVISED PER TDRR 03160		
B	REVISED PER TDRR 08307 DR CHK C.H.E.		

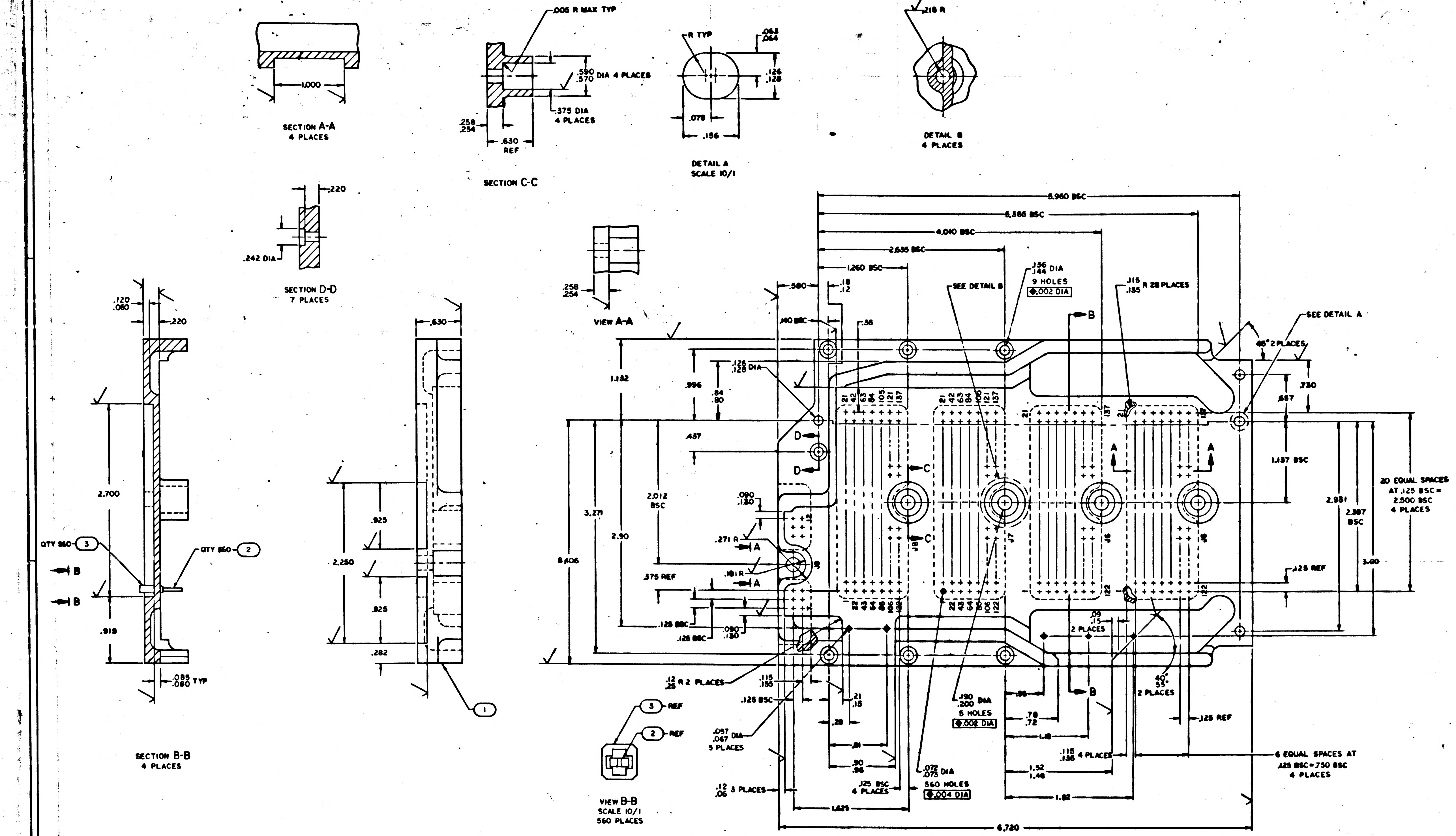
SECTION A-A
4 PLACES
1.000
.005 R MAX TYP
.590 .570 DIA 4 PLACES
.375 DIA 4 PLACES
.258 .254
.630 REF
SECTION C-C
R TYP
.063 .064
.126 .128
.078
.156
DETAIL A
SCALE 10/1
.218 R
DETAIL B
4 PLACES
.220
.242 DIA
SECTION D-D
7 PLACES
.120 .060
.220
2.700
QTY 560 ③
QTY 560 ②
B
B
.919
.085 .080 TYP
SECTION B-B
4 PLACES
.630
.925
2.250
.925
.282
①
.258 .254
VIEW A-A
③ REF
② REF
VIEW B-B
SCALE 10/1
560 PLACES
5.960 BSC
5.585 BSC
4.010 BSC
2.635 BSC
1.260 BSC
.580
.18 .12
.140 BSC
.56
.156 .144 DIA
9 HOLES
⌖ .002 DIA
SEE DETAIL B
.115 .135 R 28 PLACES
SEE DETAIL A
45° 2 PLACES
.730
.657
1.132
.996
.126 .128 DIA
.84 .80
.457
3.271
2.012 BSC
2.90
8.406
.090 .130
.271 R
.161 R
.375 REF
.125 BSC
.125 BSC
.090 .130
A
A
C
C
D
D
B
B
1.187 BSC
20 EQUAL SPACES AT .125 BSC = 2.500 BSC 4 PLACES
2.931
2.387 BSC
3.00
.125 REF
.09 .15 2 PLACES
40° 35° 2 PLACES
.125 REF
.12 .25 R 2 PLACES
.115 .155
.125 BSC
.057 .067 DIA 5 PLACES
.12 .06 3 PLACES
.21 .18
.28
.81
.90 .96
.125 BSC 4 PLACES
.072 .073 DIA
560 HOLES
⌖ .004 DIA
.190 .200 DIA
5 HOLES
⌖ .002 DIA
.56
.78 .72
1.18
.115 .135 4 PLACES
1.52 1.48
1.82
6 EQUAL SPACES AT .125 BSC = .750 BSC 4 PLACES
1.625
6.720
21 42 63 84 105 121 137
22 43 64 85 106 122
J16
J17
J18
J19

NOTES
1. MAKE FROM DRAWING NO. 1004563
2. SURFACES MARKED √ TO BE 125√
3. ANODIZE PER MIL-A-8625, TYPE I, DYED BLACK
4. REMOVE BURRS & SHARP EDGES
5. INSTALL FIND NO. 2 & 3 PER ND1002136
6. MARK .06 HIGH WHITE CHARACTERS APPROX WHERE SHOWN PER ND1002019

SEE NOTE 1

QTY REQD	PART OR IDENTIFYING NO.	NOMENCLATURE OR DESCRIPTION	FIND NO.
560	1006774	INSULATOR, WRAPOST, FEMALE	3
560	1006781-4	CONTACT, WRAPOST, FEMALE	2
1	1004584-1	PLATE	1

LIST OF MATERIALS

1003566	
NEXT ASSY	USED ON
APPLICATION	

UNLESS OTHERWISE SPECIFIED
DIMENSIONS ARE IN INCHES
TOLERANCES ON
FRACTIONS ± DECIMALS ±.005 .02 ANGL ±
DO NOT SCALE THIS DRAWING
MATERIAL SEE NOTE 1
HEAT TREATMENT NONE
FINAL FINISH SEE NOTE 3

MIT INSTRUMENTATION LAB
DRAWN DATE 18OCT
CHECKED R.R. 4NOV63
APPROVAL
APPROVAL
NASA APPROVAL
MIT APPROVAL
MIT APPROVAL

MANNED SPACECRAFT CENTER
HOUSTON, TEXAS

PLATE, CONN.
RELAY HOUSING
AGC DSKY MAIN

CODE IDENT NO. —
SIZE J
NASA DRAWING NO. 1004584
SCALE 2/1
SHEET 1 OF 1

MASTER

SYM	DESCRIPTION	DATE	APPROVAL
A	REVISED PER TDRR 05160		
B	REVISED PER TDRR 10307 DR N. [illegible] CHK R.H.S.		
C	REVISED PER TDRR 06 [illegible] DR T. Bunbeau CHK R.P.B.	7/21/66	

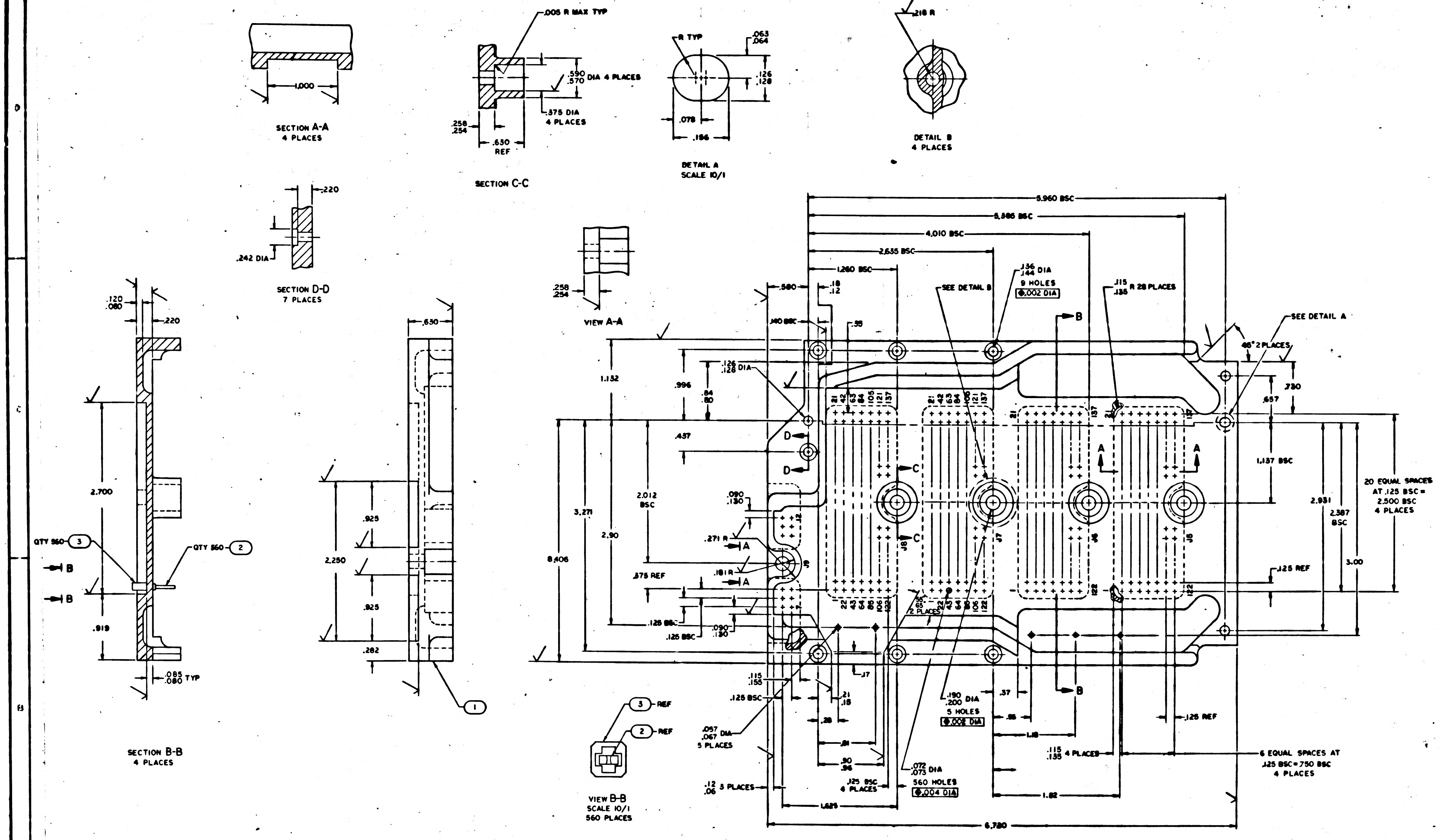
SECTION A-A
4 PLACES
1.000
.005 R MAX TYP
.590 .570 DIA 4 PLACES
.375 DIA 4 PLACES
.258 .254
.630 REF
SECTION C-C
R TYP
.063 .064
.126 .128
.078
.156
DETAIL A
SCALE 10/1
.218 R
DETAIL B
4 PLACES
.220
.242 DIA
SECTION D-D
7 PLACES
.120 .080
.220
2.700
QTY 560 3
QTY 560 2
B
.919
.085 .080 TYP
SECTION B-B
4 PLACES
.630
.925
2.250
.925
.282
1
.258 .254
VIEW A-A
3 REF
2 REF
VIEW B-B
SCALE 10/1
560 PLACES
5.960 BSC
5.885 BSC
4.010 BSC
2.635 BSC
1.260 BSC
.580
.18 .12
.140 BSC
.55
.136 .144 DIA
9 HOLES
Ⓟ.002 DIA
SEE DETAIL B
.115 .135 R 28 PLACES
SEE DETAIL A
45° 2 PLACES
.730
.657
1.132
.996
.126 .128 DIA
.84 .80
.457
D
C
A
1.137 BSC
20 EQUAL SPACES AT .125 BSC = 2.500 BSC 4 PLACES
2.012 BSC
3.271
2.90
8.406
.090 .130
.271 R
.181 R
.375 REF
.125 BSC
.125 BSC
.090 .130
2.931
2.387 BSC
3.00
.125 REF
.125 REF
J8
J7
J6
J5
J9
.115 .155
.125 BSC
.057 .067 DIA
5 PLACES
.21 .15
.28
.81
.90 .96
.125 BSC 4 PLACES
.17
.190 .200 DIA
5 HOLES
Ⓟ.002 DIA
.072 .075 DIA
560 HOLES
Ⓟ.004 DIA
.37
.55
1.18
.115 .135 4 PLACES
6 EQUAL SPACES AT .125 BSC = .750 BSC 4 PLACES
1.82
.12 .06 3 PLACES
1.625
6.780

NOTES

1. MAKE FROM DRAWING NO. 1004563
2. SURFACES MARKED √ TO BE 125√
3. ANODIZE PER MIL-A-8625, TYPE I, DYED BLACK
4. REMOVE BURRS & SHARP EDGES
5. INSTALL FIND NO. 2 & 3 PER ND1002136
6. MARK .06 HIGH WHITE CHARACTERS APPROX WHERE SHOWN PER ND1002019

R-10733 A

SEE NOTE 1

QTY REQD	PART OR IDENTIFYING NO.	NOMENCLATURE OR DESCRIPTION	FIND NO.
560	1006774	INSULATOR, WRAPOST, FEMALE	3
560	1006781-4	CONTACT, WRAPOST, FEMALE	2
1	1004584-1	PLATE	1

LIST OF MATERIALS

NEXT ASSY	USED ON
1003566	

APPLICATION

UNLESS OTHERWISE SPECIFIED DIMENSIONS ARE IN INCHES
TOLERANCES ON
FRACTIONS ± DECIMALS ±.005 .02 ANGLES ±
DO NOT SCALE THIS DRAWING
MATERIAL SEE NOTE 1
HEAT TREATMENT NONE
FINAL FINISH SEE NOTE 3

MIT INSTRUMENTATION LAB
CAMBRIDGE, MASS.
DRAWN [illegible] DATE 15 OCT 65
CHECKED R.K. [illegible] 4 NOV 65
APPROVAL [illegible] 1965
APPROVAL [illegible]
NASA APPROVAL
ANT APPROVAL [illegible]

MANNED SPACECRAFT CENTER
HOUSTON, TEXAS

PLATE, CONN.
RELAY HOUSING
AGC DSKY MAIN

CODE IDENT NO. —— SIZE J NASA DRAWING NO. 1004584
SCALE 2/1 WT SHEET 1 OF

1004584 C

MASTER

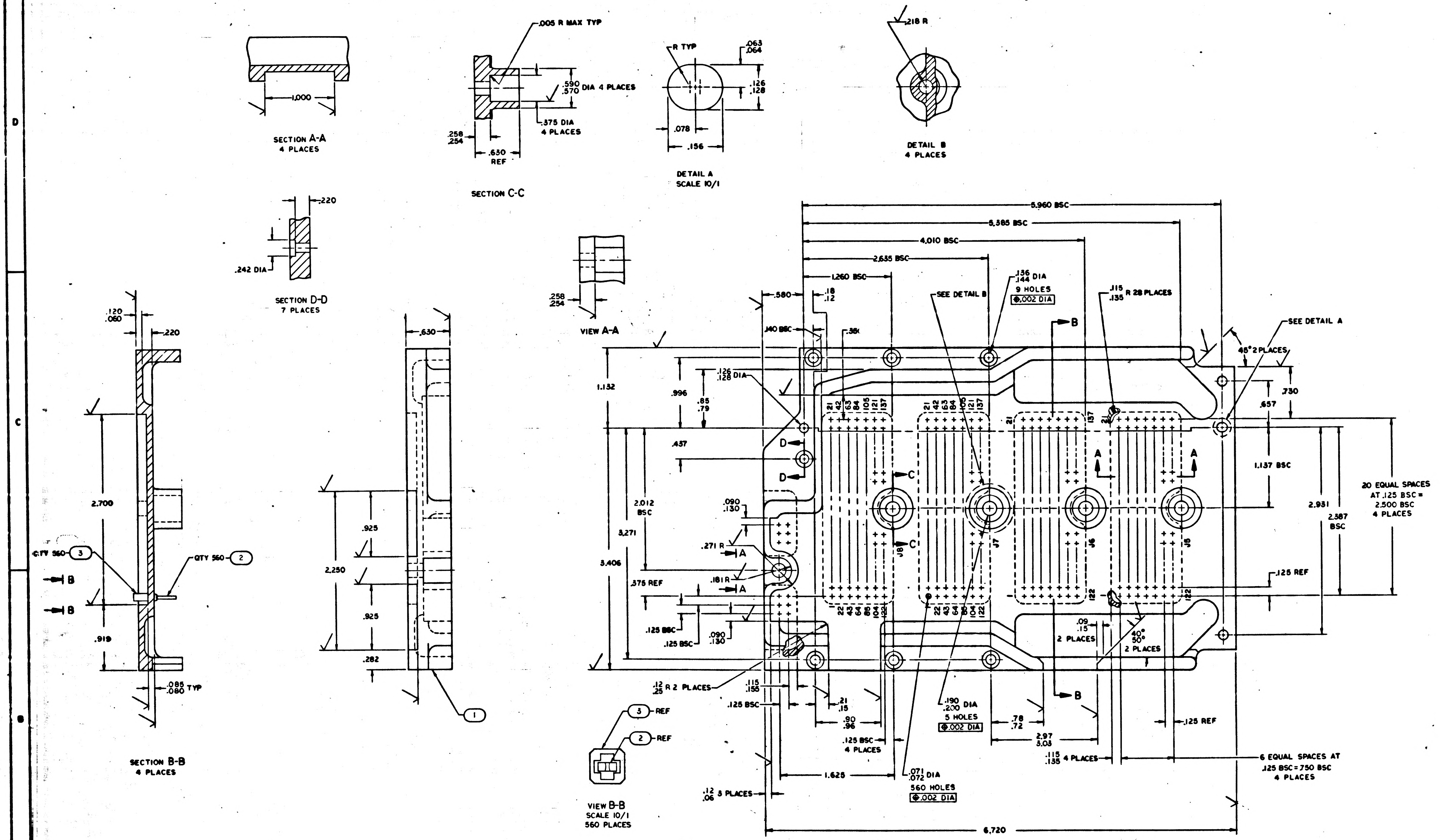
SECTION A-A
4 PLACES
1.000
SECTION C-C
.005 R MAX TYP
.590 .570 DIA 4 PLACES
.375 DIA 4 PLACES
.258 .254
.630 REF
DETAIL A
SCALE 10/1
R TYP
.063 .064
.126 .128
.078
.156
DETAIL B
4 PLACES
.218 R
SECTION D-D
7 PLACES
.220
.242 DIA
VIEW A-A
.258 .254
SECTION B-B
4 PLACES
.120 .060
.220
2.700
.919
.085 .080 TYP
QTY 560 (3)
QTY 560 (2)
B
.630
.925
2.250
.925
.282
(1)
VIEW B-B
SCALE 10/1
560 PLACES
(3) REF
(2) REF
5.960 BSC
5.385 BSC
4.010 BSC
2.635 BSC
1.260 BSC
.580
.18 .12
.140 BSC
.381
SEE DETAIL B
.156 .144 DIA
9 HOLES
⊕.002 DIA
.115 .135 R 28 PLACES
SEE DETAIL A
45° 2 PLACES
.730
.657
1.132
.996
.126 .128 DIA
.85 .79
.457
2.012 BSC
3.271
3.406
.090 .130
.271 R
.181 R
.375 REF
.125 BSC
.125 BSC
.090 .130
1.137 BSC
20 EQUAL SPACES
AT .125 BSC =
2.500 BSC
4 PLACES
2.931
2.587 BSC
.125 REF
.09 .15
2 PLACES
40° 50°
2 PLACES
J8
J7
J6
J5
.12 .25 R 2 PLACES
.115 .155
.125 BSC
.21 .15
.90 .96
.125 BSC
4 PLACES
.190 .200 DIA
5 HOLES
⊕.002 DIA
.78 .72
2.97 3.03
.125 REF
.115 .135 4 PLACES
6 EQUAL SPACES AT
.125 BSC = .750 BSC
4 PLACES
1.625
.071 .072 DIA
560 HOLES
⊕.002 DIA
.12 .06 3 PLACES
6.720

NOTES
1. MAKE FROM DRAWING NO. 1004563
2. SURFACES MARKED √ TO BE 125√
3. ANODIZE PER MIL-A-8625, TYPE I, DYED BLACK
4. REMOVE BURRS & SHARP EDGES
5. INSTALL FIND NO. 2 & 3 PER ND1002136
6. MARK .06 HIGH WHITE CHARACTERS APPROX WHERE SHOWN PER ND1002019

SEE NOTE 1

QTY REQD	PART OR IDENTIFYING NO.	NOMENCLATURE OR DESCRIPTION	FIND NO.
560	1006774	INSULATOR, WRAPOST, FEMALE	3
560	1006781-4	CONTACT, WRAPOST, FEMALE	2
1	1004584-1	PLATE	1

LIST OF MATERIALS

1003584	
NEXT ASSY	USED ON
APPLICATION	

UNLESS OTHERWISE SPECIFIED
DIMENSIONS ARE IN INCHES
TOLERANCES ON
FRACTIONS ± DECIMALS ±.005 .02 ANGL ±
DO NOT SCALE THIS DRAWING
MATERIAL
SEE NOTE 1
HEAT TREATMENT
NONE
FINAL FINISH
SEE NOTE 3

MIT
INSTRUMENTATION LAB
CAMBRIDGE, MASS
DRAWN [illegible] DATE 16OCT63
CHECKED R. R. [illegible] 4NOV63
APPROVAL [illegible]
APPROVAL [illegible]
NASA APPROVAL
MIT APPROVAL
MIT APPROVAL

MANNED SPACECRAFT CENTER
HOUSTON, TEXAS

PLATE, CONN.
RELAY HOUSING
AGC DSKY MAIN

CODE IDENT NO. —
SIZE J
NASA DRAWING NO. 1004584
SCALE 2/1
WT
SHEET 1 OF 1

MASTER

1004584

NOTICE — WHEN GOVERNMENT DRAWINGS, SPECIFICATIONS, OR OTHER DATA ARE USED FOR ANY PURPOSE OTHER THAN IN CONNECTION WITH A DEFINITELY RELATED GOVERNMENT PROCUREMENT OPERATION, THE UNITED STATES GOVERNMENT THEREBY INCURS NO RESPONSIBILITY NOR ANY OBLIGATION WHATSOEVER; AND THE FACT THAT THE GOVERNMENT MAY HAVE FORMULATED, FURNISHED, OR IN ANY WAY SUPPLIED THE SAID DRAWINGS, SPECIFICATIONS, OR OTHER DATA IS NOT TO BE REGARDED BY IMPLICATION OR OTHERWISE AS IN ANY MANNER LICENSING THE HOLDER OR ANY OTHER PERSON OR CORPORATION, OR CONVEYING ANY RIGHTS OR PERMISSION TO MANUFACTURE, USE, OR SELL ANY PATENTED INVENTION THAT MAY IN ANY WAY BE RELATED THERETO

REVISIONS 04735

SYM	DESCRIPTION	DATE	APPROVAL
A	REVISED PER TDRR 04254 DR CHK	3/22/	

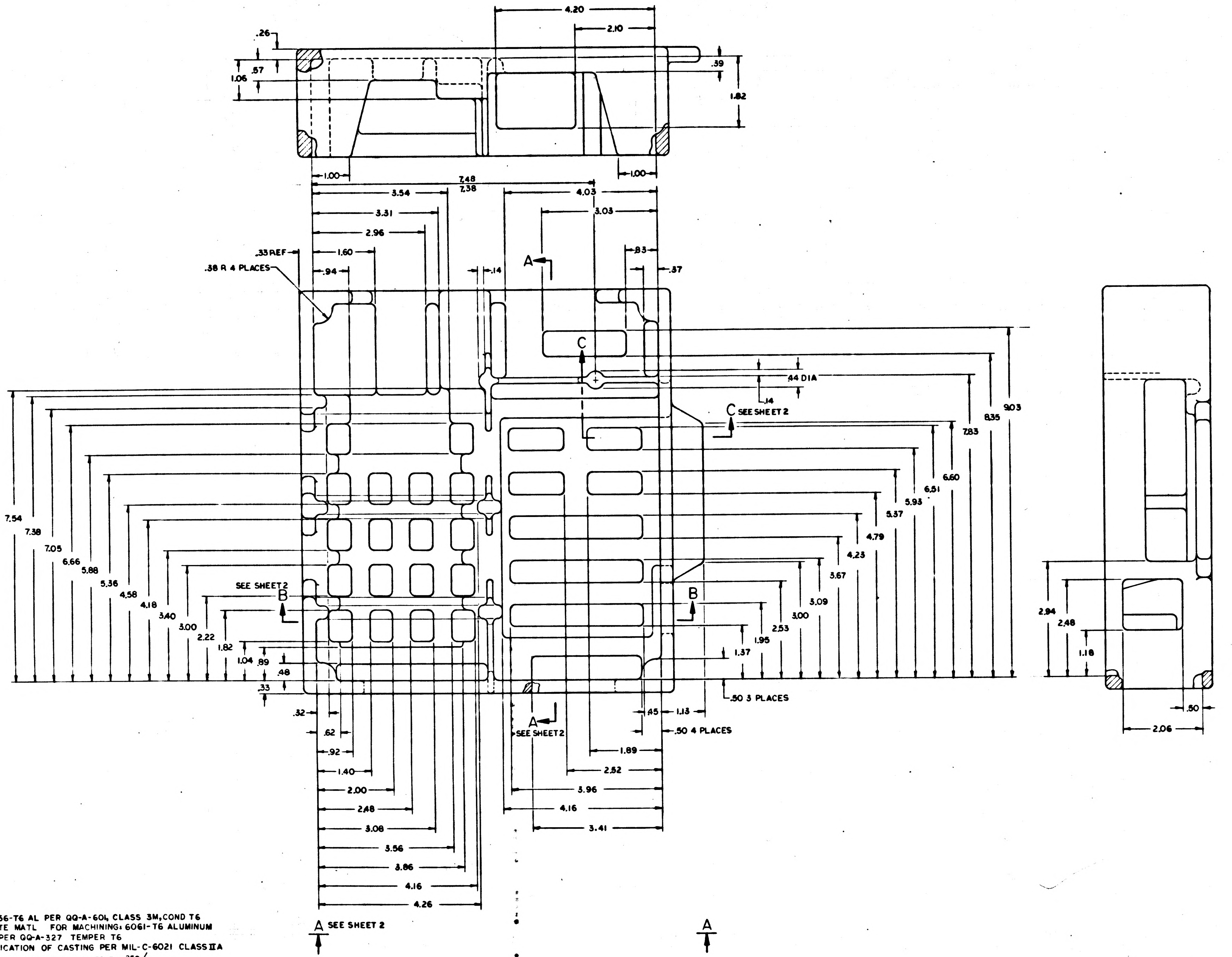

.26
.57
1.06
4.20
2.10
.39
1.82
1.00
1.00
7.48
7.38
3.54
4.03
3.31
3.03
2.96
.33 REF
1.60
.38 R 4 PLACES
.94
.14
A
.83
.37
C
.44 DIA
.14
C SEE SHEET 2
9.03
8.35
7.83
6.60
6.51
5.93
5.37
4.79
4.23
3.67
3.09
3.00
2.53
1.95
1.37
7.54
7.38
7.05
6.66
5.88
5.36
4.58
4.18
3.40
3.00
2.22
1.82
1.04
.89
.48
.33
SEE SHEET 2
B
B
.50 3 PLACES
.32
.62
.92
1.40
2.00
2.48
3.08
3.56
3.86
4.16
4.26
A
SEE SHEET 2
.45
1.13
.50 4 PLACES
1.89
2.52
3.96
4.16
3.41
2.94
2.48
1.18
.50
2.06
A SEE SHEET 2
A

NOTES
1. MATL: 356-T6 AL PER QQ-A-601, CLASS 3M, COND T6
ALTERNATE MATL FOR MACHINING: 6061-T6 ALUMINUM
ALLOY PER QQ-A-327 TEMPER T6
2. CLASSIFICATION OF CASTING PER MIL-C-6021 CLASS IIA
3. AS CAST SURFACE QUALITY TO BE $\sqrt[250]{}$
4. ALL FILLETS & ROUNDS TO BE .06/.18 R UNLESS OTHERWISE SPECIFIED
5. INTERPRET DRAWING IN ACCORDANCE WITH STANDARDS PRESCRIBED
BY MIL-D-70327

QTY REQD	PART OR IDENTIFYING NO.	NOMENCLATURE OR DESCRIPTION	FIND NO.

LIST OF MATERIALS

1004151	
NEXT ASSY	USED ON
APPLICATION	

UNLESS OTHERWISE SPECIFIED
DIMENSIONS ARE IN INCHES
TOLERANCES ON
FRACTIONS ± DECIMALS ±.03 ANGLES ±
DO NOT SCALE THIS DRAWING
MATERIAL SEE NOTE 1
HEAT TREATMENT NONE
FINAL FINISH NONE

MIT
INSTRUMENTATION LAB
CAMBRIDGE, MASS
DWG. NO. CONTRACT
DRAWN B. Jenna DATE
CHECKED
APPROVAL
APPROVAL Eldon C Hall
NASA APPROVAL
MIT APPROVAL
MIT APPROVAL

MANNED SPACECRAFT CENTER
HOUSTON, TEXAS

CASTING
FRONT PANEL HOUSING
AGC DSKY MAIN

CODE IDENT NO. —— SIZE E NASA DRAWING NO. 1004586
SCALE 1/1 WT SHEET 1 OF 2

NOTICE — WHEN GOVERNMENT DRAWINGS, SPECIFICATIONS, OR OTHER DATA ARE USED FOR ANY PURPOSE OTHER THAN IN CONNECTION WITH A DEFINITELY RELATED GOVERNMENT PROCUREMENT OPERATION, THE UNITED STATES GOVERNMENT THEREBY INCURS NO RESPONSIBILITY NOR ANY OBLIGATION WHATSOEVER AND THE FACT THAT THE GOVERNMENT MAY HAVE FORMULATED, FURNISHED, OR IN ANY WAY SUPPLIED THE SAID DRAWINGS, SPECIFICATIONS, OR OTHER DATA IS NOT TO BE REGARDED BY IMPLICATION OR OTHERWISE AS IN ANY MANNER LICENSING THE HOLDER OR ANY OTHER PERSON OR CORPORATION, OR CONVEYING ANY RIGHTS OR PERMISSION TO MANUFACTURE, USE, OR SELL ANY PATENTED INVENTION THAT MAY IN ANY WAY BE RELATED THERETO.

REVISIONS 04935

SYM	DESCRIPTION	DATE	APPROVAL
A	REVISED PER TDRR 07259 DR~~[illegible]~~ CHK [illegible]	3/13/68	HWC

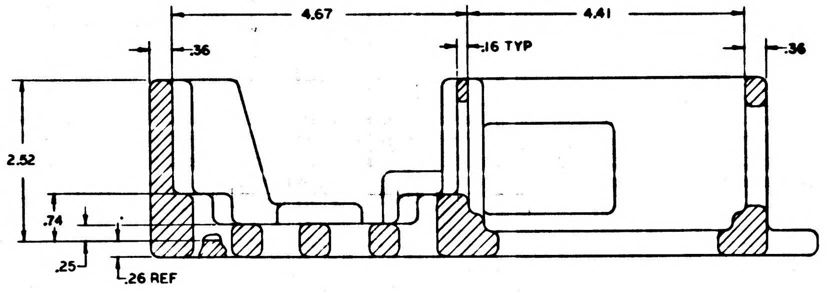

SECTION B-B

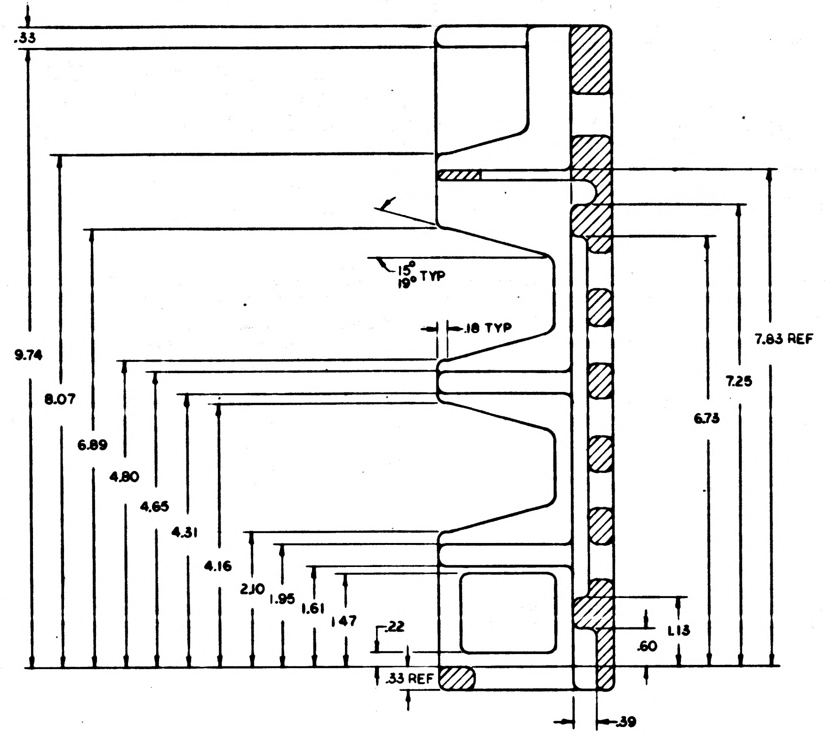

SECTION A-A
SEE SHEET 1

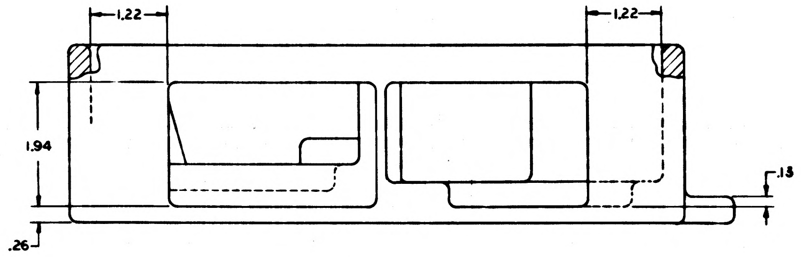

VIEW A-A

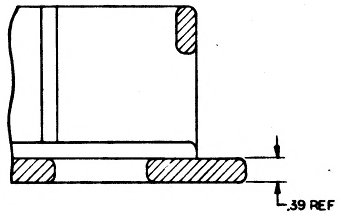

PARTIAL SECTION C-C

QTY REQD	PART OR IDENTIFYING NO.	NOMENCLATURE OR DESCRIPTION	FIND NO.

LIST OF MATERIALS

NEXT ASSY	USED ON

APPLICATION

UNLESS OTHERWISE SPECIFIED
DIMENSIONS ARE IN INCHES
TOLERANCES ON
FRACTIONS ± DECIMALS ±.03 ANGLES ±
DO NOT SCALE THIS DRAWING
MATERIAL -
HEAT TREATMENT
FINAL FINISH

MIT
INSTRUMENTATION LAB
CAMBRIDGE, MASS
DWG. NO. CONTRACT
DRAWN B. [illegible] DATE 22OCT65
CHECKED [illegible] 4NOV65
APPROVAL [illegible] [illegible]
APPROVAL Eldon C. Hall 15 Nov 65
NASA APPROVAL [illegible]
MIT APPROVAL
MIT APPROVAL [illegible]

MANNED SPACECRAFT CENTER
HOUSTON, TEXAS

CASTING
FRONT PANEL HOUSING
AGC DSKY MAIN

CODE IDENT NO. ——
SIZE E
NASA DRAWING NO. 1004586
SCALE 1/1
WT
SHEET 2 OF 2

NOTICE — WHEN GOVERNMENT DRAWINGS, SPECIFICATIONS, OR OTHER DATA ARE USED FOR ANY PURPOSE OTHER THAN IN CONNECTION WITH A DEFINITELY RELATED GOVERNMENT PROCUREMENT OPERATION, THE UNITED STATES GOVERNMENT THEREBY INCURS NO RESPONSIBILITY NOR ANY OBLIGATION WHATSOEVER; AND THE FACT THAT THE GOVERNMENT MAY HAVE FORMULATED, FURNISHED, OR IN ANY WAY SUPPLIED THE SAID DRAWINGS, SPECIFICATIONS, OR OTHER DATA IS NOT TO BE REGARDED BY IMPLICATION OR OTHERWISE AS IN ANY MANNER LICENSING THE HOLDER OR ANY OTHER PERSON OR CORPORATION, OR CONVEYING ANY RIGHTS OR PERMISSION TO MANUFACTURE, USE, OR SELL ANY PATENTED INVENTION THAT MAY IN ANY WAY BE RELATED THERETO

REVISIONS 04735

SYM	DESCRIPTION	DATE	APPROVAL
A	REVISED PER TDRR 07259 DR CHK	3/22/	
B	REVISED PER TDRR 07644 DR CHK	4/3/64	

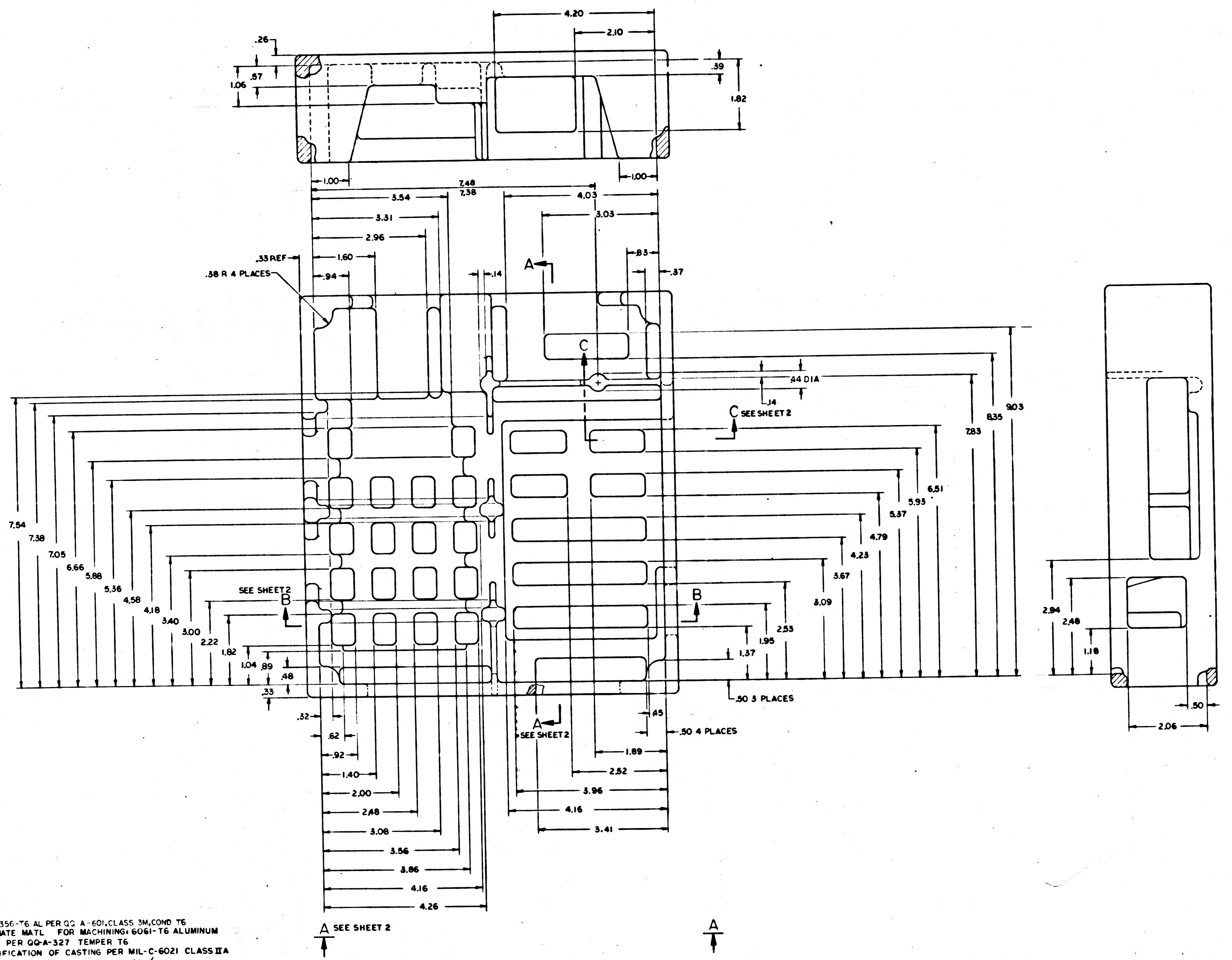

4.20
2.10
.26
.57
1.06
.39
1.82
1.00
1.00
7.48
7.38
3.54
4.03
3.31
3.03
2.96
.33 REF
1.60
.83
.38 R 4 PLACES
.94
.14
.37
A
C
.44 DIA
.14
C SEE SHEET 2
9.03
8.35
7.83
6.51
5.93
5.37
4.79
4.23
3.67
3.09
2.53
1.95
1.37
7.54
7.38
7.05
6.66
5.88
5.36
4.58
4.18
3.40
3.00
2.22
1.82
1.04
.89
.48
.33
SEE SHEET 2
B
B
.50 3 PLACES
.32
.45
.50 4 PLACES
A
SEE SHEET 2
.62
.92
1.40
2.00
2.48
3.08
3.56
3.86
4.16
4.26
1.89
2.52
3.96
4.16
3.41
2.94
2.48
1.18
.50
2.06
A SEE SHEET 2
A

NOTES

1. MATL: 356-T6 AL PER QQ A-601, CLASS 3M, COND T6
   ALTERNATE MATL FOR MACHINING: 6061-T6 ALUMINUM
   ALLOY PER QQ-A-327 TEMPER T6
2. CLASSIFICATION OF CASTING PER MIL-C-6021 CLASS IIA
3. AS CAST SURFACE QUALITY TO BE $250\checkmark$
4. ALL FILLETS & ROUNDS TO BE .06/.18 R UNLESS OTHERWISE SPECIFIED
5. INTERPRET DRAWING IN ACCORDANCE WITH STANDARDS PRESCRIBED BY MIL-D-70327

QTY REQD	PART OR IDENTIFYING NO.	NOMENCLATURE OR DESCRIPTION	FIND NO.

LIST OF MATERIALS

NEXT ASSY	USED ON
1004151	

APPLICATION

UNLESS OTHERWISE SPECIFIED
DIMENSIONS ARE IN INCHES
TOLERANCES ON
FRACTIONS ± DECIMALS ±.03 ANGLES ±
DO NOT SCALE THIS DRAWING

MATERIAL SEE NOTE 1
HEAT TREATMENT NONE
FINAL FINISH NONE

MIT
INSTRUMENTATION LAB
CAMBRIDGE MASS
DWG NO. CONTRACT

DRAWN B. Jamason DATE
CHECKED J. R. Bogni 4/10/63
APPROVAL
APPROVAL
NASA APPROVAL
MIT APPROVAL
MIT APPROVAL

MANNED SPACECRAFT CENTER
HOUSTON, TEXAS

CASTING
FRONT PANEL HOUSING
AGC DSKY MAIN

CODE IDENT NO. —— SIZE E NASA DRAWING NO. 1004586

SCALE 1/1 WT SHEET 1 OF 2

NOTICE — WHEN GOVERNMENT DRAWINGS, SPECIFICATIONS, OR OTHER DATA ARE USED FOR ANY PURPOSE OTHER THAN IN CONNECTION WITH A DEFINITELY RELATED GOVERNMENT PROCUREMENT OPERATION, THE UNITED STATES GOVERNMENT THEREBY INCURS NO RESPONSIBILITY NOR ANY OBLIGATION WHATSOEVER; AND THE FACT THAT THE GOVERNMENT MAY HAVE FORMULATED, FURNISHED, OR IN ANY WAY SUPPLIED THE SAID DRAWINGS, SPECIFICATIONS, OR OTHER DATA IS NOT TO BE REGARDED BY IMPLICATION OR OTHERWISE AS IN ANY MANNER LICENSING THE HOLDER OR ANY OTHER PERSON OR CORPORATION, OR CONVEYING ANY RIGHTS OR PERMISSION TO MANUFACTURE, USE, OR SELL ANY PATENTED INVENTION THAT MAY IN ANY WAY BE RELATED THERETO

REVISIONS 84935

SYM	DESCRIPTION	DATE	APPROVAL
A	REVISED PER TDRR 07259 DR CHK	3/23/64	HWC
B	REVISED PER TDRR 07644 DR CHK	11/3/64	HWC

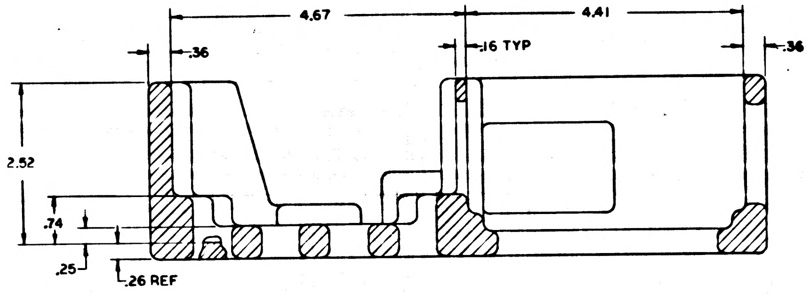

SECTION B-B

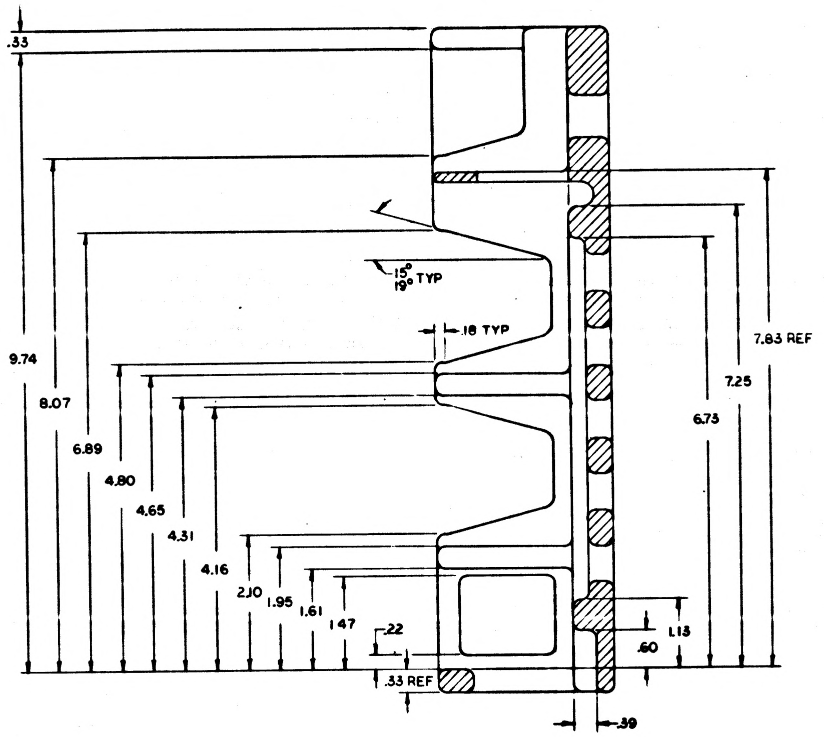

SECTION A-A
SEE SHEET 1

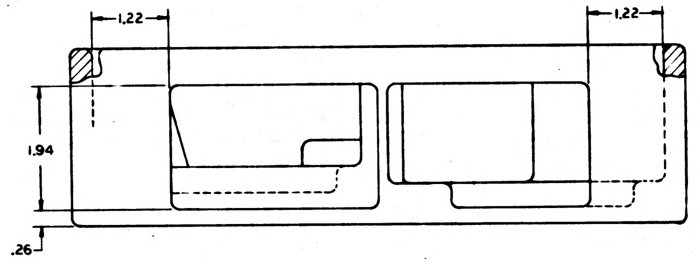

VIEW A-A

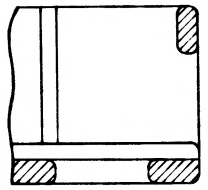

PARTIAL SECTION C-C

QTY REQD	PART OR IDENTIFYING NO.	NOMENCLATURE OR DESCRIPTION	FIND NO.

LIST OF MATERIALS

NEXT ASSY	USED ON
APPLICATION	

UNLESS OTHERWISE SPECIFIED DIMENSIONS ARE IN INCHES TOLERANCES ON
FRACTIONS ± DECIMALS ±.03 ANGLES ±
DO NOT SCALE THIS DRAWING
MATERIAL
HEAT TREATMENT
FINAL FINISH

MIT INSTRUMENTATION LAB
CAMBRIDGE, MASS
DWG NO. CONTRACT
DRAWN B. Jensen DATE 22OCT63
CHECKED 4NOV63
APPROVAL 4-4-63
APPROVAL Eldon C. Hall 15 Nov 63
NASA APPROVAL
MIT APPROVAL
MIT APPROVAL 11/14/63

MANNED SPACECRAFT CENTER
HOUSTON, TEXAS

CASTING
FRONT PANEL HOUSING
AGC DSKY MAIN

CODE IDENT NO. ——— SIZE E NASA DRAWING NO. 1004586
SCALE 1/1 WT SHEET 2 OF 2

NOTICE — WHEN GOVERNMENT DRAWINGS, SPECIFICATIONS, OR OTHER DATA ARE USED FOR ANY PURPOSE OTHER THAN IN CONNECTION WITH A DEFINITELY RELATED GOVERNMENT PROCUREMENT OPERATION, THE UNITED STATES GOVERNMENT THEREBY INCURS NO RESPONSIBILITY NOR ANY OBLIGATION WHATSOEVER; AND THE FACT THAT THE GOVERNMENT MAY HAVE FORMULATED, FURNISHED, OR IN ANY WAY SUPPLIED THE SAID DRAWINGS, SPECIFICATIONS, OR OTHER DATA IS NOT TO BE REGARDED BY IMPLICATION OR OTHERWISE AS IN ANY MANNER LICENSING THE HOLDER OR ANY OTHER PERSON OR CORPORATION, OR CONVEYING ANY RIGHTS OR PERMISSION TO MANUFACTURE, USE, OR SELL ANY PATENTED INVENTION THAT MAY IN ANY WAY BE RELATED THERETO.

REVISIONS 08735

SYM	DESCRIPTION	DATE	APPROVAL
Ⓟ A	REVISED PER TDRR 07259 DR [illegible] CHK [illegible]	3/22/[illegible]	[illegible]
B	REVISED PER TDRR 07644 DR [illegible] CHK [illegible]	4/3/[illegible]	[illegible]
Ⓜ C	REVISED PER TDRR 14732 DR Paul [illegible] CHK [illegible]	12/10/6[illegible]	HLC

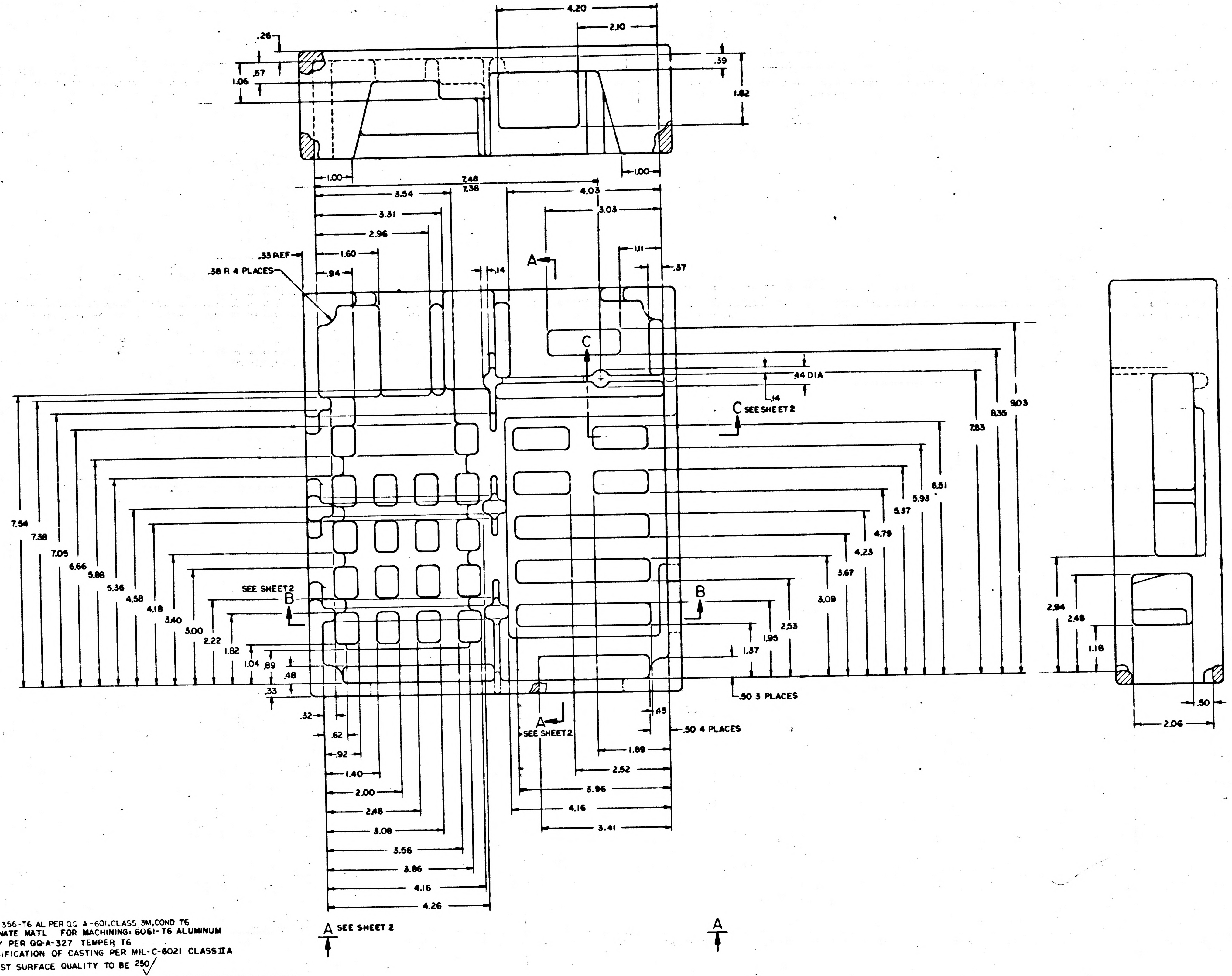

.26
.57
1.06
4.20
2.10
.39
1.82
1.00
1.00
7.48
7.38
3.54
4.03
3.31
3.03
2.96
1.60
.33 REF
.38 R 4 PLACES
.94
.14
A
1.11
.37
C
.44 DIA
.14
C SEE SHEET 2
9.03
8.35
7.83
6.81
5.93
5.57
4.79
4.23
3.67
3.09
2.53
1.95
1.37
B
.50 3 PLACES
7.54
7.38
7.05
6.66
5.88
5.36
4.58
4.18
3.40
3.00
2.22
1.82
1.04
.89
.48
.33
SEE SHEET 2
B
.32
.62
.92
1.40
2.00
2.48
3.08
3.56
3.86
4.16
4.26
A SEE SHEET 2
A
SEE SHEET 2
.45
.50 4 PLACES
1.89
2.52
3.96
4.16
3.41
A
2.94
2.48
1.18
.50
2.06

NOTES
1. MATL: 356-T6 AL PER QQ A-601, CLASS 3M, COND T6
   ALTERNATE MATL FOR MACHINING: 6061-T6 ALUMINUM
   ALLOY PER QQ-A-327 TEMPER T6
2. CLASSIFICATION OF CASTING PER MIL-C-6021 CLASS IIA
3. AS CAST SURFACE QUALITY TO BE $250\checkmark$
4. ALL FILLETS & ROUNDS TO BE .06/.18 R UNLESS OTHERWISE SPECIFIED
5. INTERPRET DRAWING IN ACCORDANCE WITH STANDARDS PRESCRIBED BY MIL-D-70327

QTY REQD	PART OR IDENTIFYING NO.	NOMENCLATURE OR DESCRIPTION	FIND NO

LIST OF MATERIALS

NEXT ASSY	USED ON
1004151	

APPLICATION

UNLESS OTHERWISE SPECIFIED DIMENSIONS ARE IN INCHES
TOLERANCES ON
FRACTIONS ± DECIMALS ±.03 ANGLES ±
DO NOT SCALE THIS DRAWING
MATERIAL SEE NOTE 1
HEAT TREATMENT NONE
FINAL FINISH NONE

MIT INSTRUMENTATION LAB
CAMBRIDGE, MASS
DRAWN B. [illegible] DATE [illegible]
CHECKED [illegible] 4/10/63
APPROVAL [illegible]
APPROVAL [illegible]
NASA APPROVAL [illegible]
MIT APPROVAL
MIT APPROVAL [illegible]

MANNED SPACECRAFT CENTER
HOUSTON, TEXAS

CASTING
FRONT PANEL HOUSING
AGC DSKY MAIN

CODE IDENT NO.	SIZE	NASA & VWING NO
—	E	1004586

SCALE 1/1 WT SHEET 1 OF 2

MASTER

1004586 C

NOTICE — WHEN GOVERNMENT DRAWINGS, SPECIFICATIONS, OR OTHER DATA ARE USED FOR ANY PURPOSE OTHER THAN IN CONNECTION WITH A DEFINITELY RELATED GOVERNMENT PROCUREMENT OPERATION, THE UNITED STATES GOVERNMENT THEREBY INCURS NO RESPONSIBILITY NOR ANY OBLIGATION WHATSOEVER; AND THE FACT THAT THE GOVERNMENT MAY HAVE FORMULATED, FURNISHED, OR IN ANY WAY SUPPLIED THE SAID DRAWINGS, SPECIFICATIONS, OR OTHER DATA IS NOT TO BE REGARDED BY IMPLICATION OR OTHERWISE AS IN ANY MANNER LICENSING THE HOLDER OR ANY OTHER PERSON OR CORPORATION, OR CONVEYING ANY RIGHTS OR PERMISSION TO MANUFACTURE, USE, OR SELL ANY PATENTED INVENTION THAT MAY IN ANY WAY BE RELATED THERETO.

REVISIONS 04935

SYM	DESCRIPTION	DATE	APPROVAL
A	REVISED PER TDRR 09259 DR CHK	3/23/64	HWC
B	REVISED PER TDRR 07644 DR CHK	11/3/64	HWC
C	REVISED PER TDRR 14732 DR CHK	2/24/64	HWC

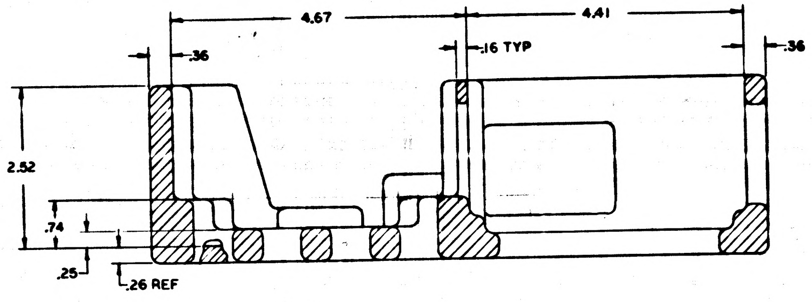

SECTION B-B

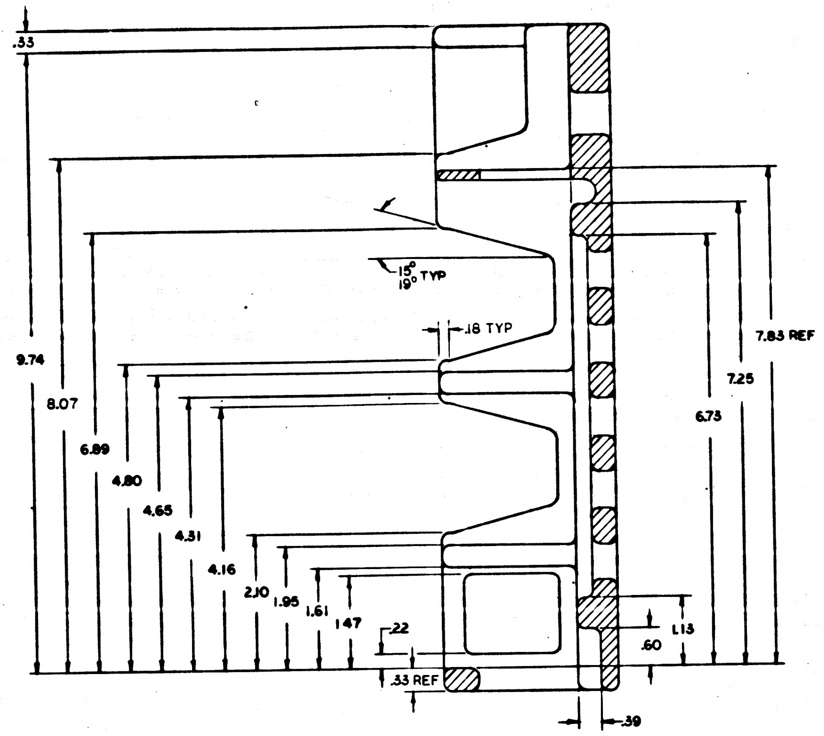

SECTION A-A
SEE SHEET 1

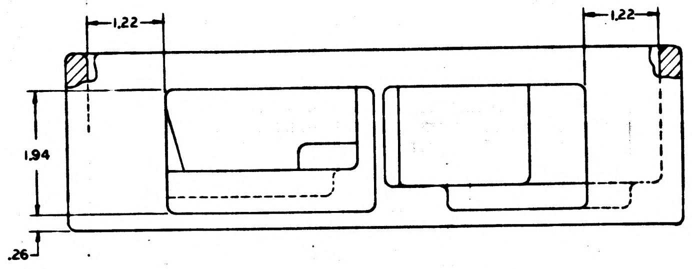

VIEW A-A

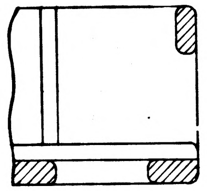

PARTIAL SECTION C-C

QTY REQD	PART OR IDENTIFYING NO.	NOMENCLATURE OR DESCRIPTION	FIND NO.

LIST OF MATERIALS

NEXT ASSY	USED ON

APPLICATION

UNLESS OTHERWISE SPECIFIED
DIMENSIONS ARE IN INCHES
TOLERANCES ON
FRACTIONS ± DECIMALS ±.03 ANGLES ±
DO NOT SCALE THIS DRAWING
MATERIAL
HEAT TREATMENT
FINAL FINISH

MIT
INSTRUMENTATION LAB
CAMBRIDGE, MASS
DWG NO CONTRACT
DRAWN B. Jones DATE 22OCT63
CHECKED R. Boag 4NOV63
APPROVAL Boggs 11-8-63
APPROVAL Eldon C. Hall 15 Nov 63
NASA APPROVAL
MIT APPROVAL
MIT APPROVAL

MANNED SPACECRAFT CENTER
HOUSTON, TEXAS

CASTING
FRONT PANEL HOUSING
AGC DSKY MAIN

CODE IDENT NO. ——
SIZE E
NASA DRAWING NO. 1004586
SCALE 1/1 WT SHEET 2 OF 2

MASTER

NOTICE — WHEN GOVERNMENT DRAWINGS, SPECIFICATIONS, OR OTHER DATA ARE USED FOR ANY PURPOSE OTHER THAN IN CONNECTION WITH A DEFINITELY RELATED GOVERNMENT PROCUREMENT OPERATION, THE UNITED STATES GOVERNMENT THEREBY INCURS NO RESPONSIBILITY NOR ANY OBLIGATION WHATSOEVER; AND THE FACT THAT THE GOVERNMENT MAY HAVE FORMULATED, FURNISHED, OR IN ANY WAY SUPPLIED THE SAID DRAWINGS, SPECIFICATIONS, OR OTHER DATA IS NOT TO BE REGARDED BY IMPLICATION OR OTHERWISE AS IN ANY MANNER LICENSING THE HOLDER OR ANY OTHER PERSON OR CORPORATION, OR CONVEYING ANY RIGHTS OR PERMISSION TO MANUFACTURE, USE, OR SELL ANY PATENTED INVENTION THAT MAY IN ANY WAY BE RELATED THERETO.

REVISIONS 04735			
SYM	DESCRIPTION	DATE	APPROVAL

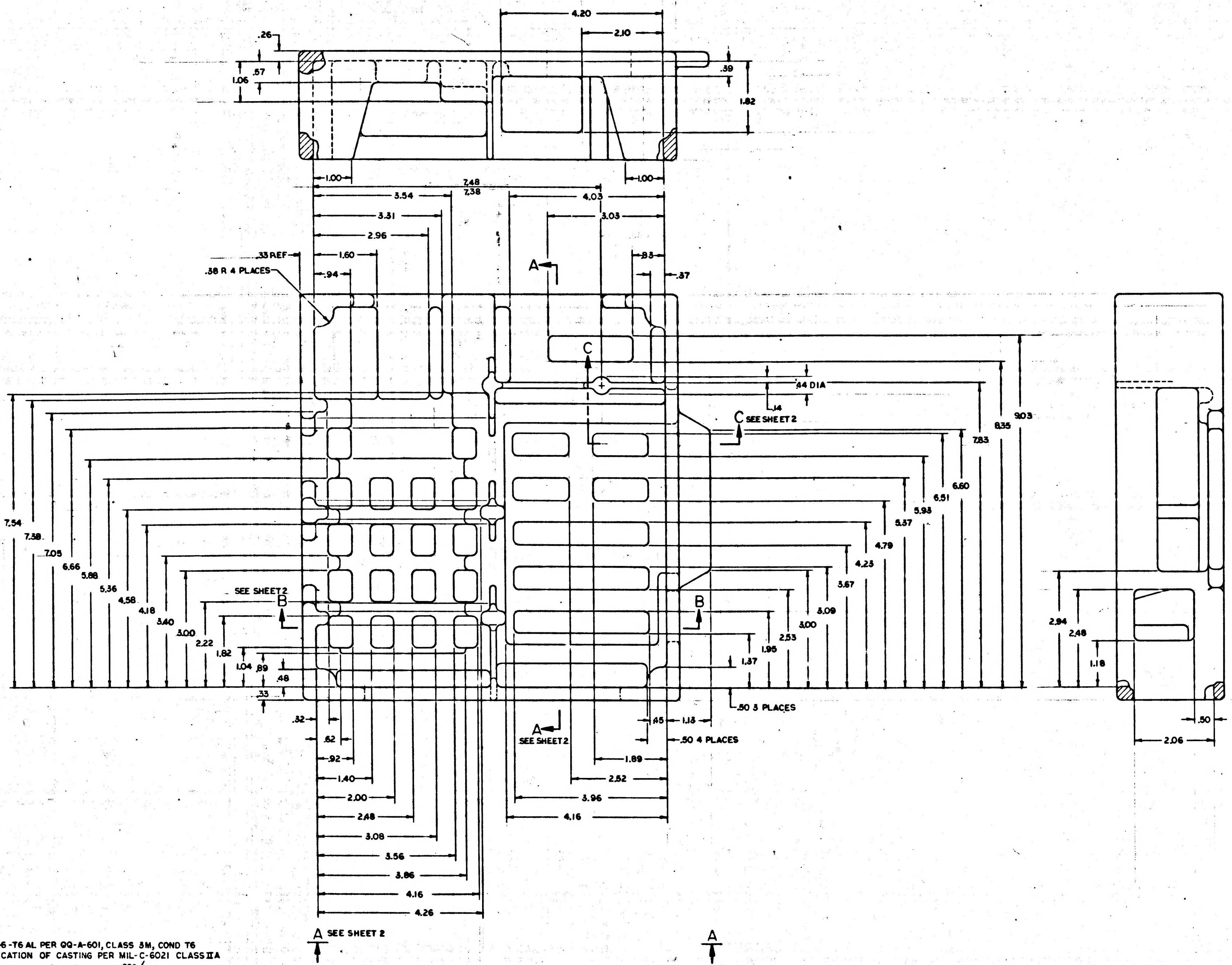

4.20
2.10
.26
.57
1.06
.39
1.82
1.00
1.00
7.48
7.38
3.54
4.03
3.31
3.03
2.96
.33 REF
1.60
.83
.38 R 4 PLACES
.94
.37
A
C
.44 DIA
.14
C SEE SHEET 2
7.83
8.35
9.03
6.60
6.51
5.93
5.57
4.79
4.23
3.67
3.09
3.00
2.53
1.95
1.37
7.54
7.38
7.05
6.66
5.88
5.36
4.58
4.18
3.40
3.00
2.22
1.82
1.04
.89
.48
.33
SEE SHEET 2
B
B
.50 3 PLACES
.32
.62
.92
1.40
2.00
2.48
3.08
3.56
3.86
4.16
4.26
.65
1.13
.50 4 PLACES
A SEE SHEET 2
1.89
2.52
3.96
4.16
2.94
2.48
1.18
.50
2.06
A SEE SHEET 2
A

NOTES
1. MATL: 356-T6 AL PER QQ-A-601, CLASS 3M, COND T6
2. CLASSIFICATION OF CASTING PER MIL-C-6021 CLASS IIA
3. AS CAST SURFACE QUALITY TO BE 250√
4. ALL FILLETS & ROUNDS TO BE .06/.18 R UNLESS OTHERWISE SPECIFIED
5. INTERPRET DRAWING IN ACCORDANCE WITH STANDARDS PRESCRIBED BY MIL-D-70327

QTY REQD	PART OR IDENTIFYING NO.	NOMENCLATURE OR DESCRIPTION	FIND NO.

LIST OF MATERIALS

1004151	
NEXT ASSY	USED ON
APPLICATION	

UNLESS OTHERWISE SPECIFIED DIMENSIONS ARE IN INCHES
TOLERANCES ON
FRACTIONS ± DECIMALS ±.03 ANGLES ±
DO NOT SCALE THIS DRAWING
MATERIAL SEE NOTE 1
HEAT TREATMENT NONE
FINAL FINISH NONE

MIT INSTRUMENTATION LAB
CAMBRIDGE, MASS.
DRAWN
DATE
CHECKED
APPROVAL
APPROVAL
NASA APPROVAL
MIT APPROVAL
MIT APPROVAL

MANNED SPACECRAFT CENTER
HOUSTON, TEXAS

CASTING
FRONT PANEL HOUSING
AGC DSKY MAIN

CODE IDENT NO. —
SIZE E
NASA DRAWING NO. 1004586
SCALE 1/1
WT
SHEET 1 OF 2

MASTER

INCHES
PHOTOGRAPHIC SCALE ONLY

NOTICE — WHEN GOVERNMENT DRAWINGS, SPECIFICATIONS, OR OTHER DATA ARE USED FOR ANY PURPOSE OTHER THAN IN CONNECTION WITH A DEFINITELY RELATED GOVERNMENT PROCUREMENT OPERATION, THE UNITED STATES GOVERNMENT THEREBY INCURS NO RESPONSIBILITY NOR ANY OBLIGATION WHATSOEVER; AND THE FACT THAT THE GOVERNMENT MAY HAVE FORMULATED, FURNISHED, OR IN ANY WAY SUPPLIED THE SAID DRAWINGS, SPECIFICATIONS, OR OTHER DATA IS NOT TO BE REGARDED BY IMPLICATION OR OTHERWISE AS IN ANY MANNER LICENSING THE HOLDER OR ANY OTHER PERSON OR CORPORATION, OR CONVEYING ANY RIGHTS OR PERMISSION TO MANUFACTURE, USE, OR SELL ANY PATENTED INVENTION THAT MAY IN ANY WAY BE RELATED THERETO.

REVISIONS 84735

SYM	DESCRIPTION	DATE	APPROVAL

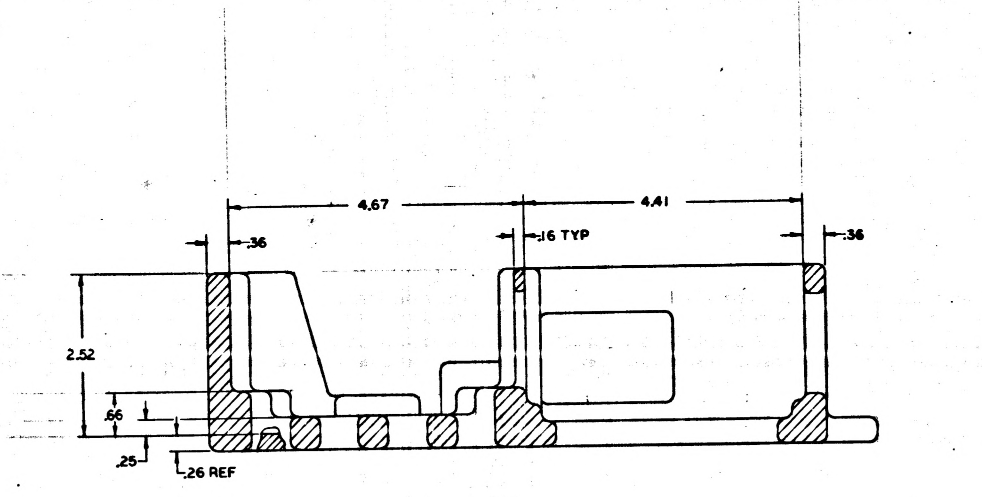

SECTION B-B

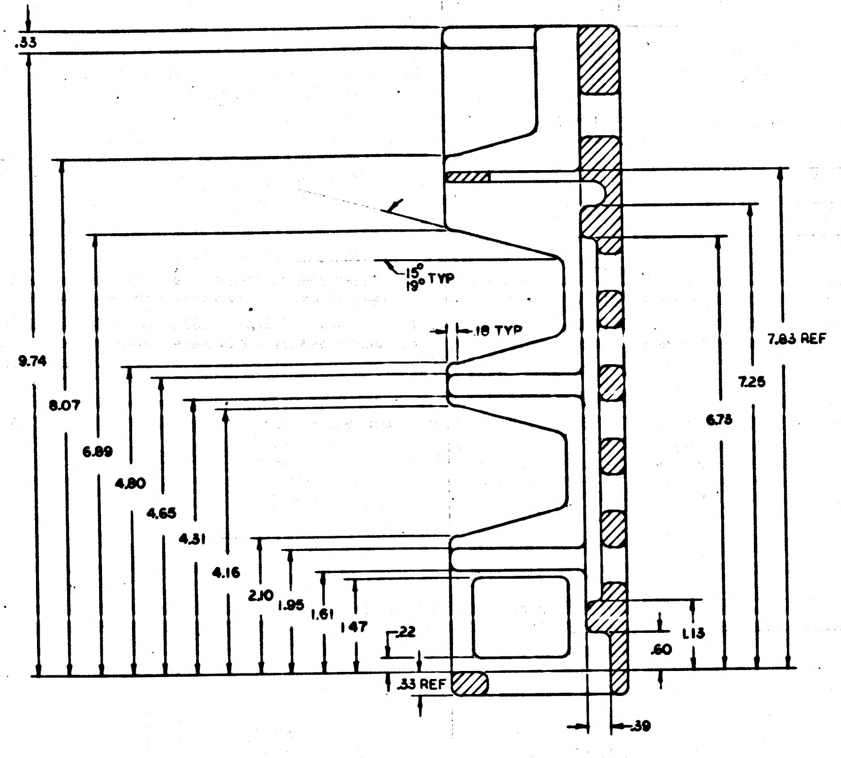

SECTION A-A
SEE SHEET 1

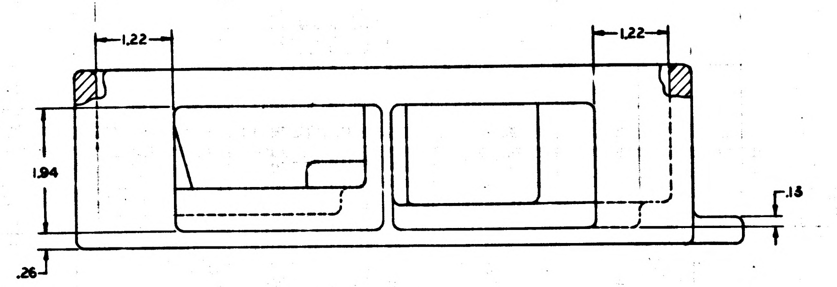

VIEW A-A

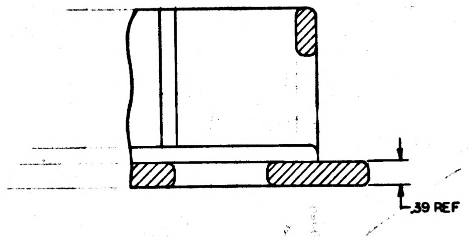

PARTIAL SECTION C-C

MASTER

QTY REQD	PART OR IDENTIFYING NO.	NOMENCLATURE OR DESCRIPTION	FIND NO.

LIST OF MATERIALS

NEXT ASSY | USED ON
APPLICATION

UNLESS OTHERWISE SPECIFIED
DIMENSIONS ARE IN INCHES
TOLERANCES ON
FRACTIONS ± DECIMALS ±.03 ANGLES ±
DO NOT SCALE THIS DRAWING
MATERIAL
HEAT TREATMENT
FINAL FINISH

MIT
INSTRUMENTATION LAB
CAMBRIDGE, MASS
DWG. NO. CONTRACT
DRAWN B. J DATE 22OCT63
CHECKED 4NOV63
APPROVAL 4-4-63
APPROVAL Eldon C Hall 15 Nov 63
NASA APPROVAL
MIT APPROVAL
MIT APPROVAL 11/14/63

MANNED SPACECRAFT CENTER
HOUSTON, TEXAS

CASTING
FRONT PANEL HOUSING
AGC DSKY MAIN

CODE IDENT NO. —
SIZE E
NASA DRAWING NO. 1004586
SCALE 1/1
WT
SHEET 2 OF 2

INCHES
PHOTOGRAPHIC SCALE ONLY

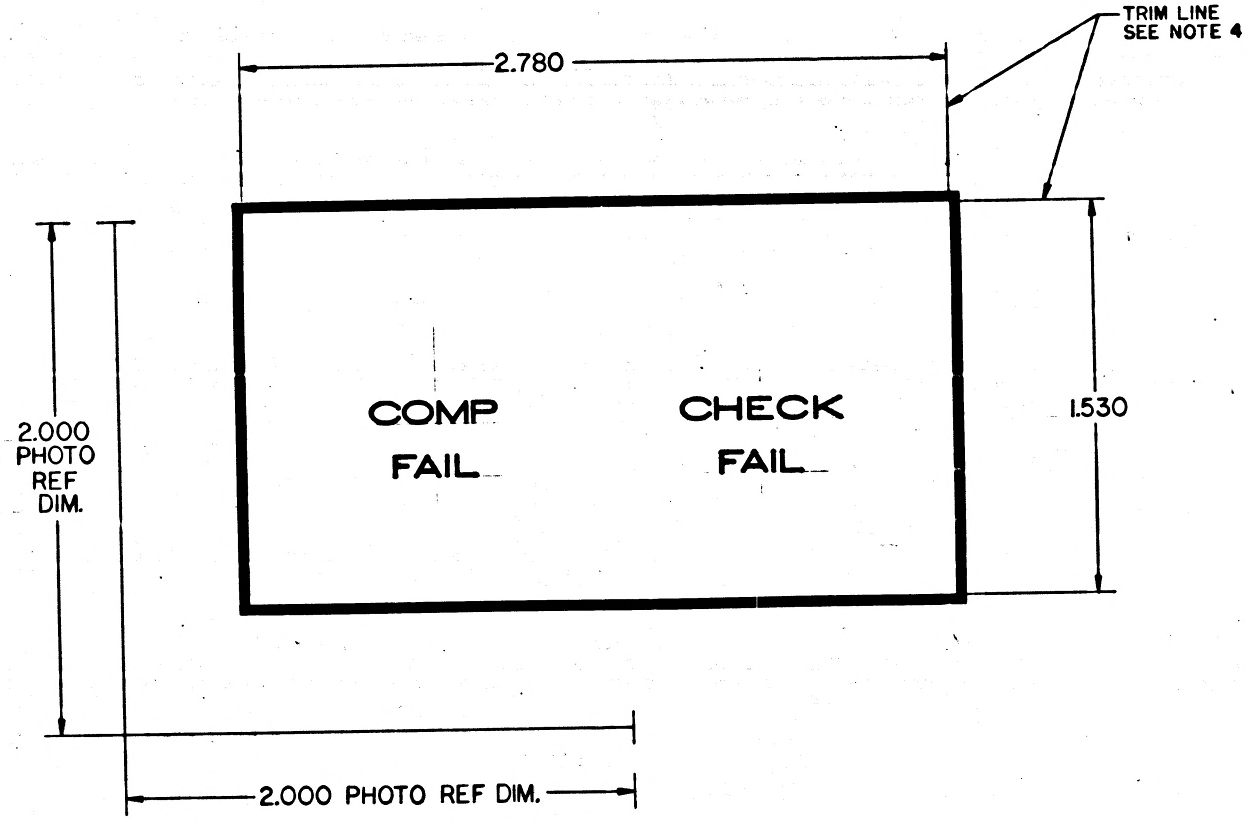

NOTES:
1. MATERIAL: .006/.008 THICK PLASTIC SHEET, SENSITIZED, DIMENSIONALLY STABLE PER L-F-340, TYPE IB, CLASS 2, STYLE IA
2. INTERPRET DRAWING IN ACCORDANCE WITH STANDARDS PRESCRIBED BY MIL-D-70327
3. THE ORIGINAL OF THIS DRAWING OR REPRODUCTION MADE BY A PROCESS OR METHOD SHALL INSURE DIMENSIONAL STABILITY. DIMENSIONAL VARIATIONS SHALL NOT EXCEED .001 INCH PER FOOT
4. CUT TO WITHIN .010 OF TRIM LINE
5. MAKE PHOTOGRAPHIC MASTER NEGATIVE AND POSITIVE FILMS TO TO DIMENSIONS SHOWN

QTY REQD	PART OR IDENTIFYING NO.	NOMENCLATURE OR DESCRIPTION	FIND NO.

LIST OF MATERIALS

NEXT ASSY	USED ON
1003540	

APPLICATION

UNLESS OTHERWISE SPECIFIED
DIMENSIONS ARE IN INCHES
TOLERANCES ON
FRACTIONS ± DECIMALS ±.020 ANGLES ±
DO NOT SCALE THIS DRAWING
MATERIAL SEE NOTE 1
HEAT TREATMENT NONE
FINAL FINISH NONE

MIT
INSTRUMENTATION LAB
CAMBRIDGE, MASS.
DRAWN
DATE
CHECKED
APPROVAL
APPROVAL Eldon C Hall 22 Oct 63
NASA APPROVAL
MIT APPROVAL

MANNED SPACECRAFT CENTER
HOUSTON, TEXAS

INSULATOR, FRONT
INDICATOR DISPLAY
AGC DSKY, MAIN

CODE IDENT NO. ——
SIZE E
NASA DRAWING NO. 1004589
SCALE 4/1
WT
SHEET 1 OF 1

REVISIONS
1004589

NOTICE — WHEN GOVERNMENT DRAWINGS, SPECIFICATIONS, OR OTHER DATA ARE USED FOR ANY PURPOSE OTHER THAN IN CONNECTION WITH A DEFINITELY RELATED GOVERNMENT PROCUREMENT OPERATION, THE UNITED STATES GOVERNMENT THEREBY INCURS NO RESPONSIBILITY NOR ANY OBLIGATION WHATSOEVER; AND THE FACT THAT THE GOVERNMENT MAY HAVE FORMULATED, FURNISHED, OR IN ANY WAY SUPPLIED THE SAID DRAWINGS, SPECIFICATIONS, OR OTHER DATA IS NOT TO BE REGARDED BY IMPLICATION OR OTHERWISE AS IN ANY MANNER LICENSING THE HOLDER OR ANY OTHER PERSON OR CORPORATION, OR CONVEYING ANY RIGHTS OR PERMISSION TO MANUFACTURE, USE, OR SELL ANY PATENTED INVENTION THAT MAY IN ANY WAY BE RELATED THERETO.

REV	DESCRIPTION	DATE	APPROVAL

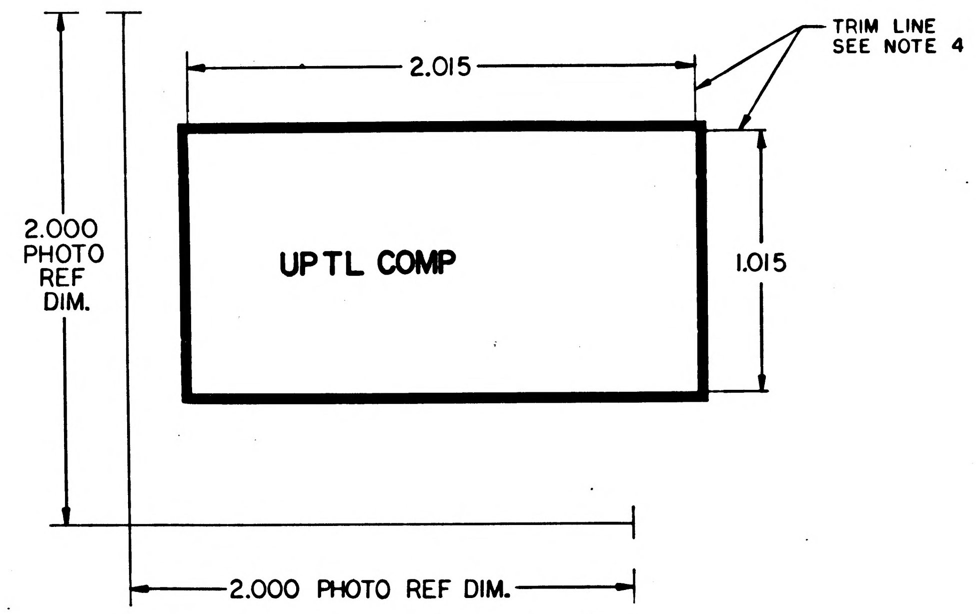

NOTES
1. MATERIAL:.006/.008 THICK PLASTIC SHEET, SENSITIZED, DIMENSIONALLY STABLE PER L-F-340, TYPE IB, CLASS 2, STYLE IA
2. INTERPRET DRAWING IN ACCORDANCE WITH STANDARDS PRESCRIBED BY MIL-D-70327
3. THE ORIGINAL OF THIS DRAWING OR REPRODUCTION MADE BY A PROCESS OR METHOD SHALL INSURE DIMENSIONAL STABILITY. DIMENSIONAL VARIATIONS SHALL NOT EXCEED .001 INCH PER FOOT
4. CUT TO WITHIN .010 OF TRIM LINE
5. MAKE PHOTOGRAPHIC MASTER NEGATIVE AND POSITIVE FILMS TO DIMENSIONS SHOWN

MASTER

QTY REQD	PART OR IDENTIFYING NO.	NOMENCLATURE OR DESCRIPTION	FIND NO.

LIST OF MATERIALS

NEXT ASSY	USED ON
1003542	

APPLICATION

UNLESS OTHERWISE SPECIFIED
DIMENSIONS ARE IN INCHES
TOLERANCES ON
FRACTIONS ± DECIMALS ±.020 ANGLES ±
DO NOT SCALE THIS DRAWING
MATERIAL SEE NOTE 1
HEAT TREATMENT NONE
FINAL FINISH NONE

MIT
INSTRUMENTATION LAB
CAMBRIDGE, MASS
DWG NO. CONTRACT
DRAWN R. Bennett DATE 6 May 63
CHECKED R. Edwards 16 May 63
APPROVAL
APPROVAL Ellas C. Hall 17 May 63
NASA APPROVAL
MIT APPROVAL

MANNED SPACECRAFT CENTER
HOUSTON, TEXAS

INSULATOR, FRONT
PROGRAM DISPLAY
AGC DSKY MAIN & NAV

CODE IDENT NO. —— SIZE E NASA DRAWING NO. 1004590
SCALE 4/1 WT SHEET 1 OF 1

INCHES
PHOTOGRAPHIC SCALE ONLY

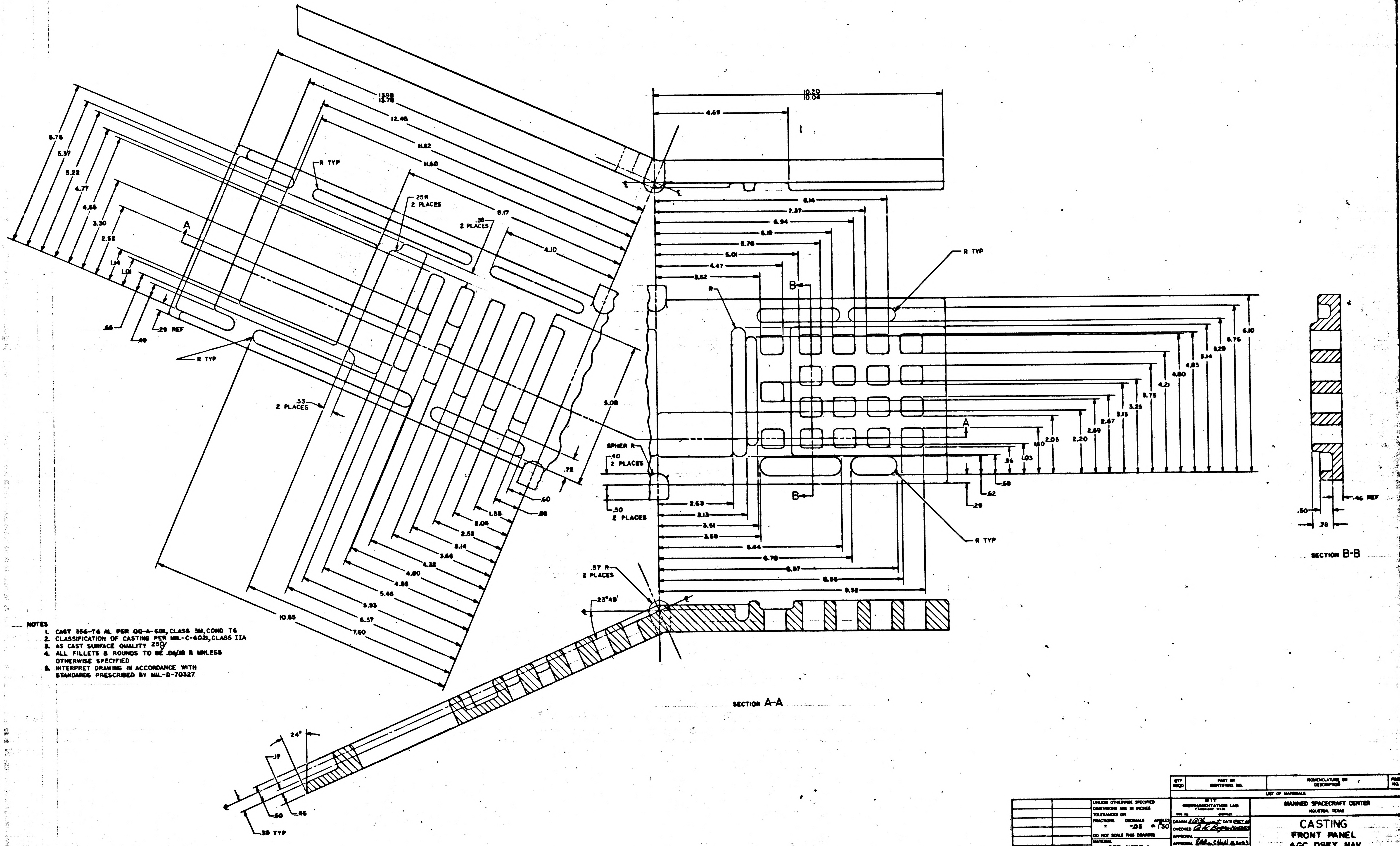
10.20
10.04
4.69
13.98
13.78
12.48
11.62
11.60
8.17
4.10
5.76
5.37
5.22
4.77
4.65
3.30
2.52
1.14
1.01
.66
.29 REF
.49
R TYP
.25R
2 PLACES
.38
2 PLACES
.33
2 PLACES
5.08
.72
.60
.86
1.38
2.06
2.58
3.14
3.66
4.32
4.80
4.85
5.46
5.93
6.37
7.60
10.85
A
B
8.14
7.37
6.94
6.19
5.78
5.01
4.47
3.62
R
SPHER R
.40
2 PLACES
.50
2 PLACES
2.68
3.13
3.61
3.58
5.44
5.78
6.57
8.56
9.32
6.10
5.76
5.29
5.14
4.83
4.80
4.21
3.75
3.25
3.15
2.67
2.89
2.20
2.05
1.60
1.03
.96
.58
.62
.29
.46 REF
.50
.78
SECTION B-B
.37 R
2 PLACES
23°49'
SECTION A-A
24°
.17
.60
.46
.39 TYP

NOTES
1. CAST 356-T6 AL PER QQ-A-601, CLASS 3M, COND T6
2. CLASSIFICATION OF CASTING PER MIL-C-6021, CLASS IIA
3. AS CAST SURFACE QUALITY 250✓
4. ALL FILLETS & ROUNDS TO BE .06/.18 R UNLESS OTHERWISE SPECIFIED
5. INTERPRET DRAWING IN ACCORDANCE WITH STANDARDS PRESCRIBED BY MIL-D-70327

QTY REQD	PART OR IDENTIFYING NO.	NOMENCLATURE OR DESCRIPTION	FIND NO.

LIST OF MATERIALS

1004141		UNLESS OTHERWISE SPECIFIED DIMENSIONS ARE IN INCHES TOLERANCES ON FRACTIONS ± DECIMALS ±.03 ANGLES ±1°30' DO NOT SCALE THIS DRAWING	MIT INSTRUMENTATION LAB CAMBRIDGE, MASS DRAWN [illegible] DATE OCT 63 CHECKED [illegible] APPROVAL APPROVAL [illegible]	MANNED SPACECRAFT CENTER HOUSTON, TEXAS CASTING FRONT PANEL AGC DSKY NAV
NEXT ASSY	USED ON	MATERIAL SEE NOTE 1	NASA APPROVAL [illegible]	CODE IDENT NO. —
APPLICATION		HEAT TREATMENT NONE	MIT APPROVAL	SIZE J · NASA DRAWING NO. 1004593
		FINAL FINISH NONE	MIT APPROVAL [illegible]	SCALE 1/1 · WT · SHEET 1 OF 1

INCHES
PHOTOGRAPHIC SCALE ONLY

NOTICE — WHEN GOVERNMENT DRAWINGS, SPECIFICATIONS, OR OTHER DATA ARE USED FOR ANY PURPOSE OTHER THAN IN CONNECTION WITH A DEFINITELY RELATED GOVERNMENT PROCUREMENT OPERATION, THE UNITED STATES GOVERNMENT THEREBY INCURS NO RESPONSIBILITY NOR ANY OBLIGATION WHATSOEVER; AND THE FACT THAT THE GOVERNMENT MAY HAVE FORMULATED, FURNISHED, OR IN ANY WAY SUPPLIED THE SAID DRAWINGS, SPECIFICATIONS OR OTHER DATA IS NOT TO BE REGARDED BY IMPLICATION OR OTHERWISE AS IN ANY MANNER LICENSING THE HOLDER OR ANY OTHER PERSON OR CORPORATION, OR CONVEYING ANY RIGHTS OR PERMISSION TO MANUFACTURE, USE, OR SELL ANY PATENTED INVENTION THAT MAY IN ANY WAY BE RELATED THERETO.

1004594

REVISIONS 05178

SYM	DESCRIPTION	DATE	APPROVAL

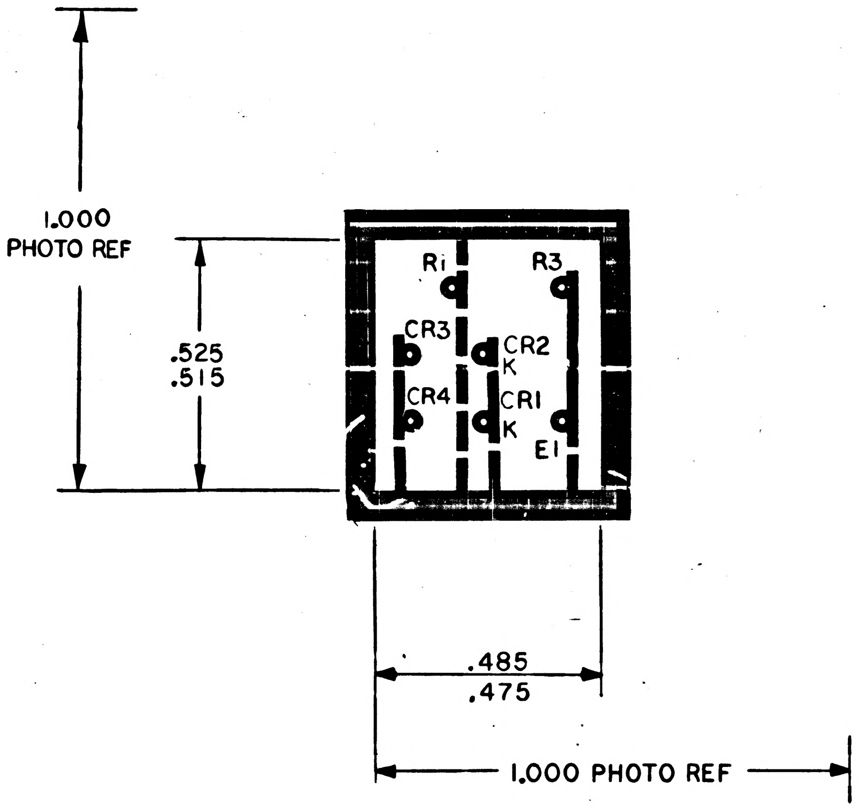

NOTES:

1. MATL .006/.008 THICK PLASTIC SHEET, SENSITIZED DIMENSIONALLY STABLE PER L-F-340, TYPE IB, CLASS II, STYLE IA
2. THE ORIGINAL OF THIS DRAWING OR REPRODUCTION MADE BY A PROCESS OR METHOD SHALL INSURE DIMENSIONAL STABILITY. DIMENSIONAL VARIATIONS SHALL NOT EXCEED .001 INCH PER FOOT.
3. MAKE PHOTOGRAPHIC MASTER NEGATIVE AND POSITIVE FILMS TO DIMENSIONS SHOWN
4. INTERPRET DRAWING IN ACCORDANCE WITH STANDARDS PRESCRIBED BY MIL-D-70327
5. BROKEN LINE DENOTES SLEEVING
6. ● DENOTES .038/.042 DIA HOLE

QTY REQD	PART OR IDENTIFYING NO.	NOMENCLATURE OR DESCRIPTION	FIND NO.

LIST OF MATERIALS

NEXT ASSY	USED ON
1003532	

APPLICATION

UNLESS OTHERWISE SPECIFIED DIMENSIONS ARE IN INCHES
TOLERANCES ON
FRACTIONS ± DECIMALS ± ANGLES ±
DO NOT SCALE THIS DRAWING
MATERIAL SEE NOTE 1
HEAT TREATMENT NONE
FINAL FINISH NONE

MIT
INSTRUMENTATION LAB
CAMBRIDGE, MASS.
DWG. NO. CONTRACT

DRAWN J.C. Cimmon DATE 27 Nov 63
CHECKED A. R. Boggi 2DEC63
APPROVAL
APPROVAL R. J. Duggan LT. B. 12-16-63
NASA APPROVAL 12/17/63
MIT APPROVAL
MIT APPROVAL R. Hozel 12/17/63

MANNED SPACECRAFT CENTER
HOUSTON, TEXAS

INSULATOR, BACK
POWER SUPPLY
AGC DSKY NAV & MAIN

CODE IDENT NO. — SIZE C NASA DRAWING NO. 1004594
SCALE 4/1 WT SHEET 1 OF 1

INCHES
0 1 2
PHOTOGRAPHIC SCALE ONLY

NOTICE — WHEN GOVERNMENT DRAWINGS, SPECIFICATIONS, OR OTHER DATA ARE USED FOR ANY PURPOSE OTHER THAN IN CONNECTION WITH A DEFINITELY RELATED GOVERNMENT PROCUREMENT OPERATION, THE UNITED STATES GOVERNMENT THEREBY INCURS NO RESPONSIBILITY NOR ANY OBLIGATION WHATSOEVER; AND THE FACT THAT THE GOVERNMENT MAY HAVE FORMULATED, FURNISHED OR IN ANY WAY SUPPLIED THE SAID DRAWINGS, SPECIFICATIONS OR OTHER DATA IS NOT TO BE REGARDED BY IMPLICATION OR OTHERWISE AS IN ANY MANNER LICENSING THE HOLDER OR ANY OTHER PERSON OR CORPORATION, OR CONVEYING ANY RIGHTS OR PERMISSION TO MANUFACTURE, USE, OR SELL ANY PATENTED INVENTION THAT MAY IN ANY WAY BE RELATED THERETO.

1004595

SYM	DESCRIPTION	DATE	APPROVAL

REVISIONS 05178

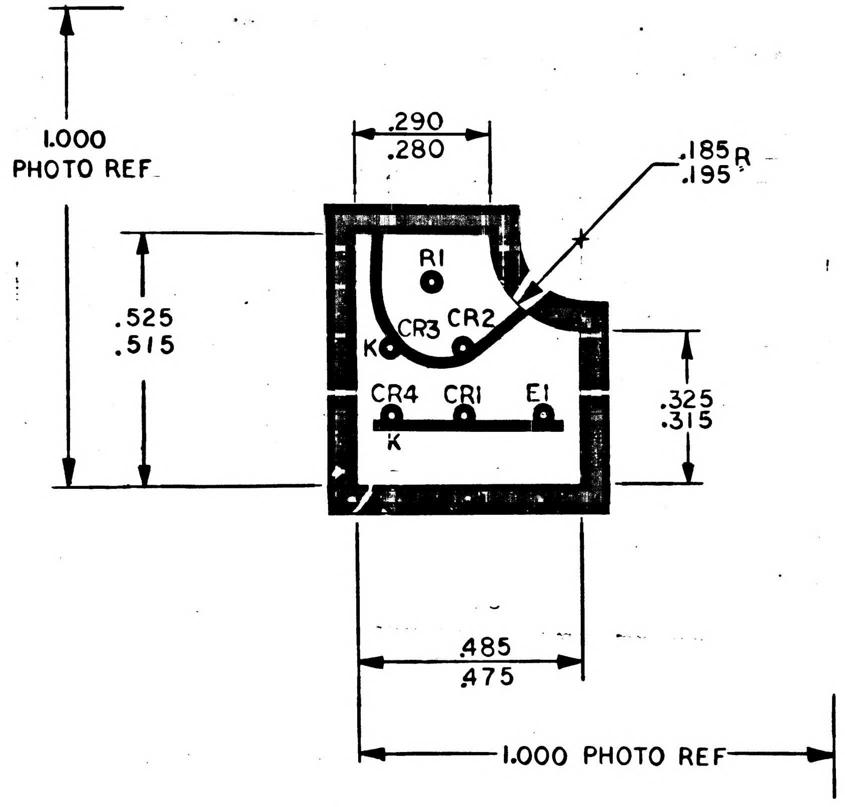

NOTES

1. MATL: .006/.008 THICK PLASTIC SHEET, SENSITIZED DIMENSIONALLY STABLE PER L-F-340, TYPE IB, CLASS II, STYLE 1A
2. THE ORIGINAL OF THIS DRAWING OR REPRODUCTION MADE BY A PROCESS OR METHOD SHALL INSURE DIMENSIONAL STABILITY. DIMENSIONAL VARIATIONS SHALL NOT EXCEED .001 INCH PER FOOT.
3. MAKE PHOTOGRAPHIC MASTER NEGATIVE AND POSITIVE FILMS TO DIMENSIONS SHOWN
4. INTERPRET DRAWING IN ACCORDANCE WITH STANDARDS PRESCRIBED BY MIL-D-70327
5. BROKEN LINE DENOTES SLEEVING
6. ● DENOTES .063/.067 DIA HOLE

MASTER

QTY REQD	PART OR IDENTIFYING NO.	NOMENCLATURE OR DESCRIPTION	FIND NO.

LIST OF MATERIALS

NEXT ASSY	USED ON
1003532	

APPLICATION

UNLESS OTHERWISE SPECIFIED DIMENSIONS ARE IN INCHES
TOLERANCES ON
FRACTIONS ± DECIMALS ± ANGLES ±
DO NOT SCALE THIS DRAWING
MATERIAL SEE NOTE 1
HEAT TREATMENT NONE
FINAL FINISH NONE

MIT INSTRUMENTATION LAB
CAMBRIDGE, MASS.
DWG. NO. CONTRACT

DRAWN DATE 26 63
CHECKED A. R. Bogni 2 DEC 63
APPROVAL
APPROVAL 16-63
NASA APPROVAL
MIT APPROVAL
MIT APPROVAL 12/17/63

MANNED SPACECRAFT CENTER
HOUSTON, TEXAS

INSULATOR, FRONT
POWER SUPPLY
AGC DSKY NAV & MAIN

CODE IDENT NO. —
SIZE C
NASA DRAWING NO. 1004595
SCALE 4/1
WT
SHEET 1 OF 1

INCHES
0 1 2
PHOTOGRAPHIC SCALE ONLY

NOTICE — WHEN GOVERNMENT DRAWINGS, SPECIFICATIONS, OR OTHER DATA ARE USED FOR ANY PURPOSE OTHER THAN IN CONNECTION WITH A DEFINITELY RELATED GOVERNMENT PROCUREMENT OPERATION, THE UNITED STATES GOVERNMENT THEREBY INCURS NO RESPONSIBILITY NOR ANY OBLIGATION WHATSOEVER AND THE FACT THAT THE GOVERNMENT MAY HAVE FORMULATED, FURNISHED, OR IN ANY WAY SUPPLIED THE SAID DRAWINGS, SPECIFICATIONS, OR OTHER DATA IS NOT TO BE REGARDED BY IMPLICATION OR OTHERWISE AS IN ANY MANNER LICENSING THE HOLDER OR ANY OTHER PERSON OR CORPORATION, OR CONVEYING ANY RIGHTS OR PERMISSION TO MANUFACTURE, USE, OR SELL ANY PATENTED INVENTION THAT MAY IN ANY WAY BE RELATED THERETO.

REVISIONS 05563			
SYM	DESCRIPTION	DATE	APPROVAL

HOLE IDENT	X BASIC DIM.	Y BASIC DIM.	⊕DIM	HOLE DIA	C'BORE DEPTH
A1	1.076	3.270	.006	.035 .038 THRU & C'BORE .202 .206	.650
A2	1.076	2.938			
A3	0.000	2.938			
A4	2.160	2.938			
A5	2.160	1.922			
A6	2.160	0.820			
A7	2.160	-0.332			
A8	1.076	0.000			
A9	1.076	-0.332			
A10	0.000	0.000			
A11	1.076	1.152			
A12	1.076	0.820			
A13	0.000	0.820			
A14	1.076	2.254			
A15	1.076	1.922			
A16	0.000	2.254			
A17	2.160	2.370			
A18	0.000	3.270			
A19	2.160	3.270			
A20	1.076	2.598			
B1	2.020	2.776	.006	.035 .038 THRU& C'BORE .108 .112	.350
B2	2.020	2.548			
B3	-0.184	2.662			
C2	-0.184	3.974	.006	.035 .038	THRU
C3	-0.104	3.904			
C4	0.000	3.840			
C5	0.104	3.780			
C6	0.184	3.712			
C7	0.258	3.648			
C8	0.892	3.974			
C9	0.972	3.904			
C10	1.076	3.840			
C11	1.184	3.780			
C12	1.262	3.712			
C13	1.338	3.648			
C14	1.976	3.974			
C15	2.056	3.904			
C16	2.160	3.840			
C17	2.264	3.780			
C18	2.344	3.712			
C19	2.420	3.648			
C20	2.020	2.662			
C21	0.892	2.600			
C22	-0.184	2.776			
D1	0.892	3.380	.006	.035 .038 THRU & C'BORE .108 .112	.350
D2	0.892	3.214			
D3	-0.184	3.214			
D4	1.976	3.214			
D5	1.976	2.200			
D6	1.976	1.094			
D7	1.976	-0.060			
D8	0.892	2.940			
D9	0.972	3.094			
D10	-0.104	3.094			
D11	2.056	3.104			
D12	2.056	2.084			
D13	2.056	0.978			
D14	0.972	2.084			
D15	-0.104	2.416			
D16	1.184	2.776			
D17	0.104	2.776			
D18	2.264	2.776			
D19	1.184	0.992			
D20	1.184	0.664			
D21	0.104	0.664			
D22	1.184	2.100			
D23	1.262	2.662			
D24	2.344	2.662			
D25	2.344	1.656			
D26	2.344	0.552			
D27	1.262	-0.608			
D28	0.184	-0.270			
D29	0.184	0.552			
D30	1.262	1.984			
D31	1.262	2.526			
D32	1.338	3.094			
D33	1.338	2.776			
D34	2.420	0.430			
D35	1.338	-0.390			
D36	0.258	-0.382			
D37	1.338	0.430			
D38	1.338	1.868			
D39	0.258	1.868			
D40	1.976	3.546			
D41	-0.184	3.546			
D42	2.056	3.436			
D43	-0.104	3.436			
D44	2.420	3.436			
D45	0.892	2.796			

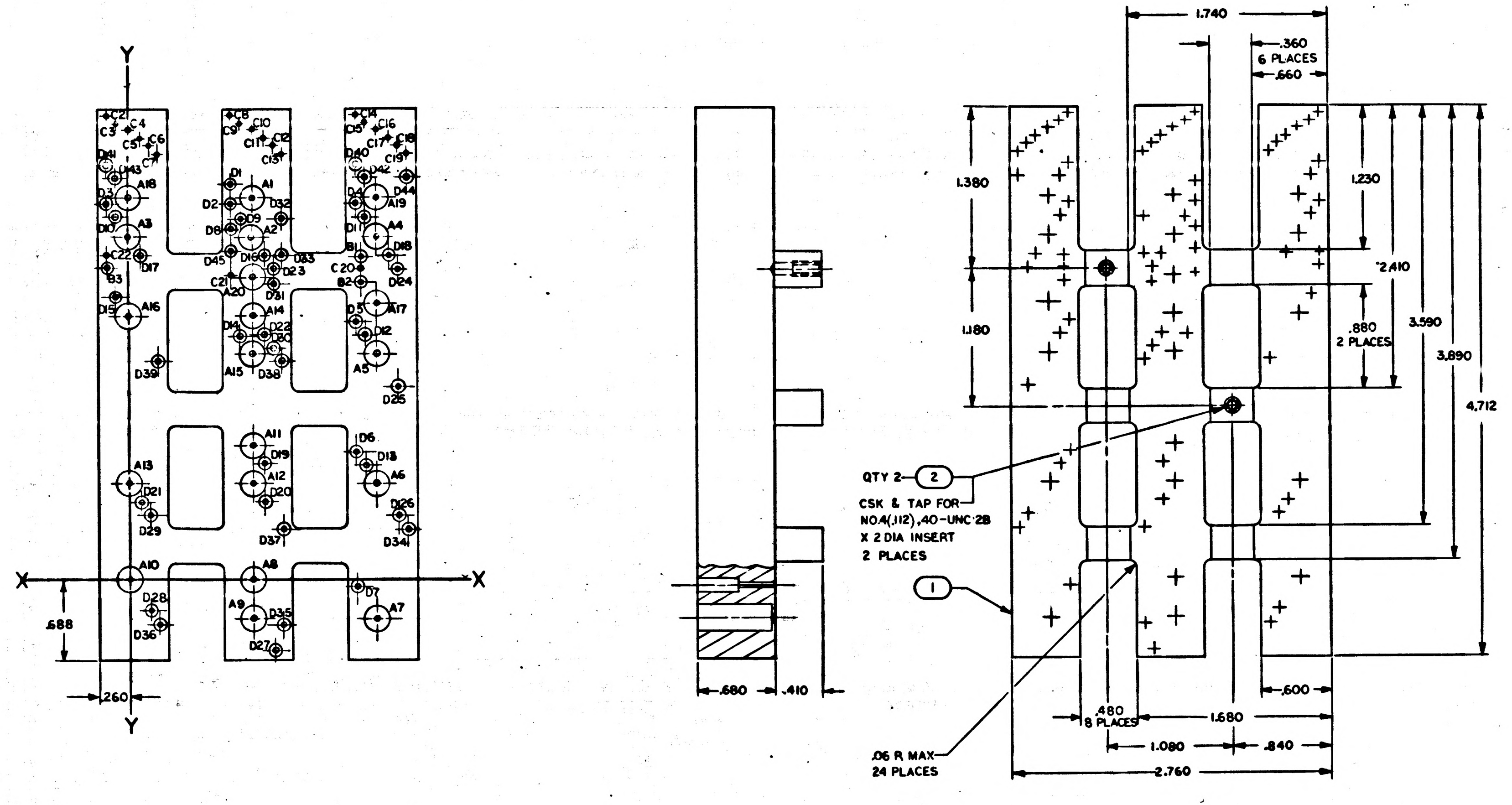
Y
X
X
Y
A1
A2
A3
A4
A5
A6
A7
A8
A9
A10
A11
A12
A13
A14
A15
A16
A17
A18
A19
B1
B2
B3
C2
C3
C4
C5
C6
C8
C9
C10
C11
C12
C14
C15
C16
C17
C18
C19
C20
C21
C22
D1
D2
D3
D4
D5
D6
D7
D8
D9
D10
D11
D12
D13
D14
D15
D16
D17
D18
D19
D20
D21
D22
D23
D24
D25
D26
D27
D28
D29
D30
D31
D32
D33
D34
D35
D36
D37
D38
D39
D40
D41
D42
D43
D44
D45
.688
.260
.680
.410
1.740
.360
6 PLACES
.660
1.380
1.180
1.230
2.410
.880
2 PLACES
3.590
3.890
4.712
QTY 2
2
CSK & TAP FOR
NO.4(.112),40-UNC-2B
X 2 DIA INSERT
2 PLACES
1
.600
.480
8 PLACES
1.680
1.080
.840
.06 R MAX
24 PLACES
2.760

NOTES:

1. MAT'L: PLASTIC, CLEAR ACRYLIC PER MIL-P-8184 FINISH B, ALT MIL-P-5425 FINISH B
2. TRUE POSITION AS SHOWN IN CHART
3. REMOVE ALL SHARP EDGES
4. INTERPRET DRAWING IN ACCORDANCE WITH STANDARDS PRESCRIBED BY MIL-D-70327

QTY REQD	PART OR IDENTIFYING NO.	NOMENCLATURE OR DESCRIPTION	FIND NO.
2	MS21209-C0420	INSERT, SCREW THREAD LOCKING	2
1	1004596-1	BLOCK	1

LIST OF MATERIALS

NEXT ASSY	USED ON
1003549	
1003548	

APPLICATION

UNLESS OTHERWISE SPECIFIED
DIMENSIONS ARE IN INCHES
TOLERANCES ON
FRACTIONS ± DECIMALS ±.005 ANGLES ±
DO NOT SCALE THIS DRAWING
MATERIAL SEE NOTE 1
HEAT TREATMENT NONE
FINAL FINISH NONE

MIT
INSTRUMENTATION LAB
CAMBRIDGE, MASS
DWG NO CONTRACT
DRAWN DATE
CHECKED A.P. Bagni 20 DEC 63
APPROVAL
APPROVAL 29 Jan 64
NASA APPROVAL
MIT APPROVAL
MIT APPROVAL

MANNED SPACECRAFT CENTER
HOUSTON, TEXAS

BLOCK, COMPONENT
KEYBOARD MODULE
AGC DSKY, MAIN & NAV

CODE IDENT NO. —
SIZE E
NASA DRAWING NO. 1004596
SCALE 2/1
WT
SHEET 1 OF 1

MASTER

NOTICE — WHEN GOVERNMENT DRAWINGS, SPECIFICATIONS, OR OTHER DATA ARE USED FOR ANY PURPOSE OTHER THAN IN CONNECTION WITH A DEFINITELY RELATED GOVERNMENT PROCUREMENT OPERATION, THE UNITED STATES GOVERNMENT THEREBY INCURS NO RESPONSIBILITY NOR ANY OBLIGATION WHATSOEVER; AND THE FACT THAT THE GOVERNMENT MAY HAVE FORMULATED, FURNISHED, OR IN ANY WAY SUPPLIED THE SAID DRAWINGS, SPECIFICATIONS OR OTHER DATA IS NOT TO BE REGARDED BY IMPLICATION OR OTHERWISE AS IN ANY MANNER LICENSING THE HOLDER OR ANY OTHER PERSON OR CORPORATION, OR CONVEYING ANY RIGHTS OR PERMISSION TO MANUFACTURE, USE, OR SELL ANY PATENTED INVENTION THAT MAY IN ANY WAY BE RELATED THERETO.

REVISIONS 05563			
SYM	DESCRIPTION	DATE	APPROVAL

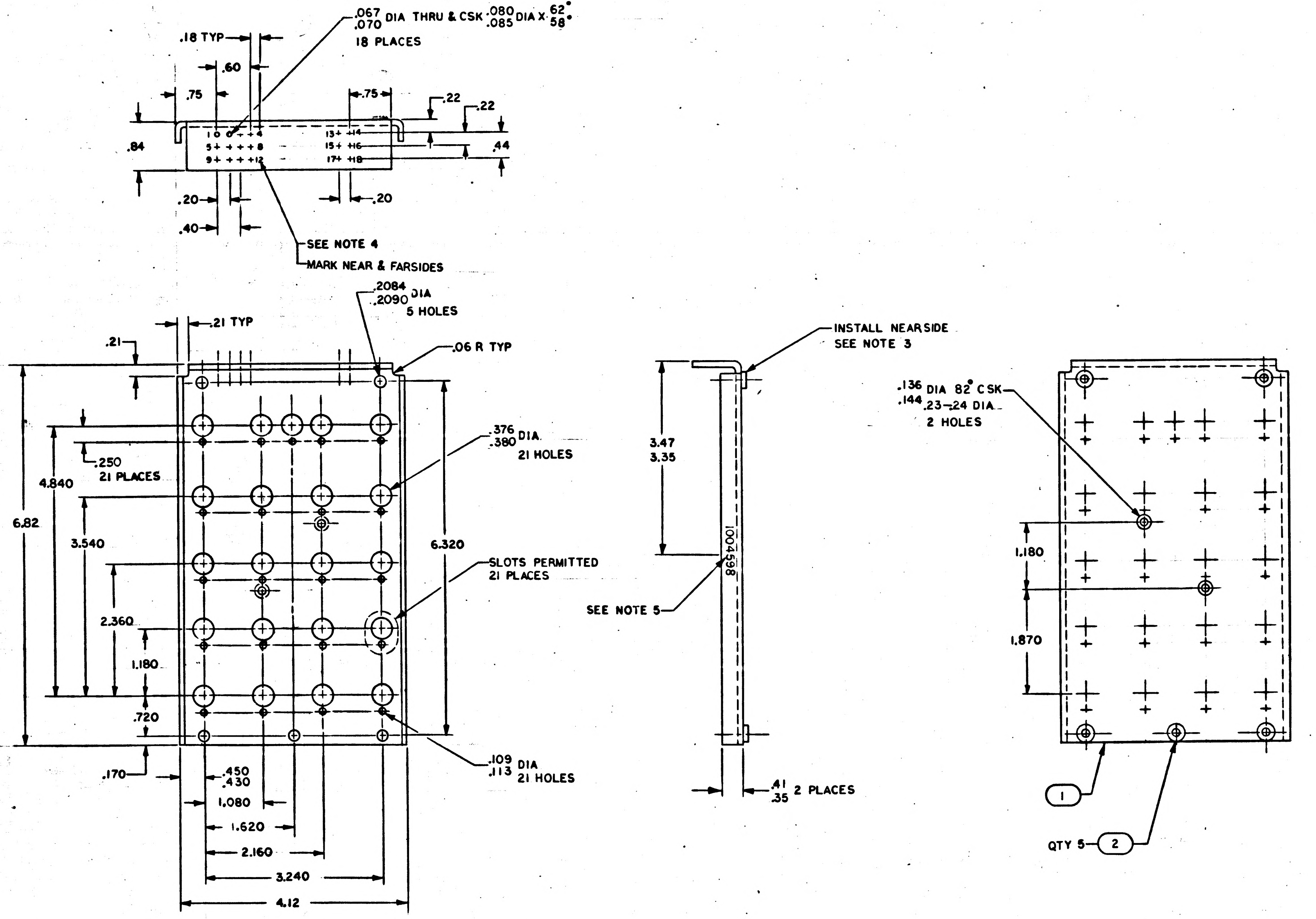

.067 .070 DIA THRU & CSK .080 .085 DIA X 62° 58°
18 PLACES
.18 TYP
.60
.75
.75
.22
.22
.84
.44
1 2 3 4
5 6 7 8
9 10 11 12
13 14
15 16
17 18
.20
.40
.20
SEE NOTE 4
MARK NEAR & FARSIDES
.2084 .2090 DIA
5 HOLES
.21 TYP
.21
.06 R TYP
.376 .380 DIA.
21 HOLES
.250
21 PLACES
4.840
6.82
3.540
2.360
1.180
.720
.170
6.320
SLOTS PERMITTED
21 PLACES
.109 .113 DIA
21 HOLES
.450 .430
1.080
1.620
2.160
3.240
4.12
INSTALL NEARSIDE
SEE NOTE 3
3.47 3.35
1004598
SEE NOTE 5
.41 .35 2 PLACES
.136 .144 DIA 82° CSK
.23-.24 DIA
2 HOLES
1.180
1.870
1
QTY 5
2

NOTES:

1. MATL: .090 THK AL5052—H32 PER QQ-A-318, TEMPER H32
2. REMOVE BURRS AND SHARP EDGES
3. INSTALL FIND 2 AND ANODIZE PER MIL-A-8625, TYPE II, DYED BLACK
4. MARK .08 HIGH WHITE PER ND1002019 & ND1002122, TYPE II, CLASS I, APPROX WHERE SHOWN
5. MARK .12 HIGH WHITF PER ND1002019 & ND1002122, TYPE II, CLASS I
6. ALL BEND R.05/.09
7. INTERPRET DRAWING IN ACCORDANCE WITH STANDARDS PRESCRIBED BY MIL-D-70327

MASTER

QTY REQD	PART OR IDENTIFYING NO.	NOMENCLATURE OR DESCRIPTION	FIND NO.
5	1004601	SPACER	2
1	1004598-1	PANEL, FRONT	1

LIST OF MATERIALS

NEXT ASSY	USED ON
1003548	

APPLICATION

UNLESS OTHERWISE SPECIFIED DIMENSIONS ARE IN INCHES
TOLERANCES ON
FRACTIONS ± DECIMALS ±.02 .005 ANGLES ±
DO NOT SCALE THIS DRAWING
MATERIAL SEE NOTE 1
HEAT TREATMENT NONE
FINAL FINISH SEE NOTE 3

MIT INSTRUMENTATION LAB
CAMBRIDGE, MASS.
DWG. NO. CONTRACT
DRAWN J.C. E[illegible] DATE 3DEC63
CHECKED D.R. Bagni 17DEC63
APPROVAL
APPROVAL [illegible] C Hall 24 Jan 64
NASA APPROVAL [illegible] 1/13/64
MIT APPROVAL
MIT APPROVAL W. [illegible] 64

MANNED SPACECRAFT CENTER
HOUSTON, TEXAS

PANEL, FRONT
KEYBOARD MODULE
AGC DSKY MAIN & NAV

CODE IDENT NO. ——
SIZE D
NASA DRAWING NO. 1004598
SCALE 1/1
WT
SHEET 1 OF 1

1004598

NOTICE — WHEN GOVERNMENT DRAWINGS, SPECIFICATIONS, OR OTHER DATA ARE USED FOR ANY PURPOSE OTHER THAN IN CONNECTION WITH A DEFINITELY RELATED GOVERNMENT PROCUREMENT OPERATION, THE UNITED STATES GOVERNMENT THEREBY INCURS NO RESPONSIBILITY NOR ANY OBLIGATION WHATSOEVER; AND THE FACT THAT THE GOVERNMENT MAY HAVE FORMULATED, FURNISHED, OR IN ANY WAY SUPPLIED THE SAID DRAWINGS, SPECIFICATIONS OR OTHER DATA IS NOT TO BE REGARDED BY IMPLICATION OR OTHERWISE AS IN ANY MANNER LICENSING THE HOLDER OR ANY OTHER PERSON OR CORPORATION, OR CONVEYING ANY RIGHTS OR PERMISSION TO MANUFACTURE, USE, OR SELL ANY PATENTED INVENTION THAT MAY IN ANY WAY BE RELATED THERETO.

1004599 —

REVISIONS 05563			
SYM	DESCRIPTION	DATE	APPROVAL

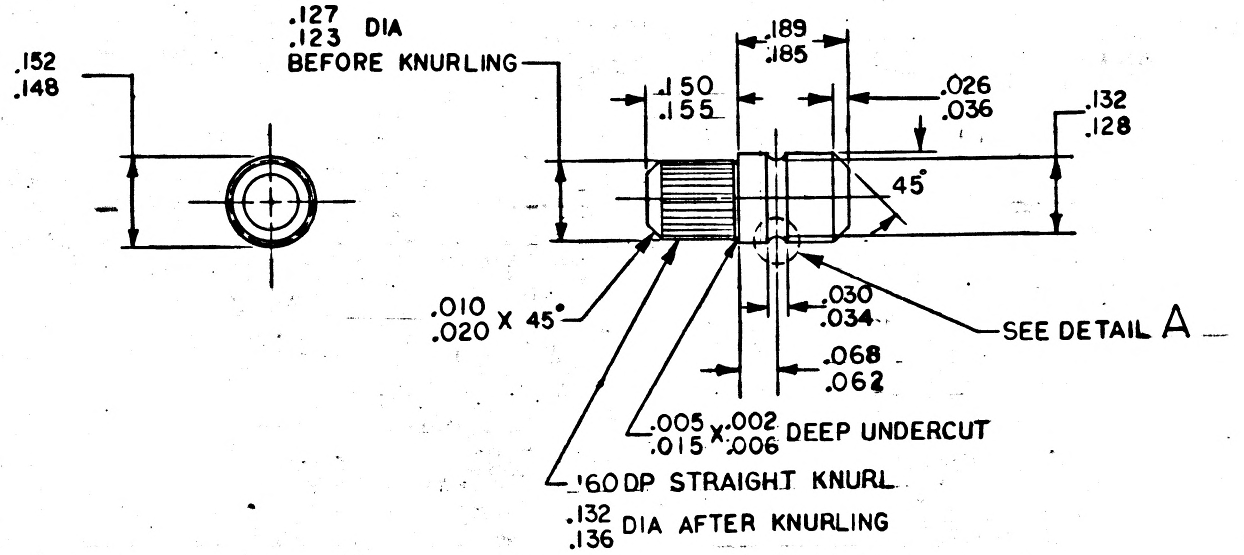
.127
.123 DIA
BEFORE KNURLING
.152
.148
.150
.155
.189
.185
.026
.036
.132
.128
45°
.010
.020 X 45°
.030
.034
SEE DETAIL A
.068
.062
.005
.015 X .002
.006 DEEP UNDERCUT
.160 DP STRAIGHT KNURL
.132
.136 DIA AFTER KNURLING

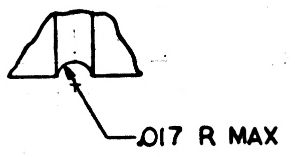

DETAIL A
SCALE 10/1

NOTES:
1. MATL: 303 CRES PER QQ-S-763, CLASS 303, COND A
2. REMOVE ALL BURRS AND BREAK SHARP EDGES
3. PASSIVATE PER MIL-F-14072
4. INTERPRET DRAWING IN ACCORDANCE WITH STANDARDS PRESCRIBED BY MIL-D-70327

QTY REQD	PART OR IDENTIFYING NO.	NOMENCLATURE OR DESCRIPTION	FIND NO.

LIST OF MATERIALS

1004600	
NEXT ASSY	USED ON
APPLICATION	

UNLESS OTHERWISE SPECIFIED
DIMENSIONS ARE IN INCHES
TOLERANCES ON
FRACTIONS ± DECIMALS ± ANGLES ± 5°
DO NOT SCALE THIS DRAWING
MATERIAL SEE NOTE 1
HEAT TREATMENT NONE
FINAL FINISH SEE NOTE 3

MIT
INSTRUMENTATION LAB
CAMBRIDGE, MASS.
DWG. NO. CONTRACT

DRAWN J.C. Cameron DATE 4 Dec 63
CHECKED Q.P. Boggi 17 DEC 63
APPROVAL
APPROVAL E. Hall 29 Jan 64
NASA APPROVAL 1/25/64
MIT APPROVAL
MIT APPROVAL 29 Jan 64

MANNED SPACECRAFT CENTER
HOUSTON, TEXAS

PIN
AGC DSKY, MAIN & NAV

CODE IDENT NO. —
SIZE C
NASA DRAWING NO. 1004599
SCALE 5/1
WT
SHEET 1 OF 1

MASTER

NOTICE — WHEN GOVERNMENT DRAWINGS, SPECIFICATIONS, OR OTHER DATA ARE USED FOR ANY PURPOSE OTHER THAN IN CONNECTION WITH A DEFINITELY RELATED GOVERNMENT PROCUREMENT OPERATION, THE UNITED STATES GOVERNMENT THEREBY INCURS NO RESPONSIBILITY NOR ANY OBLIGATION WHATSOEVER; AND THE FACT THAT THE GOVERNMENT MAY HAVE FORMULATED, FURNISHED, OR IN ANY WAY SUPPLIED THE SAID DRAWINGS, SPECIFICATIONS OR OTHER DATA IS NOT TO BE REGARDED BY IMPLICATION OR OTHERWISE AS IN ANY MANNER LICENSING THE HOLDER OR ANY OTHER PERSON OR CORPORATION, OR CONVEYING ANY RIGHTS OR PERMISSION TO MANUFACTURE, USE, OR SELL ANY PATENTED INVENTION THAT MAY IN ANY WAY BE RELATED THERETO.

1004600 A

REVISIONS 05563

SYM	DESCRIPTION	DATE	APPROVAL
A	REVISED PER TDRR 07832 DR CHK A.R.B.	4/16/64	HWC

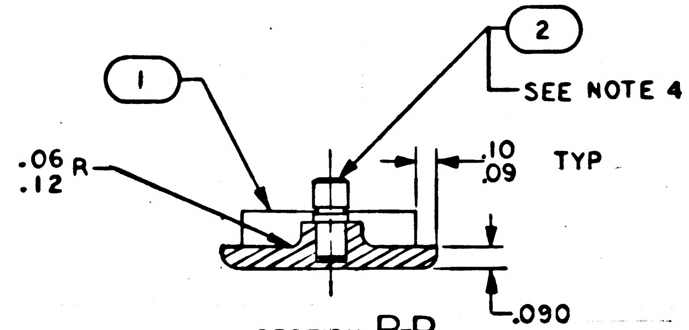

SECTION B-B

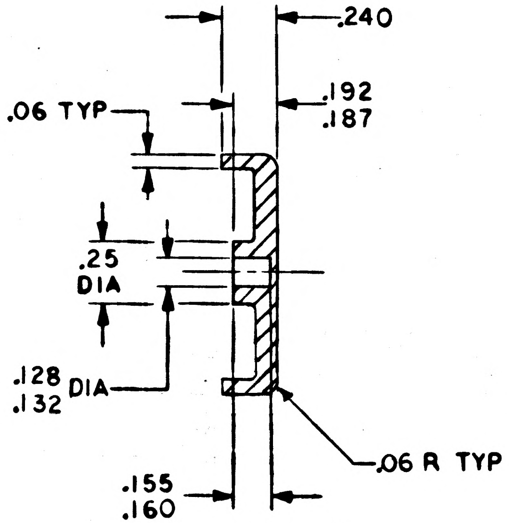

SECTION A-A

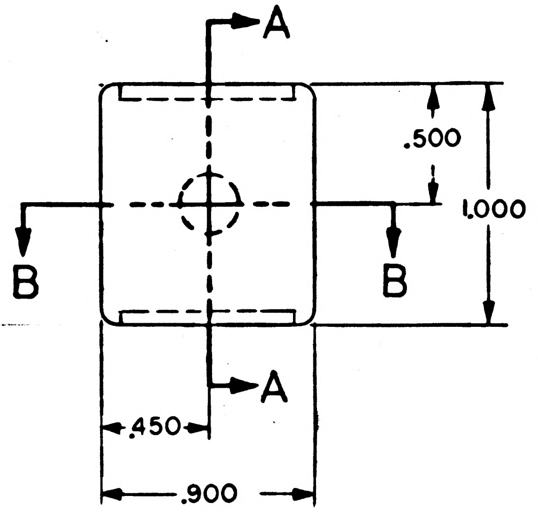

QTY REQD	PART OR IDENTIFYING NO.	NOMENCLATURE OR DESCRIPTION	FIND NO.
1	1004599	PIN	2
1	1004600-1	BUTTON, KEYBOARD	1

LIST OF MATERIALS

NOTES
1. MATL: ACRYLIC PER MIL-P-21105 TYPE II
2. INTERPRET DRAWING IN ACCORDANCE WITH STANDARDS PRESCRIBED BY MIL-D-70327
3. AFTER ASSEMBLING OF FIND NO.2 TO FIND NO.1, FIND NO.2 IS TO WITHSTAND A PULLOUT FORCE OF 15LB MIN
4. BOND FIND NO.2 IN FIND NO.1 USING ND 1002004
5. COLOR PER FED-STD-595 COLOR CHIP NO. 37875

NEXT ASSY	USED ON
1004602	

APPLICATION

UNLESS OTHERWISE SPECIFIED DIMENSIONS ARE IN INCHES
TOLERANCES ON
FRACTIONS ± DECIMALS ±.02 .005 ANGLES ±
DO NOT SCALE THIS DRAWING

MATERIAL SEE NOTE 1

HEAT TREATMENT NONE

FINAL FINISH NONE

MIT INSTRUMENTATION LAB
CAMBRIDGE, MASS.
DWG. NO. CONTRACT

DRAWN J.C. [illegible] DATE 13 DEC 63
CHECKED A.R. Boyn 18 DEC 63
APPROVAL
APPROVAL Eldon C. Hall 29 Jan 64
NASA APPROVAL [illegible] 1/23/64
MIT APPROVAL
MIT APPROVAL W C [illegible] 29 Jan 64

MANNED SPACECRAFT CENTER
HOUSTON, TEXAS

BUTTON,
KEYBOARD MODULE
AGC DSKY, MAIN & NAV

CODE IDENT NO. —— SIZE C NASA DRAWING NO. 1004600
SCALE 2/1 WT SHEET 1 OF 1

NOTICE — WHEN GOVERNMENT DRAWINGS, SPECIFICATIONS, OR OTHER DATA ARE USED FOR ANY PURPOSE OTHER THAN IN CONNECTION WITH A DEFINITELY RELATED GOVERNMENT PROCUREMENT OPERATION, THE UNITED STATES GOVERNMENT THEREBY INCURS NO RESPONSIBILITY NOR ANY OBLIGATION WHATSOEVER; AND THE FACT THAT THE GOVERNMENT MAY HAVE FORMULATED, FURNISHED, OR IN ANY WAY SUPPLIED THE SAID DRAWINGS, SPECIFICATIONS OR OTHER DATA IS NOT TO BE REGARDED BY IMPLICATION OR OTHERWISE AS IN ANY MANNER LICENSING THE HOLDER OR ANY OTHER PERSON OR CORPORATION, OR CONVEYING ANY RIGHTS OR PERMISSION TO MANUFACTURE, USE, OR SELL ANY PATENTED INVENTION THAT MAY IN ANY WAY BE RELATED THERETO.

1004600 | B

REVISIONS 05563

SYM	DESCRIPTION	DATE	APPROVAL
A	REVISED PER TDRR 07832 DR CHK A.R.B.	4/16/64	HWC
B	REVISED PER TDRR 20824 DR RC Taylor CHK R.B.G.	8/13/65	R.J. Bunker

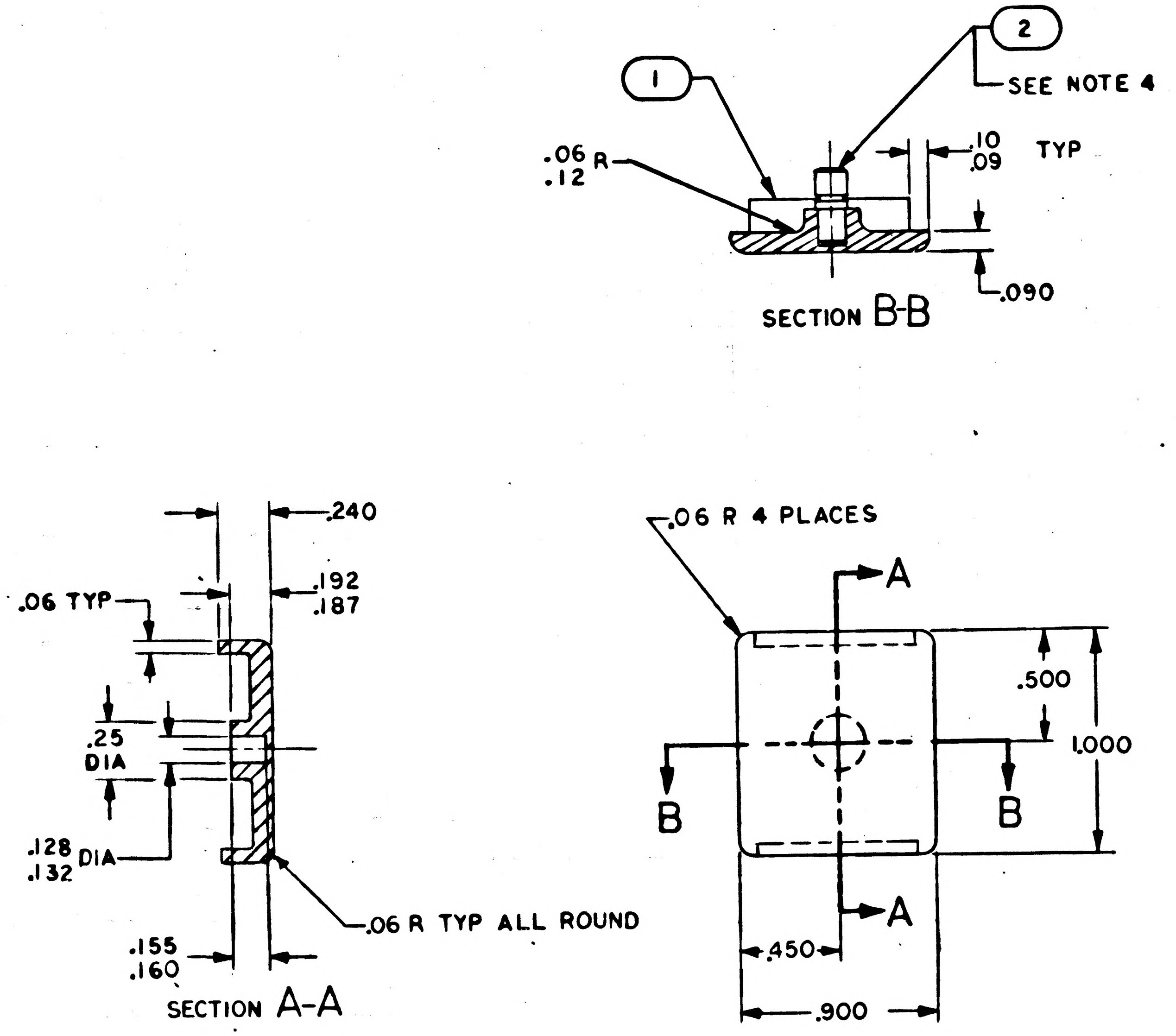

QTY REQD	PART OR IDENTIFYING NO.	NOMENCLATURE OR DESCRIPTION	FIND NO.
1	1004599	PIN	2
1	1004600-1	BUTTON, KEYBOARD	1

LIST OF MATERIALS

NOTES
1. MATL: ACRYLIC PER MIL-P-21105 TYPE II
2. INTERPRET DRAWING IN ACCORDANCE WITH STANDARDS PRESCRIBED BY MIL-D-70327
3. AFTER ASSEMBLING OF FIND NO.2 TO FIND NO.1, FIND NO.2 IS TO WITHSTAND A PULLOUT FORCE OF 15LB MIN
4. BOND FIND NO.2 IN FIND NO.1 USING ND 1002004
5. COLOR PER FED-STD-595 COLOR CHIP NO. 37875
6. BREAK ALL SHARP EDGES

M TER

1004602	
NEXT ASSY	USED ON
APPLICATION	

UNLESS OTHERWISE SPECIFIED DIMENSIONS ARE IN INCHES
TOLERANCES ON
FRACTIONS ± DECIMALS ±.02 .005 ANGLES ±
DO NOT SCALE THIS DRAWING

MATERIAL: SEE NOTE 1
HEAT TREATMENT: NONE
FINAL FINISH: NONE

MIT INSTRUMENTATION LAB
CAMBRIDGE, MASS.
DWG. NO. CONTRACT

DRAWN J.L. [illegible] DATE 13 DEC 63
CHECKED A.R. Bogni 18 DEC 63
APPROVAL
APPROVAL Eldon C Hall 29 Jan 64
NASA APPROVAL [illegible] 1/23/64
MIT APPROVAL
MIT APPROVAL [illegible] 29 Jan 64

MANNED SPACECRAFT CENTER
HOUSTON, TEXAS

BUTTON,
KEYBOARD MODULE
AGC DSKY, MAIN & NAV

CODE IDENT NO.	SIZE	NASA DRAWING NO.
80230	C	1004600
SCALE 2/1	WT	SHEET 1 OF 1

NOTICE — WHEN GOVERNMENT DRAWINGS, SPECIFICATIONS, OR OTHER DATA ARE USED FOR ANY PURPOSE OTHER THAN IN CONNECTION WITH A DEFINITELY RELATED GOVERNMENT PROCUREMENT OPERATION, THE UNITED STATES GOVERNMENT THEREBY INCURS NO RESPONSIBILITY NOR ANY OBLIGATION WHATSOEVER; AND THE FACT THAT THE GOVERNMENT MAY HAVE FORMULATED, FURNISHED, OR IN ANY WAY SUPPLIED THE SAID DRAWINGS, SPECIFICATIONS OR OTHER DATA IS NOT TO BE REGARDED BY IMPLICATION OR OTHERWISE AS IN ANY MANNER LICENSING THE HOLDER OR ANY OTHER PERSON OR CORPORATION, OR CONVEYING ANY RIGHTS OR PERMISSION TO MANUFACTURE, USE, OR SELL ANY PATENTED INVENTION THAT MAY IN ANY WAY BE RELATED THERETO.

1004600

REVISIONS 05563

SYM	DESCRIPTION	DATE	APPROVAL

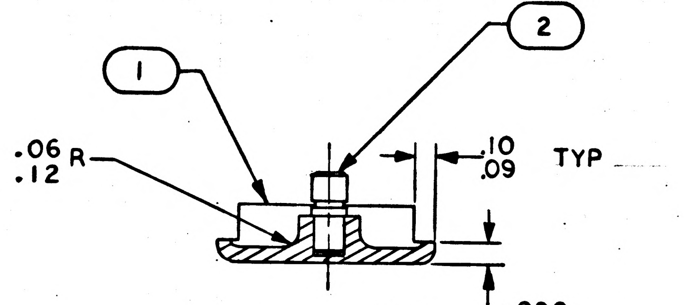

SECTION B-B

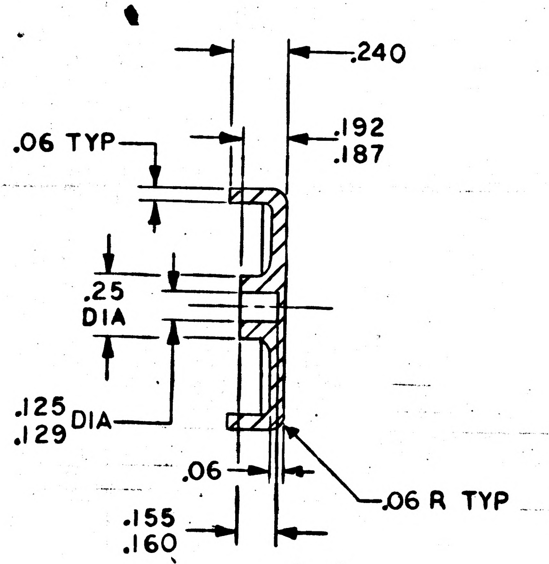

SECTION A-A

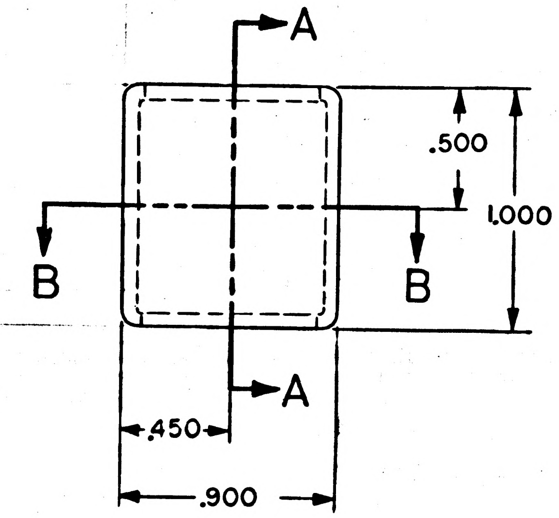

NOTES:

1. MATL: POLYCARBONATE FEDERAL LP-00393
2. INTERPRET DRAWING IN ACCORDANCE WITH STANDARDS PRESCRIBED BY MIL-D-70327
3. AFTER ASSEMBLING OF FIND NO.2 TO FIND NO.1, FIND NO.2 IS TO WITHSTAND A PULLOUT FORCE OF 15LB MIN

MASTER

QTY REQD	PART OR IDENTIFYING NO.	NOMENCLATURE OR DESCRIPTION	FIND NO.
1	1004599	PIN	2
1	1004600-1	BUTTON, KEYBOARD	1

LIST OF MATERIALS

1004602	
NEXT ASSY	USED ON
APPLICATION	

UNLESS OTHERWISE SPECIFIED
DIMENSIONS ARE IN INCHES
TOLERANCES ON
FRACTIONS ± DECIMALS ±.02 .005 ANGLES ±
DO NOT SCALE THIS DRAWING

MATERIAL SEE NOTE 1
HEAT TREATMENT NONE
FINAL FINISH NONE

MIT
INSTRUMENTATION LAB
CAMBRIDGE, MASS.
DWG. NO. CONTRACT

DRAWN J. L. E[illegible] DATE 13DEC63
CHECKED Q. R. Bogni 18DEC63
APPROVAL
APPROVAL Eldon C. Hall 29 Jan 64
NASA APPROVAL [illegible] 1/21/64
MIT APPROVAL
MIT APPROVAL W[illegible] 29 Jan 64

MANNED SPACECRAFT CENTER
HOUSTON, TEXAS

BUTTON,
KEYBOARD MODULE
AGC DSKY, MAIN & NAV

CODE IDENT NO.	SIZE	NASA DRAWING NO.
—	C	1004600

SCALE 2/1 WT SHEET 1 OF 1

NOTICE — WHEN GOVERNMENT DRAWINGS, SPECIFICATIONS, OR OTHER DATA ARE USED FOR ANY PURPOSE OTHER THAN IN CONNECTION WITH A DEFINITELY RELATED GOVERNMENT PROCUREMENT OPERATION, THE UNITED STATES GOVERNMENT THEREBY INCURS NO RESPONSIBILITY NOR ANY OBLIGATION WHATSOEVER; AND THE FACT THAT THE GOVERNMENT MAY HAVE FORMULATED, FURNISHED, OR IN ANY WAY SUPPLIED THE SAID DRAWINGS, SPECIFICATIONS OR OTHER DATA IS NOT TO BE REGARDED BY IMPLICATION OR OTHERWISE AS IN ANY MANNER LICENSING THE HOLDER OR ANY OTHER PERSON OR CORPORATION, OR CONVEYING ANY RIGHTS OR PERMISSION TO MANUFACTURE, USE, OR SELL ANY PATENTED INVENTION THAT MAY IN ANY WAY BE RELATED THERETO.

1004602

REVISIONS 65563			
SYM	DESCRIPTION	DATE	APPROVAL

PART NO.	ENGRAVING	VIEW	HEIGHT
1004602-1	CLEAR	1	.12
-2	VERB		
-3	NOUN		
-4	ENTER		.12
-5	+		.38
-6	7		
-7	8		
-8	9		.38
-9	−		
-10	4		.38
-11	5		
-12	6		
-13	0		
-14	1		
-15	2		
-16	3	1	.38
-17	TEST ALARM	2	.12
-18	ERROR RESET	2	.12
-19	KEY RLSE	2	.12

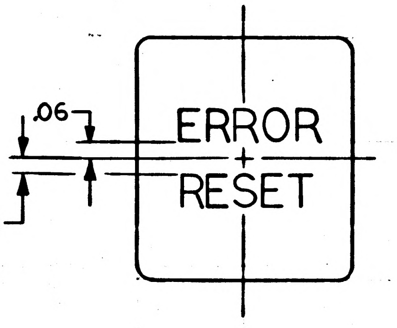

VIEW 2

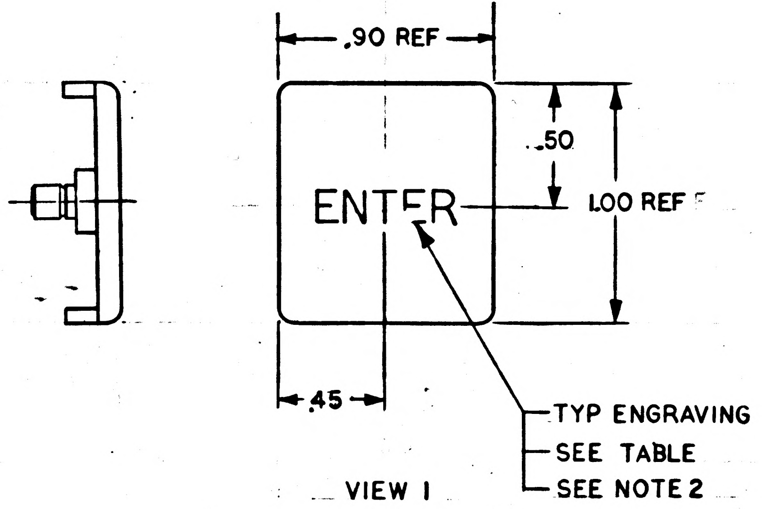

VIEW 1

NOTES

1. MATL: MAKE FROM PART NO. 1004600
2. ENGRAVE CHARACTERS .010/.016 DEEP PER ND1002019 AND FILL FLUSH TO SURFACE WITH MATERIAL PER ND1002130, COLOR BLACK PER FED-STD-595, CHIP NO 37038
3. INTERPRET DRAWING IN ACCORDANCE TO STANDARDS PRESCRIBED BY MIL-D-70327

QTY REQD	PART OR IDENTIFYING NO.	NOMENCLATURE OR DESCRIPTION	FIND NO.

LIST OF MATERIALS

1003548	
NEXT ASSY	USED ON
APPLICATION	

UNLESS OTHERWISE SPECIFIED
DIMENSIONS ARE IN INCHES
TOLERANCES ON
FRACTIONS ± DECIMALS ±.02 ANGLES ±
DO NOT SCALE THIS DRAWING
MATERIAL SEE NOTE 1
HEAT TREATMENT NONE
FINAL FINISH NONE

MIT
INSTRUMENTATION LAB
CAMBRIDGE, MASS.
DWG. NO. CONTRACT
DRAWN [illegible] DATE 13 Dec 63
CHECKED Q.R. Bogni 17 DEC 63
APPROVAL
APPROVAL Eldon C Hall 24 Jan 64
NASA APPROVAL [illegible] 1/15/64
MIT APPROVAL
MIT APPROVAL [illegible] 29 Jan 64

MANNED SPACECRAFT CENTER
HOUSTON, TEXAS

BUTTON, ENGRAVED
KEYBOARD MODULE
AGC DSKY, MAIN & NAV

CODE IDENT NO. —
SIZE C
NASA DRAWING NO. 1004602
SCALE 2/1
WT
SHEET 1 OF 1

MASTER

1004602

NOTICE — WHEN GOVERNMENT DRAWINGS, SPECIFICATIONS, OR OTHER DATA ARE USED FOR ANY PURPOSE OTHER THAN IN CONNECTION WITH A DEFINITELY RELATED GOVERNMENT PROCUREMENT OPERATION, THE UNITED STATES GOVERNMENT THEREBY INCURS NO RESPONSIBILITY NOR ANY OBLIGATION WHATSOEVER; AND THE FACT THAT THE GOVERNMENT MAY HAVE FORMULATED, FURNISHED, OR IN ANY WAY SUPPLIED THE SAID DRAWINGS, SPECIFICATIONS OR OTHER DATA IS NOT TO BE REGARDED BY IMPLICATION OR OTHERWISE AS IN ANY MANNER LICENSING THE HOLDER OR ANY OTHER PERSON OR CORPORATION, OR CONVEYING ANY RIGHTS OR PERMISSION TO MANUFACTURE, USE, OR SELL ANY PATENTED INVENTION THAT MAY IN ANY WAY BE RELATED THERETO.

1004603

REVISIONS 05748

SYM	DESCRIPTION	DATE	APPROVAL

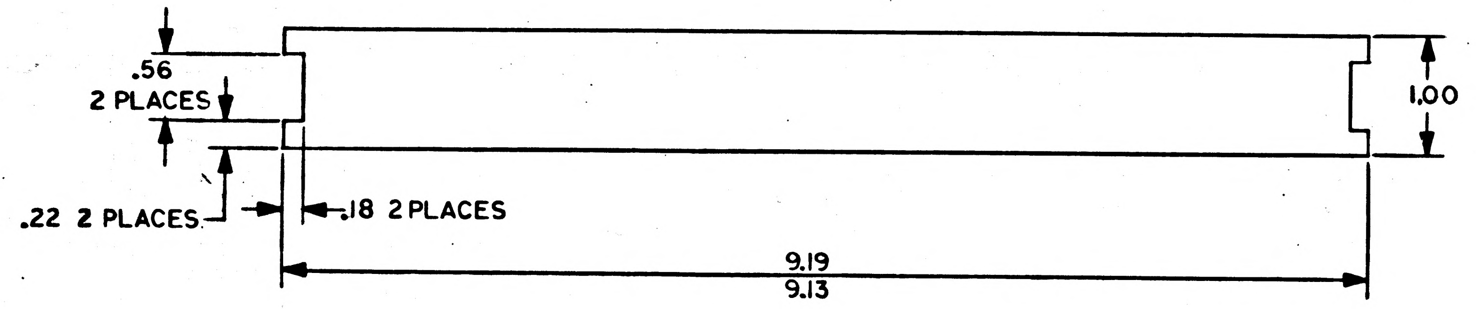

NOTES

1. MATL: .006/.008 THICK PLASTIC SHEET, SENSITIZED, DIMENSIONALLY STABLE PER L-F-340, TYPE IB, CLASS 2, STYLE IA
2. INTERPRET DRAWING IN ACCORDANCE WITH STANDARDS PRESCRIBED BY MIL-D-70327

MASTER

QTY REQD	PART OR IDENTIFYING NO.	NOMENCLATURE OR DESCRIPTION	FIND NO.

LIST OF MATERIALS

1003133	
NEXT ASSY	USED ON
APPLICATION	

UNLESS OTHERWISE SPECIFIED DIMENSIONS ARE IN INCHES
TOLERANCES ON
FRACTIONS ± DECIMALS ±.02 ANGLES ±
DO NOT SCALE THIS DRAWING
MATERIAL SEE NOTE 1
HEAT TREATMENT NONE
FINAL FINISH NONE

MIT INSTRUMENTATION LAB
CAMBRIDGE, MASS.
DWG. NO. CONTRACT
DRAWN P. Romee DATE 12 DEC 63
CHECKED A.R. Bogni 17DEC63
APPROVAL
APPROVAL Eldon C Hall 14 Jan 64
APPROVAL
NASA APPROVAL 1/14/64
MIT APPROVAL
MIT APPROVAL 1/14/64

MANNED SPACECRAFT CENTER
HOUSTON, TEXAS

INSULATOR
ROPE MEMORY

CODE IDENT NO. —
SIZE C
NASA DRAWING NO. 1004603
SCALE 1/1
WT
SHEET 1 OF 1

NOTICE — WHEN GOVERNMENT DRAWINGS, SPECIFICATIONS, OR OTHER DATA ARE USED FOR ANY PURPOSE OTHER THAN IN CONNECTION WITH A DEFINITELY RELATED GOVERNMENT PROCUREMENT OPERATION, THE UNITED STATES GOVERNMENT THEREBY INCURS NO RESPONSIBILITY NOR ANY OBLIGATION WHATSOEVER; AND THE FACT THAT THE GOVERNMENT MAY HAVE FORMULATED, FURNISHED, OR IN ANY WAY SUPPLIED THE SAID DRAWINGS, SPECIFICATIONS OR OTHER DATA IS NOT TO BE REGARDED BY IMPLICATION OR OTHERWISE AS IN ANY MANNER LICENSING THE HOLDER OR ANY OTHER PERSON OR CORPORATION, OR CONVEYING ANY RIGHTS OR PERMISSION TO MANUFACTURE, USE, OR SELL ANY PATENTED INVENTION THAT MAY IN ANY WAY BE RELATED THERETO.

1004604

REVISIONS 05178

SYM	DESCRIPTION	DATE	APPROVAL

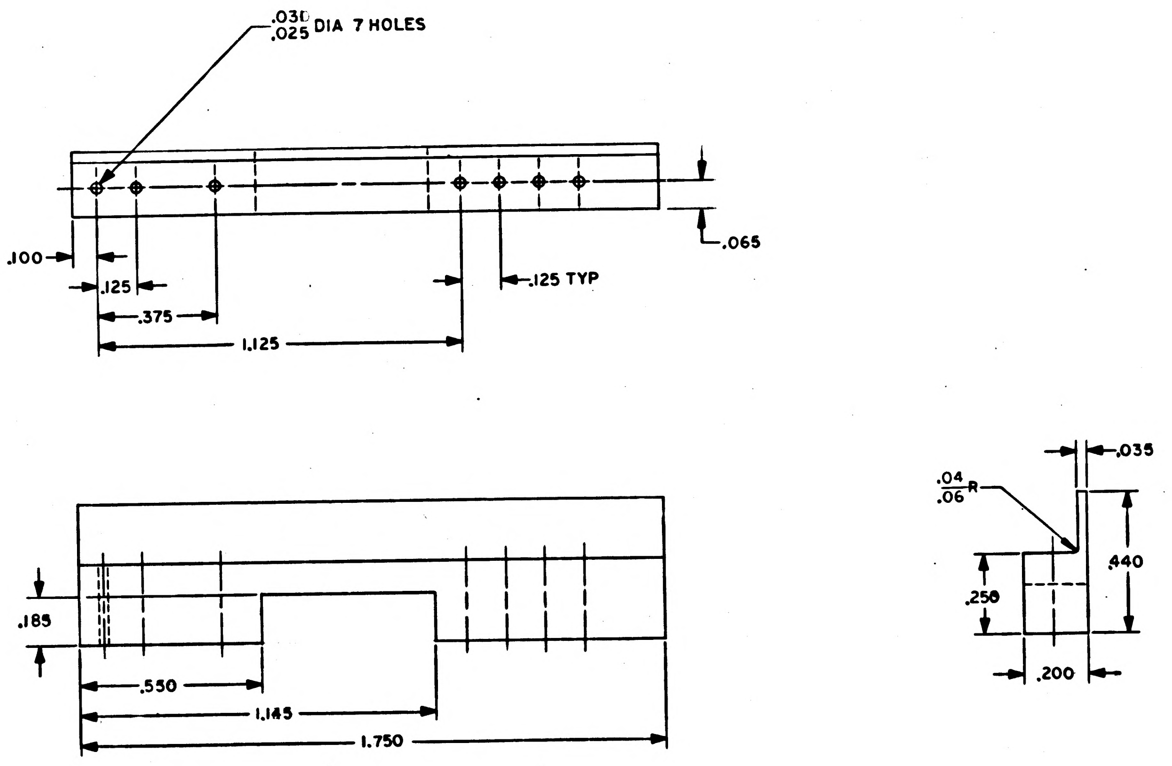

NOTES

1. MATL: PLASTIC SHEET PER MIL-P-18177, TYPE GEE
2. INTERPRET DRAWING IN ACCORDANCE WITH STANDARDS PRESCRIBED BY MIL-D-70327

1004604

MASTER

QTY REQD	PART OR IDENTIFYING NO.	NOMENCLATURE OR DESCRIPTION	FIND NO.
LIST OF MATERIALS			

1003450	
NEXT ASSY	USED ON
APPLICATION	

UNLESS OTHERWISE SPECIFIED DIMENSIONS ARE IN INCHES
TOLERANCES ON
FRACTIONS ± DECIMALS ±.015 ANGLES ±
DO NOT SCALE THIS DRAWING
MATERIAL SEE NOTE 1
HEAT TREATMENT NONE
FINAL FINISH NONE

MIT INSTRUMENTATION LAB
CAMBRIDGE, MASS.
DWG. NO.
CONTRACT
DRAWN P. Rosseau DATE 12Dec63
CHECKED A.R. Bogle 13DEC63
APPROVAL
APPROVAL R. J. Duggan LAB 12-16-63
APPROVAL
NASA APPROVAL K. Mitchell 12/14/63
MIT APPROVAL
MIT APPROVAL D. Hoag 12/17/63

MANNED SPACECRAFT CENTER
HOUSTON, TEXAS

BLOCK, INSULATOR
POWER SUPPLY
AGC DSKY, MAIN & NAV

CODE IDENT NO. —
SIZE D
NASA DRAWING NO. 1004604
SCALE 4/1
WT
SHEET 1 OF 1

INCHES
0 1 2
PHOTOGRAPHIC SCALE ONLY

NOTICE — WHEN GOVERNMENT DRAWINGS, SPECIFICATIONS, OR OTHER DATA ARE USED FOR ANY PURPOSE OTHER THAN IN CONNECTION WITH A DEFINITELY RELATED GOVERNMENT PROCUREMENT OPERATION, THE UNITED STATES GOVERNMENT THEREBY INCURS NO RESPONSIBILITY NOR ANY OBLIGATION WHATSOEVER; AND THE FACT THAT THE GOVERNMENT MAY HAVE FORMULATED, FURNISHED, OR IN ANY WAY SUPPLIED THE SAID DRAWINGS, SPECIFICATIONS OR OTHER DATA IS NOT TO BE REGARDED BY IMPLICATION OR OTHERWISE AS IN ANY MANNER LICENSING THE HOLDER OR ANY OTHER PERSON OR CORPORATION, OR CONVEYING ANY RIGHTS OR PERMISSION TO MANUFACTURE, USE, OR SELL ANY PATENTED INVENTION THAT MAY IN ANY WAY BE RELATED THERETO.

1004617 —

REVISIONS			
SYM	DESCRIPTION	DATE	APPROVAL
—	INITIAL RELEASE PER TDRR 06911	3/10/64	WKR

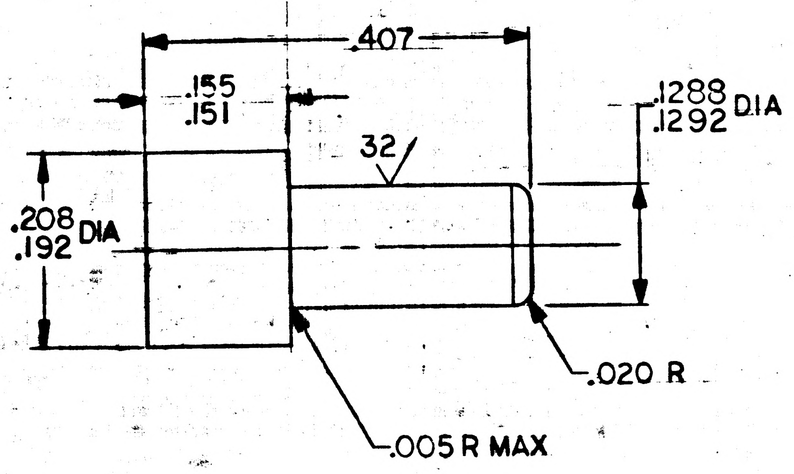

NOTES
1. MATL: 303 SST PER QQ-S-763, CL303, COND A
2. REMOVE BURRS AND SHARP EDGES
3. UNLESS OTHERWISE SPECIFIED, SURFACE QUALITY 125√
4. PASSIVATE PER MIL-F-14072
5. INTERPRET DRAWING IN ACCORDANCE WITH STANDARDS PRESCRIBED BY MIL-D-70327

QTY REQD	PART OR IDENTIFYING NO.	NOMENCLATURE OR DESCRIPTION	FIND NO.

LIST OF MATERIALS

MASTER

1003532	
NEXT ASSY	USED ON
APPLICATION	

UNLESS OTHERWISE SPECIFIED DIMENSIONS ARE IN INCHES TOLERANCES ON
FRACTIONS ± DECIMALS ±.005 ANGLES ±
DO NOT SCALE THIS DRAWING
MATERIAL SEE NOTE 1
HEAT TREATMENT NONE
FINAL FINISH SEE NOTE 4

MIT
INSTRUMENTATION LAB
CAMBRIDGE, MASS.
DWG. NO. CONTRACT

DRAWN R. Dargiewicz DATE 3 FEB 64
CHECKED G.R. Boga 5 FEB 64
APPROVAL
APPROVAL Eldon C Hall 11 Feb 64
NASA APPROVAL 3/10/64
MIT APPROVAL
MIT APPROVAL W Kupfer 10 Mar 64

MANNED SPACECRAFT CENTER
HOUSTON, TEXAS

PIN, LOCATING
POWER SUPPLY
AGC DSKY NAV & MAIN

CODE IDENT NO. —
SIZE C
NASA DRAWING NO. 1004617
SCALE 8/1
WT
SHEET 1 OF 1

INCHES
0 1 2
PHOTOGRAPHIC SCALE ONLY

NOTICE — WHEN GOVERNMENT DRAWINGS, SPECIFICATIONS, OR OTHER DATA ARE USED FOR ANY PURPOSE OTHER THAN IN CONNECTION WITH A DEFINITELY RELATED GOVERNMENT PROCUREMENT OPERATION, THE UNITED STATES GOVERNMENT THEREBY INCURS NO RESPONSIBILITY NOR ANY OBLIGATION WHATSOEVER; AND THE FACT THAT THE GOVERNMENT MAY HAVE FORMULATED, FURNISHED OR IN ANY WAY SUPPLIED THE SAID DRAWINGS, SPECIFICATIONS OR OTHER DATA IS NOT TO BE REGARDED BY IMPLICATION OR OTHERWISE AS IN ANY MANNER LICENSING THE HOLDER OR ANY OTHER PERSON OR CORPORATION, OR CONVEYING ANY RIGHTS OR PERMISSION TO MANUFACTURE, USE, OR SELL ANY PATENTED INVENTION THAT MAY IN ANY WAY BE RELATED THERETO.

REVISIONS 17894			
SYM	DESCRIPTION	DATE	APPROVAL

WIRING LIST

LEG A				LEG B			
FROM	WIRE	TO	REMARKS	FROM	WIRE	TO	REMARKS
J1-123	1010416-20	J8-28	USE $^{.23}_{.20}$ LG OF	J1-102	1010416-20	J5-44	USE $^{.23}_{.20}$ LG OF
J1-124	↑	J8-111		J1-103	↑	J5-43	
J1-125		J8-127	1006776-20	J1-104		J5-64	1006776-20
J1-126		J8-48	SEE	J1-107		J6-28	SEE
J1-127		J8-126	DETAIL A	J1-108		J6-111	DETAIL A
J1-128		J8-89		J1-109		J6-127	
J1-129		J8-88		J1-110		J6-48	
J1-130		J8-107	SEE NOTE 7	J1-111		J6-126	SEE NOTE 7
J1-131		J8-23		J1-112		J6-89	
J1-132		J8-3		J1-113		J6-88	
J1-133		J8-1		J1-114		J6-107	
J1-134		J8-123		J1-115		J6-23	
J1-135	↓	J8-87		J1-116		J6-3	
J1-136		J8-22		J1-117		J6-1	
J1-137	1010416-20	J8-85		J1-118		J6-123	
				J1-119		J6-87	
				J1-120	↓	J6-22	
				J1-121	1010416-20	J6-85	

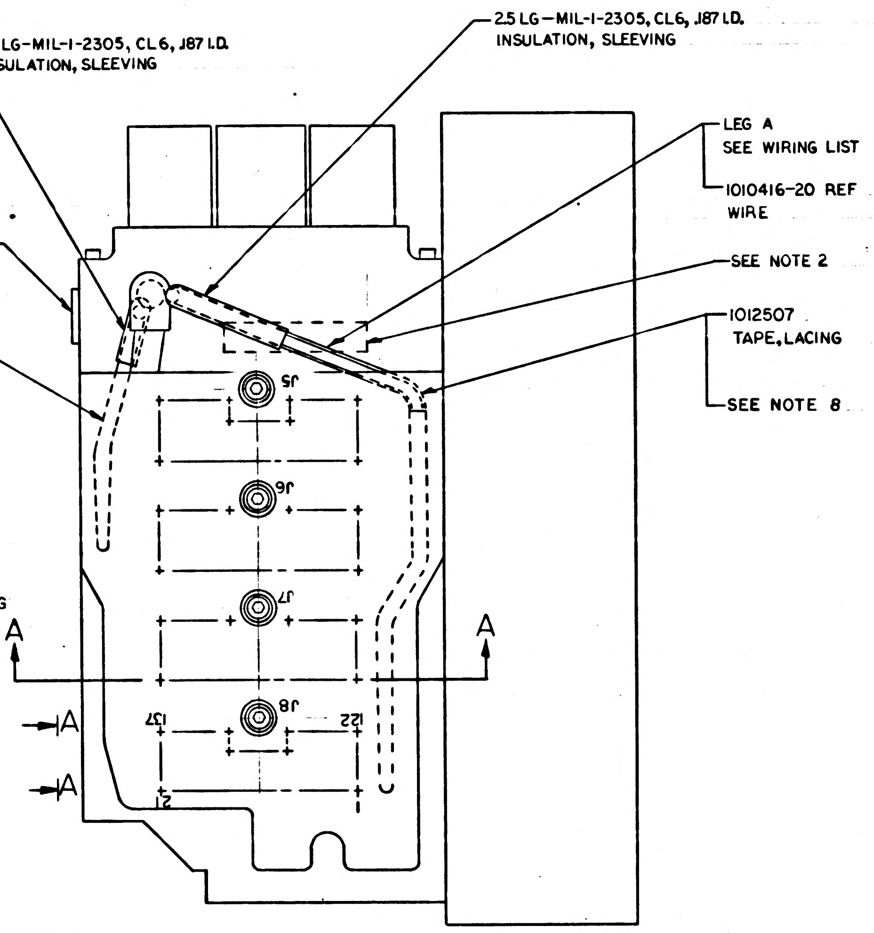
1.5 LG-MIL-I-2305, CL6, .187 I.D.
INSULATION, SLEEVING
2.5 LG-MIL-I-2305, CL6, .187 I.D.
INSULATION, SLEEVING
LEG A
SEE WIRING LIST
1010416-20 REF
WIRE
SEE NOTE 2
1012507
TAPE, LACING
SEE NOTE 8
J1 REF
LEG B
SEE WIRING
LIST
J5
J6
J7
J8
137
122
121
A
A
A
A

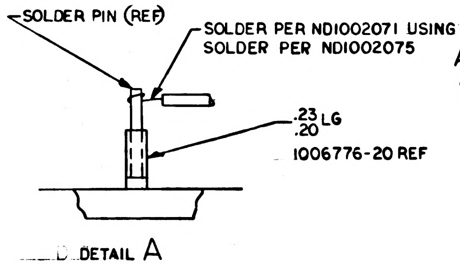
SOLDER PIN (REF)
SOLDER PER ND1002071 USING
SOLDER PER ND1002075
$^{.23}_{.20}$ LG
1006776-20 REF

DETAIL A
TYP 33 PLACES

NOTES
1. MAKE FROM 1003540 MDI
2. SECURE HARNESS IN INDICATED AREA BY STAKING PER ND1002004 TYPE V
3. REF RIB 0104032
4. RE-IDENTIFY WITH PART NO. 1003553-011 IN ACCORDANCE WITH RIB0104032
5. INTERPRET DRAWING IN ACCORDANCE WITH STANDARDS PRESCRIBED BY MIL-D-70327
6. ENCAPSULATE INDICATED AREA PER ND1002217
7. REF FOLLOWING TOOLS WHEN REWORKING J1 CONNECTOR:
   - PIN REMOVAL TOOL — HUGHES TWO-22 RT-000
   - PIN INSERTION TOOL — HUGHES TWO-22 IT-000
   - PIN CRIMPING TOOL — HUGHES TWO-00 CH-000
   - PIN LOCATOR TOOL — HUGHES TWO-22 LS-000
8. LACE PER ND1002032

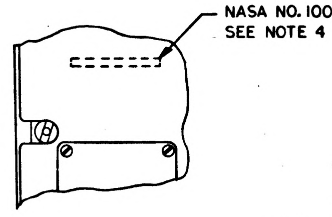
NASA NO. 1003553-011
SEE NOTE 4

VIEW A-A

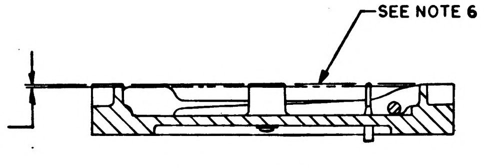
SEE NOTE 6
.000
.005

SECTION A-A

PART NO. 1003553-011

QTY REQD	PART OR IDENTIFYING NO.	NOMENCLATURE OR DESCRIPTION	FIND NO.

LIST OF MATERIALS

NEXT ASSY	USED ON
APPLICATION	

UNLESS OTHERWISE SPECIFIED DIMENSIONS ARE IN INCHES
TOLERANCES ON
FRACTIONS ± DECIMALS ± ANGLES ±
DO NOT SCALE THIS DRAWING
MATERIAL
HEAT TREATMENT
FINAL FINISH

MIT INSTRUMENTATION LAB
CAMBRIDGE, MASS.
DWG. NO. CONTRACT
DRAWN W. Brown DATE 11MAR65
CHECKED R. Edwards 12Mar65
APPROVAL DCH
APPROVAL Eldon C Hall 25Mar65
NASA APPROVAL W J Rhine 3-29-65
MIT APPROVAL W Cooper 29Mar65

MANNED SPACECRAFT CENTER
HOUSTON, TEXAS

INSTRUCTION DRAWING
FOR RIB NO. 0104032
(AGC DSKY MAIN SYS 20)

CODE IDENT NO. —
SIZE D
NASA DRAWING NO. 1004626
SCALE NONE
WT
SHEET 1 OF 1

MASTER

1004626

NOTICE – WHEN GOVERNMENT DRAWINGS, SPECIFICATIONS, OR OTHER DATA ARE USED FOR ANY PURPOSE OTHER THAN IN CONNECTION WITH A DEFINITELY RELATED GOVERNMENT PROCUREMENT OPERATION THE UNITED STATES GOVERNMENT THEREBY INCURS NO RESPONSIBILITY NOR ANY OBLIGATION WHATSOEVER; AND THE FACT THAT THE GOVERNMENT MAY HAVE FORMULATED, FURNISHED, OR IN ANY WAY SUPPLIED THE SAID DRAWINGS, SPECIFICATIONS OR OTHER DATA IS NOT TO BE REGARDED BY IMPLICATION OR OTHERWISE AS IN ANY MANNER LICENSING THE HOLDER OR ANY OTHER PERSON OR CORPORATION, OR CONVEYING ANY RIGHTS OR PERMISSION TO MANUFACTURE, USE, OR SELL ANY PATENTED INVENTION THAT MAY IN ANY WAY BE RELATED THERETO

REVISIONS 07837

SYM	DESCRIPTION	DATE	APPROVED

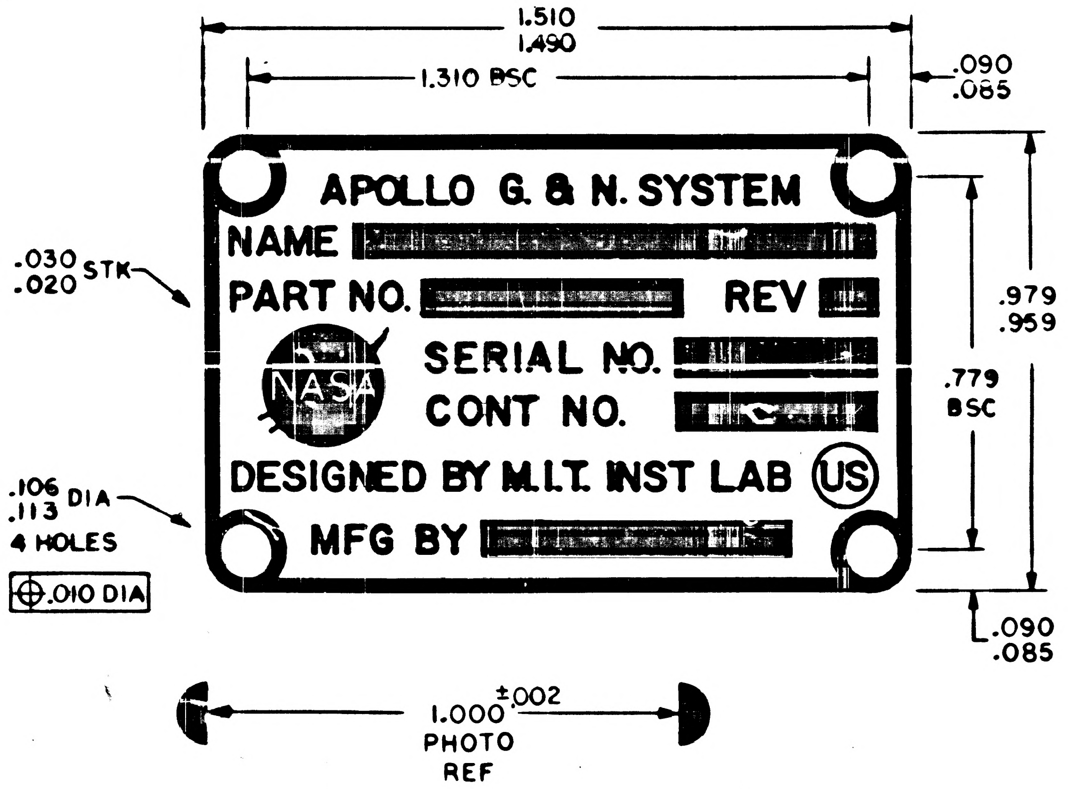

NOTES
1. MAT: AL SH, 1100 TEMPER O, ALT SPEC QQ-A-561, TEMPER O
2. PLATE MUST CONFORM TO REQUIREMENTS AS OUTLINED IN MIL-P-15024, TYPE A OR TYPE H
3. ANODIZE PER MIL-A-8625, TYPE 2, EXCEPT EDGES
4. BACKGROUND TO BE BLACK; MARKING AND LETTERING TO BE NATURAL METAL
5. IDENTIFY USING DRAWING NO., REV LETTER, AND MANUFACTURERS SYMBOL PER MIL-STD-130 ON BACK OF PLATE
6. THE ORIGINAL OF THIS DRAWING OR ANY REPRODUCTION THEREOF SHALL BE MADE BY A METHOD OR PROCESS WHICH WILL INSURE DIMENSIONAL STABILITY

INTERPRET DRAWING IN ACCORDANCE WITH STANDARDS PRESCRIBED BY MIL-D-70327

QTY REQD	PART OR IDENTIFYING NO.	NOMENCLATURE OR DESCRIPTION	FIND NO.

LIST OF MATERIALS

NEXT ASSY	USED ON
1003186	
1003540	
1003524	

APPLICATION

UNLESS OTHERWISE SPECIFIED DIMENSIONS ARE IN INCHES
TOLERANCES ON
FRACTIONS ± DECIMALS ± ANGLES ±

DO NOT SCALE THIS DRAWING

MATERIAL
SEE NOTE 1

MIT
INSTRUMENTATION LAB
CAMBRIDGE, MASS.
DWG. NO. CONTRACT

DRAWN Curzmon DATE 9 Apr 64
CHECKED ... Adrian 16 Apr 64
APPROVAL
APPROVAL
APPROVAL Eldon C Hall 21 Apr 64
NASA APPROVAL ... 4/4/64
MIT APPROVAL
MIT APPROVAL W Kupfer 2 Apr 64

MANNED SPACECRAFT CENTER
HOUSTON, TEXAS

PLATE, IDENTIFICATION

CODE IDENT NO.	SIZE	NASA DRAWING NO.
	C	1004628
SCALE 4/1	WT	SHEET 1 OF 1

NOTICE — WHEN GOVERNMENT DRAWINGS, SPECIFICATIONS, OR OTHER DATA ARE USED FOR ANY PURPOSE OTHER THAN IN CONNECTION WITH A DEFINITELY RELATED GOVERNMENT PROCUREMENT OPERATION, THE UNITED STATES GOVERNMENT THEREBY INCURS NO RESPONSIBILITY NOR ANY OBLIGATION WHATSOEVER; AND THE FACT THAT THE GOVERNMENT MAY HAVE FORMULATED, FURNISHED, OR IN ANY WAY SUPPLIED THE SAID DRAWINGS, SPECIFICATIONS OR OTHER DATA IS NOT TO BE REGARDED BY IMPLICATION OR OTHERWISE AS IN ANY MANNER LICENSING THE HOLDER OR ANY OTHER PERSON OR CORPORATION, OR CONVEYING ANY RIGHTS OR PERMISSION TO MANUFACTURE, USE, OR SELL ANY PATENTED INVENTION THAT MAY IN ANY WAY BE RELATED THERETO.

1004635

SYM	DESCRIPTION	DATE	APPROVAL

REVISIONS 08402

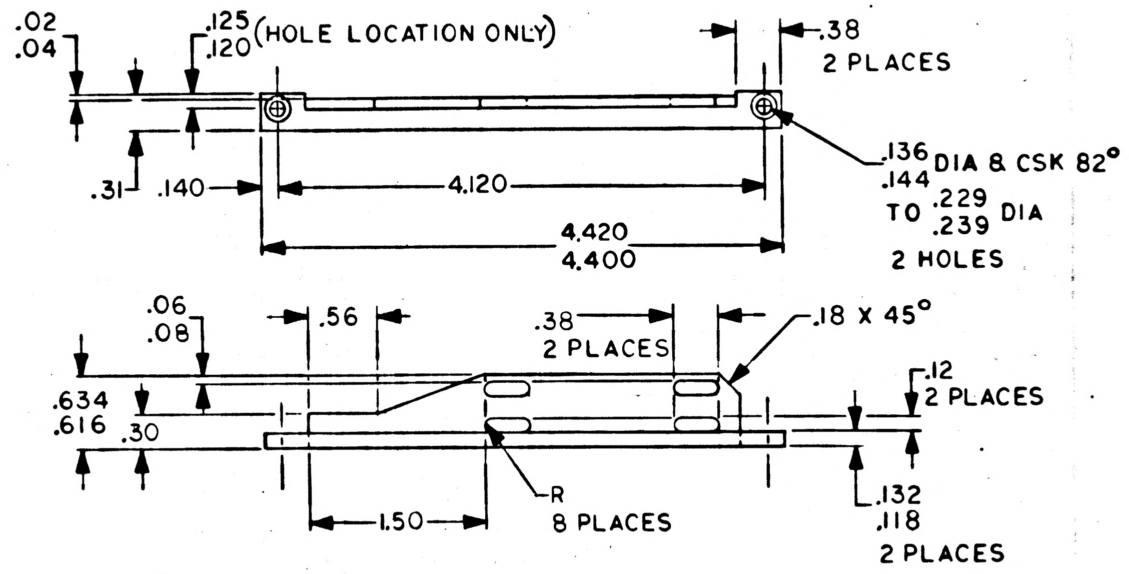

NOTES
1. INTERPRET DRAWING IN ACCORDANCE WITH STANDARDS PRESCRIBED BY MIL-D-70327
2. MATL: 6063-T5 EXTRUDED AL ANGLE PER QQ-A-274, TEMPER T5
3. ANODIZE PER MIL-A-8625, TYPE II, DYED BLACK
4. REMOVE ALL BURRS AND BREAK SHARP EDGES .005/.015

QTY REQD	PART OR IDENTIFYING NO.	NOMENCLATURE OR DESCRIPTION	FIND NO.

LIST OF MATERIALS

NEXT ASSY	USED ON
1003458	
1003524	

APPLICATION

UNLESS OTHERWISE SPECIFIED
DIMENSIONS ARE IN INCHES
TOLERANCES ON
FRACTIONS ± DECIMALS ±.005 ±.02 ANGLES ±1°
DO NOT SCALE THIS DRAWING
MATERIAL SEE NOTE 2
HEAT TREATMENT NONE
FINAL FINISH SEE NOTE 3

MIT
INSTRUMENTATION LAB
CAMBRIDGE, MASS.
DWG. NO. CONTRACT

DRAWN R. Dargiewicz DATE 16APR64
CHECKED G.R. Bogin 29APR64
APPROVAL 1 May 64
APPROVAL Eldon C. Hall 1 May 64
NASA APPROVAL W J Rhine 5-12-64
MIT APPROVAL 5/12/64
MIT APPROVAL

MANNED SPACECRAFT CENTER
HOUSTON, TEXAS

RETAINER, EL HOLD DOWN
RH
AGC DSKY, NAV

CODE IDENT NO. —
SIZE C
NASA DRAWING NO. 1004635
SCALE 1/1
WT
SHEET 1 OF 1

NOTICE — WHEN GOVERNMENT DRAWINGS, SPECIFICATIONS, OR OTHER DATA ARE USED FOR ANY PURPOSE OTHER THAN IN CONNECTION WITH A DEFINITELY RELATED GOVERNMENT PROCUREMENT OPERATION, THE UNITED STATES GOVERNMENT THEREBY INCURS NO RESPONSIBILITY NOR ANY OBLIGATION WHATSOEVER; AND THE FACT THAT THE GOVERNMENT MAY HAVE FORMULATED, FURNISHED, OR IN ANY WAY SUPPLIED THE SAID DRAWINGS, SPECIFICATIONS OR OTHER DATA IS NOT TO BE REGARDED BY IMPLICATION OR OTHERWISE AS IN ANY MANNER LICENSING THE HOLDER OR ANY OTHER PERSON OR CORPORATION, OR CONVEYING ANY RIGHTS OR PERMISSION TO MANUFACTURE, USE, OR SELL ANY PATENTED INVENTION THAT MAY IN ANY WAY BE RELATED THERETO.

1004636 | —

REVISIONS 08402			
SYM	DESCRIPTION	DATE	APPROVAL

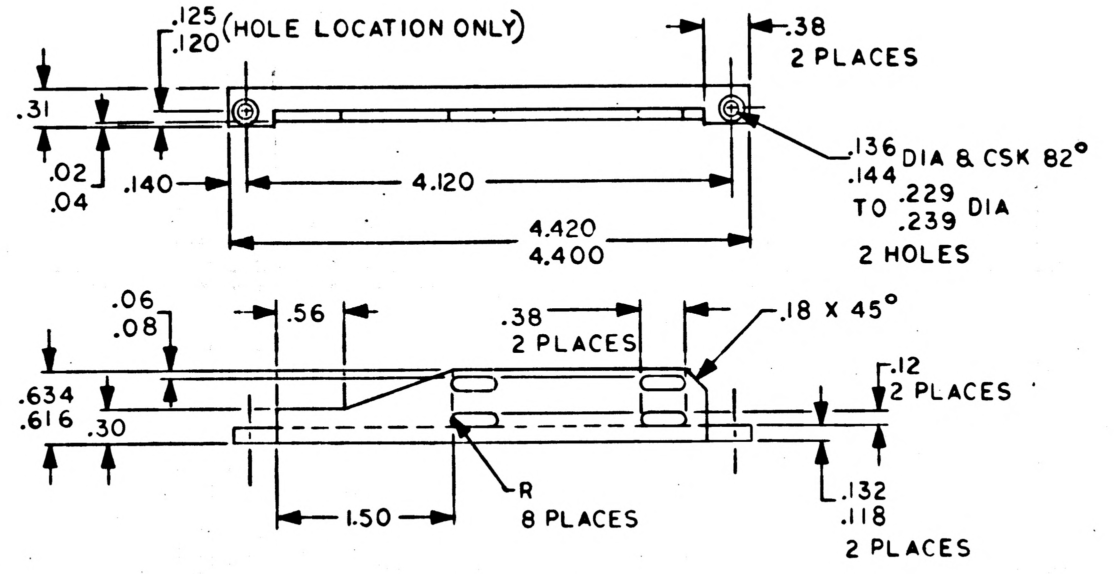

NOTES
1. INTERPRET DRAWING IN ACCORDANCE WITH STANDARDS PRESCRIBED BY MIL-D-70327
2. MATL: 6063-T5 EXTRUDED AL ANGLE PER QQ-A-274, TEMPER T5
3. ANODIZE PER MIL-A-8625, TYPE II, DYED BLACK
4. REMOVE ALL BURRS AND BREAK SHARP EDGES .005/.015

QTY REQD	PART OR IDENTIFYING NO.	NOMENCLATURE OR DESCRIPTION	FIND NO.

LIST OF MATERIALS

1003458	
1003524	
NEXT ASSY	USED ON
APPLICATION	

UNLESS OTHERWISE SPECIFIED
DIMENSIONS ARE IN INCHES
TOLERANCES ON
FRACTIONS ± | DECIMALS ±.005 ±.02 | ANGLES ± 1°
DO NOT SCALE THIS DRAWING
MATERIAL: SEE NOTE 2
HEAT TREATMENT: NONE
FINAL FINISH: SEE NOTE 3

MIT
INSTRUMENTATION LAB
CAMBRIDGE, MASS.
DWG. NO.   CONTRACT

DRAWN R. Dargiewicz DATE 29APR64
CHECKED 29APR64
APPROVAL 1 May 64
APPROVAL Eldon C Hall 1 May 64
NASA APPROVAL 5-12-64
MIT APPROVAL 5/12/64
MIT APPROVAL

MANNED SPACECRAFT CENTER
HOUSTON, TEXAS

RETAINER EL HOLD DOWN
LH
AGC DSKY, NAV

CODE IDENT NO. —— | SIZE C | NASA DRAWING NO. 1004636
SCALE 1/1 | WT | SHEET 1 OF 1

NOTICE — WHEN GOVERNMENT DRAWINGS, SPECIFICATIONS, OR OTHER DATA ARE USED FOR ANY PURPOSE OTHER THAN IN CONNECTION WITH A DEFINITELY RELATED GOVERNMENT PROCUREMENT OPERATION, THE UNITED STATES GOVERNMENT THEREBY INCURS NO RESPONSIBILITY NOR ANY OBLIGATION WHATSOEVER; AND THE FACT THAT THE GOVERNMENT MAY HAVE FORMULATED, FURNISHED, OR IN ANY WAY SUPPLIED THE SAID DRAWINGS, SPECIFICATIONS OR OTHER DATA IS NOT TO BE REGARDED BY IMPLICATION OR OTHERWISE AS IN ANY MANNER LICENSING THE HOLDER OR ANY OTHER PERSON OR CORPORATION, OR CONVEYING ANY RIGHTS OR PERMISSION TO MANUFACTURE, USE, OR SELL ANY PATENTED INVENTION THAT MAY IN ANY WAY BE RELATED THERETO.

1004645 —

REVISIONS 10611			
SYM	DESCRIPTION	DATE	APPROVAL

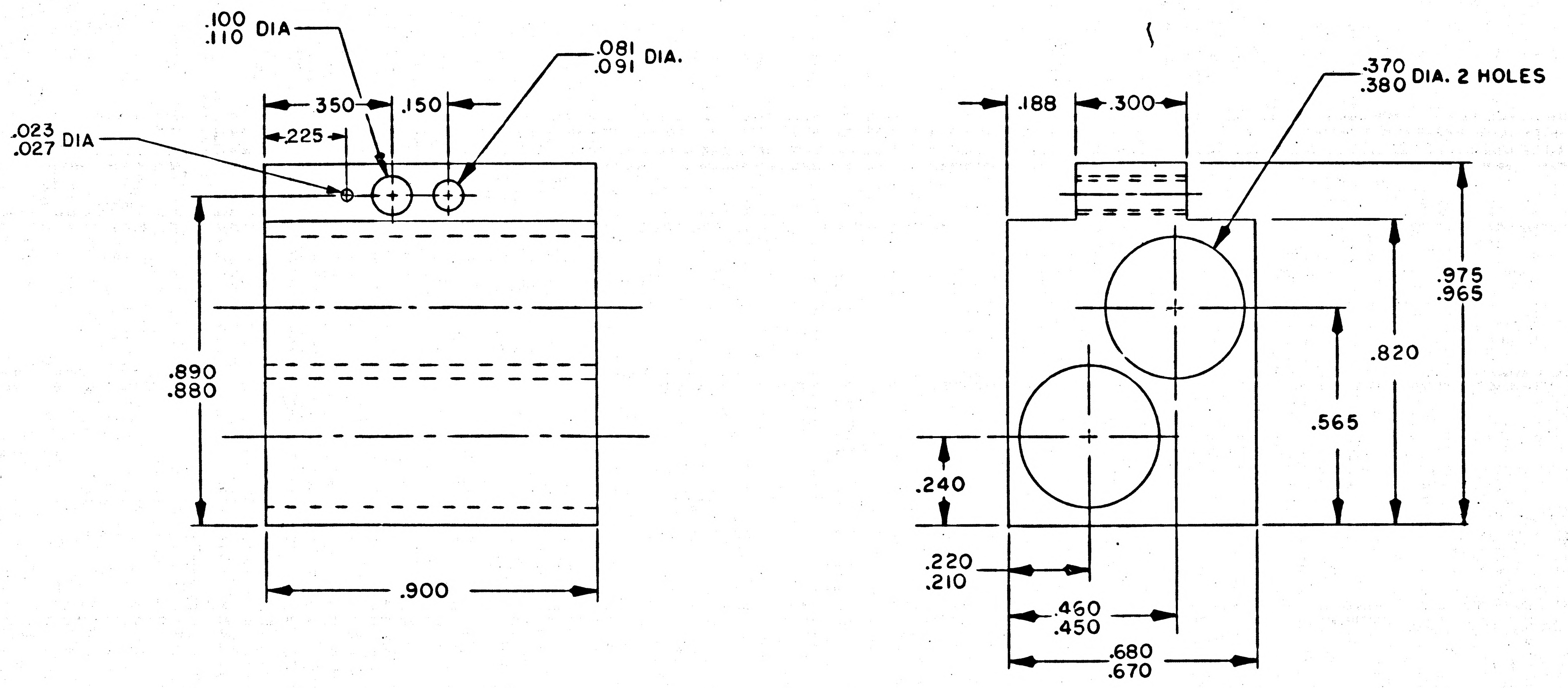

1004645

⊖ REPLACES 1004283 AFTER SYSTEM NO. 20 WITH CHANGES

NOTES:
1. INTERPRET DRAWING IN ACCORDANCE WITH STANDARDS PRESCRIBED BY MIL-D-70327
2. MAT'L: PLASTIC ACRYLIC PER MIL-P-5425 FINISH B ALT; MIL-P-8184 FINISH B
3. BREAK SHARP EDGES

QTY REQD	PART OR IDENTIFYING NO.	NOMENCLATURE OR DESCRIPTION	FIND NO.
LIST OF MATERIALS			

1003472	
NEXT ASSY	USED ON
APPLICATION	

UNLESS OTHERWISE SPECIFIED DIMENSIONS ARE IN INCHES
TOLERANCES ON
FRACTIONS ± # DECIMALS ±.010 ANGLES ± #
DO NOT SCALE THIS DRAWING
MATERIAL SEE NOTE 2
HEAT TREATMENT
FINAL FINISH

MIT INSTRUMENTATION LAB
CAMBRIDGE, MASS.
DWG. NO. CONTRACT
DRAWN P. Boudreau DATE 5 Aug 64
CHECKED R. Edwards 12 Aug 64
APPROVAL R T Martin 18 Aug 64
APPROVAL E. J. Duggan L.T.B. 9/1/64
NASA APPROVAL 9/1/64
MIT APPROVAL D. Hoag 9/1/64

MANNED SPACECRAFT CENTER
HOUSTON, TEXAS

HOLDER, COMPONENT
STRAND GATE MODULE

CODE IDENT NO. —
SIZE C
NASA DRAWING NO. 1004645
SCALE 4/1
WT
SHEET 1 OF 1

INCHES
0 1 2
PHOTOGRAPHIC SCALE ONLY

NOTICE — WHEN GOVERNMENT DRAWINGS, SPECIFICATIONS, OR OTHER DATA ARE USED FOR ANY PURPOSE OTHER THAN IN CONNECTION WITH A DEFINITELY RELATED GOVERNMENT PROCUREMENT OPERATION, THE UNITED STATES GOVERNMENT THEREBY INCURS NO RESPONSIBILITY NOR ANY OBLIGATION WHATSOEVER; AND THE FACT THAT THE GOVERNMENT MAY HAVE FORMULATED, FURNISHED, OR IN ANY WAY SUPPLIED THE SAID DRAWINGS, SPECIFICATIONS, OR OTHER DATA IS NOT TO BE REGARDED BY IMPLICATION OR OTHERWISE AS IN ANY MANNER LICENSING THE HOLDER OR ANY OTHER PERSON OR CORPORATION, OR CONVEYING ANY RIGHTS OR PERMISSION TO MANUFACTURE, USE, OR SELL ANY PATENTED INVENTION THAT MAY IN ANY WAY BE RELATED THERETO.

1004646 | -

SYM	REVISIONS DESCRIPTION	DATE	APPROVAL

HOLE IDENT	X BASIC DIM.	Y BASIC DIM.	⌖ DIA	HOLE DIA	QTY
A1	.000	.000	.010	.100 .104	48
A2	.000	.280			
A3	.000	.410			
A4	.000	.545			
A5	.135	.480			
A6	.225	.385			
A7	.320	.560			
A8	.390	.285			
A9	.515	.320			
A10	.565	.450			
A11	.700	.000			
A12	.700	.280			
A13	.700	.410			
A14	.700	.545			
A15	.835	.480			
A16	.925	.385			
A17	1.020	.560			
A18	1.090	.285			
A19	1.215	.320			
A20	1.265	.450			
A21	1.400	.000			
A22	1.400	.280			
A23	1.400	.410			
A24	1.400	.545			
A25	1.535	.480			
A26	1.625	.385			
A27	1.720	.560			
A28	1.790	.285			
A29	1.915	.320			
A30	1.965	.450			
A31	2.310	.545			
A32	2.375	.000			
A33	2.375	.130			
A34	2.375	.765			
A35	2.485	.265			
A36	2.510	.000			
A37	2.505	.130			
A38	2.515	.765			
A39	2.555	.515			
A40	2.640	.000			
A41	2.660	.765			
A42	2.710	.570			
A43	2.910	.380			
A44	2.950	.255			
A45	2.950	.505			
A46	2.510	.390			
A47	2.380	.420			
A48	2.760	.190			
B1	.115	.315	.010	.081 .085	11
B2	.260	.270			
B3	.335	.440			
B4	.815	.315			
B5	.960	.270			
B6	1.035	.440			
B7	1.515	.315			
B8	1.660	.270			
B9	1.735	.440			
B10	2.280	.225			
B11	2.370	.295			

HOLE IDENT	X BASIC DIM	Y BASIC DIM	⌖ DIA	HOLE DIA	QTY
C1	.425	.390	.010	.023 .027	5
C2	1.125	.390			
C3	1.825	.390			
C4	2.980	.800			
C5	2.455	.495			
C6	2.840	.465			
D1	.195	.080	.010	SEE DETAIL A	18
D2	.155	.685			
D3	.895	.080			
D4	.855	.685			
D5	1.595	.080			
D6	1.555	.685			
D7	.505	.110			
D8	.505	.685			
D9	1.205	.110			
D10	1.205	.685			
D11	1.905	.110			
D12	1.905	.685			
D13	2.190	.065			
D14	2.190	.385			
D15	2.190	.700			
D16	2.705	.375			
D17	2.845	.710			
D18	2.895	.055			
E1	2.640	.135	.010	.108 .112	2
E2	2.600	.645			
F1	2.440	.625	.010	.153 .157	1

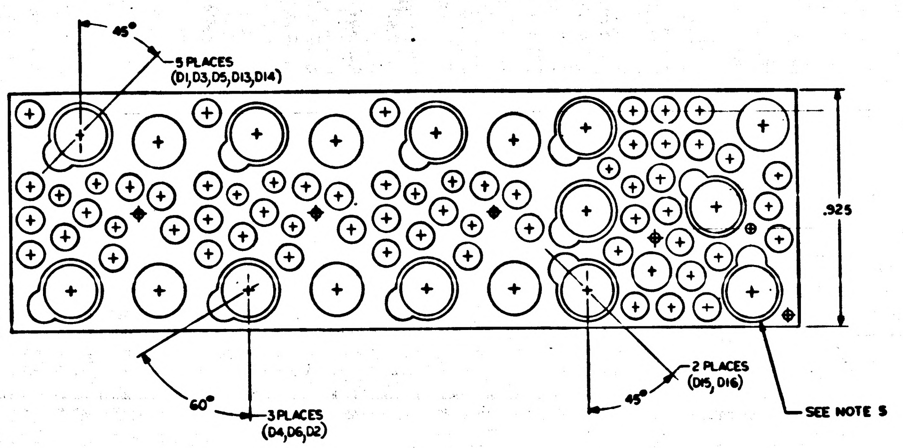

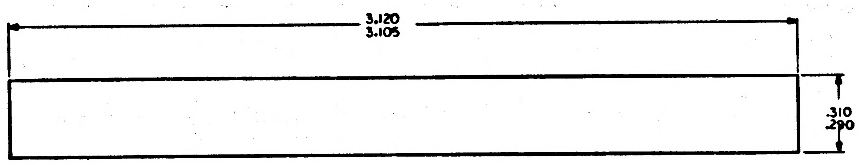

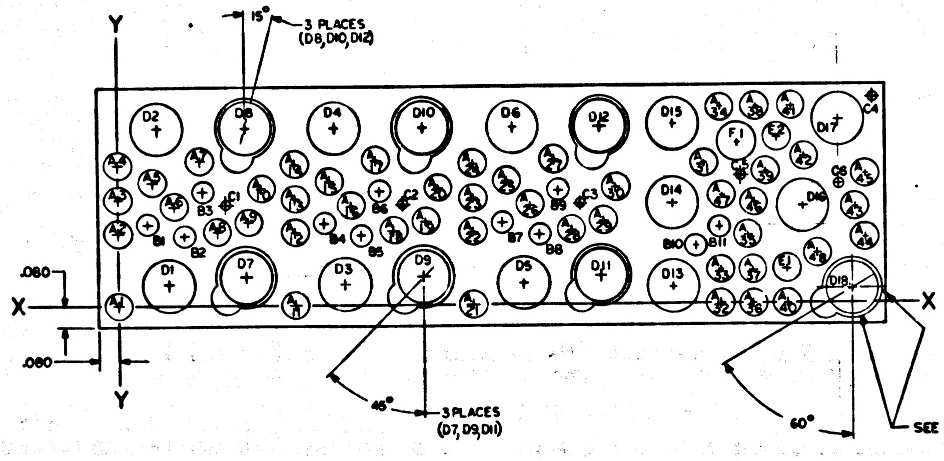

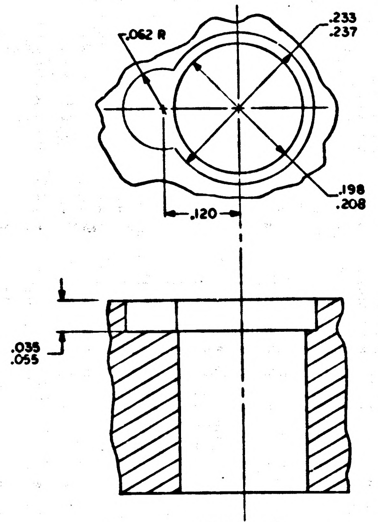

DETAIL A
SCALE 10/1
"D" HOLES, 18 PLACES
SEE TOP AND BOTTOM VIEWS FOR TAB ORIENTATION

NOTES
1. INTERPRET DRAWING IN ACCORDANCE WITH STANDARDS PRESCRIBED BY MIL-D-70327
2. MATERIAL: PLASTIC ACRYLIC PER MIL-P-5425, FINISH B ALT. MIL-P-8184 FINISH B
3. TRUE POSITIONING AS SHOWN IN CHART
4. BREAK ALL SHARP EDGES
5. BREAKOUT ALLOWED BETWEEN COUNTERBORE OF HOLES D17 AND D18 AND EDGE OF BLOCK

⊖ REPLACES 1004264 AFTER SYSTEM NO. 20 WITH CHANGES

QTY REQD	PART OR IDENTIFYING NO.	NOMENCLATURE OR DESCRIPTION	FIND NO.

LIST OF MATERIALS

1003471	-
NEXT ASSY	USED ON
APPLICATION	

UNLESS OTHERWISE SPECIFIED DIMENSIONS ARE IN INCHES
TOLERANCES ON
FRACTIONS ± DECIMALS ±.005 ANGLES ±3°
DO NOT SCALE THIS DRAWING
MATERIAL SEE NOTE 2
HEAT TREATMENT
FINAL FINISH

MIT INSTRUMENTATION LAB
CAMBRIDGE, MASS
DWG. NO. CONTRACT
DRAWN R. Wheeler DATE
CHECKED Richard 12 Aug 64
APPROVAL
APPROVAL
NASA APPROVAL
MIT APPROVAL

MANNED SPACECRAFT CENTER
HOUSTON, TEXAS

HOLDER, COMPONENT
STRAND GATE MODULE

CODE IDENT NO. —
SIZE E
NASA DRAWING NO 1004646
SCALE 4/1
WT
SHEET 1 OF 1

INCHES
0 1 2
PHOTOGRAPHIC SCALE ONLY

NOTICE — WHEN GOVERNMENT DRAWINGS, SPECIFICATIONS, OR OTHER DATA ARE USED FOR ANY PURPOSE OTHER THAN IN CONNECTION WITH A DEFINITELY RELATED GOVERNMENT PROCUREMENT OPERATION, THE UNITED STATES GOVERNMENT THEREBY INCURS NO RESPONSIBILITY NOR ANY OBLIGATION WHATSOEVER, AND THE FACT THAT THE GOVERNMENT MAY HAVE FORMULATED, FURNISHED, OR IN ANY WAY SUPPLIED THE SAID DRAWINGS, SPECIFICATIONS OR OTHER DATA IS NOT TO BE REGARDED BY IMPLICATION OR OTHERWISE AS IN ANY MANNER LICENSING THE HOLDER OR ANY OTHER PERSON OR CORPORATION, OR CONVEYING ANY RIGHTS OR PERMISSION TO MANUFACTURE, USE, OR SELL ANY PATENTED INVENTION THAT MAY IN ANY WAY BE RELATED THERETO.

REVISIONS 10611			
SYM	DESCRIPTION	DATE	APPROVAL

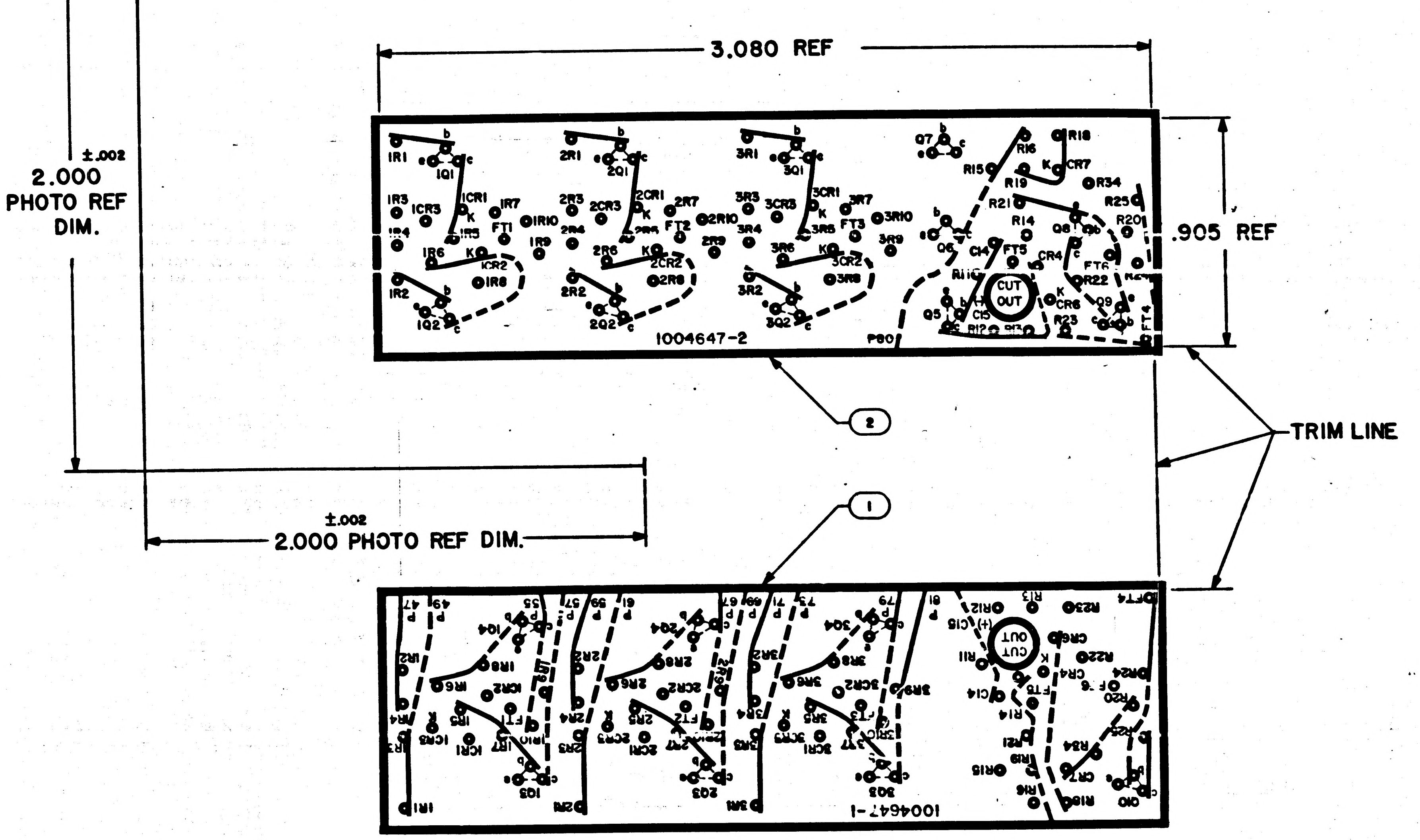

NOTES:
1. INTERPRET DRAWING IN ACCORDANCE WITH STANDARDS PRESCRIBED BY MIL-D-70327
2. MATL: FILM .006/.008 THICK PER L-F-340, TYPE IB, CLASS 2, STYLE IA
3. ORIGINAL OF THIS DRAWING OR REPRODUCTION MADE BY PROCESS OR METHOD SHALL INSURE DIMENSIONAL STABILITY. DIMENSIONAL STABILITY SHALL NOT EXCEED .001 INCH PER INCH
4. MAKE MASTER PATTERN POSITIVE FILMS TO DIMENSIONS SHOWN
5. CUT WITHIN .010 OF TRIM LINE
6. ◉ .045/.050 DIA PUNCH ALL HOLES

⊖ REPLACES 1004268 AFTER SYSTEM NO. 20 WITH CHANGES

QTY REQD	PART OR IDENTIFYING NO.	NOMENCLATURE OR DESCRIPTION	FIND NO.
1	1004647-2	INSULATOR	2
1	1004647-1	INSULATOR	1

LIST OF MATERIALS

NEXT ASSY	USED ON
1003471	

APPLICATION

UNLESS OTHERWISE SPECIFIED DIMENSIONS ARE IN INCHES
TOLERANCES ON
FRACTIONS ± DECIMALS ± ANGLES ±
DO NOT SCALE THIS DRAWING
MATERIAL SEE NOTE 2
HEAT TREATMENT
FINAL FINISH

MIT INSTRUMENTATION LAB
CAMBRIDGE, MASS
DWG. NO. CONTRACT
DRAWN R. W. Searles DATE 28 July 64
CHECKED cc R. Edmunds 12 Aug 64
APPROVAL R T Marston 18 Aug 64
APPROVAL E. J. Langan 9/1/64
NASA APPROVAL 9/1/64
MIT APPROVAL D. Hazel 9/1/64

MANNED SPACECRAFT CENTER
HOUSTON, TEXAS

INSULATOR
PHOTOGRAPHIC MASTER
STRAND GATE MODULE

CODE IDENT NO. —
SIZE D
NASA DRAWING NO. 1004647
SCALE 4/1
WT
SHEET 1 OF 1

INCHES
0 1 2
PHOTOGRAPHIC SCALE ONLY

NOTICE — WHEN GOVERNMENT DRAWINGS, SPECIFICATIONS, OR OTHER DATA ARE USED FOR ANY PURPOSE OTHER THAN IN CONNECTION WITH A DEFINITELY RELATED GOVERNMENT PROCUREMENT OPERATION, THE UNITED STATES GOVERNMENT THEREBY INCURS NO RESPONSIBILITY NOR ANY OBLIGATION WHATSOEVER; AND THE FACT THAT THE GOVERNMENT MAY HAVE FORMULATED, FURNISHED, OR IN ANY WAY SUPPLIED THE SAID DRAWINGS, SPECIFICATIONS OR OTHER DATA IS NOT TO BE REGARDED BY IMPLICATION OR OTHERWISE AS IN ANY MANNER LICENSING THE HOLDER OR ANY OTHER PERSON OR CORPORATION, OR CONVEYING ANY RIGHTS OR PERMISSION TO MANUFACTURE, USE, OR SELL ANY PATENTED INVENTION THAT MAY IN ANY WAY BE RELATED THERETO.

1004651

SYM	DESCRIPTION	DATE	APPROVAL

REVISIONS 12580

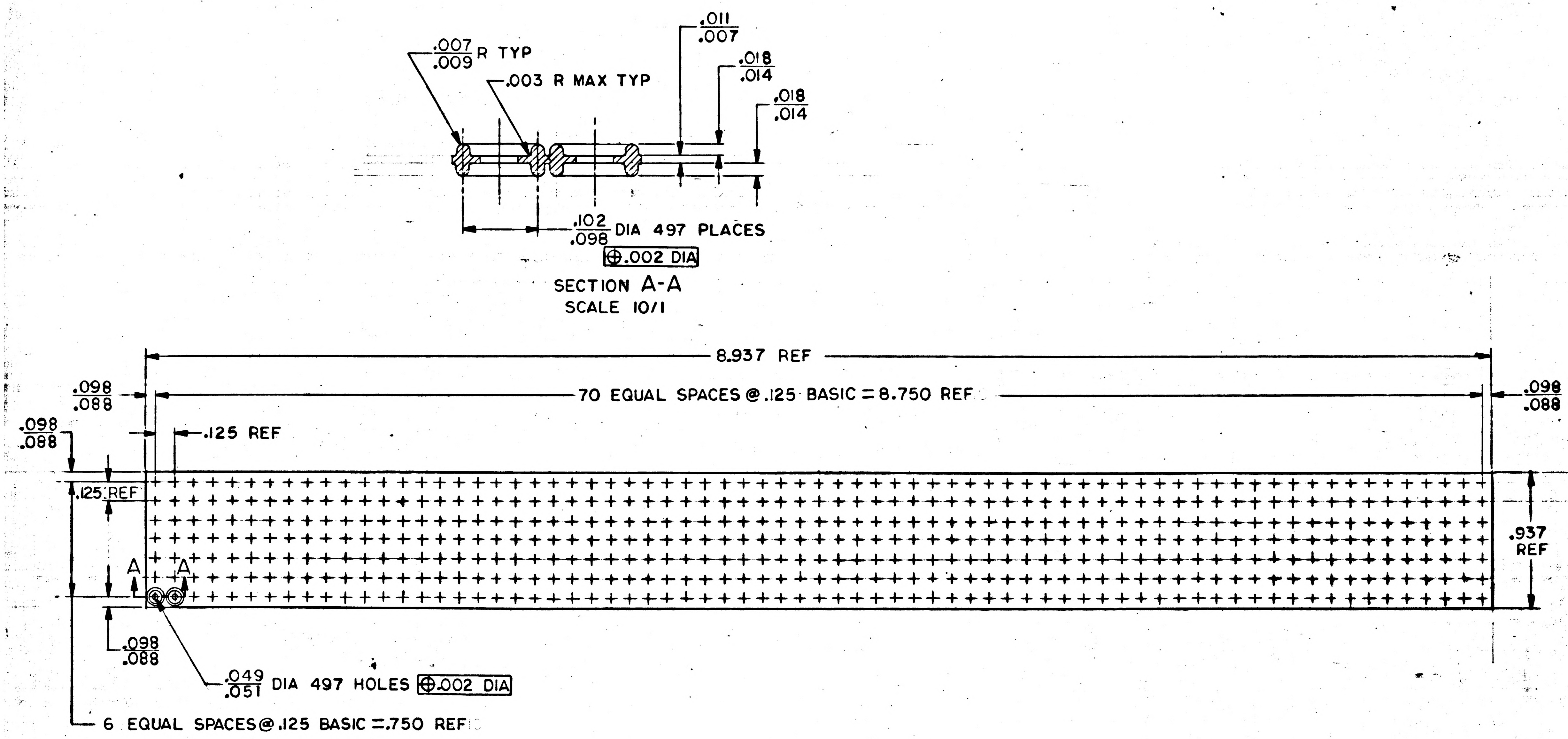

.007
.009 R TYP
.003 R MAX TYP
.011
.007
.018
.014
.018
.014
.102
.098 DIA 497 PLACES
⊕ .002 DIA
SECTION A-A
SCALE 10/1
8.937 REF
.098
.088
70 EQUAL SPACES @ .125 BASIC = 8.750 REF
.098
.088
.098
.088
.125 REF
.125 REF
.937
REF
A
A
.098
.088
.049
.051 DIA 497 HOLES ⊕ .002 DIA
6 EQUAL SPACES @ .125 BASIC = .750 REF

NOTES
1. MATL: RUBBER, SILICONE (GE-5211) PER MIL-R-5847D, CLASS III, 20-25 DURO
2. INTERPRET DRAWING IN ACCORDANCE WITH STANDARDS PRESCRIBED BY MIL-D-70327
3. THE GASKET SHALL NOT EXHIBIT ANY VOIDS OR MARS AT THE TOP PERIPHERY OF THE RINGS
4. NO AIR BUBBLES OR BLOW HOLES SHALL BE PRESENT IN THE BODY OF THE RINGS

MASTER

QTY REQD	PART OR IDENTIFYING NO.	NOMENCLATURE OR DESCRIPTION	FIND NO.

LIST OF MATERIALS

NEXT ASSY	USED ON
APPLICATION	

UNLESS OTHERWISE SPECIFIED DIMENSIONS ARE IN INCHES
TOLERANCES ON
FRACTIONS ± DECIMALS ± ANGLES ±
DO NOT SCALE THIS DRAWING
MATERIAL SEE NOTE 1
HEAT TREATMENT NONE
FINAL FINISH NONE

MIT INSTRUMENTATION LAB
CAMBRIDGE, MASS.
DWG. NO. CONTRACT

DRAWN DATE
CHECKED 11 June 64
APPROVAL
APPROVAL 11 Sept 64
NASA APPROVAL 9/15/64
MIT APPROVAL
MIT APPROVAL 9/15/64

MANNED SPACECRAFT CENTER
HOUSTON, TEXAS

GASKET, UNIVERSAL

CODE IDENT NO. —— SIZE C NASA DRAWING NO. 1004651
SCALE 2/1 WT SHEET 1 OF 1

INCHES
0 1 2
PHOTOGRAPHIC SCALE ONLY

SYM	DESCRIPTION	DATE	APPROVAL
–	ORIGINATED AND RELEASED PER TDRR 12832	[illegible]	JK.

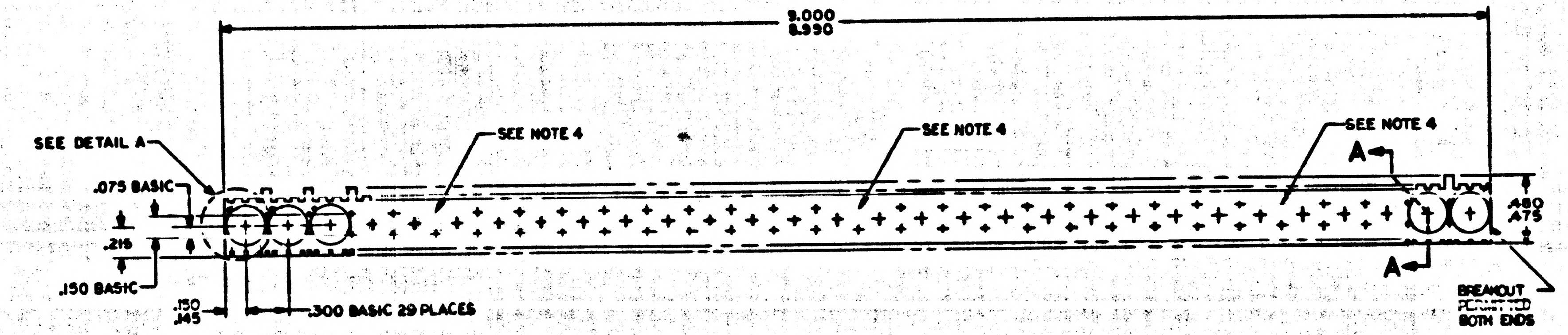

9.000
8.990
SEE DETAIL A
SEE NOTE 4
SEE NOTE 4
SEE NOTE 4
.075 BASIC
.219
.150 BASIC
.150
.145
.300 BASIC 29 PLACES
A
A
.480
.475
BREAKOUT PERMITTED BOTH ENDS

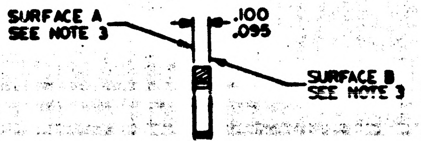

SURFACE A
SEE NOTE 3
.100
.095
SURFACE B
SEE NOTE 3

SECTION A-A

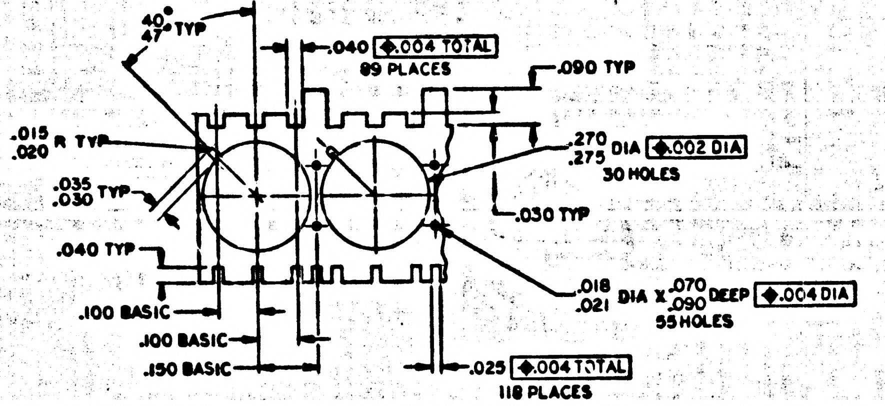

40°
47° TYP
.040 ◆.004 TOTAL
89 PLACES
.090 TYP
.015
.020 R TYP
.270
.275 DIA ◆.002 DIA
30 HOLES
.035
.030 TYP
.030 TYP
.040 TYP
.018
.021 DIA X .070
.090 DEEP ◆.004 DIA
55 HOLES
.100 BASIC
.100 BASIC
.150 BASIC
.025 ◆.004 TOTAL
118 PLACES

DETAIL A
SCALE 5/1

NOTES
1. INTERPRET DRAWING IN ACCORDANCE WITH STANDARDS PRESCRIBED BY MIL-D-70327
2. MAT'L: PLASTIC PER MIL-P-18177, TYPE GEB
3. SURFACES A AND B TO BE DULL FINISH
4. NO $^{.017}_{.024}$ HOLES AT THESE LOCATIONS
5. NO BREAKOUTS PERMITTED EXCEPT WHERE INDICATED

QTY REQD	PART OR IDENTIFYING NO.	NOMENCLATURE OR DESCRIPTION	FIND NO.

LIST OF MATERIALS

NEXT ASSY	USED ON
1003082	
1003081	

APPLICATION

UNLESS OTHERWISE SPECIFIED
DIMENSIONS ARE IN INCHES
TOLERANCES ON
FRACTIONS ± –//– DECIMALS ± .005 ANGLES ±
DO NOT SCALE THIS DRAWING
MATERIAL SEE NOTE 2
HEAT TREATMENT –//–
FINAL FINISH –//–

MIT
INSTRUMENTATION LAB
CAMBRIDGE, MASS.
DRAWN D.G. Clement DATE 7 Aug 64
CHECKED O.R. Bogni 12 Aug 64
APPROVAL R.T. Mar[illegible] 12 Aug 64
APPROVAL [illegible]
NASA APPROVAL [illegible]
MIT APPROVAL W.K[illegible] 22 Sep 64

MANNED SPACECRAFT CENTER
HOUSTON, TEXAS

HOUSING MICRO LOGIC
TO 47

CODE IDENT NO. —
SIZE D
NASA DRAWING NO. 1004658
SCALE 2/1
WT
SHEET 1 OF 1

MASTER

1004658

INCHES
0 1 2
PHOTOGRAPHIC SCALE ONLY

NOTICE – WHEN GOVERNMENT DRAWINGS, SPECIFICATIONS, OR OTHER DATA ARE USED FOR ANY PURPOSE OTHER THAN IN CONNECTION WITH A DEFINITELY RELATED GOVERNMENT PROCUREMENT OPERATION, THE UNITED STATES GOVERNMENT THEREBY INCURS NO RESPONSIBILITY NOR ANY OBLIGATION WHATSOEVER; AND THE FACT THAT THE GOVERNMENT MAY HAVE FORMULATED, FURNISHED, OR IN ANY WAY SUPPLIED THE SAID DRAWINGS, SPECIFICATIONS OR OTHER DATA IS NOT TO BE REGARDED BY IMPLICATION OR OTHERWISE AS IN ANY MANNER LICENSING THE HOLDER OR ANY OTHER PERSON OR CORPORATION, OR CONVEYING ANY RIGHTS OR PERMISSION TO MANUFACTURE, USE, OR SELL ANY PATENTED INVENTION THAT MAY IN ANY WAY BE RELATED THERETO.

1004664 —

REVISIONS TDRR 14465

SYM	ZONE	DESCRIPTION	DR	CHK	DATE	APPROVED

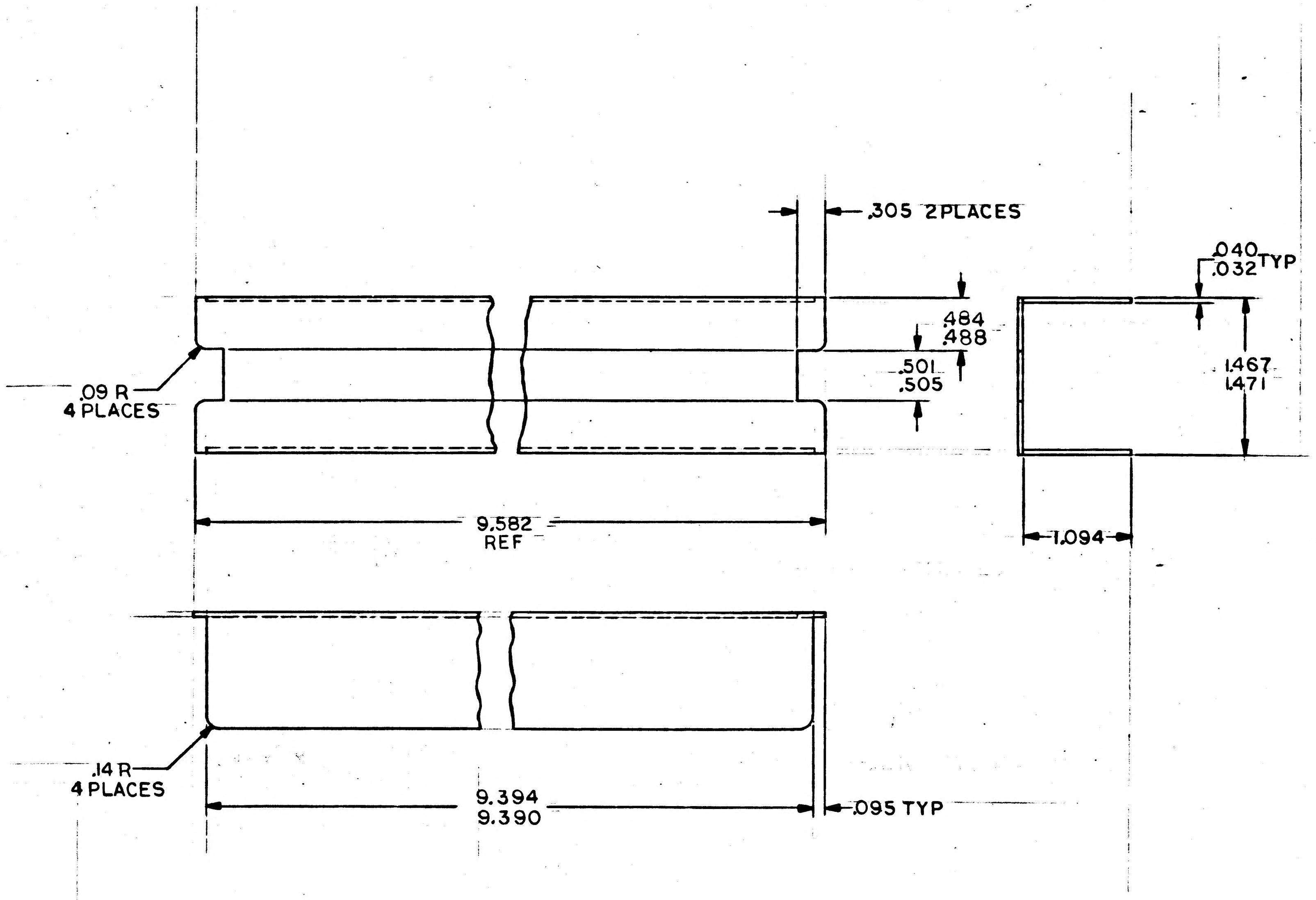

NOTES

1. MATERIAL: PLASTIC, THERMOSETTING PER MIL-P-18177 TYPE GEE
2. INTERPRET DRAWING IN ACCORDANCE WITH STANDARDS PRESCRIBED BY MIL-D-70327

QTY REQD	PART OR IDENTIFYING NO.	MATERIAL OR NOTES	NOMENCLATURE OR DESCRIPTION	FIND NO.

LIST OF MATERIALS

1003133	
NEXT ASSY	USED ON

APPLICATION

UNLESS OTHERWISE SPECIFIED
DIMENSIONS ARE IN INCHES
CAPACITOR VALUES ARE IN μf
RESISTOR VALUES ARE IN OHMS
TOLERANCES ON
FRACTIONS ± DECIMALS ± .005 .01 ANGLES ±
DO NOT SCALE THIS DRAWING

MATERIAL
SEE NOTE 1.

MIT
INSTRUMENTATION LAB
CAMBRIDGE, MASS.

DRAWN	R. Hamm	5 NOV 64
CHECKED	R. Edwards	10/30/64
APPROVED	R T Martin	10-11-64
APPROVED	Eldon C Hall	13 Nov 64
APPROVED MIT	D Hoag	11/24/64
APPROVED MSC	W Mitchell	1/19/65
		DATE

MANNED SPACECRAFT CENTER
HOUSTON, TEXAS

COVER, ROPE MEMORY
APOLLO GUIDANCE COMPUTER

CODE IDENT NO. —— SIZE C DRAWING NO. 1004664
SCALE 1/1 SHEET 1 OF 1

MASTER

INCHES
0 1 2

NOTICE – WHEN GOVERNMENT DRAWINGS, SPECIFICATIONS, OR OTHER DATA ARE USED FOR ANY PURPOSE OTHER THAN IN CONNECTION WITH A DEFINITELY RELATED GOVERNMENT PROCUREMENT OPERATION, THE UNITED STATES GOVERNMENT THEREBY INCURS NO RESPONSIBILITY NOR ANY OBLIGATION WHATSOEVER; AND THE FACT THAT THE GOVERNMENT MAY HAVE FORMULATED, FURNISHED, OR IN ANY WAY SUPPLIED THE SAID DRAWINGS, SPECIFICATIONS OR OTHER DATA IS NOT TO BE REGARDED BY IMPLICATION OR OTHERWISE AS IN ANY MANNER LICENSING THE HOLDER OR ANY OTHER PERSON OR CORPORATION, OR CONVEYING ANY RIGHTS OR PERMISSION TO MANUFACTURE, USE, OR SELL ANY PATENTED INVENTION THAT MAY IN ANY WAY BE RELATED THERETO.

1004665 –

REVISIONS 14664

SYM	ZONE	DESCRIPTION	DR	CHK	DATE	APPROVED

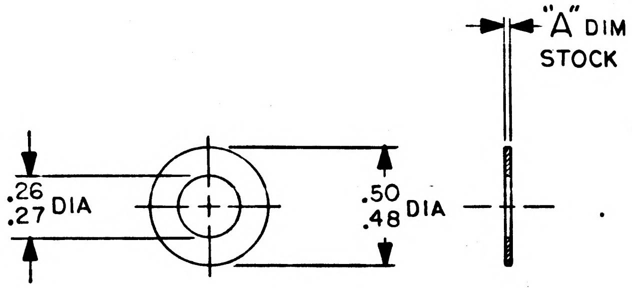

PART NO.	"A" DIM
–001	.003
–002	.005
–003	.010

NOTES

1. INTERPRET DRAWING IN ACCORDANCE WITH STANDARDS PRESCRIBED BY MIL-D-70327
2. MATL: AL 6061-T6 PER QQ-A-250/11b, TEMP T6
3. REMOVE BURRS AND SHARP EDGES
4. BLACK ANODIZE PER MIL-A-8625, TYPE II
5. IDENTIFY PER ND1002019

MASTER

QTY REQD	PART OR IDENTIFYING NO.	MATERIAL OR NOTES	NOMENCLATURE OR DESCRIPTION	FIND NO.

LIST OF MATERIALS

NEXT ASSY	USED ON
1003706	

APPLICATION

UNLESS OTHERWISE SPECIFIED
DIMENSIONS ARE IN INCHES
CAPACITOR VALUES ARE IN µf
RESISTOR VALUES ARE IN OHMS
TOLERANCES ON
FRACTIONS ± — DECIMALS ± — ANGLES ± —
DO NOT SCALE THIS DRAWING

MATERIAL
SEE NOTE 2

MIT
INSTRUMENTATION LAB
CAMBRIDGE, MASS.

DRAWN W. Jackson 12NOV64
CHECKED A. K. Bogni 16NOV64
APPROVED R. Von Bandten 16NOV64
APPROVED Eldon C Hall 4Dec64
APPROVED MIT W Kupfer 8Dec64
APPROVED MSC W J Rhine 12-8-64
DATE

MANNED SPACECRAFT CENTER
HOUSTON, TEXAS

SHIM
AGC NAV & MAIN DSKY

CODE IDENT NO. —
SIZE C
DRAWING NO. 1004665
SCALE 2/1
SHEET 1 OF 1

INCHES
0 1 2
PHOTOGRAPHIC SCALE ONLY

NOTICE – WHEN GOVERNMENT DRAWINGS, SPECIFICATIONS, OR OTHER DATA ARE USED FOR ANY PURPOSE OTHER THAN IN CONNECTION WITH A DEFINITELY RELATED GOVERNMENT PROCUREMENT OPERATION, THE UNITED STATES GOVERNMENT THEREBY INCURS NO RESPONSIBILITY NOR ANY OBLIGATION WHATSOEVER; AND THE FACT THAT THE GOVERNMENT MAY HAVE FORMULATED, FURNISHED, OR IN ANY WAY SUPPLIED THE SAID DRAWINGS, SPECIFICATIONS OR OTHER DATA IS NOT TO BE REGARDED BY IMPLICATION OR OTHERWISE AS IN ANY MANNER LICENSING THE HOLDER OR ANY OTHER PERSON OR CORPORATION, OR CONVEYING ANY RIGHTS OR PERMISSION TO MANUFACTURE, USE, OR SELL ANY PATENTED INVENTION THAT MAY IN ANY WAY BE RELATED THERETO.

– 1004669

REVISIONS 14666

SYM	ZONE	DESCRIPTION	DR	CHK	DATE	APPROVED

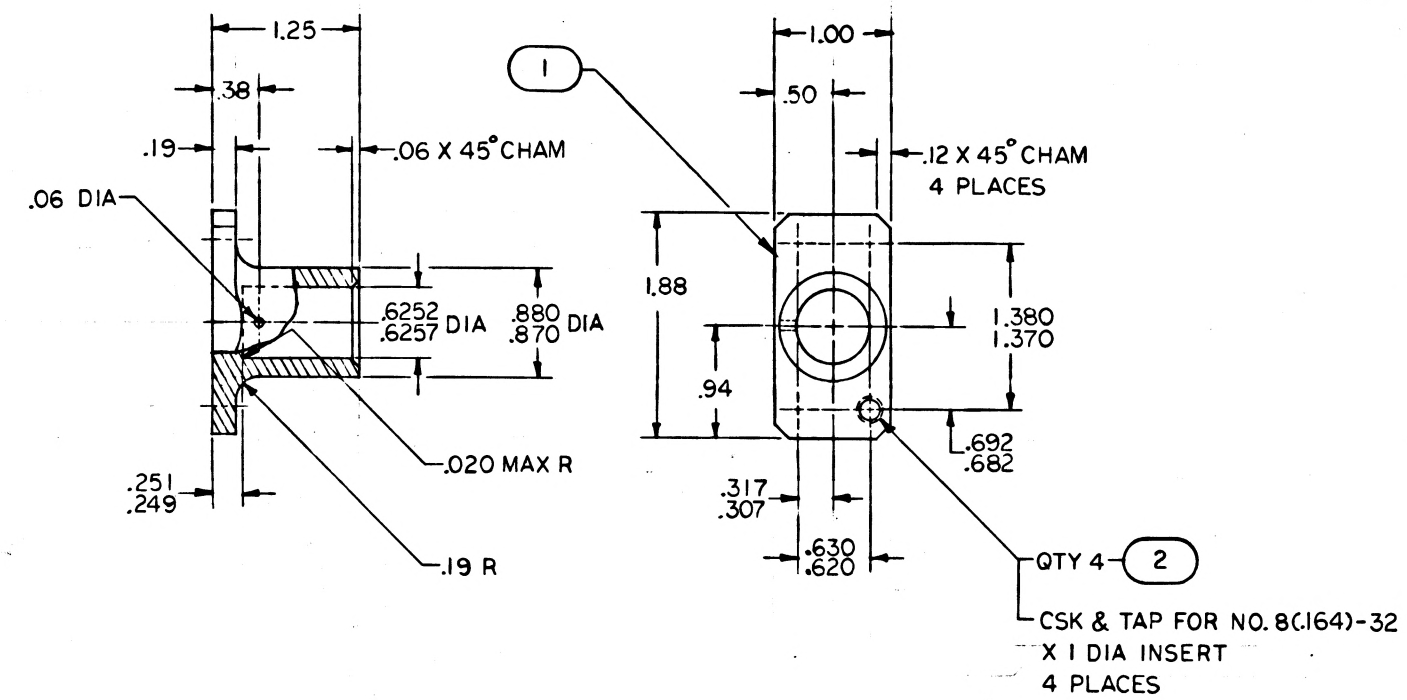

NOTES
1. MATL: 2024-T4 AL PER QQ-A-268 TEMP T4
2. REMOVE BURRS & SHARP EDGES
3. COAT THREADS OF FIND NO. 2 WITH MIL-P-8585 WET ZINC CHROMATE PRIMER COLOR Y
4. ANODIZE PER MIL-A-8625 TYPE I (CHROMIC ACID) DYED BLACK
5. INSTALL FIND NO. 2 PER MS33646 AFTER ANODIZING
6. INTERPRET DRAWING IN ACCORDANCE WITH STANDARDS PRESCRIBED BY MIL-D-70327

QTY REQD	PART OR IDENTIFYING NO.	MATERIAL OR NOTES	NOMENCLATURE OR DESCRIPTION	FIND NO.
4	MS 21208-C0810		INSERT, FREE RUNNING	2
1	1004669-001		FLANGE	1
-011	LIST OF MATERIALS			

MASTER

1003706	
NEXT ASSY	USED ON
APPLICATION	

UNLESS OTHERWISE SPECIFIED
DIMENSIONS ARE IN INCHES
CAPACITOR VALUES ARE IN µf
RESISTOR VALUES ARE IN OHMS
TOLERANCES ON
FRACTIONS ± DECIMALS ±.01 ANGLES ± 2°
DO NOT SCALE THIS DRAWING

MATERIAL

MIT
INSTRUMENTATION LAB
CAMBRIDGE, MASS.

MANNED SPACECRAFT CENTER
HOUSTON, TEXAS

DRAWN	B Jensen	12NOV64
CHECKED	A. Bogin	13NOV64
APPROVED	F.J. Londres	16 Nov 64
APPROVED	Eldon C Hall	4 Dec 64
APPROVED MIT	W Kupfer	8 Dec 64
APPROVED MSC	W J Rhine	12-8-64
		DATE

FLANGE
AGC NAV DSKY

CODE IDENT NO. ——
SIZE C
DRAWING NO. 1004669 RAY
SCALE 1/1
SHEET 1 OF 1

INCHES
0 1 2
PHOTOGRAPHIC SCALE ONLY

4 3 2 1

NOTICE — WHEN GOVERNMENT DRAWINGS, SPECIFICATIONS, OR OTHER DATA ARE USED FOR ANY PURPOSE OTHER THAN IN CONNECTION WITH A DEFINITELY RELATED GOVERNMENT PROCUREMENT OPERATION, THE UNITED STATES GOVERNMENT THEREBY INCURS NO RESPONSIBILITY NOR ANY OBLIGATION WHATSOEVER; AND THE FACT THAT THE GOVERNMENT MAY HAVE FORMULATED, FURNISHED, OR IN ANY WAY SUPPLIED THE SAID DRAWINGS, SPECIFICATIONS OR OTHER DATA IS NOT TO BE REGARDED BY IMPLICATION OR OTHERWISE AS IN ANY MANNER LICENSING THE HOLDER OR ANY OTHER PERSON OR CORPORATION, OR CONVEYING ANY RIGHTS OR PERMISSION TO MANUFACTURE, USE, OR SELL ANY PATENTED INVENTION THAT MAY IN ANY WAY BE RELATED THERETO.

—	1004670

REVISIONS 14666

SYM	ZONE	DESCRIPTION	DR	CHK	DATE	APPROVED

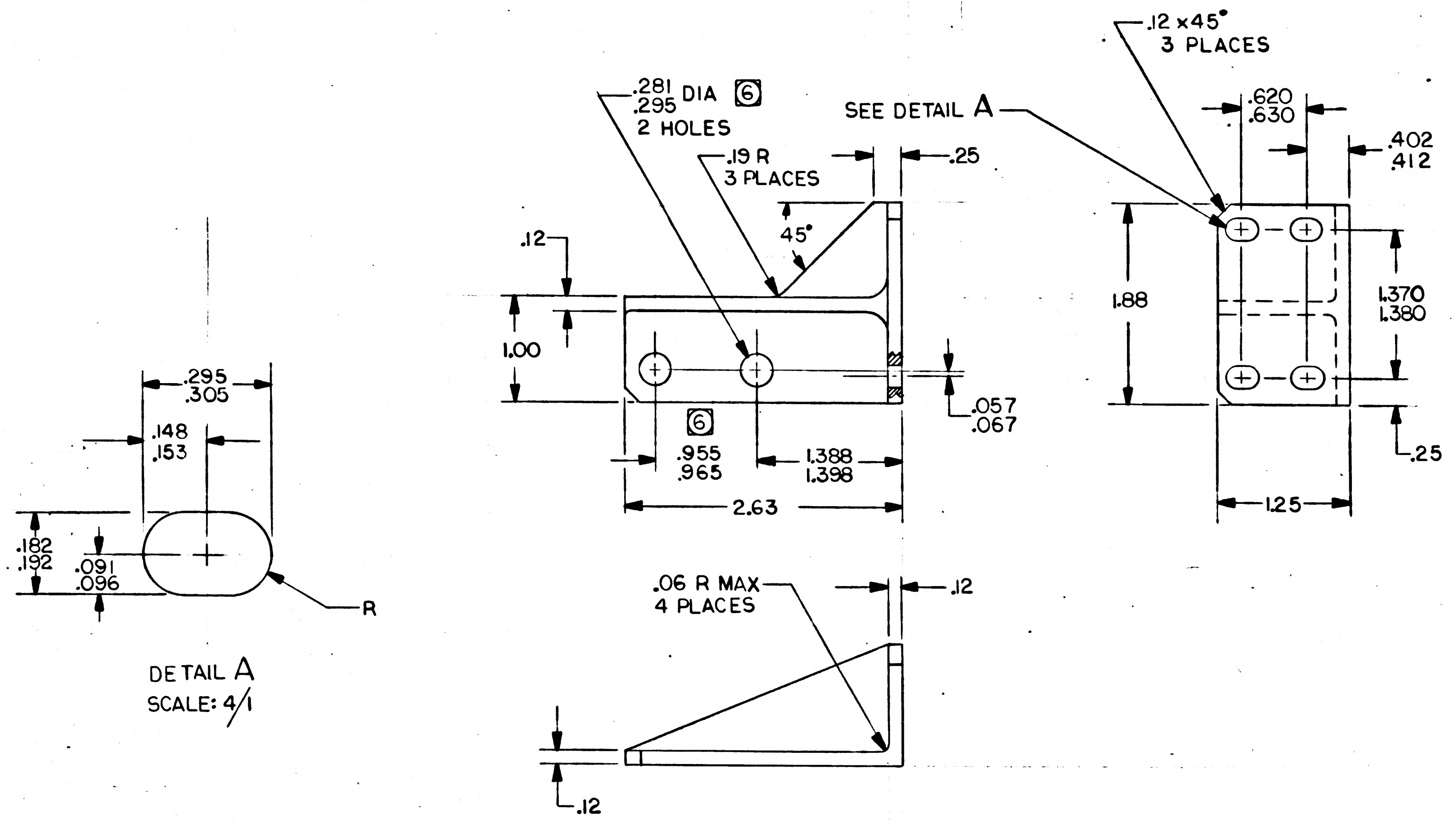
.12 x 45°
3 PLACES
SEE DETAIL A
.281
.295 DIA 6
2 HOLES
.19 R
3 PLACES
45°
.25
.620
.630
.402
.412
.12
1.00
1.88
1.370
1.380
.057
.067
.25
6
.955
.965
1.388
1.398
2.63
1.25
.295
.305
.148
.153
.182
.192
.091
.096
R
DETAIL A
SCALE: 4/1
.06 R MAX
4 PLACES
.12
.12

NOTES:

1. MATL: AL 2024-T4 PER QQ-A-268, TEMPER T4
2. REMOVE BURRS AND SHARP EDGES
3. BLACK ANODIZE PER MIL-A-8625 TYPE II
4. INTERPRET DRAWING IN ACCORDANCE WITH STANDARDS PRESCRIBED BY MIL-D-70327
5. SURFACE QUALITY TO BE 125√
6. 6 THIS DIMENSION IS CONTROLLED BY ICD MH01-01004-116
7. IDENTIFY PER ND1002019

MASTER

QTY REQD	PART OR IDENTIFYING NO.	MATERIAL OR NOTES	NOMENCLATURE OR DESCRIPTION	FIND NO.

LIST OF MATERIALS

1003706	
NEXT ASSY	USED ON
APPLICATION	

UNLESS OTHERWISE SPECIFIED
DIMENSIONS ARE IN INCHES
CAPACITOR VALUES ARE IN μf
RESISTOR VALUES ARE IN OHMS
TOLERANCES ON
FRACTIONS ± DECIMALS ±.01 ANGLES ± 2°
DO NOT SCALE THIS DRAWING

MATERIAL
SEE NOTE 1

MIT INSTRUMENTATION LAB
CAMBRIDGE, MASS.

MANNED SPACECRAFT CENTER
HOUSTON, TEXAS

DRAWN	John Manning	13 NOV 64
CHECKED	Arthur Rogin	13 NOV 64
APPROVED	F. J. Londrea	16 Nov 64
APPROVED	Eldon C Hall	4 Dec 64
APPROVED MIT	W Kupfer	8 Dec 64
APPROVED MSC	W J Rhine	12-8-64
		DATE

BRACKET, ANGLE
AGC NAV, DSKY

CODE IDENT NO.	SIZE	DRAWING NO.
———	C	1004670
SCALE 1/1		SHEET 1 OF 1

4 3 2 1

INCHES
0 1 2
PHOTOGRAPHIC SCALE COPY

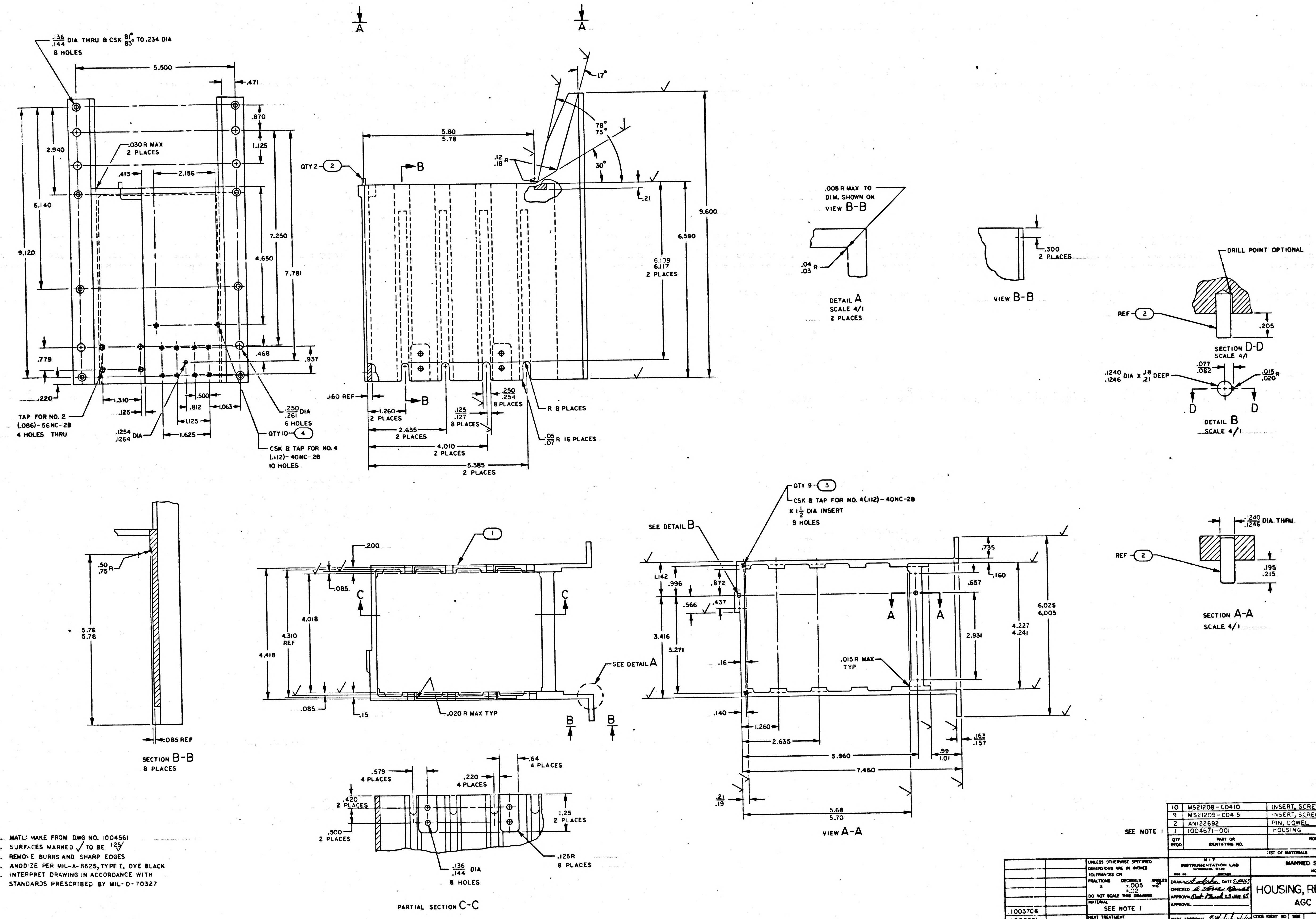
.136/.144 DIA THRU & CSK 81°/83° TO .234 DIA
8 HOLES
5.500
.471
.870
1.125
2.940
.030 R MAX
2 PLACES
.413
2.156
6.140
9.120
7.250
4.650
7.781
.779
.468
.937
.220
1.310
.125
.500
.812
1.063
1.125
1.625
TAP FOR NO. 2
(.086)-56NC-2B
4 HOLES THRU
.1254/.1264 DIA
.250/.261 DIA
6 HOLES
QTY 10 ④
CSK & TAP FOR NO. 4
(.112)-40NC-2B
10 HOLES
A
A
QTY 2 ②
B
5.80/5.78
.12/.18 R
17°
78°/75°
30°
.21
9.600
6.590
6.119/6.117
2 PLACES
.160 REF
1.260
2 PLACES
2.635
2 PLACES
4.010
2 PLACES
5.385
2 PLACES
.125/.127
8 PLACES
.250/.254
8 PLACES
R 8 PLACES
.05/.07 R 16 PLACES
.005 R MAX TO
DIM. SHOWN ON
VIEW B-B
.04/.03 R
DETAIL A
SCALE 4/1
2 PLACES
.300
2 PLACES
VIEW B-B
DRILL POINT OPTIONAL
REF ②
.205
SECTION D-D
SCALE 4/1
.1240/.1246 DIA X .18/.21 DEEP
.077/.082
.015/.020 R
D
D
DETAIL B
SCALE 4/1
.50/.75 R
5.76/5.78
.085 REF
SECTION B-B
8 PLACES
.200
①
.085
C
C
4.018
4.310 REF
4.418
SEE DETAIL A
.085
.15
.020 R MAX TYP
B
B
QTY 9 ③
CSK & TAP FOR NO. 4(.112)-40NC-2B
X 1½ DIA INSERT
9 HOLES
SEE DETAIL B
1.142
.996
.872
.566
.437
3.416
3.271
.16
.140
.735
.160
.657
A
A
2.931
4.227/4.241
6.025/6.005
.015 R MAX
TYP
1.260
2.635
5.960
7.460
.99/1.01
.163/.157
.21/.19
5.68/5.70
VIEW A-A
.1240/.1246 DIA THRU
REF ②
.195/.215
SECTION A-A
SCALE 4/1
.579
4 PLACES
.220
4 PLACES
.64
4 PLACES
.420
2 PLACES
.500
2 PLACES
1.25
2 PLACES
.136/.144 DIA
8 HOLES
.125R
8 PLACES
PARTIAL SECTION C-C

NOTES

1. MATL: MAKE FROM DWG NO. 1004561
2. SURFACES MARKED √ TO BE 125√
3. REMOVE BURRS AND SHARP EDGES
4. ANODIZE PER MIL-A-8625, TYPE I, DYE BLACK
5. INTERPRET DRAWING IN ACCORDANCE WITH STANDARDS PRESCRIBED BY MIL-D-70327

SEE NOTE 1

QTY REQD	PART OR IDENTIFYING NO.	NOMENCLATURE OR DESCRIPTION	FIND NO.
10	MS21208-C0410	INSERT, SCREW THREAD	4
9	MS21209-C0415	INSERT, SCREW THREAD	3
2	AN122692	PIN, DOWEL	2
1	1004671-001	HOUSING	

LIST OF MATERIALS

NEXT ASSY	USED ON
1003706	
1003551	

APPLICATION

UNLESS OTHERWISE SPECIFIED DIMENSIONS ARE IN INCHES
TOLERANCES ON
FRACTIONS ± DECIMALS ±.005 ±.02 ANGLES ±2°
DO NOT SCALE THIS DRAWING
MATERIAL SEE NOTE 1
HEAT TREATMENT NONE
FINAL FINISH SEE NOTE 4

MIT
INSTRUMENTATION LAB
CAMBRIDGE, MASS
DRAWN *A. Sipko* DATE 5 JAN 65
CHECKED *A. Vance* 8 Jan 65
APPROVAL *[illegible]* 29 JAN 65
APPROVAL
NASA APPROVAL *[illegible]* 1/4/65
MIT APPROVAL
MIT APPROVAL *[illegible]* 9 Feb 65

MANNED SPACECRAFT CENTER
HOUSTON, TEXAS

HOUSING, RELAY MODULE
AGC DSKY, NAV

CODE IDENT NO. —
SIZE J
NASA DRAWING NO. 1004671
SCALE 1/1
WT
SHEET 1 OF 1

REVISIONS 4827

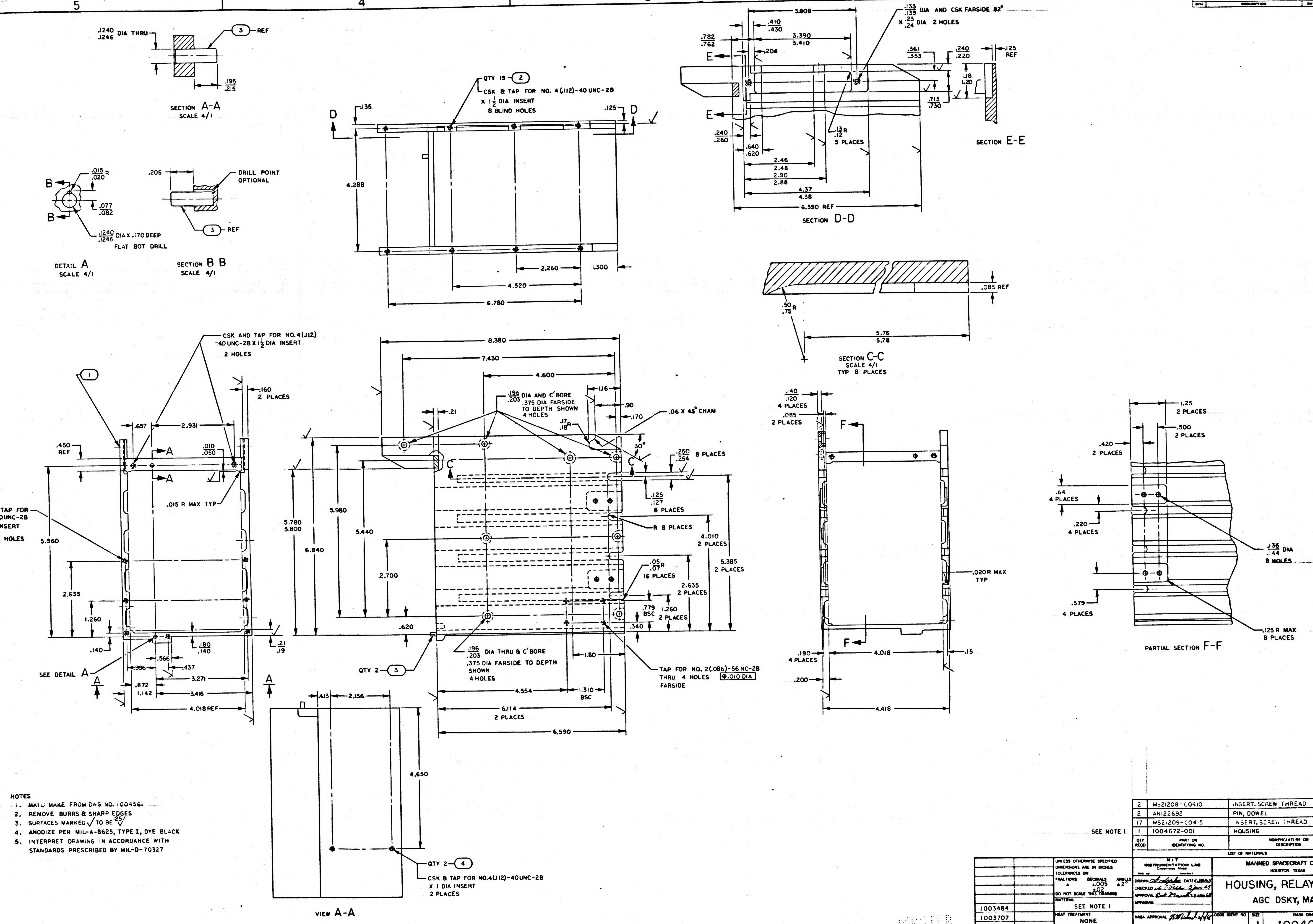
SECTION A-A
SCALE 4/1
.1240 / .1246 DIA THRU
③ REF
.195 / .215
DETAIL A
SCALE 4/1
.015 / .020 R
.077 / .082
.1240 / .1246 DIA X .170 DEEP FLAT BOT DRILL
SECTION B B
SCALE 4/1
.205
DRILL POINT OPTIONAL
③ REF
QTY 19 ②
CSK & TAP FOR NO. 4 (.112)-40 UNC-2B X 1½ DIA INSERT 8 BLIND HOLES
D
.135
.125
4.288
2.260
1.300
4.520
6.780
SECTION D-D
3.808
.410 / .430
3.390 / 3.410
.782 / .762
.204
E
.133 / .139 DIA AND CSK FARSIDE 82° X .23 / .24 DIA 2 HOLES
.361 / .353
.240 / .220
.125 REF
.118 / .120
.715 / .730
.13 / .12 R 5 PLACES
.240 / .260
.640 / .620
2.46 / 2.48
2.90 / 2.88
4.37 / 4.38
6.590 REF
SECTION E-E
.085 REF
.50 / .75 R
5.76 / 5.78
SECTION C-C
SCALE 4/1
TYP 8 PLACES
CSK AND TAP FOR NO.4 (.112) -40 UNC-2B X 1½ DIA INSERT 2 HOLES
①
.160 2 PLACES
.657
2.931
.450 REF
.010 / .050
.015 R MAX TYP
CSK AND TAP FOR NO.4 (.112)-40UNC-2B X 1½ DIA INSERT 7 BLIND HOLES
5.960
2.635
1.260
.140
.180 / .140
.21 / .19
SEE DETAIL A
.996
.566
.437
3.271
.872
1.142
3.416
4.018 REF
8.380
7.430
4.600
.116
.21
.196 / .203 DIA AND C'BORE .375 DIA FARSIDE TO DEPTH SHOWN 4 HOLES
.17 / .18 R
.90
.170
.06 X 45° CHAM
30°
.250 / .254 8 PLACES
.125 / .127 8 PLACES
R 8 PLACES
4.010 2 PLACES
5.385 2 PLACES
.05 / .07 R 16 PLACES
2.635 2 PLACES
.779 BSC
1.260 2 PLACES
.340
5.780 / 5.800
5.980
5.440
6.840
2.700
.620
QTY 2 ③
.196 / .203 DIA THRU & C'BORE .375 DIA FARSIDE TO DEPTH SHOWN 4 HOLES
1.80
TAP FOR NO. 2 (.086)-56 NC-2B THRU 4 HOLES FARSIDE ⊕ .010 DIA
4.554
1.310 BSC
6.114 2 PLACES
6.590
.413
2.156
4.650
QTY 2 ④
CSK & TAP FOR NO.4 (.112)-40UNC-2B X 1 DIA INSERT 2 PLACES
VIEW A-A
.140 / .120 4 PLACES
.085 2 PLACES
F
.020 R MAX TYP
.190 4 PLACES
4.018
.15
.200
4.418
1.25 2 PLACES
.500 2 PLACES
.420 2 PLACES
.64 4 PLACES
.220 4 PLACES
.136 / .144 DIA 8 HOLES
.579 4 PLACES
.125 R MAX 8 PLACES
PARTIAL SECTION F-F

NOTES
1. MATL: MAKE FROM DWG NO. 1004561
2. REMOVE BURRS & SHARP EDGES
3. SURFACES MARKED √ TO BE $^{125}\surd$
4. ANODIZE PER MIL-A-8625, TYPE I, DYE BLACK
5. INTERPRET DRAWING IN ACCORDANCE WITH STANDARDS PRESCRIBED BY MIL-D-70327

SEE NOTE 1

QTY REQD	PART OR IDENTIFYING NO.	NOMENCLATURE OR DESCRIPTION	FIND NO.
2	MS21208-C0410	INSERT, SCREW THREAD	4
2	AN122692	PIN, DOWEL	3
17	MS21209-C0415	INSERT, SCREW THREAD	2
1	1004672-001	HOUSING	

LIST OF MATERIALS

NEXT ASSY	USED ON
1003484	
1003707	

APPLICATION

UNLESS OTHERWISE SPECIFIED DIMENSIONS ARE IN INCHES
TOLERANCES ON
FRACTIONS ± DECIMALS ±.005 ±.02 ANGLES ±2°
DO NOT SCALE THIS DRAWING
MATERIAL SEE NOTE 1
HEAT TREATMENT NONE
FINAL FINISH SEE NOTE 4

MIT INSTRUMENTATION LAB
CAMBRIDGE MASS
DRAWN S. Lepke DATE 4 JAN 65
CHECKED A. Force 8 Jan 65
APPROVAL Carl March 29 JAN 65
APPROVAL
NASA APPROVAL 2/4/65
MIT APPROVAL
MIT APPROVAL W Kupfer 2 Feb 65

MANNED SPACECRAFT CENTER
HOUSTON, TEXAS

HOUSING, RELAY TRAY
AGC DSKY, MAIN

CODE IDENT NO. — SIZE J NASA DRAWING NO. 1004672
SCALE 1/1 WT SHEET 1 OF 1

REVISIONS 15666			
SYM	DESCRIPTION	DATE	APPROVAL

NOTICE — WHEN GOVERNMENT DRAWINGS, SPECIFICATIONS, OR OTHER DATA ARE USED FOR ANY PURPOSE OTHER THAN IN CONNECTION WITH A DEFINITELY RELATED GOVERNMENT PROCUREMENT OPERATION, THE UNITED STATES GOVERNMENT THEREBY INCURS NO RESPONSIBILITY NOR ANY OBLIGATION WHATSOEVER; AND THE FACT THAT THE GOVERNMENT MAY HAVE FORMULATED, FURNISHED, OR IN ANY WAY SUPPLIED THE SAID DRAWINGS, SPECIFICATIONS OR OTHER DATA IS NOT TO BE REGARDED BY IMPLICATION OR OTHERWISE AS IN ANY MANNER LICENSING THE HOLDER OR ANY OTHER PERSON OR CORPORATION, OR CONVEYING ANY RIGHTS OR PERMISSION TO MANUFACTURE, USE, OR SELL ANY PATENTED INVENTION THAT MAY IN ANY WAY BE RELATED THERETO.

WIRING LIST

LEG A				LEG B			
FROM	WIRE	TO	REMARKS	FROM	WIRE	TO	REMARKS
J1-123	1010416-20	J8-28	USE $^{.23}_{.20}$ LG OF 1006776-20 SEE DETAIL A	J1-102	1010416-20	J5-44	USE $^{.23}_{.20}$ LG OF 1006776-20 SEE DETAIL A
J1-124		J8-111		J1-103		J5-43	
J1-125		J8-127		J1-104		J5-64	
J1-126		J8-48		J1-107		J6-28	
J1-127		J8-126		J1-108		J6-111	
J1-128		J8-89		J1-109		J6-127	
J1-129		J8-88		J1-110		J6-48	
J1-130		J8-107		J1-111		J6-126	
J1-131		J8-23		J1-112		J6-89	
J1-132		J8-3		J1-113		J6-88	
J1-133		J8-1		J1-114		J6-107	
J1-134		J8-123		J1-115		J6-23	
J1-135		J8-87		J1-116		J6-3	
J1-136		J8-22		J1-117		J6-1	
J1-137		J8-85		J1-118		J6-123	
				J1-119		J6-87	
				J1-120		J6-22	
				J1-121		J6-85	

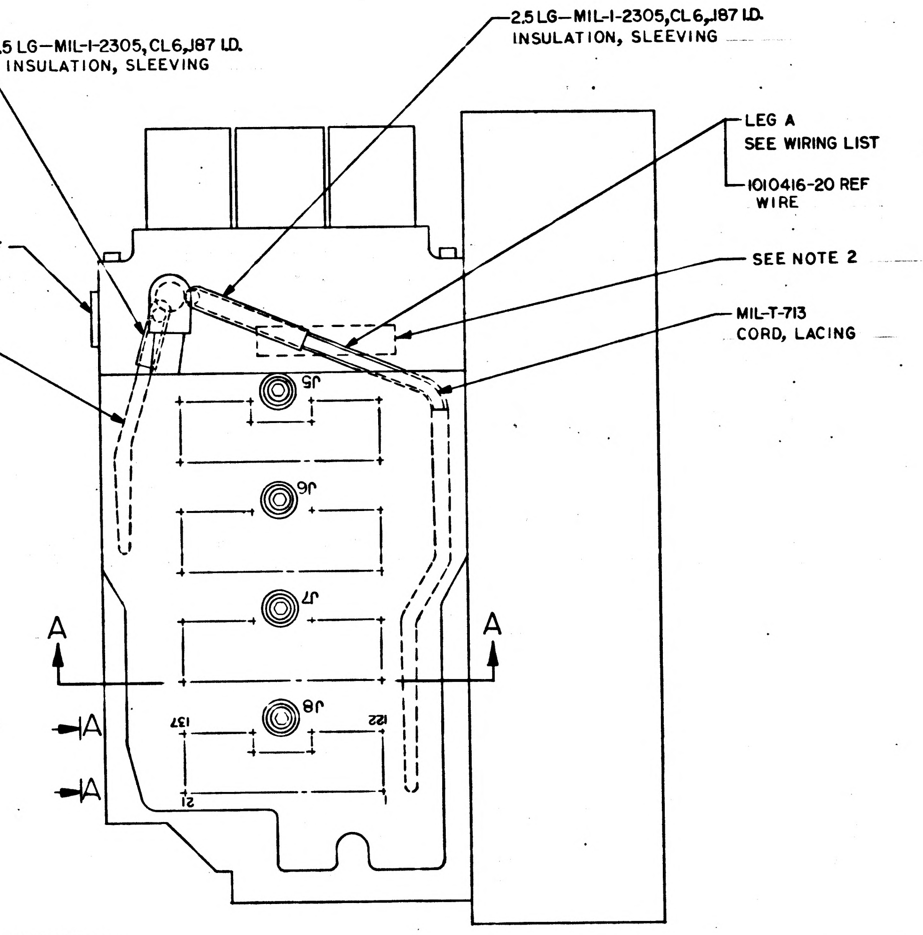
1.5 LG—MIL-I-2305, CL6, .187 I.D. INSULATION, SLEEVING
2.5 LG—MIL-I-2305, CL6, .187 I.D. INSULATION, SLEEVING
LEG A SEE WIRING LIST
1010416-20 REF WIRE
SEE NOTE 2
MIL-T-713 CORD, LACING
J1 REF
LEG B SEE WIRING LIST
J5
J6
J7
J8
A
A
A
A
137
122
121

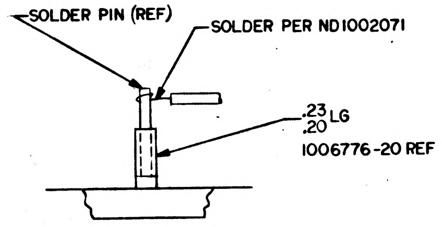
SOLDER PIN (REF)
SOLDER PER ND1002071
.23 .20 LG
1006776-20 REF

DETAIL A
TYP 33 PLACES

NOTES
1. MAKE FROM 1003459 MD 2
2. SECURE HARNESS IN INDICATED AREA BY STAKING PER ND1002004
3. REF RIB 0104024
4. RE-IDENTIFY WITH PART NO. 1003495-011 IN ACCORDANCE WITH RIB 0104024
5. INTERPRET DRAWING IN ACCORDANCE WITH STANDARDS PRESCRIBED BY MIL-D-70327
6. ENCAPSULATE INDICATED AREA PER ND1002217

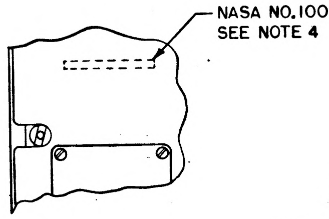
NASA NO. 1003495-011
SEE NOTE 4

VIEW A-A

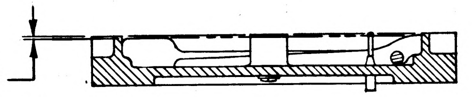
.000
.005
SEE NOTE 6

SECTION A-A

PART NO. 1003495-011

QTY REQD	PART OR IDENTIFYING NO.	NOMENCLATURE OR DESCRIPTION	FIND NO.
LIST OF MATERIALS			

NEXT ASSY	USED ON
APPLICATION	

UNLESS OTHERWISE SPECIFIED
DIMENSIONS ARE IN INCHES
TOLERANCES ON
FRACTIONS ± DECIMALS ± ANGLES ±
DO NOT SCALE THIS DRAWING
MATERIAL
HEAT TREATMENT
FINAL FINISH

MIT INSTRUMENTATION LAB
CAMBRIDGE, MASS.
DWG. NO. CONTRACT
DRAWN L.C. Clifton DATE 15 JAN 65
CHECKED B. Smith 20 Jan 65
APPROVAL F. Van Banth 20 Jan 65
APPROVAL Eldon C Hall 22 Jan 65
NASA APPROVAL [illegible]
MIT APPROVAL W Kupfer 22 Jan 65

MANNED SPACECRAFT CENTER
HOUSTON, TEXAS

INSTRUCTION DRAWING
FOR RIB NO. 0104024
(AGC DSKY MAIN SYS 6)

CODE IDENT NO. SIZE D NASA DRAWING NO. 1004687
SCALE NONE WT SHEET 1 OF 1

MASTER

SYM	DESCRIPTION	DATE	APPROVAL
A	REVISED PER TDRR 1177	1/11/64	

REVISIONS 10730

1004701 A

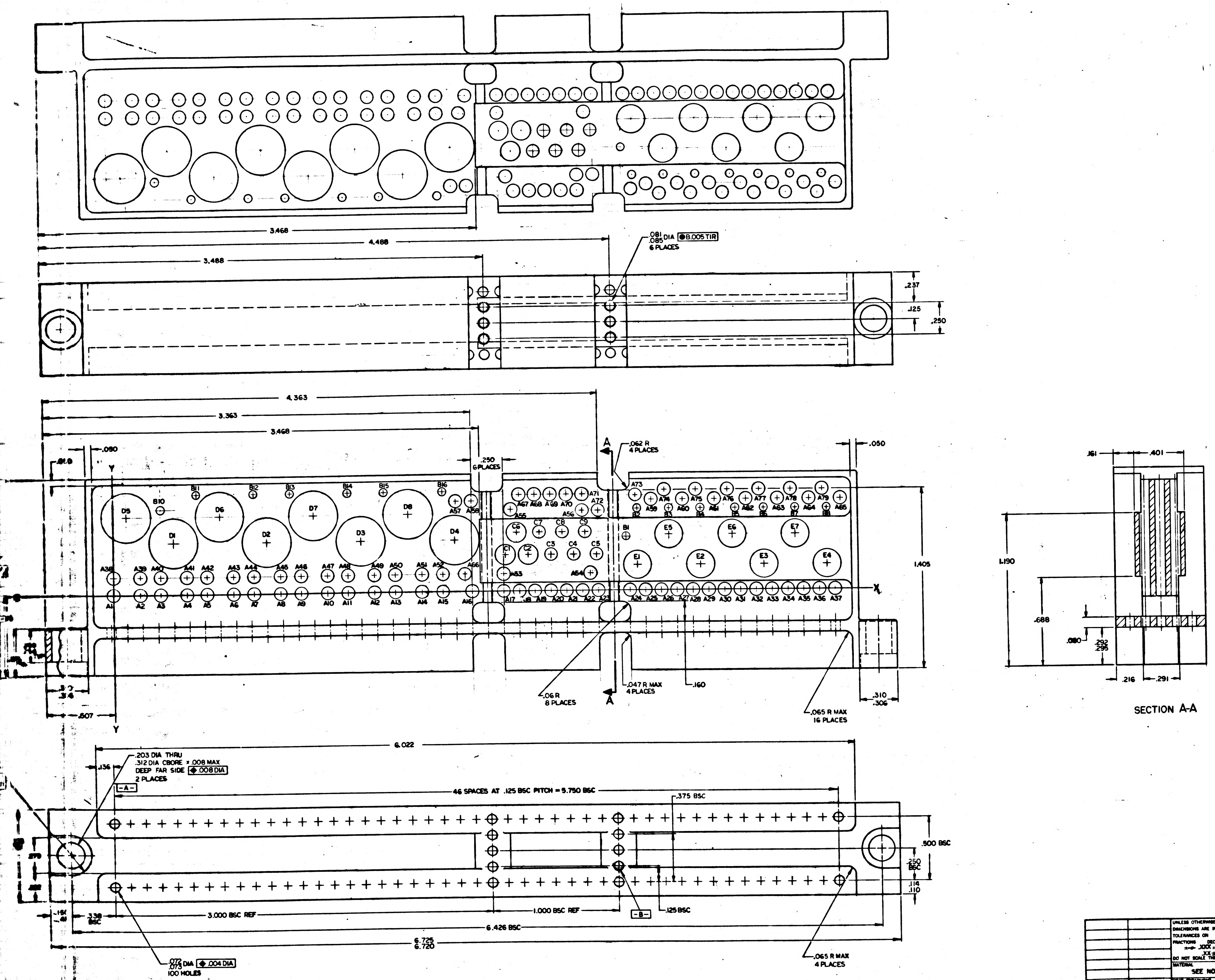

3.468
4.488
3.488
.081 / .085 DIA ⊕ B .005 TIR 6 PLACES
.237
.125
.250
4.363
3.363
3.468
.090
.250 6 PLACES
.062 R 4 PLACES
.050
1.405
.06 R 8 PLACES
.047 R MAX 4 PLACES
.160
.310 / .306
.065 R MAX 16 PLACES
.607
.161
.401
1.190
.688
.080
.292 / .295
.216
.291
6.022
.203 DIA THRU .312 DIA CBORE ± .008 MAX DEEP FAR SIDE ⊕ .008 DIA 2 PLACES
-A-
.136
46 SPACES AT .125 BSC PITCH = 5.750 BSC
.375 BSC
.500 BSC
.250 BSC
.114 / .110
3.000 BSC REF
1.000 BSC REF
-B-
.125 BSC
.338 BSC
6.426 BSC
6.725 / 6.720
.072 / .073 DIA ⊕ .004 DIA 100 HOLES
.065 R MAX 4 PLACES
X
Y
A

SECTION A-A

QTY REQD	PART OR IDENTIFYING NO.	NOMENCLATURE OR DESCRIPTION	FIND NO.

LIST OF MATERIALS

UNLESS OTHERWISE SPECIFIED DIMENSIONS ARE IN INCHES
TOLERANCES ON
FRACTIONS ± — DECIMALS .XXX ± .005 .XX ± .010 ANGLES ± —
DO NOT SCALE THIS DRAWING

MATERIAL SEE NOTE 2

HEAT TREATMENT —

FINAL FINISH SEE NOTE 6

NEXT ASSY	USED ON
1003712	

APPLICATION

MIT INSTRUMENTATION LAB
CAMBRIDGE, MASS.

DRAWN DATE 6-5-64
CHECKED 29 JAN 64
APPROVAL
APPROVAL 30 June 64
NASA APPROVAL
MIT APPROVAL

MANNED SPACECRAFT CENTER
HOUSTON, TEXAS

HEADER HOUSING
INTERFACE MODULE
A19 OR A39

CODE IDENT NO. — SIZE J NASA DRAWING NO. 1004701

SCALE 4/1 WT SHEET 1 OF 1

MASTER

1004701 A

NOTICE - WHEN GOVERNMENT DRAWINGS, SPECIFICATIONS, OR OTHER DATA ARE USED FOR ANY PURPOSE OTHER THAN IN CONNECTION WITH A DEFINITELY RELATED GOVERNMENT PROCUREMENT OPERATION, THE UNITED STATES GOVERNMENT THEREBY INCURS NO RESPONSIBILITY NOR ANY OBLIGATION WHATSOEVER; AND THE FACT THAT THE GOVERNMENT MAY HAVE FORMULATED, FURNISHED, OR IN ANY WAY SUPPLIED THE SAID DRAWINGS, SPECIFICATIONS, OR OTHER DATA IS NOT TO BE REGARDED BY IMPLICATION OR OTHERWISE AS IN ANY MANNER LICENSING THE HOLDER OR ANY OTHER PERSON OR CORPORATION, OR CONVEYING ANY RIGHTS OR PERMISSION TO MANUFACTURE, USE, OR SELL ANY PATENTED INVENTION THAT MAY IN ANY WAY BE RELATED THERETO.

HOLE IDENT	X DIM.	Y DIM.	HOLE DIA	QTY
A1	.000	.000	.100 .104	79
A2	.210			
A3	.374			
A4	.584			
A5	.748			
A6	.960			
A7	1.125			
A8	1.335			
A9	1.500			
A10	1.710			
A11	1.875			
A12	2.085			
A13	2.250			
A14	2.460			
A15	2.625			
A16	2.855			
A17	3.105			
A18	3.230			
A19	3.355			
A20	3.480			
A21	3.605			
A22	3.730			
A23	3.855			
A24	4.105			
A25	4.230			
A26	4.355			
A27	4.480			
A28	4.605			
A29	4.730			
A30	4.855			
A31	4.980			
A32	5.105			
A33	5.230			
A34	5.355			
A35	5.480			
A36	5.605			
A37	5.730			
A38	.000	.136		
A39	.210			
A40	.374			
A41	.584			
A42	.748			
A43	.960			
A44	1.125			
A45	1.335			
A46	1.500			
A47	1.710			
A48	1.875			
A49	2.085			
A50	2.250			
A51	2.460			
A52	2.625			
A53	3.105	.129		
A54	3.792	.136		
A55	3.167	.630		
A56	3.730	.630		
A57	2.730	.710		
A58	2.855			
A59	4.277			
A60	4.527			
A61	4.777			
A62	5.027			
A63	5.277			
A64	5.527			
A65	5.777			
A66	2.800	.136		
A67	3.230	.755		
A68	3.355			
A69	3.480			
A70	3.605			
A71	3.730			
A72	3.855	.630		
A73	4.157	.743		
A74	4.382	.785		
A75	4.632			
A76	4.882			
A77	5.132			
A78	5.382			
A79	5.632			

HOLE IDENT	X DIM.	Y DIM.	HOLE DIA	QTY
B1	4.081	.420	.058 .062	15
B2	4.167	.640		
B3	4.417			
B4	4.667			
B5	4.917			
B6	5.167			
B7	5.417			
B8	5.667			
B10	.375	.670		
B11	.665	.785		
B12	1.125			
B13	1.415			
B14	1.875			
B15	2.165			
B16	2.625			
C1	3.124	.285		
C2	3.302			
C3	3.480		.092 .096	3
C4	3.658			
C5	3.836			
C6	3.210	.460	.153/.157	1
C7	3.390		.092 .096	3
C8	3.570			
C9	3.750			
D1	.480	.405	.384 .391	8
D2	1.230			
D3	1.980			
D4	2.720			
D5	.105	.610		
D6	.855			
D7	1.605			
D8	2.355			
E1	4.167	.200	.218 .222	7
E2	4.667			
E3	5.167			
E4	5.667			
E5	4.417	.435		
E6	4.917			
E7	5.417			

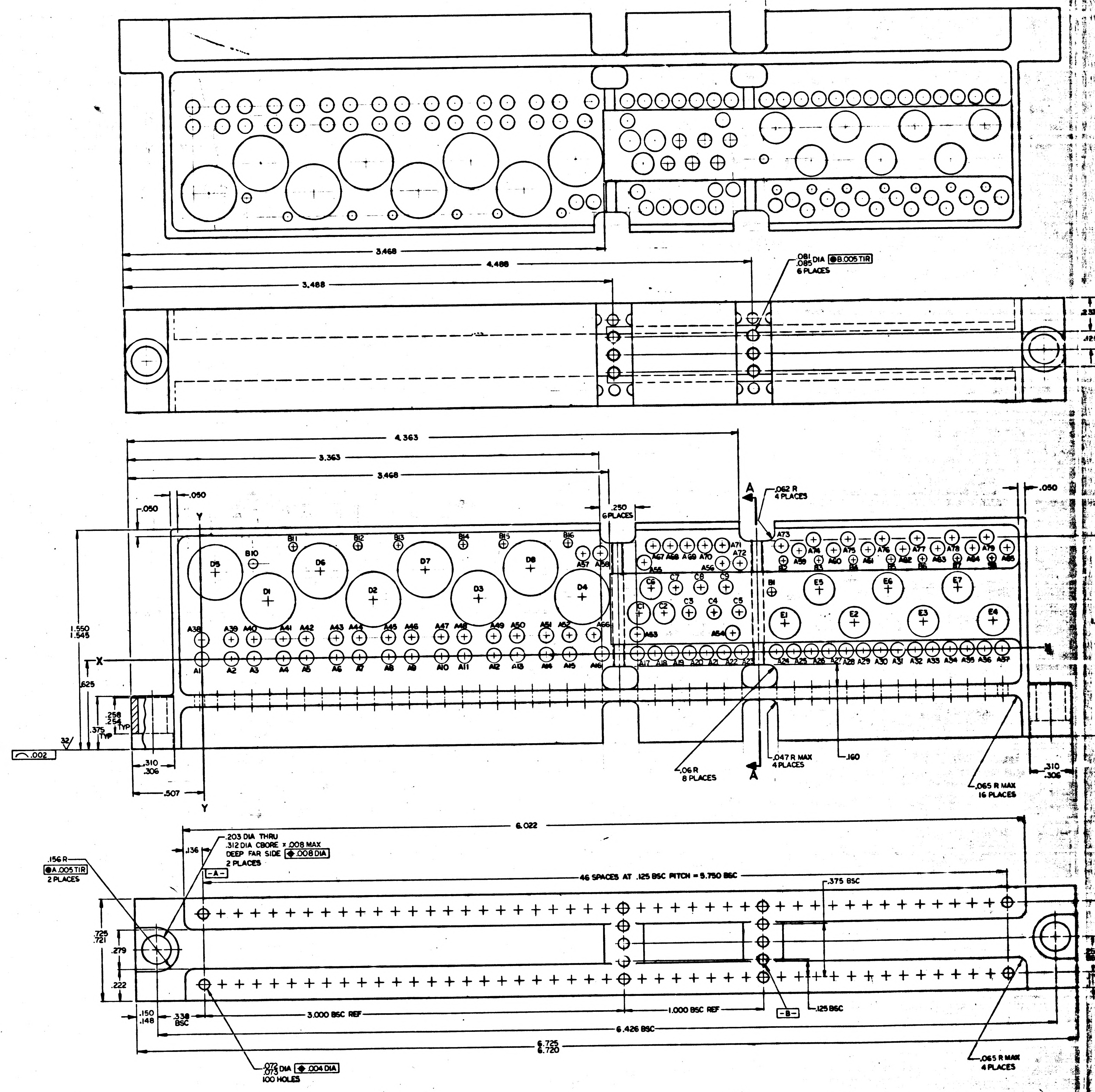
3.468
4.488
3.488
.081 .085 DIA ⊕ B .005 TIR
6 PLACES
.237
.125
4.363
3.363
3.468
.250
6 PLACES
A
.062 R
4 PLACES
.050
.050
.050
Y
X
1.550 1.545
1.405
.625
.258 .254 TYP
.375 TYP
32
.002
.310 .306
.507
Y
.06 R
8 PLACES
.047 R MAX
4 PLACES
.160
.065 R MAX
16 PLACES
.310 .306
6.022
.203 DIA THRU
.312 DIA CBORE × .008 MAX
DEEP FAR SIDE ⊕ .008 DIA
2 PLACES
.136
-A-
.156 R
⊕ A .005 TIR
2 PLACES
46 SPACES AT .125 BSC PITCH = 5.750 BSC
.375 BSC
.725 .721
.279
.222
.580
.250 BSC
.150 .148
.338 BSC
3.000 BSC REF
1.000 BSC REF
-B-
.125 BSC
6.426 BSC
6.725 6.720
.072 .073 DIA ⊕ .004 DIA
100 HOLES
.065 R MAX
4 PLACES
D1 D2 D3 D4 D5 D6 D7 D8
B1 B10 B11 B12 B13 B14 B15 B16
C1 C2 C3 C4 C5 C6 C7 C8 C9
E1 E2 E3 E4 E5 E6 E7
A1 A2 A3 A4 A5 A6 A7 A8 A9 A10 A11 A12 A13 A14 A15 A16 A17 A18 A19 A20 A21 A22 A23 A24 A25 A26 A27 A28 A29 A30 A31 A32 A33 A34 A35 A36 A37
A38 A39 A40 A41 A42 A43 A44 A45 A46 A47 A48 A49 A50 A51 A52 A53 A54 A55 A56 A57 A58 A59 A60 A61 A62 A63 A64 A65 A66 A67 A68 A69 A70 A71 A72 A73 A74 A75 A76 A77 A78 A79

NOTES
1. INTERPRET DRAWING IN ACCORDANCE WITH STANDARDS PRESCRIBED BY MIL-D-70327
2. MATL: MAG ALLOY ZK60A-T5 PER QQ-M-31
3. 125√ ALL OVER UNLESS OTHERWISE SPECIFIED
4. ALL FILLETS & RADII TO BE .005/.020 UNLESS OTHERWISE SPECIFIED
5. REMOVE BURRS & BREAK SHARP EDGES .005/.015
6. ANODIZE PER MIL-M-45202, TYPE I, CLASS C
7. IDENTIFY PER ND1002019

1004701 A

B	1004701

SYM	DESCRIPTION	DATE	APPROVAL
REVISIONS 10730			
A	REVISED PER TDRR 11778	4/19/64	
B	REVISED PER TDRR 12783	8/24/64	W.K.

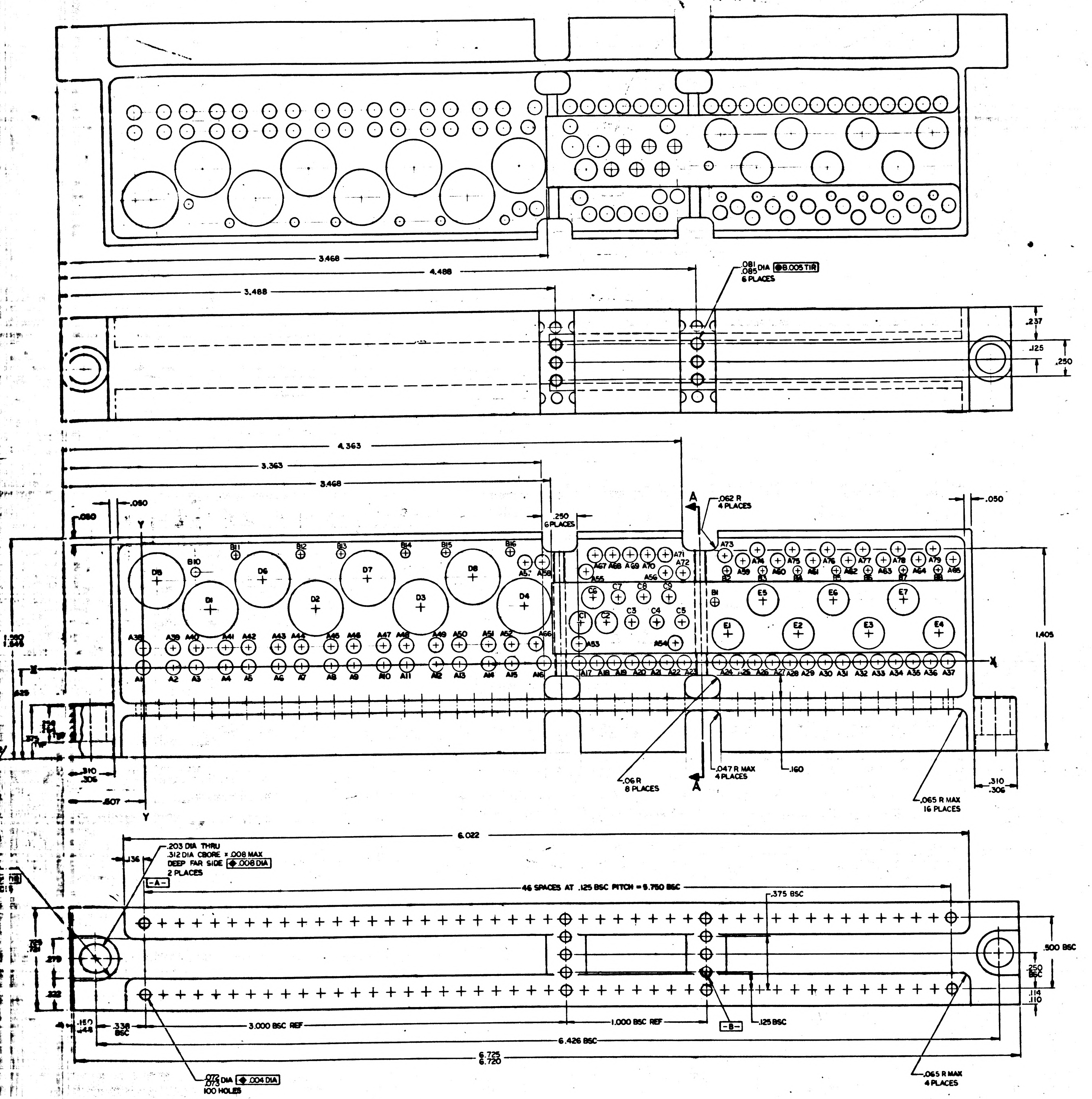

3.468
4.488
3.488
.081 / .085 DIA ⊕ .005 TIR
6 PLACES
.237
.125
.250
4.363
3.363
3.468
.060
.080
.250
6 PLACES
.062 R
4 PLACES
A
.050
1.405
1.380
1.345
X
Y
.06 R
8 PLACES
.047 R MAX
4 PLACES
.160
.065 R MAX
16 PLACES
.310
.306
.607
6.022
.203 DIA THRU
.312 DIA CBORE x .008 MAX
DEEP FAR SIDE ⊕ .008 DIA
2 PLACES
-A-
.136
46 SPACES AT .125 BSC PITCH = 5.750 BSC
.375 BSC
.500 BSC
.250 BSC
.114
.110
.338 BSC
3.000 BSC REF
1.000 BSC REF
-B-
.125 BSC
6.426 BSC
6.725
6.720
.072 / .073 DIA ⊕ .004 DIA
100 HOLES
.065 R MAX
4 PLACES

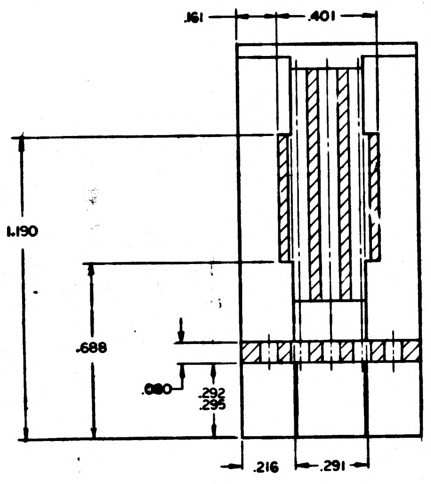

.161
.401
1.190
.688
.080
.292
.295
.216
.291

SECTION A-A

1004701	B

1003712	
NEXT ASSY	USED ON
APPLICATION	

UNLESS OTHERWISE SPECIFIED DIMENSIONS ARE IN INCHES
TOLERANCES ON
FRACTIONS ± — DECIMALS .XXX ± .005 .XX ± .010 ANGLES ± —
DO NOT SCALE THIS DRAWING
MATERIAL SEE NOTE 2
HEAT TREATMENT —
FINAL FINISH SEE NOTE 6

QTY REQD	PART OR IDENTIFYING NO.	NOMENCLATURE OR DESCRIPTION	FIND NO.

LIST OF MATERIALS

MIT
INSTRUMENTATION LAB
CAMBRIDGE, MASS

MANNED SPACECRAFT CENTER
HOUSTON, TEXAS

DRAWN DATE
CHECKED 29 JUN 64
APPROVAL
APPROVAL 29 June 64
NASA APPROVAL
MIT APPROVAL

HEADER HOUSING
INTERFACE MODULE
A19 OR A39

CODE IDENT NO. — SIZE J NASA DRAWING NO. 1004701
SCALE 4/1 WT SHEET 1 OF 1

MASTER

1004701 B

HOLE IDENT	X DIM.	Y DIM.	HOLE DIA	QTY
A1	.000	.000	.100 .104	79
A2	.210			
A3	.374			
A4	.584			
A5	.748			
A6	.960			
A7	1.125			
A8	1.335			
A9	1.500			
A10	1.710			
A11	1.875			
A12	2.085			
A13	2.250			
A14	2.460			
A15	2.625			
A16	2.855			
A17	3.105			
A18	3.230			
A19	3.355			
A20	3.480			
A21	3.605			
A22	3.730			
A23	3.855			
A24	4.105			
A25	4.230			
A26	4.355			
A27	4.480			
A28	4.605			
A29	4.730			
A30	4.855			
A31	4.980			
A32	5.105			
A33	5.230			
A34	5.355			
A35	5.480			
A36	5.605			
A37	5.730			
A38	.000	.136		
A39	.210			
A40	.374			
A41	.584			
A42	.748			
A43	.960			
A44	1.125			
A45	1.335			
A46	1.500			
A47	1.710			
A48	1.875			
A49	2.085			
A50	2.250			
A51	2.460			
A52	2.625			
A53	3.105	.129		
A54	3.792	.136		
A55	3.167	.630		
A56	3.730	.630		
A57	2.730	.710		
A58	2.855			
A59	4.277			
A60	4.527			
A61	4.777			
A62	5.027			
A63	5.277			
A64	5.527			
A65	5.777			
A66	2.800	.136		
A67	3.230	.755		
A68	3.355			
A69	3.480			
A70	3.605			
A71	3.730			
A72	3.855	.630		
A73	4.157	.743		
A74	4.382	.785		
A75	4.632			
A76	4.882			
A77	5.132			
A78	5.382			
A79	5.632			

HOLE IDENT	X DIM.	Y DIM.	HOLE DIA	QTY
B1	4.081	.420	.058 .062	15
B2	4.167	.640		
B3	4.417			
B4	4.667			
B5	4.917			
B6	5.167			
B7	5.417			
B8	5.667			
B10	.375	.670		
B11	.665	.785		
B12	1.125			
B13	1.415			
B14	1.875			
B15	2.165			
B16	2.625			
C1	3.124	.285	.153/.157	2
C2	3.302		.092 .096	3
C3	3.480			
C4	3.658			
C5	3.836			
C6	3.210	.460	.153/.157	1
C7	3.390		.092 .096	3
C8	3.570			
C9	3.750			
D1	.480	.405	.384 .391	8
D2	1.230			
D3	1.980			
D4	2.720			
D5	.105	.610		
D6	.855			
D7	1.605			
D8	2.355			
E1	4.167	.200	.218 .222	7
E2	4.667			
E3	5.167			
E4	5.667			
E5	4.417	.435		
E6	4.917			
E7	5.417			

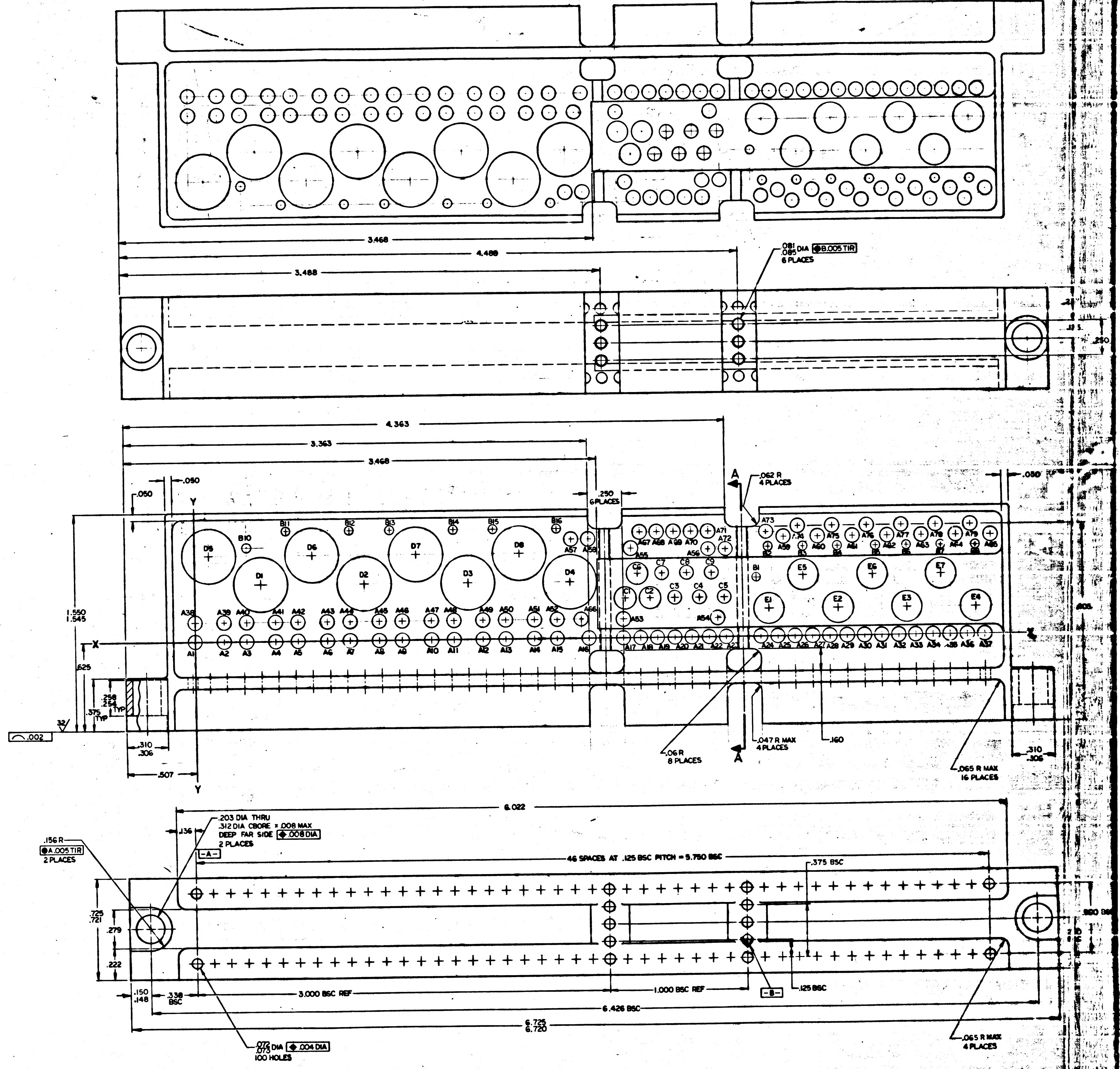

3.468
4.488
3.488
.081 .085 DIA B .005 TIR
6 PLACES
.250
4.363
3.363
3.468
.050
.080
.050
.250 6 PLACES
A
.062 R 4 PLACES
1.550 1.545
.625
.375 TYP
.258 .254 TYP
.002
.310 .306
.507
X
Y
.06 R 8 PLACES
.047 R MAX 4 PLACES
.160
.065 R MAX 16 PLACES
6.022
.203 DIA THRU
.312 DIA CBORE × .008 MAX DEEP FAR SIDE .008 DIA
2 PLACES
.136
-A-
.156 R
A .005 TIR
2 PLACES
46 SPACES AT .125 BSC PITCH = 5.750 BSC
.375 BSC
.725 .721
.279
.222
.150 .148
.338 BSC
3.000 BSC REF
1.000 BSC REF
-B-
.125 BSC
6.426 BSC
6.725 6.720
.072 .075 DIA .004 DIA
100 HOLES
.065 R MAX 4 PLACES

NOTES
1. INTERPRET DRAWING IN ACCORDANCE WITH STANDARDS PRESCRIBED BY MIL-D-70327
2. MATL: MAG ALLOY ZK60A-T5 PER QQ-M-31
3. 125/ ALL OVER UNLESS OTHERWISE SPECIFIED
4. ALL FILLETS & RADII TO BE .005/.020 UNLESS OTHERWISE SPECIFIED
5. REMOVE BURRS & BREAK SHARP EDGES .005/.015
6. ANODIZE PER MIL-M-45202, TYPE I, CLASS C
7. IDENTIFY PER ND1002019

1004701 B

1004701

REVISIONS 10730

SYM	DESCRIPTION	DATE	APPROVAL

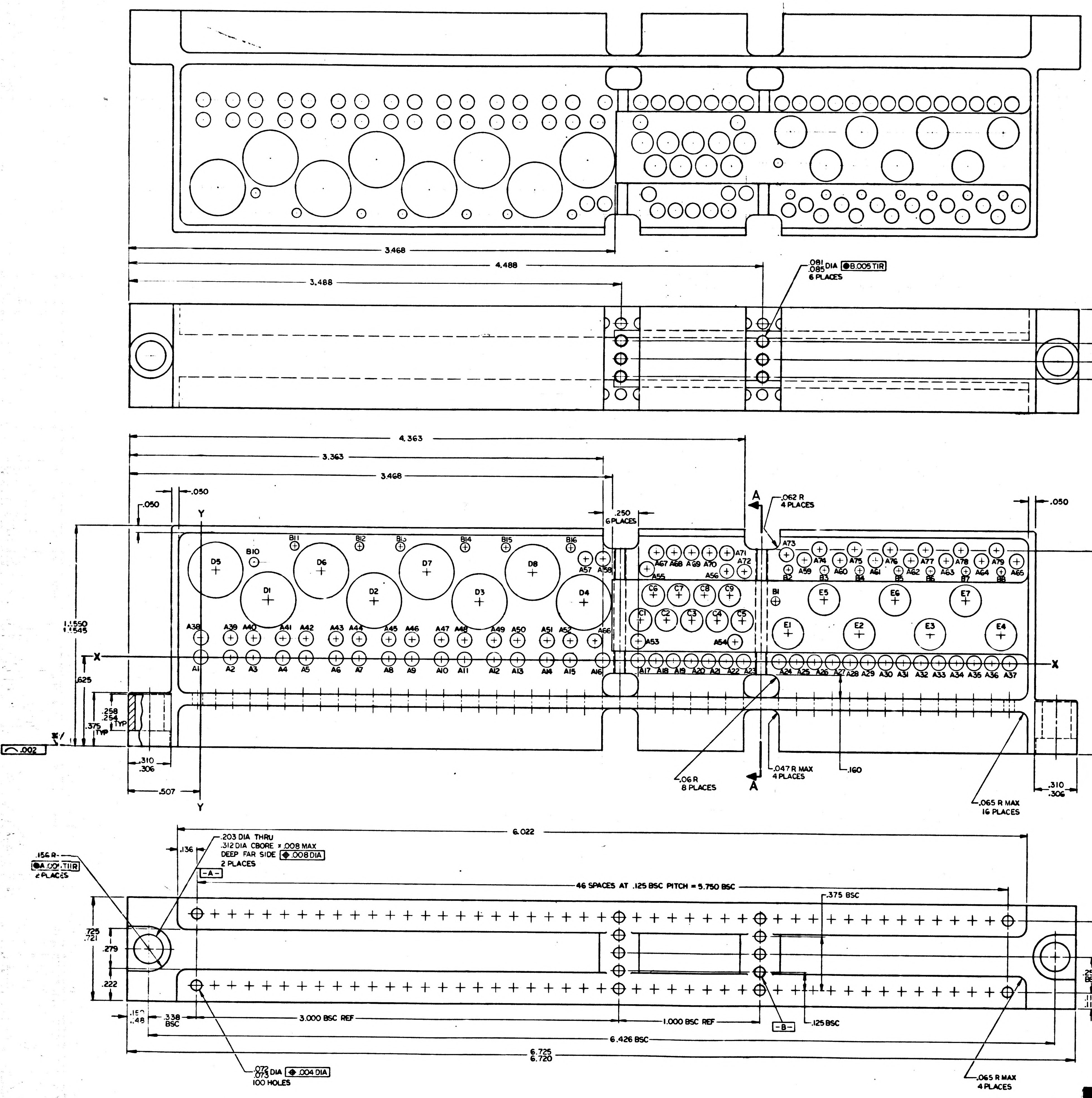

3.468
4.488
3.488
.081 .085 DIA ⊚B.005 TIR 6 PLACES
.237
.125
.250
4.363
3.363
3.468
.050
.050
.050
.250 6 PLACES
A
.062 R 4 PLACES
Y
X
1.550 1.545
.625
1.405
.258 .254 TYP
.375 TYP
.002
.310 .306
.507
.06 R 8 PLACES
.047 R MAX 4 PLACES
.160
.065 R MAX 16 PLACES
.310 .306
D1 D2 D3 D4 D5 D6 D7 D8
E1 E2 E3 E4 E5 E6 E7
C1 C2 C3 C4 C5 C6 C7 C8 C9
B1 B10 B11 B12 B13 B14 B15 B16
A1 A2 A3 A4 A5 A6 A7 A8 A9 A10 A11 A12 A13 A14 A15 A16 A17 A18 A19 A20 A21 A22 A23 A24 A25 A26 A27 A28 A29 A30 A31 A32 A33 A34 A35 A36 A37
A38 A39 A40 A41 A42 A43 A44 A45 A46 A47 A48 A49 A50 A51 A52 A53 A54 A55 A56 A57 A58 A59 A60 A61 A62 A63 A64 A65 A66 A67 A68 A69 A70 A71 A72 A73 A74 A75 A76 A77 A78 A79
6.022
.136
.203 DIA THRU
.312 DIA CBORE × .008 MAX DEEP FAR SIDE ⊕ .008 DIA
2 PLACES
-A-
.156 R ⊚A .004 TIR 2 PLACES
46 SPACES AT .125 BSC PITCH = 5.750 BSC
.375 BSC
.725 .721
.279
.222
.500 BSC
.250 BSC
.114 .110
.150 .148
.338 BSC
3.000 BSC REF
1.000 BSC REF
-B-
.125 BSC
6.426 BSC
6.725 6.720
.072 .073 DIA ⊕ .004 DIA 100 HOLES
.065 R MAX 4 PLACES

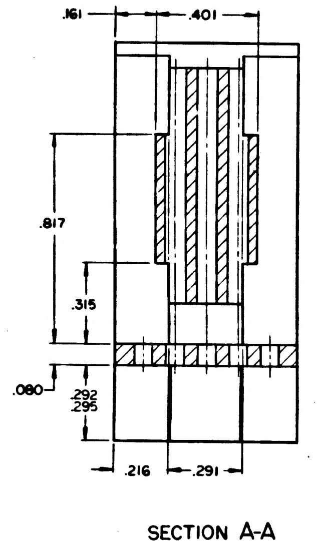

.161
.401
.817
.315
.080
.292 .295
.216
.291

SECTION A-A

1004701

QTY REQD	PART OR IDENTIFYING NO.	NOMENCLATURE OR DESCRIPTION	FIND NO

LIST OF MATERIALS

UNLESS OTHERWISE SPECIFIED DIMENSIONS ARE IN INCHES
TOLERANCES ON
FRACTIONS ± — DECIMALS .XXX ± .005 .XX ± .010 ANGLES ± —
DO NOT SCALE THIS DRAWING

MATERIAL
SEE NOTE 2

HEAT TREATMENT
—

FINAL FINISH
SEE NOTE 6

NEXT ASSY	USED ON
1003712	

APPLICATION

MIT
INSTRUMENTATION LAB
CAMBRIDGE, MASS

DRAWN C.A. Buster DATE 6-5-64
CHECKED 29 JUN 64
APPROVAL
APPROVAL 29 June 64
NASA APPROVAL
MIT APPROVAL

MANNED SPACECRAFT CENTER
HOUSTON, TEXAS

HEADER HOUSING
INTERFACE MODULE
A19 OR A39

CODE IDENT NO. —
SIZE J
NASA DRAWING NO. 1004701
SCALE 4/1
WT
SHEET 1 OF 1

1004701

2x

INCHES

NOTICE — WHEN GOVERNMENT DRAWINGS, SPECIFICATIONS, OR OTHER DATA ARE USED FOR ANY PURPOSE OTHER THAN IN CONNECTION WITH A DEFINITELY RELATED GOVERNMENT PROCUREMENT OPERATION, THE UNITED STATES GOVERNMENT THEREBY INCURS NO RESPONSIBILITY NOR ANY OBLIGATION WHATSOEVER; AND THE FACT THAT THE GOVERNMENT MAY HAVE FORMULATED, FURNISHED, OR IN ANY WAY SUPPLIED THE SAID DRAWINGS, SPECIFICATIONS, OR OTHER DATA IS NOT TO BE REGARDED BY IMPLICATION OR OTHERWISE AS IN ANY MANNER LICENSING THE HOLDER OR ANY OTHER PERSON OR CORPORATION, OR CONVEYING ANY RIGHTS OR PERMISSION TO MANUFACTURE, USE, OR SELL ANY PATENTED INVENTION THAT MAY IN ANY WAY BE RELATED THERETO.

HOLE IDENT	X DIM.	Y DIM	HOLE DIA	QTY
A1	.000	.000	.100 .104	79
A2	.210			
A3	.374			
A4	.584			
A5	.748			
A6	.960			
A7	1.125			
A8	1.335			
A9	1.500			
A10	1.710			
A11	1.875			
A12	2.085			
A13	2.250			
A14	2.460			
A15	2.625			
A16	2.855			
A17	3.105			
A18	3.230			
A19	3.355			
A20	3.480			
A21	3.605			
A22	3.730			
A23	3.855			
A24	4.105			
A25	4.230			
A26	4.355			
A27	4.480			
A28	4.605			
A29	4.730			
A30	4.855			
A31	4.980			
A32	5.105			
A33	5.230			
A34	5.355			
A35	5.480			
A36	5.605			
A37	5.730			
A38	.000	.136		
A39	.210			
A40	.374			
A41	.584			
A42	.748			
A43	.960			
A44	1.125			
A45	1.335			
A46	1.500			
A47	1.710			
A48	1.875			
A49	2.085			
A50	2.250			
A51	2.460			
A52	2.625			
A53	3.105	.129		
A54	3.792	.136		
A55	3.167	.640		
A56	3.730	.630		
A57	2.730	.710		
A58	2.855			
A59	4.277			
A60	4.527			
A61	4.777			
A62	5.027			
A63	5.277			
A64	5.527			
A65	5.777			
A66	2.800	.136		
A67	3.230	.755		
A68	3.355			
A69	3.480			
A70	3.605			
A71	3.730			
A72	3.855	.630		
A73	4.157	.743		
A74	4.382	.785		
A75	4.632			
A76	4.882			
A77	5.132			
A78	5.382			
A79	5.632			

HOLE IDENT	X DIM.	Y DIM.	HOLE DIA	QTY
B1	4.081	.420	.058 .062	16
B2	4.167	.640		
B3	4.417			
B4	4.667			
B5	4.917			
B6	5.167			
B7	5.417			
B8	5.667			
B10	.375	.670		
B11	.665	.785		
B12	1.125			
B13	1.415			
B14	1.875			
B15	2.165			
B16	2.625			
C1	3.124	.285	.153 .157	9
C2	3.302			
C3	3.480			
C4	3.658			
C5	3.836			
C6	3.210	.460		
C7	3.390			
C8	3.570			
C9	3.750			
D1	.480	.405	.384 .391	8
D2	1.230			
D3	1.980			
D4	2.720			
D5	.105	.610		
D6	.855			
D7	1.605			
D8	2.355			
E1	4.167	.200	.218 .222	7
E2	4.667			
E3	5.167			
E4	5.667			
E5	4.417	.435		
E6	4.917			
E7	5.417			

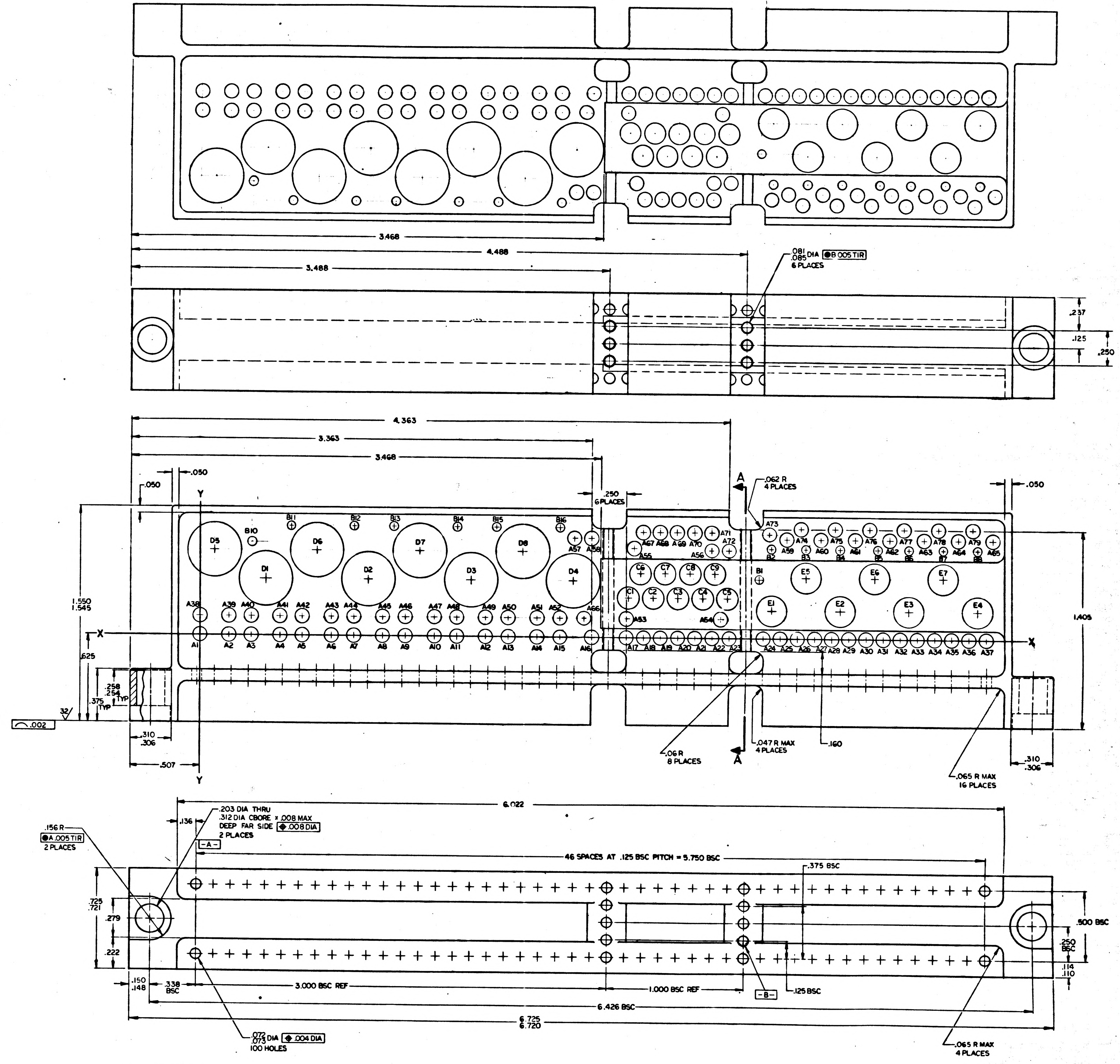
3.468
4.488
3.488
.081
.085 DIA B .005 TIR
6 PLACES
.237
.125
.250
4.363
3.363
3.468
.050
.050
Y
.250
6 PLACES
A
.062 R
4 PLACES
1.550
1.545
1.405
X
X
.625
.258
.254
TYP
.375
TYP
32
.002
.310
.306
.507
Y
.06 R
8 PLACES
.047 R MAX
4 PLACES
.160
A
.065 R MAX
16 PLACES
.310
.306
6.022
.203 DIA THRU
.312 DIA CBORE × .008 MAX
DEEP FAR SIDE .008 DIA
2 PLACES
.136
-A-
.156 R
A .005 TIR
2 PLACES
46 SPACES AT .125 BSC PITCH = 5.750 BSC
.375 BSC
.725
.721
.279
.222
.500 BSC
.250 BSC
.114
.110
.150
.148
.338 BSC
3.000 BSC REF
1.000 BSC REF
-B-
.125 BSC
6.426 BSC
6.725
6.720
.072
.073 DIA .004 DIA
100 HOLES
.065 R MAX
4 PLACES

NOTES
1. INTERPRET DRAWING IN ACCORDANCE WITH STANDARDS PRESCRIBED BY MIL-D-70327
2. MATL: MAG ALLOY ZK60A-T5 PER QQ-M-31
3. $\sqrt{125}$ ALL OVER UNLESS OTHERWISE SPECIFIED
4. ALL FILLETS & RADII TO BE .005/.020 UNLESS OTHERWISE SPECIFIED
5. REMOVE BURRS & BREAK SHARP EDGES .005/.015
6. ANODIZE PER MIL-M-45202, TYPE I, CLASS C
7. IDENTIFY PER ND 002019

1004701

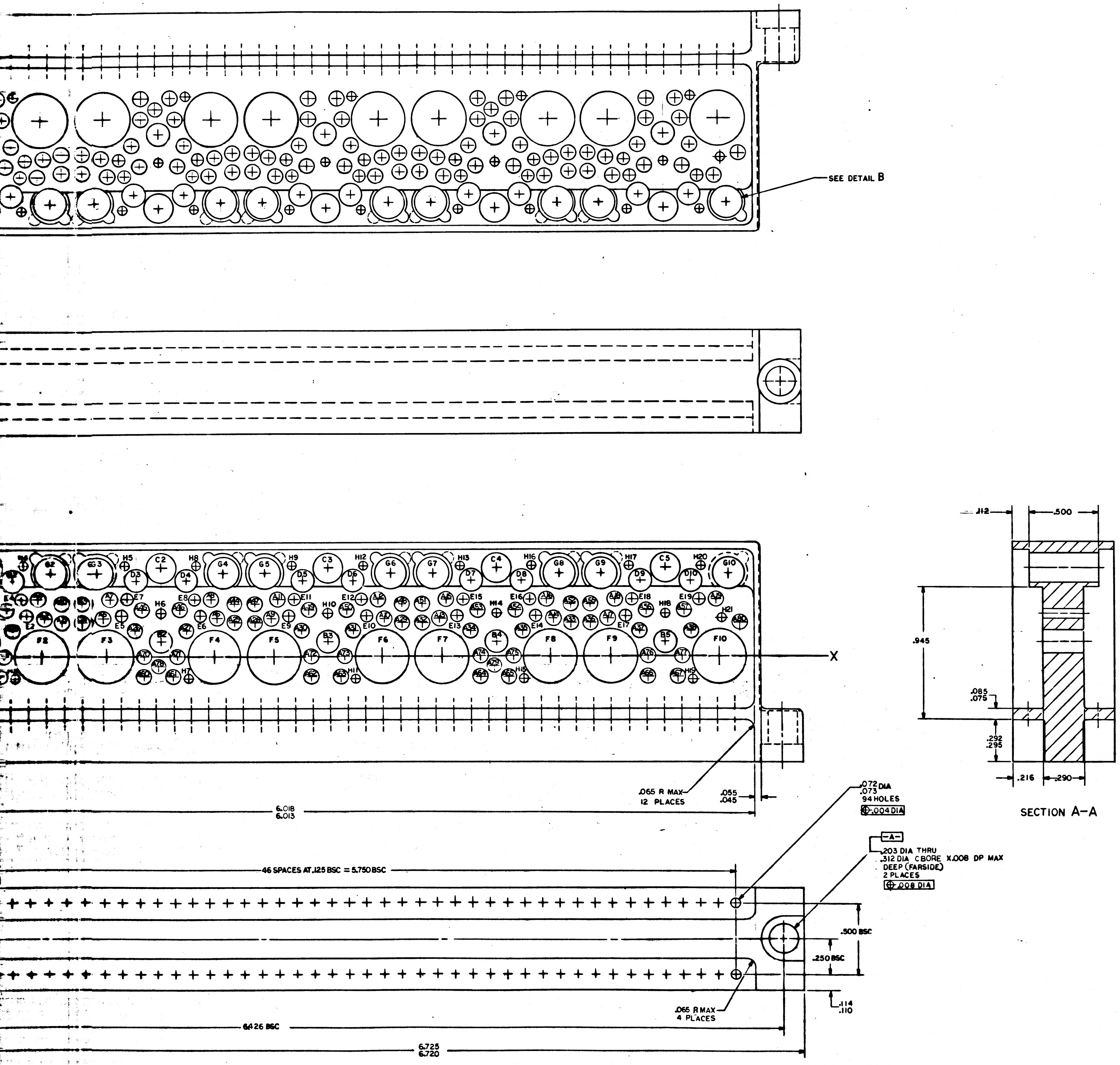
SEE DETAIL B
H5
C2
H8
G4
G5
H9
C3
H12
G6
G7
H13
C4
H16
G8
G9
H17
C5
H20
G10
E7
H6
E8
E11
H10
E12
E15
H14
E16
E18
H18
E19
H21
E5
E6
E9
E10
E13
E14
E17
F2
F3
F4
F5
F6
F7
F8
F9
F10
X
.065 R MAX
12 PLACES
.055
.045
6.018
6.013
.072 DIA
.073
94 HOLES
⊕ .004 DIA
-A-
.203 DIA THRU
.312 DIA CBORE X.008 DP MAX
DEEP (FARSIDE)
2 PLACES
⊕ .008 DIA
46 SPACES AT .125 BSC = 5.750 BSC
.500 BSC
.250 BSC
.114
.110
.065 R MAX
4 PLACES
6.426 BSC
6.725
6.720
.112
.500
.945
.085
.075
.292
.295
.216
.290
SECTION A-A

QTY REQD	PART OR IDENTIFYING NO.	NOMENCLATURE OR DESCRIPTION		FIND NO.
LIST OF MATERIALS				

1003711	
NEXT ASSY	USED ON
APPLICATION	

UNLESS OTHERWISE SPECIFIED
DIMENSIONS ARE IN INCHES
TOLERANCES ON
FRACTIONS ± — DECIMALS .XXX ± .005 .XX .02 ANGLES ± 1°
DO NOT SCALE THIS DRAWING
MATERIAL SEE NOTE 2
HEAT TREATMENT —
FINAL FINISH SEE NOTE 6

MIT
INSTRUMENTATION LAB
CAMBRIDGE, MASS.
DRAWN
CHECKED
APPROVAL
APPROVAL
NASA APPROVAL
MIT APPROVAL

MANNED SPACECRAFT CENTER
HOUSTON, TEXAS

HEADER HOUSING
INTERFACE MODULE
A20 — A40

CODE IDENT NO. —
SIZE J
NASA DRAWING NO. 1004702
SCALE 4/1
WT —
SHEET 1 OF 1

1004702

1004702

F-12 MASTER

D
C
B
A
4
3
2

HOLE IDENT	X-DIM	Y-DIM	HOLE DIA	QTY
A1	-.405	.270	.100 .104	80
A2	.405	.270		
A3	-.360	.400		
A4	.360	.400		
A5	.795	.270		
A6	1.605	.270		
A7	.840	.400		
A8	1.560	.400		
A9	1.995	.270		
A10	2.805	.270		
A11	2.040	.400		
A12	2.760	.400		
A13	3.195	.270		
A14	4.005	.270		
A15	3.240	.400		
A16	3.960	.400		
A17	4.395	.270		
A18	4.440	.400		
A19	5.160	.400		
A20	-.530	.240		
A21	.530	.240		
A22	-.185	.185		
A23	.185	.185		
A24	.670	.240		
A25	1.730	.240		
A26	1.015	.185		
A27	.385	.185		
A28	1.870	.240		
A29	2.930	.240		
A30	2.215	.185		
A31	2.585	.185		
A32	3.070	.240		
A33	4.130	.240		
A34	3.415	.185		
A35	3.785	.185		
A36	4.270	.240		
A37	4.615	.185		
A38	4.985	.185		
A39	-.530	.370		
A40	.530	.370		
A41	-.135	.330		
A42	.135	.330		
A43	.670	.370		
A44	1.730	.370		
A45	1.065	.330		
A46	1.335	.330		
A47	1.870	.370		
A48	2.930	.370		
A49	2.265	.330		
A50	2.535	.330		
A51	3.070	.370		
A52	4.130	.370		
A53	3.465	.330		
A54	3.735	.330		
A55	4.270	.370		
A56	4.665	.330		
A57	4.935	.330		
A58	-.120	-.140		
A59	.090	↑		
A60	1.080			
A61	1.290			
A62	2.280			
A63	2.490			
A64	3.480			
A65	3.690			
A66	4.680	↓		
A67	4.890	-.140		
A68	-.120	.000		
A69	.120	↑		
A70	1.080			
A71	1.320			
A72	2.280			
A73	2.520			
A74	3.480			
A75	3.720			
A76	4.680	↓		
A77	4.920	.000		
A78	1.185	-.070		
A79	3.585	-.070		
A80	5.330	.240		
B1	.000	.105	.168 .172	5
B2	1.200	↑		
B3	2.400			
B4	3.600	↓		
B5	4.800	.105		

HOLE IDENT	X-DIM	Y-DIM	HOLE DIA	QTY
C1	.000	.625	.203 .207	5
C2	1.200	↑		
C3	2.400			
C4	3.600	↓		
C5	4.800	.625		
D1	-.180	.530	.153 .157	10
D2	.180	↑		
D3	1.020			
D4	1.380			
D5	2.220			
D6	2.580			
D7	3.420			
D8	3.780			
D9	4.620	↓		
D10	4.980	.530		
E1	-.280	.285	.081 .085	19
E2	.280	.285		
E3	-.240	.400		
E4	.240	.400		
E5	.920	.285		
E6	1.480	.285		
E7	.960	.400		
E8	1.440	.400		
E9	2.120	.285		
E10	2.680	.285		
E11	2.160	.400		
E12	2.640	.400		
E13	3.320	.285		
E14	3.880	.285		
E15	3.360	.400		
E16	3.840	.400		
E17	4.520	.285		
E18	4.560	.400		
E19	5.040	.400		
F1	-.390	.000	.384 .391	10
F2	.390	↑		
F3	.810			
F4	1.590			
F5	2.010			
F6	2.790			
F7	3.210			
F8	3.990			
F9	4.410	↓		
F10	5.190	.000		
G1	-.450	.585	SEE DETAIL C	9
G2	.450	↑		
G3	.750			
G4	1.650			
G5	1.950			
G6	2.850			
G7	3.150			
G8	4.050			
G9	4.350	↓		
G10	5.250	.585	SEE DETAIL B	1
H1	-.255	.635	.058 .062	21
H2	.000	.305		
H3	.195	-.160		
H4	.255	.635		
H5	.945	.635		
H6	1.200	.305		
H7	1.395	-.160		
H8	1.455	.635		
H9	2.145	.635		
H10	2.400	.305		
H11	2.595	-.160		
H12	2.655	.635		
H13	3.345	.635		
H14	3.600	.305		
H15	3.795	-.160		
H16	3.855	.635		
H17	4.545	.635		
H18	4.800	.305		
H19	4.995	-.160		
H20	5.055	.635		
H21	5.205	.270		

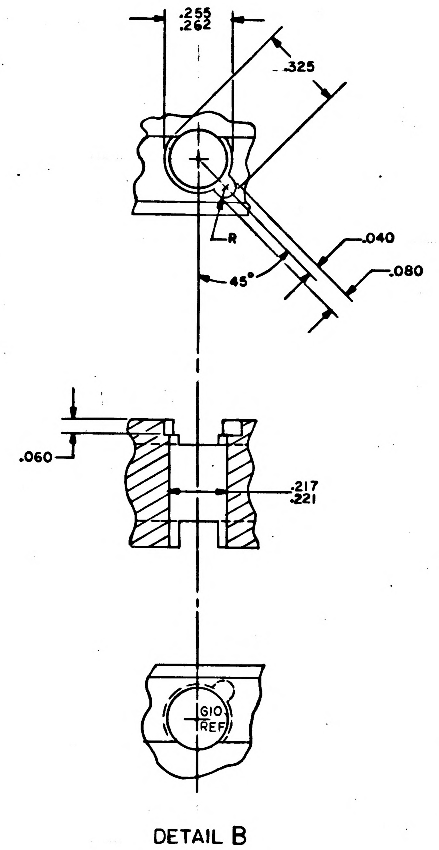
.255
.262
.325
R
.040
.080
45°
.060
.217
.221
G10
REF

DETAIL B
1 PLACE

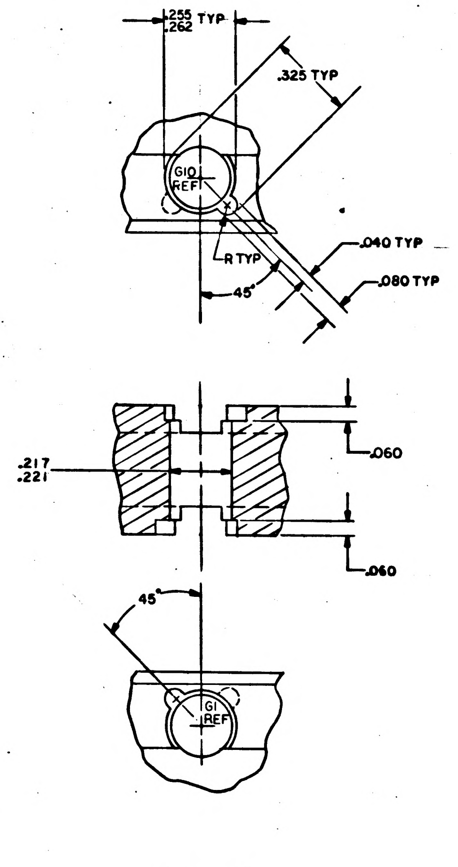
.255
.262 TYP
.325 TYP
G10
REF
R TYP
.040 TYP
.080 TYP
45°
.217
.221
.060
.060
45°
G1
REF

DETAIL C
9 PLACES

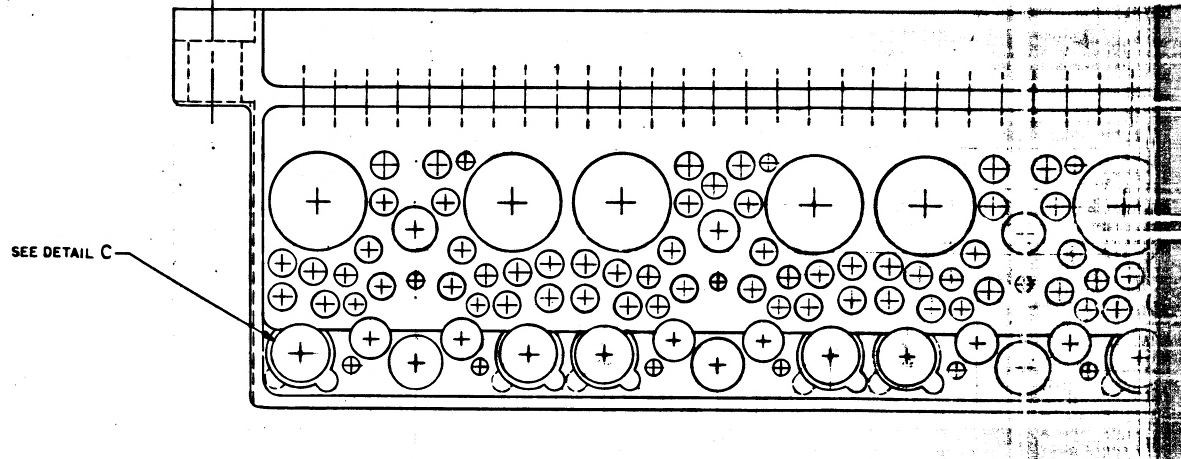
SEE DETAIL C

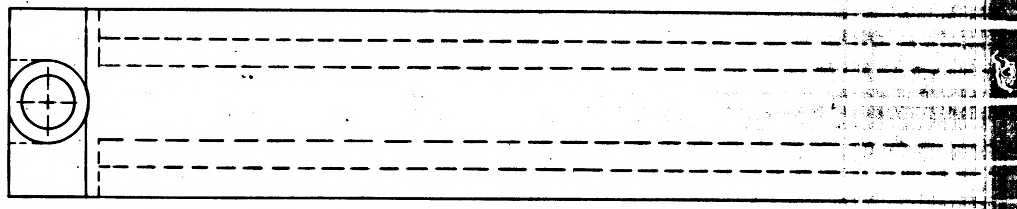

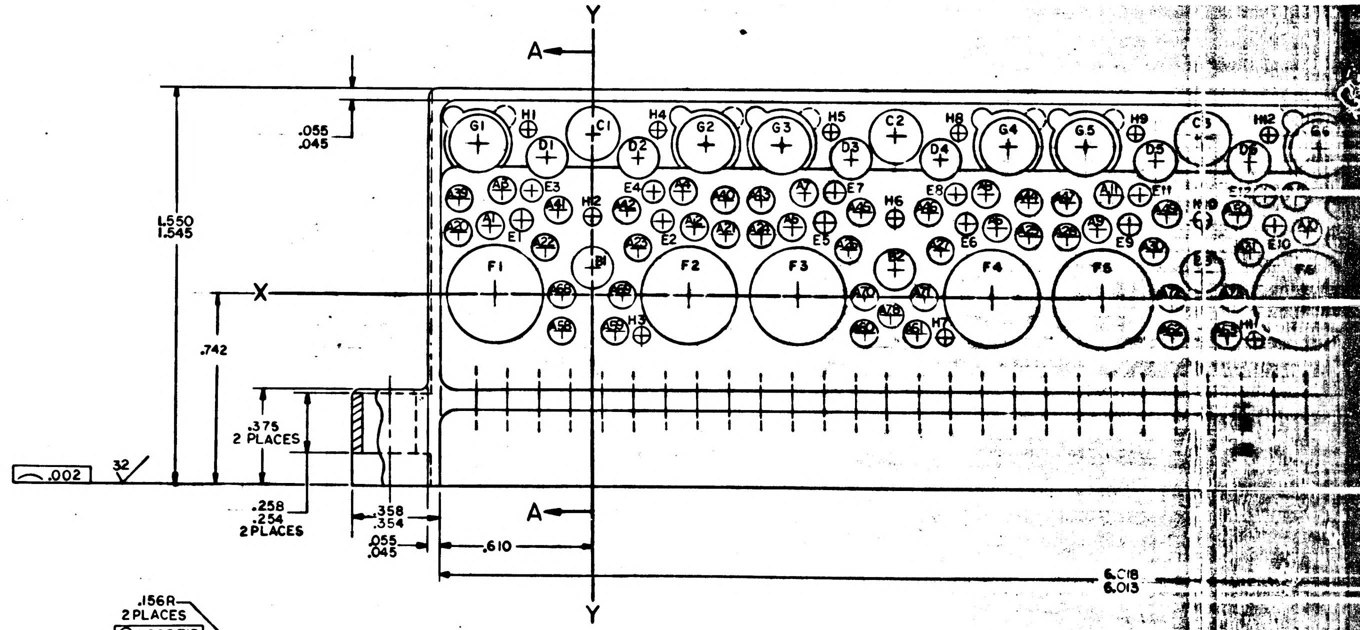
Y
A
G1
H1
D1
C1
H4
D2
G2
G3
H5
D3
C2
H8
D4
G4
G5
H9
D5
H12
E3
E4
E7
E8
E11
H2
H6
E1
E2
E5
E6
E9
E10
F1
F2
F3
F4
F5
B1
H3
H7
X
.055
.045
1.550
1.545
.742
.375
2 PLACES
.002
32
.258
.254
2 PLACES
.358
.354
.055
.045
.610
6.018
6.015

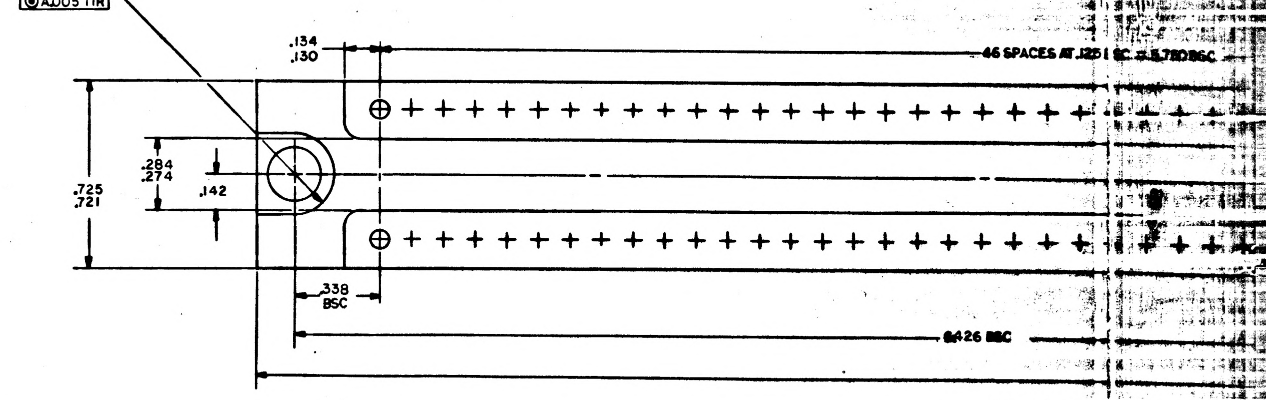
.156R
2 PLACES
◎ A .005 TIR
.134
.130
46 SPACES AT .125
BSC
.284
.274
.142
.725
.721
.338
BSC
6.426 BSC

NOTES:

1. INTERPRET DRAWING IN ACCORDANCE WITH STANDARDS PRESCRIBED BY MIL-D-70327
2. MATERIAL: MAGNESIUM ALLOY ZK60A-T5 PER QQ-M-31
3. REMOVE ALL BURRS AND BREAK SHARP EDGES .005/.015
4. ALL FILLET AND RADII TO BE .005/.020 UNLESS OTHERWISE SPECIFIED
5. ALL SURFACES $\overset{125}{\surd}$ UNLESS OTHERWISE SPECIFIED
6. FINISH: ANODIZE PER MIL-M-45202 TYPE I CLASS C

F1

NOTICE — WHEN GOVERNMENT DRAWINGS, SPECIFICATIONS, OR OTHER DATA ARE USED FOR ANY PURPOSE OTHER THAN IN CONNECTION WITH A DEFINITELY RELATED GOVERNMENT PROCUREMENT OPERATION, THE UNITED STATES GOVERNMENT THEREBY INCURS NO RESPONSIBILITY NOR ANY OBLIGATION WHATSOEVER; AND THE FACT THAT THE GOVERNMENT MAY HAVE FORMULATED, FURNISHED, OR IN ANY WAY SUPPLIED THE SAID DRAWINGS, SPECIFICATIONS OR OTHER DATA IS NOT TO BE REGARDED BY IMPLICATION OR OTHERWISE AS IN ANY MANNER LICENSING THE HOLDER OR ANY OTHER PERSON OR CORPORATION, OR CONVEYING ANY RIGHTS OR PERMISSION TO MANUFACTURE, USE, OR SELL ANY PATENTED INVENTION THAT MAY IN ANY WAY BE RELATED THERETO.

REVISIONS 10729

SYM	DESCRIPTION	DATE	APPROVAL
A	REVISED PER TDRR 11477	18 Aug 64	

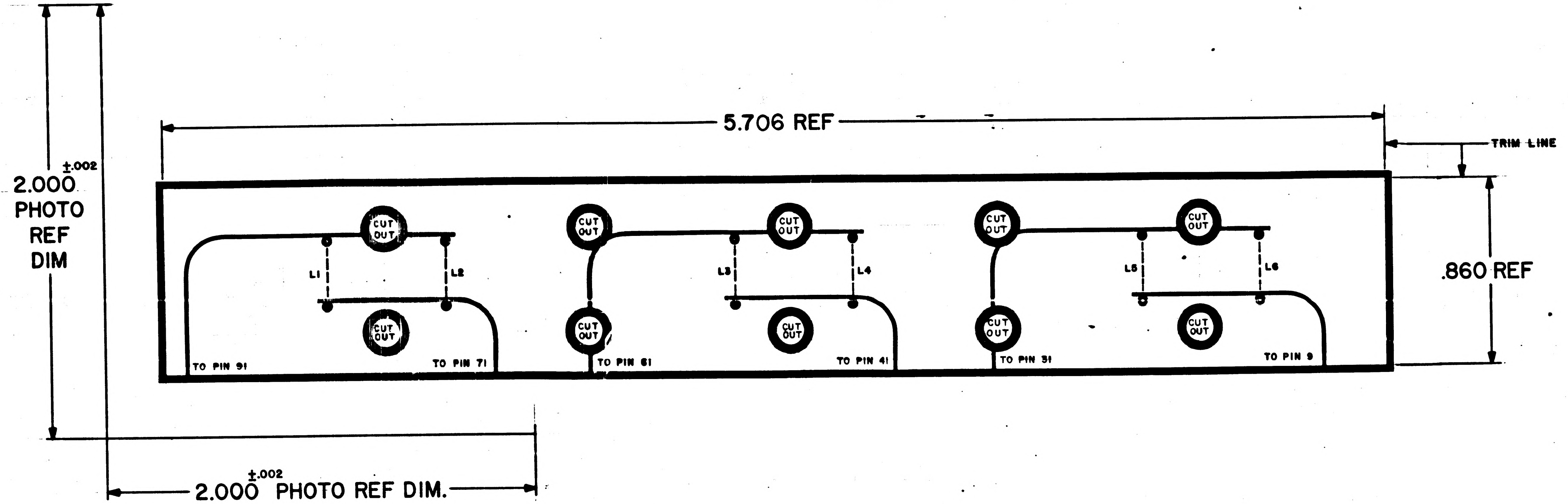

NOTES
1. INTERPRET DRAWING IN ACCORDANCE WITH STANDARDS PRESCRIBED BY MIL-D-70327
2. ORIGINAL OF THIS DRAWING OR REPRODUCTION MADE BY A PROCESS OR METHOD SHALL INSURE DIMENSIONAL STABILITY. DIMENSIONAL STABILITY SHALL NOT EXCEED .001 INCH PER INCH
3. CUT TO WITHIN .010 OF TRIM LINE
4. MAKE MASTER PATTERN POSITIVE FILMS TO DIMENSIONS SHOWN
5. MATL: FILM .006/.008 THICK PER L-F-340, TYPE IB, CLASS 2, STYLE IA
6. ● .065/.075 DIA PUNCH

MASTER

QTY REQD	PART OR IDENTIFYING NO.	NOMENCLATURE OR DESCRIPTION	FIND NO.

LIST OF MATERIALS

NEXT ASSY	USED ON
1003704	

APPLICATION

UNLESS OTHERWISE SPECIFIED DIMENSIONS ARE IN INCHES
TOLERANCES ON
FRACTIONS ± — DECIMALS ± — ANGLES ± —
DO NOT SCALE THIS DRAWING
MATERIAL SEE NOTE 5
HEAT TREATMENT —
FINAL FINISH —

MIT INSTRUMENTATION LAB
CAMBRIDGE, MASS.
DWG. NO. CONTRACT
DRAWN Ed Powers DATE 9 Jan 64
CHECKED A. Lindstrom 25 June 64
APPROVAL
APPROVAL Eldon C. Hall 29 June 64
NASA APPROVAL 6/23/64
MIT APPROVAL 6/23/64

MANNED SPACECRAFT CENTER
HOUSTON, TEXAS

INSULATOR
PHOTOGRAPHIC MASTER
FILTER MODULE B6

CODE IDENT NO. —
SIZE D
NASA DRAWING NO. 1004703
SCALE 4/1
WT —
SHEET 1 OF 1

1004703 A

NOTICE — WHEN GOVERNMENT DRAWINGS, SPECIFICATIONS, OR OTHER DATA ARE USED FOR ANY PURPOSE OTHER THAN IN CONNECTION WITH A DEFINITELY RELATED GOVERNMENT PROCUREMENT OPERATION, THE UNITED STATES GOVERNMENT THEREBY INCURS NO RESPONSIBILITY NOR ANY OBLIGATION WHATSOEVER; AND THE FACT THAT THE GOVERNMENT MAY HAVE FORMULATED, FURNISHED, OR IN ANY WAY SUPPLIED THE SAID DRAWINGS, SPECIFICATIONS OR OTHER DATA IS NOT TO BE REGARDED BY IMPLICATION OR OTHERWISE AS IN ANY MANNER LICENSING THE HOLDER OR ANY OTHER PERSON OR CORPORATION, OR CONVEYING ANY RIGHTS OR PERMISSION TO MANUFACTURE, USE OR SELL ANY PATENTED INVENTION THAT MAY IN ANY WAY BE RELATED THERETO.

REVISIONS 10729

SYM	DESCRIPTION	DATE	APPROVAL
A	REVISED PER TDRR 11477	18 Aug 64	
B	REVISED PER TDRR 13675	10/20/63	

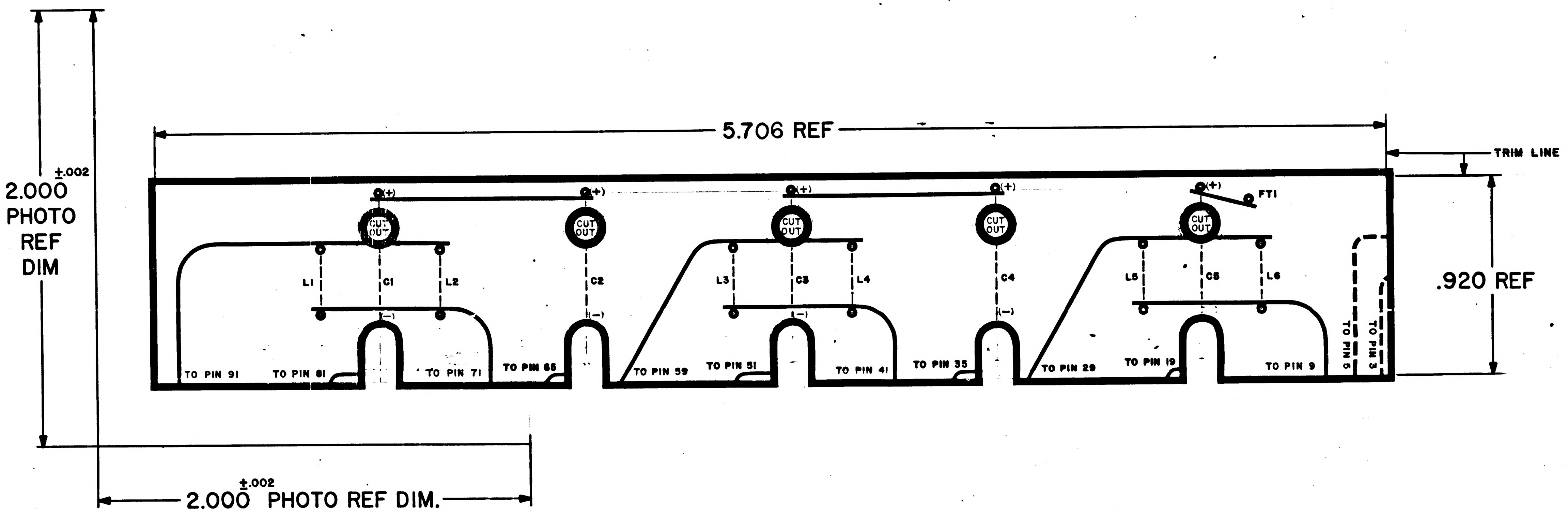
5.706 REF
TRIM LINE
2.000 ±.002 PHOTO REF DIM
.920 REF
2.000 ±.002 PHOTO REF DIM.
(+)
CUT OUT
FT1
L1
C1
L2
C2
L3
C3
L4
C4
L5
C5
L6
(−)
TO PIN 91
TO PIN 81
TO PIN 71
TO PIN 65
TO PIN 59
TO PIN 51
TO PIN 41
TO PIN 35
TO PIN 29
TO PIN 19
TO PIN 9
TO PIN 5
TO PIN 3

NOTES
1. INTERPRET DRAWING IN ACCORDANCE WITH STANDARDS PRESCRIBED BY MIL-D-70327
2. ORIGINAL OF THIS DRAWING OR REPRODUCTION MADE BY A PROCESS OR METHOD SHALL INSURE DIMENSIONAL STABILITY. DIMENSIONAL STABILITY SHALL NOT EXCEED .001 INCH PER INCH
3. CUT TO WITHIN .010 OF TRIM LINE
4. MAKE MASTER PATTERN POSITIVE FILMS TO DIMENSIONS SHOWN
5. MATL FILM .006/.008 THICK PER L-F-340, TYPE IB, CLASS 2, STYLE IA
6. ◎ .065/.075 DIA PUNCH

QTY REQD	PART OR IDENTIFYING NO.	NOMENCLATURE OR DESCRIPTION	FIND NO.

LIST OF MATERIALS

NEXT ASSY	USED ON
1003704	

APPLICATION

UNLESS OTHERWISE SPECIFIED DIMENSIONS ARE IN INCHES
TOLERANCES ON
FRACTIONS ± — DECIMALS ± — ANGLES ± —
DO NOT SCALE THIS DRAWING
MATERIAL SEE NOTE 5
HEAT TREATMENT —
FINAL FINISH —

MIT INSTRUMENTATION LAB
CAMBRIDGE, MASS.
DWG. NO.
CONTRACT
DRAWN Ed Powers DATE
CHECKED A. Lindstrom 25 June 64
APPROVAL
APPROVAL
NASA APPROVAL 6/23/64
MIT APPROVAL 6/23/64

MANNED SPACECRAFT CENTER
HOUSTON, TEXAS

INSULATOR PHOTOGRAPHIC MASTER
FILTER MODULE B5

CODE IDENT NO. —
SIZE D
NASA DRAWING NO. 1004703
SCALE 4/1
WT —
SHEET 1 OF 1

INCHES
0 2
PHOTOGRAPHIC SCALE ONLY

NOTICE — WHEN GOVERNMENT DRAWINGS, SPECIFICATIONS, OR OTHER DATA ARE USED FOR ANY PURPOSE OTHER THAN IN CONNECTION WITH A DEFINITELY RELATED GOVERNMENT PROCUREMENT OPERATION, THE UNITED STATES GOVERNMENT THEREBY INCURS NO RESPONSIBILITY NOR ANY OBLIGATION WHATSOEVER; AND THE FACT THAT THE GOVERNMENT MAY HAVE FORMULATED, FURNISHED, OR IN ANY WAY SUPPLIED THE SAID DRAWINGS, SPECIFICATIONS OR OTHER DATA IS NOT TO BE REGARDED BY IMPLICATION OR OTHERWISE AS IN ANY MANNER LICENSING THE HOLDER OR ANY OTHER PERSON OR CORPORATION, OR CONVEYING ANY RIGHTS OR PERMISSION TO MANUFACTURE, USE, OR SELL ANY PATENTED INVENTION THAT MAY IN ANY WAY BE RELATED THERETO.

REVISIONS 10729			
SYM	DESCRIPTION	DATE	APPROVAL

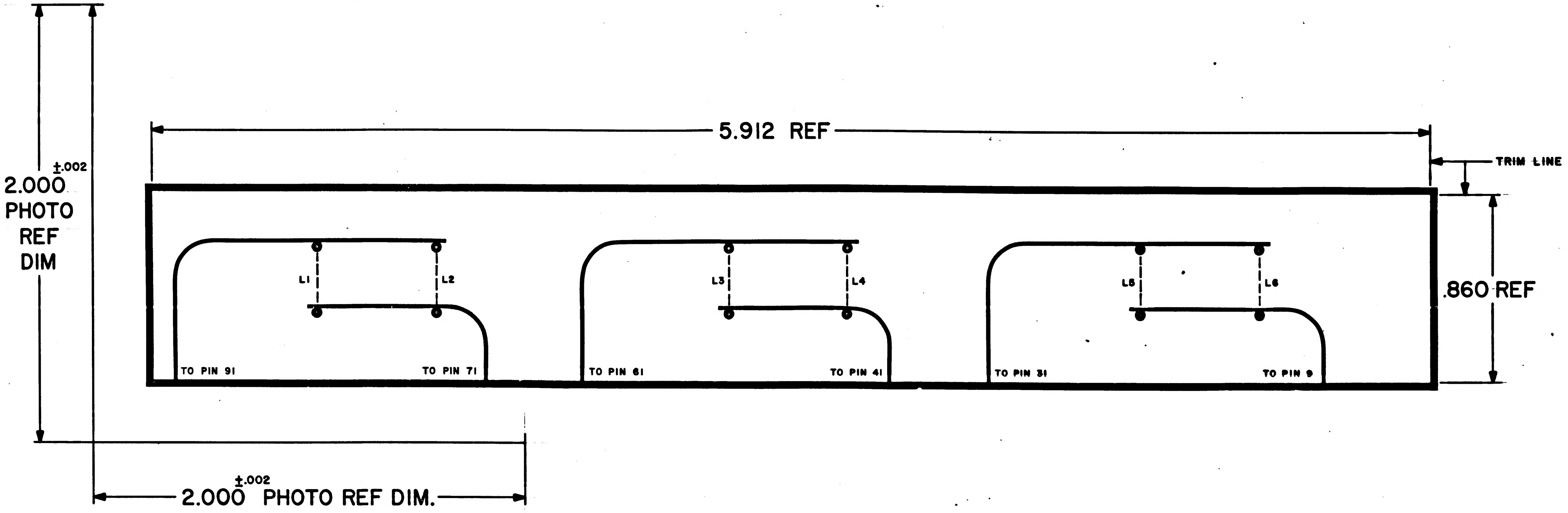

NOTES

1. INTERPRET DRAWING IN ACCORDANCE WITH STANDARDS PRESCRIBED BY MIL-D-70327
2. ORIGINAL OF THIS DRAWING OR REPRODUCTION MADE BY A PROCESS OR METHOD SHALL INSURE DIMENSIONAL STABILITY. DIMENSIONAL STABILITY SHALL NOT EXCEED .001 INCH PER INCH
3. CUT TO WITHIN .010 OF TRIM LINE
4. MAKE MASTER PATTERN POSITIVE FILMS TO DIMENSIONS SHOWN
5. MATL: FILM .006/.008 THICK PER L-F-340, TYPE IB, CLASS 2, STYLE IA
6. ⊙ .065/.075 DIA PUNCH

MASTER

QTY REQD	PART OR IDENTIFYING NO.	NOMENCLATURE OR DESCRIPTION	FIND NO.

LIST OF MATERIALS

NEXT ASSY	USED ON
1003704	

APPLICATION

UNLESS OTHERWISE SPECIFIED DIMENSIONS ARE IN INCHES
TOLERANCES ON
FRACTIONS ± DECIMALS ± ANGLES ±
DO NOT SCALE THIS DRAWING
MATERIAL
SEE NOTE 5
HEAT TREATMENT
FINAL FINISH

MIT
INSTRUMENTATION LAB
CAMBRIDGE, MASS.
DWG. NO. CONTRACT
DRAWN Ed Powers DATE [illegible]
CHECKED A. Lindstrom 25 Jan 64
APPROVAL [illegible]
APPROVAL [illegible] Jan 64
NASA APPROVAL [illegible] 1/23/64
MIT APPROVAL [illegible] 1/20/64

MANNED SPACECRAFT CENTER
HOUSTON, TEXAS

INSULATOR
PHOTOGRAPHIC MASTER
FILTER MODULE B6

CODE IDENT NO. —
SIZE D
NASA DRAWING NO. 1004703
SCALE 4/1
WT —
SHEET 1 OF 1

INCHES
0 1 2
PHOTOGRAPHIC SCALE ONLY

SYM	DESCRIPTION	DATE	APPROVAL
A	REVISED PER TDRR 11480		

REVISIONS 10729

1004704 A

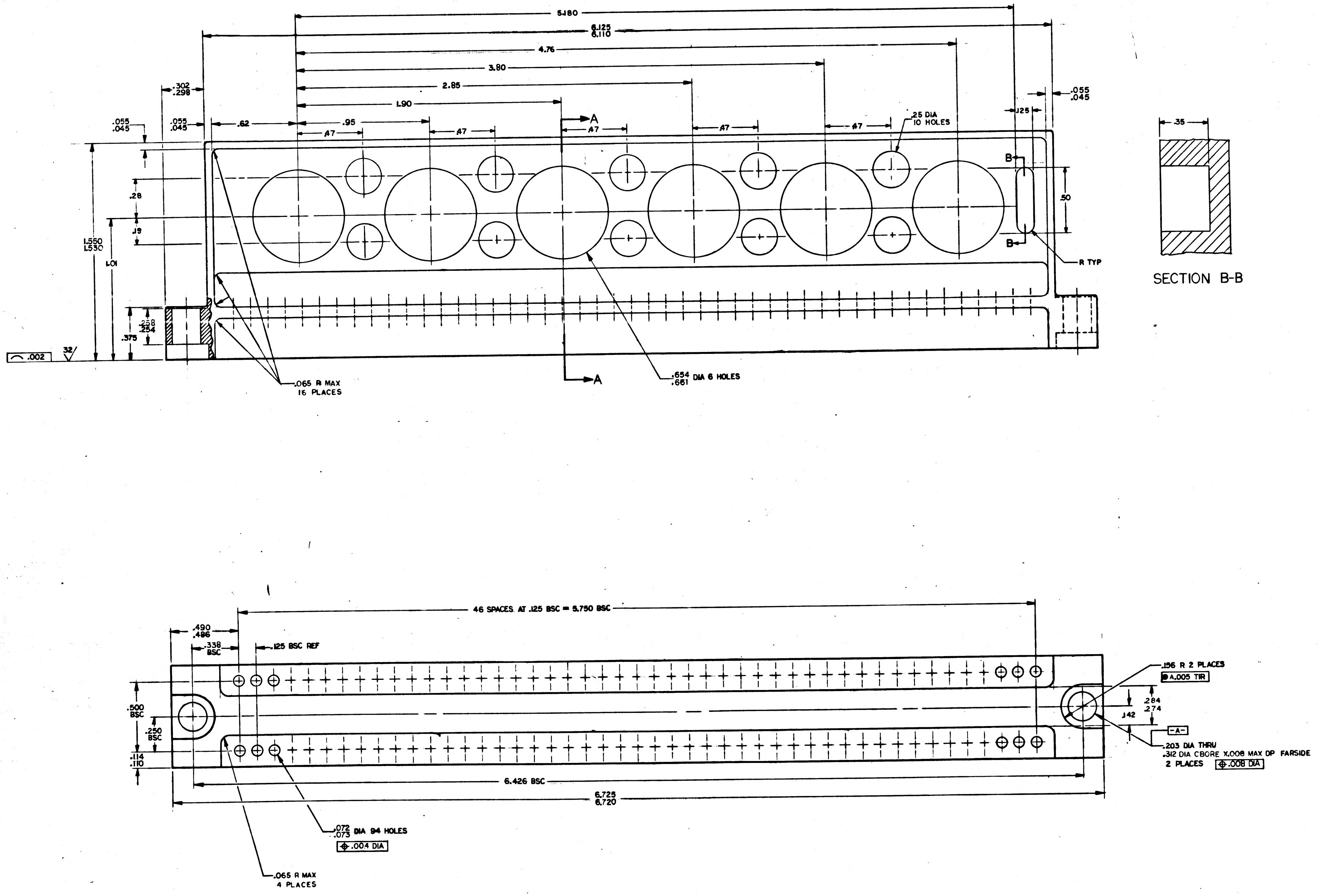

5.180
6.125
6.110
4.76
3.80
2.85
1.90
.302
.298
.055
.045
.055
.045
.055
.045
.62
.95
.47
.47
.47
.47
.47
A
.25 DIA
10 HOLES
.125
B
B
.50
R TYP
.28
.19
1.550
1.530
1.01
.258
.254
.375
.002
32
.065 R MAX
16 PLACES
A
.654
.661 DIA 6 HOLES
.35
SECTION B-B
46 SPACES AT .125 BSC = 5.750 BSC
.490
.486
.338
BSC
.125 BSC REF
.156 R 2 PLACES
A .005 TIR
.500
BSC
.250
BSC
.114
.110
.284
.274
.142
-A-
.203 DIA THRU
.312 DIA CBORE X.008 MAX DP FARSIDE
2 PLACES .008 DIA
6.426 BSC
6.725
6.720
.072
.073 DIA 94 HOLES
.004 DIA
.065 R MAX
4 PLACES

MASTER

QTY REQD	PART OR IDENTIFYING NO.	NOMENCLATURE OR DESCRIPTION	FIND NO.

LIST OF MATERIALS

NEXT ASSY	USED ON
1003705	

APPLICATION

UNLESS OTHERWISE SPECIFIED
DIMENSIONS ARE IN INCHES
TOLERANCES ON
FRACTIONS ± — DECIMALS XXX ± .005 XX ± .02 ANGLES ± —
DO NOT SCALE THIS DRAWING
MATERIAL SEE NOTE 2
HEAT TREATMENT —
FINAL FINISH SEE NOTE 6

MIT
INSTRUMENTATION LAB
CAMBRIDGE, MASS.

DRAWN [illegible] DATE
CHECKED [illegible]
APPROVAL [illegible]
APPROVAL [illegible]
NASA APPROVAL [illegible]
MIT APPROVAL [illegible]

MANNED SPACECRAFT CENTER
HOUSTON, TEXAS

HEADER HOUSING
FILTER MODULE B5

CODE IDENT NO. —
SIZE J
NASA DRAWING NO. 1004704
SCALE 4/1
WT —
SHEET 1 OF 1

1004704 A

2H

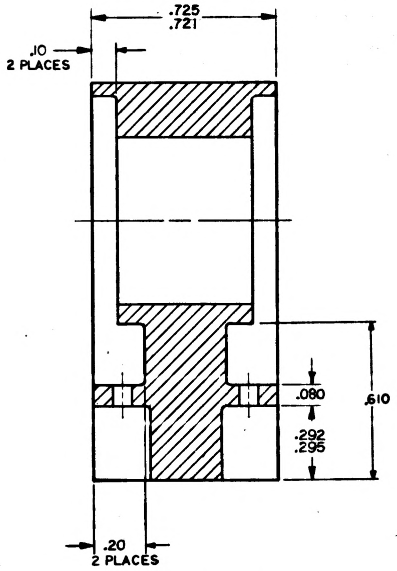
.725
.721
.10
2 PLACES
.080
.610
.292
.295
.20
2 PLACES

SECTION A–A

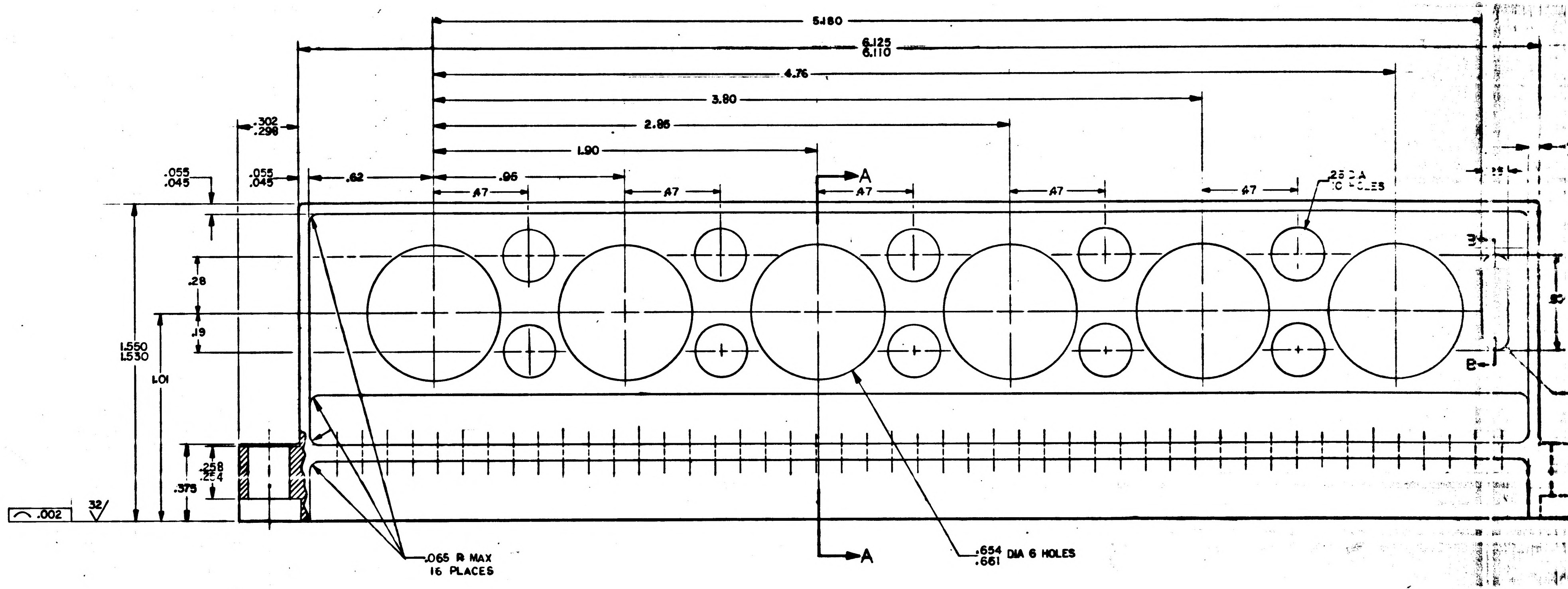
5.180
6.125
6.110
4.76
3.80
2.86
1.90
.302
.298
.055
.045
.055
.045
.62
.96
.47
.47
.47
.47
.47
A
A
.25 DIA
10 HOLES
.28
.19
1.550
1.530
1.01
.258
.254
.375
.002
32
.065 R MAX
16 PLACES
.654
.661 DIA 6 HOLES
B
B
.50

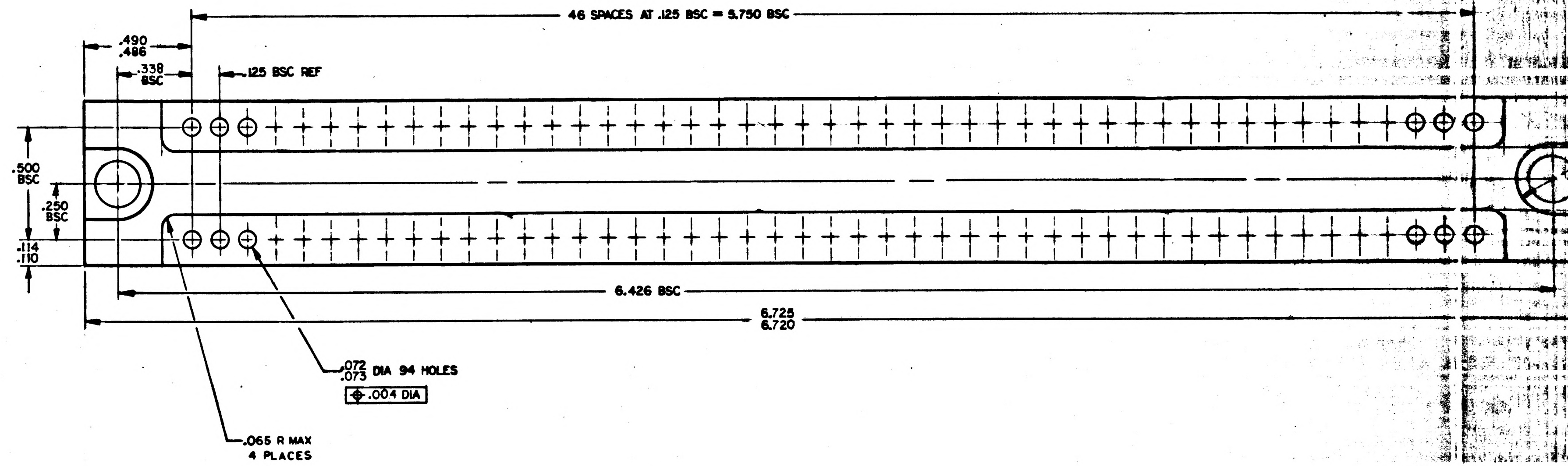
46 SPACES AT .125 BSC = 5.750 BSC
.490
.486
.338
BSC
.125 BSC REF
.500
BSC
.250
BSC
.114
.110
6.426 BSC
6.725
6.720
.072
.073 DIA 94 HOLES
⌖ .004 DIA
.065 R MAX
4 PLACES

NOTES

1. INTERPRET DRAWING IN ACCORDANCE WITH STANDARDS PRESCRIBED BY MIL–D–70327
2. MATERIAL: MAGNESIUM ALLOY ZK–60A–T5 PER QQ–M–31
3. UNLESS OTHERWISE SPECIFIED ALL FILLETS AND RADII TO BE .005/.020
4. REMOVE ALL BURRS AND BREAK SHARP EDGES .005 TO .015
5. UNLESS OTHERWISE SPECIFIED, 125√ ALL OVER
6. FINISH: ANODIZE PER MIL–M–45202 TYPE I CLASS C

MASTER

SYM	DESCRIPTION	DATE	APPROVAL
A	REVISED PER TDRR 11480		
B	REVISED PER TDRR 10235		

REVISIONS 10727

1004704 B

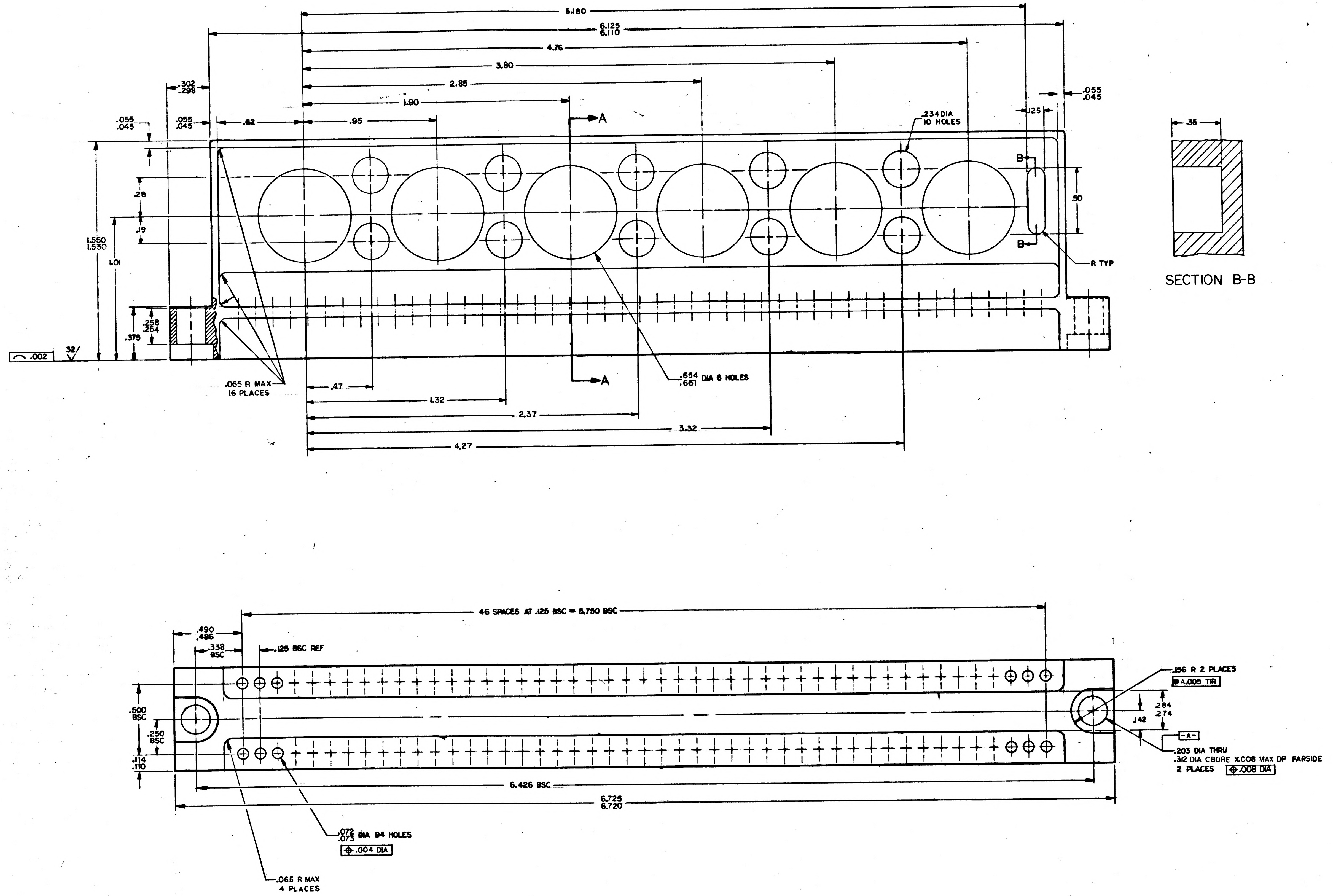

5.180
6.125
6.110
4.76
3.80
2.85
1.90
.302
.298
.055
.045
.055
.045
.62
.95
A
.234 DIA
10 HOLES
.125
.055
.045
B
B
.50
R TYP
.28
.19
1.550
1.530
1.01
.258
.254
.375
.002
32
.065 R MAX
16 PLACES
.47
1.32
2.37
3.32
4.27
A
.654
.661 DIA 6 HOLES
.35
SECTION B-B
46 SPACES AT .125 BSC = 5.750 BSC
.490
.486
.338
BSC
.125 BSC REF
.156 R 2 PLACES
A .005 TIR
.500
BSC
.250
BSC
.114
.110
.284
.274
.142
-A-
.203 DIA THRU
.312 DIA CBORE X.008 MAX DP FARSIDE
2 PLACES
.008 DIA
6.426 BSC
6.725
6.720
.072
.073 DIA 94 HOLES
.004 DIA
.065 R MAX
4 PLACES

MASTER

QTY REQD	PART OR IDENTIFYING NO.	NOMENCLATURE OR DESCRIPTION	FIND NO.

LIST OF MATERIALS

1003705	
NEXT ASSY	USED ON
APPLICATION	

UNLESS OTHERWISE SPECIFIED
DIMENSIONS ARE IN INCHES
TOLERANCES ON
FRACTIONS ± — DECIMALS .XXX ± .005 .XX ± .02 ANGLES ± —
DO NOT SCALE THIS DRAWING
MATERIAL SEE NOTE 2
HEAT TREATMENT —
FINAL FINISH SEE NOTE 6

MIT
INSTRUMENTATION LAB
CAMBRIDGE, MASS
DWG. NO.
CONTRACT
DRAWN
DATE
CHECKED
APPROVAL
APPROVAL
NASA APPROVAL
MIT APPROVAL

MANNED SPACECRAFT CENTER
HOUSTON, TEXAS

HEADER HOUSING
FILTER MODULE B5

CODE IDENT NO. —
SIZE J
NASA DRAWING NO. 1004704
SCALE 4/1
WT —
SHEET 1 OF 1

1004704 B

1004704 B

24

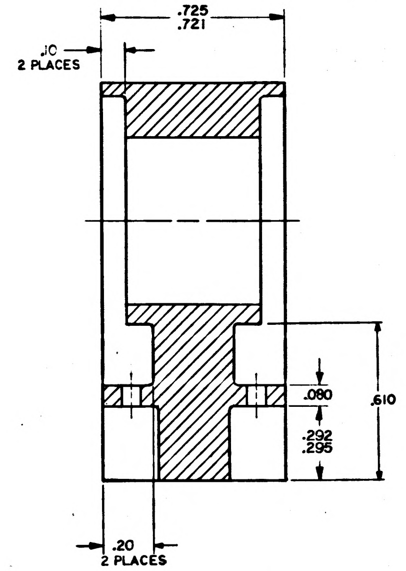
.725
.721
.10
2 PLACES
.080
.610
.292
.295
.20
2 PLACES

SECTION A–A

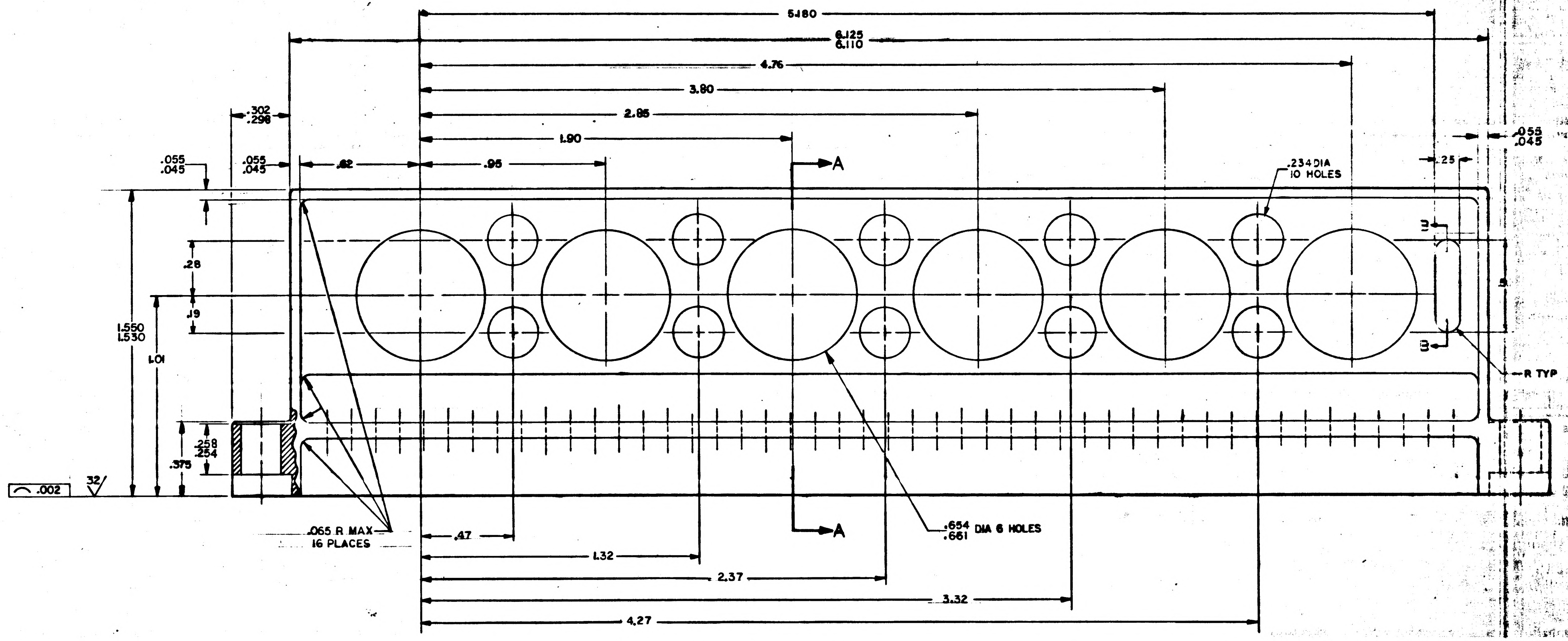
5.480
6.125
6.110
4.76
3.80
2.85
1.90
.302
.298
.055
.045
.055
.045
.62
.95
A
A
.234 DIA
10 HOLES
.055
.045
.25
B
B
R TYP
.28
.19
1.550
1.530
1.01
.258
.254
.375
.002
32
.065 R MAX
16 PLACES
.47
1.32
2.37
3.32
4.27
.654
.661 DIA 6 HOLES

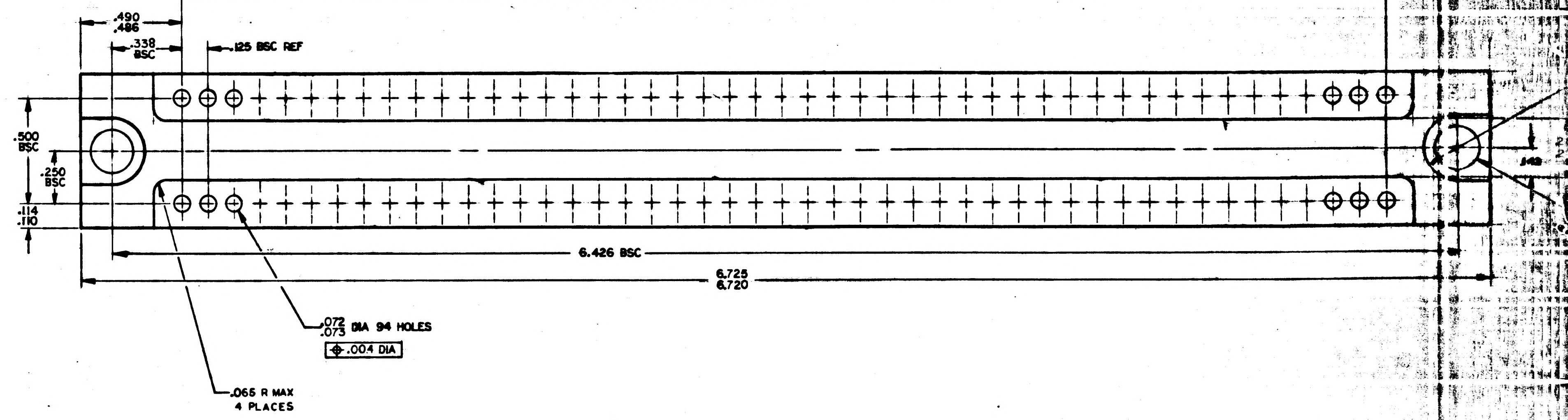
46 SPACES AT .125 BSC = 5.750 BSC
.490
.486
.338
BSC
.125 BSC REF
.500
BSC
.250
BSC
.114
.110
6.426 BSC
6.725
6.720
.072
.073 DIA 94 HOLES
.004 DIA
.065 R MAX
4 PLACES

NOTES
1. INTERPRET DRAWING IN ACCORDANCE WITH STANDARDS PRESCRIBED BY MIL–D–70327
2. MATERIAL: MAGNESIUM ALLOY ZK–60A–T5 PER QQ–M–31
3. UNLESS OTHERWISE SPECIFIED ALL FILLETS AND RADII TO BE .005/.020
4. REMOVE ALL BURRS AND BREAK SHARP EDGES .005 TO .015
5. UNLESS OTHERWISE SPECIFIED, 125√ ALL OVER
6. FINISH: ANODIZE PER MIL–M–45202 TYPE I CLASS C

MASTER

1004704 | C

REVISIONS 10727

SYM	DESCRIPTION	DATE	APPROVAL
A	REVISED PER TDRR 11480	[illegible]	[illegible]
B	REVISED PER TDRR 10235	[illegible]	[illegible]
C	REVISED PER TDRR 13675	[illegible]	[illegible]

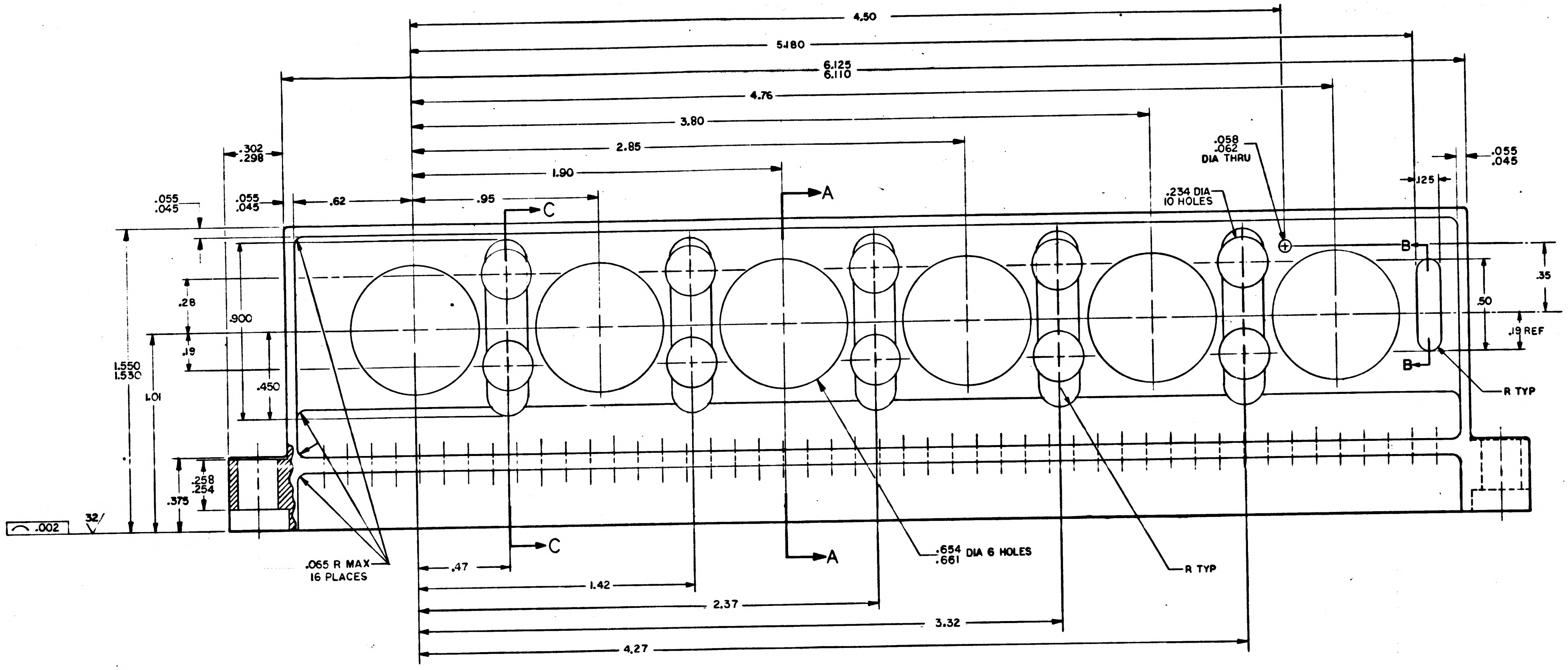

4.50
5.180
6.125
6.110
4.76
3.80
2.85
1.90
.95
.62
.302
.298
.055
.045
.055
.045
.058
.062
DIA THRU
.234 DIA
10 HOLES
.125
.055
.045
A
C
B
.35
.50
.19 REF
R TYP
.28
.19
.900
.450
1.550
1.530
1.01
.258
.254
.375
.002
32
.065 R MAX
16 PLACES
.47
1.42
2.37
3.32
4.27
.654
.661
DIA 6 HOLES
R TYP

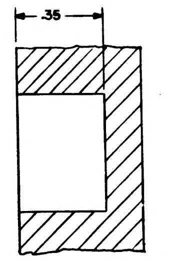

SECTION B-B

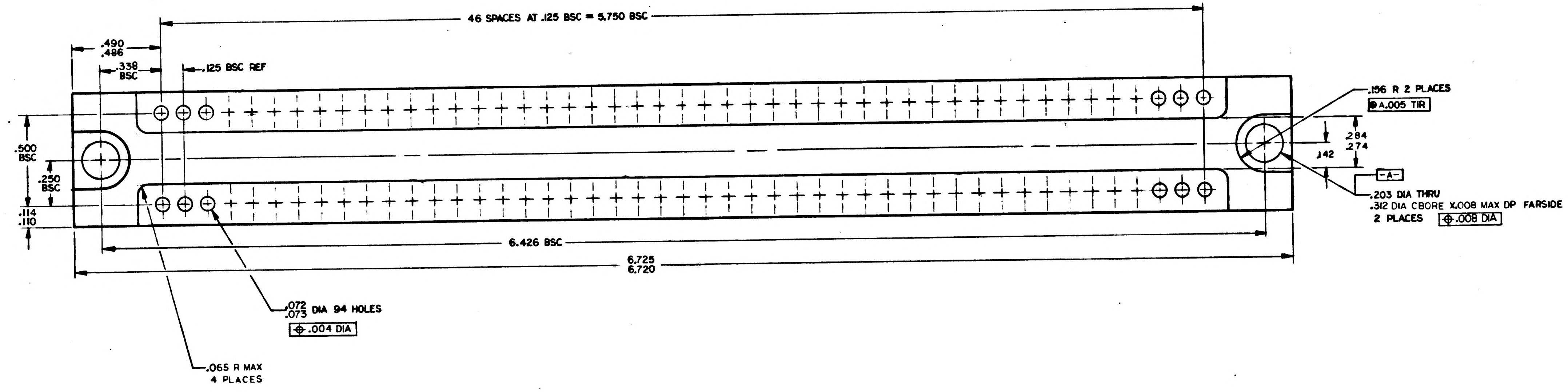

46 SPACES AT .125 BSC = 5.750 BSC
.490
.486
.338
BSC
.125 BSC REF
.500
BSC
.250
BSC
.114
.110
.156 R 2 PLACES
A .005 TIR
.284
.274
.142
-A-
.203 DIA THRU
.312 DIA CBORE X.008 MAX DP FARSIDE
2 PLACES
.008 DIA
6.426 BSC
6.725
6.720
.072
.073
DIA 94 HOLES
.004 DIA
.065 R MAX
4 PLACES

MASTER

(24)

QTY REQD	PART OR IDENTIFYING NO.	NOMENCLATURE OR DESCRIPTION	FIND NO.

LIST OF MATERIALS

NEXT ASSY	USED ON
1003705	

APPLICATION

UNLESS OTHERWISE SPECIFIED
DIMENSIONS ARE IN INCHES
TOLERANCES ON
FRACTIONS ± — DECIMALS XXX ± .005 XX ± .02 ANGLES ± —
DO NOT SCALE THIS DRAWING

MATERIAL
SEE NOTE 2

HEAT TREATMENT
—

FINAL FINISH
SEE NOTE 6

M I T
INSTRUMENTATION LAB
CAMBRIDGE, MASS

DRAWN
DATE
CHECKED
APPROVAL
APPROVAL
NASA APPROVAL
MIT APPROVAL

MANNED SPACECRAFT CENTER
HOUSTON, TEXAS

HEADER HOUSING
FILTER MODULE B5

CODE IDENT NO. —
SIZE J
NASA DRAWING NO. 1004704
SCALE 4/1
WT —
SHEET 1 OF 1

1004704 | C

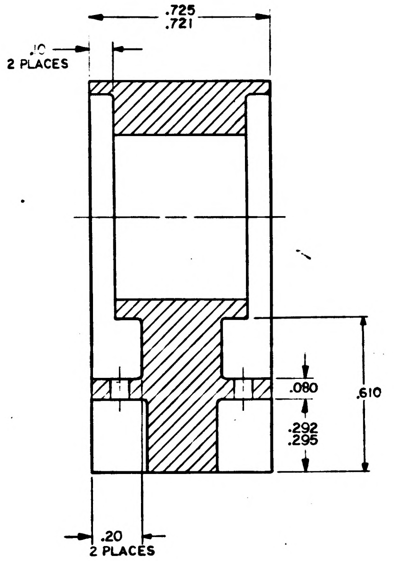
.725
.721
.10
2 PLACES
.080
.610
.292
.295
.20
2 PLACES

SECTION A–A

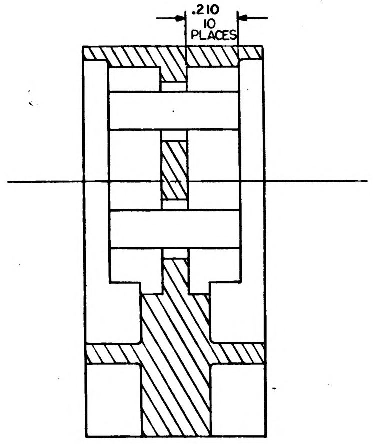
.210
10
PLACES

SECTION C-C

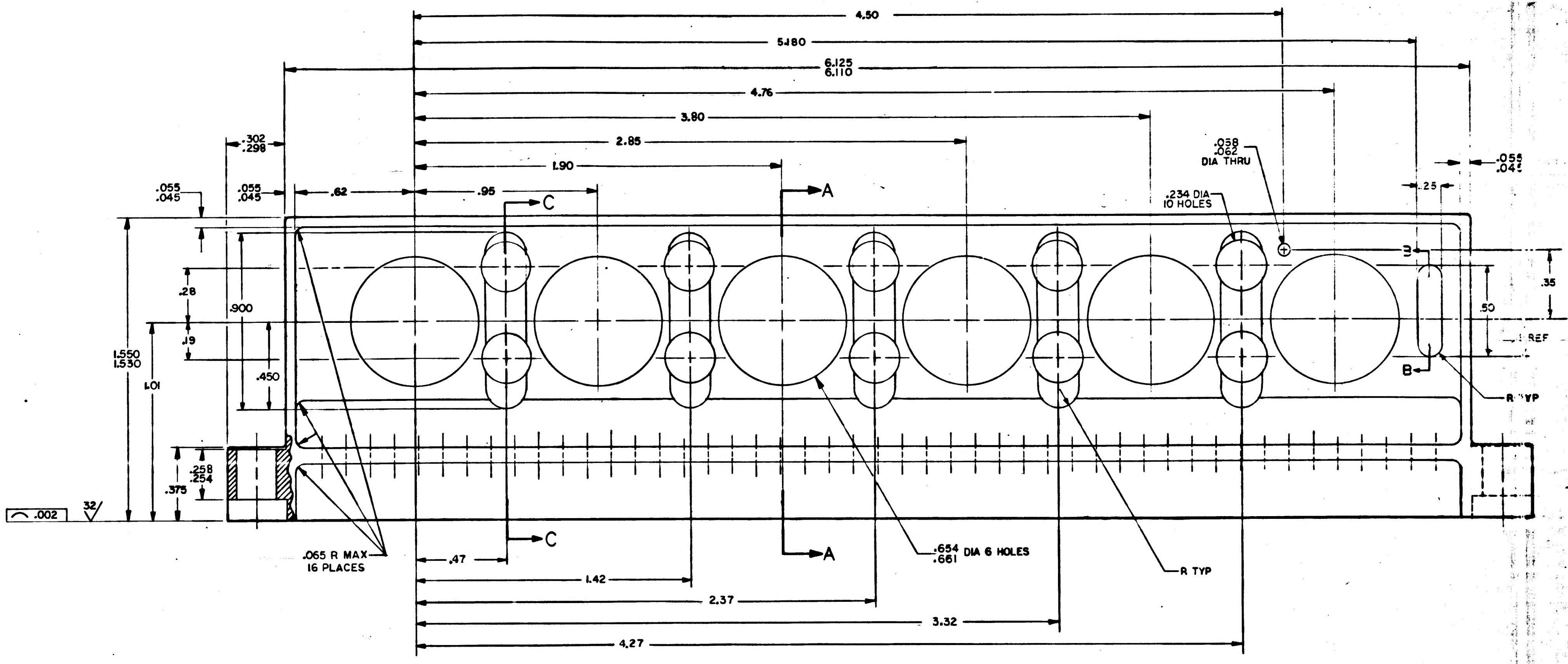
4.50
5.180
6.125
6.110
4.76
3.80
2.85
1.90
.302
.298
.055
.045
.055
.045
.62
.95
C
A
.058
.062
DIA THRU
.234 DIA
10 HOLES
.25
.055
.045
B
.35
.50
REF
R TYP
.28
.19
.900
.450
1.550
1.530
1.01
.258
.254
.375
.002
32
.065 R MAX
16 PLACES
.47
C
A
1.42
2.37
3.32
4.27
.654
.661
DIA 6 HOLES
R TYP

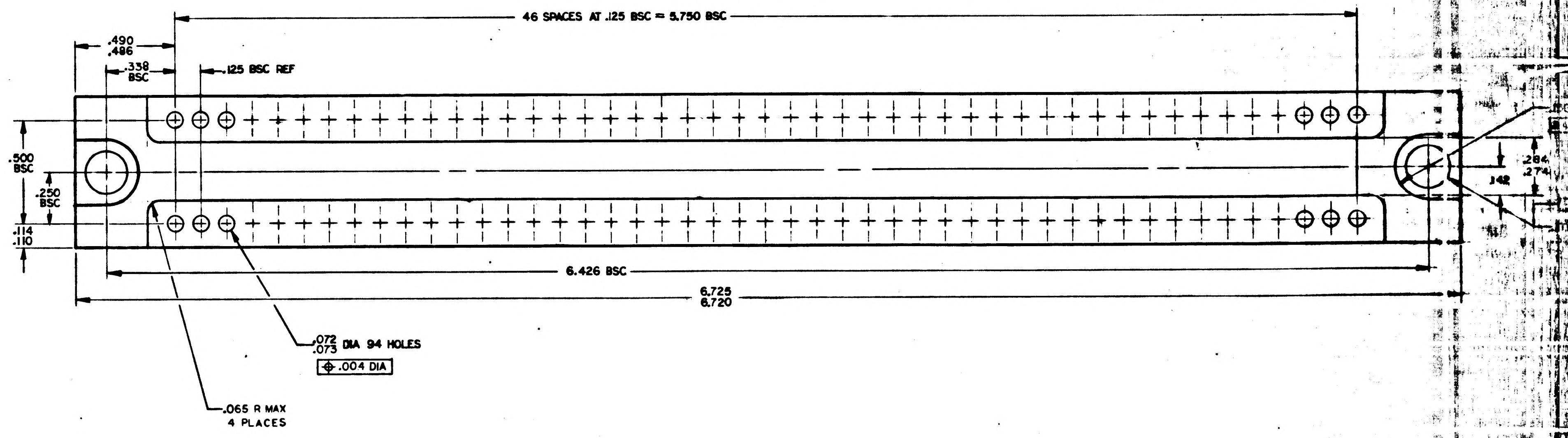
46 SPACES AT .125 BSC = 5.750 BSC
.490
.486
.338
BSC
.125 BSC REF
.500
BSC
.250
BSC
.114
.110
.284
.274
.142
6.426 BSC
6.725
6.720
.072
.073
DIA 94 HOLES
.004 DIA
.065 R MAX
4 PLACES

NOTES

1. INTERPRET DRAWING IN ACCORDANCE WITH STANDARDS PRESCRIBED BY MIL–D–70327
2. MATERIAL: MAGNESIUM ALLOY ZK–60A–T5 PER QQ–M–31
3. UNLESS OTHERWISE SPECIFIED ALL FILLETS AND RADII TO BE .005/.020
4. REMOVE ALL BURRS AND BREAK SHARP EDGES .005 TO .015
5. UNLESS OTHERWISE SPECIFIED, 125√ ALL OVER
6. FINISH: ANODIZE PER MIL–M–45202 TYPE I CLASS C

MASTER

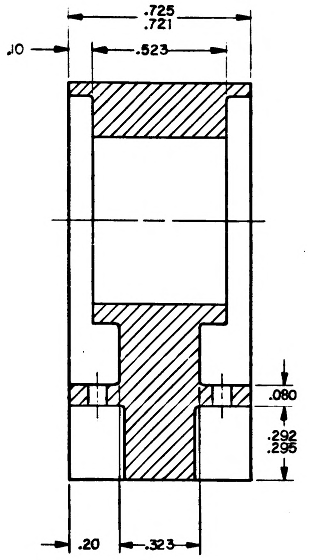
.725
.721
.10
.523
.080
.292
.295
.20
.323

SECTION A–A

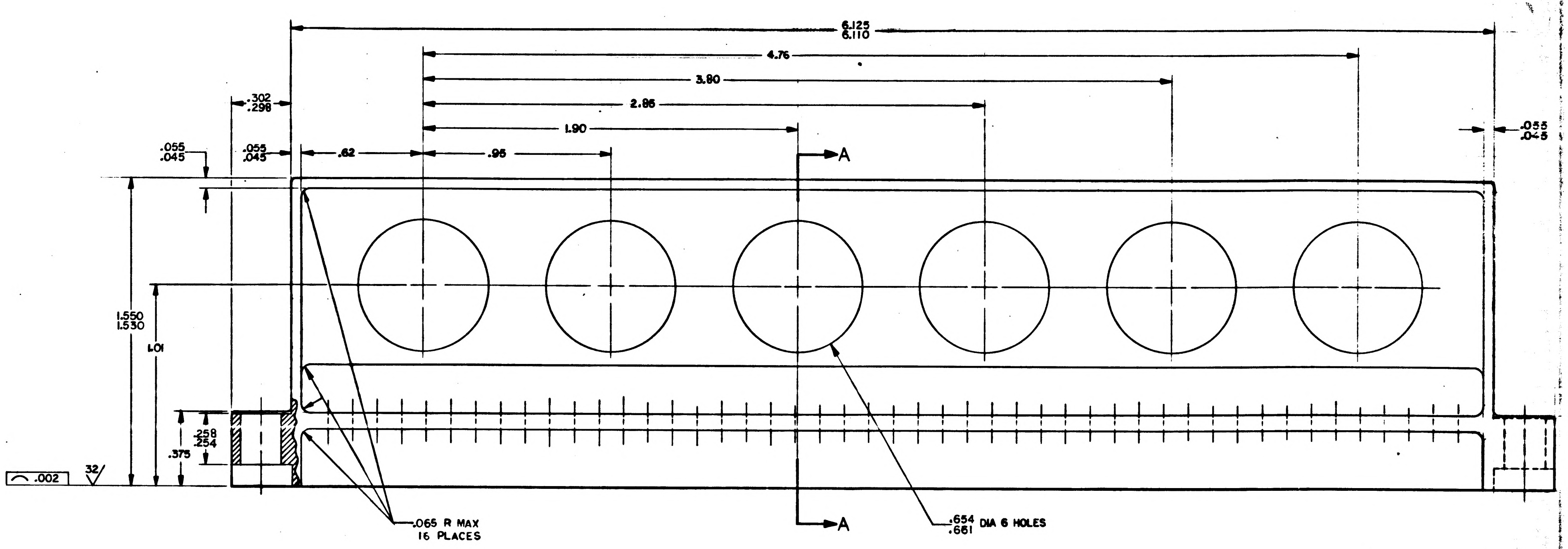
6.125
6.110
4.76
3.80
2.86
1.90
.302
.298
.055
.045
.055
.045
.62
.95
A
.055
.045
1.550
1.530
1.01
.258
.254
.375
.002
32
.065 R MAX
16 PLACES
A
.654
.661 DIA 6 HOLES

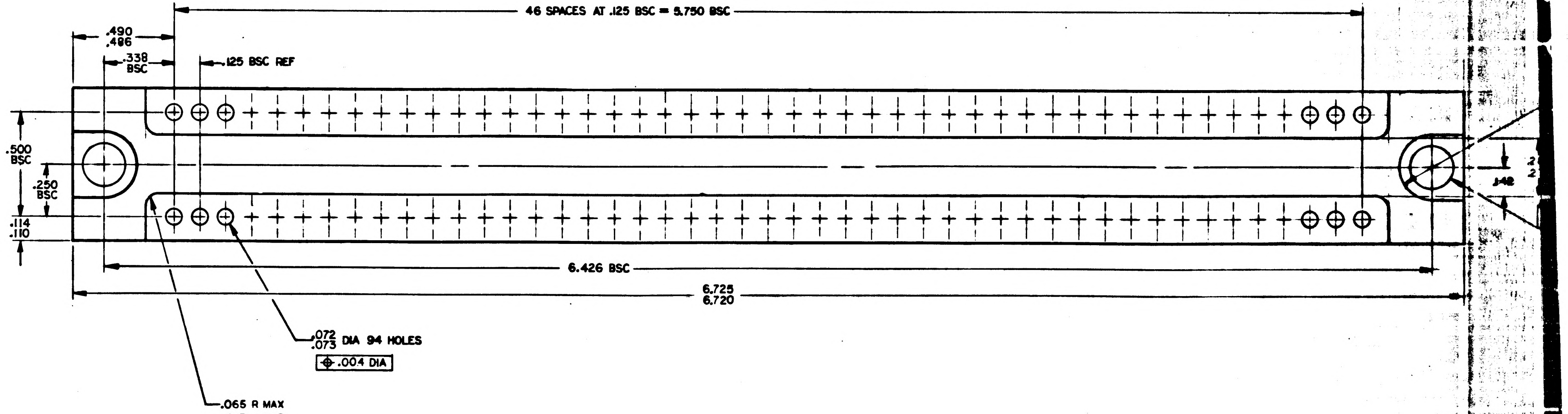
46 SPACES AT .125 BSC = 5.750 BSC
.490
.486
.338
BSC
.125 BSC REF
.500
BSC
.250
BSC
.114
.110
6.426 BSC
6.725
6.720
.072
.073 DIA 94 HOLES
.004 DIA
.065 R MAX
4 PLACES
.148

NOTES

1. INTERPRET DRAWING IN ACCORDANCE WITH STANDARDS PRESCRIBED BY MIL–D–70327
2. MATERIAL: MAGNESIUM ALLOY ZK–60A–T5 PER QQ–M–31
3. UNLESS OTHERWISE SPECIFIED ALL FILLETS AND RADII TO BE .005/.020
4. REMOVE ALL BURRS AND BREAK SHARP EDGES .005 TO .015
5. UNLESS OTHERWISE SPECIFIED, 125∨ ALL OVER
6. FINISH: ANODIZE PER MIL–M–45202 TYPE I CLASS C

F-1

MASTER

1004704

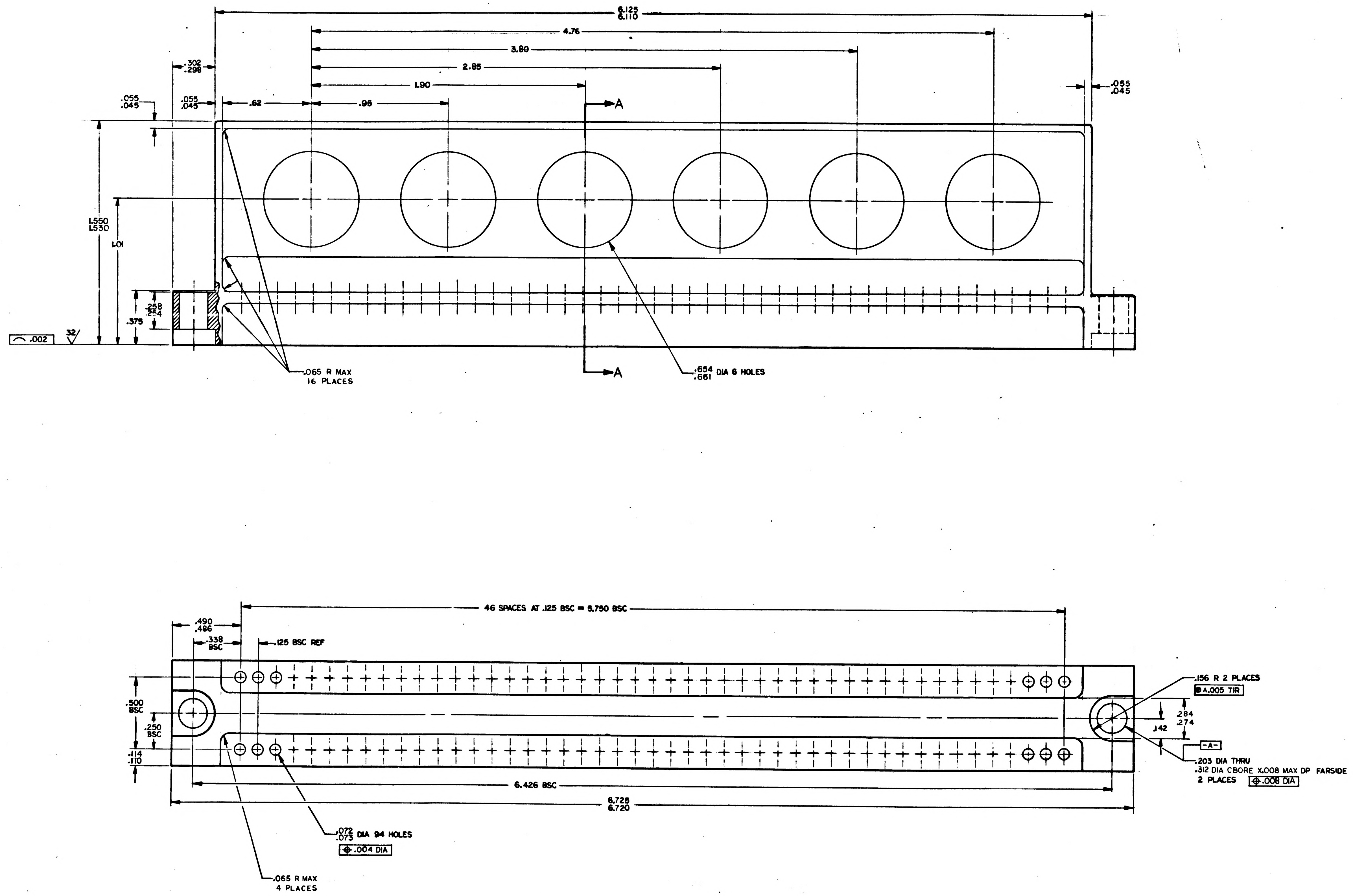
6.125
6.110
4.76
3.80
2.85
1.90
.302
.298
.055
.045
.055
.045
.62
.95
A
A
.055
.045
1.550
1.530
1.01
.258
.224
.375
.002
32
.065 R MAX
16 PLACES
.654
.661 DIA 6 HOLES
46 SPACES AT .125 BSC = 5.750 BSC
.490
.486
.338
BSC
.125 BSC REF
.500
BSC
.250
BSC
.114
.110
.156 R 2 PLACES
A .005 TIR
.284
.274
.142
-A-
.203 DIA THRU
.312 DIA CBORE X.008 MAX DP FARSIDE
2 PLACES
.008 DIA
6.426 BSC
6.725
6.720
.072
.073 DIA 94 HOLES
.004 DIA
.065 R MAX
4 PLACES

1004704

REVISIONS

MASTER

QTY REQD	PART OR IDENTIFYING NO.	NOMENCLATURE OR DESCRIPTION	FIND NO.

LIST OF MATERIALS

1003705	
NEXT ASSY	USED ON
APPLICATION	

UNLESS OTHERWISE SPECIFIED
DIMENSIONS ARE IN INCHES
TOLERANCES ON
FRACTIONS ± — DECIMALS XXX ± .005 XX ± .02 ANGLES ± —
DO NOT SCALE THIS DRAWING

MATERIAL
SEE NOTE 2

HEAT TREATMENT
—

FINAL FINISH
SEE NOTE 6

MIT
INSTRUMENTATION LAB
CAMBRIDGE, MASS.

MANNED SPACECRAFT CENTER
HOUSTON, TEXAS

DRAWN
CHECKED
APPROVAL
APPROVAL
NASA APPROVAL
MIT APPROVAL

HEADER HOUSING
FILTER MODULE B5

CODE IDENT NO. —
SIZE J
NASA DRAWING NO. 1004704
SCALE 4/1
WT —
SHEET 1 OF 1

1004704

1004704

24

NOTICE — WHEN GOVERNMENT DRAWINGS, SPECIFICATIONS, OR OTHER DATA ARE USED FOR ANY PURPOSE OTHER THAN IN CONNECTION WITH A DEFINITELY RELATED GOVERNMENT PROCUREMENT OPERATION THE UNITED STATES GOVERNMENT THEREBY INCURS NO RESPONSIBILITY NOR ANY OBLIGATION WHATSOEVER, AND THE FACT THAT THE GOVERNMENT MAY HAVE FORMULATED, FURNISHED OR IN ANY WAY SUPPLIED THE SAID DRAWINGS, SPECIFICATIONS OR OTHER DATA IS NOT TO BE REGARDED BY IMPLICATION OR OTHERWISE AS IN ANY MANNER LICENSING THE HOLDER OR ANY OTHER PERSON OR CORPORATION, OR CONVEYING ANY RIGHTS OR PERMISSION TO MANUFACTURE USE OR SELL ANY PATENTED INVENTION THAT MAY IN ANY WAY BE RELATED THERETO.

REVISIONS 10614			
SYM	DESCRIPTION	DATE	APPROVAL

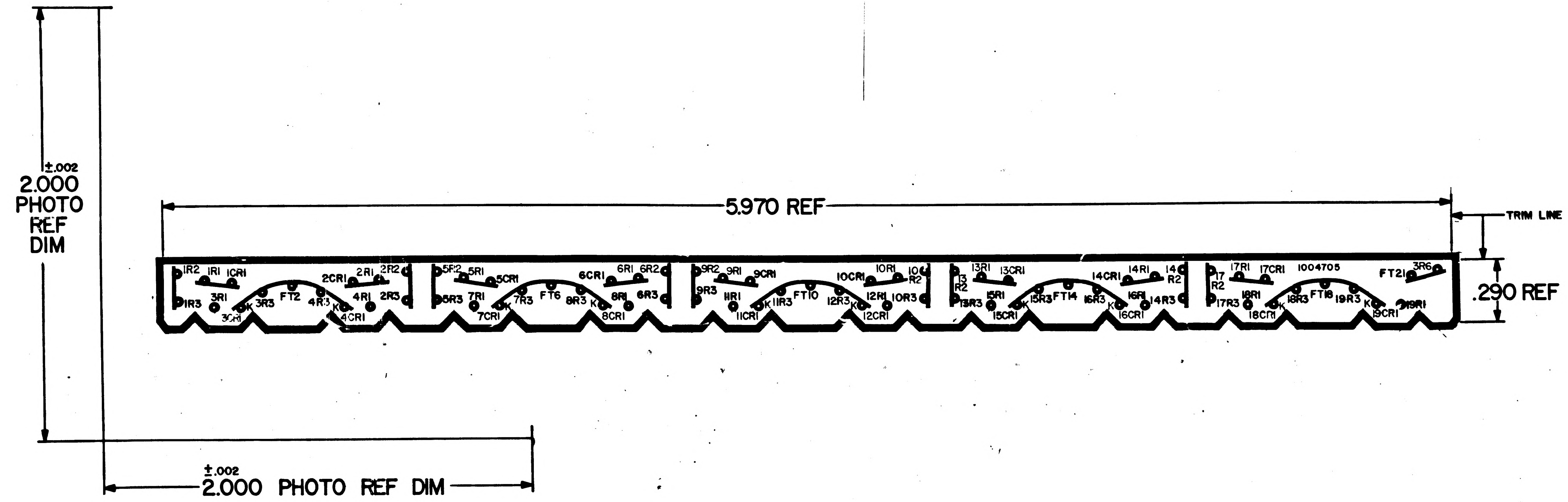
±.002
2.000
PHOTO
REF
DIM
5.970 REF
TRIM LINE
.290 REF
±.002
2.000 PHOTO REF DIM
1R2
1R1
1CR1
1R3
3R1
3CR1
3R3
FT2
4R3
K
4R1
4CR1
2CR1
2R1
2R2
2R3
5R2
5R1
5CR1
5R3
7R1
7CR1
K
7R3
FT6
8R3
K
8CR1
6CR1
6R1
6R2
8R1
6R3
9R2
9R1
9CR1
9R3
11R1
11CR1
K
11R3
FT10
12R3
K
12CR1
10CR1
10R1
10 R2
12R1
10R3
13 R2
13R1
13CR1
13R3
15R1
15CR1
K
15R3
FT14
16R3
K
16CR1
14CR1
14R1
14 R2
16R1
14R3
17 R2
17R1
17CR1
17R3
18R1
18CR1
K
18R3
FT18
19R3
K
19CR1
1004705
FT21
3R6
19R1

NOTES:
1. INTERPRET DRAWING IN ACCORDANCE WITH STANDARDS PRESCRIBED BY MIL-D-70327
2. ORIGINAL OF THIS DRAWING OR REPRODUCTION MADE BY A PROCESS OR METHOD SHALL INSURE DIMENSIONAL STABILITY. DIMENSIONAL STABILITY SHALL NOT EXCEED .001 INCH PER INCH
3. CUT TO WITHIN .010 OF TRIM LINE
4. MAKE MASTER PATTERN POSITIVE FILMS TO DIMENSIONS SHOWN
5. MATERIAL: FILM .006/.008 THICK PER L-F-340, TYPE IB, CLASS 2, STYLE IA
6. ● .035/.045 DIA PUNCH

MASTER

QTY REQD	PART OR IDENTIFYING NO.	NOMENCLATURE OR DESCRIPTION	FIND NO.

LIST OF MATERIALS

1003709	
NEXT ASSY	USED ON
APPLICATION	

UNLESS OTHERWISE SPECIFIED
DIMENSIONS ARE IN INCHES
TOLERANCES ON
FRACTIONS ± DECIMALS ± ANGLES ±
DO NOT SCALE THIS DRAWING
MATERIAL
SEE NOTE 5
HEAT TREATMENT
FINAL FINISH

MIT
INSTRUMENTATION LAB
CAMBRIDGE, MASS.
DWG. NO.
CONTRACT
DRAWN J.F. Walsh DATE 12 June 64
CHECKED 25 June 64
APPROVAL E.J. Duggan 29 June 64
APPROVAL 29 June 64
NASA APPROVAL
MIT APPROVAL

MANNED SPACECRAFT CENTER
HOUSTON, TEXAS

INSULATOR "A" PHOTOGRAPHIC MASTER
INTERFACE MODULE A20 OR A40

CODE IDENT NO. —
SIZE D
NASA DRAWING NO. 1004705
SCALE 4/1
WT
SHEET 1 OF 1

1004705

INCHES
0 1 2
PHOTOGRAPHIC SCALE CHECK

NOTICE – WHEN GOVERNMENT DRAWINGS, SPECIFICATIONS, OR OTHER DATA ARE USED FOR ANY PURPOSE OTHER THAN IN CONNECTION WITH A DEFINITELY RELATED GOVERNMENT PROCUREMENT OPERATION, THE UNITED STATES GOVERNMENT THEREBY INCURS NO RESPONSIBILITY NOR ANY OBLIGATION WHATSOEVER; AND THE FACT THAT THE GOVERNMENT MAY HAVE FORMULATED, FURNISHED, OR IN ANY WAY SUPPLIED THE SAID DRAWINGS, SPECIFICATIONS OR OTHER DATA IS NOT TO BE REGARDED BY IMPLICATION OR OTHERWISE AS IN ANY MANNER LICENSING THE HOLDER OR ANY OTHER PERSON OR CORPORATION, OR CONVEYING ANY RIGHTS OR PERMISSION TO MANUFACTURE, USE, OR SELL ANY PATENTED INVENTION THAT MAY IN ANY WAY BE RELATED THERETO.

REVISIONS						
SYM	ZONE	DESCRIPTION 10730	DR	CHK	DATE	APPROVED

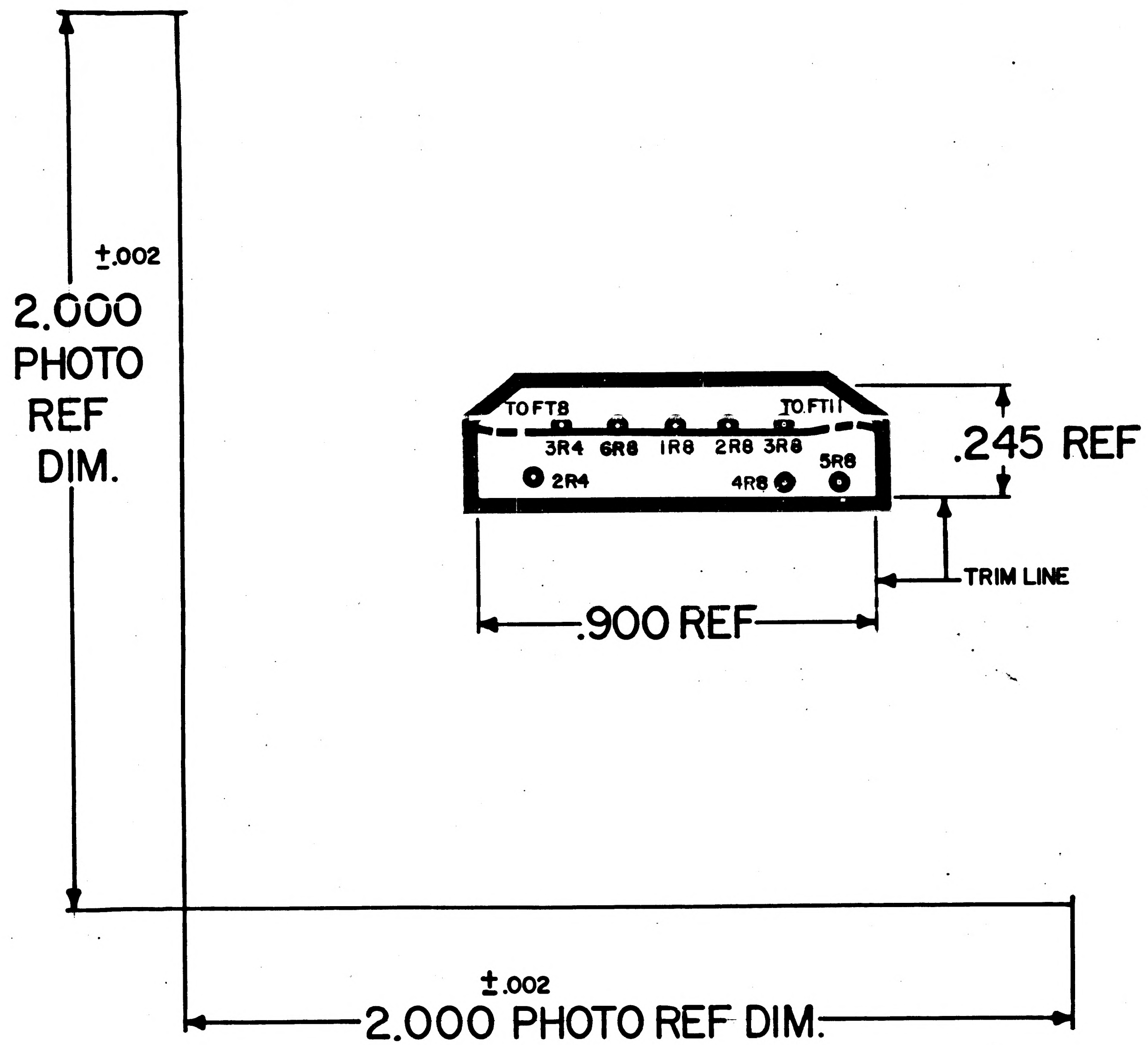

NOTES
1. INTERPRET DRAWING IN ACCORDANCE WITH STANDARDS PRESCRIBED BY MIL-D-70327
2. ORIGINAL OF THIS DRAWING OR REPRODUCTION MADE BY A PROCESS OR METHOD SHALL INSURE DIMENSIONAL STABILITY DIMENSIONAL STABILITY SHALL NOT EXCEED .001 INCH PER INCH
3. CUT TO WITHIN .010 OF TRIM LINE
4. MAKE MASTER PATTERN POSITIVE FILM TO DIMENSIONS SHOWN
5. MATERIAL: FILM .006/.008 THICK PER L-F-340, TYPE IB, CLASS 2, STYLE IA
6. ◉ .035/.045 DIA PUNCH

MASTER

1003708	
NEXT ASSY	USED ON
APPLICATION	

UNLESS OTHERWISE SPECIFIED
DIMENSIONS ARE IN INCHES
CAPACITOR VALUES ARE IN µf
RESISTOR VALUES ARE IN OHMS
TOLERANCES ON
FRACTIONS ± — DECIMALS ± — ANGLES ± —
DO NOT SCALE THIS DRAWING

MATERIAL
SEE NOTE 5

QTY REQD	PART OR IDENTIFYING NO.	MATERIAL OR NOTES	NOMENCLATURE OR DESCRIPTION	FIND NO.

LIST OF MATERIALS

MIT
INSTRUMENTATION LAB
CAMBRIDGE, MASS.

MANNED SPACECRAFT CENTER
HOUSTON, TEXAS

DRAWN	Tom Wilson	9 Jun 64
CHECKED	R Lizewski	29 JUN 64
APPROVED	E Duggan	29 June 64
APPROVED	Ellen C Hall	29 June 64
APPROVED MIT	D Hoag	6/29/64
APPROVED MSC		6/25/64
		DATE

INSULATOR "A" PHOTOGRAPHIC MASTER
INTERFACE MODULE A19 OR A39

CODE IDENT NO.	SIZE	DRAWING NO.
—	C	1004710
SCALE 4/1	—	SHEET 1 OF 1

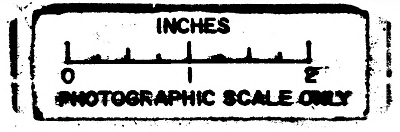

NOTICE — WHEN GOVERNMENT DRAWINGS, SPECIFICATIONS, OR OTHER DATA ARE USED FOR ANY PURPOSE OTHER THAN IN CONNECTION WITH A DEFINITELY RELATED GOVERNMENT PROCUREMENT OPERATION, THE UNITED STATES GOVERNMENT THEREBY INCURS NO RESPONSIBILITY NOR ANY OBLIGATION WHATSOEVER; AND THE FACT THAT THE GOVERNMENT MAY HAVE FORMULATED, FURNISHED, OR IN ANY WAY SUPPLIED THE SAID DRAWINGS, SPECIFICATIONS OR OTHER DATA IS NOT TO BE REGARDED BY IMPLICATION OR OTHERWISE AS IN ANY MANNER LICENSING THE HOLDER OR ANY OTHER PERSON OR CORPORATION, OR CONVEYING ANY RIGHTS OR PERMISSION TO MANUFACTURE, USE, OR SELL ANY PATENTED INVENTION THAT MAY IN ANY WAY BE RELATED THERETO.

REVISIONS 10730

SYM	DESCRIPTION	DATE	APPROVAL
A	REVISED PER TDRR 11483		

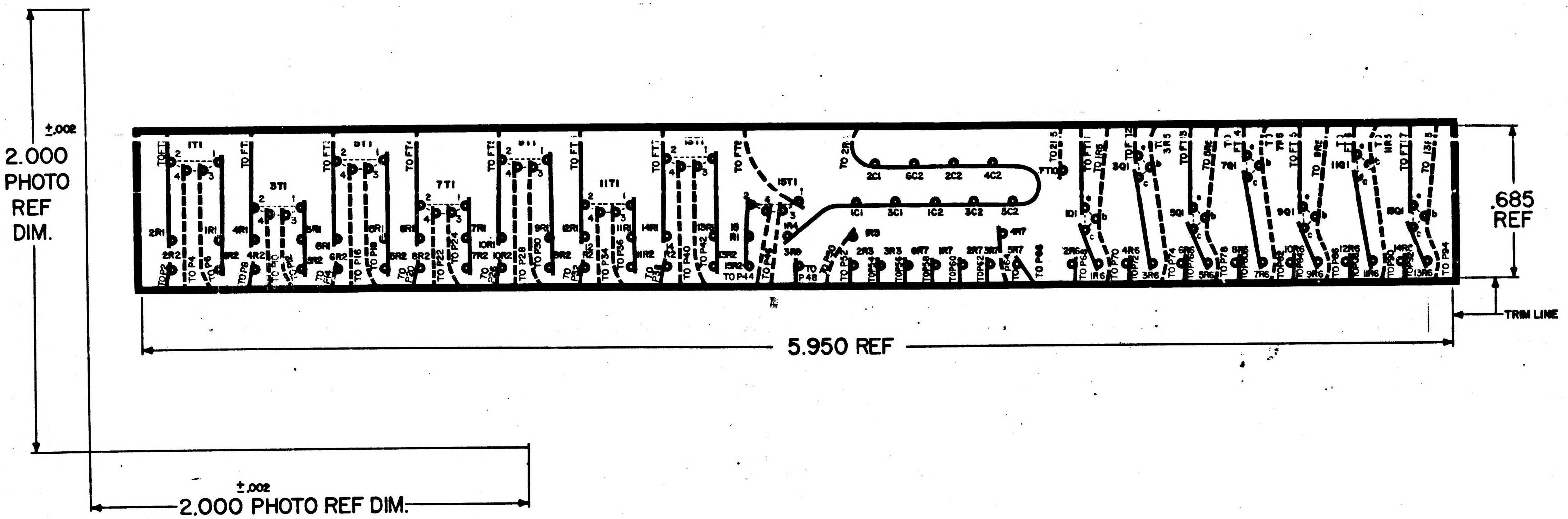

±.002
2.000 PHOTO REF DIM.
±.002
2.000 PHOTO REF DIM.
.685 REF
5.950 REF
TRIM LINE
1T1
3T1
5T1
7T1
9T1
11T1
13T1
15T1
TO FT1
TO P2
TO P4
TO P6
TO P8
TO P10
TO P12
TO P14
TO P16
TO P18
TO P20
TO P22
TO P24
TO P26
TO P28
TO P30
TO P32
TO P34
TO P36
TO P38
TO P40
TO P42
TO P44
TO P46
TO P48
TO P50
TO P52
TO P54
TO P56
TO P58
TO P60
TO P62
TO P64
TO P66
TO P68
TO P70
TO P72
TO P74
TO P76
TO P78
TO P80
TO P82
TO P84
TO P86
TO P88
TO P90
TO P92
TO P94
1R1
2R1
3R1
4R1
5R1
6R1
7R1
8R1
9R1
10R1
11R1
12R1
13R1
14R1
15R1
1R2
2R2
3R2
4R2
5R2
6R2
7R2
8R2
9R2
10R2
11R2
12R2
13R2
14R2
15R2
1R4
1R5
2R3
3R3
3R9
6R7
1R7
2R7
3R7
4R7
5R7
TO 2R
2C1
6C2
2C2
4C2
1C1
3C1
1C2
3C2
5C2
FT10
TO 21 5
TO FT11
TO 1R5
TO FT12
TO 3R5
TO FT13
TO 5R5
TO FT14
TO 7R5
TO FT15
TO 9R5
TO FT16
TO 11R5
TO FT17
TO 13R5
1Q1
3Q1
5Q1
7Q1
9Q1
11Q1
13Q1
e
b
c
1R6
2R6
3R6
4R6
5R6
6R6
7R6
8R6
9R6
10R6
11R6
12R6
13R6
14R6

NOTES
1. INTERPRET DRAWING IN ACCORDANCE WITH STANDARDS PRESCRIBED BY MIL-D-70327
2. ORIGINAL OF THIS DRAWING OR REPRODUCTION MADE BY A PROCESS OR METHOD SHALL INSURE DIMENSIONAL STABILITY DIMENSIONAL STABILITY SHALL NOT EXCEED .001 INCH PER INCH
3. CUT TO WITHIN .010 OF TRIM LINE
4. MAKE MASTER PATTERN POSITIVE FILM TO DIMENSIONS SHOWN
5. MATERIAL: FILM .006/.008 THICK PER L-F-340, TYPE IB, CLASS 2, STYLE IA
6. ● .035/.045 DIA PUNCH

MASTER

QTY REQD	PART OR IDENTIFYING NO.	NOMENCLATURE OR DESCRIPTION	FIND NO.

LIST OF MATERIALS

NEXT ASSY	USED ON
1003708	

APPLICATION

UNLESS OTHERWISE SPECIFIED DIMENSIONS ARE IN INCHES
TOLERANCES ON
FRACTIONS ± — DECIMALS ± — ANGLES ± —
DO NOT SCALE THIS DRAWING
MATERIAL SEE NOTE 5
HEAT TREATMENT —
FINAL FINISH —

MIT
INSTRUMENTATION LAB
CAMBRIDGE, MASS
DWG. NO.
CONTRACT
DRAWN Tom Gibson DATE 18 JUN 64
CHECKED R. Listanci 29 JUN 64
APPROVAL E. J. Duggan 29 June 64
APPROVAL Eldon C Hall 29 June 64
NASA APPROVAL 6/25/64
MIT APPROVAL 6/29/64

MANNED SPACECRAFT CENTER
HOUSTON, TEXAS

INSULATOR "B"
PHOTOGRAPHIC MASTER
INTERFACE MODULE A19 OR A39

CODE IDENT NO. —
SIZE D
NASA DRAWING NO. 1004711
SCALE 4/1
WT —
SHEET 1 OF 1

1004711 A

INCHES
0 1 2
PHOTOGRAPHIC SCALE-GREY

NOTICE — WHEN GOVERNMENT DRAWINGS, SPECIFICATIONS, OR OTHER DATA ARE USED FOR ANY PURPOSE OTHER THAN IN CONNECTION WITH A DEFINITELY RELATED GOVERNMENT PROCUREMENT OPERATION, THE UNITED STATES GOVERNMENT THEREBY INCURS NO RESPONSIBILITY NOR ANY OBLIGATION WHATSOEVER; AND THE FACT THAT THE GOVERNMENT MAY HAVE FORMULATED, FURNISHED OR IN ANY WAY SUPPLIED THE SAID DRAWINGS, SPECIFICATIONS OR OTHER DATA IS NOT TO BE REGARDED BY IMPLICATION OR OTHERWISE AS IN ANY MANNER LICENSING THE HOLDER OR ANY OTHER PERSON OR CORPORATION, OR CONVEYING ANY RIGHTS OR PERMISSION TO MANUFACTURE USE OR SELL ANY PATENTED INVENTION THAT MAY IN ANY WAY BE RELATED THERETO.

REVISIONS 10730			
SYM	DESCRIPTION	DATE	APPROVAL

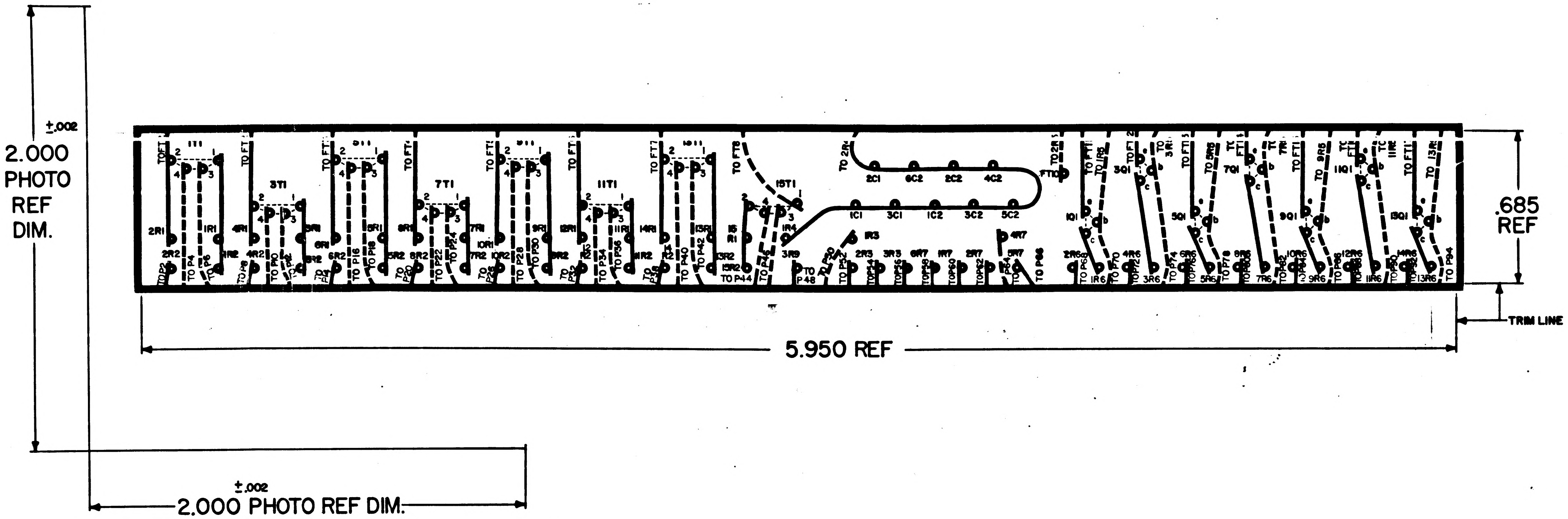
±.002
2.000
PHOTO
REF
DIM.
1T1
3T1
5T1
7T1
9T1
11T1
13T1
15T1
2R1
1R1
4R1
3R1
6R1
5R1
8R1
7R1
10R1
9R1
12R1
11R1
14R1
13R1
15R1
1R4
3R9
1R3
4R7
2R2
4R2
6R2
8R2
10R2
12R2
14R2
15R2
2C1
6C2
2C2
4C2
1C1
3C1
1C2
3C2
5C2
FT10
1Q1
3Q1
5Q1
7Q1
9Q1
11Q1
13Q1
1R6
3R6
5R6
7R6
9R6
11R6
13R6
TO FT1
TO P2
TO P4
TO P44
TO P48
TO P94
.685
REF
5.950 REF
TRIM LINE
±.002
2.000 PHOTO REF DIM.

NOTES
1. INTERPRET DRAWING IN ACCORDANCE WITH STANDARDS PRESCRIBED BY MIL-D-70327
2. ORIGINAL OF THIS DRAWING OR REPRODUCTION MADE BY A PROCESS OR METHOD SHALL INSURE DIMENSIONAL STABILITY DIMENSIONAL STABILITY SHALL NOT EXCEED .001 INCH PER INCH
3. CUT TO WITHIN .010 OF TRIM LINE
4. MAKE MASTER PATTERN POSITIVE FILM TO DIMENSIONS SHOWN
5. MATERIAL: FILM .006/.008 THICK PER L-F-340, TYPE IB, CLASS 2, STYLE IA
6. ● .035/.045 DIA PUNCH

MASTER

QTY REQD	PART OR IDENTIFYING NO.	NOMENCLATURE OR DESCRIPTION	FIND NO.

LIST OF MATERIALS

1003708	
NEXT ASSY	USED ON
APPLICATION	

UNLESS OTHERWISE SPECIFIED DIMENSIONS ARE IN INCHES
TOLERANCES ON
FRACTIONS ± DECIMALS ± ANGLES ±
DO NOT SCALE THIS DRAWING
MATERIAL SEE NOTE 5
HEAT TREATMENT
FINAL FINISH

MIT
INSTRUMENTATION LAB
CAMBRIDGE, MASS.
DWG. NO. CONTRACT
DRAWN Tom Wilson DATE 18 JUN 64
CHECKED R. Listanis 29 JUN 64
APPROVAL E. J. Duggan 29 June 64
APPROVAL Eldon C. Hall 29 June 64
NASA APPROVAL 6/15/64
MIT APPROVAL 6/29/64

MANNED SPACECRAFT CENTER
HOUSTON, TEXAS

INSULATOR "B"
PHOTOGRAPHIC MASTER
INTERFACE MODULE A19 OR A39

CODE IDENT NO. —— SIZE D NASA DRAWING NO. 1004711
SCALE 4/1 WT —— SHEET 1 OF 1

INCHES
0 1 2
PHOTOGRAPHIC SCALE ONLY

NOTICE — WHEN GOVERNMENT DRAWINGS, SPECIFICATIONS, OR OTHER DATA ARE USED FOR ANY PURPOSE OTHER THAN IN CONNECTION WITH A DEFINITELY RELATED GOVERNMENT PROCUREMENT OPERATION, THE UNITED STATES GOVERNMENT THEREBY INCURS NO RESPONSIBILITY NOR ANY OBLIGATION WHATSOEVER; AND THE FACT THAT THE GOVERNMENT MAY HAVE FORMULATED, FURNISHED, OR IN ANY WAY SUPPLIED THE SAID DRAWINGS, SPECIFICATIONS OR OTHER DATA IS NOT TO BE REGARDED BY IMPLICATION OR OTHERWISE AS IN ANY MANNER LICENSING THE HOLDER OR ANY OTHER PERSON OR CORPORATION, OR CONVEYING ANY RIGHTS OR PERMISSION TO MANUFACTURE, USE, OR SELL ANY PATENTED INVENTION THAT MAY IN ANY WAY BE RELATED THERETO.

REVISIONS 10730			
SYM	DESCRIPTION	DATE	APPROVAL

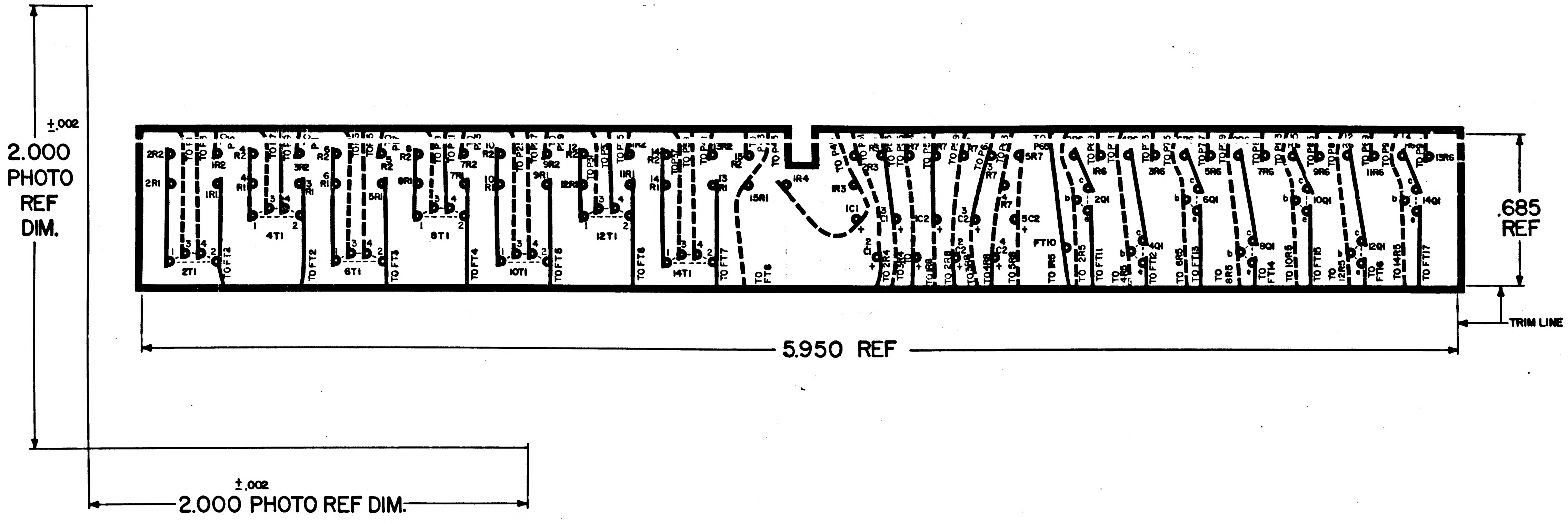

NOTES
1. INTERPRET DRAWING IN ACCORDANCE WITH STANDARDS PRESCRIBED BY MIL-D-70327
2. ORIGINAL OF THIS DRAWING OR REPRODUCTION MADE BY A PROCESS OR METHOD SHALL INSURE DIMENSIONAL STABILITY DIMENSIONAL STABILITY SHALL NOT EXCEED .001 INCH PER INCH
3. CUT TO WITHIN .010 OF TRIM LINE
4. MAKE MASTER PATTERN POSITIVE FILM TO DIMENSIONS SHOWN
5. MATERIAL: FILM .006/.008 THICK PER L-F-340, TYPE IB, CLASS 2, STYLE IA
6. ● .035/.045 DIA PUNCH

MASTER

QTY REQD	PART OR IDENTIFYING NO.	NOMENCLATURE OR DESCRIPTION	FIND NO.

LIST OF MATERIALS

NEXT ASSY	USED ON
1003708	

APPLICATION

UNLESS OTHERWISE SPECIFIED DIMENSIONS ARE IN INCHES
TOLERANCES ON
FRACTIONS ± DECIMALS ± ANGLES ±
DO NOT SCALE THIS DRAWING
MATERIAL SEE NOTE 5
HEAT TREATMENT
FINAL FINISH

MIT
INSTRUMENTATION LAB
CAMBRIDGE, MASS.
DWG. NO.
CONTRACT
DRAWN DATE 16 JUN 64
CHECKED 23 JUN 64
APPROVAL
APPROVAL 23 June 64
NASA APPROVAL 6/25/69
MIT APPROVAL 6/29/69

MANNED SPACECRAFT CENTER
HOUSTON, TEXAS

INSULATOR "C"
PHOTOGRAPHIC MASTER
INTERFACE MODULE A19 OR A39

CODE IDENT NO. —
SIZE D
NASA DRAWING NO. 1004712
SCALE 4/1
WT —
SHEET 1 OF 1

INCHES
0 1 2

NOTICE — WHEN GOVERNMENT DRAWINGS, SPECIFICATIONS, OR OTHER DATA ARE USED FOR ANY PURPOSE OTHER THAN IN CONNECTION WITH A DEFINITELY RELATED GOVERNMENT PROCUREMENT OPERATION, THE UNITED STATES GOVERNMENT THEREBY INCURS NO RESPONSIBILITY NOR ANY OBLIGATION WHATSOEVER; AND THE FACT THAT THE GOVERNMENT MAY HAVE FORMULATED, FURNISHED, OR IN ANY WAY SUPPLIED THE SAID DRAWINGS, SPECIFICATIONS, OR OTHER DATA IS NOT TO BE REGARDED BY IMPLICATION OR OTHERWISE AS IN ANY MANNER LICENSING THE HOLDER OR ANY OTHER PERSON OR CORPORATION, OR CONVEYING ANY RIGHTS OR PERMISSION TO MANUFACTURE, USE, OR SELL ANY PATENTED INVENTION THAT MAY IN ANY WAY BE RELATED THERETO

(7)

SYM	DESCRIPTION	DATE	APPROVAL
	REVISIONS TDRR 12306		
A	REVISED AND UPGRADED TO CLASS A PER TDRR 12564	13 Sept 68	

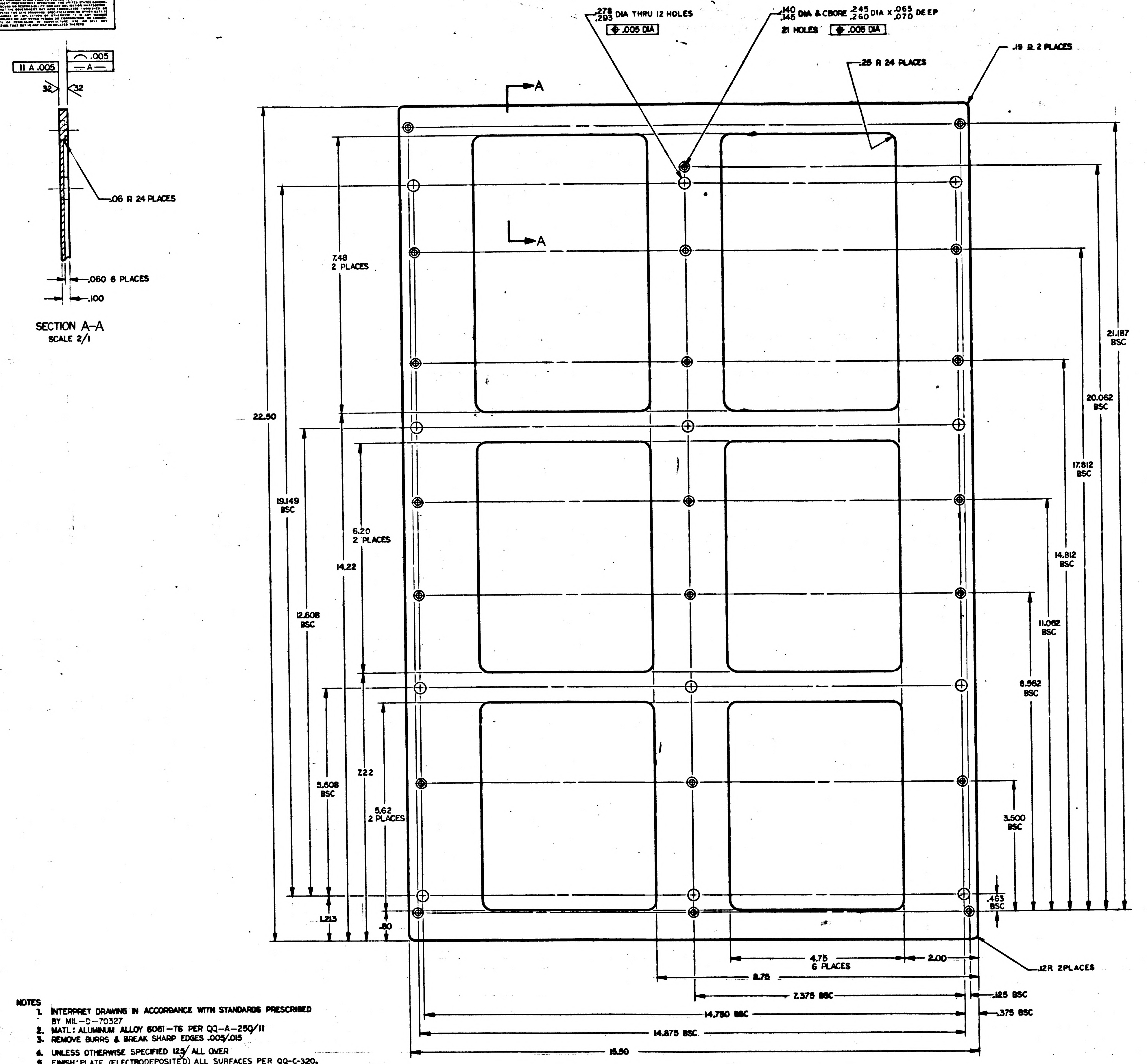
.278 / .293 DIA THRU 12 HOLES
⌖ .005 DIA
.140 / .145 DIA & CBORE .245 / .260 DIA X .065 / .070 DEEP
21 HOLES ⌖ .005 DIA
.19 R 2 PLACES
.25 R 24 PLACES
A
A
11 A .005
⌒ .005
A
32
32
.06 R 24 PLACES
.060 6 PLACES
.100
SECTION A-A
SCALE 2/1
7.48
2 PLACES
22.50
19.149
BSC
6.20
2 PLACES
14.22
12.608
BSC
7.22
5.608
BSC
5.62
2 PLACES
1.213
.80
21.187
BSC
20.062
BSC
17.812
BSC
14.812
BSC
11.062
BSC
8.562
BSC
3.500
BSC
.463
BSC
4.75
6 PLACES
2.00
8.76
7.375 BSC
.125 BSC
14.750 BSC
.375 BSC
14.875 BSC
15.50
.12R 2PLACES

NOTES

1. INTERPRET DRAWING IN ACCORDANCE WITH STANDARDS PRESCRIBED BY MIL-D-70327
2. MATL: ALUMINUM ALLOY 6061-T6 PER QQ-A-250/11
3. REMOVE BURRS & BREAK SHARP EDGES .005/.015
4. UNLESS OTHERWISE SPECIFIED 125√ ALL OVER
5. FINISH: PLATE (ELECTRODEPOSITED) ALL SURFACES PER QQ-C-320, CLASS 2, TYPE I, PLATING TO BE .0004 TO .0008 THICK, HARDNESS ROCKELL C60 MIN. DIMENSIONS APPLY AFTER PLATING. SPECIFIED THICKNESS NOT REQUIRED IN ALL HOLES AS LONG AS PLATING IS CONTINUOUS THROUGH EACH HOLE
6. IDENTIFY PER ND 1002019

MASTER

QTY REQD	PART OR IDENTIFYING NO.	NOMENCLATURE OR DESCRIPTION	FIND NO.

LIST OF MATERIALS

NEXT ASSY	USED ON

APPLICATION

UNLESS OTHERWISE SPECIFIED
DIMENSIONS ARE IN INCHES
TOLERANCES ON
FRACTIONS ± — DECIMALS XXX±.005 XX±.01 ANGLES ± —
DO NOT SCALE THIS DRAWING
MATERIAL SEE NOTE 2
HEAT TREATMENT —
FINAL FINISH SEE NOTE 5

MIT
INSTRUMENTATION LAB
CAMBRIDGE, MASS
DWG. NO. CONTRACT
DRAWN
DATE
CHECKED
APPROVAL E J Duggan
APPROVAL
NASA APPROVAL
MIT APPROVAL

MANNED SPACECRAFT CENTER
HOUSTON, TEXAS

COVER, TRAY A
AGC COMPUTER

CODE IDENT NO. —
SIZE E
NASA DRAWING NO. 1004713
SCALE 1/1
WT —
SHEET 1 OF 1

NOTICE — WHEN GOVERNMENT DRAWINGS, SPECIFICATIONS, OR OTHER DATA ARE USED FOR ANY PURPOSE OTHER THAN IN CONNECTION WITH A DEFINITELY RELATED GOVERNMENT PROCUREMENT OPERATION, THE UNITED STATES GOVERNMENT THEREBY INCURS NO RESPONSIBILITY NOR ANY OBLIGATION WHATSOEVER; AND THE FACT THAT THE GOVERNMENT MAY HAVE FORMULATED, FURNISHED, OR IN ANY WAY SUPPLIED THE SAID DRAWINGS, SPECIFICATIONS, OR OTHER DATA IS NOT TO BE REGARDED BY IMPLICATION OR OTHERWISE AS IN ANY MANNER LICENSING THE HOLDER OR ANY OTHER PERSON OR CORPORATION, OR CONVEYING ANY RIGHTS OR PERMISSION TO MANUFACTURE, USE, OR SELL ANY PATENTED INVENTION THAT MAY IN ANY WAY BE RELATED THERETO

		REVISIONS TDRR 12306	
SYM	DESCRIPTION	DATE	APPROVAL
A	REVISED AND UPGRADED TO CLASS A PER TDRR 12569	13 Sept 68	
B	REVISED PER TDRR 13681	10/30/68	

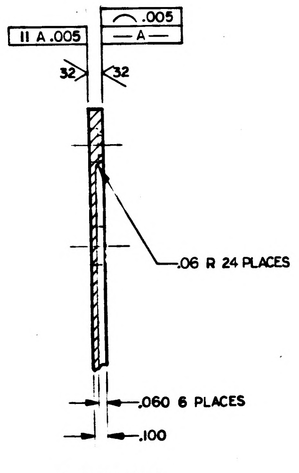
II A .005
⌒ .005
— A —
32
32
.06 R 24 PLACES
.060 6 PLACES
.100

SECTION A-A
SCALE 2/1

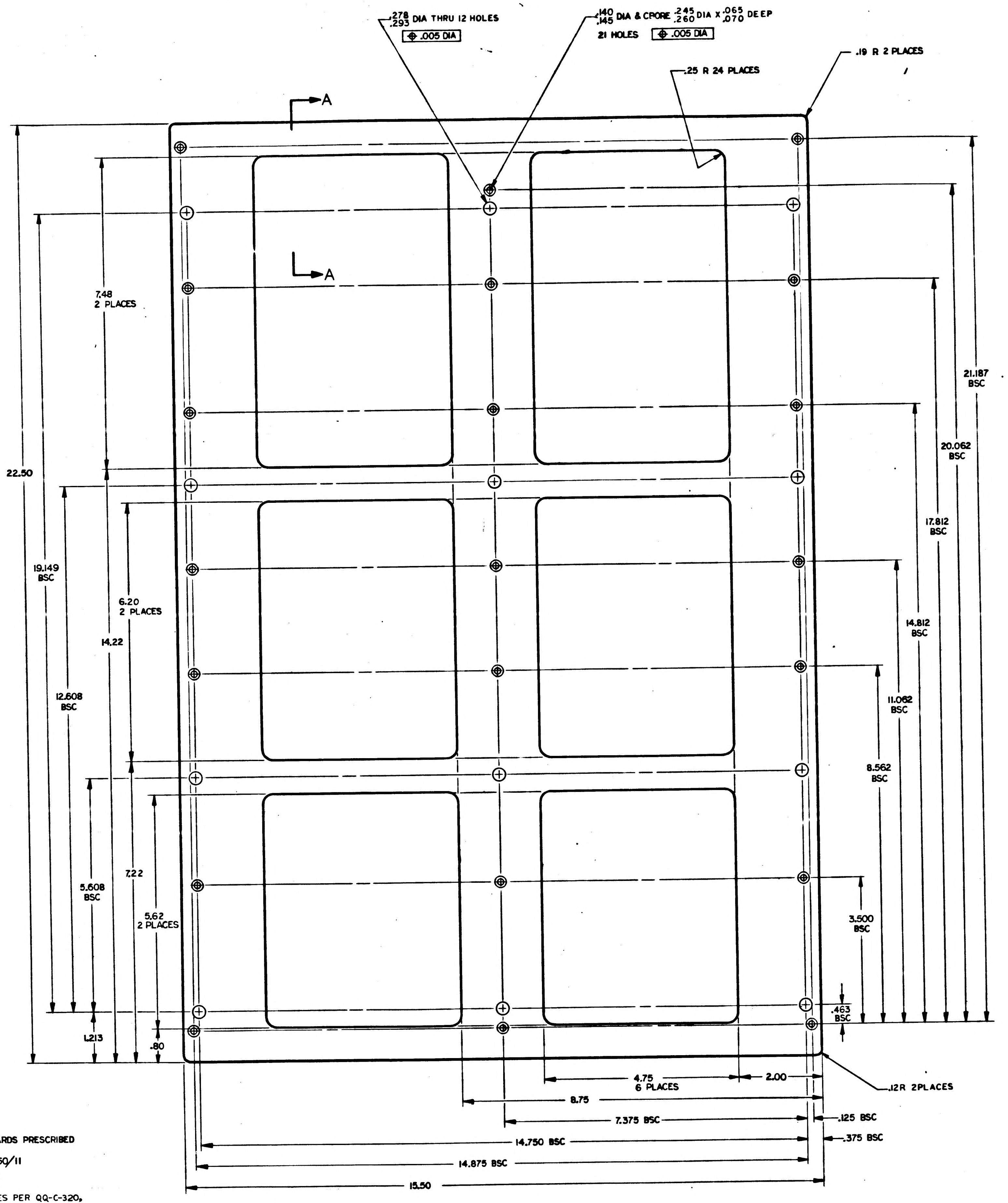
.278
.293 DIA THRU 12 HOLES
⊕ .005 DIA
.140
.145 DIA & CBORE .245
.260 DIA X .065
.070 DEEP
21 HOLES ⊕ .005 DIA
.19 R 2 PLACES
.25 R 24 PLACES
A
A
7.48
2 PLACES
22.50
19.149
BSC
6.20
2 PLACES
14.22
12.608
BSC
5.608
BSC
7.22
5.62
2 PLACES
1.213
.80
21.187
BSC
20.062
BSC
17.812
BSC
14.812
BSC
11.062
BSC
8.562
BSC
3.500
BSC
.463
BSC
4.75
6 PLACES
2.00
8.75
7.375 BSC
.125 BSC
14.750 BSC
.375 BSC
14.875 BSC
15.50
.12R 2PLACES

NOTES
1. INTERPRET DRAWING IN ACCORDANCE WITH STANDARDS PRESCRIBED BY MIL—D—70327
2. MATL: ALUMINUM ALLOY 6061—T6 PER QQ—A—250/11
3. REMOVE BURRS & BREAK SHARP EDGES .005/.015
4. UNLESS OTHERWISE SPECIFIED 125√ ALL OVER
5. FINISH: PLATE (ELECTRODEPOSITED) ALL SURFACES PER QQ-C-320, CLASS 2, TYPE II, PLATING TO BE .0004 TO .0008 THICK, HARDNESS ROCKELL C60 MIN. DIMENSIONS APPLY AFTER PLATING. SPECIFIED THICKNESS NOT REQUIRED IN ALL HOLES AS LONG AS PLATING IS CONTINUOUS THROUGH EACH HOLE
6. IDENTIFY PER ND 1002019

QTY REQD	PART OR IDENTIFYING NO.	NOMENCLATURE OR DESCRIPTION	FIND NO.

LIST OF MATERIALS

NEXT ASSY	USED ON
APPLICATION	

UNLESS OTHERWISE SPECIFIED
DIMENSIONS ARE IN INCHES
TOLERANCES ON
FRACTIONS ± — DECIMALS XXX±.005 XX±.01 ANGLES ± —
DO NOT SCALE THIS DRAWING
MATERIAL SEE NOTE 2
HEAT TREATMENT —
FINAL FINISH SEE NOTE 5

MIT
INSTRUMENTATION LAB
CAMBRIDGE, MASS
DWG NO. CONTRACT
DRAWN B J Pagio DATE
CHECKED
APPROVAL E J Duggan
APPROVAL
NASA APPROVAL
MIT APPROVAL

MANNED SPACECRAFT CENTER
HOUSTON, TEXAS

COVER, TRAY A
AGC COMPUTER

CODE IDENT NO. —
SIZE E
NASA DRAWING NO. 1004713
SCALE 1/1
WT —
SHEET 1 OF 1

1004713 B

MASTER

NOTICE — WHEN GOVERNMENT DRAWINGS, SPECIFICATIONS OR OTHER DATA ARE USED FOR ANY PURPOSE OTHER THAN IN CONNECTION WITH A DEFINITELY RELATED GOVERNMENT PROCUREMENT OPERATION, THE UNITED STATES GOVERNMENT THEREBY INCURS NO RESPONSIBILITY NOR ANY OBLIGATION WHATSOEVER, AND THE FACT THAT THE GOVERNMENT MAY HAVE FORMULATED, FURNISHED, OR IN ANY WAY SUPPLIED THE SAID DRAWINGS, SPECIFICATIONS OR OTHER DATA IS NOT TO BE REGARDED BY IMPLICATION OR OTHERWISE AS IN ANY MANNER LICENSING THE HOLDER OR ANY OTHER PERSON OR CORPORATION, OR CONVEYING ANY RIGHTS OR PERMISSION TO MANUFACTURE, USE, OR SELL ANY PATENTED INVENTION THAT MAY IN ANY WAY BE RELATED THERETO

REVISIONS TDRR 12306			
SYM	DESCRIPTION	DATE	APPROVAL
A	REVISED AND UPGRADED TO CLASS A PER TDRR 12564	[illegible]	[illegible]
B	REVISED PER TDRR 13621	10/20/64	[illegible]
C	REVISED PER TDRR 14290	11/3/64	[illegible]

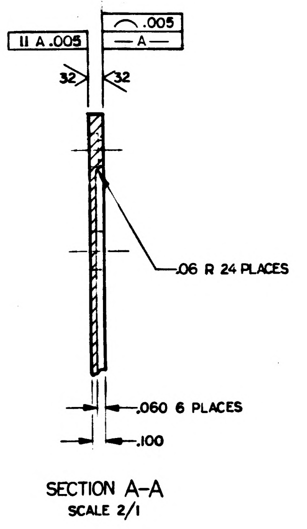

II A .005
⌒ .005
—A—
32
32
.06 R 24 PLACES
.060 6 PLACES
.100
SECTION A-A
SCALE 2/1

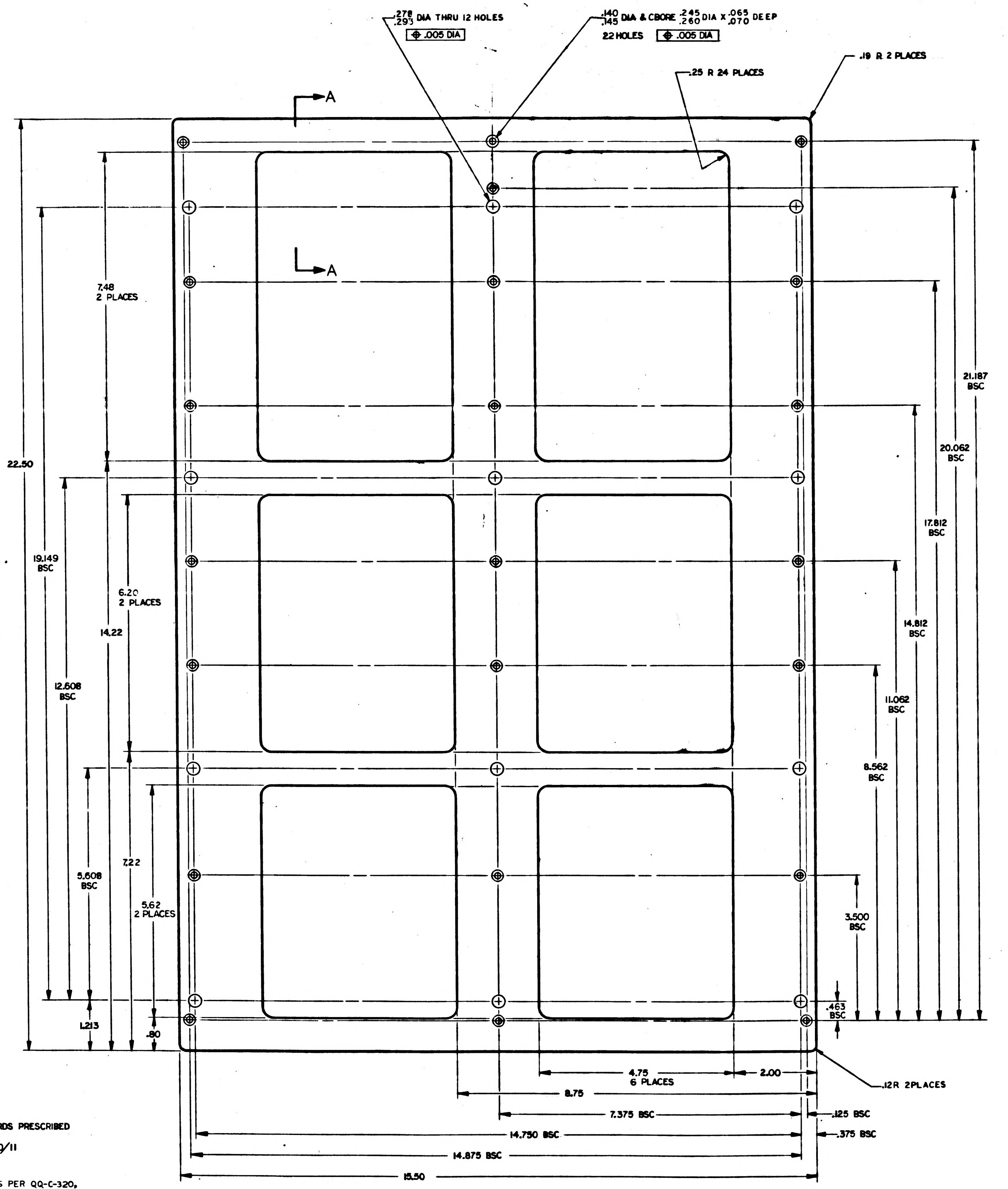

.278/.293 DIA THRU 12 HOLES
⊕ .005 DIA
.140/.145 DIA & CBORE .245/.260 DIA X .065/.070 DEEP
22 HOLES
⊕ .005 DIA
.25 R 24 PLACES
.19 R 2 PLACES
A
A
7.48
2 PLACES
22.50
19.149
BSC
6.20
2 PLACES
14.22
12.608
BSC
5.608
BSC
7.22
5.62
2 PLACES
1.213
.80
21.187
BSC
20.062
BSC
17.812
BSC
14.812
BSC
11.062
BSC
8.562
BSC
3.500
BSC
.463
BSC
4.75
6 PLACES
2.00
8.75
7.375 BSC
.125 BSC
14.750 BSC
.375 BSC
14.875 BSC
15.50
.12R 2PLACES

NOTES
1. INTERPRET DRAWING IN ACCORDANCE WITH STANDARDS PRESCRIBED BY MIL—D—70327
2. MATL: ALUMINUM ALLOY 6061—T6 PER QQ—A—250/11
3. REMOVE BURRS & BREAK SHARP EDGES .005/.015
4. UNLESS OTHERWISE SPECIFIED 125√ ALL OVER
5. FINISH: PLATE (ELECTRODEPOSITED) ALL SURFACES PER QQ-C-320, CLASS 2, TYPE II, PLATING TO BE .0004 TO .0008 THICK, HARDNESS ROCKELL C60 MIN. DIMENSIONS APPLY AFTER PLATING. SPECIFIED THICKNESS NOT REQUIRED IN ALL HOLES AS LONG AS PLATING IS CONTINUOUS THROUGH EACH HOLE
6. IDENTIFY PER ND 1002019

MASTER

QTY REQD	PART OR IDENTIFYING NO.	NOMENCLATURE OR DESCRIPTION	FIND NO.

LIST OF MATERIALS

NEXT ASSY	USED ON
APPLICATION	

UNLESS OTHERWISE SPECIFIED
DIMENSIONS ARE IN INCHES
TOLERANCES ON
FRACTIONS ± — DECIMALS XXX±.005 XX±.01 ANGLES ± —
DO NOT SCALE THIS DRAWING
MATERIAL SEE NOTE 2
HEAT TREATMENT —
FINAL FINISH SEE NOTE 5

MIT
INSTRUMENTATION LAB
CAMBRIDGE, MASS
DWG NO
CONTRACT
DRAWN [illegible] DATE [illegible]
CHECKED [illegible]
APPROVAL E. J. Duggan [illegible]
APPROVAL [illegible]
NASA APPROVAL [illegible]
MIT APPROVAL [illegible]

MANNED SPACECRAFT CENTER
HOUSTON, TEXAS

COVER, TRAY A
AGC COMPUTER

CODE IDENT NO. —
SIZE E
NASA DRAWING NO. 1004713
SCALE 1/1
WT —
SHEET 1 OF 1

NOTICE — WHEN GOVERNMENT DRAWINGS, SPECIFICATIONS, OR OTHER DATA ARE USED FOR ANY PURPOSE OTHER THAN IN CONNECTION WITH A DEFINITELY RELATED GOVERNMENT PROCUREMENT OPERATION, THE UNITED STATES GOVERNMENT THEREBY INCURS NO RESPONSIBILITY NOR ANY OBLIGATION WHATSOEVER; AND THE FACT THAT THE GOVERNMENT MAY HAVE FORMULATED, FURNISHED, OR IN ANY WAY SUPPLIED THE SAID DRAWINGS, SPECIFICATIONS, OR OTHER DATA IS NOT TO BE REGARDED BY IMPLICATION OR OTHERWISE AS IN ANY MANNER LICENSING THE HOLDER OR ANY OTHER PERSON OR CORPORATION, OR CONVEYING ANY RIGHTS OR PERMISSION TO MANUFACTURE, USE, OR SELL ANY PATENTED INVENTION THAT MAY IN ANY WAY BE RELATED THERETO

REVISIONS			
SYM	DESCRIPTION	DATE	APPROVAL

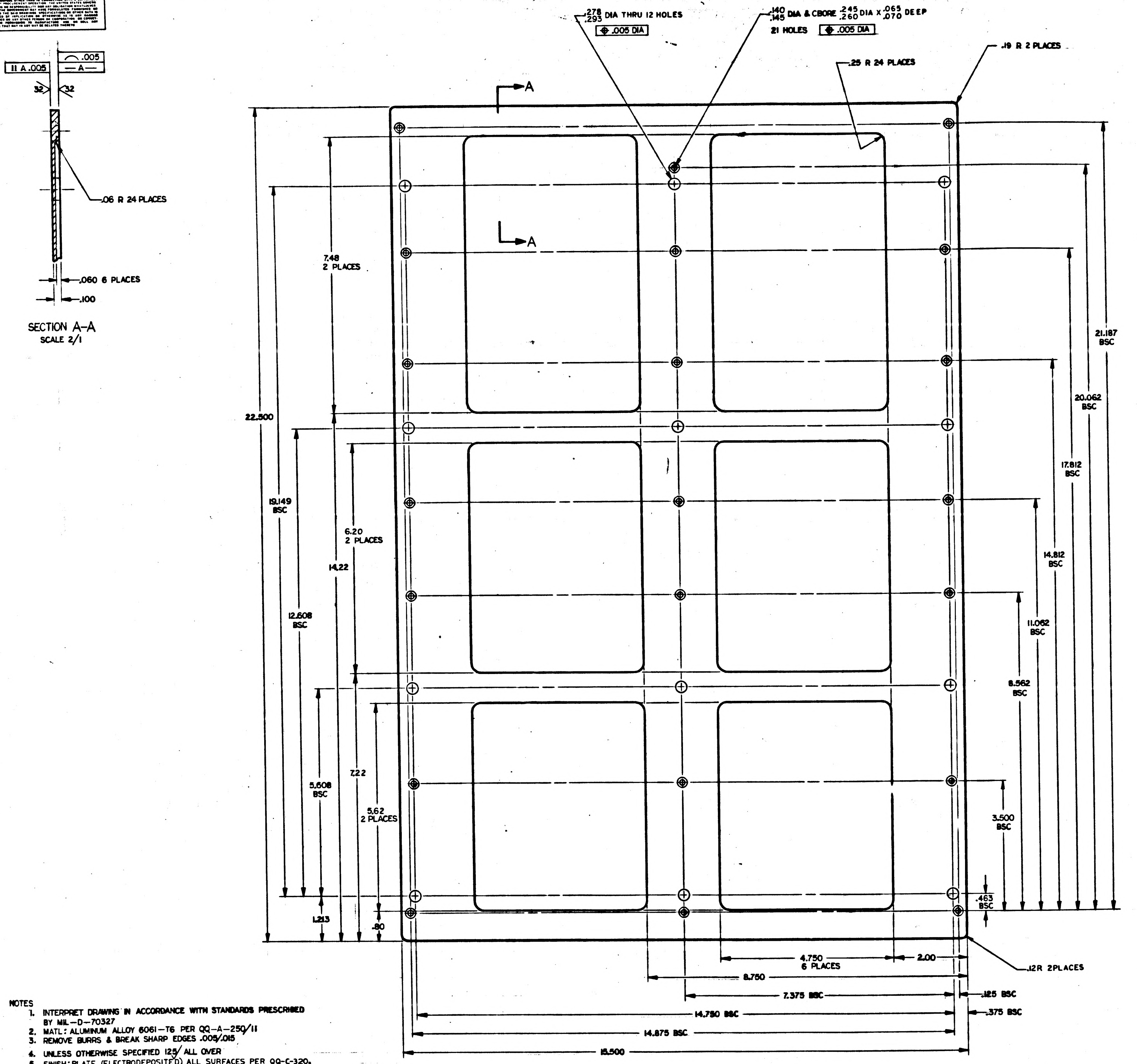

.278/.293 DIA THRU 12 HOLES
⌖ .005 DIA
.140/.145 DIA & CBORE .245/.260 DIA X .065/.070 DEEP
21 HOLES
⌖ .005 DIA
.19 R 2 PLACES
.25 R 24 PLACES
A
A
II A .005
⌒ .005
— A —
32
32
.06 R 24 PLACES
.060 6 PLACES
.100
SECTION A-A
SCALE 2/1
22.500
19.149 BSC
7.48 2 PLACES
14.22
6.20 2 PLACES
12.608 BSC
5.608 BSC
7.22
5.62 2 PLACES
1.213
.80
21.187 BSC
20.062 BSC
17.812 BSC
14.812 BSC
11.062 BSC
8.562 BSC
3.500 BSC
.463 BSC
4.750 6 PLACES
2.00
8.750
7.375 BSC
.125 BSC
14.750 BSC
.375 BSC
14.875 BSC
15.500
.12R 2PLACES

NOTES
1. INTERPRET DRAWING IN ACCORDANCE WITH STANDARDS PRESCRIBED BY MIL-D-70327
2. MATL: ALUMINUM ALLOY 6061-T6 PER QQ-A-250/11
3. REMOVE BURRS & BREAK SHARP EDGES .005/.015
4. UNLESS OTHERWISE SPECIFIED 125/ ALL OVER
5. FINISH: PLATE (ELECTRODEPOSITED) ALL SURFACES PER QQ-C-320, CLASS 2, TYPE II, PLATING TO BE .0004 TO .0002 THICK, HARDNESS ROCKELL C70-72. DIMENSIONS APPLY AFTER PLATING. SPECIFIED THICKNESS NOT REQUIRED IN ALL HOLES AS LONG AS PLATING IS CONTINUOUS THROUGH EACH HOLE
6. IDENTIFY PER ND 1002019

FOR INFORMATION ONLY
CLASS B RELEASE · TDR NO. 12306

MASTER

QTY REQD	PART OR IDENTIFYING NO.	NOMENCLATURE OR DESCRIPTION	FIND NO.
LIST OF MATERIALS			

NEXT ASSY	USED ON
APPLICATION	

UNLESS OTHERWISE SPECIFIED
DIMENSIONS ARE IN INCHES
TOLERANCES ON
FRACTIONS ± — DECIMALS XXX±.005 XX±.01 ANGLES ± —
DO NOT SCALE THIS DRAWING
MATERIAL SEE NOTE 2
HEAT TREATMENT ——
FINAL FINISH SEE NOTE 5

MIT
INSTRUMENTATION LAB
CAMBRIDGE, MASS
DWG NO. CONTRACT
DRAWN DATE
CHECKED
APPROVAL
APPROVAL
NASA APPROVAL
MIT APPROVAL

MANNED SPACECRAFT CENTER
HOUSTON, TEXAS

COVER, TRAY A
AGC COMPUTER

CODE IDENT NO. ——
SIZE E
NASA DRAWING NO. 1004713
SCALE 1/1
WT ——
SHEET 1 OF 1

12306

REVISIONS			
SYM	DESCRIPTION	DATE	APPROVAL
A	REVISED AND UP GRADED TO CLASS A PER TDRR 12584	14SEP64	

NOTICE — WHEN GOVERNMENT DRAWINGS, SPECIFICATIONS, OR OTHER DATA ARE USED FOR ANY PURPOSE OTHER THAN IN CONNECTION WITH A DEFINITELY RELATED GOVERNMENT PROCUREMENT OPERATION, THE UNITED STATES GOVERNMENT THEREBY INCURS NO RESPONSIBILITY NOR ANY OBLIGATION WHATSOEVER; AND THE FACT THAT THE GOVERNMENT MAY HAVE FORMULATED, FURNISHED, OR IN ANY WAY SUPPLIED THE SAID DRAWINGS, SPECIFICATIONS OR OTHER DATA IS NOT TO BE REGARDED BY IMPLICATION OR OTHERWISE AS IN ANY MANNER LICENSING THE HOLDER OR ANY OTHER PERSON OR CORPORATION, OR CONVEYING ANY RIGHTS OR PERMISSION TO MANUFACTURE, USE, OR SELL ANY PATENTED INVENTION THAT MAY IN ANY WAY BE RELATED THERETO.

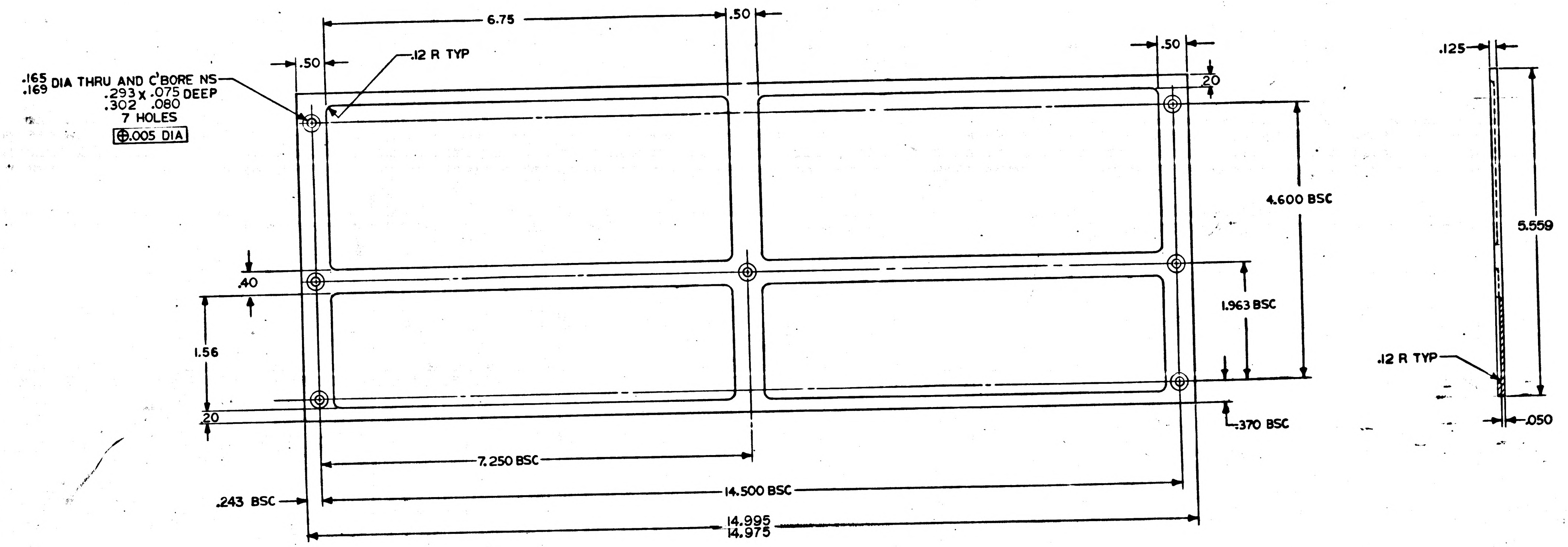

NOTES:
1. INTERPRET DRAWING IN ACCORDANCE WITH STANDARDS PRESCRIBED BY MIL-D-70327
2. MATERIAL: 6061-T6 ALUMINUM, PER QQ-A-250/11
3. SURFACE QUALITY: 125√ ALL OVER
4. REMOVE ALL BURRS AND BREAK SHARP EDGES .005/.015
5. FINISH: PLATE (ELECTRODEPOSITED) ALL SURFACES PER QQ-C-320, CLASS 2, TYPE I PLATING TO BE .0004 TO .0008 THICK, HARDNESS ROCKWELL C60 MIN. DIMENSIONS APPLY AFTER PLATING. SPECIFIED THICKNESS NOT REQUIRED IN ALL HOLES AS LONG AS PLATING IS CONTINOUS THROUGH EACH HOLE
6. IDENTIFY PER ND 1002019

MASTER

QTY REQD	PART OR IDENTIFYING NO.	NOMENCLATURE OR DESCRIPTION	FIND NO.
LIST OF MATERIALS			

NEXT ASSY	USED ON
1003700	
APPLICATION	

UNLESS OTHERWISE SPECIFIED DIMENSIONS ARE IN INCHES
TOLERANCES ON
FRACTIONS ± — DECIMALS XXX ±.005 XX ±.01 ANGLES ± —
DO NOT SCALE THIS DRAWING
MATERIAL SEE NOTE 2
HEAT TREATMENT
FINAL FINISH SEE NOTE 5

MIT INSTRUMENTATION LAB
CAMBRIDGE, MASS.
DWG. NO.
CONTRACT
DRAWN J.F. [illegible] DATE 2 [illegible] 64
CHECKED [illegible]
APPROVAL [illegible]
APPROVAL [illegible]
NASA APPROVAL [illegible]
MIT APPROVAL [illegible] 9 Apr 64

MANNED SPACECRAFT CENTER
HOUSTON, TEXAS

REAR PLATE
TRAY A&B
AGC COMPUTER

CODE IDENT NO. —
SIZE D
NASA DRAWING NO. 1004714
SCALE 1/1
WT —
SHEET 1 OF 1

12306

NOTICE — WHEN GOVERNMENT DRAWINGS, SPECIFICATIONS, OR OTHER DATA ARE USED FOR ANY PURPOSE OTHER THAN IN CONNECTION WITH A DEFINITELY RELATED GOVERNMENT PROCUREMENT OPERATION, THE UNITED STATES GOVERNMENT THEREBY INCURS NO RESPONSIBILITY NOR ANY OBLIGATION WHATSOEVER; AND THE FACT THAT THE GOVERNMENT MAY HAVE FORMULATED, FURNISHED, OR IN ANY WAY SUPPLIED THE SAID DRAWINGS, SPECIFICATIONS OR OTHER DATA IS NOT TO BE REGARDED BY IMPLICATION OR OTHERWISE AS IN ANY MANNER LICENSING THE HOLDER OR ANY OTHER PERSON OR CORPORATION, OR CONVEYING ANY RIGHTS OR PERMISSION TO MANUFACTURE, USE, OR SELL ANY PATENTED INVENTION THAT MAY IN ANY WAY BE RELATED THERETO.

REVISIONS

SYM	DESCRIPTION	DATE	APPROVAL
A	REVISED AND UP GRADED TO CLASS A PER TDRR 12584	14SEP64	RL
B	REVISED PER TDRR 13295	5FEB65	

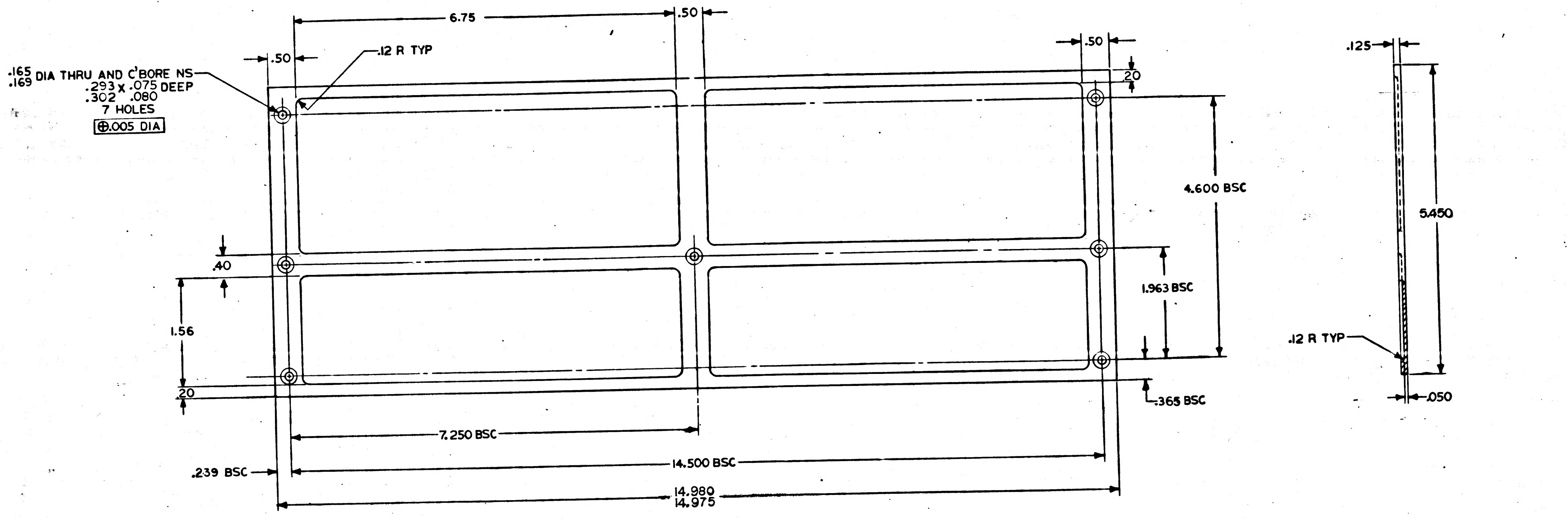

NOTES:

1. INTERPRET DRAWING IN ACCORDANCE WITH STANDARDS PRESCRIBED BY MIL-D-70327
2. MATERIAL: 6061-T6 ALUMINUM, PER QQ-A-250/11
3. SURFACE QUALITY: 125✓ ALL OVER
4. REMOVE ALL BURRS AND BREAK SHARP EDGES .005/.015
5. FINISH: PLATE (ELECTRODEPOSITED) ALL SURFACES PER QQ-C-320, CLASS 2, TYPE I PLATING TO BE .0004 TO .0008 THICK, HARDNESS ROCKWELL C60 MIN. DIMENSIONS APPLY AFTER PLATING. SPECIFIED THICKNESS NOT REQUIRED IN ALL HOLES AS LONG AS PLATING IS CONTINUOUS THROUGH EACH HOLE
6. IDENTIFY PER ND 1002019

MASTER

QTY REQD	PART OR IDENTIFYING NO.	NOMENCLATURE OR DESCRIPTION	FIND NO.

LIST OF MATERIALS

NEXT ASSY	USED ON
1003700	

APPLICATION

UNLESS OTHERWISE SPECIFIED DIMENSIONS ARE IN INCHES
TOLERANCES ON
FRACTIONS ± — DECIMALS XXX ±.005 XX ±.01 ANGLES ± —
DO NOT SCALE THIS DRAWING

MATERIAL SEE NOTE 2
HEAT TREATMENT
FINAL FINISH SEE NOTE 5

MIT INSTRUMENTATION LAB
CAMBRIDGE, MASS.
DWG. NO. CONTRACT

DRAWN J.F. Walsh DATE 2 July 64
CHECKED
APPROVAL
APPROVAL
NASA APPROVAL
MIT APPROVAL

MANNED SPACECRAFT CENTER
HOUSTON, TEXAS

REAR PLATE
TRAY A&B
AGC COMPUTER

CODE IDENT NO.	SIZE	NASA DRAWING NO.
—	D	1004714

SCALE 1/1 WT — SHEET 1 OF 1

INCHES
0 1/2

NOTICE — WHEN GOVERNMENT DRAWINGS, SPECIFICATIONS, OR OTHER DATA ARE USED FOR ANY PURPOSE OTHER THAN IN CONNECTION WITH A DEFINITELY RELATED GOVERNMENT PROCUREMENT OPERATION, THE UNITED STATES GOVERNMENT THEREBY INCURS NO RESPONSIBILITY NOR ANY OBLIGATION WHATSOEVER; AND THE FACT THAT THE GOVERNMENT MAY HAVE FORMULATED, FURNISHED, OR IN ANY WAY SUPPLIED THE SAID DRAWINGS, SPECIFICATIONS OR OTHER DATA IS NOT TO BE REGARDED BY IMPLICATION OR OTHERWISE AS IN ANY MANNER LICENSING THE HOLDER OR ANY OTHER PERSON OR CORPORATION, OR CONVEYING ANY RIGHTS OR PERMISSION TO MANUFACTURE, USE, OR SELL ANY PATENTED INVENTION THAT MAY IN ANY WAY BE RELATED THERETO.

12306

REVISIONS			
SYM	DESCRIPTION	DATE	APPROVAL
A	REVISED AND UP GRADED TO CLASS A PER TDRR 12584	14SEP64	CC
B	REVISED PER TDRR 13295		
C	REVISED PER TDRR 13681	10/2/64	

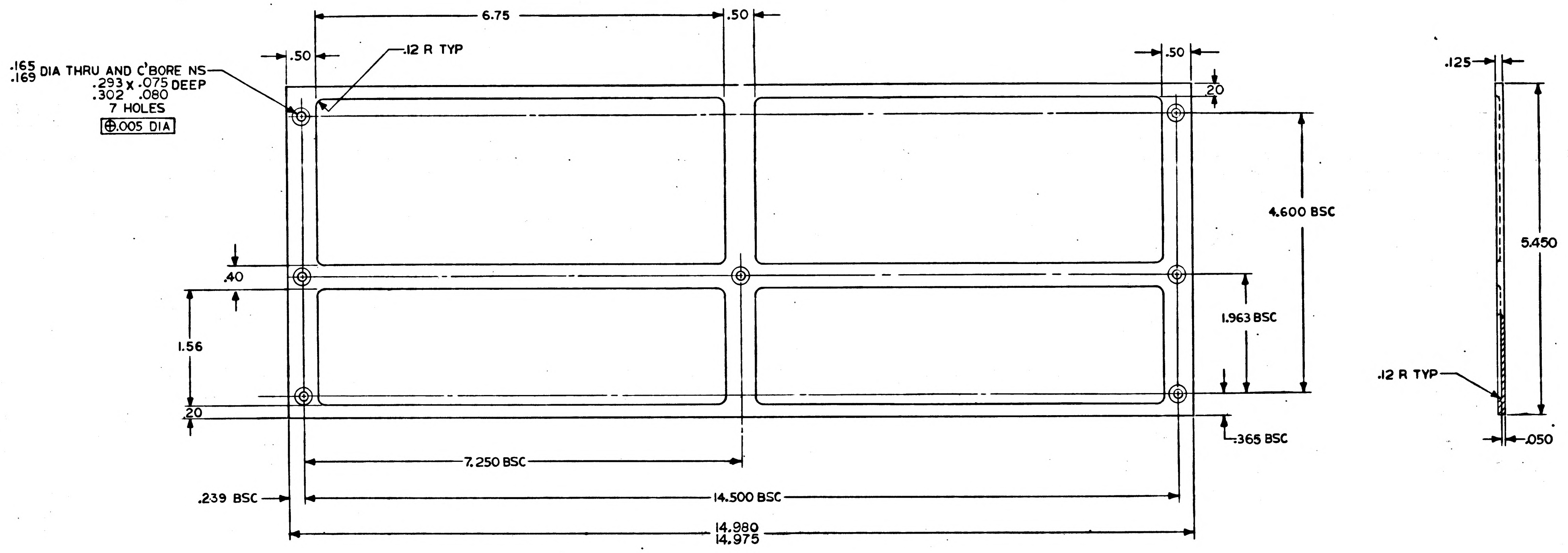

NOTES:

1. INTERPRET DRAWING IN ACCORDANCE WITH STANDARDS PRESCRIBED BY MIL-D-70327
2. MATERIAL: 6061-T6 ALUMINUM, PER QQ-A-250/11
3. SURFACE QUALITY: 125✓ ALL OVER
4. REMOVE ALL BURRS AND BREAK SHARP EDGES .005/.015
5. FINISH: PLATE (ELECTRODEPOSITED) ALL SURFACES PER QQ-C-320, CLASS 2, TYPE II PLATING TO BE .0004 TO .0008 THICK, HARDNESS ROCKWELL C60 MIN. DIMENSIONS APPLY AFTER PLATING. SPECIFIED THICKNESS NOT REQUIRED IN ALL HOLES AS LONG AS PLATING IS CONTINUOUS THROUGH EACH HOLE
6. IDENTIFY PER ND 1002019

MASTER

QTY REQD	PART OR IDENTIFYING NO.	NOMENCLATURE OR DESCRIPTION	FIND NO.
LIST OF MATERIALS			

NEXT ASSY	USED ON
1003700	
APPLICATION	

UNLESS OTHERWISE SPECIFIED DIMENSIONS ARE IN INCHES
TOLERANCES ON
FRACTIONS ± — DECIMALS XXX ±.005 XX ±.01 ANGLES ± —
DO NOT SCALE THIS DRAWING

MATERIAL SEE NOTE 2
HEAT TREATMENT
FINAL FINISH SEE NOTE 5

MIT INSTRUMENTATION LAB
CAMBRIDGE, MASS.
DWG. NO. CONTRACT
DRAWN J.F. Walsh DATE 2 July 64
CHECKED
APPROVAL
APPROVAL
NASA APPROVAL
MIT APPROVAL

MANNED SPACECRAFT CENTER
HOUSTON, TEXAS

REAR PLATE
TRAY A&B
AGC COMPUTER

CODE IDENT NO.	SIZE	NASA DRAWING NO.
—	D	1004714
SCALE 1/1	WT —	SHEET 1 OF 1

1004714 C

NOTICE — WHEN GOVERNMENT DRAWINGS, SPECIFICATIONS, OR OTHER DATA ARE USED FOR ANY PURPOSE OTHER THAN IN CONNECTION WITH A DEFINITELY RELATED GOVERNMENT PROCUREMENT OPERATION, THE UNITED STATES GOVERNMENT THEREBY INCURS NO RESPONSIBILITY NOR ANY OBLIGATION WHATSOEVER; AND THE FACT THAT THE GOVERNMENT MAY HAVE FORMULATED, FURNISHED, OR IN ANY WAY SUPPLIED THE SAID DRAWINGS, SPECIFICATIONS OR OTHER DATA IS NOT TO BE REGARDED BY IMPLICATION OR OTHERWISE AS IN ANY MANNER LICENSING THE HOLDER OR ANY OTHER PERSON OR CORPORATION, OR CONVEYING ANY RIGHTS OR PERMISSION TO MANUFACTURE, USE, OR SELL ANY PATENTED INVENTION THAT MAY IN ANY WAY BE RELATED THERETO.

12306

REVISIONS			
SYM	DESCRIPTION	DATE	APPROVAL
A	REVISED AND UP GRADED TO CLASS A PER TDRR 12584	14SEP64	
B	REVISED PER TDRR 13295		RRK
C	REVISED PER TDRR 13681	10/2/64	
D	REVISED PER TDRR 14269	11/13/64	WK

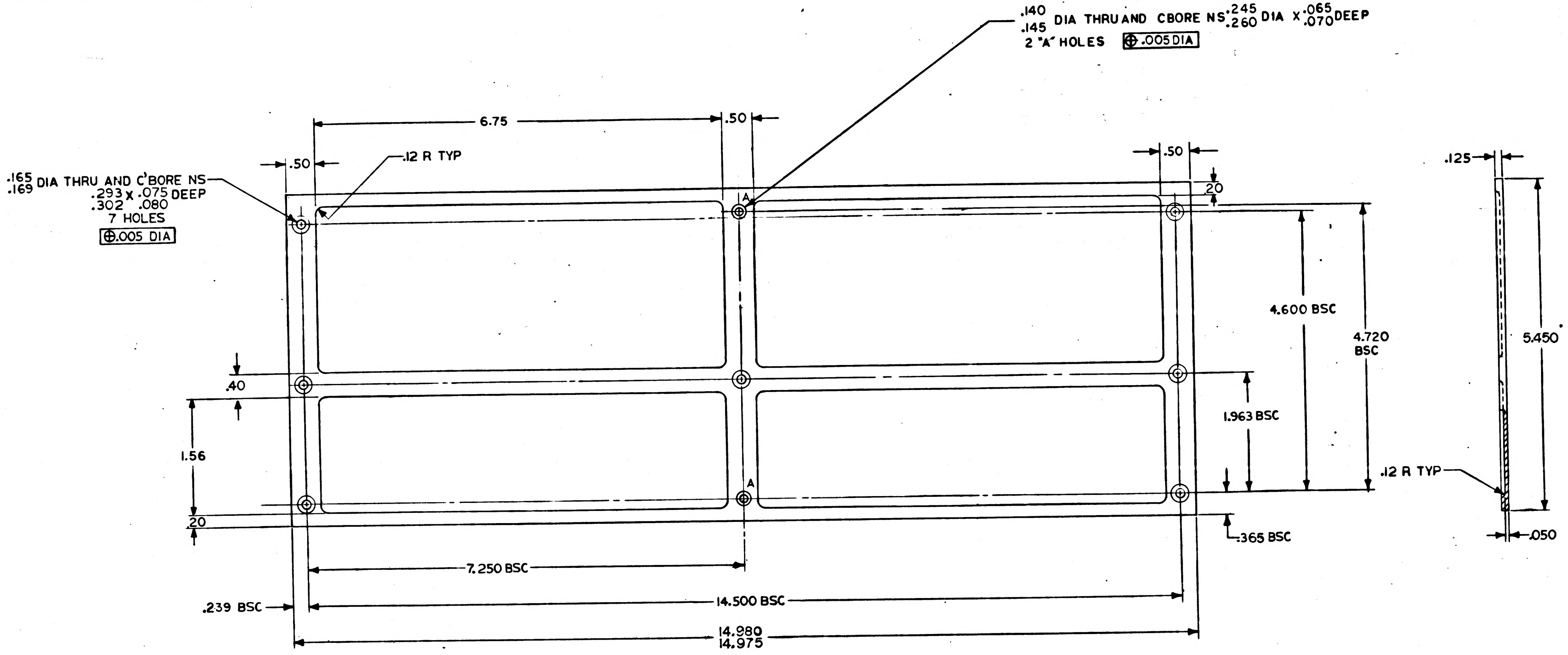
.140
.145 DIA THRU AND CBORE NS .245
.260 DIA X .065
.070 DEEP
2 "A" HOLES ⊕ .005 DIA
.165
.169 DIA THRU AND C'BORE NS
.293 X .075 DEEP
.302 .080
7 HOLES
⊕ .005 DIA
.50
.12 R TYP
6.75
.50
.50
.20
A
A
4.600 BSC
4.720 BSC
1.963 BSC
.40
1.56
.20
.365 BSC
7.250 BSC
.239 BSC
14.500 BSC
14.980
14.975
.125
5.450
.12 R TYP
.050

NOTES:
1. INTERPRET DRAWING IN ACCORDANCE WITH STANDARDS PRESCRIBED BY MIL-D-70327
2. MATERIAL: 6061-T6 ALUMINUM, PER QQ-A-250/11
3. SURFACE QUALITY: 125√ ALL OVER
4. REMOVE ALL BURRS AND BREAK SHARP EDGES .005/.015
5. FINISH: PLATE (ELECTRODEPOSITED) ALL SURFACES PER QQ-C-320, CLASS 2, TYPE II PLATING TO BE .0004 TO .0008 THICK, HARDNESS ROCKWELL C60 MIN. DIMENSIONS APPLY AFTER PLATING. SPECIFIED THICKNESS NOT REQUIRED IN ALL HOLES AS LONG AS PLATING IS CONTINUOUS THROUGH EACH HOLE
6. IDENTIFY PER ND 1002019

MASTER

QTY REQD	PART OR IDENTIFYING NO.	NOMENCLATURE OR DESCRIPTION	FIND NO.

LIST OF MATERIALS

NEXT ASSY	USED ON
1003700	

APPLICATION

UNLESS OTHERWISE SPECIFIED DIMENSIONS ARE IN INCHES
TOLERANCES ON
FRACTIONS ± — DECIMALS .XXX ± .005 .XX ± .01 ANGLES ± —
DO NOT SCALE THIS DRAWING

MATERIAL SEE NOTE 2
HEAT TREATMENT
FINAL FINISH SEE NOTE 5

MIT INSTRUMENTATION LAB
CAMBRIDGE, MASS.
DWG. NO.
CONTRACT
DRAWN J.F. Welch DATE 2 July 64
CHECKED
APPROVAL
APPROVAL
NASA APPROVAL
MIT APPROVAL

MANNED SPACECRAFT CENTER
HOUSTON, TEXAS

REAR PLATE
TRAY A&B
AGC COMPUTER

CODE IDENT NO. —
SIZE D
NASA DRAWING NO. 1004714
SCALE 1/1
WT —
SHEET 1 OF 1

INCHES

NOTICE — WHEN GOVERNMENT DRAWINGS, SPECIFICATIONS, OR OTHER DATA ARE USED FOR ANY PURPOSE OTHER THAN IN CONNECTION WITH A DEFINITELY RELATED GOVERNMENT PROCUREMENT OPERATION, THE UNITED STATES GOVERNMENT THEREBY INCURS NO RESPONSIBILITY NOR ANY OBLIGATION WHATSOEVER; AND THE FACT THAT THE GOVERNMENT MAY HAVE FORMULATED, FURNISHED, OR IN ANY WAY SUPPLIED THE SAID DRAWINGS, SPECIFICATIONS OR OTHER DATA IS NOT TO BE REGARDED BY IMPLICATION OR OTHERWISE AS IN ANY MANNER LICENSING THE HOLDER OR ANY OTHER PERSON OR CORPORATION, OR CONVEYING ANY RIGHTS OR PERMISSION TO MANUFACTURE, USE, OR SELL ANY PATENTED INVENTION THAT MAY IN ANY WAY BE RELATED THERETO.

REVISIONS			
SYM	DESCRIPTION	DATE	APPROVAL

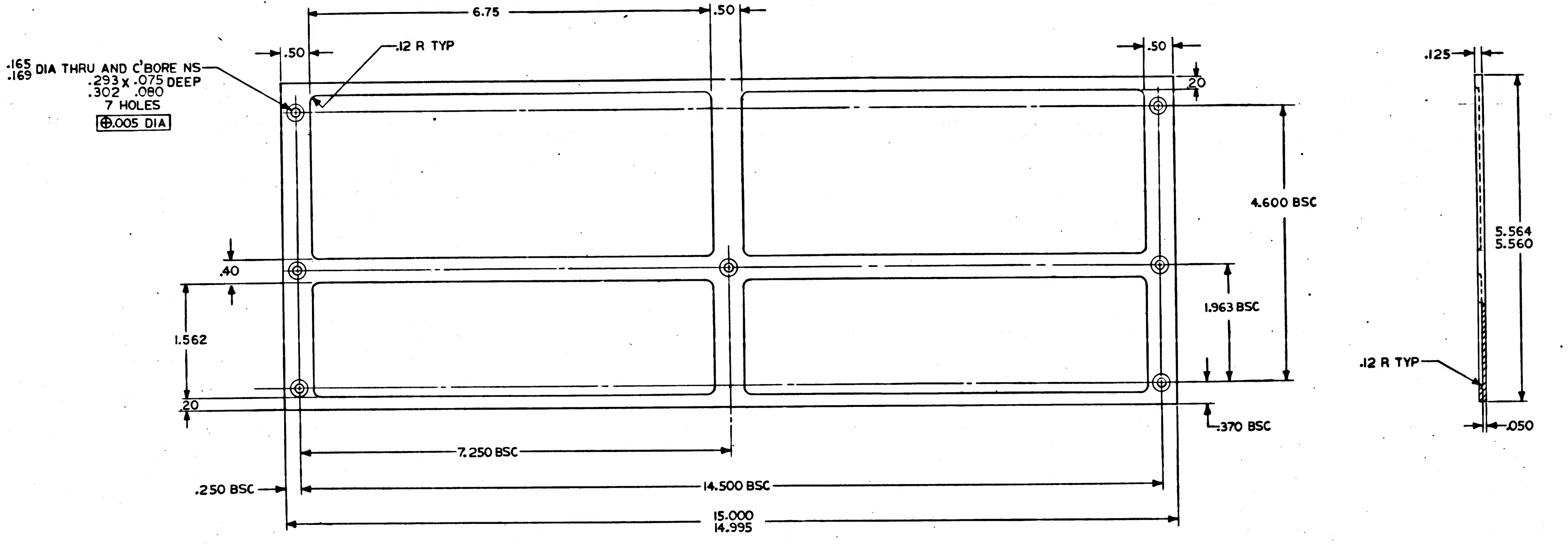

FOR INFORMATION ONLY
CLASS B RELEASE TDR NO 12306

NOTES:

1. INTERPRET DRAWING IN ACCORDANCE WITH STANDARDS PRESCRIBED BY MIL-D-70327
2. MATERIAL: 6061-T6 ALUMINUM, PER QQ-A-250/11
3. SURFACE QUALITY: 125✓ ALL OVER
4. REMOVE ALL BURRS AND BREAK SHARP EDGES .005/.015
5. FINISH: PLATE (ELECTRODEPOSITED) ALL SURFACES PER QQ-C-320, CLASS II, TYPE II PLATING TO BE .0004 TO .0002 THICK, HARDNESS ROCKWELL C70-72. DIMENSIONS APPLY AFTER PLATING. SPECIFIED THICKNESS NOT REQUIRED IN ALL HOLES AS LONG AS PLATING IS CONTINOUS THROUGH EACH HOLE
6. IDENTIFY PER ND 1002019

MASTER

QTY REQD	PART OR IDENTIFYING NO.	NOMENCLATURE OR DESCRIPTION	FIND NO.

LIST OF MATERIALS

NEXT ASSY	USED ON

APPLICATION

UNLESS OTHERWISE SPECIFIED DIMENSIONS ARE IN INCHES
TOLERANCES ON
FRACTIONS ± — DECIMALS XXX ±.005 XX ±.01 ANGLES ± —
DO NOT SCALE THIS DRAWING
MATERIAL SEE NOTE 2
HEAT TREATMENT
FINAL FINISH SEE NOTE 5

MIT INSTRUMENTATION LAB
CAMBRIDGE, MASS.
DWG. NO. CONTRACT
DRAWN DATE 2 July 64
CHECKED
APPROVAL
APPROVAL
NASA APPROVAL
MIT APPROVAL

MANNED SPACECRAFT CENTER
HOUSTON, TEXAS

REAR PLATE
TRAY A&B
AGC COMPUTER

CODE IDENT NO. —
SIZE D
NASA DRAWING NO. 1004714
SCALE 1/1
WT —
SHEET 1 OF 1

12306

REVISIONS			
SYM	DESCRIPTION	DATE	APPROVAL
A	REVISED AND UP GRADED TO CLASS A PER TDRR 12574	14SEP64	JM

NOTICE — WHEN GOVERNMENT DRAWINGS, SPECIFICATIONS, OR OTHER DATA ARE USED FOR ANY PURPOSE OTHER THAN IN CONNECTION WITH A DEFINITELY RELATED GOVERNMENT PROCUREMENT OPERATION, THE UNITED STATES GOVERNMENT THEREBY INCURS NO RESPONSIBILITY NOR ANY OBLIGATION WHATSOEVER; AND THE FACT THAT THE GOVERNMENT MAY HAVE FORMULATED, FURNISHED, OR IN ANY WAY SUPPLIED THE SAID DRAWINGS, SPECIFICATIONS OR OTHER DATA IS NOT TO BE REGARDED BY IMPLICATION OR OTHERWISE AS IN ANY MANNER LICENSING THE HOLDER OR ANY OTHER PERSON OR CORPORATION, OR CONVEYING ANY RIGHTS OR PERMISSION TO MANUFACTURE, USE, OR SELL ANY PATENTED INVENTION THAT MAY IN ANY WAY BE RELATED THERETO.

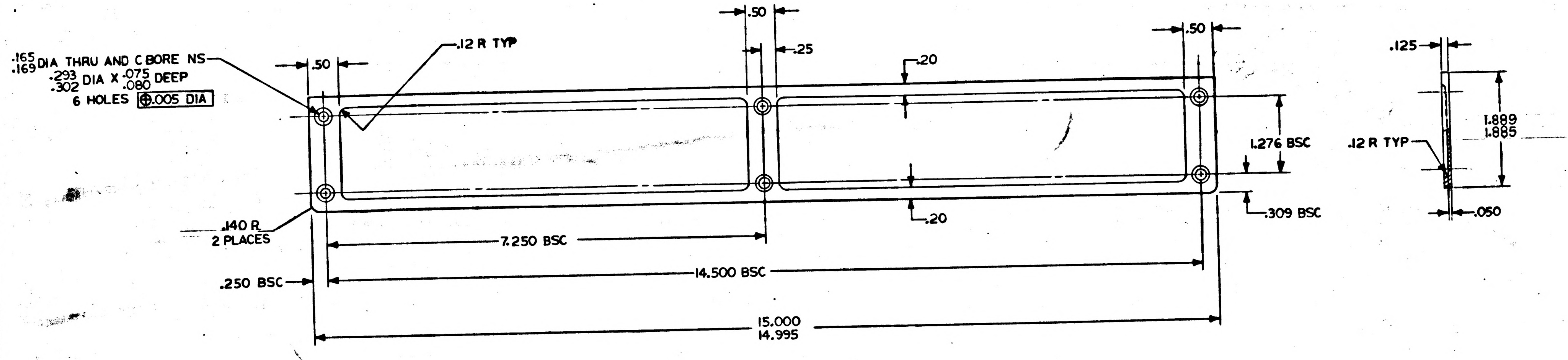

NOTES

1. INTERPRET DRAWING IN ACCORDANCE WITH STANDARDS PRESCRIBED BY MIL-D-70327
2. MATERIAL: ALUMINUM ALLOY 6061-T6 PER QQ-A-250/11
3. UNLESS OTHERWISE SPECIFIED $^{125}\surd$ ALL OVER
4. REMOVE ALL BURRS AND BREAK SHARP EDGES .005/.015
5. FINISH: PLATE (ELECTRODEPOSITED) ALL SURFACES PER QQ-C-320, CLASS 2, TYPE I PLATING TO BE .0004 TO .0008 THICK, HARDNESS ROCKWELL C60 MIN. DIMENSIONS APPLY AFTER PLATING. SPECIFIED THICKNESS NOT REQUIRED IN ALL HOLES AS LONG AS PLATING IS CONTINOUS THROUGH EACH HOLE
6. IDENTIFY PER ND 1002019

MASTER

QTY REQD	PART OR IDENTIFYING NO.	NOMENCLATURE OR DESCRIPTION	FIND NO.

LIST OF MATERIALS

1003700	
NEXT ASSY	USED ON
APPLICATION	

UNLESS OTHERWISE SPECIFIED DIMENSIONS ARE IN INCHES
TOLERANCES ON
FRACTIONS ± —
DECIMALS XXX ±.005 XX ±.01
ANGLES ± —
DO NOT SCALE THIS DRAWING
MATERIAL SEE NOTE 2
HEAT TREATMENT —
FINAL FINISH SEE NOTE 5

MIT INSTRUMENTATION LAB
CAMBRIDGE, MASS.
DWG. NO.
CONTRACT
DRAWN J.E. Welch DATE 2 July 64
CHECKED A. Lindstrom 12 Aug 64
APPROVAL E. Duggan LTB
APPROVAL Eldon Hall 28 Aug 64
NASA APPROVAL 9/1/64
MIT APPROVAL 9/1/64

MANNED SPACECRAFT CENTER
HOUSTON, TEXAS

FRONT PLATE
TRAY A
AGC COMPUTER

CODE IDENT NO. —
SIZE D
NASA DRAWING NO. 1004715
SCALE 1/1
WT —
SHEET 1 OF 1

12306

NOTICE — WHEN GOVERNMENT DRAWINGS, SPECIFICATIONS, OR OTHER DATA ARE USED FOR ANY PURPOSE OTHER THAN IN CONNECTION WITH A DEFINITELY RELATED GOVERNMENT PROCUREMENT OPERATION, THE UNITED STATES GOVERNMENT THEREBY INCURS NO RESPONSIBILITY NOR ANY OBLIGATION WHATSOEVER; AND THE FACT THAT THE GOVERNMENT MAY HAVE FORMULATED, FURNISHED, OR IN ANY WAY SUPPLIED THE SAID DRAWINGS, SPECIFICATIONS OR OTHER DATA IS NOT TO BE REGARDED BY IMPLICATION OR OTHERWISE AS IN ANY MANNER LICENSING THE HOLDER OR ANY OTHER PERSON OR CORPORATION, OR CONVEYING ANY RIGHTS OR PERMISSION TO MANUFACTURE, USE, OR SELL ANY PATENTED INVENTION THAT MAY IN ANY WAY BE RELATED THERETO.

REVISIONS

SYM	DESCRIPTION	DATE	APPROVAL
A	REVISED AND UP GRADED TO CLASS A PER TDRR 12574	14SEP64	JM
B	REVISED PER TDRR 13294	5OCT64	WK

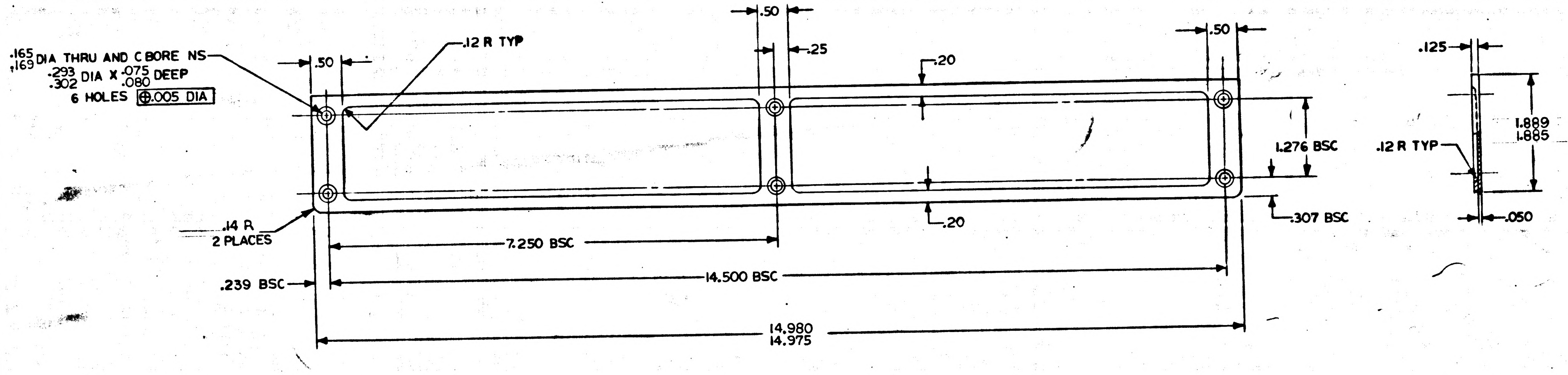

NOTES
1. INTERPRET DRAWING IN ACCORDANCE WITH STANDARDS PRESCRIBED BY MIL-D-70327
2. MATERIAL: ALUMINUM ALLOY 6061-T6 PER QQ-A-250/11
3. UNLESS OTHERWISE SPECIFIED $^{125}\surd$ ALL OVER
4. REMOVE ALL BURRS AND BREAK SHARP EDGES .005/.015
5. FINISH: PLATE (ELECTRODEPOSITED) ALL SURFACES PER QQ-C-320, CLASS 2, TYPE I PLATING TO BE .0004 TO .0008 THICK, HARDNESS ROCKWELL C60 MIN. DIMENSIONS APPLY AFTER PLATING. SPECIFIED THICKNESS NOT REQUIRED IN ALL HOLES AS LONG AS PLATING IS CONTINUOUS THROUGH EACH HOLE
6. IDENTIFY PER ND 1002019

MASTER

QTY REQD	PART OR IDENTIFYING NO.	NOMENCLATURE OR DESCRIPTION	FIND NO.

LIST OF MATERIALS

NEXT ASSY	USED ON
1003700	

APPLICATION

UNLESS OTHERWISE SPECIFIED DIMENSIONS ARE IN INCHES
TOLERANCES ON
FRACTIONS ± — DECIMALS XXX ±.005 XX ±.01 ANGLES ± —
DO NOT SCALE THIS DRAWING

MATERIAL SEE NOTE 2
HEAT TREATMENT —
FINAL FINISH SEE NOTE 5

MIT INSTRUMENTATION LAB
CAMBRIDGE, MASS.
DWG. NO.
CONTRACT
DRAWN J.F. Walsh DATE 2 July 64
CHECKED A. Lindstrom 12 Aug 64
APPROVAL E. Duggan / LFB
APPROVAL [illegible] 28 Aug 64
NASA APPROVAL [illegible] 9/1/64
MIT APPROVAL [illegible] 9/11/64

MANNED SPACECRAFT CENTER
HOUSTON, TEXAS

FRONT PLATE
TRAY A
AGC COMPUTER

CODE IDENT NO.	SIZE	NASA DRAWING NO.
—	D	1004715

SCALE 1/1 WT — SHEET 1 OF 1

INCHES
0 1 2
PHOTOGRAPHIC SCALE ONLY

NOTICE — WHEN GOVERNMENT DRAWINGS, SPECIFICATIONS, OR OTHER DATA ARE USED FOR ANY PURPOSE OTHER THAN IN CONNECTION WITH A DEFINITELY RELATED GOVERNMENT PROCUREMENT OPERATION, THE UNITED STATES GOVERNMENT THEREBY INCURS NO RESPONSIBILITY NOR ANY OBLIGATION WHATSOEVER; AND THE FACT THAT THE GOVERNMENT MAY HAVE FORMULATED, FURNISHED, OR IN ANY WAY SUPPLIED THE SAID DRAWINGS, SPECIFICATIONS OR OTHER DATA IS NOT TO BE REGARDED BY IMPLICATION OR OTHERWISE AS IN ANY MANNER LICENSING THE HOLDER OR ANY OTHER PERSON OR CORPORATION, OR CONVEYING ANY RIGHTS OR PERMISSION TO MANUFACTURE, USE, OR SELL ANY PATENTED INVENTION THAT MAY IN ANY WAY BE RELATED THERETO.

REVISIONS			
SYM	DESCRIPTION	DATE	APPROVAL

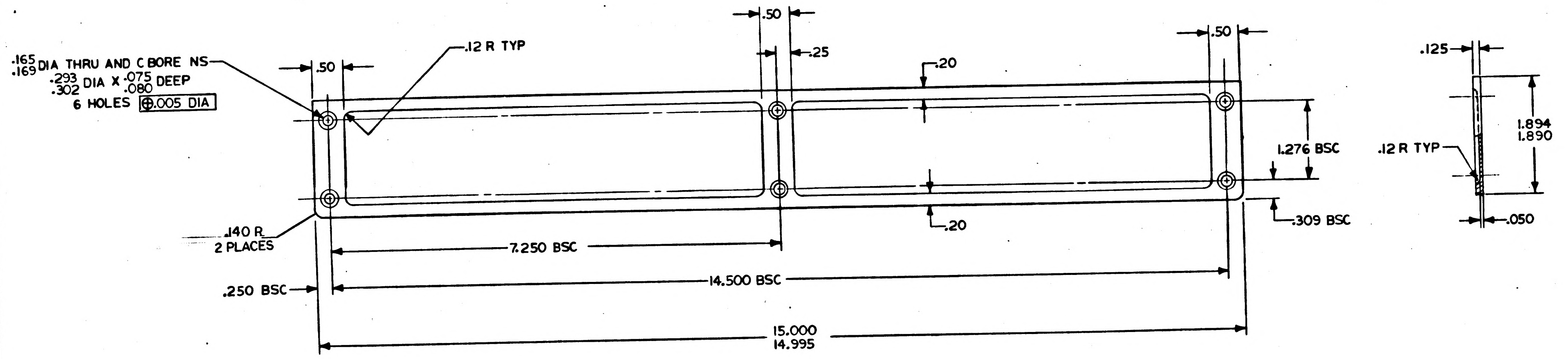

FOR INFORMATION ONLY
CLASS B RELEASE TDRR NO 12306

NOTES
1. INTERPRET DRAWING IN ACCORDANCE WITH STANDARDS PRESCRIBED BY MIL-D-70327
2. MATERIAL: ALUMINUM ALLOY 6061-T6 PER QQ-A-250/11
3. UNLESS OTHERWISE SPECIFIED 125√ ALL OVER
4. REMOVE ALL BURRS AND BREAK SHARP EDGES .005/.015
5. FINISH: PLATE (ELECTRODEPOSITED) ALL SURFACES PER QQ-C-320, CLASS II, TYPE II PLATING TO BE .0004 TO .0002 THICK, HARDNESS ROCKWELL C70-72. DIMENSIONS APPLY AFTER PLATING. SPECIFIED THICKNESS NOT REQUIRED IN ALL HOLES AS LONG AS PLATING IS CONTINOUS THROUGH EACH HOLE
6. IDENTIFY PER ND 1002019

MASTER

QTY REQD	PART OR IDENTIFYING NO.	NOMENCLATURE OR DESCRIPTION	FIND NO.

LIST OF MATERIALS

NEXT ASSY	USED ON
APPLICATION	

UNLESS OTHERWISE SPECIFIED DIMENSIONS ARE IN INCHES
TOLERANCES ON
FRACTIONS ± —
DECIMALS XXX ± .005 XX ± .01
ANGLES ± —
DO NOT SCALE THIS DRAWING
MATERIAL SEE NOTE 2
HEAT TREATMENT ——
FINAL FINISH SEE NOTE 5

MIT INSTRUMENTATION LAB
CAMBRIDGE, MASS.
DWG. NO.
CONTRACT
DRAWN J.F. Welch DATE 2 July 64
CHECKED A. Lindstrom 12 Aug 64
APPROVAL E. Duggan / LTB
APPROVAL Eldon Hall 28 Aug 64
NASA APPROVAL 9/1/64
MIT APPROVAL 9/1/64

MANNED SPACECRAFT CENTER
HOUSTON, TEXAS

FRONT PLATE
TRAY A
AGC COMPUTER

CODE IDENT NO. ——
SIZE D
NASA DRAWING NO. 1004715
SCALE 1/1
WT ——
SHEET 1 OF 1

NOTICE — WHEN GOVERNMENT DRAWINGS, SPECIFICATIONS, OR OTHER DATA ARE USED FOR ANY PURPOSE OTHER THAN IN CONNECTION WITH A DEFINITELY RELATED GOVERNMENT PROCUREMENT OPERATION, THE UNITED STATES GOVERNMENT THEREBY INCURS NO RESPONSIBILITY NOR ANY OBLIGATION WHATSOEVER; AND THE FACT THAT THE GOVERNMENT MAY HAVE FORMULATED, FURNISHED, OR IN ANY WAY SUPPLIED THE SAID DRAWINGS, SPECIFICATIONS OR OTHER DATA IS NOT TO BE REGARDED BY IMPLICATION OR OTHERWISE AS IN ANY MANNER LICENSING THE HOLDER OR ANY OTHER PERSON OR CORPORATION, OR CONVEYING ANY RIGHTS OR PERMISSION TO MANUFACTURE, USE, OR SELL ANY PATENTED INVENTION THAT MAY IN ANY WAY BE RELATED THERETO.

12306

REVISIONS			
SYM	DESCRIPTION	DATE	APPROVAL
A	REVISED AND UP GRADED TO CLASS A PER TDRR 12582	11SEP64	

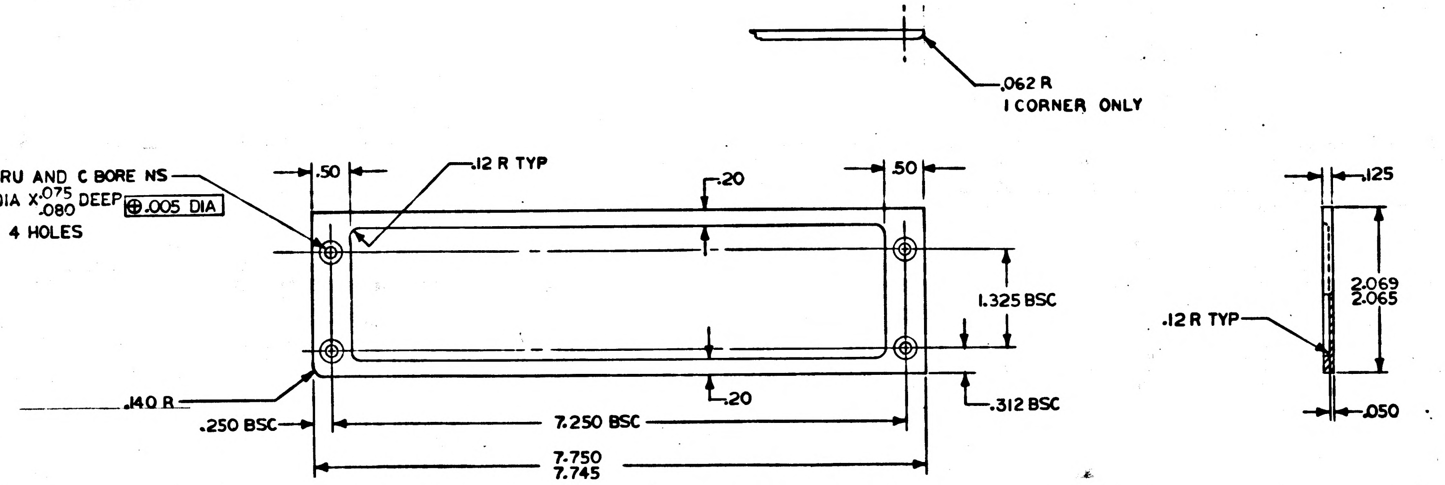

NOTES:
1. INTERPRET DRAWING IN ACCORDANCE WITH STANDARDS PRESCRIBED BY MIL-D-70327
2. MATERIAL: ALUMINUM ALLOY 6061-T6 PER QQ-A-250/11
3. SURFACE QUALITY: 125✓ ALL OVER
4. REMOVE ALL BURRS AND BREAK SHARP EDGES .005/.015
5. FINISH: PLATE (ELECTRODEPOSITED) ALL SURFACES PER QQ-C-320, CLASS 2, TYPE I PLATING TO BE .0004 TO .0008 THICK, HARDNESS ROCKWELL C60 MIN. DIMENSIONS APPLY AFTER PLATING. SPECIFIED THICKNESS NOT REQUIRED IN ALL HOLES AS LONG AS PLATING IS CONTINOUS THROUGH EACH HOLE
6. IDENTIFY PER ND 1002019

MASTER

QTY REQD	PART OR IDENTIFYING NO.	NOMENCLATURE OR DESCRIPTION	FIND NO.

LIST OF MATERIALS

NEXT ASSY	USED ON

APPLICATION

UNLESS OTHERWISE SPECIFIED
DIMENSIONS ARE IN INCHES
TOLERANCES ON
FRACTIONS ± —
DECIMALS XXX ± .005 XX ± .01
ANGLES ± —
DO NOT SCALE THIS DRAWING

MATERIAL SEE NOTE 2

HEAT TREATMENT —

FINAL FINISH SEE NOTE 5

MIT INSTRUMENTATION LAB
CAMBRIDGE, MASS.
DWG. NO.
CONTRACT
DRAWN DATE 6 July 64
CHECKED
APPROVAL
APPROVAL
NASA APPROVAL
MIT APPROVAL

MANNED SPACECRAFT CENTER
HOUSTON, TEXAS

FRONT PLATE LEFT SIDE TRAY B
AGC COMPUTER

CODE IDENT NO.	SIZE	NASA DRAWING NO.
—	D	1004716

SCALE 1/1
WT —
SHEET 1 OF 1

12306

SYM	DESCRIPTION	DATE	APPROVAL
A	REVISED AND UP GRADED TO CLASS A PER TDRR 12582	11 SEP 64 9/15	RL
B	REVISED PER TDRR 13296	10/6/64	WK

NOTICE — WHEN GOVERNMENT DRAWINGS, SPECIFICATIONS, OR OTHER DATA ARE USED FOR ANY PURPOSE OTHER THAN IN CONNECTION WITH A DEFINITELY RELATED GOVERNMENT PROCUREMENT OPERATION, THE UNITED STATES GOVERNMENT THEREBY INCURS NO RESPONSIBILITY NOR ANY OBLIGATION WHATSOEVER; AND THE FACT THAT THE GOVERNMENT MAY HAVE FORMULATED, FURNISHED, OR IN ANY WAY SUPPLIED THE SAID DRAWINGS, SPECIFICATIONS OR OTHER DATA IS NOT TO BE REGARDED BY IMPLICATION OR OTHERWISE AS IN ANY MANNER LICENSING THE HOLDER OR ANY OTHER PERSON OR CORPORATION, OR CONVEYING ANY RIGHTS OR PERMISSION TO MANUFACTURE, USE, OR SELL ANY PATENTED INVENTION THAT MAY IN ANY WAY BE RELATED THERETO.

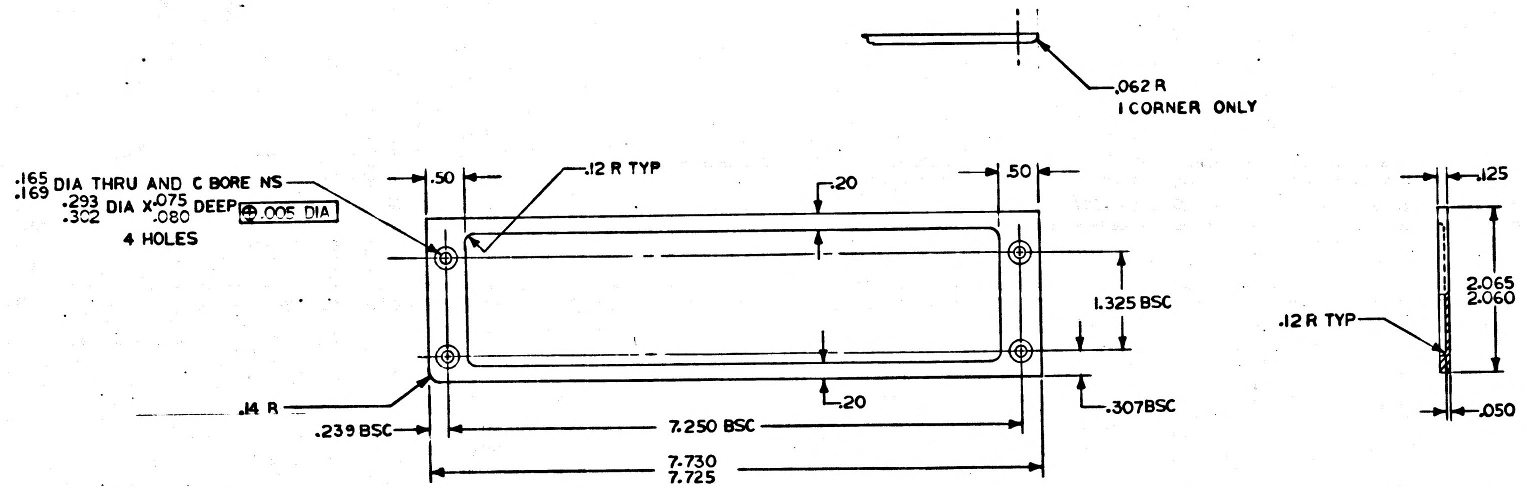

NOTES:

1. INTERPRET DRAWING IN ACCORDANCE WITH STANDARDS PRESCRIBED BY MIL-D-70327
2. MATERIAL: ALUMINUM ALLOY 6061-T6 PER QQ-A-250/11
3. SURFACE QUALITY: 125 ✓ ALL OVER
4. REMOVE ALL BURRS AND BREAK SHARP EDGES .005/.015
5. FINISH: PLATE (ELECTRODEPOSITED) ALL SURFACES PER QQ-C-320, CLASS 2, TYPE I PLATING TO BE .0004 TO .0008 THICK, HARDNESS ROCKWELL C60 MIN. DIMENSIONS APPLY AFTER PLATING. SPECIFIED THICKNESS NOT REQUIRED IN ALL HOLES AS LONG AS PLATING IS CONTINUOUS THROUGH EACH HOLE
6. IDENTIFY PER ND 1002019

MASTER

QTY REQD	PART OR IDENTIFYING NO.	NOMENCLATURE OR DESCRIPTION	FIND NO.

LIST OF MATERIALS

NEXT ASSY	USED ON
1003700	

APPLICATION

UNLESS OTHERWISE SPECIFIED DIMENSIONS ARE IN INCHES
TOLERANCES ON
FRACTIONS ± —
DECIMALS XXX ± .005 XX ± .01
ANGLES ± —
DO NOT SCALE THIS DRAWING

MATERIAL SEE NOTE 2
HEAT TREATMENT —
FINAL FINISH SEE NOTE 5

MIT INSTRUMENTATION LAB
CAMBRIDGE, MASS.
DWG. NO. CONTRACT
DRAWN J.F. Walsh DATE 6 July 64
CHECKED
APPROVAL
APPROVAL
NASA APPROVAL
MIT APPROVAL

MANNED SPACECRAFT CENTER
HOUSTON, TEXAS

FRONT PLATE LEFT SIDE TRAY B AGC COMPUTER

CODE IDENT NO. —
SIZE D
NASA DRAWING NO. 1004716
SCALE 1/1
WT —
SHEET 1 OF 1

1004716 B

INCHES 0 1 2
PHOTOGRAPHIC SCALE ONLY

NOTICE — WHEN GOVERNMENT DRAWINGS, SPECIFICATIONS, OR OTHER DATA ARE USED FOR ANY PURPOSE OTHER THAN IN CONNECTION WITH A DEFINITELY RELATED GOVERNMENT PROCUREMENT OPERATION, THE UNITED STATES GOVERNMENT THEREBY INCURS NO RESPONSIBILITY NOR ANY OBLIGATION WHATSOEVER; AND THE FACT THAT THE GOVERNMENT MAY HAVE FORMULATED, FURNISHED, OR IN ANY WAY SUPPLIED THE SAID DRAWINGS, SPECIFICATIONS OR OTHER DATA IS NOT TO BE REGARDED BY IMPLICATION OR OTHERWISE AS IN ANY MANNER LICENSING THE HOLDER OR ANY OTHER PERSON OR CORPORATION, OR CONVEYING ANY RIGHTS OR PERMISSION TO MANUFACTURE, USE, OR SELL ANY PATENTED INVENTION THAT MAY IN ANY WAY BE RELATED THERETO.

REVISIONS			
SYM	DESCRIPTION	DATE	APPROVAL

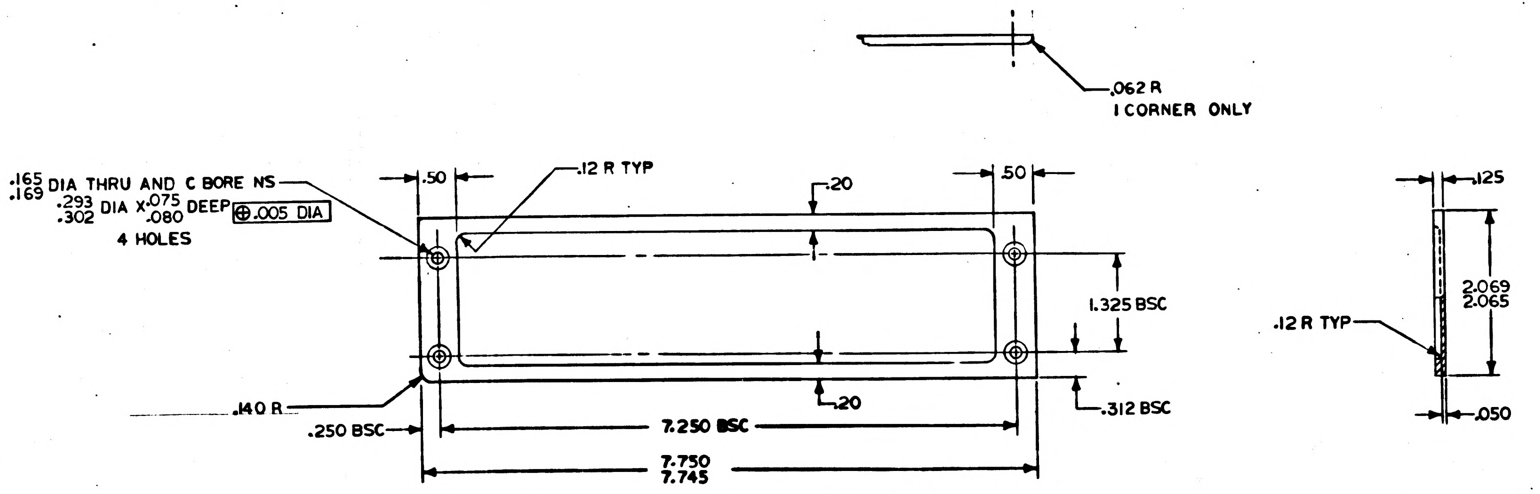

FOR INFORMATION ONLY
CLASS B RELEASE TDRC NO 12306

NOTES:
1. INTERPRET DRAWING IN ACCORDANCE WITH STANDARDS PRESCRIBED BY MIL-D-70327
2. MATERIAL: ALUMINUM ALLOY 6061-T6 PER QQ-A-250/11
3. SURFACE QUALITY: 125✓ ALL OVER
4. REMOVE ALL BURRS AND BREAK SHARP EDGES .005/.015
5. FINISH: PLATE (ELECTRODEPOSITED) ALL SURFACES PER QQ-C-320, CLASS II, TYPE II PLATING TO BE .0004 TO .0002 THICK, HARDNESS ROCKWELL C70-72. DIMENSIONS APPLY AFTER PLATING. SPECIFIED THICKNESS NOT REQUIRED IN ALL HOLES AS LONG AS PLATING IS CONTINOUS THROUGH EACH HOLE
6. IDENTIFY PER ND 1002019

MASTER

QTY REQD	PART OR IDENTIFYING NO.	NOMENCLATURE OR DESCRIPTION	FIND NO.
LIST OF MATERIALS			

NEXT ASSY	USED ON
APPLICATION	

UNLESS OTHERWISE SPECIFIED DIMENSIONS ARE IN INCHES TOLERANCES ON FRACTIONS ±— DECIMALS XXX±.005 XX±.01 ANGLES ±— DO NOT SCALE THIS DRAWING	MIT INSTRUMENTATION LAB CAMBRIDGE, MASS. DWG. NO. CONTRACT	MANNED SPACECRAFT CENTER HOUSTON, TEXAS	
MATERIAL SEE NOTE 2	DRAWN J.F. Walsh DATE 6 July 64 CHECKED APPROVAL APPROVAL	FRONT PLATE LEFT SIDE TRAY B AGC COMPUTER	
HEAT TREATMENT —	NASA APPROVAL 9/1/64	CODE IDENT NO. —	SIZE D | NASA DRAWING NO. 1004716
FINAL FINISH SEE NOTE 5	MIT APPROVAL 9/1/64	SCALE 1/1	WT — | SHEET 1 OF 1

INCHES

NOTICE — WHEN GOVERNMENT DRAWINGS, SPECIFICATIONS, OR OTHER DATA ARE USED FOR ANY PURPOSE OTHER THAN IN CONNECTION WITH A DEFINITELY RELATED GOVERNMENT PROCUREMENT OPERATION, THE UNITED STATES GOVERNMENT THEREBY INCURS NO RESPONSIBILITY NOR ANY OBLIGATION WHATSOEVER; AND THE FACT THAT THE GOVERNMENT MAY HAVE FORMULATED, FURNISHED, OR IN ANY WAY SUPPLIED THE SAID DRAWINGS, SPECIFICATIONS, OR OTHER DATA IS NOT TO BE REGARDED BY IMPLICATION OR OTHERWISE AS IN ANY MANNER LICENSING THE HOLDER OR ANY OTHER PERSON OR CORPORATION, OR CONVEYING ANY RIGHTS OR PERMISSION TO MANUFACTURE, USE, OR SELL ANY PATENTED INVENTION THAT MAY IN ANY WAY BE RELATED THERETO

12306

G

REVISIONS

SYM	DESCRIPTION	DATE	APPROVAL
A	REVISED AND UP GRADED TO CLASS A PER TDRR 12590	14SEP64	

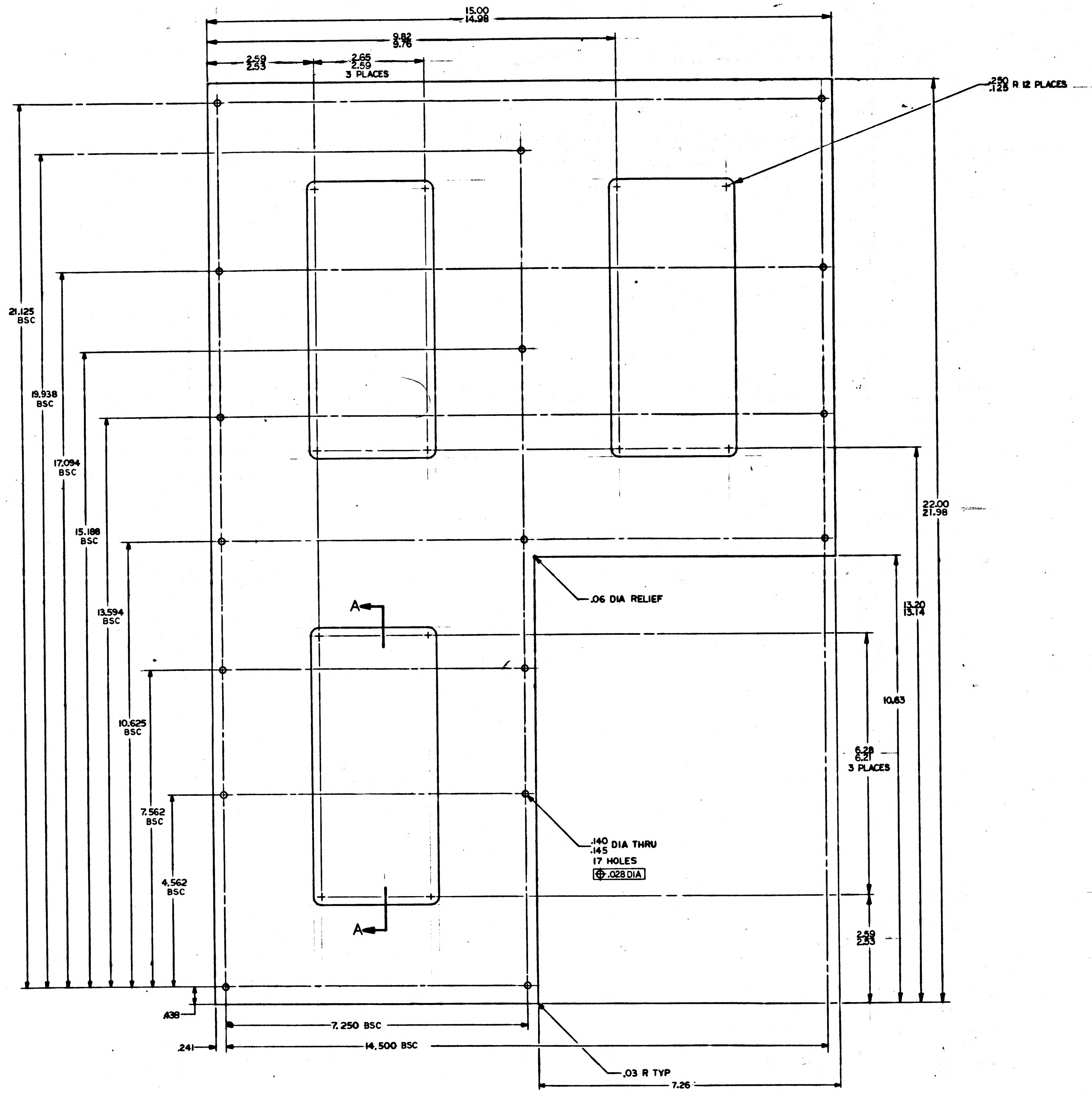
15.00
14.98
9.82
9.76
2.59
2.53
2.65
2.59
3 PLACES
.250
.125 R 12 PLACES
21.125
BSC
19.938
BSC
17.094
BSC
15.188
BSC
13.594
BSC
10.625
BSC
7.562
BSC
4.562
BSC
22.00
21.98
13.20
13.14
10.63
6.28
6.21
3 PLACES
2.59
2.53
.06 DIA RELIEF
A
A
.140
.145 DIA THRU
17 HOLES
⊕ .028 DIA
.138
.241
7.250 BSC
14.500 BSC
.03 R TYP
7.26

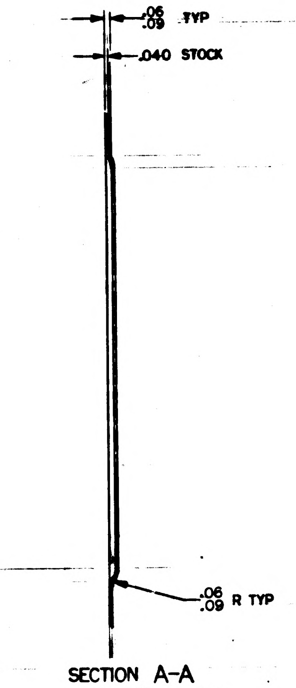
.06
.09 TYP
.040 STOCK
.06
.09 R TYP

SECTION A-A
3 PLACES

NOTES
1. INTERPRET DRAWING IN ACCORDANCE WITH STANDARDS PRESCRIBED BY MIL-D-70327
2. MATERIAL: ALUMINUM ALLOY 5052-H32 PER QQ-A-250/8
3. FINISH: PLATE (ELECTRODEPOSITED) ALL SURFACES PER QQ-C-320, CLASS 2, TYPE I, PLATING TO BE .0004 TO .0008 THICK, HARDNESS ROCKWELL C60 MIN. DIMENSIONS APPLY AFTER PLATING. SPECIFIED THICKNESS NOT REQUIRED IN ALL HOLES AS LONG AS PLATING IS CONTINUOUS THROUGH EACH HOLE
4. SURFACE QUALITY: 125/ ALL OVER
5. REMOVE BURRS AND BREAK SHARP EDGES .005/.015
6. IDENTIFY PER ND1002019

MASTER

QTY REQD	PART OR IDENTIFYING NO.	NOMENCLATURE OR DESCRIPTION	FIND NO.

LIST OF MATERIALS

NEXT ASSY | USED ON
APPLICATION

UNLESS OTHERWISE SPECIFIED
DIMENSIONS ARE IN INCHES
TOLERANCES ON
FRACTIONS ± —— DECIMALS ±.005 .01 ANGLES ± ——
DO NOT SCALE THIS DRAWING
MATERIAL
SEE NOTE 2
HEAT TREATMENT
——
FINAL FINISH
SEE NOTE 3

MIT
INSTRUMENTATION LAB
CAMBRIDGE, MASS
DWG NO. CONTRACT
DRAWN DATE
CHECKED
APPROVAL
APPROVAL
NASA APPROVAL
MIT APPROVAL

MANNED SPACECRAFT CENTER
HOUSTON, TEXAS

COVER TRAY B
AGC COMPUTER

CODE IDENT NO. ——
SIZE E
NASA DRAWING NO. 1004717
SCALE 1/1
WT ——
SHEET 1 OF 1

NOTICE — WHEN GOVERNMENT DRAWINGS, SPECIFICATIONS, OR OTHER DATA ARE USED FOR ANY PURPOSE OTHER THAN IN CONNECTION WITH A DEFINITELY RELATED GOVERNMENT PROCUREMENT OPERATION, THE UNITED STATES GOVERNMENT THEREBY INCURS NO RESPONSIBILITY NOR ANY OBLIGATION WHATSOEVER; AND THE FACT THAT THE GOVERNMENT MAY HAVE FORMULATED, FURNISHED, OR IN ANY WAY SUPPLIED THE SAID DRAWINGS, SPECIFICATIONS, OR OTHER DATA IS NOT TO BE REGARDED BY IMPLICATION OR OTHERWISE AS IN ANY MANNER LICENSING THE HOLDER OR ANY OTHER PERSON OR CORPORATION, OR CONVEYING ANY RIGHTS OR PERMISSION TO MANUFACTURE, USE, OR SELL ANY PATENTED INVENTION THAT MAY IN ANY WAY BE RELATED THERETO

SYM	DESCRIPTION	DATE	APPROVAL

REVISIONS

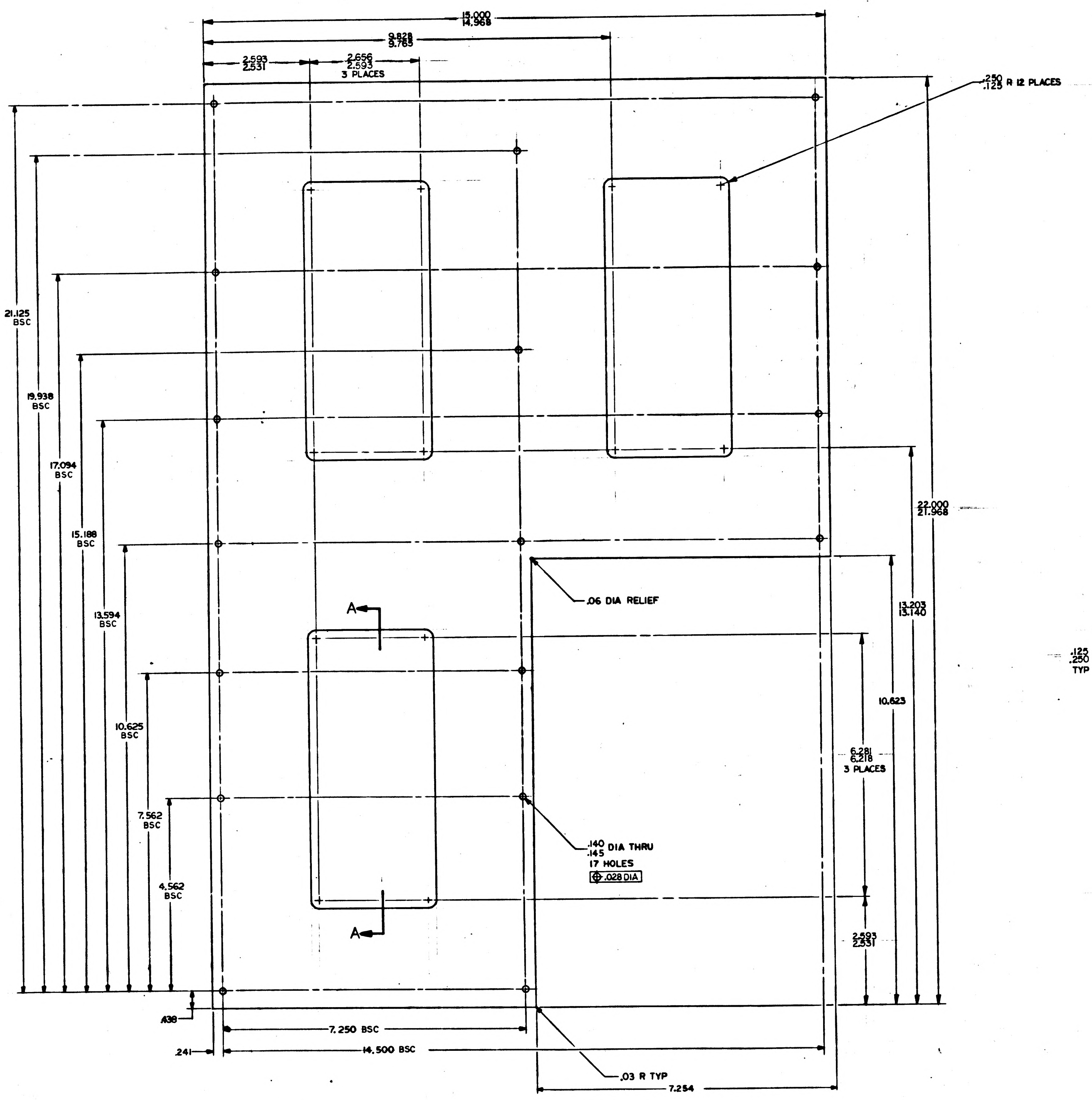

15.000
14.968
9.828
9.765
2.593
2.531
2.656
2.593
3 PLACES
.250
.125 R 12 PLACES
21.125 BSC
19.938 BSC
17.094 BSC
15.188 BSC
13.594 BSC
10.625 BSC
7.562 BSC
4.562 BSC
22.000
21.968
13.203
13.140
10.623
6.281
6.218
3 PLACES
2.593
2.531
.06 DIA RELIEF
A
A
.140
.145 DIA THRU
17 HOLES
⊕ .028 DIA
.138
.241
7.250 BSC
14.500 BSC
.03 R TYP
7.254

FOR INFORMATION ONLY
CLASS B RELEASE TDRC NO. 12306

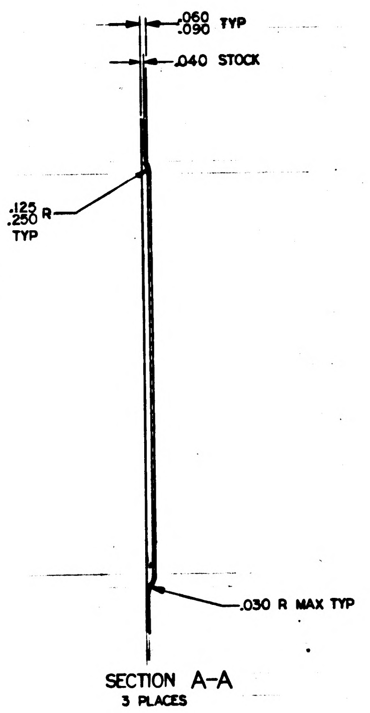

.060
.090 TYP
.040 STOCK
.125
.250 R
TYP
.030 R MAX TYP

SECTION A-A
3 PLACES

Remove burrs and sharp edges .005/.015
identify per ND1002019
Surface Quality 125/ all over

NOTES

1. INTERPRET DRAWING IN ACCORDANCE WITH STANDARDS PRESCRIBED BY MIL-D-70327
2. MATERIAL: ALUMINUM ALLOY 5052-H32 PER QQ-A-250/8
3. FINISH: PLATE (ELECTRODEPOSITED) ALL SURFACES PER QQ-C-320, CLASS 2, TYPE II, PLATING TO BE .0004 TO .0002 THICK, HARDNESS ROCKWELL C70-72. DIMENSIONS APPLY AFTER PLATING. SPECIFIED THICKNESS NOT REQUIRED IN ALL HOLES AS LONG AS PLATING IS CONTINUOUS THROUGH EACH HOLE
4. SURFACE QUALITY: 125/ALL OVER
5. REMOVE BURRS AND BREAK SHARP EDGES .005/.015
6. IDENTIFY PER ND1002019

MASTER

QTY REQD	PART OR IDENTIFYING NO.	NOMENCLATURE OR DESCRIPTION	FIND NO

LIST OF MATERIALS

		UNLESS OTHERWISE SPECIFIED DIMENSIONS ARE IN INCHES TOLERANCES ON FRACTIONS ± —— DECIMALS ±.005 .01 ANGLES ± —— DO NOT SCALE THIS DRAWING	MIT INSTRUMENTATION LAB CAMBRIDGE, MASS DWG NO. CONTRACT	MANNED SPACECRAFT CENTER HOUSTON, TEXAS
		MATERIAL SEE NOTE 2	DRAWN J. Bradley DATE 6-4-64 CHECKED 5 Aug 64 APPROVAL LSB APPROVAL 6 Aug 64	COVER TRAY B AGC COMPUTER
		HEAT TREATMENT ——	NASA APPROVAL 9/1/64	CODE IDENT NO. —— | SIZE E | NASA DRAWING NO. 1004717
NEXT ASSY	USED ON	FINAL FINISH SEE NOTE 3	MIT APPROVAL 9/1/64	SCALE 1/1 | WT —— | SHEET 1 OF 1
APPLICATION				

NOTICE — WHEN GOVERNMENT DRAWINGS, SPECIFICATIONS, OR OTHER DATA ARE USED FOR ANY PURPOSE OTHER THAN IN CONNECTION WITH A DEFINITELY RELATED GOVERNMENT PROCUREMENT OPERATION, THE UNITED STATES GOVERNMENT THEREBY INCURS NO RESPONSIBILITY NOR ANY OBLIGATION WHATSOEVER; AND THE FACT THAT THE GOVERNMENT MAY HAVE FORMULATED, FURNISHED, OR IN ANY WAY SUPPLIED THE SAID DRAWINGS, SPECIFICATIONS, OR OTHER DATA IS NOT TO BE REGARDED BY IMPLICATION OR OTHERWISE AS IN ANY MANNER LICENSING THE HOLDER OR ANY OTHER PERSON OR CORPORATION, OR CONVEYING ANY RIGHTS OR PERMISSION TO MANUFACTURE, USE, OR SELL ANY PATENTED INVENTION THAT MAY IN ANY WAY BE RELATED THERETO.

12306

REVISIONS			
SYM	DESCRIPTION	DATE	APPROVAL
A	REVISED AND UPGRADED TO CLASS A PER TDRR 12587		

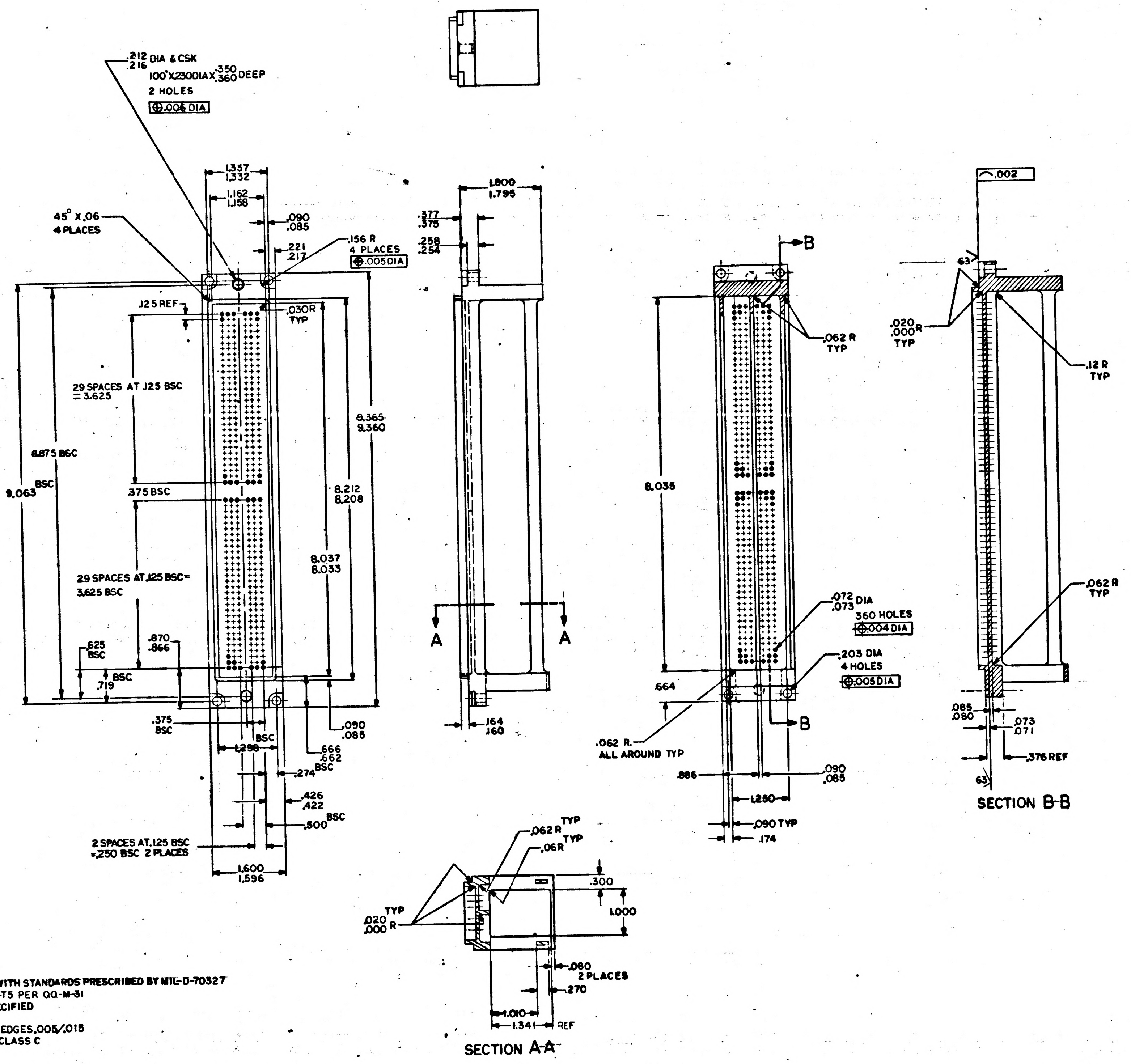

.212 .216 DIA & CSK
100° X .230 DIA X .350 .360 DEEP
2 HOLES
⊕ .006 DIA
1.337 1.332
1.162 1.158
45° X .06
4 PLACES
.090 .085
.221 .217
.156 R
4 PLACES
⊕ .005 DIA
.125 REF
.030 R TYP
29 SPACES AT .125 BSC = 3.625
8.875 BSC
9.063 BSC
.375 BSC
8.365 9.360
8.212 8.208
8.037 8.033
29 SPACES AT .125 BSC = 3.625 BSC
.625 BSC
.870 .866
.719 BSC
.375 BSC
BSC
1.298
.090 .085
.666 .662 BSC
.274
.426 .422
.500 BSC
2 SPACES AT .125 BSC = .250 BSC 2 PLACES
1.600 1.596
1.800 1.796
.377 .375
.258 .254
A
A
.164 .160
.062 R TYP
.06 R TYP
.020 .000 R TYP
.300
1.000
.080 2 PLACES
.270
1.010
1.341 REF
SECTION A-A
B
B
8.035
.062 R TYP
.072 .073 DIA
360 HOLES
⊕ .004 DIA
.203 DIA
4 HOLES
⊕ .005 DIA
.664
.062 R. ALL AROUND TYP
.886
.090 .085
1.250
.090 TYP
.174
⌒ .002
63
.020 .000 R TYP
.12 R TYP
.062 R TYP
.085 .080
.073 .071
.376 REF
63
SECTION B-B

NOTES:
1. INTERPRET DRAWING IN ACCORDANCE WITH STANDARDS PRESCRIBED BY MIL-D-70327
2. MATERIAL: MAGNESIUM ALLOY ZK60A-T5 PER QQ-M-31
3. 125√ ALL OVER UNLESS OTHERWISE SPECIFIED
4. REMOVE ALL BURRS AND BREAK SHARP EDGES .005/.015
5. ANODIZE PER MIL-M-45202, TYPE I, CLASS C
6. IDENTIFY PER ND 1002019

MASTER

QTY REQD	PART OR IDENTIFYING NO.	NOMENCLATURE OR DESCRIPTION	FIND NO.
LIST OF MATERIALS			

NEXT ASSY	USED ON
APPLICATION	

UNLESS OTHERWISE SPECIFIED DIMENSIONS ARE IN INCHES
TOLERANCES ON
FRACTIONS ± — DECIMALS .XX ± .01 .XXX ± .005 ANGLES ± 1/2°
DO NOT SCALE THIS DRAWING
MATERIAL SEE NOTE 2
HEAT TREATMENT —
FINAL FINISH SEE NOTE 3

MIT INSTRUMENTATION LAB
CAMBRIDGE, MASS
DWG. NO. CONTRACT
DRAWN W F Tagg DATE 7/7/64
CHECKED
APPROVAL
APPROVAL E. C. Hall 20 May 64
NASA APPROVAL
MIT APPROVAL

MANNED SPACECRAFT CENTER
HOUSTON, TEXAS

CONNECTOR
360 CONTACT
AGC COMPUTER

CODE IDENT NO. —
SIZE E
NASA DRAWING NO. 1004718
SCALE 1/1
WT —
SHEET 1 OF 1

12306

SYM	DESCRIPTION	DATE	APPROVAL
A	REVISED AND UPGRADE D TO CLASS A PER TDRR 12587		
B	REVISED PER TDRR 12782		WK

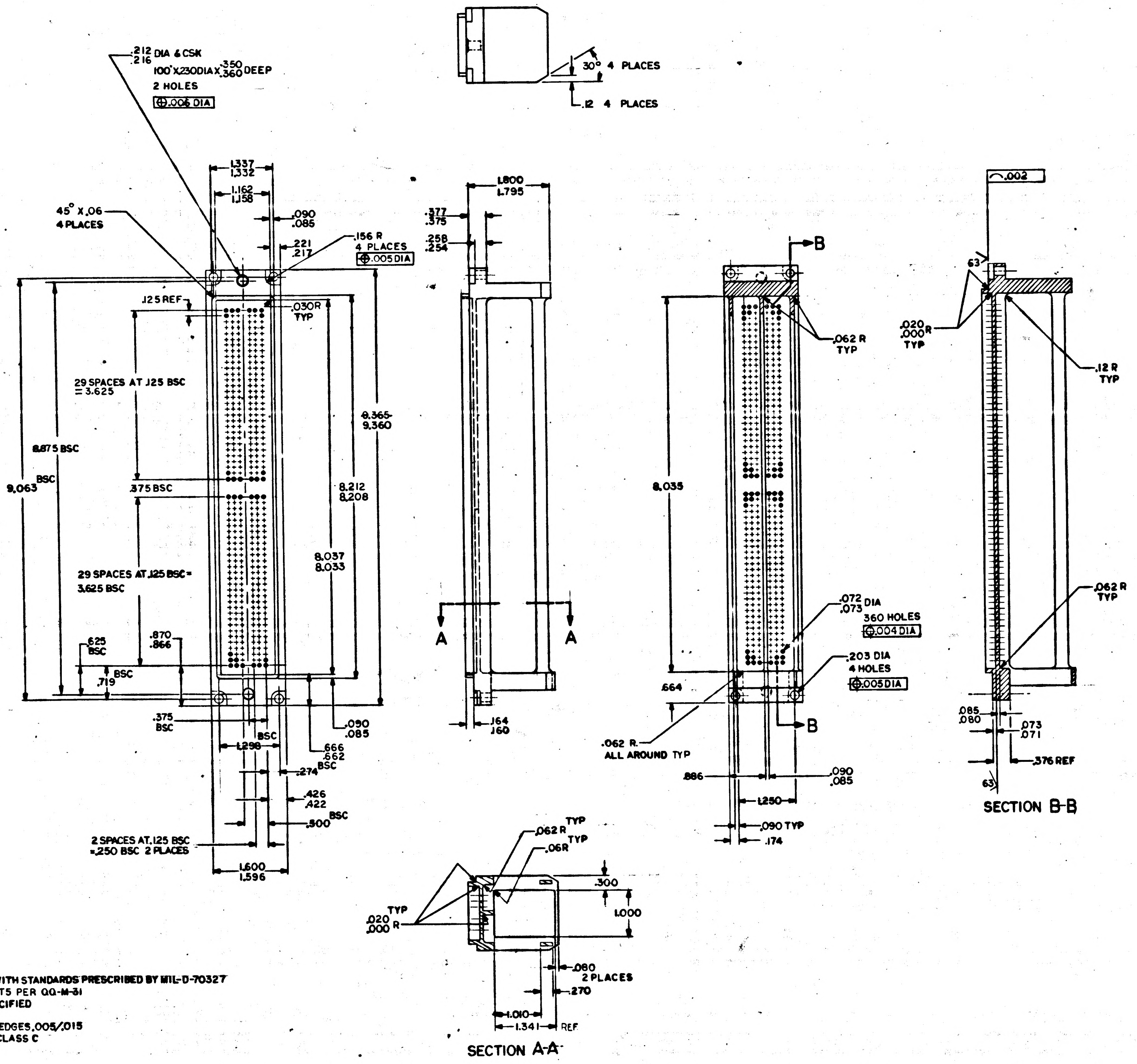

.212 .216 DIA & CSK
100° X.230 DIA X .350 .360 DEEP
2 HOLES
.006 DIA
30° 4 PLACES
.12 4 PLACES
45° X .06
4 PLACES
1.337 1.332
1.162 1.158
.090 .085
.221 .217
.156 R
4 PLACES
.005 DIA
.125 REF
.030R TYP
29 SPACES AT .125 BSC = 3.625
8.875 BSC
9.063 BSC
.375 BSC
8.365 8.360
8.212 8.208
8.037 8.033
29 SPACES AT .125 BSC = 3.625 BSC
.625 BSC
.870 .866
.719 BSC
.375 BSC
1.298 BSC
.666 .662 BSC
.274
.426 .422
.500 BSC
2 SPACES AT .125 BSC =.250 BSC 2 PLACES
1.600 1.596
1.800 1.795
.377 .375
.258 .254
A
A
.164 .160
B
B
8.035
.062 R TYP
.072 .073 DIA
360 HOLES
.004 DIA
.203 DIA
4 HOLES
.005 DIA
.664
.062 R
ALL AROUND TYP
.886
1.250
.090 .085
.090 TYP
.174
.002
63
.020 .000 R TYP
.12 R TYP
.062 R TYP
.085 .080
.073 .071
.376 REF
63
SECTION B-B
TYP
.062 R
TYP
.06R
.300
1.000
TYP
.020 .000 R
.080
2 PLACES
.270
1.010
1.341 REF
SECTION A-A

NOTES:
1. INTERPRET DRAWING IN ACCORDANCE WITH STANDARDS PRESCRIBED BY MIL-D-70327
2. MATERIAL: MAGNESIUM ALLOY ZK60A-T5 PER QQ-M-31
3. 125√ ALL OVER UNLESS OTHERWISE SPECIFIED
4. REMOVE ALL BURRS AND BREAK SHARP EDGES .005/.015
5. ANODIZE PER MIL-M-45202, TYPE 1, CLASS C
6. IDENTIFY PER ND1002019

MASTER

QTY REQD	PART OR IDENTIFYING NO.	NOMENCLATURE OR DESCRIPTION	FIND NO.

LIST OF MATERIALS

NEXT ASSY	USED ON
APPLICATION	

UNLESS OTHERWISE SPECIFIED
DIMENSIONS ARE IN INCHES
TOLERANCES ON
FRACTIONS ± —
DECIMALS .XX ± .01 .XXX ± .005
ANGLES ± 1/2°
DO NOT SCALE THIS DRAWING
MATERIAL SEE NOTE 2
HEAT TREATMENT ——
FINAL FINISH SEE NOTE 3

MIT
INSTRUMENTATION LAB
CAMBRIDGE, MASS
DWG. NO.
CONTRACT
DRAWN W.F. Tay DATE 7/9/64
CHECKED
APPROVAL
APPROVAL
NASA APPROVAL
MIT APPROVAL

MANNED SPACECRAFT CENTER
HOUSTON, TEXAS

CONNECTOR
360 CONTACT
AGC COMPUTER

CODE IDENT NO. ——
SIZE E
NASA DRAWING NO. 1004718
SCALE 1/1
WT ——
SHEET 1 OF 1

NOTICE — WHEN GOVERNMENT DRAWINGS, SPECIFICATIONS, OR OTHER DATA ARE USED FOR ANY PURPOSE OTHER THAN IN CONNECTION WITH A DEFINITELY RELATED GOVERNMENT PROCUREMENT OPERATION, THE UNITED STATES GOVERNMENT THEREBY INCURS NO RESPONSIBILITY NOR ANY OBLIGATION WHATSOEVER; AND THE FACT THAT THE GOVERNMENT MAY HAVE FORMULATED, FURNISHED, OR IN ANY WAY SUPPLIED THE SAID DRAWINGS, SPECIFICATIONS, OR OTHER DATA IS NOT TO BE REGARDED BY IMPLICATION OR OTHERWISE AS IN ANY MANNER LICENSING THE HOLDER OR ANY OTHER PERSON OR CORPORATION, OR CONVEYING ANY RIGHTS OR PERMISSION TO MANUFACTURE, USE, OR SELL ANY PATENTED INVENTION THAT MAY IN ANY WAY BE RELATED THERETO

12306

REVISIONS			
SYM	DESCRIPTION	DATE	APPROVAL
A	REVISED AND UPGRADED TO CLASS A PER TDRR 12569		
B	REVISED PER TDRR 12782		WR
C	REVISED PER TDRR 13299		WR

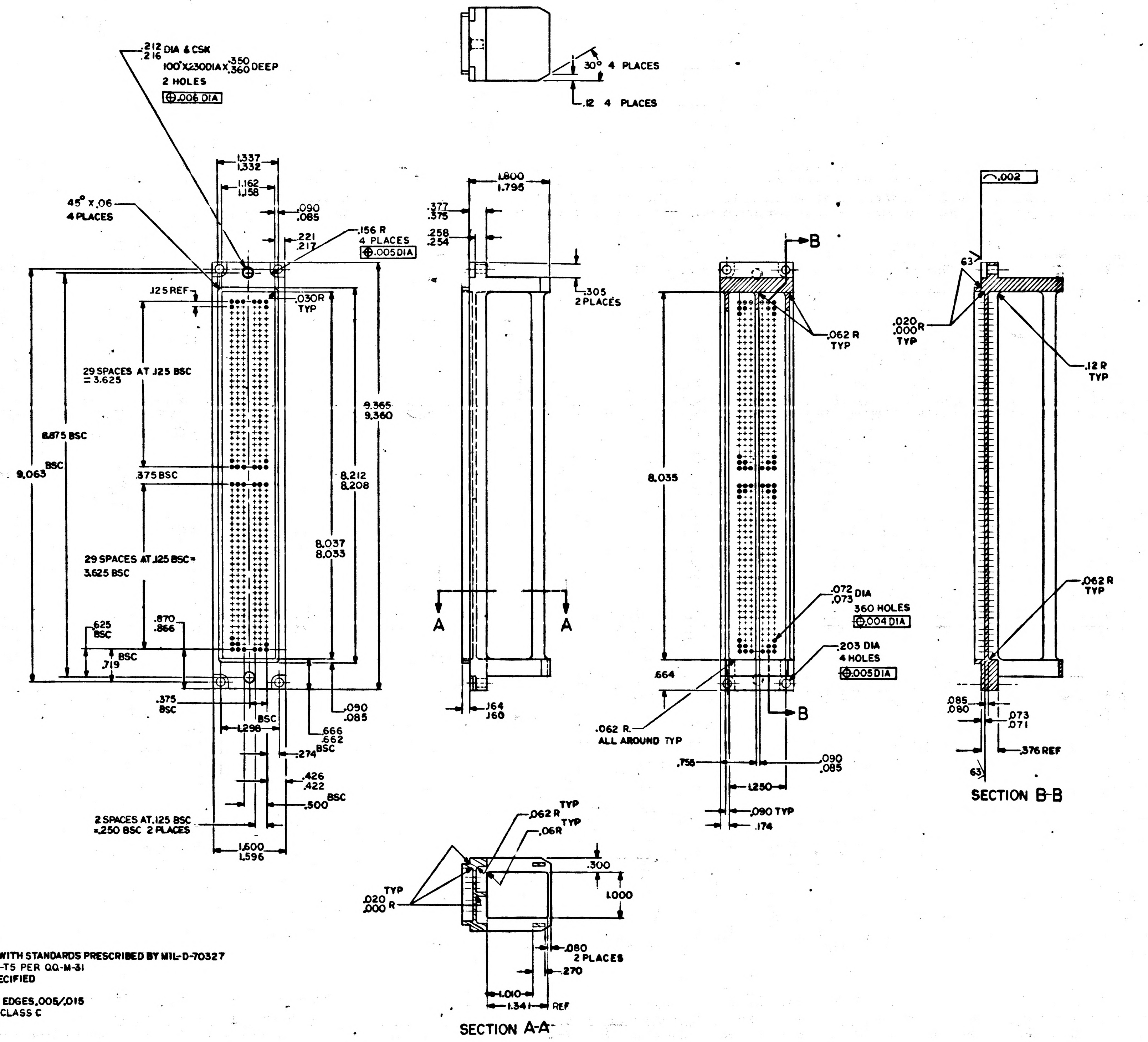
.212 .216 DIA & CSK
100° X .230 DIA X .350 .360 DEEP
2 HOLES
⊕ .006 DIA
30° 4 PLACES
.12 4 PLACES
1.337 1.332
1.162 1.158
45° X .06
4 PLACES
.090 .085
.221 .217
.156 R
4 PLACES
⊕ .005 DIA
.125 REF
.030 R TYP
29 SPACES AT .125 BSC = 3.625
8.875 BSC
9.063 BSC
.375 BSC
9.365 9.360
8.212 8.208
8.037 8.033
29 SPACES AT .125 BSC = 3.625 BSC
.625 BSC
.870 .866
.719 BSC
.375 BSC
1.298 BSC
.666 .662 BSC
.274
.426 .422 BSC
.500
2 SPACES AT .125 BSC = .250 BSC 2 PLACES
1.600 1.596
1.800 1.795
.377 .375
.258 .254
.305 2 PLACES
A
A
.164 .160
B
B
.062 R TYP
8.035
.072 .073 DIA
360 HOLES
⊕ .004 DIA
.203 DIA
4 HOLES
⊕ .005 DIA
.664
.062 R. ALL AROUND TYP
.756
.090 .085
1.250
.090 TYP
.174
⌒ .002
63
.020 .000 R TYP
.12 R TYP
.062 R TYP
.085 .080
.073 .071
.376 REF
63
SECTION B-B
.062 R TYP
.06 R TYP
.300
1.000
.020 .000 R TYP
.080 2 PLACES
.270
1.010
1.341 REF
SECTION A-A

NOTES:

1. INTERPRET DRAWING IN ACCORDANCE WITH STANDARDS PRESCRIBED BY MIL-D-70327
2. MATERIAL: MAGNESIUM ALLOY ZK60A-T5 PER QQ-M-31
3. 125√ ALL OVER UNLESS OTHERWISE SPECIFIED
4. REMOVE ALL BURRS AND BREAK SHARP EDGES .005/.015
5. ANODIZE PER MIL-M-45202, TYPE I, CLASS C
6. IDENTIFY PER ND1002019

MASTER

QTY REQD	PART OR IDENTIFYING NO.	NOMENCLATURE OR DESCRIPTION	FIND NO.
LIST OF MATERIALS			

NEXT ASSY	USED ON
APPLICATION	

UNLESS OTHERWISE SPECIFIED
DIMENSIONS ARE IN INCHES
TOLERANCES ON
FRACTIONS ± — DECIMALS .XX ± .01 .XXX ± .005 ANGLES ± 1/2°
DO NOT SCALE THIS DRAWING
MATERIAL SEE NOTE 2
HEAT TREATMENT —
FINAL FINISH SEE NOTE 3

MIT
INSTRUMENTATION LAB
CAMBRIDGE, MASS
DWG. NO. CONTRACT
DRAWN DATE 7/9/64
CHECKED
APPROVAL
APPROVAL Ellen C. Hall 28 Aug 64
NASA APPROVAL
MIT APPROVAL

MANNED SPACECRAFT CENTER
HOUSTON, TEXAS

CONNECTOR
360 CONTACT
AGC COMPUTER

CODE IDENT NO. —
SIZE E
NASA DRAWING NO. 1004718
SCALE 1/1
WT —
SHEET 1 OF 1

NOTICE — WHEN GOVERNMENT DRAWINGS, SPECIFICATIONS, OR OTHER DATA ARE USED FOR ANY PURPOSE OTHER THAN IN CONNECTION WITH A DEFINITELY RELATED GOVERNMENT PROCUREMENT OPERATION, THE UNITED STATES GOVERNMENT THEREBY INCURS NO RESPONSIBILITY NOR ANY OBLIGATION WHATSOEVER AND THE FACT THAT THE GOVERNMENT MAY HAVE FORMULATED, FURNISHED, OR IN ANY WAY SUPPLIED THE SAID DRAWINGS, SPECIFICATIONS OR OTHER DATA IS NOT TO BE REGARDED BY IMPLICATION OR OTHERWISE AS IN ANY MANNER LICENSING THE HOLDER OR ANY OTHER PERSON OR CORPORATION, OR CONVEYING ANY RIGHTS OR PERMISSION TO MANUFACTURE, USE, OR SELL ANY PATENTED INVENTION THAT MAY IN ANY WAY BE RELATED THERETO

SYM	DESCRIPTION	DATE	APPROVAL
	REVISIONS		

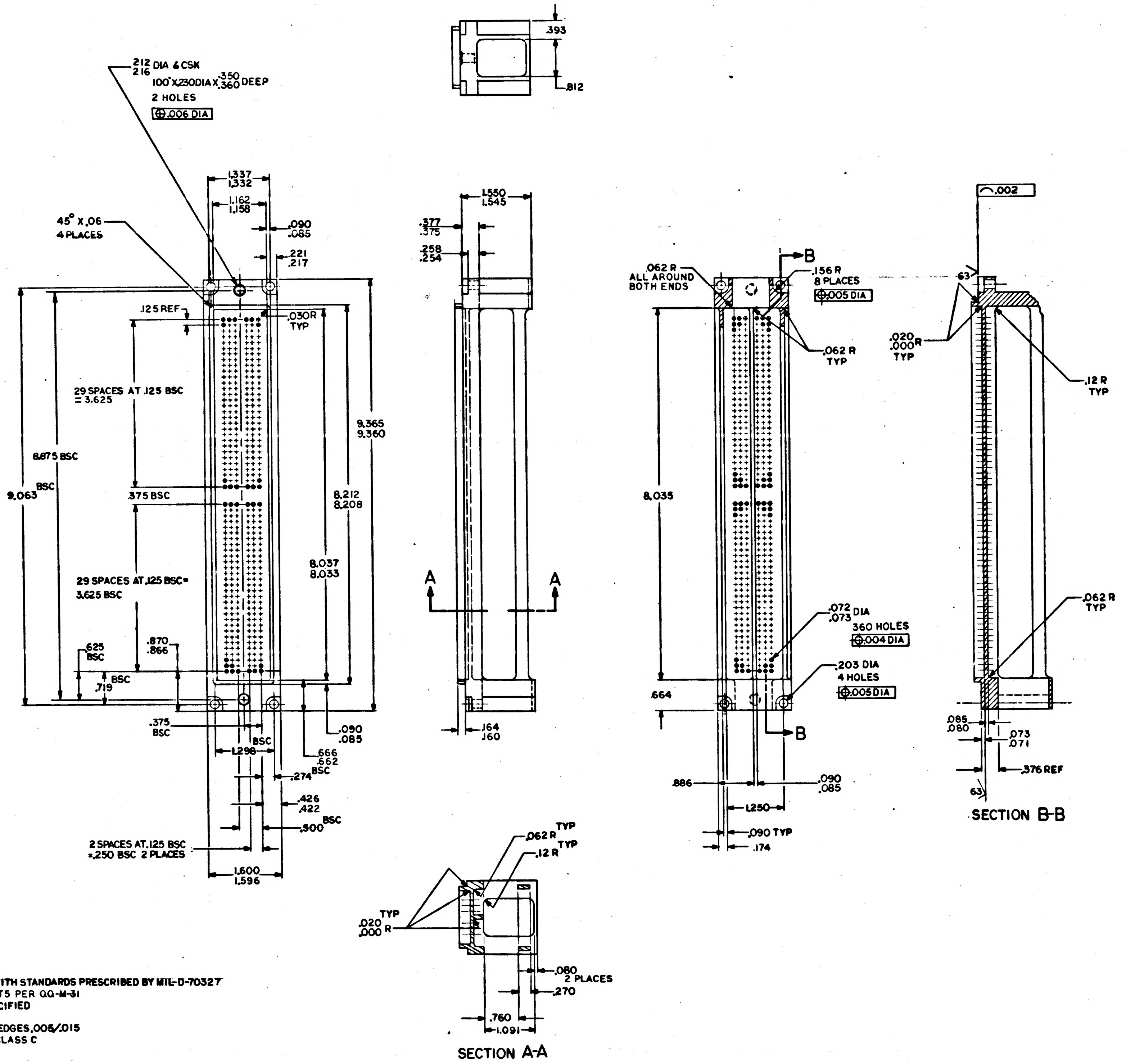

.393
.812
.212 .216 DIA & CSK
100° X .230 DIA X .350 .360 DEEP
2 HOLES
⊕ .006 DIA
1.337 1.332
1.162 1.158
45° X .06
4 PLACES
.090 .085
.221 .217
.125 REF
.030R TYP
29 SPACES AT .125 BSC = 3.625
8.875 BSC
9.063 BSC
.375 BSC
9.365 9.360
8.212 8.208
8.037 8.033
29 SPACES AT .125 BSC = 3.625 BSC
.625 BSC
.719 BSC
.870 .866
.375 BSC
BSC
1.298
.090 .085
.666 .662 BSC
.274
.426 .422
.500 BSC
2 SPACES AT .125 BSC = .250 BSC 2 PLACES
1.600 1.596
1.550 1.545
.377 .375
.258 .254
A
A
.164 .160
.062 R ALL AROUND BOTH ENDS
B
.156 R 8 PLACES
⊕ .005 DIA
.062 R TYP
8.035
.072 .073 DIA
360 HOLES
⊕ .004 DIA
.203 DIA 4 HOLES
⊕ .005 DIA
.664
B
.886
1.250
.090 .085
.090 TYP
.174
⌒ .002
63
.020 .000 R TYP
.12 R TYP
.062 R TYP
.085 .080
.073 .071
.376 REF
63
SECTION B-B
.062 R TYP
.12 R TYP
.020 .000 R TYP
.080 2 PLACES
.270
.760
1.091
SECTION A-A

FOR INFORMATION ONLY
CLASS B RELEASE TDR NO. 12306

NOTES:
1. INTERPRET DRAWING IN ACCORDANCE WITH STANDARDS PRESCRIBED BY MIL-D-70327
2. MATERIAL: MAGNESIUM ALLOY ZK60A-T5 PER QQ-M-31
3. 125√ ALL OVER UNLESS OTHERWISE SPECIFIED
4. REMOVE ALL BURRS AND BREAK SHARP EDGES .005/.015
5. ANODIZE PER MIL-M-45202, TYPE I, CLASS C
6. IDENTIFY PER ND1002019

MASTER

QTY REQD	PART OR IDENTIFYING NO.	NOMENCLATURE OR DESCRIPTION	FIND NO.
	LIST OF MATERIALS		

NEXT ASSY	USED ON	UNLESS OTHERWISE SPECIFIED DIMENSIONS ARE IN INCHES TOLERANCES ON FRACTIONS ± — DECIMALS .XX ± .01 .XXX ± .005 ANGLES ± 1/2° DO NOT SCALE THIS DRAWING	MIT INSTRUMENTATION LAB CAMBRIDGE, MASS
APPLICATION		MATERIAL SEE NOTE 2	DRAWN W.F. Tay DATE 7/9/64
		HEAT TREATMENT —	CHECKED
		FINAL FINISH SEE NOTE 3	APPROVAL
			APPROVAL Ellen C. Hall 28 Aug 64
			NASA APPROVAL
			MIT APPROVAL

MANNED SPACECRAFT CENTER
HOUSTON, TEXAS

CONNECTOR
360 CONTACT
AGC COMPUTER

CODE IDENT NO.	SIZE	NASA DRAWING NO.
—	E	1004718
SCALE 1/1	WT —	SHEET 1 OF 1

NOTICE — WHEN GOVERNMENT DRAWINGS, SPECIFICATIONS, OR OTHER DATA ARE USED FOR ANY PURPOSE OTHER THAN IN CONNECTION WITH A DEFINITELY RELATED GOVERNMENT PROCUREMENT OPERATION, THE UNITED STATES GOVERNMENT THEREBY INCURS NO RESPONSIBILITY NOR ANY OBLIGATION WHATSOEVER; AND THE FACT THAT THE GOVERNMENT MAY HAVE FORMULATED, FURNISHED, OR IN ANY WAY SUPPLIED THE SAID DRAWINGS, SPECIFICATIONS OR OTHER DATA IS NOT TO BE REGARDED BY IMPLICATION OR OTHERWISE AS IN ANY MANNER LICENSING THE HOLDER OR ANY OTHER PERSON OR CORPORATION, OR CONVEYING ANY RIGHTS OR PERMISSION TO MANUFACTURE, USE, OR SELL ANY PATENTED INVENTION THAT MAY IN ANY WAY BE RELATED THERETO.

12306

REVISIONS			
SYM	DESCRIPTION	DATE	APPROVAL
A	UPGRADED TO CLASS A PER TDRR 12581	9/4/64	

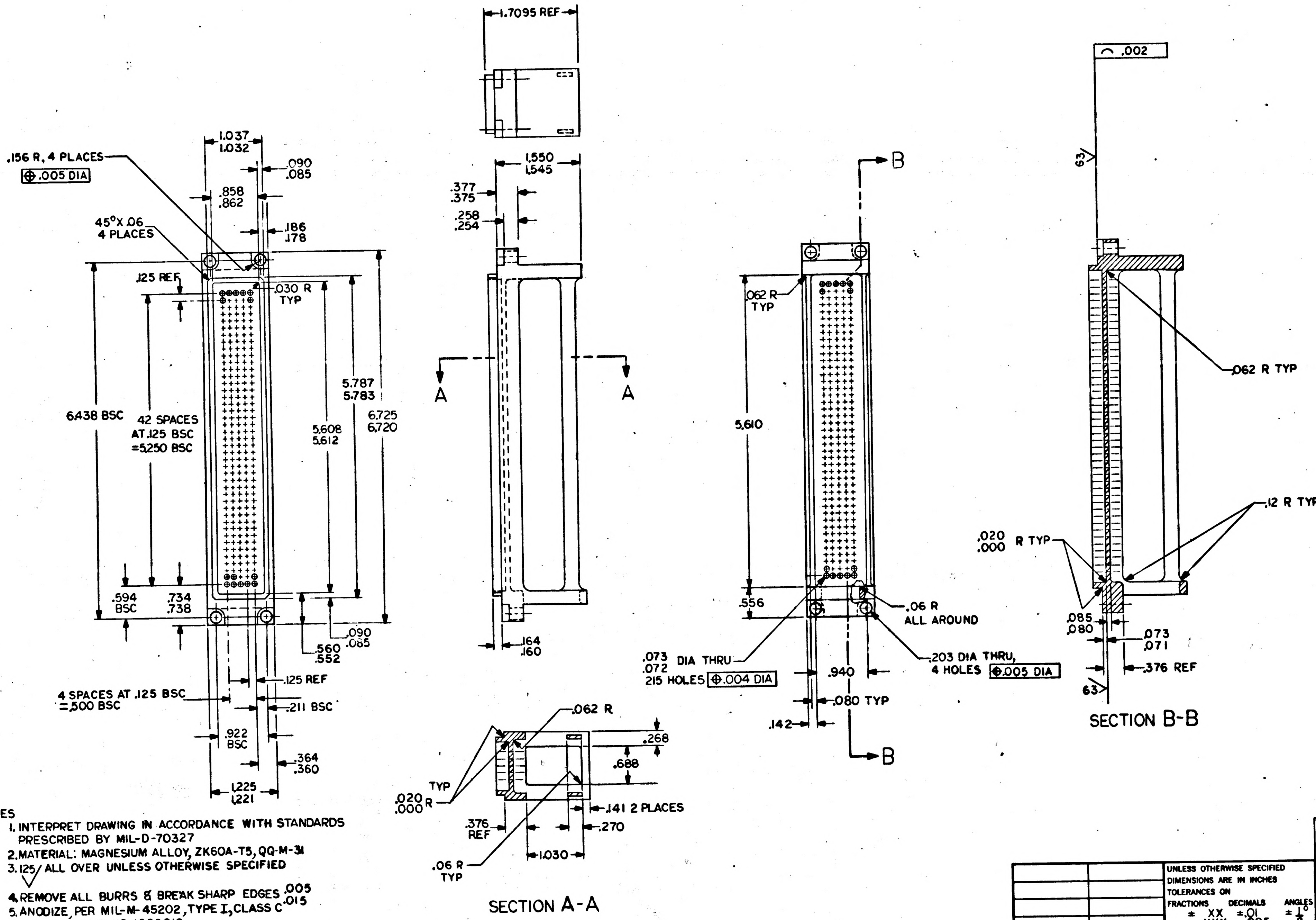

1.7095 REF
.156 R, 4 PLACES
⊕ .005 DIA
1.037
1.032
.090
.085
.858
.862
.186
.178
45° X .06
4 PLACES
.125 REF
.030 R
TYP
6.438 BSC
42 SPACES
AT .125 BSC
=5.250 BSC
5.608
5.612
5.787
5.783
6.725
6.720
.594
BSC
.734
.738
.560
.552
.090
.085
.125 REF
4 SPACES AT .125 BSC
=.500 BSC
.211 BSC
.922
BSC
.364
.360
1.225
1.221
1.550
1.545
.377
.375
.258
.254
A
A
.164
.160
.062 R
.268
.688
TYP
.020
.000
R
.141 2 PLACES
.376
REF
.270
.06 R
TYP
1.030
SECTION A-A
B
.062 R
TYP
5.610
.556
.06 R
ALL AROUND
.073
.072
DIA THRU
215 HOLES
⊕ .004 DIA
.203 DIA THRU,
4 HOLES
⊕ .005 DIA
.940
.080 TYP
.142
B
⌒ .002
63
.062 R TYP
.12 R TYP
.020
.000
R TYP
.085
.080
.073
.071
.376 REF
63
SECTION B-B

NOTES

1. INTERPRET DRAWING IN ACCORDANCE WITH STANDARDS PRESCRIBED BY MIL-D-70327
2. MATERIAL: MAGNESIUM ALLOY, ZK60A-T5, QQ-M-31
3. 125√ ALL OVER UNLESS OTHERWISE SPECIFIED
4. REMOVE ALL BURRS & BREAK SHARP EDGES $^{.005}_{.015}$
5. ANODIZE, PER MIL-M-45202, TYPE I, CLASS C
6. IDENTIFY PER ND 1002019

MASTER

QTY REQD	PART OR IDENTIFYING NO.	NOMENCLATURE OR DESCRIPTION	FIND NO.
	LIST OF MATERIALS		

NEXT ASSY	USED ON
APPLICATION	

UNLESS OTHERWISE SPECIFIED
DIMENSIONS ARE IN INCHES
TOLERANCES ON
FRACTIONS ±
DECIMALS XX ±.01 XXX ±.005
ANGLES ± $\frac{1}{2}$°
DO NOT SCALE THIS DRAWING

MATERIAL SEE NOTE 2

HEAT TREATMENT ———

FINAL FINISH SEE NOTE 3

MIT INSTRUMENTATION LAB
CAMBRIDGE, MASS.
DWG. NO.
CONTRACT

DRAWN R. Romey DATE 7-9-64
CHECKED
APPROVAL
APPROVAL

NASA APPROVAL 9/1/64
MIT APPROVAL 9/1/64

MANNED SPACECRAFT CENTER
HOUSTON, TEXAS

CONNECTOR
215 CONTACT
AGC COMPUTER

CODE IDENT NO. ———
SIZE D
NASA DRAWING NO. 1004719
SCALE 1/1
WT ———
SHEET 1 OF 1

NOTICE — WHEN GOVERNMENT DRAWINGS, SPECIFICATIONS, OR OTHER DATA ARE USED FOR ANY PURPOSE OTHER THAN IN CONNECTION WITH A DEFINITELY RELATED GOVERNMENT PROCUREMENT OPERATION, THE UNITED STATES GOVERNMENT THEREBY INCURS NO RESPONSIBILITY NOR ANY OBLIGATION WHATSOEVER; AND THE FACT THAT THE GOVERNMENT MAY HAVE FORMULATED, FURNISHED, OR IN ANY WAY SUPPLIED THE SAID DRAWINGS, SPECIFICATIONS OR OTHER DATA IS NOT TO BE REGARDED BY IMPLICATION OR OTHERWISE AS IN ANY MANNER LICENSING THE HOLDER OR ANY OTHER PERSON OR CORPORATION, OR CONVEYING ANY RIGHTS OR PERMISSION TO MANUFACTURE, USE, OR SELL ANY PATENTED INVENTION THAT MAY IN ANY WAY BE RELATED THERETO.

REVISIONS			
SYM	DESCRIPTION	DATE	APPROVAL

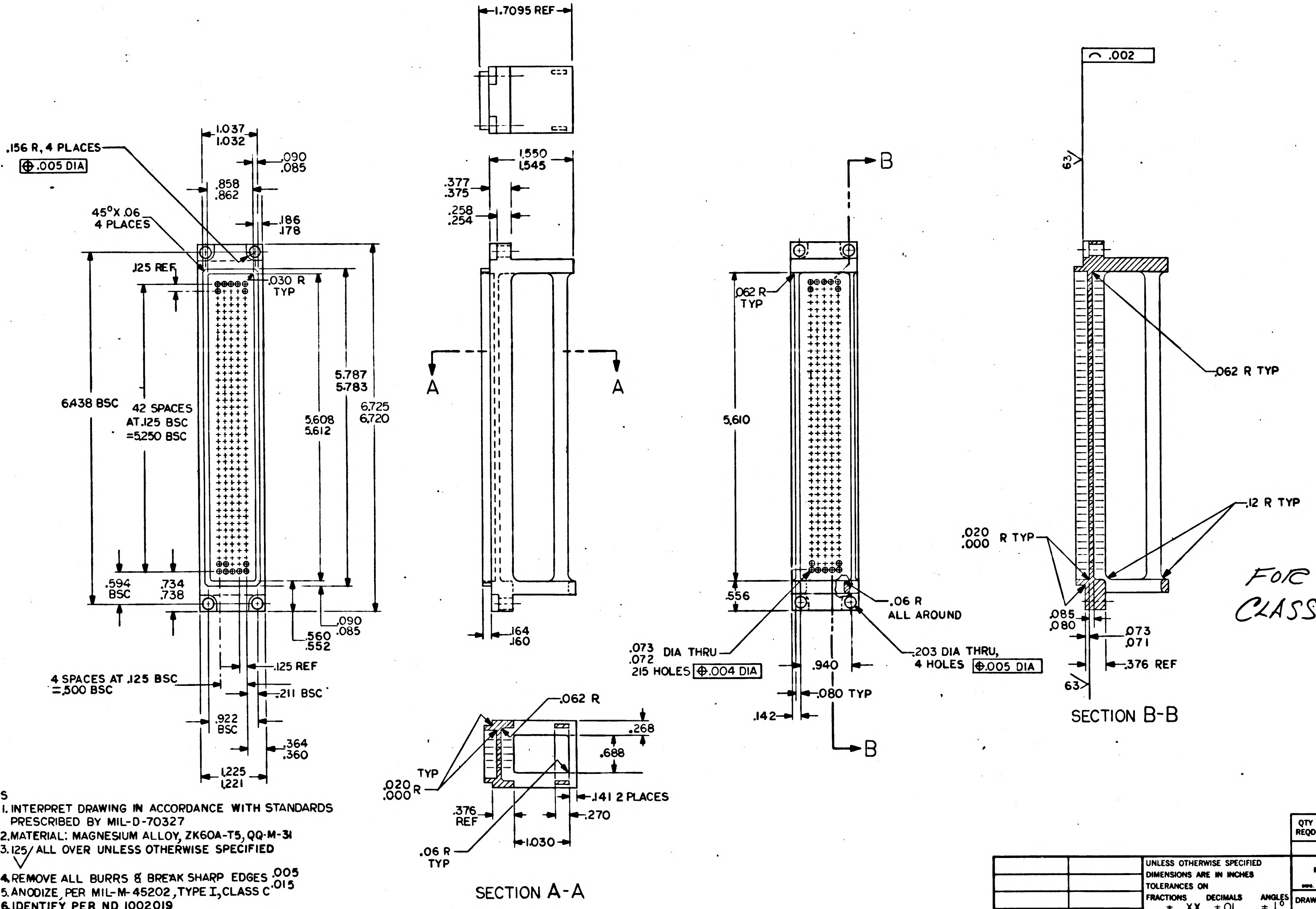
1.7095 REF
1.037
1.032
.090
.085
.156 R, 4 PLACES
⊕ .005 DIA
.858
.862
45° X .06
4 PLACES
.186
.178
.125 REF
.030 R
TYP
6.438 BSC
42 SPACES
AT .125 BSC
=5.250 BSC
5.787
5.783
5.608
5.612
6.725
6.720
.594
BSC
.734
.738
.090
.085
.560
.552
.125 REF
4 SPACES AT .125 BSC
=.500 BSC
.211 BSC
.922
BSC
.364
.360
1.225
1.221
1.550
1.545
.377
.375
.258
.254
A
A
.164
.160
.062 R
.268
.688
TYP
.020
.000 R
.376
REF
.141 2 PLACES
.270
1.030
.06 R
TYP
SECTION A-A
B
.062 R
TYP
5.610
.556
.06 R
ALL AROUND
.073 DIA THRU
.072
215 HOLES ⊕ .004 DIA
.203 DIA THRU,
4 HOLES ⊕ .005 DIA
.940
.080 TYP
.142
B
⌒ .002
63
.062 R TYP
.12 R TYP
.020
.000 R TYP
.085
.080
.073
.071
.376 REF
63
SECTION B-B

NOTES
1. INTERPRET DRAWING IN ACCORDANCE WITH STANDARDS PRESCRIBED BY MIL-D-70327
2. MATERIAL: MAGNESIUM ALLOY, ZK60A-T5, QQ-M-31
3. 125 ALL OVER UNLESS OTHERWISE SPECIFIED
4. REMOVE ALL BURRS & BREAK SHARP EDGES $^{.005}_{.015}$
5. ANODIZE PER MIL-M-45202, TYPE I, CLASS C
6. IDENTIFY PER ND 1002019

FOR INFORMATION ONLY
CLASS B RELEASE TDR NO. 12306

MASTER

QTY REQD	PART OR IDENTIFYING NO.	NOMENCLATURE OR DESCRIPTION	FIND NO.

LIST OF MATERIALS

NEXT ASSY	USED ON
APPLICATION	

UNLESS OTHERWISE SPECIFIED
DIMENSIONS ARE IN INCHES
TOLERANCES ON
FRACTIONS ±
DECIMALS XX ±.01 XXX .005
ANGLES ± $\frac{1}{2}$°
DO NOT SCALE THIS DRAWING

MATERIAL SEE NOTE 2

HEAT TREATMENT —

FINAL FINISH SEE NOTE 3

MIT
INSTRUMENTATION LAB
CAMBRIDGE, MASS.
DWG. NO.
CONTRACT

DRAWN F. Romey DATE 2-9-64
CHECKED [illegible]
APPROVAL E. D. [illegible]
APPROVAL Eldon C. Hall [illegible]
NASA APPROVAL [illegible] 9/1/64
MIT APPROVAL [illegible] 9/1/64

MANNED SPACECRAFT CENTER
HOUSTON, TEXAS

CONNECTOR
215 CONTACT
AGC COMPUTER

CODE IDENT NO. —
SIZE D
NASA DRAWING NO. 1004719
SCALE 1/1
WT —
SHEET 1 OF 1

INCHES
0 1 2
PHOTOGRAPHIC SCALE ONLY

12306

1004720 A

NOTICE — WHEN GOVERNMENT DRAWINGS, SPECIFICATIONS, OR OTHER DATA ARE USED FOR ANY PURPOSE OTHER THAN IN CONNECTION WITH A DEFINITELY RELATED GOVERNMENT PROCUREMENT OPERATION, THE UNITED STATES GOVERNMENT THEREBY INCURS NO RESPONSIBILITY NOR ANY OBLIGATION WHATSOEVER; AND THE FACT THAT THE GOVERNMENT MAY HAVE FORMULATED, FURNISHED, OR IN ANY WAY SUPPLIED THE SAID DRAWINGS, SPECIFICATIONS OR OTHER DATA IS NOT TO BE REGARDED BY IMPLICATION OR OTHERWISE AS IN ANY MANNER LICENSING THE HOLDER OR ANY OTHER PERSON OR CORPORATION, OR CONVEYING ANY RIGHTS OR PERMISSION TO MANUFACTURE, USE, OR SELL ANY PATENTED INVENTION THAT MAY IN ANY WAY BE RELATED THERETO.

REVISIONS

SYM	DESCRIPTION	DATE	APPROVAL
A	REVISED AND UP GRADED TO CLASS A PER TDRR 12571	14SEP64	R.L.

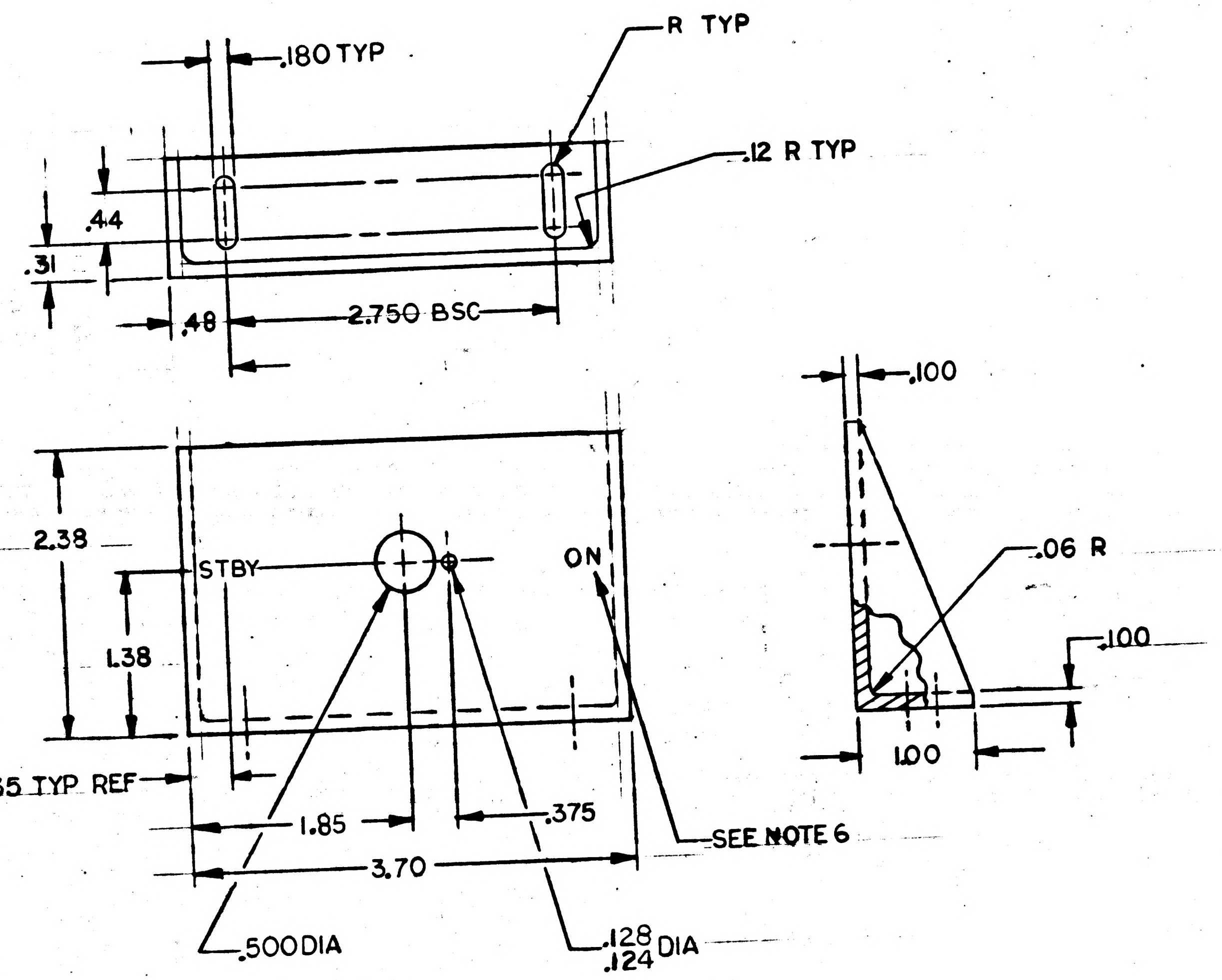

NOTES

1. INTERPRET DRAWING IN ACCORDANCE WITH STANDARDS PRESCRIBED BY MIL-D-70327
2. MATERIAL: 6061-T6 AL ALLOY PER QQ-A-250/11
3. REMOVE BURRS AND BREAK SHARP EDGES .005/.015
4. SURFACE QUALITY $\sqrt{125}$ ALL OVER
5. FINISH: PLATE (ELECTRODEPOSITED) ALL SURFACES PER QQ-C-320, CLASS 2, TYPE I, PLATING TO BE .0004 TO .0008 THICK, HARDNESS ROCKWELL C60 MIN. DIMENSIONS APPLY AFTER PLATING. SPECIFIED THICKNESS NOT REQUIRED IN ALL HOLES AS LONG AS PLATING IS CONTINUOUS THROUGH EACH HOLE
6. MARK .140/.100 HIGH WHITE CHARACTERS PER ND 1002122 TYPE II, CLASS 1, PER ND 1002019
7. IDENTIFY PER ND1002019

MASTER

QTY REQD	PART OR IDENTIFYING NO.	NOMENCLATURE OR DESCRIPTION	FIND NO.

LIST OF MATERIALS

NEXT ASSY	USED ON
1003701	

APPLICATION

UNLESS OTHERWISE SPECIFIED DIMENSIONS ARE IN INCHES
TOLERANCES ON
FRACTIONS ± —— DECIMALS ±.005 ±.01 ANGLES ± ——
DO NOT SCALE THIS DRAWING

MATERIAL SEE NOTE 2

HEAT TREATMENT ——

FINAL FINISH SEE NOTE 5

MIT
INSTRUMENTATION LAB
CAMBRIDGE, MASS.
DWG. NO. CONTRACT

DRAWN L. Balfour DATE 25 Aug 64
CHECKED R. Lindstrom 1 Sept 64
APPROVAL E. L. Duggan LTB
APPROVAL Eldon C Hall 28 Aug 64

NASA APPROVAL 9/1/64

MIT APPROVAL 9/1/64

MANNED SPACECRAFT CENTER
HOUSTON, TEXAS

SWITCH MOUNT
(TRAY B)
AGC

CODE IDENT NO. ——
SIZE C
NASA DRAWING NO. 1004720
SCALE 1/1
WT ——
SHEET 1 OF 1

INCHES
0 1 2

NOTICE — WHEN GOVERNMENT DRAWINGS, SPECIFICATIONS, OR OTHER DATA ARE USED FOR ANY PURPOSE OTHER THAN IN CONNECTION WITH A DEFINITELY RELATED GOVERNMENT PROCUREMENT OPERATION, THE UNITED STATES GOVERNMENT THEREBY INCURS NO RESPONSIBILITY NOR ANY OBLIGATION WHATSOEVER; AND THE FACT THAT THE GOVERNMENT MAY HAVE FORMULATED, FURNISHED OR IN ANY WAY SUPPLIED THE SAID DRAWINGS, SPECIFICATIONS OR OTHER DATA IS NOT TO BE REGARDED BY IMPLICATION OR OTHERWISE AS IN ANY MANNER LICENSING THE HOLDER OR ANY OTHER PERSON OR CORPORATION, OR CONVEYING ANY RIGHTS OR PERMISSION TO MANUFACTURE, USE, OR SELL ANY PATENTED INVENTION THAT MAY IN ANY WAY BE RELATED THERETO.

1004720

REVISIONS			
SYM	DESCRIPTION	DATE	APPROVAL

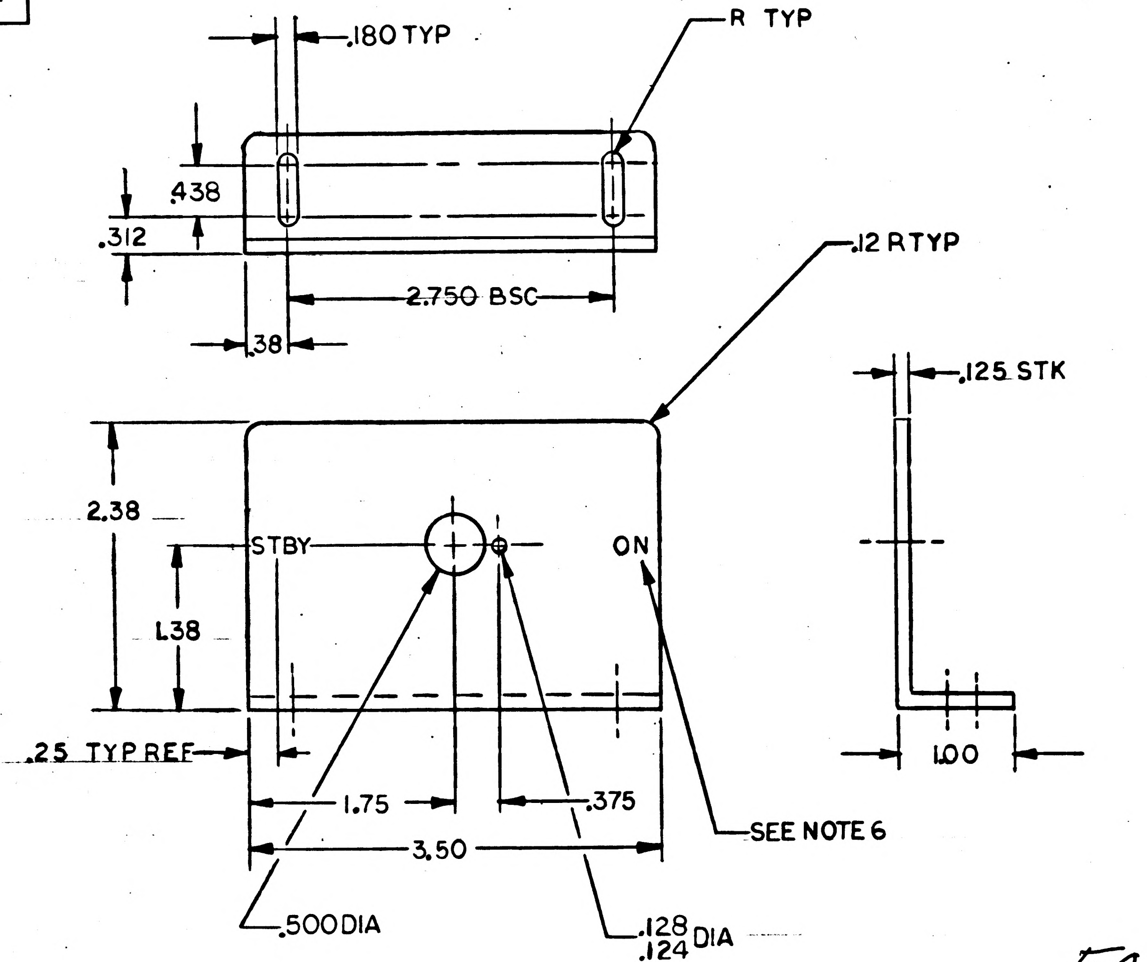

FOR INFORMATION ONLY
CLASS B RELEASE TDR NO. 1230

NOTES

1. INTERPRET DRAWING IN ACCORDANCE WITH STANDARDS PRESCRIBED BY MIL-D-70327
2. MATERIAL: 6063-T5 AL EXTRUDED ANGLE
3. REMOVE BURRS AND BREAK SHARP EDGES .005/.015
4. SURFACE QUALITY $\sqrt{125}$ ALL OVER
5. FINISH: PLATE (ELECTRODEPOSITED) ALL SURFACES PER QQ-C-320, CLASS 2, TYPE II. PLATING TO BE .0004 TO .0002 THICK, HARDNESS ROCKWELL C70-72. DIMENSIONS APPLY AFTER PLATING. SPECIFIED THICKNESS NOT REQUIRED IN ALL HOLES AS LONG AS PLATING IS CONTINUOUS THROUGH EACH HOLE
6. MARK .140/.100 HIGH WHITE CHARACTERS PER ND 1002122 TYPE II, CLASS I, PER ND 1002019
7. IDENTIFY PER ND1002019

QTY REQD	PART OR IDENTIFYING NO.	NOMENCLATURE OR DESCRIPTION	FIND NO.

LIST OF MATERIALS

MASTER

1003701	
NEXT ASSY	USED ON
APPLICATION	

UNLESS OTHERWISE SPECIFIED
DIMENSIONS ARE IN INCHES
TOLERANCES ON
FRACTIONS ± —— DECIMALS ±.005 ±.02 ANGLES ± ——
DO NOT SCALE THIS DRAWING

MATERIAL SEE NOTE 2

HEAT TREATMENT ——

FINAL FINISH SEE NOTE 5

MIT
INSTRUMENTATION LAB
CAMBRIDGE, MASS.
DWG. NO. CONTRACT

DRAWN DATE 25 Aug 64
CHECKED A. Lindstrom 1 Sept '64
APPROVAL E. J. Duggan LTB
APPROVAL Ellen C Hall 28 Aug 64
NASA APPROVAL 9/1/64
MIT APPROVAL 9/1/64

MANNED SPACECRAFT CENTER
HOUSTON, TEXAS

SWITCH MOUNT
(TRAY B)
AGC

CODE IDENT NO. ——
SIZE C
NASA DRAWING NO. 1004720
SCALE 1/1
WT ——
SHEET 1 OF 1

INCHES
0 1 2
PHOTOGRAPHIC SCALE ONLY

12306

NOTICE — WHEN GOVERNMENT DRAWINGS, SPECIFICATIONS, OR OTHER DATA ARE USED FOR ANY PURPOSE OTHER THAN IN CONNECTION WITH A DEFINITELY RELATED GOVERNMENT PROCUREMENT OPERATION, THE UNITED STATES GOVERNMENT THEREBY INCURS NO RESPONSIBILITY NOR ANY OBLIGATION WHATSOEVER; AND THE FACT THAT THE GOVERNMENT MAY HAVE FORMULATED, FURNISHED, OR IN ANY WAY SUPPLIED THE SAID DRAWINGS, SPECIFICATIONS OR OTHER DATA IS NOT TO BE REGARDED BY IMPLICATION OR OTHERWISE AS IN ANY MANNER LICENSING THE HOLDER OR ANY OTHER PERSON OR CORPORATION, OR CONVEYING ANY RIGHTS OR PERMISSION TO MANUFACTURE, USE, OR SELL ANY PATENTED INVENTION THAT MAY IN ANY WAY BE RELATED THERETO.

1004721 | A

REVISIONS

SYM	DESCRIPTION	DATE	APPROVAL
A	REVISED AND UP GRADED TO CLASS A PER TDRR 12579	14 SEP 64	

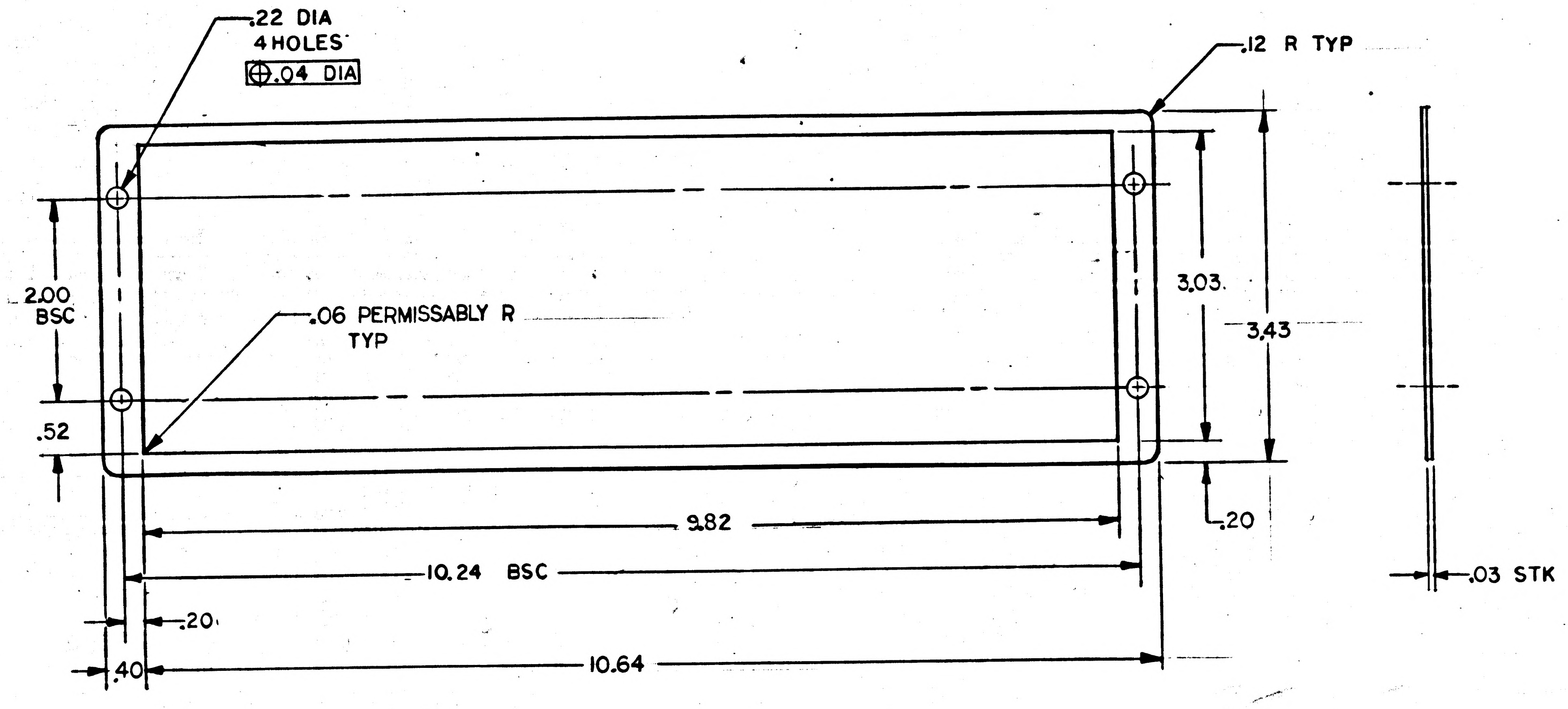

NOTES

1. INTERPRET DRAWING IN ACCORDANCE WITH STANDARDS PRESCRIBED BY MIL-D-70327
2. MATERIAL: WHITE SILICON RUBBER PER MIL-R-5847, CLASS IIb, GRADE 50
3. IDENTIFY PER ND 1002019

MASTER

QTY REQD	PART OR IDENTIFYING NO.	NOMENCLATURE OR DESCRIPTION	FIND NO.

LIST OF MATERIALS

1003716	
NEXT ASSY	USED ON
APPLICATION	

UNLESS OTHERWISE SPECIFIED DIMENSIONS ARE IN INCHES
TOLERANCES ON
FRACTIONS ± — DECIMALS ±.01 ANGLES ± —
DO NOT SCALE THIS DRAWING
MATERIAL SEE NOTE 2
HEAT TREATMENT —
FINAL FINISH —

MIT
INSTRUMENTATION LAB
CAMBRIDGE, MASS.
DWG. NO. CONTRACT
DRAWN DATE 21 AUG 64
CHECKED
APPROVAL E. J. Duggan
APPROVAL Eldon C Hall
NASA APPROVAL 9/1/64
MIT APPROVAL 9/1/64

MANNED SPACECRAFT CENTER
HOUSTON, TEXAS

GASKET
ROPE COVER

CODE IDENT NO. — SIZE C NASA DRAWING NO. 1004721
SCALE 1/1 WT — SHEET 1 OF 1

INCHES
0 1 2
PHOTOGRAPHIC SCALE ONLY

NOTICE — WHEN GOVERNMENT DRAWINGS, SPECIFICATIONS, OR OTHER DATA ARE USED FOR ANY PURPOSE OTHER THAN IN CONNECTION WITH A DEFINITELY RELATED GOVERNMENT PROCUREMENT OPERATION, THE UNITED STATES GOVERNMENT THEREBY INCURS NO RESPONSIBILITY NOR ANY OBLIGATION WHATSOEVER; AND THE FACT THAT THE GOVERNMENT MAY HAVE FORMULATED, FURNISHED, OR IN ANY WAY SUPPLIED THE SAID DRAWINGS, SPECIFICATIONS OR OTHER DATA IS NOT TO BE REGARDED BY IMPLICATION OR OTHERWISE AS IN ANY MANNER LICENSING THE HOLDER OR ANY OTHER PERSON OR CORPORATION, OR CONVEYING ANY RIGHTS OR PERMISSION TO MANUFACTURE, USE, OR SELL ANY PATENTED INVENTION THAT MAY IN ANY WAY BE RELATED THERETO.

1004721 B

12306

REVISIONS			
SYM	DESCRIPTION	DATE	APPROVAL
A	REVISED AND UP GRADED TO CLASS A PER TDRR 12579	14 SEP 64	
B	REVISED PER TDRR 13296	5 OCT 64	WC

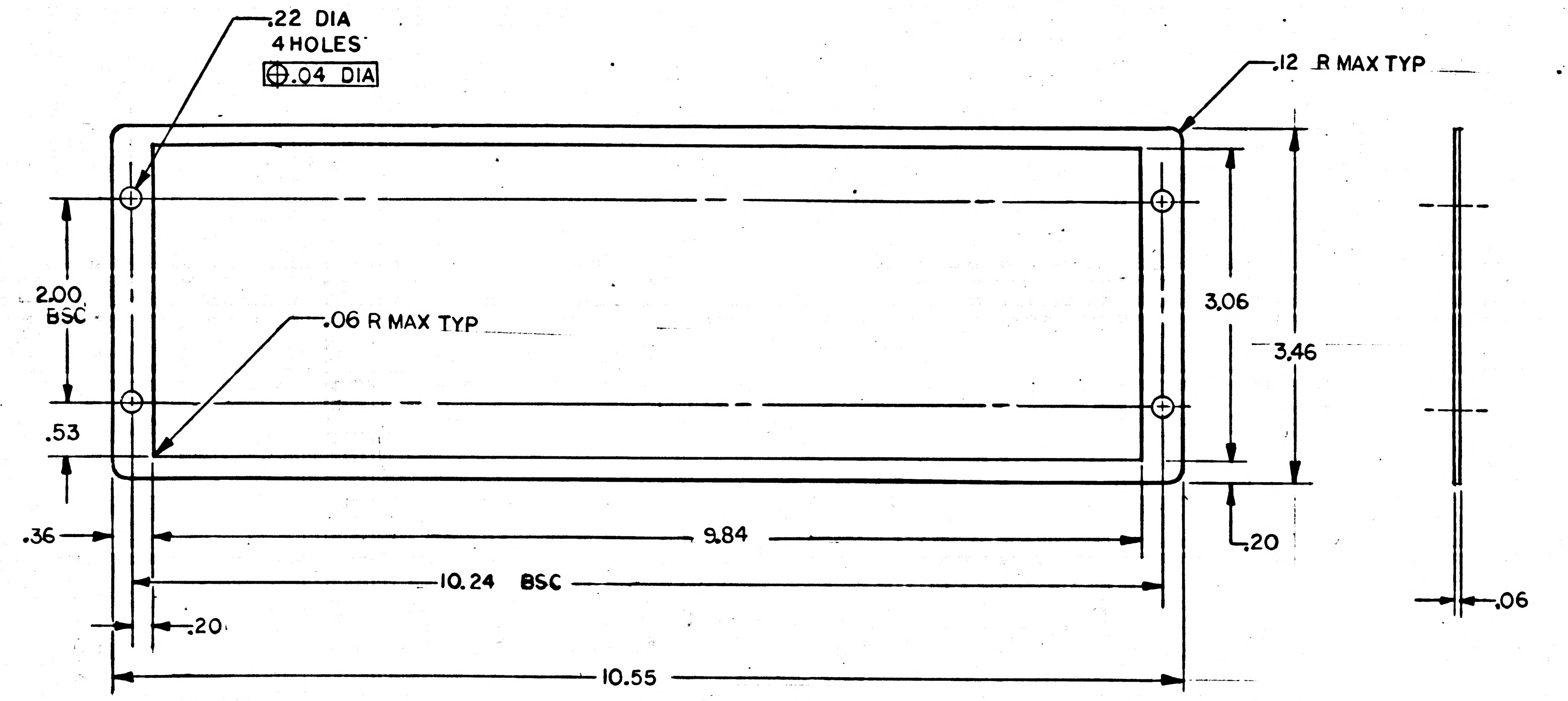

NOTES

1. INTERPRET DRAWING IN ACCORDANCE WITH STANDARDS PRESCRIBED BY MIL-D-70327
2. MATERIAL: WHITE SILICON RUBBER PER MIL-R-5847, CLASS III, GRADE 25
3. IDENTIFY PER ND 1002019

MASTER

QTY REQD	PART OR IDENTIFYING NO.	NOMENCLATURE OR DESCRIPTION	FIND NO.

LIST OF MATERIALS

1003716	
NEXT ASSY	USED ON
APPLICATION	

UNLESS OTHERWISE SPECIFIED DIMENSIONS ARE IN INCHES
TOLERANCES ON
FRACTIONS ± — DECIMALS ±.01 ANGLES ± —
DO NOT SCALE THIS DRAWING
MATERIAL SEE NOTE 2
HEAT TREATMENT
FINAL FINISH

MIT INSTRUMENTATION LAB
CAMBRIDGE, MASS.
DWG. NO. CONTRACT
DRAWN L. Pellini DATE 21 AUG 64
CHECKED
APPROVAL E. J. Duggan LFB
APPROVAL Eldon C. Hall 28 Aug 64
NASA APPROVAL 9/1/64
MIT APPROVAL 9/1/64

MANNED SPACECRAFT CENTER
HOUSTON, TEXAS

GASKET
ROPE COVER

CODE IDENT NO. —
SIZE C
NASA DRAWING NO. 1004721
SCALE 1/1
WT —
SHEET 1 OF 1

INCHES
0 1 2
PHOTOGRAPHIC SCALE ONLY

NOTICE — WHEN GOVERNMENT DRAWINGS, SPECIFICATIONS, OR OTHER DATA ARE USED FOR ANY PURPOSE OTHER THAN IN CONNECTION WITH A DEFINITELY RELATED GOVERNMENT PROCUREMENT OPERATION, THE UNITED STATES GOVERNMENT THEREBY INCURS NO RESPONSIBILITY NOR ANY OBLIGATION WHATSOEVER; AND THE FACT THAT THE GOVERNMENT MAY HAVE FORMULATED, FURNISHED, OR IN ANY WAY SUPPLIED THE SAID DRAWINGS, SPECIFICATIONS OR OTHER DATA IS NOT TO BE REGARDED BY IMPLICATION OR OTHERWISE AS IN ANY MANNER LICENSING THE HOLDER OR ANY OTHER PERSON OR CORPORATION, OR CONVEYING ANY RIGHTS OR PERMISSION TO MANUFACTURE, USE, OR SELL ANY PATENTED INVENTION THAT MAY IN ANY WAY BE RELATED THERETO.

1004721

REVISIONS			
SYM	DESCRIPTION	DATE	APPROVAL

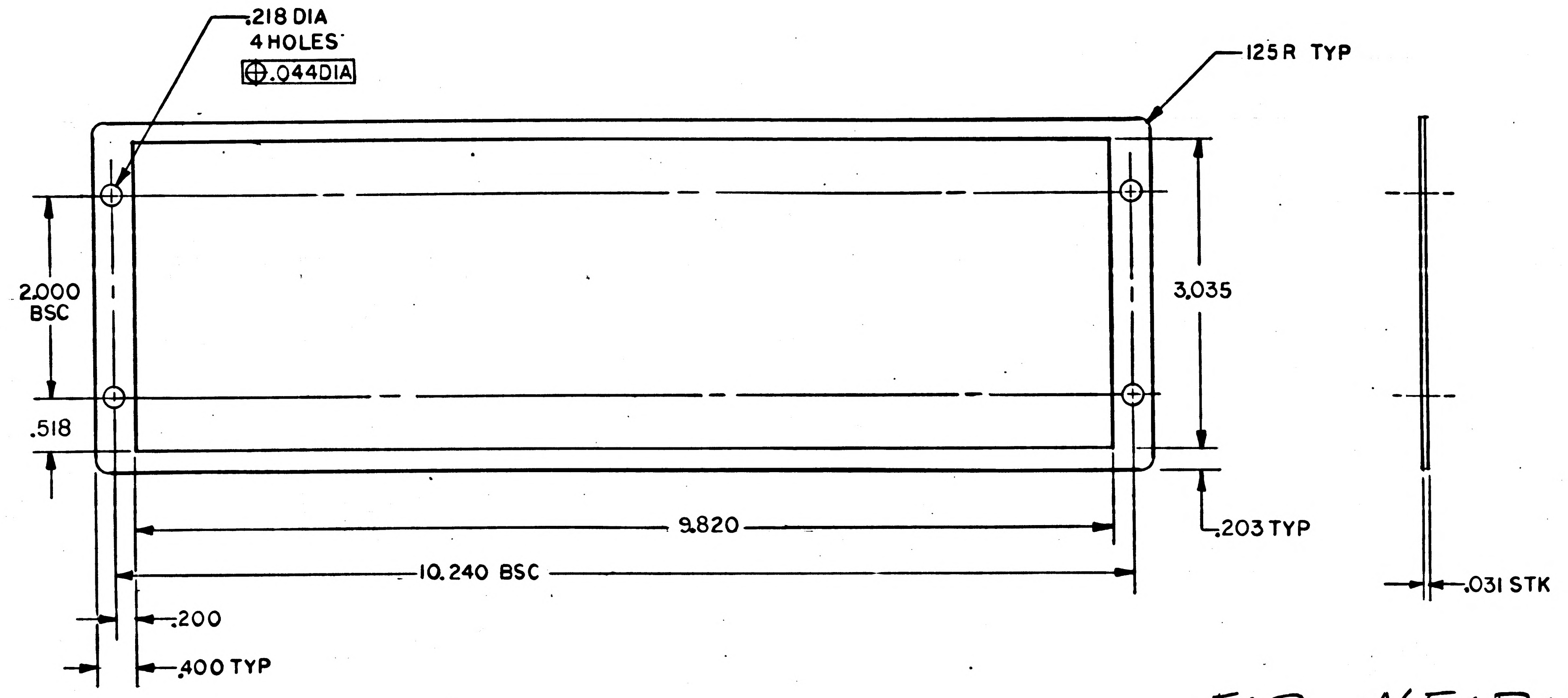

FOR INFORMATION ONLY
CLASS B RELEASE TDE NO. 12306

NOTES

1. INTERPRET DRAWING IN ACCORDANCE WITH STANDARDS PRESCRIBED BY MIL-D-70327
2. MATERIAL: WHITE SILICON RUBBER PER MIL-R-5847C, CLASS 2, GRADE 50

MASTER

QTY REQD	PART OR IDENTIFYING NO.	NOMENCLATURE OR DESCRIPTION	FIND NO.

LIST OF MATERIALS

NEXT ASSY	USED ON
APPLICATION	

UNLESS OTHERWISE SPECIFIED DIMENSIONS ARE IN INCHES
TOLERANCES ON
FRACTIONS ± —— DECIMALS ±.015 ANGLES ± ——
DO NOT SCALE THIS DRAWING
MATERIAL SEE NOTE 2
HEAT TREATMENT ——
FINAL FINISH ——

MIT
INSTRUMENTATION LAB
CAMBRIDGE, MASS.
DWG. NO. CONTRACT
DRAWN L. Pallini DATE 21 AUG 64
CHECKED
APPROVAL E. J. Duggan
APPROVAL Eldon C. Hall
NASA APPROVAL 9/4/64
MIT APPROVAL 9/1/64

MANNED SPACECRAFT CENTER
HOUSTON, TEXAS

GASKET
ROPE COVER

CODE IDENT NO. ——
SIZE C
NASA DRAWING NO. 1004721
SCALE 1/1
WT ——
SHEET 1 OF 1

INCHES
0 1 2
PHOTOGRAPHIC SCALE ONLY

NOTICE — WHEN GOVERNMENT DRAWINGS, SPECIFICATIONS, OR OTHER DATA ARE USED FOR ANY PURPOSE OTHER THAN IN CONNECTION WITH A DEFINITELY RELATED GOVERNMENT PROCUREMENT OPERATION, THE UNITED STATES GOVERNMENT THEREBY INCURS NO RESPONSIBILITY NOR ANY OBLIGATION WHATSOEVER; AND THE FACT THAT THE GOVERNMENT MAY HAVE FORMULATED, FURNISHED, OR IN ANY WAY SUPPLIED THE SAID DRAWINGS, SPECIFICATIONS OR OTHER DATA IS NOT TO BE REGARDED BY IMPLICATION OR OTHERWISE AS IN ANY MANNER LICENSING THE HOLDER OR ANY OTHER PERSON OR CORPORATION, OR CONVEYING ANY RIGHTS OR PERMISSION TO MANUFACTURE, USE, OR SELL ANY PATENTED INVENTION THAT MAY IN ANY WAY BE RELATED THERETO.

Ⓐ 1004722 A

12306

REVISIONS			
SYM	DESCRIPTION	DATE	APPROVAL
A	REVISED AND UP GRADED TO CLASS A PER TDRR 12586	14 SEP 64	

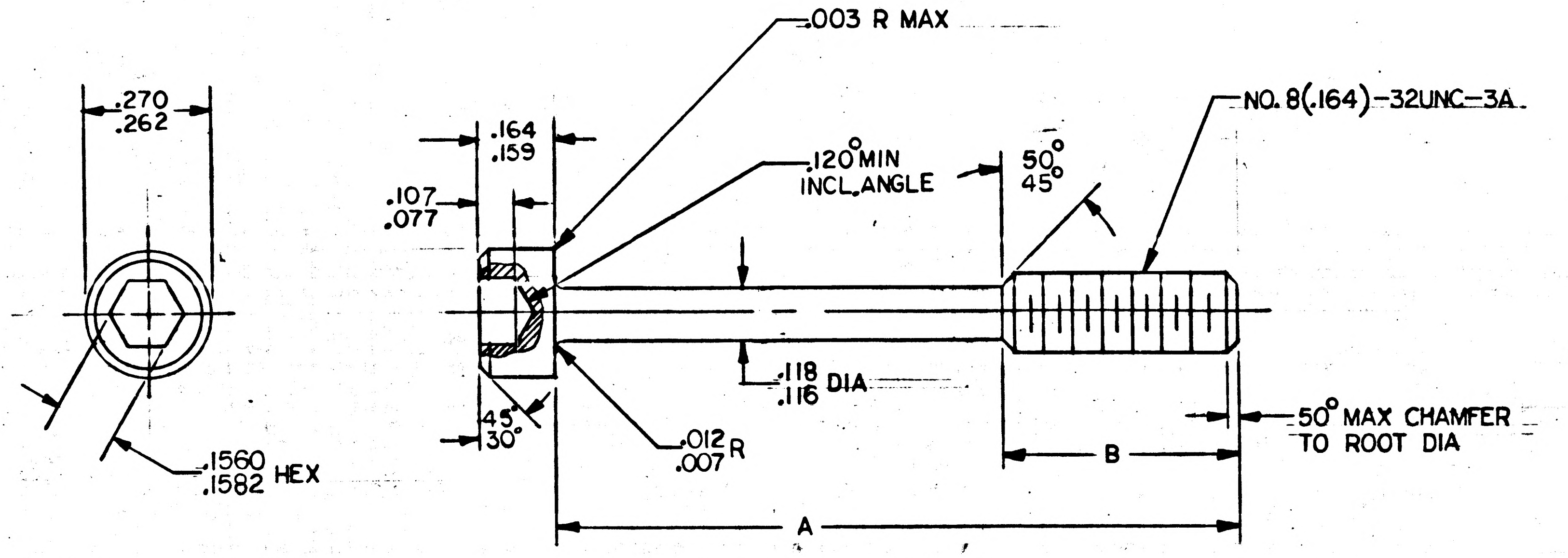

NOTES

1. INTERPRET DRAWING IN ACCORDANCE WITH STANDARDS PRESCRIBED BY MIL-D-70327
2. MATERIAL: 416 SE CRES CLASS 416 SE, COND H_1 PER QQ-S-763
3. HEAT TREAT: 160,000 PSI MIN. TENSILE STRENGTH PER MIL-H-6875
   HARDNESS: ROCKWELL C36-40
4. FINISH: PASSIVATE PER MIL-F-14072 FINISH E 300 TYPE I
5. THREADS TO BE FORMED BY ROLLING
6. SURFACE ROUGHNESS 125√ UNLESS OTHERWISE SPECIFIED
7. UNLESS OTHERWISE SPECIFIED SCREW SHALL BE MANUFACTURED IN ACCORDANCE WITH FED SPEC FF-S-86 TYPE VI
8. REMOVE ALL BURRS AND BREAK SHARP EDGES
9. IDENTIFY PER ND 1002019

PART NUMBER	A	B
-1	1.51 1.49	.531 .500
-2	.70 .67	.266 .234

MASTER

QTY REQD	PART OR IDENTIFYING NO.	NOMENCLATURE OR DESCRIPTION	FIND NO.
LIST OF MATERIALS			

NEXT ASSY	USED ON
APPLICATION	

UNLESS OTHERWISE SPECIFIED DIMENSIONS ARE IN INCHES
TOLERANCES ON
FRACTIONS ± DECIMALS ± ANGLES ±
DO NOT SCALE THIS DRAWING
MATERIAL SEE NOTE 2
HEAT TREATMENT SEE NOTE 3
FINAL FINISH SEE NOTE 4

MIT
INSTRUMENTATION LAB
CAMBRIDGE, MASS.
DWG. NO. CONTRACT
DRAWN L. Pellini DATE 21 Aug 64
CHECKED
APPROVAL E. T. Duggan L&B
APPROVAL Eldon C Hall 28 Aug 64
NASA APPROVAL 9/1/64
MIT APPROVAL 9/1/64

MANNED SPACECRAFT CENTER
HOUSTON, TEXAS

SCREW, CAPTIVE
ROPE COVER

CODE IDENT NO. —
SIZE C
NASA DRAWING NO. 1004722
SCALE 4/1
WT —
SHEET 1 OF 1

INCHES
0 1 2
PHOTOGRAPHIC SCALE ONLY

NOTICE — WHEN GOVERNMENT DRAWINGS, SPECIFICATIONS, OR OTHER DATA ARE USED FOR ANY PURPOSE OTHER THAN IN CONNECTION WITH A DEFINITELY RELATED GOVERNMENT PROCUREMENT OPERATION, THE UNITED STATES GOVERNMENT THEREBY INCURS NO RESPONSIBILITY NOR ANY OBLIGATION WHATSOEVER; AND THE FACT THAT THE GOVERNMENT MAY HAVE FORMULATED, FURNISHED, OR IN ANY WAY SUPPLIED THE SAID DRAWINGS, SPECIFICATIONS OR OTHER DATA IS NOT TO BE REGARDED BY IMPLICATION OR OTHERWISE AS IN ANY MANNER LICENSING THE HOLDER OR ANY OTHER PERSON OR CORPORATION, OR CONVEYING ANY RIGHTS OR PERMISSION TO MANUFACTURE, USE, OR SELL ANY PATENTED INVENTION THAT MAY IN ANY WAY BE RELATED THERETO.

1004722

REVISIONS			
SYM	DESCRIPTION	DATE	APPROVAL

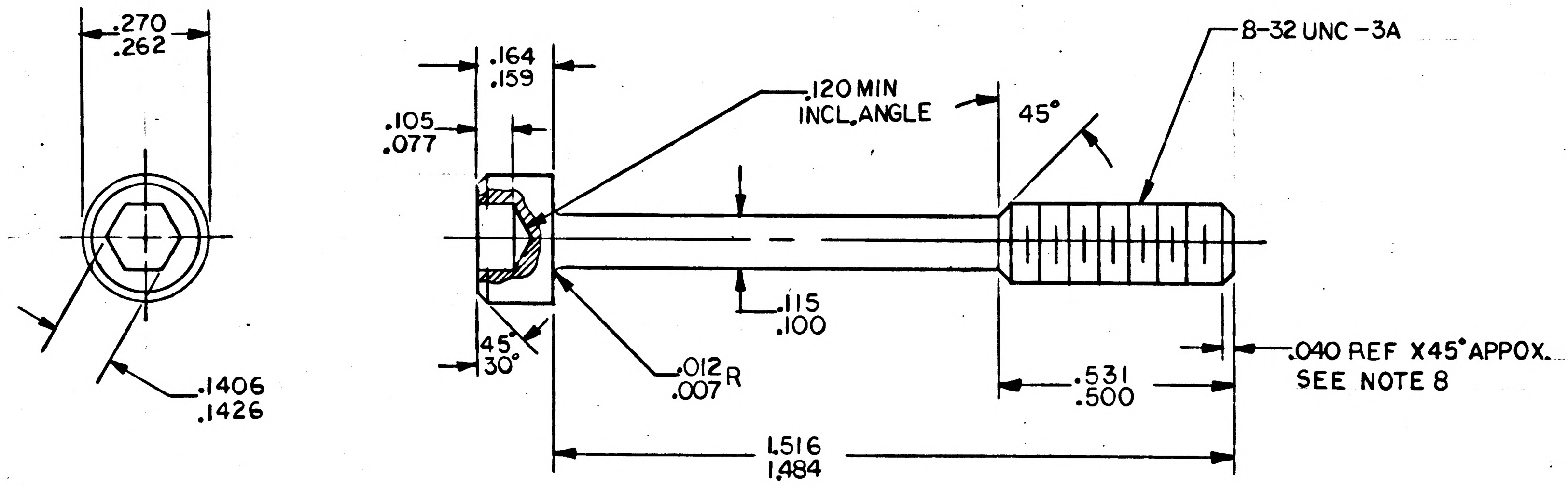

NOTES

1. INTERPRET DRAWING IN ACCORDANCE WITH STANDARDS PRESCRIBED BY MIL-D-70327
2. MATERIAL: ALLOY STEEL PER FED SPEC 66 ULTIMATE LOAD-160,000 PSI TENSILE STRENGTH
3. HARDNESS: ROCKWELL C36-43
4. FINISH: CADIUM PLATE PER QQ-P-416, TYPE II, CLASS
5. CONCENTRICITY: BODY AND HEAD O.D. WITHIN .006 T.I.R. BODY AND HEX SOCKET WITHIN .005 T.I.R.
6. HEAD MAY BE FORGED OR MACHINED AT MANUFACTURER'S OPTION
7. THREADS TO BE FORMED BY ROLLING
8. REFERENCE DIMENSIONS ARE FOR DESIGN PURPOSES ONLY AND ARE NOT AN INSPECTION REQUIREMENT
9. SCREWS SHALL BE FREE OF BURRS AND SHARP EDGES
10. DIMENSIONS TO BE MET AFTER PLATING
11. SURFACE ROUGHNESS $\sqrt{125}$ UNLESS OTHERWISE SPECIFIED

FOR INFORMATON ONLY
CLASS B RELEASE TDRC NO. 12306

MASTER

QTY REQD	PART OR IDENTIFYING NO.	NOMENCLATURE OR DESCRIPTION	FIND NO.

LIST OF MATERIALS

NEXT ASSY	USED ON
APPLICATION	

UNLESS OTHERWISE SPECIFIED
DIMENSIONS ARE IN INCHES
TOLERANCES ON
FRACTIONS ± DECIMALS ± ANGLES ± 2°
DO NOT SCALE THIS DRAWING
MATERIAL SEE NOTE 2
HEAT TREATMENT SEE NOTE 3
FINAL FINISH SEE NOTE 4

MIT
INSTRUMENTATION LAB
CAMBRIDGE, MASS.
DWG. NO. CONTRACT
DRAWN L. Pollini DATE 21 Aug 64
CHECKED
APPROVAL E. I. Duggan LAB
APPROVAL Eldon C Hall 28 Aug 64
NASA APPROVAL 9/1/64
MIT APPROVAL 9/1/64

MANNED SPACECRAFT CENTER
HOUSTON, TEXAS

SCREW, CAPTIVE
ROPE COVER

CODE IDENT NO. —
SIZE C
NASA DRAWING NO. 1004722
SCALE 4/1
WT —
SHEET 1 OF 1

INCHES
0 1 2
PHOTOGRAPHIC SCALE ONLY

REVISIONS			
SYM	DESCRIPTION	DATE	APPROVAL
A	REVISED AND UPGRADED TO CLASS A PER TDRR 12262	9/17/64	

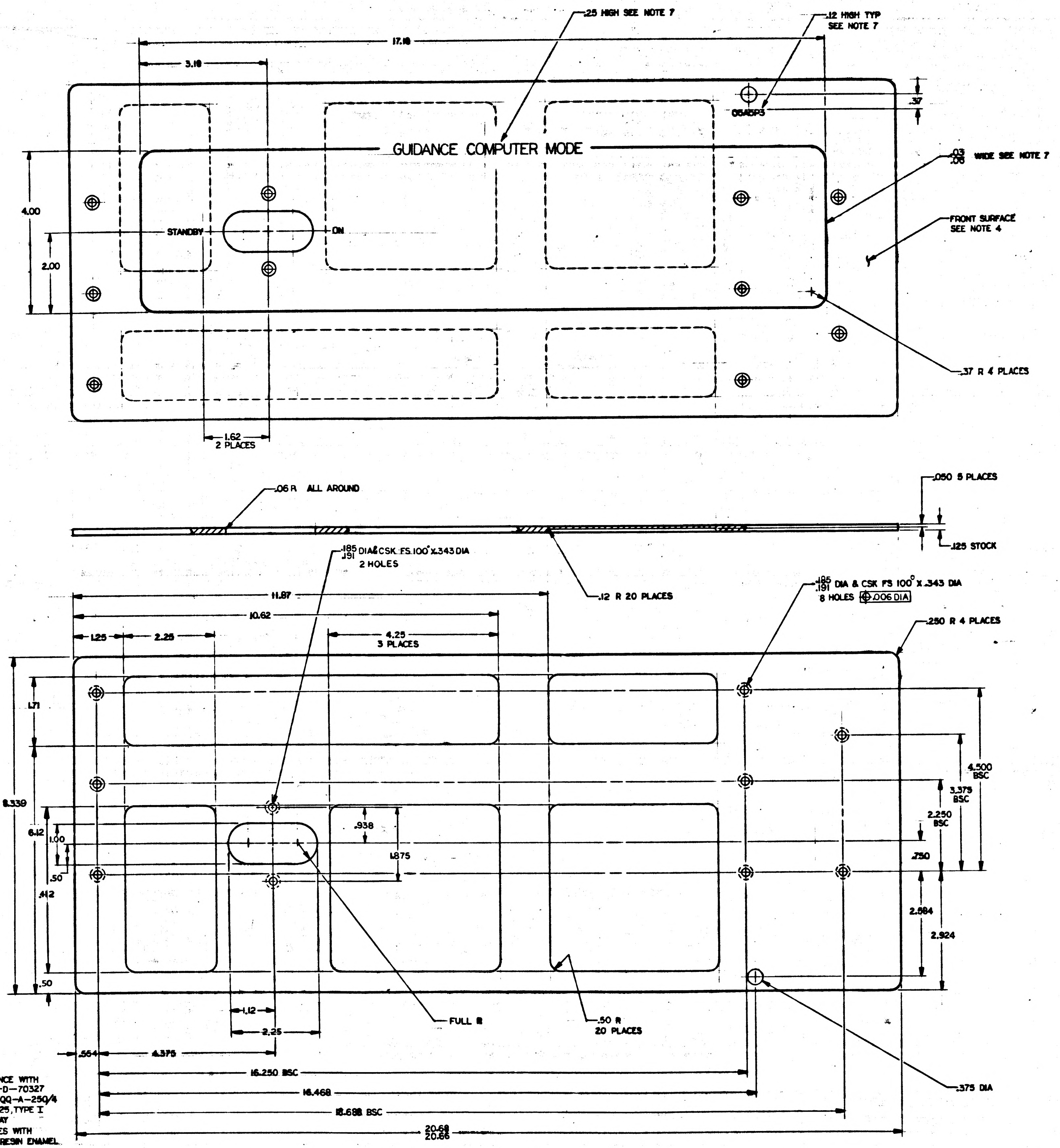

.25 HIGH SEE NOTE 7
.12 HIGH TYP
SEE NOTE 7
17.18
3.18
.37
058593
GUIDANCE COMPUTER MODE
.03
.06 WIDE SEE NOTE 7
FRONT SURFACE
SEE NOTE 4
4.00
2.00
STANDBY
ON
.37 R 4 PLACES
1.62
2 PLACES
.06 R ALL AROUND
.050 5 PLACES
.125 STOCK
.185
.191 DIA & CSK FS 100° X .343 DIA
2 HOLES
.12 R 20 PLACES
.185
.191 DIA & CSK FS 100° X .343 DIA
8 HOLES ⌖ .006 DIA
.250 R 4 PLACES
11.87
10.62
1.25
2.25
4.25
3 PLACES
1.71
8.339
6.12
1.00
.50
.412
.50
.938
1.875
4.500
BSC
3.375
BSC
2.250
BSC
.750
2.684
2.924
1.12
2.25
FULL R
.50 R
20 PLACES
.564
4.375
16.250 BSC
16.468
18.688 BSC
20.68
20.66
.375 DIA

NOTES

1. INTERPRET DRAWING IN ACCORDANCE WITH STANDARDS PRESCRIBED BY MIL-D-70327
2. MATL: AL ALLOY 2024-T4 PER QQ-A-250/4
3. FINISH: ANODIZE PER MIL-A-8625, TYPE I (CHROMIC ACID) DYED MEDIUM GRAY
4. PAINT FRONT SURFACE AND EDGES WITH 1010729-1 MEDIUM GRAY EPOXY RESIN ENAMEL PER ND
5. REMOVE BURRS AND BREAK SHARP EDGES .005/.015
6. SURFACE QUAL: 125/ ALL OVER
7. MARK BLACK PER ND1002019 AND ND1002122 TYPE II, CLASS I, USING 1006271-10, CENTRALLY LOCATE UNLESS OTHERWISE SPECIFIED

MASTER

QTY REQD	PART OR IDENTIFYING NO.	NOMENCLATURE OR DESCRIPTION	FIND NO.

LIST OF MATERIALS

NEXT ASSY	USED ON
1003700	

APPLICATION

UNLESS OTHERWISE SPECIFIED
DIMENSIONS ARE IN INCHES
TOLERANCES ON
FRACTIONS ± —
DECIMALS ±.005 ±.02
ANGLES ± 1/2°
DO NOT SCALE THIS DRAWING
MATERIAL SEE NOTE 2
HEAT TREATMENT —
FINAL FINISH SEE NOTES 3 & 4

MIT
INSTRUMENTATION LAB
CAMBRIDGE, MASS
DRAWN S J Fazio DATE
CHECKED
APPROVAL E T Duggan LAB
APPROVAL Eldon C Hall
NASA APPROVAL
MIT APPROVAL

MANNED SPACECRAFT CENTER
HOUSTON, TEXAS

FRONT CLOSE-OUT PANEL
AGC COMPUTER

CODE IDENT NO. —
SIZE E
NASA DRAWING NO. 1004723
SCALE 1/1
WT —
SHEET 1 OF 1

REVISIONS			
SYM	DESCRIPTION	DATE	APPROVAL

NOTICE — WHEN GOVERNMENT DRAWINGS, SPECIFICATIONS, OR OTHER DATA ARE USED FOR ANY PURPOSE OTHER THAN IN CONNECTION WITH A DEFINITELY RELATED GOVERNMENT PROCUREMENT OPERATION, THE UNITED STATES GOVERNMENT THEREBY INCURS NO RESPONSIBILITY NOR ANY OBLIGATION WHATSOEVER; AND THE FACT THAT THE GOVERNMENT MAY HAVE FORMULATED, FURNISHED, OR IN ANY WAY SUPPLIED THE SAID DRAWINGS, SPECIFICATIONS, OR OTHER DATA IS NOT TO BE REGARDED BY IMPLICATION OR OTHERWISE AS IN ANY MANNER LICENSING THE HOLDER OR ANY OTHER PERSON OR CORPORATION, OR CONVEYING ANY RIGHTS OR PERMISSION TO MANUFACTURE, USE, OR SELL ANY PATENTED INVENTION THAT MAY IN ANY WAY BE RELATED THERETO

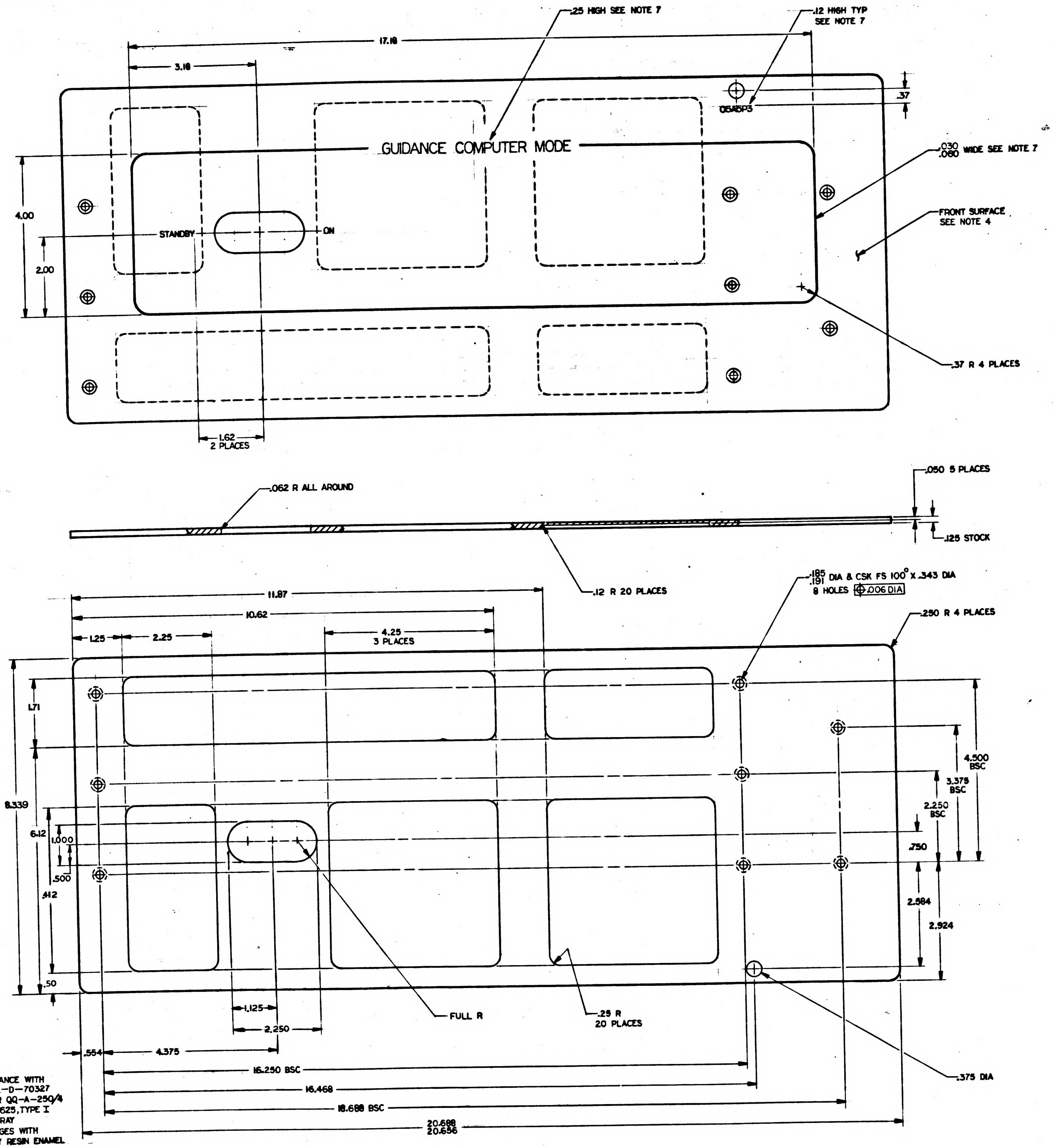
.25 HIGH SEE NOTE 7
.12 HIGH TYP
SEE NOTE 7
17.18
3.18
.37
05A5P3
GUIDANCE COMPUTER MODE
.030
.060 WIDE SEE NOTE 7
FRONT SURFACE
SEE NOTE 4
4.00
STANDBY
ON
2.00
.37 R 4 PLACES
1.62
2 PLACES
.050 5 PLACES
.062 R ALL AROUND
.125 STOCK
.12 R 20 PLACES
.185
.191 DIA & CSK FS 100° X .343 DIA
8 HOLES ⌖ .006 DIA
.250 R 4 PLACES
11.87
10.62
1.25
2.25
4.25
3 PLACES
1.71
8.339
6.12
1.000
.500
.412
.50
4.500
BSC
3.375
BSC
2.250
BSC
.750
2.584
2.924
FULL R
.25 R
20 PLACES
1.125
2.250
.375 DIA
.554
4.375
16.250 BSC
16.468
18.688 BSC
20.688
20.656

NOTES
1. INTERPRET DRAWING IN ACCORDANCE WITH STANDARDS PRESCRIBED BY MIL—D—70327
2. MATL: AL ALLOY 2024-T4 PER QQ-A-250/4
3. FINISH: ANODIZE PER MIL-A-8625, TYPE I (CHROMIC ACID) DYED MEDIUM GRAY
4. PAINT FRONT SURFACE AND EDGES WITH 1010729-1 MEDIUM GRAY EPOXY RESIN ENAMEL PER ND
5. REMOVE BURRS AND BREAK SHARP EDGES .005/.015
6. SURFACE QUAL: 125/ ALL OVER
7. MARK BLACK PER ND1002019 AND ND1002122 TYPE II, CLASS I, USING 1006271-10, CENTRALLY LOCATE UNLESS OTHERWISE SPECIFIED

FOR INFORMATION ONLY
CLASS B RELEASE TDR NO. 12306

MASTER

QTY REQD	PART OR IDENTIFYING NO.	NOMENCLATURE OR DESCRIPTION	FIND NO.

LIST OF MATERIALS

NEXT ASSY	USED ON

APPLICATION

UNLESS OTHERWISE SPECIFIED
DIMENSIONS ARE IN INCHES
TOLERANCES ON
FRACTIONS ± —
DECIMALS ±.005 ±.02
ANGLES ± 1/2
DO NOT SCALE THIS DRAWING
MATERIAL SEE NOTE 2
HEAT TREATMENT —
FINAL FINISH SEE NOTES 3 & 4

MIT
INSTRUMENTATION LAB
CAMBRIDGE MASS
DWG. NO.
CONTRACT
DRAWN S J Papia DATE
CHECKED
APPROVAL
APPROVAL
NASA APPROVAL
MIT APPROVAL

MANNED SPACECRAFT CENTER
HOUSTON, TEXAS

FRONT CLOSE—OUT PANEL
AGC COMPUTER

CODE IDENT NO. —
SIZE E
NASA DRAWING NO. 1004723
SCALE 1/1
WT —
SHEET 1 OF 1

NOTICE — WHEN GOVERNMENT DRAWINGS, SPECIFICATIONS, OR OTHER DATA ARE USED FOR ANY PURPOSE OTHER THAN IN CONNECTION WITH A DEFINITELY RELATED GOVERNMENT PROCUREMENT OPERATION, THE UNITED STATES GOVERNMENT THEREBY INCURS NO RESPONSIBILITY NOR ANY OBLIGATION WHATSOEVER; AND THE FACT THAT THE GOVERNMENT MAY HAVE FORMULATED, FURNISHED, OR IN ANY WAY SUPPLIED THE SAID DRAWINGS, SPECIFICATIONS OR OTHER DATA IS NOT TO BE REGARDED BY IMPLICATION OR OTHERWISE AS IN ANY MANNER LICENSING THE HOLDER OR ANY OTHER PERSON OR CORPORATION, OR CONVEYING ANY RIGHTS OR PERMISSION TO MANUFACTURE, USE, OR SELL ANY PATENTED INVENTION THAT MAY IN ANY WAY BE RELATED THERETO.

REVISIONS 12589

SYM	DESCRIPTION	DATE	APPROVAL
A	REVISED PER TDRR 13681	10/24/64	

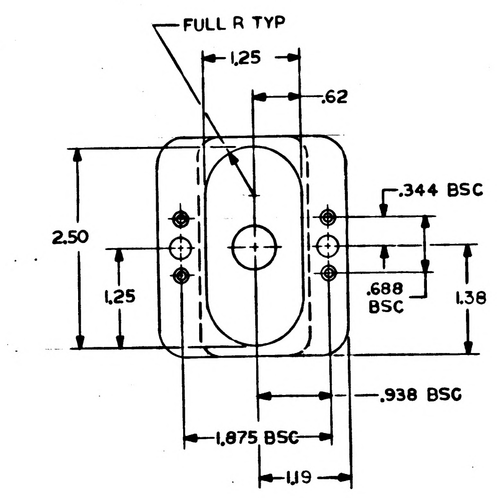

FULL R TYP
1.25
.62
.344 BSC
2.50
1.25
.688 BSC
1.38
.938 BSC
1.875 BSC
1.19

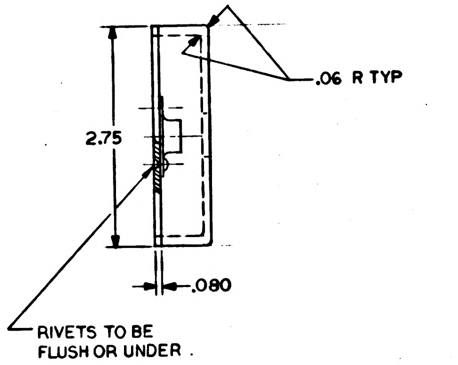

.06 R TYP
2.75
.080
RIVETS TO BE FLUSH OR UNDER

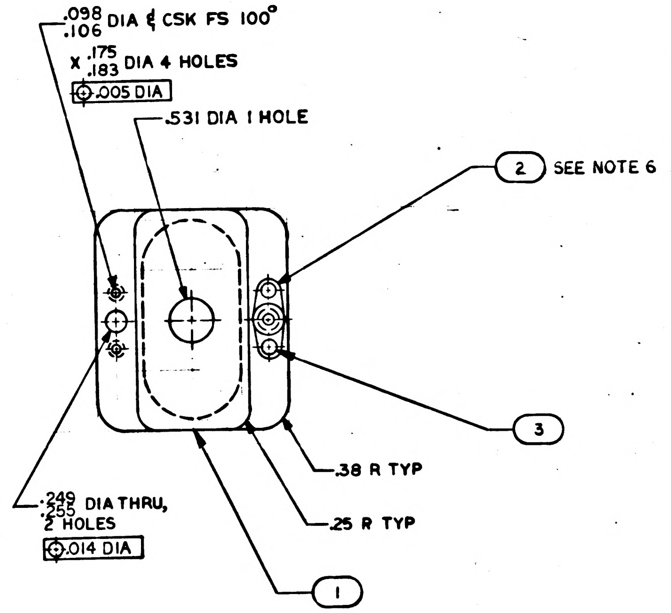

.098 .106 DIA & CSK FS 100°
X .175 .183 DIA 4 HOLES
.005 DIA
.531 DIA 1 HOLE
2 SEE NOTE 6
3
.38 R TYP
.25 R TYP
.249 .255 DIA THRU, 2 HOLES
.014 DIA
1

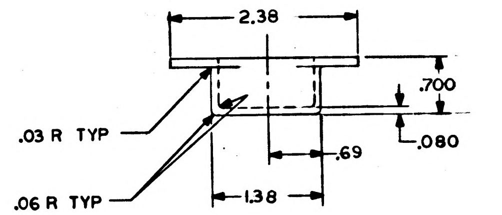

2.38
.700
.03 R TYP
.69
.080
.06 R TYP
1.38

NOTES:

1. INTERPRET DRAWING IN ACCORDANCE WITH STANDARDS PRESCRIBED BY MIL-D-70327
2. MATERIAL: ALUMINUM ALLOY 6061-T6 PER QQ-A-250/11
3. FINISH: PLATE (ELECTRODEPOSITED) ALL SURFACES PER QQ-C-320 CLASS 2, TYPE II PLATING TO BE .0004 TO .0008 THICK, HARDNESS ROCKWELL C60 MIN. DIMENSIONS APPLY AFTER PLATING. SPECIFIED THICKNESS NOT REQUIRED IN ALL HOLES AS LONG AS PLATING IS CONTINUOUS THROUGH EACH HOLE
4. REMOVE ALL BURRS AND BREAK SHARP EDGES .005/.015
5. UNLESS OTHERWISE SPECIFIED 125 ALL OVER
6. INSTALL FIND NO.2 USING FIND NO.3 AFTER PLATING
7. IDENTIFY PER ND 1002019

MASTER

QTY REQD	PART OR IDENTIFYING NO.	NOMENCLATURE OR DESCRIPTION	FIND NO.
4	MS20426AD3	RIVET FLAT HD	3
2	NAS686C08M	NUT, FLOATING ANCHOR	2
1	1004728-1	SHIELD, STANDBY SWITCH AGC	1

LIST OF MATERIALS

NEXT ASSY	USED ON
1003700	

APPLICATION

UNLESS OTHERWISE SPECIFIED DIMENSIONS ARE IN INCHES
TOLERANCES ON
FRACTIONS ± —
DECIMALS ±.005 .01
ANGLES ± —
DO NOT SCALE THIS DRAWING

MATERIAL SEE NOTE 2
HEAT TREATMENT —
FINAL FINISH SEE NOTE 3

MIT INSTRUMENTATION LAB
CAMBRIDGE, MASS.
DWG. NO.
CONTRACT

DRAWN J. Cowley DATE 8 Sept 64
CHECKED R. Luciani 14 SEP 64
APPROVAL
APPROVAL E. J. Duggan 9/14/64
NASA APPROVAL
MIT APPROVAL 9/15/64

MANNED SPACECRAFT CENTER
HOUSTON, TEXAS

SHIELD, STANDBY SWITCH AGC

CODE IDENT NO. —
SIZE D
NASA DRAWING NO. 1004728
SCALE 1/1
WT —
SHEET 1 OF 1

NOTICE — WHEN GOVERNMENT DRAWINGS, SPECIFICATIONS, OR OTHER DATA ARE USED FOR ANY PURPOSE OTHER THAN IN CONNECTION WITH A DEFINITELY RELATED GOVERNMENT PROCUREMENT OPERATION, THE UNITED STATES GOVERNMENT THEREBY INCURS NO RESPONSIBILITY NOR ANY OBLIGATION WHATSOEVER; AND THE FACT THAT THE GOVERNMENT MAY HAVE FORMULATED, FURNISHED, OR IN ANY WAY SUPPLIED THE SAID DRAWINGS, SPECIFICATIONS OR OTHER DATA IS NOT TO BE REGARDED BY IMPLICATION OR OTHERWISE AS IN ANY MANNER LICENSING THE HOLDER OR ANY OTHER PERSON OR CORPORATION, OR CONVEYING ANY RIGHTS OR PERMISSION TO MANUFACTURE, USE, OR SELL ANY PATENTED INVENTION THAT MAY IN ANY WAY BE RELATED THERETO.

REVISIONS 12589			
SYM	DESCRIPTION	DATE	APPROVAL
A	REVISED PER TDRR 13681	10/24/64	
B	REVISED PER TDRR 13886	10/27/64	

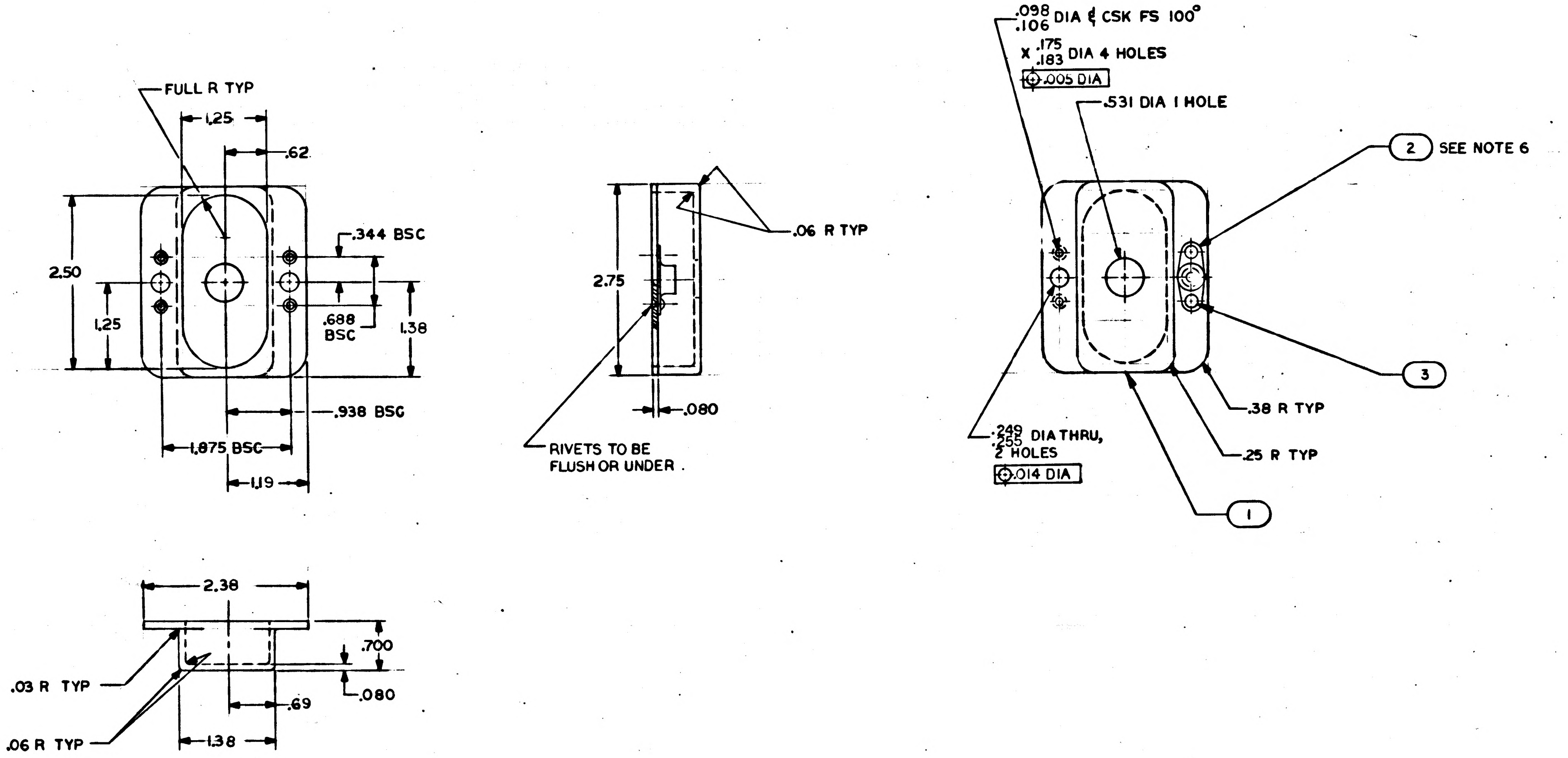
FULL R TYP
1.25
.62
.344 BSC
2.50
1.25
.688 BSC
1.38
.938 BSC
1.875 BSC
1.19
2.75
.06 R TYP
.080
RIVETS TO BE FLUSH OR UNDER
.098 .106 DIA ℄ CSK FS 100°
X .175 .183 DIA 4 HOLES
⊕ .005 DIA
.531 DIA 1 HOLE
2 SEE NOTE 6
3
.38 R TYP
.25 R TYP
.249 .255 DIA THRU, 2 HOLES
⊕ .014 DIA
1
2.38
.700
.080
.69
1.38
.03 R TYP
.06 R TYP

NOTES:

1. INTERPRET DRAWING IN ACCORDANCE WITH STANDARDS PRESCRIBED BY MIL-D-70327
2. MATERIAL: ALUMINUM ALLOY 6061-T6 PER QQ-A-250/11
3. FINISH: PLATE (ELECTRODEPOSITED) ALL SURFACES PER QQ-C-320 CLASS 2, TYPE II PLATING TO BE .0004 TO .0008 THICK, HARDNESS ROCKWELL C60 MIN. DIMENSIONS APPLY AFTER PLATING. SPECIFIED THICKNESS NOT REQUIRED IN ALL HOLES AS LONG AS PLATING IS CONTINUOUS THROUGH EACH HOLE
4. REMOVE ALL BURRS AND BREAK SHARP EDGES .005/.015
5. UNLESS OTHERWISE SPECIFIED 125✓ ALL OVER
6. INSTALL FIND NO. 2 USING FIND NO. 3 AFTER PLATING
7. IDENTIFY PER ND 1002019

QTY REQD	PART OR IDENTIFYING NO.	NOMENCLATURE OR DESCRIPTION	FIND NO.
4	MS20426AD3-4	RIVET FLAT HD	3
2	NAS686C08M	NUT, FLOATING ANCHOR	2
1	1004728-1	SHIELD, STANDBY SWITCH AGC	1

LIST OF MATERIALS

NEXT ASSY	USED ON
1003700	

APPLICATION

UNLESS OTHERWISE SPECIFIED DIMENSIONS ARE IN INCHES
TOLERANCES ON
FRACTIONS ± — DECIMALS ±.005 .01 ANGLES ± —
DO NOT SCALE THIS DRAWING

MATERIAL SEE NOTE 2

HEAT TREATMENT —

FINAL FINISH SEE NOTE 3

MIT INSTRUMENTATION LAB
CAMBRIDGE, MASS.
DWG. NO. CONTRACT

DRAWN J. Crowley DATE 3 Sept 64
CHECKED R. LaFemi 14 SEP 64
APPROVAL
APPROVAL E. J. Duggan 9/14/64
NASA APPROVAL
MIT APPROVAL 9/15/64

MANNED SPACECRAFT CENTER
HOUSTON, TEXAS

SHIELD, STANDBY SWITCH AGC

CODE IDENT NO. —
SIZE D
NASA DRAWING NO. 1004728
SCALE 1/1
WT —
SHEET 1 OF 1

MASTER

1004728 B

NOTICE — WHEN GOVERNMENT DRAWINGS, SPECIFICATIONS, OR OTHER DATA ARE USED FOR ANY PURPOSE OTHER THAN IN CONNECTION WITH A DEFINITELY RELATED GOVERNMENT PROCUREMENT OPERATION, THE UNITED STATES GOVERNMENT THEREBY INCURS NO RESPONSIBILITY NOR ANY OBLIGATION WHATSOEVER; AND THE FACT THAT THE GOVERNMENT MAY HAVE FORMULATED, FURNISHED, OR IN ANY WAY SUPPLIED THE SAID DRAWINGS, SPECIFICATIONS OR OTHER DATA IS NOT TO BE REGARDED BY IMPLICATION OR OTHERWISE AS IN ANY MANNER LICENSING THE HOLDER OR ANY OTHER PERSON OR CORPORATION, OR CONVEYING ANY RIGHTS OR PERMISSION TO MANUFACTURE, USE, OR SELL ANY PATENTED INVENTION THAT MAY IN ANY WAY BE RELATED THERETO.

REVISIONS 12589			
SYM	DESCRIPTION	DATE	APPROVAL

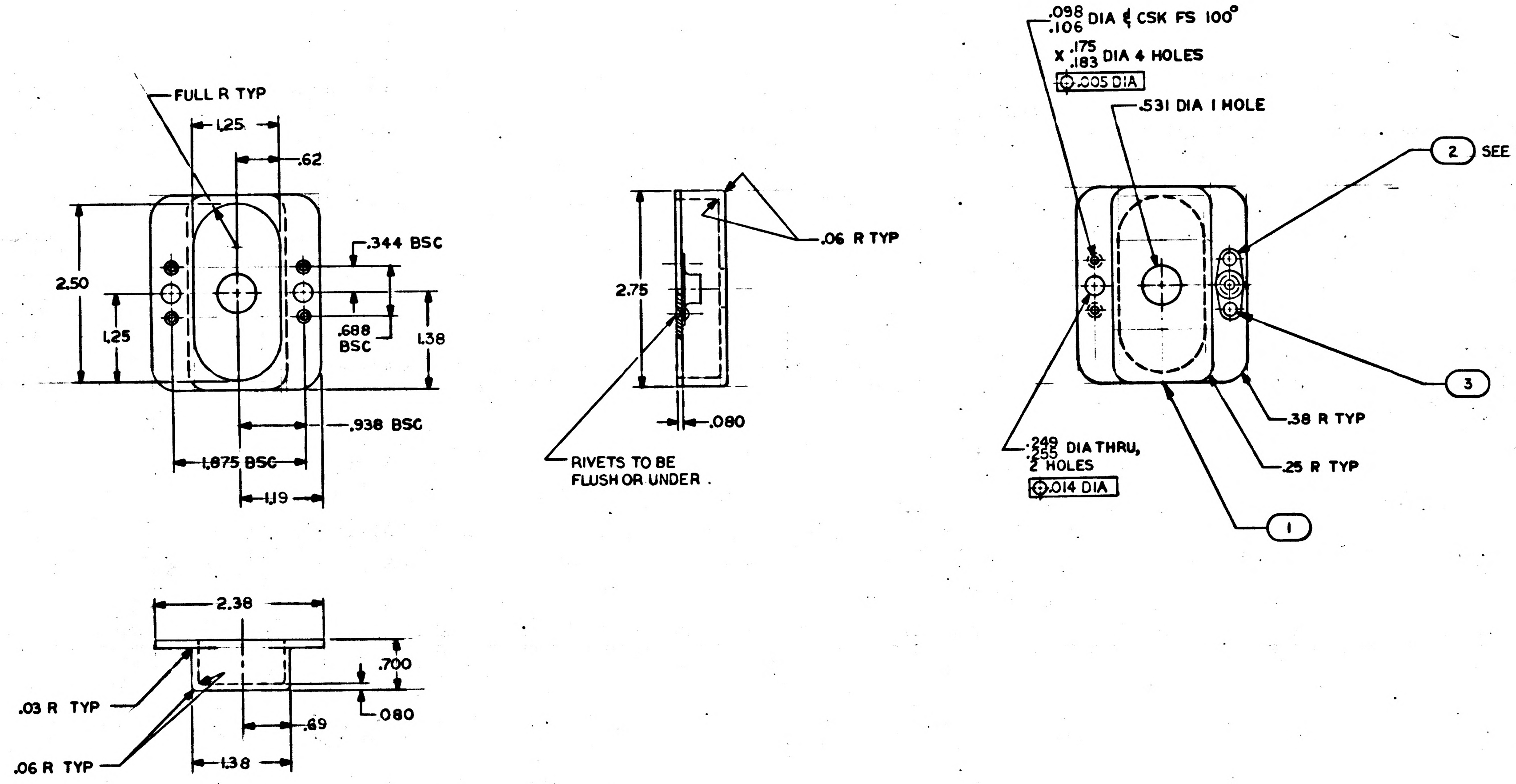
FULL R TYP
1.25
.62
.344 BSC
2.50
1.25
.688 BSC
1.38
.938 BSC
1.875 BSC
1.19
2.75
.06 R TYP
.080
RIVETS TO BE FLUSH OR UNDER
.098 .106 DIA ⊄ CSK FS 100°
X .175 .183 DIA 4 HOLES
⌖ .005 DIA
.531 DIA 1 HOLE
2 SEE NOTE 6
3
.38 R TYP
.25 R TYP
.249 .255 DIA THRU, 2 HOLES
⌖ .014 DIA
1
2.38
.700
.080
.03 R TYP
.06 R TYP
.69
1.38

NOTES:
1. INTERPRET DRAWING IN ACCORDANCE WITH STANDARDS PRESCRIBED BY MIL-D-70327
2. MATERIAL: ALUMINUM ALLOY 6061-T6 PER QQ-A-250/11
3. FINISH: PLATE (ELECTRODEPOSITED) ALL SURFACES PER QQ-C-320 CLASS 2, TYPE I PLATING TO BE .0004 TO .0008 THICK; HARDNESS ROCKWELL C60 MIN. DIMENSIONS APPLY AFTER PLATING. SPECIFIED THICKNESS NOT REQUIRED IN ALL HOLES AS LONG AS PLATING IS CONTINUOUS THROUGH EACH HOLE
4. REMOVE ALL BURRS AND BREAK SHARP EDGES .005/.015
5. UNLESS OTHERWISE SPECIFIED $\sqrt{125}$ ALL OVER
6. INSTALL FIND NO. 2 USING FIND NO. 3 AFTER PLATING
7. IDENTIFY PER ND 1002019

QTY REQD	PART OR IDENTIFYING NO.	NOMENCLATURE OR DESCRIPTION	FIND NO.
4	MS20426AD3	RIVET FLAT HD	3
2	NAS686C08M	NUT, FLOATING ANCHOR	2
1	1004728-1	SHIELD, STANDBY SWITCH AGC	1

LIST OF MATERIALS

NEXT ASSY	USED ON
1003700	

APPLICATION

UNLESS OTHERWISE SPECIFIED DIMENSIONS ARE IN INCHES
TOLERANCES ON
FRACTIONS ± —— DECIMALS ±.005 .01 ANGLES ± ——
DO NOT SCALE THIS DRAWING

MATERIAL: SEE NOTE 2
HEAT TREATMENT: ——
FINAL FINISH: SEE NOTE 3

MIT INSTRUMENTATION LAB
CAMBRIDGE, MASS.
DWG. NO. CONTRACT

DRAWN J. Cowley DATE 3 Sept 68
CHECKED R. LaTerri 11 SEP 68
APPROVAL
APPROVAL E. J. Duggan 9/17/68
NASA APPROVAL
MIT APPROVAL 9/15/68

MANNED SPACECRAFT CENTER
HOUSTON, TEXAS

SHIELD, STANDBY SWITCH AGC

CODE IDENT NO. ——
SIZE D
NASA DRAWING NO. 1004728
SCALE 1/1
WT ——
SHEET 1 OF 1

1004728

MASTER

NOTICE — WHEN GOVERNMENT DRAWINGS, SPECIFICATIONS, OR OTHER DATA ARE USED FOR ANY PURPOSE OTHER THAN IN CONNECTION WITH A DEFINITELY RELATED GOVERNMENT PROCUREMENT OPERATION, THE UNITED STATES GOVERNMENT THEREBY INCURS NO RESPONSIBILITY NOR ANY OBLIGATION WHATSOEVER; AND THE FACT THAT THE GOVERNMENT MAY HAVE FORMULATED, FURNISHED, OR IN ANY WAY SUPPLIED THE SAID DRAWINGS, SPECIFICATIONS, OR OTHER DATA IS NOT TO BE REGARDED BY IMPLICATION OR OTHERWISE AS IN ANY MANNER LICENSING THE HOLDER OR ANY OTHER PERSON OR CORPORATION, OR CONVEYING ANY RIGHTS OR PERMISSION TO MANUFACTURE, USE, OR SELL ANY PATENTED INVENTION THAT MAY IN ANY WAY BE RELATED THERETO.

REVISIONS 12780

SYM	DESCRIPTION	DATE	APPROVAL
A	REVISED PER TDRR 13681	10/24/64	

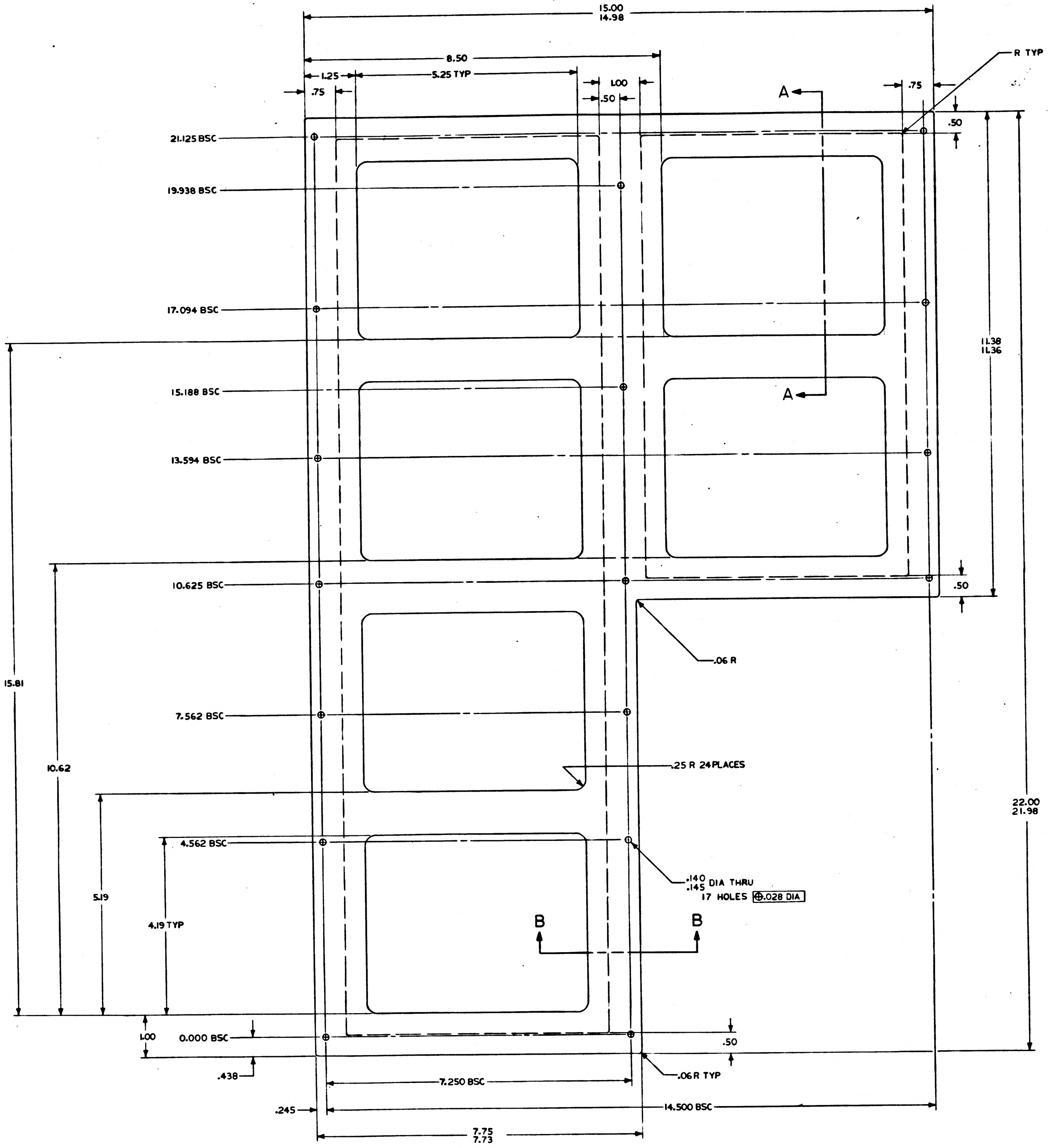

15.00
14.98
8.50
1.25
5.25 TYP
.75
1.00
.50
R TYP
.75
.50
A
A
21.125 BSC
19.938 BSC
17.094 BSC
15.188 BSC
13.594 BSC
10.625 BSC
7.562 BSC
4.562 BSC
0.000 BSC
11.38
11.36
.50
.06 R
15.81
10.62
.25 R 24 PLACES
22.00
21.98
5.19
4.19 TYP
.140
.145 DIA THRU
17 HOLES ⊕ .028 DIA
B
B
1.00
.50
.438
.06R TYP
7.250 BSC
.245
14.500 BSC
7.75
7.73

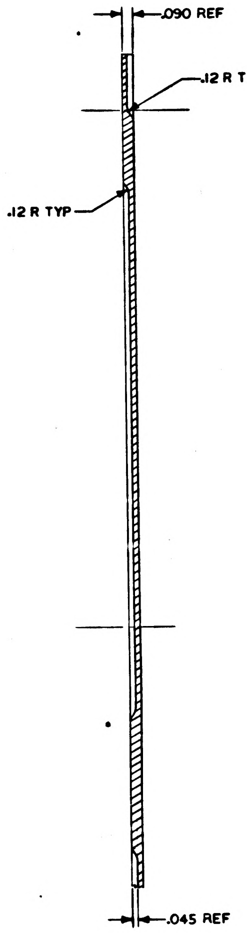

.090 REF
.12 R TYP
.12 R TYP
.045 REF

SECTION A-A
SCALE 2-1

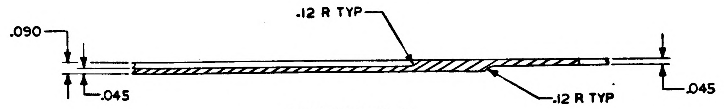

.090
.12 R TYP
.045
.12 R TYP
.045

SECTION B-B
SCALE 2-1

NOTES:

1. INTERPRET DRAWING IN ACCORDANCE WITH STANDARDS PRESCRIBED BY MIL-D-70327
2. MATERIAL: 6061-T6 ALUMINUM PER QQ-A-250/11
3. FINISH: PLATE (ELECTRODEPOSITED) ALL SURFACES PER QQ-C-320, CLASS 2, TYPE II, PLATING TO BE .0004 TO .0008 THICK HARDNESS ROCKWELL C60 MINIMUM. DIMENSIONS APPLY AFTER PLATING. SPECIFIED THICKNESS NOT REQUIRED IN ALL HOLES AS LONG AS PLATING IS CONTINUOUS THROUGH EACH HOLE.
4. REMOVE BURRS AND BREAK SHARP EDGES .005/.015
5. 125√ ALL OVER
6. IDENTIFY PER ND 1002019

QTY REQD	PART OR IDENTIFYING NO.	NOMENCLATURE OR DESCRIPTION	FIND NO

LIST OF MATERIALS

NEXT ASSY	USED ON
1003700	

APPLICATION

UNLESS OTHERWISE SPECIFIED
DIMENSIONS ARE IN INCHES
TOLERANCES ON
FRACTIONS ± — DECIMALS XX±.01 XXX±.005 ANGLES ± —
DO NOT SCALE THIS DRAWING

MATERIAL SEE NOTE 2
HEAT TREATMENT SEE NOTE 3
FINAL FINISH SEE NOTE 3

MIT
INSTRUMENTATION LAB
CAMBRIDGE, MASS

DRAWN J.F. [illegible] DATE 15 Sep 64
CHECKED [illegible] 16 SEP 64
APPROVAL
APPROVAL Eldon C. Hall 18 Sept 64
NASA APPROVAL W. J. [illegible] 9-22-64
MIT APPROVAL [illegible] 22 Sep 64

MANNED SPACECRAFT CENTER
HOUSTON, TEXAS

COVER, TRAY B
AGC COMPUTER

CODE IDENT NO. —
SIZE E
NASA DRAWING NO. 1004729
SCALE 1/1
WT —
SHEET 1 OF 1

NOTICE — WHEN GOVERNMENT DRAWINGS, SPECIFICATIONS OR OTHER DATA ARE USED FOR ANY PURPOSE OTHER THAN IN CONNECTION WITH A DEFINITELY RELATED GOVERNMENT PROCUREMENT OPERATION, THE UNITED STATES GOVERNMENT THEREBY INCURS NO RESPONSIBILITY NOR ANY OBLIGATION WHATSOEVER AND THE FACT THAT THE GOVERNMENT MAY HAVE FORMULATED FURNISHED OR IN ANY WAY SUPPLIED THE SAID DRAWINGS, SPECIFICATIONS OR OTHER DATA IS NOT TO BE REGARDED BY IMPLICATION OR OTHERWISE AS IN ANY MANNER LICENSING THE HOLDER OR ANY OTHER PERSON OR CORPORATION, OR CONVEYING ANY RIGHTS OR PERMISSION TO MANUFACTURE, USE, OR SELL ANY PATENTED INVENTION THAT MAY IN ANY WAY BE RELATED THERETO

REVISIONS [illegible]

SYM	DESCRIPTION	DATE	APPROVAL

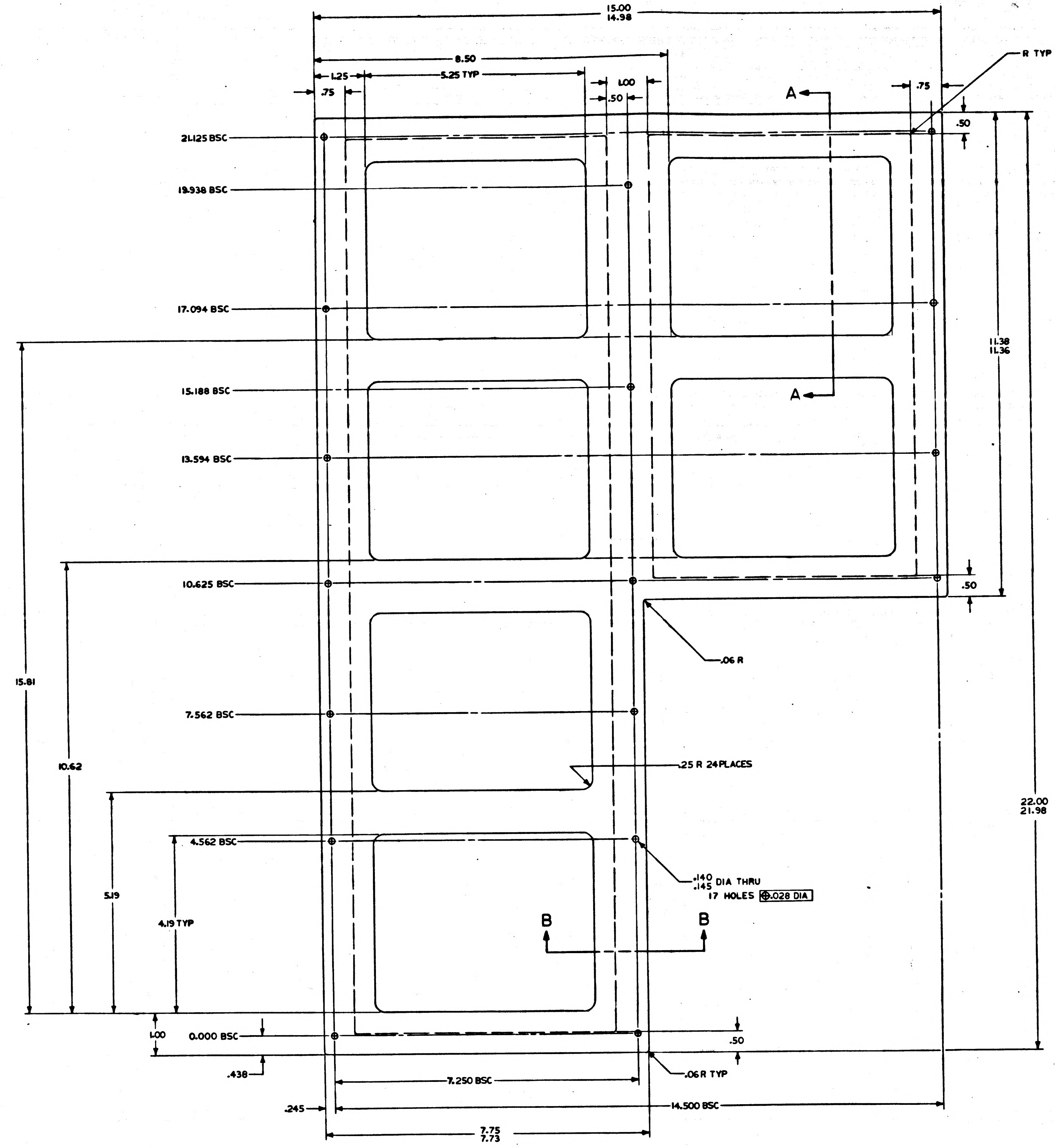
15.00
14.98
8.50
1.25
5.25 TYP
.75
1.00
.50
R TYP
.75
.50
A
A
21.125 BSC
19.938 BSC
17.094 BSC
15.188 BSC
13.594 BSC
10.625 BSC
7.562 BSC
4.562 BSC
0.000 BSC
11.38
11.36
.50
.06 R
.25 R 24 PLACES
15.81
10.62
5.19
4.19 TYP
.140
.145 DIA THRU
17 HOLES ⊕ .028 DIA
B
B
22.00
21.98
1.00
.438
.50
.06 R TYP
7.250 BSC
.245
14.500 BSC
7.75
7.73

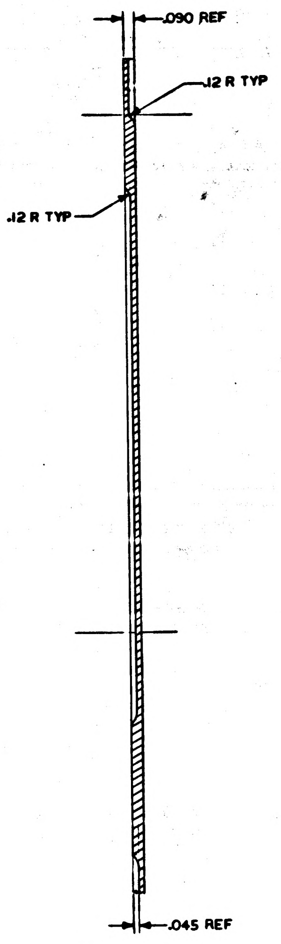
.090 REF
.12 R TYP
.12 R TYP
.045 REF

SECTION A-A
SCALE 2-1

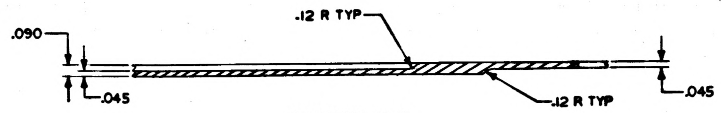
.090
.12 R TYP
.045
.12 R TYP
.045

SECTION B-B
SCALE 2-1

NOTES:

1. INTERPRET DRAWING IN ACCORDANCE WITH STANDARDS PRESCRIBED BY MIL-D-70327
2. MATERIAL: 6061-T6 ALUMINUM PER QQ-A-250/11
3. FINISH: PLATE (ELECTRODEPOSITED) ALL SURFACES PER QQ-C-320, CLASS 2, TYPE I, PLATING TO BE .0004 TO .0008 THICK HARDNESS ROCKWELL C60 MINIMUM. DIMENSIONS APPLY AFTER PLATING. SPECIFIED THICKNESS NOT REQUIRED IN ALL HOLES AS LONG AS PLATING IS CONTINUOUS THROUGH EACH HOLE.
4. REMOVE BURRS AND BREAK SHARP EDGES .005/.015
5. 125√ ALL OVER
6. IDENTIFY PER ND 1002019

MASTER

QTY REQD	PART OR IDENTIFYING NO.	NOMENCLATURE OR DESCRIPTION	FIND NO.

LIST OF MATERIALS

1003700	
NEXT ASSY	USED ON
APPLICATION	

UNLESS OTHERWISE SPECIFIED
DIMENSIONS ARE IN INCHES
TOLERANCES ON
FRACTIONS ± —
DECIMALS XX ±.01 XXX ±.005
ANGLES ± —
DO NOT SCALE THIS DRAWING
MATERIAL SEE NOTE 2
HEAT TREATMENT SEE NOTE 3
FINAL FINISH SEE NOTE 3

MIT
INSTRUMENTATION LAB
CAMBRIDGE, MASS.
DWG NO. CONTRACT
DRAWN J.F. [illegible] DATE 15 Sep 64
CHECKED [illegible] 16 SEP 64
APPROVAL
APPROVAL [illegible] 18 Sept 64
NASA APPROVAL [illegible] 9-22-64
MIT APPROVAL [illegible] 22 Sep 64

MANNED SPACECRAFT CENTER
HOUSTON, TEXAS

COVER, TRAY B
AGC COMPUTER

CODE IDENT NO. —
SIZE E
NASA DRAWING NO. 1004729
SCALE 1/1
WT —
SHEET 1 OF 1

NOTICE – WHEN GOVERNMENT DRAWINGS, SPECIFICATIONS, OR OTHER DATA ARE USED FOR ANY PURPOSE OTHER THAN IN CONNECTION WITH A DEFINITELY RELATED GOVERNMENT PROCUREMENT OPERATION, THE UNITED STATES GOVERNMENT THEREBY INCURS NO RESPONSIBILITY NOR ANY OBLIGATION WHATSOEVER; AND THE FACT THAT THE GOVERNMENT MAY HAVE FORMULATED, FURNISHED, OR IN ANY WAY SUPPLIED THE SAID DRAWINGS, SPECIFICATIONS OR OTHER DATA IS NOT TO BE REGARDED BY IMPLICATION OR OTHERWISE AS IN ANY MANNER LICENSING THE HOLDER OR ANY OTHER PERSON OR CORPORATION, OR CONVEYING ANY RIGHTS OR PERMISSION TO MANUFACTURE, USE, OR SELL ANY PATENTED INVENTION THAT MAY IN ANY WAY BE RELATED THERETO.

REVISIONS 13127

SYM	ZONE	DESCRIPTION	DR	CHK	DATE	APPROVED

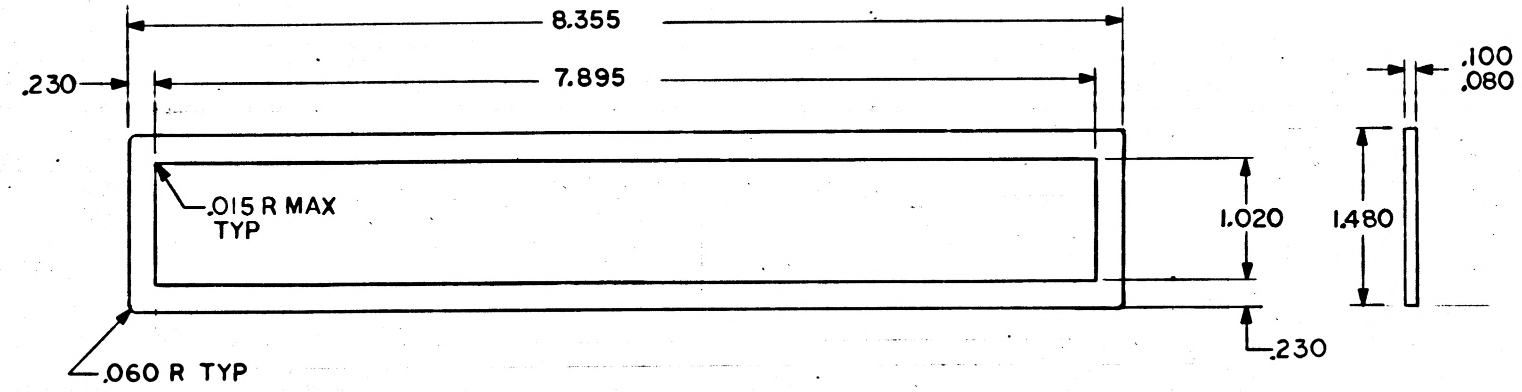

NOTES:

1. INTERPRET DRAWING IN ACCORDANCE WITH STANDARDS PRESCRIBED BY MIL-D-70327
2. MATERIAL: WHITE SILICONE RUBBER PER MIL-R-5847 CLASS II, GRADE 50
3. IDENTIFY PER ND 1002009

MASTER

QTY REQD	PART OR IDENTIFYING NO.	MATERIAL OR NOTES	NOMENCLATURE OR DESCRIPTION	FIND NO.

LIST OF MATERIALS

NEXT ASSY	USED ON

APPLICATION

UNLESS OTHERWISE SPECIFIED
DIMENSIONS ARE IN INCHES
CAPACITOR VALUES ARE IN μf
RESISTOR VALUES ARE IN OHMS
TOLERANCES ON
FRACTIONS ± — DECIMALS ±.015 ANGLES ± —
DO NOT SCALE THIS DRAWING

MATERIAL
SEE NOTE 2

MIT INSTRUMENTATION LAB
CAMBRIDGE, MASS.

MANNED SPACECRAFT CENTER
HOUSTON, TEXAS

		DATE
DRAWN	A. Addonizio Jr	18 Sept 64
CHECKED	R. Kingsbury	25 SEP 64
APPROVED		
APPROVED	Eldon C Hall	25 Sep 64
APPROVED MIT	D. Hoag	9/29/64
APPROVED MSC	W J Rhine	9-29-64

GASKET, 360 PIN CONNECTOR

CODE IDENT NO. ——
SIZE C
DRAWING NO. 1004730
SCALE 1/1
SHEET 1 OF 1

INCHES
0 1 2
PHOTOGRAPHIC SCALE ONLY

NOTICE — WHEN GOVERNMENT DRAWINGS, SPECIFICATIONS, OR OTHER DATA ARE USED FOR ANY PURPOSE OTHER THAN IN CONNECTION WITH A DEFINITELY RELATED GOVERNMENT PROCUREMENT OPERATION, THE UNITED STATES GOVERNMENT THEREBY INCURS NO RESPONSIBILITY NOR ANY OBLIGATION WHATSOEVER; AND THE FACT THAT THE GOVERNMENT MAY HAVE FORMULATED, FURNISHED, OR IN ANY WAY SUPPLIED THE SAID DRAWINGS, SPECIFICATIONS OR OTHER DATA IS NOT TO BE REGARDED BY IMPLICATION OR OTHERWISE AS IN ANY MANNER LICENSING THE HOLDER OR ANY OTHER PERSON OR CORPORATION, OR CONVEYING ANY RIGHTS OR PERMISSION TO MANUFACTURE, USE, OR SELL ANY PATENTED INVENTION THAT MAY IN ANY WAY BE RELATED THERETO.

REVISIONS 13/27

SYM	ZONE	DESCRIPTION	DR	CHK	DATE	APPROVED

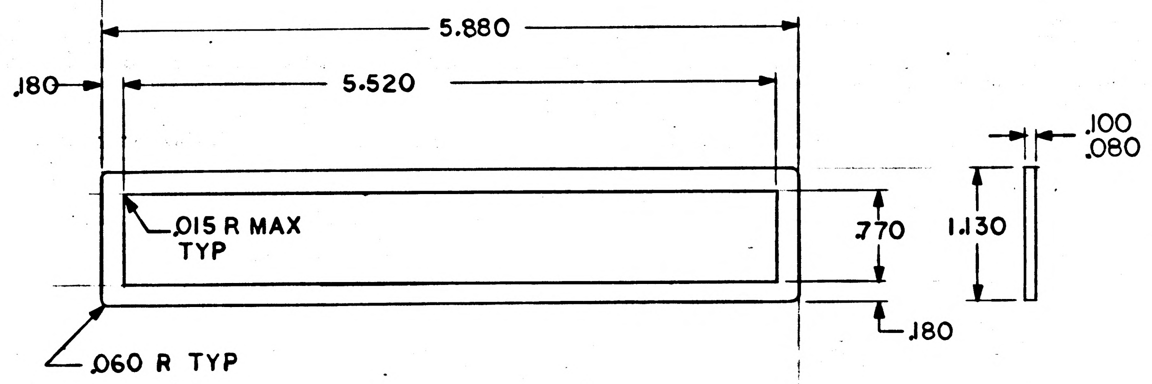

NOTES:
1. INTERPRET DRAWING IN ACCORDANCE WITH STANDARDS PRESCRIBED BY MIL-D-70327
2. MATERIAL: WHITE SILICONE RUBBER PER MIL-R-5847 CLASS II, GRADE 50
3. IDENTIFY PER ND 1002009

MASTER

QTY REQD	PART OR IDENTIFYING NO.	MATERIAL OR NOTES	NOMENCLATURE OR DESCRIPTION	FIND NO.

LIST OF MATERIALS

NEXT ASSY	USED ON
APPLICATION	

UNLESS OTHERWISE SPECIFIED
DIMENSIONS ARE IN INCHES
CAPACITOR VALUES ARE IN μf
RESISTOR VALUES ARE IN OHMS
TOLERANCES ON
FRACTIONS ± — DECIMALS ±.015 ANGLES ± —
DO NOT SCALE THIS DRAWING

MATERIAL
SEE NOTE 2

MIT
INSTRUMENTATION LAB
CAMBRIDGE, MASS.

MANNED SPACECRAFT CENTER
HOUSTON, TEXAS

		DATE
DRAWN	A. Addario Jr.	18 Sept 64
CHECKED	R. Kingsbury	25 Sept 64
APPROVED		
APPROVED	Eldon C Hall	25 Sept 64
APPROVED MIT	D Hoag	9/29/64
APPROVED MSC	W J Rhine	9-29-64

GASKET, 215 PIN CONNECTOR

CODE IDENT NO. —
SIZE C
DRAWING NO. 1004731
SCALE 1/1
SHEET 1 OF 1

INCHES
0 1 2
PHOTOGRAPHIC SCALE ONLY

NOTICE – WHEN GOVERNMENT DRAWINGS, SPECIFICATIONS, OR OTHER DATA ARE USED FOR ANY PURPOSE OTHER THAN IN CONNECTION WITH A DEFINITELY RELATED GOVERNMENT PROCUREMENT OPERATION, THE UNITED STATES GOVERNMENT THEREBY INCURS NO RESPONSIBILITY NOR ANY OBLIGATION WHATSOEVER; AND THE FACT THAT THE GOVERNMENT MAY HAVE FORMULATED, FURNISHED, OR IN ANY WAY SUPPLIED THE SAID DRAWINGS, SPECIFICATIONS OR OTHER DATA IS NOT TO BE REGARDED BY IMPLICATION OR OTHERWISE AS IN ANY MANNER LICENSING THE HOLDER OR ANY OTHER PERSON OR CORPORATION, OR CONVEYING ANY RIGHTS OR PERMISSION TO MANUFACTURE, USE, OR SELL ANY PATENTED INVENTION THAT MAY IN ANY WAY BE RELATED THERETO.

REVISIONS 13464

SYM	ZONE	DESCRIPTION	DR	CHK	DATE	APPROVED

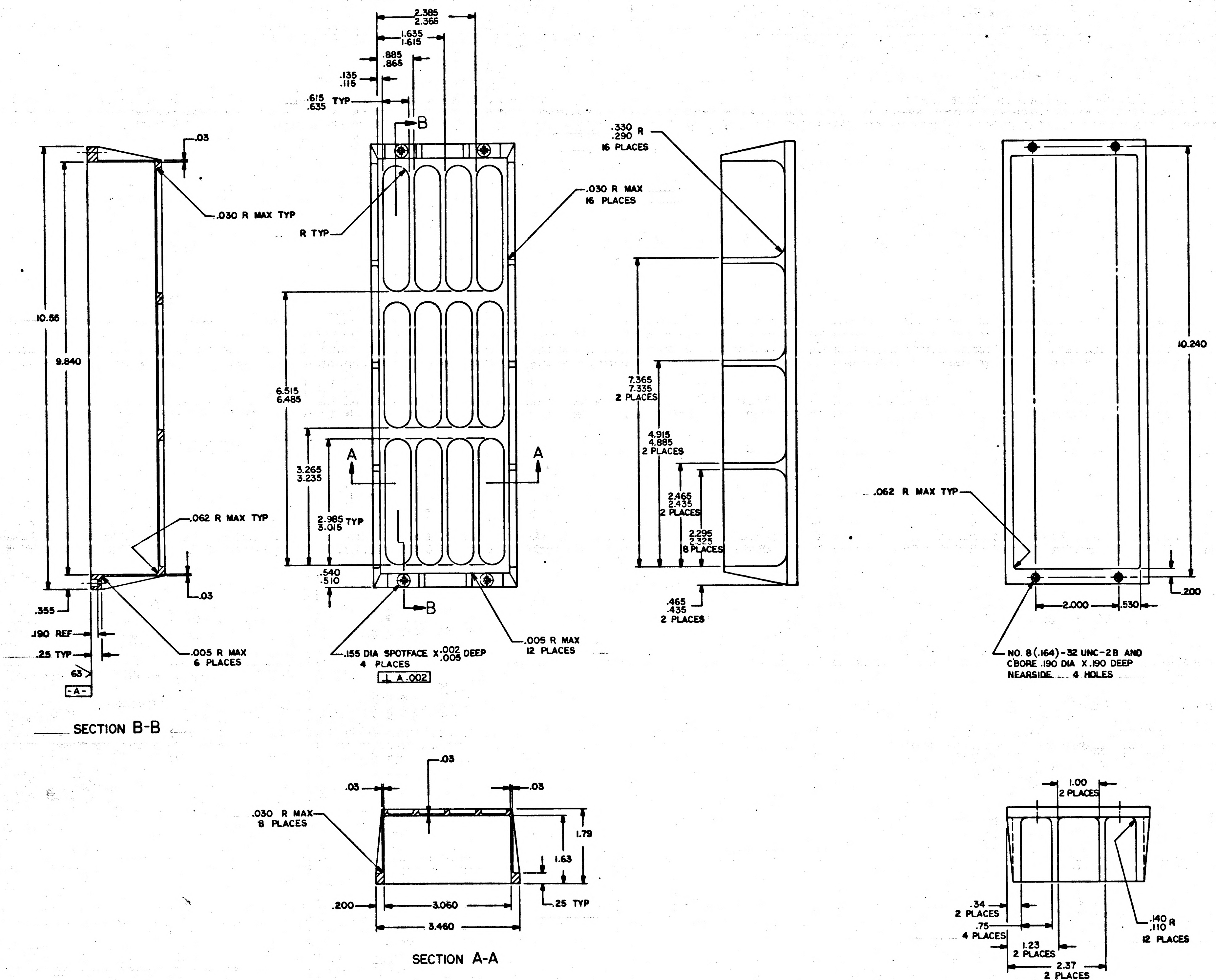
2.385
2.365
1.635
1.615
.885
.865
.135
.115
.615
.635
TYP
B
B
.03
.030 R MAX TYP
R TYP
.030 R MAX
16 PLACES
10.55
9.840
6.515
6.485
3.265
3.235
A
A
2.985 TYP
3.015
.540
.510
.062 R MAX TYP
.03
.355
.190 REF
.25 TYP
63
-A-
.005 R MAX
6 PLACES
.155 DIA SPOTFACE X .002/.005 DEEP
4 PLACES
⊥ A .002
.005 R MAX
12 PLACES
SECTION B-B
.330 R
.290
16 PLACES
7.365
7.335
2 PLACES
4.915
4.885
2 PLACES
2.465
2.435
2 PLACES
2.295
2.325
8 PLACES
.465
.435
2 PLACES
10.240
.062 R MAX TYP
2.000
.530
.200
NO. 8 (.164)-32 UNC-2B AND
CBORE .190 DIA X .190 DEEP
NEARSIDE 4 HOLES
.03
.03
.03
.030 R MAX
8 PLACES
1.79
1.63
.200
3.060
.25 TYP
3.460
SECTION A-A
1.00
2 PLACES
.34
2 PLACES
.75
4 PLACES
1.23
2 PLACES
2.37
2 PLACES
.140 R
.110
12 PLACES

NOTES
1. INTERPRET DRAWING IN ACCORDANCE WITH STANDARDS PRESCRIBED BY MIL-D-70327
2. MATERIAL: CAST ALUMINUM ALLOY 356-T6 PER QQ-A-596, CLASS 8
3. SURFACE QUALITY 250 UNLESS OTHERWISE SPECIFIED
4. FINISH: PLATE (ELECTRODEPOSITED) ALL SURFACES PER QQ-C-320, CLASS 2, TYPE II, PLATING TO BE .0004 TO .0002 THK, ROCKWELL HARDNESS C60 MIN
5. REMOVE ALL BURRS AND BREAK SHARP EDGES .005/.015
6. ALL DIMENSIONS INCLUDE PLATING
7. MASK HOLES BEFORE PLATING
8. IDENTIFY PER ND 1002019

MASTER

QTY REQD	PART OR IDENTIFYING NO.	MATERIAL OR NOTES	NOMENCLATURE OR DESCRIPTION	FIND NO.

LIST OF MATERIALS

NEXT ASSY	USED ON
1003700	

APPLICATION

UNLESS OTHERWISE SPECIFIED
DIMENSIONS ARE IN INCHES
CAPACITOR VALUES ARE IN μf
RESISTOR VALUES ARE IN OHMS
TOLERANCES ON
FRACTIONS ± — DECIMALS XXX ±.005 XX ±.01 ANGLES ± —
DO NOT SCALE THIS DRAWING

MATERIAL
SEE NOTE 2

MIT
INSTRUMENTATION LAB
CAMBRIDGE, MASS.

DRAWN
CHECKED
APPROVED
APPROVED
APPROVED MIT
APPROVED MSC
DATE

MANNED SPACECRAFT CENTER
HOUSTON, TEXAS

COVER, ROPE
AGC COMPUTER

CODE IDENT NO. —
SIZE E
DRAWING NO. 1004734
SCALE 1/1
SHEET 1 OF 1

NOTICE – WHEN GOVERNMENT DRAWINGS, SPECIFICATIONS, OR OTHER DATA ARE USED FOR ANY PURPOSE OTHER THAN IN CONNECTION WITH A DEFINITELY RELATED GOVERNMENT PROCUREMENT OPERATION, THE UNITED STATES GOVERNMENT THEREBY INCURS NO RESPONSIBILITY NOR ANY OBLIGATION WHATSOEVER; AND THE FACT THAT THE GOVERNMENT MAY HAVE FORMULATED, FURNISHED, OR IN ANY WAY SUPPLIED THE SAID DRAWINGS, SPECIFICATIONS OR OTHER DATA IS NOT TO BE REGARDED BY IMPLICATION OR OTHERWISE AS IN ANY MANNER LICENSING THE HOLDER OR ANY OTHER PERSON OR CORPORATION, OR CONVEYING ANY RIGHTS OR PERMISSION TO MANUFACTURE, USE, OR SELL ANY PATENTED INVENTION THAT MAY IN ANY WAY BE RELATED THERETO.

SYM	ZONE	DESCRIPTION	DR	CHK	DATE	APPROVED

REVISIONS 13673

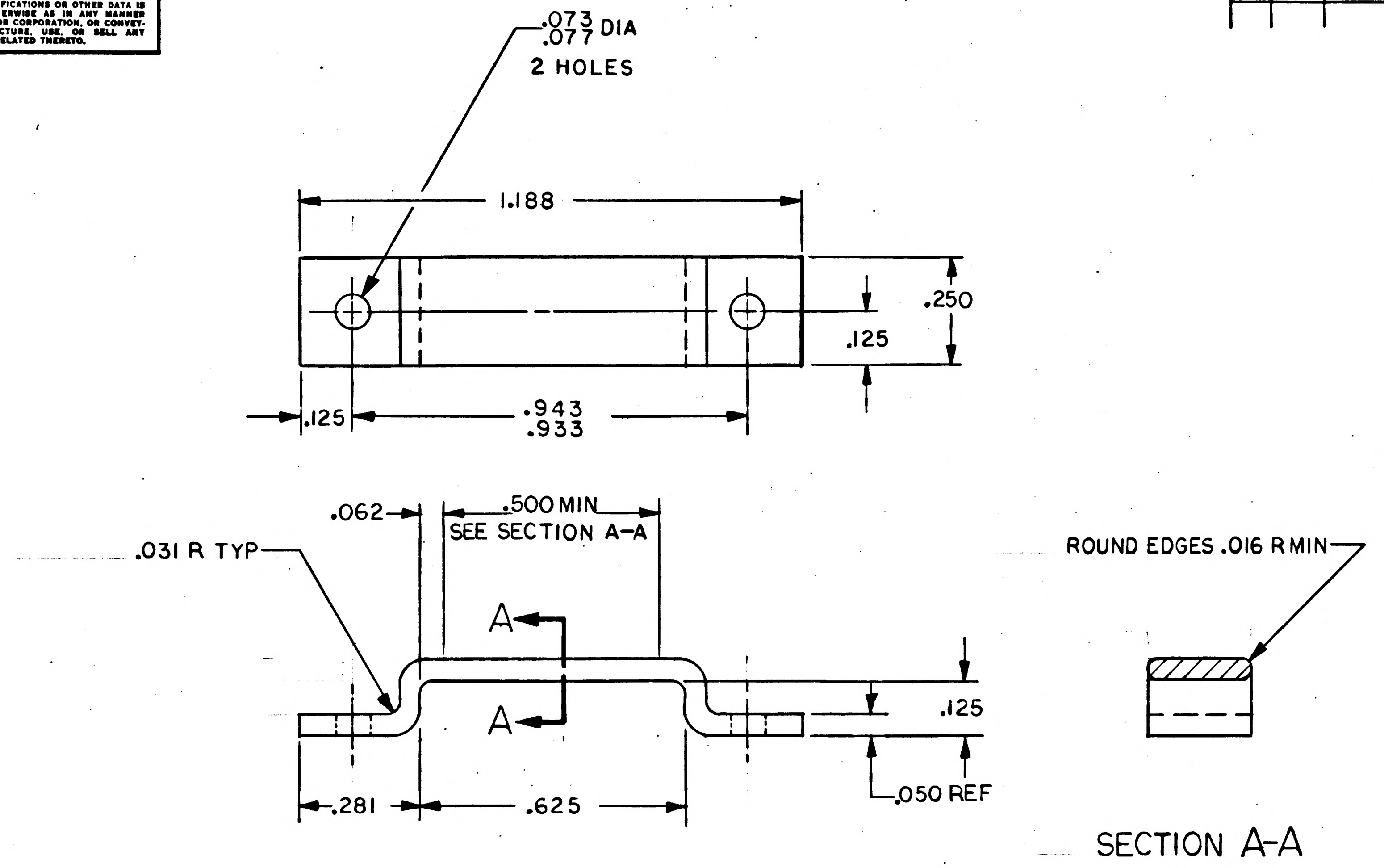

SECTION A–A

NOTES

1. INTERPRET DRAWING IN ACCORDANCE WITH STANDARDS PRESCRIBED BY MIL-D-70327
2. MATERIAL: .050 THK 5052-H32 AL PER QQ-A-250/8
3. REMOVE ALL BURRS AND BREAK SHARP EDGES .005/.015
4. SURFACE QUALITY $\sqrt{125}$ ALL OVER
5. FINISH: CLEAR ANODIZE PER MIL-A-8625, TYPE II
6. IDENTIFY PER ND 1002019

MASTER

NEXT ASSY	USED ON
APPLICATION	

UNLESS OTHERWISE SPECIFIED
DIMENSIONS ARE IN INCHES
CAPACITOR VALUES ARE IN μf
RESISTOR VALUES ARE IN OHMS
TOLERANCES ON
FRACTIONS ± — DECIMALS XXX±.016 ANGLES ± —
DO NOT SCALE THIS DRAWING

MATERIAL
SEE NOTE 2

QTY REQD	PART OR IDENTIFYING NO.	MATERIAL OR NOTES	NOMENCLATURE OR DESCRIPTION	FIND NO.

LIST OF MATERIALS

MIT INSTRUMENTATION LAB
CAMBRIDGE, MASS.

MANNED SPACECRAFT CENTER
HOUSTON, TEXAS

DRAWN		8OCT64
CHECKED	R. Kingsbury	19OCT64
APPROVED		
APPROVED	Eldon C Hall	9Oct64
APPROVED MIT		10/20/64
APPROVED MSC	W J Rhine	10-20-64
		DATE

BRACKET CABLE SUPPORT
AGC

CODE IDENT NO.	SIZE	DRAWING NO.
—	C	1004735
SCALE 4/1	—	SHEET 1 OF 1

INCHES
0 1 2
PHOTOGRAPHIC SCALE ONLY

NOTICE — WHEN GOVERNMENT DRAWINGS, SPECIFICATIONS, OR OTHER DATA ARE USED FOR ANY PURPOSE OTHER THAN IN CONNECTION WITH A DEFINITELY RELATED GOVERNMENT PROCUREMENT OPERATION, THE UNITED STATES GOVERNMENT THEREBY INCURS NO RESPONSIBILITY NOR ANY OBLIGATION WHATSOEVER; AND THE FACT THAT THE GOVERNMENT MAY HAVE FORMULATED, FURNISHED, OR IN ANY WAY SUPPLIED THE SAID DRAWINGS, SPECIFICATIONS OR OTHER DATA IS NOT TO BE REGARDED BY IMPLICATION OR OTHERWISE AS IN ANY MANNER LICENSING THE HOLDER OR ANY OTHER PERSON OR CORPORATION, OR CONVEYING ANY RIGHTS OR PERMISSION TO MANUFACTURE, USE, OR SELL ANY PATENTED INVENTION THAT MAY IN ANY WAY BE RELATED THERETO.

REVISIONS 13673			
SYM	DESCRIPTION	DATE	APPROVAL

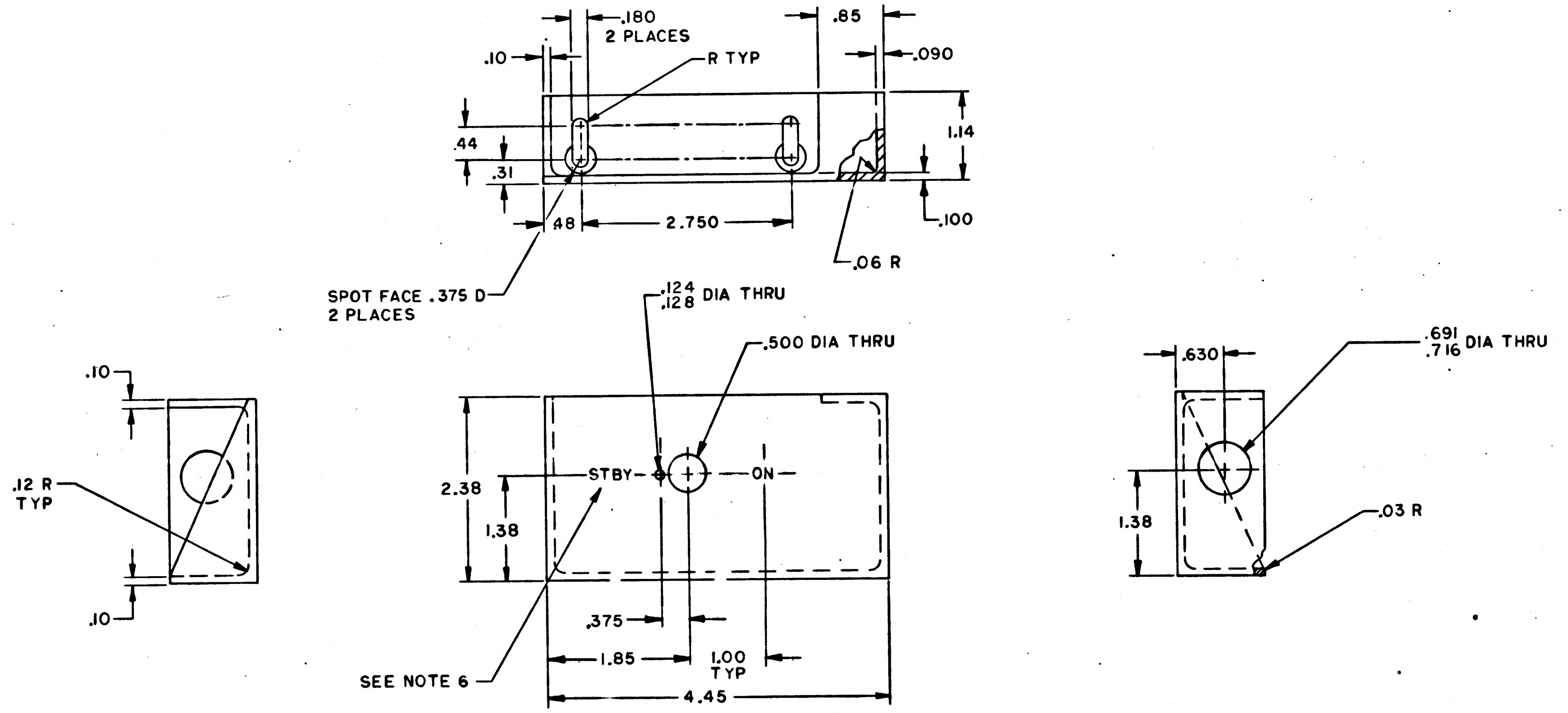

NOTES:
1. INTERPRET DRAWING IN ACCORDANCE WITH STANDARDS PRESCRIBED BY MIL-D-70327
2. MATERIAL: 6061-T6 AL, PER QQ-A-250/11
3. FINISH: PLATE (ELECTRODEPOSITED) ALL SURFACES PER QQ-C-320, CLASS 2, TYPE II, PLATING TO BE .0004 TO .0008 THICK, HARDNESS ROCKWELL C60 MIN. DIMENSIONS APPLY AFTER PLATING. SPECIFIED THICKNESS NOT REQUIRED IN ALL HOLES AS LONG AS PLATING IS CONTINUOUS THROUGH EACH HOLE
4. SURFACE QUALITY 125/ ALL OVER
5. REMOVE BURRS AND BREAK SHARP EDGES .005/.015
6. MARK .140/.100 HIGH WHITE CHARACTERS PER ND 1002122 TYPE II CLASS I PER ND1002019
7. IDENTIFY PER ND 1002019

MASTER

QTY REQD	PART OR IDENTIFYING NO.	NOMENCLATURE OR DESCRIPTION	FIND NO.

LIST OF MATERIALS

NEXT ASSY	USED ON
APPLICATION	

UNLESS OTHERWISE SPECIFIED DIMENSIONS ARE IN INCHES
TOLERANCES ON
FRACTIONS ± __ DECIMALS XXX ± .005 XX ± .01 ANGLES ± __
DO NOT SCALE THIS DRAWING
MATERIAL SEE NOTE 2
HEAT TREATMENT ——
FINAL FINISH SEE NOTE 3

MIT INSTRUMENTATION LAB
CAMBRIDGE, MASS.
DWG. NO. CONTRACT
DRAWN R C Taylor DATE 8 OCT 64
CHECKED [illegible] 19 OCT 64
APPROVAL
APPROVAL Eldon C Hall 10/9/64
NASA APPROVAL W J Rhine 10-20-64
MIT APPROVAL [illegible] 10/20/64

MANNED SPACECRAFT CENTER
HOUSTON, TEXAS

MOUNT
STBY SW AND P/S CONN

CODE IDENT NO. —— SIZE D NASA DRAWING NO. 1004736
SCALE 1/1 WT —— SHEET 1 OF 1

NOTICE — WHEN GOVERNMENT DRAWINGS, SPECIFICATIONS, OR OTHER DATA ARE USED FOR ANY PURPOSE OTHER THAN IN CONNECTION WITH A DEFINITELY RELATED GOVERNMENT PROCUREMENT OPERATION, THE UNITED STATES GOVERNMENT THEREBY INCURS NO RESPONSIBILITY NOR ANY OBLIGATION WHATSOEVER; AND THE FACT THAT THE GOVERNMENT MAY HAVE FORMULATED, FURNISHED, OR IN ANY WAY SUPPLIED THE SAID DRAWINGS, SPECIFICATIONS OR OTHER DATA IS NOT TO BE REGARDED BY IMPLICATION OR OTHERWISE AS IN ANY MANNER LICENSING THE HOLDER OR ANY OTHER PERSON OR CORPORATION, OR CONVEYING ANY RIGHTS OR PERMISSION TO MANUFACTURE, USE OR SELL ANY PATENTED INVENTION THAT MAY IN ANY WAY BE RELATED THERETO.

REVISIONS 13673			
SYM	DESCRIPTION	DATE	APPROVAL

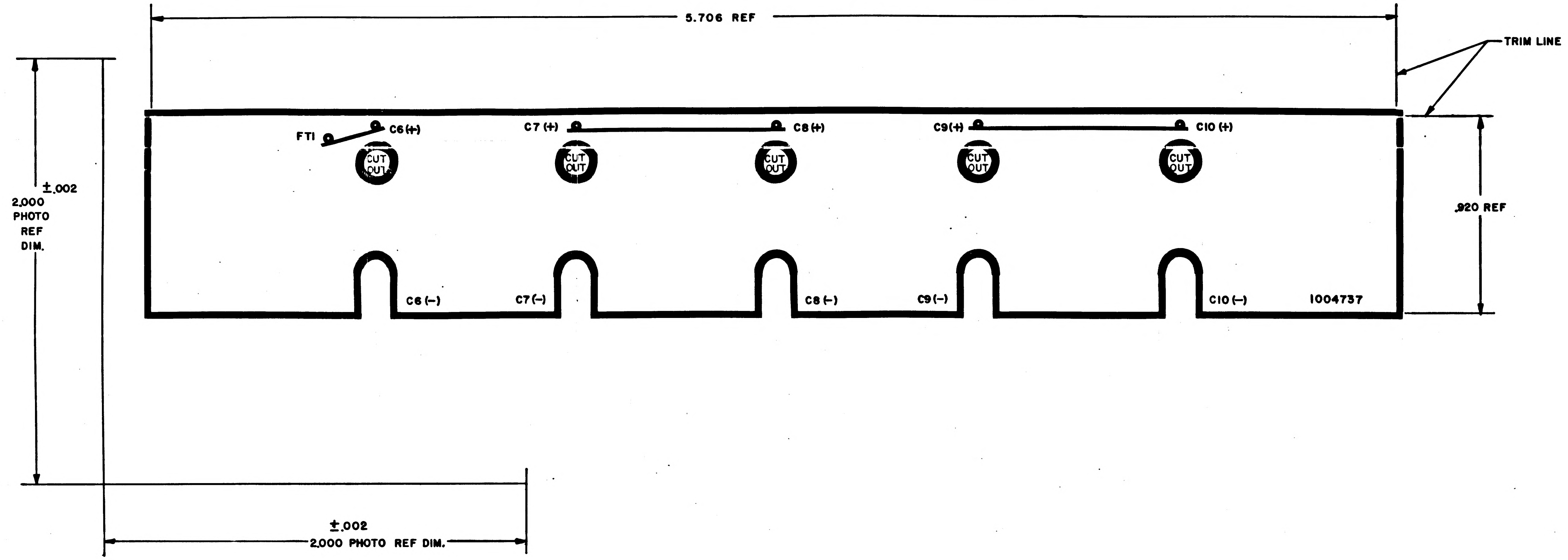

NOTES:
1. INTERPRET DRAWING IN ACCORDANCE WITH STANDARDS PRESCRIBED BY MIL-D-70327
2. ORIGINAL OF THIS DRAWING OR REPRODUCTION MADE BY A PROCESS OR METHOD SHALL INSURE DIMENSIONAL STABILITY. DIMENSIONAL STABILITY SHALL NOT EXCEED .001 INCH PER INCH
3. CUT TO WITHIN .010 OF TRIM LINE
4. MAKE MASTER PATTERN POSITIVE FILMS TO DIMENSIONS SHOWN
5. MATERIAL: FILM .006/.008 THICK PER L-F-340, TYPE IB, CLASS 2, STYLE IA
6. ⊙ .065/.075 DIA PUNCH

MASTER

QTY REQD	PART OR IDENTIFYING NO.	NOMENCLATURE OR DESCRIPTION	FIND NO.

LIST OF MATERIALS

1003704	
NEXT ASSY	USED ON
APPLICATION	

UNLESS OTHERWISE SPECIFIED DIMENSIONS ARE IN INCHES
TOLERANCES ON
FRACTIONS ± DECIMALS ± ANGLES ±
DO NOT SCALE THIS DRAWING
MATERIAL SEE NOTE 5
HEAT TREATMENT
FINAL FINISH

MIT INSTRUMENTATION LAB
CAMBRIDGE, MASS.
DWG NO. CONTRACT
DRAWN DATE
CHECKED 20 Oct 64
APPROVAL
APPROVAL Eldon C Hall 20 Oct 64
NASA APPROVAL 10-20-64
MIT APPROVAL 10/29/64

MANNED SPACECRAFT CENTER
HOUSTON, TEXAS

INSULATOR PHOTOGRAPHIC MASTER
FILTER MODULE B5

CODE IDENT NO. —
SIZE D
NASA DRAWING NO. 1004737
SCALE 4/1
WT
SHEET 1 OF 1

1004737

INCHES
0 1 2
PHOTOGRAPHIC SCALE ONLY

NOTICE — WHEN GOVERNMENT DRAWINGS, SPECIFICATIONS, OR OTHER DATA ARE USED FOR ANY PURPOSE OTHER THAN IN CONNECTION WITH A DEFINITELY RELATED GOVERNMENT PROCUREMENT OPERATION, THE UNITED STATES GOVERNMENT THEREBY INCURS NO RESPONSIBILITY NOR ANY OBLIGATION WHATSOEVER; AND THE FACT THAT THE GOVERNMENT MAY HAVE FORMULATED, FURNISHED, OR IN ANY WAY SUPPLIED THE SAID DRAWINGS, SPECIFICATIONS OR OTHER DATA IS NOT TO BE REGARDED BY IMPLICATION OR OTHERWISE AS IN ANY MANNER LICENSING THE HOLDER OR ANY OTHER PERSON OR CORPORATION, OR CONVEYING ANY RIGHTS OR PERMISSION TO MANUFACTURE, USE, OR SELL ANY PATENTED INVENTION THAT MAY IN ANY WAY BE RELATED THERETO.

REVISIONS 14006

SYM	ZONE	DESCRIPTION	DR	CHK	DATE	APPROVED
A		REVISED PER TDRR 17744	RAB	PKB	4/24/65	

DASH NO.	A	B
−000	.40	.19
−001	.29	.12

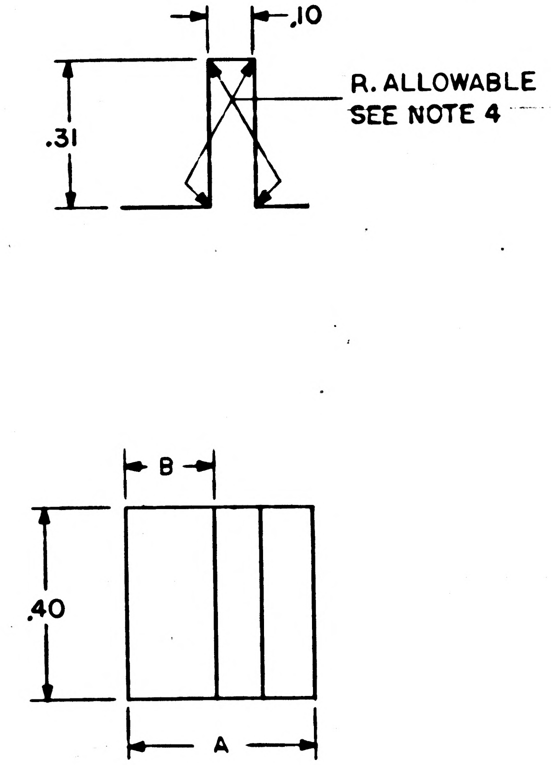

NOTES
1. INTERPRET DRAWING IN ACCORDANCE WITH STANDARDS PRESCRIBED BY MIL-D-70327
2. MATERIAL: FILM .006/.008 THICK PER L-F-340, TYPE IB, CLASS 2, STYLE IA
3. IDENTIFY PER ND 1002019
4. BREAKAGE OF FILM SHALL BE CAUSE FOR REJECTION

QTY REQD	PART OR IDENTIFYING NO.	MATERIAL OR NOTES	NOMENCLATURE OR DESCRIPTION	FIND NO.

LIST OF MATERIALS

1003704	
NEXT ASSY	USED ON

APPLICATION

UNLESS OTHERWISE SPECIFIED
DIMENSIONS ARE IN INCHES
CAPACITOR VALUES ARE IN µf
RESISTOR VALUES ARE IN OHMS
TOLERANCES ON
FRACTIONS ± — DECIMALS ±.02 ANGLES ± —
DO NOT SCALE THIS DRAWING

MATERIAL
SEE NOTE 2

MIT
INSTRUMENTATION LAB
CAMBRIDGE, MASS.

DRAWN A. Addario Jr. 3 NOV. 64
CHECKED R. Lisboni 3NOV64
APPROVED
APPROVED E. Hall 11/4/64
APPROVED MIT W Kupfer 4 Nov 64
APPROVED MSC W G Rhi 11-4-64
DATE

MANNED SPACECRAFT CENTER
HOUSTON, TEXAS

INSULATOR

CODE IDENT NO. 80230
SIZE C
DRAWING NO. 1004738
SCALE 4/1
SHEET 1 OF 1

NOTICE — WHEN GOVERNMENT DRAWINGS, SPECIFICATIONS, OR OTHER DATA ARE USED FOR ANY PURPOSE OTHER THAN IN CONNECTION WITH A DEFINITELY RELATED GOVERNMENT PROCUREMENT OPERATION, THE UNITED STATES GOVERNMENT THEREBY INCURS NO RESPONSIBILITY NOR ANY OBLIGATION WHATSOEVER; AND THE FACT THAT THE GOVERNMENT MAY HAVE FORMULATED, FURNISHED, OR IN ANY WAY SUPPLIED THE SAID DRAWINGS, SPECIFICATIONS OR OTHER DATA IS NOT TO BE REGARDED BY IMPLICATION OR OTHERWISE AS IN ANY MANNER LICENSING THE HOLDER OR ANY OTHER PERSON OR CORPORATION, OR CONVEYING ANY RIGHTS OR PERMISSION TO MANUFACTURE, USE, OR SELL ANY PATENTED INVENTION THAT MAY IN ANY WAY BE RELATED THERETO.

REVISIONS 14006

SYM	ZONE	DESCRIPTION	DR	CHK	DATE	APPROVED

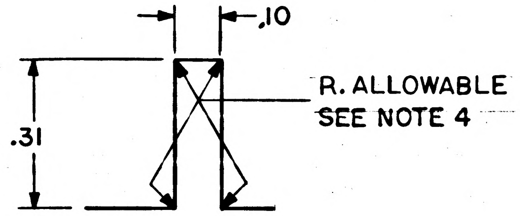

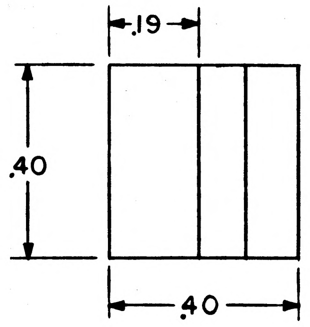

NOTES
1. INTERPRET DRAWING IN ACCORDANCE WITH STANDARDS PRESCRIBED BY MIL-D-70327
2. MATERIAL : FILM .006/.008 THICK PER L-F-340, TYPE IB, CLASS 2, STYLE 1A
3. IDENTIFY PER ND 1002019
4. BREAKAGE OF FILM SHALL BE CAUSE FOR REJECTION

QTY REQD	PART OR IDENTIFYING NO.	MATERIAL OR NOTES	NOMENCLATURE OR DESCRIPTION	FIND NO.

LIST OF MATERIALS

1003704	
NEXT ASSY	USED ON

APPLICATION

UNLESS OTHERWISE SPECIFIED
DIMENSIONS ARE IN INCHES
CAPACITOR VALUES ARE IN μf
RESISTOR VALUES ARE IN OHMS
TOLERANCES ON
FRACTIONS DECIMALS ANGLES
± —— ±.02 ± ——
DO NOT SCALE THIS DRAWING

MATERIAL
SEE NOTE 2

MIT
INSTRUMENTATION LAB
CAMBRIDGE, MASS.

MANNED SPACECRAFT CENTER
HOUSTON, TEXAS

		DATE
DRAWN	A. Addarjo Jr.	3 NOV. 64
CHECKED	R. Lisdeni	3NOV64
APPROVED		
APPROVED	E. Hall	11/4/64
APPROVED MIT	W Kupfer	4Nov64
APPROVED MSC	W G Rhi	11-4-64

INSULATOR FILTER MODULE

CODE IDENT NO. ——
SIZE C
DRAWING NO. 1004738
SCALE 4/1
SHEET 1 OF 1

1004738

INCHES
0 1 2

NOTICE – WHEN GOVERNMENT DRAWINGS, SPECIFICATIONS, OR OTHER DATA ARE USED FOR ANY PURPOSE OTHER THAN IN CONNECTION WITH A DEFINITELY RELATED GOVERNMENT PROCUREMENT OPERATION, THE UNITED STATES GOVERNMENT THEREBY INCURS NO RESPONSIBILITY NOR ANY OBLIGATION WHATSOEVER: AND THE FACT THAT THE GOVERNMENT MAY HAVE FORMULATED, FURNISHED, OR IN ANY WAY SUPPLIED THE SAID DRAWINGS, SPECIFICATIONS OR OTHER DATA IS NOT TO BE REGARDED BY IMPLICATION OR OTHERWISE AS IN ANY MANNER LICENSING THE HOLDER OR ANY OTHER PERSON OR CORPORATION, OR CONVEYING ANY RIGHTS OR PERMISSION TO MANUFACTURE, USE, OR SELL ANY PATENTED INVENTION THAT MAY IN ANY WAY BE RELATED THERETO.

REVISIONS 14265

SYM	ZONE	DESCRIPTION	DR	CHK	DATE	APPROVED

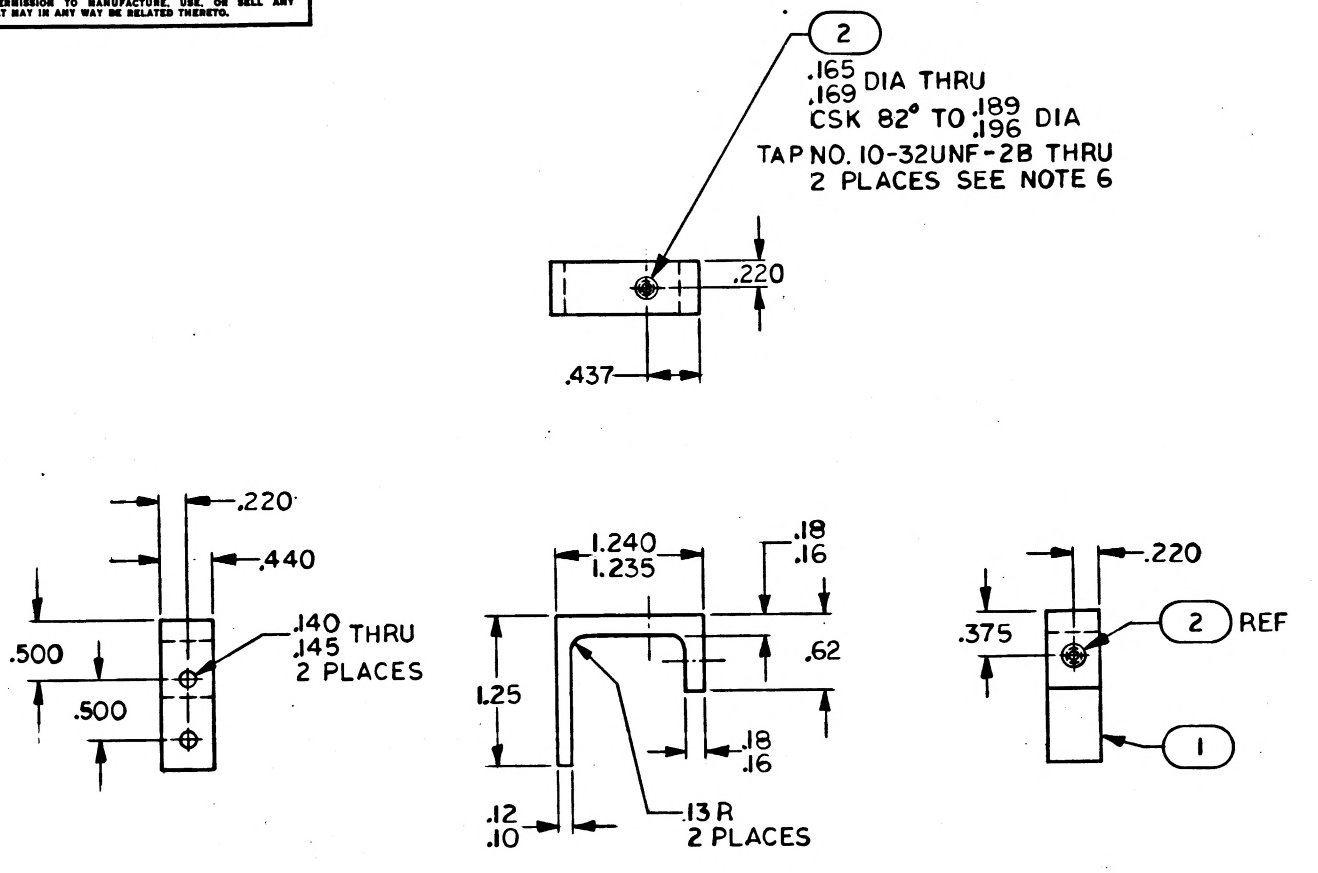

NOTES:

1. INTERPRET DRAWING IN ACCORDANCE WITH STANDARDS PRESCRIBED BY MIL-D-70327
2. MATERIAL: AL 2024-T4 PER QQ-A-250/4
3. FINISH: ANODIZE PER MIL-A-8625 TYPE II DYED BLACK
4. REMOVE ALL BURRS AND BREAK SHARP EDGES .005/.015
5. SURFACE QUALITY 125/
6. INSTALL FIND NO.2 PER ND 1002121

QTY REQD	PART OR IDENTIFYING NO.	MATERIAL OR NOTES	NOMENCLATURE OR DESCRIPTION	FIND NO.
2	1006702-2		INSERT, THREADED, SELF LOCKING	2
1	1004739-001		BRACKET	1

LIST OF MATERIALS

NEXT ASSY	USED ON
1003700	

APPLICATION

UNLESS OTHERWISE SPECIFIED
DIMENSIONS ARE IN INCHES
CAPACITOR VALUES ARE IN μf
RESISTOR VALUES ARE IN OHMS
TOLERANCES ON
FRACTIONS ± DECIMALS XX ±.01 XXX ±.005 ANGLES ±
DO NOT SCALE THIS DRAWING

MATERIAL
SEE NOTE 2

MIT
INSTRUMENTATION LAB
CAMBRIDGE, MASS.

DRAWN	L Krahn	5 NOV 64
CHECKED	R. Lizdeni	9NOV64
APPROVED		
APPROVED	Eldon C Hall	9Nov64
APPROVED MIT	W Keyfer	13Nov64
APPROVED MSC	W J Rhine	11-13-64
		DATE

MANNED SPACECRAFT CENTER
HOUSTON, TEXAS

BRACKET
TRAY A AND B
AGC COMPUTER

CODE IDENT NO. —
SIZE C
DRAWING NO. 1004739
SCALE 1/1
SHEET 1 OF 1

MASTER

INCHES
0 1 2
PHOTOGRAPHIC SCALE ONLY

REVISIONS			
SYM	DESCRIPTION	DATE	APPROVAL
A	REVISED PER TDRR 3669 DR [illegible] CHK [illegible] QTM	11/4/64	

1004750 A

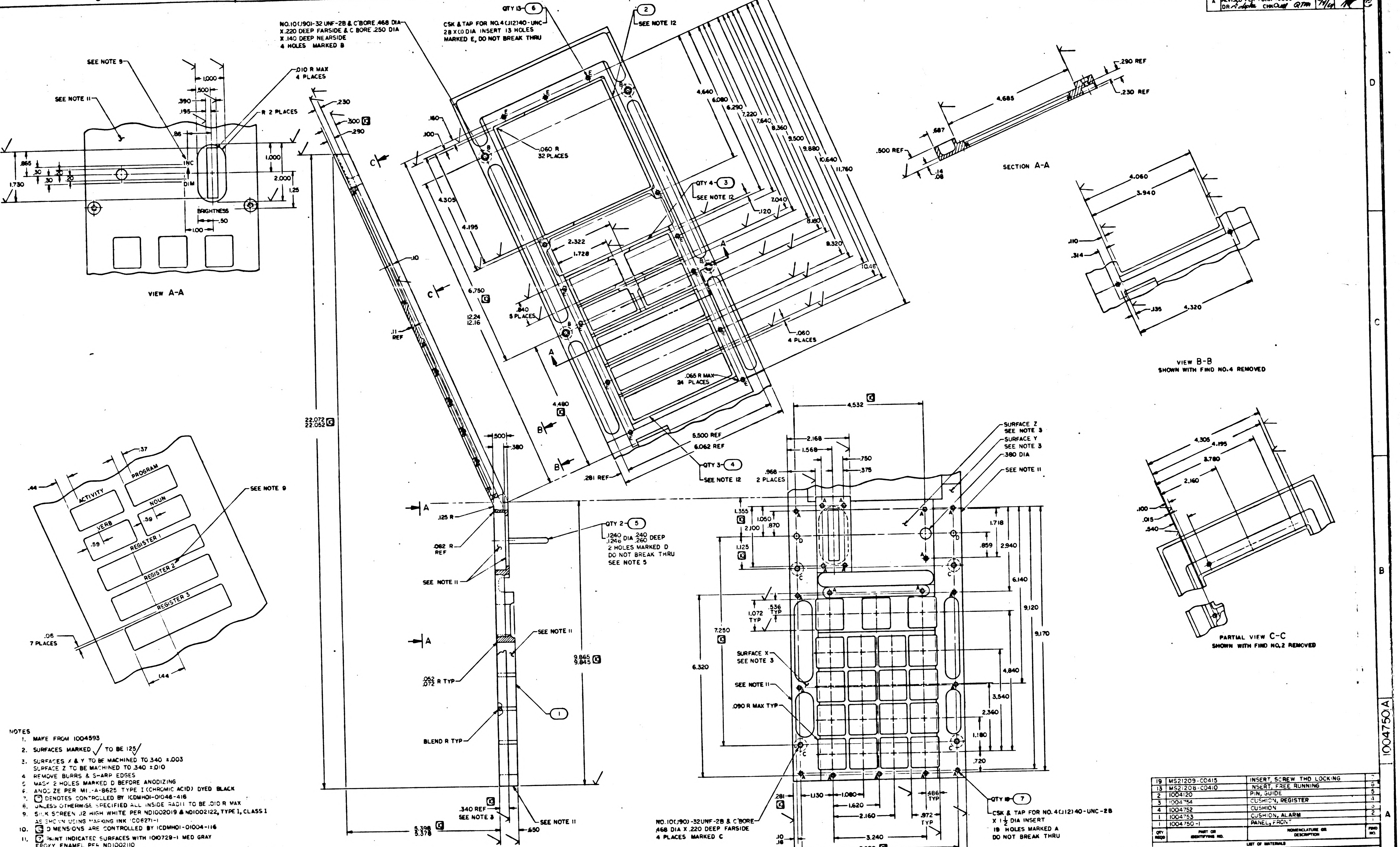

VIEW A-A
SEE NOTE 9
SEE NOTE 11
.010 R MAX 4 PLACES
R 2 PLACES
INC
DIM
BRIGHTNESS
NO.10(.190)-32 UNF-2B & C'BORE .468 DIA X .220 DEEP FARSIDE & C BORE .250 DIA X .140 DEEP NEARSIDE 4 HOLES MARKED B
QTY 13 ⑥
CSK & TAP FOR NO.4(.112)40-UNC-2B X (1) DIA INSERT 13 HOLES MARKED E, DO NOT BREAK THRU
② SEE NOTE 12
.060 R 32 PLACES
QTY 4 ③ SEE NOTE 12
.840 5 PLACES
.060 4 PLACES
.065 R MAX 24 PLACES
5.500 REF
6.062 REF
QTY 3 ④ SEE NOTE 12
SECTION A-A
VIEW B-B SHOWN WITH FIND NO.4 REMOVED
PARTIAL VIEW C-C SHOWN WITH FIND NO.2 REMOVED
PROGRAM
ACTIVITY
NOUN
VERB
REGISTER 1
REGISTER 2
REGISTER 3
.06 7 PLACES
QTY 2 ⑤
.1240 .1246 DIA .240 .260 DEEP 2 HOLES MARKED D DO NOT BREAK THRU SEE NOTE 5
BLEND R TYP
SURFACE Z SEE NOTE 3
SURFACE Y SEE NOTE 3
.380 DIA
SURFACE X SEE NOTE 3
.090 R MAX TYP
NO.10(.190)-32UNF-2B & C'BORE .468 DIA X .220 DEEP FARSIDE 4 PLACES MARKED C
.340 REF SEE NOTE 3
QTY 19 ⑦
CSK & TAP FOR NO.4(.112)40-UNC-2B X 1½ DIA INSERT 19 HOLES MARKED A DO NOT BREAK THRU

NOTES
1. MAKE FROM 1004593
2. SURFACES MARKED √ TO BE 125√
3. SURFACES X & Y TO BE MACHINED TO .340 ±.003
SURFACE Z TO BE MACHINED TO .340 ±.010
4. REMOVE BURRS & SHARP EDGES
5. MASK 2 HOLES MARKED D BEFORE ANODIZING
6. ANODIZE PER MIL-A-8625 TYPE I (CHROMIC ACID) DYED BLACK
7. ⑦ DENOTES CONTROLLED BY ICDMH01-01046-416
8. UNLESS OTHERWISE SPECIFIED ALL INSIDE RADII TO BE .010 R MAX
9. SILK SCREEN .12 HIGH WHITE PER ND1002019 & ND1002122, TYPE I, CLASS I
AS SHOWN USING MARKING INK 1006271-1
10. Ⓒ DIMENSIONS ARE CONTROLLED BY ICDMH01-01004-116
11. ⑦ PAINT INDICATED SURFACES WITH 1010729-1 MED GRAY
EPOXY ENAMEL PER ND1002110
12. BOND FIND NO. 2,3 & 4 TO FIND NO. 1 PER ND1002151
13. INTERPRET DRAWING IN ACCORDANCE WITH STANDARDS
PRESCRIBED BY MIL-D-70327

QTY REQD	PART OR IDENTIFYING NO.	NOMENCLATURE OR DESCRIPTION	FIND NO.
19	MS21209-C0415	INSERT, SCREW THD LOCKING	7
13	MS21208-C0410	INSERT, FREE RUNNING	6
2	1004120	PIN, GUIDE	5
3	1004754	CUSHION, REGISTER	4
4	1004752	CUSHION	3
1	1004753	CUSHION, ALARM	2
1	1004750-1	PANEL, FRONT	1

LIST OF MATERIALS

NEXT ASSY	USED ON
1003706	

APPLICATION

UNLESS OTHERWISE SPECIFIED
DIMENSIONS ARE IN INCHES
TOLERANCES ON
FRACTIONS ± DECIMALS ±.005 .02 ANGLES ±
DO NOT SCALE THIS DRAWING
MATERIAL SEE NOTE 1
HEAT TREATMENT NONE
FINAL FINISH SEE NOTE 6

MIT
INSTRUMENTATION LAB
CAMBRIDGE, MASS
DRAWN B Jensen DATE 6 AUG 64
CHECKED [illegible]
APPROVAL [illegible] Sept 15 64
APPROVAL [illegible]
NASA APPROVAL W J Rhine 9-22-64
MIT APPROVAL
MIT APPROVAL [illegible]

MANNED SPACECRAFT CENTER
HOUSTON, TEXAS

PANEL, FRONT
AGC DSKY, NAV
100 SERIES

CODE IDENT NO. —— SIZE J NASA DRAWING NO. 1004750
SCALE 1/1 WT SHEET OF 1

1004750 A

	1004750	B

SYM	REVISIONS DESCRIPTION	DATE	APPROVAL
A	REVISED PER TDRR 13669 DR CHK	11/4/64	
B	REVISED PER TDRR 16474 DR CHK	3/3/65	

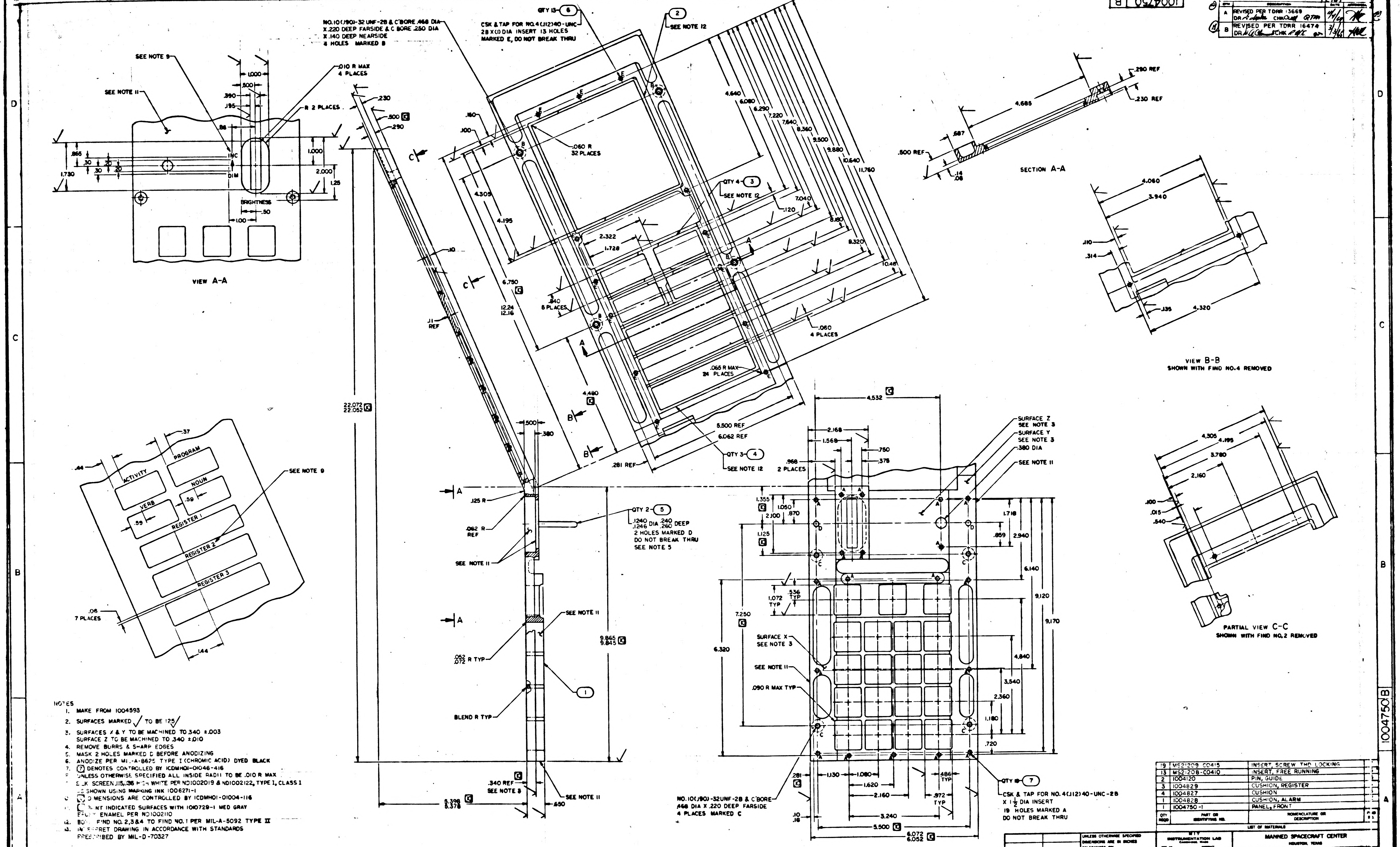

5
4
3
2
1
D
C
B
A
VIEW A-A
SEE NOTE 9
SEE NOTE 11
.010 R MAX 4 PLACES
R 2 PLACES
INC
DIM
BRIGHTNESS
1.000
.500
.390
.195
2.000
1.25
1.730
NO.10(.190)-32 UNF-2B & C'BORE .468 DIA X .220 DEEP FARSIDE & C'BORE .250 DIA X .140 DEEP NEARSIDE 4 HOLES MARKED B
QTY 13 6
CSK & TAP FOR NO.4(.112)40-UNC-2B X(1)DIA INSERT 13 HOLES MARKED E, DO NOT BREAK THRU
2
SEE NOTE 12
QTY 4 3
SEE NOTE 12
QTY 3 4
SEE NOTE 12
.060 R 32 PLACES
.060 4 PLACES
.065 R MAX 24 PLACES
5.500 REF
6.062 REF
.281 REF
.340 REF
SEE NOTE 8
SECTION A-A
4.685
.290 REF
.230 REF
.687
.500 REF
VIEW B-B SHOWN WITH FIND NO.4 REMOVED
PARTIAL VIEW C-C SHOWN WITH FIND NO.2 REMOVED
ACTIVITY
PROGRAM
VERB
NOUN
REGISTER 1
REGISTER 2
REGISTER 3
.06 7 PLACES
QTY 2 5
.1240 .1245 DIA .240 .260 DEEP 2 HOLES MARKED D DO NOT BREAK THRU SEE NOTE 5
1
BLEND R TYP
SURFACE Z SEE NOTE 3
SURFACE Y SEE NOTE 3
.380 DIA
SURFACE X SEE NOTE 3
.090 R MAX TYP
.968 2 PLACES
NO.10(.190)-32UNF-2B & C'BORE .468 DIA X .220 DEEP FARSIDE 4 PLACES MARKED C
QTY 19 7
22.072 22.052
9.865 9.845
6.072 6.052
5.500
4.532

CSK & TAP FOR NO. 4(.112)40-UNC-2B X 1$\frac{1}{2}$ DIA INSERT 19 HOLES MARKED A DO NOT BREAK THRU

NOTES
1. MAKE FROM 1004593
2. SURFACES MARKED √ TO BE 125√
3. SURFACES X & Y TO BE MACHINED TO .340 ±.003
   SURFACE Z TO BE MACHINED TO .340 ±.010
4. REMOVE BURRS & SHARP EDGES
5. MASK 2 HOLES MARKED D BEFORE ANODIZING
6. ANODIZE PER MIL-A-8625 TYPE I (CHROMIC ACID) DYED BLACK
7. $\boxed{7}$ DENOTES CONTROLLED BY ICDMH01-01046-416
8. UNLESS OTHERWISE SPECIFIED ALL INSIDE RADII TO BE .010 R MAX
9. SILK SCREEN .115/.136 HIGH WHITE PER ND1002019 & ND1002122, TYPE I, CLASS I AS SHOWN USING MARKING INK 1006271-1
10. $\boxed{C}$ DIMENSIONS ARE CONTROLLED BY ICDMH01-01004-116
11. PAINT INDICATED SURFACES WITH 1010729-1 MED GRAY EPOXY ENAMEL PER ND1002110
12. BOND FIND NO. 2,3&4 TO FIND NO.1 PER MIL-A-5092 TYPE II
13. INTERPRET DRAWING IN ACCORDANCE WITH STANDARDS PRESCRIBED BY MIL-D-70327

QTY REQD	PART OR IDENTIFYING NO.	NOMENCLATURE OR DESCRIPTION
19	MS21209-C0415	INSERT, SCREW THD LOCKING
13	MS21208-C0410	INSERT, FREE RUNNING
2	1004120	PIN, GUIDE
3	1004829	CUSHION, REGISTER
4	1004827	CUSHION
1	1004828	CUSHION, ALARM
1	1004750-1	PANEL, FRONT

LIST OF MATERIALS

NEXT ASSY	USED ON
1003706	

APPLICATION

UNLESS OTHERWISE SPECIFIED
DIMENSIONS ARE IN INCHES
TOLERANCES ON
FRACTIONS ± DECIMALS ±.005 .02 ANGLES ±
DO NOT SCALE THIS DRAWING
MATERIAL SEE NOTE 1
HEAT TREATMENT NONE
FINAL FINISH SEE NOTE 6

MIT INSTRUMENTATION LAB
CAMBRIDGE, MASS
DRAWN B. Jensen DATE 6 AUG 64
CHECKED
APPROVAL
APPROVAL
NASA APPROVAL W J 4-22-64
MIT APPROVAL
MIT APPROVAL

MANNED SPACECRAFT CENTER
HOUSTON, TEXAS

PANEL, FRONT
AGC DSKY, NAV
100 SERIES

CODE IDENT NO. —— SIZE J NASA DRAWING NO. 1004750
SCALE 1/1 WT SHEET

1004750 B

MASTER

C	1004750

REVISIONS 12765

SYM	DESCRIPTION	DATE	APPROVAL
A	REVISED PER TDRR 13669 DR *S. Lapham* CHK *Cull* *QTM*	*4/4/65*	
B	REVISED PER TDRR 16474 DR *D. A. Clement* CHK *R.W.E.*	*3/3/65*	
C	REVISED PER TDRR 17120 DR *A. J. Biron* CHK *R.W.S.*	*3/20/65*	

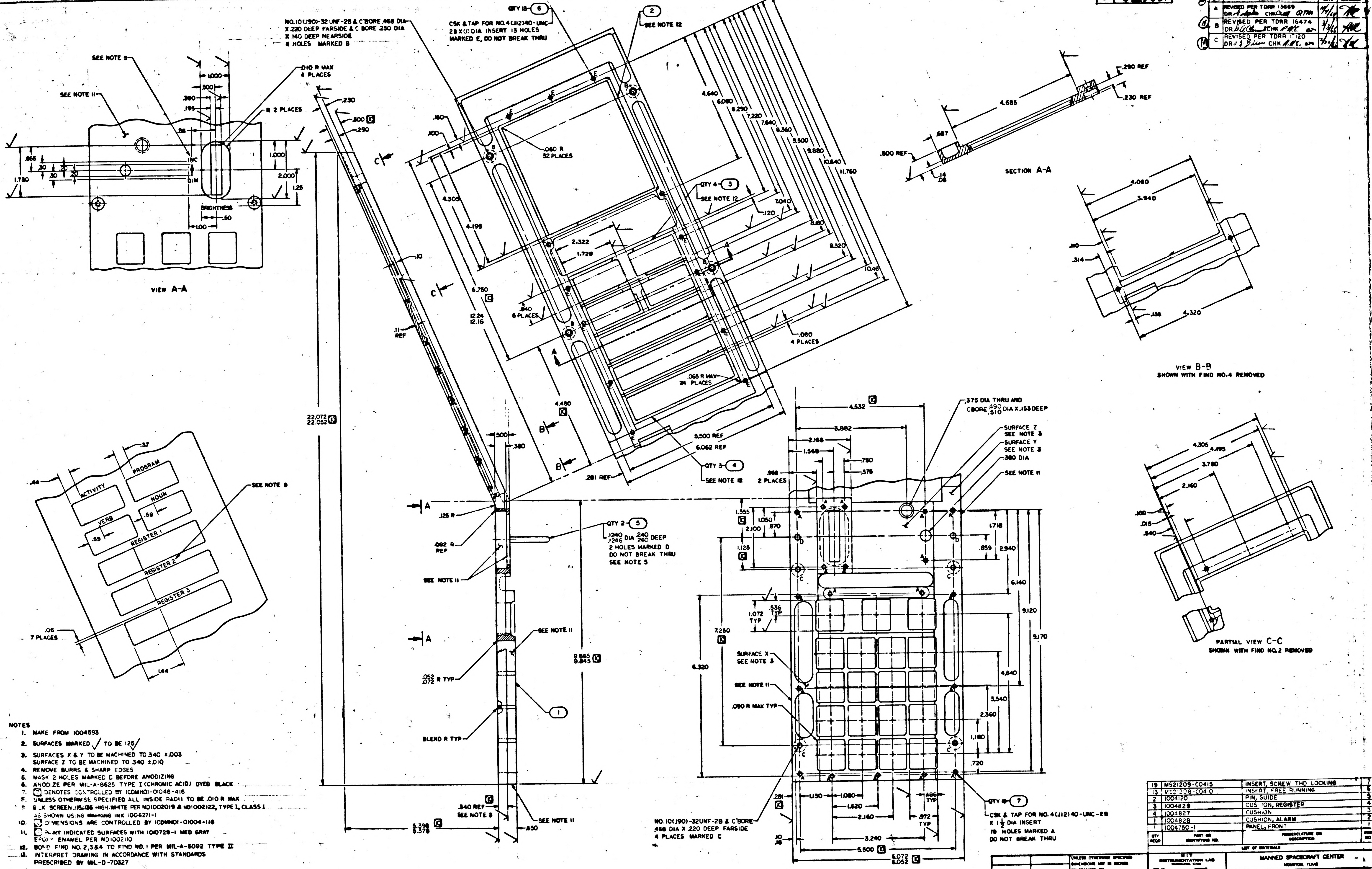

SEE NOTE 9
SEE NOTE 11
.010 R MAX 4 PLACES
R 2 PLACES
INC
DIM
BRIGHTNESS
VIEW A-A
NO.10(.190)-32 UNF-2B & C'BORE .468 DIA X .220 DEEP FARSIDE & C BORE .250 DIA X .140 DEEP NEARSIDE 4 HOLES MARKED B
QTY 13 6
CSK & TAP FOR NO.4(.112)40-UNC-2B X(1.0 DIA INSERT 13 HOLES MARKED E, DO NOT BREAK THRU
2 SEE NOTE 12
.060 R 32 PLACES
QTY 4 3 SEE NOTE 12
.040 8 PLACES
.060 4 PLACES
.065 R MAX 24 PLACES
5.500 REF
6.062 REF
QTY 3 4 SEE NOTE 12
.281 REF
SECTION A-A
.290 REF
.230 REF
.500 REF
VIEW B-B SHOWN WITH FIND NO.4 REMOVED
PARTIAL VIEW C-C SHOWN WITH FIND NO.2 REMOVED
ACTIVITY
PROGRAM
VERB
NOUN
REGISTER 1
REGISTER 2
REGISTER 3
SEE NOTE 9
.06 7 PLACES
QTY 2 5
.1240 .1246 DIA .240 .260 DEEP 2 HOLES MARKED D DO NOT BREAK THRU SEE NOTE 5
.125 R
.062 R REF
SEE NOTE 11
.052 .072 R TYP
1
BLEND R TYP
.340 REF SEE NOTE 3
.375 DIA THRU AND CBORE .490 .510 DIA X .153 DEEP
SURFACE Z SEE NOTE 3
SURFACE Y SEE NOTE 3
.380 DIA
SEE NOTE 11
.968 2 PLACES
SURFACE X SEE NOTE 3
SEE NOTE 11
.090 R MAX TYP
NO.10(.190)-32UNF-2B & C'BORE .468 DIA X .220 DEEP FARSIDE 4 PLACES MARKED C
QTY 19 7
CSK & TAP FOR NO. 4(.112)40-UNC-2B X 1 1/2 DIA INSERT 19 HOLES MARKED A DO NOT BREAK THRU
22.072 22.052
9.865 9.845
6.072 6.052

NOTES
1. MAKE FROM 1004593
2. SURFACES MARKED √ TO BE 125√
3. SURFACES X & Y TO BE MACHINED TO .340 ±.003
SURFACE Z TO BE MACHINED TO .340 ±.010
4. REMOVE BURRS & SHARP EDGES
5. MASK 2 HOLES MARKED D BEFORE ANODIZING
6. ANODIZE PER MIL-A-8625 TYPE I (CHROMIC ACID) DYED BLACK
7. Ⓒ DENOTES CONTROLLED BY ICDMH01-01046-416
8. UNLESS OTHERWISE SPECIFIED ALL INSIDE RADII TO BE .010 R MAX
9. SILK SCREEN .115/.135 HIGH WHITE PER ND1002019 & ND1002122, TYPE 1, CLASS I AS SHOWN USING MARKING INK 1006271-1
10. Ⓒ DIMENSIONS ARE CONTROLLED BY ICDMH01-01004-116
11. Ⓒ PAINT INDICATED SURFACES WITH 1010729-1 MED GRAY EPOXY ENAMEL PER ND1002110
12. BOND FIND NO. 2,3&4 TO FIND NO. 1 PER MIL-A-5092 TYPE II
13. INTERPRET DRAWING IN ACCORDANCE WITH STANDARDS PRESCRIBED BY MIL-D-70327

MASTER

QTY REQD	PART OR IDENTIFYING NO.	NOMENCLATURE OR DESCRIPTION	FIND NO
19	MS21209-C0415	INSERT, SCREW THD LOCKING	7
13	MS21208-C0410	INSERT, FREE RUNNING	6
2	1004120	PIN, GUIDE	5
3	1004829	CUSHION, REGISTER	4
4	1004827	CUSHION	3
1	1004828	CUSHION, ALARM	2
1	1004750-1	PANEL, FRONT	1

LIST OF MATERIALS

NEXT ASSY	USED ON
1003706	

APPLICATION

UNLESS OTHERWISE SPECIFIED DIMENSIONS ARE IN INCHES
TOLERANCES ON
FRACTIONS ± DECIMALS ±.005 .02 ANGLES ±
DO NOT SCALE THIS DRAWING
MATERIAL SEE NOTE 1
HEAT TREATMENT NONE
FINAL FINISH SEE NOTE 6

MIT INSTRUMENTATION LAB CAMBRIDGE, MASS.
DRAWN *B. Jensen* DATE 6 AUG 64
CHECKED *R. Edward*
APPROVAL *Sept 15 '64*
APPROVAL *Eldon C. Hall*
NASA APPROVAL *W. J. Rhine 9-22-64*
MIT APPROVAL
MIT APPROVAL

MANNED SPACECRAFT CENTER
HOUSTON, TEXAS

PANEL, FRONT
AGC DSKY, NAV
100 SERIES

CODE IDENT NO. —— SIZE J NASA DRAWING NO. 1004750
SCALE 1/1 WT SHEET OF 1

1004750

1004750 D

SYM	DESCRIPTION	DATE	APPROVAL
A	REVISED PER TDRR 13669 DR CHK RTM	11/4/64	
B	REVISED PER TDRR 16474 DR D.G. Clement CHK R.W.E.	3/3/65	
C	REVISED PER TDRR 17120 DR J J Bison CHK R.W.E.	3/22/65	
D	REVISED PER TDRR 20824 DR R C Taylor CHK R.E.G.	8/12/65	

12765

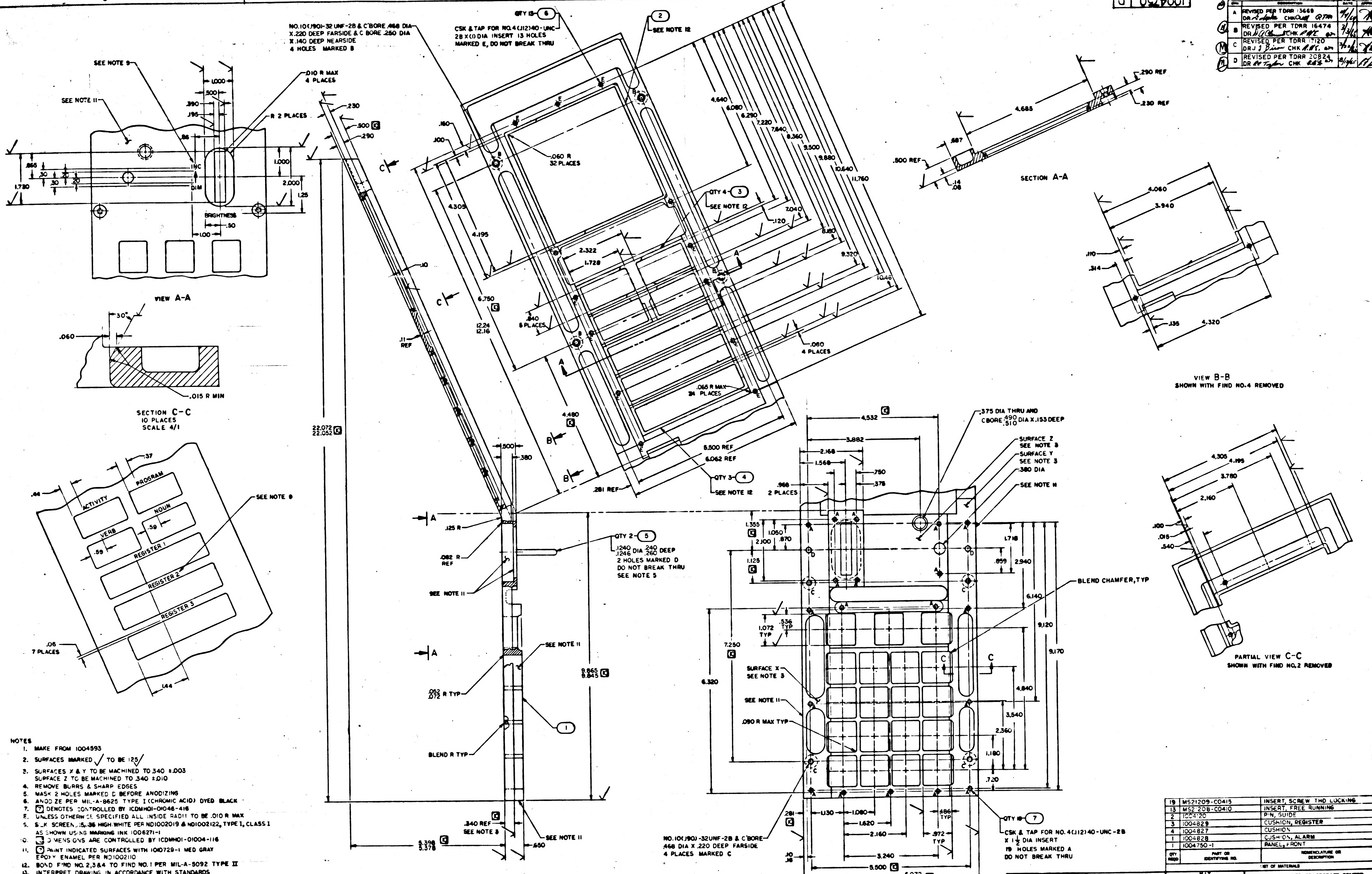

VIEW A-A
SECTION C-C
10 PLACES
SCALE 4/1
SECTION A-A
VIEW B-B
SHOWN WITH FIND NO.4 REMOVED
PARTIAL VIEW C-C
SHOWN WITH FIND NO.2 REMOVED
SEE NOTE 9
SEE NOTE 11
SEE NOTE 12
SEE NOTE 3
R 2 PLACES
.010 R MAX
4 PLACES
BRIGHTNESS
ACTIVITY
PROGRAM
VERB
NOUN
REGISTER 1
REGISTER 2
REGISTER 3
7 PLACES
NO.10(190)-32 UNF-2B & C'BORE .468 DIA X.220 DEEP FARSIDE & C'BORE .250 DIA X.140 DEEP NEARSIDE 4 HOLES MARKED B
QTY 13-6
CSK & TAP FOR NO.4(.112)40-UNC-2B X(1)DIA INSERT 13 HOLES MARKED E, DO NOT BREAK THRU
.060 R
32 PLACES
QTY 4-3
QTY 3-4
QTY 2-5
.1240 .1246 DIA .240 .260 DEEP
2 HOLES MARKED D
DO NOT BREAK THRU
SEE NOTE 5
.065 R MAX
34 PLACES
.060
4 PLACES
5.500 REF
6.062 REF
.281 REF
.375 DIA THRU AND C'BORE .490 .510 DIA X.153 DEEP
SURFACE Z
SURFACE Y
SURFACE X
.380 DIA
BLEND CHAMFER, TYP
BLEND R TYP
.090 R MAX TYP
NO.10(190)-32UNF-2B & C'BORE .468 DIA X .220 DEEP FARSIDE 4 PLACES MARKED C
QTY 19-7
CSK & TAP FOR NO. 4(.112)40-UNC-2B
X 1½ DIA INSERT
19 HOLES MARKED A
DO NOT BREAK THRU
22.072
22.052
5.500
6.072
6.052

NOTES
1. MAKE FROM 1004593
2. SURFACES MARKED √ TO BE 125√
3. SURFACES X & Y TO BE MACHINED TO .340 ±.003
SURFACE Z TO BE MACHINED TO .340 ±.010
4. REMOVE BURRS & SHARP EDGES
5. MASK 2 HOLES MARKED D BEFORE ANODIZING
6. ANODIZE PER MIL-A-8625 TYPE I (CHROMIC ACID) DYED BLACK
7. Ⓒ DENOTES CONTROLLED BY ICDMH01-01046-416
8. UNLESS OTHERWISE SPECIFIED ALL INSIDE RADII TO BE .010 R MAX
9. SILK SCREEN .15-.35 HIGH WHITE PER ND1002019 & ND1002122, TYPE I, CLASS I
AS SHOWN USING MARKING INK 1006271-1
10. Ⓒ DIMENSIONS ARE CONTROLLED BY ICDMH01-01004-116
11. ⓟ PAINT INDICATED SURFACES WITH 1010729-1 MED GRAY
EPOXY ENAMEL PER ND1002110
12. BOND FIND NO. 2,3&4 TO FIND NO. 1 PER MIL-A-5092 TYPE II
13. INTERPRET DRAWING IN ACCORDANCE WITH STANDARDS
PRESCRIBED BY MIL-D-70327

QTY REQD	PART OR IDENTIFYING NO.	NOMENCLATURE OR DESCRIPTION	FIND NO.
19	MS21209-C0415	INSERT, SCREW THD LOCKING	7
13	MS21208-C0410	INSERT, FREE RUNNING	6
2	1004120	PIN, GUIDE	5
3	1004829	CUSHION, REGISTER	4
4	1004827	CUSHION	3
1	1004828	CUSHION, ALARM	2
1	1004750-1	PANEL, FRONT	1

LIST OF MATERIALS

1003706	
NEXT ASSY	USED ON
APPLICATION	

UNLESS OTHERWISE SPECIFIED
DIMENSIONS ARE IN INCHES
TOLERANCES ON
FRACTIONS ± DECIMALS ±.005 .02 ANGLES ± 2°
DO NOT SCALE THIS DRAWING
MATERIAL SEE NOTE 1
HEAT TREATMENT NONE
FINAL FINISH SEE NOTE 6

MIT
INSTRUMENTATION LAB
CAMBRIDGE, MASS
DRAWN B. Jensen DATE 6AUG64
CHECKED
APPROVAL
APPROVAL
NASA APPROVAL W J Rhine 6-22-64
MIT APPROVAL
MIT APPROVAL

MANNED SPACECRAFT CENTER
HOUSTON, TEXAS

PANEL, FRONT
AGC DSKY, NAV
100 SERIES

CODE IDENT NO. 80230 SIZE J NASA DRAWING NO. 1004750
SCALE 1/1 WT SHEET OF

1004750 D

MASTER

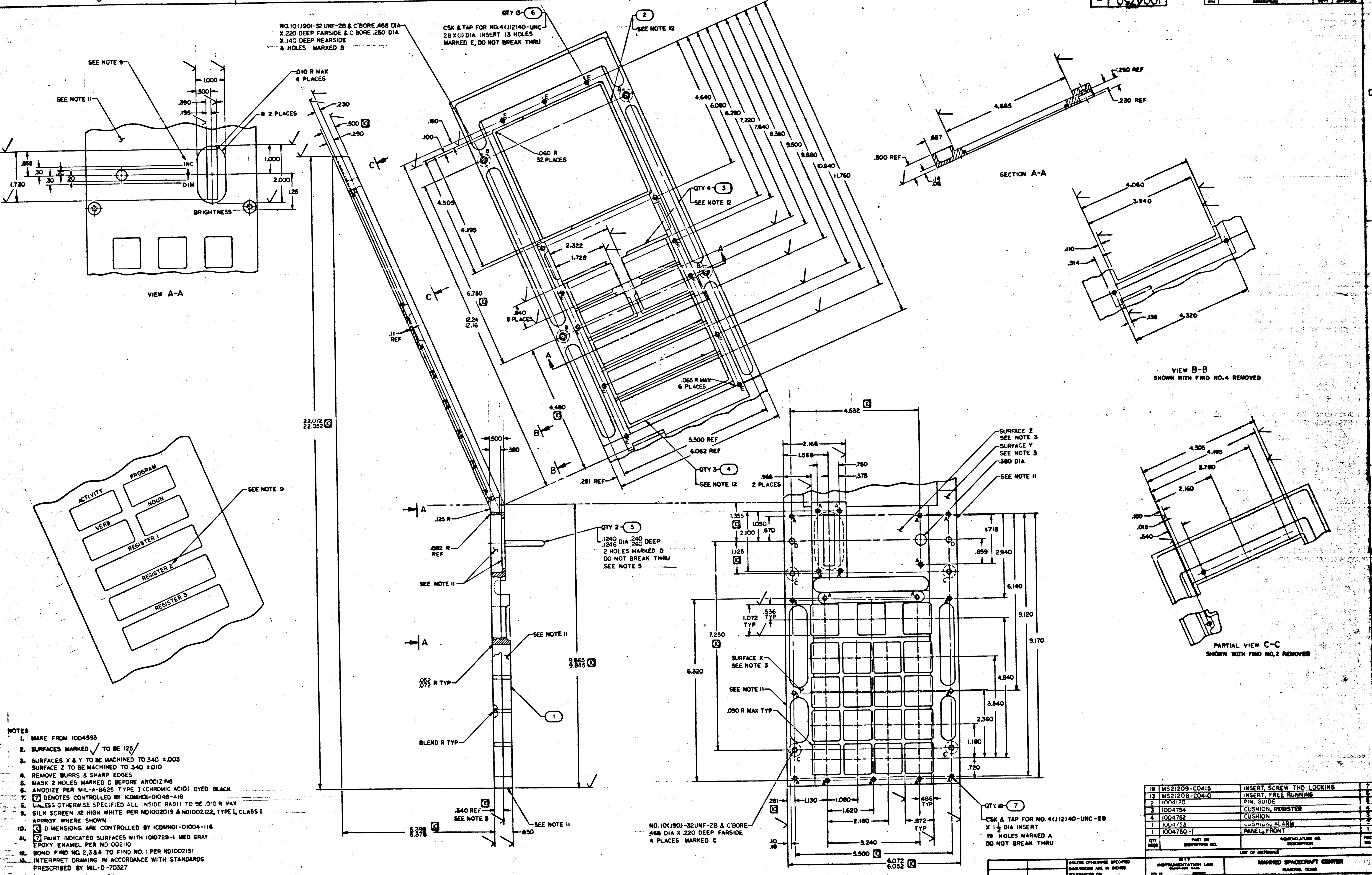
1004750
VIEW A-A
SEE NOTE 9
SEE NOTE 11
BRIGHTNESS
INC
DIM
R 2 PLACES
.010 R MAX 4 PLACES
ACTIVITY
PROGRAM
VERB
NOUN
REGISTER 1
REGISTER 2
REGISTER 3
NO.10(.190)-32 UNF-2B & C'BORE .468 DIA X .220 DEEP FARSIDE & C'BORE .250 DIA X .140 DEEP NEARSIDE 4 HOLES MARKED B
QTY 13 6
CSK & TAP FOR NO.4(.112)40-UNC-2B X (1) DIA INSERT 13 HOLES MARKED E, DO NOT BREAK THRU
2 SEE NOTE 12
QTY 4 3 SEE NOTE 12
.060 R 32 PLACES
.065 R MAX 6 PLACES
QTY 3 4 SEE NOTE 12
5.500 REF
6.062 REF
SECTION A-A
VIEW B-B SHOWN WITH FIND NO.4 REMOVED
PARTIAL VIEW C-C SHOWN WITH FIND NO.2 REMOVED
QTY 2 5
.1240 .1246 DIA .240 .260 DEEP 2 HOLES MARKED D DO NOT BREAK THRU SEE NOTE 5
SURFACE Z SEE NOTE 3
SURFACE Y SEE NOTE 3
SURFACE X SEE NOTE 3
.380 DIA
SEE NOTE 11
.090 R MAX TYP
BLEND R TYP
.052 .072 R TYP
1
NO.10(.190)-32UNF-2B & C'BORE .468 DIA X .220 DEEP FARSIDE 4 PLACES MARKED C
QTY 19 7
CSK & TAP FOR NO. 4(.112)40-UNC-2B X 1½ DIA INSERT 19 HOLES MARKED A DO NOT BREAK THRU
MASTER

NOTES
1. MAKE FROM 1004593
2. SURFACES MARKED √ TO BE 125√
3. SURFACES X & Y TO BE MACHINED TO .340 ±.003
SURFACE Z TO BE MACHINED TO .340 ±.010
4. REMOVE BURRS & SHARP EDGES
5. MASK 2 HOLES MARKED D BEFORE ANODIZING
6. ANODIZE PER MIL-A-8625 TYPE I (CHROMIC ACID) DYED BLACK
7. ⑦ DENOTES CONTROLLED BY ICDMH01-01048-416
8. UNLESS OTHERWISE SPECIFIED ALL INSIDE RADII TO BE .010 R MAX
9. SILK SCREEN .12 HIGH WHITE PER ND1002019 & ND1002122, TYPE I, CLASS I APPROX WHERE SHOWN
10. Ⓒ DIMENSIONS ARE CONTROLLED BY ICDMH01-01004-116
11. ⑦ PAINT INDICATED SURFACES WITH 1010729-1 MED GRAY EPOXY ENAMEL PER ND1002110
12. BOND FIND NO. 2,3 & 4 TO FIND NO. 1 PER ND1002151
13. INTERPRET DRAWING IN ACCORDANCE WITH STANDARDS PRESCRIBED BY MIL-D-70327

QTY REQD	PART OR IDENTIFYING NO.	NOMENCLATURE OR DESCRIPTION	FIND NO.
19	MS21209-C0415	INSERT, SCREW THD LOCKING	7
13	MS21208-C0410	INSERT, FREE RUNNING	6
2	1004120	PIN. GUIDE	5
3	1004754	CUSHION, REGISTER	4
4	1004752	CUSHION	3
1	1004753	CUSHION, ALARM	2
1	1004750-1	PANEL, FRONT	1

LIST OF MATERIALS

NEXT ASSY	USED ON
1003706	

APPLICATION

UNLESS OTHERWISE SPECIFIED
DIMENSIONS ARE IN INCHES
TOLERANCES ON
FRACTIONS ± DECIMALS ±.005 .02 ANGLES ±
DO NOT SCALE THIS DRAWING
MATERIAL SEE NOTE 1
HEAT TREATMENT NONE
FINAL FINISH SEE NOTE 6

MIT
INSTRUMENTATION LAB
CAMBRIDGE, MASS.

DRAWN B Jensen DATE 6 AUG 64
CHECKED
APPROVAL
APPROVAL
NASA APPROVAL W J Rhine 4-22-67
MIT APPROVAL
MIT APPROVAL

MANNED SPACECRAFT CENTER
HOUSTON, TEXAS

PANEL, FRONT
AGC DSKY, NAV
100 SERIES

CODE IDENT NO. —
SIZE J
NASA DRAWING NO. 1004750
SCALE 1/1
WT
SHEET 1

1004751 | —

SYM	DESCRIPTION	DATE	APPROVAL

REVISIONS 12765

NOTICE — WHEN GOVERNMENT DRAWINGS, SPECIFICATIONS, OR OTHER DATA ARE USED FOR ANY PURPOSE OTHER THAN IN CONNECTION WITH A DEFINITELY RELATED GOVERNMENT PROCUREMENT OPERATION, THE UNITED STATES GOVERNMENT THEREBY INCURS NO RESPONSIBILITY NOR ANY OBLIGATION WHATSOEVER; AND THE FACT THAT THE GOVERNMENT MAY HAVE FORMULATED, FURNISHED, OR IN ANY WAY SUPPLIED THE SAID DRAWINGS, SPECIFICATIONS, OR OTHER DATA IS NOT TO BE REGARDED BY IMPLICATION OR OTHERWISE AS IN ANY MANNER LICENSING THE HOLDER OR ANY OTHER PERSON OR CORPORATION, OR CONVEYING ANY RIGHTS OR PERMISSION TO MANUFACTURE, USE, OR SELL ANY PATENTED INVENTION THAT MAY IN ANY WAY BE RELATED THERETO.

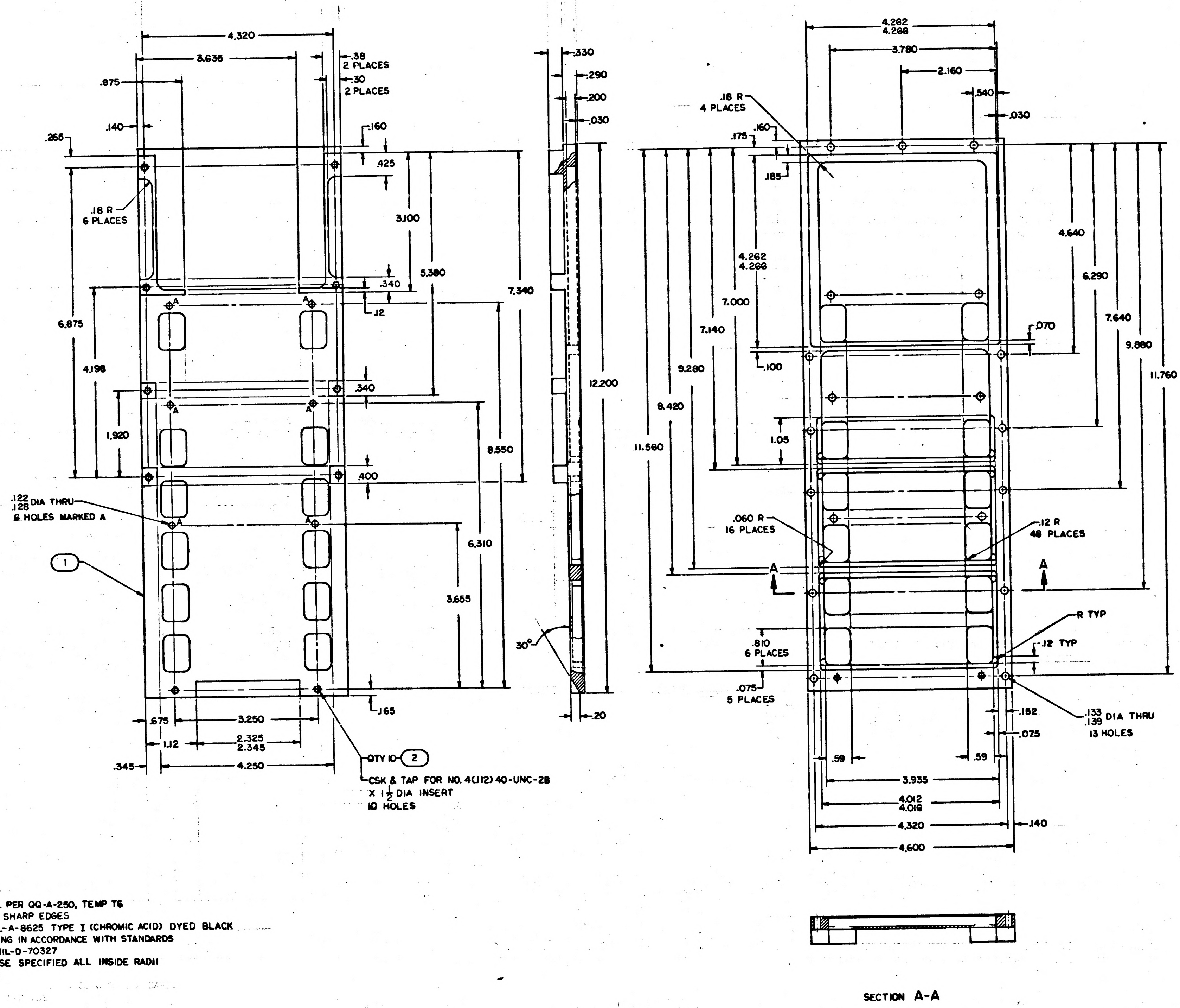

4.320
3.635
.38 2 PLACES
.30 2 PLACES
.975
.140
.265
.160
.425
.18 R 6 PLACES
3.100
5.380
7.340
.340
.12
6.875
4.198
.340
1.920
.400
8.550
.122 .128 DIA THRU 6 HOLES MARKED A
A
1
6.310
3.655
.165
.675
3.250
1.12
2.325 2.345
.345
4.250
QTY 10 2
CSK & TAP FOR NO. 4(.112) 40-UNC-2B X 1½ DIA INSERT 10 HOLES
.330
.290
.200
.030
12.200
30°
.20
4.262 4.266
3.780
2.160
.540
.030
.18 R 4 PLACES
.175
.160
.185
4.262 4.266
7.000
7.140
9.280
9.420
11.560
.070
.100
4.640
6.290
7.640
9.880
11.760
1.05
.060 R 16 PLACES
.12 R 48 PLACES
A
A
R TYP
.12 TYP
.810 6 PLACES
.075 5 PLACES
.152
.075
.133 .139 DIA THRU 13 HOLES
.59
.59
3.935
4.012 4.016
4.320
.140
4.600
SECTION A-A

NOTES
1. MATL: 6061-T6 AL PER QQ-A-250, TEMP T6
2. REMOVE BURRS & SHARP EDGES
3. ANODIZE PER MIL-A-8625 TYPE I (CHROMIC ACID) DYED BLACK
4. INTERPRET DRAWING IN ACCORDANCE WITH STANDARDS PRESCRIBED BY MIL-D-70327
5. UNLESS OTHERWISE SPECIFIED ALL INSIDE RADII TO BE .010 R MAX

MASTER

QTY REQD	PART OR IDENTIFYING NO.	NOMENCLATURE OR DESCRIPTION	FIND NO.
10	MS21208-C0415	INSERT, FREE RUNNING	2
1	1004751-1	E/L FRAME	1

LIST OF MATERIALS

NEXT ASSY	USED ON
1003758	

APPLICATION

UNLESS OTHERWISE SPECIFIED DIMENSIONS ARE IN INCHES
TOLERANCES ON
FRACTIONS ±
DECIMALS ±.005 .01
ANGLES ±5°
DO NOT SCALE THIS DRAWING
MATERIAL SEE NOTE 1
HEAT TREATMENT NONE
FINAL FINISH SEE NOTE 3

MIT INSTRUMENTATION LAB
CAMBRIDGE, MASS.
DWG. NO. CONTRACT
DRAWN B Jansen DATE 10 AUG 64
CHECKED H. Edwards 15 Sept 64
APPROVAL Sept 16 64
APPROVAL
NASA APPROVAL W J Rhine
MIT APPROVAL
MIT APPROVAL

MANNED SPACECRAFT CENTER
HOUSTON, TEXAS

E/L FRAME
AGC DSKY, NAV
100 SERIES

CODE IDENT NO. —
SIZE E
NASA DRAWING NO. 1004751
SCALE 1/1
WT
SHEET 1 OF 1

NOTICE — WHEN GOVERNMENT DRAWINGS, SPECIFICATIONS, OR OTHER DATA ARE USED FOR ANY PURPOSE OTHER THAN IN CONNECTION WITH A DEFINITELY RELATED GOVERNMENT PROCUREMENT OPERATION, THE UNITED STATES GOVERNMENT THEREBY INCURS NO RESPONSIBILITY NOR ANY OBLIGATION WHATSOEVER; AND THE FACT THAT THE GOVERNMENT MAY HAVE FORMULATED, FURNISHED, OR IN ANY WAY SUPPLIED THE SAID DRAWINGS, SPECIFICATIONS OR OTHER DATA IS NOT TO BE REGARDED BY IMPLICATION OR OTHERWISE AS IN ANY MANNER LICENSING THE HOLDER OR ANY OTHER PERSON OR CORPORATION, OR CONVEYING ANY RIGHTS OR PERMISSION TO MANUFACTURE, USE, OR SELL ANY PATENTED INVENTION THAT MAY IN ANY WAY BE RELATED THERETO.

1004755 A

REVISIONS 12765			
SYM	DESCRIPTION	DATE	APPROVAL
A	REVISED PER TDRR16112 DR A.J. Biron CHK R.W.E.	2/19/65	

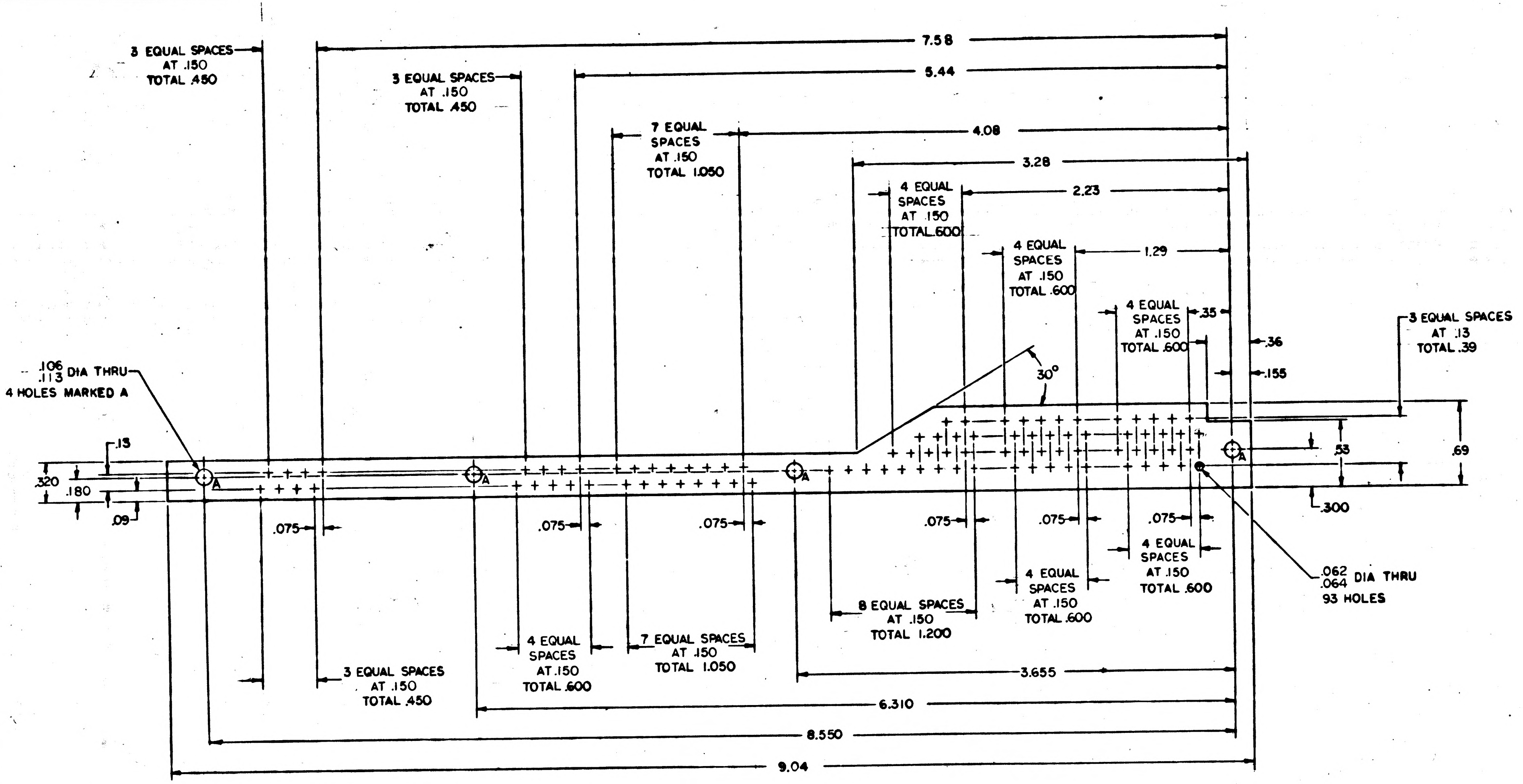

3 EQUAL SPACES AT .150 TOTAL .450
3 EQUAL SPACES AT .150 TOTAL .450
7 EQUAL SPACES AT .150 TOTAL 1.050
4 EQUAL SPACES AT .150 TOTAL .600
4 EQUAL SPACES AT .150 TOTAL .600
4 EQUAL SPACES AT .150 TOTAL .600
3 EQUAL SPACES AT .13 TOTAL .39
7.58
5.44
4.08
3.28
2.23
1.29
.35
.36
.155
30°
.106 .113 DIA THRU 4 HOLES MARKED A
.13
.320
.180
.09
A
A
A
A
.53
.69
.300
.075
.075
.075
.075
.075
.075
.062 .064 DIA THRU 93 HOLES
4 EQUAL SPACES AT .150 TOTAL .600
4 EQUAL SPACES AT .150 TOTAL .600
8 EQUAL SPACES AT .150 TOTAL 1.200
7 EQUAL SPACES AT .150 TOTAL 1.050
4 EQUAL SPACES AT .150 TOTAL .600
3 EQUAL SPACES AT .150 TOTAL .450
3.655
6.310
8.550
9.04

NOTES
1. MATL: .094 THK PLASTIC SHEET PER MIL-P-18177, TYPE GEB
2. REMOVE BURRS AND SHARP EDGES
3. INTERPRET DRAWING IN ACCORDANCE WITH STANDARDS PRESCRIBED BY MIL-D-70327

MASTER

QTY REQD	PART OR IDENTIFYING NO.	NOMENCLATURE OR DESCRIPTION	FIND NO.

LIST OF MATERIALS

1003757	
1003756	
NEXT ASSY	USED ON
APPLICATION	

UNLESS OTHERWISE SPECIFIED DIMENSIONS ARE IN INCHES
TOLERANCES ON
FRACTIONS ± DECIMALS ±.005 .01 ANGLES ±5°
DO NOT SCALE THIS DRAWING
MATERIAL SEE NOTE 1
HEAT TREATMENT NONE
FINAL FINISH NONE

MIT INSTRUMENTATION LAB
CAMBRIDGE, MASS.
DWG. NO. CONTRACT
DRAWN B. Jensen DATE 12 AUG 64
CHECKED R. Edward 12 Aug 64
APPROVAL Sept 18/64
APPROVAL
NASA APPROVAL 9-22-64
MIT APPROVAL
MIT APPROVAL

MANNED SPACECRAFT CENTER
HOUSTON, TEXAS

BOARD, TERMINAL
AGC DSKY, NAV
100 SERIES

CODE IDENT NO. —— SIZE D NASA DRAWING NO. 1004755
SCALE 2/1 WT SHEET 1 OF 1

NOTICE — WHEN GOVERNMENT DRAWINGS, SPECIFICATIONS, OR OTHER DATA ARE USED FOR ANY PURPOSE OTHER THAN IN CONNECTION WITH A DEFINITELY RELATED GOVERNMENT PROCUREMENT OPERATION, THE UNITED STATES GOVERNMENT THEREBY INCURS NO RESPONSIBILITY NOR ANY OBLIGATION WHATSOEVER, AND THE FACT THAT THE GOVERNMENT MAY HAVE FORMULATED, FURNISHED, OR IN ANY WAY SUPPLIED THE SAID DRAWINGS, SPECIFICATIONS OR OTHER DATA IS NOT TO BE REGARDED BY IMPLICATION OR OTHERWISE AS IN ANY MANNER LICENSING THE HOLDER OR ANY OTHER PERSON OR CORPORATION, OR CONVEYING ANY RIGHTS OR PERMISSION TO MANUFACTURE, USE, OR SELL ANY PATENTED INVENTION THAT MAY IN ANY WAY BE RELATED THERETO.

1004755 B

REVISIONS 12765

SYM	DESCRIPTION	DATE	APPROVAL
A	REVISED PER TDRR16112 DR A.J. Biron CHK R.W.E.	2/18/65	
B	REVISED PER TDRR 16532 DR M.B. Ripley CHK S.S.Smith	3/3/65	

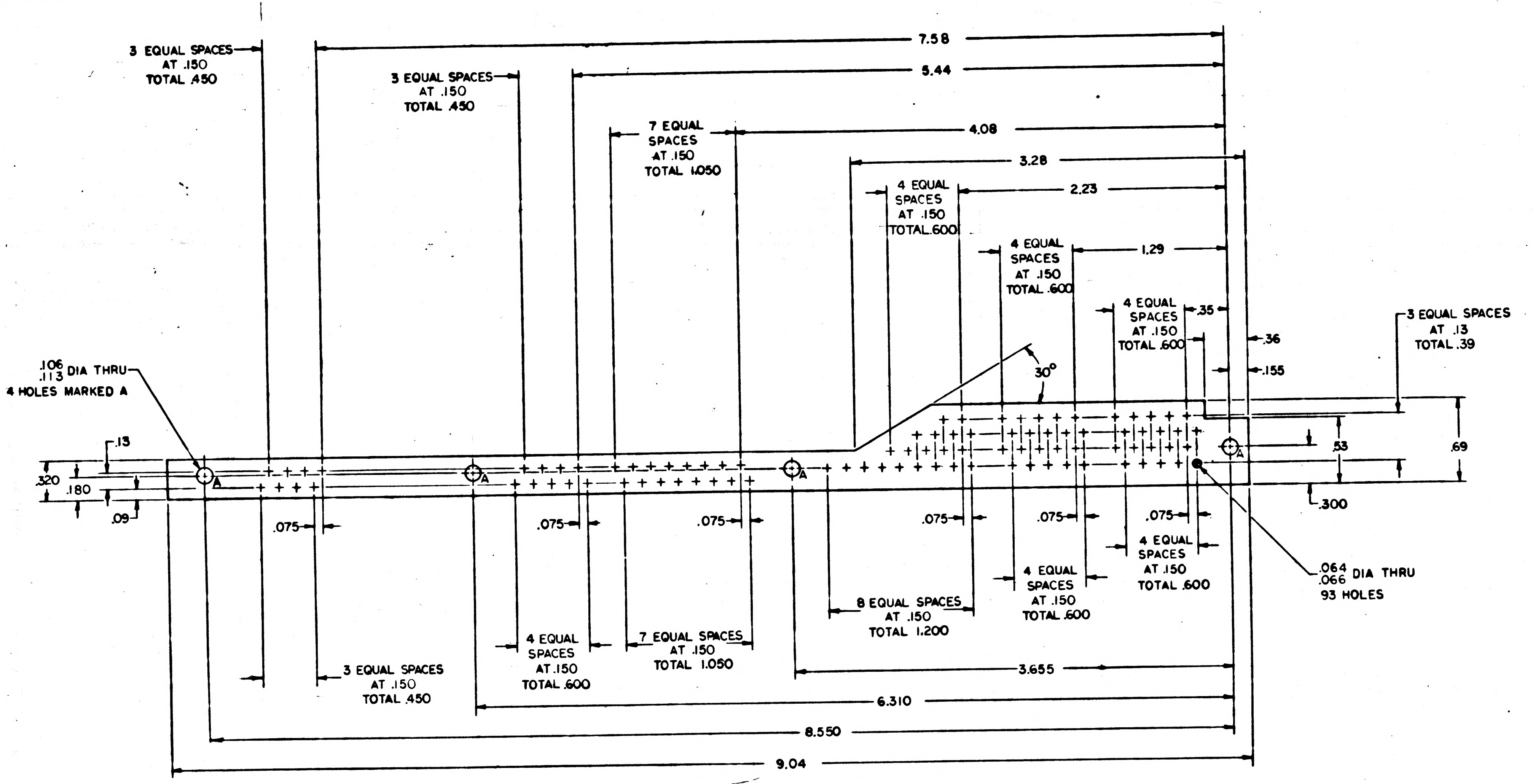

3 EQUAL SPACES AT .150 TOTAL .450
3 EQUAL SPACES AT .150 TOTAL .450
7.58
5.44
7 EQUAL SPACES AT .150 TOTAL 1.050
4.08
3.28
4 EQUAL SPACES AT .150 TOTAL .600
2.23
4 EQUAL SPACES AT .150 TOTAL .600
1.29
4 EQUAL SPACES AT .150 TOTAL .600
.35
.36
.155
3 EQUAL SPACES AT .13 TOTAL .39
30°
.106 .113 DIA THRU
4 HOLES MARKED A
A
A
A
A
.13
.320
.180
.09
.53
.69
.300
.075
.075
.075
.075
.075
.075
.064 .066 DIA THRU
93 HOLES
4 EQUAL SPACES AT .150 TOTAL .600
4 EQUAL SPACES AT .150 TOTAL .600
8 EQUAL SPACES AT .150 TOTAL 1.200
4 EQUAL SPACES AT .150 TOTAL .600
7 EQUAL SPACES AT .150 TOTAL 1.050
3 EQUAL SPACES AT .150 TOTAL .450
3.655
6.310
8.550
9.04

NOTES
1. MATL: .094 THK PLASTIC SHEET PER MIL-P-18177, TYPE GEB
2. REMOVE BURRS AND SHARP EDGES
3. INTERPRET DRAWING IN ACCORDANCE WITH STANDARDS PRESCRIBED BY MIL-D-70327

MASTER

QTY REQD	PART OR IDENTIFYING NO.	NOMENCLATURE OR DESCRIPTION	FIND NO.

LIST OF MATERIALS

NEXT ASSY	USED ON
1003757	
1003756	

APPLICATION

UNLESS OTHERWISE SPECIFIED
DIMENSIONS ARE IN INCHES
TOLERANCES ON
FRACTIONS ± DECIMALS ±.005 .01 ANGLES ±5°
DO NOT SCALE THIS DRAWING

MATERIAL
SEE NOTE 1

HEAT TREATMENT
NONE

FINAL FINISH
NONE

MIT
INSTRUMENTATION LAB
CAMBRIDGE, MASS
DWG. NO. CONTRACT

DRAWN B. Jensen DATE 12 AUG 64
CHECKED R. Edward 12 Aug 64
APPROVAL K. Jensen Sept 15 '64
APPROVAL
NASA APPROVAL W. J. Rhine 9-22-64
MIT APPROVAL
MIT APPROVAL

MANNED SPACECRAFT CENTER
HOUSTON, TEXAS

BOARD, TERMINAL
AGC DSKY, NAV
100 SERIES

CODE IDENT NO. ——
SIZE D
NASA DRAWING NO. 1004755
SCALE 2/1 WT SHEET 1 OF 1

NOTICE — WHEN GOVERNMENT DRAWINGS, SPECIFICATIONS, OR OTHER DATA ARE USED FOR ANY PURPOSE OTHER THAN IN CONNECTION WITH A DEFINITELY RELATED GOVERNMENT PROCUREMENT OPERATION, THE UNITED STATES GOVERNMENT THEREBY INCURS NO RESPONSIBILITY NOR ANY OBLIGATION WHATSOEVER; AND THE FACT THAT THE GOVERNMENT MAY HAVE FORMULATED, FURNISHED, OR IN ANY WAY SUPPLIED THE SAID DRAWINGS, SPECIFICATIONS OR OTHER DATA IS NOT TO BE REGARDED BY IMPLICATION OR OTHERWISE AS IN ANY MANNER LICENSING THE HOLDER OR ANY OTHER PERSON OR CORPORATION, OR CONVEYING ANY RIGHTS OR PERMISSION TO MANUFACTURE, USE, OR SELL ANY PATENTED INVENTION THAT MAY IN ANY WAY BE RELATED THERETO.

– 1004755

REVISIONS 12765			
SYM	DESCRIPTION	DATE	APPROVAL

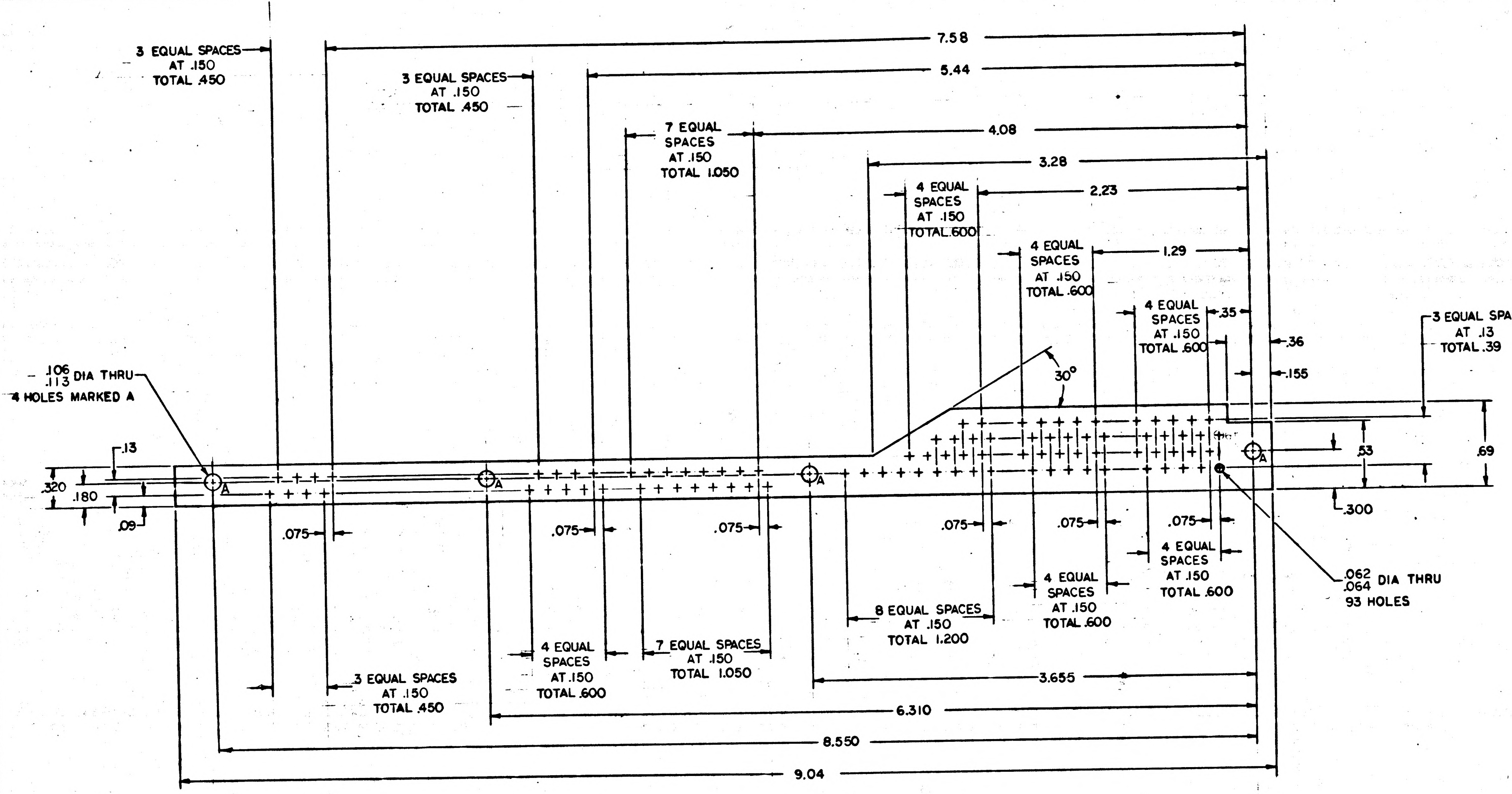
3 EQUAL SPACES AT .150 TOTAL .450
3 EQUAL SPACES AT .150 TOTAL .450
7.58
5.44
7 EQUAL SPACES AT .150 TOTAL 1.050
4.08
3.28
4 EQUAL SPACES AT .150 TOTAL .600
2.23
4 EQUAL SPACES AT .150 TOTAL .600
1.29
4 EQUAL SPACES AT .150 TOTAL .600
.35
.36
.155
3 EQUAL SPACES AT .13 TOTAL .39
30°
.106 .113 DIA THRU
4 HOLES MARKED A
.13
.320
.180
.09
A
A
A
A
.53
.69
.300
.075
.075
.075
.075
.075
.075
.062 .064 DIA THRU
93 HOLES
4 EQUAL SPACES AT .150 TOTAL .600
4 EQUAL SPACES AT .150 TOTAL .600
8 EQUAL SPACES AT .150 TOTAL 1.200
7 EQUAL SPACES AT .150 TOTAL 1.050
4 EQUAL SPACES AT .150 TOTAL .600
3 EQUAL SPACES AT .150 TOTAL .450
3.655
6.310
8.550
9.04

NOTES
1. MATL: .094 THK PLASTIC SHEET PER MIL-P-18177, TYPE GEE
2. REMOVE BURRS AND SHARP EDGES
3. INTERPRET DRAWING IN ACCORDANCE WITH STANDARDS PRESCRIBED BY MIL-D-70327

MASTER

QTY REQD	PART OR IDENTIFYING NO.	NOMENCLATURE OR DESCRIPTION	FIND NO.

LIST OF MATERIALS

1003757	
1003756	
NEXT ASSY	USED ON
APPLICATION	

UNLESS OTHERWISE SPECIFIED
DIMENSIONS ARE IN INCHES
TOLERANCES ON
FRACTIONS ±
DECIMALS ±.005 .01
ANGLES ±5°
DO NOT SCALE THIS DRAWING

MATERIAL
SEE NOTE 1

HEAT TREATMENT
NONE

FINAL FINISH
NONE

MIT
INSTRUMENTATION LAB
CAMBRIDGE, MASS.
DWG. NO. CONTRACT

DRAWN B. Jensen DATE 12 AUG 64
CHECKED R. Edward 12 Sept 64
APPROVAL K. Jensen Sept 18/64
APPROVAL E. Hall 21 Sept 64
NASA APPROVAL W. J. Rhine 9-22-64
MIT APPROVAL
MIT APPROVAL 22 Sept 64

MANNED SPACECRAFT CENTER
HOUSTON, TEXAS

BOARD, TERMINAL
AGC DSKY, NAV
100 SERIES

CODE IDENT NO. ——
SIZE D
NASA DRAWING NO. 1004755
SCALE 2/1
WT
SHEET 1 OF 1

1004755

NOTICE — WHEN GOVERNMENT DRAWINGS, SPECIFICATIONS, OR OTHER DATA ARE USED FOR ANY PURPOSE OTHER THAN IN CONNECTION WITH A DEFINITELY RELATED GOVERNMENT PROCUREMENT OPERATION, THE UNITED STATES GOVERNMENT THEREBY INCURS NO RESPONSIBILITY NOR ANY OBLIGATION WHATSOEVER; AND THE FACT THAT THE GOVERNMENT MAY HAVE FORMULATED, FURNISHED, OR IN ANY WAY SUPPLIED THE SAID DRAWINGS, SPECIFICATIONS OR OTHER DATA IS NOT TO BE REGARDED BY IMPLICATION OR OTHERWISE AS IN ANY MANNER LICENSING THE HOLDER OR ANY OTHER PERSON OR CORPORATION, OR CONVEYING ANY RIGHTS OR PERMISSION TO MANUFACTURE, USE, OR SELL ANY PATENTED INVENTION THAT MAY IN ANY WAY BE RELATED THERETO.

— 1004756

REVISIONS 12765			
SYM	DESCRIPTION	DATE	APPROVAL

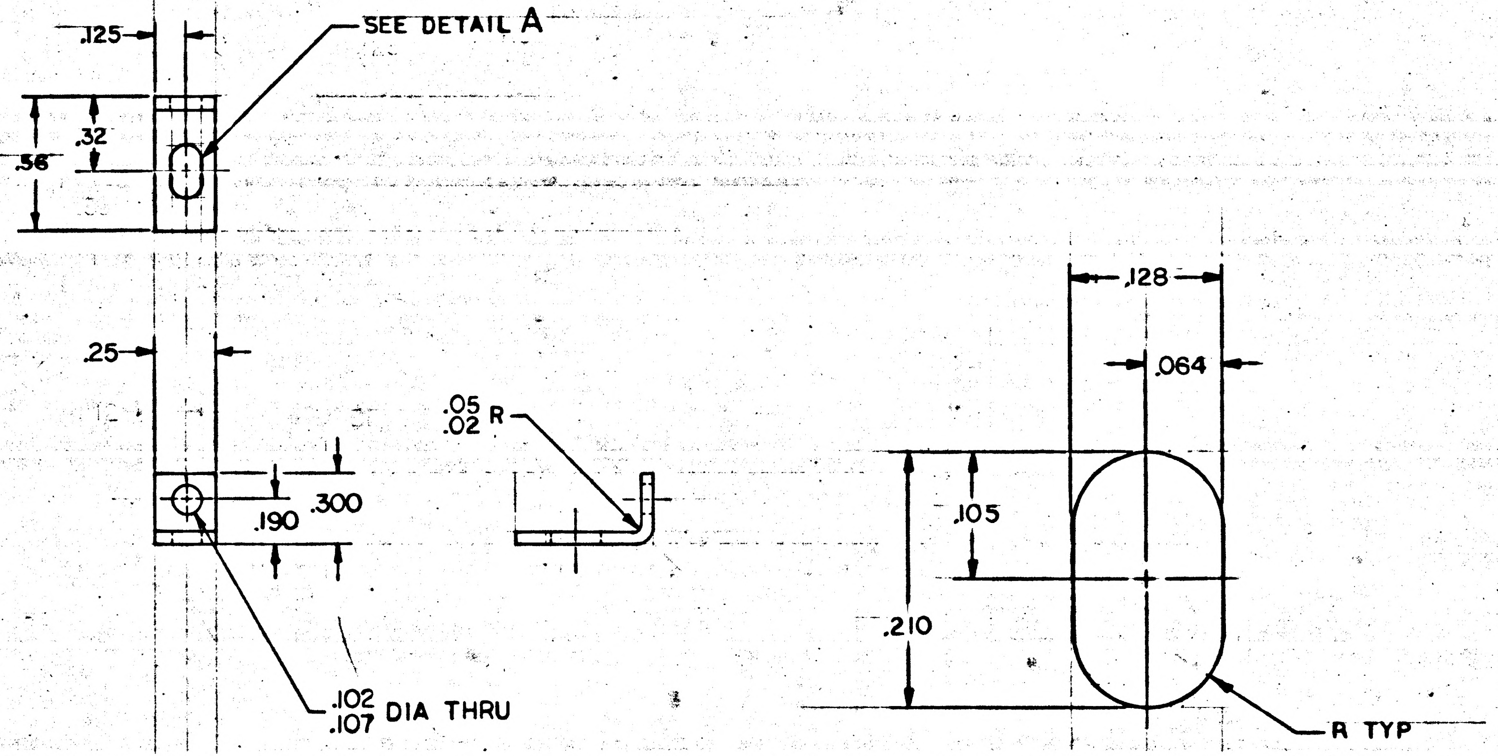

DETAIL A
SCALE 10/1

NOTES
1. MATL: .050 THK 5052-H32 AL PER QQ-A-318, TEMP H32
2. REMOVE BURRS & SHARP EDGES
3. ANODIZE PER MIL-A-8625 TYPE I (CHROMIC ACID) DYED BLACK
4. INTERPRET DRAWING IN ACCORDANCE WITH STANDARDS PRESCRIBED BY MIL-D-70327

MASTER

QTY REQD	PART OR IDENTIFYING NO.	NOMENCLATURE OR DESCRIPTION	FIND NO.

LIST OF MATERIALS

1003758	
NEXT ASSY	USED ON
APPLICATION	

UNLESS OTHERWISE SPECIFIED
DIMENSIONS ARE IN INCHES
TOLERANCES ON
FRACTIONS ± DECIMALS ±.005 .01 ANGLES ±
DO NOT SCALE THIS DRAWING

MATERIAL SEE NOTE 1
HEAT TREATMENT NONE
FINAL FINISH SEE NOTE 3

MIT
INSTRUMENTATION LAB
CAMBRIDGE, MASS.
DWG. NO. CONTRACT

DRAWN B Jensen DATE 13AUG64
CHECKED R. Edward 11 Sept 64
APPROVAL K Jensen Sept 15 64
APPROVAL Eldon C Hall 21 Sept 64
NASA APPROVAL W J Rhine 9-22-64
MIT APPROVAL
MIT APPROVAL

MANNED SPACECRAFT CENTER
HOUSTON, TEXAS

BRACKET
AGC DSKY, NAV
100 SERIES

CODE IDENT NO.	SIZE	NASA DRAWING NO.
—	C	1004756
SCALE 2/1	WT	SHEET 1 OF 1

INCHES
0 1 2
PHOTOGRAPHIC SCALE

NOTICE — WHEN GOVERNMENT DRAWINGS, SPECIFICATIONS, OR OTHER DATA ARE USED FOR ANY PURPOSE OTHER THAN IN CONNECTION WITH A DEFINITELY RELATED GOVERNMENT PROCUREMENT OPERATION, THE UNITED STATES GOVERNMENT THEREBY INCURS NO RESPONSIBILITY NOR ANY OBLIGATION WHATSOEVER; AND THE FACT THAT THE GOVERNMENT MAY HAVE FORMULATED, FURNISHED, OR IN ANY WAY SUPPLIED THE SAID DRAWINGS, SPECIFICATIONS OR OTHER DATA IS NOT TO BE REGARDED BY IMPLICATION OR OTHERWISE AS IN ANY MANNER LICENSING THE HOLDER OR ANY OTHER PERSON OR CORPORATION, OR CONVEYING ANY RIGHTS OR PERMISSION TO MANUFACTURE, USE, OR SELL ANY PATENTED INVENTION THAT MAY IN ANY WAY BE RELATED THERETO.

—	1004757

REVISIONS 12765			
SYM	DESCRIPTION	DATE	APPROVAL

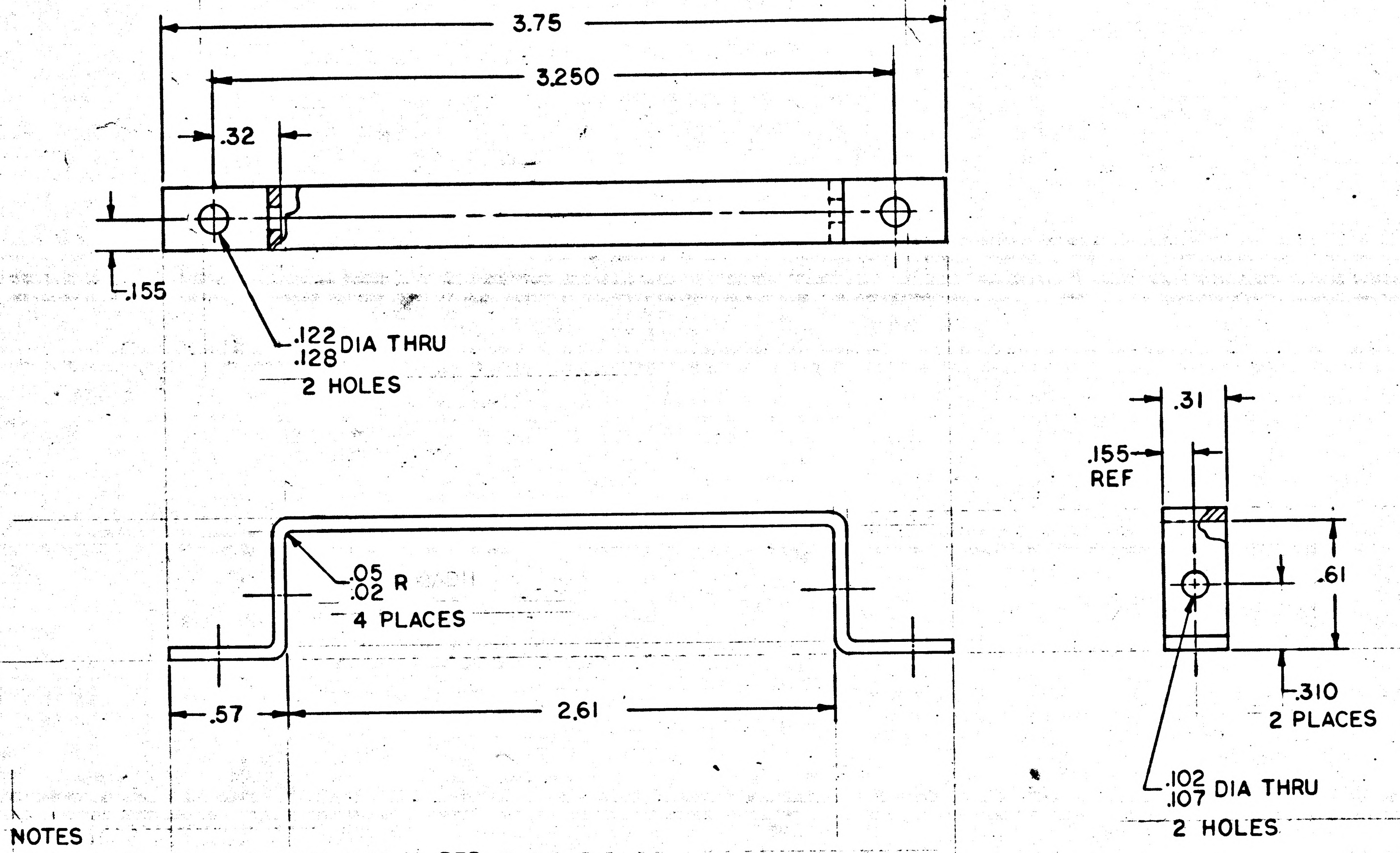

NOTES
1. MATL: .063 THK 5052-H32 AL PER PER QQ-A-318, TEMP H32
2. REMOVE BURRS & SHARP EDGES
3. ANODIZE PER MIL-A-8625 TYPE I (CHROMIC ACID) DYED BLACK
4. INTERPRET DRAWING IN ACCORDANCE WITH STANDARDS PRESCRIBED BY MIL-D-70327

MASTER

QTY REQD	PART OR IDENTIFYING NO.	NOMENCLATURE OR DESCRIPTION	FIND NO.

LIST OF MATERIALS

1003758	
NEXT ASSY	USED ON
APPLICATION	

UNLESS OTHERWISE SPECIFIED
DIMENSIONS ARE IN INCHES
TOLERANCES ON
FRACTIONS ± DECIMALS ±.005 .01 ANGLES ±
DO NOT SCALE THIS DRAWING
MATERIAL SEE NOTE 1
HEAT TREATMENT NONE
FINAL FINISH SEE NOTE 3

MIT
INSTRUMENTATION LAB
CAMBRIDGE, MASS.
DWG. NO. CONTRACT
DRAWN B Jensen DATE 13AUG64
CHECKED R. Edwards 11 Sept 64
APPROVAL K Jensen. Sept 15/64
APPROVAL Eldon C Hall 21 Sept 64
NASA APPROVAL W J [illegible] 9-22-64
MIT APPROVAL
MIT APPROVAL [illegible] 22/9/64

MANNED SPACECRAFT CENTER
HOUSTON, TEXAS

BRACKET, CABLE
AGC DSKY, NAV
100 SERIES

CODE IDENT NO. —
SIZE C
NASA DRAWING NO. 1004757
SCALE 2/1
WT
SHEET 1 OF 1

1004757

INCHES
0 1 2
PHOTOGRAPHIC SCALE ONLY

NOTICE — WHEN GOVERNMENT DRAWINGS, SPECIFICATIONS, OR OTHER DATA ARE USED FOR ANY PURPOSE OTHER THAN IN CONNECTION WITH A DEFINITELY RELATED GOVERNMENT PROCUREMENT OPERATION, THE UNITED STATES GOVERNMENT THEREBY INCURS NO RESPONSIBILITY NOR ANY OBLIGATION WHATSOEVER; AND THE FACT THAT THE GOVERNMENT MAY HAVE FORMULATED, FURNISHED, OR IN ANY WAY SUPPLIED THE SAID DRAWINGS, SPECIFICATIONS OR OTHER DATA IS NOT TO BE REGARDED BY IMPLICATION OR OTHERWISE AS IN ANY MANNER LICENSING THE HOLDER OR ANY OTHER PERSON OR CORPORATION, OR CONVEYING ANY RIGHTS OR PERMISSION TO MANUFACTURE, USE, OR SELL ANY PATENTED INVENTION THAT MAY IN ANY WAY BE RELATED THERETO.

— 1004758

REVISIONS 12765			
SYM	DESCRIPTION	DATE	APPROVAL

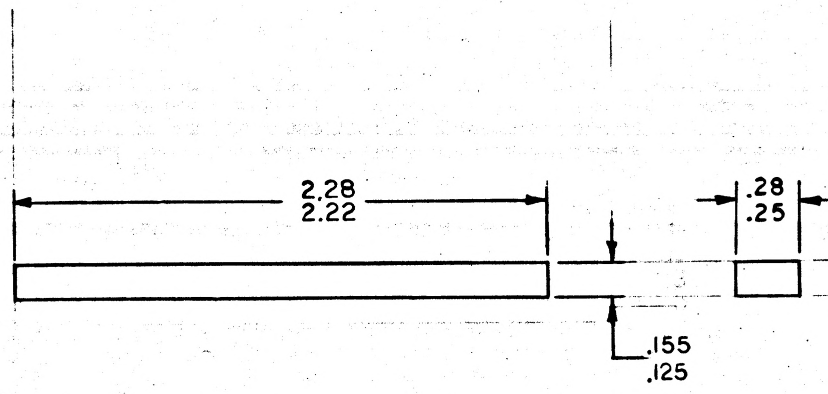

NOTES
1. MATL: SILICONE RUBBER PER MIL-R-5847 CLASS IIb, GRADE 40
2. INTERPRET DRAWING IN ACCORDANCE WITH STANDARDS PRESCRIBED BY MIL-D-70327

MASTER

QTY REQD	PART OR IDENTIFYING NO.	NOMENCLATURE OR DESCRIPTION	FIND NO.

LIST OF MATERIALS

1003758	
NEXT ASSY	USED ON
APPLICATION	

UNLESS OTHERWISE SPECIFIED
DIMENSIONS ARE IN INCHES
TOLERANCES ON
FRACTIONS ± DECIMALS ± ANGLES ±
DO NOT SCALE THIS DRAWING
MATERIAL SEE NOTE 1
HEAT TREATMENT NONE
FINAL FINISH NONE

MIT
INSTRUMENTATION LAB
CAMBRIDGE, MASS.
DWG. NO. CONTRACT

DRAWN B Jensen DATE 13AUG64
CHECKED R. Edwards [illegible] 64
APPROVAL K Jensen Sept 15/64.
APPROVAL Eldon C Hall 21 Sept 64
NASA APPROVAL W J Rhine 9-22-64
MIT APPROVAL
MIT APPROVAL [illegible] 22 Sep 64

MANNED SPACECRAFT CENTER
HOUSTON, TEXAS

CUSHION, CABLE
AGC DSKY, NAV
100 SERIES

CODE IDENT NO. ——
SIZE C
NASA DRAWING NO. 1004758
SCALE 2/1
WT
SHEET 1 OF 1

INCHES
0 1 2
PHOTOGRAPHIC SCALE ONLY

NOTICE — WHEN GOVERNMENT DRAWINGS, SPECIFICATIONS, OR OTHER DATA ARE USED FOR ANY PURPOSE OTHER THAN IN CONNECTION WITH A DEFINITELY RELATED GOVERNMENT PROCUREMENT OPERATION, THE UNITED STATES GOVERNMENT THEREBY INCURS NO RESPONSIBILITY NOR ANY OBLIGATION WHATSOEVER; AND THE FACT THAT THE GOVERNMENT MAY HAVE FORMULATED, FURNISHED, OR IN ANY WAY SUPPLIED THE SAID DRAWINGS, SPECIFICATIONS, OR OTHER DATA IS NOT TO BE REGARDED BY IMPLICATION OR OTHERWISE AS IN ANY MANNER LICENSING THE HOLDER OR ANY OTHER PERSON OR CORPORATION, OR CONVEYING ANY RIGHTS OR PERMISSION TO MANUFACTURE, USE, OR SELL ANY PATENTED INVENTION THAT MAY IN ANY WAY BE RELATED THERETO.

1004759 A

REVISIONS 13222			
SYM	DESCRIPTION	DATE	APPROVAL
A	REVISED PER TDRR 13669 DR G. Sypka CHK	11/14/64	

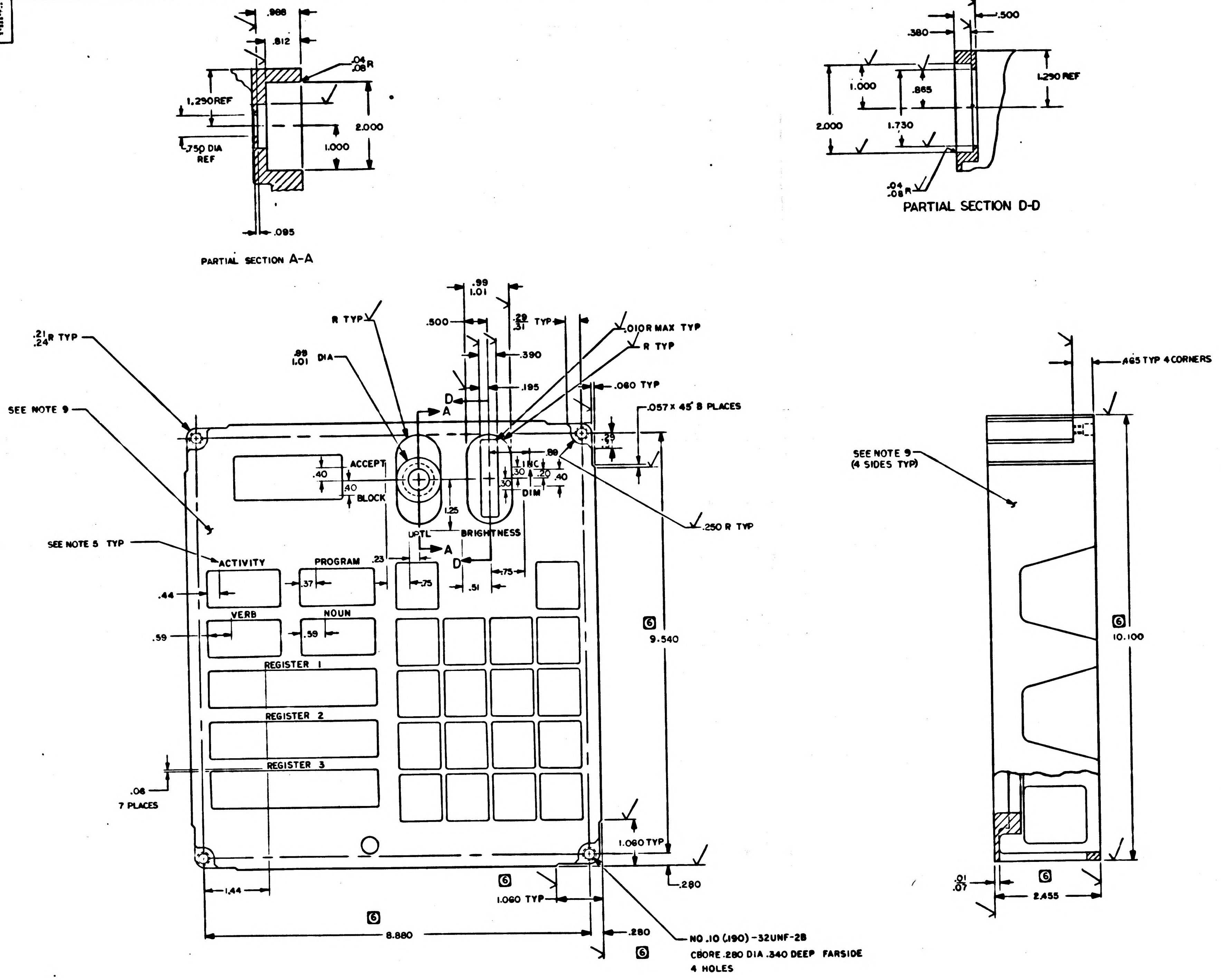

.988
.812
.04 .08 R
1.290 REF
.750 DIA REF
2.000
1.000
.095
PARTIAL SECTION A-A
.500
.380
1.000
.865
1.290 REF
2.000
1.730
.04 .08 R
PARTIAL SECTION D-D
.99 1.01
R TYP
.500
.29 .31 TYP
.010 R MAX TYP
R TYP
.21 .24 R TYP
.99 1.01 DIA
.390
.195
.060 TYP
.057 X 45° 8 PLACES
SEE NOTE 9
D
A
ACCEPT
.40
.40
BLOCK
INC
.30
.30
.20
.40
DIM
.89
.29
1.25
UPTL
BRIGHTNESS
.250 R TYP
SEE NOTE 5 TYP
ACTIVITY
PROGRAM
.23
.75
.75
.51
.44
.37
VERB
NOUN
.59
.59
REGISTER 1
REGISTER 2
REGISTER 3
.06
7 PLACES
6
9.540
1.060 TYP
.280
1.060 TYP
1.44
8.880
.280
NO. 10 (.190) -32UNF-2B
CBORE .280 DIA .340 DEEP FARSIDE
4 HOLES
.465 TYP 4 CORNERS
SEE NOTE 9 (4 SIDES TYP)
10.100
.01 .07
2.455

NOTES

1. MAKE FROM DWG 1004586
2. SURFACE MARKED √ TO BE 125√
3. REMOVE ALL BURRS AND SHARP EDGES
4. ANODIZE PER MIL-A-8625, TYPE I CHROMIC-ACID DYED BLACK
5. SILK SCREEN .12 HIGH WHITE PER ND1002019 AND ND1002122, TYPE CLASS AS SHOWN MARKING APPROXIMATELY WHERE SHOWN
6. ⑥ DIMENSIONS ARE CONTROLLED BY ICDMH01-01005-116
7. INTERPRET DRAWING IN ACCORDANCE WITH STANDARDS PRESCRIBED BY MIL-D-70327
8. ⑥ NOTES CONTROLLED BY ICD-MH01-01046-416
9. PAINT INDICATED SURFACES WITH 1010729-1 MEDIUM GREY EPOXY RESIN ENAMEL PER ND1002110
10. IDENTIFY PER ND1002019
11. BOND FIND NO.S 4, 6 & 7 TO FIND NO. 3 PER ND1002150

FOR LIST OF MATERIALS SEE SHEET 2

QTY REQD	PART OR IDENTIFYING NO.	NOMENCLATURE OR DESCRIPTION	FIND NO.

LIST OF MATERIALS

1003707	
NEXT ASSY	USED ON
APPLICATION	

UNLESS OTHERWISE SPECIFIED DIMENSIONS ARE IN INCHES
TOLERANCES ON
FRACTIONS ± DECIMALS ±.005 ANGLES ± 2°
DO NOT SCALE THIS DRAWING
MATERIAL SEE NOTE 1
HEAT TREATMENT NONE
FINAL FINISH SEE NOTE 4

MIT INSTRUMENTATION LAB
CAMBRIDGE, MASS.
DWG NO CONTRACT
DRAWN P. Boudreau DATE 17 Aug 64
CHECKED 10 Sept 64
APPROVAL 9/22/64
APPROVAL 6 Oct 64
NASA APPROVAL 10-6-64
MIT APPROVAL
MIT APPROVAL

MANNED SPACECRAFT CENTER
HOUSTON, TEXAS

HOUSING, FRONT PANEL
AGC DSKY MAIN (100 SERIE

CODE IDENT NO. ——
SIZE E
NASA DRAWING NO. 1004759
SCALE 1/1 WT SHEET 1 OF 2

NOTICE — WHEN GOVERNMENT DRAWINGS, SPECIFICATIONS, OR OTHER DATA ARE USED FOR ANY PURPOSE OTHER THAN IN CONNECTION WITH A DEFINITELY RELATED GOVERNMENT PROCUREMENT OPERATION, THE UNITED STATES GOVERNMENT THEREBY INCURS NO RESPONSIBILITY NOR ANY OBLIGATION WHATSOEVER; AND THE FACT THAT THE GOVERNMENT MAY HAVE FORMULATED, FURNISHED, OR IN ANY WAY SUPPLIED THE SAID DRAWINGS, SPECIFICATIONS, OR OTHER DATA IS NOT TO BE REGARDED BY IMPLICATION OR OTHERWISE AS IN ANY MANNER LICENSING THE HOLDER OR ANY OTHER PERSON OR CORPORATION, OR CONVEYING ANY RIGHTS OR PERMISSION TO MANUFACTURE, USE, OR SELL ANY PATENTED INVENTION THAT MAY IN ANY WAY BE RELATED THERETO.

REVISIONS

SYM	DESCRIPTION	DATE	APPROVAL
A	REVISED PER TDRR 13669 DR CHK GTM	11/9/64	

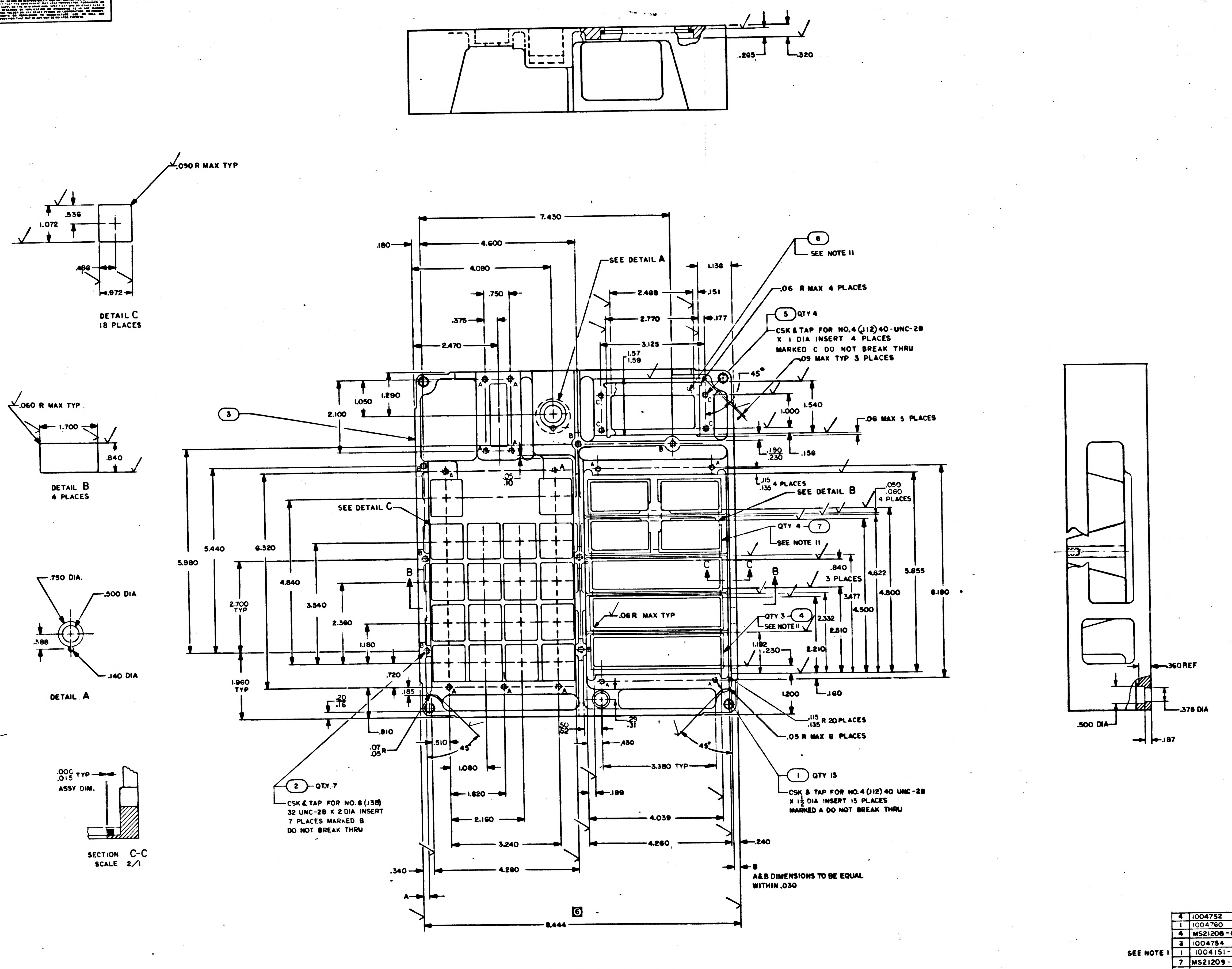

.265
.320
.090 R MAX TYP
.536
1.072
.486
.972
DETAIL C
18 PLACES
.060 R MAX TYP
1.700
.840
DETAIL B
4 PLACES
.750 DIA.
.500 DIA
.388
.140 DIA
DETAIL A
7.430
4.600
4.090
.180
.750
.375
2.470
SEE DETAIL A
1.136
2.498
.151
2.770
.177
3.125
1.57
1.59
6 SEE NOTE 11
.06 R MAX 4 PLACES
5 QTY 4
CSK & TAP FOR NO. 4 (.112) 40-UNC-2B X 1 DIA INSERT 4 PLACES MARKED C DO NOT BREAK THRU
.09 MAX TYP 3 PLACES
45°
1.540
1.000
.06 MAX 5 PLACES
1.050
1.290
2.100
3
.190
.230
.156
.05
.10
.115
.135 4 PLACES
SEE DETAIL B
.050
.060
4 PLACES
SEE DETAIL C
QTY 4 7
SEE NOTE 11
5.980
5.440
6.320
4.840
3.540
2.360
1.180
2.700 TYP
B
C
.840
3 PLACES
4.622
5.855
6.180
4.800
3.477
4.500
.06 R MAX TYP
QTY 3 4
SEE NOTE 11
2.332
2.510
1.192
.230
2.210
.720
1.960 TYP
.185
.20
.16
.910
.07
.05 R
.510
45°
1.200
.160
.25
.31
.50
.62
.430
.115
.135 R 20 PLACES
.05 R MAX 6 PLACES
45°
1 QTY 13
CSK & TAP FOR NO. 4 (.112) 40 UNC-2B X 1 1/2 DIA INSERT 13 PLACES MARKED A DO NOT BREAK THRU
1.080
3.380 TYP
2 QTY 7
CSK & TAP FOR NO. 6 (.138) 32 UNC-2B X 2 DIA INSERT 7 PLACES MARKED B DO NOT BREAK THRU
1.620
.199
2.190
4.039
3.240
4.260
.240
.340
4.280
B
A&B DIMENSIONS TO BE EQUAL WITHIN .030
A
6
9.444
.000
.015 TYP
ASSY DIM.
SECTION C-C
SCALE 2/1
.360 REF
.375 DIA
.500 DIA
.187

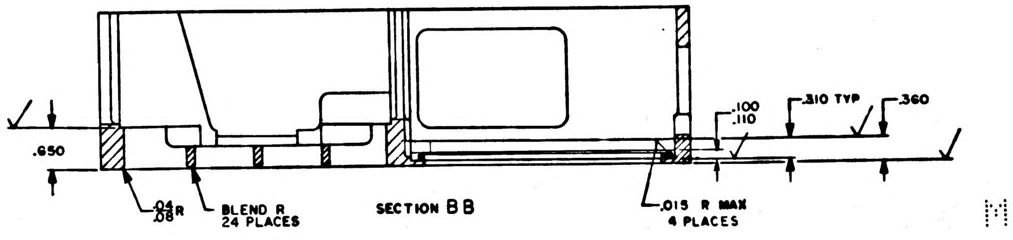

.650
.100
.110
.310 TYP
.360
.04
.08 R
BLEND R
24 PLACES
SECTION B B
.015 R MAX
4 PLACES

SEE NOTE 1

QTY REQD	PART OR IDENTIFYING NO.	NOMENCLATURE OR DESCRIPTION	FIND NO
4	1004752	CUSHION	
1	1004760	GASKET	6
4	MS21208-C0410	INSERT, SCREW THREAD	5
3	1004754	CUSHION, REGISTER	4
1	1004151-1	HOUSING, FRONT PANEL	3
7	MS21209-C0620	INSERT, SCREW THREAD	2
13	MS21209-C0415	INSERT, SCREW THREAD	1

LIST OF MATERIALS

MASTER

NEXT ASSY	USED ON
1003707	

APPLICATION

UNLESS OTHERWISE SPECIFIED DIMENSIONS ARE IN INCHES
TOLERANCES ON
FRACTIONS ± DECIMALS ±.005 ANGLES ± 2°
DO NOT SCALE THIS DRAWING
MATERIAL
HEAT TREATMENT
FINAL FINISH

MIT
INSTRUMENTATION LAB
CAMBRIDGE, MASS.
DWG NO. CONTRACT
DRAWN R Buchanan DATE
CHECKED 10 Sept 64
APPROVAL 9/22/64
APPROVAL 6 Oct 64
NASA APPROVAL 10-6-64
MIT APPROVAL
MIT APPROVAL

MANNED SPACECRAFT CENTER
HOUSTON, TEXAS

HOUSING, FRONT PANEL
AGC DSKY MAIN 100 SERIES

CODE IDENT NO. —— SIZE E NASA DRAWING NO. 1004759
SCALE 1/1 WT SHEET 2 OF 2

SYM	DESCRIPTION	DATE	APPROVAL
A	REVISED PER TDRR 13669 DR S. Lake CHK	11/4/64	
B	REVISED PER TDRR 16474 DR D.A. Clement CHK	3/3/65	

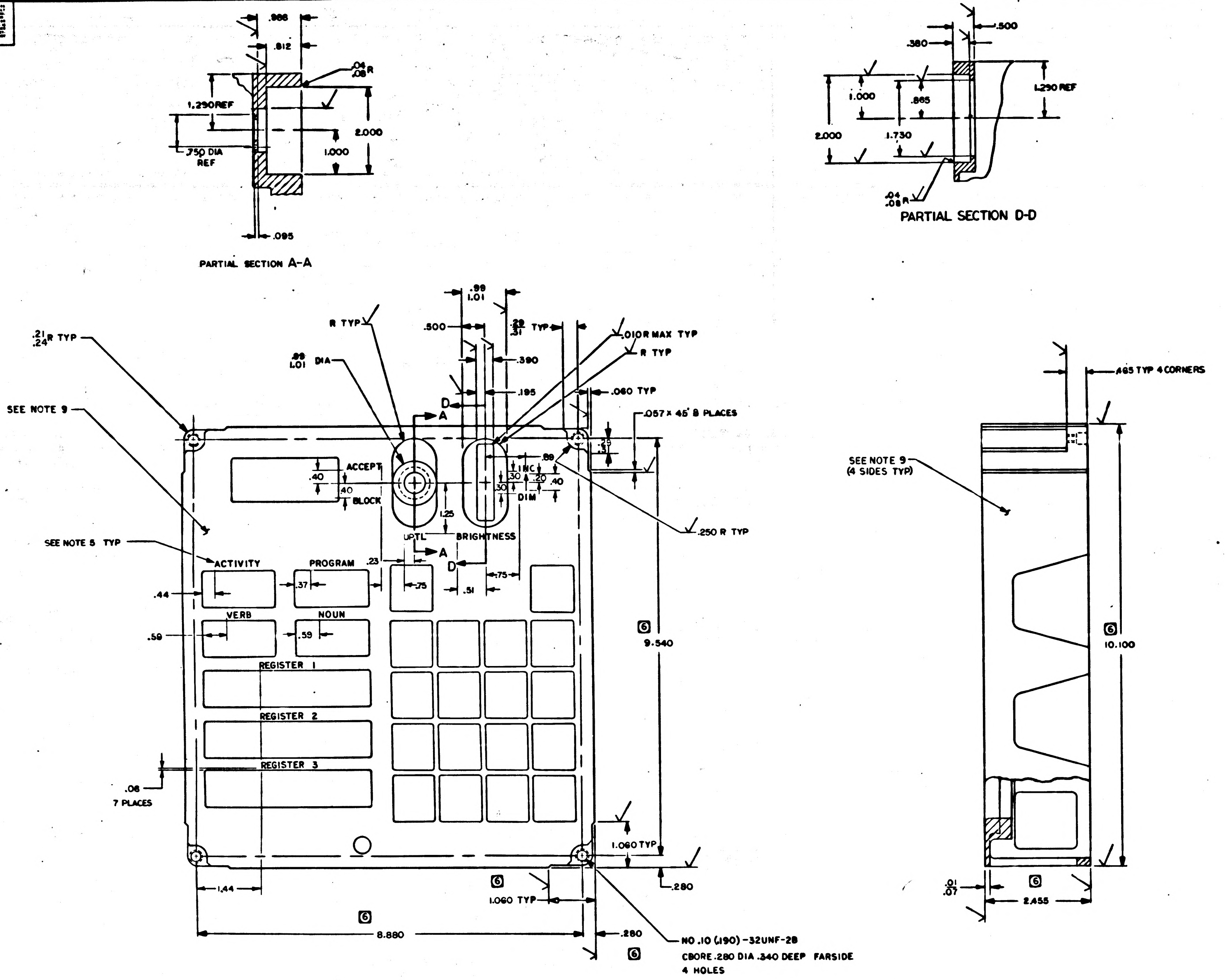

PARTIAL SECTION A-A
PARTIAL SECTION D-D
ACCEPT
BLOCK
UPTL
BRIGHTNESS
INC
DIM
ACTIVITY
PROGRAM
VERB
NOUN
REGISTER 1
REGISTER 2
REGISTER 3
SEE NOTE 9
SEE NOTE 5 TYP
SEE NOTE 9 (4 SIDES TYP)
.165 TYP 4 CORNERS
.057 x 45° 8 PLACES
.010 R MAX TYP
R TYP
.250 R TYP
.060 TYP
1.060 TYP
9.540
8.880
10.100
2.455
NO .10 (.190)-32UNF-2B CBORE .280 DIA .340 DEEP FARSIDE 4 HOLES
.08 7 PLACES

NOTES

1. MAKE FROM DWG 1004586
2. SURFACE MARKED √ TO BE 125√
3. REMOVE ALL BURRS AND SHARP EDGES
4. ANODIZE PER MIL-A-8625, TYPE I CHROMIC-ACID DYED BLACK
5. SILK SCREEN .115/.135 HIGH WHITE PER ND1002019 AND ND1002122, TYPE I, CLASS I AS SHOWN MARKING APPROXIMATELY WHERE SHOWN
6. ⑥ DIMENSIONS ARE CONTROLLED BY ICDMH01-01005-116
7. INTERPRET DRAWING IN ACCORDANCE WITH STANDARDS PRESCRIBED BY MIL-D-70327
8. ⑧ NOTES CONTROLLED BY ICD-MH01-01046-416
9. PAINT INDICATED SURFACES WITH 1010729-1 MEDIUM GREY EPOXY RESIN ENAMEL PER ND1002110
10. IDENTIFY PER ND1002019
11. BOND FIND NO.S 4, 6 & 7 TO FIND NO. 3 PER MIL-A-5092 TYPE II

MASTER

FOR LIST OF MATERIALS SEE SHEET 2

QTY REQD	PART OR IDENTIFYING NO.	NOMENCLATURE OR DESCRIPTION	FIND NO

LIST OF MATERIALS

NEXT ASSY	USED ON
1003707	

APPLICATION

UNLESS OTHERWISE SPECIFIED DIMENSIONS ARE IN INCHES
TOLERANCES ON FRACTIONS ± DECIMALS ±.005 ANGLES ± 2°
DO NOT SCALE THIS DRAWING
MATERIAL SEE NOTE 1
HEAT TREATMENT NONE
FINAL FINISH SEE NOTE 4

MIT INSTRUMENTATION LAB CAMBRIDGE MASS
DRAWN P. Boudreau DATE
CHECKED
APPROVAL 9/22/64
APPROVAL
NASA APPROVAL
MIT APPROVAL
MIT APPROVAL

MANNED SPACECRAFT CENTER
HOUSTON, TEXAS

HOUSING, FRONT PANEL
AGC DSKY MAIN (100 S

CODE IDENT NO. —
SIZE E
NASA DRAWING NO. 1004759
SCALE 1/1 WT SHEET 1 OF 2

NOTICE — WHEN GOVERNMENT DRAWINGS, SPECIFICATIONS, OR OTHER DATA ARE USED FOR ANY PURPOSE OTHER THAN IN CONNECTION WITH A DEFINITELY RELATED GOVERNMENT PROCUREMENT OPERATION, THE UNITED STATES GOVERNMENT THEREBY INCURS NO RESPONSIBILITY NOR ANY OBLIGATION WHATSOEVER; AND THE FACT THAT THE GOVERNMENT MAY HAVE FORMULATED, FURNISHED, OR IN ANY WAY SUPPLIED THE SAID DRAWINGS, SPECIFICATIONS, OR OTHER DATA IS NOT TO BE REGARDED BY IMPLICATION OR OTHERWISE AS IN ANY MANNER LICENSING THE HOLDER OR ANY OTHER PERSON OR CORPORATION, OR CONVEYING ANY RIGHTS OR PERMISSION TO MANUFACTURE, USE, OR SELL ANY PATENTED INVENTION THAT MAY IN ANY WAY BE RELATED THERETO.

REVISIONS			
SYM	DESCRIPTION	DATE	APPROVAL
A	REVISED PER TDRR 1[illegible] DR [illegible] CHK [illegible]	11/9/64	[illegible]
B	REVISED PER TDR[illegible] [illegible]474 DR D.G. Clement CHK [illegible]	[illegible]	[illegible]

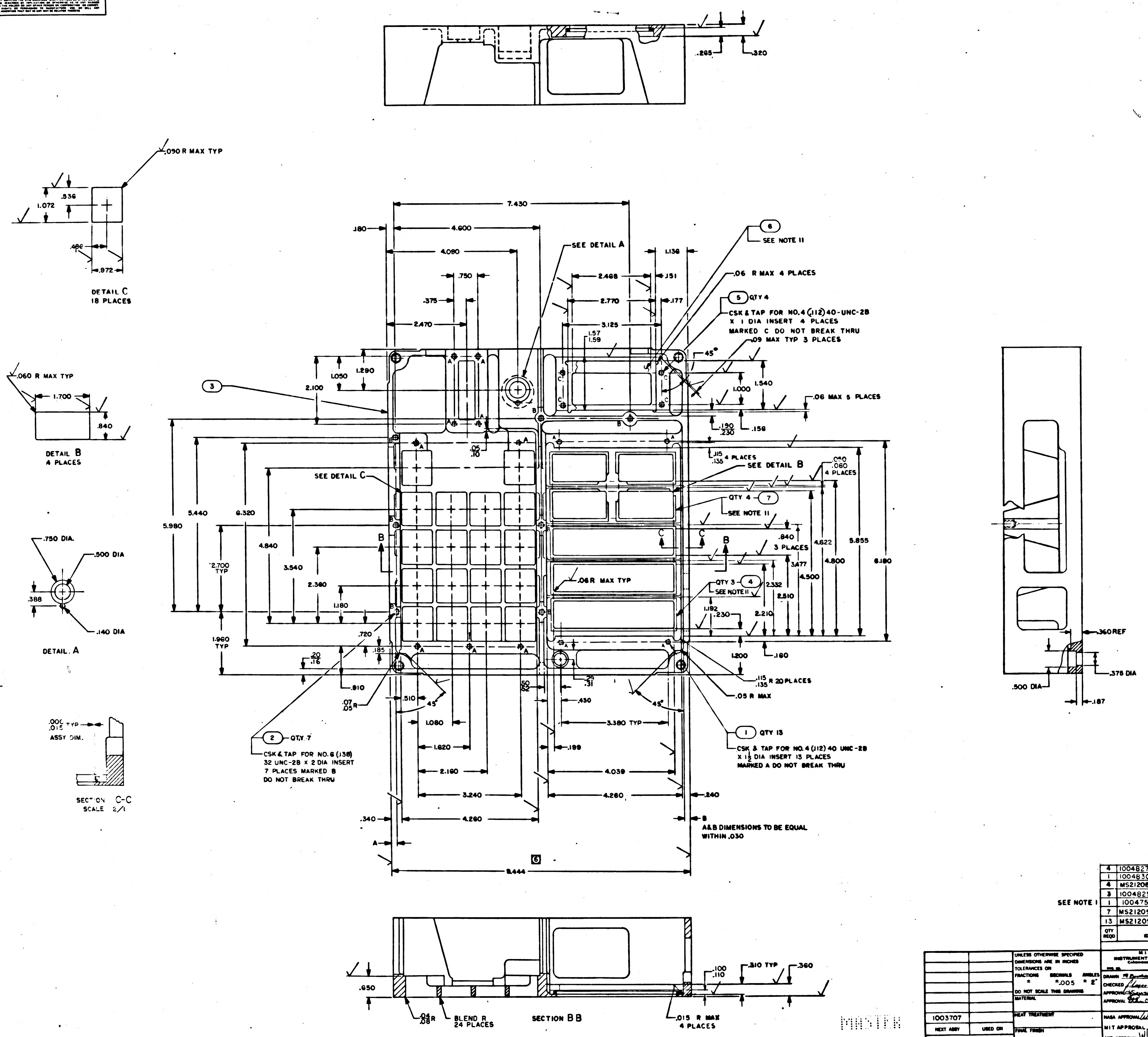
.265
.320
.090 R MAX TYP
.536
1.072
.486
.972
DETAIL C
18 PLACES
.060 R MAX TYP
1.700
.840
DETAIL B
4 PLACES
.750 DIA.
.500 DIA
.388
.140 DIA
DETAIL. A
.000
.015 TYP
ASSY DIM.
SECTION C-C
SCALE 2/1
7.430
.180
4.600
4.080
.750
.375
2.470
SEE DETAIL A
1.136
2.498
.151
2.770
.177
3.125
1.57
1.59
6
SEE NOTE 11
.06 R MAX 4 PLACES
5 QTY 4
CSK & TAP FOR NO.4 (.112) 40-UNC-2B
X 1 DIA INSERT 4 PLACES
MARKED C DO NOT BREAK THRU
.09 MAX TYP 3 PLACES
45°
1.000
1.540
.06 MAX 5 PLACES
1.290
1.050
2.100
3
.190
.230
.156
.05
.10
.115
.135 4 PLACES
SEE DETAIL B
.040
.060 4 PLACES
SEE DETAIL C
QTY 4 7
SEE NOTE 11
5.440
6.320
5.980
4.840
3.540
2.700 TYP
2.380
1.180
.840 3 PLACES
4.622
5.855
3.477
4.800
4.500
6.180
.06R MAX TYP
QTY 3 4
SEE NOTE 11
2.332
2.510
1.192
.230
2.210
.720
1.960 TYP
.185
.20
.16
1.200
.160
.910
.07
.05 R
.510
45°
.50
.52
.29
.31
.430
.115
.135 R 20 PLACES
.05 R MAX
1.080
3.380 TYP
2 QTY 7
CSK & TAP FOR NO. 6 (.138)
32 UNC-2B X 2 DIA INSERT
7 PLACES MARKED B
DO NOT BREAK THRU
1.620
.199
1 QTY 13
CSK & TAP FOR NO. 4 (.112) 40 UNC-2B
X 1½ DIA INSERT 13 PLACES
MARKED A DO NOT BREAK THRU
2.160
4.039
3.240
4.260
.240
.340
4.280
B
A&B DIMENSIONS TO BE EQUAL
WITHIN .030
A
6
8.444
.360 REF
.375 DIA
.500 DIA
.187
.650
.04
.08 R
BLEND R
24 PLACES
SECTION B B
.100
.110
.310 TYP
.360
.015 R MAX
4 PLACES
MASTER

SEE NOTE 1

QTY REQD	PART OR IDENTIFYING NO.	NOMENCLATURE OR DESCRIPTION	FIND NO.
4	1004827	CUSHION	[illegible]
1	1004830	GASKET	[illegible]
4	MS21208-C0410	INSERT, SCREW THREAD	5
3	1004829	CUSHION, REGISTER	4
1	1004759-1	HOUSING, FRONT PANEL	3
7	MS21209-C0620	INSERT, SCREW THREAD	2
13	MS21209-C0415	INSERT, SCREW THREAD	1

LIST OF MATERIALS

1003707	
NEXT ASSY	USED ON
APPLICATION	

UNLESS OTHERWISE SPECIFIED
DIMENSIONS ARE IN INCHES
TOLERANCES ON
FRACTIONS ± DECIMALS ±.005 ANGLES ± 2°
DO NOT SCALE THIS DRAWING
MATERIAL
HEAT TREATMENT
FINAL FINISH

MIT
INSTRUMENTATION LAB
CAMBRIDGE, MASS
DRAWN [illegible] DATE [illegible]
CHECKED [illegible] 18 Sept 64
APPROVAL [illegible] 9/22/64
APPROVAL [illegible] 6 Oct 64
NASA APPROVAL [illegible] 10-6-64
MIT APPROVAL
MIT APPROVAL [illegible]

MANNED SPACECRAFT CENTER
HOUSTON, TEXAS

HOUSING, FRONT PANEL
AGC DSKY MAIN 100 SERIES

CODE IDENT NO. — SIZE E NASA DRAWING NO. 10047[illegible]9
SCALE 1/1 WT SHEET 2 OF 2

1004759 C

NOTICE - WHEN GOVERNMENT DRAWINGS, SPECIFICATIONS, OR OTHER DATA ARE USED FOR ANY PURPOSE OTHER THAN IN CONNECTION WITH A DEFINITELY RELATED GOVERNMENT PROCUREMENT OPERATION, THE UNITED STATES GOVERNMENT THEREBY INCURS NO RESPONSIBILITY NOR ANY OBLIGATION WHATSOEVER; AND THE FACT THAT THE GOVERNMENT MAY HAVE FORMULATED, FURNISHED, OR IN ANY WAY SUPPLIED THE SAID DRAWINGS, SPECIFICATIONS, OR OTHER DATA IS NOT TO BE REGARDED BY IMPLICATION OR OTHERWISE AS IN ANY MANNER LICENSING THE HOLDER OR ANY OTHER PERSON OR CORPORATION, OR CONVEYING ANY RIGHTS OR PERMISSION TO MANUFACTURE, USE, OR SELL ANY PATENTED INVENTION THAT MAY IN ANY WAY BE RELATED THERETO

REVISIONS 13222			
SYM	DESCRIPTION	DATE	APPROVAL
A	REVISED PER TDRR 13669 DR G. Sipka CHK	11/4/64	
B	REVISED PER TDRR 16474 DR D.A. Clement CHK	3/3/65	
C	REVISED PER TDRR 2?445 DR C.A. Austin CHK		

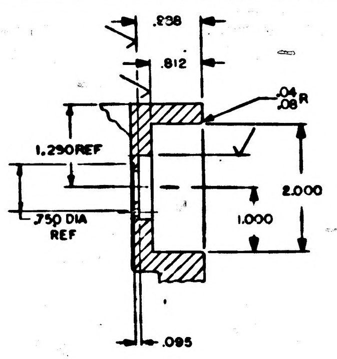
.238
.812
.04
.08 R
1.290 REF
.750 DIA REF
2.000
1.000
.095

PARTIAL SECTION A-A

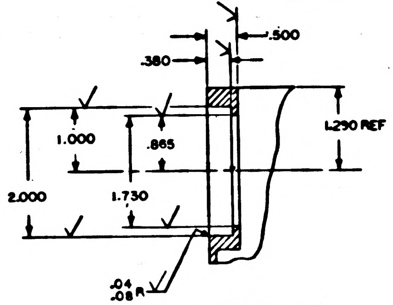
.500
.380
1.000
.865
1.290 REF
2.000
1.730
.04
.08 R

PARTIAL SECTION D-D

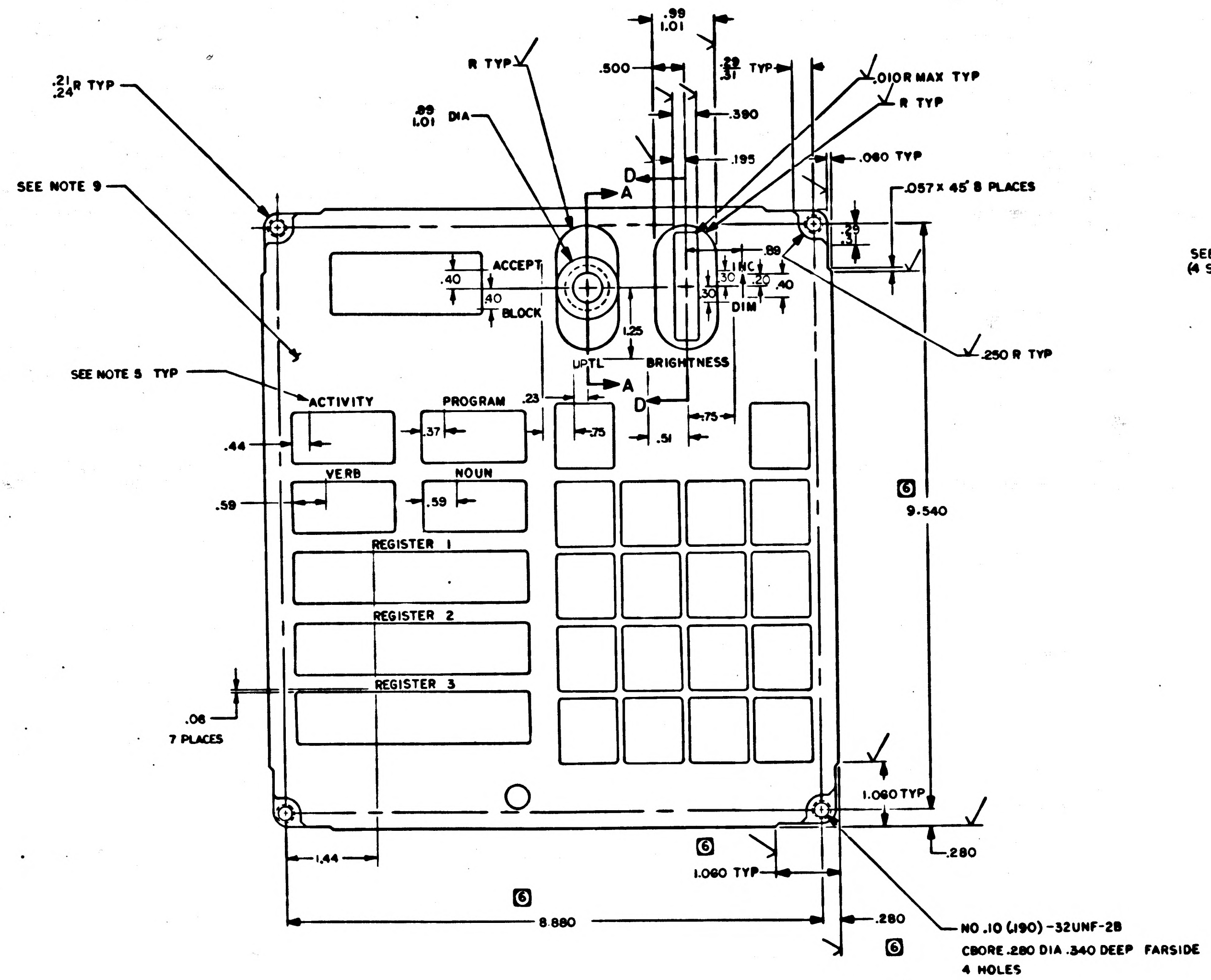
.21
.24 R TYP
R TYP
.99
1.01 DIA
.99
1.01
.500
.29
.31 TYP
.010 R MAX TYP
R TYP
.390
.195
.060 TYP
.057 X 45° 8 PLACES
SEE NOTE 9
D
A
ACCEPT
.40
.40
BLOCK
INC
DIM
.30
.30
.20
.40
.89
.25
.31
1.25
UPTL
BRIGHTNESS
.250 R TYP
SEE NOTE 5 TYP
ACTIVITY
PROGRAM
.23
.44
.37
.75
.51
.75
VERB
NOUN
.59
.59
REGISTER 1
REGISTER 2
REGISTER 3
.06
7 PLACES
6
9.540
1.060 TYP
.280
1.44
6
1.060 TYP
6
8.880
.280
6
NO. 10 (.190) -32UNF-2B
CBORE .280 DIA .340 DEEP FARSIDE
4 HOLES

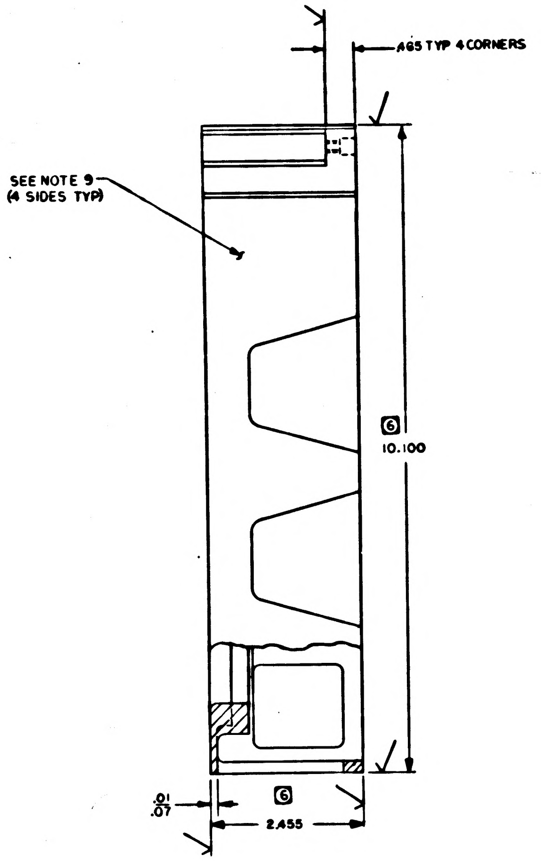
.465 TYP 4 CORNERS
SEE NOTE 9
(4 SIDES TYP)
6
10.100
.01
.07
6
2.455

NOTES
1. MAKE FROM DWG 1004586
2. SURFACE MARKED ✓ TO BE $\overset{125}{\checkmark}$
3. REMOVE ALL BURRS AND SHARP EDGES
4. ANODIZE PER MIL-A-8625, TYPE I CHROMIC-ACID DYED BLACK
5. SILK SCREEN .115/.135 HIGH WHITE PER ND1002019 AND ND1002122, TYPE I, CLASS I AS SHOWN MARKING APPROXIMATELY WHERE SHOWN
6. 6 DIMENSIONS ARE CONTROLLED BY ICDMH01-01005-116
7. INTERPRET DRAWING IN ACCORDANCE WITH STANDARDS PRESCRIBED BY MIL-D-70327
8. 8 NOTES CONTROLLED BY ICD-MH01-01046-416
9. PAINT INDICATED SURFACES WITH 1010729-1 MEDIUM GREY EPOXY RESIN ENAMEL PER ND1002110
10. IDENTIFY WITH DRAWING NO. & REVISION PER ND1002019
11. BOND FIND NO.S 4, 6 & 7 TO FIND NO. 3 PER MIL-A-5092 TYPE II
12. CENTERLINES OF HOLES TO BE LOCATED AT CENTER OF RIB INTERSECTIONS WITHIN .005 TIR. DO NOT BREAK THRU SIDEWALLS
13. BOND FIND NO. 8 & 9 TO FIND NO. 3 PER ND1002004, TYPE I
14. AFTER MACHINING, SIDES OF FIND NO. 8 TO BE FLUSH WITH RIB SURFACES OF FIND NO. 3, FLATNESS MUST BE WITHIN .003
15. TOUCH-UP BARE METAL SURFACES PER ND1002040

FOR LIST OF MATERIALS SEE SHEET 2

QTY REQD	PART OR IDENTIFYING NO.	NOMENCLATURE OR DESCRIPTION	FIND NO

LIST OF MATERIALS

NEXT ASSY	USED ON
1003707	

APPLICATION

UNLESS OTHERWISE SPECIFIED DIMENSIONS ARE IN INCHES
TOLERANCES ON
FRACTIONS ± DECIMALS ±.005 ANGLES ± 2°
DO NOT SCALE THIS DRAWING
MATERIAL SEE NOTE 1
HEAT TREATMENT NONE
FINAL FINISH SEE NOTES

MIT INSTRUMENTATION LAB
CAMBRIDGE, MASS.
DRAWN P. Bouchard DATE Aug 64
CHECKED 18 Sept 64
APPROVAL 9/22/64
APPROVAL
NASA APPROVAL 10-6-64
MIT APPROVAL
MIT APPROVAL

MANNED SPACECRAFT CENTER
HOUSTON, TEXAS

HOUSING, FRONT PANEL
AGC DSKY MAIN (100 SERIES)

CODE IDENT NO. 80230
SIZE E
NASA DRAWING NO. 1004759
SCALE 1/1
WT
SHEET 1 OF 3

1004759

NOTICE — WHEN GOVERNMENT DRAWINGS, SPECIFICATIONS, OR OTHER DATA ARE USED FOR ANY PURPOSE OTHER THAN IN CONNECTION WITH A DEFINITELY RELATED GOVERNMENT PROCUREMENT OPERATION, THE UNITED STATES GOVERNMENT THEREBY INCURS NO RESPONSIBILITY NOR ANY OBLIGATION WHATSOEVER; AND THE FACT THAT THE GOVERNMENT MAY HAVE FORMULATED, FURNISHED, OR IN ANY WAY SUPPLIED THE SAID DRAWINGS, SPECIFICATIONS, OR OTHER DATA IS NOT TO BE REGARDED BY IMPLICATION OR OTHERWISE AS IN ANY MANNER LICENSING THE HOLDER OR ANY OTHER PERSON OR CORPORATION, OR CONVEYING ANY RIGHTS OR PERMISSION TO MANUFACTURE, USE, OR SELL ANY PATENTED INVENTION THAT MAY IN ANY WAY BE RELATED THERETO.

1004759 C

REVISIONS 3222			
SYM	DESCRIPTION	DATE	APPROVAL
A	REVISED PER TDRR 13669 DR CHK	11/9/64	
B	REVISED PER TDRR 16474 DR D.Q. Clement CHK	3/3/65	
C	REVISED PER TDRR [illegible] DR C.A. Bertz CHK	9/14/65	

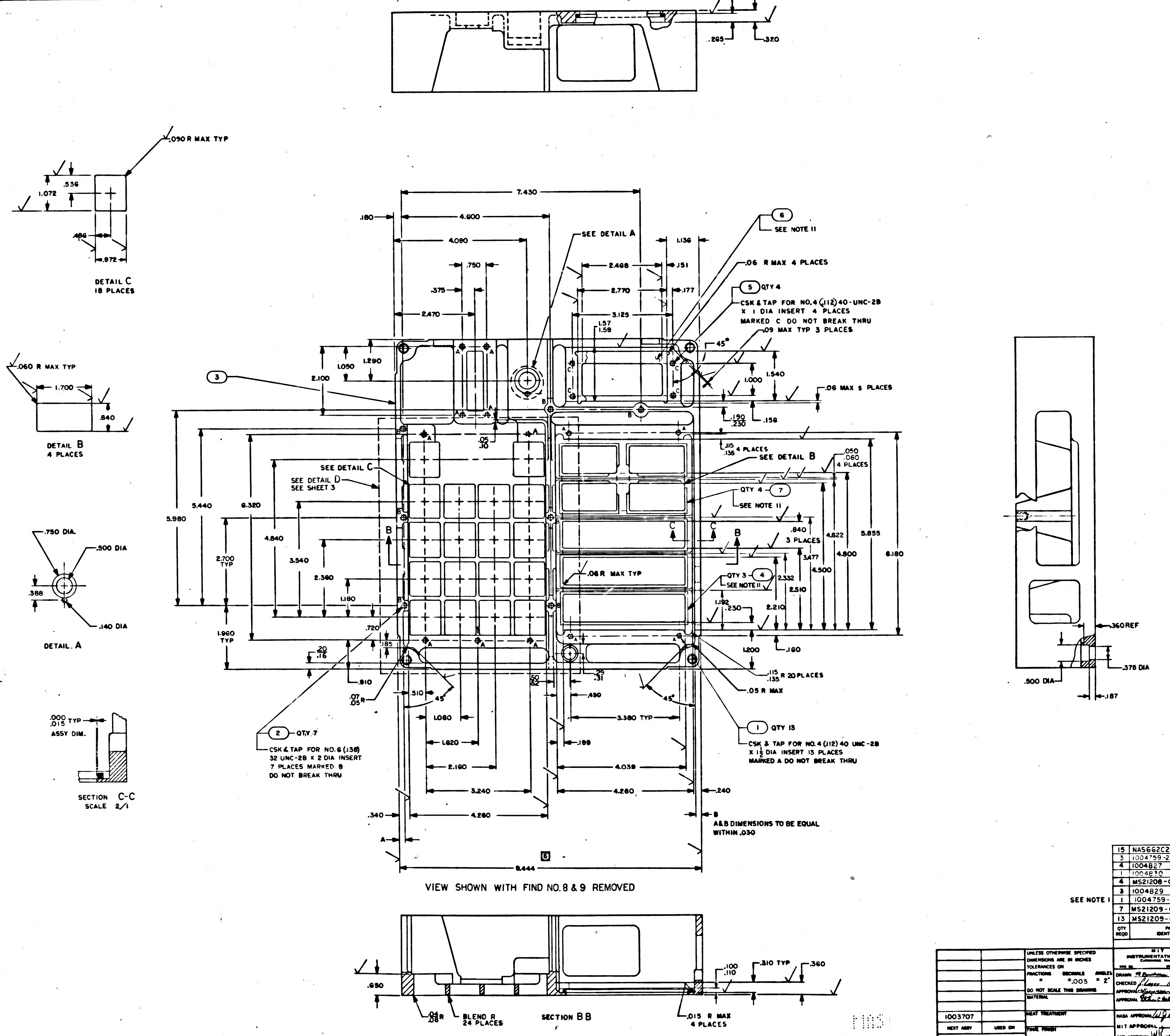

.265
.320
.090 R MAX TYP
1.072
.536
.486
.972
DETAIL C
18 PLACES
.060 R MAX TYP
1.700
.840
DETAIL B
4 PLACES
.750 DIA.
.500 DIA
.388
.140 DIA
DETAIL A
.000
.015 TYP
ASSY DIM.
SECTION C-C
SCALE 2/1
7.430
.180
4.900
4.090
.750
.375
2.470
SEE DETAIL A
1.136
2.498
.151
2.770
.177
3.125
1.57
1.59
6
SEE NOTE 11
.06 R MAX 4 PLACES
5 QTY 4
CSK & TAP FOR NO.4 (.112) 40-UNC-2B
X 1 DIA INSERT 4 PLACES
MARKED C DO NOT BREAK THRU
.09 MAX TYP 3 PLACES
45°
1.540
1.000
.06 MAX 5 PLACES
.190
.230
.159
1.290
1.050
2.100
3
.05
.10
.115
.135 4 PLACES
SEE DETAIL B
.050
.060
4 PLACES
SEE DETAIL C
SEE DETAIL D
SEE SHEET 3
QTY 4 7
SEE NOTE 11
5.980
5.440
6.320
4.840
3.540
2.700 TYP
2.360
1.180
1.960 TYP
.720
.185
.20
.16
.910
.07
.05 R
.510
45°
.50
.52
.29
.31
.430
45°
.840
3 PLACES
3.477
4.622
4.500
4.800
5.855
6.180
.06 R MAX TYP
QTY 3 4
SEE NOTE 11
2.332
2.510
1.192
.230
2.210
1.200
.160
.115
.135 R 20 PLACES
.05 R MAX
1 QTY 13
CSK & TAP FOR NO.4 (.112) 40 UNC-2B
X 1½ DIA INSERT 13 PLACES
MARKED A DO NOT BREAK THRU
2 QTY 7
CSK & TAP FOR NO.6 (.138)
32 UNC-2B X 2 DIA INSERT
7 PLACES MARKED B
DO NOT BREAK THRU
1.080
3.380 TYP
1.620
.199
2.160
4.039
3.240
4.260
.240
.340
4.280
B
A&B DIMENSIONS TO BE EQUAL
WITHIN .030
A
9.444
.360 REF
.375 DIA
.500 DIA
.187
.650
.04
.08 R
BLEND R
24 PLACES
SECTION BB
.100
.110
.310 TYP
.360
.015 R MAX
4 PLACES

VIEW SHOWN WITH FIND NO. 8 & 9 REMOVED

SEE NOTE 1

15	NAS662C2-4	SCREW, FLAT HD, 100°	9
3	1004759-2	EXTENDER RIB	8
4	1004827	CUSHION	7
1	1004830	GASKET	6
4	MS21208-C0410	INSERT, SCREW THREAD	5
3	1004829	CUSHION, REGISTER	4
1	1004759-1	HOUSING, FRONT PANEL	3
7	MS21209-C0620	INSERT, SCREW THREAD	2
13	MS21209-C0415	INSERT, SCREW THREAD	1
QTY REQD	PART OR IDENTIFYING NO.	NOMENCLATURE OR DESCRIPTION	FIND NO.

LIST OF MATERIALS

1003707		UNLESS OTHERWISE SPECIFIED DIMENSIONS ARE IN INCHES TOLERANCES ON FRACTIONS ± DECIMALS ±.005 ANGLES ± 2° DO NOT SCALE THIS DRAWING MATERIAL HEAT TREATMENT FINAL FINISH	MIT INSTRUMENTATION LAB CAMBRIDGE, MASS DWG. NO. CONTRACT DRAWN R Brothers DATE CHECKED 18 Sept 64 APPROVAL 9/22/64 APPROVAL 6 Oct 64 NASA APPROVAL 10-6-64 MIT APPROVAL MIT APPROVAL	MANNED SPACECRAFT CENTER HOUSTON, TEXAS HOUSING, FRONT PANEL AGC DSKY MAIN 100 SERIES CODE IDENT NO. 80230 SIZE E NASA DRAWING NO. 1004759 SCALE 1/1 WT SHEET 2 OF 3
NEXT ASSY	USED ON			
APPLICATION				

1004759 C

NOTICE — WHEN GOVERNMENT DRAWINGS, SPECIFICATIONS, OR OTHER DATA ARE USED FOR ANY PURPOSE OTHER THAN IN CONNECTION WITH A DEFINITELY RELATED GOVERNMENT PROCUREMENT OPERATION, THE UNITED STATES GOVERNMENT THEREBY INCURS NO RESPONSIBILITY NOR ANY OBLIGATION WHATSOEVER; AND THE FACT THAT THE GOVERNMENT MAY HAVE FORMULATED, FURNISHED, OR IN ANY WAY SUPPLIED THE SAID DRAWINGS, SPECIFICATIONS, OR OTHER DATA IS NOT TO BE REGARDED BY IMPLICATION OR OTHERWISE AS IN ANY MANNER LICENSING THE HOLDER OR ANY OTHER PERSON OR CORPORATION, OR CONVEYING ANY RIGHTS OR PERMISSION TO MANUFACTURE, USE, OR SELL ANY PATENTED INVENTION THAT MAY IN ANY WAY BE RELATED THERETO.

REVISIONS			
SYM	DESCRIPTION	DATE	APPROVAL
C	THIS SHEET ADDED PER TDRR 20445	6/25	McM

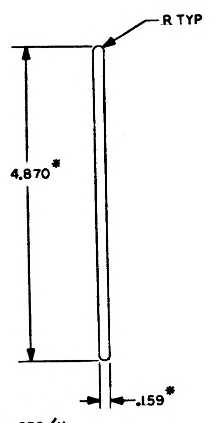
R TYP
4.870*
.159*

NOTES
1. MATL: .125 THK 6061-T6 ALUM/QQ-A-250/11
2. REMOVE BURRS AND SHARP EDGES .005/.015
3. * INDICATES NOMINAL DIMENSION, TO FIT AT ASSEMBLY..

EXTENDER, RIB
1004759-2
SCALE 1/1

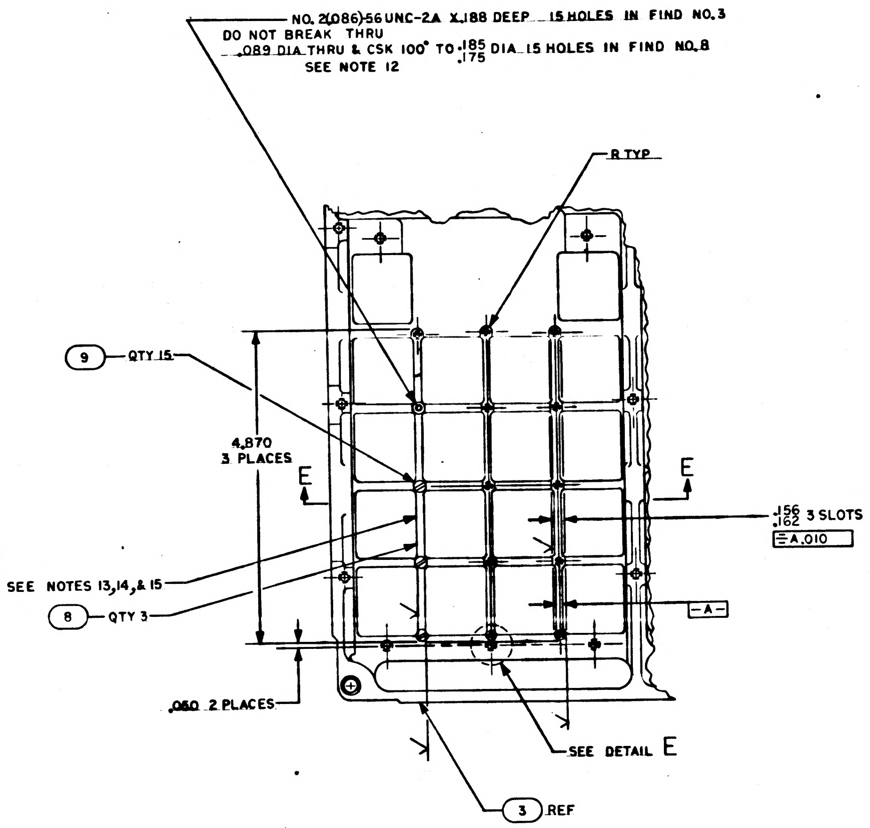
NO. 2(.086)-56 UNC-2A X.188 DEEP 15 HOLES IN FIND NO. 3
DO NOT BREAK THRU
.089 DIA THRU & CSK 100° TO .185/.175 DIA 15 HOLES IN FIND NO. 8
SEE NOTE 12
R TYP
9 QTY 15
4.870
3 PLACES
E
E
.156/.162 3 SLOTS
⌯A .010
SEE NOTES 13, 14, & 15
8 QTY 3
-A-
.050 2 PLACES
SEE DETAIL E
3 REF

DETAIL D
SEE SHEET 2

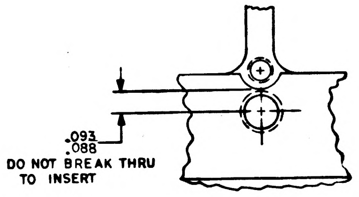
.093/.088
DO NOT BREAK THRU
TO INSERT

DETAIL E
SCALE 4/1

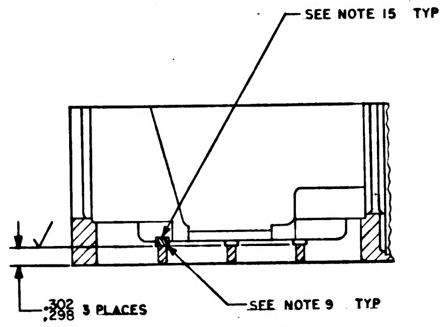
SEE NOTE 15 TYP
.302/.298 3 PLACES
SEE NOTE 9 TYP

SECTION E-E

Ⓒ THIS SHEET ADDED

MASTER

QTY REQD	PART OR IDENTIFYING NO.	NOMENCLATURE OR DESCRIPTION

LIST OF MATERIALS

1003707	
NEXT ASSY	USED ON
APPLICATION	

UNLESS OTHERWISE SPECIFIED
DIMENSIONS ARE IN INCHES
TOLERANCES ON
FRACTIONS ± DECIMALS ±.005 ANGLES ±2°
DO NOT SCALE THIS DRAWING
MATERIAL
HEAT TREATMENT
FINAL FINISH

MIT
INSTRUMENTATION LAB
CAMBRIDGE MASS
DRAWN R. Bowman DATE 6-25-65
CHECKED J. P. Fagan 28 Jun 65
APPROVAL
APPROVAL Eldon C Hall 28 Jun 65
NASA APPROVAL 7/2/65
MIT APPROVAL McMurdy 6-28-65
MIT APPROVAL

MANNED SPACECRAFT CENTER
HOUSTON, TEXAS

HOUSING, FRONT PANEL
AGC DSKY MAIN 100 SERIES

CODE IDENT NO.	SIZE	NASA DRAWING NO
80230	E	1004759
SCALE 1/1	WT	SHEET 3 OF 3

SYM	DESCRIPTION	DATE	APPROVAL
A	REVISED PER TDRR 13669 DR G. Sykes CHK	11/9/64	
B	REVISED PER TDRR 16474 DR D. P. Clermont CHK	3/3/65	
C	REVISED PER TDRR 20445 DR C. A. Bastis CHK		R. F. Bunker
D	REVISED PER TDRR 20946 DR CHK		

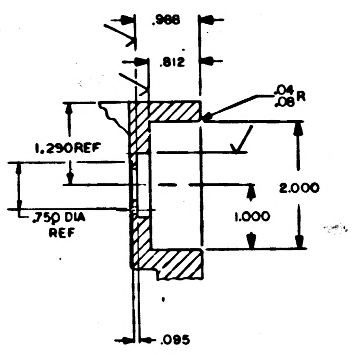

.988
.812
.04 .08 R
1.290 REF
2.000
.750 DIA REF
1.000
.095

PARTIAL SECTION A-A

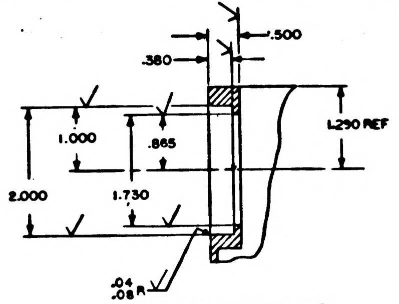

.500
.380
1.000
.865
1.290 REF
2.000
1.730
.04 .08 R

PARTIAL SECTION D-D

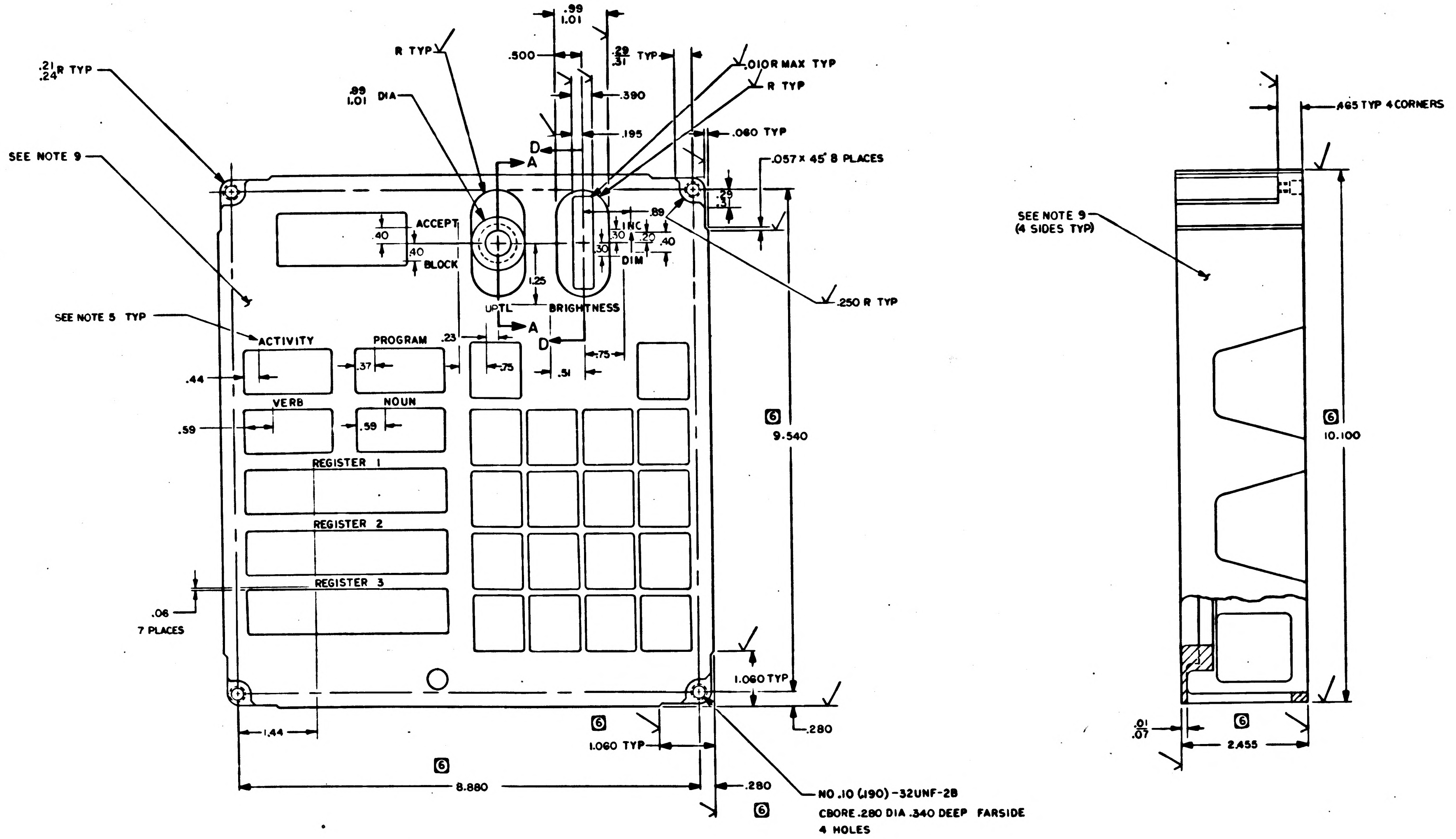

.21 .24 R TYP
R TYP
.99 1.01 DIA
.500
.99 1.01
.29 .31 TYP
.010 R MAX TYP
R TYP
.390
.195
.060 TYP
.057 X 45° 8 PLACES
SEE NOTE 9
ACCEPT
.40
.40
BLOCK
INC
DIM
.89
.30
.30
.40
1.25
UPTL
BRIGHTNESS
.250 R TYP
SEE NOTE 5 TYP
ACTIVITY
PROGRAM
.23
.44
.37
.75
.51
.75
VERB
NOUN
.59
.59
REGISTER 1
REGISTER 2
REGISTER 3
6
9.540
.06
7 PLACES
1.060 TYP
1.44
6
1.060 TYP
.280
6
8.880
.280
6
NO.10 (.190) -32UNF-2B
CBORE .280 DIA .340 DEEP FARSIDE
4 HOLES
.165 TYP 4 CORNERS
SEE NOTE 9 (4 SIDES TYP)
6
10.100
.01 .07
6
2.455

NOTES
1. MAKE FROM DWG 1004586
2. SURFACE MARKED √ TO BE 125√
3. REMOVE ALL BURRS AND SHARP EDGES
4. ANODIZE PER MIL-A-8625, TYPE I CHROMIC-ACID DYED BLACK
5. SILK SCREEN .15/.135 HIGH WHITE PER ND1002019 AND ND1002122, TYPE I, CLASS I AS SHOWN MARKING APPROXIMATELY WHERE SHOWN
6. 6 DIMENSIONS ARE CONTROLLED BY ICDMH01-01005-116
7. INTERPRET DRAWING IN ACCORDANCE WITH STANDARDS PRESCRIBED BY MIL-D-70327
8. 8 NOTES CONTROLLED BY ICD-MH01-01046-416
9. PAINT INDICATED SURFACES WITH 1010729-1 MEDIUM GREY EPOXY RESIN ENAMEL PER ND1002110
10. IDENTIFY WITH DRAWING NO. & REVISION PER ND1002019
11. BOND FIND NO.S 4, 6 & 7 TO FIND NO. 3 PER MIL-A-5092 TYPE II
12. CENTERLINES OF HOLES TO BE LOCATED AT CENTER OF RIB INTERSECTIONS WITHIN .005 TIR. DO NOT BREAK THRU SIDEWALLS
13. BOND FIND NO.8, 9 & 10 TO FIND NO. 3 PER ND1002004, TYPE I
14. AFTER MACHINING, SIDES OF FIND NO.8 & 10 TO BE FLUSH WITH RIB SURFACES OF FIND NO. 3, FLATNESS TO BE WITHIN .003
15. TOUCH-UP BARE METAL SURFACES PER ND1002040

FOR LIST OF MATERIALS SEE SHEET 2

QTY REQD	PART OR IDENTIFYING NO.	NOMENCLATURE OR DESCRIPTION	FIND NO

LIST OF MATERIALS

NEXT ASSY	USED ON
1003707	

APPLICATION

UNLESS OTHERWISE SPECIFIED DIMENSIONS ARE IN INCHES
TOLERANCES ON
FRACTIONS ± DECIMALS ±.005 ANGLES ± 2°
DO NOT SCALE THIS DRAWING
MATERIAL SEE NOTE 1
HEAT TREATMENT NONE
FINAL FINISH SEE NOTES

MIT INSTRUMENTATION LAB CAMBRIDGE MASS
DRAWN P. Boudreau DATE
CHECKED 28 Sept 64
APPROVAL 9/22/64
APPROVAL 6 Oct 64
NASA APPROVAL 10-6-64
MIT APPROVAL
MIT APPROVAL

MANNED SPACECRAFT CENTER
HOUSTON, TEXAS

HOUSING, FRONT PANEL
AGC DSKY MAIN (100 SERIES)

CODE IDENT NO. 80230 SIZE E NASA DRAWING NO. 1004759
SCALE 1/1 WT SHEET 1 OF 3

NOTICE — WHEN GOVERNMENT DRAWINGS, SPECIFICATIONS, OR OTHER DATA ARE USED FOR ANY PURPOSE OTHER THAN IN CONNECTION WITH A DEFINITELY RELATED GOVERNMENT PROCUREMENT OPERATION, THE UNITED STATES GOVERNMENT THEREBY INCURS NO RESPONSIBILITY NOR ANY OBLIGATION WHATSOEVER AND THE FACT THAT THE GOVERNMENT MAY HAVE FORMULATED, FURNISHED, OR IN ANY WAY SUPPLIED THE SAID DRAWINGS, SPECIFICATIONS OR OTHER DATA IS NOT TO BE REGARDED BY IMPLICATION OR OTHERWISE AS IN ANY MANNER LICENSING THE HOLDER OR ANY OTHER PERSON OR CORPORATION, OR CONVEYING ANY RIGHTS OR PERMISSION TO MANUFACTURE, USE, OR SELL ANY PATENTED INVENTION THAT MAY IN ANY WAY BE RELATED THERETO

1004759 D

REVISIONS			13222
SYM	DESCRIPTION	DATE	APPROVAL
A	REVISED PER TDRR 13669 DR CHK	11/9/64	
B	REVISED PER TDRR 16474 DR S.A. Clermont CHK	3/3/65	HAC
C	REVISED PER TDRR 20445 DR C.A. Bestra CHK	9/14/65	
D	REVISED PER TDRR 20946 DR CHK	9/24/65	

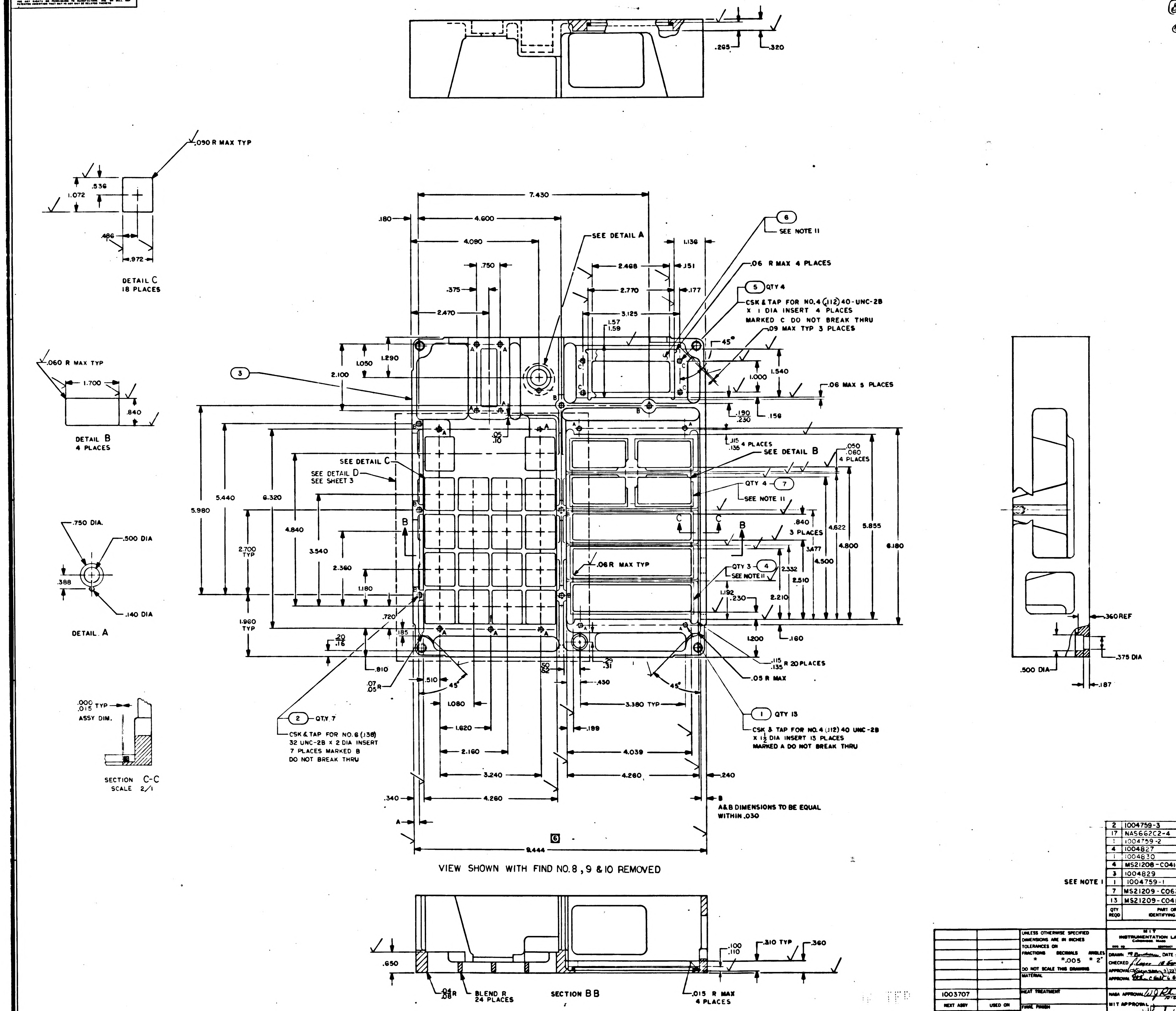

.265
.320
.090 R MAX TYP
.536
1.072
.486
.972
DETAIL C
18 PLACES
.060 R MAX TYP
1.700
.840
DETAIL B
4 PLACES
.750 DIA.
.500 DIA
.388
.140 DIA
DETAIL A
.000
.015 TYP
ASSY DIM.
SECTION C-C
SCALE 2/1
7.430
.180
4.600
4.090
.750
.375
2.470
SEE DETAIL A
1.136
2.468
.151
2.770
.177
3.125
1.57
1.59
6
SEE NOTE 11
.06 R MAX 4 PLACES
5 QTY 4
CSK & TAP FOR NO.4 (.112) 40-UNC-2B
X 1 DIA INSERT 4 PLACES
MARKED C DO NOT BREAK THRU
.09 MAX TYP 3 PLACES
45°
1.540
1.000
.06 MAX 5 PLACES
.190
.230
.156
3
2.100
1.050
1.290
.05
.10
.115
.135 4 PLACES
SEE DETAIL B
.050
.060
4 PLACES
SEE DETAIL C
SEE DETAIL D
SEE SHEET 3
QTY 4 7
SEE NOTE 11
5.980
5.440
6.320
4.840
3.540
2.700 TYP
2.360
1.180
1.960 TYP
.720
.185
.20
.16
B
C
.840
3 PLACES
4.622
5.855
4.800
6.180
3.477
4.500
.06R MAX TYP
QTY 3 4
SEE NOTE 11
2.332
2.510
1.192
.230
2.210
1.200
.160
.910
.07
.05 R
.510
45°
.50
.52
.29
.31
.430
.115
.135 R 20 PLACES
.05 R MAX
1.080
1.620
2.160
3.240
4.260
.340
A
3.380 TYP
.199
4.039
4.260
.240
B
A&B DIMENSIONS TO BE EQUAL
WITHIN .030
2 QT.Y 7
CSK & TAP FOR NO. 6 (.138)
32 UNC-2B X 2 DIA INSERT
7 PLACES MARKED B
DO NOT BREAK THRU
1 QTY 13
CSK & TAP FOR NO. 4 (.112) 40 UNC-2B
X 1 1/2 DIA INSERT 13 PLACES
MARKED A DO NOT BREAK THRU
G
9.444
VIEW SHOWN WITH FIND NO. 8, 9 & 10 REMOVED
.650
.04
.08 R
BLEND R
24 PLACES
SECTION BB
.015 R MAX
4 PLACES
.100
.110
.310 TYP
.360
.360 REF
.375 DIA
.500 DIA
.187

SEE NOTE 1

QTY REQD	PART OR IDENTIFYING NO.	NOMENCLATURE OR DESCRIPTION	FIND NO
2	1004759-3	EXTENDER, RIB	10
17	NAS662C2-4	SCREW, FLAT HD, 100°	9
1	1004759-2	EXTENDER RIB	8
4	1004827	CUSHION	7
1	1004830	GASKET	6
4	MS21208-C0410	INSERT, SCREW THREAD	5
3	1004829	CUSHION, REGISTER	4
1	1004759-1	HOUSING, FRONT PANEL	3
7	MS21209-C0620	INSERT, SCREW THREAD	2
13	MS21209-C0415	INSERT, SCREW THREAD	1

LIST OF MATERIALS

NEXT ASSY	USED ON
1003707	

APPLICATION

UNLESS OTHERWISE SPECIFIED DIMENSIONS ARE IN INCHES
TOLERANCES ON
FRACTIONS ± DECIMALS ±.005 ANGLES ± 2°
DO NOT SCALE THIS DRAWING
MATERIAL
HEAT TREATMENT
FINAL FINISH

MIT
INSTRUMENTATION LAB
CAMBRIDGE, MASS
DWG NO CONTRACT

DRAWN DATE
CHECKED 18 Sept 64
APPROVAL 3/22/64
APPROVAL 6 Oct 64
NASA APPROVAL 10-6-64
MIT APPROVAL
MIT APPROVAL

MANNED SPACECRAFT CENTER
HOUSTON, TEXAS

HOUSING, FRONT PANEL
AGC DSKY MAIN 100 SERIES

CODE IDENT NO.	SIZE	NASA DRAWING NO.
80230	E	1004759

SCALE 1/1 WT SHEET 2 OF 3

1004759 D

REVISIONS			
SYM	DESCRIPTION	DATE	APPROVAL
C	THIS SHEET ADDED PER TDRR 20445		McT
D	REVISED PER TDRR 20946 DR E P CHK		

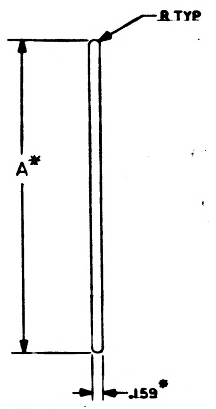

PART NO.	DIM. A
1004759-2	4.870*
1004759-3	6.230*

NOTES
1. MATL: .125 THK 6061-T6 ALUM/QQ-A-250/11
2. REMOVE BURRS AND SHARP EDGES .005/.015
3. * INDICATES NOMINAL DIMENSION, TO FIT AT ASSEMBLY.

EXTENDER, RIB
1004759-2
1004759-3

SCALE 1/1

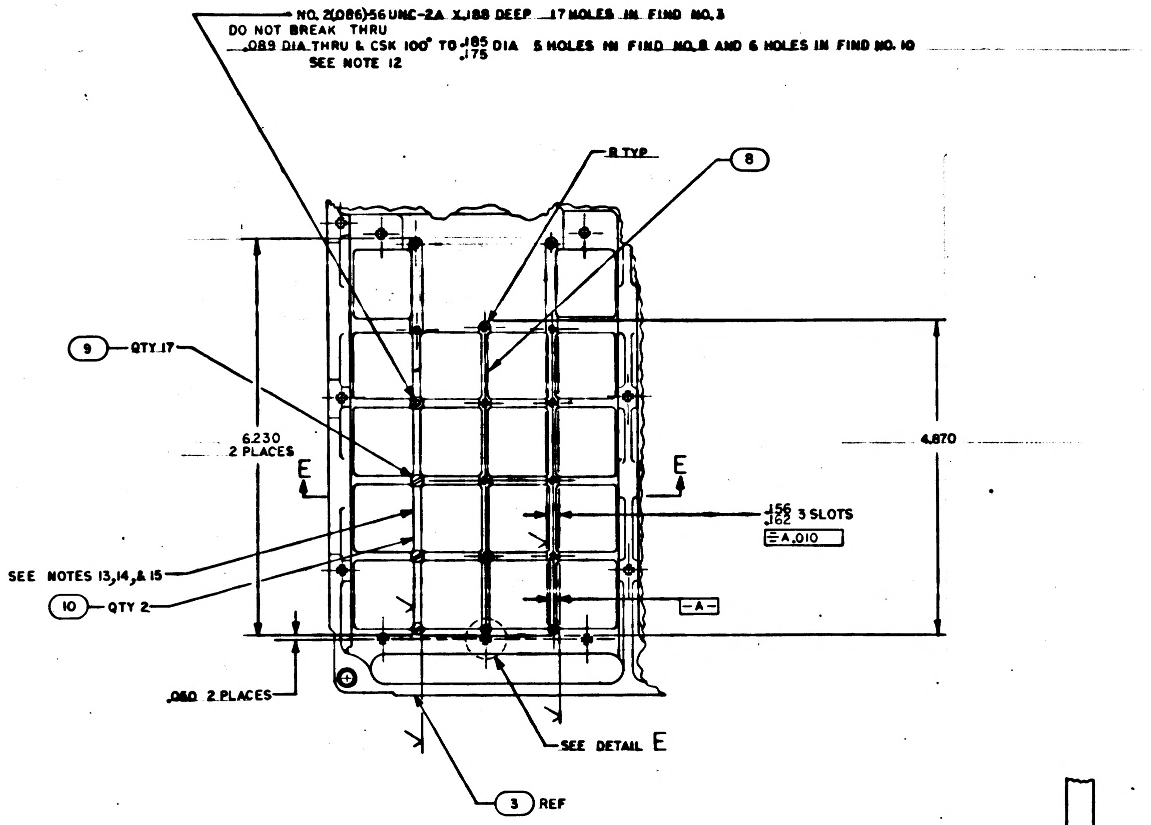

NO. 2(.086)56UNC-2A X.188 DEEP 17 HOLES IN FIND NO.3
DO NOT BREAK THRU
.089 DIA THRU & CSK 100° TO .185/.175 DIA 5 HOLES IN FIND NO.8 AND 6 HOLES IN FIND NO. 10
SEE NOTE 12
R TYP
8
9 QTY 17
6.230 2 PLACES
E
E
4.870
.156/.162 3 SLOTS
⌯ A .010
-A-
SEE NOTES 13,14,& 15
10 QTY 2
.080 2 PLACES
SEE DETAIL E
3 REF

DETAIL D
SEE SHEET 2

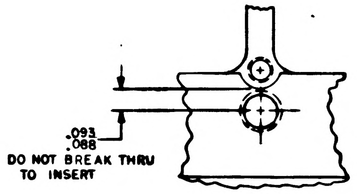

.093/.088
DO NOT BREAK THRU TO INSERT

DETAIL E
SCALE 4/1

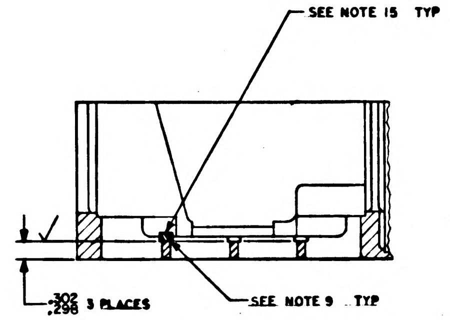

SEE NOTE 15 TYP
.302/.298 3 PLACES
SEE NOTE 9 TYP

SECTION E-E

Ⓒ THIS SHEET ADDED

QTY REQD	PART OR IDENTIFYING NO.	NOMENCLATURE OR DESCRIPTION	FIND NO.

LIST OF MATERIALS

1003707	
NEXT ASSY	USED ON
APPLICATION	

UNLESS OTHERWISE SPECIFIED
DIMENSIONS ARE IN INCHES
TOLERANCES ON
FRACTIONS ± DECIMALS ±.005 ANGLES ±2°
DO NOT SCALE THIS DRAWING
MATERIAL
HEAT TREATMENT
FINAL FINISH

MIT INSTRUMENTATION LAB
CAMBRIDGE, MASS
DRAWN DATE 6-25-65
CHECKED
APPROVAL
APPROVAL Eldon C. Hall 28 Jun 65
NASA APPROVAL
MIT APPROVAL 6-28-65
MIT APPROVAL

MANNED SPACECRAFT CENTER
HOUSTON, TEXAS

HOUSING, FRONT PANEL
AGC DSKY MAIN 100 SERIES

CODE IDENT NO. 80230
SIZE E
NASA DRAWING NO. 1004759
SCALE 1/1
WT
SHEET 3 OF 5

NOTICE — WHEN GOVERNMENT DRAWINGS SPECIFICATIONS OR OTHER DATA ARE USED FOR ANY PURPOSE OTHER THAN IN CONNECTION WITH A DEFINITELY RELATED GOVERNMENT PROCUREMENT OPERATION THE UNITED STATES GOVERNMENT THEREBY INCURS NO RESPONSIBILITY NOR ANY OBLIGATION WHATSOEVER AND THE FACT THAT THE GOVERNMENT MAY HAVE FORMULATED FURNISHED OR IN ANY WAY SUPPLIED THE SAID DRAWINGS SPECIFICATIONS OR OTHER DATA IS NOT TO BE REGARDED BY IMPLICATION OR OTHERWISE AS IN ANY MANNER LICENSING THE HOLDER OR ANY OTHER PERSON OR CORPORATION OR CONVEYING ANY RIGHTS OR PERMISSION TO MANUFACTURE USE OR SELL ANY PATENTED INVENTION THAT MAY IN ANY WAY BE RELATED THERETO

1004759 E

REVISIONS 1322			
SYM	DESCRIPTION	DATE	APPROVAL
A	REVISED PER TDRR 13669 DR CHK	11/4/64	
B	REVISED PER TDRR 16474 DR CHK	3/3/65	
C	REVISED PER TDRR 20445 DR CHK		
D	REVISED PER TDRR 20946 DR CHK		
E	REVISED PER TDRR 21551 DR CHK CAP		

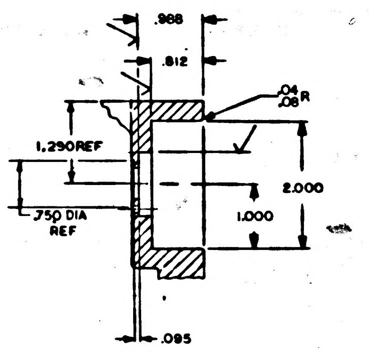

.988
.812
.04
.08 R
1.250 REF
.750 DIA
REF
2.000
1.000
.095

PARTIAL SECTION A-A

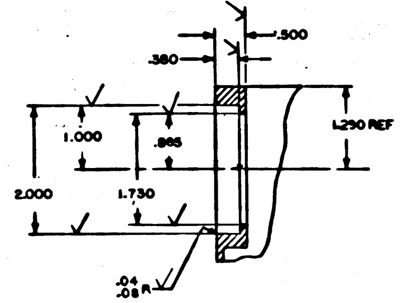

.500
.380
1.290 REF
1.000
.985
2.000
1.730
.04
.08 R

PARTIAL SECTION D-D

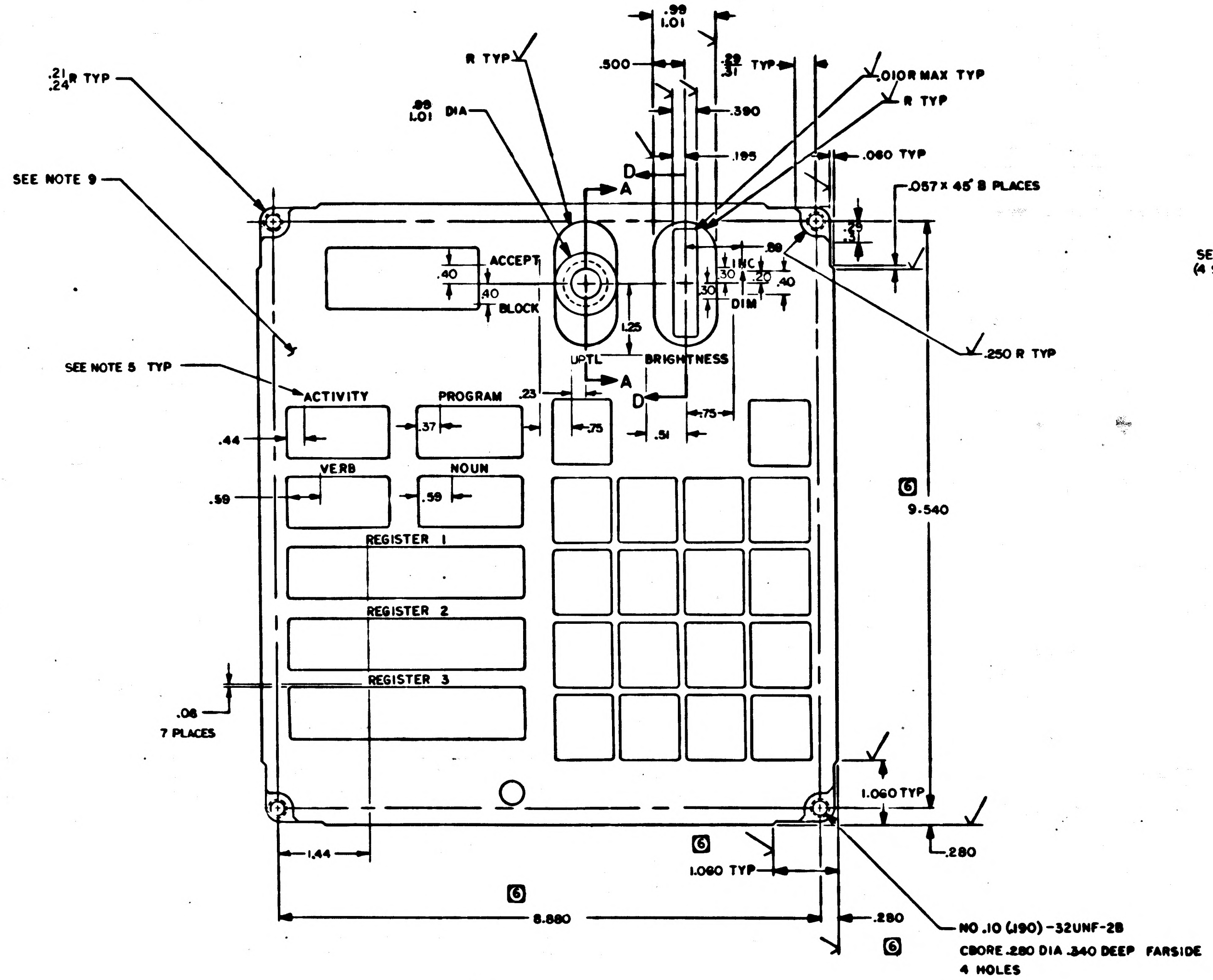

.99
1.01
R TYP
.500
.29
.31 TYP
.010 R MAX TYP
R TYP
.21
.24 R TYP
.99
1.01 DIA
.390
.195
.060 TYP
.057 × 45° 8 PLACES
SEE NOTE 9
D
A
ACCEPT
.40
.40
BLOCK
INC
.30
.30
DIM
.20
.40
.88
1.25
UPTL
BRIGHTNESS
.250 R TYP
SEE NOTE 5 TYP
ACTIVITY
PROGRAM
.23
.44
.37
.75
.51
.75
VERB
NOUN
.59
.59
REGISTER 1
REGISTER 2
REGISTER 3
6
9.540
.06
7 PLACES
1.060 TYP
1.44
1.090 TYP
.280
8.880
.280
NO.10 (.190)-32UNF-2B
CBORE .280 DIA .340 DEEP FARSIDE
4 HOLES

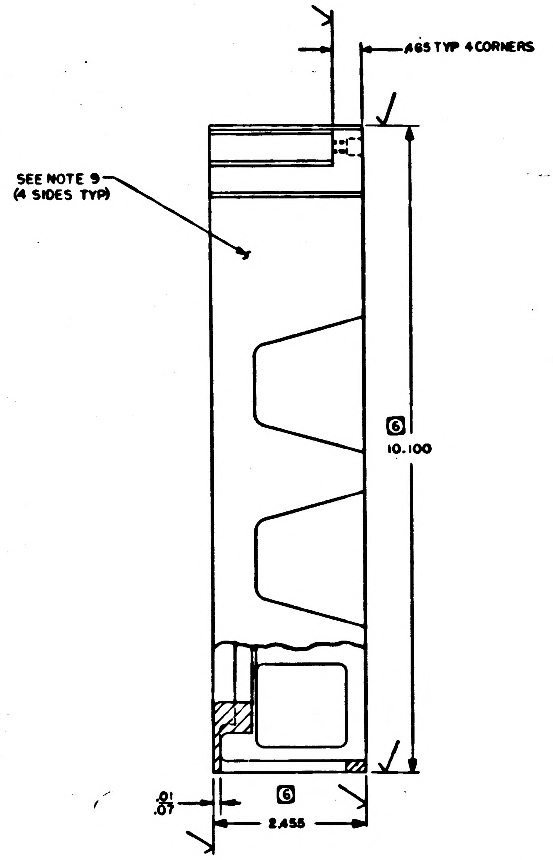

.485 TYP 4 CORNERS
SEE NOTE 9
(4 SIDES TYP)
6
10.100
.01
.07
6
2.455

NOTES
1. MAKE FROM DWG 1004586
2. SURFACE MARKED √ TO BE $\overset{125}{\surd}$
3. REMOVE ALL BURRS AND SHARP EDGES
4. ANODIZE PER MIL-A-8625, TYPE I CHROMIC-ACID DYED BLACK
5. SILK SCREEN .115/.135 HIGH WHITE PER ND1002019 AND ND1002122, TYPE I, CLASS I AS SHOWN MARKING APPROXIMATELY WHERE SHOWN
6. ⑥ DIMENSIONS ARE CONTROLLED BY ICDMH01-01005-116
7. INTERPRET DRAWING IN ACCORDANCE WITH STANDARDS PRESCRIBED BY MIL-D-70327
8. ⑧ NOTES CONTROLLED BY ICD-MH01-01046-416
9. PAINT INDICATED SURFACES WITH 1010729-1 MEDIUM GREY EPOXY RESIN ENAMEL PER ND1002110
10. IDENTIFY WITH DRAWING NO. & REVISION PER ND1002019
11. BOND FIND NO.S 4, 6 & 7 TO FIND NO. 3 PER MIL-A-5092 TYPE II
12. CENTERLINES OF HOLES TO BE LOCATED AT CENTER OF RIB INTERSECTIONS WITHIN .005 TIR. DO NOT BREAK THRU SIDEWALLS
13. BOND FIND NO.8, 9 & 10 TO FIND NO. 3 PER ND1002004, TYPE I
14. AFTER MACHINING, SIDES OF FIND NO.8 & 10 TO BE FLUSH WITH RIB SURFACES OF FIND NO. 3, FLATNESS TO BE WITHIN .003
15. TOUCH-UP BARE METAL SURFACES PER ND1002040

MASTER

FOR LIST OF MATERIALS SEE SHEET 2

QTY REQD	PART OR IDENTIFYING NO.	NOMENCLATURE OR DESCRIPTION	FIND NO

LIST OF MATERIALS

1003707	
NEXT ASSY	USED ON
APPLICATION	

UNLESS OTHERWISE SPECIFIED DIMENSIONS ARE IN INCHES
TOLERANCES ON
FRACTIONS ± DECIMALS ±.005 ANGLES ± 2°
DO NOT SCALE THIS DRAWING
MATERIAL SEE NOTE 1
HEAT TREATMENT NONE
FINAL FINISH SEE NOTES

MIT INSTRUMENTATION LAB
CAMBRIDGE, MASS
DRAWN P. Baudreau DATE
CHECKED
APPROVAL 9/22/64
APPROVAL
NASA APPROVAL
MIT APPROVAL
MIT APPROVAL

MANNED SPACECRAFT CENTER
HOUSTON, TEXAS

HOUSING, FRONT PANEL
AGC DSKY MAIN (100 SERIES)

CODE IDENT NO. 80230
SIZE E
NASA DRAWING NO. 1004759
SCALE 1/1
WT
SHEET 1 OF 3

1004759 E

NOTICE — WHEN GOVERNMENT DRAWINGS, SPECIFICATIONS, OR OTHER DATA ARE USED FOR ANY PURPOSE OTHER THAN IN CONNECTION WITH A DEFINITELY RELATED GOVERNMENT PROCUREMENT OPERATION, THE UNITED STATES GOVERNMENT THEREBY INCURS NO RESPONSIBILITY NOR ANY OBLIGATION WHATSOEVER, AND THE FACT THAT THE GOVERNMENT MAY HAVE FORMULATED, FURNISHED, OR IN ANY WAY SUPPLIED THE SAID DRAWINGS, SPECIFICATIONS, OR OTHER DATA IS NOT TO BE REGARDED BY IMPLICATION OR OTHERWISE AS IN ANY MANNER LICENSING THE HOLDER OR ANY OTHER PERSON OR CORPORATION, OR CONVEYING ANY RIGHTS OR PERMISSION TO MANUFACTURE, USE, OR SELL ANY PATENTED INVENTION THAT MAY IN ANY WAY BE RELATED THERETO

REVISIONS 3222

SYM	DESCRIPTION	DATE	APPROVAL
A	REVISED PER TDRR 13669 DR [illegible] CHK [illegible]	11/9/64	[illegible]
B	REVISED PER TDRR 16474 DR D.Q. Clermont CHK [illegible]	3/3/65	HAC
C	REVISED PER TDRR 20445 DR C.R. Bustro CHK [illegible]	9/14/65	[illegible]
D	REVISED PER TDRR 20546 DR [illegible] CHK [illegible]	9/24/65	[illegible]
E	REVISED PER TDRR 21551 DR R. [illegible] CHK C.A.P.	9/26/65	[illegible]

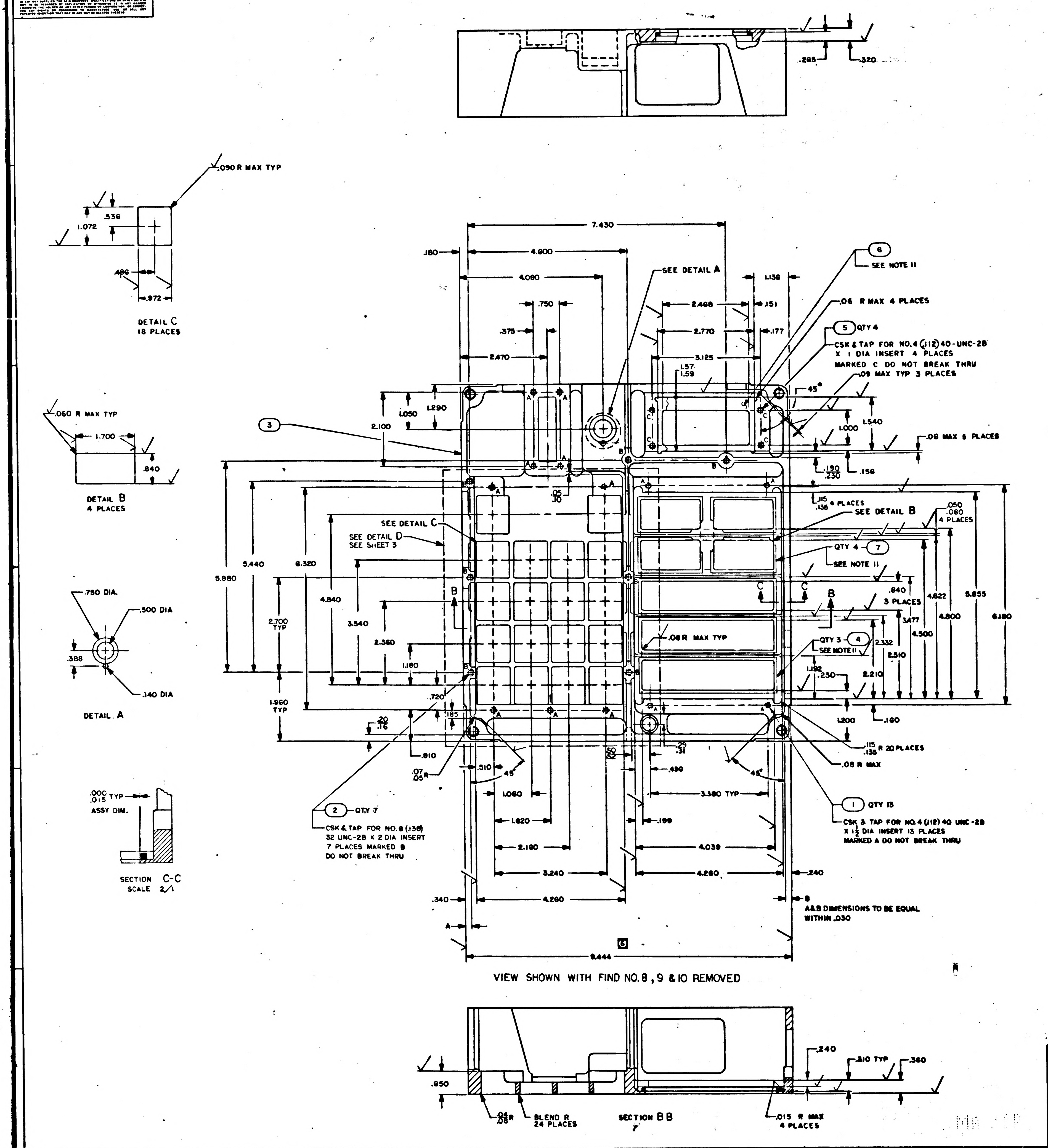
.265
.320
.090 R MAX TYP
.536
1.072
.486
.972
DETAIL C
18 PLACES
.060 R MAX TYP
1.700
.840
DETAIL B
4 PLACES
.750 DIA.
.500 DIA
.388
.140 DIA
DETAIL A
.000 .015 TYP
ASSY DIM.
SECTION C-C
SCALE 2/1
7.430
.180
4.900
4.090
.750
.375
2.470
SEE DETAIL A
1.136
2.498
.151
2.770
.177
3.125
1.57 1.59
6 SEE NOTE 11
.06 R MAX 4 PLACES
5 QTY 4
CSK & TAP FOR NO.4 (.112) 40-UNC-2B X 1 DIA INSERT 4 PLACES MARKED C DO NOT BREAK THRU
.09 MAX TYP 3 PLACES
45°
1.540
1.000
.06 MAX 5 PLACES
.190 .230
.156
.115 .135 4 PLACES
SEE DETAIL B
.050 .060 4 PLACES
1.290
1.050
2.100
3
.05 .10
SEE DETAIL C
SEE DETAIL D
SEE SHEET 3
5.980
5.440
6.320
4.840
3.540
2.360
1.180
2.700 TYP
1.960 TYP
QTY 4 7
SEE NOTE 11
B
C
.840 3 PLACES
3.477
4.622
4.800
5.855
6.180
4.500
.06R MAX TYP
QTY 3 4
SEE NOTE 11
2.332
2.510
1.192
.230
2.210
.160
1.200
.720
.185
.20 .16
.910
.07 .05 R
.510
45°
.50 .52
.25 .31
.490
.115 .135 R 20 PLACES
.05 R MAX
45°
1 QTY 13
CSK & TAP FOR NO.4 (.112) 40 UNC-2B X 1½ DIA INSERT 13 PLACES MARKED A DO NOT BREAK THRU
2 QTY 7
CSK & TAP FOR NO.6 (.138) 32 UNC-2B X 2 DIA INSERT 7 PLACES MARKED B DO NOT BREAK THRU
1.080
1.620
2.160
3.240
4.280
3.380 TYP
.199
4.039
4.280
.240
.340
A
B
A&B DIMENSIONS TO BE EQUAL WITHIN .030
G
9.444
.240
.310 TYP
.360
.950
.04 .08 R
BLEND R 24 PLACES
SECTION BB
.015 R MAX 4 PLACES

VIEW SHOWN WITH FIND NO.8, 9 & 10 REMOVED

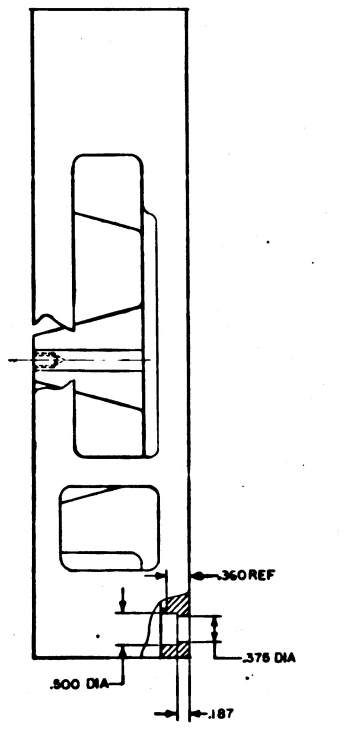
.360 REF
.376 DIA
.500 DIA
.187

SEE NOTE 1

QTY REQD	PART OR IDENTIFYING NO.	NOMENCLATURE OR DESCRIPTION	FIND NO
2	1004759-3	EXTENDER, RIB	10
17	NAS662C2-4	SCREW, FLAT HD, 100°	9
1	1004759-2	EXTENDER RIB	8
4	1004827	CUSHION	7
1	1004830	GASKET	6
4	MS21208-C0410	INSERT, SCREW THREAD	5
3	1004829	CUSHION, REGISTER	4
1	1004759-1	HOUSING, FRONT PANEL	3
7	MS21209-C0620	INSERT, SCREW THREAD	2
13	MS21209-C0415	INSERT, SCREW THREAD	1

LIST OF MATERIALS

NEXT ASSY	USED ON
1003707	

APPLICATION

UNLESS OTHERWISE SPECIFIED
DIMENSIONS ARE IN INCHES
TOLERANCES ON
FRACTIONS ± DECIMALS ±.005 ANGLES ± 2°
DO NOT SCALE THIS DRAWING
MATERIAL
HEAT TREATMENT
FINAL FINISH

M I T
INSTRUMENTATION LAB
CAMBRIDGE, MASS
DRAWN R Buchanan DATE 17 Aug 64
CHECKED [illegible] 18 Sept 64
APPROVAL [illegible] 9/22/64
APPROVAL [illegible] 6 Oct 64
NASA APPROVAL [illegible]
MIT APPROVAL
MIT APPROVAL [illegible]

MANNED SPACECRAFT CENTER
HOUSTON, TEXAS

HOUSING, FRONT PANEL
AGC DSKY MAIN 100 SERIES

CODE IDENT NO. 80230
SIZE E
NASA DRAWING NO. 1004759
SCALE 1/1
WT
SHEET 2 OF 3

	REVISIONS		
SYM	DESCRIPTION	DATE	APPROVAL
C	THIS SHEET ADDED PER TDRR 20445		
D	REVISED PER TDRR 20946 DR E.P.O. CHK		
E	REVISED PER TDRR 21551 DR R. CHK CAP	9/2/65	

[illegible]

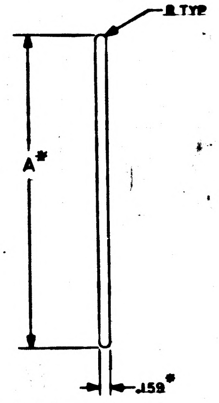

PART NO.	DIM. A
1004759-2	4.870*
1004759-3	6.230*

NOTES
1. MATL: .125 THK 6061-T6 ALUM/QQ-A-250/11
2. REMOVE BURRS AND SHARP EDGES .005/.015
3. * INDICATES NOMINAL DIMENSION, TO FIT AT ASSEMBLY.

EXTENDER, RIB
1004759-2
1004759-3
SCALE 1/1

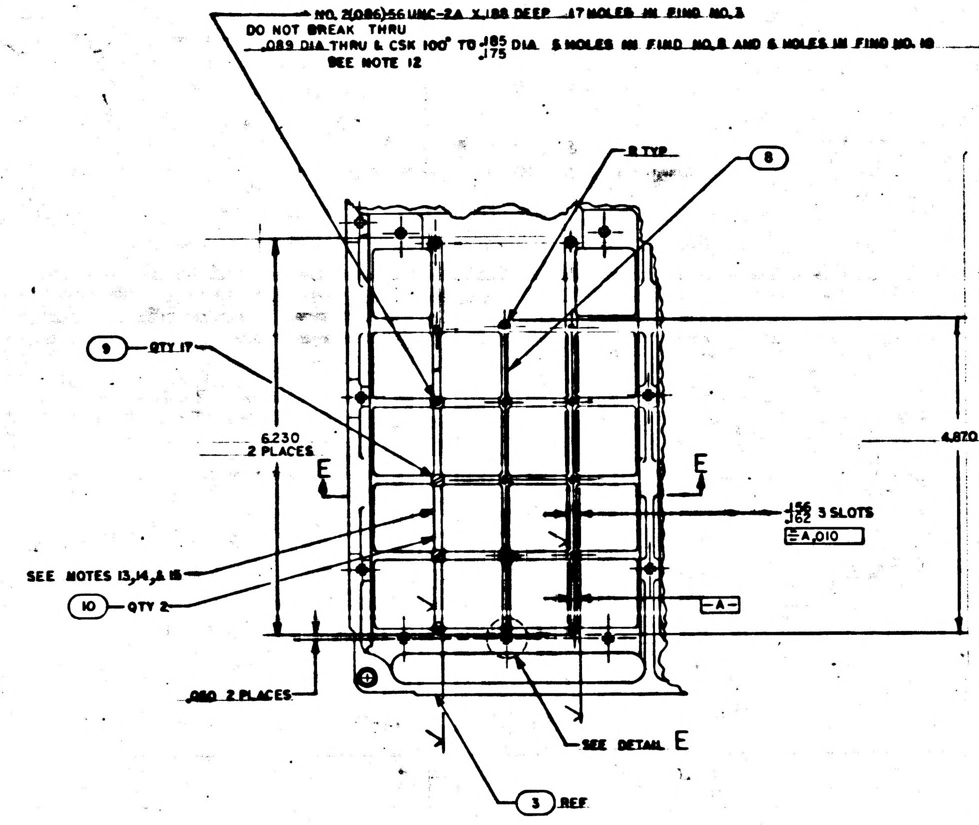
NO. 2(.086)-56 UNC-2A X .188 DEEP 17 HOLES IN FIND NO. 3
DO NOT BREAK THRU
.089 DIA THRU & CSK 100° TO .185/.175 DIA 5 HOLES IN FIND NO. 8 AND 6 HOLES IN FIND NO. 10
SEE NOTE 12
R TYP
8
9 QTY 17
6.230 2 PLACES
E
E
4.870
.156/.162 3 SLOTS
= A .010
SEE NOTES 13, 14, & 15
10 QTY 2
-A-
.080 2 PLACES
SEE DETAIL E
3 REF

DETAIL D
SEE SHEET 2

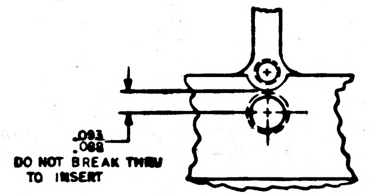
.093/.088
DO NOT BREAK THRU TO INSERT

DETAIL E
SCALE 4/1

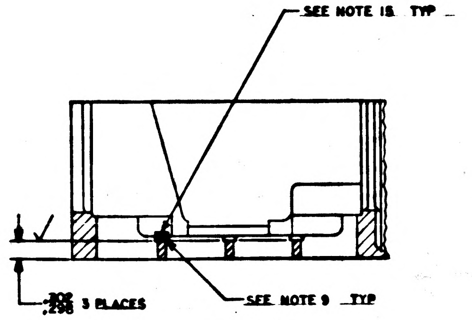
SEE NOTE 15 TYP
.302/.298 3 PLACES
SEE NOTE 9 TYP

SECTION E-E

Ⓒ THIS SHEET ADDED

MASTER

QTY REQD	PART OR IDENTIFYING NO.	NOMENCLATURE OR DESCRIPTION	FIND NO.

LIST OF MATERIALS

1003707	
NEXT ASSY	USED ON
APPLICATION	

UNLESS OTHERWISE SPECIFIED
DIMENSIONS ARE IN INCHES
TOLERANCES ON
FRACTIONS ± DECIMALS ±.005 ANGLES ±2°
DO NOT SCALE THIS DRAWING
MATERIAL
HEAT TREATMENT
FINAL FINISH

MIT
INSTRUMENTATION LAB
CAMBRIDGE, MASS.
DRAWN DATE
CHECKED
APPROVAL
APPROVAL
NASA APPROVAL
MIT APPROVAL
MIT APPROVAL

MANNED SPACECRAFT CENTER
HOUSTON, TEXAS

HOUSING, FRONT PANEL
AGC DSKY MAIN 100 SERIES

CODE IDENT NO. 80230
SIZE E
NASA DRAWING NO. 1004759
SCALE 1/1
WT
SHEET 3 OF 3

NOTICE — WHEN GOVERNMENT DRAWINGS, SPECIFICATIONS, OR OTHER DATA ARE USED FOR ANY PURPOSE OTHER THAN IN CONNECTION WITH A DEFINITELY RELATED GOVERNMENT PROCUREMENT OPERATION, THE UNITED STATES GOVERNMENT THEREBY INCURS NO RESPONSIBILITY NOR ANY OBLIGATION WHATSOEVER AND THE FACT THAT THE GOVERNMENT MAY HAVE FORMULATED, FURNISHED, OR IN ANY WAY SUPPLIED THE SAID DRAWINGS, SPECIFICATIONS OR OTHER DATA IS NOT TO BE REGARDED BY IMPLICATION OR OTHERWISE AS IN ANY MANNER LICENSING THE HOLDER OR ANY OTHER PERSON OR CORPORATION, OR CONVEYING ANY RIGHTS OR PERMISSION TO MANUFACTURE, USE, OR SELL ANY PATENTED INVENTION THAT MAY IN ANY WAY BE RELATED THERETO

SYM	DESCRIPTION	DATE	APPROVAL
REVISIONS			

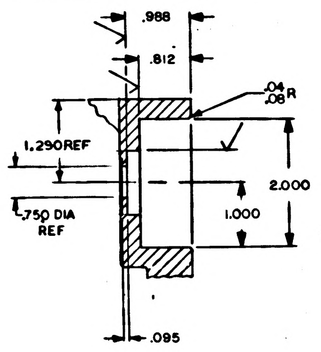
.988
.812
.04
.08 R
1.290 REF
2.000
1.000
.750 DIA
REF
.095

PARTIAL SECTION A-A

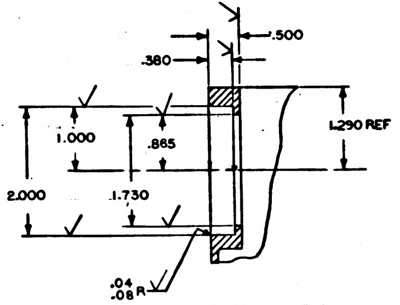
.500
.380
1.000
.865
1.290 REF
2.000
1.730
.04
.08 R

PARTIAL SECTION D-D

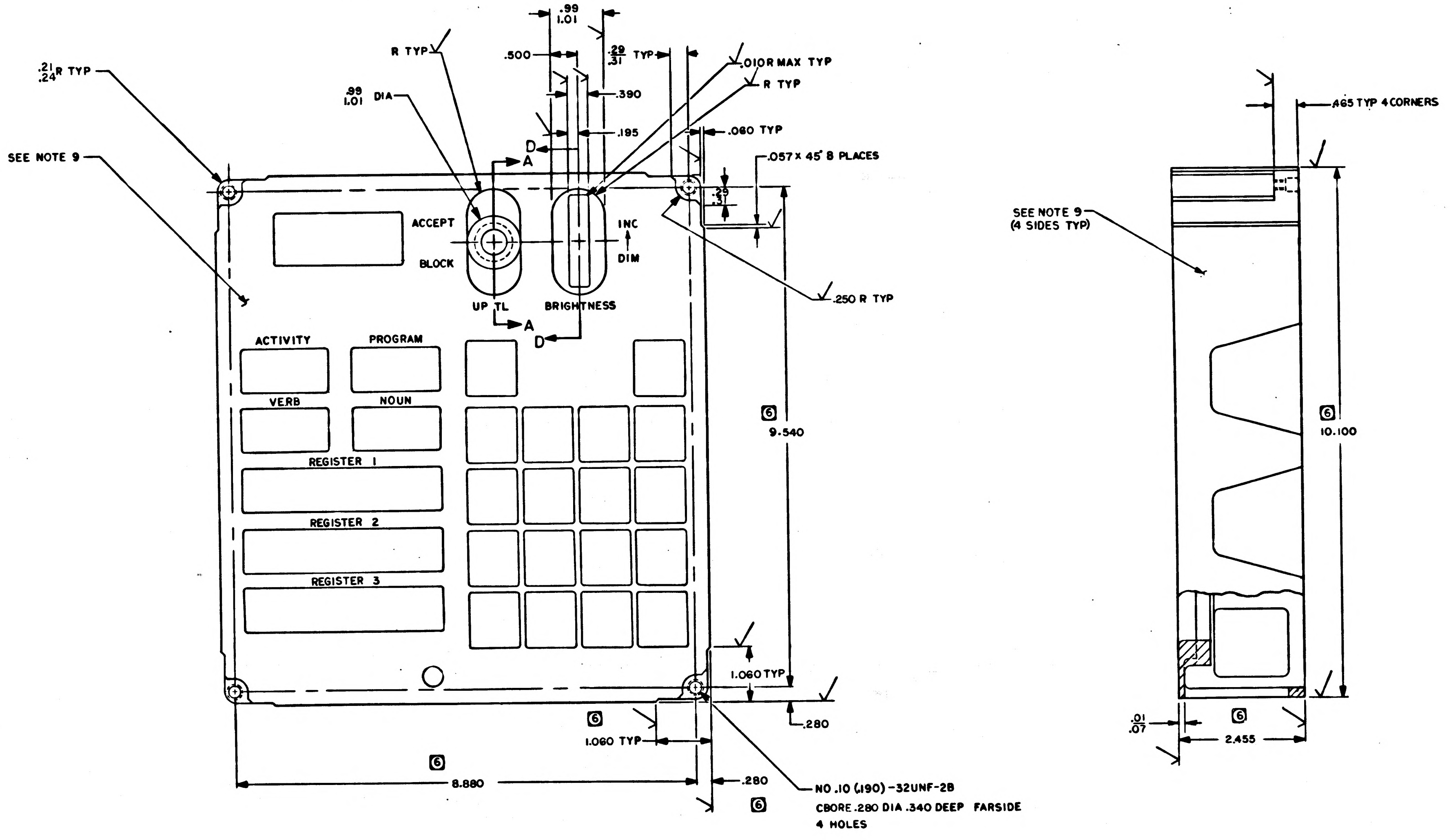
.21
.24 R TYP
SEE NOTE 9
R TYP
.99
1.01 DIA
.500
.99
1.01
.29
.31 TYP
.390
.195
.010R MAX TYP
R TYP
.080 TYP
.057 X 45° 8 PLACES
.29
.31
D
A
ACCEPT
BLOCK
UP TL
INC
DIM
BRIGHTNESS
A
D
.250 R TYP
ACTIVITY
PROGRAM
VERB
NOUN
REGISTER 1
REGISTER 2
REGISTER 3
6
9.540
1.060 TYP
.280
6
1.060 TYP
6
8.880
.280
6
NO.10 (.190)-32UNF-2B
CBORE .280 DIA .340 DEEP FARSIDE
4 HOLES
.465 TYP 4 CORNERS
SEE NOTE 9
(4 SIDES TYP)
6
10.100
.01
.07
6
2.455

NOTES
1. MAKE FROM DWG 1004586
2. SURFACE MARKED $\surd$ TO BE $\overset{125}{\surd}$
3. REMOVE ALL BURRS AND SHARP EDGES
4. ANODIZE PER MIL-A-8625, TYPE I CHROMIC-ACID DYED BLACK
5. SILK SCREEN .12 HIGH WHITE PER ND1002019 USING MARKING INK PER 1006271-1 MARKING APPROXIMATELY WHERE SHOWN
6. 6 DIMENSIONS ARE CONTROLLED BY ICDMH01-01005-116
7. INTERPRET DRAWING IN ACCORDANCE WITH STANDARDS PRESCRIBED BY MIL-D-70327
8. 8 NOTES CONTROLLED BY ICD-MH01-01046-416
E 9. PAINT INDICATED SURFACES WITH 1010729-1 MEDIUM GREY EPOXY RESIN ENAMEL PER ND1002110
10. IDENTIFY PER ND1002019
11. BOND FIND NO.S 4, 6 & 7 TO FIND NO. 3 PER ND1002150

MASTER

FOR LIST OF MATERIALS SEE SHEET 2

QTY REQD	PART OR IDENTIFYING NO.	NOMENCLATURE OR DESCRIPTION	FIND NO.
LIST OF MATERIALS			

1003707	
NEXT ASSY	USED ON
APPLICATION	

UNLESS OTHERWISE SPECIFIED
DIMENSIONS ARE IN INCHES
TOLERANCES ON
FRACTIONS ± DECIMALS ±.005 ANGLES ± 2°
DO NOT SCALE THIS DRAWING
MATERIAL: SEE NOTE 1
HEAT TREATMENT: NONE
FINAL FINISH: SEE NOTE 4

MIT
INSTRUMENTATION LAB
CAMBRIDGE, MASS.
DRAWN P. Boudreau DATE 1 Aug 64
CHECKED J. Hagen 18 Sep 64
APPROVAL 9/22/64
APPROVAL 6 Oct 64
NASA APPROVAL 10-6-64
MIT APPROVAL
MIT APPROVAL

MANNED SPACECRAFT CENTER
HOUSTON, TEXAS

HOUSING, FRONT PANEL
AGC DSKY MAIN (100 SERIES)

CODE IDENT NO. — SIZE E NASA DRAWING NO. 1004759
SCALE 1/1 WT SHEET 1 OF 2

1004759

SYM	REVISIONS DESCRIPTION	DATE	APPROVAL

NOTICE — WHEN GOVERNMENT DRAWINGS, SPECIFICATIONS, OR OTHER DATA ARE USED FOR ANY PURPOSE OTHER THAN IN CONNECTION WITH A DEFINITELY RELATED GOVERNMENT PROCUREMENT OPERATION, THE UNITED STATES GOVERNMENT THEREBY INCURS NO RESPONSIBILITY NOR ANY OBLIGATION WHATSOEVER, AND THE FACT THAT THE GOVERNMENT MAY HAVE FORMULATED, FURNISHED, OR IN ANY WAY SUPPLIED THE SAID DRAWINGS, SPECIFICATIONS OR OTHER DATA IS NOT TO BE REGARDED BY IMPLICATION OR OTHERWISE AS IN ANY MANNER LICENSING THE HOLDER OR ANY OTHER PERSON OR CORPORATION, OR CONVEYING ANY RIGHTS OR PERMISSION TO MANUFACTURE, USE, OR SELL ANY PATENTED INVENTION THAT MAY IN ANY WAY BE RELATED THERETO

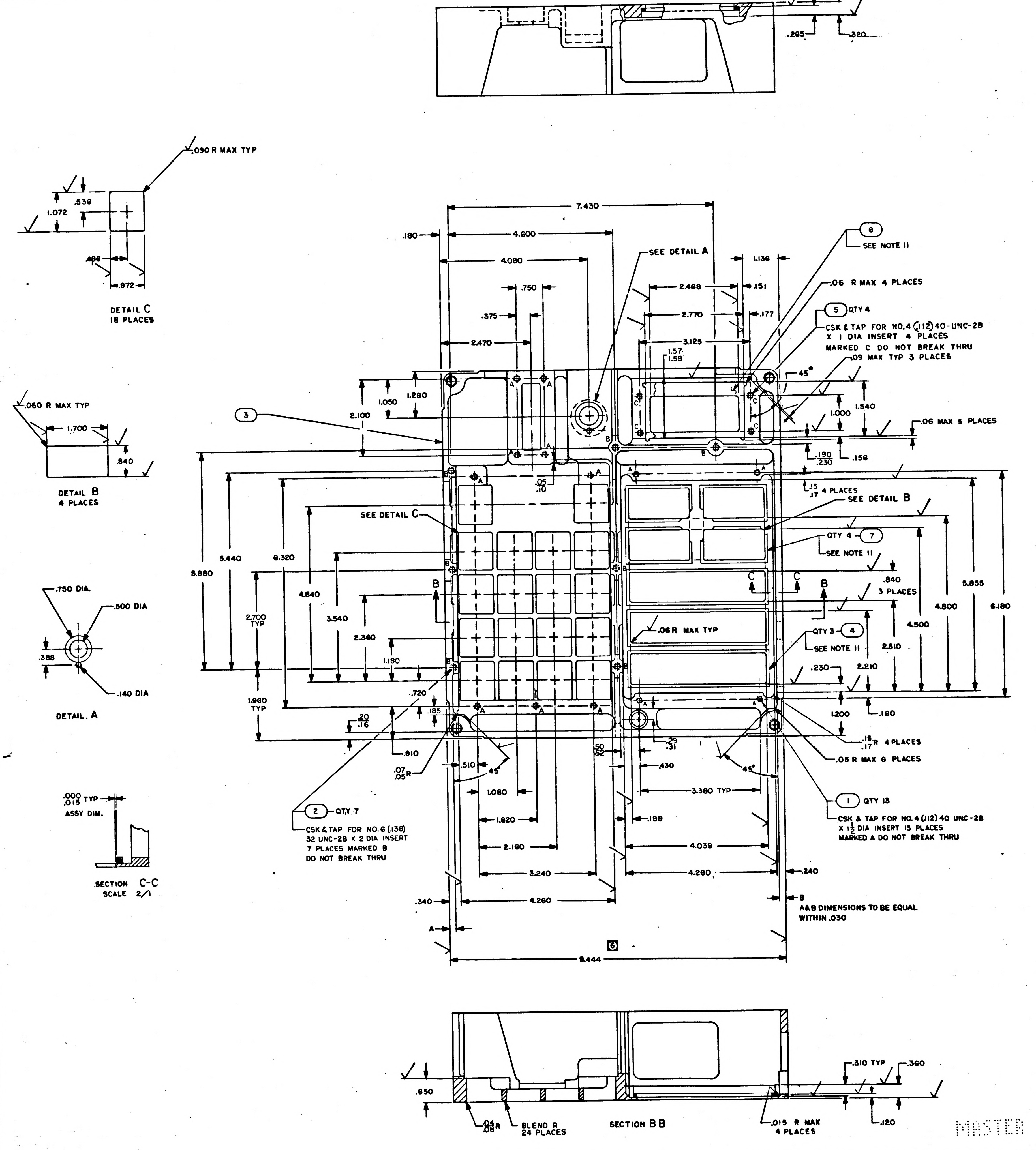
.265
.320
.090 R MAX TYP
.536
1.072
.486
.972
DETAIL C
18 PLACES
.060 R MAX TYP
1.700
.840
DETAIL B
4 PLACES
.750 DIA.
.500 DIA
.388
.140 DIA
DETAIL. A
.000
.015 TYP
ASSY DIM.
SECTION C-C
SCALE 2/1
7.430
.180
4.600
4.090
.750
.375
2.470
SEE DETAIL A
1.136
2.498
.151
2.770
.177
3.125
1.57
1.59
6
SEE NOTE 11
.06 R MAX 4 PLACES
5 QTY 4
CSK & TAP FOR NO. 4 (.112) 40-UNC-2B
X 1 DIA INSERT 4 PLACES
MARKED C DO NOT BREAK THRU
.09 MAX TYP 3 PLACES
45°
1.540
1.000
.06 MAX 5 PLACES
.190
.230
.156
1.290
1.050
2.100
3
.05
.10
.15
.17 4 PLACES
SEE DETAIL B
SEE DETAIL C
QTY 4 7
SEE NOTE 11
5.980
5.440
6.320
4.840
3.540
2.700 TYP
2.360
1.180
1.960 TYP
.720
.185
.20
.16
C
C
B
B
.840
3 PLACES
5.855
4.800
4.500
6.180
.06 R MAX TYP
QTY 3 4
SEE NOTE 11
2.510
.230
2.210
1.200
.160
.29
.31
.50
.52
.15
.17 R 4 PLACES
.05 R MAX 6 PLACES
.910
.07
.05 R
.510
45°
.430
45°
1.080
3.380 TYP
1.620
.199
1 QTY 13
CSK & TAP FOR NO. 4 (.112) 40 UNC-2B
X 1 1/2 DIA INSERT 13 PLACES
MARKED A DO NOT BREAK THRU
2 QTY 7
CSK & TAP FOR NO. 6 (.138)
32 UNC-2B X 2 DIA INSERT
7 PLACES MARKED B
DO NOT BREAK THRU
2.160
4.039
3.240
4.260
.240
4.260
.340
B
A&B DIMENSIONS TO BE EQUAL
WITHIN .030
A
6
8.444
.310 TYP
.360
.650
.04
.08 R
BLEND R
24 PLACES
SECTION BB
.015 R MAX
4 PLACES
.120

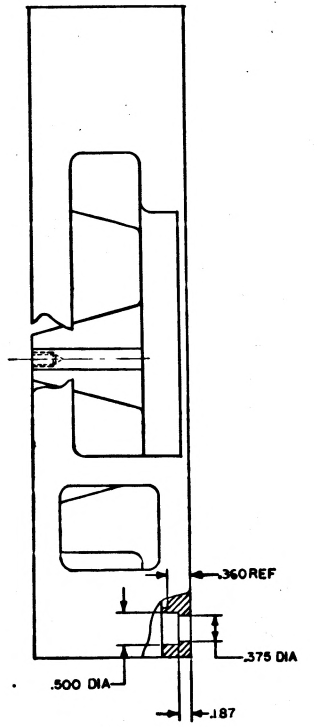
.360 REF
.375 DIA
.500 DIA
.187

SEE NOTE 1

QTY REQD	PART OR IDENTIFYING NO.	NOMENCLATURE OR DESCRIPTION	FIND NO.
4	1004752	CUSHION	7
1	1004760	GASKET	6
4	MS21208-C0410	INSERT, SCREW THREAD	5
3	1004754	CUSHION, REGISTER	4
1	1004151-1	HOUSING, FRONT PANEL	3
7	MS21209-C0620	INSERT, SCREW THREAD	2
13	MS21209-C0415	INSERT, SCREW THREAD	1

LIST OF MATERIALS

NEXT ASSY	USED ON
1003707	

APPLICATION

UNLESS OTHERWISE SPECIFIED
DIMENSIONS ARE IN INCHES
TOLERANCES ON
FRACTIONS ± DECIMALS ±.005 ANGLES ± 2°
DO NOT SCALE THIS DRAWING
MATERIAL
HEAT TREATMENT
FINAL FINISH

MIT
INSTRUMENTATION LAB
Cambridge, Mass
DWG. NO. CONTRACT
DRAWN R Boudreau DATE 17 Aug 64
CHECKED L Lopez 18 Sept 64
APPROVAL Hansen 9/22/64
APPROVAL C Hall 6 Oct 64
NASA APPROVAL WJ Rhine 10-8-64
MIT APPROVAL
MIT APPROVAL

MANNED SPACECRAFT CENTER
HOUSTON, TEXAS

HOUSING, FRONT PANEL
AGC DSKY MAIN 100 SERIES

CODE IDENT NO. —— SIZE E NASA DRAWING NO. 1004759
SCALE 1/1 WT SHEET 2 OF 2

MASTER

NOTICE — WHEN GOVERNMENT DRAWINGS, SPECIFICATIONS, OR OTHER DATA ARE USED FOR ANY PURPOSE OTHER THAN IN CONNECTION WITH A DEFINITELY RELATED GOVERNMENT PROCUREMENT OPERATION, THE UNITED STATES GOVERNMENT THEREBY INCURS NO RESPONSIBILITY NOR ANY OBLIGATION WHATSOEVER; AND THE FACT THAT THE GOVERNMENT MAY HAVE FORMULATED, FURNISHED, OR IN ANY WAY SUPPLIED THE SAID DRAWINGS, SPECIFICATIONS OR OTHER DATA IS NOT TO BE REGARDED BY IMPLICATION OR OTHERWISE AS IN ANY MANNER LICENSING THE HOLDER OR ANY OTHER PERSON OR CORPORATION, OR CONVEYING ANY RIGHTS OR PERMISSION TO MANUFACTURE, USE, OR SELL ANY PATENTED INVENTION THAT MAY IN ANY WAY BE RELATED THERETO.

REVISIONS 20569			
SYM	DESCRIPTION	DATE	APPROVAL

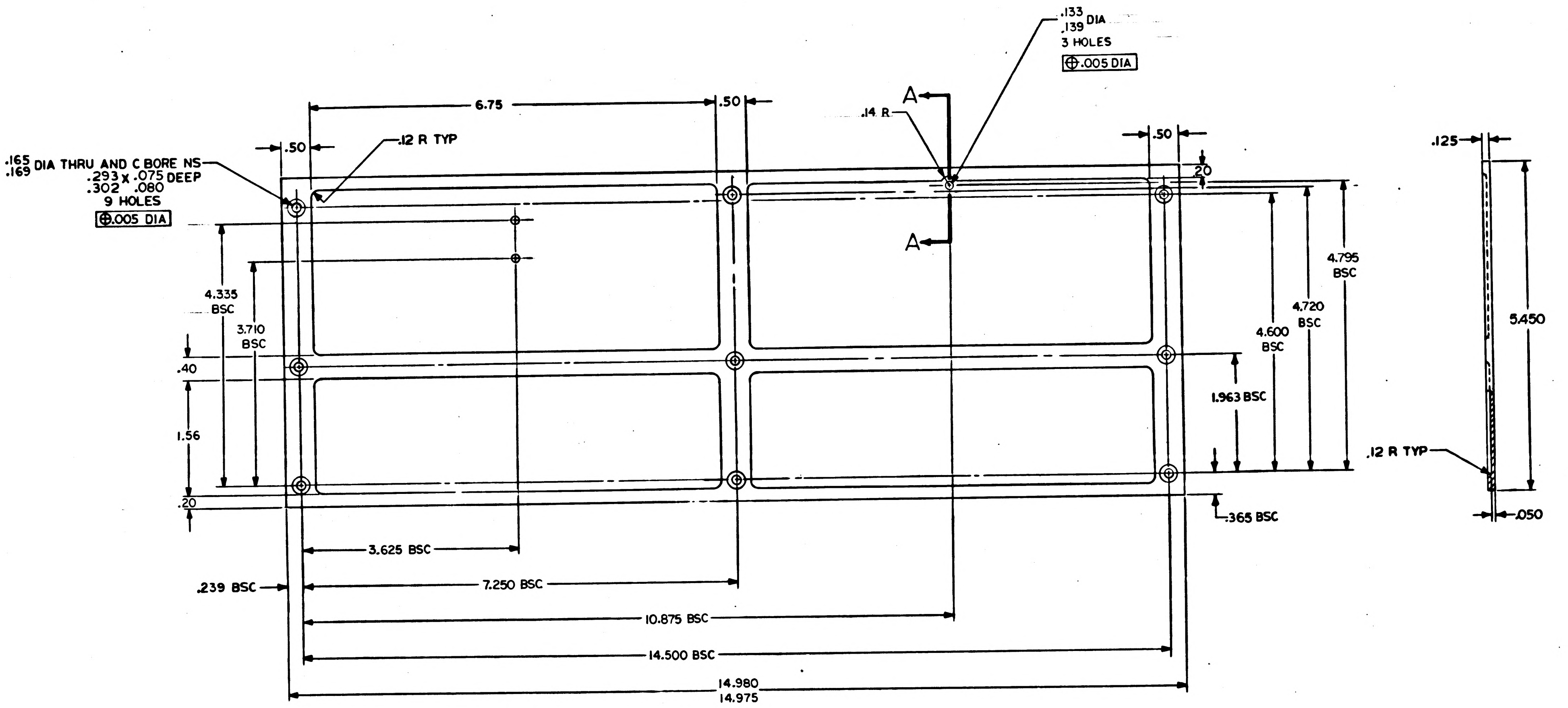

.133
.139 DIA
3 HOLES
⊕.005 DIA
A
A
.14 R
6.75
.50
.50
.50
.12 R TYP
.165
.169 DIA THRU AND C BORE NS
.293 X .075 DEEP
.302 .080
9 HOLES
⊕.005 DIA
.20
4.795 BSC
4.720 BSC
4.600 BSC
1.963 BSC
.365 BSC
4.335 BSC
3.710 BSC
.40
1.56
.20
3.625 BSC
.239 BSC
7.250 BSC
10.875 BSC
14.500 BSC
14.980
14.975
.125
5.450
.12 R TYP
.050

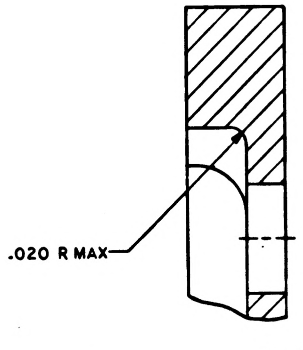

SECTION A-A
SCALE 10/1

MASTER

NOTES:
1. INTERPRET DRAWING IN ACCORDANCE WITH STANDARDS PRESCRIBED BY MIL-D-70327
2. MATERIAL: 6061-T6 ALUMINUM, PER QQ-A-250/11
3. SURFACE QUALITY: 125✓ ALL OVER
4. REMOVE ALL BURRS AND BREAK SHARP EDGES .005/.015
5. FINISH: PLATE (ELECTRODEPOSITED) ALL SURFACES PER QQ-C-320, CLASS 2, TYPE II PLATING TO BE .0004 TO .0008 THICK, HARDNESS ROCKWELL C60 MIN. DIMENSIONS APPLY AFTER PLATING. SPECIFIED THICKNESS NOT REQUIRED IN ALL HOLES AS LONG AS PLATING IS CONTINUOUS THROUGH EACH HOLE
6. IDENTIFY WITH DRAWING NO. AND REVISION PER ND1002019

QTY REQD	PART OR IDENTIFYING NO.	NOMENCLATURE OR DESCRIPTION	FIND NO.
LIST OF MATERIALS			

1003700	
NEXT ASSY	USED ON
APPLICATION	

UNLESS OTHERWISE SPECIFIED DIMENSIONS ARE IN INCHES
TOLERANCES ON
FRACTIONS ± — DECIMALS XXX ±.005 XX ±.01 ANGLES ± —
DO NOT SCALE THIS DRAWING
MATERIAL SEE NOTE 2
HEAT TREATMENT
FINAL FINISH SEE NOTE 5

MIT INSTRUMENTATION LAB
CAMBRIDGE, MASS.
DWG. NO. CONTRACT
DRAWN R. Leard DATE 8 Jul 65
CHECKED [illegible] 9 Jul 65
APPROVAL
APPROVAL R. Alonso
NASA APPROVAL
MIT APPROVAL W. Kupfer 1 Jul 65

MANNED SPACECRAFT CENTER
HOUSTON, TEXAS

REAR PLATE
TRAY A&B
AGC COMPUTER

CODE IDENT NO. 80230
SIZE D
NASA DRAWING NO. 1004762
SCALE 1/1
WT —
SHEET 1 OF 1

NOTICE – WHEN GOVERNMENT DRAWINGS, SPECIFICATIONS, OR OTHER DATA ARE USED FOR ANY PURPOSE OTHER THAN IN CONNECTION WITH A DEFINITELY RELATED GOVERNMENT PROCUREMENT OPERATION, THE UNITED STATES GOVERNMENT THEREBY INCURS NO RESPONSIBILITY NOR ANY OBLIGATION WHATSOEVER; AND THE FACT THAT THE GOVERNMENT MAY HAVE FORMULATED, FURNISHED, OR IN ANY WAY SUPPLIED THE SAID DRAWINGS, SPECIFICATIONS OR OTHER DATA IS NOT TO BE REGARDED BY IMPLICATION OR OTHERWISE AS IN ANY MANNER LICENSING THE HOLDER OR ANY OTHER PERSON OR CORPORATION, OR CONVEYING ANY RIGHTS OR PERMISSION TO MANUFACTURE, USE, OR SELL ANY PATENTED INVENTION THAT MAY IN ANY WAY BE RELATED THERETO.

REVISIONS 24773

SYM	ZONE	DESCRIPTION	DR	CHK	DATE	APPROVED

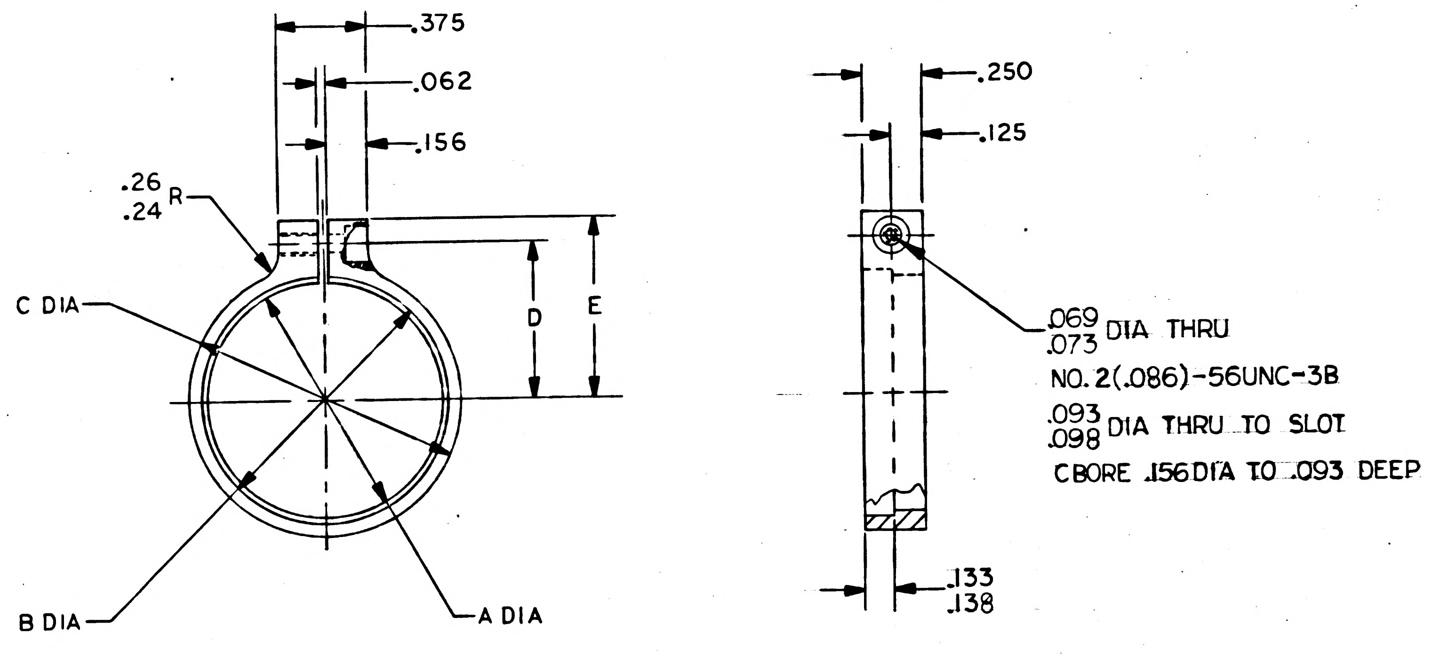

DASH NO.	A DIA	B DIA	C DIA	D	E
-001	1.031	1.074	1.140	.640	.750
-002	.676	.737	.803	.425	.520

NOTES

1. INTERPRET DRAWING IN ACCORDANCE WITH STANDARDS PRESCRIBED BY MIL-D-70327
2. REMOVE BURRS AND SHARP EDGES .005/.015
3. IDENTIFY WITH DRAWING NO. PER ND 1002019
4. CHROMATE PER MIL-C-5541 EXCEPT COATING TO BE ELECTRICALLY CONDUCTIVE

QTY REQD	PART OR IDENTIFYING NO.	MATERIAL OR NOTES	NOMENCLATURE OR DESCRIPTION	FIND NO.

LIST OF MATERIALS

NEXT ASSY	USED ON
1005785	
1004866	

APPLICATION

UNLESS OTHERWISE SPECIFIED
DIMENSIONS ARE IN INCHES
CAPACITOR VALUES ARE IN µf
RESISTOR VALUES ARE IN OHMS
TOLERANCES ON
FRACTIONS ± DECIMALS ±.005 ANGLES ±
DO NOT SCALE THIS DRAWING

MATERIAL
AL ALLOY 2024-T4 PER QQ-A-225/6

MIT
INSTRUMENTATION LAB
CAMBRIDGE, MASS.

DRAWN K.W. Simpson 20SEP65
CHECKED 27SEP65
APPROVED
APPROVED Eldon C Hall
APPROVED MIT A.C. METZGER
APPROVED MSC
DATE

MANNED SPACECRAFT CENTER
HOUSTON, TEXAS

CLAMP,
SUBMINIATURE CONNECTOR

CODE IDENT NO. 80230
SIZE C
DRAWING NO. 1004781
SCALE NONE
SHEET 1 OF 1

MODERN BLUE PRINT CO. D-19550

1004781

NOTICE – WHEN GOVERNMENT DRAWINGS, SPECIFICATIONS, OR OTHER DATA ARE USED FOR ANY PURPOSE OTHER THAN IN CONNECTION WITH A DEFINITELY RELATED GOVERNMENT PROCUREMENT OPERATION, THE UNITED STATES GOVERNMENT THEREBY INCURS NO RESPONSIBILITY NOR ANY OBLIGATION WHATSOEVER; AND THE FACT THAT THE GOVERNMENT MAY HAVE FORMULATED, FURNISHED, OR IN ANY WAY SUPPLIED THE SAID DRAWINGS, SPECIFICATIONS, OR OTHER DATA IS NOT TO BE REGARDED BY IMPLICATION OR OTHERWISE AS IN ANY MANNER LICENSING THE HOLDER OR ANY OTHER PERSON OR CORPORATION, OR CONVEYING ANY RIGHTS OR PERMISSION TO MANUFACTURE, USE OR SELL ANY PATENTED INVENTION THAT MAY IN ANY WAY BE RELATED THERETO.

REVISIONS							
SYM	ZONE	DESCRIPTION	DR	CHK	DATE	APPROVED	
—		RELEASED PER 23989					
A		REVISED PER TDRR 24374					

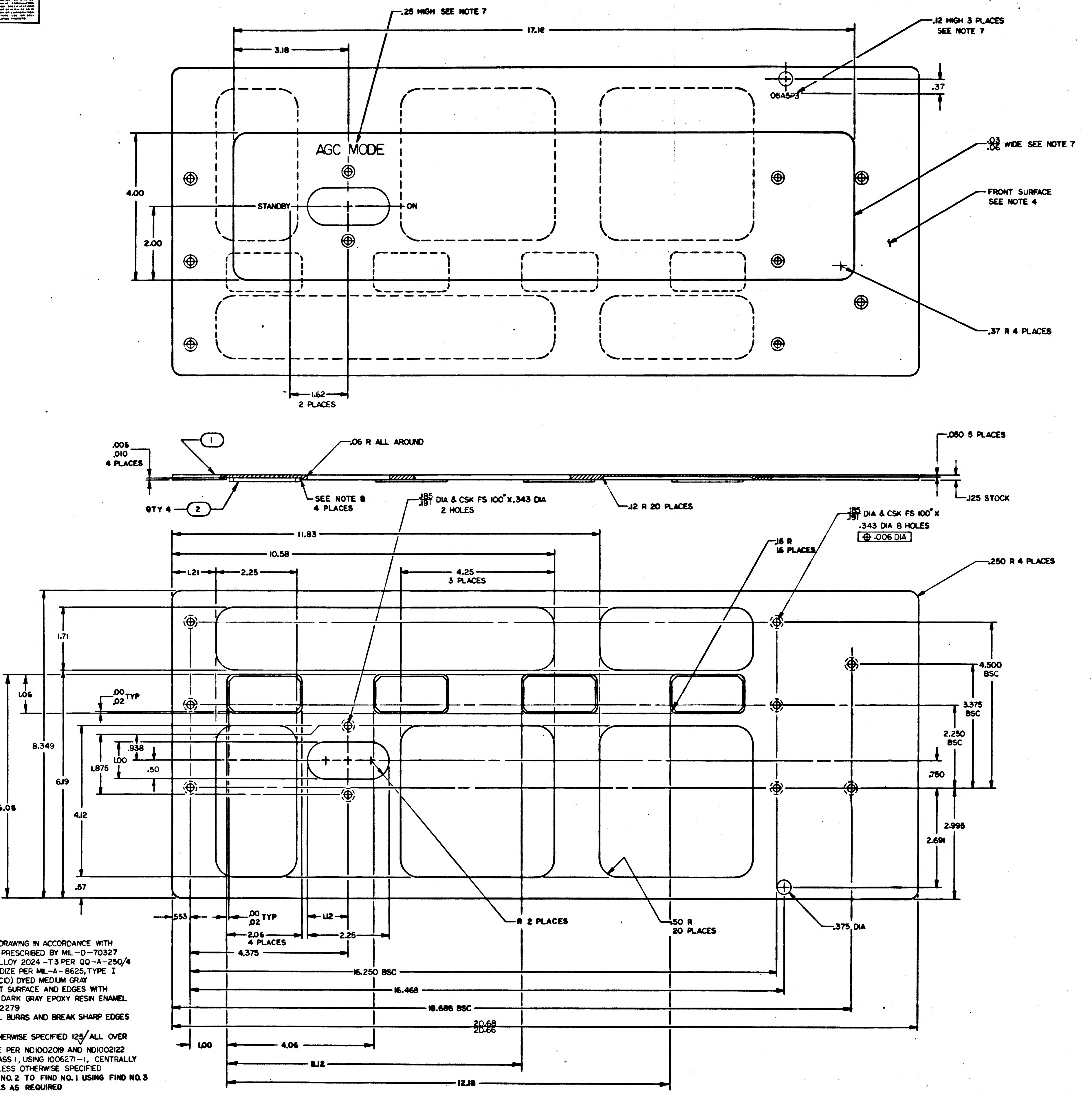

.25 HIGH SEE NOTE 7
17.12
3.18
.12 HIGH 3 PLACES SEE NOTE 7
06A5P3
.37
AGC MODE
STANDBY
ON
4.00
2.00
.03 .06 WIDE SEE NOTE 7
FRONT SURFACE SEE NOTE 4
.37 R 4 PLACES
1.62 2 PLACES
.005 .010 4 PLACES
1
.06 R ALL AROUND
.060 5 PLACES
QTY 4
2
SEE NOTE 8 4 PLACES
.125 STOCK
.12 R 20 PLACES
.185 .191 DIA & CSK FS 100° X .343 DIA 2 HOLES
.185 .191 DIA & CSK FS 100° X .343 DIA 8 HOLES
⊕ .006 DIA
11.83
10.58
1.21
2.25
4.25 3 PLACES
.15 R 16 PLACES
.250 R 4 PLACES
1.71
1.06
.00 .02 TYP
8.349
6.19
6.08
4.12
1.875
1.00
.938
.50
.57
4.500 BSC
3.375 BSC
2.250 BSC
.750
2.996
2.691
.553
.00 .02 TYP
2.06 4 PLACES
1.12
2.25
4.375
R 2 PLACES
.50 R 20 PLACES
.375 DIA
16.250 BSC
16.469
18.686 BSC
20.68 20.66
1.00
4.06
8.12
12.18

NOTES:

1. INTERPRET DRAWING IN ACCORDANCE WITH STANDARDS PRESCRIBED BY MIL–D–70327
2. MATL: AL ALLOY 2024 –T3 PER QQ–A–250/4
3. FINISH: ANODIZE PER MIL–A–8625, TYPE I (CHROMIC ACID) DYED MEDIUM GRAY
4. PAINT FRONT SURFACE AND EDGES WITH 1008809-1 DARK GRAY EPOXY RESIN ENAMEL PER ND1002279
5. REMOVE ALL BURRS AND BREAK SHARP EDGES .005/.015
6. UNLESS OTHERWISE SPECIFIED 125√ ALL OVER
7. MARK WHITE PER ND1002019 AND ND1002122 TYPE II, CLASS 1, USING 1006271–1, CENTRALLY LOCATE UNLESS OTHERWISE SPECIFIED
8. BOND FIND NO. 2 TO FIND NO. 1 USING FIND NO. 3
9. AR DENOTES AS REQUIRED

QTY REQD	PART OR IDENTIFYING NO.	NOMENCLATURE OR DESCRIPTION	FIND NO.
AR	1006338	SEALING COMPOUND, SILICONE RUBBER	3
4	1004787	CUSHION	2
1	1004783-001	FRONT CLOSE-OUT PANEL	1

LIST OF MATERIALS

NEXT ASSY	USED ON
1003700	
1003565	

APPLICATION

UNLESS OTHERWISE SPECIFIED
DIMENSIONS ARE IN INCHES
CAPACITOR VALUES ARE IN μf
RESISTOR VALUES ARE IN OHMS
TOLERANCES ON
FRACTIONS ± — DECIMALS .XX ± .02 .XXX ± .005 ANGLES ± 1/2°
DO NOT SCALE THIS DRAWING

MATERIAL
SEE NOTE 2

MIT
INSTRUMENTATION LAB
CAMBRIDGE, MASS

DRAWN 19 Oct 65
CHECKED R. Edwards
APPROVED
APPROVED Eldon C Hall 19 Oct 65
APPROVED MIT
APPROVED MSC C. METZGER
DATE

MANNED SPACECRAFT CENTER
HOUSTON, TEXAS

FRONT CLOSE-OUT PANEL
AGC COMPUTER (INSEPARABLE ASSEMBLY)

CODE IDENT NO. 80230
SIZE E
DRAWING NO. 1004783
SCALE 1/1
SHEET 1 OF 1

1004783 A

MASTER

NOTICE – WHEN GOVERNMENT DRAWINGS, SPECIFICATIONS, OR OTHER DATA ARE USED FOR ANY PURPOSE OTHER THAN IN CONNECTION WITH A DEFINITELY RELATED GOVERNMENT PROCUREMENT OPERATION, THE UNITED STATES GOVERNMENT THEREBY INCURS NO RESPONSIBILITY NOR ANY OBLIGATION WHATSOEVER, AND THE FACT THAT THE GOVERNMENT MAY HAVE FORMULATED, FURNISHED, OR IN ANY WAY SUPPLIED THE SAID DRAWINGS, SPECIFICATIONS OR OTHER DATA IS NOT TO BE REGARDED BY IMPLICATION OR OTHERWISE AS IN ANY MANNER LICENSING THE HOLDER OR ANY OTHER PERSON OR CORPORATION, OR CONVEYING ANY RIGHTS OR PERMISSION TO MANUFACTURE, USE, OR SELL ANY PATENTED INVENTION THAT MAY IN ANY WAY BE RELATED THERETO.

REVISIONS

SYM	ZONE	DESCRIPTION	DR	CHK	DATE	APPROVED
—		RELEASED PER 23989				

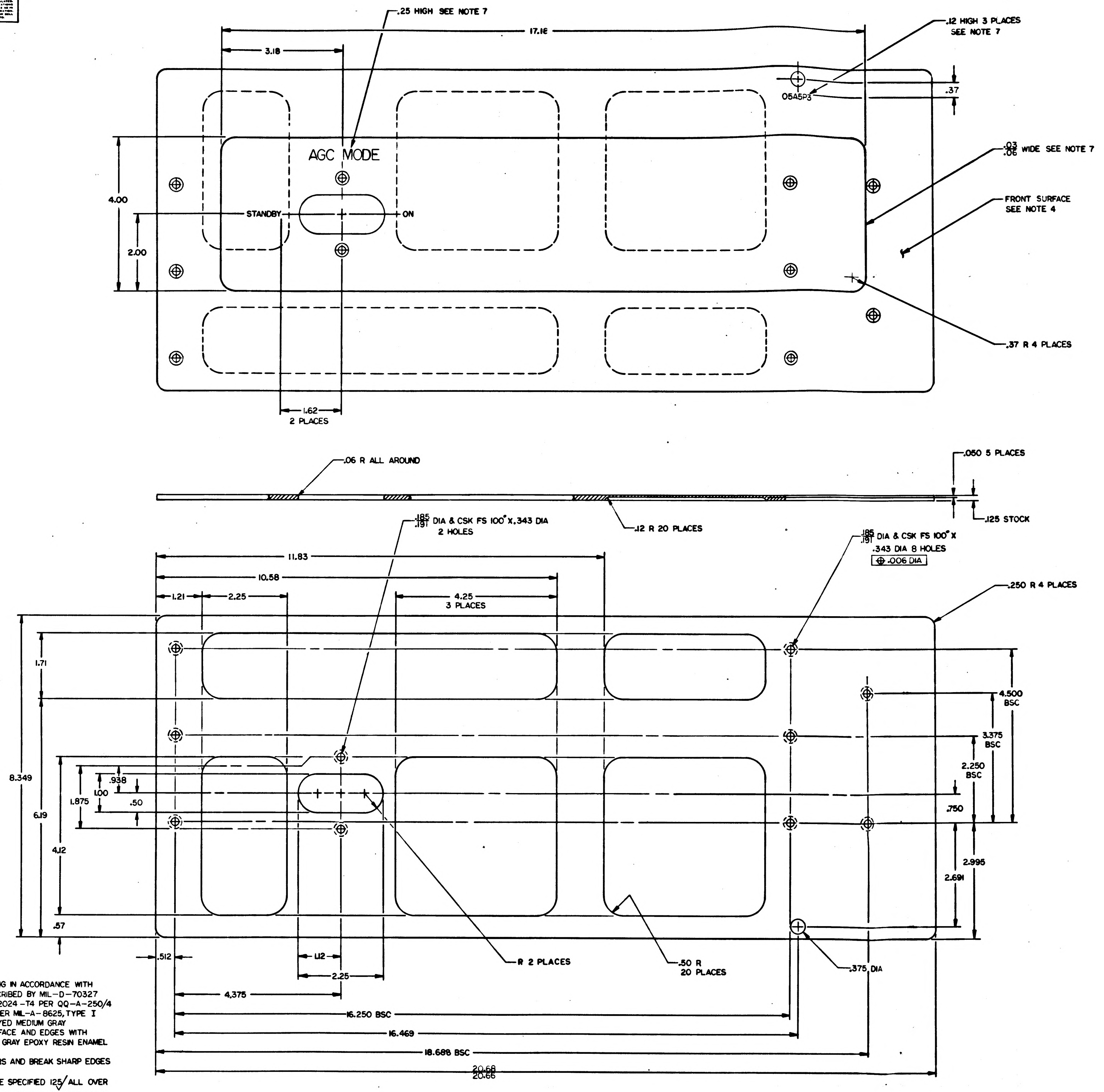

.25 HIGH SEE NOTE 7
17.18
3.18
.12 HIGH 3 PLACES SEE NOTE 7
0545P3
.37
AGC MODE
STANDBY
ON
4.00
2.00
.03/.06 WIDE SEE NOTE 7
FRONT SURFACE SEE NOTE 4
.37 R 4 PLACES
1.62 2 PLACES
.06 R ALL AROUND
.050 5 PLACES
.12 R 20 PLACES
.125 STOCK
.185/.191 DIA & CSK FS 100° X .343 DIA 2 HOLES
.185/.191 DIA & CSK FS 100° X .343 DIA 8 HOLES
⊕ .006 DIA
11.83
10.58
1.21
2.25
4.25 3 PLACES
.250 R 4 PLACES
1.71
8.349
6.19
4.12
1.875
1.00
.938
.50
.57
4.500 BSC
3.375 BSC
2.250 BSC
.750
2.995
2.691
.512
.112
2.25
4.375
R 2 PLACES
.50 R 20 PLACES
.375 DIA
16.250 BSC
16.469
18.688 BSC
20.68/20.66

NOTES:
1. INTERPRET DRAWING IN ACCORDANCE WITH STANDARDS PRESCRIBED BY MIL–D–70327
2. MATL: AL ALLOY 2024 –T4 PER QQ–A–250/4
3. FINISH: ANODIZE PER MIL–A–8625, TYPE I (CHROMIC ACID) DYED MEDIUM GRAY
4. PAINT FRONT SURFACE AND EDGES WITH 1008809-1 DARK GRAY EPOXY RESIN ENAMEL PER ND1002279
5. REMOVE ALL BURRS AND BREAK SHARP EDGES .005/.015
6. UNLESS OTHERWISE SPECIFIED 125√ ALL OVER
7. MARK WHITE PER ND1002019 AND ND1002122 TYPE II, CLASS I, USING 1006271–1, CENTRALLY LOCATE UNLESS OTHERWISE SPECIFIED

MASTER

QTY REQD	PART OR IDENTIFYING NO.	NOMENCLATURE OR DESCRIPTION	FIND NO.

LIST OF MATERIALS

NEXT ASSY	USED ON
1003565	

APPLICATION

UNLESS OTHERWISE SPECIFIED
DIMENSIONS ARE IN INCHES
CAPACITOR VALUES ARE IN μf
RESISTOR VALUES ARE IN OHMS
TOLERANCES ON
FRACTIONS ± — DECIMALS .XX ± .02 .XXX ± .005 ANGLES ± 1/2
DO NOT SCALE THIS DRAWING

MATERIAL
SEE NOTE 2

MIT
INSTRUMENTATION LAB
CAMBRIDGE, MASS.

DRAWN 19 Oct 65
CHECKED R. Edwards
APPROVED
APPROVED Eldon C Hall 20 Oct 65
APPROVED MIT
APPROVED MSC C. METZGER
DATE

MANNED SPACECRAFT CENTER
HOUSTON, TEXAS

FRONT CLOSE-OUT PANEL
AGC COMPUTER

CODE IDENT NO 80230
SIZE E
DRAWING NO. 1004783
SCALE 1/1
SHEET 1 OF 1

1004783 – 1

NOTICE — WHEN GOVERNMENT DRAWINGS SPECIFICATIONS OR OTHER DATA ARE USED FOR ANY PURPOSE OTHER THAN IN CONNECTION WITH A DEFINITELY RELATED GOVERNMENT PROCUREMENT OPERATION THE UNITED STATES GOVERNMENT THEREBY INCURS NO RESPONSIBILITY NOR ANY OBLIGATION WHATSOEVER AND THE FACT THAT THE GOVERNMENT MAY HAVE FORMULATED FURNISHED OR IN ANY WAY SUPPLIED THE SAID DRAWINGS SPECIFICATIONS OR OTHER DATA IS NOT TO BE REGARDED BY IMPLICATION OR OTHERWISE AS IN ANY MANNER LICENSING THE HOLDER OR ANY OTHER PERSON OR CORPORATION OR CONVEYING ANY RIGHTS OR PERMISSION TO MANUFACTURE USE OR SELL ANY PATENTED INVENTION THAT MAY IN ANY WAY BE RELATED THERETO

REVISIONS

SYM	DESCRIPTION	DATE	APPROVAL

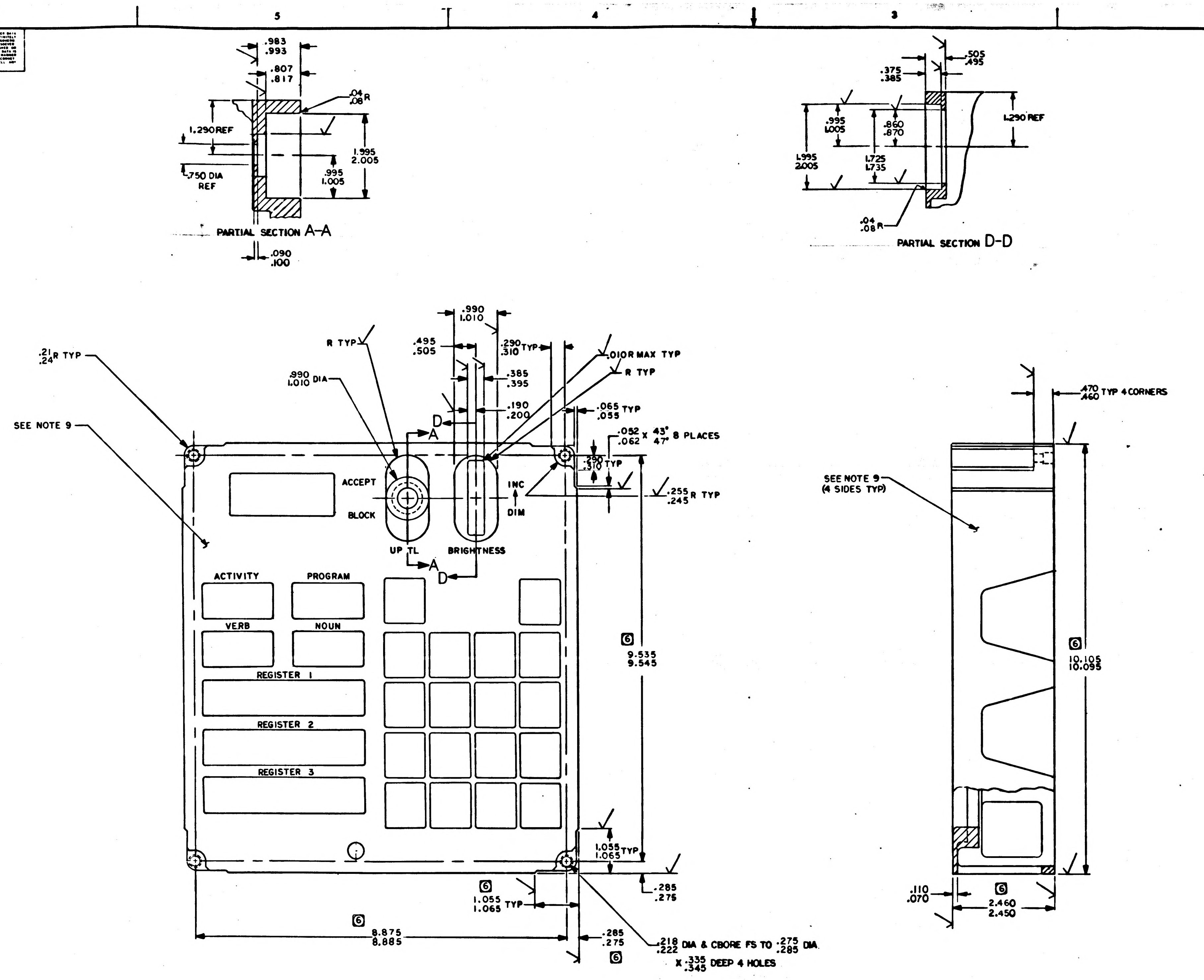

.983 .993
.807 .817
.04 .08 R
1.290 REF
1.995 2.005
.995 1.005
.750 DIA REF
PARTIAL SECTION A-A
.090 .100
.505 .495
.375 .385
.995 1.005
.860 .870
1.290 REF
1.995 2.005
1.725 1.735
.04 .08 R
PARTIAL SECTION D-D
.990 1.010
R TYP
.495 .505
.290 .310 TYP
.21 .24 R TYP
.990 1.010 DIA
.385 .395
.010 R MAX TYP
R TYP
.190 .200
.065 .055 TYP
.052 .062 X 43° 47° 8 PLACES
SEE NOTE 9
D
A
ACCEPT
BLOCK
UP TL
BRIGHTNESS
INC
DIM
.290 .310 TYP
.255 .245 R TYP
ACTIVITY
PROGRAM
VERB
NOUN
REGISTER 1
REGISTER 2
REGISTER 3
6
9.535 9.545
1.055 1.065 TYP
.285 .275
1.055 1.065 TYP
8.875 8.885
.285 .275
.218 .222 DIA & CBORE FS TO .275 .285 DIA
X .335 .345 DEEP 4 HOLES
.470 .460 TYP 4 CORNERS
SEE NOTE 9 (4 SIDES TYP)
10.105 10.095
.110 .070
2.460 2.450

NOTES

1. MAKE FROM DWG 1004586
2. SURFACE MARKED √ TO BE 125√
3. REMOVE ALL BURRS AND SHARP EDGES
4 ANODIZE PER MIL-A-8625,TYPE I CHROMIC-ACID DYED BLACK, EXCEPT INDICATED AREAS
5. SILK SCREEN .12 HIGH WHITE PER ND1002019 LOCATE MARKING APPROXIMATELY WHERE SHOWN
6. 6 DIMENSIONS ARE CONTROLLED BY ICD-MH01-01205-116
7. INTERPRET DRAWING IN ACCORDANCE WITH STANDARDS PRESCRIBED BY MIL-D-70327
8. IDENTIFY WITH PART NO. PER ND1002019
9. PAINT INDICATED SURFACES WITH 1008809-1 DARK GREY EPOXY RESIN ENAMEL PER ND 1002279
10. TOUCH-UP BARE METAL SURFACES PER ND1002040, EXCEPT DO NOT EPOXY COAT AREAS INDICATED ON SHEET 2
11. CENTERLINES OF HOLES TO BE LOCATED AT CENTER OF RIB INTERSECTIONS WITHIN .005 TIR DO NOT BREAK THRU SIDEWALLS
12. BOND FIND NO. 5,6,& 7 TO FIND NO.3 PER ND1002004, TYPE I
13. AFTER MACHINING, SIDES OF FIND NO.5 & 7 TO BE FLUSH WITH RIB SURFACES OF FIND NO.3, FLATNESS TO BE WITHIN .003

QTY REQD	PART OR IDENTIFYING NO.	NOMENCLATURE OR DESCRIPTION	FIND NO
2	1004785-003	RIB. EXTENDED	7
17	NAS662C2-4	SCREW, FLAT HD	6
1	1004785-002	RIB, EXTENDED	5
1	MS21209-CU815	INSERT, HELICAL	4
1	1004785-001	HOUSING, FRONT PANEL	3
7	MS21209-C0620	INSERT HELICAL	2
19	MS21209-C0415	INSERT HELICAL	1

LIST OF MATERIALS

1003569	
NEXT ASSY	USED ON
APPLICATION	

UNLESS OTHERWISE SPECIFIED
DIMENSIONS ARE IN INCHES
TOLERANCES ON
FRACTIONS ± DECIMALS ± ANGLES ±
DO NOT SCALE THIS DRAWING
MATERIAL: SEE NOTE 1
HEAT TREATMENT: NONE
FINAL FINISH: SEE NOTES 4 & 11

MIT
INSTRUMENTATION LAB
CAMBRIDGE, MASS
DWG NO. CONTRACT
DRAWN DATE
CHECKED R. B.
APPROVAL
APPROVAL
NASA APPROVAL A. C. METZGER
MIT APPROVAL
MIT APPROVAL

MANNED SPACECRAFT CENTER
HOUSTON, TEXAS

HOUSING, FRONT PANEL
AGC DSKY MAIN

CODE IDENT NO. 80230
SIZE E
NASA DRAWING NO 1004785
SCALE 1/1
WT
SHEET 1 OF 3

MASTER

NOTICE — WHEN GOVERNMENT DRAWINGS, SPECIFICATIONS, OR OTHER DATA ARE USED FOR ANY PURPOSE OTHER THAN IN CONNECTION WITH A DEFINITELY RELATED GOVERNMENT PROCUREMENT OPERATION, THE UNITED STATES GOVERNMENT THEREBY INCURS NO RESPONSIBILITY NOR ANY OBLIGATION WHATSOEVER; AND THE FACT THAT THE GOVERNMENT MAY HAVE FORMULATED, FURNISHED, OR IN ANY WAY SUPPLIED THE SAID DRAWINGS, SPECIFICATIONS, OR OTHER DATA IS NOT TO BE REGARDED BY IMPLICATION OR OTHERWISE AS IN ANY MANNER LICENSING THE HOLDER OR ANY OTHER PERSON OR CORPORATION, OR CONVEYING ANY RIGHTS OR PERMISSION TO MANUFACTURE, USE, OR SELL ANY PATENTED INVENTION THAT MAY IN ANY WAY BE RELATED THERETO

REVISIONS			
SYM	DESCRIPTION	DATE	APPROVAL

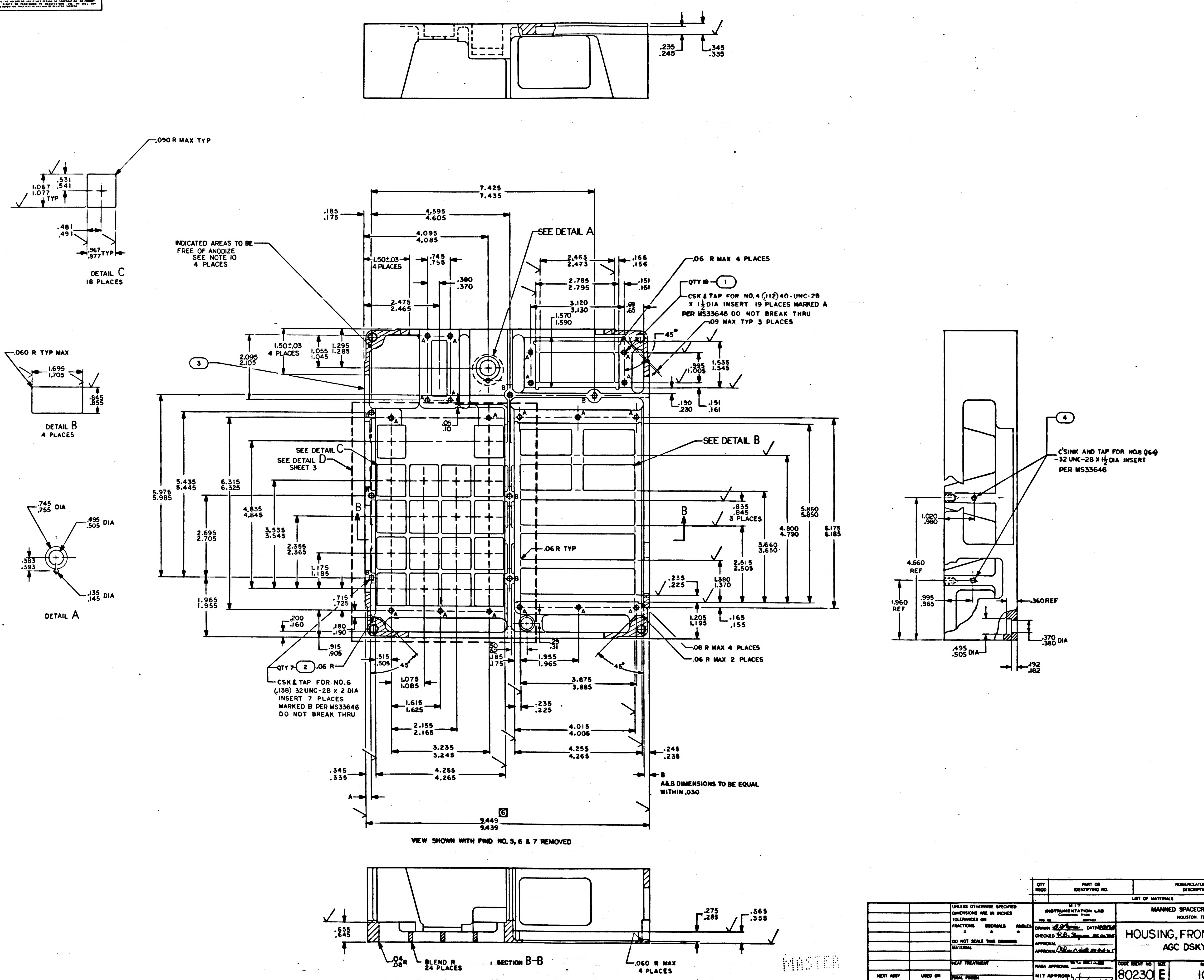

.235
.245
.345
.335
.090 R MAX TYP
1.067
1.077
TYP
.531
.541
.481
.491
.967
.977 TYP
DETAIL C
18 PLACES
.060 R TYP MAX
1.695
1.705
.845
.855
DETAIL B
4 PLACES
.745
.755 DIA
.495
.505 DIA
.383
.393
.135
.145 DIA
DETAIL A
7.425
7.435
4.595
4.605
.185
.175
4.095
4.085
SEE DETAIL A
INDICATED AREAS TO BE FREE OF ANODIZE SEE NOTE 10 4 PLACES
1.50±.03 4 PLACES
.745
.755
.380
.370
2.475
2.465
2.463
2.473
.166
.156
2.785
2.795
.151
.161
3.120
3.130
.99
.65
1.570
1.590
.06 R MAX 4 PLACES
QTY 19 ①
CSK & TAP FOR NO.4 (.112) 40-UNC-2B X 1½ DIA INSERT 19 PLACES MARKED A PER MS33646 DO NOT BREAK THRU
.09 MAX TYP 3 PLACES
45°
2.095
2.105
③
1.50±.03 4 PLACES
1.055
1.045
1.295
1.285
.995
1.005
1.535
1.545
.190
.230
.151
.161
.05
.10
SEE DETAIL C
SEE DETAIL D SHEET 3
SEE DETAIL B
5.975
5.985
5.435
5.445
6.315
6.325
4.835
4.845
3.535
3.545
2.695
2.705
2.355
2.365
1.175
1.185
B
B
.835
.845
3 PLACES
5.860
5.850
4.800
4.790
3.660
3.650
6.175
6.185
.06 R TYP
2.515
2.505
.235
.225
1.380
1.370
1.965
1.955
.715
.725
.200
.160
.180
.190
.915
.905
1.205
1.195
.165
.155
QTY 7 ② .06 R
CSK & TAP FOR NO.6 (.138) 32UNC-2B X 2 DIA INSERT 7 PLACES MARKED B PER MS33646 DO NOT BREAK THRU
.515
.505
45°
.50
.52
.185
.175
.29
.31
1.955
1.965
.06 R MAX 4 PLACES
.06 R MAX 2 PLACES
45°
1.075
1.085
3.875
3.885
1.615
1.625
.235
.225
2.155
2.165
4.015
4.005
3.235
3.245
4.255
4.265
.245
.235
.345
.335
4.255
4.265
B
A
A&B DIMENSIONS TO BE EQUAL WITHIN .030
⑥
9.449
9.439
VIEW SHOWN WITH FIND NO. 5, 6 & 7 REMOVED
.655
.645
.04
.08 R
BLEND R 24 PLACES
SECTION B-B
.275
.285
.365
.355
.060 R MAX 4 PLACES
④
C'SINK AND TAP FOR NO.8 (.164) -32 UNC-2B X 1½ DIA INSERT PER MS33646
1.020
.980
4.660 REF
1.960 REF
.995
.965
.360 REF
.370
.380 DIA
.495
.505 DIA
.192
.182

MASTER

QTY REQD	PART OR IDENTIFYING NO.	NOMENCLATURE OR DESCRIPTION	FIND NO.

LIST OF MATERIALS

NEXT ASSY	USED ON
APPLICATION	

UNLESS OTHERWISE SPECIFIED
DIMENSIONS ARE IN INCHES
TOLERANCES ON
FRACTIONS ± DECIMALS ± ANGLES ±
DO NOT SCALE THIS DRAWING
MATERIAL
HEAT TREATMENT
FINAL FINISH

MIT
INSTRUMENTATION LAB
CAMBRIDGE MASS
DRAWN DATE
CHECKED R.B. 26 OCT 65
APPROVAL
APPROVAL
NASA APPROVAL
MIT APPROVAL
MIT APPROVAL

MANNED SPACECRAFT CENTER
HOUSTON, TEXAS

HOUSING, FRONT PANEL
AGC DSKY MAIN

CODE IDENT NO.	SIZE	NASA DRAWING NO.
80230	E	1004785
SCALE 1/1	WT	SHEET 2 OF 3

NOTICE — WHEN GOVERNMENT DRAWINGS SPECIFICATIONS OR OTHER DATA ARE USED FOR ANY PURPOSE OTHER THAN IN CONNECTION WITH A DEFINITELY RELATED GOVERNMENT PROCUREMENT OPERATION THE UNITED STATES GOVERNMENT THEREBY INCURS NO RESPONSIBILITY NOR ANY OBLIGATION WHATSOEVER AND THE FACT THAT THE GOVERNMENT MAY HAVE FORMULATED FURNISHED OR IN ANY WAY SUPPLIED THE SAID DRAWINGS SPECIFICATIONS OR OTHER DATA IS NOT TO BE REGARDED BY IMPLICATION OR OTHERWISE AS IN ANY MANNER LICENSING THE HOLDER OR ANY OTHER PERSON OR CORPORATION OR CONVEYING ANY RIGHTS OR PERMISSION TO MANUFACTURE USE OR SELL ANY PATENTED INVENTION THAT MAY IN ANY WAY BE RELATED THERETO

REVISIONS 23944			
SYM	DESCRIPTION	DATE	APPROVAL

Ⓜ

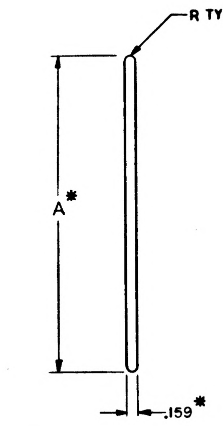

RIB, EXTENDER

PART NO.	DIM. A
1004785-002	4.870 *
1004785-003	6.230 *

NOTES
1. MATL: .125 THK 6061-T6 AL PER QQ-A-250/11, TEMP 6
2. REMOVE BURRS AND SHARP EDGES .005/.015
3. * INDICATES NOMINAL DIMENSION TO FIT AT ASSEMBLY

1004785-002
1004785-003

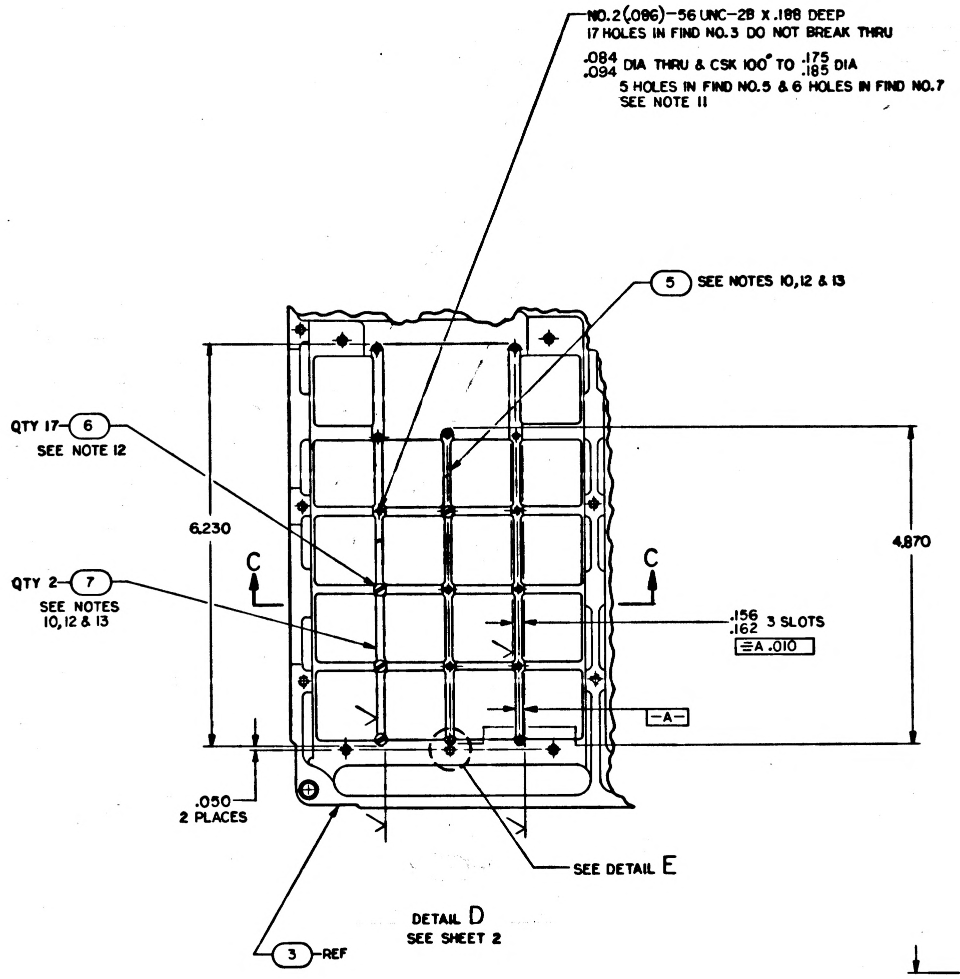
NO.2(.086)-56 UNC-2B X .188 DEEP
17 HOLES IN FIND NO.3 DO NOT BREAK THRU
.084 .094 DIA THRU & CSK 100° TO .175 .185 DIA
5 HOLES IN FIND NO.5 & 6 HOLES IN FIND NO.7
SEE NOTE 11
5 SEE NOTES 10,12 & 13
QTY 17-6
SEE NOTE 12
6.230
C
C
4.870
QTY 2-7
SEE NOTES 10,12 & 13
.156 .162 3 SLOTS
≡A .010
-A-
.050 2 PLACES
SEE DETAIL E
3 REF

DETAIL D
SEE SHEET 2

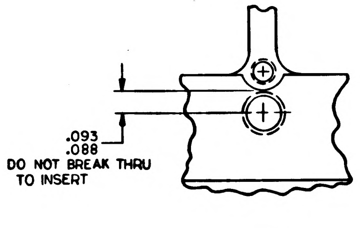
.093 .088
DO NOT BREAK THRU TO INSERT

DETAIL E
SCALE 4/1

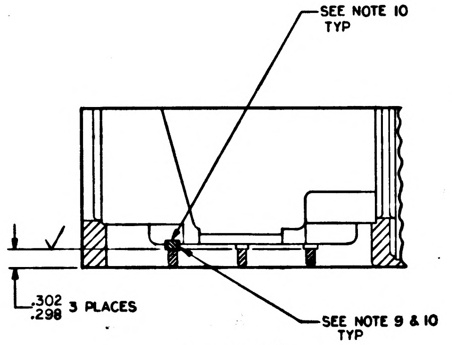
SEE NOTE 10 TYP
.302 .298 3 PLACES
SEE NOTE 9 & 10 TYP

SECTION C-C

MASTER

QTY REQD	PART OR IDENTIFYING NO.	NOMENCLATURE OR DESCRIPTION	FIND NO.

LIST OF MATERIALS

NEXT ASSY	USED ON
APPLICATION	

UNLESS OTHERWISE SPECIFIED
DIMENSIONS ARE IN INCHES
TOLERANCES ON
FRACTIONS ± DECIMALS ±.005 ANGLES ±2°
DO NOT SCALE THIS DRAWING
MATERIAL
HEAT TREATMENT
FINAL FINISH

MIT
INSTRUMENTATION LAB
CAMBRIDGE, MASS
DWG NO. CONTRACT
DRAWN B.J. Pagia DATE 2/10/65
CHECKED R.B. Hogrum 22 Oct 65
APPROVAL
APPROVAL Eldon C. Hall 29 Oct 65
NASA APPROVAL A. C. METZGER
MIT APPROVAL
MIT APPROVAL 10/4/65

MANNED SPACECRAFT CENTER
HOUSTON, TEXAS

HOUSING, FRONT PANEL
AGC DSKY MAIN

CODE IDENT NO.	SIZE	NASA DRAWING NO.
80230	E	1004785

SCALE 1/1 WT SHEET 3 OF 3

NOTICE – WHEN GOVERNMENT DRAWINGS, SPECIFICATIONS, OR OTHER DATA ARE USED FOR ANY PURPOSE OTHER THAN IN CONNECTION WITH A DEFINITELY RELATED GOVERNMENT PROCUREMENT OPERATION, THE UNITED STATES GOVERNMENT THEREBY INCURS NO RESPONSIBILITY NOR ANY OBLIGATION WHATSOEVER; AND THE FACT THAT THE GOVERNMENT MAY HAVE FORMULATED, FURNISHED, OR IN ANY WAY SUPPLIED THE SAID DRAWINGS, SPECIFICATIONS OR OTHER DATA IS NOT TO BE REGARDED BY IMPLICATION OR OTHERWISE AS IN ANY MANNER LICENSING THE HOLDER OR ANY OTHER PERSON OR CORPORATION, OR CONVEYING ANY RIGHTS OR PERMISSION TO MANUFACTURE, USE, OR SELL ANY PATENTED INVENTION THAT MAY IN ANY WAY BE RELATED THERETO.

REVISIONS 23988						
SYM	ZONE	DESCRIPTION	DR	CHK	DATE	APPROVED

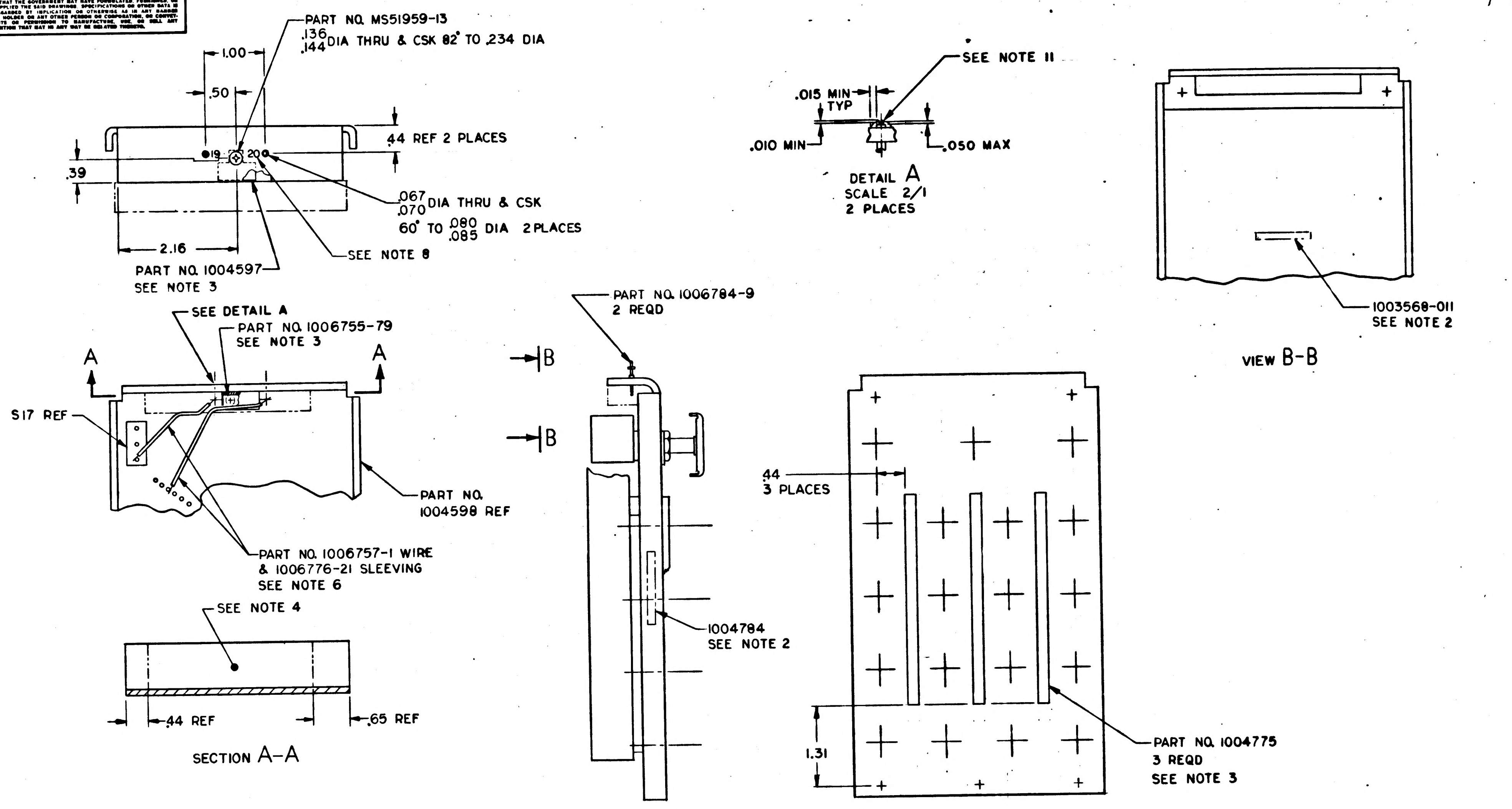

PART NO. MS51959-13
.136 .144 DIA THRU & CSK 82° TO .234 DIA
1.00
.50
.44 REF 2 PLACES
19
20
.39
.067 .070 DIA THRU & CSK
60° TO .080 .085 DIA 2 PLACES
2.16
SEE NOTE 8
PART NO. 1004597
SEE NOTE 3
SEE NOTE 11
.015 MIN TYP
.010 MIN
.050 MAX
DETAIL A
SCALE 2/1
2 PLACES
SEE DETAIL A
PART NO. 1006755-79
SEE NOTE 3
A
A
S17 REF
PART NO. 1004598 REF
PART NO. 1006757-1 WIRE
& 1006776-21 SLEEVING
SEE NOTE 6
SEE NOTE 4
.44 REF
.65 REF
SECTION A-A
PART NO. 1006784-9
2 REQD
B
B
1004784
SEE NOTE 2
.44
3 PLACES
1.31
PART NO. 1004775
3 REQD
SEE NOTE 3
1003568-011
SEE NOTE 2
VIEW B-B

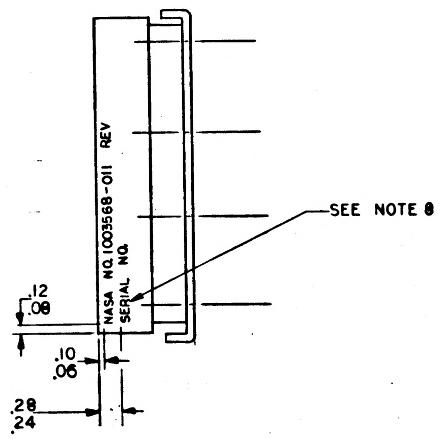

NASA NO. 1003568-011 REV
SERIAL NO.
SEE NOTE 8
.12
.08
.10
.06
.28
.24

NOTES

1. MAKE FROM KEYBOARD MOD ASSY DWG NO. 1003548
2. RE-IDENTIFY WITH PART NO. AS SHOWN IN ACCORDANCE WITH R. I. B.
3. BOND 1006755-79 TO 1004597 AND 1004597 AND 1004755 TO 1004598 PER ND 1002004, TYPE V
4. ENCAPSULATE INDICATED AREA PER ND 1002217
5. INTERPRET DRAWING IN ACCORDANCE WITH STANDARDS PRESCRIBED BY MIL-D-70327
6. ALL CONNECTIONS TO BE MADE BY WELDING PER ND1002005
7. WORKMANSHIP, FABRICATION & INSPECTION REQUIREMENTS PER ND1002069
8. MARK .08 HIGH WHITE PER ND1002019 & ND1002122, TYPE II, CLASS I USING MARKING INK 1006271-1 APPROX AS SHOWN
9. REMOVE TERMINAL MARKING NO. 8 & 15
10. + DENOTES POSITIVE SIDE OF CAPACITOR
11. CUT TERMINALS 19 AND 20 AS SHOWN AND ENCAPSULATE PER ND1002004 TYPE VI

MASTER

PART NO. 1004784

PART NO. 1003568-011 ASSY

QTY REQD	PART OR IDENTIFYING NO.	MATERIAL OR NOTES	NOMENCLATURE OR DESCRIPTION	FIND NO.

LIST OF MATERIALS

NEXT ASSY	USED ON
APPLICATION	

UNLESS OTHERWISE SPECIFIED
DIMENSIONS ARE IN INCHES
CAPACITOR VALUES ARE IN μf
RESISTOR VALUES ARE IN OHMS
TOLERANCES ON
FRACTIONS ± DECIMALS .XX ±.02 .XXX ±.005 ANGLES ±2°
DO NOT SCALE THIS DRAWING

MATERIAL

MIT
INSTRUMENTATION LAB
CAMBRIDGE, MASS.

MANNED SPACECRAFT CENTER
HOUSTON, TEXAS

DRAWN	a. Voce	18 OCT 65
CHECKED	C.A. Prestia	20 OCT 65
APPROVED		
APPROVED		
APPROVED MIT	W Kupfer A. C. METZGER	
APPROVED MSC		DATE

INSTRUCTION DRAWING
FOR KIT NO. 8104121
KEYBOARD MODULE ASSEMBLY D17
AGC DSKY, NAV

CODE IDENT NO.	SIZE	DRAWING NO.
80230	D	1004790
SCALE 1/1		SHEET 1 OF 1

NOTICE – WHEN GOVERNMENT DRAWINGS, SPECIFICATIONS, OR OTHER DATA ARE USED FOR ANY PURPOSE OTHER THAN IN CONNECTION WITH A DEFINITELY RELATED GOVERNMENT PROCUREMENT OPERATION, THE UNITED STATES GOVERNMENT THEREBY INCURS NO RESPONSIBILITY NOR ANY OBLIGATION WHATSOEVER; AND THE FACT THAT THE GOVERNMENT MAY HAVE FORMULATED, FURNISHED, OR IN ANY WAY SUPPLIED THE SAID DRAWINGS, SPECIFICATIONS OR OTHER DATA IS NOT TO BE REGARDED BY IMPLICATION OR OTHERWISE AS IN ANY MANNER LICENSING THE HOLDER OR ANY OTHER PERSON OR CORPORATION, OR CONVEYING ANY RIGHTS OR PERMISSION TO MANUFACTURE, USE, OR SELL ANY PATENTED INVENTION THAT MAY IN ANY WAY BE RELATED THERETO.

REVISIONS						
SYM	ZONE	DESCRIPTION	DR	CHK	DATE	APPROVED

23988

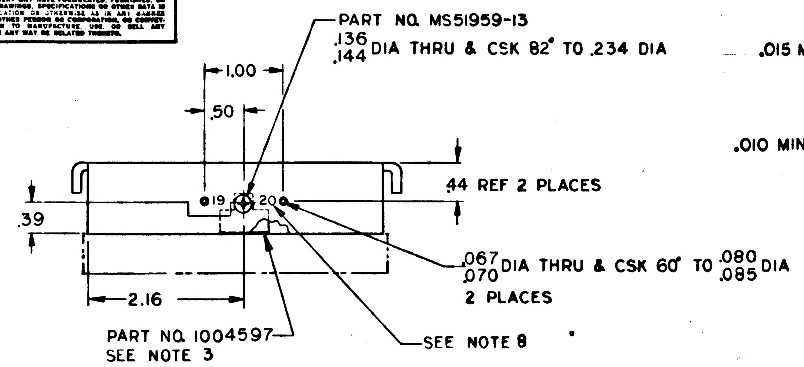
PART NO. MS51959-13
.136 .144 DIA THRU & CSK 82° TO .234 DIA
1.00
.50
.44 REF 2 PLACES
.39
19
20
.067 .070 DIA THRU & CSK 60° TO .080 .085 DIA
2 PLACES
2.16
PART NO. 1004597
SEE NOTE 3
SEE NOTE 8

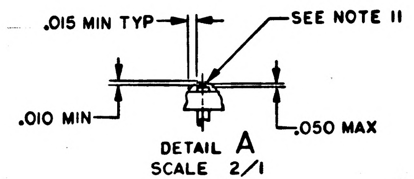
.015 MIN TYP
SEE NOTE 11
.010 MIN
.050 MAX

DETAIL A
SCALE 2/1
2 PLACES

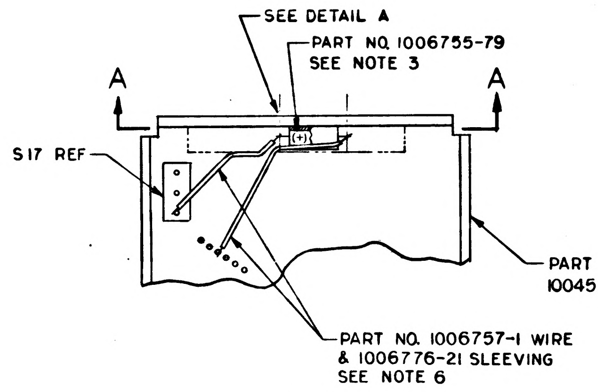
SEE DETAIL A
PART NO. 1006755-79
SEE NOTE 3
A
A
S17 REF
PART NO.
1004598 REF
PART NO. 1006757-1 WIRE
& 1006776-21 SLEEVING
SEE NOTE 6

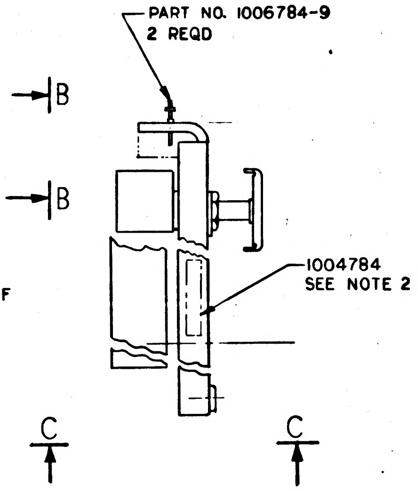
PART NO. 1006784-9
2 REQD
B
B
1004784
SEE NOTE 2
C
C

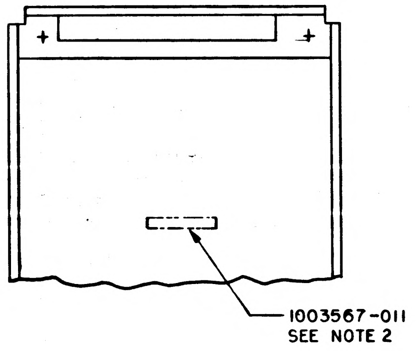
+
+
1003567-011
SEE NOTE 2

VIEW B-B

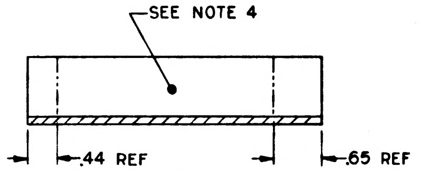
SEE NOTE 4
.44 REF
.65 REF

SECTION A-A

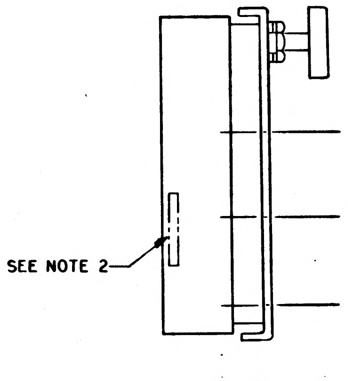

VIEW C-C

NOTES

1. MAKE FROM KEYBOARD MOD ASSY DWG NO. 1003549
2. RE-IDENTIFY WITH PART NO. AS SHOWN IN ACCORDANCE WITH R. L. B.
3. BOND 1006755-79 TO 1004597 AND 1004597 TO 1004598 PER ND 1002004, TYPE V
4. ENCAPSULATE INDICATED AREA PER ND1002217
5. INTERPRET DRAWING IN ACCORDANCE WITH STANDARDS PRESCRIBED BY MIL-D-70327
6. ALL CONNECTIONS TO BE MADE BY WELDING PER ND1002005
7. WORKMANSHIP, FABRICATION & INSPECTION REQUIREMENTS PER ND1002069
8. MARK .08 HIGH WHITE PER ND1002019 & ND1002122, TYPE II, CLASS I USING MARKING INK 1006271-1 APPROX AS SHOWN
9. REMOVE TERMINAL MARKING NO. 8 & 15
10. + DENOTES POSITIVE SIDE OF CAPACITOR
11. CUT TERMINALS 19 AND 20 AS SHOWN AND ENCAPSULATE PER ND1002004 TYPE VI

MASTER

PART NO. 1004784

PART NO. 1003567-011 ASSY

QTY REQD	PART OR IDENTIFYING NO.	MATERIAL OR NOTES	NOMENCLATURE OR DESCRIPTION	FIND NO.

LIST OF MATERIALS

NEXT ASSY	USED ON
APPLICATION	

UNLESS OTHERWISE SPECIFIED
DIMENSIONS ARE IN INCHES
CAPACITOR VALUES ARE IN µf
RESISTOR VALUES ARE IN OHMS
TOLERANCES ON
FRACTIONS ± DECIMALS .XX ±.02 .XXX ±.005 ANGLES ± 2°
DO NOT SCALE THIS DRAWING

MATERIAL

MIT
INSTRUMENTATION LAB
CAMBRIDGE, MASS.

MANNED SPACECRAFT CENTER
HOUSTON, TEXAS

DRAWN	A. Vorce	16 OCT 65
CHECKED	C.A. Lester	21 OCT 65
APPROVED		
APPROVED	Eldon C Hall	29 Oct 65
APPROVED MIT	W Kupfer A/G METZGER	1 Nov 65
APPROVED MSC		DATE

INSTRUCTION DRAWING
FOR KIT NO. 8104118
KEYBOARD MODULE ASSEMBLY D18
AGC DSKY, MAIN

CODE IDENT NO.	SIZE	DRAWING NO.
80230	D	1004792
SCALE 1/1		SHEET 1 OF 1

1004792

NOTICE – WHEN GOVERNMENT DRAWINGS, SPECIFICATIONS, OR OTHER DATA ARE USED FOR ANY PURPOSE OTHER THAN IN CONNECTION WITH A DEFINITELY RELATED GOVERNMENT PROCUREMENT OPERATION, THE UNITED STATES GOVERNMENT THEREBY INCURS NO RESPONSIBILITY NOR ANY OBLIGATION WHATSOEVER, AND THE FACT THAT THE GOVERNMENT MAY HAVE FORMULATED, FURNISHED, OR IN ANY WAY SUPPLIED THE SAID DRAWINGS, SPECIFICATIONS OR OTHER DATA IS NOT TO BE REGARDED BY IMPLICATION OR OTHERWISE AS IN ANY MANNER LICENSING THE HOLDER OR ANY OTHER PERSON OR CORPORATION, OR CONVEYING ANY RIGHTS OR PERMISSION TO MANUFACTURE, USE, OR SELL ANY PATENTED INVENTION THAT MAY IN ANY WAY BE RELATED THERETO.

Ⓜ

REVISIONS 2391F			
SYM	DESCRIPTION	DATE	APPROVAL

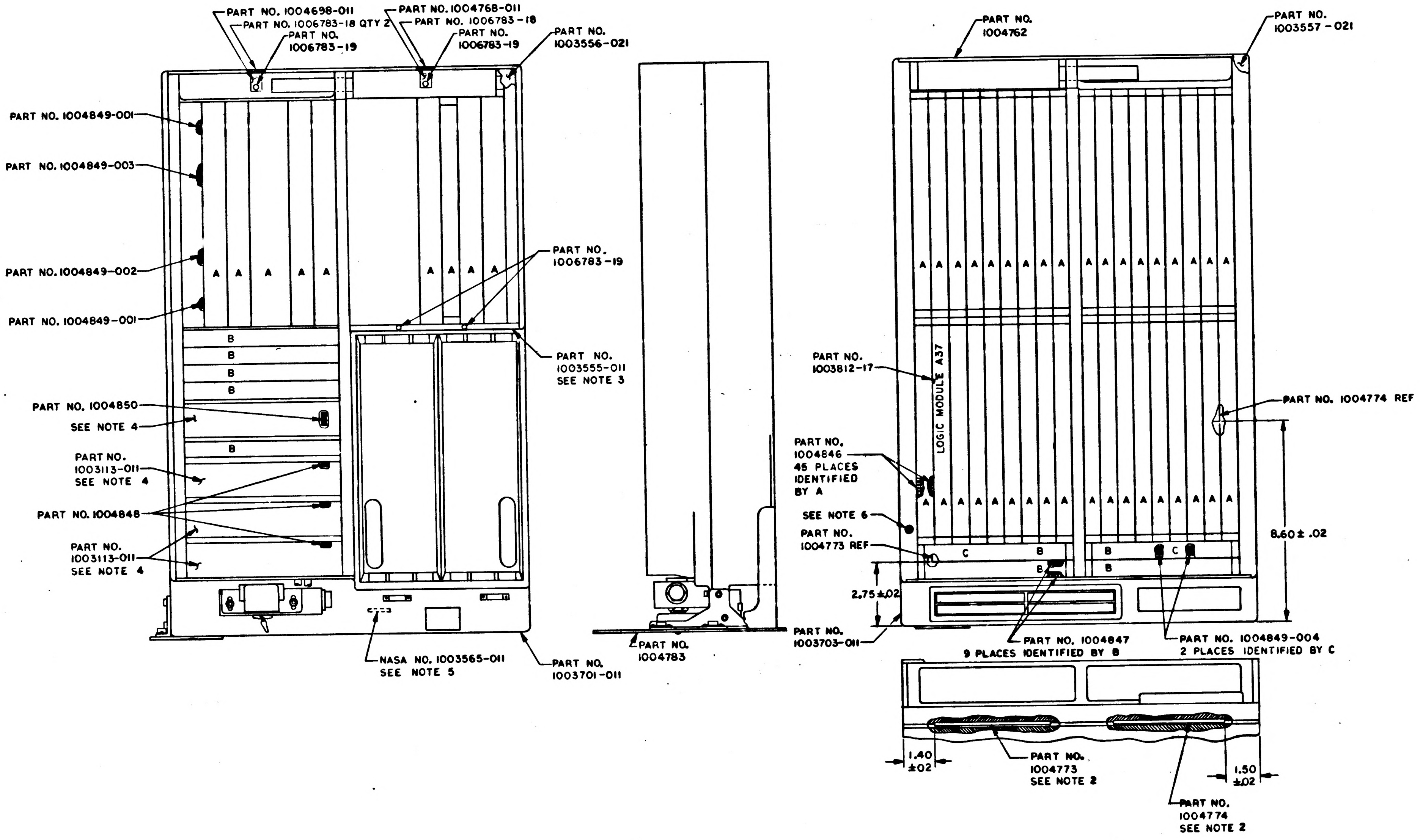
PART NO. 1004698-011
PART NO. 1006783-18 QTY 2
PART NO. 1006783-19
PART NO. 1004768-011
PART NO. 1006783-18
PART NO. 1006783-19
PART NO. 1003556-021
PART NO. 1004849-001
PART NO. 1004849-003
PART NO. 1004849-002
PART NO. 1004849-001
A A A A A
A A A A
PART NO. 1006783-19
B B B B B
PART NO. 1003555-011 SEE NOTE 3
PART NO. 1004850
SEE NOTE 4
PART NO. 1003113-011 SEE NOTE 4
PART NO. 1004848
PART NO. 1003113-011 SEE NOTE 4
NASA NO. 1003565-011 SEE NOTE 5
PART NO. 1003701-011
PART NO. 1004783
PART NO. 1004762
PART NO. 1003557-021
PART NO. 1003812-17
LOGIC MODULE A37
PART NO. 1004846 45 PLACES IDENTIFIED BY A
SEE NOTE 6
PART NO. 1004773 REF
2.75±.02
PART NO. 1003703-011
PART NO. 1004774 REF
8.60±.02
C B B B C
PART NO. 1004847 9 PLACES IDENTIFIED BY B
PART NO. 1004849-004 2 PLACES IDENTIFIED BY C
1.40 ±02
PART NO. 1004773 SEE NOTE 2
1.50 ±02
PART NO. 1004774 SEE NOTE 2

NOTES
1. MAKE FROM COMPUTER ASSY DRAWING NO. 1003700 –011
2. BOND PART NO. 1004773 AND 1004774 TO ENCAPSULATED SURFACE OF PART NO. 1003703-011 USING MIL-A-5092 TYPE II PRIOR TO ASSEMBLY OF PART NO. 1003703-011
3. ASSEMBLE PART NO. 1003555-011 TO PART NO. 1003701-011 PRIOR TO ASSEMBLY OF PART NO. 1003701-011 TO PART NO. 1003703-011
4. TORQUE MTG SCREWS OF PART NO. 1003819-011 AND OSCILLATOR MODULE PART NO. 1003527 REF TO 4/6 INCH POUNDS
5. RE-IDENTIFY WITH PART NO. 1003565-011 IN ACCORDANCE WITH R.I.B.
6. TORQUE MTG SCREWS (MS16996-13 REF) TO 28/32 INCH POUNDS 22 PLACES
7. UNLESS OTHERWISE SPECIFIED TORQUE ALL MODULE MTG SCREWS 15/19 INCH POUNDS
8. INTERPRET DRAWING IN ACCORDANCE WITH STANDARDS PRESCRIBED BY MIL-D-70327

PART NO. 10035 5-011

QTY REQD	PART OR IDENTIFYING NO.	NOMENCLATURE OR DESCRIPTION	FIND NO

LIST OF MATERIALS

MASTER

NEXT ASSY	USED ON
APPLICATION	

UNLESS OTHERWISE SPECIFIED DIMENSIONS ARE IN INCHES
TOLERANCES ON
FRACTIONS ± DECIMALS ± ANGLES ±
DO NOT SCALE THIS DRAWING
MATERIAL
HEAT TREATMENT
FINAL FINISH

MIT INSTRUMENTATION LAB
CAMBRIDGE, MASS
DWG NO CONTRACT
DRAWN R.B. [illegible] DATE 18OCT65
CHECKED R. Edwards 20 Oct 65
APPROVAL
APPROVAL Eldon C Hall 29 Oct 65
NASA APPROVAL A. C. METZGER
MIT APPROVAL [illegible]

MANNED SPACECRAFT CENTER
HOUSTON, TEXAS

INSTRUCTION DRAWING
FOR KIT NO. 8104119
COMPUTER ASSY

CODE IDENT NO. 80230
SIZE E
NASA DRAWING NO. 1004793
SCALE NONE
WT
SHEET 1 OF 1

SYM	DESCRIPTION	DATE	APPROVAL

NOTICE — WHEN GOVERNMENT DRAWINGS, SPECIFICATIONS, OR OTHER DATA ARE USED FOR ANY PURPOSE OTHER THAN IN CONNECTION WITH A DEFINITELY RELATED GOVERNMENT PROCUREMENT OPERATION, THE UNITED STATES GOVERNMENT THEREBY INCURS NO RESPONSIBILITY NOR ANY OBLIGATION WHATSOEVER; AND THE FACT THAT THE GOVERNMENT MAY HAVE FORMULATED, FURNISHED, OR IN ANY WAY SUPPLIED THE SAID DRAWINGS, SPECIFICATIONS OR OTHER DATA IS NOT TO BE REGARDED BY IMPLICATION OR OTHERWISE AS IN ANY MANNER LICENSING THE HOLDER OR ANY OTHER PERSON OR CORPORATION, OR CONVEYING ANY RIGHTS OR PERMISSION TO MANUFACTURE, USE, OR SELL ANY PATENTED INVENTION THAT MAY IN ANY WAY BE RELATED THERETO.

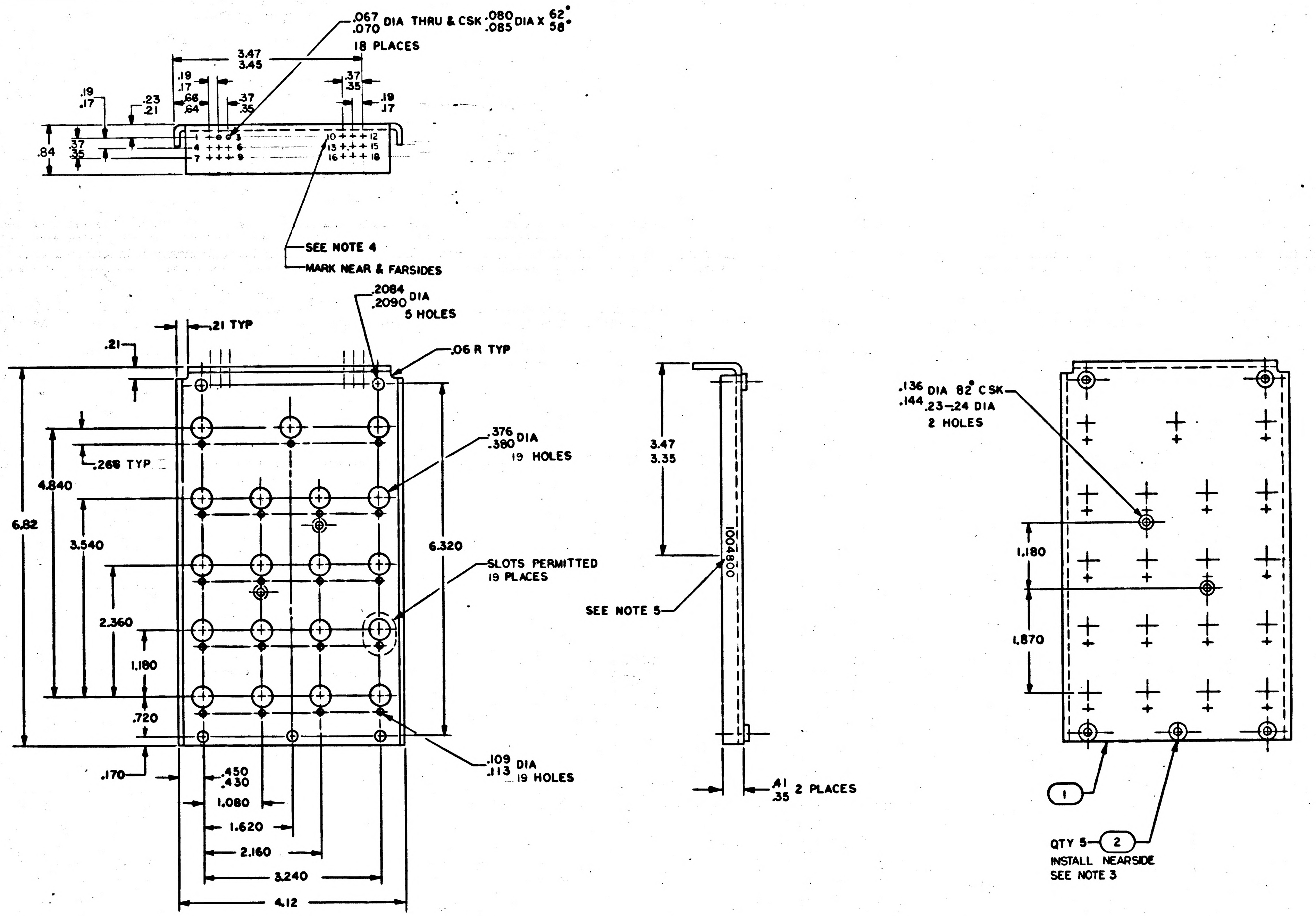
.067 .070 DIA THRU & CSK .080 .085 DIA X 62° 58°
18 PLACES
3.47 3.45
.19 .17
.66 .64
.37 .35
.23 .21
.84
1 2 3 4 5 6 7 8 9 10 11 12 13 14 15 16 17 18
SEE NOTE 4
MARK NEAR & FARSIDES
.2084 .2090 DIA 5 HOLES
.21 TYP
.21
.06 R TYP
.376 .380 DIA 19 HOLES
.268 TYP
4.840
6.82
3.540
6.320
SLOTS PERMITTED 19 PLACES
2.360
1.180
.720
.109 .113 DIA 19 HOLES
.170
.450 .430
1.080
1.620
2.160
3.240
4.12
3.47 3.35
1004800
SEE NOTE 5
.41 .35 2 PLACES
.136 .144 DIA 82° CSK .23-.24 DIA 2 HOLES
1.180
1.870
1
QTY 5 2
INSTALL NEARSIDE
SEE NOTE 3

NOTES:

1. MATL: .090 THK AL5052—H32 PER QQ-A-318, TEMPER H32
2. REMOVE BURRS AND SHARP EDGES
3. INSTALL FIND NO. 2 AND ANODIZE PER MIL-A-8625, TYPE I (CHROMIC ACID), DYED BLACK.
4. MARK .08 HIGH WHITE PER ND1002019 & ND1002122, TYPE II, CLASS I, APPROX WHERE SHOWN
5. MARK .12 HIGH WHITE PER ND1002019 & ND1002122, TYPE II, CLASS I
6. ALL BEND R.05/.09
7. INTERPRET DRAWING IN ACCORDANCE WITH STANDARDS PRESCRIBED BY MIL-D-70327

MASTER

QTY REQD	PART OR IDENTIFYING NO.	NOMENCLATURE OR DESCRIPTION	FIND NO.
5	1004601	SPACER	2
1	1004800-1	PANEL, FRONT	1

LIST OF MATERIALS

NEXT ASSY	USED ON
1003806	

APPLICATION

UNLESS OTHERWISE SPECIFIED DIMENSIONS ARE IN INCHES
TOLERANCES ON
FRACTIONS ± DECIMALS ±.02 .005 ANGLES ±
DO NOT SCALE THIS DRAWING
MATERIAL SEE NOTE 1
HEAT TREATMENT NONE
FINAL FINISH SEE NOTE 3

MIT INSTRUMENTATION LAB
CAMBRIDGE, MASS.
DRAWN R. Buchanan DATE 19 Aug 64
CHECKED F. Edwards 15 Sept
APPROVAL Sept 15 64.
APPROVAL Eldon C. Hall 21 Sept 64
NASA APPROVAL W J Rhine 9-22-64
MIT APPROVAL
MIT APPROVAL 23 Sept 64

MANNED SPACECRAFT CENTER
HOUSTON, TEXAS

PANEL, FRONT
KEYBOARD MODULE
AGC DSKY, NAV 100 SERIES

CODE IDENT NO. —— SIZE D NASA DRAWING NO. 1004800
SCALE 1/1 WT SHEET 1 OF 1

NOTICE – WHEN GOVERNMENT DRAWINGS, SPECIFICATIONS, OR OTHER DATA ARE USED FOR ANY PURPOSE OTHER THAN IN CONNECTION WITH A DEFINITELY RELATED GOVERNMENT PROCUREMENT OPERATION, THE UNITED STATES GOVERNMENT THEREBY INCURS NO RESPONSIBILITY NOR ANY OBLIGATION WHATSOEVER, AND THE FACT THAT THE GOVERNMENT MAY HAVE FORMULATED, FURNISHED, OR IN ANY WAY SUPPLIED THE SAID DRAWINGS, SPECIFICATIONS OR OTHER DATA IS NOT TO BE REGARDED BY IMPLICATION OR OTHERWISE AS IN ANY MANNER LICENSING THE HOLDER OR ANY OTHER PERSON OR CORPORATION, OR CONVEYING ANY RIGHTS OR PERMISSION TO MANUFACTURE, USE, OR SELL ANY PATENTED INVENTION THAT MAY IN ANY WAY BE RELATED THERETO.

REVISIONS			3222
SYM	DESCRIPTION	DATE	APPROVAL
A	REVISED PER TDRR 16479 DR M B. [illegible] CHK [illegible]	5/3/65	HUC

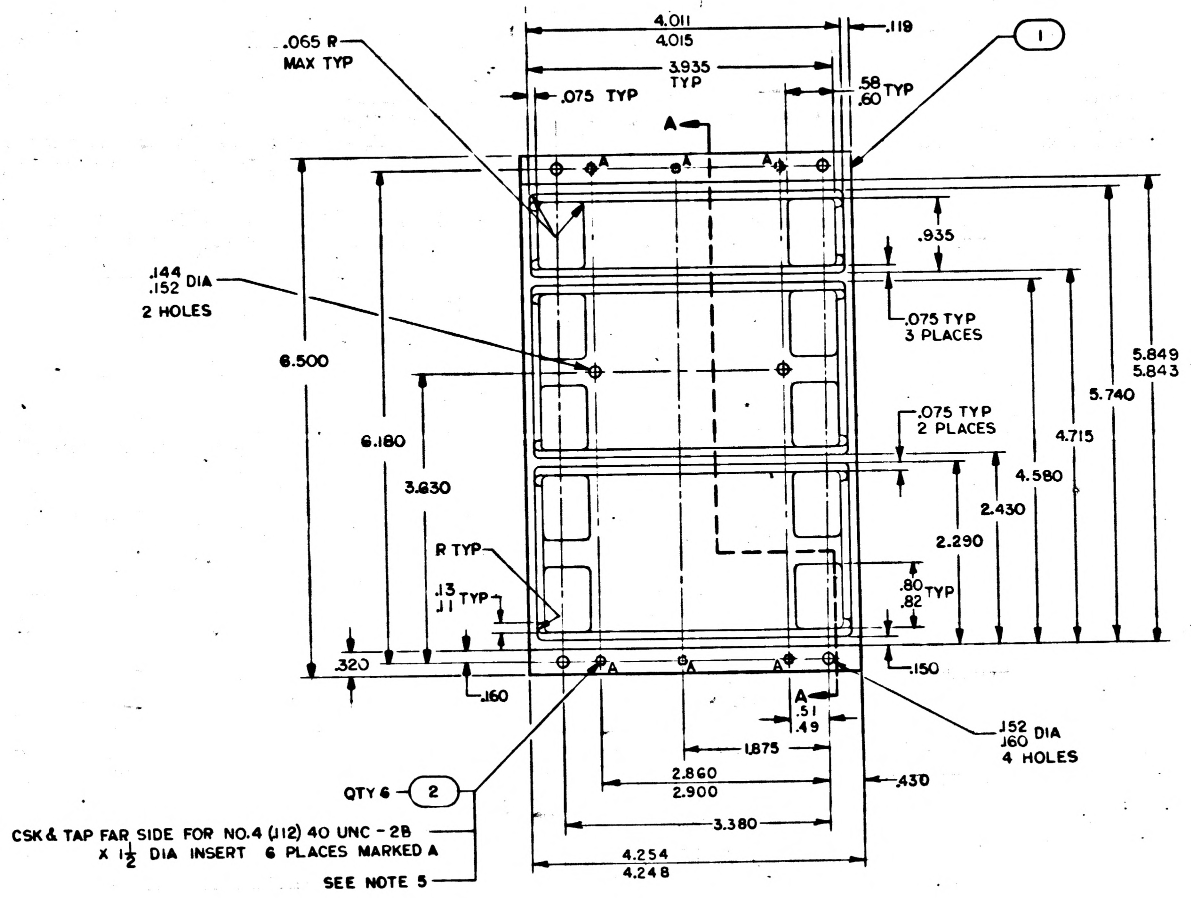

4.011
4.015
.119
.065 R
MAX TYP
3.935
TYP
.075 TYP
.58
.60 TYP
1
A
.935
.144
.152 DIA
2 HOLES
.075 TYP
3 PLACES
6.500
5.849
5.843
5.740
4.715
.075 TYP
2 PLACES
4.580
6.180
3.630
2.430
2.290
R TYP
.13
.11 TYP
.80
.82 TYP
.320
.150
.160
A
.51
.49
1.875
.152
.160 DIA
4 HOLES
2.860
2.900
.430
QTY 6
2
CSK & TAP FAR SIDE FOR NO.4 (.112) 40 UNC - 2B
X 1½ DIA INSERT 6 PLACES MARKED A
3.380
4.254
4.248
SEE NOTE 5

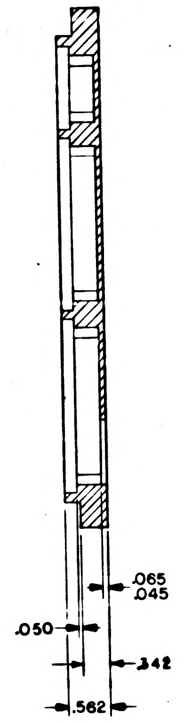

.065
.045
.050
.342
.562

SECTION A-A

NOTES
1. MATL: 6061-T6 ALUMINIUM PER QQ-A-250/11
2. REMOVE BURRS AND SHARP EDGES
3. ANODIZE PER MIL-A-8625, TYPE I, (CHROMIC ACID) DYED BLACK
4. INTERPRET DRAWING IN ACCORDANCE WITH STANDARDS PRESCRIBED BY MIL-D-70327
5. INSTALL FIND NO.2 PER MS33648 REMOVE TANG

MASTER

QTY REQD	PART OR IDENTIFYING NO.	NOMENCLATURE OR DESCRIPTION	FIND NO.
6	MS21209-C0415	INSERT, SCREW THREAD	2
1	1004802-1	FRAME, E/L	1

LIST OF MATERIALS

NEXT ASSY	USED ON
1003809	

APPLICATION

UNLESS OTHERWISE SPECIFIED DIMENSIONS ARE IN INCHES
TOLERANCES ON
FRACTIONS ± DECIMALS ±.005 ANGLES ± 2°
DO NOT SCALE THIS DRAWING
MATERIAL SEE NOTE 1
HEAT TREATMENT NONE
FINAL FINISH NONE

MIT INSTRUMENTATION LAB CAMBRIDGE, MASS
DWG. NO. CONTRACT
DRAWN R. Boudreau DATE [illegible]
CHECKED [illegible] 13 Sept 64
APPROVAL [illegible] 9/22/64.
APPROVAL [illegible] 9 Oct 64
NASA APPROVAL [illegible] 10-6-64
MIT APPROVAL
MIT APPROVAL [illegible] 6 Oct 64

MANNED SPACECRAFT CENTER
HOUSTON, TEXAS

FRAME, E/L
AGC DSKY MAIN 100 SERIES

CODE IDENT NO. —— SIZE D NASA DRAWING NO. 1004802
SCALE 1/1 WT SHEET 1 OF 1

NOTICE — WHEN GOVERNMENT DRAWINGS, SPECIFICATIONS, OR OTHER DATA ARE USED FOR ANY PURPOSE OTHER THAN IN CONNECTION WITH A DEFINITELY RELATED GOVERNMENT PROCUREMENT OPERATION, THE UNITED STATES GOVERNMENT THEREBY INCURS NO RESPONSIBILITY NOR ANY OBLIGATION WHATSOEVER; AND THE FACT THAT THE GOVERNMENT MAY HAVE FORMULATED, FURNISHED, OR IN ANY WAY SUPPLIED THE SAID DRAWINGS, SPECIFICATIONS OR OTHER DATA IS NOT TO BE REGARDED BY IMPLICATION OR OTHERWISE AS IN ANY MANNER LICENSING THE HOLDER OR ANY OTHER PERSON OR CORPORATION, OR CONVEYING ANY RIGHTS OR PERMISSION TO MANUFACTURE, USE, OR SELL ANY PATENTED INVENTION THAT MAY IN ANY WAY BE RELATED THERETO.

REVISIONS 3222			
SYM	DESCRIPTION	DATE	APPROVAL

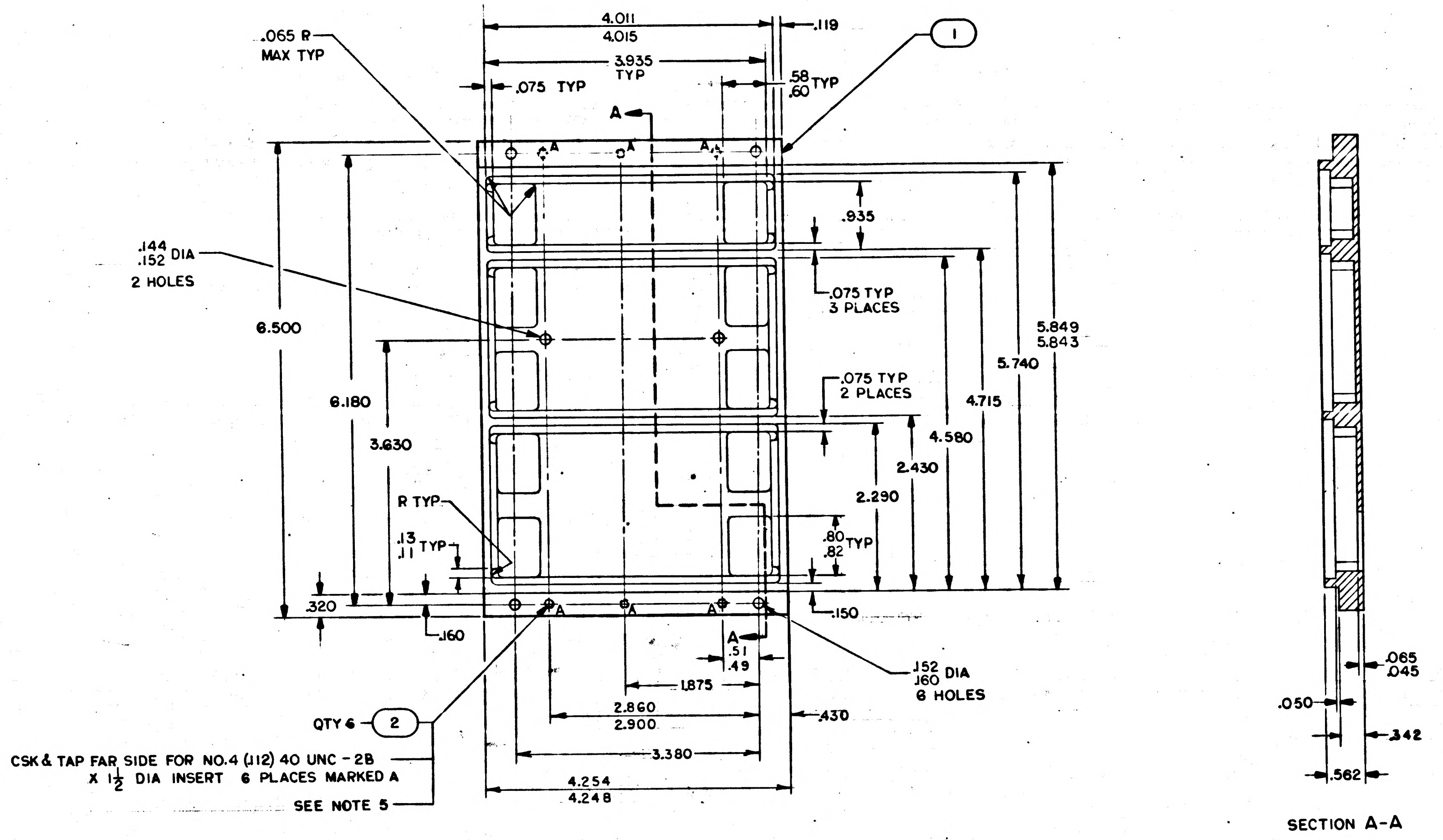

4.011
4.015
.119
3.935
TYP
.075 TYP
.58
.60 TYP
.065 R
MAX TYP
1
A
A
.935
.144
.152 DIA
2 HOLES
.075 TYP
3 PLACES
6.500
6.180
3.630
5.849
5.843
5.740
4.715
4.580
.075 TYP
2 PLACES
2.430
2.290
R TYP
.13
.11 TYP
.80
.82 TYP
.320
.160
.150
.51
.49
.152
.160 DIA
6 HOLES
1.875
2.860
2.900
.430
QTY 6
2
3.380
4.254
4.248
CSK & TAP FAR SIDE FOR NO.4 (.112) 40 UNC - 2B
X 1½ DIA INSERT 6 PLACES MARKED A
SEE NOTE 5
.065
.045
.050
.342
.562
SECTION A-A

NOTES

1. MATL: 6061-T6 ALUMINIUM PER QQ-A-250/11
2. REMOVE BURRS AND SHARP EDGES
3. ANODIZE PER MIL-A-8625, TYPE I, (CHROMIC ACID) DYED BLACK
4. INTERPRET DRAWING IN ACCORDANCE WITH STANDARDS PRESCRIBED BY MIL-D-70327
5. INSTALL FIND NO.2 PER MS33646, REMOVE TANG

MASTER

QTY REQD	PART OR IDENTIFYING NO.	NOMENCLATURE OR DESCRIPTION	FIND NO.
6	MS21209-C0415	INSERT, SCREW THREAD	2
1	1004802-1	FRAME, E/L	1

LIST OF MATERIALS

NEXT ASSY	USED ON
1003809	

APPLICATION

UNLESS OTHERWISE SPECIFIED DIMENSIONS ARE IN INCHES
TOLERANCES ON
FRACTIONS ± DECIMALS ±.005 ANGLES ± 2°
DO NOT SCALE THIS DRAWING

MATERIAL SEE NOTE 1
HEAT TREATMENT NONE
FINAL FINISH NONE

MIT INSTRUMENTATION LAB
CAMBRIDGE, MASS.
DWG. NO. CONTRACT

DRAWN P. Boudreau DATE 26 Aug 64
CHECKED Flynn 15 Sept 64
APPROVAL Hjemsen 9/22/64.
APPROVAL [illegible] 9 Oct 64
NASA APPROVAL W J Rhine 10-6-64
MIT APPROVAL
MIT APPROVAL W Kupfer 6 Oct 64

MANNED SPACECRAFT CENTER
HOUSTON, TEXAS

FRAME, E/L
AGC DSKY MAIN 100 SERIES

CODE IDENT NO. ——— SIZE D NASA DRAWING NO. 1004802
SCALE 1/1 WT SHEET 1 OF 1

NOTICE — WHEN GOVERNMENT DRAWINGS, SPECIFICATIONS, OR OTHER DATA ARE USED FOR ANY PURPOSE OTHER THAN IN CONNECTION WITH A DEFINITELY RELATED GOVERNMENT PROCUREMENT OPERATION, THE UNITED STATES GOVERNMENT THEREBY INCURS NO RESPONSIBILITY NOR ANY OBLIGATION WHATSOEVER; AND THE FACT THAT THE GOVERNMENT MAY HAVE FORMULATED, FURNISHED, OR IN ANY WAY SUPPLIED THE SAID DRAWINGS, SPECIFICATIONS OR OTHER DATA IS NOT TO BE REGARDED BY IMPLICATION OR OTHERWISE AS IN ANY MANNER LICENSING THE HOLDER OR ANY OTHER PERSON OR CORPORATION, OR CONVEYING ANY RIGHTS OR PERMISSION TO MANUFACTURE, USE, OR SELL ANY PATENTED INVENTION THAT MAY IN ANY WAY BE RELATED THERETO.

1004803 A

REVISIONS 13222

SYM	DESCRIPTION	DATE	APPROVAL
A	REVISED PER TDRR 16112 DR a. J. Bien CHK R.M.E.	2/19/65	

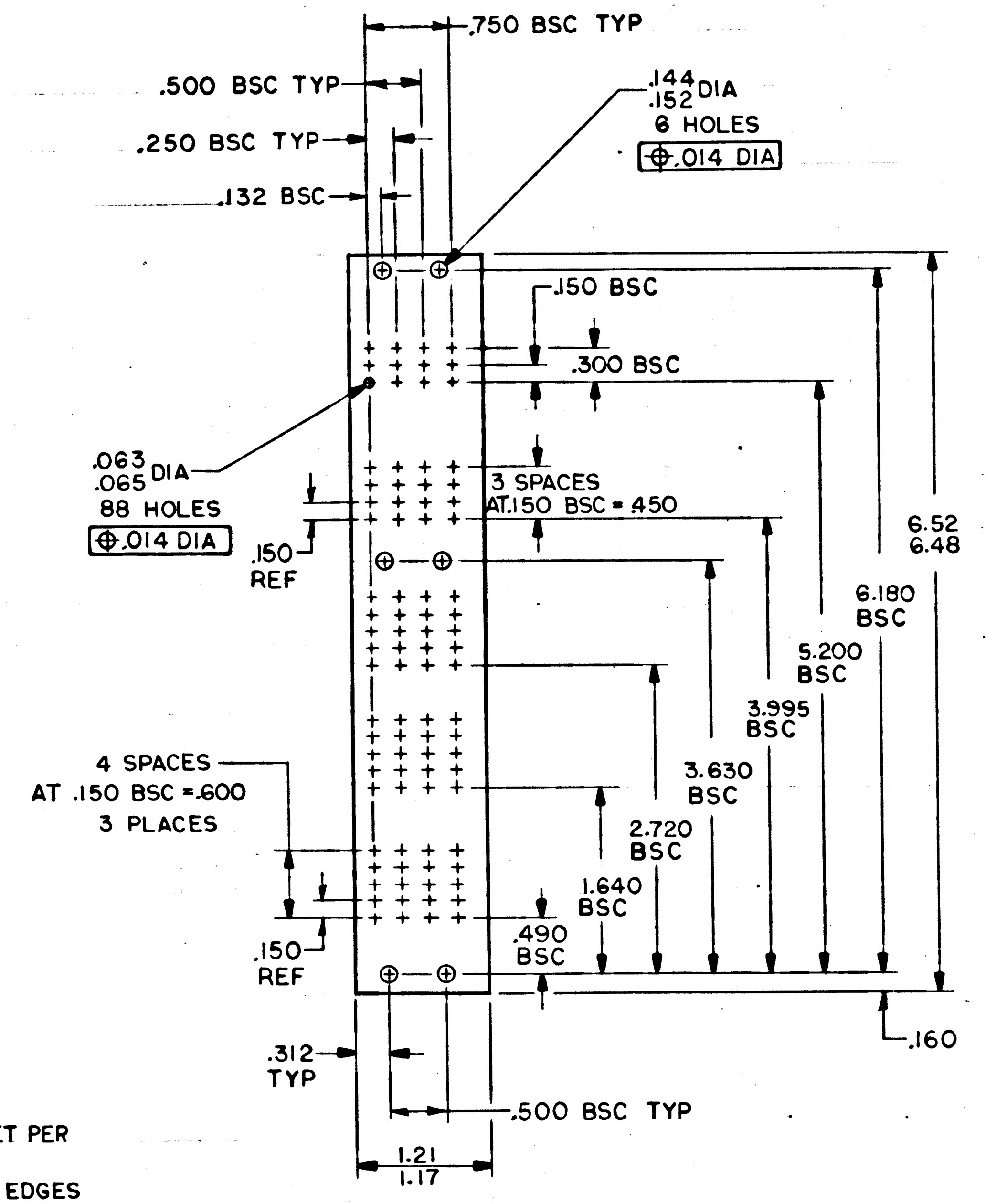
.750 BSC TYP
.500 BSC TYP
.250 BSC TYP
.132 BSC
.144
.152 DIA
6 HOLES
⊕.014 DIA
.150 BSC
.300 BSC
.063
.065 DIA
88 HOLES
⊕.014 DIA
3 SPACES
AT .150 BSC = .450
.150 REF
6.52
6.48
6.180 BSC
5.200 BSC
3.995 BSC
3.630 BSC
2.720 BSC
1.640 BSC
.490 BSC
4 SPACES
AT .150 BSC = .600
3 PLACES
.150 REF
.160
.312 TYP
.500 BSC TYP
1.21
1.17

NOTES

1. MATL: .094 THK PLASTIC SHEET PER MIL-P-18177, TYPE GEB
2. REMOVE BURRS AND SHARP EDGES
3. INTERPRET DRAWING IN ACCORDANCE WITH STANDARDS PRESCRIBED BY MIL-D-70327

MASTER

QTY REQD	PART OR IDENTIFYING NO.	NOMENCLATURE OR DESCRIPTION	FIND NO.

LIST OF MATERIALS

NEXT ASSY	USED ON
1003760	
1003759	

APPLICATION

UNLESS OTHERWISE SPECIFIED DIMENSIONS ARE IN INCHES
TOLERANCES ON
FRACTIONS ± DECIMALS ±.005 ANGLES ±
DO NOT SCALE THIS DRAWING

MATERIAL SEE NOTE 1
HEAT TREATMENT NONE
FINAL FINISH NONE

MIT INSTRUMENTATION LAB
CAMBRIDGE, MASS.
DWG. NO. CONTRACT

DRAWN P. Boudreau DATE 21 Aug 64
CHECKED Fleger 15 Sept 64
APPROVAL K. Jensen 9/22/64.
APPROVAL Eldon C Hall 6 Oct 64
NASA APPROVAL W J Rhine 10-6-64
MIT APPROVAL
MIT APPROVAL

MANNED SPACECRAFT CENTER
HOUSTON, TEXAS

BOARD, TERMINAL
AGC DSKY MAIN 100 SERIES

CODE IDENT NO. —— SIZE C NASA DRAWING NO. 1004803
SCALE 1/1 WT SHEET 1 OF 1

NOTICE — WHEN GOVERNMENT DRAWINGS, SPECIFICATIONS, OR OTHER DATA ARE USED FOR ANY PURPOSE OTHER THAN IN CONNECTION WITH A DEFINITELY RELATED GOVERNMENT PROCUREMENT OPERATION, THE UNITED STATES GOVERNMENT THEREBY INCURS NO RESPONSIBILITY NOR ANY OBLIGATION WHATSOEVER; AND THE FACT THAT THE GOVERNMENT MAY HAVE FORMULATED, FURNISHED, OR IN ANY WAY SUPPLIED THE SAID DRAWINGS, SPECIFICATIONS OR OTHER DATA IS NOT TO BE REGARDED BY IMPLICATION OR OTHERWISE AS IN ANY MANNER LICENSING THE HOLDER OR ANY OTHER PERSON OR CORPORATION, OR CONVEYING ANY RIGHTS OR PERMISSION TO MANUFACTURE, USE, OR SELL ANY PATENTED INVENTION THAT MAY IN ANY WAY BE RELATED THERETO.

— | 1004803

REVISIONS 13222

SYM	DESCRIPTION	DATE	APPROVAL

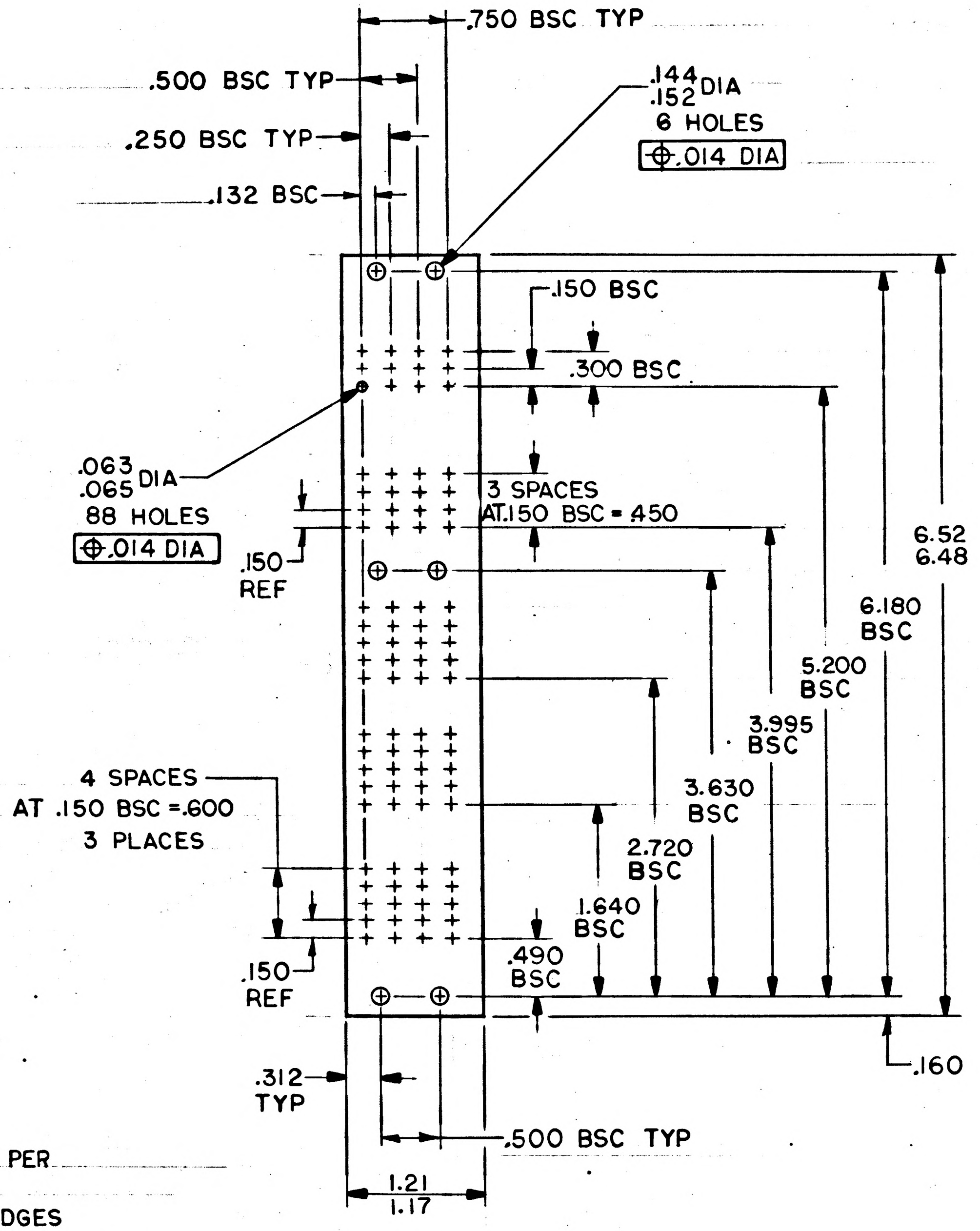
.750 BSC TYP
.500 BSC TYP
.250 BSC TYP
.132 BSC
.144
.152 DIA
6 HOLES
⌖ .014 DIA
.150 BSC
.300 BSC
.063
.065 DIA
88 HOLES
⌖ .014 DIA
3 SPACES
AT .150 BSC = .450
.150
REF
6.52
6.48
6.180
BSC
5.200
BSC
3.995
BSC
3.630
BSC
2.720
BSC
1.640
BSC
.490
BSC
4 SPACES
AT .150 BSC = .600
3 PLACES
.150
REF
.160
.312
TYP
.500 BSC TYP
1.21
1.17

NOTES

1. MATL: .094 THK PLASTIC SHEET PER MIL-P-18177, TYPE GEE
2. REMOVE BURRS AND SHARP EDGES
3. INTERPRET DRAWING IN ACCORDANCE WITH STANDARDS PRESCRIBED BY MIL-D-70327

MASTER

QTY REQD	PART OR IDENTIFYING NO.	NOMENCLATURE OR DESCRIPTION	FIND NO.

LIST OF MATERIALS

1003760	
1003759	
NEXT ASSY	USED ON
APPLICATION	

UNLESS OTHERWISE SPECIFIED
DIMENSIONS ARE IN INCHES
TOLERANCES ON
FRACTIONS ± DECIMALS ±.005 ANGLES ±
DO NOT SCALE THIS DRAWING
MATERIAL SEE NOTE 1
HEAT TREATMENT NONE
FINAL FINISH NONE

MIT
INSTRUMENTATION LAB
CAMBRIDGE, MASS.
DWG. NO. CONTRACT

DRAWN P. Boudreau DATE 21 Aug 64
CHECKED Clager 15 Sept 64
APPROVAL K Jensen 9/22/64.
APPROVAL Eldon C Hall 6 Oct 64
NASA APPROVAL W J Rhine 10-6-64
MIT APPROVAL
MIT APPROVAL

MANNED SPACECRAFT CENTER
HOUSTON, TEXAS

BOARD, TERMINAL
AGC DSKY MAIN 100 SERIES

CODE IDENT NO. ——— SIZE C NASA DRAWING NO. 1004803
SCALE 1/1 WT SHEET 1 OF 1

INCHES
0 1 2
PHOTOGRAPHIC SCALE ONLY

NOTICE – WHEN GOVERNMENT DRAWINGS, SPECIFICATIONS, OR OTHER DATA ARE USED FOR ANY PURPOSE OTHER THAN IN CONNECTION WITH A DEFINITELY RELATED GOVERNMENT PROCUREMENT OPERATION, THE UNITED STATES GOVERNMENT THEREBY INCURS NO RESPONSIBILITY NOR ANY OBLIGATION WHATSOEVER; AND THE FACT THAT THE GOVERNMENT MAY HAVE FORMULATED, FURNISHED, OR IN ANY WAY SUPPLIED THE SAID DRAWINGS, SPECIFICATIONS OR OTHER DATA IS NOT TO BE REGARDED BY IMPLICATION OR OTHERWISE AS IN ANY MANNER LICENSING THE HOLDER OR ANY OTHER PERSON OR CORPORATION, OR CONVEYING ANY RIGHTS OR PERMISSION TO MANUFACTURE, USE, OR SELL ANY PATENTED INVENTION THAT MAY IN ANY WAY BE RELATED THERETO.

1004804 —

REVISIONS 12765			
SYM	DESCRIPTION	DATE	APPROVED

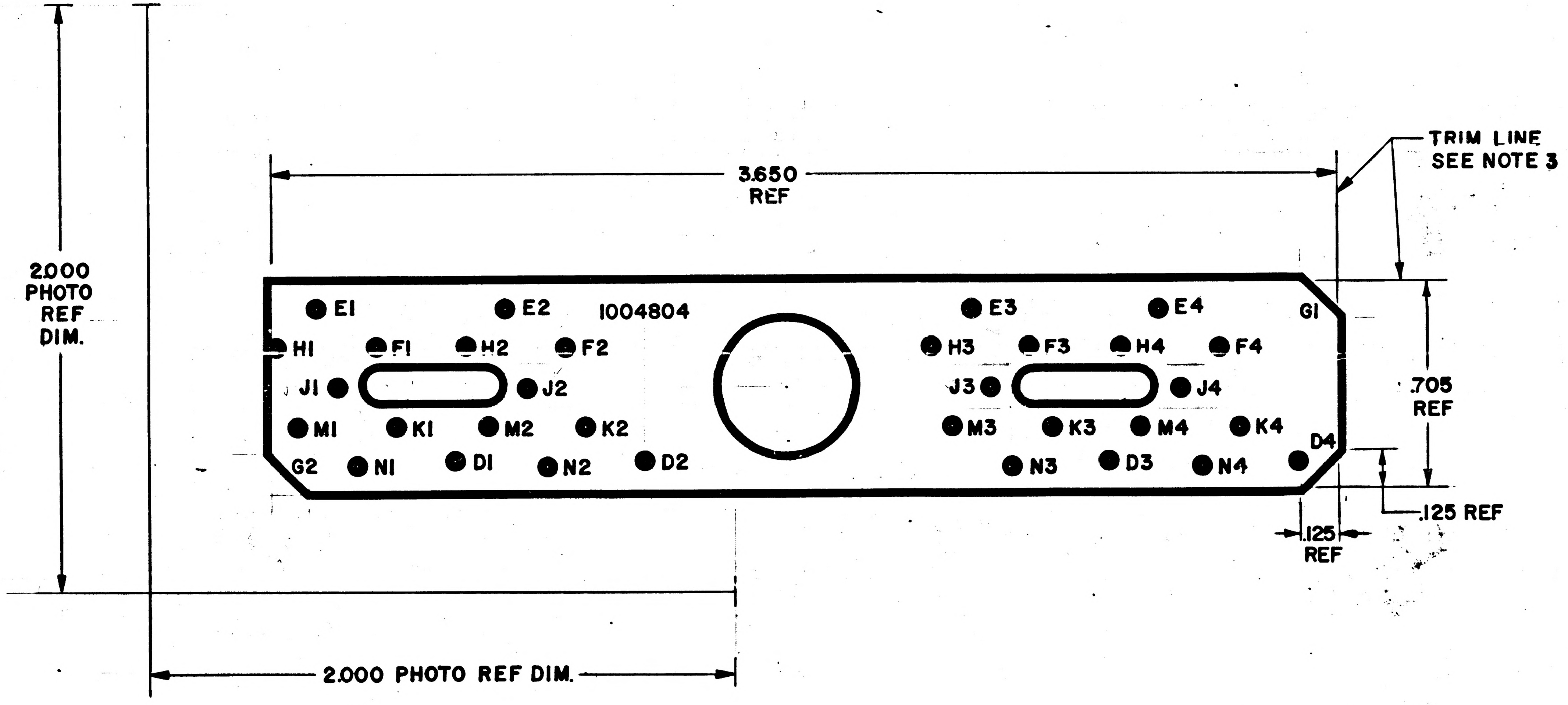

NOTES
1. INTERPRET DRAWING IN ACCORDANCE WITH STANDARDS PRESCRIBED BY MIL-D-70327
2. THE ORIGINAL OF THIS DRAWING OR REPRODUCTION MADE BY A PROCESS OR METHOD SHALL INSURE DIMENSIONAL STABILITY. DIMENSIONAL VARIATIONS SHALL NOT EXCEED .001 INCH PER FOOT
3. CUT TO WITHIN .010 OF TRIM LINE
4. MAKE MASTER PATTERN POSITIVE FILM TO DIMENSIONS SHOWN

MASTER

QTY REQD	PART OR IDENTIFYING NO.	NOMENCLATURE OR DESCRIPTION	FIND NO.

LIST OF MATERIALS

NEXT ASSY	USED ON

APPLICATION

UNLESS OTHERWISE SPECIFIED
DIMENSIONS ARE IN INCHES
TOLERANCES ON
FRACTIONS DECIMALS ANGLES
DO NOT SCALE THIS DRAWING
MATERIAL
HEAT TREATMENT
FINAL FINISH

MIT
INSTRUMENTATION LAB
CAMBRIDGE, MASS.
DRAWN W. Barry DATE 27 Aug 64
CHECKED R. Edwards 10 Sept 64
APPROVAL Sept 15 '64
APPROVAL 21 Sept 64
NASA APPROVAL W. J. R. 9-22-64
MIT APPROVAL
MIT APPROVAL W. Cooper 22 Sept 64

MANNED SPACECRAFT CENTER
HOUSTON, TEXAS

PHOTOGRAPHIC MASTER
INSULATOR BD, VERB - NOUN
AGC DSKY, NAV & MAIN
100 SERIES

CODE IDENT NO. —— SIZE D NASA DRAWING NO. 1004804
SCALE 8/1 WT SHEET 1 OF 1

INCHES
0 1 2

NOTICE — WHEN GOVERNMENT DRAWINGS, SPECIFICATIONS, OR OTHER DATA ARE USED FOR ANY PURPOSE OTHER THAN IN CONNECTION WITH A DEFINITELY RELATED GOVERNMENT PROCUREMENT OPERATION, THE UNITED STATES GOVERNMENT THEREBY INCURS NO RESPONSIBILITY NOR ANY OBLIGATION WHATSOEVER; AND THE FACT THAT THE GOVERNMENT MAY HAVE FORMULATED, FURNISHED, OR IN ANY WAY SUPPLIED THE SAID DRAWINGS, SPECIFICATIONS OR OTHER DATA IS NOT TO BE REGARDED BY IMPLICATION OR OTHERWISE AS IN ANY MANNER LICENSING THE HOLDER OR ANY OTHER PERSON OR CORPORATION, OR CONVEYING ANY RIGHTS OR PERMISSION TO MANUFACTURE, USE, OR SELL ANY PATENTED INVENTION THAT MAY IN ANY WAY BE RELATED THERETO.

1004805 —

REVISIONS		2765	
SYM	DESCRIPTION	DATE	APPROVED

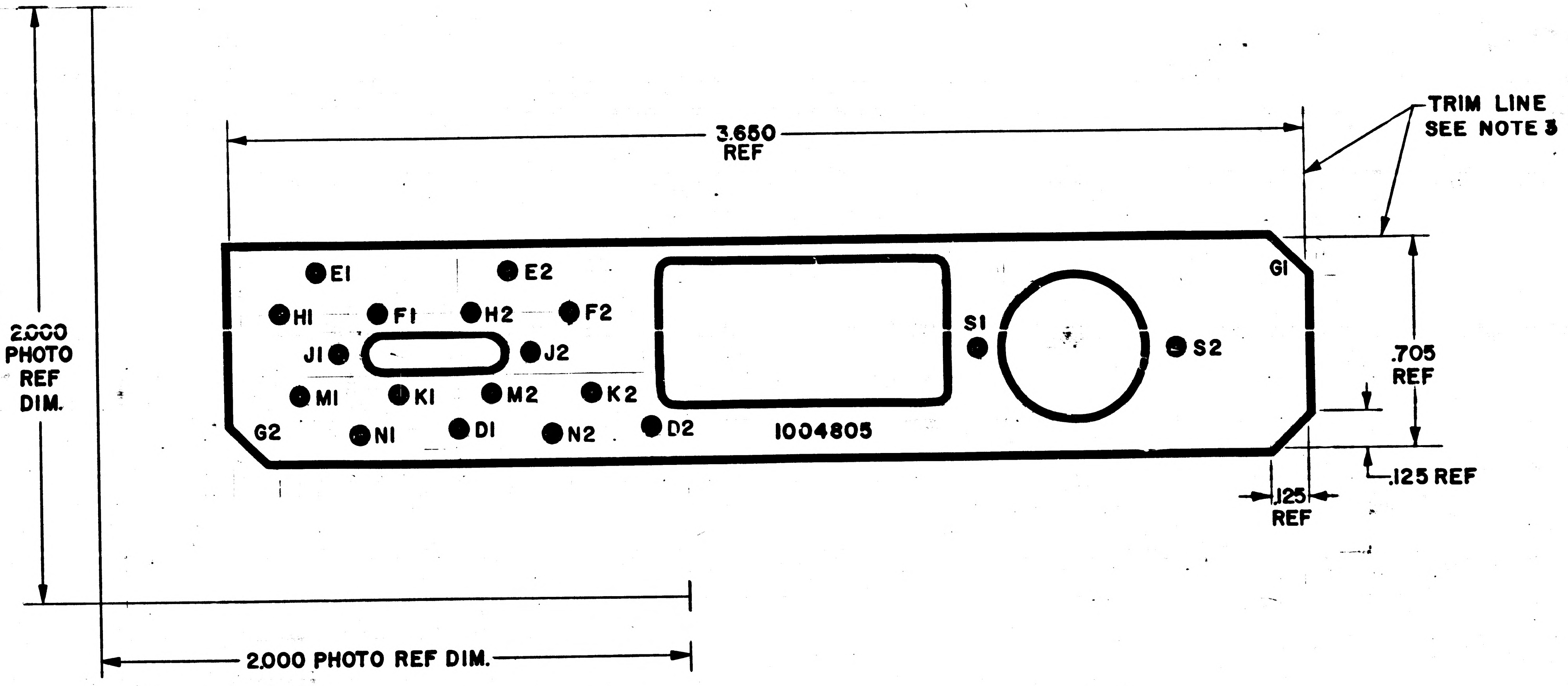

NOTES
1. INTERPRET DRAWING IN ACCORDANCE ~~WITH~~ STANDARDS ~~PRESCRIBED~~ BY MIL-D-70327
2. THE ORIGINAL OF THIS DRAWING OR REPRODUCTION MADE BY A PROCESS OR METHOD SHALL INSURE DIMENSIONAL STABILITY. DIMENSIONAL VARIATIONS SHALL NOT EXCEED .001 INCH PER FOOT
3. CUT TO WITHIN .010 OF TRIM LINE
4. MAKE MASTER PATTERN POSITIVE FILM TO DIMENSIONS SHOWN

MASTER

QTY REQD	PART OR IDENTIFYING NO.	NOMENCLATURE OR DESCRIPTION	FIND NO.
LIST OF MATERIALS			

NEXT ASSY	USED ON
APPLICATION	

UNLESS OTHERWISE SPECIFIED
DIMENSIONS ARE IN INCHES
TOLERANCES ON
FRACTIONS ± DECIMALS ± ANGLES ±
DO NOT SCALE THIS DRAWING
MATERIAL
HEAT TREATMENT
FINAL FINISH

MIT
INSTRUMENTATION LAB
CAMBRIDGE, MASS.
DRAWN Al Brown DATE 26 AUG 64
CHECKED R. Edwards 10 Sept
APPROVAL
APPROVAL
NASA APPROVAL W J Rhine 9-22-64
MIT APPROVAL
MIT APPROVAL

MANNED SPACECRAFT CENTER
HOUSTON, TEXAS

PHOTOGRAPHIC MASTER
INSULATOR BOARD, PROGRAM
AGC DSKY, MAIN & NAV
100 SERIES

CODE IDENT NO. ——— SIZE D NASA DRAWING NO. 1004805
SCALE 5/1 WT SHEET 1 OF 1

INCHES

NOTICE – WHEN GOVERNMENT DRAWINGS, SPECIFICATIONS, OR OTHER DATA ARE USED FOR ANY PURPOSE OTHER THAN IN CONNECTION WITH A DEFINITELY RELATED GOVERNMENT PROCUREMENT OPERATION, THE UNITED STATES GOVERNMENT THEREBY INCURS NO RESPONSIBILITY NOR ANY OBLIGATION WHATSOEVER; AND THE FACT THAT THE GOVERNMENT MAY HAVE FORMULATED, FURNISHED, OR IN ANY WAY SUPPLIED THE SAID DRAWINGS, SPECIFICATIONS OR OTHER DATA IS NOT TO BE REGARDED BY IMPLICATION OR OTHERWISE AS IN ANY MANNER LICENSING THE HOLDER OR ANY OTHER PERSON OR CORPORATION, OR CONVEYING ANY RIGHTS OR PERMISSION TO MANUFACTURE, USE, OR SELL ANY PATENTED INVENTION THAT MAY IN ANY WAY BE RELATED THERETO.

1004807 | —

REVISIONS 12765			
SYM	DESCRIPTION	DATE	APPROVED

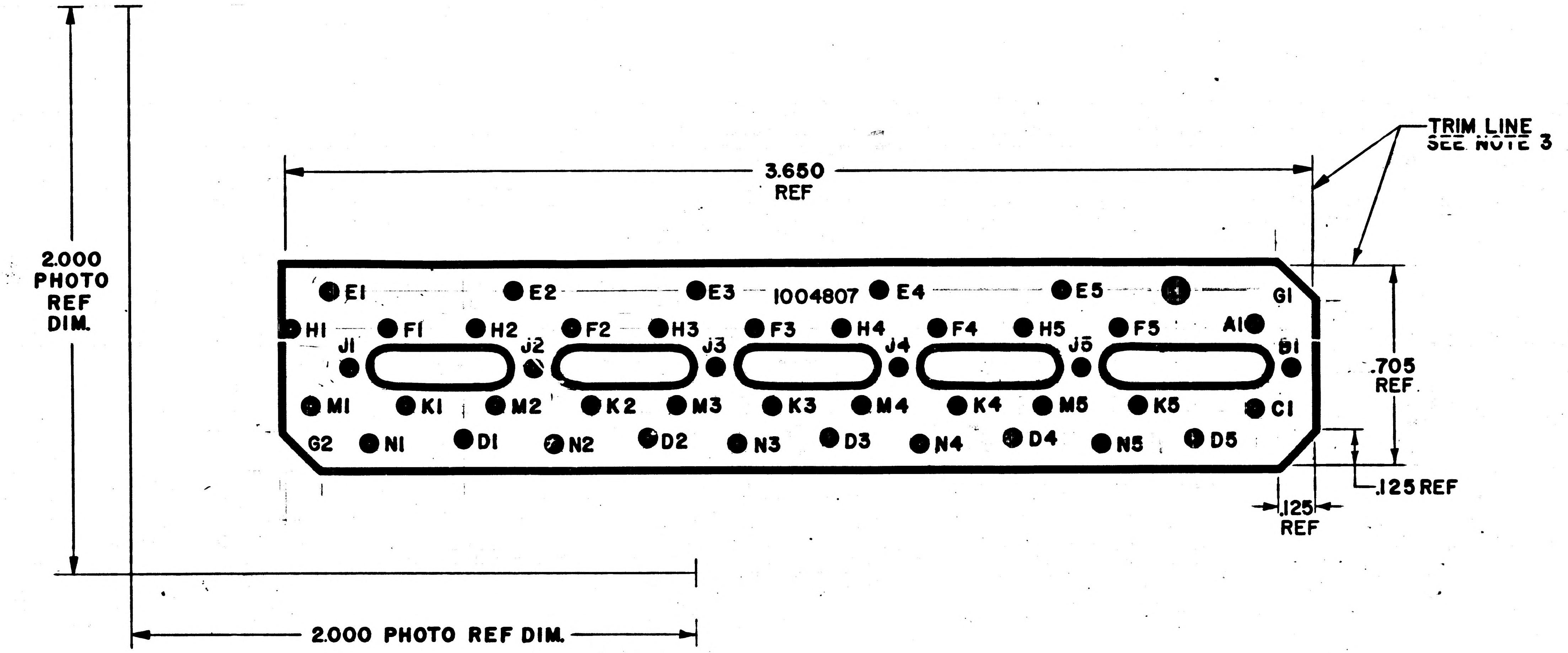
TRIM LINE
SEE NOTE 3
3.650
REF
2.000
PHOTO
REF
DIM.
1004807
E1
E2
E3
E4
E5
G1
H1
F1
H2
F2
H3
F3
H4
F4
H5
F5
A1
J1
J2
J3
J4
J5
B1
M1
K1
M2
K2
M3
K3
M4
K4
M5
K5
C1
G2
N1
D1
N2
D2
N3
D3
N4
D4
N5
D5
.705
REF
.125 REF
.125
REF
2.000 PHOTO REF DIM.

NOTES
1. INTERPRET DRAWING IN ACCORDANCE WITH STANDARDS PRESCRIBED BY MIL-D-70327
2. THE ORIGINAL OF THIS DRAWING OR REPRODUCTION MADE BY A PROCESS OR METHOD SHALL INSURE DIMENSIONAL STABILITY. DIMENSIONAL VARIATIONS SHALL NOT EXCEED .001 INCH PER FOOT
3. CUT TO WITHIN .010 OF TRIM LINE
4. MAKE MASTER PATTERN POSITIVE FILM TO DIMENSIONS SHOWN

MASTER

QTY REQD	PART OR IDENTIFYING NO.	NOMENCLATURE OR DESCRIPTION	FIND NO.

LIST OF MATERIALS

NEXT ASSY	USED ON

APPLICATION

UNLESS OTHERWISE SPECIFIED DIMENSIONS ARE IN INCHES
TOLERANCES ON
FRACTIONS ± DECIMALS ± ANGLES ±
DO NOT SCALE THIS DRAWING
MATERIAL
HEAT TREATMENT
FINAL FINISH

MIT
INSTRUMENTATION LAB
CAMBRIDGE, MASS.
DRAWN W. Brown DATE 26 AUG 64
CHECKED R. Edwards 10 Sept 64
APPROVAL Sept 15 64
APPROVAL
NASA APPROVAL W J Rhine 9-23-64
MIT APPROVAL
MIT APPROVAL W Tyler 23 Sept 64

MANNED SPACECRAFT CENTER
HOUSTON, TEXAS

PHOTOGRAPHIC MASTER
INSULATOR BOARD, REGISTER
AGC DSKY, NAV & MAIN
100 SERIES

CODE IDENT NO. —
SIZE D
NASA DRAWING NO. 1004807
SCALE 5/1
WT
SHEET 1 OF 1

INCHES
0 1 2

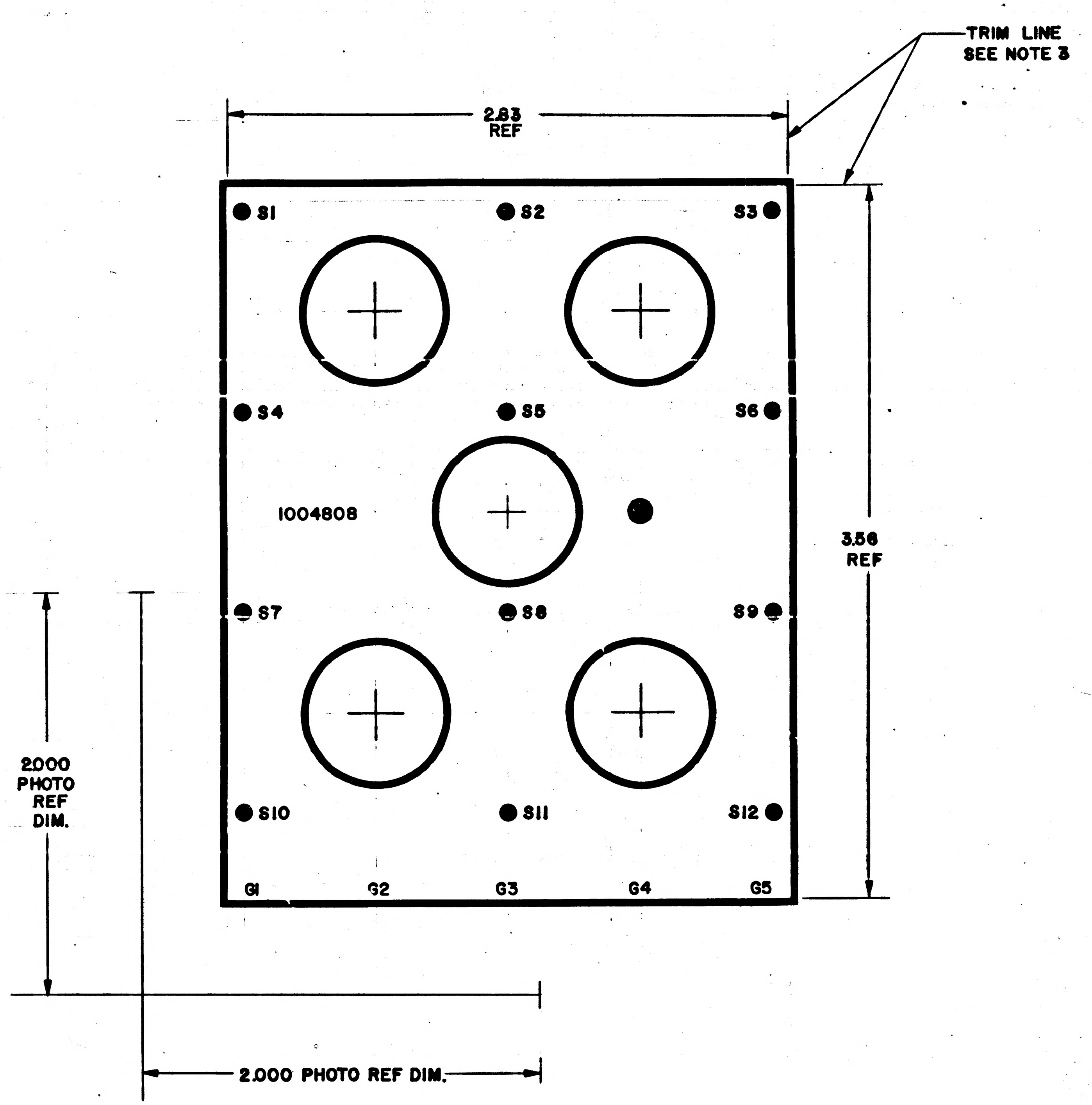
TRIM LINE
SEE NOTE 3
2.83
REF
3.56
REF
S1
S2
S3
S4
S5
S6
S7
S8
S9
S10
S11
S12
1004808
G1
G2
G3
G4
G5
2.000
PHOTO
REF
DIM.
2.000 PHOTO REF DIM.

NOTES

1. INTERPRET DRAWING IN ACCORDANCE WITH STANDARDS PRESCRIBED BY MIL-D-70327
2. THE ORIGINAL OF THIS DRAWING OR REPRODUCTION MADE BY A PROCESS OR METHOD SHALL INSURE DIMENSIONAL STABILITY. DIMENSIONAL VARIATIONS SHALL NOT EXCEED .001 INCH PER FOOT
3. CUT TO WITHIN .010 OF TRIM LINE
4. MAKE MASTER PATTERN POSITIVE FILM TO DIMENSIONS SHOWN

MASTER

QTY REQD	PART OR IDENTIFYING NO.	NOMENCLATURE OR DESCRIPTION	FIND NO.
LIST OF MATERIALS			

UNLESS OTHERWISE SPECIFIED
DIMENSIONS ARE IN INCHES
TOLERANCES ON
FRACTIONS ± DECIMALS ± ANGLES ±
DO NOT SCALE THIS DRAWING
MATERIAL
HEAT TREATMENT
FINAL FINISH

NEXT ASSY | USED ON
APPLICATION

MIT
INSTRUMENTATION LAB
CAMBRIDGE, MASS.
DRAWN
DATE
CHECKED
APPROVAL
APPROVAL
NASA APPROVAL
MIT APPROVAL
MIT APPROVAL

MANNED SPACECRAFT CENTER
HOUSTON, TEXAS

PHOTOGRAPHIC MASTER
INSULATOR BOARD, ALARM
AGC DSKY, NAV 100 SERIES

CODE IDENT NO. | SIZE E | NASA DRAWING NO. 1004808
SCALE 4/1 | WT | SHEET 1 OF 1

LTR	DESCRIPTION	DATE	APPR
A	REVISED PER TDRR 16527 DR _a Vo_ CHK _R.W.E._	3/19/65	

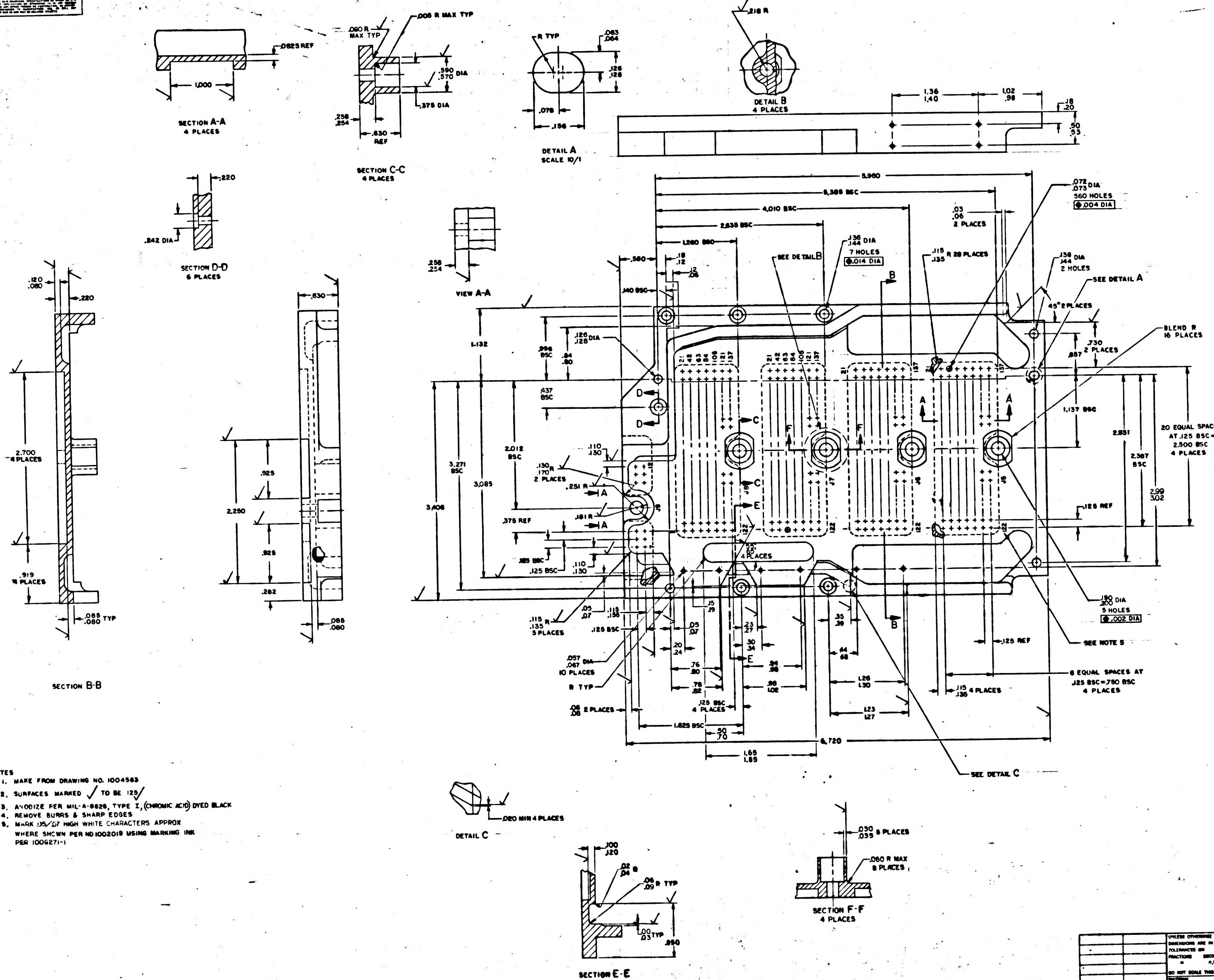

SECTION A-A
4 PLACES
1.000
.0825 REF
.090 R MAX TYP
.005 R MAX TYP
.590 .570 DIA
.375 DIA
.630 REF
SECTION C-C
4 PLACES
R TYP
DETAIL A
SCALE 10/1
.218 R
DETAIL B
4 PLACES
SECTION D-D
6 PLACES
.242 DIA
.220
VIEW A-A
SECTION B-B
2.700 4 PLACES
.919 4 PLACES
.085 .080 TYP
2.250
.925
.282
8.960
8.385 BSC
4.010 BSC
2.635 BSC
1.260 BSC
.072 .073 DIA
560 HOLES
⌖ .004 DIA
.136 .144 DIA
7 HOLES
⌖ .014 DIA
SEE DETAIL B
.115 .135 R 28 PLACES
.136 .144 DIA
2 HOLES
SEE DETAIL A
45° 2 PLACES
BLEND R
16 PLACES
.730 2 PLACES
20 EQUAL SPACES
AT .125 BSC =
2.500 BSC
4 PLACES
1.137 BSC
2.931
2.387 BSC
2.99 3.02
.125 REF
.190 .200 DIA
5 HOLES
⌖ .002 DIA
SEE NOTE 5
6 EQUAL SPACES AT
.125 BSC = .750 BSC
4 PLACES
.115 .135 4 PLACES
SEE DETAIL C
6.720
1.625 BSC
1.65 1.85
3.406
3.271 BSC
3.085
2.012 BSC
1.132
.375 REF
.057 .067 DIA
10 PLACES
R TYP
.06 .08 2 PLACES
.115 .135 R
5 PLACES
.125 BSC 4 PLACES
DETAIL C
.020 MIN 4 PLACES
SECTION E-E
SECTION F-F
4 PLACES
.030 .035 8 PLACES
.060 R MAX
8 PLACES
J1 J2 J3 J4 J5 J6 J7 J8 J9
MASTER

NOTES

1. MAKE FROM DRAWING NO. 1004563
2. SURFACES MARKED √ TO BE 125√
3. ANODIZE PER MIL-A-8625, TYPE I, (CHROMIC ACID) DYED BLACK
4. REMOVE BURRS & SHARP EDGES
5. MARK .05/.07 HIGH WHITE CHARACTERS APPROX WHERE SHOWN PER ND 1002019 USING MARKING INK PER 1006271-1

QTY REQD	PART OR IDENTIFYING NO.	NOMENCLATURE OR DESCRIPTION	FIND NO.

LIST OF MATERIALS

NEXT ASSY	USED ON
1003810	

APPLICATION

UNLESS OTHERWISE SPECIFIED DIMENSIONS ARE IN INCHES
TOLERANCES ON
FRACTIONS ± DECIMALS ±.005 ANGLES ± 2°
DO NOT SCALE THIS DRAWING
MATERIAL SEE NOTE 1
HEAT TREATMENT NONE
FINAL FINISH SEE NOTE 3

MIT
INSTRUMENTATION LAB
CAMBRIDGE, MASS

DRAWN _R. Thomas_ DATE
CHECKED _16 Sept 64_
APPROVAL _9/22/64_
APPROVAL _C. Hall_
NASA APPROVAL _W. J. ... 10-5-64_
MIT APPROVAL

MANNED SPACECRAFT CENTER
HOUSTON, TEXAS

PLATE, CONN.
RELAY HOUSING
AGC DSKY MAIN 100 SERIES

CODE IDENT NO. —— SIZE J NASA DRAWING NO. 1004810

SCALE 2/1 WT SHEET 1 OF 1

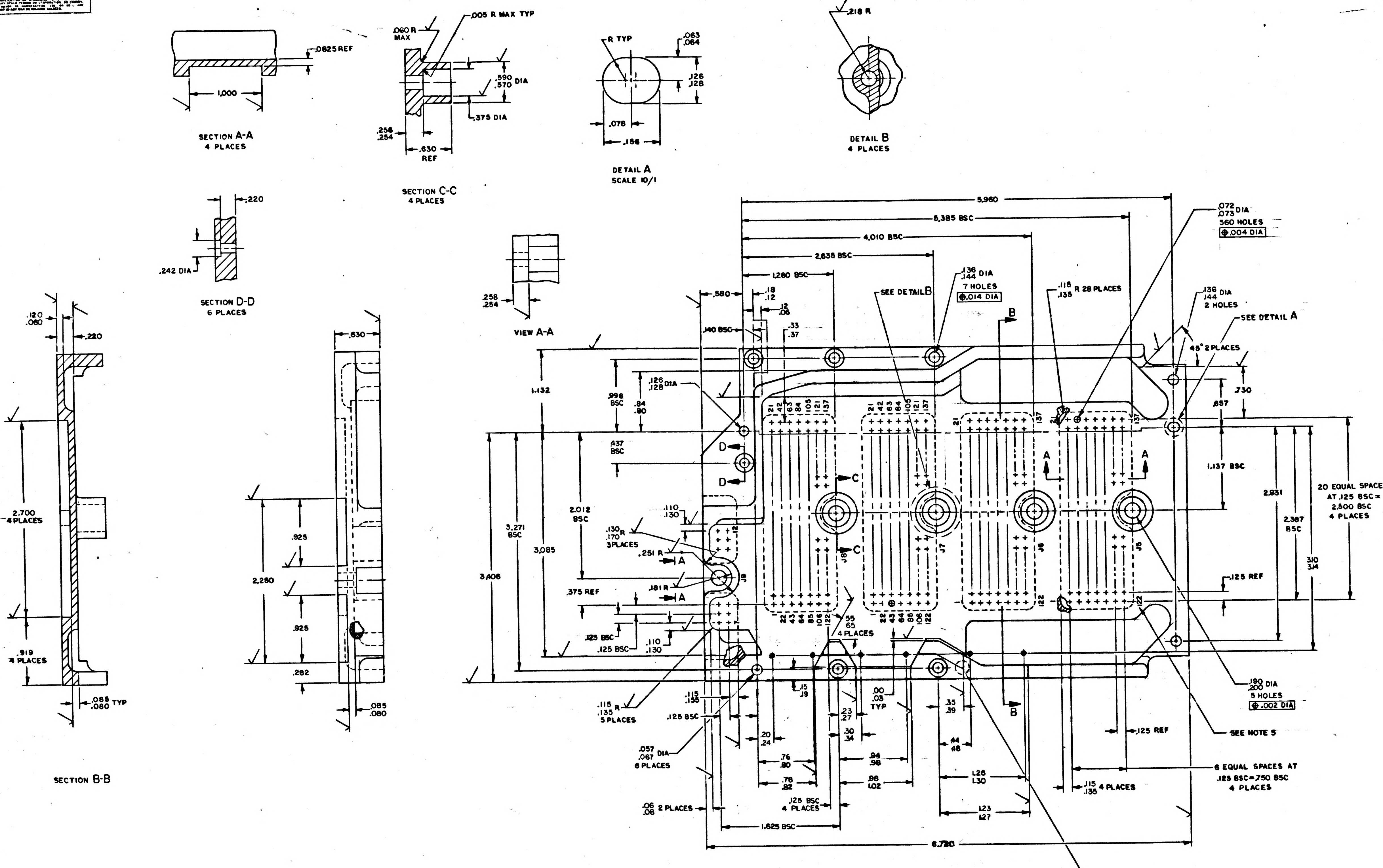
SECTION A-A
4 PLACES
.0825 REF
1.000
SECTION C-C
4 PLACES
.060 R MAX
.005 R MAX TYP
.590 .570 DIA
.375 DIA
.258 .254
.630 REF
DETAIL A
SCALE 10/1
R TYP
.063 .064
.126 .128
.078
.156
DETAIL B
4 PLACES
.218 R
SECTION D-D
6 PLACES
.220
.242 DIA
VIEW A-A
.258 .254
SECTION B-B
.120 .080
.220
2.700 4 PLACES
.919 4 PLACES
.085 .080 TYP
.630
.925
2.250
.925
.282
.085 .080
5.960
5.385 BSC
4.010 BSC
2.635 BSC
1.260 BSC
.580
.140 BSC
.18 .12
.12 .06
.33 .37
.136 .144 DIA
7 HOLES
⊕ .014 DIA
SEE DETAIL B
.115 .135 R 28 PLACES
.072 .073 DIA
560 HOLES
⊕ .004 DIA
.136 .144 DIA
2 HOLES
SEE DETAIL A
45° 2 PLACES
.730
.857
1.137 BSC
2.931
2.387 BSC
20 EQUAL SPACES AT .125 BSC = 2.500 BSC 4 PLACES
3.10 3.14
.125 REF
1.132
.996 BSC
.84 .80
.126 .128 DIA
.437 BSC
2.012 BSC
3.271 BSC
3.085
3.406
.110 .130
.130 .170 R 3 PLACES
.251 R
.181 R
.375 REF
.125 BSC
.125 BSC
.110 .130
.55 .65 4 PLACES
J8 J7 J6 J5 J9
.115 .135 R 5 PLACES
.115 .138
.125 BSC
.15 .19
.20 .24
.23 .27
.30 .34
.00 .03 TYP
.35 .39
.44 .48
.057 .067 DIA 6 PLACES
.76 .80
.78 .82
.94 .98
.98 1.02
.125 BSC 4 PLACES
1.26 1.30
1.23 1.27
.06 .08 2 PLACES
1.625 BSC
6.730
.115 .135 4 PLACES
.125 REF
.190 .200 DIA
5 HOLES
⊕ .002 DIA
SEE NOTE 5
6 EQUAL SPACES AT .125 BSC = .750 BSC 4 PLACES
SEE DETAIL C
A
B
C
D

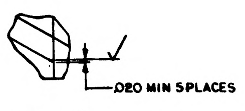
.020 MIN 5 PLACES

DETAIL C

NOTES

1. MAKE FROM DRAWING NO. 1004563
2. SURFACES MARKED √ TO BE 125√
3. ANODIZE PER MIL-A-8625, TYPE I, (CHROMIC ACID) DYED BLACK
4. REMOVE BURRS & SHARP EDGES
5. MARK .06 HIGH WHITE CHARACTERS APPROX WHERE SHOWN PER ND 1002019 USING MARKING INK PER 1006271-1

MASTER

QTY REQD	PART OR IDENTIFYING NO.	NOMENCLATURE OR DESCRIPTION	FIND NO.
		LIST OF MATERIALS	

1003810	
NEXT ASSY	USED ON
APPLICATION	

UNLESS OTHERWISE SPECIFIED DIMENSIONS ARE IN INCHES
TOLERANCES ON
FRACTIONS ± DECIMALS ±.005 ANGLES ± 2°
DO NOT SCALE THIS DRAWING
MATERIAL SEE NOTE 1
HEAT TREATMENT NONE
FINAL FINISH SEE NOTE 3

MIT INSTRUMENTATION LAB
CAMBRIDGE, MASS.
DRAWN
DATE
CHECKED
APPROVAL 9/22/64
APPROVAL
NASA APPROVAL 10-6-64
MIT APPROVAL
MIT APPROVAL

MANNED SPACECRAFT CENTER
HOUSTON, TEXAS

PLATE, CONN.
RELAY HOUSING
AGC DSKY MAIN ICO SERIES

CODE IDENT NO. —
SIZE J
NASA DRAWING NO. 1004810
SCALE 2/1
WT
SHEET

1004810

NOTICE — WHEN GOVERNMENT DRAWINGS, SPECIFICATIONS, OR OTHER DATA ARE USED FOR ANY PURPOSE OTHER THAN IN CONNECTION WITH A DEFINITELY RELATED GOVERNMENT PROCUREMENT OPERATION, THE UNITED STATES GOVERNMENT THEREBY INCURS NO RESPONSIBILITY NOR ANY OBLIGATION WHATSOEVER, AND THE FACT THAT THE GOVERNMENT MAY HAVE FORMULATED, FURNISHED, OR IN ANY WAY SUPPLIED THE SAID DRAWINGS, SPECIFICATIONS OR OTHER DATA IS NOT TO BE REGARDED BY IMPLICATION OR OTHERWISE AS IN ANY MANNER LICENSING THE HOLDER OR ANY OTHER PERSON OR CORPORATION, OR CONVEYING ANY RIGHTS OR PERMISSION TO MANUFACTURE, USE, OR SELL ANY PATENTED INVENTION THAT MAY IN ANY WAY BE RELATED THERETO.

A | 1004812

REVISIONS 12765			
SYM	DESCRIPTION	DATE	APPROVAL
A	REVISED PER TDRR 13999 DR CHK	12/4/64	

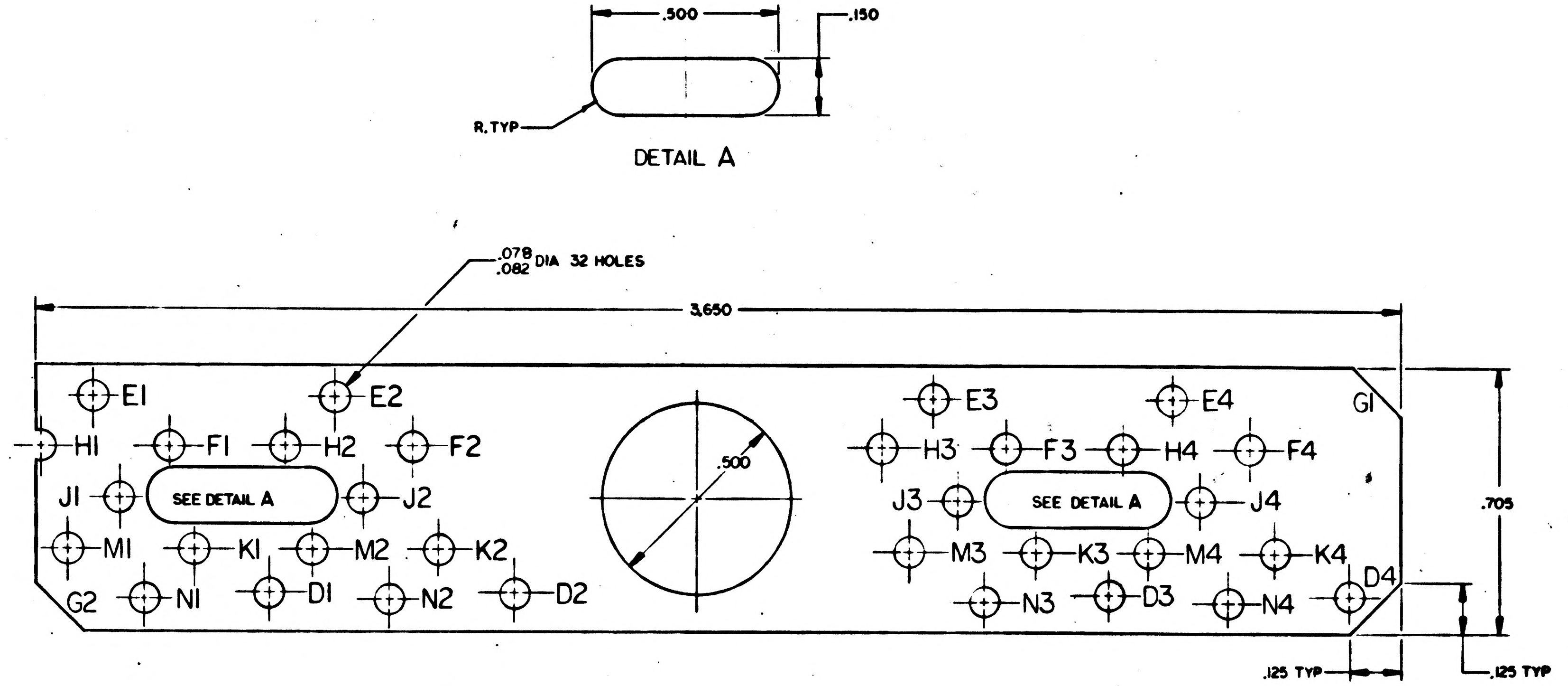

REF:
DWG NO. 1004804 FOR PHOTOGRAPHIC MASTER

NOTES
1. MATERIAL: .002/.007 THICK PLASTIC SHEET PER MIL-P-18177, TYPE GEE
2. INTERPRET DRAWING IN ACCORDANCE WITH STANDARDS PRESCRIBED BY MIL-D-70327
3. PREPARE BOARD FOR PHOTOGRAPHY PER ND1002133

QTY REQD	PART OR IDENTIFYING NO.	NOMENCLATURE OR DESCRIPTION	FIND NO.

LIST OF MATERIALS

1003802	
NEXT ASSY	USED ON
APPLICATION	

UNLESS OTHERWISE SPECIFIED
DIMENSIONS ARE IN INCHES
TOLERANCES ON
FRACTIONS ± DECIMALS ±.020 ANGLES ±
DO NOT SCALE THIS DRAWING

MATERIAL: SEE NOTE 1
HEAT TREATMENT: NONE
FINAL FINISH: NONE

MIT
INSTRUMENTATION LAB
CAMBRIDGE, MASS
DWG. NO. CONTRACT

DRAWN DATE 19 Sept 64
CHECKED R. Edmund 21 Sept 64
APPROVAL Sept 21 64
APPROVAL 21 Sept 64
NASA APPROVAL 10-22-64
MIT APPROVAL
MIT APPROVAL 23 Sept 64

MANNED SPACECRAFT CENTER
HOUSTON, TEXAS

BOARD, INSULATOR
VERB-NOUN DISPLAY
AGC DSKY, NAV & MAIN 100 SERIES

CODE IDENT NO. | SIZE D | NASA DRAWING NO. 1004812
SCALE 5/1 | WT | SHEET OF

-	1004812

REVISIONS 12765

SYM	DESCRIPTION	DATE	APPROVAL

NOTICE — WHEN GOVERNMENT DRAWINGS, SPECIFICATIONS, OR OTHER DATA ARE USED FOR ANY PURPOSE OTHER THAN IN CONNECTION WITH A DEFINITELY RELATED GOVERNMENT PROCUREMENT OPERATION, THE UNITED STATES GOVERNMENT THEREBY INCURS NO RESPONSIBILITY NOR ANY OBLIGATION WHATSOEVER; AND THE FACT THAT THE GOVERNMENT MAY HAVE FORMULATED, FURNISHED, OR IN ANY WAY SUPPLIED THE SAID DRAWINGS, SPECIFICATIONS OR OTHER DATA IS NOT TO BE REGARDED BY IMPLICATION OR OTHERWISE AS IN ANY MANNER LICENSING THE HOLDER OR ANY OTHER PERSON OR CORPORATION, OR CONVEYING ANY RIGHTS OR PERMISSION TO MANUFACTURE, USE, OR SELL ANY PATENTED INVENTION THAT MAY IN ANY WAY BE RELATED THERETO.

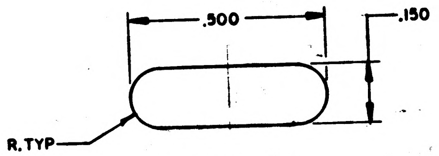

DETAIL A

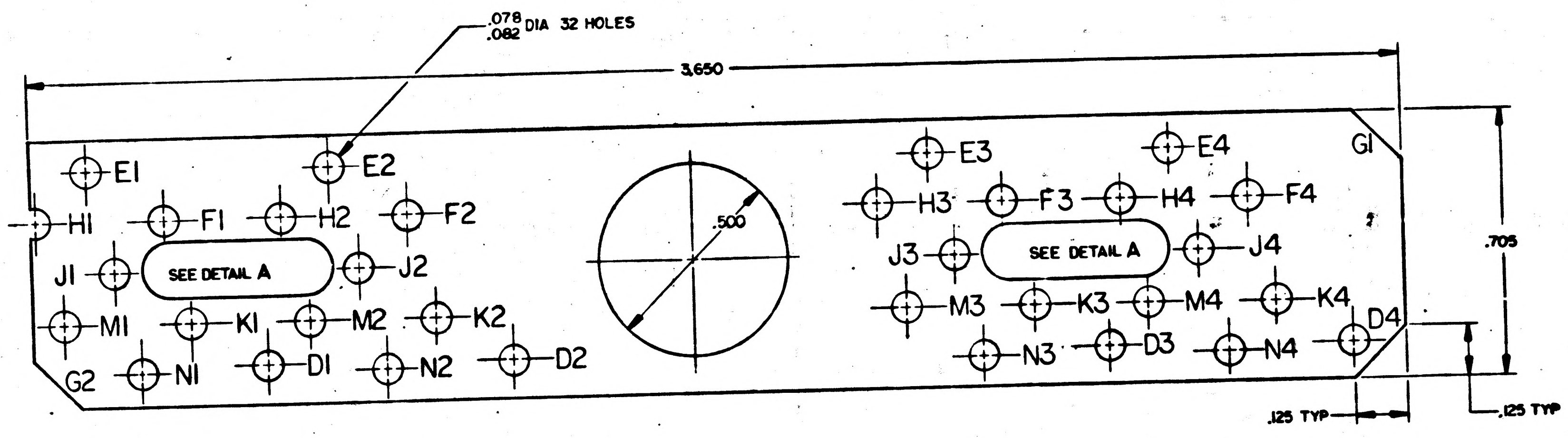

REF:
DWG NO. 1004804 FOR PHOTOGRAPHIC MASTER

NOTES
1. MATERIAL: .002/.007 THICK PLASTIC SHEET PER MIL-P-18177, TYPE GEB
2. INTERPRET DRAWING IN ACCORDANCE WITH STANDARDS PRESCRIBED BY MIL-D-70327
3. PREPARE BOARD FOR PHOTOGRAPHY PER ND1002133

MASTER

QTY REQD	PART OR IDENTIFYING NO.	NOMENCLATURE OR DESCRIPTION	FIND NO.

LIST OF MATERIALS

NEXT ASSY	USED ON
1003802	

APPLICATION

UNLESS OTHERWISE SPECIFIED
DIMENSIONS ARE IN INCHES
TOLERANCES ON
FRACTIONS ± DECIMALS ±.020 ANGLES ±
DO NOT SCALE THIS DRAWING
MATERIAL SEE NOTE 1
HEAT TREATMENT NONE
FINAL FINISH NONE

MIT
INSTRUMENTATION LAB
CAMBRIDGE, MASS.
DWG. NO. CONTRACT
DRAWN DATE 19 Sep 64
CHECKED
APPROVAL Sept 21 64
APPROVAL 21 Sept 64
NASA APPROVAL 9-22-64
MIT APPROVAL
MIT APPROVAL

MANNED SPACECRAFT CENTER
HOUSTON, TEXAS

BOARD, INSULATOR
VERB-NOUN DISPLAY
AGC DSKY, NAV & MAIN 100 SERIES

CODE IDENT NO.
SIZE D
NASA DRAWING NO. 1004812
SCALE 5/1
WT
SHEET 1 OF 1

NOTICE — WHEN GOVERNMENT DRAWINGS, SPECIFICATIONS, OR OTHER DATA ARE USED FOR ANY PURPOSE OTHER THAN IN CONNECTION WITH A DEFINITELY RELATED GOVERNMENT PROCUREMENT OPERATION, THE UNITED STATES GOVERNMENT THEREBY INCURS NO RESPONSIBILITY NOR ANY OBLIGATION WHATSOEVER, AND THE FACT THAT THE GOVERNMENT MAY HAVE FORMULATED, FURNISHED, OR IN ANY WAY SUPPLIED THE SAID DRAWINGS, SPECIFICATIONS OR OTHER DATA IS NOT TO BE REGARDED BY IMPLICATION OR OTHERWISE AS IN ANY MANNER LICENSING THE HOLDER OR ANY OTHER PERSON OR CORPORATION, OR CONVEYING ANY RIGHTS OR PERMISSION TO MANUFACTURE, USE, OR SELL ANY PATENTED INVENTION THAT MAY IN ANY WAY BE RELATED THERETO.

1004813 A

REVISIONS 12765

SYM	DESCRIPTION	DATE	APPROVAL
A	REVISED PER TDRR 13999 DR	12/4/64	

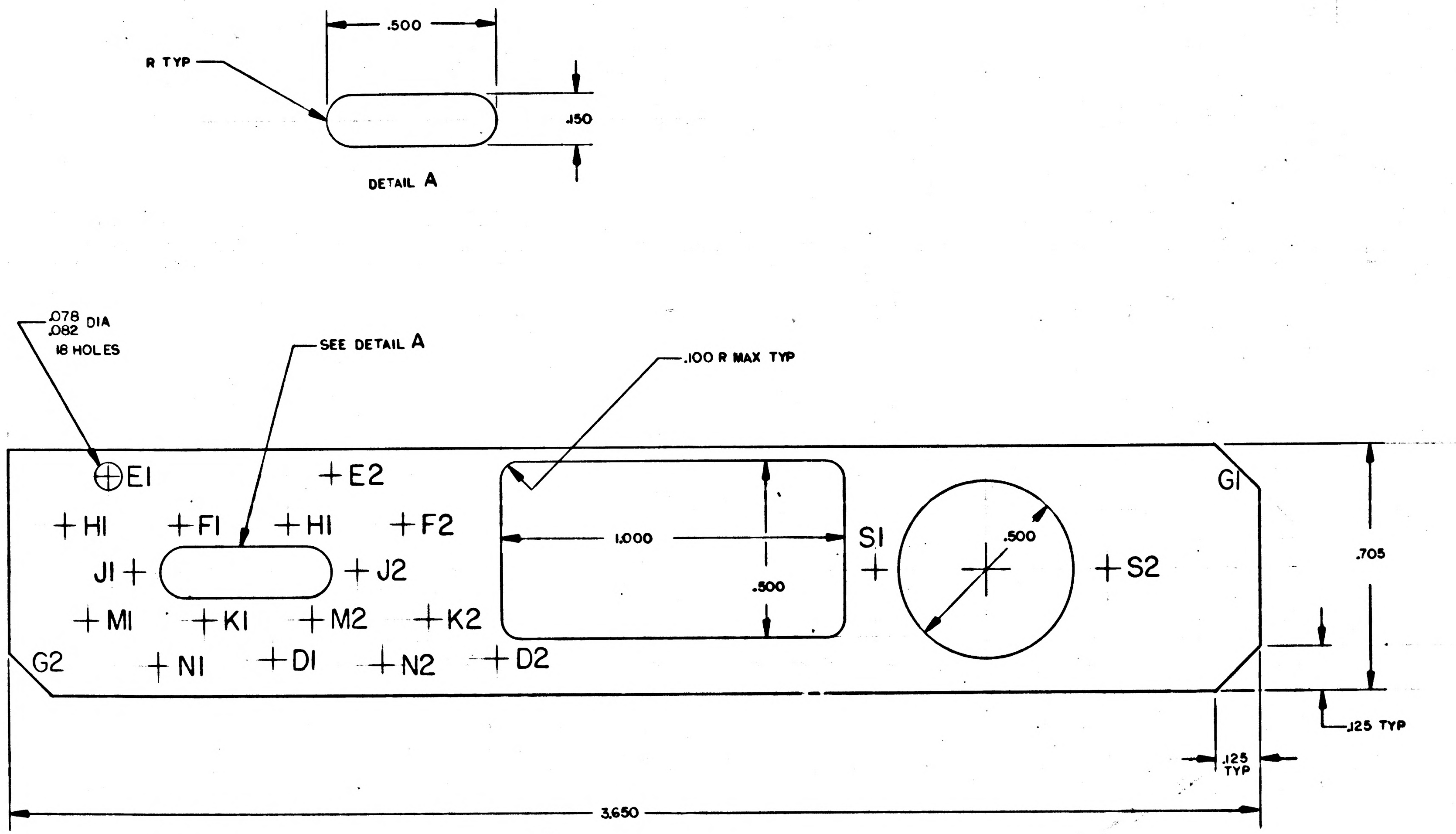

REF:
DWG NO. 1004805 FOR PHOTOGRAPHIC MASTER

NOTES
1. MATERIAL: .002/.007 THICK PLASTIC SHEET PER MIL-P-18177, TYPE GEE
2. INTERPRET DRAWING IN ACCORDANCE WITH STANDARDS PRESCRIBED BY MIL-D-70327
3 PREPARE BOARD FOR PHOTOGRAPHY PER ND1002133

QTY REQD	PART OR IDENTIFYING NO.	NOMENCLATURE OR DESCRIPTION	FIND NO.

LIST OF MATERIALS

1003801	
NEXT ASSY	USED ON
APPLICATION	

UNLESS OTHERWISE SPECIFIED
DIMENSIONS ARE IN INCHES
TOLERANCES ON
FRACTIONS ± DECIMALS ±.020 ANGLES ±
DO NOT SCALE THIS DRAWING
MATERIAL
SEE NOTE 1
HEAT TREATMENT
NONE
FINAL FINISH
NONE

MIT
INSTRUMENTATION LAB
CAMBRIDGE, MASS.
DWG. NO. CONTRACT
DRAWN John Mann DATE 21 SEP 64
CHECKED R. Edward 21 Sept 64
APPROVAL K. Jensen Sept 21 64
APPROVAL Eldon C Hall 21 Sept 64
NASA APPROVAL W. J. Rhine 9-22-64
MIT APPROVAL
MIT APPROVAL 22 Sept 64

MANNED SPACECRAFT CENTER
HOUSTON, TEXAS

BOARD, INSULATOR
PROGRAM DISPLAY
AGC DSKY, NAV & MAIN 100 SERIES

CODE IDENT NO. ——— SIZE D NASA DRAWING NO. 1004813
SCALE 5/1 WT SHEET 1 OF 1

NOTICE — WHEN GOVERNMENT DRAWINGS, SPECIFICATIONS, OR OTHER DATA ARE USED FOR ANY PURPOSE OTHER THAN IN CONNECTION WITH A DEFINITELY RELATED GOVERNMENT PROCUREMENT OPERATION, THE UNITED STATES GOVERNMENT THEREBY INCURS NO RESPONSIBILITY NOR ANY OBLIGATION WHATSOEVER; AND THE FACT THAT THE GOVERNMENT MAY HAVE FORMULATED, FURNISHED, OR IN ANY WAY SUPPLIED THE SAID DRAWINGS, SPECIFICATIONS OR OTHER DATA IS NOT TO BE REGARDED BY IMPLICATION OR OTHERWISE AS IN ANY MANNER LICENSING THE HOLDER OR ANY OTHER PERSON OR CORPORATION, OR CONVEYING ANY RIGHTS OR PERMISSION TO MANUFACTURE, USE, OR SELL ANY PATENTED INVENTION THAT MAY IN ANY WAY BE RELATED THERETO.

1004813 -

REVISIONS	12765		
SYM	DESCRIPTION	DATE	APPROVAL

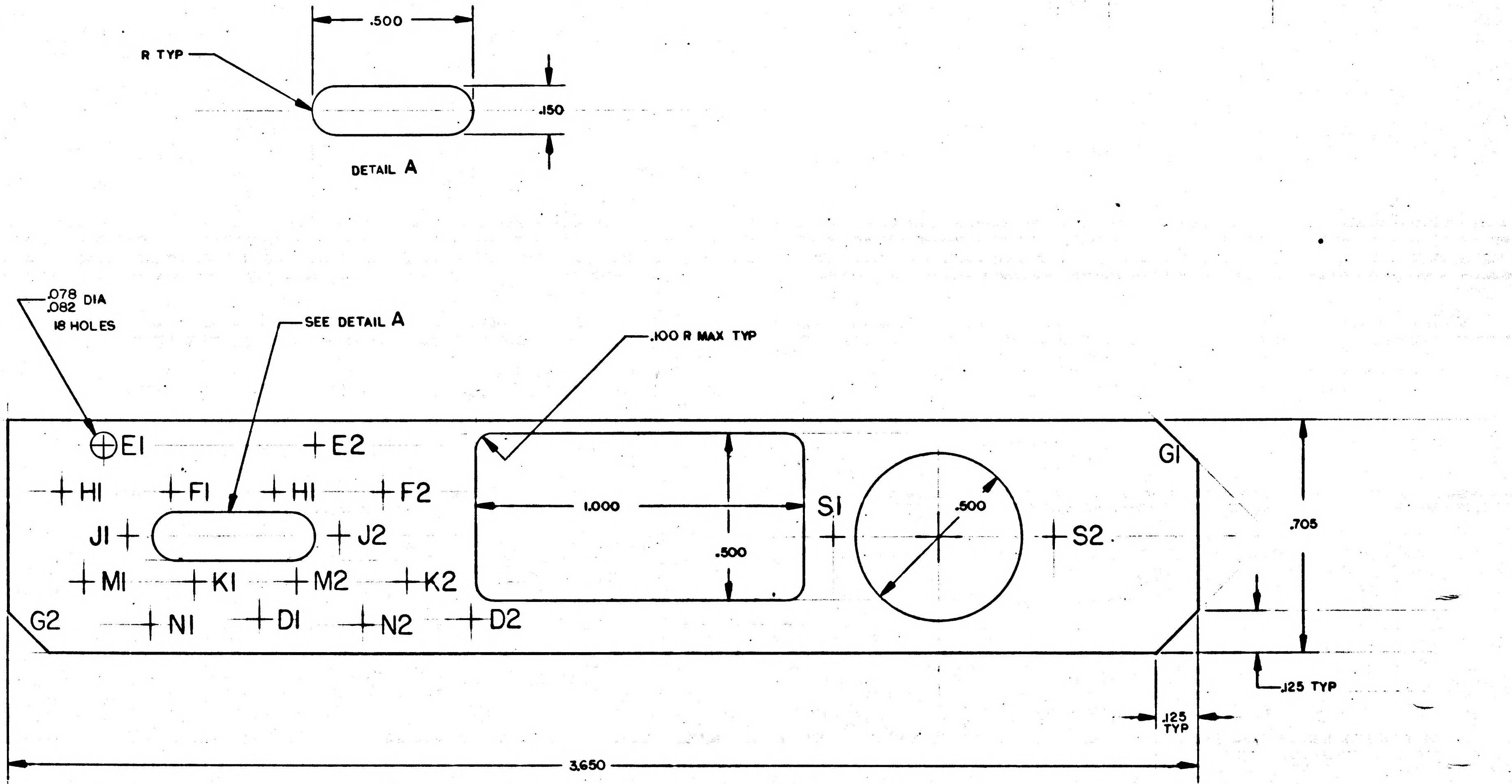

REF:
DWG NO. 1004805 FOR PHOTOGRAPHIC MASTER

NOTES
1. MATERIAL: .002/.007 THICK PLASTIC SHEET PER MIL-P-18177, TYPE GEB
2. INTERPRET DRAWING IN ACCORDANCE WITH STANDARDS PRESCRIBED BY MIL-D-70327
3 PREPARE BOARD FOR PHOTOGRAPHY PER ND1002133

MASTER

QTY REQD	PART OR IDENTIFYING NO.	NOMENCLATURE OR DESCRIPTION	FIND NO.

LIST OF MATERIALS

NEXT ASSY	USED ON
1003801	

APPLICATION

UNLESS OTHERWISE SPECIFIED
DIMENSIONS ARE IN INCHES
TOLERANCES ON
FRACTIONS ± DECIMALS ±.020 ANGLES ±
DO NOT SCALE THIS DRAWING
MATERIAL SEE NOTE 1
HEAT TREATMENT NONE
FINAL FINISH NONE

MIT
INSTRUMENTATION LAB
CAMBRIDGE, MASS.
DWG. NO. CONTRACT
DRAWN John [illegible] DATE 21 Sept 64
CHECKED R Edwards 21 Sept 64
APPROVAL K Jensen Sept 21 64
APPROVAL [illegible] 21 Sept 64
NASA APPROVAL W J [illegible] 9-22-64
MIT APPROVAL
MIT APPROVAL [illegible] 22 Sept 64

MANNED SPACECRAFT CENTER
HOUSTON, TEXAS

BOARD, INSULATOR
PROGRAM DISPLAY
AGC DSKY, NAV & MAIN 100 SERIES

CODE IDENT NO. —— SIZE D NASA DRAWING NO. 1004813
SCALE 5/1 WT SHEET 1 OF 1

NOTICE — WHEN GOVERNMENT DRAWINGS, SPECIFICATIONS, OR OTHER DATA ARE USED FOR ANY PURPOSE OTHER THAN IN CONNECTION WITH A DEFINITELY RELATED GOVERNMENT PROCUREMENT OPERATION, THE UNITED STATES GOVERNMENT THEREBY INCURS NO RESPONSIBILITY NOR ANY OBLIGATION WHATSOEVER; AND THE FACT THAT THE GOVERNMENT MAY HAVE FORMULATED, FURNISHED, OR IN ANY WAY SUPPLIED THE SAID DRAWINGS, SPECIFICATIONS OR OTHER DATA IS NOT TO BE REGARDED BY IMPLICATION OR OTHERWISE AS IN ANY MANNER LICENSING THE HOLDER OR ANY OTHER PERSON OR CORPORATION, OR CONVEYING ANY RIGHTS OR PERMISSION TO MANUFACTURE, USE, OR SELL ANY PATENTED INVENTION THAT MAY IN ANY WAY BE RELATED THERETO.

1004814 A

REVISIONS 12765			
SYM	DESCRIPTION	DATE	APPROVAL
A	REVISED PER TDRR 13999 DR P. White CHK	12/2/64	

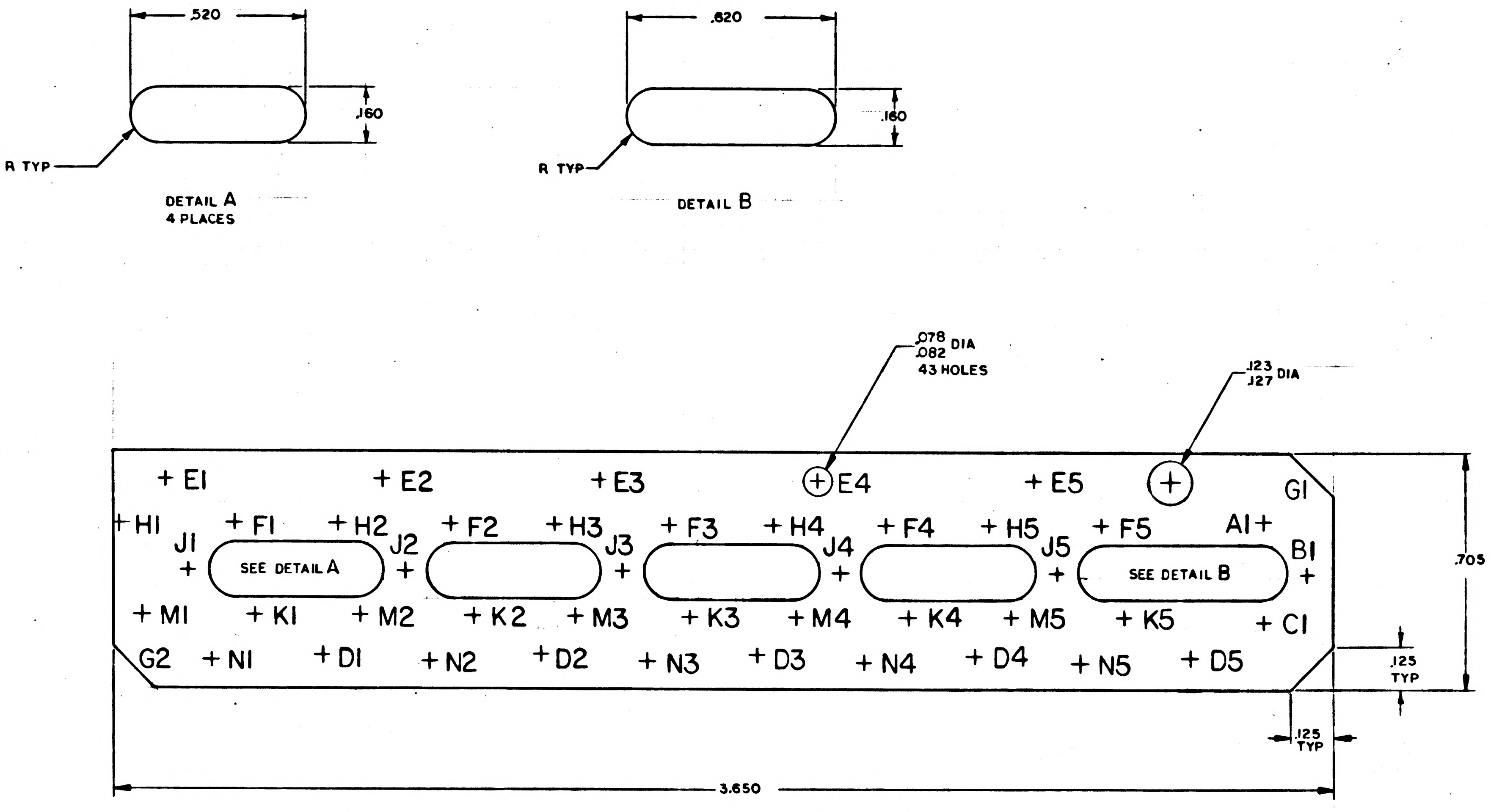

.520
.160
R TYP
DETAIL A
4 PLACES
.620
.160
R TYP
DETAIL B
.078 .082 DIA
43 HOLES
.123 .127 DIA
E1
E2
E3
E4
E5
G1
H1
F1
H2
F2
H3
F3
H4
F4
H5
F5
A1
J1
J2
J3
J4
J5
B1
SEE DETAIL A
SEE DETAIL B
M1
K1
M2
K2
M3
K3
M4
K4
M5
K5
C1
G2
N1
D1
N2
D2
N3
D3
N4
D4
N5
D5
.705
.125 TYP
.125 TYP
3.650

NOTES
1. MATERIAL: .002/.007 THICK PLASTIC SHEET PER MIL-P-18177, TYPE GEE
2. INTERPRET DRAWING IN ACCORDANCE WITH STANDARDS PRESCRIBED BY MIL-D-70327
3. PREPARE BOARD FOR PHOTOGRAPHY PER ND1002133

REF:
DWG NO. 1004804 FOR PHOTOGRAPHIC MASTER

QTY REQD	PART OR IDENTIFYING NO.	NOMENCLATURE OR DESCRIPTION	FIND NO.
LIST OF MATERIALS			

NEXT ASSY	USED ON
1003803	
APPLICATION	

UNLESS OTHERWISE SPECIFIED
DIMENSIONS ARE IN INCHES
TOLERANCES ON
FRACTIONS ± DECIMALS ±.020 ANGLES ±
DO NOT SCALE THIS DRAWING
MATERIAL SEE NOTE 1
HEAT TREATMENT NONE
FINAL FINISH NONE

MIT
INSTRUMENTATION LAB
CAMBRIDGE, MASS.
DWG. NO. CONTRACT
DRAWN D. [illegible] DATE 21 SEPT 64
CHECKED R. Edwards 21 Sept 64
APPROVAL [illegible] Sept 21 64
APPROVAL [illegible] C Hall 21 Sept 64
NASA APPROVAL W J [illegible] 9-22-64
MIT APPROVAL
MIT APPROVAL [illegible] 22 Sep 64

MANNED SPACECRAFT CENTER
HOUSTON, TEXAS

BOARD, INSULATOR
REGISTER DISPLAY
AGC DSKY, NAV & MAIN 100 SERIES

CODE IDENT NO. —
SIZE D
NASA DRAWING NO. 1004814
SCALE 5/1
WT
SHEET 1 OF 1

NOTICE — WHEN GOVERNMENT DRAWINGS, SPECIFICATIONS, OR OTHER DATA ARE USED FOR ANY PURPOSE OTHER THAN IN CONNECTION WITH A DEFINITELY RELATED GOVERNMENT PROCUREMENT OPERATION, THE UNITED STATES GOVERNMENT THEREBY INCURS NO RESPONSIBILITY NOR ANY OBLIGATION WHATSOEVER; AND THE FACT THAT THE GOVERNMENT MAY HAVE FORMULATED, FURNISHED, OR IN ANY WAY SUPPLIED THE SAID DRAWINGS, SPECIFICATIONS OR OTHER DATA IS NOT TO BE REGARDED BY IMPLICATION OR OTHERWISE AS IN ANY MANNER LICENSING THE HOLDER OR ANY OTHER PERSON OR CORPORATION, OR CONVEYING ANY RIGHTS OR PERMISSION TO MANUFACTURE, USE, OR SELL ANY PATENTED INVENTION THAT MAY IN ANY WAY BE RELATED THERETO.

SYM	DESCRIPTION	DATE	APPROVAL

REVISIONS 13765

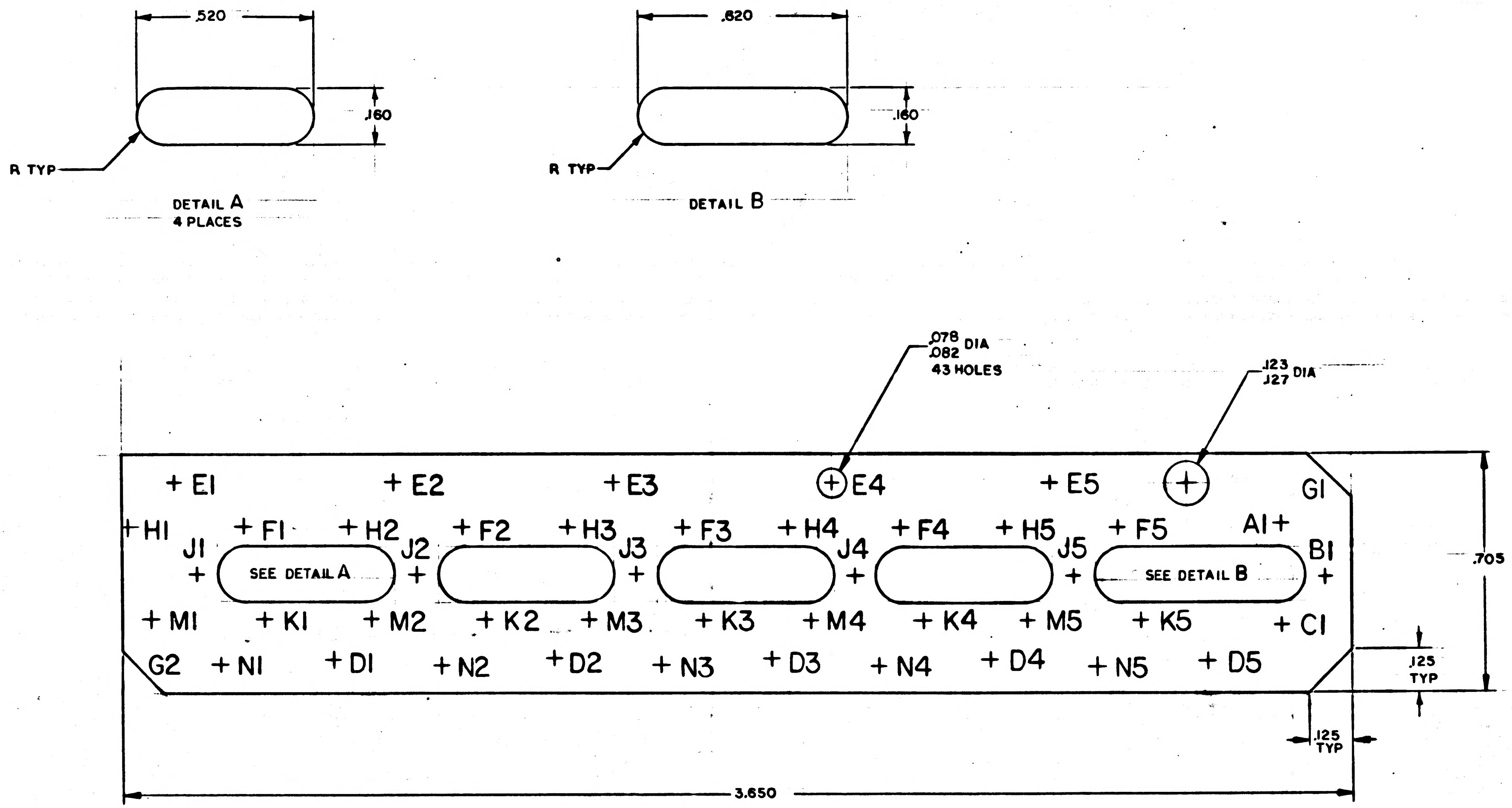
.520
.160
R TYP
DETAIL A
4 PLACES
.620
.160
R TYP
DETAIL B
.078
.082 DIA
43 HOLES
.123
.127 DIA
E1
E2
E3
E4
E5
G1
H1
F1
H2
F2
H3
F3
H4
F4
H5
F5
A1
J1
J2
J3
J4
J5
B1
SEE DETAIL A
SEE DETAIL B
.705
M1
K1
M2
K2
M3
K3
M4
K4
M5
K5
C1
G2
N1
D1
N2
D2
N3
D3
N4
D4
N5
D5
.125
TYP
.125
TYP
3.650

REF:
DWG NO. 1004804 FOR PHOTOGRAPHIC MASTER

NOTES
1. MATERIAL: .002/.007 THICK PLASTIC SHEET PER MIL-P-18177, TYPE GEB
2. INTERPRET DRAWING IN ACCORDANCE WITH STANDARDS PRESCRIBED BY MIL-D-70327
3. PREPARE BOARD FOR PHOTOGRAPHY PER ND1002133

MASTER

QTY REQD	PART OR IDENTIFYING NO.	NOMENCLATURE OR DESCRIPTION	FIND NO.

LIST OF MATERIALS

1003803
NEXT ASSY | USED ON
APPLICATION

UNLESS OTHERWISE SPECIFIED
DIMENSIONS ARE IN INCHES
TOLERANCES ON
FRACTIONS ± DECIMALS ±.020 ANGLES ±
DO NOT SCALE THIS DRAWING
MATERIAL SEE NOTE 1
HEAT TREATMENT NONE
FINAL FINISH NONE

MIT
INSTRUMENTATION LAB
CAMBRIDGE, MASS.
DRAWN D. Hanna DATE 21 SEPT 64
CHECKED R. Edwards 21 Sept 64
APPROVAL Sept 21 64
APPROVAL C Hall 21 Sept 64
NASA APPROVAL W J Rhine 9-22-64
MIT APPROVAL
MIT APPROVAL 21 Sept 64

MANNED SPACECRAFT CENTER
HOUSTON, TEXAS

BOARD, INSULATOR
REGISTER DISPLAY
AGC DSKY, NAV & MAIN 100 SERIES

CODE IDENT NO. —
SIZE D
NASA DRAWING NO. 1004814
SCALE 5/1
WT
SHEET 1 OF 1

NOTICE — WHEN GOVERNMENT DRAWINGS, SPECIFICATIONS, OR OTHER DATA ARE USED FOR ANY PURPOSE OTHER THAN IN CONNECTION WITH A DEFINITELY RELATED GOVERNMENT PROCUREMENT OPERATION, THE UNITED STATES GOVERNMENT THEREBY INCURS NO RESPONSIBILITY NOR ANY OBLIGATION WHATSOEVER; AND THE FACT THAT THE GOVERNMENT MAY HAVE FORMULATED, FURNISHED, OR IN ANY WAY SUPPLIED THE SAID DRAWINGS, SPECIFICATIONS, OR OTHER DATA IS NOT TO BE REGARDED BY IMPLICATION OR OTHERWISE AS IN ANY MANNER LICENSING THE HOLDER OR ANY OTHER PERSON OR CORPORATION, OR CONVEYING ANY RIGHTS OR PERMISSION TO MANUFACTURE, USE, OR SELL ANY PATENTED INVENTION THAT MAY IN ANY WAY BE RELATED THERETO.

1004815 A

REVISIONS 12965

SYM	DESCRIPTION	DATE	APPROVAL
A	REVISED PER TDRR 13999 DR CHK		

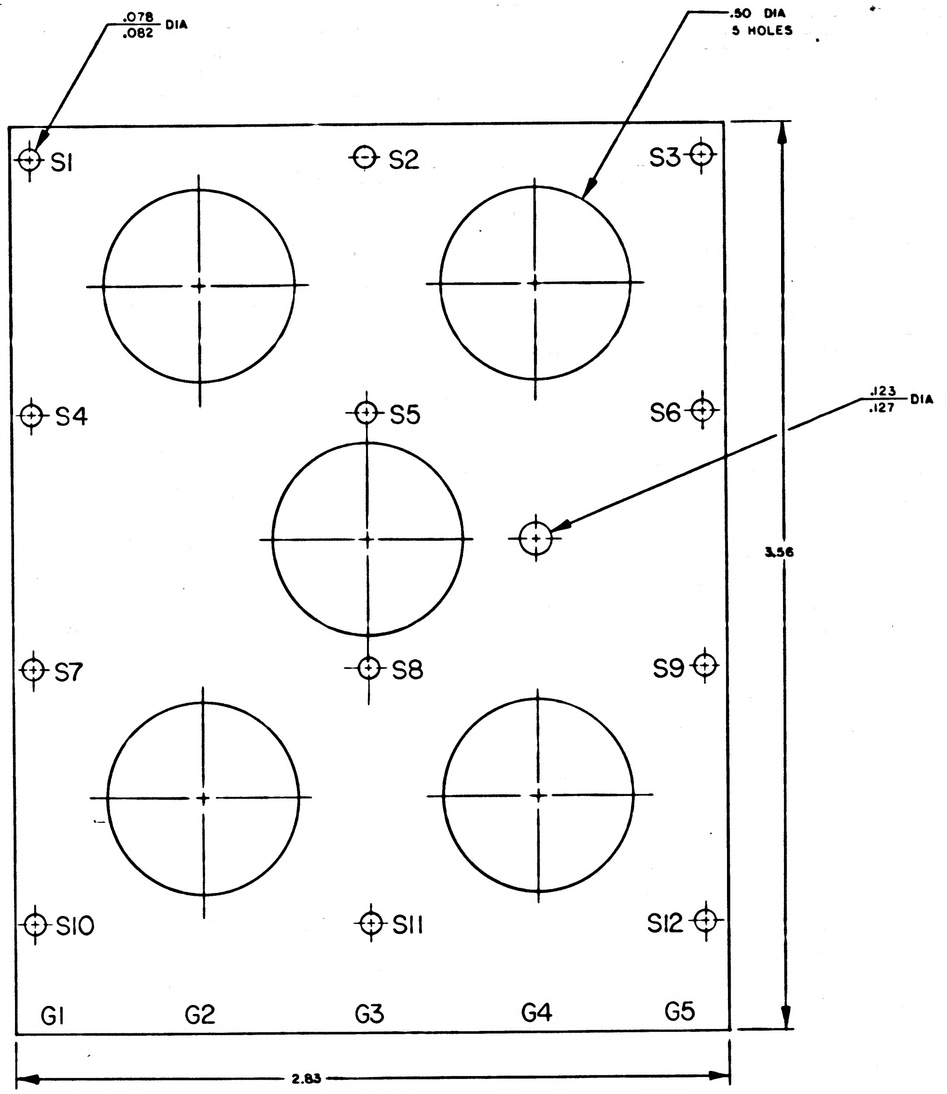

REFERENCE
DWG NO. 1004808 FOR PHOTOGRAPHIC MASTER

NOTES
1. MATERIAL: .002/.007 THICK PLASTIC SHEET PER MIL-P-18177, TYPE GEE
2. INTERPRET DRAWING IN ACCORDANCE WITH STANDARDS PRESCRIBED BY MIL-D-70327
3. PREPARE BOARD FOR PHOTOGRAPHY PER ND 1002133

QTY REQD	PART OR IDENTIFYING NO.	NOMENCLATURE OR DESCRIPTION	FIND NO

LIST OF MATERIALS

NEXT ASSY	USED ON
1003800	

APPLICATION

UNLESS OTHERWISE SPECIFIED
DIMENSIONS ARE IN INCHES
TOLERANCES ON
FRACTIONS ± DECIMALS ±.02 ANGLES ±
DO NOT SCALE THIS DRAWING
MATERIAL SEE NOTE 1
HEAT TREATMENT NONE
FINAL FINISH NONE

MIT
INSTRUMENTATION LAB
CAMBRIDGE, MASS
DWG NO CONTRACT
DRAWN DATE 9 SEP 64
CHECKED R. Edwards 19 Sept 64
APPROVAL Sept 21/64.
APPROVAL
NASA APPROVAL W. J. 9-22-64
MIT APPROVAL
MIT APPROVAL 22 Sep 64

MANNED SPACECRAFT CENTER
HOUSTON, TEXAS

BOARD, INSULATOR
ALARM DISPLAY
AGC DSKY, NAV 100 SERIES

CODE IDENT NO. —
SIZE E
NASA DRAWING NO 1004815
SCALE 4/1
WT
SHEET 1 OF 1

NOTICE — WHEN GOVERNMENT DRAWINGS, SPECIFICATIONS, OR OTHER DATA ARE USED FOR ANY PURPOSE OTHER THAN IN CONNECTION WITH A DEFINITELY RELATED GOVERNMENT PROCUREMENT OPERATION, THE UNITED STATES GOVERNMENT THEREBY INCURS NO RESPONSIBILITY NOR ANY OBLIGATION WHATSOEVER; AND THE FACT THAT THE GOVERNMENT MAY HAVE FORMULATED, FURNISHED, OR IN ANY WAY SUPPLIED THE SAID DRAWINGS, SPECIFICATIONS, OR OTHER DATA IS NOT TO BE REGARDED BY IMPLICATION OR OTHERWISE AS IN ANY MANNER LICENSING THE HOLDER OR ANY OTHER PERSON OR CORPORATION, OR CONVEYING ANY RIGHTS OR PERMISSION TO MANUFACTURE, USE, OR SELL ANY PATENTED INVENTION THAT MAY IN ANY WAY BE RELATED THERETO.

1004815 –

REVISIONS 12765			
SYM	DESCRIPTION	DATE	APPROVAL

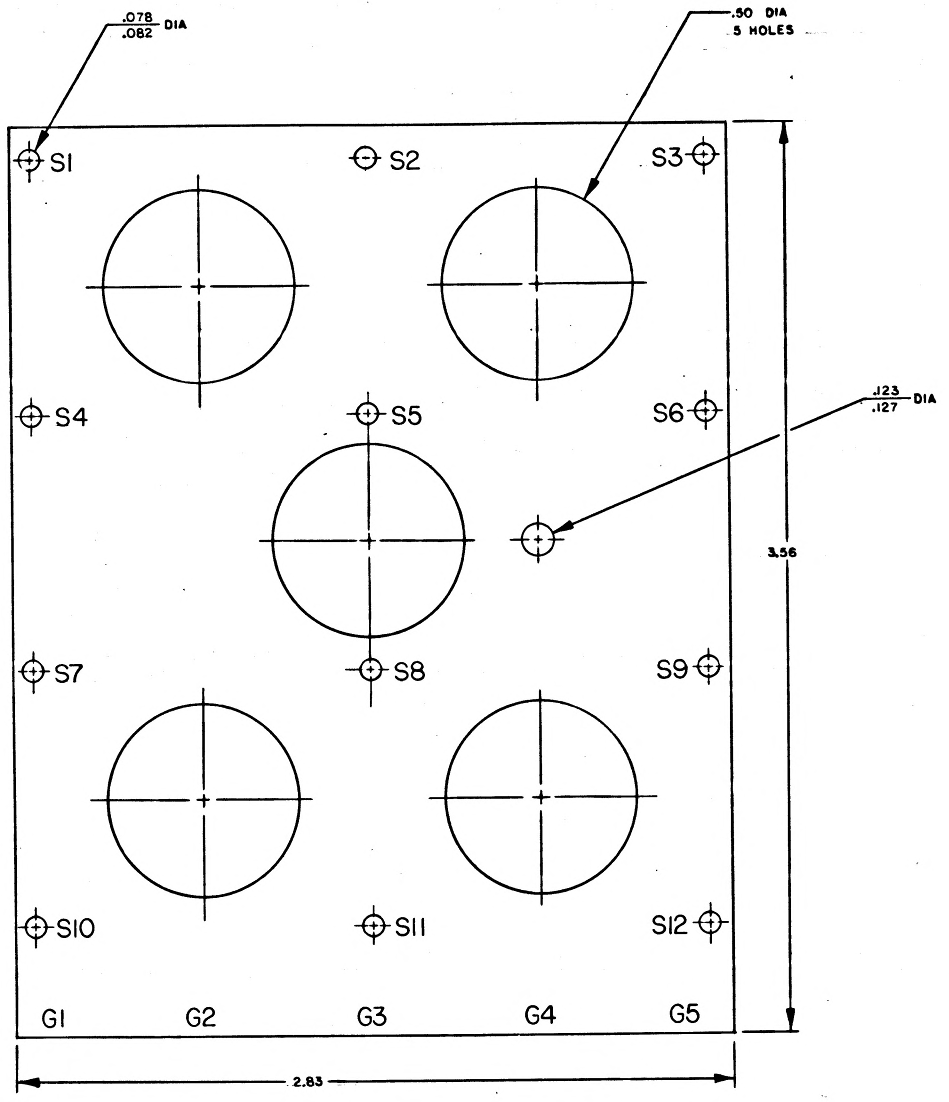

REFERENCE
DWG NO. 1004808 FOR PHOTOGRAPHIC MASTER

NOTES
1. MATERIAL: .002/.007 THICK PLASTIC SHEET PER MIL-P-18177, TYPE GEB
2. INTERPRET DRAWING IN ACCORDANCE WITH STANDARDS PRESCRIBED BY MIL-D-70327
3. PREPARE BOARD FOR PHOTOGRAPHY PER ND1002133

MASTER

QTY REQD	PART OR IDENTIFYING NO.	NOMENCLATURE OR DESCRIPTION	FIND NO.

LIST OF MATERIALS

NEXT ASSY	USED ON
1003800	

APPLICATION

UNLESS OTHERWISE SPECIFIED
DIMENSIONS ARE IN INCHES
TOLERANCES ON
FRACTIONS ± DECIMALS ±.02 ANGLES ±
DO NOT SCALE THIS DRAWING
MATERIAL SEE NOTE 1
HEAT TREATMENT NONE
FINAL FINISH NONE

MIT
INSTRUMENTATION LAB
CAMBRIDGE, MASS.
DWG. NO. CONTRACT
DRAWN DATE 19 SEP 64
CHECKED 19 Sept 64
APPROVAL Sept 21/64.
APPROVAL 21 Sept 64
NASA APPROVAL 9-22-64
MIT APPROVAL
MIT APPROVAL 22 Sept 64

MANNED SPACECRAFT CENTER
HOUSTON, TEXAS

BOARD, INSULATOR
ALARM DISPLAY
AGC DSKY, NAV 100 SERIES

CODE IDENT NO. —
SIZE E
NASA DRAWING NO. 1004815
SCALE 4/1
WT
SHEET 1 OF 1

1004815

NOTICE — WHEN GOVERNMENT DRAWINGS, SPECIFICATIONS, OR OTHER DATA ARE USED FOR ANY PURPOSE OTHER THAN IN CONNECTION WITH A DEFINITELY RELATED GOVERNMENT PROCUREMENT OPERATION, THE UNITED STATES GOVERNMENT THEREBY INCURS NO RESPONSIBILITY NOR ANY OBLIGATION WHATSOEVER, AND THE FACT THAT THE GOVERNMENT MAY HAVE FORMULATED, FURNISHED, OR IN ANY WAY SUPPLIED THE SAID DRAWINGS, SPECIFICATIONS OR OTHER DATA IS NOT TO BE REGARDED BY IMPLICATION OR OTHERWISE AS IN ANY MANNER LICENSING THE HOLDER OR ANY OTHER PERSON OR CORPORATION, OR CONVEYING ANY RIGHTS OR PERMISSION TO MANUFACTURE, USE, OR SELL ANY PATENTED INVENTION THAT MAY IN ANY WAY BE RELATED THERETO.

1004816 —

REVISIONS			
SYM	DESCRIPTION	DATE	APPROVAL

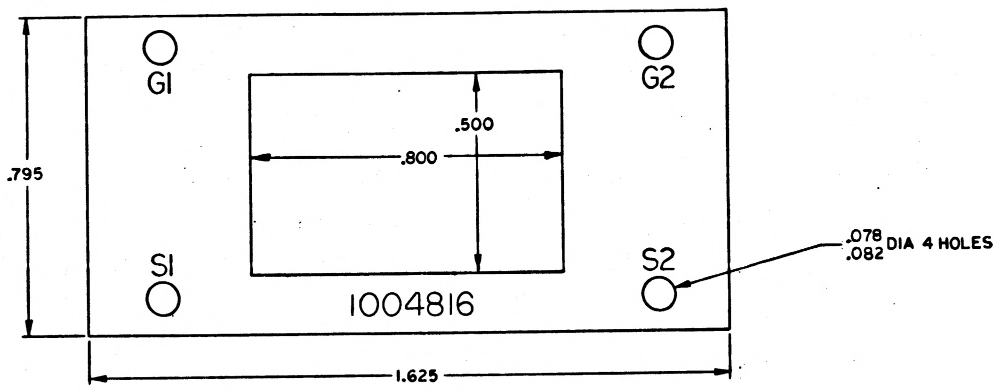

REF:
DRAWING NO. 1004806 FOR PHOTOGRAPHIC MASTER

NOTES
1. MATERIAL: .002/.007 THICK PLASTIC SHEET PER MIL-P-18177, TYPE GEB
2. INTERPRET DRAWING IN ACCORDANCE WITH STANDARDS PRESCRIBED BY MIL-D-70327
3. PREPARE BOARD FOR PHOTOGRAPHY PER ND1002133

MASTER

QTY REQD	PART OR IDENTIFYING NO.	NOMENCLATURE OR DESCRIPTION	FIND NO.

LIST OF MATERIALS

NEXT ASSY	USED ON
1003804	

APPLICATION

UNLESS OTHERWISE SPECIFIED DIMENSIONS ARE IN INCHES
TOLERANCES ON
FRACTIONS ± DECIMALS ±.020 ANGLES ±
DO NOT SCALE THIS DRAWING

MATERIAL: SEE NOTE 1
HEAT TREATMENT: NONE
FINAL FINISH: NONE

MIT INSTRUMENTATION LAB
CAMBRIDGE, MASS.
DWG. NO. CONTRACT
DRAWN R Belanger DATE 18 Sept 64
CHECKED J Lager Sept 18 64
APPROVAL K Jensen 9/22/64
APPROVAL Eldon C Hall 6 Oct 64
NASA APPROVAL W J Rhine 10-6-64
MIT APPROVAL
MIT APPROVAL 6 Oct 64

MANNED SPACECRAFT CENTER
HOUSTON, TEXAS

BOARD, INSULATOR
INDICATOR DISPLAY
AGC DSKY, MAIN 100 SERIES

CODE IDENT NO. —
SIZE D
NASA DRAWING NO. 1004816
SCALE 5/1
WT
SHEET 1 OF 1

NOTICE – WHEN GOVERNMENT DRAWINGS, SPECIFICATIONS, OR OTHER DATA ARE USED FOR ANY PURPOSE OTHER THAN IN CONNECTION WITH A DEFINITELY RELATED GOVERNMENT PROCUREMENT OPERATION, THE UNITED STATES GOVERNMENT THEREBY INCURS NO RESPONSIBILITY NOR ANY OBLIGATION WHATSOEVER; AND THE FACT THAT THE GOVERNMENT MAY HAVE FORMULATED, FURNISHED, OR IN ANY WAY SUPPLIED THE SAID DRAWINGS, SPECIFICATIONS OR OTHER DATA IS NOT TO BE REGARDED BY IMPLICATION OR OTHERWISE AS IN ANY MANNER LICENSING THE HOLDER OR ANY OTHER PERSON OR CORPORATION, OR CONVEYING ANY RIGHTS OR PERMISSION TO MANUFACTURE, USE, OR SELL ANY PATENTED INVENTION THAT MAY IN ANY WAY BE RELATED THERETO.

1004817 –

REVISIONS 13222

SYM	ZONE	DESCRIPTION	DR	CHK	DATE	APPROVED

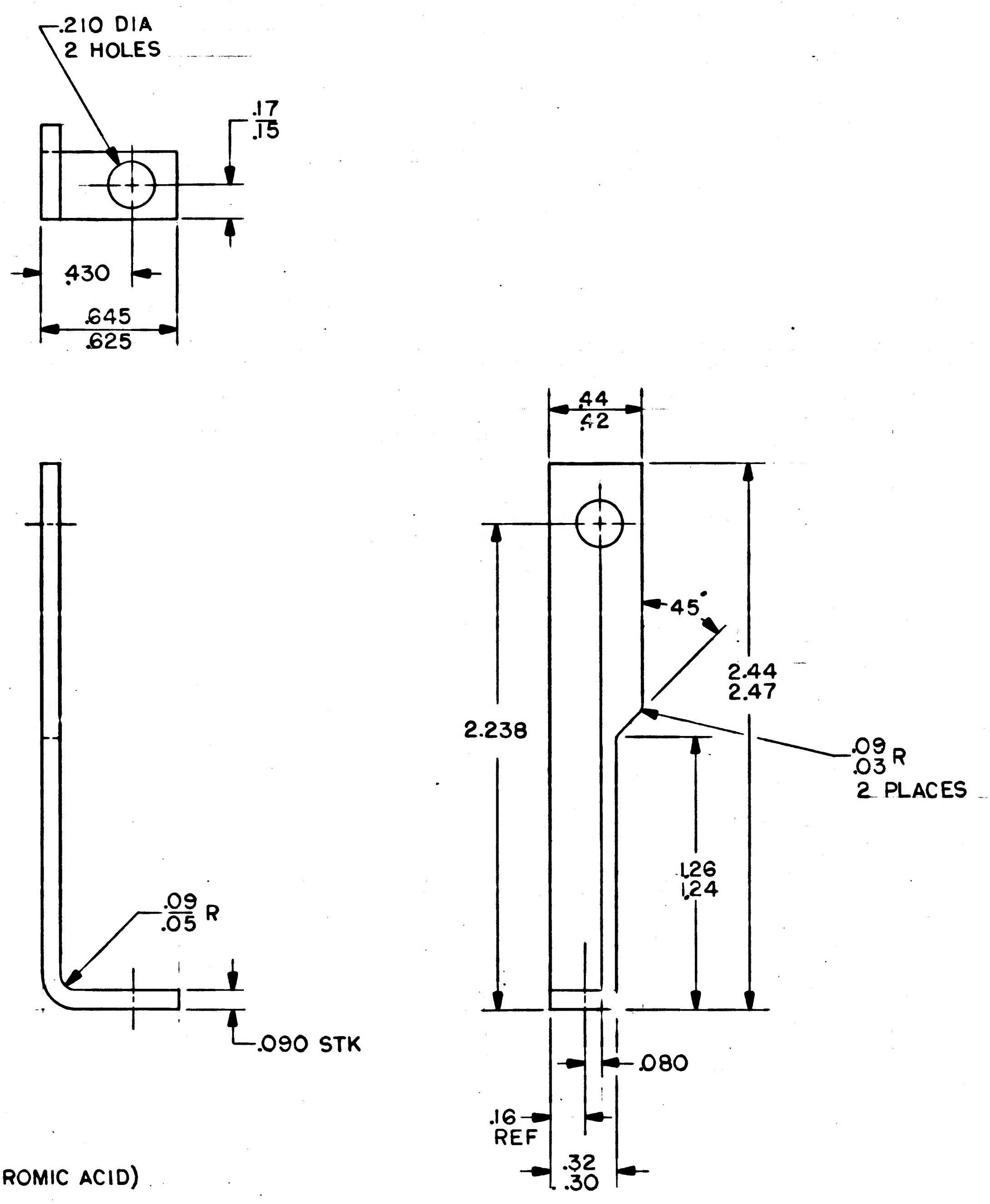

NOTES
1. MATL: AL. 5052-H32 PER QQ-A-250/8
2. REMOVE BURRS AND SHARP EDGES
3. ANODIZE PER MIL-A-8625 TYPE I (CHROMIC ACID) DYED BLACK
4. INTERPRET DRAWING IN ACCORDANCE WITH STANDARD PRESCRIBED BY MIL-D-70327

QTY REQD	PART OR IDENTIFYING NO.	MATERIAL OR NOTES	NOMENCLATURE OR DESCRIPTION	FIND NO.

LIST OF MATERIALS

MASTER

1003809	
NEXT ASSY	USED ON
APPLICATION	

UNLESS OTHERWISE SPECIFIED
DIMENSIONS ARE IN INCHES
CAPACITOR VALUES ARE IN µf
RESISTOR VALUES ARE IN OHMS
TOLERANCES ON
FRACTIONS ± DECIMALS ±.005 ANGLES ± 3°
DO NOT SCALE THIS DRAWING

MATERIAL
SEE NOTE 1

MIT INSTRUMENTATION LAB
CAMBRIDGE, MASS.

MANNED SPACECRAFT CENTER
HOUSTON, TEXAS

DRAWN P. Boudreau 21 Sept 64
CHECKED 22 Sept 64
APPROVED 9/22/64
APPROVED 6 Oct 64
APPROVED MIT 6 Oct 64
APPROVED MSC 10-6-64
DATE

BRACKET,
E/L FRAME
AGC DSKY MAIN 100 SERIES

CODE IDENT NO. ——
SIZE C
DRAWING NO. 1004817
SCALE 2/1
SHEET 1 OF 1

INCHES
0 1 2
PHOTOGRAPHIC SCALE ONLY

NOTICE – WHEN GOVERNMENT DRAWINGS, SPECIFICATIONS, OR OTHER DATA ARE USED FOR ANY PURPOSE OTHER THAN IN CONNECTION WITH A DEFINITELY RELATED GOVERNMENT PROCUREMENT OPERATION, THE UNITED STATES GOVERNMENT THEREBY INCURS NO RESPONSIBILITY NOR ANY OBLIGATION WHATSOEVER; AND THE FACT THAT THE GOVERNMENT MAY HAVE FORMULATED, FURNISHED, OR IN ANY WAY SUPPLIED THE SAID DRAWINGS, SPECIFICATIONS OR OTHER DATA IS NOT TO BE REGARDED BY IMPLICATION OR OTHERWISE AS IN ANY MANNER LICENSING THE HOLDER OR ANY OTHER PERSON OR CORPORATION, OR CONVEYING ANY RIGHTS OR PERMISSION TO MANUFACTURE, USE, OR SELL ANY PATENTED INVENTION THAT MAY IN ANY WAY BE RELATED THERETO.

1004818 A

REVISIONS 13222

SYM	ZONE	DESCRIPTION	DR	CHK	DATE	APPROVED
A		REVISED PER TDRR 20558			8/26/65	

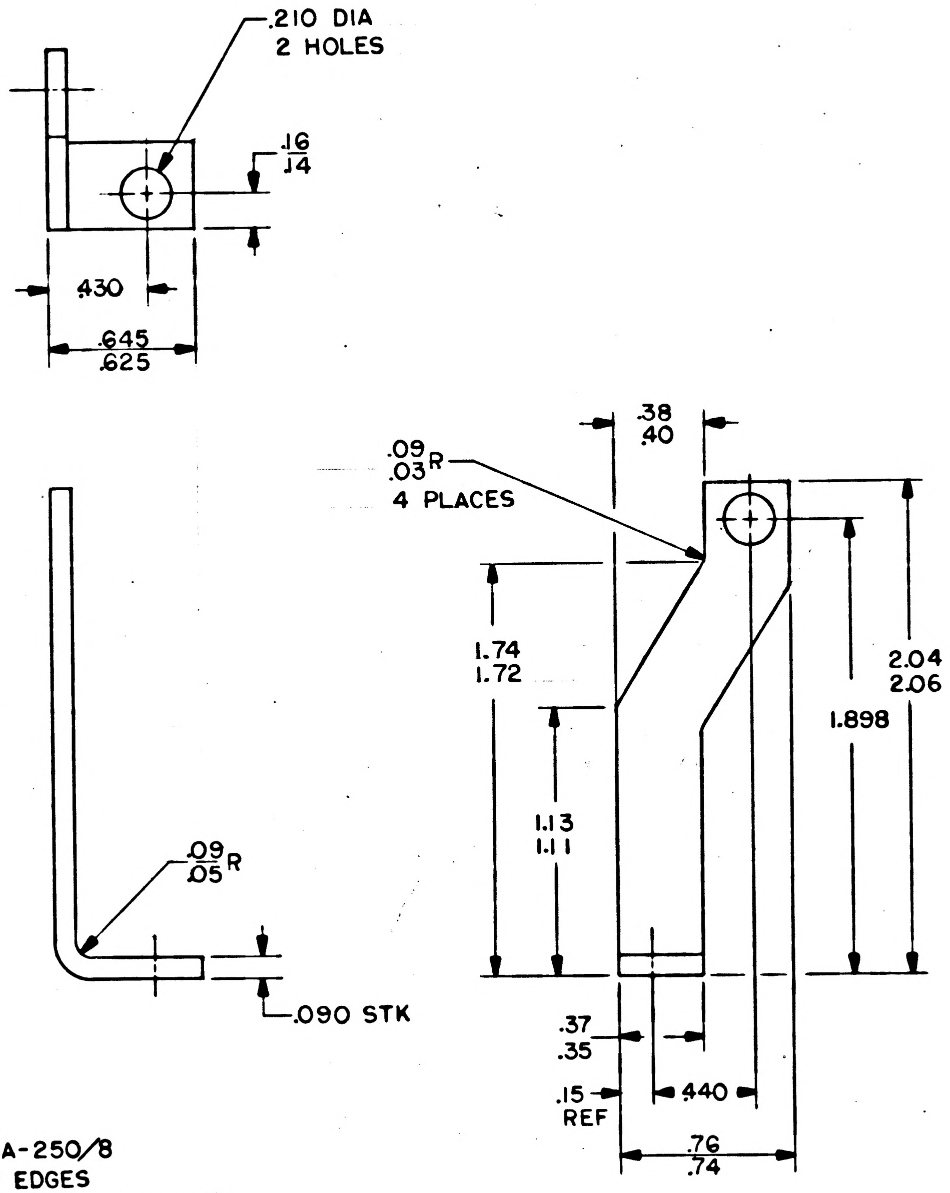

NOTES

1. MATL: AL. 5052-H32 PER QQ-A-250/8
2. REMOVE ALL BURRS AND SHARP EDGES
3. ANODIZE PER MIL-A-8625 TYPE I (CHROMIC ACID) DYED BLACK
4. INTERPRET DRAWING IN ACCORDANCE WITH STANDARDS PRESCRIBED BY MIL-D-70327

QTY REQD	PART OR IDENTIFYING NO.	MATERIAL OR NOTES	NOMENCLATURE OR DESCRIPTION	FIND NO.

LIST OF MATERIALS

1003809	
NEXT ASSY	USED ON
APPLICATION	

UNLESS OTHERWISE SPECIFIED
DIMENSIONS ARE IN INCHES
CAPACITOR VALUES ARE IN μf
RESISTOR VALUES ARE IN OHMS
TOLERANCES ON
FRACTIONS ± DECIMALS ±.005 ANGLES ±
DO NOT SCALE THIS DRAWING

MATERIAL
SEE NOTE 1

MIT
INSTRUMENTATION LAB
CAMBRIDGE, MASS.

DRAWN R Boudreau 22 Sep 64
CHECKED 22 Sep 64
APPROVED 9/22/64
APPROVED C Hall 6 Oct 64
APPROVED MIT 6 Oct 64
APPROVED MSC 10-6-64
DATE

MANNED SPACECRAFT CENTER
HOUSTON, TEXAS

BRACKET, CONNECTOR PLATE AGC DSKY MAIN 100 SERIES

CODE IDENT NO. 80230
SIZE C
DRAWING NO. 1004818
SCALE 2/1
SHEET 1 OF 1

NOTICE — WHEN GOVERNMENT DRAWINGS, SPECIFICATIONS, OR OTHER DATA ARE USED FOR ANY PURPOSE OTHER THAN IN CONNECTION WITH A DEFINITELY RELATED GOVERNMENT PROCUREMENT OPERATION, THE UNITED STATES GOVERNMENT THEREBY INCURS NO RESPONSIBILITY NOR ANY OBLIGATION WHATSOEVER; AND THE FACT THAT THE GOVERNMENT MAY HAVE FORMULATED, FURNISHED, OR IN ANY WAY SUPPLIED THE SAID DRAWINGS, SPECIFICATIONS OR OTHER DATA IS NOT TO BE REGARDED BY IMPLICATION OR OTHERWISE AS IN ANY MANNER LICENSING THE HOLDER OR ANY OTHER PERSON OR CORPORATION, OR CONVEYING ANY RIGHTS OR PERMISSION TO MANUFACTURE, USE, OR SELL ANY PATENTED INVENTION THAT MAY IN ANY WAY BE RELATED THERETO.

1004818 —

REVISIONS 13222

SYM	ZONE	DESCRIPTION	DR	CHK	DATE	APPROVED

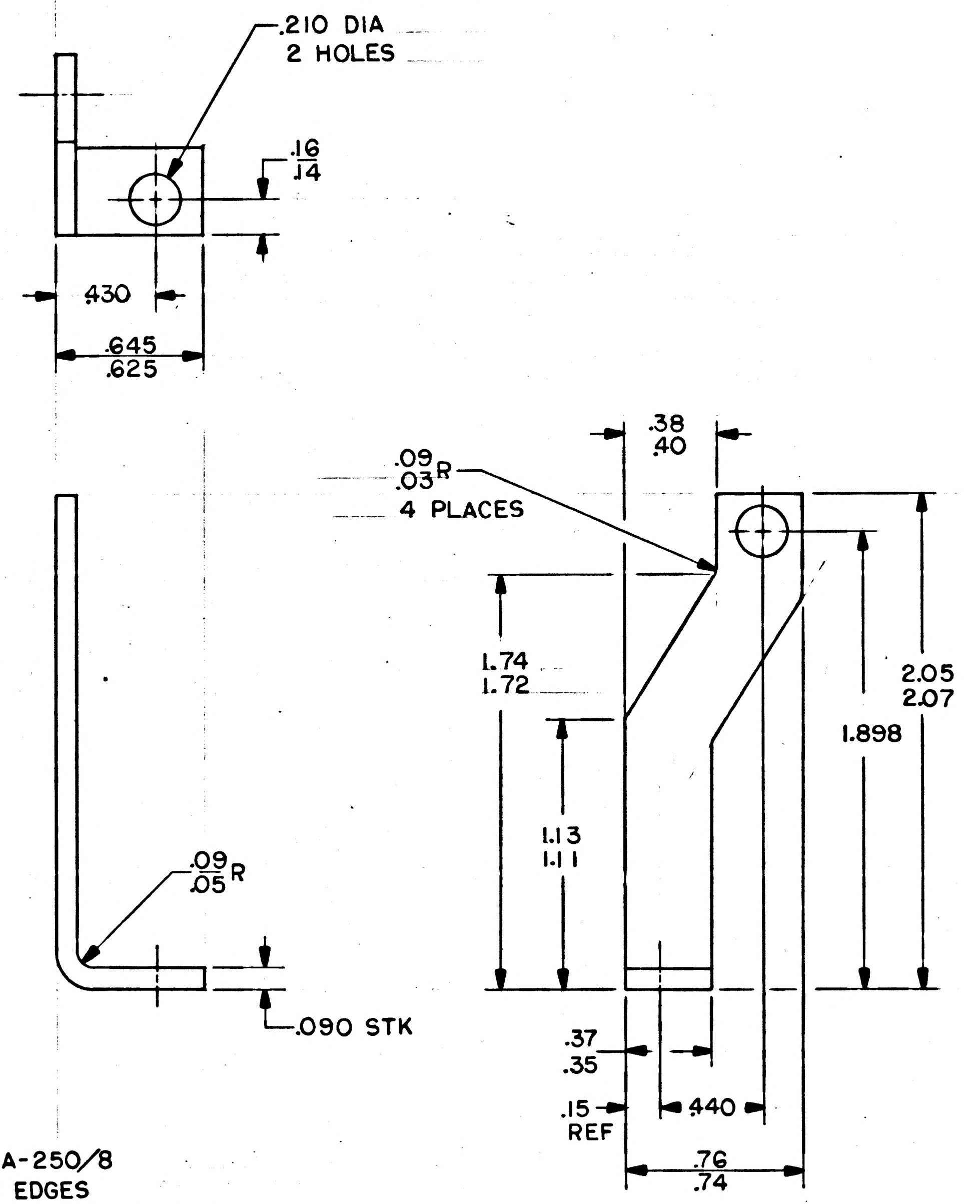

NOTES
1. MATL: AL. 5052-H32 PER QQ-A-250/8
2. REMOVE ALL BURRS AND SHARP EDGES
3. ANODIZE PER MIL-A-8625 TYPE I (CHROMIC ACID) DYED BLACK
4. INTERPRET DRAWING IN ACCORDANCE WITH STANDARDS PRESCRIBED BY MIL-D-70327

MASTER

QTY REQD	PART OR IDENTIFYING NO.	MATERIAL OR NOTES	NOMENCLATURE OR DESCRIPTION	FIND NO.

LIST OF MATERIALS

NEXT ASSY	USED ON
1003809	

APPLICATION

UNLESS OTHERWISE SPECIFIED
DIMENSIONS ARE IN INCHES
CAPACITOR VALUES ARE IN µf
RESISTOR VALUES ARE IN OHMS
TOLERANCES ON
FRACTIONS ± DECIMALS ±.005 ANGLES ±
DO NOT SCALE THIS DRAWING

MATERIAL
SEE NOTE 1

MIT
INSTRUMENTATION LAB
CAMBRIDGE, MASS.

DRAWN P. Boudreau 22 Sep 64
CHECKED 22 Sep 64
APPROVED K Jensen 9/22/64
APPROVED Eldon C Hall 6 Oct 64
APPROVED MIT 6 Oct 64
APPROVED MSC 10-6-64
DATE

MANNED SPACECRAFT CENTER
HOUSTON, TEXAS

BRACKET,
CONNECTOR PLATE
AGC DSKY MAIN 100 SERIES

CODE IDENT NO. —
SIZE C
DRAWING NO. 1004818
SCALE 2/1
SHEET 1 OF 1

INCHES
0 1 2
PHOTOGRAPHIC SCALE ONLY

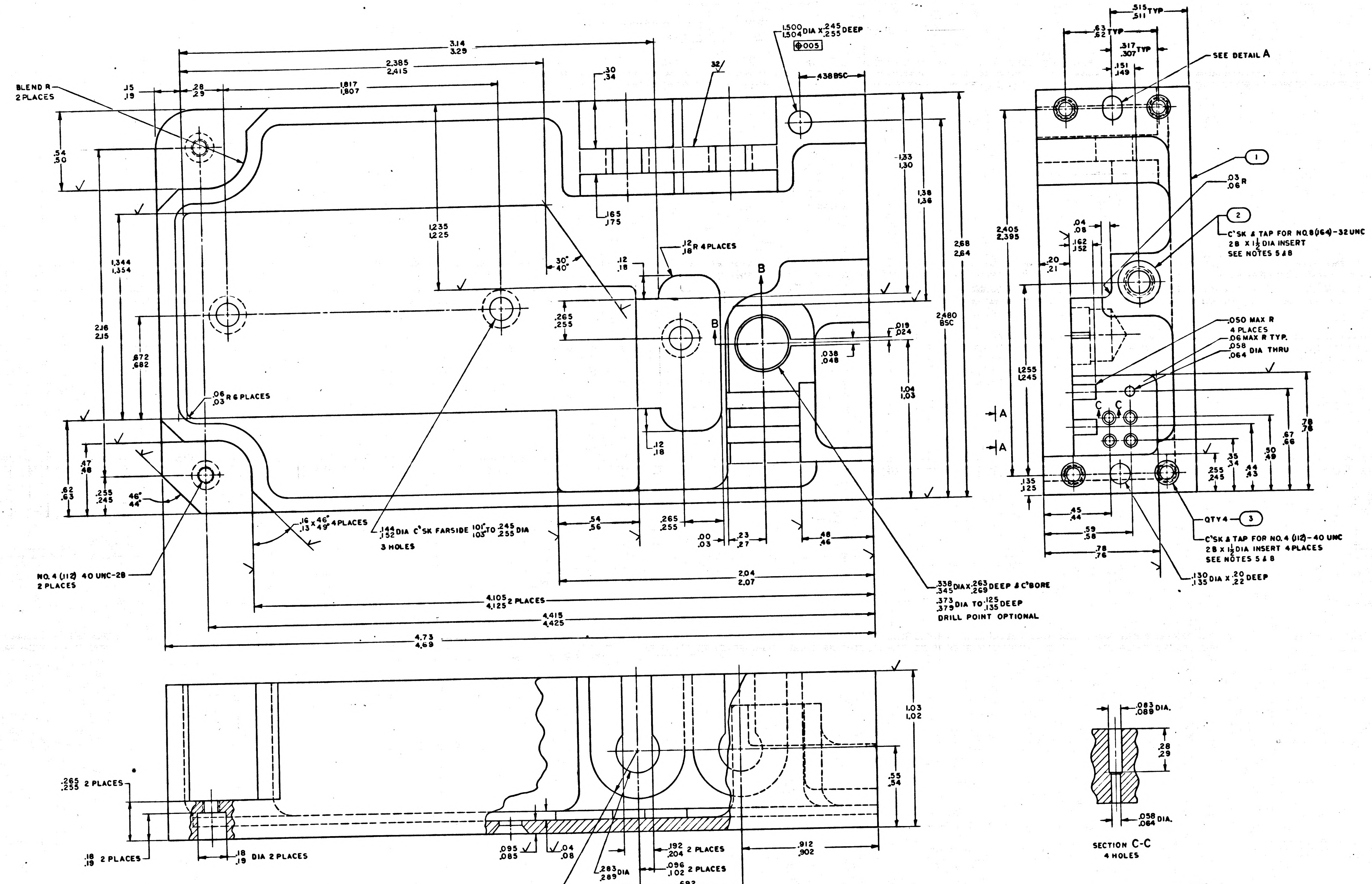
BLEND R 2 PLACES
SEE DETAIL A
1.500/1.504 DIA X .245/.255 DEEP
C'SK & TAP FOR NO.8 (164)-32 UNC 2B X 1½ DIA INSERT SEE NOTES 5 & 8
C'SK & TAP FOR NO. 4 (112)-40 UNC 2B X 1½ DIA INSERT 4 PLACES SEE NOTES 5 & 8
NO. 4 (112) 40 UNC-2B 2 PLACES
.144/.152 DIA C'SK FARSIDE 101°/105° TO .245/.255 DIA 3 HOLES
.338/.345 DIA X .263/.269 DEEP & C'BORE .373/.379 DIA TO .125/.135 DEEP DRILL POINT OPTIONAL
.130/.135 DIA X .20/.22 DEEP
.050 MAX R 4 PLACES
.06 MAX R TYP.
.058/.064 DIA THRU
.06/.03 R 6 PLACES
.12/.18 R 4 PLACES
.314/.320 R 4 PLACES
.283/.289 DIA 2 HOLES
.265/.255 2 PLACES
.18/.19 2 PLACES
.18/.19 DIA 2 PLACES
QTY 4
1
2
3
B
A
C
SECTION C-C 4 HOLES

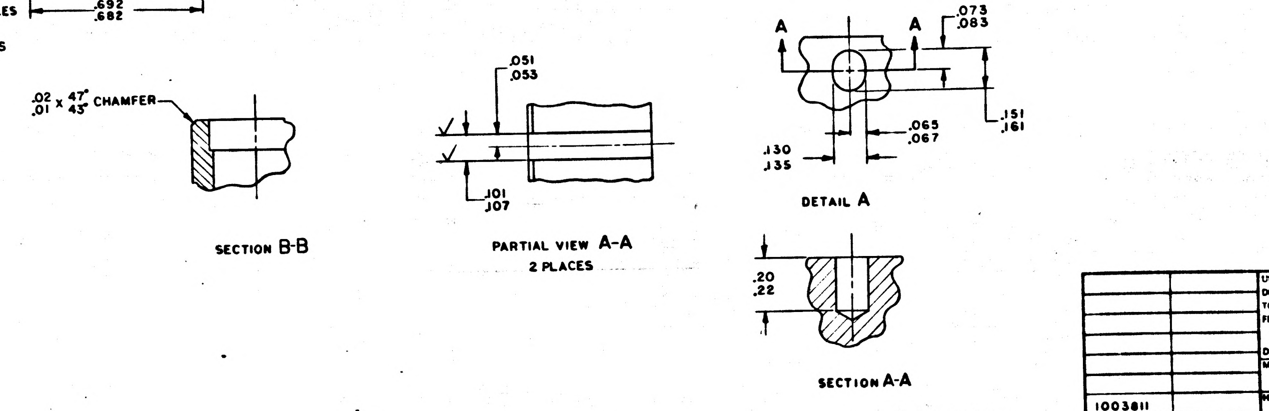
.02/.01 X 47°/43° CHAMFER
SECTION B-B
PARTIAL VIEW A-A 2 PLACES
DETAIL A
SECTION A-A

NOTES
1. MAKE FROM 1004574
2. SURFACE MARKED √ TO BE 125√ UNLESS OTHERWISE SPECIFIED
3. MASK THREADS OF FIND NO. 2 AND 3 AND 1.500/1.504 DIA HOLE AND ANODIZE PER MIL-A-8625, TYPE I, DYED BLACK
4. REMOVE SHARP EDGES AND BURRS
5. INSTALL INSERTS PER MS33646
6. INTERPRET DRAWING IN ACCORDANCE WITH STANDARDS PRESCRIBED BY MIL-D-70327
7. IDENTIFY PER ND1002019
8. COAT THREADS OF FIND NO. 2 AND 3 WITH MIL-P-8585 WET ZINC CHROMATE PRIMER, COLOR Y

SEE NOTE 1

QTY REQD	PART OR IDENTIFYING NO.	NOMENCLATURE OR DESCRIPTION	FIND NO.
4	MS21209-C0415	INSERT, HELICAL	3
1	MS21209-C0815	INSERT, HELICAL	2
1	1004819-001	HOUSING	1
-011	LIST OF MATERIALS		

NEXT ASSY	USED ON
1003811	

APPLICATION

UNLESS OTHERWISE SPECIFIED DIMENSIONS ARE IN INCHES
TOLERANCES ON FRACTIONS ± DECIMALS ± ANGLES ±
DO NOT SCALE THIS DRAWING
MATERIAL SEE NOTE 1
HEAT TREATMENT NONE
FINAL FINISH SEE NOTE 3

MIT INSTRUMENTATION LAB CAMBRIDGE, MASS.
DRAWN R. [illegible] DATE [illegible]
CHECKED R. Edmonds [illegible]
APPROVAL [illegible]
APPROVAL [illegible]
NASA APPROVAL [illegible] 12-7-66
MIT APPROVAL
MIT APPROVAL [illegible]

MANNED SPACECRAFT CENTER
HOUSTON, TEXAS

HOUSING, MACHINED
POWER SUPPLY
AGC DSKY MAIN & NAV 100 SERIES

CODE IDENT NO. —— SIZE J NASA DRAWING NO. 1004819
SCALE 4/1 WT SHEET 1 OF

MASTER

NOTICE — WHEN GOVERNMENT DRAWINGS, SPECIFICATIONS, OR OTHER DATA ARE USED FOR ANY PURPOSE OTHER THAN IN CONNECTION WITH A DEFINITELY RELATED GOVERNMENT PROCUREMENT OPERATION, THE UNITED STATES GOVERNMENT THEREBY INCURS NO RESPONSIBILITY NOR ANY OBLIGATION WHATSOEVER; AND THE FACT THAT THE GOVERNMENT MAY HAVE FORMULATED, FURNISHED, OR IN ANY WAY SUPPLIED THE SAID DRAWINGS, SPECIFICATIONS, OR OTHER DATA IS NOT TO BE REGARDED BY IMPLICATION OR OTHERWISE AS IN ANY MANNER LICENSING THE HOLDER OR ANY OTHER PERSON OR CORPORATION, OR CONVEYING ANY RIGHTS OR PERMISSION TO MANUFACTURE, USE, OR SELL ANY PATENTED INVENTION THAT MAY IN ANY WAY BE RELATED THERETO

REVISIONS 6353			
SY'L	DESCRIPTION	DATE	APPROVAL
–	Replaces 1004189 TDRR 6353	[illegible]	[illegible]

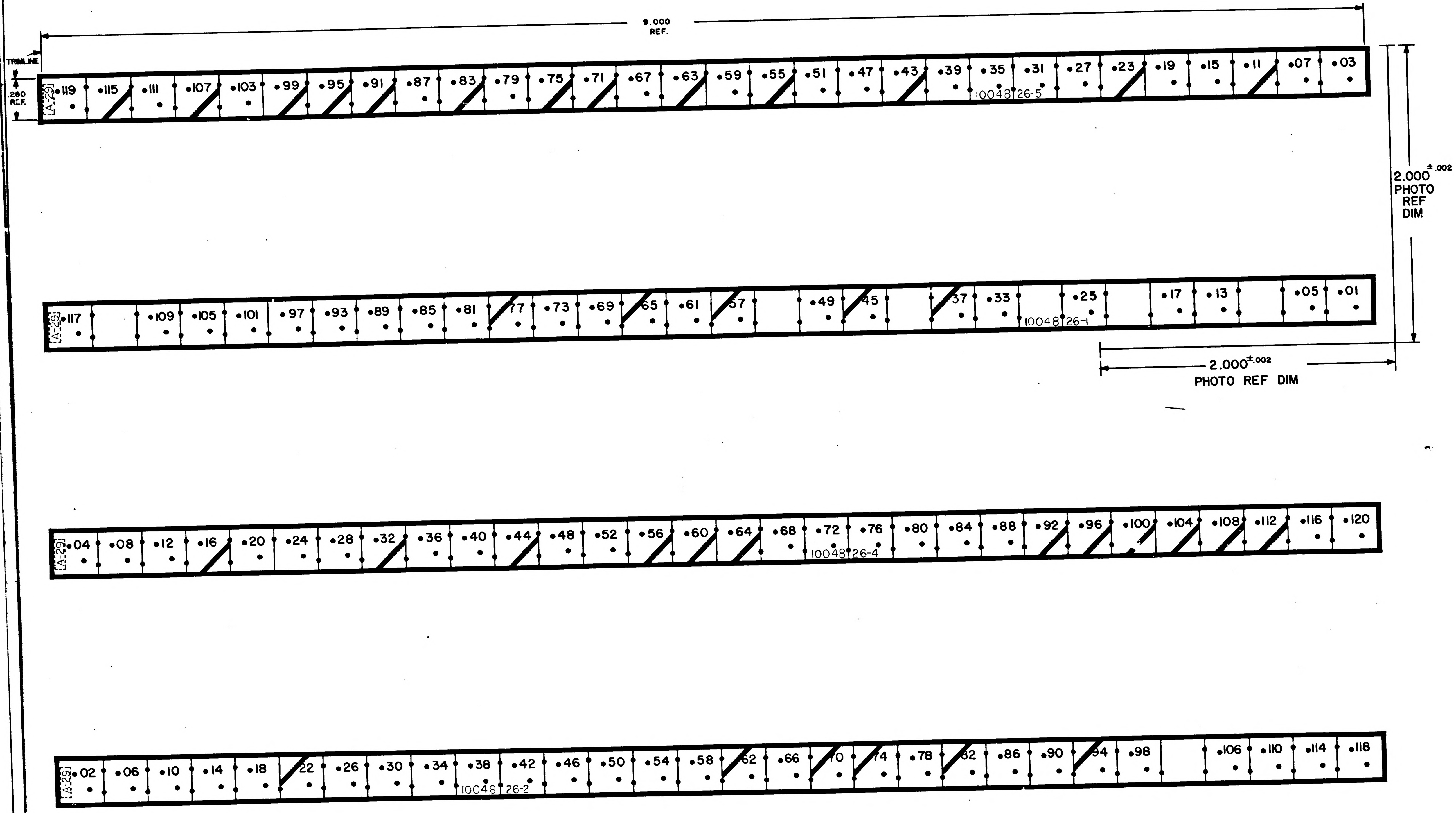
9.000
REF.
TRIMLINE
.280
REF.
A-29
•119 •115 •111 •107 •103 •99 •95 •91 •87 •83 •79 •75 •71 •67 •63 •59 •55 •51 •47 •43 •39 •35 •31 •27 •23 •19 •15 •11 •07 •03
1004826-5
2.000 ±.002
PHOTO
REF
DIM
•117 •109 •105 •101 •97 •93 •89 •85 •81 77 •73 •69 65 •61 57 •49 45 37 •33 •25 •17 •13 •05 •01
1004826-1
2.000 ±.002
PHOTO REF DIM
•04 •08 •12 •16 •20 •24 •28 •32 •36 •40 •44 •48 •52 •56 •60 •64 •68 •72 •76 •80 •84 •88 •92 •96 •100 •104 •108 •112 •116 •120
1004826-4
•02 •06 •10 •14 •18 22 •26 •30 •34 •38 •42 •46 •50 •54 •58 62 •66 70 74 •78 82 •86 •90 94 •98 •106 •110 •114 •118
1004826-2

REFERENCE DWG
LWIRING DIAGRAM 1005761

NOTES:
1. INTERPRET DRAWING IN ACCORDANCE WITH STANDARDS PRESCRIBED BY MIL-D-70327
2. ORIGINAL OF THIS DRAWING OR REPRODUCTION MADE BY PROCESS OR METHOD SHALL INSURE DIMENSIONAL STABILITY. DIMENSIONAL VARIATIONS SHALL NOT EXCEED .001 INCH PER INCH
3. MAKE MASTER PATTERN POSITIVE FILMS TO DIMENSIONS SHOWN
4. CUT TO WITHIN .010 OF TRIMLINE
5. MATERIAL: .006/.008 THICK PLASTIC SHEETS, SENSITIZED, DIMENSIONALLY STABLE PER L-F-340, TYPE IB, CLASS 2, STYLE IA
6. ● PUNCH HOLES TO .040 DIAMETER

QTY REQD	PART OR IDENTIFYING NO	NOMENCLATURE OR DESCRIPTION	FIND NO
LIST OF MATERIALS			

NEXT ASSY	USED ON
1003814	
1003813	
APPLICATION	

UNLESS OTHERWISE SPECIFIED DIMENSIONS ARE IN INCHES
TOLERANCES ON
FRACTIONS — DECIMALS .005 — ANGLES —
DO NOT SCALE THIS DRAWING
MATERIAL SEE NOTE 5
HEAT TREATMENT —
FINAL FINISH —

MIT INSTRUMENTATION LAB
CAMBRIDGE, MASS
DWG NO
CONTRACT
DRAWN J.C. [illegible] DATE 24 Feb 65
CHECKED R. Edwards 10 Mar 65
APPROVAL B. Marsh 15 Mar 65
APPROVAL Eldon C. Hall 6 April 65
NASA APPROVAL W. J. [illegible] 4-6-65
MIT APPROVAL [illegible]

MANNED SPACECRAFT CENTER
HOUSTON, TEXAS

IDENTIFICATION TAPE
LOGIC MODULE NO. A-29

CODE IDENT NO	SIZE	NASA DRAWING NO
—	E	1004826
SCALE 4/1	WT	SHEET 1 OF 1

NOTICE – WHEN GOVERNMENT DRAWINGS, SPECIFICATIONS, OR OTHER DATA ARE USED FOR ANY PURPOSE OTHER THAN IN CONNECTION WITH A DEFINITELY RELATED GOVERNMENT PROCUREMENT OPERATION, THE UNITED STATES GOVERNMENT THEREBY INCURS NO RESPONSIBILITY NOR ANY OBLIGATION WHATSOEVER; AND THE FACT THAT THE GOVERNMENT MAY HAVE FORMULATED, FURNISHED, OR IN ANY WAY SUPPLIED THE SAID DRAWINGS, SPECIFICATIONS OR OTHER DATA IS NOT TO BE REGARDED BY IMPLICATION OR OTHERWISE AS IN ANY MANNER LICENSING THE HOLDER OR ANY OTHER PERSON OR CORPORATION, OR CONVEYING ANY RIGHTS OR PERMISSION TO MANUFACTURE, USE, OR SELL ANY PATENTED INVENTION THAT MAY IN ANY WAY BE RELATED THERETO.

REVISIONS 18626						
SYM	ZONE	DESCRIPTION	DR	CHK	DATE	APPROVED

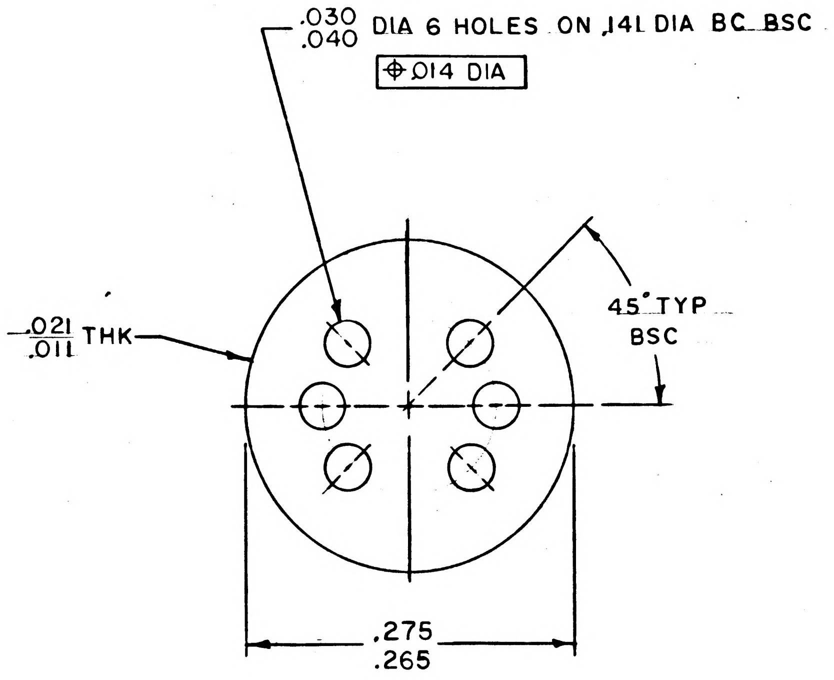

NOTES

1. MATL: MAKE FROM 1006806-19
2. INTERPRET DRAWING IN ACCORDANCE WITH STANDARDS PRESCRIBED BY MIL-D-70327

MASTER

QTY REQD	PART OR IDENTIFYING NO.	MATERIAL OR NOTES	NOMENCLATURE OR DESCRIPTION	FIND NO.

LIST OF MATERIALS

NEXT ASSY	USED ON
1003814	
1003813	

APPLICATION

UNLESS OTHERWISE SPECIFIED DIMENSIONS ARE IN INCHES
CAPACITOR VALUES ARE IN µf
RESISTOR VALUES ARE IN OHMS
TOLERANCES ON
FRACTIONS ± DECIMALS ± ANGLES ±
DO NOT SCALE THIS DRAWING

MATERIAL
SEE NOTE 1

MIT
INSTRUMENTATION LAB
CAMBRIDGE, MASS.

DRAWN		14APR65
CHECKED		4/23/65
APPROVED		
APPROVED	Eldon C Hall	27Apr65
APPROVED MIT	W Cuyler	27Apr65
APPROVED MSC		4-27-65
		DATE

MANNED SPACECRAFT CENTER
HOUSTON, TEXAS

INSULATOR

CODE IDENT NO.	SIZE	DRAWING NO.
80230	C	1004851
SCALE 10/1		SHEET 1 OF 1

1004851

NOTICE – WHEN GOVERNMENT DRAWINGS, SPECIFICATIONS, OR OTHER DATA ARE USED FOR ANY PURPOSE OTHER THAN IN CONNECTION WITH A DEFINITELY RELATED GOVERNMENT PROCUREMENT OPERATION, THE UNITED STATES GOVERNMENT THEREBY INCURS NO RESPONSIBILITY NOR ANY OBLIGATION WHATSOEVER, AND THE FACT THAT THE GOVERNMENT MAY HAVE FORMULATED, FURNISHED, OR IN ANY WAY SUPPLIED THE SAID DRAWINGS, SPECIFICATIONS OR OTHER DATA IS NOT TO BE REGARDED BY IMPLICATION OR OTHERWISE AS IN ANY MANNER LICENSING THE HOLDER OR ANY OTHER PERSON OR CORPORATION, OR CONVEYING ANY RIGHTS OR PERMISSION TO MANUFACTURE, USE, OR SELL ANY PATENTED INVENTION THAT MAY IN ANY WAY BE RELATED THERETO.

1004857 –

SYM	DESCRIPTION	DATE	APPROVAL

REVISIONS 19228

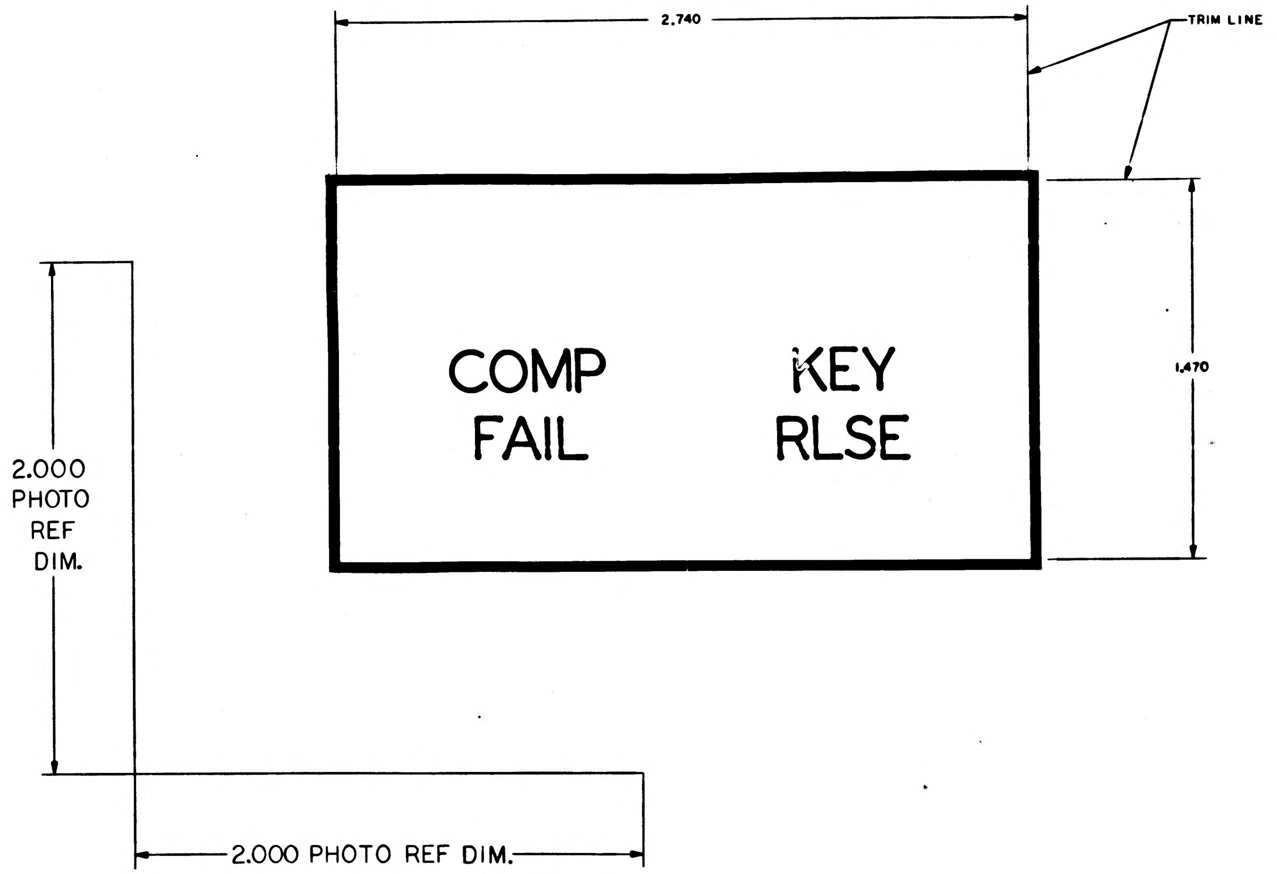

NOTES

1. MATERIAL: FILM, .006/.008 THK SENSITIZED DIMENSIONALLY STABLE PER L-F-340, TYPE IB, CLASS 2, STYLE IA
2. ORIGINAL OF THIS DRAWING OR REPRODUCTION MADE BY A PROCESS OR METHOD SHALL INSURE DIMENSIONAL STABILITY DIMENSIONAL VARIATIONS SHALL NOT EXCEED .001 INCH PER FOOT
3. CUT TO WITHIN .010 OF TRIM LINE
4. INTERPRET DRAWING IN ACCORDANCE WITH STANDARDS PRESCRIBED BY MIL-D-70327
5. MAKE MASTER PATTERN POSITIVE FILMS TO DIMENSIONS SHOWN

1A

QTY REQD	PART OR IDENTIFYING NO.	NOMENCLATURE OR DESCRIPTION	FIND NO.

LIST OF MATERIALS

NEXT ASSY	USED ON
1003801	

APPLICATION

UNLESS OTHERWISE SPECIFIED DIMENSIONS ARE IN INCHES
TOLERANCES ON
FRACTIONS ± DECIMALS ±.020 ANGLES ±
DO NOT SCALE THIS DRAWING
MATERIAL: SEE NOTE 1
HEAT TREATMENT: NONE
FINAL FINISH: NONE

MIT INSTRUMENTATION LAB
CAMBRIDGE MASS
DWG NO
CONTRACT
DRAWN
DATE
CHECKED
APPROVAL
APPROVAL
NASA APPROVAL
MIT APPROVAL

MANNED SPACECRAFT CENTER
HOUSTON, TEXAS

INSULATOR, FRONT
INDICATOR DISPLAY
AGC DSKY, MAIN 100 SERIES

CODE IDENT NO. —
SIZE E
NASA DRAWING NO. 1004857
SCALE 4/1
WT
SHEET 1 OF 1

1004857 –

1004857

NOTICE – WHEN GOVERNMENT DRAWINGS, SPECIFICATIONS, OR OTHER DATA ARE USED FOR ANY PURPOSE OTHER THAN IN CONNECTION WITH A DEFINITELY RELATED GOVERNMENT PROCUREMENT OPERATION, THE UNITED STATES GOVERNMENT THEREBY INCURS NO RESPONSIBILITY NOR ANY OBLIGATION WHATSOEVER; AND THE FACT THAT THE GOVERNMENT MAY HAVE FORMULATED, FURNISHED, OR IN ANY WAY SUPPLIED THE SAID DRAWINGS, SPECIFICATIONS OR OTHER DATA IS NOT TO BE REGARDED BY IMPLICATION OR OTHERWISE AS IN ANY MANNER LICENSING THE HOLDER OR ANY OTHER PERSON OR CORPORATION, OR CONVEYING ANY RIGHTS OR PERMISSION TO MANUFACTURE, USE, OR SELL ANY PATENTED INVENTION THAT MAY IN ANY WAY BE RELATED THERETO.

REVISIONS 20557

SYM	ZONE	DESCRIPTION	DR	CHK	DATE	APPROVED

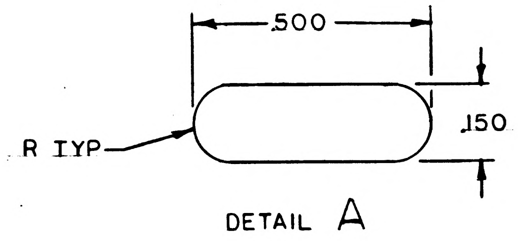

DETAIL A

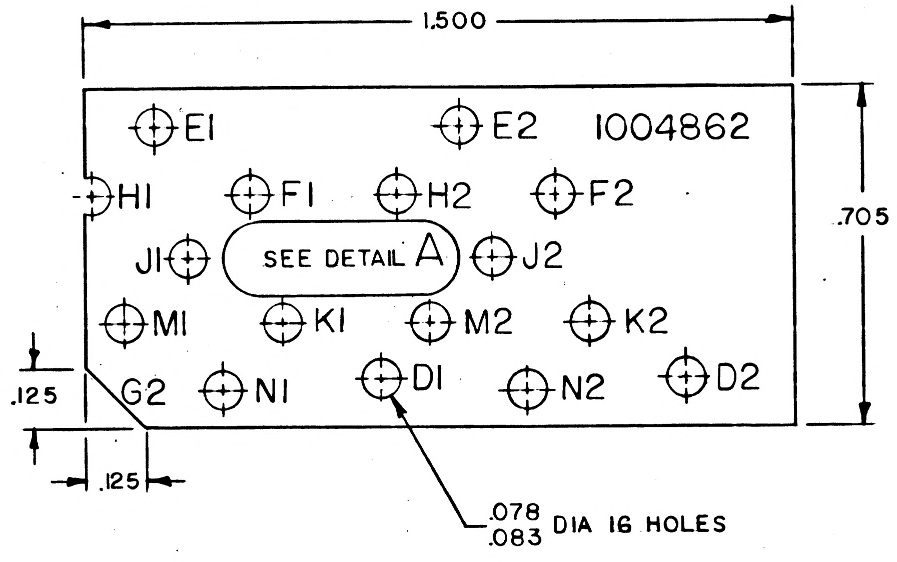

NOTES

1. MATL: .002/.007 THICK PLASTIC SHEET PER MIL-P-18177, TYPE GEE
2. INTERPRET DRAWING IN ACCORDANCE WITH STANDARDS PRESCRIBED BY MIL-D-70327
3. PREPARE BOARD FOR PHOTOGRAPHY PER ND1002133

REF.
DWG NO. 1004861-001 FOR PHOTOGRAPHIC MASTER

MASTER

QTY REQD	PART OR IDENTIFYING NO.	MATERIAL OR NOTES	NOMENCLATURE OR DESCRIPTION	FIND NO.

LIST OF MATERIALS

NEXT ASSY	USED ON
1003802	

APPLICATION

UNLESS OTHERWISE SPECIFIED
DIMENSIONS ARE IN INCHES
CAPACITOR VALUES ARE IN µf
RESISTOR VALUES ARE IN OHMS
TOLERANCES ON
FRACTIONS ± DECIMALS ± ANGLES ±
DO NOT SCALE THIS DRAWING

MATERIAL
SEE NOTE 1

MIT
INSTRUMENTATION LAB
CAMBRIDGE, MASS.

DRAWN R Donato 10APR65
CHECKED L Cayer 14Apr65
APPROVED
APPROVED Eldon C Hall 16April65
APPROVED MIT
APPROVED MSC
DATE

MANNED SPACECRAFT CENTER
HOUSTON, TEXAS

BOARD INSULATOR L.H.
VERB-NOUN DISPLAY
AGC DSKY NAV & MAIN 100 SERIES

CODE IDENT NO. 80230
SIZE C
DRAWING NO. 1004862
SCALE 4/1
SHEET 1 OF 1

NOTICE — WHEN GOVERNMENT DRAWINGS, SPECIFICATIONS, OR OTHER DATA ARE USED FOR ANY PURPOSE OTHER THAN IN CONNECTION WITH A DEFINITELY RELATED GOVERNMENT PROCUREMENT OPERATION, THE UNITED STATES GOVERNMENT THEREBY INCURS NO RESPONSIBILITY NOR ANY OBLIGATION WHATSOEVER; AND THE FACT THAT THE GOVERNMENT MAY HAVE FORMULATED, FURNISHED, OR IN ANY WAY SUPPLIED THE SAID DRAWINGS, SPECIFICATIONS OR OTHER DATA IS NOT TO BE REGARDED BY IMPLICATION OR OTHERWISE AS IN ANY MANNER LICENSING THE HOLDER OR ANY OTHER PERSON OR CORPORATION, OR CONVEYING ANY RIGHTS OR PERMISSION TO MANUFACTURE, USE, OR SELL ANY PATENTED INVENTION THAT MAY IN ANY WAY BE RELATED THERETO.

REVISIONS 20557

SYM	ZONE	DESCRIPTION	DR	CHK	DATE	APPROVED

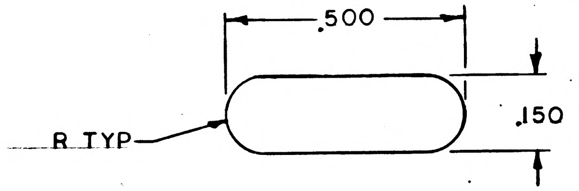

DETAIL A

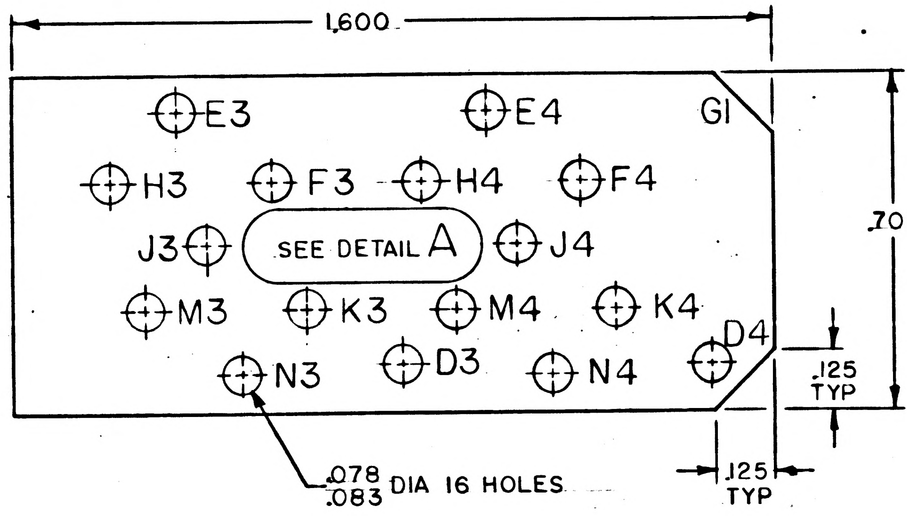

REF.
DWG NO. 1004861-002 FOR PHOTOGRAPHIC MASTER

NOTES
1. MATL: .002/.007 THICK PLASTIC SHEET PER MIL-P-18177, TYPE GEE
2 INTERPRET DRAWING IN ACCORDANCE WITH STANDARDS PRESCRIBED BY MIL-D-70327
3 PREPARE BOARD FOR PHOTOGRAPHY PER ND1002133

QTY REQD	PART OR IDENTIFYING NO.	MATERIAL OR NOTES	NOMENCLATURE OR DESCRIPTION	FIND NO.

LIST OF MATERIALS

MASTER

1003802	
NEXT ASSY	USED ON
APPLICATION	

UNLESS OTHERWISE SPECIFIED
DIMENSIONS ARE IN INCHES
CAPACITOR VALUES ARE IN μf
RESISTOR VALUES ARE IN OHMS
TOLERANCES ON
FRACTIONS ± DECIMALS ± ANGLES ±
DO NOT SCALE THIS DRAWING

MATERIAL
SEE NOTE 1

MIT
INSTRUMENTATION LAB
CAMBRIDGE, MASS.

DRAWN	R Dunwood	9APR65
CHECKED	L Cozer	14 April 65
APPROVED		
APPROVED	Eldon C Hall	16 April 65
APPROVED MIT		
APPROVED MSC		DATE

MANNED SPACECRAFT CENTER
HOUSTON, TEXAS

BOARD INSULATOR R.H.
VERB-NOUN DISPLAY
AGC DSKY NAV & MAIN 100 SERIES

CODE IDENT NO.	SIZE	DRAWING NO.
80230	C	1004863
SCALE 4/1		SHEET 1 OF 1

NOTICE – WHEN GOVERNMENT DRAWINGS, SPECIFICATIONS, OR OTHER DATA ARE USED FOR ANY PURPOSE OTHER THAN IN CONNECTION WITH A DEFINITELY RELATED GOVERNMENT PROCUREMENT OPERATION, THE UNITED STATES GOVERNMENT THEREBY INCURS NO RESPONSIBILITY NOR ANY OBLIGATION WHATSOEVER; AND THE FACT THAT THE GOVERNMENT MAY HAVE FORMULATED, FURNISHED, OR IN ANY WAY SUPPLIED THE SAID DRAWINGS, SPECIFICATIONS OR OTHER DATA IS NOT TO BE REGARDED BY IMPLICATION OR OTHERWISE AS IN ANY MANNER LICENSING THE HOLDER OR ANY OTHER PERSON OR CORPORATION, OR CONVEYING ANY RIGHTS OR PERMISSION TO MANUFACTURE, USE, OR SELL ANY PATENTED INVENTION THAT MAY IN ANY WAY BE RELATED THERETO.

REVISIONS 21583

SYM	ZONE	DESCRIPTION	DR	CHK	DATE	APPROVED

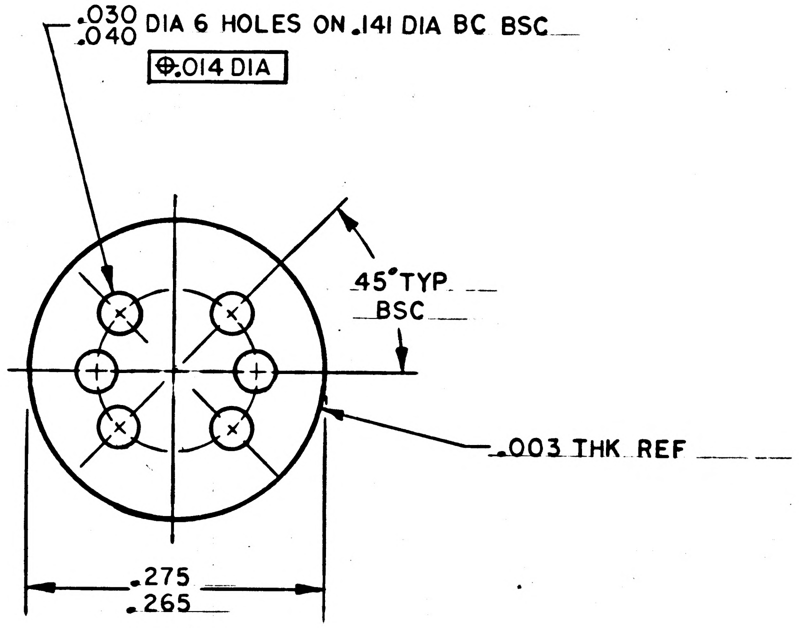

NOTES

1. MATL: MAKE FROM 1006352
2. INTERPRET DRAWING IN ACCORDANCE WITH STANDARDS PRESCRIBED BY MIL-D-70327

QTY REQD	PART OR IDENTIFYING NO.	MATERIAL OR NOTES	NOMENCLATURE OR DESCRIPTION	FIND NO.

LIST OF MATERIALS

1003814	
1003813	
NEXT ASSY	USED ON
APPLICATION	

UNLESS OTHERWISE SPECIFIED
DIMENSIONS ARE IN INCHES
CAPACITOR VALUES ARE IN μf
RESISTOR VALUES ARE IN OHMS
TOLERANCES ON
FRACTIONS DECIMALS ANGLES
± ± ±
DO NOT SCALE THIS DRAWING

MATERIAL
SEE NOTE 1

MIT
INSTRUMENTATION LAB
CAMBRIDGE, MASS.

MANNED SPACECRAFT CENTER
HOUSTON, TEXAS

DRAWN 25AUG65
CHECKED cc R. Edward 25 Aug 65
APPROVED B. Marsh 25 aug 65
APPROVED Ellen C Hall 9 Sept 65
APPROVED MIT M G Mueller 8 Sept 65
APPROVED NASA MSC NOT REQUIRED PER LETTER PP7-65-612
DATE

INSULATOR

CODE IDENT NO. 80230
SIZE C
DRAWING NO. 1004865
SCALE 10/1
SHEET 1 OF 1

MODERN BLUE PRINT CO. D-19550

	REVISIONS		
SYM	DESCRIPTION	DATE	APPROVAL
—	RELEASED PER TDRR 25753		
A	REVISED PER TDRR 26557 DR CHK APPD	2/20/66	

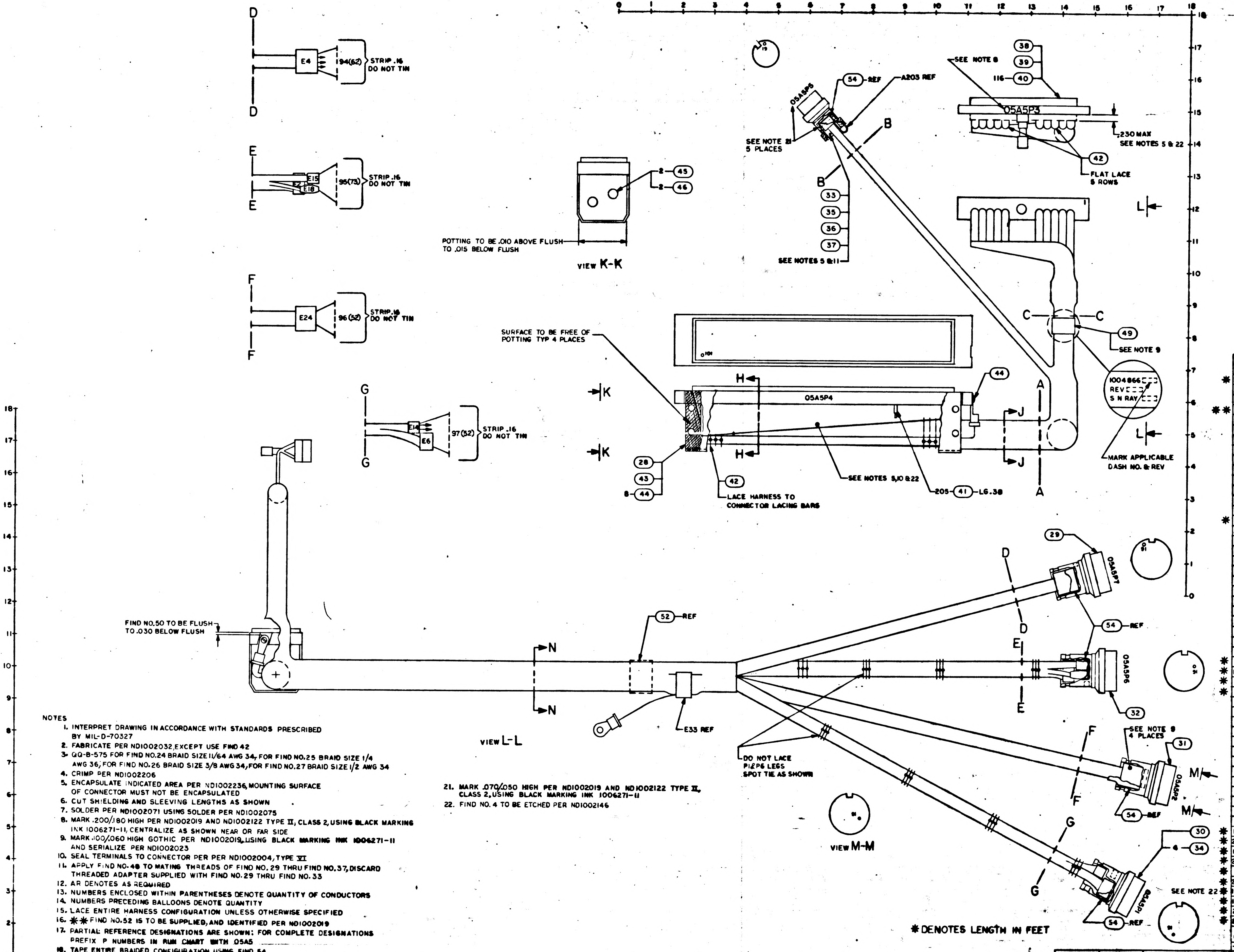

VIEW K-K
POTTING TO BE .010 ABOVE FLUSH TO .015 BELOW FLUSH
E4
194(62)
STRIP .16 DO NOT TIN
E15
E18
95(73)
E24
96(52)
E6
97(52)
05A5P5
05A5P3
05A5P4
05A5P7
05A5P6
05A5P2
05A5P1
A203 REF
SEE NOTE 8
SEE NOTE 21 5 PLACES
.230 MAX SEE NOTES 5 & 22
FLAT LACE 5 ROWS
SEE NOTES 5 & 11
SURFACE TO BE FREE OF POTTING TYP 4 PLACES
SEE NOTES 5,10 & 22
205-(41)-L6.38
LACE HARNESS TO CONNECTOR LACING BARS
SEE NOTE 9
1004866 REV S N RAY
MARK APPLICABLE DASH NO. & REV
FIND NO.50 TO BE FLUSH TO .030 BELOW FLUSH
E33 REF
VIEW L-L
DO NOT LACE P1,P2,P6 LEGS SPOT TIE AS SHOWN
SEE NOTE 9 4 PLACES
VIEW M-M
SEE NOTE 22

✱ DENOTES LENGTH IN FEET

NOTES

1. INTERPRET DRAWING IN ACCORDANCE WITH STANDARDS PRESCRIBED BY MIL-D-70327
2. FABRICATE PER ND1002032, EXCEPT USE FIND 42
3. QQ-B-575 FOR FIND NO.24 BRAID SIZE 11/64 AWG 34, FOR FIND NO.25 BRAID SIZE 1/4 AWG 36, FOR FIND NO.26 BRAID SIZE 3/8 AWG 34, FOR FIND NO.27 BRAID SIZE 1/2 AWG 34
4. CRIMP PER ND1002206
5. ENCAPSULATE INDICATED AREA PER ND1002236, MOUNTING SURFACE OF CONNECTOR MUST NOT BE ENCAPSULATED
6. CUT SHIELDING AND SLEEVING LENGTHS AS SHOWN
7. SOLDER PER ND1002071 USING SOLDER PER ND1002075
8. MARK .200/.180 HIGH PER ND1002019 AND ND1002122 TYPE II, CLASS 2, USING BLACK MARKING INK 1006271-11, CENTRALIZE AS SHOWN NEAR OR FAR SIDE
9. MARK .100/.060 HIGH GOTHIC PER ND1002019, USING BLACK MARKING INK 1006271-11 AND SERIALIZE PER ND1002023
10. SEAL TERMINALS TO CONNECTOR PER PER ND1002004, TYPE VI
11. APPLY FIND NO. 48 TO MATING THREADS OF FIND NO. 29 THRU FIND NO. 37, DISCARD THREADED ADAPTER SUPPLIED WITH FIND NO. 29 THRU FIND NO. 33
12. AR DENOTES AS REQUIRED
13. NUMBERS ENCLOSED WITHIN PARENTHESES DENOTE QUANTITY OF CONDUCTORS
14. NUMBERS PRECEDING BALLOONS DENOTE QUANTITY
15. LACE ENTIRE HARNESS CONFIGURATION UNLESS OTHERWISE SPECIFIED
16. ✱✱ FIND NO.52 IS TO BE SUPPLIED, AND IDENTIFIED PER ND1002019
17. PARTIAL REFERENCE DESIGNATIONS ARE SHOWN: FOR COMPLETE DESIGNATIONS PREFIX P NUMBERS IN RUN CHART WITH 05A5
18. TAPE ENTIRE BRAIDED CONFIGURATION USING FIND 54
19. MIL-T-23594, TYPE I, WIDTH 1/2
20. MIL-I-631, TYPE F, FORM U 2, GRADE A, CLASS 1, CATEGORY 1, AWG SIZE NO.3
21. MARK .070/.050 HIGH PER ND1002019 AND ND1002122 TYPE II, CLASS 2, USING BLACK MARKING INK 1006271-11
22. FIND NO. 4 TO BE ETCHED PER ND1002146

	QTY REQD	PART OR IDENTIFYING NO.	NOMENCLATURE OR DESCRIPTION	FIND NO
	2	1000243-36	FERRULE, ELEC	56
✱	0.2	SEE NOTE 20	INSULATION, ELEC	55
	AR	SEE NOTE 19	TAPE, PRESSURE SENSITIVE	54
	3	1000242-36	FERRULE, ELEC	53
✱✱	1	1010400-5	CLAMP, CABLE	52
	1	MS25036-12	TERMINAL, LUG	51
	1	MS25036-11	TERMINAL, LUG	50
	1	MS18035-1-2	STRAP, CABLE	49
	AR	MIL-S-22473 GRADE C	SEALING COMPOUND	48
	1	1003562-011	TERMINAL BLOCK ASSY	47
	2	MS35333-70	WASHER, LOCK	46
	2	1006783-19	SCREW, BUTTON HD	45
	9	1006783-18	SCREW, BUTTON HD	44
	1	1004868	COVER	43
	AR	1012507-003	TAPE, LACING	42
✱	7.7	1006322-007	INSULATION SLEEVING	41
	244	1010738-5	CONTACT, ELEC, PIN	40
	1	1010812-1	SEAL RUBBER	39
	1	1010815-144	CONNECTOR, PLUG	38
	1	MS16995-2	SCREW, CAP	37
	1	1004781-002	CLAMP, CONNECTOR	36
	1	1004782-002	ADAPTER, CONNECTOR	35
	4	1004782-001	ADAPTER, CONNECTOR	34
	1	1010771-013	CONNECTOR, PLUG	33
	1	1010771-104	CONNECTOR, PLUG	32
	1	1010771-103	CONNECTOR, PLUG	31
	1	1010771-102	CONNECTOR, PLUG	30
	1	1010771-101	CONNECTOR, PLUG	29
	1	1003731-011	CONNECTOR ASSY	28
✱	0.8	SEE NOTE 3	WIRE, BRAID	27
✱	10.7	SEE NOTE 3	WIRE, BRAID	26
✱	7.8	SEE NOTE 3	WIRE, BRAID	25
✱	2.6	SEE NOTE 3	WIRE, BRAID	24
	2	1010402-3	SLEEVE, SOLDER	23
	14	1010402-2	SLEEVE, SOLDER	22
	1	1006384-001	FERRULE, ELEC	21
	1	1000242-29	FERRULE, ELEC	20
	5	1000242-27	FERRULE, ELEC	19
	1	1000242-32	FERRULE, ELEC	18
	6	1000242-33	FERRULE, ELEC	17
	1	1000242-30	FERRULE, ELEC	16
	2	1000243-40	FERRULE, ELEC	15
	5	1000243-21	FERRULE, ELEC	14
	4	1000243-37	FERRULE, ELEC	13
	2	1000243-34	FERRULE, ELEC	12
	1	1000243-31	FERRULE, ELEC	11
✱	10.0	1010789-001	WIRE, ELEC, AWG 24 (YEL)	10
✱	25.0	1010789-003	WIRE, ELEC, AWG 24 (2 COND TWIST)	9
✱	17.0	1010789-015	WIRE, ELEC, AWG 26 (2 COND SHLD)	8
✱	25.0	1010789-004	WIRE, ELEC, AWG 24 (3 COND TWIST)	7
✱	4.0	1010789-005	WIRE, ELEC, AWG 24 (4 COND TWIST)	6
✱	25.0	1010789-006	WIRE, ELEC, AWG 22 (YEL)	5
✱	16.0	1010416-140	WIRE, ELEC, AWG 26 (RED/ORN TCR)	4
✱	16.0	1010789-007	WIRE, ELEC, AWG 22 (BLK)	3
✱	215	1010789-017	WIRE, ELEC, AWG 26 (2 COND TWIST)	2
✱	260	1010789-016	WIRE, ELEC, AWG 26 (YEL)	1
	-011	LIST OF MATERIALS		

NEXT ASSY	USED ON
APPLICATION	

UNLESS OTHERWISE SPECIFIED DIMENSIONS ARE IN INCHES
TOLERANCES ON
FRACTIONS ± DECIMALS ± .03 ANGLES ±
MATERIAL
HEAT TREATMENT
FINAL FINISH

MIT INSTRUMENTATION LAB
CAMBRIDGE, MASS
DRAWN A.J. DATE 24NOV65
CHECKED 7DEC65
APPROVAL
APPROVAL 22Dec65
NASA APPROVAL A. C. METZGER
MIT APPROVAL
MIT APPROVAL

MANNED SPACECRAFT CENTER
HOUSTON, TEXAS

WIRING HARNESS
AGC TO PSA & G/N TO SPACECRAFT

CODE IDENT NO 80230
SIZE J
NASA DRAWING NO 1004866
SCALE 1/1
WT
SHEET 1 OF 5

MASTER

1004866 A

1004866 A

SYM	DESCRIPTION	DATE	APPROVAL
—	RELEASED PER TDRR 25153		
A	REVISED PER TDRR 26557 DR *J.P. Sufin* CHK *J.J.* APPD	*4/2/68*	*J. M.*

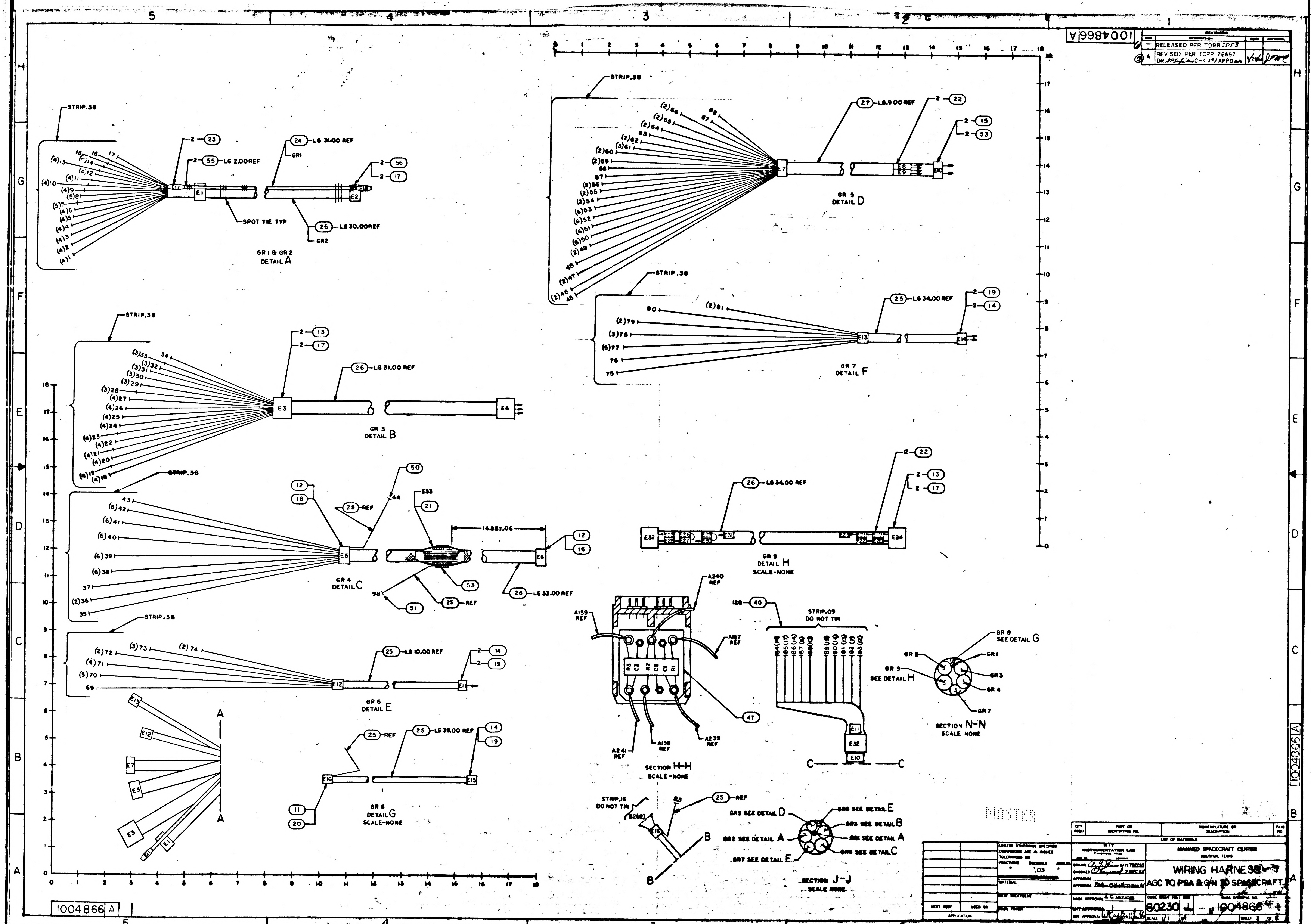
STRIP .38
GR 1 & GR 2 DETAIL A
SPOT TIE TYP
LG 2.00 REF
LG 31.00 REF
LG 30.00 REF
GR 3 DETAIL B
LG 31.00 REF
GR 4 DETAIL C
14.88±.06
LG 33.00 REF
E33
GR 5 DETAIL D
LG 6.900 REF
GR 6 DETAIL E
LG 10.00 REF
GR 7 DETAIL F
LG 34.00 REF
GR 8 DETAIL G SCALE-NONE
LG 39.00 REF
GR 9 DETAIL H SCALE-NONE
LG 34.00 REF
A240 REF
A159 REF
A157 REF
A241 REF
A158 REF
A239 REF
SECTION H-H SCALE-NONE
STRIP .09 DO NOT TIN
SECTION N-N SCALE NONE
GR 8 SEE DETAIL G
GR 9 SEE DETAIL H
GR 2
GR 1
GR 3
GR 4
GR 7
STRIP .16 DO NOT TIN
SECTION J-J SCALE NONE
GR5 SEE DETAIL D
GR6 SEE DETAIL E
GR3 SEE DETAIL B
GR2 SEE DETAIL A
GR1 SEE DETAIL A
GR4 SEE DETAIL C
GR7 SEE DETAIL F
MASTER

QTY REQD	PART OR IDENTIFYING NO.	NOMENCLATURE OR DESCRIPTION	FIND NO

LIST OF MATERIALS

UNLESS OTHERWISE SPECIFIED
DIMENSIONS ARE IN INCHES
TOLERANCES ON
FRACTIONS ± DECIMALS ±.03 ANGLES ±
MATERIAL
HEAT TREATMENT
FINAL FINISH

NEXT ASSY | USED ON
APPLICATION

MIT
INSTRUMENTATION LAB
CAMBRIDGE, MASS

DRAWN *A.J. Kiser* DATE *7 DEC 65*
CHECKED *Hazzard 7 DEC 65*
APPROVAL
APPROVAL *[illegible]*
NASA APPROVAL *A. C. Metzger*
MIT APPROVAL
MIT APPROVAL *[illegible]*

MANNED SPACECRAFT CENTER
HOUSTON, TEXAS

WIRING HARNESS
AGC TO PSA & G/N TO SPACECRAFT

CODE IDENT NO. 80230 | SIZE J | NASA DRAWING NO. 1004866
SCALE 1/1 | WT | SHEET 2 OF 6

1004866 A

SYM	DESCRIPTION	DATE	APPROVAL
—	RELEASED PER TDRR 25153		
A	REVISED PER TDRR 26557 DR CHK APPD	2/20/66	

1004866 A

ASSEMBLY INFORMATION CHART

FROM				DESCRIPTION			TO		
REMARKS	COND IDENT	STA NO.	DES	COLOR	AWG	FIND NO.	STA NO.	DES	REMARKS
	A1	13	P4-146	YEL	24	7	95	P6-26	GROUP 1 SEE DETAIL A
		14	P4-147	RED	24		95	P6-47	
		15	P4-148	GRN	24		95	P6-48	
			E17	SHLD				E18	
	A2	7	P4-540	YEL	26	2	95	P6-74	GROUP 2 SEE DETAIL A
		8	541	RED				75	
	A3	3	436	YEL				89	
		4	437	RED				88	
	A4	3	336	YEL				60	
		4	337	RED				59	
	A5	1	434	YEL				37	
		2	435	RED				36	
	A6	1	334	YEL				20	
		2	335	RED				19	
	A7	5	138	YEL				18	
		6	139	RED				17	
	A8	1	234	YEL				21	
		2	235	RED				8	
	A9	1	134	YEL				22	
		2	135	RED				9	
	A10	3	236	YEL				42	
		4	237	RED				23	
	A11	3	136	YEL				43	
		4	137	RED				69	
	A12	5	238	YEL				35	
		6	239	RED				34	
	A13	13	346	YEL				7	
		14	347	RED				6	
	A14	13	246	YEL				2	
		14	247	RED				1	
	A15	5	438	YEL				10	
		6	439	RED				3	
	A16	5	338	YEL				24	
		6	339	RED				11	
	A17	7	440	YEL				56	
		8	441	RED				55	
	A18	7	340	YEL				33	
		8	341	RED				32	
	A19	7	240	YEL				16	
		8	241	RED				15	
	A20	7	140	YEL				5	
		8	141	RED				14	
	A21	13	446	YEL				44	
		14	447	RED				25	
	A22	9	442	YEL				4	
		10	443	RED				13	
	A23	9	342	YEL				12	
		10	343	RED				27	
	A24	9	242	YEL				54	
		10	243	RED				53	
	A25	9	142	YEL				31	
		10	143	RED				52	
	A26	11	444	YEL				30	
		12	445	RED				51	
	A27	11	344	YEL				29	
		12	345	RED				50	
	A28	11	244	YEL				28	
		12	245	RED				49	
	A29	11	144	YEL				46	
		12	145	RED				73	
	A30	16	149	YEL		2		58	
		17	P4-150	RED	26		95	P6-57	GROUP 2 SEE DETAIL A
			E1	SHLD				E2	
	A31	26	P4-424	YEL	26	2	94	P7-61	PART OF GROUP 3 SEE DETAIL B
		27	425	RED				60	
	A32	26	324	YEL				38	
		27	325	RED				37	
	A33	24	422	YEL				59	
		25	423	RED				58	
	A34	24	322	YEL				36	
		25	323	RED				35	
	A35	18	416	YEL				39	
		19	417	RED				20	
	A36	18	316	YEL				40	
		19	317	RED				21	
	A37	18	216	YEL				41	
		19	217	RED				22	
	A38	18	116	YEL		2		67	
		19	P4-117	RED	26		94	P7-42	PART OF GROUP 3 SEE DETAIL B

△ DENOTES TWO CONNECTIONS TO ONE PIN

▲ DENOTES INTERNAL CONNECTION

ASSEMBLY INFORMATION CHART

FROM				DESCRIPTION			TO		
REMARKS	COND IDENT	STA NO.	DES	COLOR	AWG	FIND NO.	STA NO.	DES	REMARKS
	A39	20	P4-418	YEL	26	2	94	P7-19	PART OF GROUP 3 SEE DETAIL B
		21	419	RED				18	
	A40	20	318	YEL				8	
		21	319	RED				7	
	A41	24	122	YEL				70	
		25	123	RED				71	
	A42	20	218	YEL				9	
		21	219	RED				2	
	A43	20	118	YEL				23	
		21	119	RED				10	
	A44	22	420	YEL				43	
		23	421	RED				24	
	A45	22	320	YEL				69	
		23	321	RED				44	
	A46	22	220	YEL				57	
		23	221	RED				56	
	A47	22	120	YEL				34	
		23	121	RED				33	
	A48	26	224	YEL				45	
		27	225	RED				72	
	A49	26	124	YEL				25	
		27	125	RED				46	
	A50	24	222	YEL		2		17	
		25	223	RED				16	
	A51	29	228	YEL		1		11	
	A52	28	227					1	
	A53	28	327					6	
	A54	28	127					3	
△	A55	29	328					84	
	A56	30	329					55	
	A57	31	330					32	
	A58	32	331					15	
	A59	30	229					83	
	A60	31	230					54	
	A61	32	231					31	
	A62	30	129					5	
	A63	31	130					14	
	A64	32	131					30	
	A65	33	332					4	
	A66	33	232					13	
	A67	33	132					29	
	A68	34	133					12	
△	A69	29	P4-128	YEL	26	1	94	P7-26	
			E3	SHLD				E4	
	A70	▲	E4	BLK	22	3	94	P7-51	PART OF GROUP 3 SEE DETAIL B
	A71	▲	E4	BLK	22	3	94	P7-87	
	A72	▲	E4	BLK	22	3	94	P7-64	
△	A73	38	P4-310	YEL	26	1	97	P1-90	GROUP 4 SEE DETAIL C
	A74	38	210					38	
	A75	39	611					40	
	A76		511					67	
	A77		411					89	
	A78		311					37	
	A79		211					21	
	A80	39	111					42	
	A81	40	612					88	
	A82		512					36	
	A83		412					8	
	A84		312					23	
	A85		212					87	
	A86	40	112					35	
	A87	41	613					7	
	A88	41	513					10	
	A89	42	614					3	
	A90		514					25	
	A91		414					71	
	A92	42	314					85	
	A93	41	413					44	
	A94		313					86	
	A95		213					34	
	A96	41	113					6	
	A97	36	603					64	
△	A98	36	503					65	
	A99	38	410					46	
	A100		610					12	
	A101		510					26	
	A102	38	110					72	
	A103	35	502	YEL		1		63	
△	A104	42	114	YEL		2		5	
		43	315	RED				4	
	A105	42	214	YEL		2		33	
△		37	P4-504	RED	26		97	P1-16	
			E5	SHLD				E6	
	A106	44	~~P4-SHELL~~	SHLD		25	▲	E5	GROUP 4 SEE DETAIL C
	A107	▲	E33	SHLD		25	98	GRD	

ASSEMBLY INFORMATION CHART

FROM				DESCRIPTION			TO		
REMARKS	COND IDENT	STA NO.	DES	COLOR	AWG	FIND NO.	STA NO.	DES	REMARKS
	A108	57	P4-618	YEL	26	2	87	P3-194	GROUP 5 SEE DETAIL D
		58	619	RED			87	195	
	A109	65	534	YEL			88	90	
		66	535	RED				91	
	A110	59	620	YEL				123	
		60	621	RED				124	
	A111	59	520	YEL			88	125	
		60	521	RED			87	126	
	A112	67	644	YEL			89	224	
		68	645	RED			88	226	
	A113	65	634	YEL			87	94	
		66	635	RED			87	95	
	A114	55	616	YEL			88	190	
		56	617	RED				191	
	A115	55	516	YEL				192	
		56	517	RED			88	193	
	A116	63	430	YEL			89	88	
		61	526	RED				54	
	A117	64	631	YEL		2		86	
		61	626	RED				55	
△	A118	61	426	YEL		1		155	
	A119	64	531					119	
	A120	62	428					87	
	A121	62	628				89	120	
△	A122	53	114				91	47	
	A123	54	315				90	48	
	A124	53	214				91	115	
	A125	48	504				90	116	
	A126	53	614				91	8	
	A127		514					216	
	A128		414					181	
	A129	53	314					148	
	A130	52	413					146	
	A131		313					113	
	A132		213					80	
	A133	52	113				91	P3-45	
	A134	47	603					E8	
△	A135	47	P4-503					E9	
	A136	▲	E8				93	P3-75	
	A137		E8					3	
	A138		E9					209	
	A139	▲	E9				93	141	
△	A140	52	P4-513				91	179	
	A141	49	310				93	210	
	A142	49	210					175	
	A143	50	611					142	
	A144		511					109	
	A145		411					76	
	A146		311					41	
	A147		211				93	4	
	A148	50	111				92	212	
	A149	51	612					177	
	A150		512					144	
	A151		412					111	
	A152		312					78	
	A153		212					43	
	A154	51	112				92	6	
△	A155	52	613				91	214	
	A156	54	P4-615		26	1	91	82	
	A157	46	R1		24	10	89	122	
	A158	46	R2		24	10	89	152	
	A159	45	R3	YEL	24	10	89	P3-153	
			E7	SHLD				E10	
	A160	▲	E10	BLK	22	3	93	P3-107	GROUP 5 SEE DETAIL D
	A161	▲	E10	BLK	22	3	89	P3-89	
	A162	71	P4-607	YEL	26	1	90	P3-49	GROUP 6 SEE DETAIL E
	A163	71	507				89	51	
△	A164	70	305				90	117	
	A165	70	205				90	84	
	A166	71	307				89	220	
	A167	70	605				90	218	
	A168	70	505					183	
	A169	70	405	YEL		1		150	
	A170	69	604	RED/ORN		4		151	
	A171	72	609					118	
	A172	73	415				90	85	
	A173	73	215				89	221	
	A174	71	407				89	185	
	A175	73	415				89	186	
	A176	72	209				90	219	
	A177	74	333				90	184	
△	A178	74	P4-433	RED/ORN	26	4	90	P3-50	
			E12	SHLD				E11	GROUP 6 SEE DETAIL E
	A179	▲	E11	BLK	22	3	89	P3-187	

MASTER

QTY REQD	PART OR IDENTIFYING NO.	NOMENCLATURE OR DESCRIPTION	FIND NO.

LIST OF MATERIALS

NEXT ASSY	USED ON

APPLICATION

UNLESS OTHERWISE SPECIFIED
DIMENSIONS ARE IN INCHES
TOLERANCES ON
FRACTIONS ± DECIMALS ± ANGLES ±
DO NOT SCALE THIS DRAWING
MATERIAL
HEAT TREATMENT
FINAL FINISH

MIT
INSTRUMENTATION LAB
CAMBRIDGE MASS
DRAWN DATE
CHECKED 7 DEC 65
APPROVAL
APPROVAL
NASA APPROVAL
MIT APPROVAL
MIT APPROVAL

MANNED SPACECRAFT CENTER
HOUSTON, TEXAS

WIRING HARNESS
AGC TO PSA & G/N TO SPACECRAFT

CODE IDENT NO. 80230 SIZE J NASA DRAWING NO. 1004866
SCALE NONE WT SHEET 3 OF 5

1004866 A

REVISIONS SYM	DESCRIPTION	DATE	APPROVAL
—	RELEASED PER TDRR 2553		
A	CHANGED PER TDRR 26557 DR SP Infi CHK JJ APPD	2/4/66	J.

ASSEMBLY INFORMATION CHART

FROM				DESCRIPTION			TO		
REMARKS	COND IDENT	STA NO.	DES	COLOR	AWG	FIND NO.	STA NO.	DES	REMARKS
△1	A180	77	P4-205	YEL	26	2	97	P1-32	GROUP 7 SEE DETAIL F
△1		81	-433	RED				-15	
	A181	78	-107	YEL				-83	
△1		80	-215	RED				-54	
	A182	77	-605	YEL				-29	
		81	-333	RED				-28	
	A183	77	-505	YEL				-48	
		75	-604	RED				-74	
	A184	77	-405	YEL				-82	
		79	-609	RED				-53	
	A185	77	-305	YEL		2		-52	
		79	-209	RED				-51	
	A186	78	-307	YEL		1		-14	
△1	A187	78	-407	YEL		1		-27	
	A188	76	P4-105	YEL	26	1	97	P1-31	
			E13	SHLD				E14	
	A189	△3	E14	BLK	22	3	97	P1-73	
	A190	△3	E14	BLK	22	3	97	P1-50	
									GROUP 7 SEE DETAIL F
TWIST TOGETHER	A191	82	P5-17	YEL	22	5	95	P6-62	GROUP 8 SEE DETAIL G
	A192		-18					-63	
	A193		-19					-61	
	A194		-7					-38	
	A195		-5					-91	
	A196		-15					-90	
	A197		-9					-64	
	A198		-10	YEL		5		-65	
	A199		-11	BLK		3		-39	
	A200		-2					-40	
	A201		-13					-66	
TWIST TOGETHER	A202	82	P5-14	BLK	22	3	95	P6-41	
			E16	SHLD				E15	
	A203	83	P5-SHELL	SHLD		25	△3	E16	
									GROUP 8 SEE DETAIL G
	A204	96	P2-83	YEL	26	8	85	P3-66	PART OF GROUP 9 SEE DETAIL H
		96	P2-82	RED	26		△3	E25	
			E19	SHLD				E26	
	A205	△3	E25	RED/ORN	26	4	86	P3-31	
	A206	96	P2-54	BLK	22	3	△3	E19	
	A207	△3	E26	BLK	22	3	△3	E27	
	A208	△3	E26	BLK	22	3	85	P3-67	
	A209	96	P2-75	RED	26	8	△3	E25	
		96	P2-74	YEL	26		85	P3-32	
			E20	SHLD				E27	
	A210	96	P2-48	BLK	22	3	△3	E20	
	A211	96	P2-49	YEL	26	8	85	P3-33	
		96	P2-76	RED	26		△3	E28	
			E21	SHLD				E29	
	A212	△3	E28	RED/ORN	26	4	84	P3-69	
	A213	96	P2-77	BLK	22	3	△3	E21	
	A214	△3	E29	BLK	22	3	△3	E30	
	A215	△3	E29	BLK	22	3	85	P3-34	
	A216	96	P2-81	RED	26	8	△3	E28	
		96	P2-53	YEL	26		85	P3-68	
			E22	SHLD				E30	
	A217	96	P2-80	BLK	22	3	△3	E22	
	A218	96	P2-78	YEL	26	8	84	P3-36	
		96	P2-79	RED	26		84	P3-35	
			E23	SHLD				E31	
	A219	96	P2-51	BLK	22	3	△3	E23	
	A220	△3	E31	BLK	22	3	84	P3-70	
	A221	96	P2-64	YEL	24	10	86	P3-29	
	A222		P2-35	RED		7		P3-197	
			-36	GRN				-198	
			-18	YEL				-163	
	A223		-58	YEL		7		-97	
			-87	RED				-98	
			-88	GRN				-130	
	A224		-7	YEL		7	86	-99	
			-2	RED			85	-100	
			-8	GRN			85	-132	
	A225		-72	YEL		9	84	-243	
			-73	RED			84	-242	
	A226		-12	YEL		9	85	-166	
			-26	RED			85	-167	
	A227		-4	YEL		9	86	-199	
			-13	RED			85	-200	
	A228		-15	YEL		9	85	-168	
			-14	RED			84	-169	
	A229		-16	YEL		9	85	-201	
			-32	RED			85	-202	
	A230		-33	YEL		9	84	-170	
			-56	RED				-171	PART OF GROUP 9 SEE DETAIL H
	A231		-85	YEL		9		-203	
		96	P2-84	RED	24		84	P3-204	

△1 DENOTES TWO CONNECTIONS TO ONE PIN
△2 DENOTES JUMPER
△3 DENOTES INTERNAL CONNECTION

ASSEMBLY INFORMATION CHART

FROM				DESCRIPTION			TO		
REMARKS	COND IDENT	STA NO.	DES	COLOR	AWG	FIND NO.	STA NO.	DES	REMARKS
	A232	96	P2-65	YEL	24	7	85	P3-101	PART OF GROUP 9 SEE DETAIL H
			-41	RED			85	-134	
			-40	GRN			85	-102	
	A233		-39	YEL		6	87	-62	
			-63	RED			87	-28	
			-38	GRN			86	-63	
			-62	BRN			87	-96	
	A234		-67	YEL		7	84	-103	
			-68	RED			84	-104	
			-42	GRN			84	-136	
	A235		-89	YEL		7	86	-131	
			-60	RED			86	-164	
		96	P2-90	GRN	24		86	P3-165	
			E24	SHLD				E32	
									PART OF GROUP 9 SEE DETAIL H
△1 △2	A236		P4-328	YEL	26	1		P4-627	
△1 △2	A237		P4-128		26	1		-527	
△1 △2	A238		P4-426		26	1		-427	
△2	A239		R1,C1		24	10		-629	
△2	A240		R2,C2		24	10		-431	
△2	A241		R3,C3	YEL	24	10		P4-529	

MASTER

QTY REQD	PART OR IDENTIFYING NO.	NOMENCLATURE OR DESCRIPTION	FIND NO.

LIST OF MATERIALS

NEXT ASSY	USED ON
APPLICATION	

UNLESS OTHERWISE SPECIFIED
DIMENSIONS ARE IN INCHES
TOLERANCES ON
FRACTIONS DECIMALS ANGLES
± ± ±
DO NOT SCALE THIS DRAWING
MATERIAL
HEAT TREATMENT
FINAL FINISH

M I T
INSTRUMENTATION LAB
CAMBRIDGE, MASS
DWG BY CONTRACT
DRAWN Ray Cwrdo DATE 22 Nov 65
CHECKED Chaysmal 7 DEC 65
APPROVAL
APPROVAL 22 Dec 65
NASA APPROVAL A. C. METZGER
APPROVAL
R.E. APPROVAL

MANNED SPACECRAFT CENTER
HOUSTON, TEXAS

WIRING HARNESS
AGC TO PSA & G/N TO SPACECRAFT

CODE IDENT NO.	SIZE	NASA DRAWING NO.
80230	J	1004866
SCALE NONE	WT	SHEET 4 OF 5

1004866 A

1004866 | A

SYM	DESCRIPTION	DATE	APPROVAL
—	REVISED PER TDRR 25153		
A	REVISED PER TDRR 26557 DR CHK J.J APPD		

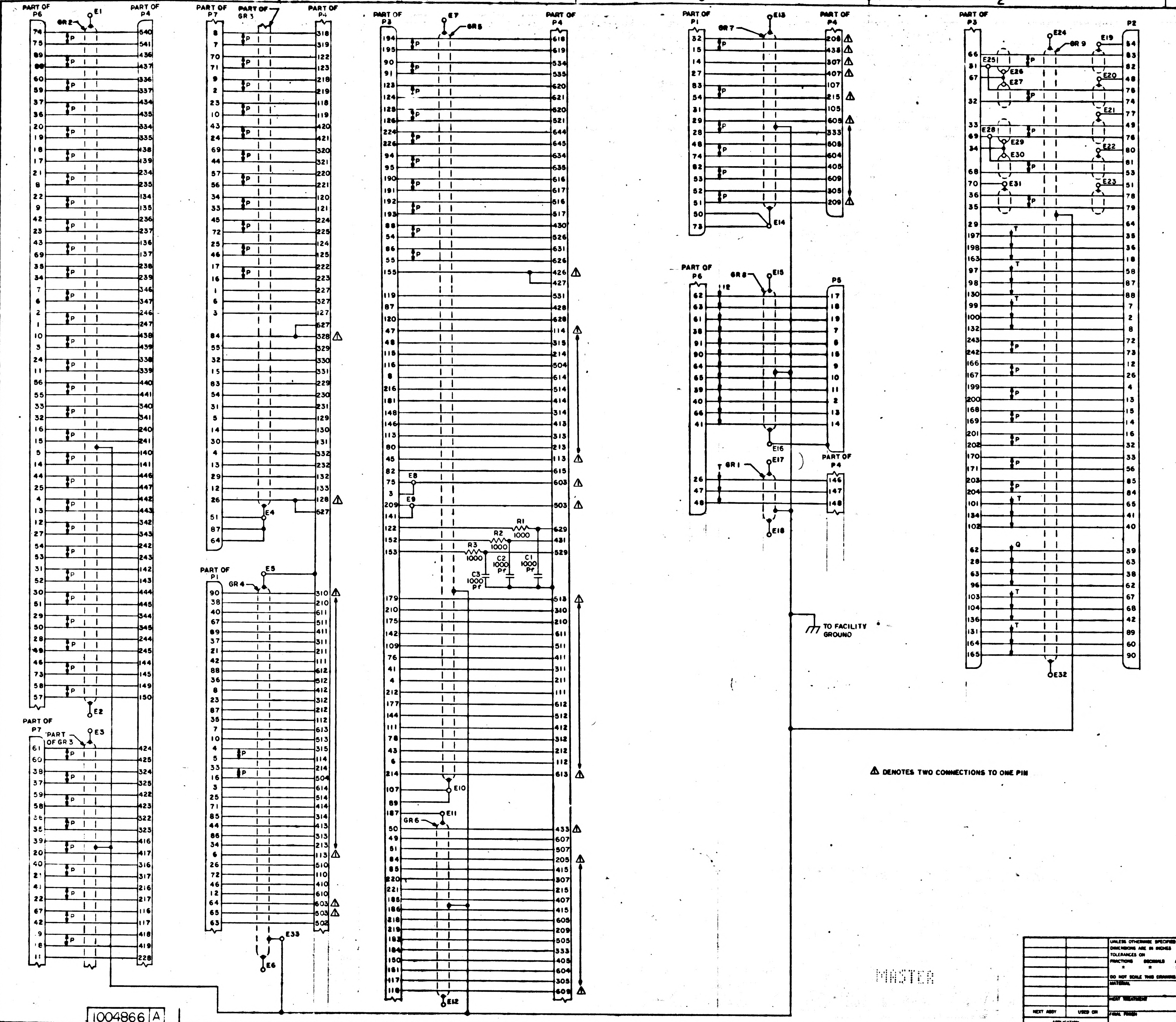

PART OF P6
PART OF P4
GR 2
E1
E2
PART OF P7
PART OF GR 3
E3
PART OF P7
PART OF GR 3
E4
PART OF P1
GR 4
E5
E6
E33
PART OF P3
E7
GR 5
E8
E9
R1 1000
R2 1000
R3 1000
C1 1000 PF
C2 1000 PF
C3 1000 PF
E10
GR 6
E11
E12
PART OF P1
GR 7
E13
E14
PART OF P6
GR 8
E15
E16
P5
GR 1
E17
E18
TO FACILITY GROUND
PART OF P3
P2
E24
GR 9
E19
E20
E21
E22
E23
E25
E26
E27
E28
E29
E30
E31
E32
P
T
Q

⚠ DENOTES TWO CONNECTIONS TO ONE PIN

MASTER

1004866 | A

QTY REQD	PART OR IDENTIFYING NO.	NOMENCLATURE OR DESCRIPTION	FIND NO

LIST OF MATERIALS

NEXT ASSY	USED ON
APPLICATION	

UNLESS OTHERWISE SPECIFIED
DIMENSIONS ARE IN INCHES
TOLERANCES ON
FRACTIONS ± DECIMALS ± ANGLES ±
DO NOT SCALE THIS DRAWING
MATERIAL
HEAT TREATMENT
FINAL FINISH

MIT
INSTRUMENTATION LAB
CAMBRIDGE MASS

DRAWN DATE
CHECKED
APPROVAL
APPROVAL
NASA APPROVAL A. C. METZGER
MIT APPROVAL
MIT APPROVAL

MANNED SPACECRAFT CENTER
HOUSTON, TEXAS

WIRING HARNESS
AGC TO PSA & G/N TO SPACECRAFT

CODE IDENT NO. 80230 | SIZE J | NASA DRAWING NO. 1004866
SCALE NONE | WT | SHEET 5 OF 5

1004866	—

REVISIONS			
SYM	DESCRIPTION	DATE	APPROVAL
—	RELEASED PER TDRR 2575		

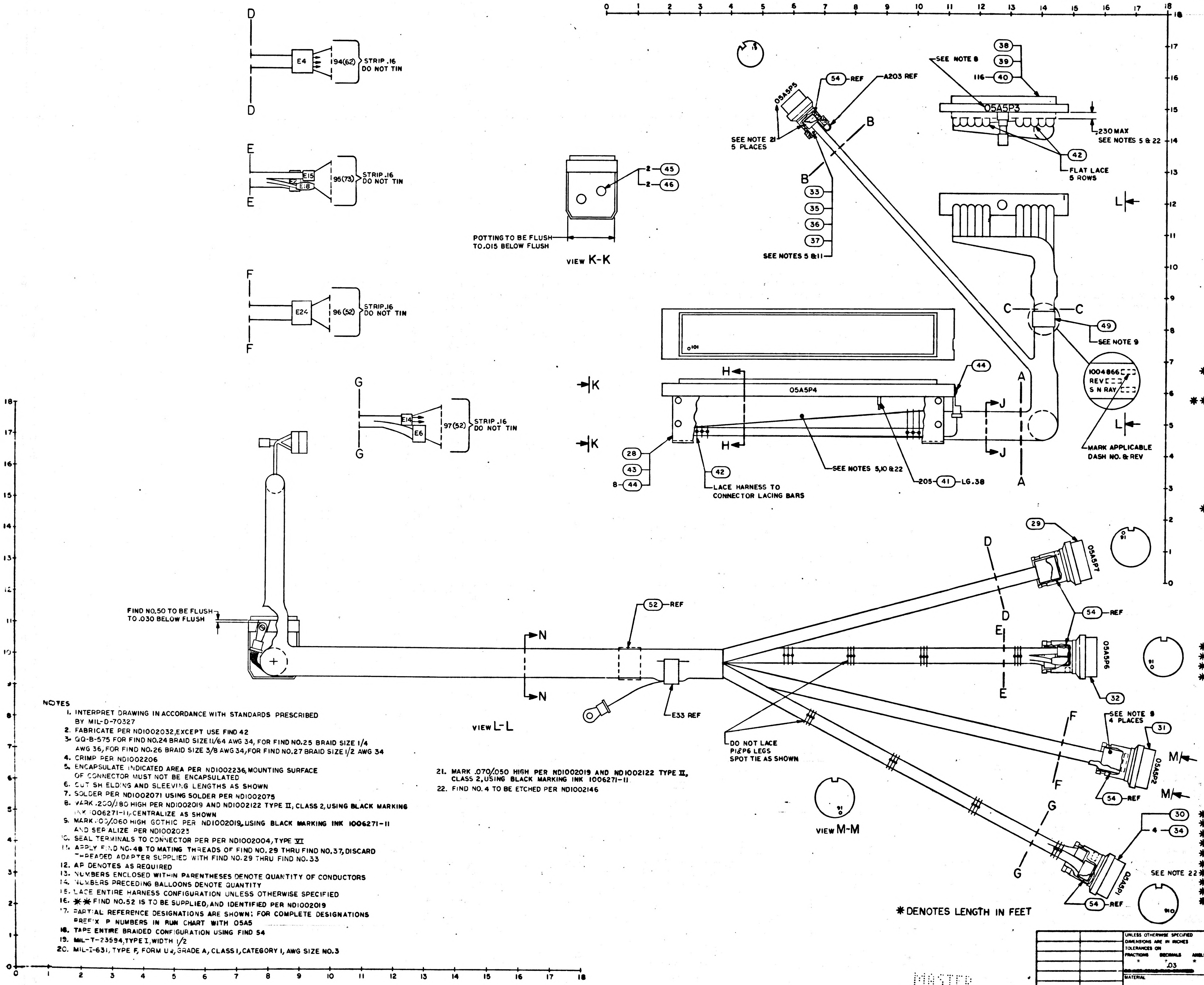

D
D
E4
94(62)
STRIP .16
DO NOT TIN
E
E
E15
E16
95(73)
STRIP .16
DO NOT TIN
F
F
E24
96(52)
STRIP .16
DO NOT TIN
G
G
E14
E6
97(52)
STRIP .16
DO NOT TIN
2
45
2
46
POTTING TO BE FLUSH
TO .015 BELOW FLUSH
VIEW K-K
05A5P5
54
REF
A203 REF
B
B
SEE NOTE 21
5 PLACES
33
35
36
37
SEE NOTES 5 & 11
SEE NOTE 8
38
39
116
40
05A5P3
.230 MAX
SEE NOTES 5 & 22
42
FLAT LACE
5 ROWS
L
L
C
C
49
SEE NOTE 9
1004866
REV
S N RAY
MARK APPLICABLE
DASH NO. & REV
A
A
J
J
44
05A5P4
H
H
K
K
28
43
8
44
42
LACE HARNESS TO
CONNECTOR LACING BARS
SEE NOTES 5,10 & 22
205
41
LG.38
FIND NO.50 TO BE FLUSH
TO .030 BELOW FLUSH
N
N
52
REF
E33 REF
VIEW L-L
DO NOT LACE
P1 & P6 LEGS
SPOT TIE AS SHOWN
29
05A5P7
D
D
54
REF
E
E
05A5P6
32
SEE NOTE 8
4 PLACES
31
F
F
05A5P2
M
M
54
REF
G
G
30
4
34
05A5P1
54
REF
SEE NOTE 22
VIEW M-M
910

NOTES

1. INTERPRET DRAWING IN ACCORDANCE WITH STANDARDS PRESCRIBED BY MIL-D-70327
2. FABRICATE PER ND1002032, EXCEPT USE FIND 42
3. QQ-B-575 FOR FIND NO.24 BRAID SIZE 11/64 AWG 34, FOR FIND NO.25 BRAID SIZE 1/4 AWG 36, FOR FIND NO.26 BRAID SIZE 3/8 AWG 34, FOR FIND NO.27 BRAID SIZE 1/2 AWG 34
4. CRIMP PER ND1002206
5. ENCAPSULATE INDICATED AREA PER ND1002236, MOUNTING SURFACE OF CONNECTOR MUST NOT BE ENCAPSULATED
6. CUT SHIELDING AND SLEEVING LENGTHS AS SHOWN
7. SOLDER PER ND1002071 USING SOLDER PER ND1002075
8. MARK .200/.180 HIGH PER ND1002019 AND ND1002122 TYPE II, CLASS 2, USING BLACK MARKING INK 1006271-11, CENTRALIZE AS SHOWN
9. MARK .080/.060 HIGH GOTHIC PER ND1002019, USING BLACK MARKING INK 1006271-11 AND SERIALIZE PER ND1002023
10. SEAL TERMINALS TO CONNECTOR PER PER ND1002004, TYPE VI
11. APPLY FIND NO. 48 TO MATING THREADS OF FIND NO. 29 THRU FIND NO. 37, DISCARD THREADED ADAPTER SUPPLIED WITH FIND NO. 29 THRU FIND NO. 33
12. AR DENOTES AS REQUIRED
13. NUMBERS ENCLOSED WITHIN PARENTHESES DENOTE QUANTITY OF CONDUCTORS
14. NUMBERS PRECEDING BALLOONS DENOTE QUANTITY
15. LACE ENTIRE HARNESS CONFIGURATION UNLESS OTHERWISE SPECIFIED
16. ✱✱ FIND NO.52 IS TO BE SUPPLIED, AND IDENTIFIED PER ND1002019
17. PARTIAL REFERENCE DESIGNATIONS ARE SHOWN: FOR COMPLETE DESIGNATIONS PREFIX P NUMBERS IN RUN CHART WITH 05A5
18. TAPE ENTIRE BRAIDED CONFIGURATION USING FIND 54
19. MIL-T-23594, TYPE I, WIDTH 1/2
20. MIL-I-631, TYPE F, FORM U2, GRADE A, CLASS I, CATEGORY I, AWG SIZE NO.3
21. MARK .070/.050 HIGH PER ND1002019 AND ND1002122 TYPE II, CLASS 2, USING BLACK MARKING INK 1006271-11
22. FIND NO. 4 TO BE ETCHED PER ND1002146

	QTY REQD	PART OR IDENTIFYING NO.	NOMENCLATURE OR DESCRIPTION	FIND NO
✱	0.2	SEE NOTE 20	INSULATION, ELEC	55
	AR	SEE NOTE 19	TAPE, PRESSURE SENSITIVE	54
	3	1000242-36	FERRULE, ELEC	53
✱✱	1	1010400-5	CLAMP, CABLE	52
	1	MS25036-12	TERMINAL, LUG	51
	1	MS25036-11	TERMINAL, LUG	50
	1	MS18035-1-2	STRAP, CABLE	49
	AR	MIL-S-22473 GRADE C	SEALING COMPOUND	48
	1	1003562-011	TERMINAL BLOCK ASSY	47
	2	MS35333-70	WASHER, LOCK	46
	2	1006783-19	SCREW, BUTTON HD	45
	9	1006783-18	SCREW, BUTTON HD	44
	1	1004868	COVER	43
	AR	1012507-003	TAPE, LACING	42
✱	7.7	1006322-007	INSULATION SLEEVING	41
	244	1010738-5	CONTACT, ELEC, PIN	40
	1	1010812-1	SEAL RUBBER	39
	1	1010815-144	CONNECTOR, PLUG	38
	1	MS16995-2	SCREW, CAP	37
	1	1004781-002	CLAMP, CONNECTOR	36
	1	1004782-002	ADAPTER, CONNECTOR	35
	4	1004782-001	ADAPTER, CONNECTOR	34
	1	1010771-013	CONNECTOR, PLUG	33
	1	1010771-104	CONNECTOR, PLUG	32
	1	1010771-103	CONNECTOR, PLUG	31
	1	1010771-102	CONNECTOR, PLUG	30
	1	1010771-101	CONNECTOR, PLUG	29
	1	1003731-011	CONNECTOR ASSY	28
✱	0.8	SEE NOTE 3	WIRE, BRAID	27
✱	10.7	SEE NOTE 3	WIRE, BRAID	26
✱	7.8	SEE NOTE 3	WIRE, BRAID	25
✱	2.6	SEE NOTE 3	WIRE, BRAID	24
	2	1010402-3	SLEEVE, SOLDER	23
	14	1010402-2	SLEEVE, SOLDER	22
	1	1006384-001	FERRULE, ELEC	21
	1	1000242-29	FERRULE, ELEC	20
	5	1000242-27	FERRULE, ELEC	19
	1	1000242-32	FERRULE, ELEC	18
	6	1000242-33	FERRULE, ELEC	17
	1	1000242-30	FERRULE, ELEC	16
	2	1000243-40	FERRULE, ELEC	15
	5	1000243-28	FERRULE, ELEC	14
	6	1000243-37	FERRULE, ELEC	13
	2	1000243-34	FERRULE, ELEC	12
	1	1000243-31	FERRULE, ELEC	11
✱	10.0	1010789-001	WIRE, ELEC, AWG 24 (YEL)	10
✱	25.0	1010789-003	WIRE, ELEC, AWG 24 (2 COND TWIST)	9
✱	17.0	1010789-015	WIRE, ELEC, AWG 26 (2 COND SHLD)	8
✱	25.0	1010789-004	WIRE, ELEC, AWG 24 (3 COND TWIST)	7
✱	4.0	1010789-005	WIRE, ELEC, AWG 24 (4 COND TWIST)	6
✱	25.0	1010789-006	WIRE, ELEC, AWG 22 (YEL)	5
✱	16.0	1010416-140	WIRE, ELEC, AWG 26 (RED/ORN TCR)	4
✱	16.0	1010789-007	WIRE, ELEC, AWG 22 (BLK)	3
✱	215	1010789-017	WIRE, ELEC, AWG 26 (2 COND TWIST)	2
✱	260	1010789-016	WIRE, ELEC, AWG 26 (YEL)	1
	-011	LIST OF MATERIALS		

✱ DENOTES LENGTH IN FEET

NEXT ASSY	USED ON
APPLICATION	

UNLESS OTHERWISE SPECIFIED
DIMENSIONS ARE IN INCHES
TOLERANCES ON
FRACTIONS ± DECIMALS ± .03 ANGLES ±
MATERIAL
HEAT TREATMENT
FINAL FINISH

MIT
INSTRUMENTATION LAB
Cambridge Mass
DWG NO
CONTRACT
DRAWN A.J. Biz... DATE 24 NOV 66
CHECKED C Naquant 7 DEC 66
APPROVAL
APPROVAL 27 Dec 66
NASA APPROVAL A. C. METZGER
MIT APPROVAL
MIT APPROVAL W Kupfer

MANNED SPACECRAFT CENTER
HOUSTON, TEXAS

WIRING HARNESS
AGC TO PSA & G/N TO SPACECRAFT

CODE IDENT NO	SIZE	NASA DRAWING NO.
80230	J	1004866
SCALE 1/1	WT	SHEET 1 OF 5

MASTER

1004866	—

1004866	—

2H

F-2

REVISIONS			
SYM	DESCRIPTION	DATE	APPROVAL
—	RELEASED PER TDRR 2[illegible]		

1004866 —

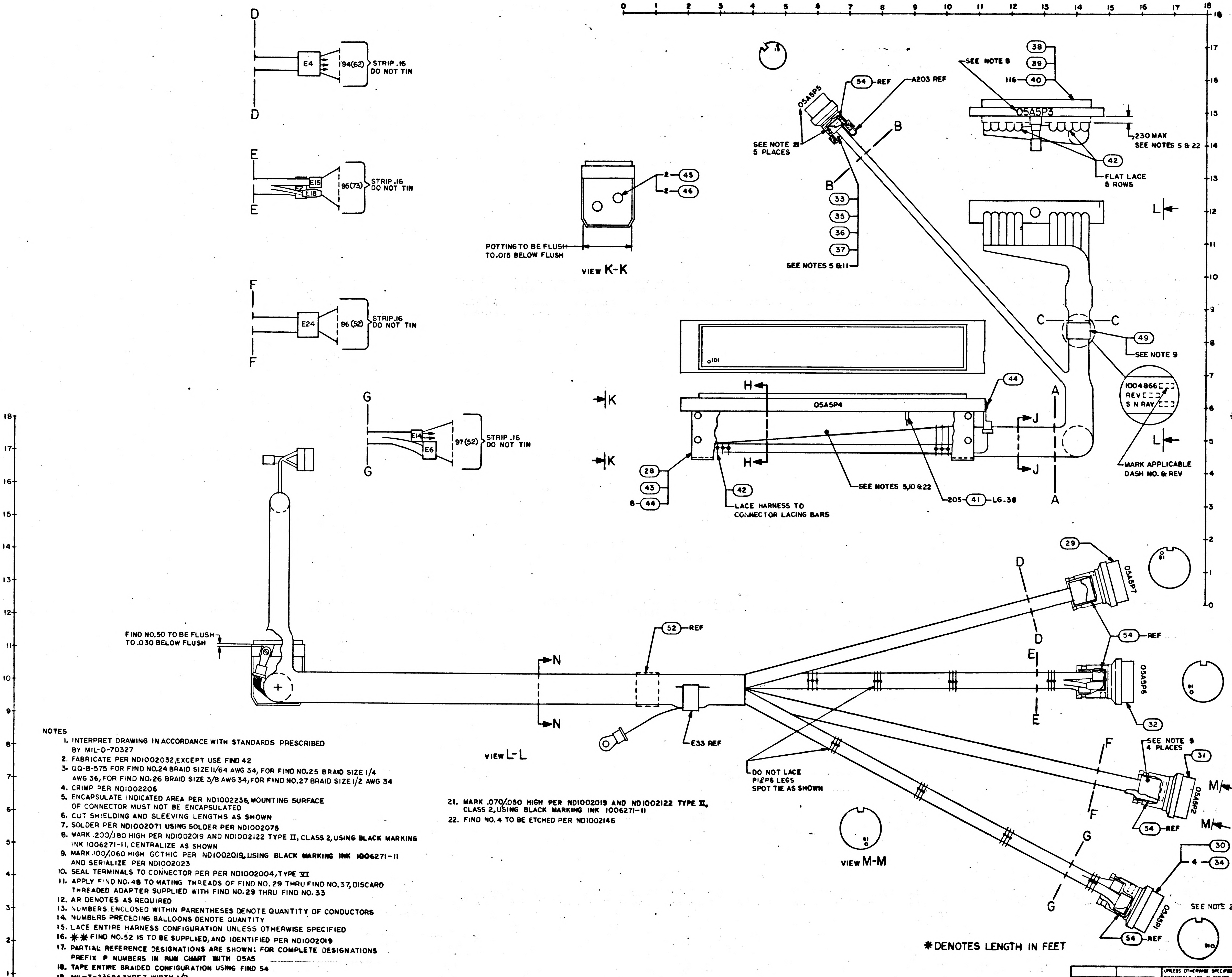
D
E4
94(62)
STRIP .16
DO NOT TIN
E
E15
E2
E18
95(73)
STRIP .16
DO NOT TIN
F
E24
96(52)
STRIP .16
DO NOT TIN
G
E14
E6
97(52)
STRIP .16
DO NOT TIN
2-45
2-46
POTTING TO BE FLUSH TO .015 BELOW FLUSH
VIEW K-K
K
05A5P5
54 REF
A203 REF
SEE NOTE 21 5 PLACES
B
33
35
36
37
SEE NOTES 5 & 11
SEE NOTE 8
38
39
116-40
05A5P3
.230 MAX
SEE NOTES 5 & 22
42
FLAT LACE 5 ROWS
L
C
49
SEE NOTE 9
1004866
REV
S N RAY
MARK APPLICABLE DASH NO. & REV
H
05A5P4
44
J
A
28
43
8-44
42
LACE HARNESS TO CONNECTOR LACING BARS
SEE NOTES 5,10 & 22
205-41-LG.38
FIND NO.50 TO BE FLUSH TO .030 BELOW FLUSH
N
52 REF
E33 REF
VIEW L-L
DO NOT LACE P1&P6 LEGS SPOT TIE AS SHOWN
29
05A5P7
54 REF
05A5P6
32
SEE NOTE 9 4 PLACES
31
M
05A5P2
54 REF
VIEW M-M
30
4-34
05A5P1
SEE NOTE 22
54 REF
0 1 2 3 4 5 6 7 8 9 10 11 12 13 14 15 16 17 18

NOTES

1. INTERPRET DRAWING IN ACCORDANCE WITH STANDARDS PRESCRIBED BY MIL-D-70327
2. FABRICATE PER ND1002032, EXCEPT USE FIND 42
3. QQ-B-575 FOR FIND NO.24 BRAID SIZE 11/64 AWG 34, FOR FIND NO.25 BRAID SIZE 1/4 AWG 36, FOR FIND NO.26 BRAID SIZE 3/8 AWG 34, FOR FIND NO.27 BRAID SIZE 1/2 AWG 34
4. CRIMP PER ND1002206
5. ENCAPSULATE INDICATED AREA PER ND1002236, MOUNTING SURFACE OF CONNECTOR MUST NOT BE ENCAPSULATED
6. CUT SHIELDING AND SLEEVING LENGTHS AS SHOWN
7. SOLDER PER ND1002071 USING SOLDER PER ND1002075
8. MARK .200/.180 HIGH PER ND1002019 AND ND1002122 TYPE II, CLASS 2, USING BLACK MARKING INK 1006271-11, CENTRALIZE AS SHOWN
9. MARK .100/.060 HIGH GOTHIC PER ND1002019, USING BLACK MARKING INK 1006271-11 AND SERIALIZE PER ND1002023
10. SEAL TERMINALS TO CONNECTOR PER PER ND1002004, TYPE VI
11. APPLY FIND NO. 48 TO MATING THREADS OF FIND NO. 29 THRU FIND NO. 37, DISCARD THREADED ADAPTER SUPPLIED WITH FIND NO. 29 THRU FIND NO. 33
12. AR DENOTES AS REQUIRED
13. NUMBERS ENCLOSED WITHIN PARENTHESES DENOTE QUANTITY OF CONDUCTORS
14. NUMBERS PRECEDING BALLOONS DENOTE QUANTITY
15. LACE ENTIRE HARNESS CONFIGURATION UNLESS OTHERWISE SPECIFIED
16. ✱✱ FIND NO.52 IS TO BE SUPPLIED, AND IDENTIFIED PER ND1002019
17. PARTIAL REFERENCE DESIGNATIONS ARE SHOWN; FOR COMPLETE DESIGNATIONS PREFIX P NUMBERS IN RUN CHART WITH 05A5
18. TAPE ENTIRE BRAIDED CONFIGURATION USING FIND 54
19. MIL-T-23594, TYPE I, WIDTH 1/2
20. MIL-I-631, TYPE F, FORM U 2, GRADE A, CLASS I, CATEGORY I, AWG SIZE NO.3
21. MARK .070/.050 HIGH PER ND1002019 AND ND1002122 TYPE II, CLASS 2, USING BLACK MARKING INK 1006271-11
22. FIND NO. 4 TO BE ETCHED PER ND1002146

✱ DENOTES LENGTH IN FEET

	QTY REQD	PART OR IDENTIFYING NO.	NOMENCLATURE OR DESCRIPTION	FIND NO
✱	0.2	SEE NOTE 20	INSULATION, ELEC	55
	AR	SEE NOTE 19	TAPE, PRESSURE SENSITIVE	54
	3	1000242-36	FERRULE, ELEC	53
✱✱	1	1010400-5	CLAMP, CABLE	52
	1	MS25036-12	TERMINAL, LUG	51
	1	MS25036-11	TERMINAL, LUG	50
	1	MS18035-1-2	STRAP, CABLE	49
	AR	MIL-S-22473 GRADE C	SEALING COMPOUND	48
	1	1003562-011	TERMINAL BLOCK ASSY	47
	2	MS35333-70	WASHER, LOCK	46
	2	1006783-19	SCREW, BUTTON HD	45
	9	1006783-18	SCREW, BUTTON HD	44
	1	1004868	COVER	43
	AR	1012507-003	TAPE, LACING	42
✱	7.7	1006322-007	INSULATION SLEEVING	41
	244	1010738-5	CONTACT, ELEC, PIN	40
	1	1010812-1	SEAL RUBBER	39
	1	1010815-144	CONNECTOR, PLUG	38
	1	MS16995-2	SCREW, CAP	37
	1	1004781-002	CLAMP, CONNECTOR	36
	1	1004782-002	ADAPTER, CONNECTOR	35
	4	1004782-001	ADAPTER, CONNECTOR	34
	1	1010771-013	CONNECTOR, PLUG	33
	1	1010771-104	CONNECTOR, PLUG	32
	1	1010771-103	CONNECTOR, PLUG	31
	1	1010771-102	CONNECTOR, PLUG	30
	1	1010771-101	CONNECTOR, PLUG	29
	1	1003731-011	CONNECTOR ASSY	28
✱	0.8	SEE NOTE 3	WIRE, BRAID	27
✱	10.7	SEE NOTE 3	WIRE, BRAID	26
✱	7.8	SEE NOTE 3	WIRE, BRAID	25
✱	2.6	SEE NOTE 3	WIRE, BRAID	24
	2	1010402-3	SLEEVE, SOLDER	23
	14	1010402-2	SLEEVE, SOLDER	22
	1	1006384-001	FERRULE, ELEC	21
	1	1000242-29	FERRULE, ELEC	20
	5	1000242-27	FERRULE, ELEC	19
	1	1000242-32	FERRULE, ELEC	18
	6	1000242-33	FERRULE, ELEC	17
	1	1000242-30	FERRULE, ELEC	16
	2	1000243-40	FERRULE, ELEC	15
	5	1000243-28	FERRULE, ELEC	14
	6	1000243-37	FERRULE, ELEC	13
	2	1000243-34	FERRULE, ELEC	12
	1	1000243-31	FERRULE, ELEC	11
✱	10.0	1010789-001	WIRE ELEC, AWG 24 (YEL)	10
✱	25.0	1010789-003	WIRE, ELEC, AWG 24 (2 COND TWIST)	9
✱	17.0	1010789-015	WIRE, ELEC, AWG 26, 2 COND SHLD	8
✱	25.0	1010789-004	WIRE, ELEC, AWG 24 (3 COND TWIST	7
✱	4.0	1010789-005	WIRE, ELEC, AWG 24 (4 COND TWIST	6
✱	25.0	1010789-006	WIRE, ELEC, AWG 22 (YEL)	5
✱	16.0	10104 6 - 40	WIRE, ELEC, AWG 26 (RED ORN TCR	4
✱	16.0	1010789-007	WIRE, ELEC, AWG 22 (BLK)	3
✱	215	1010789-017	WIRE, ELEC, AWG 26 (2 COND TWIST)	2
✱	260	1010789-016	WIRE, ELEC, AWG 26 (YEL)	
	-011	LIST OF MATERIALS		

NEXT ASSY	USED ON
APPLICATION	

UNLESS OTHERWISE SPECIFIED
DIMENSIONS ARE IN INCHES
TOLERANCES ON
FRACTIONS ± DECIMALS ± .03 ANGLES ±
MATERIAL
HEAT TREATMENT
FINAL FINISH

MIT
INSTRUMENTATION LAB
Cambridge Mass
DRAWN A.J. Bizzaro DATE 24 NOV 66
CHECKED C Raymond 7 DEC 66
APPROVAL
APPROVAL Eldon C Hall 8 Dec 66
NASA APPROVAL A. C. METZGER
MIT APPROVAL
MIT APPROVAL W Kupfer

MANNED SPACECRAFT CENTER
HOUSTON, TEXAS

WIRING HARNESS
AGC TO PSA & G/N TO SPACECRAFT

CODE IDENT NO. 80230
SIZE J
NASA DRAWING NO. 1004866
SCALE 1/1
WT
SHEET
OF 3

1004866 —

MASTER

SYM	DESCRIPTION	DATE	APPROVAL
—	RELEASED PER TDRR 25153		

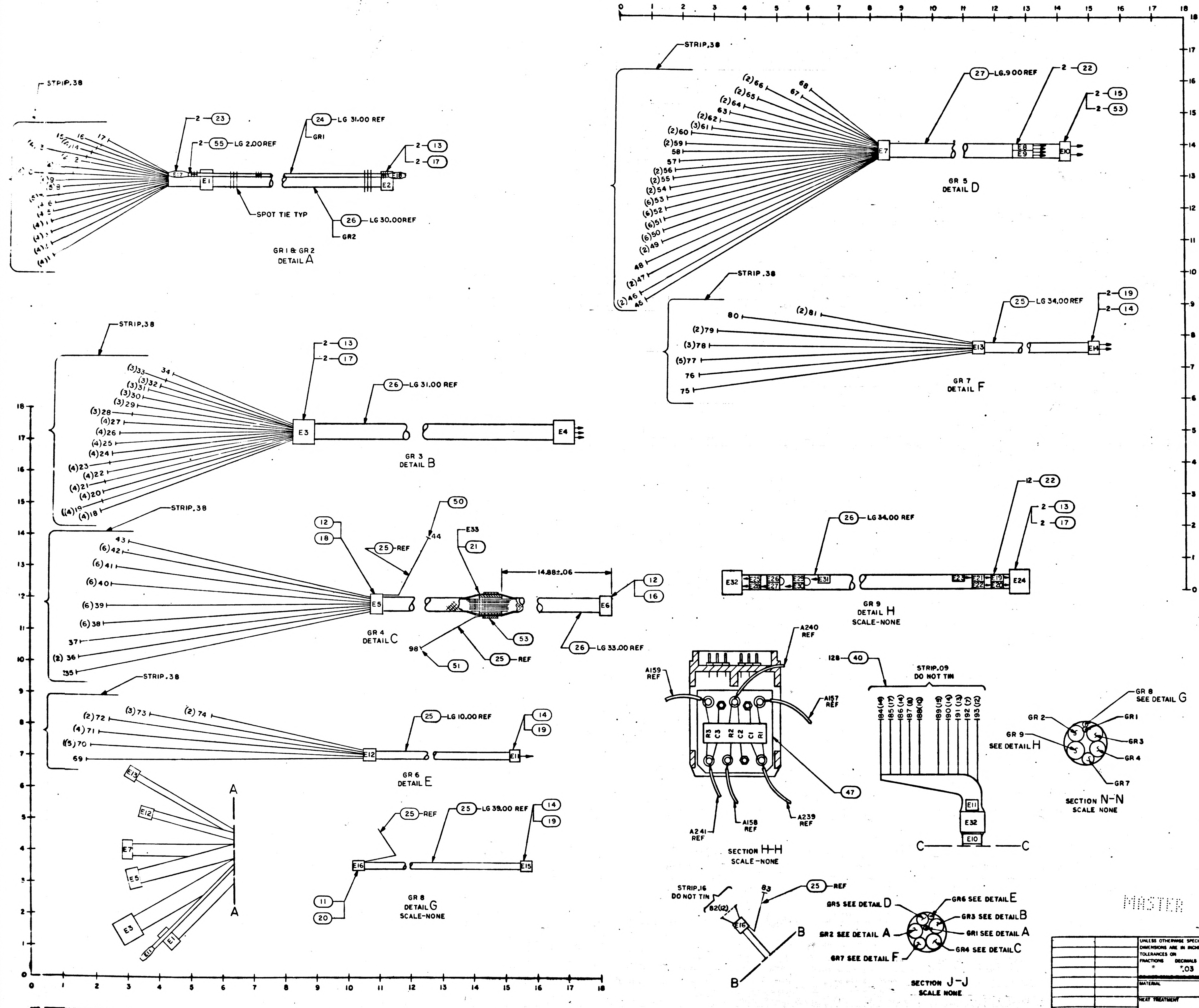

STRIP .38
GR1 & GR2
DETAIL A
2 — 23
2 — 55 — LG 2.00 REF
24 — LG 31.00 REF
GR1
2 — 13
2 — 17
E17
E1
E2
E18
SPOT TIE TYP
26 — LG 30.00 REF
GR2
GR 3
DETAIL B
26 — LG 31.00 REF
E3
E4
GR 4
DETAIL C
12
18
25 — REF
50
44
E33
21
14.88±.06
12
16
E5
E6
53
98
51
25 — REF
26 — LG 33.00 REF
GR 6
DETAIL E
25 — LG 10.00 REF
14
19
E12
E11
GR 8
DETAIL G
SCALE-NONE
25 — REF
25 — LG 39.00 REF
14
19
E16
E15
11
20
E13
E12
E7
E5
E3
E1
A
A
GR 5
DETAIL D
27 — LG.900 REF
2 — 22
2 — 15
2 — 53
E7
E8
E9
E10
GR 7
DETAIL F
25 — LG 34.00 REF
2 — 19
2 — 14
E13
E14
GR 9
DETAIL H
SCALE-NONE
26 — LG 34.00 REF
12 — 22
2 — 13
2 — 17
E32
E31
E24
SECTION H-H
SCALE-NONE
A240 REF
A159 REF
A157 REF
A241 REF
A158 REF
A239 REF
R3 C3 R2 C2 C1 R1
47
128 — 40
STRIP .09
DO NOT TIN
E11
E32
E10
C
C
SECTION N-N
SCALE NONE
GR 8 SEE DETAIL G
GR 2
GR 1
GR 9 SEE DETAIL H
GR 3
GR 4
GR 7
STRIP .16
DO NOT TIN
82(12)
83
25 — REF
E16
B
B
GR5 SEE DETAIL D
GR6 SEE DETAIL E
GR3 SEE DETAIL B
GR2 SEE DETAIL A
GR1 SEE DETAIL A
GR7 SEE DETAIL F
GR4 SEE DETAIL C
SECTION J-J
SCALE NONE

MASTER

QTY REQD	PART OR IDENTIFYING NO.	NOMENCLATURE OR DESCRIPTION	FIND NO.

LIST OF MATERIALS

NEXT ASSY	USED ON
APPLICATION	

UNLESS OTHERWISE SPECIFIED DIMENSIONS ARE IN INCHES
TOLERANCES ON
FRACTIONS ± DECIMALS ±.03 ANGLES ±
MATERIAL
HEAT TREATMENT
FINAL FINISH

MIT
INSTRUMENTATION LAB
CAMBRIDGE MASS

DRAWN A.J. Bise DATE 7DEC65
CHECKED Raymond 7DEC65
APPROVAL
APPROVAL
NASA APPROVAL A. C. METZGER
MIT APPROVAL
MIT APPROVAL

MANNED SPACECRAFT CENTER
HOUSTON, TEXAS

WIRING HARNESS
AGC TO PSA & G/N TO SPACECRAFT

CODE IDENT NO.	SIZE	NASA DRAWING NO.
80230	J	1004866

SCALE 1/1 WT SHEET 2 OF 3

1004866 —

2H

F-2

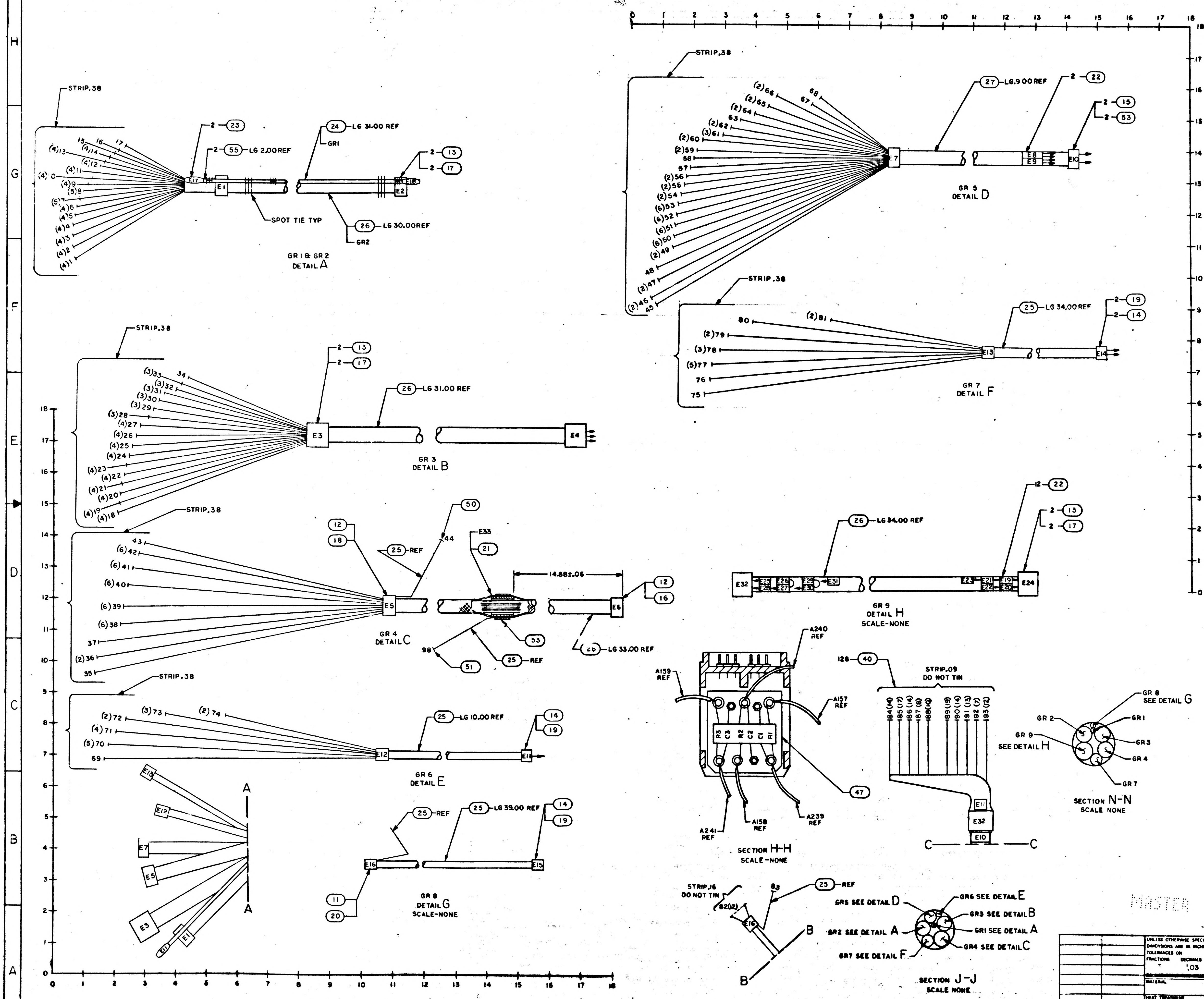

STRIP .38
2 — 23
2 — 55 — LG 2.00 REF
24 — LG 31.00 REF
GR1
2 — 13
2 — 17
E17
E1
E2
E18
SPOT TIE TYP
26 — LG 30.00 REF
GR2
GR1 & GR2
DETAIL A
27 — LG 9.00 REF
2 — 22
2 — 15
2 — 53
E7
E8
E9
E10
GR 5
DETAIL D
25 — LG 34.00 REF
2 — 19
2 — 14
E13
E14
GR 7
DETAIL F
26 — LG 31.00 REF
E3
E4
GR 3
DETAIL B
12 — 22
26 — LG 34.00 REF
E32
E31
E24
GR 9
DETAIL H
SCALE-NONE
12
18
50
25 — REF
44
E33
21
14.88±.06
E5
E6
12
16
GR 4
DETAIL C
53
98
51
25 — REF
26 — LG 33.00 REF
25 — LG 10.00 REF
14
19
E12
E11
GR 6
DETAIL E
A
A
E13
E12
E7
E5
E3
E1
E11
25 — REF
25 — LG 39.00 REF
E16
E15
11
20
GR 8
DETAIL G
SCALE-NONE
A240 REF
A159 REF
A157 REF
R3 C3 R2 C2 C1 R1
47
A241 REF
A158 REF
A239 REF
SECTION H-H
SCALE-NONE
128 — 40
STRIP .09
DO NOT TIN
184(14) 185(17) 186(14) 187(8) 188(10) 189(9) 190(14) 191(13) 192(7) 193(12)
E11
E32
E10
C
C
GR 8 SEE DETAIL G
GR 2
GR 1
GR 9 SEE DETAIL H
GR 3
GR 4
GR 7
SECTION N-N
SCALE NONE
STRIP .16
DO NOT TIN
82(2)
83
25 — REF
E16
B
B
GR5 SEE DETAIL D
GR6 SEE DETAIL E
GR3 SEE DETAIL B
GR2 SEE DETAIL A
GR1 SEE DETAIL A
GR7 SEE DETAIL F
GR4 SEE DETAIL C
SECTION J-J
SCALE NONE

1004866 —

SYM	DESCRIPTION	DATE
—	RELEASED PER TDRR 25153	

MASTER

QTY REQD	PART OR IDENTIFYING NO	NOMENCLATURE OR DESCRIPTION	FIND NO

LIST OF MATERIALS

UNLESS OTHERWISE SPECIFIED DIMENSIONS ARE IN INCHES
TOLERANCES ON
FRACTIONS ± DECIMALS ±.03 ANGLES ±
MATERIAL
HEAT TREATMENT
FINAL FINISH

NEXT ASSY | USED ON
APPLICATION

MIT
INSTRUMENTATION LAB
CAMBRIDGE MASS
DRAWN A.J. Biro DATE 7DEC65
CHECKED Kaymond 7DEC65
APPROVAL
APPROVAL Eldon C Hall 22 Dec 65
NASA APPROVAL L. C. METZGER
MIT APPROVAL
MIT APPROVAL

MANNED SPACECRAFT CENTER
HOUSTON, TEXAS

WIRING HARNESS
AGC TO PSA & G/N TO SPACECRAFT

CODE IDENT NO. 80230 | SIZE J | NASA DRAWING NO. 1004866
SCALE 1/1 | SHEET 2

1004866 —

REVISIONS			
SYM	DESCRIPTION	DATE	APPROVAL
—	RELEASED PER TDRR 25153		

ASSEMBLY INFORMATION CHART

	FROM			DESCRIPTION			TO		
REMARKS	COND IDENT	STA NO.	DES	COLOR	AWG	FIND NO.	STA NO.	DES	REMARKS
	A1	13	P4-146	YEL	24	7	95	P6-26	GROUP 1 SEE DETAIL A
		14	P4-147	RED	24		95	P6-47	
		15	P4-148	GRN	24		95	P6-48	
			E17	SHLD				E18	
	A2	7	P4-540	YEL	26	2	95	P6-74	GROUP 2 SEE DETAIL A
		6	↑ 541	RED	↑		↑	↑ 75	
	A3	3	436	YEL		↑		89	↑
		4	437	RED				88	
	A4	3	336	YEL				60	
		4	337	RED				59	
	A5	1	434	YEL				37	
		2	435	RED				36	
	A6	1	334	YEL				20	
		2	335	RED				19	
	A7	5	138	YEL				18	
		6	139	RED				17	
	A8	1	234	YEL				21	
		2	235	RED				8	
	A9	1	134	YEL				22	
		2	135	RED				9	
	A10	3	236	YEL				42	
		4	237	RED				23	
	A11	3	136	YEL				43	
		4	137	RED				69	
	A12	5	238	YEL				35	
		6	239	RED				34	
	A13	13	346	YEL				7	
		14	347	RED				6	
	A14	13	246	YEL				2	
		14	247	RED				1	
	A15	5	438	YEL				10	
		6	439	RED				3	
	A16	5	338	YEL				24	
		6	339	RED				11	
	A17	7	440	YEL				56	
		8	441	RED				55	
	A18	7	340	YEL				33	
		8	341	RED				32	
	A19	7	240	YEL				16	
		8	241	RED				15	
	A20	7	140	YEL				5	
		8	141	RED				14	
	A21	13	446	YEL				44	
		14	447	RED				25	
	A22	9	442	YEL				4	
		10	443	RED				13	
	A23	9	342	YEL				12	
		10	343	RED				27	
	A24	9	242	YEL				54	
		10	243	RED				53	
	A25	9	142	YEL				31	
		10	143	RED				52	
	A26	11	444	YEL				30	
		12	445	RED				51	
	A27	11	344	YEL				29	
		12	345	RED				50	
	A28	11	244	YEL				28	
		12	245	RED				49	
	A29	11	144	YEL				46	
		12	145	RED		↓		73	
	A30	16	↓ 149	YEL	↓	2	↓	↓ 58	↓
		17	P4-150	RED	26		95	P6-57	GROUP 2 SEE DETAIL A
			E1	SHLD				E2	
	A31	26	P4-424	YEL	26	2	94	P7-61	PART OF GROUP 3 SEE DETAIL B
		27	↑ 425	RED	↑		↑	↑ 60	
	A32	26	324	YEL		↑		38	↑
		27	325	RED				37	
	A33	24	422	YEL				59	
		25	423	RED				58	
	A34	24	322	YEL				36	
		25	323	RED				35	
	A35	18	416	YEL				39	
		19	417	RED				20	
	A36	18	316	YEL				40	
		19	317	RED				21	
	A37	18	216	YEL				41	
		19	217	RED		↓		22	↓
	A38	18	↓ 116	YEL	↓	2	↓	↓ 67	PART OF GROUP 3 SEE DETAIL B
		19	P4-117	RED	26		94	P7-42	

△1 DENOTES TWO CONNECTIONS TO ONE PIN

△3 DENOTES INTERNAL CONNECTION

ASSEMBLY INFORMATION CHART

	FROM			DESCRIPTION			TO		
REMARKS	COND IDENT	STA NO.	DES	COLOR	AWG	FIND NO.	STA NO.	DES	REMARKS
	A39	20	P4-418	YEL	26	2	94	P7-19	PART OF GROUP 3 SEE DETAIL B
		21	↑ 419	RED	↑		↑	↑ 18	
	A40	20	318	YEL		↑		8	↑
		21	319	RED				7	
	A41	24	122	YEL				70	
		25	123	RED				71	
	A42	20	218	YEL				9	
		21	219	RED				2	
	A43	20	118	YEL				23	
		21	119	RED				10	
	A44	22	420	YEL				43	
		23	421	RED				24	
	A45	22	320	YEL				69	
		23	321	RED				44	
	A46	22	220	YEL				57	
		23	221	RED				56	
	A47	22	120	YEL				34	
		23	121	RED				33	
	A48	26	224	YEL				45	
		27	225	RED				72	
	A49	26	124	YEL				25	
		27	125	RED		↓		46	
	A50	24	222	YEL		2		17	
		25	223	RED				16	
	A51	29	228	YEL		1		11	
	A52	28	227	↑		↑		1	
	A53	28	327					6	
	A54	28	127					3	
△1	A55	29	328					84	
	A56	30	329					55	
	A57	31	330					32	
	A58	32	331					15	
	A59	30	229					83	
	A60	31	230					54	
	A61	32	231					31	
	A62	30	129					5	
	A63	31	130					14	
	A64	32	131					30	
	A65	33	332					4	
	A66	33	232					13	
	A67	33	132					29	
	A68	34	↓ 133	↓	↓	↓	↓	↓ 12	
△1	A69	29	P4-128	YEL	26	1	94	P7-26	↓
			E3	SHLD				E4	
	A70	△3	E4	BLK	22	3	94	P7-51	PART OF GROUP 3 SEE DETAIL B
	A71	△3	E4	BLK	22	3	94	P7-87	
	A72	△3	E4	BLK	22	3	94	P7-64	
△1	A73	38	P4-310	YEL	26	1	97	P1-90	GROUP 4 SEE DETAIL C
↑	A74	38	↑ 210	↑	↑	↑	↑	↑ 38	↑
	A75	39	611					40	
	A76	↑	511					67	
	A77		411					89	
	A78		311					37	
	A79	↓	211					21	
	A80	39	111					42	
	A81	40	612					88	
	A82	↑	512					36	
	A83		412					8	
	A84		312					23	
	A85	↓	212					87	
	A86	40	112					35	
	A87	41	613					7	
	A88	41	513					10	
	A89	42	614					3	
	A90	↑	514					25	
	A91	↓	414					71	
	A92	42	314					85	
	A93	41	413					44	
	A94	↑	313					86	
	A95	↓	213					34	
	A96	41	113					6	
↓	A97	36	603					64	
△1	A98	36	503					65	
	A99	38	410					46	
	A100	↑	610					12	
	A101	↓	510					26	
	A102	38	110	↓		↓		72	
	A103	35	502	YEL		1		63	
△1	A104	42	114	YEL		2		5	
↑		43	315	RED				4	
↓	A105	42	↓ 214	YEL	↓	2	↓	↓ 33	
△1		37	P4-504	RED	26		97	P1-16	↓
			E5	SHLD				E6	
	A106	44	~~P4-SHELL~~	SHLD		25	△3	E5	GROUP 4 SEE DETAIL C
	A107	△3	E33	SHLD		25	98	GRD	

ASSEMBLY INFORMATION CHART

	FROM			DESCRIPTION			TO		
REMARKS	COND IDENT	STA NO.	DES	COLOR	AWG	FIND NO.	STA NO.	DES	REMARKS
	A108	57	P4-618	YEL	26	2	87	P3-194	GROUP 5 SEE DETAIL D
		58	↑ 619	RED	↑		87	↑ 195	
	A109	65	534	YEL		↑	88	90	↑
		66	535	RED			↑	91	
	A110	59	620	YEL				123	
		60	621	RED			↓	124	
	A111	59	520	YEL			88	125	
		60	521	RED			87	126	
	A112	67	644	YEL			89	224	
		68	645	RED			88	226	
	A113	65	634	YEL			87	94	
		66	635	RED			87	95	
	A114	55	616	YEL			88	190	
		56	617	RED			↑	191	
	A115	55	516	YEL			↓	192	
		56	517	RED			88	193	
	A116	63	430	YEL			89	88	
		61	526	RED		↓	↑	54	
	A117	64	631	YEL		2		86	
		61	626	RED				55	
△1	A118	61	426	YEL		1		155	
	A119	64	531	↑		↑		119	
	A120	62	428				↓	87	
	A121	62	628				89	120	
△1	A122	53	114				91	47	
↑	A123	54	315				90	48	
	A124	53	214				91	115	
	A125	48	504				90	116	
	A126	53	614				91	8	
	A127	↑	514				↑	216	
	A128	↓	414					181	
	A129	53	314					148	
	A130	52	413					146	
	A131	↑	313					113	
	A132	↓	213				↓	↓ 80	
	A133	52	113				91	P3-45	
↓	A134	47	↓ 603					E8	
△1	A135	47	P4-503					E9	
	A136	△3	E8				93	P3-75	
	A137		E8				↑	↑ 3	
	A138		E9				↓	209	
	A139	△3	E9				93	141	
△1	A140	52	P4-513				91	179	
↑	A141	49	↑ 310				93	210	
	A142	49	210				↑	175	
	A143	50	611					142	
	A144	↑	511					109	
	A145		411					76	
	A146		311				↓	41	
	A147	↓	211				93	4	
	A148	50	111				92	212	
	A149	51	612				↑	177	
	A150	↑	512					144	
	A151		412					111	
	A152		312					78	
	A153	↓	212				↓	43	
↓	A154	51	112				92	6	
△1	A155	52	↓ 613		↓	↓	91	214	
	A156	54	P4-615		26	1	91	82	
	A157	46	R1		24	10	89	122	
	A158	46	R2	↓	24	10	89	↓ 152	
	A159	45	R3	YEL	24	10	89	P3-153	↓
			E7	SHLD				E10	
	A160	△3	E10	BLK	22	3	93	P3-107	GROUP 5 SEE DETAIL D
	A161	△3	E10	BLK	22	3	89	P3-89	
	A162	71	P4-607	YEL	26	1	90	P3-49	GROUP 6 SEE DETAIL E
	A163	71	↑ 507	↑	↑	↑	89	↑ 51	↑
△1	A164	70	305				90	117	
↑	A165	70	205				90	84	
	A166	71	307				89	220	
	A167	70	605				90	218	
	A168	70	505	↓		↓	↑	183	
	A169	70	405	YEL		1		150	
	A170	69	604	RED/ORN		4		151	
	A171	72	609	↑		↑	↓	118	
	A172	73	415				90	85	
	A173	73	215				89	221	
	A174	71	407				89	185	
	A175	73	415				89	186	
	A176	72	209				90	219	
↓	A177	74	↓ 333	↓	↓	↓	90	↓ 184	
△1	A178	74	P4-433	RED/ORN	26	4	90	P3-50	↓
			E12	SHLD				E11	GROUP 6 SEE DETAIL E
	A179	△3	E11	BLK	22	3	89	P3-187	

2H

QTY REQD	PART OR IDENTIFYING NO.	NOMENCLATURE OR DESCRIPTION	FIND NO.

LIST OF MATERIALS

NEXT ASSY	USED ON

APPLICATION

UNLESS OTHERWISE SPECIFIED
DIMENSIONS ARE IN INCHES
TOLERANCES ON
FRACTIONS ± DECIMALS ± ANGLES ±
DO NOT SCALE THIS DRAWING
MATERIAL
HEAT TREATMENT
FINAL FINISH

MIT
INSTRUMENTATION LAB
CAMBRIDGE, MASS

DRAWN DATE
CHECKED 7 DEC 65
APPROVAL
APPROVAL 27 Dec 65
NASA APPROVAL
MIT APPROVAL
MIT APPROVAL

MANNED SPACECRAFT CENTER
HOUSTON, TEXAS

WIRING HARNESS
AGC TO PSA & G/N TO SPACECRAFT

CODE IDENT NO. 80230 | SIZE J | NASA DRAWING NO. 1004866
SCALE NONE | WT | SHEET 3 OF 5

MASTER

F-2

SYM	DESCRIPTION	DATE	APPROVAL
—	RELEASED PER TDRR 25153		

ASSEMBLY INFORMATION CHART

FROM				DESCRIPTION			TO		
REMARKS	COND IDENT	STA NO.	DES	COLOR	AWG	FIND NO.	STA NO.	DES	REMARKS
	A1	13	P4-146	YEL	24	7	95	P6-26	GROUP 1 SEE DETAIL A
		14	P4-147	RED	24		95	P6-47	
		15	P4-148	GRN	24		95	P6-48	
			E17	SHLD				E18	
	A2	7	P4-540	YEL	26	2	95	P6-74	GROUP 2 SEE DETAIL A
		8	↑ 541	RED	↑		↑	↑ 75	
	A3	3	436	YEL		↑		89	↑
		4	437	RED				88	
	A4	3	336	YEL				60	
		4	337	RED				59	
	A5	1	434	YEL				37	
		2	435	RED				36	
	A6	1	334	YEL				20	
		2	335	RED				19	
	A7	5	138	YEL				18	
		6	139	RED				17	
	A8	1	234	YEL				21	
		2	235	RED				8	
	A9	1	134	YEL				22	
		2	135	RED				9	
	A10	3	236	YEL				42	
		4	237	RED				23	
	A11	3	136	YEL				43	
		4	137	RED				69	
	A12	5	238	YEL				35	
		6	239	RED				34	
	A13	13	346	YEL				7	
		14	347	RED				6	
	A14	13	246	YEL				2	
		14	247	RED				1	
	A15	5	438	YEL				10	
		6	439	RED				3	
	A16	5	338	YEL				24	
		6	339	RED				11	
	A17	7	440	YEL				56	
		8	441	RED				55	
	A18	7	340	YEL				33	
		8	341	RED				32	
	A19	7	240	YEL				16	
		8	241	RED				15	
	A20	7	140	YEL				5	
		8	141	RED				14	
	A21	13	446	YEL				44	
		14	447	RED				25	
	A22	9	442	YEL				4	
		10	443	RED				13	
	A23	9	342	YEL				12	
		10	343	RED				27	
	A24	9	242	YEL				54	
		10	243	RED				53	
	A25	9	142	YEL				31	
		10	143	RED				52	
	A26	11	444	YEL				30	
		12	445	RED				51	
	A27	11	344	YEL				29	
		12	345	RED				50	
	A28	11	244	YEL				28	
		12	245	RED				49	
	A29	11	144	YEL				46	
		12	145	RED		↓		73	
	A30	16	↓ 149	YEL	↓	2	↓	↓ 58	↓
		17	P4-150	RED	26		95	P6-57	GROUP 2 SEE DETAIL A
			E1	SHLD				E2	
	A31	26	P4-424	YEL	26	2	94	P7-61	PART OF GROUP 3 SEE DETAIL B
		27	↑ 425	RED	↑		↑	↑ 60	
	A32	26	324	YEL		↑		38	↑
		27	325	RED				37	
	A33	24	422	YEL				59	
		25	423	RED				58	
	A34	24	322	YEL				36	
		25	323	RED				35	
	A35	18	416	YEL				39	
		19	417	RED				20	
	A36	18	316	YEL				40	
		19	317	RED				21	
	A37	18	216	YEL				41	
		19	217	RED		↓		22	↓
	A38	18	↓ 116	YEL	↓	2	↓	↓ 67	PART OF GROUP 3 SEE DETAIL B
		19	P4-117	RED	26		94	P7-42	

△1 DENOTES TWO CONNECTIONS TO ONE PIN

▲3 DENOTES INTERNAL CONNECTION

ASSEMBLY INFORMATION CHART

FROM				DESCRIPTION			TO		
REMARKS	COND IDENT	STA NO.	DES	COLOR	AWG	FIND NO.	STA NO.	DES	REMARKS
	A39	20	P4-418	YEL	26	2	94	P7-19	PART OF GROUP 3 SEE DETAIL B
		21	↑ 419	RED	↑		↑	↑ 18	
	A40	20	318	YEL		↑		8	↑
		21	319	RED				7	
	A41	24	122	YEL				70	
		25	123	RED				71	
	A42	20	218	YEL				9	
		21	219	RED				2	
	A43	20	118	YEL				23	
		21	119	RED				10	
	A44	22	420	YEL				43	
		23	421	RED				24	
	A45	22	320	YEL				69	
		23	321	RED				44	
	A46	22	220	YEL				57	
		23	221	RED				56	
	A47	22	120	YEL				34	
		23	121	RED				33	
	A48	26	224	YEL				45	
		27	225	RED				72	
	A49	26	124	YEL				25	
		27	125	RED		↓		46	
	A50	24	222	YEL		2		17	
		25	223	RED				16	
	A51	29	228	YEL		1		11	
	A52	28	227	↑		↑		1	
	A53	28	327					6	
	A54	28	127					3	
△1	A55	29	328					84	
	A56	30	329					55	
	A57	31	330					32	
	A58	32	331					15	
	A59	30	229					83	
	A60	31	230					54	
	A61	32	231					31	
	A62	30	129					5	
	A63	31	130					14	
	A64	32	131					30	
	A65	33	332					4	
	A66	33	232					13	
	A67	33	132					29	
	A68	34	↓ 133	↓	↓	↓	↓	↓ 12	
△1	A69	29	P4-128	YEL	26	1	94	P7-26	↓
			E3	SHLD				E4	
	A70	▲3	E4	BLK	22	3	94	P7-51	PART OF GROUP 3 SEE DETAIL B
	A71	▲3	E4	BLK	22	3	94	P7-87	
	A72	▲3	E4	BLK	22	3	94	P7-64	
△1	A73	38	P4-310	YEL	26	1	97	P1-90	GROUP 4 SEE DETAIL C
↑	A74	38	↑ 210	↑	↑	↑	↑	↑ 38	↑
	A75	39	611					40	
	A76	↑	511					67	
	A77		411					89	
	A78		311					37	
	A79	↓	211					21	
	A80	39	111					42	
	A81	40	612					88	
	A82	↑	512					36	
	A83		412					8	
	A84		312					23	
	A85	↓	212					87	
	A86	40	112					35	
	A87	41	613					7	
	A88	41	513					10	
	A89	42	614					3	
	A90	↑	514					25	
	A91	↓	414					71	
	A92	42	314					85	
	A93	41	413					44	
	A94	↑	313					86	
	A95	↓	213					34	
	A96	41	113					6	
↓	A97	36	603					64	
△1	A98	36	503					65	
	A99	38	410					46	
	A100	↑	610					12	
	A101	↓	510					26	
	A102	38	110	↓		↓		72	
	A103	35	502	YEL		1		63	
△1	A104	42	114	YEL		2		5	
↕		43	315	RED				4	
	A105	42	↓ 214	YEL	↓	2	↓	↓ 33	
△1		37	P4-504	RED	26		97	P1-16	↓
			E5	SHLD				E6	
	A106	44	P4-SHELL	SHLD		25	▲3	E5	GROUP 4 SEE DETAIL C
	A107	▲3	E33	SHLD		25	98	GRD	

ASSEMBLY INFORMATION CHART

FROM				DESCRIPTION			TO		
REMARKS	COND IDENT	STA NO.	DES	COLOR	AWG	FIND NO.	STA NO.	DES	REMARKS
	A108	57	P4-618	YEL	26	2	87	P3-194	GROUP 5 SEE DETAIL D
		58	↑ 619	RED	↑		87	↑ 195	
	A109	65	534	YEL		↑	88	90	↑
		66	535	RED			↑	91	
	A110	59	620	YEL				123	
		60	621	RED			↓	124	
	A111	59	520	YEL			88	125	
		60	521	RED			87	125	
	A112	67	644	YEL			89	224	
		68	645	RED			88	226	
	A113	65	634	YEL			87	94	
		66	635	RED			87	95	
	A114	55	616	YEL			88	190	
		56	617	RED			↑	191	
	A115	55	516	YEL			↓	192	
		56	517	RED			88	193	
	A116	63	430	YEL			89	88	
		61	526	RED		↓	↑	54	
	A117	64	631	YEL		2		86	
		61	626	RED				55	
△1	A118	61	426	YEL		1		155	
	A119	64	531	↑		↑		119	
	A120	62	428				↓	87	
	A121	62	628				89	120	
△1	A122	53	114				91	47	
↑	A123	54	315				90	48	
	A124	53	214				91	115	
	A125	48	504				90	116	
	A126	53	614				91	8	
	A127	↑	514				↑	215	
	A128	↓	414					181	
	A129	53	314					148	
	A130	52	413					146	
	A131	↑	313					113	
	A132	↓	213				↓	↓ 80	
	A133	52	113				91	P3-45	
↓	A134	47	↓ 603					E8	
△1	A135	47	P4-503					E9	
	A136	▲3	E8				93	P3-75	
	A137		E8				↑	↑ 3	
	A138		E9				↓	209	
	A139	▲3	E9				93	141	
△1	A140	52	P4-513				91	179	
↑	A141	49	↑ 310				93	210	
	A142	49	210				↑	175	
	A143	50	611					142	
	A144	↑	511					109	
	A145		411					76	
	A146		311				↓	41	
	A147	↓	211				93	4	
	A148	50	111				92	212	
	A149	51	612				↑	177	
	A150	↑	512					144	
	A151		412					111	
	A152		312					78	
	A153	↓	212				↓	43	
↓	A154	51	112				92	6	
△1	A155	52	↓ 613		↓	↓	91	214	
	A156	54	P4-615		26	1	91	82	
	A157	46	R1		24	10	89	122	
	A158	46	R2	↓	24	10	89	↓ 152	
	A159	45	R3	YEL	24	10	89	P3-153	↓
			E7	SHLD				E10	
	A160	▲3	E10	BLK	22	3	93	P3-107	GROUP 5 SEE DETAIL D
	A161	▲3	E10	BLK	22	3	89	P3-89	
	A162	71	P4-607	YEL	26	1	90	P3-49	GROUP 6 SEE DETAIL E
	A163	71	↑ 507	↑	↑	↑	89	↑ 51	↑
△1	A164	70	305				90	117	
↑	A165	70	205				90	84	
	A166	71	307				89	220	
	A167	70	605				90	218	
	A168	70	505	↓		↓	↑	183	
	A169	70	405	YEL		1		150	
	A170	69	604	RED/ORN		4		151	
	A171	72	609	↑		↑	↓	118	
	A172	73	415				90	85	
	A173	73	215				89	221	
	A174	71	407				89	185	
	A175	73	415				89	186	
	A176	72	209				90	219	
↓	A177	74	↓ 333	↓	↓	↓	90	↓ 184	↓
△1	A178	74	P4-433	RED/ORN	26	4	90	P3-50	
			E12	SHLD				E11	GROUP 6 SEE DETAIL E
	A179	▲3	E11	BLK	22	3	89	P3-187	

QTY REQD	PART OR IDENTIFYING NO.	NOMENCLATURE OR DESCRIPTION	FIND NO

LIST OF MATERIALS

NEXT ASSY	USED ON
APPLICATION	

UNLESS OTHERWISE SPECIFIED DIMENSIONS ARE IN INCHES
TOLERANCES ON
FRACTIONS ± DECIMALS ± ANGLES ±
DO NOT SCALE THIS DRAWING
MATERIAL
HEAT TREATMENT
FINAL FINISH

M I T
INSTRUMENTATION LAB
CAMBRIDGE MASS
DWG NO. CONTRACT
DRAWN Ray Coombs DATE 18 Nov 65
CHECKED C. Haywood 7 Dec 65
APPROVAL
APPROVAL Eldon C. Hall 27 Dec 65
NASA APPROVAL E. G. METZGER
MIT APPROVAL
MIT APPROVAL

MANNED SPACECRAFT CENTER
HOUSTON, TEXAS

WIRING HARNESS
AGC TO PSA & G/N TO SPACECRAFT

CODE IDENT NO. 80230
SIZE J
NASA DRAWING NO. 1004866
SCALE NONE
WT
SHEET 5 OF 5

MASTER

1004866 -

REVISIONS			
SYM	DESCRIPTION	DATE	APPROVAL
—	RELEASED PER TDRR 25153		

ASSEMBLY INFORMATION CHART

FROM				DESCRIPTION			TO		
REMARKS	COND IDENT	STA NO.	DES	COLOR	AWG	FIND NO.	STA NO.	DES	REMARKS
△1	A180	77	P4-205	YEL	26	2	97	P1-32	GROUP 7 SEE DETAIL F
△1		81	-433	RED				-15	
	A181	78	-107	YEL				-83	
△1		80	-215	RED				-54	
	A182	77	-605	YEL				-29	
		81	-333	RED				-28	
	A183	77	-505	YEL				-48	
		75	-604	RED				-74	
	A184	77	-405	YEL				-82	
		79	-609	RED				-53	
	A185	77	-305	YEL		2		-52	
		79	-209	RED				-51	
	A186	78	-307	YEL		1		-14	
△1	A187	78	-407	YEL		1		-27	
	A188	76	P4-105	YEL	26	1	97	P1-31	
			E13	SHLD				E14	
	A189	△3	E14	BLK	22	3	97	P1-73	
	A190	△3	E14	BLK	22	3	97	P1-50	
									GROUP 7 SEE DETAIL F
TWIST TOGETHER	A191	82	P5-17	YEL	22	5	95	P6-62	GROUP 8 SEE DETAIL G
	A192		-18					-63	
	A193		-19					-61	
	A194		-7					-38	
	A195		-5					-91	
	A196		-15					-90	
	A197		-9					-64	
	A198		-10	YEL		5		-65	
	A199		-11	BLK		3		-39	
	A200		-2					-40	
	A201		-13					-66	
TWIST TOGETHER	A202	82	P5-14	BLK	22	3	95	P6-41	
			E16	SHLD				E15	
	A203	83	P5-SHELL	SHLD		25	△3	E16	
									GROUP 8 SEE DETAIL G
	A204	96	P2-83	YEL	26	8	85	P3-66	PART OF GROUP 9 SEE DETAIL H
		96	P2-82	RED	26		△3	E25	
			E19	SHLD				E26	
	A205	△3	E25	RED/ORN	26	4	86	P3-31	
	A206	96	P2-54	BLK	22	3	△3	E19	
	A207	△3	E26	BLK	22	3	△3	E27	
	A208	△3	E26	BLK	22	3	85	P3-67	
	A209	96	P2-75	RED	26	8	△3	E25	
		96	P2-74	YEL	26		85	P3-32	
			E20	SHLD				E27	
	A210	96	P2-48	BLK	22	3	△3	E20	
	A211	96	P2-49	YEL	26	8	85	P3-33	
		96	P2-76	RED	26		△3	E28	
			E21	SHLD				E29	
	A212	△3	E28	RED/ORN	26	4	84	P3-69	
	A213	96	P2-77	BLK	22	3	△3	E21	
	A214	△3	E29	BLK	22	3	△3	E30	
	A215	△3	E29	BLK	22	3	85	P3-34	
	A216	96	P2-81	RED	26	8	△3	E28	
		96	P2-53	YEL	26		85	P3-68	
			E22	SHLD				E30	
	A217	96	P2-80	BLK	22	3	△3	E22	
	A218	96	P2-78	YEL	26	8	84	P3-36	
		96	P2-79	RED	26		84	P3-35	
			E23	SHLD				E31	
	A219	96	P2-51	BLK	22	3	△3	E23	
	A220	△3	E31	BLK	22	3	84	P3-70	
	A221	96	P2-64	YEL	24	10	86	P3-29	
	A222		P2-35	RED		7		P3-197	
			-36	GRN				-198	
			-18	YEL				-163	
	A223		-58	YEL		7		-97	
			-87	RED				-98	
			-88	GRN				-130	
	A224		-7	YEL		7	86	-99	
			-2	RED			85	-100	
			-8	GRN			85	-132	
	A225		-72	YEL		9	84	-243	
			-73	RED			84	-242	
	A226		-12	YEL		9	85	-166	
			-26	RED			85	-167	
	A227		-4	YEL		9	86	-199	
			-13	RED			85	-200	
	A228		-15	YEL		9	85	-168	
			-14	RED			84	-169	
	A229		-16	YEL		9	85	-201	
			-32	RED			85	-202	
	A230		-33	YEL		9	84	-170	
			-56	RED				-171	
	A231		-85	YEL		9		-203	PART OF GROUP 9 SEE DETAIL H
		96	P2-84	RED	24		84	P3-204	

△1 DENOTES TWO CONNECTIONS TO ONE PIN
△2 DENOTES JUMPER
△3 DENOTES INTERNAL CONNECTION

ASSEMBLY INFORMATION CHART

FROM				DESCRIPTION			TO		
REMARKS	COND IDENT	STA NO.	DES	COLOR	AWG	FIND NO.	STA NO.	DES	REMARKS
	A232	96	P2-65	YEL	24	7	85	P3-101	PART OF GROUP 9 SEE DETAIL H
			-41	RED			85	-134	
			-40	GRN			85	-102	
	A233		-39	YEL		6	87	-62	
			-63	RED			87	-28	
			-38	GRN			86	-63	
			-62	BRN			87	-96	
	A234		-67	YEL		7	84	-103	
			-68	RED			84	-104	
			-42	GRN			84	-136	
	A235		-89	YEL		7	86	-131	
			-60	RED			86	-164	
		96	P2-90	GRN	24		86	P3-165	
			E24	SHLD				E32	
									PART OF GROUP 9 SEE DETAIL H
△1 △2	A236		P4-328	YEL	26	1		P4-627	
△1 △2	A237		P4-128		26	1		-527	
△1 △2	A238		P4-426		26	1		-427	
△2	A239		R1,C1		24	10		-629	
△2	A240		R2,C2		24	10		-431	
△2	A241		R3,C3	YEL	24	10		P4-529	

2H

1004866-

MASTER

QTY REQD	PART OR IDENTIFYING NO.	NOMENCLATURE OR DESCRIPTION	FIND NO.

LIST OF MATERIALS

NEXT ASSY	USED ON
APPLICATION	

UNLESS OTHERWISE SPECIFIED DIMENSIONS ARE IN INCHES
TOLERANCES ON
FRACTIONS ± DECIMALS ± ANGLES ±
DO NOT SCALE THIS DRAWING
MATERIAL
HEAT TREATMENT
FINAL FINISH

M I T
INSTRUMENTATION LAB
CAMBRIDGE, MASS

DRAWN Ray Comeau DATE 22 Nov 65
CHECKED C. Hayward 7 DEC 65
APPROVAL
APPROVAL [illegible] 22 Dec 65
NASA APPROVAL A. C. METZGER
MIT APPROVAL
MIT APPROVAL

MANNED SPACECRAFT CENTER
HOUSTON, TEXAS

WIRING HARNESS
AGC TO PSA & G/N TO SPACECRAFT

CODE IDENT NO.	SIZE	NASA DRAWING NO
80230	J	1004866

SCALE NONE WT SHEET 4 OF 5

1004866 -

F-2

1004866-

SYM	DESCRIPTION	DATE	APPROVAL
—	RELEASED PER TDRR 26153		

ASSEMBLY INFORMATION CHART

FROM				DESCRIPTION			TO		
REMARKS	COND IDENT	STA NO.	DES	COLOR	AWG	FIND NO.	STA NO.	DES	REMARKS
△1	A180	77	P4-205	YEL	26	2	97	P1-32	GROUP 7 SEE DETAIL F
△1		81	↑ -433	RED	↑		↑	↑ -15	↑
	A181	78	-107	YEL		↑		-83	
△1		80	-215	RED				-54	
↑	A182	77	-605	YEL				-29	
		81	-333	RED				-28	
	A183	77	-505	YEL				-48	
		75	-604	RED				-74	
	A184	77	-405	YEL				-82	
		79	-609	RED		↓		-53	
	A185	77	-305	YEL		2		-52	
		79	-209	RED				-51	
↓	A186	78	-307	YEL		1		-14	
△1	A187	78	↓ -407	YEL	↓	1	↓	↓ -27	
	A188	76	P4-105	YEL	26	1	97	P1-31	
			E13	SHLD				E14	
	A189	△3	E14	BLK	22	3	97	P1-73	
	A190	△3	E14	BLK	22	3	97	P1-50	↓
									GROUP 7 SEE DETAIL F
TWIST TOGETHER	A191	82	P5-17	YEL	22	5	95	P6-62	GROUP 8 SEE DETAIL G
↑	A192	↑	↑ -18	↑	↑	↑	↑	↑ -63	↑
	A193		-19					-61	
	A194		-7					-38	
	A195		-5					-91	
	A196		-15					-90	
	A197		-9	↓		↓		-64	
	A198		-10	YEL		5		-65	
	A199		-11	BLK		3		-39	
	A200		-2	↑		↑		-40	
↓	A201	↓	↓ -13	↓	↓	↓	↓	↓ -66	
TWIST TOGETHER	A202	82	P5-14	BLK	22	3	95	P6-41	
			E16	SHLD				E15	
	A203	83	P5-SHELL	SHLD		25	△3	E16	↓
									GROUP 8 SEE DETAIL G
	A204	96	P2-83	YEL	26	8	85	P3-66	PART OF GROUP 9 SEE DETAIL H
		96	P2-82	RED	26		△3	E25	
			E19	SHLD				E26	↑
	A205	△3	E25	RED/ORN	26	4	86	P3-31	
	A206	96	P2-54	BLK	22	3	△3	E19	
	A207	△3	E26	BLK	22	3	△3	E27	
	A208	△3	E26	BLK	22	3	85	P3-67	
	A209	96	P2-75	RED	26	8	△3	E25	
		96	P2-74	YEL	26		85	P3-32	
			E20	SHLD				E27	
	A210	96	P2-48	BLK	22	3	△3	E20	
	A211	96	P2-49	YEL	26	8	85	P3-33	
		96	P2-76	RED	26		△3	E28	
			E21	SHLD				E29	
	A212	△3	E28	RED/ORN	26	4	84	P3-69	
	A213	96	P2-77	BLK	22	3	△3	E21	
	A214	△3	E29	BLK	22	3	△3	E30	
	A215	△3	E29	BLK	22	3	85	P3-34	
	A216	96	P2-81	RED	26	8	△3	E28	
		96	P2-53	YEL	26		65	P3-68	
			E22	SHLD				E30	
	A217	96	P2-80	BLK	22	3	△3	E22	
	A218	96	P2-78	YEL	26	8	84	P3-36	
		96	P2-79	RED	26		84	P3-35	
			E23	SHLD				E31	
	A219	96	P2-51	BLK	22	3	△3	E23	
	A220	△3	E31	BLK	22	3	84	P3-70	
	A221	96	P2-64	YEL	24	10	86	P3-29	
	A222	↑	P2-35	RED	↑	7	↑	P3-197	
			↑ -36	GRN				↑ -198	
			-13	YEL				-163	
	A223		-58	YEL		7		-97	
			-87	RED				-98	
			-88	GRN			↓	-130	
	A224		-7	YEL		7	86	-99	
			-2	RED			85	-100	
			-8	GRN			85	-132	
	A225		-72	YEL		9	84	-243	
			-73	RED			84	-242	
	A226		-12	YEL		9	85	-166	
			-26	RED			85	-167	
	A227		-4	YEL		9	86	-199	
			-13	RED			85	-200	
	A228		-15	YEL		9	85	-168	
			-14	RED			84	-169	
	A229		-16	YEL		9	85	-201	
			-32	RED			85	-202	
	A230		-33	YEL		9	84	-170	
			-56	RED			↑	-171	↓
	A231	↓	↓ -85	YEL	↓	9	↓	↓ -203	PART OF GROUP 9 SEE DETAIL H
		96	P2-84	RED	24		84	P3-204	

△1 DENOTES TWO CONNECTIONS TO ONE PIN
△2 DENOTES JUMPER
△3 DENOTES INTERNAL CONNECTION

ASSEMBLY INFORMATION CHART

FROM				DESCRIPTION			TO		
REMARKS	COND IDENT	STA NO.	DES	COLOR	AWG	FIND NO.	STA NO.	DES	REMARKS
	A232	96	P2-[illegible]5	YEL	24	7	85	P3-101	PART OF GROUP 9 SEE DETAIL H
		↑	↑ -[illegible]	RED	↑		85	↑ -134	
			-40	GRN			85	-102	↑
	A233		-39	YEL		6	87	-62	
			-63	RED			87	-28	
			-38	GRN			86	-63	
			-62	BRN			87	-96	
	A234		-67	YEL		7	84	-103	
			-68	RED			84	-104	
			-42	GRN			84	-136	
	A235		-89	YEL		7	86	-131	
		↓	↓ -60	RED	↓		86	↓ -164	
		96	P2-90	GRN	24		86	P3-165	
			E24	SHLD				E32	↓
									PART OF GROUP 9 SEE DETAIL H
△1 △2	A236		P4-328	YEL	26	1		P4-627	
△1 △2	A237		P4-128	↑	26	1		↑ -527	
△1 △2	A238		P4-426		26	1		-427	
△2	A239		R1,C1		24	10		-629	
△2	A240		R2,C2	↓	24	10		↓ -431	
△2	A241		R3,C3	YEL	24	10		P4-529	

MASTER

QTY REQD	PART OR IDENTIFYING NO.	NOMENCLATURE OR DESCRIPTION	FIND NO.

LIST OF MATERIALS

NEXT ASSY	USED ON
APPLICATION	

UNLESS OTHERWISE SPECIFIED
DIMENSIONS ARE IN INCHES
TOLERANCES ON
FRACTIONS ± DECIMALS ± ANGLES ±
DO NOT SCALE THIS DRAWING
MATERIAL
HEAT TREATMENT
FINAL FINISH

MIT
INSTRUMENTATION LAB
CAMBRIDGE, MASS.
DRAWN Ray C[illegible] DATE 22 Nov 65
CHECKED [illegible] 7 DEC 65
APPROVAL
APPROVAL [illegible] 27 Dec 65
NASA APPROVAL A. C. METZGER
MIT APPROVAL
MIT APPROVAL [illegible] 11 Jan 66

MANNED SPACECRAFT CENTER
HOUSTON, TEXAS

WIRING HARNESS
AGC TO PSA & G/N TO SPACECRAFT

CODE IDENT NO. 80230 | SIZE J | NASA DRAWING NO. 1004866
SCALE NONE | WT | SHEET

1004866-

1004866 | —

SYM	DESCRIPTION	DATE	APPROVAL
—	REVISED PER TDRR 25153		

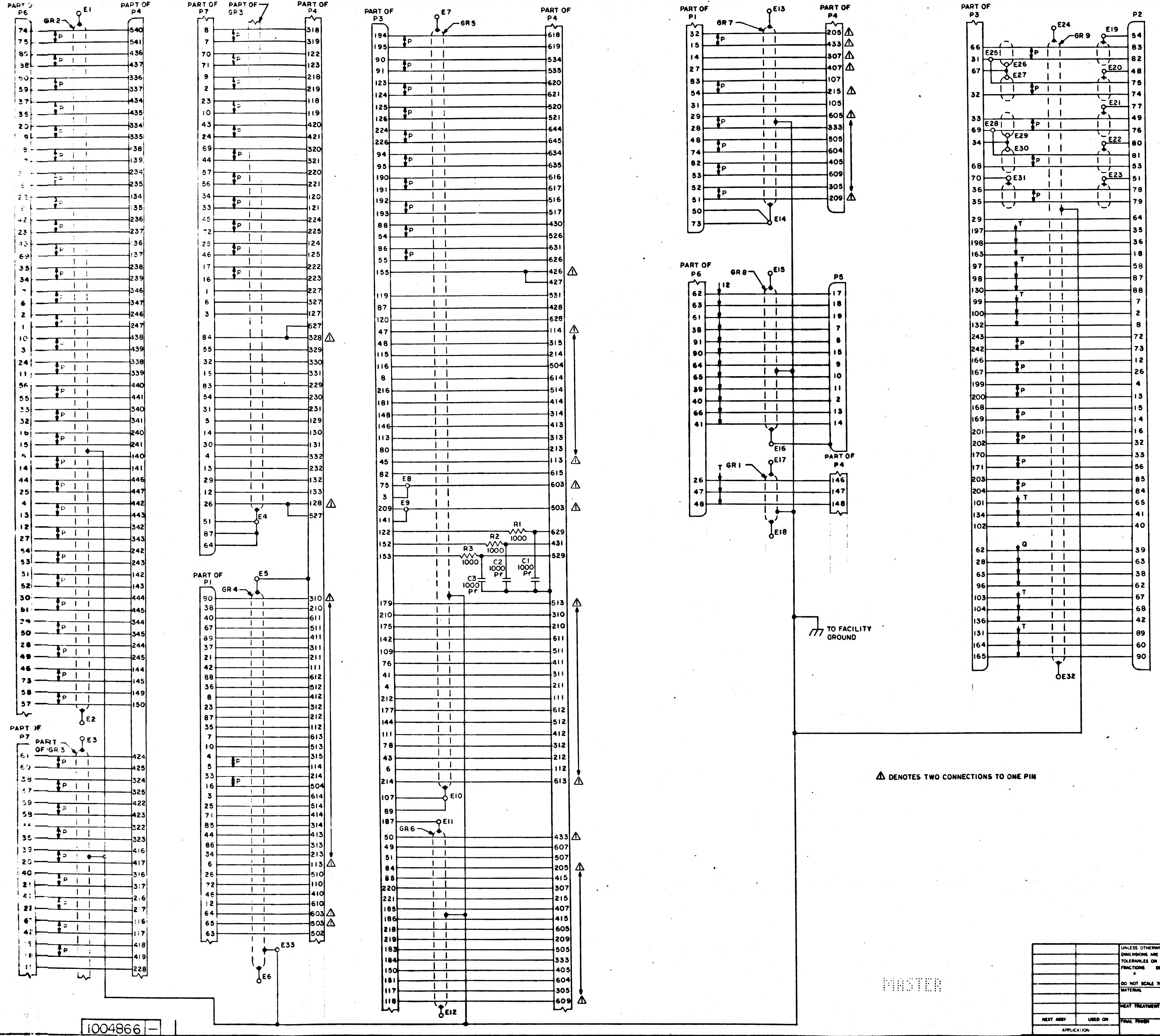
PART OF P6
PART OF P4
PART OF P7
PART OF GR3
PART OF P3
PART OF P4
PART OF P1
PART OF P4
PART OF P3
P2
PART OF P6
P5
PART OF P4
PART OF P7
PART OF GR3
PART OF P1
GR1
GR2
GR4
GR5
GR6
GR7
GR8
GR9
E1
E2
E3
E4
E5
E6
E7
E8
E9
E10
E11
E12
E13
E14
E15
E16
E17
E18
E19
E20
E21
E22
E23
E24
E25
E26
E27
E28
E29
E30
E31
E32
E33
R1 1000
R2 1000
R3 1000
C1 1000 Pf
C2 1000 Pf
C3 1000 Pf
TO FACILITY GROUND
P
T
Q
12

⚠ DENOTES TWO CONNECTIONS TO ONE PIN

MASTER

QTY REQD	PART OR IDENTIFYING NO.	NOMENCLATURE OR DESCRIPTION	FIND NO.

LIST OF MATERIALS

NEXT ASSY	USED ON

APPLICATION

UNLESS OTHERWISE SPECIFIED DIMENSIONS ARE IN INCHES
TOLERANCES ON
FRACTIONS ± DECIMALS ± ANGLES ±
DO NOT SCALE THIS DRAWING
MATERIAL
HEAT TREATMENT
FINAL FINISH

MIT INSTRUMENTATION LAB
CAMBRIDGE MASS
CONTRACT
DRAWN G. J. Bis— DATE 9 NOV 65
CHECKED C. Kayemad 8 DEC 65
APPROVAL
APPROVAL Dalton C. Hall 22 Dec 65
NASA APPROVAL A. C. METZGER
MIT APPROVAL
MIT APPROVAL

MANNED SPACECRAFT CENTER
HOUSTON, TEXAS

WIRING HARNESS
AGC TO PSA & G/N TO SPACECRAFT

CODE IDENT NO. 80230
SIZE J
NASA DRAWING NO. 1004866
SCALE NONE
WT
SHEET 5 OF 5

1004866 | —

1004866 | —

2H

E-2

1004866 –

SYM	DESCRIPTION	DATE	APPROVAL
–	REVISED PER TDRR 23573		

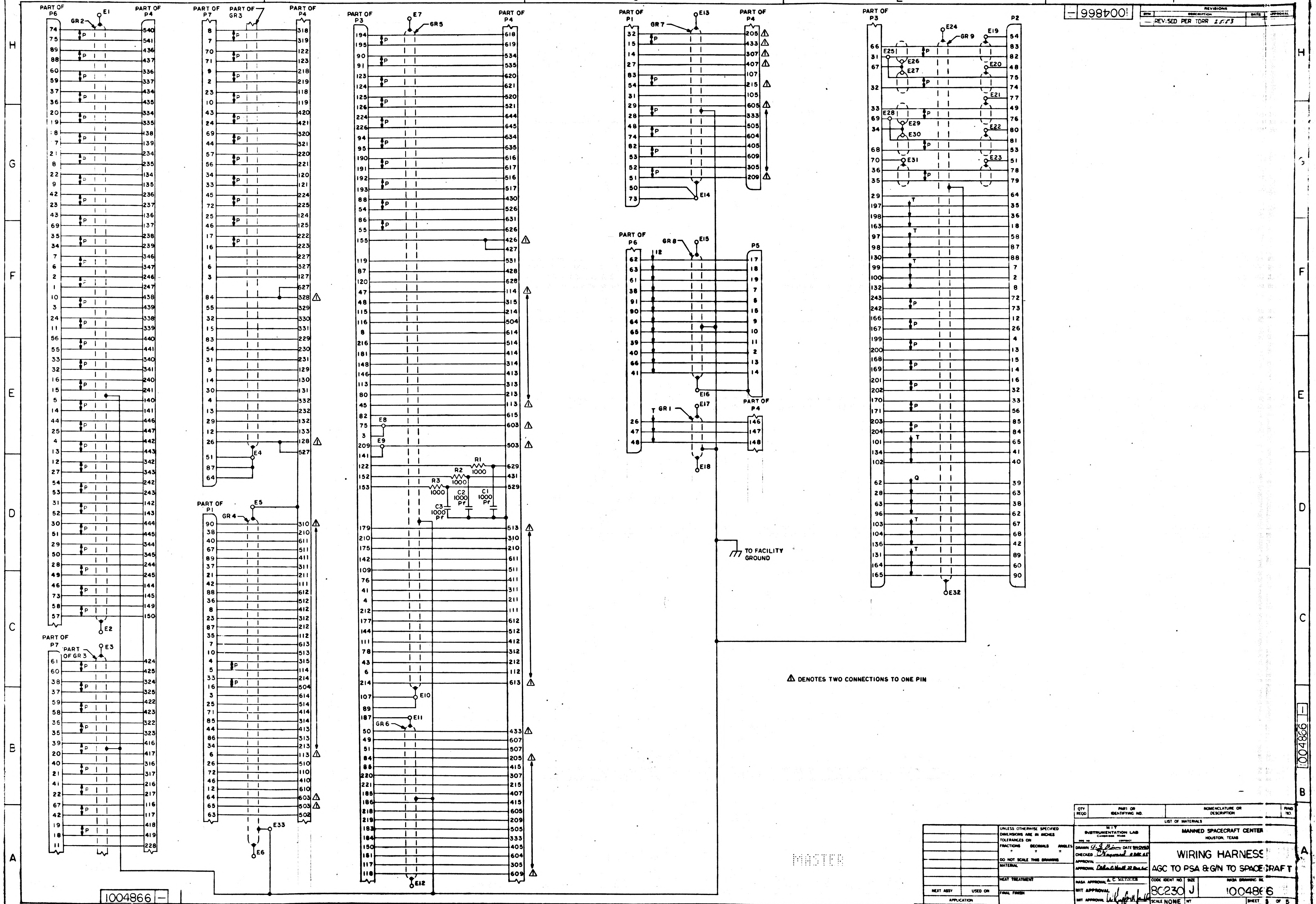

PART OF P6
PART OF P4
PART OF P7
PART OF GR3
PART OF P3
PART OF P1
PART OF P5
PART OF P2
GR1
GR2
GR3
GR4
GR5
GR6
GR7
GR8
GR9
E1
E2
E3
E4
E5
E6
E7
E8
E9
E10
E11
E12
E13
E14
E15
E16
E17
E18
E19
E20
E21
E22
E23
E24
E25
E26
E27
E28
E29
E30
E31
E32
E33
R1 1000
R2 1000
R3 1000
C1 1000 Pf
C2 1000 Pf
C3 1000 Pf
TO FACILITY GROUND

⚠ DENOTES TWO CONNECTIONS TO ONE PIN

MASTER

QTY REQD	PART OR IDENTIFYING NO.	NOMENCLATURE OR DESCRIPTION	FIND NO.

LIST OF MATERIALS

NEXT ASSY	USED ON

APPLICATION

UNLESS OTHERWISE SPECIFIED DIMENSIONS ARE IN INCHES
TOLERANCES ON
FRACTIONS ± DECIMALS ± ANGLES ±
DO NOT SCALE THIS DRAWING
MATERIAL
HEAT TREATMENT
FINAL FINISH

MIT INSTRUMENTATION LAB
CAMBRIDGE, MASS

DRAWN G. J. Bien DATE 8 NOV 65
CHECKED C. Kaywood 8 DEC 65
APPROVAL
APPROVAL Delen C Hall 22 Dec 65
NASA APPROVAL A. C. METZGER
MIT APPROVAL
MIT APPROVAL

MANNED SPACECRAFT CENTER
HOUSTON, TEXAS

WIRING HARNESS
AGC TO PSA & G/N TO SPACECRAFT

CODE IDENT NO. 8C230
SIZE J
NASA DRAWING NO. 1004866
SCALE NONE
WT
SHEET 3 OF 5

1004866 –

REVISIONS	22/66		
SYM	DESCRIPTION	DATE	APPROVAL

NOTES:

1. MAKE FROM 1003520-1, AND RE-IDENTIFY AFTER COMPLETION OF TEST;
2. INTERPRET DRAWING IN ACCORDANCE WITH STANDARDS PRESCRIBED BY MIL-D-70327.
3. TEST REQUIREMENTS:

A. V_{CEO} SUSTAINED SHALL BE NLT 22 VOLTS WITH I_C = 10 ma AND I_b = 0 (MEASURED ON A CALIBRATED CURVE TRACER)

FIGURE 1

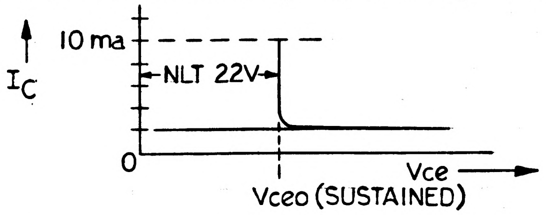

B. THE UNITS WHICH MEET THE V_{CEO} SUSTAINED REQUIREMENT SHALL THEN BE TESTED IN THE FOLLOWING TEST CIRCUIT. UNITS WHICH EXHIBIT A DETERIORATED WAVEFORM AS SHOWN IN FIGURES 4, 5 & 6 SHALL BE REJECTED.

(1) TEST CIRCUIT: (ALL RESISTORS 1/4 W, 2% UNLESS OTHERWISE SPECIFIED)

DIAGRAM 1

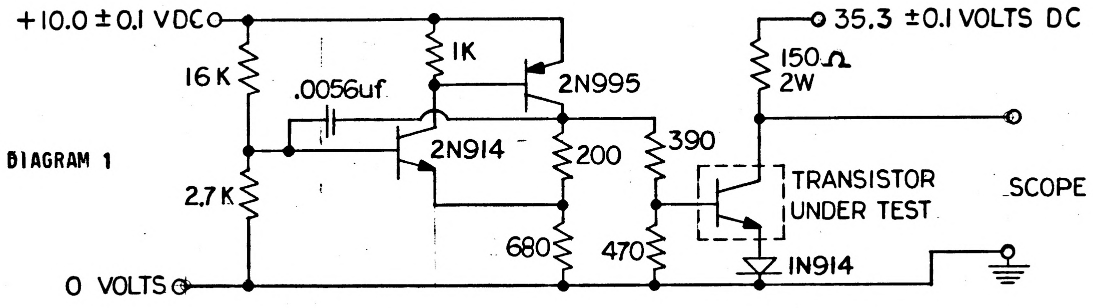

(2) THE WAVEFORM AS OBSERVED BETWEEN THE SCOPE TERMINALS SHALL HAVE THE FOLLOWING CHARACTERISTICS: A TYPE 541A SCOPE WITH A 53/54C PLUG IN OR EQUIVALENT SHALL BE USED. THE PROBE SHALL BE AN X10.

$V_1 = V_{CE}$ SAT. OF TRANSISTOR UNDER TEST + Vd
V_1 = 0.8 ± .3 VOLTS
A = 34.5 ± 1.0 V_{pp}
PW = 2.2 ± 0.2 us
T = 22 ± 2 us

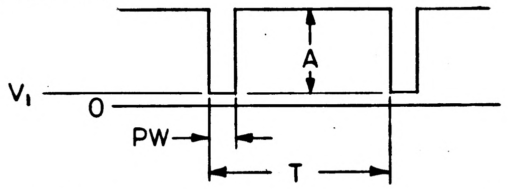

FIGURE 2

(3) THE WAVEFORM SHALL NOT EXHIBIT ANY DETERIORATION IN THE FORM OF CLIPPING, CHIPPING OR OSCILLATING CONDITION AS SHOWN IN FIGURES 4, 5 AND 6

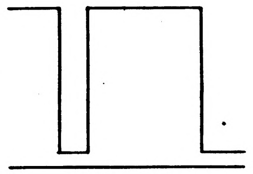

IDEAL WAVEFORM

FIGURE 3

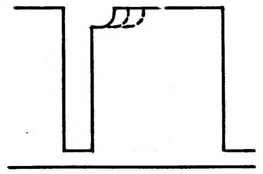

FIGURE 4

DETERIORATED WAVEFORMS

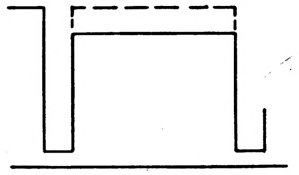

FIGURE 5

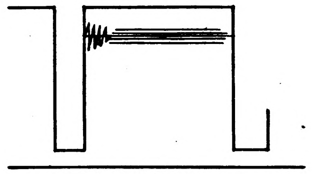

FIGURE 6

MASTER

QTY REQD	PART OR IDENTIFYING NO.	NOMENCLATURE OR DESCRIPTION	FIND NO.
1	1003520-1	TRANSISTOR	

LIST OF MATERIALS

NEXT ASSY	USED ON		
APPLICATION			

UNLESS OTHERWISE SPECIFIED
DIMENSIONS ARE IN INCHES
TOLERANCES ON
FRACTIONS ± DECIMALS ± ANGLES ±
DO NOT SCALE THIS DRAWING
MATERIAL
SEE NOTE 1
HEAT TREATMENT
FINAL FINISH

MIT
INSTRUMENTATION LAB
CAMBRIDGE, MASS
DWG. NO. CONTRACT

DRAWN Raul Machado DATE 23 Aug 65
CHECKED Tom Adrian 23Aug65
APPROVAL Don Richards 23Aug65
APPROVAL Eldon C Hall 27 Aug 65
NASA APPROVAL
MIT APPROVAL

MANNED SPACECRAFT CENTER
HOUSTON, TEXAS

TRANSISTOR
TEST SELECTED

CODE IDENT NO.	SIZE	NASA DRAWING NO.
80230	C	1004873
SCALE NONE	WT	SHEET 1 OF 1

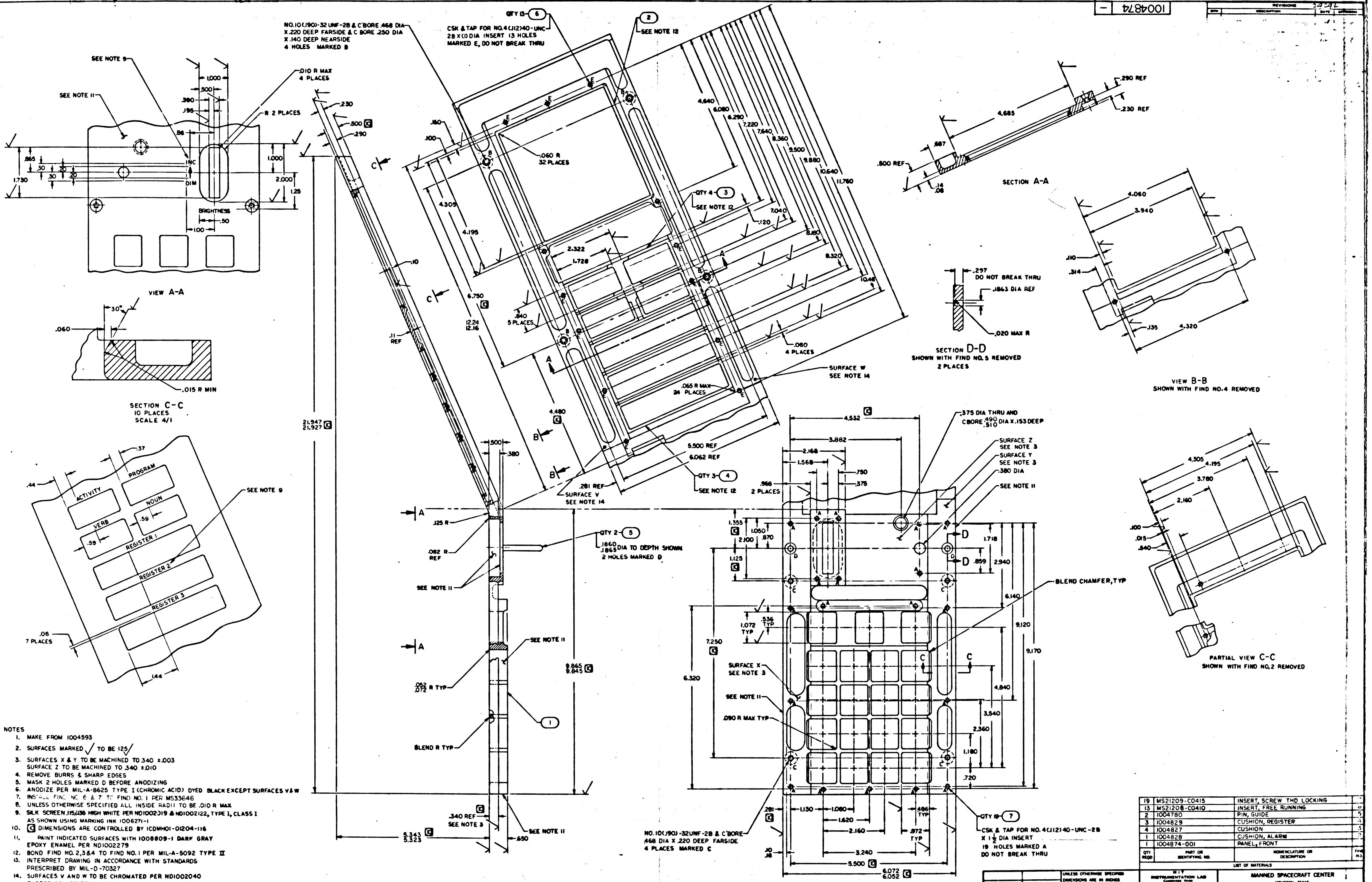
5
4
3
2
1
1004874
REVISIONS
SEE NOTE 9
SEE NOTE 11
INC
DIM
BRIGHTNESS
R 2 PLACES
.010 R MAX 4 PLACES
VIEW A-A
SECTION C-C
10 PLACES
SCALE 4/1
.015 R MIN
PROGRAM
ACTIVITY
VERB
NOUN
REGISTER 1
REGISTER 2
REGISTER 3
.06 7 PLACES
NO.10(.190)-32 UNF-2B & C'BORE .468 DIA X .220 DEEP FARSIDE & C BORE .250 DIA X .140 DEEP NEARSIDE 4 HOLES MARKED B
QTY 13 ⑥
CSK & TAP FOR NO.4(.112)40-UNC-2B X (.D DIA INSERT 13 HOLES MARKED E, DO NOT BREAK THRU
② SEE NOTE 12
.060 R 32 PLACES
QTY 4 ③ SEE NOTE 12
.840 5 PLACES
.080 4 PLACES
SURFACE W SEE NOTE 14
.065 R MAX 24 PLACES
QTY 3 ④ SEE NOTE 12
.281 REF
SURFACE V SEE NOTE 14
QTY 2 ⑤
.1860/.1865 DIA TO DEPTH SHOWN 2 HOLES MARKED D
SEE NOTE 11
BLEND R TYP
SEE NOTE 3
SECTION A-A
SECTION D-D
SHOWN WITH FIND NO.5 REMOVED
2 PLACES
DO NOT BREAK THRU
.1863 DIA REF
.020 MAX R
VIEW B-B
SHOWN WITH FIND NO.4 REMOVED
.375 DIA THRU AND CBORE .490/.510 DIA X .153 DEEP
SURFACE Z SEE NOTE 3
SURFACE Y SEE NOTE 3
.380 DIA
BLEND CHAMFER, TYP
SURFACE X SEE NOTE 3
.090 R MAX TYP
PARTIAL VIEW C-C
SHOWN WITH FIND NO.2 REMOVED
NO.10(.190)-32UNF-2B & C'BORE .468 DIA X .220 DEEP FARSIDE 4 PLACES MARKED C
QTY 19 ⑦
CSK & TAP FOR NO.4(.112)40-UNC-2B X 1 1/2 DIA INSERT 19 HOLES MARKED A DO NOT BREAK THRU

NOTES

1. MAKE FROM 1004593
2. SURFACES MARKED √ TO BE 125√
3. SURFACES X & Y TO BE MACHINED TO .340 ±.003
   SURFACE Z TO BE MACHINED TO .340 ±.010
4. REMOVE BURRS & SHARP EDGES
5. MASK 2 HOLES MARKED D BEFORE ANODIZING
6. ANODIZE PER MIL-A-8625 TYPE I (CHROMIC ACID) DYED BLACK EXCEPT SURFACES V & W
7. INSTALL FIND NO 6 & 7 TO FIND NO. 1 PER MS33646
8. UNLESS OTHERWISE SPECIFIED ALL INSIDE RADII TO BE .010 R MAX
9. SILK SCREEN .115/.136 HIGH WHITE PER ND1002019 & ND1002122, TYPE I, CLASS I
   AS SHOWN USING MARKING INK 1006271-1
10. Ⓒ DIMENSIONS ARE CONTROLLED BY ICDMH01-01204-116
11. PAINT INDICATED SURFACES WITH 1008809-1 DARK GRAY
    EPOXY ENAMEL PER ND1002279
12. BOND FIND NO. 2,3 & 4 TO FIND NO. 1 PER MIL-A-5092 TYPE II
13. INTERPRET DRAWING IN ACCORDANCE WITH STANDARDS
    PRESCRIBED BY MIL-D-70327
14. SURFACES V AND W TO BE CHROMATED PER ND1002040
    EXCEPT DO NOT EPOXY COAT.

QTY REQD	PART OR IDENTIFYING NO.	NOMENCLATURE OR DESCRIPTION	FIND NO.
19	MS21209-C0415	INSERT, SCREW THD LOCKING	7
13	MS21208-C0410	INSERT, FREE RUNNING	6
2	1004780	PIN, GUIDE	5
3	1004829	CUSHION, REGISTER	4
4	1004827	CUSHION	3
1	1004828	CUSHION, ALARM	2
1	1004874-001	PANEL, FRONT	

LIST OF MATERIALS

NEXT ASSY	USED ON
APPLICATION	

UNLESS OTHERWISE SPECIFIED DIMENSIONS ARE IN INCHES
TOLERANCES ON
FRACTIONS ± DECIMALS ±.005 .02 ANGLES ± 2°
DO NOT SCALE THIS DRAWING
MATERIAL SEE NOTE 1
HEAT TREATMENT NONE
FINAL FINISH SEE NOTE 6 & 14

MIT INSTRUMENTATION LAB
CAMBRIDGE MASS
DRAWN [illegible] DATE 5 OCT 65
CHECKED [illegible] 5 OCT 65
APPROVAL [illegible] 6 OCT 65
APPROVAL [illegible]
NASA APPROVAL A. C. METZGER
MIT APPROVAL
MIT APPROVAL

MANNED SPACECRAFT CENTER
HOUSTON, TEXAS

PANEL, FRONT
AGC DSKY, NAV
100 SERIES

CODE IDENT NO 80230
SIZE J
NASA DRAWING NO 1004874
SCALE 1/1
WT
SHEET 1 OF 1

NOTICE: WHEN GOVERNMENT DRAWINGS, SPECIFICATIONS, OR OTHER DATA ARE USED FOR ANY PURPOSE OTHER THAN IN CONNECTION WITH A DEFINITELY RELATED GOVERNMENT PROCUREMENT OPERATION, THE UNITED STATES GOVERNMENT THEREBY INCURS NO RESPONSIBILITY NOR ANY OBLIGATION WHATSOEVER; AND THE FACT THAT THE GOVERNMENT MAY HAVE FORMULATED, FURNISHED, OR IN ANY WAY SUPPLIED THE SAID DRAWINGS, SPECIFICATIONS OR OTHER DATA IS NOT TO BE REGARDED BY IMPLICATION OR OTHERWISE AS IN ANY MANNER LICENSING THE HOLDER OR ANY OTHER PERSON OR CORPORATION, OR CONVEYING ANY RIGHTS OR PERMISSION TO MANUFACTURE, USE, OR SELL ANY PATENTED INVENTION THAT MAY IN ANY WAY BE RELATED THERETO.

REVISIONS 24033

SYM	ZONE	DESCRIPTION	DR	CHK	DATE	APPROVED
A		REVISED PER TDRR 25312			1/26/66	

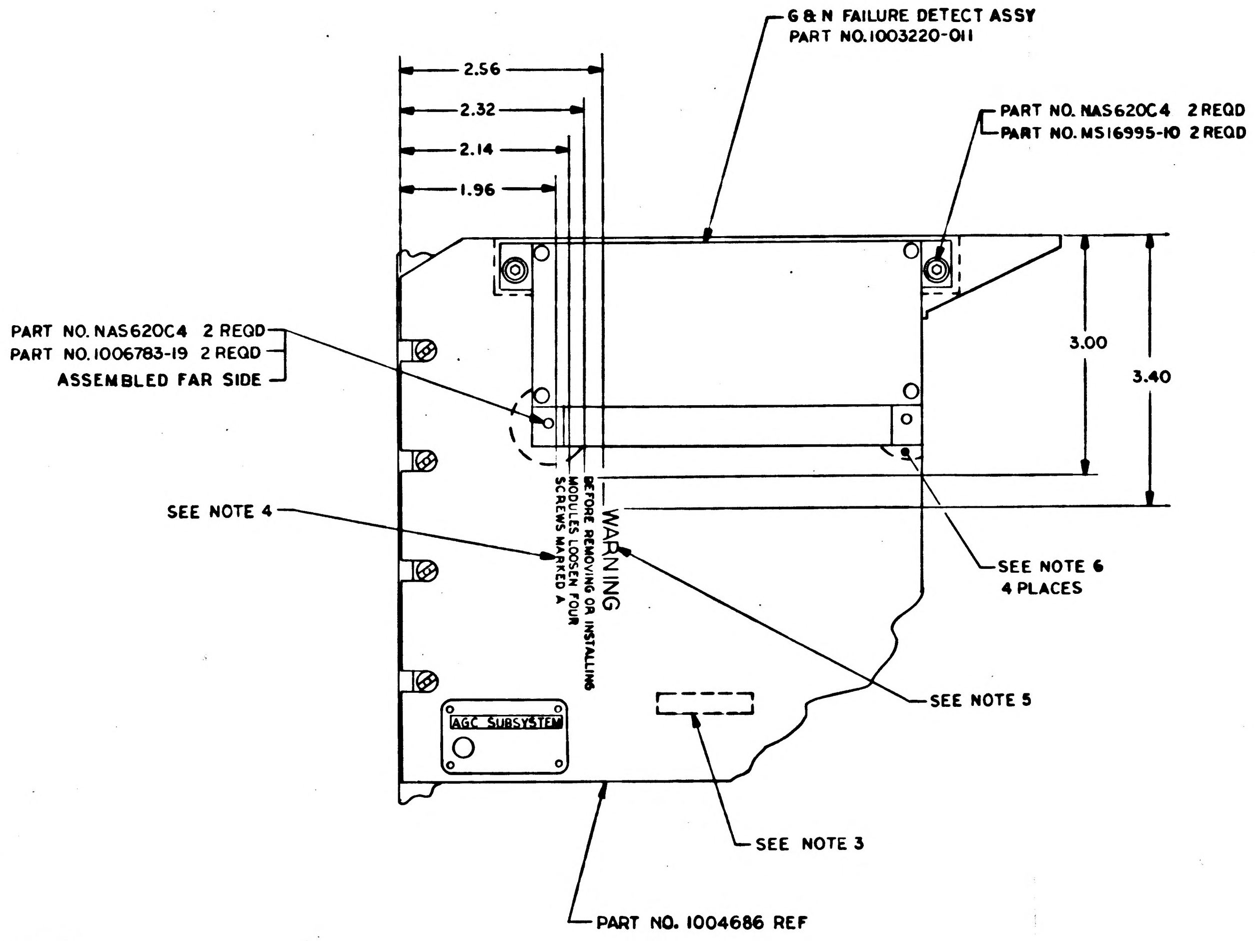
G & N FAILURE DETECT ASSY
PART NO. 1003220-011
PART NO. NAS620C4 2 REQD
PART NO. MS16995-10 2 REQD
2.56
2.32
2.14
1.96
3.00
3.40
PART NO. NAS620C4 2 REQD
PART NO. 1006783-19 2 REQD
ASSEMBLED FAR SIDE
SEE NOTE 4
WARNING
BEFORE REMOVING OR INSTALLING MODULES LOOSEN FOUR SCREWS MARKED A
SEE NOTE 6
4 PLACES
SEE NOTE 5
AGC SUBSYSTEM
SEE NOTE 3
PART NO. 1004686 REF

NOTES
1. MAKE FROM TABLE I
2. INTERPRET DRAWING IN ACCORDANCE WITH STANDARDS PRESCRIBED BY MIL-D-70327
3. RE-IDENTIFY IN ACCORDANCE WITH R.I.B. NO. 0104049
4. MARK .08/.10 HIGH WHITE CHARACTERS PER ND1002019 AND ND1002122, TYPE II, CLASS I, USING INK 1006271-1
5. MARK .18/.20 HIGH WHITE CHARACTERS PER ND1002019 AND ND1002122, TYPE II, CLASS I, USING INK 1006271-1
6. AFTER ASSEMBLY OF PART NO. 1003220-011 TO PART NO. 1004686, TOUCH-UP INDICATED AREAS PER 1002040

TABLE I

PART NO.	MAKE FROM
1003563-031	1003707-031
1003563-021	1003707-021
1003563-011	1003707-011
1003563-041	1003576-011

QTY REQD	PART OR IDENTIFYING NO.	MATERIAL OR NOTES	NOMENCLATURE OR DESCRIPTION	FIND NO.

LIST OF MATERIALS

MASTER

NEXT ASSY	USED ON
APPLICATION	

UNLESS OTHERWISE SPECIFIED
DIMENSIONS ARE IN INCHES
CAPACITOR VALUES ARE IN µf
RESISTOR VALUES ARE IN OHMS
TOLERANCES ON
FRACTIONS ± DECIMALS ±.02 ANGLES ±
DO NOT SCALE THIS DRAWING
MATERIAL

MIT
INSTRUMENTATION LAB
CAMBRIDGE, MASS.

DRAWN 1 NOV 65
CHECKED
APPROVED
APPROVED
APPROVED MIT W Kupfer
APPROVED MSC A. O. METZGER
DATE

MANNED SPACECRAFT CENTER
HOUSTON, TEXAS

INSTRUCTION DRAWING
FOR R.I.B. NO. 0104049
AGC MAIN DSKY ASSY
100 SERIES

CODE IDENT NO. 80230
SIZE D
DRAWING NO. 1004879
SCALE 1/1
SHEET 1 OF 1

NOTICE — WHEN GOVERNMENT DRAWINGS, SPECIFICATIONS, OR OTHER DATA ARE USED FOR ANY PURPOSE OTHER THAN IN CONNECTION WITH A DEFINITELY RELATED GOVERNMENT PROCUREMENT OPERATION, THE UNITED STATES GOVERNMENT THEREBY INCURS NO RESPONSIBILITY NOR ANY OBLIGATION WHATSOEVER; AND THE FACT THAT THE GOVERNMENT MAY HAVE FORMULATED, FURNISHED, OR IN ANY WAY SUPPLIED THE SAID DRAWINGS, SPECIFICATIONS, OR OTHER DATA IS NOT TO BE REGARDED BY IMPLICATION OR OTHERWISE AS IN ANY MANNER LICENSING THE HOLDER OR ANY OTHER PERSON OR CORPORATION, OR CONVEYING ANY RIGHTS OR PERMISSION TO MANUFACTURE, USE, OR SELL ANY PATENTED INVENTION THAT MAY IN ANY WAY BE RELATED THERETO.

REVISIONS 24033

SYM	ZONE	DESCRIPTION	DR	CHK	DATE	APPROVED
A		REVISED PER TDRR 25312			1/26/66	
B		REVISED PER TDRR 31831			11/22/66	

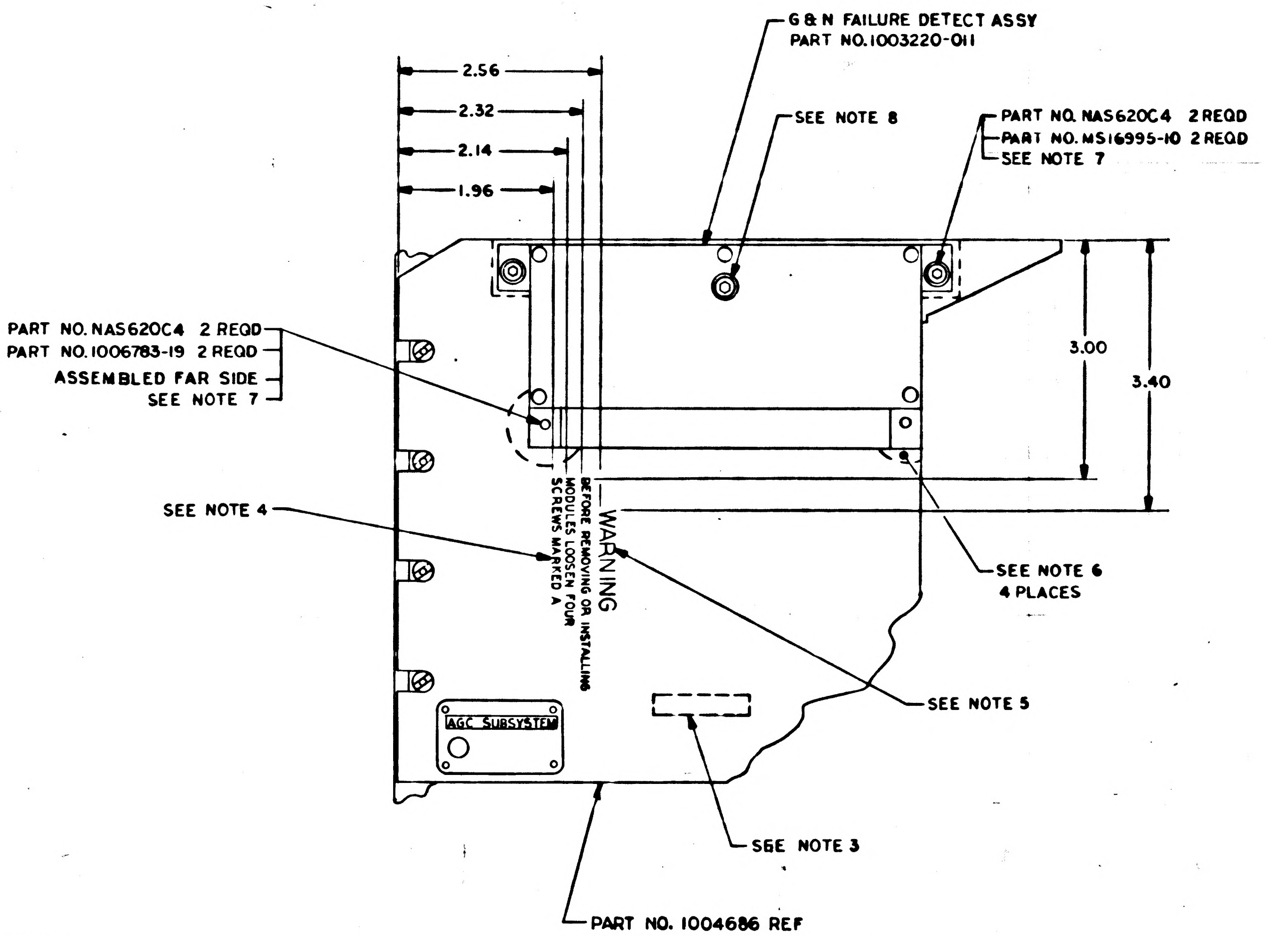
G & N FAILURE DETECT ASSY
PART NO. 1003220-011
2.56
2.32
2.14
1.96
SEE NOTE 8
PART NO. NAS620C4 2 REQD
PART NO. MS16995-10 2 REQD
SEE NOTE 7
3.00
3.40
PART NO. NAS620C4 2 REQD
PART NO. 1006783-19 2 REQD
ASSEMBLED FAR SIDE
SEE NOTE 7
SEE NOTE 4
WARNING
BEFORE REMOVING OR INSTALLING
MODULES LOOSEN FOUR
SCREWS MARKED A
SEE NOTE 6
4 PLACES
SEE NOTE 5
AGC SUBSYSTEM
SEE NOTE 3
PART NO. 1004686 REF

NOTES

1. MAKE FROM TABLE I
2. INTERPRET DRAWING IN ACCORDANCE WITH STANDARDS PRESCRIBED BY MIL-D-70327
3. RE-IDENTIFY IN ACCORDANCE WITH R.I.B. NO. 0104049
4. MARK .08/.10 HIGH WHITE CHARACTERS PER ND1002019 AND ND1002122, TYPE II, CLASS I, USING INK 1006271-1
5. MARK .18/.20 HIGH WHITE CHARACTERS PER ND1002019 AND ND1002122, TYPE II, CLASS I, USING INK 1006271-1
6. AFTER ASSEMBLY OF PART NO. 1003220-011 TO PART NO. 1004686, TOUCH-UP INDICATED AREAS PER 1002040
7. MOUNTING TORQUE TO BE 3 TO 5 INCH-POUNDS.
8. MOUNTING TORQUE TO BE 9 TO 10 INCH-POUNDS AND SHALL BE TORQUED PRIOR TO MOUNTING SCREWS OF G AND N FAILURE DETECT ASSY.

TABLE I

PART NO.	MAKE FROM
1003563-031	1003707-031
1003563-021	1003707-021
1003563-011	1003707-011
1003563-041	1003576-011

QTY REQD	PART OR IDENTIFYING NO.	MATERIAL OR NOTES	NOMENCLATURE OR DESCRIPTION	FIND NO.

LIST OF MATERIALS

NEXT ASSY	USED ON

APPLICATION

UNLESS OTHERWISE SPECIFIED
DIMENSIONS ARE IN INCHES
CAPACITOR VALUES ARE IN µf
RESISTOR VALUES ARE IN OHMS
TOLERANCES ON
FRACTIONS ± DECIMALS ±.02 ANGLES ±
DO NOT SCALE THIS DRAWING

MATERIAL

MIT
INSTRUMENTATION LAB
CAMBRIDGE, MASS.

DRAWN		1 NOV 65
CHECKED		
APPROVED		
APPROVED	Eldon C. Hall	
APPROVED MIT	W Kupfer	
APPROVED MSC	A. C. METZGER	DATE

MANNED SPACECRAFT CENTER
HOUSTON, TEXAS

INSTRUCTION DRAWING FOR R.I.B. NO. 0104049
AGC MAIN DSKY ASSY
100 SERIES

CODE IDENT NO. 80230
SIZE D
DRAWING NO. 1004879
SCALE 1/1
SHEET 1 OF 1

1004879 B

NOTICE – WHEN GOVERNMENT DRAWINGS, SPECIFICATIONS, OR OTHER DATA ARE USED FOR ANY PURPOSE OTHER THAN IN CONNECTION WITH A DEFINITELY RELATED GOVERNMENT PROCUREMENT OPERATION THE UNITED STATES GOVERNMENT THEREBY INCURS NO RESPONSIBILITY NOR ANY OBLIGATION WHATSOEVER; AND THE FACT THAT THE GOVERNMENT MAY HAVE FORMULATED, FURNISHED, OR IN ANY WAY SUPPLIED THE SAID DRAWINGS, SPECIFICATIONS OR OTHER DATA IS NOT TO BE REGARDED BY IMPLICATION OR OTHERWISE AS IN ANY MANNER LICENSING THE HOLDER OR ANY OTHER PERSON OR CORPORATION, OR CONVEYING ANY RIGHTS OR PERMISSION TO MANUFACTURE, USE, OR SELL ANY PATENTED INVENTION THAT MAY IN ANY WAY BE RELATED THERETO.

REVISIONS 24033

SYM	ZONE	DESCRIPTION	DR	CHK	DATE	APPROVED

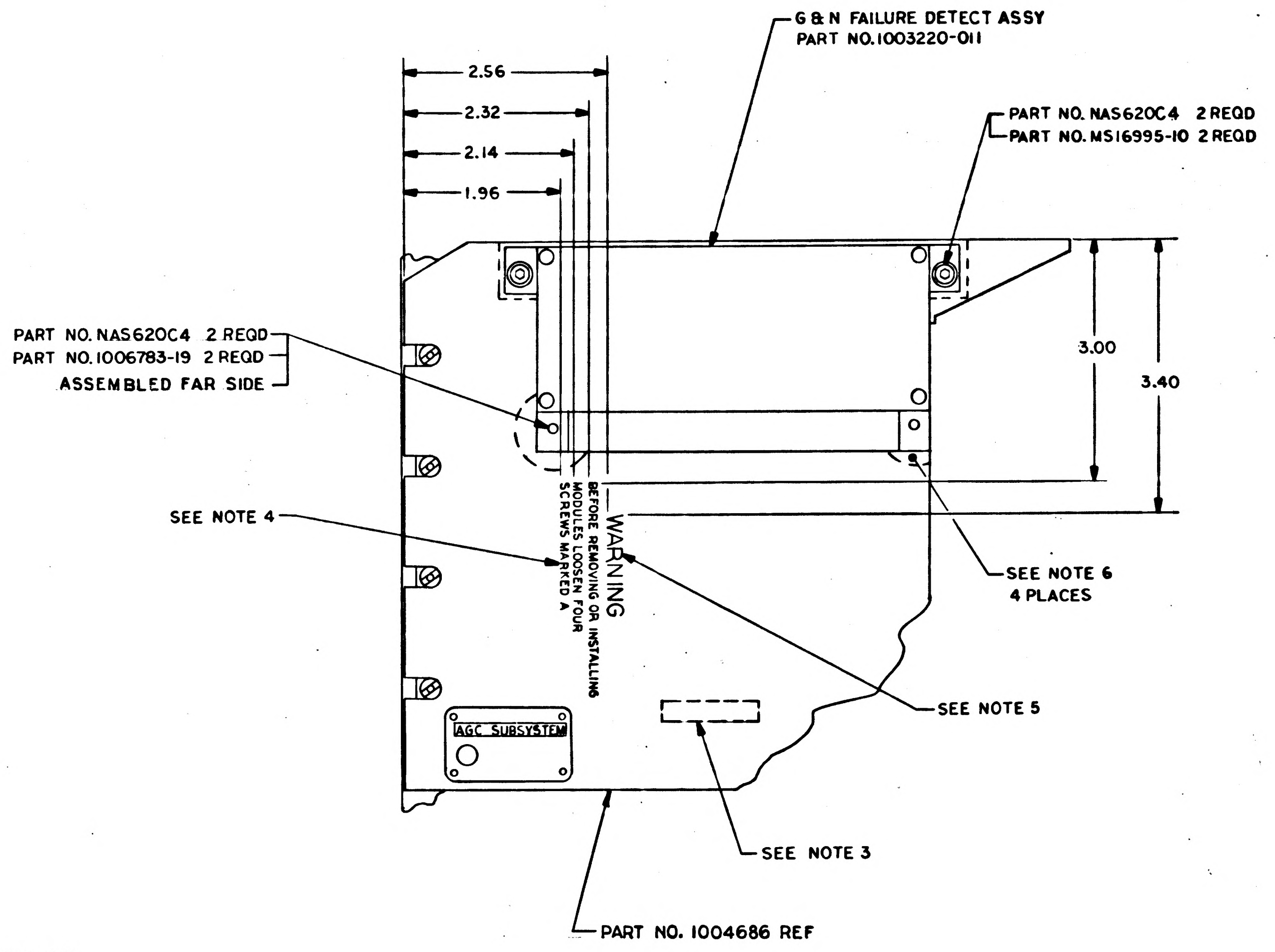
G & N FAILURE DETECT ASSY
PART NO. 1003220-011
2.56
2.32
2.14
1.96
PART NO. NAS620C4 2 REQD
PART NO. MS16995-10 2 REQD
PART NO. NAS620C4 2 REQD
PART NO. 1006783-19 2 REQD
ASSEMBLED FAR SIDE
3.00
3.40
SEE NOTE 4
WARNING
BEFORE REMOVING OR INSTALLING
MODULES LOOSEN FOUR
SCREWS MARKED A
SEE NOTE 6
4 PLACES
SEE NOTE 5
AGC SUBSYSTEM
SEE NOTE 3
PART NO. 1004686 REF

NOTES

1. MAKE FROM TABLE I
2. INTERPRET DRAWING IN ACCORDANCE WITH STANDARDS PRESCRIBED BY MIL-D-70327
3. RE-IDENTIFY IN ACCORDANCE WITH R.I.B. NO 0104060
4. MARK .08/.10 HIGH WHITE CHARACTERS PER ND1002019 AND ND1002122, TYPE II, CLASS I, USING INK 1006271-1
5. MARK .18/.20 HIGH WHITE CHARACTERS PER ND1002019 AND ND1002122, TYPE II, CLASS I, USING INK 1006271-1
6. AFTER ASSEMBLY OF PART NO. 1003220-011 TO PART NO. 1004686, TOUCH-UP INDICATED AREAS PER 1002040

TABLE I

PART NO.	MAKE FROM
1003563-031	1003707-031
1003563-021	1003707-021
1003563-011	1003707-011

QTY REQD	PART OR IDENTIFYING NO.	MATERIAL OR NOTES	NOMENCLATURE OR DESCRIPTION	FIND NO.

LIST OF MATERIALS

MASTER

NEXT ASSY	USED ON
APPLICATION	

UNLESS OTHERWISE SPECIFIED
DIMENSIONS ARE IN INCHES
CAPACITOR VALUES ARE IN μf
RESISTOR VALUES ARE IN OHMS
TOLERANCES ON
FRACTIONS ± DECIMALS ±.02 ANGLES ±
DO NOT SCALE THIS DRAWING

MATERIAL

MIT
INSTRUMENTATION LAB
CAMBRIDGE, MASS.

DRAWN Kuhlsingaan 1 NOV 65
CHECKED 30Nov65
APPROVED
APPROVED Eldon C Hall 3Nov65
APPROVED MIT W Kupfer 16Nov65
APPROVED MSC A. C. METZGER
DATE

MANNED SPACECRAFT CENTER
HOUSTON, TEXAS

INSTRUCTION DRAWING
FOR R.I.B. NO. 0104049
AGC MAIN DSKY ASSY
100 SERIES

CODE IDENT NO. 80230
SIZE D
DRAWING NO. 1004879
SCALE 1/1
SHEET 1 OF 1

1004879

NOTICE - WHEN GOVERNMENT DRAWINGS, SPECIFICATIONS, OR OTHER DATA ARE USED FOR ANY PURPOSE OTHER THAN IN CONNECTION WITH A DEFINITELY RELATED GOVERNMENT PROCUREMENT OPERATION, THE UNITED STATES GOVERNMENT THEREBY INCURS NO RESPONSIBILITY NOR ANY OBLIGATION WHATSOEVER; AND THE FACT THAT THE GOVERNMENT MAY HAVE FORMULATED, FURNISHED, OR IN ANY WAY SUPPLIED THE SAID DRAWINGS, SPECIFICATIONS OR OTHER DATA IS NOT TO BE REGARDED BY IMPLICATION OR OTHERWISE AS IN ANY MANNER LICENSING THE HOLDER OR ANY OTHER PERSON OR CORPORATION, OR CONVEYING ANY RIGHTS OR PERMISSION TO MANUFACTURE, USE, OR SELL ANY PATENTED INVENTION THAT MAY IN ANY WAY BE RELATED THERETO.

REVISIONS 24842

SYM	ZONE	DESCRIPTION	DR	CHK	DATE	APPROVED

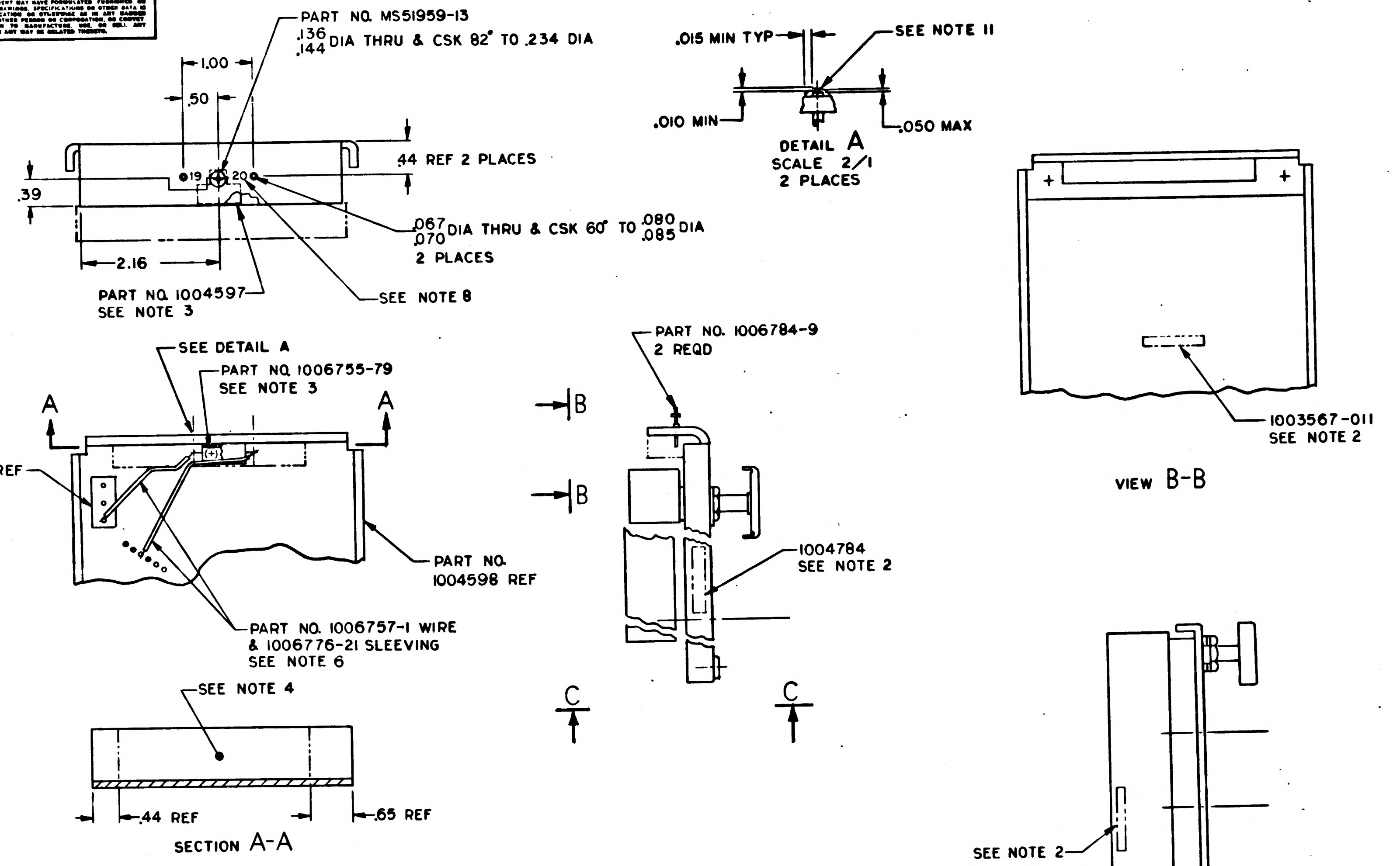

PART NO. MS51959-13
.136/.144 DIA THRU & CSK 82° TO .234 DIA
1.00
.50
.44 REF 2 PLACES
.39
19
20
.067/.070 DIA THRU & CSK 60° TO .080/.085 DIA
2 PLACES
2.16
PART NO. 1004597
SEE NOTE 3
SEE NOTE 8
.015 MIN TYP
SEE NOTE 11
.010 MIN
.050 MAX
DETAIL A
SCALE 2/1
2 PLACES
SEE DETAIL A
PART NO. 1006755-79
SEE NOTE 3
A
A
517 REF
PART NO. 1004598 REF
PART NO. 1006757-1 WIRE & 1006776-21 SLEEVING
SEE NOTE 6
SEE NOTE 4
.44 REF
.65 REF
SECTION A-A
B
B
PART NO. 1006784-9
2 REQD
1004784
SEE NOTE 2
C
C
1003567-011
SEE NOTE 2
VIEW B-B
SEE NOTE 2
VIEW C-C

NOTES

1. MAKE FROM KEYBOARD MOD ASSY DWG NO. 1003549
2. RE-IDENTIFY WITH PART NO. AS SHOWN IN ACCORDANCE WITH R. L. B.
3. BOND 1006755-79 TO 1004597 AND 1004597 TO 1004598 PER ND 1002004, TYPE V
4. ENCAPSULATE INDICATED AREA PER ND1002217
5. INTERPRET DRAWING IN ACCORDANCE WITH STANDARDS PRESCRIBED BY MIL-D-70327
6. ALL CONNECTIONS TO BE MADE BY WELDING PER ND1002005
7. WORKMANSHIP, FABRICATION & INSPECTION REQUIREMENTS PER ND1002069
8. MARK .08 HIGH WHITE PER ND1002019 & ND1002122, TYPE II, CLASS I USING MARKING INK 1006271-1 APPROX AS SHOWN
9. REMOVE TERMINAL MARKING NO. 8 & 15
10. + DENOTES POSITIVE SIDE OF CAPACITOR
11. CUT TERMINALS 19 AND 20 AS SHOWN AND ENCAPSULATE PER ND1002004 TYPE VI

PART NO. 1004784

PART NO. 1003567-011 ASSY

QTY REQD	PART OR IDENTIFYING NO.	MATERIAL OR NOTES	NOMENCLATURE OR DESCRIPTION	FIND NO.

LIST OF MATERIALS

NEXT ASSY	USED ON

APPLICATION

UNLESS OTHERWISE SPECIFIED
DIMENSIONS ARE IN INCHES
CAPACITOR VALUES ARE IN µf
RESISTOR VALUES ARE IN OHMS
TOLERANCES ON
FRACTIONS ± DECIMALS .XX ±.02 .XXX ±.005 ANGLES ± 2°
DO NOT SCALE THIS DRAWING

MATERIAL

MIT
INSTRUMENTATION LAB
CAMBRIDGE, MASS.

DRAWN K W Simpson 7 DEC 65
CHECKED J C Joubert 9 DEC 65
APPROVED
APPROVED Eldon C Hall 21 Dec 65
APPROVED MIT W 22 Dec 65
APPROVED MSC A. C. METZGER
DATE

MANNED SPACECRAFT CENTER
HOUSTON, TEXAS

INSTRUCTION DRAWING
FOR KIT NO. 8104096
KEYBOARD MODULE ASSEMBLY D18
AGC DSKY, MAIN

CODE IDENT NO. 80230
SIZE D
DRAWING NO. 1004893
SCALE 1/1
SHEET 1 OF 1

1004893

MASTER

NOTICE — WHEN GOVERNMENT DRAWINGS, SPECIFICATIONS, OR OTHER DATA ARE USED FOR ANY PURPOSE OTHER THAN IN CONNECTION WITH A DEFINITELY RELATED GOVERNMENT PROCUREMENT OPERATION, THE UNITED STATES GOVERNMENT THEREBY INCURS NO RESPONSIBILITY NOR ANY OBLIGATION WHATSOEVER; AND THE FACT THAT THE GOVERNMENT MAY HAVE FORMULATED, FURNISHED, OR IN ANY WAY SUPPLIED THE SAID DRAWINGS, SPECIFICATIONS OR OTHER DATA IS NOT TO BE REGARDED BY IMPLICATION OR OTHERWISE AS IN ANY MANNER LICENSING THE HOLDER OR ANY OTHER PERSON OR CORPORATION, OR CONVEYING ANY RIGHTS OR PERMISSION TO MANUFACTURE, USE, OR SELL ANY PATENTED INVENTION THAT MAY IN ANY WAY BE RELATED THERETO.

REVISIONS 24842

SYM	ZONE	DESCRIPTION	DR	CHK	DATE	APPROVED

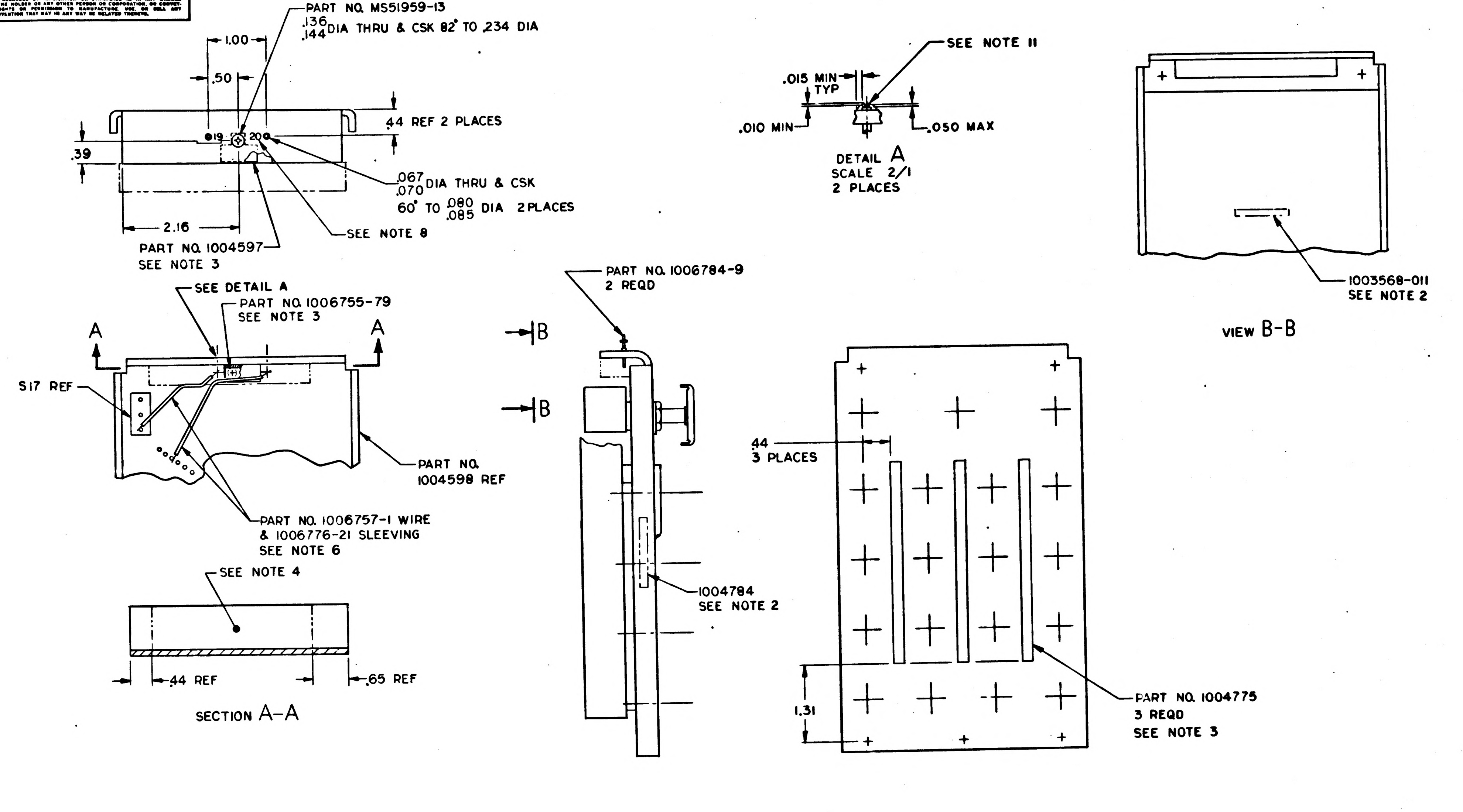
PART NO. MS51959-13
.136/.144 DIA THRU & CSK 82° TO .234 DIA
1.00
.50
.44 REF 2 PLACES
19
20
.39
.067/.070 DIA THRU & CSK
60° TO .080/.085 DIA 2 PLACES
2.16
PART NO. 1004597
SEE NOTE 3
SEE NOTE 8
SEE NOTE 11
.015 MIN TYP
.010 MIN
.050 MAX
DETAIL A
SCALE 2/1
2 PLACES
1003568-011
SEE NOTE 2
VIEW B-B
SEE DETAIL A
PART NO. 1006755-79
SEE NOTE 3
A
A
S17 REF
PART NO. 1004598 REF
PART NO. 1006757-1 WIRE
& 1006776-21 SLEEVING
SEE NOTE 6
PART NO. 1006784-9
2 REQD
B
B
1004784
SEE NOTE 2
.44
3 PLACES
1.31
PART NO. 1004775
3 REQD
SEE NOTE 3
SEE NOTE 4
.44 REF
.65 REF
SECTION A-A

NOTES
1. MAKE FROM KEYBOARD MOD ASSY DWG NO. 1003548
2. RE-IDENTIFY WITH PART NO. AS SHOWN IN ACCORDANCE WITH R. I. B.
3. BOND 1006755-79 TO 1004597 AND 1004597 AND 1004755 TO 1004598 PER ND 1002004, TYPE V
4. ENCAPSULATE INDICATED AREA PER ND 1002217
5. INTERPRET DRAWING IN ACCORDANCE WITH STANDARDS PRESCRIBED BY MIL-D-70327
6. ALL CONNECTIONS TO BE MADE BY WELDING PER ND1002005
7. WORKMANSHIP, FABRICATION & INSPECTION REQUIREMENTS PER ND1002069
8. MARK .08 HIGH WHITE PER ND1002019 & ND1002122, TYPE II, CLASS I USING MARKING INK 1006271-1 APPROX AS SHOWN
9. REMOVE TERMINAL MARKING NO. 8 & 15
10. + DENOTES POSITIVE SIDE OF CAPACITOR
11. CUT TERMINALS 19 AND 20 AS SHOWN AND ENCAPSULATE PER ND1002004 TYPE VI

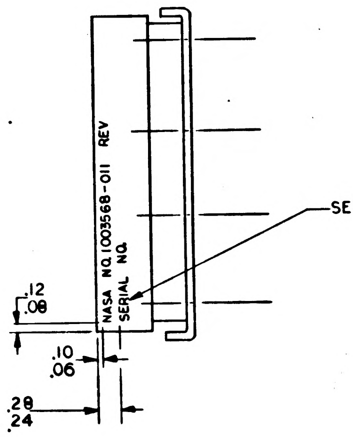
NASA NO. 1003568-011 REV
SERIAL NO.
SEE NOTE 8
.12
.08
.10
.06
.28
.24

MASTER

PART NO. 1004784
PART NO. 1003568-011 ASSY

QTY REQD	PART OR IDENTIFYING NO.	MATERIAL OR NOTES	NOMENCLATURE OR DESCRIPTION	FIND NO.

LIST OF MATERIALS

NEXT ASSY	USED ON
APPLICATION	

UNLESS OTHERWISE SPECIFIED
DIMENSIONS ARE IN INCHES
CAPACITOR VALUES ARE IN µf
RESISTOR VALUES ARE IN OHMS
TOLERANCES ON
FRACTIONS ± DECIMALS .XX ± .02 .XXX ± .005 ANGLES ± 2°
DO NOT SCALE THIS DRAWING
MATERIAL

MIT
INSTRUMENTATION LAB
CAMBRIDGE, MASS.

DRAWN K.W. Simpson 7 DEC 65
CHECKED C.C. J.C. Joubert 9 DEC 65
APPROVED
APPROVED Allan C Hall 21 Dec
APPROVED MIT W Kupfer 21 Dec 65
A. C. METZGER
APPROVED MSC
DATE

MANNED SPACECRAFT CENTER
HOUSTON, TEXAS

INSTRUCTION DRAWING
FOR KIT NO. 8104095
KEYBOARD MODULE ASSEMBLY D17
AGC DSKY, NAV

CODE IDENT NO. 80230
SIZE D
DRAWING NO. 1004894
SCALE 1/1
SHEET 1 OF 1

1004894

NOTICE – WHEN GOVERNMENT DRAWINGS, SPECIFICATIONS, OR OTHER DATA ARE USED FOR ANY PURPOSE OTHER THAN IN CONNECTION WITH A DEFINITELY RELATED GOVERNMENT PROCUREMENT OPERATION, THE UNITED STATES GOVERNMENT THEREBY INCURS NO RESPONSIBILITY NOR ANY OBLIGATION WHATSOEVER; AND THE FACT THAT THE GOVERNMENT MAY HAVE FORMULATED, FURNISHED, OR IN ANY WAY SUPPLIED THE SAID DRAWINGS, SPECIFICATIONS OR OTHER DATA IS NOT TO BE REGARDED BY IMPLICATION OR OTHERWISE AS IN ANY MANNER LICENSING THE HOLDER OR ANY OTHER PERSON OR CORPORATION, OR CONVEYING ANY RIGHTS OR PERMISSION TO MANUFACTURE, USE, OR SELL ANY PATENTED INVENTION THAT MAY IN ANY WAY BE RELATED THERETO.

REVISIONS

SYM	ZONE	DESCRIPTION	DR	CHK	DATE	APPROVED
—		INITIAL RELEASE CLASS A PER TDRR 28640			5-10-66	
A		REVISION STATUS CHANGED	PHG		16 JUL 66	

REQUIREMENTS:

1. GENERAL:

   A. INTERPRET DRAWING IN ACCORDANCE WITH STANDARDS PRESCRIBED BY MIL-D-70327.

   B. THIS UNIT SHALL MEET THE APPLICABLE REQUIREMENTS OF MIL-R-5757 WITH THE EXCEPTIONS AND ADDITIONS SPECIFIED HEREIN.

   C. THE SUPPLIER SHALL CONFORM TO THE QUALITY ASSURANCE PROVISIONS AS CONTAINED IN ND 1015404, CLASS 2.

   D. THIS UNIT SHALL BE CAPABLE OF MEETING THE QUALIFICATION REQUIREMENTS OF ND 1002046 UNLESS OTHERWISE SPECIFIED HEREIN. ELECTRICAL REQUIREMENTS CONTAINED HEREIN SHALL TAKE PRECEDENCE OVER THOSE LISTED IN ND 1002046. THE CLASSIFICATION OF THIS RELAY SHALL BE GENERAL PURPOSE.

   E. MARKING:

      (1) UNITS SHALL BE MARKED IN ACCORDANCE WITH ND 1002019 WITH THE FOLLOWING:

         NASA DRAWING NUMBER, DASH NUMBER AND REVISION LETTER.

         DATE CODE (SHALL CONSIST OF A FOUR DIGIT NUMBER, THE FIRST TWO DIGITS OF WHICH SHALL BE THE LAST TWO DIGITS OF THE YEAR, AND THE SECOND TWO DIGITS SHALL BE THE NUMBER OF THE WEEK OF THE YEAR).

         DC COIL RESISTANCE AT 25 DEGREES CENTIGRADE.

         MUST OPERATE VOLTAGE, MAXIMUM, @ 25°C.

         SCHEMATIC DIAGRAM.

         BLUE BEADING AROUND TERMINAL 1, OR TERMINALS 1 AND 9, OR A RED DOT BETWEEN TERMINALS 2 AND 3.

      (2) UNIT PACKAGES AND SHIPPING CONTAINERS SHALL BE MARKED IN ACCORDANCE WITH MIL-STD-129, BOTH INTERNALLY AND EXTERNALLY WITH THE NASA DRAWING NUMBER, DASH NUMBER AND REVISION LETTER, SUPPLIERS NAME, LOT NUMBER OR CODE, AND DATE OF MANUFACTURE.

   F. PREPARATION FOR DELIVERY SHALL BE IN ACCORDANCE WITH ND 1002215, CLASS I, CODE I.

      (1) MARKING OF SHIPPING CONTAINERS SHALL CONFORM TO THE MARKING OF UNIT AND INTERMEDIATE PACKAGES AND THE METHODS OF MARKING PER ND 1002215.

2. ACCEPTANCE AND INSPECTION: 100%

   A. MECHANICAL REQUIREMENTS:

      (1) DIMENSIONS: DIMENSIONS SHALL BE AS SPECIFIED HEREIN.

      (2) MARKING: PER NOTE 1.E.

      (3) LEAK RATE: UNITS SHALL BE DEGASSED, BACK FILLED TO ONE ATMOSPHERE PRESSURE (ABSOLUTE) WITH DRY NITROGEN (90%) AND HELIUM (10%) GASES, AND HERMETICALLY SEALED. 100 PERCENT OF THE UNITS SHALL BE TESTED PER MIL-STD-202, METHOD 112, TEST CONDITION C, PROCEDURE IV. THE LEAK RATE SHALL BE LESS THAN 10^{-8} CUBIC CENTIMETERS/SECOND AT 1 ATMOSPHERE PRESSURE DIFFERENTIAL.

   B. ELECTRICAL REQUIREMENTS:

      (1) COIL VOLTAGE: MUST OPERATE (EITHER DIRECTION) IN ACCORDANCE WITH TABLE I.

      (2) COIL RESISTANCE: IN ACCORDANCE WITH TABLE I.

      (3) CONTACT RESISTANCE: SHALL BE 0.05 OHM MAXIMUM WHEN MEASURED WITH 100 MILLIAMPERES FROM A 6 VDC OPEN CIRCUIT VOLTAGE (CONTACTS SHALL NOT SWITCH THE MEASURING LOAD). 100 PERCENT OF UNITS PROCURED SHALL BE INSPECTED FOR THIS CHARACTERISTIC.

      (4) DIELECTRIC STRENGTH:

         (a) AT SEA LEVEL: 800 VOLTS RMS MINIMUM FOR 30 SECONDS MINIMUM WITHOUT DAMAGE, ARCING OR BREAKDOWN BETWEEN EACH SWITCHING CIRCUIT AND OTHER CIRCUITS. 500 VOLTS RMS MINIMUM BETWEEN OPEN CONTACTS AND BETWEEN COILS AND BETWEEN COILS AND FRAME.

      (5) INSULATION RESISTANCE: 1K MEG OHM MINIMUM WHEN 500 VOLTS DC APPLIED BETWEEN MUTUALLY INSULATED CONTACTS, BETWEEN COIL & CONTACTS, BETWEEN CONTACTS & CASE, AND BETWEEN COIL & CASE.

      (6) OPERATE TIME, BOTH DIRECTIONS: EACH 10 MILLISECONDS MAXIMUM UNDER ALL CONDITIONS SPECIFIED IN TABLE I, WHEN A POSITIVE VOLTAGE IS APPLIED TO EITHER TERMINAL 1 OR TERMINAL 10; 4 MILLISECONDS MAX WHEN THE NORMAL RATED VOLTAGE IS APPLIED AT +25°C.

      (7) CONTACT BOUNCE: 4.0 MILLISECONDS MAXIMUM WHEN THE NORMAL RATED VOLTAGE IS APPLIED AT 25°C WITH CONTACT LOAD OF 100 MILLIAMPERES

PROCURE ONLY FROM APPROVED SOURCES LISTED IN ND 1002034 FOR THIS DRAWING.

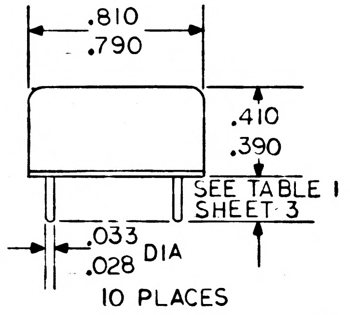

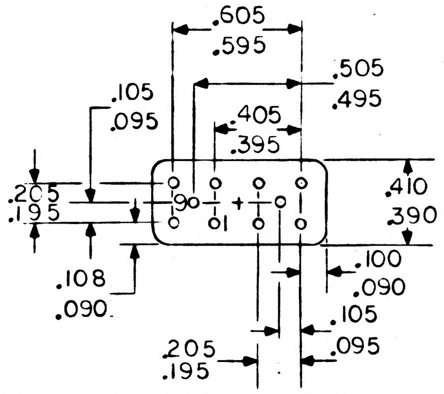

SCHEMATIC AND PIN LAYOUT
(FOR REFERENCE ONLY)

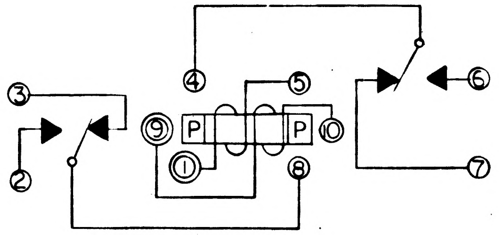

+ VOLTAGE ON PIN 1 CLOSES SWITCH AS SHOWN. + VOLTAGE ON PIN 10 REVERSES POSITION OF CONTACTS.

QTY REQD	PART OR IDENTIFYING NO.	MATERIAL OR NOTES	NOMENCLATURE OR DESCRIPTION	FIND NO.

LIST OF MATERIALS

NEXT ASSY	USED ON
APPLICATION	

UNLESS OTHERWISE SPECIFIED
DIMENSIONS ARE IN INCHES
CAPACITOR VALUES ARE IN μf
RESISTOR VALUES ARE IN OHMS
TOLERANCES ON
FRACTIONS ± DECIMALS ± ANGLES ±
DO NOT SCALE THIS DRAWING

MATERIAL
SEE NOTES

MIT
INSTRUMENTATION LAB
CAMBRIDGE, MASS.

MANNED SPACECRAFT CENTER
HOUSTON, TEXAS

DRAWN	Robert Selner	2 May 66
CHECKED		2 May 66
APPROVED		
APPROVED	Ellen C Hall	10 May 66
APPROVED MIT		5-10-66
APPROVED MSC	A. C. METZGER	DATE

RELAY, ARMATURE
MAGNETIC LATCHING
SPECIFICATION CONTROL DRAWING

CODE IDENT NO. 80230
SIZE C
DRAWING NO. 1005001
SCALE NONE
SHEET 1 OF 3

1005001 A

MODERN BLUE PRINT CO., INC. 02840

NOTICE – WHEN GOVERNMENT DRAWINGS, SPECIFICATIONS, OR OTHER DATA ARE USED FOR ANY PURPOSE OTHER THAN IN CONNECTION WITH A DEFINITELY RELATED GOVERNMENT PROCUREMENT OPERATION, THE UNITED STATES GOVERNMENT THEREBY INCURS NO RESPONSIBILITY NOR ANY OBLIGATION WHATSOEVER; AND THE FACT THAT THE GOVERNMENT MAY HAVE FORMULATED, FURNISHED, OR IN ANY WAY SUPPLIED THE SAID DRAWINGS, SPECIFICATIONS OR OTHER DATA IS NOT TO BE REGARDED BY IMPLICATION OR OTHERWISE AS IN ANY MANNER LICENSING THE HOLDER OR ANY OTHER PERSON OR CORPORATION, OR CONVEYING ANY RIGHTS OR PERMISSION TO MANUFACTURE, USE, OR SELL ANY PATENTED INVENTION THAT MAY IN ANY WAY BE RELATED THERETO.

REVISIONS						
SYM	ZONE	DESCRIPTION	DR	CHK	DATE	APPROVED
—		INITIAL RELEASE CLASS A PER TDRR 28640			5-10-66	
A		REVISION STATUS CHANGED	PHG	Y.M.		

NOTES: (CONTINUED)

3. DESIGN:

A. ELECTRICAL RATINGS:

(1) COIL VOLTAGE: IN ACCORDANCE WITH TABLE I.

(2) MAXIMUM COIL TRANSFER POWER: 200 MILLIWATTS MAXIMUM • 25°C.

(3) CONTACT RATINGS (PER POLE): 0.5 AMPS • 32 VDC (INDUCTIVE LOAD); OR, 1 AMP • 115 VRMS, 400 CPS (RESISTIVE LOAD, CASE NOT GROUNDED), OR 0.25 AMP (CASE GROUNDED); OR, 1.0 MILLIAMP • 250 VRMS, 800 CPS; • P.F. NOT MORE THAN 0.35 (CASE NOT GROUNDED); OR, 0.3 AMP • 5 VDC, LAMP LOAD (STEADY STATE). THESE RATINGS ARE APPLICABLE FOR THE LIFE REQUIREMENTS STATED IN 3.C.(1) ONLY IF COIL VOLTAGE IS NOT LESS THAN THE MUST-OPERATE VALUE PLUS 20 PERCENT.

(4) CONTACT CHATTER: 10.0 MICROSECONDS MAXIMUM DURING VIBRATION AND SHOCK AS SPECIFIED IN ND 1002046.

(5) DIELECTRIC STRENGTH (AT 70,000 FEET): 300 VOLTS RMS MINIMUM FOR 5 SECONDS MINIMUM WITHOUT DAMAGE, ARCING, OR BREAKDOWN BETWEEN EACH SWITCHING CIRCUIT AND ALL OTHER CONNECTIONS INCLUDING THE FRAME.

B. CONSTRUCTION:

(1) CONTACT FORM AND SWITCHING ACTION: 2 FORM C CONTACTS (BREAK BEFORE MAKE); DOUBLE POLE, DOUBLE THROW, POLARIZED WITH MAGNETIC LATCHING ACTION.

(2) LEAD MATERIAL: PER TABLE I.

(3) LEAD STRENGTH: UNITS SHALL WITHSTAND A FORCE OF 3 POUNDS PER MIL-R-5757.

(4) CASE: CASE MATERIAL SHALL BE CUPRO-NICKEL. CASE-TO-HEADER CONNECTION SHALL BE WELDED.

C. QUALIFICATION REQUIREMENTS:

(1) LIFE: LIFE OF THIS UNIT SHALL BE 100,000 CYCLES MINIMUM WHEN TESTED PER ND 1002046. FOR THE LIFE TESTS, THE CLASSIFICATION OF THIS RELAY SHALL BE GENERAL PURPOSE. CONTACT RESISTANCE AFTER LIFE WHEN MEASURED PER 2.B.(3) SHALL BE NOT MORE THAN 0.10 OHMS.

D. ENVIRONMENTAL REQUIREMENTS:

(1) HUMIDITY (MOISTURE RESISTANCE): UNITS SHALL BE CAPABLE OF WITHSTANDING RELATIVE HUMIDITY UP TO 98 PERCENT.

(2) OPERATING TEMPERATURE RANGE: UNITS SHALL BE CAPABLE OF OPERATING WITHIN THE ELECTRICAL REQUIREMENTS OF THIS SPECIFICATION WHEN EXPOSED TO AMBIENT TEMPERATURES FROM MINUS 65 DEGREES CENTIGRADE TO PLUS 125 DEGREES CENTIGRADE.

(3) THERMAL SHOCK: UNITS SHALL BE CAPABLE OF WITHSTANDING THERMAL SHOCK FROM MINUS 65 DEGREES CENTIGRADE TO PLUS 125 DEGREES CENTIGRADE.

(4) THE SALT SPRAY TEST PER MIL-R-5757 IS NOT APPLICABLE.

4. SPECIAL CONDITIONING:

A. THE MANUFACTURER SHALL SUBJECT ALL RELAYS TO THE FOLLOWING SEQUENCE OF TESTS:

(1) VIBRATION: THE UNITS SHALL BE SUBJECTED TO THE FOLLOWING TEST:

10 TO 2000 CPS, 0.12 INCH D.A. MAXIMUM, 20 G's IN THREE (3) MUTUALLY PERPENDICULAR PLANES; SWEEP TIME MINIMUM TO MAXIMUM TO MINIMUM CPS SHALL BE 20 MINUTES; UNITS SHALL BE LATCHED WITH A POSITIVE 13 VOLT DC PULSE OF 10 MILLISECOND WIDTH APPLIED TO PIN 1 PRIOR TO ASCENDING SWEEP; THE SAME PULSE SHALL BE APPLIED TO PIN 10 TO RESET UNIT PRIOR TO DESCENDING SWEEP; MAXIMUM ALLOWABLE CONTACT OPENING SHALL BE 10 MICROSECONDS AND THERE SHALL BE NO CLOSURE OF THE OPEN CONTACTS. IT IS PERMISSIBLE FOR THIS TEST TO BE PERFORMED AT A 30 G LEVEL.

(2) HIGH TEMPERATURE MISS TEST: THE RELAYS SHALL BE SUBJECTED TO +125°C WITH THE RATED COIL VOLTAGE PER TABLE I APPLIED FOR ONE HOUR PER COIL (TOTAL SOAK TIME IS 2 HOURS). RELAYS SHALL THEN BE OPERATED AT RATED COIL VOLTAGE FOR 2000 CYCLES AT A RATE OF 1 TO 3 CYCLES PER SECOND. CONTACT LOADING SHALL BE 30 MICROAMPS WITH A MAXIMUM OPEN CIRCUIT VOLTAGE OF 30 MILLIVOLTS. CONTACT RESISTANCE SHALL BE MONITORED CONTINUOUSLY AND SHALL NOT EXCEED 100 OHMS.

(3) INTERNAL MOISTURE TEST: FOLLOWING THE HIGH TEMPERATURE TEST, AND WHILE STILL AT +125°C, THE RELAYS SHALL BE ENERGIZED WITH RATED COIL VOLTAGE ON TERMINAL #1 WHILE THE TEMPERATURE OF THE CHAMBER IS LOWERED TO -65°C. AFTER REACHING THIS TEMPERATURE, THE RELAY SHALL BE CONDITIONED WHILE ENERGIZED FOR ONE HOUR. AT THE END OF THIS PERIOD, THE RELAY COIL SHALL BE DE-ENERGIZED AND RATED COIL VOLTAGE APPLIED TO TERMINAL #10 AND THE CONTACT RESISTANCE OF THE CLOSED CONTACTS SHALL BE MEASURED USING 100 MILLIAMPS FROM A 6 VOLT SOURCE. THE RESISTANCE SHALL NOT EXCEED 1 OHM. AN ALTERNATE MEASUREMENT IS PERMISSIBLE USING A 30 MICROAMP FROM A 30 MILLIVOLT SOURCE WITH A NOT TO EXCEED RESISTANCE OF 100 OHMS.

(4) LOW TEMPERATURE TEST: FOLLOWING THE INTERNAL MOISTURE TEST, THE RELAYS SHALL BE SUBJECTED TO -65°C FOR TWO HOURS WITH NO COIL VOLTAGE APPLIED. RELAYS SHALL THEN BE SUBJECTED TO THE MISS TEST AS SPECIFIED IN PARA. 4.A.(2).

(5) DISPOSITION OF RELAYS WITH HIGH CONTACT RESISTANCE: ALL RELAYS EXHIBITING A CONTACT RESISTANCE OF MORE THAN 100 OHMS IN PARA 4.A.(2) AND 4.A.(4) TESTS SHALL BE REJECTED AND ANALYZED TO DETERMINE CAUSE. THE PURCHASER SHALL BE INFORMED OF THE NUMBER OF UNITS IN EACH LOT WHICH FAIL THESE TESTS.

QTY REQD	PART OR IDENTIFYING NO.	MATERIAL OR NOTES	NOMENCLATURE OR DESCRIPTION	FIND NO.
LIST OF MATERIALS				

NEXT ASSY	USED ON
APPLICATION	

UNLESS OTHERWISE SPECIFIED
DIMENSIONS ARE IN INCHES
CAPACITOR VALUES ARE IN µf
RESISTOR VALUES ARE IN OHMS
TOLERANCES ON
FRACTIONS ± DECIMALS ± ANGLES ±
DO NOT SCALE THIS DRAWING

MATERIAL

SEE NOTES

MIT
INSTRUMENTATION LAB
CAMBRIDGE, MASS.

DRAWN	George Trifahas	2 MAY 66
CHECKED		2 MAY 66
APPROVED		
APPROVED	Eldon C Hall	10 May 66
APPROVED MIT	R. C. METZGER	5-10-66
APPROVED MSC		DATE

MANNED SPACECRAFT CENTER
HOUSTON, TEXAS

RELAY, ARMATURE
MAGNETIC LATCHING
SPECIFICATION CONTROL DRAWING

CODE IDENT NO.	SIZE	DRAWING NO.
80230	C	1005001
SCALE NONE		SHEET 2 OF 3

1005001 A

NOTICE – WHEN GOVERNMENT DRAWINGS, SPECIFICATIONS, OR OTHER DATA ARE USED FOR ANY PURPOSE OTHER THAN IN CONNECTION WITH A DEFINITELY RELATED GOVERNMENT PROCUREMENT OPERATION, THE UNITED STATES GOVERNMENT THEREBY INCURS NO RESPONSIBILITY NOR ANY OBLIGATION WHATSOEVER; AND THE FACT THAT THE GOVERNMENT MAY HAVE FORMULATED, FURNISHED, OR IN ANY WAY SUPPLIED THE SAID DRAWINGS, SPECIFICATIONS OR OTHER DATA IS NOT TO BE REGARDED BY IMPLICATION OR OTHERWISE AS IN ANY MANNER LICENSING THE HOLDER OR ANY OTHER PERSON OR CORPORATION, OR CONVEYING ANY RIGHTS OR PERMISSION TO MANUFACTURE, USE, OR SELL ANY PATENTED INVENTION THAT MAY IN ANY WAY BE RELATED THERETO.

REVISIONS						
SYM	ZONE	DESCRIPTION	DR	CHK	DATE	APPROVED
—		INITIAL RELEASE CLASS A PER TDRR 28640			5-10-66	
A		REVISED PER TDRR 30058	PHG	V.M.	16 JUL 66	

NOTES: (CONTINUED)

4. B. PULSED OPERATION TEST: ALL RELAYS SHALL BE TESTED FOR CORRECT OPERATION UNDER THE FOLLOWING CONDITIONS: @ 25°C:

(1) A POSITIVE 13.5 VDC PULSE SHALL BE ALTERNATELY APPLIED TO TERMINALS 1 AND 10. PULSE WIDTH SHALL BE 10 MILLISECONDS.

(2) RELAY SHALL BE ACTIVATED 10 TIMES IN EACH DIRECTION.

(3) CONTACT LOAD SHALL BE A HIGH IMPEDANCE NEON BULB FOR EACH STATIONARY CONTACT FOR VISUAL INDICATION OF CONTACT CLOSURE.

TABLE I

	COIL PARAMETERS					LEAD PARAMETERS	
		MUST-OPERATE VOLTAGE (VOLTS D.C.)			COIL RESISTANCE		
DASH NO.	NORMAL RATED COIL VOLTAGE VOLTS D.C.	MAX OVER TEMP RANGE PER NOTE 3-D-2	MIN (OVER AMBIENT TEMP RANGE)	MAX AT +25°C	RANGE AT +25°C (OHMS)	LEAD LENGTH MAX/MIN	LEAD MATERIAL
-1	26	18	5.0	13.5	765 TO 1100	.218/.172	CORE: ALLOY 426 SLEEVING: COMPOSITION NICKEL- 42.5% CHROMIUM - 5.75% SILICON - 0.25% MANGANESE - 0.5% CARBON - 0.10% IRON - BALANCE PLATING PER MIL-G-45204, TYPE II. COPPER OR NICKEL FLASHED.
-2	26	18	5.0	13.5	765 TO 1100	.218/.172	ALLOY 52, GOLD PLATED PER MIL-G-45204, TYPE II, NICKEL OR COPPER FLASHED.

QTY REQD	PART OR IDENTIFYING NO.	MATERIAL OR NOTES	NOMENCLATURE OR DESCRIPTION	FIND NO.

LIST OF MATERIALS

NEXT ASSY	USED ON
APPLICATION	

UNLESS OTHERWISE SPECIFIED
DIMENSIONS ARE IN INCHES
CAPACITOR VALUES ARE IN μf
RESISTOR VALUES ARE IN OHMS
TOLERANCES ON
FRACTIONS ± DECIMALS ± ANGLES ±
DO NOT SCALE THIS DRAWING

MATERIAL
SEE NOTES

MIT
INSTRUMENTATION LAB
CAMBRIDGE, MASS.

		DATE
DRAWN	George Tarpinian	2 MAY 66
CHECKED	C. Morrissey	2 MAY 66
APPROVED		
APPROVED	Eldon C Hall	10 May 66
APPROVED MIT	M. Worley A. C. METZGER	5-10-66
APPROVED MSC		

MANNED SPACECRAFT CENTER
HOUSTON, TEXAS

RELAY, ARMATURE
MAGNETIC LATCHING
SPECIFICATION CONTROL DRAWING

CODE IDENT NO.	SIZE	DRAWING NO.
80230	C	1005001
SCALE NONE		SHEET 3 OF 3

1005001 A

MODERN BLUE PRINT CO. D-19550

NOTICE – WHEN GOVERNMENT DRAWINGS, SPECIFICATIONS, OR OTHER DATA ARE USED FOR ANY PURPOSE OTHER THAN IN CONNECTION WITH A DEFINITELY RELATED GOVERNMENT PROCUREMENT OPERATION, THE UNITED STATES GOVERNMENT THEREBY INCURS NO RESPONSIBILITY NOR ANY OBLIGATION WHATSOEVER; AND THE FACT THAT THE GOVERNMENT MAY HAVE FORMULATED, FURNISHED, OR IN ANY WAY SUPPLIED THE SAID DRAWINGS, SPECIFICATIONS OR OTHER DATA IS NOT TO BE REGARDED BY IMPLICATION OR OTHERWISE AS IN ANY MANNER LICENSING THE HOLDER OR ANY OTHER PERSON OR CORPORATION, OR CONVEYING ANY RIGHTS OR PERMISSION TO MANUFACTURE, USE, OR SELL ANY PATENTED INVENTION THAT MAY IN ANY WAY BE RELATED THERETO.

REVISIONS						
SYM	ZONE	DESCRIPTION	DR	CHK	DATE	APPROVED
—		INITIAL RELEASE CLASS A PER TDRR 28640			5-10-66	
A		REVISION STATUS CHANGED	PHG		16 JUL 66	
B		REVISION STATUS CHANGED	AF		13JAN67	

REQUIREMENTS:

1. GENERAL:

A. INTERPRET DRAWING IN ACCORDANCE WITH STANDARDS PRESCRIBED BY MIL-D-70327.

B. THIS UNIT SHALL MEET THE APPLICABLE REQUIREMENTS OF MIL-R-5757 WITH THE EXCEPTIONS AND ADDITIONS SPECIFIED HEREIN.

C. THE SUPPLIER SHALL CONFORM TO THE QUALITY ASSURANCE PROVISIONS AS CONTAINED IN ND 1015404, CLASS 2.

D. THIS UNIT SHALL BE CAPABLE OF MEETING THE QUALIFICATION REQUIREMENTS OF ND 1002046 UNLESS OTHERWISE SPECIFIED HEREIN. ELECTRICAL REQUIREMENTS CONTAINED HEREIN SHALL TAKE PRECEDENCE OVER THOSE LISTED IN ND 1002046. THE CLASSIFICATION OF THIS RELAY SHALL BE GENERAL PURPOSE.

E. MARKING:

(1) UNITS SHALL BE MARKED IN ACCORDANCE WITH ND 1002019 WITH THE FOLLOWING:

NASA DRAWING NUMBER, DASH NUMBER AND REVISION LETTER.

DATE CODE (SHALL CONSIST OF A FOUR DIGIT NUMBER, THE FIRST TWO DIGITS OF WHICH SHALL BE THE LAST TWO DIGITS OF THE YEAR, AND THE SECOND TWO DIGITS SHALL BE THE NUMBER OF THE WEEK OF THE YEAR).

DC COIL RESISTANCE AT 25 DEGREES CENTIGRADE.

MUST OPERATE VOLTAGE, MAXIMUM, @ 25°C.

SCHEMATIC DIAGRAM.

BLUE BEADING AROUND TERMINAL 1, OR TERMINALS 1 AND 9, OR A RED DOT BETWEEN TERMINALS 2 AND 3.

(2) UNIT PACKAGES AND SHIPPING CONTAINERS SHALL BE MARKED IN ACCORDANCE WITH MIL-STD-129, BOTH INTERNALLY AND EXTERNALLY WITH THE NASA DRAWING NUMBER, DASH NUMBER AND REVISION LETTER, SUPPLIERS NAME, LOT NUMBER OR CODE, AND DATE OF MANUFACTURE.

F. PREPARATION FOR DELIVERY SHALL BE IN ACCORDANCE WITH ND 1002215, CLASS I, CODE I.

(1) MARKING OF SHIPPING CONTAINERS SHALL CONFORM TO THE MARKING OF UNIT AND INTERMEDIATE PACKAGES AND THE METHODS OF MARKING PER ND 1002215.

2. ACCEPTANCE AND INSPECTION: 100%

A. MECHANICAL REQUIREMENTS:

(1) DIMENSIONS: DIMENSIONS SHALL BE AS SPECIFIED HEREIN.

(2) MARKING: PER NOTE 1.E.

(3) LEAK RATE: UNITS SHALL BE DEGASSED, BACK FILLED TO ONE ATMOSPHERE PRESSURE (ABSOLUTE) WITH DRY NITROGEN (90%) AND HELIUM (10%) GASES, AND HERMETICALLY SEALED. 100 PERCENT OF THE UNITS SHALL BE TESTED PER MIL-STD-202, METHOD 112, TEST CONDITION C, PROCEDURE IV. THE LEAK RATE SHALL BE LESS THAN 10^{-8} CUBIC CENTIMETERS/SECOND AT 1 ATMOSPHERE PRESSURE DIFFERENTIAL.

B. ELECTRICAL REQUIREMENTS:

(1) COIL VOLTAGE: MUST OPERATE (EITHER DIRECTION) IN ACCORDANCE WITH TABLE I.

(2) COIL RESISTANCE: IN ACCORDANCE WITH TABLE I.

(3) CONTACT RESISTANCE: SHALL BE 0.05 OHM MAXIMUM WHEN MEASURED WITH 100 MILLIAMPERES FROM A 6 VDC OPEN CIRCUIT VOLTAGE (CONTACTS SHALL NOT SWITCH THE MEASURING LOAD). 100 PERCENT OF UNITS PROCURED SHALL BE INSPECTED FOR THIS CHARACTERISTIC.

(4) DIELECTRIC STRENGTH:

(a) AT SEA LEVEL: 800 VOLTS RMS MINIMUM FOR 30 SECONDS MINIMUM WITHOUT DAMAGE, ARCING OR BREAKDOWN BETWEEN EACH SWITCHING CIRCUIT AND OTHER CIRCUITS. 500 VOLTS RMS MINIMUM BETWEEN OPEN CONTACTS AND BETWEEN COILS AND BETWEEN COILS AND FRAME.

(5) INSULATION RESISTANCE: 1K MEG OHM MINIMUM WHEN 500 VOLTS DC APPLIED BETWEEN MUTUALLY INSULATED CONTACTS, BETWEEN COIL & CONTACTS, BETWEEN CONTACTS & CASE, AND BETWEEN COIL & CASE.

(6) OPERATE TIME, BOTH DIRECTIONS: EACH 10 MILLISECONDS MAXIMUM UNDER ALL CONDITIONS SPECIFIED IN TABLE I, WHEN A POSITIVE VOLTAGE IS APPLIED TO EITHER TERMINAL 1 OR TERMINAL 10; 4 MILLISECONDS MAX WHEN THE NORMAL RATED VOLTAGE IS APPLIED AT +25°C.

(7) CONTACT BOUNCE: 4.0 MILLISECONDS MAXIMUM WHEN THE NORMAL RATED VOLTAGE IS APPLIED AT 25°C WITH CONTACT LOAD OF 100 MILLIAMPERES

PROCURE ONLY FROM APPROVED SOURCES LISTED IN ND 1002034 FOR THIS DRAWING.

SCHEMATIC AND PIN LAYOUT
(FOR REFERENCE ONLY)

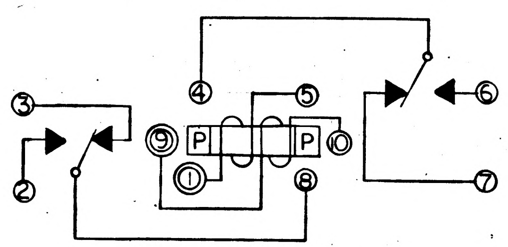

+ VOLTAGE ON PIN 1 CLOSES SWITCH AS SHOWN. + VOLTAGE ON PIN 10 REVERSES POSITION OF CONTACTS.

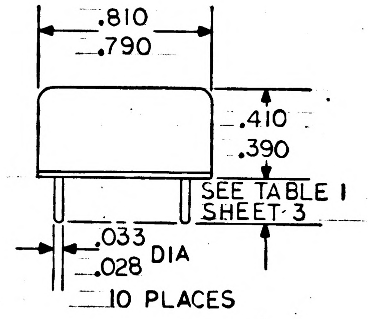

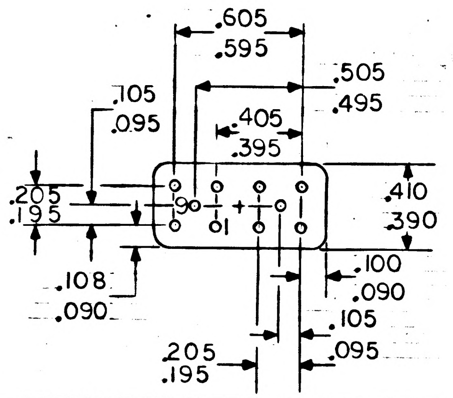

QTY REQD	PART OR IDENTIFYING NO.	MATERIAL OR NOTES	NOMENCLATURE OR DESCRIPTION	FIND NO.

LIST OF MATERIALS

NEXT ASSY	USED ON
APPLICATION	

UNLESS OTHERWISE SPECIFIED
DIMENSIONS ARE IN INCHES
CAPACITOR VALUES ARE IN µf
RESISTOR VALUES ARE IN OHMS
TOLERANCES ON
FRACTIONS ± DECIMALS ± ANGLES ±
DO NOT SCALE THIS DRAWING

MATERIAL
SEE NOTES

MIT
INSTRUMENTATION LAB
CAMBRIDGE, MASS.

DRAWN Robert Silver 2May66
CHECKED 2May66
APPROVED
APPROVED Eldon C Hall 10May66
APPROVED MIT 5-10-66
APPROVED MSC A. C. METZGER
DATE

MANNED SPACECRAFT CENTER
HOUSTON, TEXAS

RELAY, ARMATURE
MAGNETIC LATCHING
SPECIFICATION CONTROL DRAWING

CODE IDENT NO. 80230
SIZE C
DRAWING NO. 1005001
SCALE NONE
SHEET 1 OF 3

MODERN BLUE PRINT CO., INC. 02840

NOTICE – WHEN GOVERNMENT DRAWINGS, SPECIFICATIONS, OR OTHER DATA ARE USED FOR ANY PURPOSE OTHER THAN IN CONNECTION WITH A DEFINITELY RELATED GOVERNMENT PROCUREMENT OPERATION, THE UNITED STATES GOVERNMENT THEREBY INCURS NO RESPONSIBILITY NOR ANY OBLIGATION WHATSOEVER; AND THE FACT THAT THE GOVERNMENT MAY HAVE FORMULATED, FURNISHED, OR IN ANY WAY SUPPLIED THE SAID DRAWINGS, SPECIFICATIONS OR OTHER DATA IS NOT TO BE REGARDED BY IMPLICATION OR OTHERWISE AS IN ANY MANNER LICENSING THE HOLDER OR ANY OTHER PERSON OR CORPORATION, OR CONVEYING ANY RIGHTS OR PERMISSION TO MANUFACTURE, USE, OR SELL ANY PATENTED INVENTION THAT MAY IN ANY WAY BE RELATED THERETO.

Ⓜ

REVISIONS							
SYM	ZONE	DESCRIPTION	DR	CHK	DATE	APPROVED	
—		INITIAL RELEASE CLASS A PER TDRR 28640			5-10-66		
A		REVISION STATUS CHANGED	PHG	Y.M.			
B		REVISION STATUS CHANGED	AF	DW	13JAN67		

NOTES: (CONTINUED)

3. DESIGN:

A. ELECTRICAL RATINGS:

(1) COIL VOLTAGE: IN ACCORDANCE WITH TABLE I.

(2) MAXIMUM COIL TRANSFER POWER: 200 MILLIWATTS MAXIMUM @ 25°C.

(3) CONTACT RATINGS (PER POLE): 0.5 AMPS @ 32 VDC (INDUCTIVE LOAD); OR, 1 AMP @ 115 VRMS, 400 CPS (RESISTIVE LOAD, CASE NOT GROUNDED), OR 0.25 AMP (CASE GROUNDED); OR, 1.0 MILLIAMP @ 250 VRMS, 800 CPS; @ P.F. NOT MORE THAN 0.35 (CASE NOT GROUNDED); OR, 0.3 AMP @ 5 VDC, LAMP LOAD (STEADY STATE). THESE RATINGS ARE APPLICABLE FOR THE LIFE REQUIREMENTS STATED IN 3.C.(1) ONLY IF COIL VOLTAGE IS NOT LESS THAN THE MUST-OPERATE VALUE PLUS 20 PERCENT.

(4) CONTACT CHATTER: 10.0 MICROSECONDS MAXIMUM DURING VIBRATION AND SHOCK AS SPECIFIED IN ND 1002046.

(5) DIELECTRIC STRENGTH (AT 70,000 FEET): 300 VOLTS RMS MINIMUM FOR 5 SECONDS MINIMUM WITHOUT DAMAGE, ARCING, OR BREAKDOWN BETWEEN EACH SWITCHING CIRCUIT AND ALL OTHER CONNECTIONS INCLUDING THE FRAME.

B. CONSTRUCTION:

(1) CONTACT FORM AND SWITCHING ACTION: 2 FORM C CONTACTS (BREAK BEFORE MAKE); DOUBLE POLE, DOUBLE THROW, POLARIZED WITH MAGNETIC LATCHING ACTION.

(2) LEAD MATERIAL: PER TABLE I.

(3) LEAD STRENGTH: UNITS SHALL WITHSTAND A FORCE OF 3 POUNDS PER MIL-R-5757.

(4) CASE: CASE MATERIAL SHALL BE CUPRO-NICKEL. CASE-TO-HEADER CONNECTION SHALL BE WELDED.

C. QUALIFICATION REQUIREMENTS:

(1) LIFE: LIFE OF THIS UNIT SHALL BE 100,000 CYCLES MINIMUM WHEN TESTED PER ND 1002046. FOR THE LIFE TESTS, THE CLASSIFICATION OF THIS RELAY SHALL BE GENERAL PURPOSE. CONTACT RESISTANCE AFTER LIFE WHEN MEASURED PER 2.B.(3) SHALL BE NOT MORE THAN 0.10 OHMS.

D. ENVIRONMENTAL REQUIREMENTS:

(1) HUMIDITY (MOISTURE RESISTANCE): UNITS SHALL BE CAPABLE OF WITHSTANDING RELATIVE HUMIDITY UP TO 98 PERCENT.

(2) OPERATING TEMPERATURE RANGE: UNITS SHALL BE CAPABLE OF OPERATING WITHIN THE ELECTRICAL REQUIREMENTS OF THIS SPECIFICATION WHEN EXPOSED TO AMBIENT TEMPERATURES FROM MINUS 65 DEGREES CENTIGRADE TO PLUS 125 DEGREES CENTIGRADE.

(3) THERMAL SHOCK: UNITS SHALL BE CAPABLE OF WITHSTANDING THERMAL SHOCK FROM MINUS 65 DEGREES CENTIGRADE TO PLUS 125 DEGREES CENTIGRADE.

(4) THE SALT SPRAY TEST PER MIL-R-5757 IS NOT APPLICABLE.

4. SPECIAL CONDITIONING:

A. THE MANUFACTURER SHALL SUBJECT ALL RELAYS TO THE FOLLOWING SEQUENCE OF TESTS:

(1) VIBRATION: THE UNITS SHALL BE SUBJECTED TO THE FOLLOWING TEST:

10 TO 2000 CPS, 0.12 INCH D.A. MAXIMUM, 20 G's IN THREE (3) MUTUALLY PERPENDICULAR PLANES; SWEEP TIME MINIMUM TO MAXIMUM TO MINIMUM CPS SHALL BE 20 MINUTES; UNITS SHALL BE LATCHED WITH A POSITIVE 13 VOLT DC PULSE OF 10 MILLISECOND WIDTH APPLIED TO PIN 1 PRIOR TO ASCENDING SWEEP; THE SAME PULSE SHALL BE APPLIED TO PIN 10 TO RESET UNIT PRIOR TO DESCENDING SWEEP; MAXIMUM ALLOWABLE CONTACT OPENING SHALL BE 10 MICROSECONDS AND THERE SHALL BE NO CLOSURE OF THE OPEN CONTACTS. IT IS PERMISSIBLE FOR THIS TEST TO BE PERFORMED AT A 30 G LEVEL.

(2) HIGH TEMPERATURE MISS TEST: THE RELAYS SHALL BE SUBJECTED TO +125°C WITH THE RATED COIL VOLTAGE PER TABLE I APPLIED FOR ONE HOUR PER COIL (TOTAL SOAK TIME IS 2 HOURS). RELAYS SHALL THEN BE OPERATED AT RATED COIL VOLTAGE FOR 2000 CYCLES AT A RATE OF 1 TO 3 CYCLES PER SECOND. CONTACT LOADING SHALL BE 30 MICROAMPS WITH A MAXIMUM OPEN CIRCUIT VOLTAGE OF 30 MILLIVOLTS. CONTACT RESISTANCE SHALL BE MONITORED CONTINUOUSLY AND SHALL NOT EXCEED 100 OHMS.

(3) INTERNAL MOISTURE TEST: FOLLOWING THE HIGH TEMPERATURE TEST, AND WHILE STILL AT +125°C, THE RELAYS SHALL BE ENERGIZED WITH RATED COIL VOLTAGE ON TERMINAL #1 WHILE THE TEMPERATURE OF THE CHAMBER IS LOWERED TO -65°C. AFTER REACHING THIS TEMPERATURE, THE RELAY SHALL BE CONDITIONED WHILE ENERGIZED FOR ONE HOUR. AT THE END OF THIS PERIOD, THE RELAY COIL SHALL BE DE-ENERGIZED AND RATED COIL VOLTAGE APPLIED TO TERMINAL #10 AND THE CONTACT RESISTANCE OF THE CLOSED CONTACTS SHALL BE MEASURED USING 100 MILLIAMPS FROM A 6 VOLT SOURCE. THE RESISTANCE SHALL NOT EXCEED 1 OHM. AN ALTERNATE MEASUREMENT IS PERMISSIBLE USING A 30 MICROAMP FROM A 30 MILLIVOLT SOURCE WITH A NOT TO EXCEED RESISTANCE OF 100 OHMS.

(4) LOW TEMPERATURE TEST: FOLLOWING THE INTERNAL MOISTURE TEST, THE RELAYS SHALL BE SUBJECTED TO -65°C FOR TWO HOURS WITH NO COIL VOLTAGE APPLIED. RELAYS SHALL THEN BE SUBJECTED TO THE MISS TEST AS SPECIFIED IN PARA. 4.A.(2).

(5) DISPOSITION OF RELAYS WITH HIGH CONTACT RESISTANCE: ALL RELAYS EXHIBITING A CONTACT RESISTANCE OF MORE THAN 100 OHMS IN PARA 4.A.(2) AND 4.A.(4) TESTS SHALL BE REJECTED AND ANALYZED TO DETERMINE CAUSE. THE PURCHASER SHALL BE INFORMED OF THE NUMBER OF UNITS IN EACH LOT WHICH FAIL THESE TESTS.

QTY REQD	PART OR IDENTIFYING NO.	MATERIAL OR NOTES	NOMENCLATURE OR DESCRIPTION	FIND NO.

LIST OF MATERIALS

NEXT ASSY	USED ON

APPLICATION

UNLESS OTHERWISE SPECIFIED
DIMENSIONS ARE IN INCHES
CAPACITOR VALUES ARE IN μf
RESISTOR VALUES ARE IN OHMS
TOLERANCES ON
FRACTIONS ± DECIMALS ± ANGLES ±
DO NOT SCALE THIS DRAWING

MATERIAL
SEE NOTES

MIT
INSTRUMENTATION LAB
CAMBRIDGE, MASS.

MANNED SPACECRAFT CENTER
HOUSTON, TEXAS

		DATE
DRAWN	George Trifiikas	2MAY'66
CHECKED		2MAY66
APPROVED		
APPROVED	Eldon C Hall	10May66
APPROVED MIT		5/10/66
APPROVED MSC	A. C. METZGER	

RELAY, ARMATURE
MAGNETIC LATCHING
SPECIFICATION CONTROL DRAWING

CODE IDENT NO.	SIZE	DRAWING NO.
80230	C	1005001
SCALE NONE		SHEET 2 OF 3

1005001 B

NOTICE – WHEN GOVERNMENT DRAWINGS, SPECIFICATIONS, OR OTHER DATA ARE USED FOR ANY PURPOSE OTHER THAN IN CONNECTION WITH A DEFINITELY RELATED GOVERNMENT PROCUREMENT OPERATION, THE UNITED STATES GOVERNMENT THEREBY INCURS NO RESPONSIBILITY NOR ANY OBLIGATION WHATSOEVER; AND THE FACT THAT THE GOVERNMENT MAY HAVE FORMULATED, FURNISHED, OR IN ANY WAY SUPPLIED THE SAID DRAWINGS, SPECIFICATIONS OR OTHER DATA IS NOT TO BE REGARDED BY IMPLICATION OR OTHERWISE AS IN ANY MANNER LICENSING THE HOLDER OR ANY OTHER PERSON OR CORPORATION, OR CONVEYING ANY RIGHTS OR PERMISSION TO MANUFACTURE, USE, OR SELL ANY PATENTED INVENTION THAT MAY IN ANY WAY BE RELATED THERETO.

REVISIONS

SYM	ZONE	DESCRIPTION	DR	CHK	DATE	APPROVED
—		INITIAL RELEASE CLASS A PER TDRR 28640			5-10-66	
A		REVISED PER TDRR 30058	PHG	V.M.	16 JUL 66	
B		REVISED PER TDRR 32525	AF	DW	13JAN67	

NOTES: (CONTINUED)

4. B. PULSED OPERATION TEST: ALL RELAYS SHALL BE TESTED FOR CORRECT OPERATION UNDER THE FOLLOWING CONDITIONS: @ 25°C:

(1) A POSITIVE 13.5 VDC PULSE SHALL BE ALTERNATELY APPLIED TO TERMINALS 1 AND 10. PULSE WIDTH SHALL BE 10 MILLISECONDS.

(2) RELAY SHALL BE ACTIVATED 10 TIMES IN EACH DIRECTION.

(3) CONTACT LOAD SHALL BE A HIGH IMPEDANCE NEON BULB FOR EACH STATIONARY CONTACT FOR VISUAL INDICATION OF CONTACT CLOSURE.

TABLE I

	COIL PARAMETERS					LEAD PARAMETERS	
		MUST-OPERATE VOLTAGE (VOLTS D.C.)			COIL RESISTANCE		
DASH NO.	NORMAL RATED COIL VOLTAGE VOLTS D.C.	MAX OVER TEMP RANGE PER NOTE 3-D-2	MIN (OVER AMBIENT TEMP RANGE)	MAX AT +25°C	RANGE AT +25°C (OHMS)	LEAD LENGTH MAX/MIN	LEAD MATERIAL
-1	26	18	5.0	13.5	900 TO 1100	.218/.172	CORE: ALLOY 426 SLEEVING: COMPOSITION NICKEL - 42.5% CHROMIUM - 5.75% SILICON - 0.25% MANGANESE - 0.5% CARBON - 0.10% IRON - BALANCE PLATING PER MIL-G-45204, TYPE II. COPPER OR NICKEL FLASHED.
-2	26	18	5.0	13.5	900 TO 1100	.218/.172	ALLOY 52, COMPOSITION: NICKEL - 51% NOM. CARBON - 0.10% MAX. MANGANESE - 0.50% MAX. SILICON - .25% MAX. IRON - BALANCE PLATING: GOLD PLATED PER MIL-G-45204, TYPE II, NICKEL OR COPPER FLASHED.

QTY REQD	PART OR IDENTIFYING NO.	MATERIAL OR NOTES	NOMENCLATURE OR DESCRIPTION	FIND NO.

LIST OF MATERIALS

NEXT ASSY	USED ON
APPLICATION	

UNLESS OTHERWISE SPECIFIED
DIMENSIONS ARE IN INCHES
CAPACITOR VALUES ARE IN μf
RESISTOR VALUES ARE IN OHMS
TOLERANCES ON
FRACTIONS ± DECIMALS ± ANGLES ±
DO NOT SCALE THIS DRAWING

MATERIAL
SEE NOTES

MIT
INSTRUMENTATION LAB
CAMBRIDGE, MASS.

DRAWN 2MAY66
CHECKED 2MAY66
APPROVED
APPROVED Eldon C Hall 10May66
APPROVED MIT 5-10-66
A. G. METZGER
APPROVED MSC
DATE

MANNED SPACECRAFT CENTER
HOUSTON, TEXAS

RELAY, ARMATURE
MAGNETIC LATCHING
SPECIFICATION CONTROL DRAWING

CODE IDENT NO. 80230
SIZE C
DRAWING NO. 1005001
SCALE NONE
SHEET 3 OF 3

1005001 B

NOTICE – WHEN GOVERNMENT DRAWINGS, SPECIFICATIONS, OR OTHER DATA ARE USED FOR ANY PURPOSE OTHER THAN IN CONNECTION WITH A DEFINITELY RELATED GOVERNMENT PROCUREMENT OPERATION, THE UNITED STATES GOVERNMENT THEREBY INCURS NO RESPONSIBILITY NOR ANY OBLIGATION WHATSOEVER; AND THE FACT THAT THE GOVERNMENT MAY HAVE FORMULATED, FURNISHED, OR IN ANY WAY SUPPLIED THE SAID DRAWINGS, SPECIFICATIONS OR OTHER DATA IS NOT TO BE REGARDED BY IMPLICATION OR OTHERWISE AS IN ANY MANNER LICENSING THE HOLDER OR ANY OTHER PERSON OR CORPORATION, OR CONVEYING ANY RIGHTS OR PERMISSION TO MANUFACTURE, USE, OR SELL ANY PATENTED INVENTION THAT MAY IN ANY WAY BE RELATED THERETO.

REVISIONS						
SYM	ZONE	DESCRIPTION	DR	CHK	DATE	APPROVED
–		INITIAL RELEASE CLASS A PER TDRR 28640			5-10-66	
A		REVISION STATUS CHANGED	PHG		16 JUL 66	
B		~~REVISION STATUS CHANGED~~	AF		13 JAN 67	
C		REVISION STATUS CHANGED	A.N.		27 JUL 67	

REQUIREMENTS:

1. GENERAL:

A. INTERPRET DRAWING IN ACCORDANCE WITH STANDARDS PRESCRIBED BY MIL-D-70327.

B. THIS UNIT SHALL MEET THE APPLICABLE REQUIREMENTS OF MIL-R-5757 WITH THE EXCEPTIONS AND ADDITIONS SPECIFIED HEREIN.

C. THE SUPPLIER SHALL CONFORM TO THE QUALITY ASSURANCE PROVISIONS AS CONTAINED IN ND 1015404, CLASS 2.

D. THIS UNIT SHALL BE CAPABLE OF MEETING THE QUALIFICATION REQUIREMENTS OF ND 1002046 UNLESS OTHERWISE SPECIFIED HEREIN. ELECTRICAL REQUIREMENTS CONTAINED HEREIN SHALL TAKE PRECEDENCE OVER THOSE LISTED IN ND 1002046. THE CLASSIFICATION OF THIS RELAY SHALL BE GENERAL PURPOSE.

E. MARKING:

(1) UNITS SHALL BE MARKED IN ACCORDANCE WITH ND 1002019 WITH THE FOLLOWING:

NASA DRAWING NUMBER, DASH NUMBER AND REVISION LETTER.

DATE CODE (SHALL CONSIST OF A FOUR DIGIT NUMBER, THE FIRST TWO DIGITS OF WHICH SHALL BE THE LAST TWO DIGITS OF THE YEAR, AND THE SECOND TWO DIGITS SHALL BE THE NUMBER OF THE WEEK OF THE YEAR).

DC COIL RESISTANCE AT 25 DEGREES CENTIGRADE.

MUST OPERATE VOLTAGE, MAXIMUM, @ 25°C.

SCHEMATIC DIAGRAM.

BLUE BEADING AROUND TERMINAL 1, OR TERMINALS 1 AND 9, OR A RED DOT BETWEEN TERMINALS 2 AND 3.

(2) UNIT PACKAGES AND SHIPPING CONTAINERS SHALL BE MARKED IN ACCORDANCE WITH MIL-STD-129, BOTH INTERNALLY AND EXTERNALLY WITH THE NASA DRAWING NUMBER, DASH NUMBER AND REVISION LETTER, SUPPLIERS NAME, LOT NUMBER OR CODE, AND DATE OF MANUFACTURE.

F. PREPARATION FOR DELIVERY SHALL BE IN ACCORDANCE WITH ND 1002215, CLASS I, CODE I.

(1) MARKING OF SHIPPING CONTAINERS SHALL CONFORM TO THE MARKING OF UNIT AND INTERMEDIATE PACKAGES AND THE METHODS OF MARKING PER ND 1002215.

MASTER

2. ACCEPTANCE AND INSPECTION: 100%

A. MECHANICAL REQUIREMENTS:

(1) DIMENSIONS: DIMENSIONS SHALL BE AS SPECIFIED HEREIN.

(2) MARKING: PER NOTE 1.E.

(3) LEAK RATE: UNITS SHALL BE DEGASSED, BACK FILLED TO ONE ATMOSPHERE PRESSURE (ABSOLUTE) WITH DRY NITROGEN (90%) AND HELIUM (10%) GASES, AND HERMETICALLY SEALED. 100 PERCENT OF THE UNITS SHALL BE TESTED PER MIL-STD-202, METHOD 112, TEST CONDITION C, PROCEDURE IV. THE LEAK RATE SHALL BE LESS THAN 10^{-8} CUBIC CENTIMETERS/SECOND AT 1 ATMOSPHERE PRESSURE DIFFERENTIAL.

B. ELECTRICAL REQUIREMENTS:

(1) COIL VOLTAGE: MUST OPERATE (EITHER DIRECTION) IN ACCORDANCE WITH TABLE I.

(2) COIL RESISTANCE: IN ACCORDANCE WITH TABLE I.

(3) CONTACT RESISTANCE: SHALL BE 0.05 OHM MAXIMUM WHEN MEASURED WITH 100 MILLIAMPERES FROM A 6 VDC OPEN CIRCUIT VOLTAGE (CONTACTS SHALL NOT SWITCH THE MEASURING LOAD). 100 PERCENT OF UNITS PROCURED SHALL BE INSPECTED FOR THIS CHARACTERISTIC.

(4) DIELECTRIC STRENGTH:

(a) AT SEA LEVEL: 800 VOLTS RMS MINIMUM FOR 30 SECONDS MINIMUM WITHOUT DAMAGE, ARCING OR BREAKDOWN BETWEEN EACH SWITCHING CIRCUIT AND OTHER CIRCUITS. 500 VOLTS RMS MINIMUM BETWEEN OPEN CONTACTS AND BETWEEN COILS AND BETWEEN COILS AND FRAME.

(5) INSULATION RESISTANCE: 1K MEG OHM MINIMUM WHEN 500 VOLTS DC APPLIED BETWEEN MUTUALLY INSULATED CONTACTS, BETWEEN COIL & CONTACTS, BETWEEN CONTACTS & CASE, AND BETWEEN COIL & CASE.

(6) OPERATE TIME, BOTH DIRECTIONS: EACH 10 MILLISECONDS MAXIMUM UNDER ALL CONDITIONS SPECIFIED IN TABLE I, WHEN A POSITIVE VOLTAGE IS APPLIED TO EITHER TERMINAL 1 OR TERMINAL 10; 4 MILLISECONDS MAX WHEN THE NORMAL RATED VOLTAGE IS APPLIED AT +25°C.

(7) CONTACT BOUNCE: 4.0 MILLISECONDS MAXIMUM WHEN THE NORMAL RATED VOLTAGE IS APPLIED AT 25°C WITH CONTACT LOAD OF 100 MILLIAMPERES

PROCURE ONLY FROM APPROVED SOURCES LISTED IN ND 1002034 FOR THIS DRAWING.

SCHEMATIC AND PIN LAYOUT
(FOR REFERENCE ONLY)

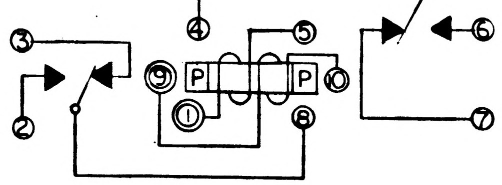

+ VOLTAGE ON PIN 1 CLOSES SWITCH AS SHOWN. + VOLTAGE ON PIN 10 REVERSES POSITION OF CONTACTS.

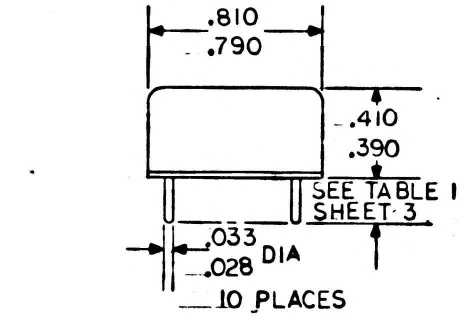

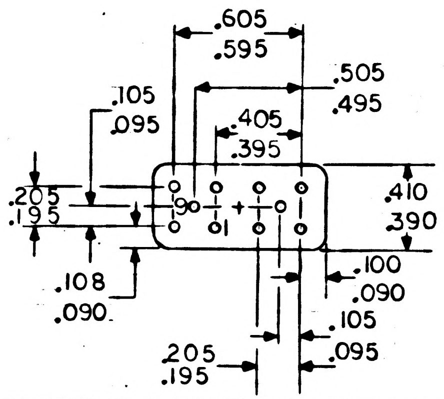

QTY REQD	PART OR IDENTIFYING NO.	MATERIAL OR NOTES	NOMENCLATURE OR DESCRIPTION	FIND NO.

LIST OF MATERIALS

NEXT ASSY	USED ON
APPLICATION	

UNLESS OTHERWISE SPECIFIED
DIMENSIONS ARE IN INCHES
CAPACITOR VALUES ARE IN µf
RESISTOR VALUES ARE IN OHMS
TOLERANCES ON
FRACTIONS ± DECIMALS ± ANGLES ±
DO NOT SCALE THIS DRAWING

MATERIAL
SEE NOTES

MIT
INSTRUMENTATION LAB
CAMBRIDGE, MASS.

DRAWN Robert Selner 2 May 66
CHECKED 2 May 66
APPROVED
APPROVED Eldon C Hall 10 May 66
APPROVED MIT 5-10-66
A. C. METZGER
APPROVED MSC
DATE

MANNED SPACECRAFT CENTER
HOUSTON, TEXAS

RELAY, ARMATURE
MAGNETIC LATCHING
SPECIFICATION CONTROL DRAWING

CODE IDENT NO.	SIZE	DRAWING NO.
80230	C	1005001
SCALE NONE		SHEET 1 OF 3

MODERN BLUE PRINT CO., INC. 02840

NOTICE – WHEN GOVERNMENT DRAWINGS, SPECIFICATIONS, OR OTHER DATA ARE USED FOR ANY PURPOSE OTHER THAN IN CONNECTION WITH A DEFINITELY RELATED GOVERNMENT PROCUREMENT OPERATION, THE UNITED STATES GOVERNMENT THEREBY INCURS NO RESPONSIBILITY NOR ANY OBLIGATION WHATSOEVER; AND THE FACT THAT THE GOVERNMENT MAY HAVE FORMULATED, FURNISHED, OR IN ANY WAY SUPPLIED THE SAID DRAWINGS, SPECIFICATIONS OR OTHER DATA IS NOT TO BE REGARDED BY IMPLICATION OR OTHERWISE AS IN ANY MANNER LICENSING THE HOLDER OR ANY OTHER PERSON OR CORPORATION, OR CONVEYING ANY RIGHTS OR PERMISSION TO MANUFACTURE, USE, OR SELL ANY PATENTED INVENTION THAT MAY IN ANY WAY BE RELATED THERETO.

(M)

REVISIONS						
SYM	ZONE	DESCRIPTION	DR	CHK	DATE	APPROVED
—		INITIAL RELEASE CLASS A PER TDRR 28640			5-10-66	
A		REVISION STATUS CHANGED	PHG	Y.M.		
B		REVISION STATUS CHANGED	AF	DW	13JAN67	
C		REVISED PER TDRR 33672	F.N.	ON	27JUL67	

NOTES: (CONTINUED)

3. DESIGN:

A. ELECTRICAL RATINGS:

(1) COIL VOLTAGE: IN ACCORDANCE WITH TABLE I.

(2) MAXIMUM COIL TRANSFER POWER: 200 MILLIWATTS MAXIMUM @ 25°C.

(3) CONTACT RATINGS (PER POLE): 0.5 AMPS @ 32 VDC (INDUCTIVE LOAD); OR, 1 AMP @ 115 VRMS, 400 CPS (RESISTIVE LOAD, CASE NOT GROUNDED), OR 0.25 AMP (CASE GROUNDED); OR, 1.0 MILLIAMP @ 250 VRMS, 800 CPS; @ P.F. NOT MORE THAN 0.35 (CASE NOT GROUNDED); OR, 0.3 AMP @ 5 VDC, LAMP LOAD (STEADY STATE). THESE RATINGS ARE APPLICABLE FOR THE LIFE REQUIREMENTS STATED IN 3.C.(1) ONLY IF COIL VOLTAGE IS NOT LESS THAN THE MUST-OPERATE VALUE PLUS 20 PERCENT.

(4) CONTACT CHATTER: 10.0 MICROSECONDS MAXIMUM DURING VIBRATION AND SHOCK AS SPECIFIED IN ND 1002046.

(5) DIELECTRIC STRENGTH (AT 70,000 FEET): 300 VOLTS RMS MINIMUM FOR 5 SECONDS MINIMUM WITHOUT DAMAGE, ARCING, OR BREAKDOWN BETWEEN EACH SWITCHING CIRCUIT AND ALL OTHER CONNECTIONS INCLUDING THE FRAME.

B. CONSTRUCTION:

(1) CONTACT FORM AND SWITCHING ACTION: 2 FORM C CONTACTS (BREAK BEFORE MAKE); DOUBLE POLE, DOUBLE THROW, POLARIZED WITH MAGNETIC LATCHING ACTION.

(2) LEAD MATERIAL: PER TABLE I.

(3) LEAD STRENGTH: UNITS SHALL WITHSTAND A FORCE OF 3 POUNDS PER MIL-R-5757.

(4) CASE: CASE MATERIAL SHALL BE CUPRO-NICKEL. CASE-TO-HEADER CONNECTION SHALL BE WELDED.

C. QUALIFICATION REQUIREMENTS:

(1) LIFE: LIFE OF THIS UNIT SHALL BE 100,000 CYCLES MINIMUM WHEN TESTED PER ND 1002046. FOR THE LIFE TESTS, THE CLASSIFICATION OF THIS RELAY SHALL BE GENERAL PURPOSE. CONTACT RESISTANCE AFTER LIFE WHEN MEASURED PER 2.B.(3) SHALL BE NOT MORE THAN 0.10 OHMS.

D. ENVIRONMENTAL REQUIREMENTS:

(1) HUMIDITY (MOISTURE RESISTANCE): UNITS SHALL BE CAPABLE OF WITHSTANDING RELATIVE HUMIDITY UP TO 98 PERCENT.

(2) OPERATING TEMPERATURE RANGE: UNITS SHALL BE CAPABLE OF OPERATING WITHIN THE ELECTRICAL REQUIREMENTS OF THIS SPECIFICATION WHEN EXPOSED TO AMBIENT TEMPERATURES FROM MINUS 65 DEGREES CENTIGRADE TO PLUS 125 DEGREES CENTIGRADE.

(3) THERMAL SHOCK: UNITS SHALL BE CAPABLE OF WITHSTANDING THERMAL SHOCK FROM MINUS 65 DEGREES CENTIGRADE TO PLUS 125 DEGREES CENTIGRADE.

(4) THE SALT SPRAY TEST PER MIL-R-5757 IS NOT APPLICABLE.

4. SPECIAL CONDITIONING:

A. THE MANUFACTURER SHALL SUBJECT ALL RELAYS TO THE FOLLOWING SEQUENCE OF TESTS:

(1) VIBRATION: THE UNITS SHALL BE SUBJECTED TO THE FOLLOWING TEST:

10 TO 2000 CPS, 0.12 INCH D.A. MAXIMUM, 20 G's IN THREE (3) MUTUALLY PERPENDICULAR PLANES; SWEEP TIME MINIMUM TO MAXIMUM TO MINIMUM CPS SHALL BE 20 MINUTES; UNITS SHALL BE LATCHED WITH A POSITIVE 13 VOLT DC PULSE OF 10 MILLISECOND WIDTH APPLIED TO PIN 1 PRIOR TO ASCENDING SWEEP; THE SAME PULSE SHALL BE APPLIED TO PIN 10 TO RESET UNIT PRIOR TO DESCENDING SWEEP; MAXIMUM ALLOWABLE CONTACT OPENING SHALL BE 10 MICROSECONDS AND THERE SHALL BE NO CLOSURE OF THE OPEN CONTACTS, WHEN MONITORED WITH DETECTION CIRCUITRY WITH A SENSITIVITY OF 1 MICROSECOND.

(2) HIGH TEMPERATURE MISS TEST: THE RELAYS SHALL BE SUBJECTED TO +125°C WITH THE RATED COIL VOLTAGE PER TABLE I APPLIED FOR ONE HOUR PER COIL (TOTAL SOAK TIME IS 2 HOURS). RELAYS SHALL THEN BE OPERATED AT RATED COIL VOLTAGE FOR 2000 CYCLES AT A RATE OF 1 TO 3 CYCLES PER SECOND. CONTACT LOADING SHALL BE 30 MICROAMPS WITH A MAXIMUM OPEN CIRCUIT VOLTAGE OF 30 MILLIVOLTS. CONTACT RESISTANCE SHALL BE MONITORED CONTINUOUSLY AND SHALL NOT EXCEED 100 OHMS.

(3) INTERNAL MOISTURE TEST: FOLLOWING THE HIGH TEMPERATURE TEST, AND WHILE STILL AT +125°C, THE RELAYS SHALL BE ENERGIZED WITH RATED COIL VOLTAGE ON TERMINAL #1 WHILE THE TEMPERATURE OF THE CHAMBER IS LOWERED TO -65°C. AFTER REACHING THIS TEMPERATURE, THE RELAY SHALL BE CONDITIONED WHILE ENERGIZED FOR ONE HOUR. AT THE END OF THIS PERIOD, THE RELAY COIL SHALL BE DE-ENERGIZED AND RATED COIL VOLTAGE APPLIED TO TERMINAL #10 AND THE CONTACT RESISTANCE OF THE CLOSED CONTACTS SHALL BE MEASURED USING 100 MILLIAMPS FROM A 6 VOLT SOURCE. THE RESISTANCE SHALL NOT EXCEED 1 OHM. AN ALTERNATE MEASUREMENT IS PERMISSIBLE USING A 30 MICROAMP FROM A 30 MILLIVOLT SOURCE WITH A NOT TO EXCEED RESISTANCE OF 100 OHMS.

(4) LOW TEMPERATURE TEST: FOLLOWING THE INTERNAL MOISTURE TEST, THE RELAYS SHALL BE SUBJECTED TO -65°C FOR TWO HOURS WITH NO COIL VOLTAGE APPLIED. RELAYS SHALL THEN BE SUBJECTED TO THE MISS TEST AS SPECIFIED IN PARA. 4.A.(2).

(5) DISPOSITION OF RELAYS WITH HIGH CONTACT RESISTANCE: ALL RELAYS EXHIBITING A CONTACT RESISTANCE OF MORE THAN 100 OHMS IN PARA 4.A.(2) AND 4.A.(4) TESTS SHALL BE REJECTED AND ANALYZED TO DETERMINE CAUSE. THE PURCHASER SHALL BE INFORMED OF THE NUMBER OF UNITS IN EACH LOT WHICH FAIL THESE TESTS.

(6) RELAYS SHALL BE SERIALIZED, AND THE MUST-OPERATE VOLTAGE IN BOTH DIRECTIONS AT 25°C SHALL BE RECORDED. A COPY OF THESE READINGS SHALL ACCOMPANY EACH SHIPMENT.

1005001 C

QTY REQD	PART OR IDENTIFYING NO.	MATERIAL OR NOTES	NOMENCLATURE OR DESCRIPTION	FIND NO.

LIST OF MATERIALS

NEXT ASSY	USED ON
APPLICATION	

UNLESS OTHERWISE SPECIFIED
DIMENSIONS ARE IN INCHES
CAPACITOR VALUES ARE IN μf
RESISTOR VALUES ARE IN OHMS
TOLERANCES ON
FRACTIONS DECIMALS ANGLES
± ± ±
DO NOT SCALE THIS DRAWING

MATERIAL
SEE NOTES

MIT
INSTRUMENTATION LAB
CAMBRIDGE, MASS.

MANNED SPACECRAFT CENTER
HOUSTON, TEXAS

DRAWN	George Trafikas	2MAY'66
CHECKED		2MAY66
APPROVED		
APPROVED	Eldon C. Hall	10May66
APPROVED MIT		5/10/66
	R. C. METZGER	
APPROVED MSC		DATE

RELAY, ARMATURE
MAGNETIC LATCHING
SPECIFICATION CONTROL DRAWING

CODE IDENT NO.	SIZE	DRAWING NO.
80230	C	1005001

SCALE NONE
SHEET 2 OF 3

MASTER

NOTICE – WHEN GOVERNMENT DRAWINGS, SPECIFICATIONS, OR OTHER DATA ARE USED FOR ANY PURPOSE OTHER THAN IN CONNECTION WITH A DEFINITELY RELATED GOVERNMENT PROCUREMENT OPERATION, THE UNITED STATES GOVERNMENT THEREBY INCURS NO RESPONSIBILITY NOR ANY OBLIGATION WHATSOEVER; AND THE FACT THAT THE GOVERNMENT MAY HAVE FORMULATED, FURNISHED, OR IN ANY WAY SUPPLIED THE SAID DRAWINGS, SPECIFICATIONS OR OTHER DATA IS NOT TO BE REGARDED BY IMPLICATION OR OTHERWISE AS IN ANY MANNER LICENSING THE HOLDER OR ANY OTHER PERSON OR CORPORATION, OR CONVEYING ANY RIGHTS OR PERMISSION TO MANUFACTURE, USE, OR SELL ANY PATENTED INVENTION THAT MAY IN ANY WAY BE RELATED THERETO.

REVISIONS

SYM	ZONE	DESCRIPTION	DR	CHK	DATE	APPROVED	
—		INITIAL RELEASE CLASS A PER TDRR 28640			5-10-66		
A		REVISED PER TDRR 30058	PHG	V.H.	16 JUL 66		
B		REVISED PER TDRR 32525	AF	DW	13JAN67		
C		REVISED PER TDRR 33672	A.N.	CN	27JUL67		

NOTES: (CONTINUED)

4. B. PULSED OPERATION TEST: ALL RELAYS SHALL BE TESTED FOR CORRECT OPERATION UNDER THE FOLLOWING CONDITIONS: @ 25°C:
   - (1) A POSITIVE 13.5 VDC PULSE SHALL BE ALTERNATELY APPLIED TO TERMINALS 1 AND 10. PULSE WIDTH SHALL BE 10 MILLISECONDS.
   - (2) RELAY SHALL BE ACTIVATED 10 TIMES IN EACH DIRECTION.
   - (3) CONTACT LOAD SHALL BE A HIGH IMPEDANCE NEON BULB FOR EACH STATIONARY CONTACT FOR VISUAL INDICATION OF CONTACT CLOSURE.

TABLE I

COIL PARAMETERS						LEAD PARAMETERS	
		MUST-OPERATE VOLTAGE (VOLTS D.C.)			COIL RESISTANCE		
DASH NO.	NORMAL RATED COIL VOLTAGE VOLTS D.C.	MAX OVER TEMP RANGE PER NOTE 3-D-2	MIN AT + 25° C	MAX AT +25°C	RANGE AT +25°C (OHMS)	LEAD LENGTH MAX/MIN	LEAD MATERIAL
-1	26	18	5.0	12.5	900 TO 1100	.218/.172	CORE: COPPER SLEEVING: COMPOSITION: ALLOY 426 NICKEL- 42.5% CHROMIUM - 5.75% SILICON - 0.25% MANGANESE - 0.5% CARBON - 0.10% IRON - BALANCE PLATING PER MIL-G-45204, TYPE II, COPPER OR NICKEL FLASHED.
-2	26	18	5.0	13.5	900 TO 1100	.218/.172	ALLOY 52, COMPOSITION: NICKEL - 51% NOM. CARBON - 0.10% MAX. MANGANESE - 0.50% MAX. SILICON - .25% MAX. IRON - BALANCE PLATING: GOLD PLATED PER MIL-G-45204, TYPE II, NICKEL OR COPPER FLASHED.

QTY REQD	PART OR IDENTIFYING NO.	MATERIAL OR NOTES	NOMENCLATURE OR DESCRIPTION	FIND NO.

LIST OF MATERIALS

NEXT ASSY	USED ON
APPLICATION	

UNLESS OTHERWISE SPECIFIED
DIMENSIONS ARE IN INCHES
CAPACITOR VALUES ARE IN μf
RESISTOR VALUES ARE IN OHMS
TOLERANCES ON
FRACTIONS ± DECIMALS ± ANGLES ±
DO NOT SCALE THIS DRAWING

MATERIAL
SEE NOTES

MIT
INSTRUMENTATION LAB
CAMBRIDGE, MASS.

DRAWN	George Tarfian	2MAY66
CHECKED	C Warren	2MAY66
APPROVED		
APPROVED	Eldon C Hall	10 May 66
APPROVED MIT	M. Hurley A. G. METZGER	5-10-66
APPROVED MSC		
		DATE

MANNED SPACECRAFT CENTER
HOUSTON, TEXAS

RELAY, ARMATURE
MAGNETIC LATCHING
SPECIFICATION CONTROL DRAWING

CODE IDENT NO.	SIZE	DRAWING NO.
80230	C	1005001
SCALE NONE		SHEET 3 OF 3

MODERN BLUE PRINT CO. D-19550

NOTICE – WHEN GOVERNMENT DRAWINGS, SPECIFICATIONS, OR OTHER DATA ARE USED FOR ANY PURPOSE OTHER THAN IN CONNECTION WITH A DEFINITELY RELATED GOVERNMENT PROCUREMENT OPERATION, THE UNITED STATES GOVERNMENT THEREBY INCURS NO RESPONSIBILITY NOR ANY OBLIGATION WHATSOEVER; AND THE FACT THAT THE GOVERNMENT MAY HAVE FORMULATED, FURNISHED, OR IN ANY WAY SUPPLIED THE SAID DRAWINGS, SPECIFICATIONS OR OTHER DATA IS NOT TO BE REGARDED BY IMPLICATION OR OTHERWISE AS IN ANY MANNER LICENSING THE HOLDER OR ANY OTHER PERSON OR CORPORATION, OR CONVEYING ANY RIGHTS OR PERMISSION TO MANUFACTURE, USE, OR SELL ANY PATENTED INVENTION THAT MAY IN ANY WAY BE RELATED THERETO.

REVISIONS

SYM	ZONE	DESCRIPTION	DR	CHK	DATE	APPROVED
—		INITIAL RELEASE CLASS A PER TDRR 28640			5-10-66	

REQUIREMENTS:

1. GENERAL:

A. INTERPRET DRAWING IN ACCORDANCE WITH STANDARDS PRESCRIBED BY MIL-D-70327.

B. THIS UNIT SHALL MEET THE APPLICABLE REQUIREMENTS OF MIL-R-5757 WITH THE EXCEPTIONS AND ADDITIONS SPECIFIED HEREIN.

C. THE SUPPLIER SHALL CONFORM TO THE QUALITY ASSURANCE PROVISIONS AS CONTAINED IN ND 1015404, CLASS 2.

D. THIS UNIT SHALL BE CAPABLE OF MEETING THE QUALIFICATION REQUIREMENTS OF ND 1002046 UNLESS OTHERWISE SPECIFIED HEREIN. ELECTRICAL REQUIREMENTS CONTAINED HEREIN SHALL TAKE PRECEDENCE OVER THOSE LISTED IN ND 1002046. THE CLASSIFICATION OF THIS RELAY SHALL BE GENERAL PURPOSE.

E. MARKING:

(1) UNITS SHALL BE MARKED IN ACCORDANCE WITH ND 1002019 WITH THE FOLLOWING:

NASA DRAWING NUMBER, DASH NUMBER AND REVISION LETTER.

DATE CODE (SHALL CONSIST OF A FOUR DIGIT NUMBER, THE FIRST TWO DIGITS OF WHICH SHALL BE THE LAST TWO DIGITS OF THE YEAR, AND THE SECOND TWO DIGITS SHALL BE THE NUMBER OF THE WEEK OF THE YEAR).

DC COIL RESISTANCE AT 25 DEGREES CENTIGRADE.

MUST OPERATE VOLTAGE, MAXIMUM, @ 25°C.

SCHEMATIC DIAGRAM.

BLUE BEADING AROUND TERMINAL 1, OR TERMINALS 1 AND 9, OR A RED DOT BETWEEN TERMINALS 2 AND 3.

(2) UNIT PACKAGES AND SHIPPING CONTAINERS SHALL BE MARKED IN ACCORDANCE WITH MIL-STD-129, BOTH INTERNALLY AND EXTERNALLY WITH THE NASA DRAWING NUMBER, DASH NUMBER AND REVISION LETTER, SUPPLIERS NAME, LOT NUMBER OR CODE, AND DATE OF MANUFACTURE.

F. PREPARATION FOR DELIVERY SHALL BE IN ACCORDANCE WITH ND 1002215, CLASS I, CODE I.

(1) MARKING OF SHIPPING CONTAINERS SHALL CONFORM TO THE MARKING OF UNIT AND INTERMEDIATE PACKAGES AND THE METHODS OF MARKING PER ND 1002215.

MASTER

2. ACCEPTANCE AND INSPECTION: 100%

A. MECHANICAL REQUIREMENTS:

(1) DIMENSIONS: DIMENSIONS SHALL BE AS SPECIFIED HEREIN.

(2) MARKING: PER NOTE 1.E.

(3) LEAK RATE: UNITS SHALL BE DEGASSED, BACK FILLED TO ONE ATMOSPHERE PRESSURE (ABSOLUTE) WITH DRY NITROGEN (90%) AND HELIUM (10%) GASES, AND HERMETICALLY SEALED. 100 PERCENT OF THE UNITS SHALL BE TESTED PER MIL-STD-202, METHOD 112, TEST CONDITION C, PROCEDURE IV. THE LEAK RATE SHALL BE LESS THAN 10^{-8} CUBIC CENTIMETERS/SECOND AT 1 ATMOSPHERE PRESSURE DIFFERENTIAL.

B. ELECTRICAL REQUIREMENTS:

(1) COIL VOLTAGE: MUST OPERATE (EITHER DIRECTION) IN ACCORDANCE WITH TABLE I.

(2) COIL RESISTANCE: IN ACCORDANCE WITH TABLE I.

(3) CONTACT RESISTANCE: SHALL BE 0.05 OHM MAXIMUM WHEN MEASURED WITH 100 MILLIAMPERES FROM A 6 VDC OPEN CIRCUIT VOLTAGE (CONTACTS SHALL NOT SWITCH THE MEASURING LOAD). 100 PERCENT OF UNITS PROCURED SHALL BE INSPECTED FOR THIS CHARACTERISTIC.

(4) DIELECTRIC STRENGTH:

(a) AT SEA LEVEL: 800 VOLTS RMS MINIMUM FOR 30 SECONDS MINIMUM WITHOUT DAMAGE, ARCING OR BREAKDOWN BETWEEN EACH SWITCHING CIRCUIT AND OTHER CIRCUITS. 500 VOLTS RMS MINIMUM BETWEEN OPEN CONTACTS AND BETWEEN COILS AND BETWEEN COILS AND FRAME.

(5) INSULATION RESISTANCE: 1K MEG OHM MINIMUM WHEN 500 VOLTS DC APPLIED BETWEEN MUTUALLY INSULATED CONTACTS, BETWEEN COIL & CONTACTS, BETWEEN CONTACTS & CASE, AND BETWEEN COIL & CASE.

(6) OPERATE TIME, BOTH DIRECTIONS: EACH 10 MILLISECONDS MAXIMUM UNDER ALL CONDITIONS SPECIFIED IN TABLE I, WHEN A POSITIVE VOLTAGE IS APPLIED TO EITHER TERMINAL 1 OR TERMINAL 10; 4 MILLISECONDS MAX WHEN THE NORMAL RATED VOLTAGE IS APPLIED AT +25°C.

(7) CONTACT BOUNCE: 4.0 MILLISECONDS MAXIMUM WHEN THE NORMAL RATED VOLTAGE IS APPLIED AT 25°C WITH CONTACT LOAD OF 100 MILLIAMPERES

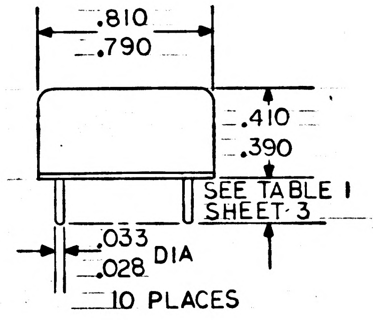

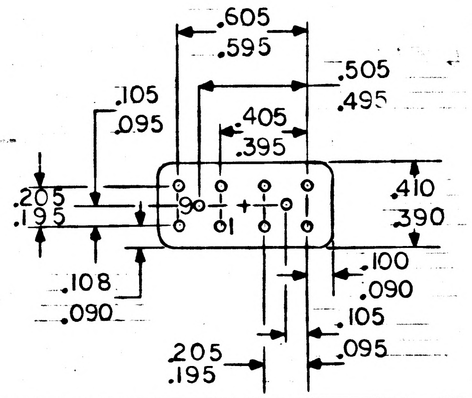

SCHEMATIC AND PIN LAYOUT
(FOR REFERENCE ONLY)

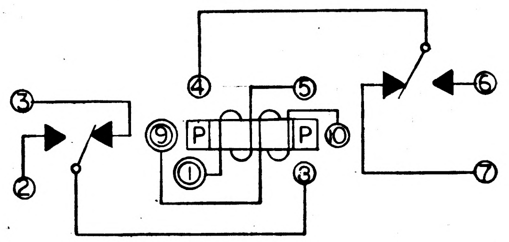

+ VOLTAGE ON PIN 1 CLOSES SWITCH AS SHOWN. + VOLTAGE ON PIN 10 REVERSES POSITION OF CONTACTS.

QTY REQD	PART OR IDENTIFYING NO.	MATERIAL OR NOTES	NOMENCLATURE OR DESCRIPTION	FIND NO.

LIST OF MATERIALS

NEXT ASSY	USED ON

APPLICATION

UNLESS OTHERWISE SPECIFIED
DIMENSIONS ARE IN INCHES
CAPACITOR VALUES ARE IN µf
RESISTOR VALUES ARE IN OHMS
TOLERANCES ON
FRACTIONS ± DECIMALS ± ANGLES ±
DO NOT SCALE THIS DRAWING

MATERIAL
SEE NOTES

MIT
INSTRUMENTATION LAB
CAMBRIDGE, MASS.

DRAWN Robert Silver 2 May 66
CHECKED O Warriner 2 May 66
APPROVED
APPROVED Eldon C Hall 10 May 66
APPROVED MIT M.B. Wesley 5-10-66 A. C. METZGER
APPROVED MSC
DATE

MANNED SPACECRAFT CENTER
HOUSTON, TEXAS

RELAY, ARMATURE
MAGNETIC LATCHING
SPECIFICATION CONTROL DRAWING

CODE IDENT NO. 80230
SIZE C
DRAWING NO. 1005001
SCALE NONE
SHEET 1 OF 3

MODERN BLUE PRINT CO., INC. 02840

PROCURE ONLY FROM APPROVED SOURCES LISTED IN ND 1002034 FOR THIS DRAWING.

NOTICE – WHEN GOVERNMENT DRAWINGS, SPECIFICATIONS, OR OTHER DATA ARE USED FOR ANY PURPOSE OTHER THAN IN CONNECTION WITH A DEFINITELY RELATED GOVERNMENT PROCUREMENT OPERATION, THE UNITED STATES GOVERNMENT THEREBY INCURS NO RESPONSIBILITY NOR ANY OBLIGATION WHATSOEVER; AND THE FACT THAT THE GOVERNMENT MAY HAVE FORMULATED, FURNISHED, OR IN ANY WAY SUPPLIED THE SAID DRAWINGS, SPECIFICATIONS OR OTHER DATA IS NOT TO BE REGARDED BY IMPLICATION OR OTHERWISE AS IN ANY MANNER LICENSING THE HOLDER OR ANY OTHER PERSON OR CORPORATION, OR CONVEYING ANY RIGHTS OR PERMISSION TO MANUFACTURE, USE, OR SELL ANY PATENTED INVENTION THAT MAY IN ANY WAY BE RELATED THERETO.

REVISIONS						
SYM	ZONE	DESCRIPTION	DR	CHK	DATE	APPROVED
—		INITIAL RELEASE CLASS A PER TDRR 28640			5-10-66	

NOTES: (CONTINUED)

3. DESIGN:

A. ELECTRICAL RATINGS:

(1) COIL VOLTAGE: IN ACCORDANCE WITH TABLE I.

(2) MAXIMUM COIL TRANSFER POWER: 200 MILLIWATTS MAXIMUM @ 25°C.

(3) CONTACT RATINGS (PER POLE): 0.5 AMPS @ 32 VDC (INDUCTIVE LOAD); OR, 1 AMP @ 115 VRMS, 400 CPS (RESISTIVE LOAD, CASE NOT GROUNDED), OR 0.25 AMP (CASE GROUNDED); OR, 1.0 MILLIAMP @ 250 VRMS, 800 CPS; @ P.F. NOT MORE THAN 0.35 (CASE NOT GROUNDED); OR, 0.3 AMP @ 5 VDC, LAMP LOAD (STEADY STATE). THESE RATINGS ARE APPLICABLE FOR THE LIFE REQUIREMENTS STATED IN 3.C.(1) ONLY IF COIL VOLTAGE IS NOT LESS THAN THE MUST-OPERATE VALUE PLUS 20 PERCENT.

(4) CONTACT CHATTER: 10.0 MICROSECONDS MAXIMUM DURING VIBRATION AND SHOCK AS SPECIFIED IN ND 1002046.

(5) DIELECTRIC STRENGTH (AT 70,000 FEET): 300 VOLTS RMS MINIMUM FOR 5 SECONDS MINIMUM WITHOUT DAMAGE, ARCING, OR BREAKDOWN BETWEEN EACH SWITCHING CIRCUIT AND ALL OTHER CONNECTIONS INCLUDING THE FRAME.

B. CONSTRUCTION:

(1) CONTACT FORM AND SWITCHING ACTION: 2 FORM C CONTACTS (BREAK BEFORE MAKE); DOUBLE POLE, DOUBLE THROW, POLARIZED WITH MAGNETIC LATCHING ACTION.

(2) LEAD MATERIAL: PER TABLE I.

(3) LEAD STRENGTH: UNITS SHALL WITHSTAND A FORCE OF 3 POUNDS PER MIL-R-5757.

(4) CASE: CASE MATERIAL SHALL BE CUPRO-NICKEL. CASE-TO-HEADER CONNECTION SHALL BE WELDED.

C. QUALIFICATION REQUIREMENTS:

(1) LIFE: LIFE OF THIS UNIT SHALL BE 100,000 CYCLES MINIMUM WHEN TESTED PER ND 1002046. FOR THE LIFE TESTS, THE CLASSIFICATION OF THIS RELAY SHALL BE GENERAL PURPOSE. CONTACT RESISTANCE AFTER LIFE WHEN MEASURED PER 2.B.(3) SHALL BE NOT MORE THAN 0.10 OHMS.

D. ENVIRONMENTAL REQUIREMENTS:

(1) HUMIDITY (MOISTURE RESISTANCE): UNITS SHALL BE CAPABLE OF WITHSTANDING RELATIVE HUMIDITY UP TO 98 PERCENT.

(2) OPERATING TEMPERATURE RANGE: UNITS SHALL BE CAPABLE OF OPERATING WITHIN THE ELECTRICAL REQUIREMENTS OF THIS SPECIFICATION WHEN EXPOSED TO AMBIENT TEMPERATURES FROM MINUS 65 DEGREES CENTIGRADE TO PLUS 125 DEGREES CENTIGRADE.

(3) THERMAL SHOCK: UNITS SHALL BE CAPABLE OF WITHSTANDING THERMAL SHOCK FROM MINUS 65 DEGREES CENTIGRADE TO PLUS 125 DEGREES CENTIGRADE.

(4) THE SALT SPRAY TEST PER MIL-R-5757 IS NOT APPLICABLE.

4. SPECIAL CONDITIONING:

A. THE MANUFACTURER SHALL SUBJECT ALL RELAYS TO THE FOLLOWING SEQUENCE OF TESTS:

(1) VIBRATION: THE UNITS SHALL BE SUBJECTED TO THE FOLLOWING TEST:

10 TO 2000 CPS, 0.12 INCH D.A. MAXIMUM, 20 G's IN THREE (3) MUTUALLY PERPENDICULAR PLANES; SWEEP TIME MINIMUM TO MAXIMUM TO MINIMUM CPS SHALL BE 20 MINUTES; UNITS SHALL BE LATCHED WITH A POSITIVE 13 VOLT DC PULSE OF 10 MILLISECOND WIDTH APPLIED TO PIN 1 PRIOR TO ASCENDING SWEEP; THE SAME PULSE SHALL BE APPLIED TO PIN 10 TO RESET UNIT PRIOR TO DESCENDING SWEEP; MAXIMUM ALLOWABLE CONTACT OPENING SHALL BE 10 MICROSECONDS AND THERE SHALL BE NO CLOSURE OF THE OPEN CONTACTS. IT IS PERMISSIBLE FOR THIS TEST TO BE PERFORMED AT A 30 G LEVEL.

(2) HIGH TEMPERATURE MISS TEST: THE RELAYS SHALL BE SUBJECTED TO +125°C WITH THE RATED COIL VOLTAGE PER TABLE I APPLIED FOR ONE HOUR PER COIL (TOTAL SOAK TIME IS 2 HOURS). RELAYS SHALL THEN BE OPERATED AT RATED COIL VOLTAGE FOR 2000 CYCLES AT A RATE OF 1 TO 3 CYCLES PER SECOND. CONTACT LOADING SHALL BE 30 MICROAMPS WITH A MAXIMUM OPEN CIRCUIT VOLTAGE OF 30 MILLIVOLTS. CONTACT RESISTANCE SHALL BE MONITORED CONTINUOUSLY AND SHALL NOT EXCEED 100 OHMS.

(3) INTERNAL MOISTURE TEST: FOLLOWING THE HIGH TEMPERATURE TEST, AND WHILE STILL AT +125°C, THE RELAYS SHALL BE ENERGIZED WITH RATED COIL VOLTAGE ON TERMINAL #1 WHILE THE TEMPERATURE OF THE CHAMBER IS LOWERED TO -65°C. AFTER REACHING THIS TEMPERATURE, THE RELAY SHALL BE CONDITIONED WHILE ENERGIZED FOR ONE HOUR. AT THE END OF THIS PERIOD, THE RELAY COIL SHALL BE DE-ENERGIZED AND RATED COIL VOLTAGE APPLIED TO TERMINAL #10 AND THE CONTACT RESISTANCE OF THE CLOSED CONTACTS SHALL BE MEASURED USING 100 MILLIAMPS FROM A 6 VOLT SOURCE. THE RESISTANCE SHALL NOT EXCEED 1 OHM. AN ALTERNATE MEASUREMENT IS PERMISSABLE USING A 30 MICROAMP FROM A 30 MILLIVOLT SOURCE WITH A NOT TO EXCEED RESISTANCE OF 100 OHMS.

(4) LOW TEMPERATURE TEST: FOLLOWING THE INTERNAL MOISTURE TEST, THE RELAYS SHALL BE SUBJECTED TO -65°C FOR TWO HOURS WITH NO COIL VOLTAGE APPLIED. RELAYS SHALL THEN BE SUBJECTED TO THE MISS TEST AS SPECIFIED IN PARA. 4.A.(2).

(5) DISPOSITION OF RELAYS WITH HIGH CONTACT RESISTANCE: ALL RELAYS EXHIBITING A CONTACT RESISTANCE OF MORE THAN 100 OHMS IN PARA 4.A.(2) AND 4.A.(4) TESTS SHALL BE REJECTED AND ANALYZED TO DETERMINE CAUSE. THE PURCHASER SHALL BE INFORMED OF THE NUMBER OF UNITS IN EACH LOT WHICH FAIL THESE TESTS.

QTY REQD	PART OR IDENTIFYING NO.	MATERIAL OR NOTES	NOMENCLATURE OR DESCRIPTION	FIND NO.

LIST OF MATERIALS

NEXT ASSY	USED ON
APPLICATION	

UNLESS OTHERWISE SPECIFIED
DIMENSIONS ARE IN INCHES
CAPACITOR VALUES ARE IN µf
RESISTOR VALUES ARE IN OHMS
TOLERANCES ON
FRACTIONS ± DECIMALS ± ANGLES ±
DO NOT SCALE THIS DRAWING

MATERIAL
SEE NOTES

MIT
INSTRUMENTATION LAB
CAMBRIDGE, MASS.

		DATE
DRAWN	George Trefrikas	2MAY66
CHECKED		2MAY66
APPROVED		
APPROVED	Eldon C. Hall	10May66
APPROVED MIT	M C Mudy A. C. METZGER	5/10/66
APPROVED MSC		

MANNED SPACECRAFT CENTER
HOUSTON, TEXAS

RELAY, ARMATURE
MAGNETIC LATCHING
SPECIFICATION CONTROL DRAWING

CODE IDENT NO.	SIZE	DRAWING NO.
80230	C	1005001

SCALE NONE

SHEET 2 OF 3

MASTER

NOTICE – WHEN GOVERNMENT DRAWINGS, SPECIFICATIONS, OR OTHER DATA ARE USED FOR ANY PURPOSE OTHER THAN IN CONNECTION WITH A DEFINITELY RELATED GOVERNMENT PROCUREMENT OPERATION, THE UNITED STATES GOVERNMENT THEREBY INCURS NO RESPONSIBILITY NOR ANY OBLIGATION WHATSOEVER; AND THE FACT THAT THE GOVERNMENT MAY HAVE FORMULATED, FURNISHED, OR IN ANY WAY SUPPLIED THE SAID DRAWINGS, SPECIFICATIONS OR OTHER DATA IS NOT TO BE REGARDED BY IMPLICATION OR OTHERWISE AS IN ANY MANNER LICENSING THE HOLDER OR ANY OTHER PERSON OR CORPORATION, OR CONVEYING ANY RIGHTS OR PERMISSION TO MANUFACTURE, USE, OR SELL ANY PATENTED INVENTION THAT MAY IN ANY WAY BE RELATED THERETO.

REVISIONS

SYM	ZONE	DESCRIPTION	DR	CHK	DATE	APPROVED
—		INITIAL RELEASE CLASS A PER TDRR 28640			5-10-66	

NOTES: (CONTINUED)

4. B. PULSED OPERATION TEST: ALL RELAYS SHALL BE TESTED FOR CORRECT OPERATION UNDER THE FOLLOWING CONDITIONS: @ 25°C:
   - (1) A POSITIVE 13.5 VDC PULSE SHALL BE ALTERNATELY APPLIED TO TERMINALS 1 AND 10. PULSE WIDTH SHALL BE 10 MILLISECONDS.
   - (2) RELAY SHALL BE ACTIVATED 10 TIMES IN EACH DIRECTION.
   - (3) CONTACT LOAD SHALL BE A HIGH IMPEDANCE NEON BULB FOR EACH STATIONARY CONTACT FOR VISUAL INDICATION OF CONTACT CLOSURE.

TABLE I

COIL PARAMETERS						LEAD PARAMETERS	
		MUST-OPERATE VOLTAGE (VOLTS D.C.)			COIL RESISTANCE		
DASH NO.	NORMAL RATED COIL VOLTAGE VOLTS D.C.	MAX OVER TEMP RANGE PER NOTE 3-D-2	MIN (OVER AMBIENT TEMP RANGE)	MAX AT +25°C	RANGE AT +25°C (OHMS)	LEAD LENGTH MAX/MIN	LEAD MATERIAL
-1	26	18	5.0	13.5	765 TO 1100	.218/.187	CORE: COPPER, 1/3 OF TOTAL DIAMETER SLEEVING: COMPOSITION NICKEL - 42.5% IRON - 50.9% CHROMIUM - 5.75% SILICON - 0.25% MANGANESE - 0.5% CARBON - 0.07% PLATING PER MIL-G-45204, TYPE II, COPPER OR NICKEL FLASHED.
-2	26	18	5.0	13.5	765 TO 1100	.218/.187	ALLOY 52, GOLD PLATED PER MIL-G-45204, TYPE II, NICKEL OR COPPER FLASHED.

MASTER

QTY REQD	PART OR IDENTIFYING NO.	MATERIAL OR NOTES	NOMENCLATURE OR DESCRIPTION	FIND NO.

LIST OF MATERIALS

NEXT ASSY	USED ON
APPLICATION	

UNLESS OTHERWISE SPECIFIED
DIMENSIONS ARE IN INCHES
CAPACITOR VALUES ARE IN μf
RESISTOR VALUES ARE IN OHMS
TOLERANCES ON
FRACTIONS ± DECIMALS ± ANGLES ±
DO NOT SCALE THIS DRAWING

MATERIAL
SEE NOTES

MIT
INSTRUMENTATION LAB
CAMBRIDGE, MASS.

DRAWN George Tefik 2 MAY 66
CHECKED 2 MAY 66
APPROVED
APPROVED Eldon C Hall 10 May 66
APPROVED MIT A. C. METZGER 5-10-66
APPROVED MSC
DATE

MANNED SPACECRAFT CENTER
HOUSTON, TEXAS

RELAY, ARMATURE MAGNETIC LATCHING
SPECIFICATION CONTROL DRAWING

CODE IDENT NO. 80230
SIZE C
DRAWING NO. 1005001
SCALE NONE
SHEET 3 OF 3

NOTICE — WHEN GOVERNMENT DRAWINGS, SPECIFICATIONS, OR OTHER DATA ARE USED FOR ANY PURPOSE OTHER THAN IN CONNECTION WITH A DEFINITELY RELATED GOVERNMENT PROCUREMENT OPERATION, THE UNITED STATES GOVERNMENT THEREBY INCURS NO RESPONSIBILITY NOR ANY OBLIGATION WHATSOEVER; AND THE FACT THAT THE GOVERNMENT MAY HAVE FORMULATED, FURNISHED, OR IN ANY WAY SUPPLIED THE SAID DRAWINGS, SPECIFICATIONS OR OTHER DATA IS NOT TO BE REGARDED BY IMPLICATION OR OTHERWISE AS IN ANY MANNER LICENSING THE HOLDER OR ANY OTHER PERSON OR CORPORATION, OR CONVEYING ANY RIGHTS OR PERMISSION TO MANUFACTURE, USE, OR SELL ANY PATENTED INVENTION THAT MAY IN ANY WAY BE RELATED THERETO.

1005002

REVISIONS						
SYM	ZONE	DESCRIPTION	DR	CHK	DATE	APPROVED
—		INITIAL RELEASE CLASS A PER TDRR 28542			5-3-66	

REQUIREMENTS:

1. GENERAL:

A. INTERPRET DRAWING IN ACCORDANCE WITH STANDARDS PRESCRIBED BY MIL-D-70327.

B. UNITS SHALL MEET THE REQUIREMENTS OF MIL-S-19500 EXCEPT AS, AND IN ADDITION TO THE REQUIREMENTS, SPECIFIED HEREIN.

C. SUPPLIER SHALL CONFORM TO THE QUALITY ASSURANCE PROVISIONS CONTAINED IN ND 1015404, CLASS 2.

D. UNITS SHALL BE CAPABLE OF MEETING THE QUALIFICATION REQUIREMENTS OF ND 1002051.

E. MARKING:

(1) PARTS SHALL BE PERMANENTLY AND LEGIBLY MARKED, IN ACCORDANCE WITH ND 1002019, WITH THE NASA PART NUMBER (DRAWING NUMBER AND REVISION LETTER) OR AS MANY SIGNIFICANT DIGITS AS POSSIBLE (E.G. 6323). OTHER MARKING SUCH AS MANUFACTURER'S IDENTIFICATION AND TYPE NUMBER IS PERMISSIBLE.

F. PREPARATION FOR DELIVERY SHALL BE IN ACCORDANCE WITH ND 1002215, CLASS I, CODE 2.

(1) MARKING OF SHIPPING CONTAINERS SHALL CONFORM TO THE MARKING OF UNIT AND INTERMEDIATE PACKAGES AND THE METHODS OF MARKING AS SPECIFIED IN ND 1002215.

2. ACCEPTANCE AND INSPECTION:

A. MECHANICAL PROPERTIES:

(1) DIMENSIONS: AS DELINEATED HEREIN.

B. SEAL TEST: THE UNITS SHALL BE SUBJECTED TO A HELIUM OR RADIFLO LEAK DETECTION TEST WITH A SENSITIVITY OF AT LEAST 1 X 10^{-8} CC/ATM/SEC AND A HOT GLYCERINE BUBBLE TEST FOR GROSS LEAKS. THE LEAK TEST SHALL BE PERFORMED IN ACCORDANCE WITH MIL-STD-202C METHOD 112. TEST CONDITION C SHALL BE USED FOR THE HELIUM OR RADIFLO TEST. TEST CONDITION A SHALL BE USED FOR THE GROSS LEAK TEST EXCEPT THAT GLYCERINE SHALL REPLACE THE MINERAL OIL. A LEAKAGE RATE OF 1 X 10^{-8} CC-ATM-SEC OR GREATER SHALL CONSTITUTE A FAILURE.

C. ELECTRICAL CHARACTERISTICS: PER TABLES I, II, AND III AS LISTED BELOW:

(1) PRE-ELECTRICAL TEST PROCESSING: ON LOTS OF 500 OR LESS, THE TESTS OF TABLE I SHALL BE PERFORMED IN THE SEQUENCE INDICATED BEFORE THE TESTS OF TABLE II.

(2) ELECTRICAL TESTING: THE TESTS LISTED IN TABLE II SHALL BE PERFORMED AS LISTED BELOW:

COLLECTOR CUTOFF CURRENT
COLLECTOR-BASE BREAKDOWN VOLTAGE
EMITTER-BASE BREAKDOWN VOLTAGE
EMITTER-BASE REVERSE CURRENT
COLLECTOR-EMITTER SUSTAINING VOLTAGE
COLLECTOR-EMITTER CURRENT
COLLECTOR-EMITTER THRESHOLD CURRENT
DIRECT CURRENT GAIN
BASE-EMITTER SATURATION VOLTAGE
COLLECTOR-EMITTER SATURATION VOLTAGE
COLLECTOR CAPACITANCE
TURN-ON AND TURN-OFF TIME

(3) QUALITY DEMONSTRATION TESTING:

PER TABLE III ON LOTS MORE THAN 500 UNITS USING ACCEPTABLE UNITS FROM SUBGROUP 2 OF TABLE II FOR SUBGROUP 2,3, & 4 OF TABLE III. SUBGROUPS 1 & 5 MAY USE ELECTRICAL REJECTS FROM THE SAME LOT.

D. VENDOR SUPPLIED DATA: EACH SHIPMENT OF PARTS SHALL BE ACCOMPANIED BY THE FOLLOWING DOCUMENTATION.

(1) CERTIFICATE OF COMPLIANCE WITH LEAD MATERIAL REQUIREMENT.

(2) CERTIFICATE OF COMPLIANCE WITH ND 1015404, CLASS 2.

(3) "A CERTIFICATE OF COMPLIANCE WITH PARA 2.C (1) OR 2.C(3). UNITS USED IN QUALITY DEMONSTRATION TESTS OF TABLE III WILL NOT BE SHIPPED AS PART OF THE DELIVERY SCHEDULE BUT WILL BE FORWARDED UNDER SEPARATE COVER WITH TEST DATA FOR EACH LOT SHIPMENT.

3. DESIGN:

A. STORAGE LIFE: INDEFINITE WHEN STORED AT TEMPERATURES BETWEEN -65°C AND +150°C.

B. ABSOLUTE MAXIMUM RATINGS AT 25°C AMBIENT.

(1) COLLECTOR-EMITTER VOLTAGE (V_{CEO}): 35 VDC
(2) COLLECTOR-BASE VOLTAGE (V_{CBO}): 60 VDC
(3) EMITTER-BASE VOLTAGE (V_{EBO}): 5 VDC
(4) COLLECTOR CURRENT (I_C): 600 MILLIAMPERES
(5) THERMAL RESISTANCE, JUNCTION-CASE (θ_{JC}): 50°C/WATT
(6) THERMAL RESISTANCE, JUNCTION-AMBIENT (θ_{JA}): 350°C/WATT
(7) TEMP. RANGE, JUNCTION, OPERATING: -65°C TO +150°C
(8) TEMP. RANGE, STORAGE: -65°C TO +150°C

C. CONSTRUCTION:

(1) SEMICONDUCTOR: SILICON PLANAR EPITAXIAL NPN

(2) CASE: METAL CASE AND METAL HEADER HERMETICALLY SEALED (JEDEC TO -18)

(3) COLLECTOR SHALL BE ELECTRICALLY CONNECTED TO THE CASE INTERNALLY.

(4) LEAD MATERIAL: WELDABLE, GOLD PLATED, ANNEALED IRON-NICKEL-COBALT (KOVAR) ALLOY IN ACCORDANCE WITH ND 1015402.

D. QUALITY ASSURANCE REQUIREMENTS:

(1) LOT DEFINITION: A GROUP OF PARTS IN A SINGLE PROCUREMENT SELECTED FROM A SINGLE CONTINUOUS PRODUCTION RUN USING LIKE MATERIALS WHICH ARE CONTROLLED USING A PROCESS WHICH IS THE SAME FROM THE BEGINNING TO THE END OF THE RUN.

(2) INSPECTION CONDITIONS: UNLESS OTHERWISE SPECIFIED, ALL INSPECTIONS SHALL BE MADE AT AN AMBIENT TEMPERATURE OF +25° ± 3°C.

MASTER

PROCURE ONLY FROM APPROVED SOURCES LISTED IN ND 1002034 FOR THIS DRAWING.

QTY REQD	PART OR IDENTIFYING NO.	MATERIAL OR NOTES	NOMENCLATURE OR DESCRIPTION	FIND NO.

LIST OF MATERIALS

NEXT ASSY	USED ON
APPLICATION	

UNLESS OTHERWISE SPECIFIED
DIMENSIONS ARE IN INCHES
CAPACITOR VALUES ARE IN µf
RESISTOR VALUES ARE IN OHMS
TOLERANCES ON
FRACTIONS ± DECIMALS ± ANGLES ±
DO NOT SCALE THIS DRAWING
MATERIAL

MIT
INSTRUMENTATION LAB
CAMBRIDGE, MASS.

MANNED SPACECRAFT CENTER
HOUSTON, TEXAS

DRAWN		
CHECKED	A. Martz	5-3-66
APPROVED		
APPROVED	Eldon C Hall	3 May 66
APPROVED MIT	A. C. METZGER	3 May 66
APPROVED MSC		DATE

TRANSISTOR, SILICON, TYPE NPN, SWITCHING

SPECIFICATION CONTROL DRAWING

CODE IDENT NO.	SIZE	DRAWING NO.
80230	C	1005002
SCALE		SHEET 1 OF 4

NOTICE — WHEN GOVERNMENT DRAWINGS, SPECIFICATIONS, OR OTHER DATA ARE USED FOR ANY PURPOSE OTHER THAN IN CONNECTION WITH A DEFINITELY RELATED GOVERNMENT PROCUREMENT OPERATION, THE UNITED STATES GOVERNMENT THEREBY INCURS NO RESPONSIBILITY NOR ANY OBLIGATION WHATSOEVER; AND THE FACT THAT THE GOVERNMENT MAY HAVE FORMULATED, FURNISHED, OR IN ANY WAY SUPPLIED THE SAID DRAWINGS, SPECIFICATIONS OR OTHER DATA IS NOT TO BE REGARDED BY IMPLICATION OR OTHERWISE AS IN ANY MANNER LICENSING THE HOLDER OR ANY OTHER PERSON OR CORPORATION, OR CONVEYING ANY RIGHTS OR PERMISSION TO MANUFACTURE, USE, OR SELL ANY PATENTED INVENTION THAT MAY IN ANY WAY BE RELATED THERETO.

REVISIONS			
SYM	DESCRIPTION	DATE	APPROVAL
—	INITIAL RELEASE CLASS A PER TDRR 28542	5-3-66	

TABLE I

PRE-ELECTRICAL TEST PROCESSING

TEST	MIL-STD-750 TEST CONDITIONS	LOT 1 TO 500	LOT OVER 500
THERMAL SHOCK *	METHOD 1056, CONDITION B (+150°C TO -65°C, 3 CYCLES)	100%	NO REQUIREMENT
STORAGE LIFE * (HIGH TEMPERATURE STABILIZATION)	METHOD 1031, Tstg = 150° ± 5°C, $72 \begin{smallmatrix}+8\\-4\end{smallmatrix}$ HOURS	↓	↓
CONSTANT ACCELERATION *	METHOD 2006 (20,000 G) Y AXIS	↓	↓
POWER, BURN-IN *	METHOD 1026 P = 350 MILLIWATTS V_{CE} = +20.0 VOLTS MINIMUM T_A = +22°C MIN IN FREE AMBIENT AIR $t = 168 \begin{smallmatrix}+12\\-6\end{smallmatrix}$ HOURS	↓	↓
SEAL TEST *	SEE NOTE 2.B	↓	↓

*TEST TO BE PERFORMED IN ORDER INDICATED

**PULSE ≤ 300u SECS AT ≤ 2% DUTY CYCLE.

***LTPD OR λ PER MIL-S-19500D, TABLE CI OR CII

****THE PARAMETER MEASURED MAY NOT CHANGE ANY GREATER THAN THE PERCENTAGE SPECIFIED BETWEEN THE INITIAL VALUE AND THE END OF TEST VALUE. VALUES OF COLLECTOR AND EMITTER CUTOFF CURRENTS LESS THAN 10 NANOAMPERES MAY BE CONSIDERED TO BE 10 NANOAMPERES FOR CALCULATING PERCENTAGE CHANGE.

● CURRENTS TO WITHIN ±10%

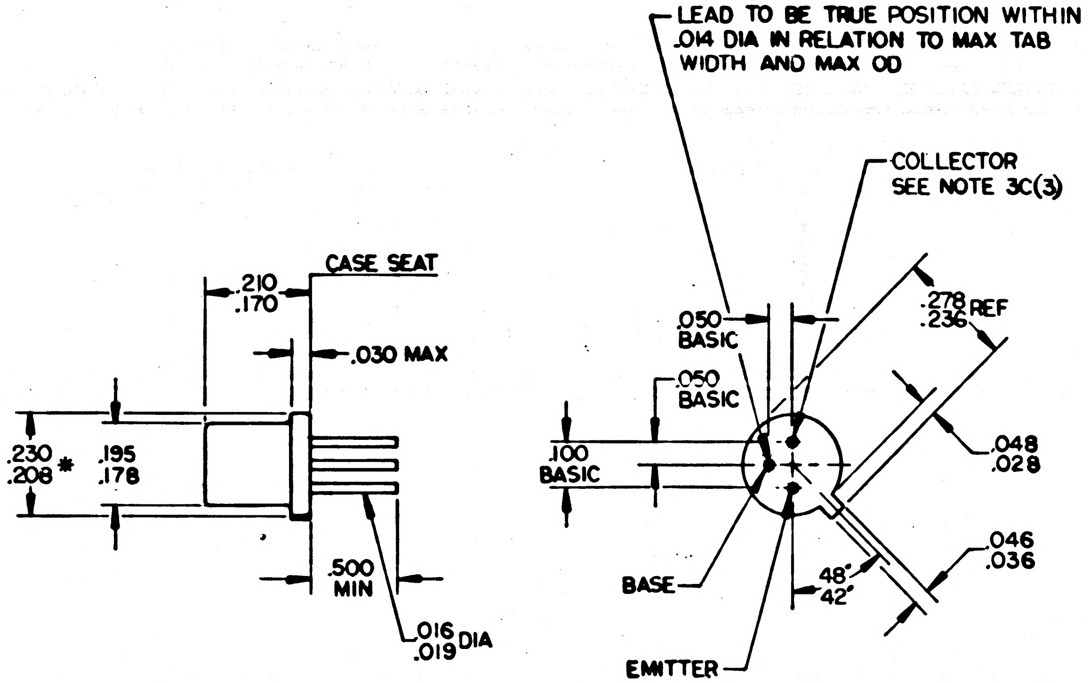

MASTER

QTY REQD	PART OR IDENTIFYING NO.	NOMENCLATURE OR DESCRIPTION	FIND NO.

LIST OF MATERIALS

NEXT ASSY	USED ON

APPLICATION

UNLESS OTHERWISE SPECIFIED DIMENSIONS ARE IN INCHES
TOLERANCES ON
FRACTIONS ± DECIMALS ± ANGLES ±
DO NOT SCALE THIS DRAWING
MATERIAL SEE NOTE
HEAT TREATMENT NONE
FINAL FINISH NONE

MIT INSTRUMENTATION LAB
CAMBRIDGE, MASS.
DWG. NO. CONTRACT
DRAWN DATE
CHECKED a. Marto 5-3-66
APPROVAL
APPROVAL Eldon C Hall 3 May 66
NASA APPROVAL A. C. METZGER
MIT APPROVAL 3 May 66
MIT APPROVAL

MANNED SPACECRAFT CENTER
HOUSTON, TEXAS

TRANSISTOR, SILICON, TYPE NPN, SWITCHING
SPECIFICATION CONTROL DRAWING

CODE IDENT NO. 80230
SIZE C
NASA DRAWING NO. 1005002
SCALE NONE
WT
SHEET 2 OF 4

NOTICE — WHEN GOVERNMENT DRAWINGS, SPECIFICATIONS, OR OTHER DATA ARE USED FOR ANY PURPOSE OTHER THAN IN CONNECTION WITH A DEFINITELY RELATED GOVERNMENT PROCUREMENT OPERATION, THE UNITED STATES GOVERNMENT THEREBY INCURS NO RESPONSIBILITY NOR ANY OBLIGATION WHATSOEVER; AND THE FACT THAT THE GOVERNMENT MAY HAVE FORMULATED, FURNISHED, OR IN ANY WAY SUPPLIED THE SAID DRAWINGS, SPECIFICATIONS OR OTHER DATA IS NOT TO BE REGARDED BY IMPLICATION OR OTHERWISE AS IN ANY MANNER LICENSING THE HOLDER OR ANY OTHER PERSON OR CORPORATION, OR CONVEYING ANY RIGHTS OR PERMISSION TO MANUFACTURE, USE, OR SELL ANY PATENTED INVENTION THAT MAY IN ANY WAY BE RELATED THERETO.

1005002

REVISIONS						
SYM	DESCRIPTION	DR	CHK	DATE	APPROVED	
-	INITIAL RELEASE CLASS A PER TDRR 28542			5-3-66		

TABLE II

ACCEPTANCE INSPECTION

TEST	SYMBOL	MIL-STD-750 TEST CONDITIONS $T_A = 25° \pm 3°C$ UNLESS SPECIFIED	LIMIT MIN	LIMIT MAX	UNITS	LOT 1 TO 500	LOT OVER 500
SUBGROUP 1							
VISUAL AND MECHANICAL EXAMINATION		METHOD 2071				LTPD*** = 10 MAX ACC NO. = 3	LTPD*** = 10 MAX ACC NO. = 3
SUBGROUP 2							
COLLECTOR CUTOFF CURRENT	I_{CBO}	$V_{CB} = 30$ V; $I_E = 0$		100		100%	LTPD** = 2 (COMBINED) MAX ACC NO. = 3
COLLECTOR CUTOFF CURRENT 150°C	I_{CBO}	$V_{CB} = 30$ V; $I_E = 0$, $T_A = +150°C$		200	uA		
COLLECTOR-BASE BREAKDOWN VOLTAGE	BV_{CBO}	$I_C = 100$ uA; $I_E = 0$	60		V		
EMITTER-BASE REVERSE CURRENT	I_{EBO}	$V_{EB} = 3$ V; $I_C = 0$		100			
EMITTER-BASE BREAKDOWN VOLTAGE	BV_{EBO}	$I_E = 100$ uA; $I_C = 0$	5		V		
COLLECTOR-EMITTER SUSTAINING VOLTAGE**	V_{CEO} SUST	$I_C = 30$ mA PULSED $I_B = 0$	35		V		
COLLECTOR-EMITTER CURRENT RES. RETURN	I_{CER}	$V_{CE} = 30$ V: $R_{BE} = 100$ K		10	uA		
COLLECTOR-EMITTER THRESHOLD CURRENT	I_{CEX}	$V_{BE} = +0.35$ V: $V_{CE} = 40$ V; $T_A = +70°C$		60	uA		
DC CURRENT GAIN **	h_{FE}	$I_C = +500$ mA; $V_{CE} = +10$ V	25				
DC CURRENT GAIN **	h_{FE}	$I_C = +150$ mA; $V_{CE} = +10$ V	40	120			
DC CURRENT GAIN **	h_{FE}	$I_C = +10$ mA; $V_{CE} = +10$ V	30				
BASE-EMITTER SATURATION VOLTAGE **	V_{BE} SAT	$I_C = 500$ mA; $I_B = 50$ mA	1.10	1.30	V		
COLLECTOR-EMITTER SATURATION VOLTAGE**	$V_{CE(sat)}$	$I_C = 150$ mA; $I_B = 15$ mA		0.40	V		
COLLECTOR-EMITTER SATURATION VOLTAGE**	$V_{CE(sat)}$	$I_C = 500$ mA; $I_B = 50$ mA		1.0	V		
COLLECTOR CAPACITANCE	C_{ob}	$V_{CB} = -10$ V; $I_E = 0$; $F = 0.14$ mc		8	PF	LTPD*** = 5 MAX ACC NO = 0	LTPD*** = 5 MAX ACC NO = 0
TURN ON TIME (TEST IN CIRCUIT OF FIGURE I)	t_{on}	$I_{B1} \approx 15$ mA; $I_C \approx 150$ mA $t_w > 400$ nsec 2% DUTY CYCLE		25	NSEC		
TURN OFF TIME (TEST IN CIRCUIT OF FIGURE I)	t_{off}	$I_{B1} = I_{B2} \approx 15$ mA; $I_C \approx 150$ mA $t_w > 400$ nsec 2% DUTY CYCLE		40	NSEC		

FIGURE I

SWITCHING CIRCUIT: T ON; T OFF

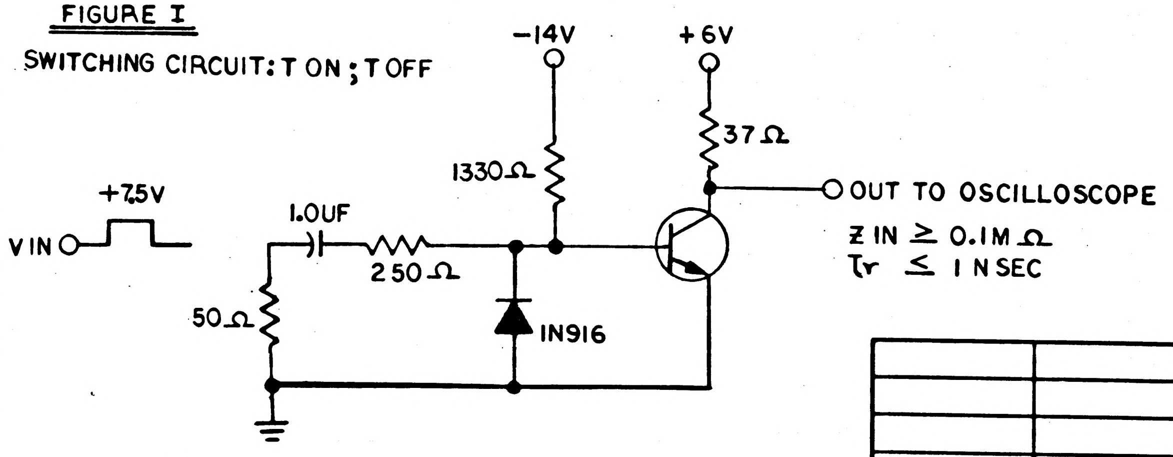

VOLTAGE IN: VIN = +7.5V

PULSE WIDTH: PW = 0.5USEC

TOTAL RISE, FALL: Tr + Tf ≤ 6NSEC

IMPEDANCE IN: Z IN = 50Ω

NEXT ASSY	USED ON
APPLICATION	

UNLESS OTHERWISE SPECIFIED
DIMENSIONS ARE IN INCHES
CAPACITOR VALUES ARE IN μf
RESISTOR VALUES ARE IN OHMS
TOLERANCES ON
FRACTIONS ± DECIMALS ± ANGLES ±
DO NOT SCALE THIS DRAWING

MATERIAL

QTY REQD	PART OR IDENTIFYING NO.	MATERIAL OR NOTES	NOMENCLATURE OR DESCRIPTION	FIND NO.

LIST OF MATERIALS

MIT
INSTRUMENTATION LAB
CAMBRIDGE, MASS.

MANNED SPACECRAFT CENTER
HOUSTON, TEXAS

DRAWN		
CHECKED	A. Martz	5-3-66
APPROVED		
APPROVED	Eldon Hall	3 May 66
APPROVED MIT	W Kupfer	3 May 66
APPROVED MSC	C. METZGER	
		DATE

TRANSISTOR, SILICON,
TYPE NPN, SWITCHING
SPECIFICATION CONTROL DRAWING

CODE IDENT NO. 80230

SIZE C

DRAWING NO. 1005002

SCALE

SHEET 3 OF 4

1005002

NOTICE – WHEN GOVERNMENT DRAWINGS, SPECIFICATIONS, OR OTHER DATA ARE USED FOR ANY PURPOSE OTHER THAN IN CONNECTION WITH A DEFINITELY RELATED GOVERNMENT PROCUREMENT OPERATION, THE UNITED STATES GOVERNMENT THEREBY INCURS NO RESPONSIBILITY NOR ANY OBLIGATION WHATSOEVER; AND THE FACT THAT THE GOVERNMENT MAY HAVE FORMULATED, FURNISHED, OR IN ANY WAY SUPPLIED THE SAID DRAWINGS, SPECIFICATIONS OR OTHER DATA IS NOT TO BE REGARDED BY IMPLICATION OR OTHERWISE AS IN ANY MANNER LICENSING THE HOLDER OR ANY OTHER PERSON OR CORPORATION, OR CONVEYING ANY RIGHTS OR PERMISSION TO MANUFACTURE, USE, OR SELL ANY PATENTED INVENTION THAT MAY IN ANY WAY BE RELATED THERETO.

REVISIONS

SYM	ZONE	DESCRIPTION	DR	CHK	DATE	APPROVED
–		INITIAL RELEASE CLASS A PER TDRR 28542			5-3-66	

TABLE III

TEST	QUALITY DEMONSTRATION TESTS MIL-STD-750 TEST CONDITIONS	LOT 1 TO 500	LOT OVER 500
SUBGROUP 1 PHYSICAL DIMENSIONS	METHOD 2066	NO REQUIREMENTS	LTPD*** = 20 MAX ACC NO. = 1
SUBGROUP 2* THERMAL SHOCK SEAL TEST	METHOD 1056.1 (+150 °C TO –65°C, 5 CYCLES) SEE NOTE 2.B		LTPD*** = 10 (COMBINED) MAX ACC NO.= 3
SUBGROUP 3* STORAGE LIFE SHOCK VIBRATION VARIABLE FREQUENCY CONSTANT ACCELERATION	METHOD 1031.1 Tstg = 150° ± 5°C, 1000 HOURS METHOD 2016.1 1500 G, 0.5 MSEC 5 BLOWS EACH IN X1, Y1, Y2, Z1 DIRECTIONS, 20 BLOWS TOTAL METHOD 2056, 30 G FROM 5 TO 2000 CPS LIMITED TO 0.12 DOUBLE AMPLITUDE, 3 CYCLES, 15 MINUTES PER CYCLE MINIMUM. METHOD 2006, 20,000 G Y AXIS		LTPD*** = 10 (COMBINED) MAX ACC NO.= 3
SUBGROUP 4 OPERATION LIFE	METHOD 1026 .1 P = 350 MILLIWATTS V_{CE} = +20 VOLTS MINIMUM T_A = +22°C MIN IN FREE AMBIENT AIR t = 1000 HOURS		λ** = 10 MAX ACC NO.= 8
SUBGROUP 5* LEAD TENSION (COND. A) LEAD FATIGUE (COND. E)	METHOD 2036 .1 4 POUND LOAD FOR 10 SECONDS 3 ARCS		LTPD*** = 20 (COMBINED) MAX ACC NO.= 3

TABLE III (CONTINUED)

TEST	SYMBOL	TEST CONDITION	LIMIT
END POINTS FOR SUBGROUP 2			
COLLECTOR CUTOFF CURRENT	I_{CBO}	V_{CB}= 30 V, I_E = 0	±50% ****
EMITTER-BASE REVERSE CURRENT	I_{EBO}	V_{EB}=+3 V, I_C = 0	±50%****
DC CURRENT GAIN	hFE	V_{CE} = +10 V, I_C =150 mA	±10%****
END POINTS FOR SUBGROUPS 3 & 4			
COLLECTOR CUTOFF CURRENT	I_{CBO}	V_{CB} = +30 V, I_E = 0	±100%****
EMITTER-BASE REVERSE CURRENT	I_{EBO}	V_{EB} +3 V, I_C = 0	±100%****
DC CURRENT GAIN	hFE	V_{CE} = +10 V, I_C = 150 mA	±20%****

MASTER

QTY REQD	PART OR IDENTIFYING NO.	MATERIAL OR NOTES	NOMENCLATURE OR DESCRIPTION	FIND NO.

LIST OF MATERIALS

NEXT ASSY	USED ON

APPLICATION

UNLESS OTHERWISE SPECIFIED
DIMENSIONS ARE IN INCHES
CAPACITOR VALUES ARE IN μf
RESISTOR VALUES ARE IN OHMS
TOLERANCES ON
FRACTIONS ± DECIMALS ± ANGLES ±
DO NOT SCALE THIS DRAWING

MATERIAL

MIT
INSTRUMENTATION LAB
CAMBRIDGE, MASS.

DRAWN
CHECKED A. Marto 5-3-66
APPROVED
APPROVED Ellas C Hall 3 May 66
APPROVED MIT W Kupfer 3 May 66
A. C. METZGER
APPROVED MSC
DATE

MANNED SPACECRAFT CENTER
HOUSTON, TEXAS

TRANSISTOR, SILICON TYPE NPN, SWITCHING

SPECIFICATION CONTROL DRAWING

CODE IDENT NO. 80230
SIZE C
DRAWING NO. 1005002
SCALE
SHEET 4 OF 4

NOTICE – WHEN GOVERNMENT DRAWINGS, SPECIFICATIONS, OR OTHER DATA ARE USED FOR ANY PURPOSE OTHER THAN IN CONNECTION WITH A DEFINITELY RELATED GOVERNMENT PROCUREMENT OPERATION, THE UNITED STATES GOVERNMENT THEREBY INCURS NO RESPONSIBILITY NOR ANY OBLIGATION WHATSOEVER; AND THE FACT THAT THE GOVERNMENT MAY HAVE FORMULATED, FURNISHED, OR IN ANY WAY SUPPLIED THE SAID DRAWINGS, SPECIFICATIONS OR OTHER DATA IS NOT TO BE REGARDED BY IMPLICATION OR OTHERWISE AS IN ANY MANNER LICENSING THE HOLDER OR ANY OTHER PERSON OR CORPORATION, OR CONVEYING ANY RIGHTS OR PERMISSION TO MANUFACTURE, USE, OR SELL ANY PATENTED INVENTION THAT MAY IN ANY WAY BE RELATED THERETO.

REVISIONS

SYM	ZONE	DESCRIPTION	DR	CHK	DATE	APPROVED
—		INITIAL RELEASE CLASS A PER TDRR 28639			5-10-66	

REQUIREMENTS: (CONTINUED)

3. DESIGN REQUIREMENTS:

A. AMBIENT TEMPERATURE RANGE: -65°C TO +125°C

B. COIL RESISTANCE: SEE TABLE I.

C. LIFE: WHEN TESTED AT ANY OF THE ABOVE RATINGS, OR BETWEEN THE MAXIMUM RATING AND THE MINIMUM RATING, FOR 100,000 CYCLES, OVER THE AMBIENT TEMPERATURE RANGE, THERE SHALL BE NO FAILURES AS DEFINED IN ND 1002046 AND THERE SHALL BE NO CONTACT RESISTANCE READING GREATER THAN 5 OHMS DURING ANY CYCLE.

D. TERMINAL STRENGTH: 3 LBS MINIMUM AXIAL PULL.

E. ENVIRONMENTAL LEVELS:

(1) TEMPERATURE:
  (a) HIGH: +125°C
  (b) LOW: -65°C
(2) THERMAL SHOCK: -65°C TO +125°C
(3) VIBRATION: 10-2000 CPS, 20 G
(4) SHOCK: 50 G, 11 MILLISECONDS
(5) ACCELERATION: 20 G
(6) ALTITUDE: 70,000 FEET
(7) HUMIDITY: 10 CYCLES
(8) SALT SPRAY TESTS AS REFERENCED IN MIL-R-5757 ARE NOT APPLICABLE .

F. DIELECTRIC STRENGTH: SHALL BE CAPABLE OF WITHSTANDING THE FOLLOWING POTENTIAL FOR ONE MINUTE WITHOUT ARCING, DAMAGE OR BREAKDOWN.

(1) ALTITUDE: 300 VOLTS RMS 60 CPS BETWEEN ALL TERMINALS AND CASE AND BETWEEN ALL TERMINALS.

G. CONTACT FORM AND SWITCHING ACTION: 2 FORM C CONTACTS (2 PDT).

H. COIL VOLTAGE: SEE TABLE I.

J. CONTACT RATINGS: (MAXIMUM AMPERES PER POLE) NORMALLY OPEN OR NORMALLY CLOSED.

LOAD VOLTAGE	28 VDC	115/200 VRMS, 400 CPS
RESISTIVE	2.0	0.75
INDUCTIVE	0.5	0.75
LAMP	0.5	0.3
MINIMUM	0.1	--

NOTE 2 (SHEET 2)

NOTE 1 (SHEET 2)

K. COIL DISSIPATION: 1.5 WATTS MAX AT +125°C.

L. CASE MATERIAL: CUPRO-NICKEL

4. SPECIAL CONDITIONING:

A. THE MANUFACTURER SHALL SUBJECT ALL RELAYS TO THE FOLLOWING SEQUENCE OF TESTS:

(1) VIBRATION: 5 TO 2,000 CPS 0.12 INCH DOUBLE AMPLITUDE MAXIMUM 20.0'S IN THREE (3) MUTUALLY PERPENDICULAR PLANES. SWEEP TIME MINIMUM TO MAXIMUM TO MINIMUM CPS SHALL BE 20 MINUTES; UNITS SHALL BE ENERGIZED AT THE NOMINAL COIL VOLTAGE PRIOR TO ASCENDING SWEEP AND DEENERGIZED PRIOR TO THE DESCENDING SWEEP. MAXIMUM ALLOWABLE CONTACT OPENING SHALL BE 10 MICROSECONDS AND THERE SHALL BE NO CLOSURE OF THE OPEN CONTACTS. IT IS PERMISSABLE FOR THE TEST TO BE RUN AT A 30 G LEVEL AND/OR EXTENDED TO 3,000 CPS.

(2) HIGH TEMPERATURE MISS TEST: THE RELAYS SHALL BE SUBJECTED TO +125°C WITH THE RATED COIL VOLTAGE PER TABLE I APPLIED FOR TWO HOURS. RELAYS SHALL THEN BE OPERATED AT RATED COIL VOLTAGE FOR 2000 CYCLES AT A RATE OF 1 TO 3 CYCLES PER SECOND. CONTACT LOADING SHALL BE 30 MICROAMPS WITH A MAXIMUM OPEN CIRCUIT VOLTAGE OF 30 MILLIVOLTS. CONTACT RESISTANCE SHALL BE MONITORED CONTINUOUSLY AND SHALL NOT EXCEED 100 OHMS.

(3) INTERNAL MOISTURE TEST: FOLLOWING THE HIGH TEMPERATURE TEST, AND WHILE STILL AT +125°C, THE RELAYS SHALL BE ENERGIZED WITH RATED COIL VOLTAGE WHILE THE TEMPERATURE OF THE CHAMBER IS LOWERED TO -65°C. AFTER REACHING THIS TEMPERATURE, THE RELAY SHALL BE CONDITIONED WHILE ENERGIZED FOR ONE HOUR. AT THE END OF THIS PERIOD, THE RELAY COIL SHALL BE DE-ENERGIZED AND THE CONTACT RESISTANCE OF THE CLOSED CONTACTS SHALL BE MEASURED USING 100 MILLIAMP FROM A 6 VOLT SOURCE. THE RESISTANCE SHALL NOT EXCEED 1 OHM. AN ALTERNATE MEASUREMENT IS PERMISSABLE USING 30 MICROAMP FROM A 30 MILLIVOLT SOURCE WITH A NOT TO EXCEED RESISTANCE OF 100 OHMS.

(4) LOW TEMPERATURE TEST: FOLLOWING THE INTERNAL MOISTURE TEST, THE RELAYS SHALL BE SUBJECTED TO -65°C FOR TWO HOURS WITH NO COIL VOLTAGE APPLIED. RELAYS SHALL THEN BE SUBJECTED TO THE MISS TEST AS SPECIFIED IN PARA 4.A.(2).

(5) DISPOSITION OF RELAYS WITH HIGH CONTACT RESISTANCE: ALL RELAYS EXHIBITING A CONTACT RESISTANCE OF MORE THAN 100 OHMS IN PARA 4.A.(2) AND 4.A.(4) TESTS SHALL BE REJECTED AND ANALYZED TO DETERMINE CAUSE. PURCHASER SHALL BE NOTIFED AS TO THE NUMBER OF UNITS FROM EACH LOT WHICH FAIL THESE TEST.

MASTER

NOTES:

1. INDUCTIVE LOAD LIMITED BY $\leq .008$ SEC $\frac{L}{R}$, WL = 100 M j POWER FACTOR 50% FOR AC
2. ALL AC RATINGS ARE GIVEN FOR UNGROUNDED CASE ONLY.

QTY REQD	PART OR IDENTIFYING NO.	MATERIAL OR NOTES	NOMENCLATURE OR DESCRIPTION	FIND NO.

LIST OF MATERIALS

NEXT ASSY	USED ON

APPLICATION

UNLESS OTHERWISE SPECIFIED
DIMENSIONS ARE IN INCHES
CAPACITOR VALUES ARE IN μf
RESISTOR VALUES ARE IN OHMS
TOLERANCES ON
FRACTIONS ± DECIMALS ± ANGLES ±
DO NOT SCALE THIS DRAWING

MATERIAL
SEE NOTES

MIT
INSTRUMENTATION LAB
CAMBRIDGE, MASS.

DRAWN 3 MAY 66
CHECKED 3 MAY 66
APPROVED
APPROVED Eldon C Hall 10 May 66
APPROVED MIT 5/10/66
APPROVED MSC A. C. METZGER
DATE

MANNED SPACECRAFT CENTER
HOUSTON, TEXAS

RELAY, ARMATURE
(GENERAL PURPOSE)
SPECIFICATION CONTROL DRAWING

CODE IDENT NO. 80230
SIZE C
DRAWING NO. 1005003
SCALE NONE
SHEET 2 OF 3

MODERN BLUE PRINT CO. D-19550

NOTICE – WHEN GOVERNMENT DRAWINGS, SPECIFICATIONS, OR OTHER DATA ARE USED FOR ANY PURPOSE OTHER THAN IN CONNECTION WITH A DEFINITELY RELATED GOVERNMENT PROCUREMENT OPERATION, THE UNITED STATES GOVERNMENT THEREBY INCURS NO RESPONSIBILITY NOR ANY OBLIGATION WHATSOEVER; AND THE FACT THAT THE GOVERNMENT MAY HAVE FORMULATED, FURNISHED, OR IN ANY WAY SUPPLIED THE SAID DRAWINGS, SPECIFICATIONS OR OTHER DATA IS NOT TO BE REGARDED BY IMPLICATION OR OTHERWISE AS IN ANY MANNER LICENSING THE HOLDER OR ANY OTHER PERSON OR CORPORATION, OR CONVEYING ANY RIGHTS OR PERMISSION TO MANUFACTURE, USE, OR SELL ANY PATENTED INVENTION THAT MAY IN ANY WAY BE RELATED THERETO.

REVISIONS

SYM	ZONE	DESCRIPTION	DR	CHK	DATE	APPROVED
—		INITIAL RELEASE CLASS A PER TDRR 28639			5-10-66	

TABLE I

DASH NO.	SCHEMATIC NO.	FIGURE NO.	NOMINAL RATED COIL VOLTAGE (VOLTS DC)	PULL-IN VOLTAGE (VOLTS DC)			DROP-OUT VOLTAGE (VOLTS DC)		COIL RESISTANCE RANGE AT +25°C (OHMS)	PIN LENGTH "A"	LEAD MATERIAL
				MAX (OVER AMBIENT TEMP RANGE)	MINIMUM (AT +25°C)	MIN (OVER AMBIENT TEMP RANGE)	MAX (OVER AMBIENT TEMP RANGE)	MIN (OVER AMBIENT TEMP RANGE)			
-1	A	1	28.0	18.0	8.0	5.0	14.0	1.0	745 TO 990	.210/.172	SEE TABLE II
-2	A	1	28.0	18.0	8.0	5.0	14.0	1.0	745 TO 990	.210/.172	ALLOY 52, GOLD PLATED PER MIL-G-45204, TYPE 11, COPPER ON NICKEL FLASHED.

TABLE II

LEAD MATERIAL:

CORE - 1/3 OF TOTAL LEAD DIAMETER, COPPER

JACKET - COMPOSITION:

NICKEL - 42.5%
IRON - 50.9%
CHROMIUM - 5.75%
MANGANESE - 0.5%
SILICON - 0.25%
CARBON - 0.07%

FINISH - GOLD PLATE PER MIL-G-45204, TYPE 11, COPPER FLASHED

THE PART NUMBER IS THE DRAWING NUMBER PLUS THE APPLICABLE DASH NUMBER.

MASTER

NEXT ASSY	USED ON
APPLICATION	

UNLESS OTHERWISE SPECIFIED
DIMENSIONS ARE IN INCHES
CAPACITOR VALUES ARE IN µf
RESISTOR VALUES ARE IN OHMS
TOLERANCES ON
FRACTIONS ± DECIMALS ± ANGLES ±
DO NOT SCALE THIS DRAWING

MATERIAL
SEE NOTES

QTY REQD	PART OR IDENTIFYING NO.	MATERIAL OR NOTES	NOMENCLATURE OR DESCRIPTION	FIND NO.

LIST OF MATERIALS

MIT
INSTRUMENTATION LAB
CAMBRIDGE, MASS.

MANNED SPACECRAFT CENTER
HOUSTON, TEXAS

DRAWN 2MAY66
CHECKED 3 May 66
APPROVED
APPROVED 10 May 66
APPROVED MIT 5-10-66
APPROVED MSC C. METZGER
DATE

RELAY, ARMATURE (GENERAL PURPOSE)

SPECIFICATION CONTROL DRAWING

CODE IDENT NO. 80230
SIZE C
DRAWING NO. 1005003
SCALE NONE
SHEET 3 OF 3

1005003

MODERN BLUE PRINT CO. D-19550

NOTICE – WHEN GOVERNMENT DRAWINGS, SPECIFICATIONS, OR OTHER DATA ARE USED FOR ANY PURPOSE OTHER THAN IN CONNECTION WITH A DEFINITELY RELATED GOVERNMENT PROCUREMENT OPERATION, THE UNITED STATES GOVERNMENT THEREBY INCURS NO RESPONSIBILITY NOR ANY OBLIGATION WHATSOEVER; AND THE FACT THAT THE GOVERNMENT MAY HAVE FORMULATED, FURNISHED, OR IN ANY WAY SUPPLIED THE SAID DRAWINGS, SPECIFICATIONS OR OTHER DATA IS NOT TO BE REGARDED BY IMPLICATION OR OTHERWISE AS IN ANY MANNER LICENSING THE HOLDER OR ANY OTHER PERSON OR CORPORATION, OR CONVEYING ANY RIGHTS OR PERMISSION TO MANUFACTURE, USE, OR SELL ANY PATENTED INVENTION THAT MAY IN ANY WAY BE RELATED THERETO.

REVISIONS						
SYM	ZONE	DESCRIPTION	DR	CHK	DATE	APPROVED
—		INITIAL RELEASE CLASS A PER TDRR 28639			5-10-66	

REQUIREMENTS:

1. GENERAL:

A. INTERPRET DRAWING IN ACCORDANCE WITH STANDARDS PRESCRIBED BY MIL-D-70327.

B. SUPPLIER SHALL CONFORM TO QUALITY ASSURANCE PROVISIONS SPECIFIED IN ND 1015404, CLASS 2.

C. UNITS SHALL BE CAPABLE OF MEETING ALL QUALIFICATION REQUIREMENTS SPECIFIED IN ND 1002046 UNLESS MODIFIED OR AMENDED BY DESIGN REQUIREMENTS IN THIS DRAWING. ALL ELECTRICAL REQUIREMENT LEVELS AS LISTED ON THIS DRAWING SHALL TAKE PRECEDENCE OVER THOSE LISTED IN ND 1002046. THE CLASSIFICATION OF THIS RELAY SHALL BE GENERAL PURPOSE.

D. THIS UNIT SHALL MEET ALL APPLICABLE PARAGRAPHS OF MIL-R-5757 WITH THE FOLLOWING QUALIFICATIONS.

E. PRESERVATION, PACKAGING, PACKING AND CONTAINER MARKING PER ND 1002215, CLASS 1, CODE 1. (THERE ARE NO CRITICAL FUNCTIONING OR CLOSELY TOLERANCED SURFACES AS DESCRIBED IN ND 1002215).

2. INSPECTION AND ACCEPTANCE:

A. MECHANICAL REQUIREMENTS:

(1) LEAD MATERIAL: SHALL BE PER TABLE I.
A CERTIFICATE OF COMPLIANCE WITH THIS REQUIREMENT SHALL ACCOMPANY EACH SHIPMENT.

(2) MARKING: UNIT SHALL BE PERMANENTLY AND LEGIBLY MARKED WITH THE FOLLOWING:

MANUFACTURER'S NAME OR SYMBOL
MANUFACTURER'S PART NUMBER
NASA DRAWING NUMBER, DASH NUMBER, AND REVISION LETTER
RATED COIL VOLTAGE
DATE CODE
COIL RESISTANCE
CIRCUIT DIAGRAM

(3) LEAK RATE: UNITS SHALL BE DEGASSED, BACK FILLED TO ONE ATMOSPHERE (ABSOLUTE) WITH DRY NITROGEN (90%) AND HELIUM (10%) GASES, AND HERMETICALLY SEALED. 100 PERCENT OF THE UNITS SHALL BE TESTED PER MIL-STD-202, METHOD 112, TEST CONDITION C, PROCEDURE IV. THE LEAK RATE SHALL BE LESS THAN 10^{-8} CUBIC CENTIMETER/SECOND AT ONE ATMOSPHERE PRESSURE DIFFERENTIAL.

B. ELECTRICAL REQUIREMENTS:

(1) PULL-IN VOLTAGE: SEE TABLE I.

(2) DROP-OUT VOLTAGE: SEE TABLE I.

(3) CONTACT RESISTANCE: (100% INSPECTION) .05 OHM MAXIMUM BEFORE LIFE (.10 OHMS MAXIMUM AFTER LIFE) WHEN MEASURED WITH 100 MILLIAMPS FROM A SIX (6) VOLT DC SOURCE. (THE CONTACTS SHALL NOT SWITCH THE MEASURING LOAD).

(4) DIELECTRIC STRENGTH: SHALL WITHSTAND FOR ONE MINUTE THE FOLLOWING POTENTIALS AT THE INDICATED LEVELS, WITHOUT ARCING, DAMAGE, OR BREAKDOWN.

(a) SEA LEVEL: 1000 VOLTS RMS 60 CPS BETWEEN,
1. CONTACT TERMINALS AND COIL TERMINALS,
2. CONTACT TERMINALS AND CASE,
3. CIRCUITS

(b) SEA LEVEL: 500 VOLTS RMS 60 CPS BETWEEN,
1. OPEN CONTACT TERMINALS OF EACH CIRCUIT (RELAY BOTH ENERGIZED AND DEENERGIZED)
2. COIL TERMINALS AND CASE.

(5) INSULATION RESISTANCE: 1000 MEGOHMS MINIMUM, USING A 500 VOLT DC TEST POTENTIAL APPLIED BETWEEN

(a) COIL TERMINALS, COMMONLY CONNECTED, AND CASE

(b) EACH NORMALLY OPEN CONTACT AND CASE

(c) EACH MOVABLE, OR "COMMON" CONTACT AND CASE (WITH COIL DEENERGIZED)

(d) ALL CONTACT TERMINALS, COMMONLY CONNECTED, AND THE COIL TERMINALS.

(6) OPERATE TIME: 6 MILLISECONDS MAXIMUM OVER THE AMBIENT ~~TEMPERATURE~~ TEMPERATURE RANGE.

(7) RELEASE TIME: 6 MILLISECONDS MAXIMUM OVER THE AMBIENT TEMPERATURE RANGE.

(8) CONTACT BOUNCE TIME: 3 MILLISECONDS MAXIMUM OVER THE AMBIENT TEMPERATURE RANGE. (CONTACT BOUNCE TIME IS NOT TO BE INCLUDED IN OPERATE AND RELEASE TIME). CONTACT LOAD 100 MA

PROCURE ONLY FROM APPROVED SOURCES LISTED ON ND 1002034 FOR THIS DRAWING.

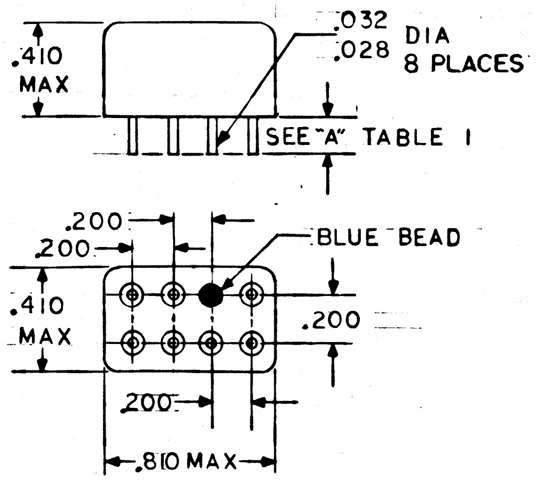

FIG. 1

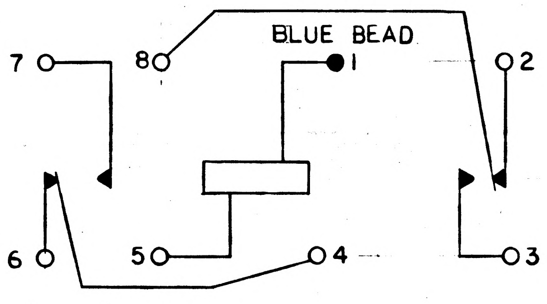

SCHEMATIC A
CONTACTS SHOWN DE-ENERGIZED
(NUMBERS FOR REF ONLY)

QTY REQD	PART OR IDENTIFYING NO.	MATERIAL OR NOTES	NOMENCLATURE OR DESCRIPTION	FIND NO.
LIST OF MATERIALS				

NEXT ASSY	USED ON
APPLICATION	

UNLESS OTHERWISE SPECIFIED
DIMENSIONS ARE IN INCHES
CAPACITOR VALUES ARE IN μf
RESISTOR VALUES ARE IN OHMS
TOLERANCES ON
FRACTIONS ± DECIMALS ± ANGLES ±
DO NOT SCALE THIS DRAWING

MATERIAL
SEE NOTES

MIT
INSTRUMENTATION LAB
CAMBRIDGE, MASS.

DRAWN George Tasfika 2MAY66
CHECKED [illegible] 3MAY66
APPROVED
APPROVED Ellen C Hall 10 May 66
APPROVED MIT M G Mundy 5 10 66
APPROVED MSC C. METZGER
DATE

MANNED SPACECRAFT CENTER
HOUSTON, TEXAS

RELAY, ARMATURE
(GENERAL PURPOSE)
SPECIFICATION CONTROL DRAWING

CODE IDENT NO. 80230
SIZE C
DRAWING NO. 1005003
SCALE NONE
SHEET 1 OF 3

MASTER

NOTICE – WHEN GOVERNMENT DRAWINGS, SPECIFICATIONS, OR OTHER DATA ARE USED FOR ANY PURPOSE OTHER THAN IN CONNECTION WITH A DEFINITELY RELATED GOVERNMENT PROCUREMENT OPERATION, THE UNITED STATES GOVERNMENT THEREBY INCURS NO RESPONSIBILITY NOR ANY OBLIGATION WHATSOEVER; AND THE FACT THAT THE GOVERNMENT MAY HAVE FORMULATED, FURNISHED, OR IN ANY WAY SUPPLIED THE SAID DRAWINGS, SPECIFICATIONS OR OTHER DATA IS NOT TO BE REGARDED BY IMPLICATION OR OTHERWISE AS IN ANY MANNER LICENSING THE HOLDER OR ANY OTHER PERSON OR CORPORATION, OR CONVEYING ANY RIGHTS OR PERMISSION TO MANUFACTURE, USE, OR SELL ANY PATENTED INVENTION THAT MAY IN ANY WAY BE RELATED THERETO.

REVISIONS						
SYM	ZONE	DESCRIPTION	DR	CHK	DATE	APPROVED
M		INITIAL RELEASE CLASS A PER TDRR 29120			5-24-66	

REQUIREMENTS:

1. GENERAL:

A. INTERPRET DRAWING IN ACCORDANCE WITH STANDARDS PRESCRIBED BY MIL-D-70327.

B. SUPPLIER SHALL CONFORM TO THE QUALITY ASSURANCE PROVISIONS AS CONTAINED IN ND 1015404, CLASS 3.

C. PREPARATION FOR DELIVERY SHALL BE IN ACCORDANCE WITH MIL-C-12000. CONTAINER (SPOOL OR BARREL) SHALL BE MARKED IN ACCORDANCE WITH MIL-C-12000 WITH THE MANUFACTURER'S NAME AND/OR SYMBOL, LOT OR SERIAL NUMBER, DATE OF MANUFACTURE OR CODING, NASA DRAWING NUMBER, REVISION LETTER, AND DASH NUMBER, QUANTITY ENCLOSED AND THE PRECAUTIONARY WORDS "FRAGILE", "THIS END UP" AND "DO NOT DROP OR ROLL".

- *1. WIRE SHALL BE COILED AND FURNISHED IN A BARREL PACK. THE BARREL DIAMETER SHALL BE 20 INCHES AND THE MINIMUM DIAMETER OF THE COIL SHALL BE 13 INCHES.
  - * FOR OTHER THAN MACHINE WIRE-WRAPPING, WIRE MAY BE COILED AND FURNISHED ON A SPOOL.

2. ACCEPTANCE AND INSPECTION:

A. MECHANICAL REQUIREMENTS:

- (1) INSULATION: COLOR, YELLOW
- (2) DIAMETER OF CONDUCTOR: 0.010 INCH +0.0003, -0.0001 INCH.
- (3) DIAMETER OVER INSULATION: 0.021 INCH, ± 0.0015 INCH.
- (4) MINIMUM CONTINUOUS LENGTH: 500 FEET.
- (5) FLAMMABILITY: INSULATION SHALL NOT SUPPORT COMBUSTION.
- (6) STRIP FORCE: THE INSULATION PULL-OFF FORCE FOR A 3 INCH STRIP SHALL BE 8 OUNCES MINIMUM, 3 POUNDS MAXIMUM.

B. ELECTRICAL CHARACTERISTICS: AT 25°C ± 5°C.

- (1) DC RESISTANCE: 115 OHMS MAXIMUM PER 1000 FEET.
- (2) VOLTAGE RATING: 600 VOLTS RMS.
- (3) DIELECTRIC STRENGTH: 1500 VOLTS RMS, MINIMUM AFTER 4 HOURS IN WATER 25°C PLUS OR MINUS 5°C.
- (4) INSULATION RESISTANCE: 2500 MEGOHMS MINIMUM PER 1000 FEET AFTER 4 HOURS IN WATER 25°C PLUS OR MINUS 5°C.

C. VENDOR SUPPLIED DATA: EACH SHIPMENT OF WIRE SHALL BE ACCOMPANIED BY THE FOLLOWING DOCUMENTATION.

- (1) CERTIFICATE OF COMPLIANCE WITH DESIGN REQUIREMENTS.

MASTER

PROCURE ONLY FROM APPROVED SOURCES LISTED IN ND 1002034 FOR THIS DRAWING.

3. DESIGN:

A. OPERATING TEMPERATURE: 130°C MAXIMUM.

B. TENSILE STRENGTH: 33,000 POUNDS PER SQUARE INCH MINIMUM, 42,000 PSI MAXIMUM.

C. ELONGATION: 12 PERCENT MINIMUM, 25 PERCENT MAXIMUM.

D. SPLICES: SPLICES OF THE CONDUCTOR SHALL BE ELECTRO-WELDED BEFORE FINAL PACKAGING AND SHALL BE OF THE BUTT TYPE. 2" ON EITHER SIDE OF SPLICE SHALL BE STRIPPED ON INSULATION.

E. DIELECTRIC CONSTANT: 3.3 MAXIMUM AT 1 MC AND 77°F.

F. CONCENTRICITY: AT ANY CROSS SECTION ALONG THE LENGTH OF THE COMPLETED WIRE THE MINIMUM THICKNESS OF THE INSULATION SHALL NOT BE LESS THAN 41 PERCENT OF THE DIFFERENCE BETWEEN THE MEASURED DIAMETER OVER THE INSULATION AND THE MEASURED DIAMETER OVER THE CONDUCTOR, OR NOT LESS THAN 70 PERCENT OF THE MAXIMUM THICKNESS AT THAT CROSS-SECTION.

G. HEAT RESISTANCE: INSULATION SHALL WITHSTAND 1500 VOLTS MINIMUM AFTER 96 HOURS AT 150°C.

H. COLD BEND: INSULATION SHALL WITHSTAND 1500 VOLTS MINIMUM AFTER 4 HOURS AT -65°C AND BENT AROUND A 1/2 INCH DIAMETER MANDREL.

J. INSULATION CUT-THROUGH: AT A TEMPERATURE OF 50°C THE INSULATION SHALL RESIST THE PENETRATION OF A METAL BLADE 0.003 INCH ± 0.0002 INCH THICK WITH 750 GRAMS APPLIED AT THE POINT OF CONTACT FOR 24 HOURS. THERE SHALL BE NO ELECTRICAL CONTINUITY BETWEEN THE BLADE AND THE CONDUCTOR WHEN A POTENTIAL OF 500 VOLTS RMS IS APPLIED.

K. MINIMUM CURL OF WIRE: WHEN A 30 INCH LENGTH OF WIRE IS CUT FROM A BARREL, THE WIRE, WHEN LYING UNRESTRAINED ON A SMOOTH, FLAT SURFACE, SHALL NOT CURL UP TO A DIAMETER OF LESS THAN 10 INCHES WITHIN ONE MINUTE AT AMBIENT TEMPERATURES.

L. SPARK TEST: 2000 VOLTS RMS.

M. MATERIAL OF CONDUCTOR: SOLID, OXYGEN FREE HIGH CONDUCTIVITY, COPPER, CERTIFIED GRADE, REF ASTM-B-170 SILVER PLATED 40 MICROINCHES MINIMUM, 80 MICROINCHES MAXIMUM.

N. WORKMANSHIP: THE SURFACE OF THE FINISHED WIRE SHALL BE CLEAN, SMOOTH, FREE FROM FOREIGN RESIDUE AND FREE FROM VISIBLE BLEMISHES. THERE SHALL BE NO IMPERFECTIONS WHICH INCREASE THE OVERALL DIAMETER SO AS TO EXCEED THE MAXIMUM SPECIFIED. THE INSULATION SHALL BE UNIFORM THROUGHOUT AND FREE FROM ANY DEFECTS SUCH AS INCLUSIONS, RADIAL CRACKS, PINHOLES, DISCOLORATION OF CONDUCTOR OR INSULATION WHICH MAY AFFECT ITS SERVICEABILITY OR REQUIRE SPECIAL HANDLING.

P. MATERIAL IS A POLYIMIDE FILM.

R. INTENDED USE: MATERIAL WILL BE USED AS A WIRE-WRAP WIRE IN POTTED ASSEMBLIES.

QTY REQD	PART OR IDENTIFYING NO.	MATERIAL OR NOTES	NOMENCLATURE OR DESCRIPTION	FIND NO.
LIST OF MATERIALS				

NEXT ASSY	USED ON
APPLICATION	

UNLESS OTHERWISE SPECIFIED
DIMENSIONS ARE IN INCHES
CAPACITOR VALUES ARE IN µf
RESISTOR VALUES ARE IN OHMS
TOLERANCES ON
FRACTIONS ± DECIMALS ± ANGLES ±
DO NOT SCALE THIS DRAWING

MATERIAL
SEE NOTES

MIT
INSTRUMENTATION LAB
CAMBRIDGE, MASS.

DRAWN		17 MAY 1966
CHECKED		17 May 66
APPROVED		
APPROVED	Eldon C Hall	24 May 66
APPROVED MIT		5-24-66
APPROVED MSC	A. C. METZGER	
		DATE

MANNED SPACECRAFT CENTER
HOUSTON, TEXAS

WIRE, ELECTRICAL, INSULATED, SOLID

SPECIFICATION CONTROL DRAWING

CODE IDENT NO.	SIZE	DRAWING NO.
80230	C	1005005
SCALE NONE		SHEET 1 OF 1

MODERN BLUE PRINT CO. D-19550

NOTICE – WHEN GOVERNMENT DRAWINGS, SPECIFICATIONS, OR OTHER DATA ARE USED FOR ANY PURPOSE OTHER THAN IN CONNECTION WITH A DEFINITELY RELATED GOVERNMENT PROCUREMENT OPERATION, THE UNITED STATES GOVERNMENT THEREBY INCURS NO RESPONSIBILITY NOR ANY OBLIGATION WHATSOEVER; AND THE FACT THAT THE GOVERNMENT MAY HAVE FORMULATED, FURNISHED, OR IN ANY WAY SUPPLIED THE SAID DRAWINGS, SPECIFICATIONS OR OTHER DATA IS NOT TO BE REGARDED BY IMPLICATION OR OTHERWISE AS IN ANY MANNER LICENSING THE HOLDER OR ANY OTHER PERSON OR CORPORATION, OR CONVEYING ANY RIGHTS OR PERMISSION TO MANUFACTURE, USE, OR SELL ANY PATENTED INVENTION THAT MAY IN ANY WAY BE RELATED THERETO.

REVISIONS						
SYM	ZONE	DESCRIPTION	DR	CHK	DATE	APPROVED
		ORIGINATED AND RELEASED PER TDRR 33080			23 FEB 67	

REQUIREMENTS:

1. GENERAL:
   - A. INTERPRET DRAWING IN ACCORDANCE WITH STANDARDS PRESCRIBED BY MIL-D-70327.
   - B. SUPPLIER SHALL CONFORM TO THE QUALITY ASSURANCE PROVISIONS CONTAINED IN ND 1015404, CLASS 3.
   - C. PREPARATION FOR DELEVERY SHALL BE IN ACCORDANCE WITH ND 1002215, CLASS II.
     - (1) MARKING OF SHIPPING CONTAINERS SHALL CONFORM TO THE MARKING OF UNIT AND INTERMEDIATE PACKAGES AND THE METHODS OF MARKING AS SPECIFIED IN ND 1002215 AND SHALL INCLUDE EXPIRATION DATE.
2. ACCEPTANCE AND INSPECTION:
   - A. PROPERTIES:
     - (1) COLOR AND BODY: WHITE LIQUID RESIN.
     - (2) VISCOSITY: 30,000 CENTIPOISES MEASURED ON A BROOKFIELD VISCOMETER, NO. 4 SPINDLE, 2 RPM AT 25°C ± 2°C, PER ASTM D-445.
     - (3) SPECIFIC GRAVITY: 1.47 PER ASTM D-792.
3. DESIGN:
   - A. DESCRIPTION: THE SILICONE RUBBER AS DESCRIBED HEREIN IS A FIRE RESISTANT (SELF EXTINGUISHING) ENCAPSULANT, WHITE IN COLOR, WITH A MEDIUM VISCOSITY THAT CURES READILY IN DEEP SECTIONS (1" DEPTH IN METAL CAN) TO A HIGH DUROMETER, HIGH STRENGTH RUBBER AND HAS GOOD CORROSION RESISTANCE.
   - B. SHALL BE DESIGNED TO HAVE PROPERTIES, AFTER BEING MIXED WITH CATALYST IN A 10 TO 1 RATIO PER THE MANUFACTURER'S INSTRUCTIONS, PER TABLE I, OTHER PROPERTIES ARE:
     - (1) DEEP SECTION CURE: MATERIAL SHALL BE CAPABLE OF A DEEP SECTION CURE TO A 1" DEPTH IN A METAL CAN.
     - (2) CORROSION RESISTANCE: CORROSION RESISTANCE OF MATERIAL SHALL BE CAPABLE OF MEETING THE REQUIREMENTS OF MIL-S-23586.
     - (3) THERMAL SHOCK: MATERIAL SHALL BE CAPABLE OF WITHSTANDING 10 CYCLES OF THERMAL SHOCK PER MIL-I-16923C.
     - (4) FIRE RESISTANCE: MATERIAL SHALL BE FIRE RESISTANT, SELF EXTINGUISHING PER ASTM D-1692.
   - C. STORAGE: THE SILICONE RUBBER SHALL BE STORED IN CLOSED CONTAINERS AT TEMPERATURES OF 70°F OR LESS UPON RECEIVING FROM VENDOR.
   - D. SHELF LIFE: WHEN STORED AT 70°F OR LESS THE AS RECEIVED MATERIAL SHALL HAVE A SHELF LIFE OF AT LEAST 12 MONTHS.

TABLE I
GENERAL PROPERTIES

PROPERTIES	TEST METHOD	RATING	UNITS
PHYSICAL AND CHEMICAL			
RADIATION RESISTANCE • 25°C	COBALT 60 SOURCE	100	MEGARAD
WATER ABSORPTION • 25°C	ASTM D-570	0.2	% 7 DAYS
TEMPERATURE RANGE		-65 TO 250	°C
THERMAL CONDUCTIVITY 25°C THRU 100°C	CENCO-FITCH	6.0×10^{-4}	CAL/cm^2/°C/SEC/cm
WEIGHT LOSS AFTER 96 HOURS • 200°C		3.7	%
VOLUME EXPANSION 25°C THRU 150°C		5.0×10^{-8}	cc/cc/°C
SPECIFIC HEAT		0.33	CAL/cm/°C
BRITTLE POINT	ASTM D-746	-100	°C
MECHANICAL			
TENSILE STRENGTH	ASTM D-412	650	psi
ELONGATION	ASTM D-412	120	%
HARDNESS DUROMETER	ASTM D-676	60	SHORE A
SHRINKAGE, LINEAR • 25°C		0.4	% 3 DAYS
ELECTRICAL			
ARC RESISTANCE	ASTM D-495	125	SECONDS
DIELECTRIC CONSTANT • 25°C	ASTM D-150		
• 10^2 CPS		3.2	
• 10^3 CPS		3.2	
• 10^6 CPS		3.1	
• 10^9 CPS		2.95	
DISSIPATION FACTOR • 25°C	ASTM D-150		
• 10^2 CPS		0.030	
• 10^3 CPS		0.015	
• 10^6 CPS		0.005	
• 10^9 CPS		0.005	
ELECTRIC STRENGTH 1/16" SAMPLE	ASTM D-149	600	VOLTS/MIL
VOLUME RESISTIVITY 500 V, DC	ASTM D-257	3×10^{14}	OHM/cm

PROCURE ONLY FROM APPROVED SOURCES AS LISTED IN ND 1002034 FOR THIS DRAWING.

QTY REQD	PART OR IDENTIFYING NO.	MATERIAL OR NOTES	NOMENCLATURE OR DESCRIPTION	FIND NO.

LIST OF MATERIALS

NEXT ASSY	USED ON

APPLICATION

UNLESS OTHERWISE SPECIFIED
DIMENSIONS ARE IN INCHES
CAPACITOR VALUES ARE IN µf
RESISTOR VALUES ARE IN OHMS
TOLERANCES ON
FRACTIONS ± DECIMALS ± ANGLES ±
DO NOT SCALE THIS DRAWING

MATERIAL
SEE NOTE

MIT
INSTRUMENTATION LAB
CAMBRIDGE, MASS.

MANNED SPACECRAFT CENTER
HOUSTON, TEXAS

		DATE
DRAWN	R. F. Smith	1·18·67
CHECKED	#8M	1·18·67
APPROVED		1/20/67
APPROVED	Ellen C Hall	2/10/67
APPROVED		2/23/67
APPROVED MSC		2/14/67

COMPOUND, SILICONE RUBBER
SPECIFICATION CONTROL DRAWING

CODE IDENT NO.	SIZE	DRAWING NO.
80230	C	1005008

SCALE NONE — SHEET 1 OF 1

1005008

NOTICE – WHEN GOVERNMENT DRAWINGS, SPECIFICATIONS, OR OTHER DATA ARE USED FOR ANY PURPOSE OTHER THAN IN CONNECTION WITH A DEFINITELY RELATED GOVERNMENT PROCUREMENT OPERATION, THE UNITED STATES GOVERNMENT THEREBY INCURS NO RESPONSIBILITY NOR ANY OBLIGATION WHATSOEVER; AND THE FACT THAT THE GOVERNMENT MAY HAVE FORMULATED, FURNISHED, OR IN ANY WAY SUPPLIED THE SAID DRAWINGS, SPECIFICATIONS OR OTHER DATA IS NOT TO BE REGARDED BY IMPLICATION OR OTHERWISE AS IN ANY MANNER LICENSING THE HOLDER OR ANY OTHER PERSON OR CORPORATION, OR CONVEYING ANY RIGHTS OR PERMISSION TO MANUFACTURE, USE, OR SELL ANY PATENTED INVENTION THAT MAY IN ANY WAY BE RELATED THERETO.

REVISIONS						
SYM	ZONE	DESCRIPTION	DR	CHK	DATE	APPROVED
		ORIGINATED AND RELEASED PER TDRR 33080			23 FEB 67	

REQUIREMENTS:

1. GENERAL:
   - A. INTERPRET DRAWING IN ACCORDANCE WITH STANDARDS PRESCRIBED BY MIL-D-70327.
   - B. SUPPLIER SHALL CONFORM TO THE QUALITY ASSURANCE PROVISIONS CONTAINED IN ND 1015404, CLASS 3.
   - C. PREPARATION FOR DELEVERY SHALL BE IN ACCORDANCE WITH ND 1002215, CLASS II.
     - (1) MARKING OF SHIPPING CONTAINERS SHALL CONFORM TO THE MARKING OF UNIT AND INTERMEDIATE PACKAGES AND THE METHODS OF MARKING AS SPECIFIED IN ND 1002215 AND SHALL INCLUDE EXPIRATION DATE.
2. ACCEPTANCE AND INSPECTION:
   - A. PROPERTIES:
     - (1) COLOR AND BODY: WHITE LIQUID RESIN.
     - (2) VISCOSITY: 30,000 CENTIPOISES MEASURED ON A BROOKFIELD VISCOMETER, NO. 4 SPINDLE, 2 RPM AT 25°C ± 2°C, PER ASTM D-445.
     - (3) SPECIFIC GRAVITY: 1.47 PER ASTM D-792.
3. DESIGN:
   - A. DESCRIPTION: THE SILICONE RUBBER AS DESCRIBED HEREIN IS A FIRE RESISTANT (SELF EXTINGUISHING) ENCAPSULANT, WHITE IN COLOR, WITH A MEDIUM VISCOSITY THAT CURES READILY IN DEEP SECTIONS (1" DEPTH IN METAL CAN) TO A HIGH DUROMETER, HIGH STRENGTH RUBBER AND HAS GOOD CORROSION RESISTANCE.
   - B. SHALL BE DESIGNED TO HAVE PROPERTIES, AFTER BEING MIXED WITH CATALYST IN A 10 TO 1 RATIO PER THE MANUFACTURER'S INSTRUCTIONS, PER TABLE I. OTHER PROPERTIES ARE:
     - (1) DEEP SECTION CURE: MATERIAL SHALL BE CAPABLE OF A DEEP SECTION CURE TO A 1" DEPTH IN A METAL CAN.
     - (2) CORROSION RESISTANCE: CORROSION RESISTANCE OF MATERIAL SHALL BE CAPABLE OF MEETING THE REQUIREMENTS OF MIL-S-23586.
     - (3) THERMAL SHOCK: MATERIAL SHALL BE CAPABLE OF WITHSTANDING 10 CYCLES OF THERMAL SHOCK PER MIL-I-16923C.
     - (4) FIRE RESISTANCE: MATERIAL SHALL BE FIRE RESISTANT, SELF EXTINGUISHING PER ASTM D-1692.
   - C. STORAGE: THE SILICONE RUBBER SHALL BE STORED IN CLOSED CONTAINERS AT TEMPERATURES OF 70°F OR LESS UPON RECEIVING FROM VENDOR.
   - D. SHELF LIFE: WHEN STORED AT 70°F OR LESS THE AS RECEIVED MATERIAL SHALL HAVE A SHELF LIFE OF AT LEAST 12 MONTHS.

PROCURE ONLY FROM APPROVED SOURCES AS LISTED IN ND 1002034 FOR THIS DRAWING.

TABLE I
GENERAL PROPERTIES

PROPERTIES	TEST METHOD	RATING	UNITS
PHYSICAL AND CHEMICAL			
RADIATION RESISTANCE @ 25°C	COBALT 60 SOURCE	100	MEGARAD
WATER ABSORPTION @ 25°C	ASTM D-570	0.2	% 7 DAYS
TEMPERATURE RANGE		-65 TO 250	°C
THERMAL CONDUCTIVITY 25°C THRU 100°C	CENCO-FITCH	6.0×10^{-4}	CAL/cm^2/°C/SEC/cm
WEIGHT LOSS AFTER 96 HOURS @ 200°C		3.7	%
VOLUME EXPANSION 25°C THRU 150°C		5.0×10^{-8}	cc/cc/°C
SPECIFIC HEAT		0.33	CAL/cm/°C
BRITTLE POINT	ASTM D-746	-100	°C
MECHANICAL			
TENSILE STRENGTH	ASTM D-412	650	psi
ELONGATION	ASTM D-412	120	%
HARDNESS DUROMETER	ASTM D-676	60	SHORE A
SHRINKAGE, LINEAR @ 25°C		0.4	% 3 DAYS
ELECTRICAL			
ARC RESISTANCE	ASTM D-495	125	SECONDS
DIELECTRIC CONSTANT @ 25°C	ASTM D-150		
@ 10^2 CPS		3.2	
@ 10^3 CPS		3.2	
@ 10^6 CPS		3.1	
@ 10^9 CPS		2.95	
DISSIPATION FACTOR @ 25°C	ASTM D-150		
@ 10^2 CPS		0.030	
@ 10^3 CPS		0.015	
@ 10^6 CPS		0.005	
@ 10^9 CPS		0.005	
ELECTRIC STRENGTH 1/16" SAMPLE	ASTM D-149	600	VOLTS/MIL
VOLUME RESISTIVITY 500 V, DC	ASTM D-257	3×10^{14}	OHM/cm

QTY REQD	PART OR IDENTIFYING NO.	MATERIAL OR NOTES	NOMENCLATURE OR DESCRIPTION	FIND NO.

LIST OF MATERIALS

NEXT ASSY	USED ON
APPLICATION	

UNLESS OTHERWISE SPECIFIED
DIMENSIONS ARE IN INCHES
CAPACITOR VALUES ARE IN μf
RESISTOR VALUES ARE IN OHMS
TOLERANCES ON
FRACTIONS DECIMALS ANGLES
± ± ±
DO NOT SCALE THIS DRAWING

MATERIAL
SEE NOTE

MIT
INSTRUMENTATION LAB
CAMBRIDGE, MASS.

MANNED SPACECRAFT CENTER
HOUSTON, TEXAS

DRAWN	R. F. Smith	1·18·67
CHECKED	[illegible]	1·18·67
APPROVED	A. [illegible]	1/20/67
APPROVED	Ellen C Hall	2/10/67
APPROVED ~~MIT~~ CCB	[illegible]	2/23/67
APPROVED MSC	[illegible]	2/14/67
		DATE

COMPOUND, SILICONE RUBBER
SPECIFICATION CONTROL DRAWING

CODE IDENT NO.	SIZE	DRAWING NO.
80230	C	1005008

SCALE NONE SHEET 1 OF 1

1005008

NOTICE – WHEN GOVERNMENT DRAWINGS, SPECIFICATIONS, OR OTHER DATA ARE USED FOR ANY PURPOSE OTHER THAN IN CONNECTION WITH A DEFINITELY RELATED GOVERNMENT PROCUREMENT OPERATION, THE UNITED STATES GOVERNMENT THEREBY INCURS NO RESPONSIBILITY NOR ANY OBLIGATION WHATSOEVER; AND THE FACT THAT THE GOVERNMENT MAY HAVE FORMULATED, FURNISHED, OR IN ANY WAY SUPPLIED THE SAID DRAWINGS, SPECIFICATIONS OR OTHER DATA IS NOT TO BE REGARDED BY IMPLICATION OR OTHERWISE AS IN ANY MANNER LICENSING THE HOLDER OR ANY OTHER PERSON OR CORPORATION, OR CONVEYING ANY RIGHTS OR PERMISSION TO MANUFACTURE, USE, OR SELL ANY PATENTED INVENTION THAT MAY IN ANY WAY BE RELATED THERETO.

REVISIONS							
SYM	ZONE	DESCRIPTION	DR	CHK	DATE	APPROVED
		ORIGINATED AND RELEASED PER TDRR 33080			23 FEB 67		

REQUIREMENTS:

1. GENERAL:

   A. INTERPRET DRAWING IN ACCORDANCE WITH STANDARDS PRESCRIBED BY MIL-D-70327.

   B. SUPPLIER SHALL CONFORM TO THE QUALITY ASSURANCE PROVISIONS CONTAINED IN ND 1015404, CLASS 3.

   C. PREPARATION FOR DELIVERY SHALL BE IN ACCORDANCE WITH ND 1002215, CLASS II.

      (1) MARKING OF SHIPPING CONTAINERS SHALL CONFORM TO THE MARKING OF UNIT AND INTERMEDIATE PACKAGES AND THE METHODS OF MARKING AS SPECIFIED IN ND 1002215 AND SHALL INCLUDE EXPIRATION DATE.

2. ACCEPTANCE AND INSPECTION:

   A. PROPERTIES:

      (1) COLOR AND BODY: RED LIQUID RESIN.

      (2) VISCOSITY: 30,000 CENTIPOISES MEASURED ON A BROOKFIELD VISCOMETER, NO. 4 SPINDLE, 2 RPM AT 25°C ± 2°C PER ASTM D-445.

      (3) SPECIFIC GRAVITY: 1.47 PER ASTM D-792.

3. DESIGN:

   A. DESCRIPTION: THE SILICONE RUBBER AS DESCRIBED HEREIN IS A FIRE RESISTANT (SELF EXTINGUISHING) ENCAPSULANT, RED IN COLOR, WITH A MEDIUM VISCOSITY THAT CURES READILY IN DEEP SECTIONS (1" DEPTH IN METAL CAN) TO A HIGH DUROMETER, HIGH STRENGTH RUBBER, AND HAS GOOD CORROSION RESISTANCE.

   B. SHALL BE DESIGNED TO HAVE PROPERTIES, AFTER BEING MIXED WITH CATALYST IN A 10 TO 1 RATIO PER THE MANUFACTURER'S INSTRUCTIONS, PER TABLE I. OTHER PROPERTIES ARE:

      (1) DEEP SECTION CURE: MATERIAL SHALL BE CAPABLE OF A DEEP SECTION CURE TO A 1" DEPTH IN A METAL CAN.

      (2) CORROSION RESISTANCE: CORROSION RESISTANCE OF MATERIAL SHALL BE CAPABLE OF MEETING THE REQUIREMENTS OF MIL-S-23586.

      (3) THERMAL SHOCK: MATERIAL SHALL BE CAPABLE OF WITHSTANDING 10 CYCLES OF THERMAL SHOCK PER MIL-I-16923C.

      (4) FIRE RESISTANCE: MATERIAL SHALL BE FIRE RESISTANT, SELF EXTINGUISHING PER ASTM D-1692.

   C. STORAGE: THE SILICONE RUBBER SHALL BE STORED IN CLOSED CONTAINERS AT TEMPERATURES OF 70°F OR LESS UPON RECEIVING FROM VENDOR.

   D. SHELF LIFE: WHEN STORED AT 70°F OR LESS THE AS RECEIVED MATERIAL SHALL HAVE A SHELF LIFE OF AT LEAST 12 MONTHS.

TABLE I

GENERAL PROPERTIES

PROPERTIES	TEST METHOD	RATING	UNITS
PHYSICAL AND CHEMICAL			
RADIATION RESISTANCE • 25°C	COBALT 60 SOURCE	100	MEGARAD
WATER ABSORPTION • 25°C	ASTM D-570	0.2	% 7 DAYS
TEMPERATURE RANGE		-65 TO 300	°C
THERMAL CONDUCTIVITY 25°C THRU 100°C	CENCO-FITCH	7.7×10^{-4}	CAL/cm^2/°C/SEC/cm
WEIGHT LOSS AFTER 96 HOURS • 200°C		5.7	%
VOLUME EXPANSION 25°C THRU 150°C		5.2×10^{-4}	cc/cc/°C
SPECIFIC HEAT		0.32	CAL/Gm/°C
BRITTLE POINT	ASTM D-746	-100	°C
MECHANICAL			
TENSILE STRENGTH	ASTM D-412	650	psi
ELONGATION	ASTM D-412	100	%
HARDNESS DUROMETER	ASTM D-676	65	SHORE A
SHRINKAGE, LINEAR • 25°C		0.3	% 3 DAYS
ELECTRICAL			
ARC RESISTANCE	ASTM D-495	125	SECONDS
DIELECTRIC CONSTANT • 25°C	ASTM D-150		
• 10^2 CPS		3.8	
• 10^3 CPS		3.8	
• 10^6 CPS		3.7	
• 10^9 CPS		3.5	
DISSIPATION FACTOR • 25°C	ASTM D-150		
• 10^2 CPS		0.030	
• 10^3 CPS		0.040	
• 10^6 CPS		0.003	
• 10^9 CPS		0.004	
ELECTRIC STRENGTH 1/16" SAMPLE	ASTM D-149	550	VOLTS/MIL
VOLUME RESISTIVITY 500 V, DC	ASTM D-257	5×10^{13}	OHM/cm

PROCURE ONLY FROM APPROVED SOURCES AS LISTED IN ND 1002034 FOR THIS DRAWING.

NEXT ASSY	USED ON
APPLICATION	

UNLESS OTHERWISE SPECIFIED
DIMENSIONS ARE IN INCHES
CAPACITOR VALUES ARE IN µf
RESISTOR VALUES ARE IN OHMS
TOLERANCES ON
FRACTIONS ± DECIMALS ± ANGLES ±
DO NOT SCALE THIS DRAWING

MATERIAL
SEE NOTE

QTY REQD	PART OR IDENTIFYING NO.	MATERIAL OR NOTES	NOMENCLATURE OR DESCRIPTION	FIND NO.
LIST OF MATERIALS				

MIT
INSTRUMENTATION LAB
CAMBRIDGE, MASS.

MANNED SPACECRAFT CENTER
HOUSTON, TEXAS

DRAWN	R. F. Smith	1-18-67
CHECKED	HBM	1-18-67
APPROVED		1/20/67
APPROVED	Eldon C Hall	10 Feb 67
APPROVED [redacted] CCB		2/23/67
APPROVED MSC		2/14/67
		DATE

COMPOUND, SILICONE RUBBER
SPECIFICATION CONTROL DRAWING

CODE IDENT NO.	SIZE	DRAWING NO.
80230	C	1005009
SCALE NONE		SHEET 1 OF 1

1005009

NOTICE – WHEN GOVERNMENT DRAWINGS, SPECIFICATIONS, OR OTHER DATA ARE USED FOR ANY PURPOSE OTHER THAN IN CONNECTION WITH A DEFINITELY RELATED GOVERNMENT PROCUREMENT OPERATION, THE UNITED STATES GOVERNMENT THEREBY INCURS NO RESPONSIBILITY NOR ANY OBLIGATION WHATSOEVER; AND THE FACT THAT THE GOVERNMENT MAY HAVE FORMULATED, FURNISHED, OR IN ANY WAY SUPPLIED THE SAID DRAWINGS, SPECIFICATIONS OR OTHER DATA IS NOT TO BE REGARDED BY IMPLICATION OR OTHERWISE AS IN ANY MANNER LICENSING THE HOLDER OR ANY OTHER PERSON OR CORPORATION, OR CONVEYING ANY RIGHTS OR PERMISSION TO MANUFACTURE, USE, OR SELL ANY PATENTED INVENTION THAT MAY IN ANY WAY BE RELATED THERETO.

REVISIONS

SYM	ZONE	DESCRIPTION	DR	CHK	DATE	APPROVED
		ORIGINATED AND RELEASED PER TDRR 33080			23 FEB 67	EoA

REQUIREMENTS:

1. GENERAL:
   - A. INTERPRET DRAWING IN ACCORDANCE WITH STANDARDS PRESCRIBED BY MIL-D-70327.
   - B. SUPPLIER SHALL CONFORM TO THE QUALITY ASSURANCE PROVISIONS CONTAINED IN ND 1015404, CLASS 3.
   - C. PREPARATION FOR DELIVERY SHALL BE IN ACCORDANCE WITH ND 1002215, CLASS II.
     - (1) MARKING OF SHIPPING CONTAINERS SHALL CONFORM TO THE MARKING OF UNIT AND INTERMEDIATE PACKAGES AND THE METHODS OF MARKING AS SPECIFIED IN ND 1002215 AND SHALL INCLUDE EXPIRATION DATE.

2. ACCEPTANCE AND INSPECTION (SAMPLING):
   - A. PHYSICAL PROPERTIES:
     - (1) COLOR: LIGHT TAN
     - (2) CONSISTENCY: PASTE
   - B. VENDOR SUPPLIED DATA: EACH SHIPMENT OF MATERIAL SHALL BE ACCOMPANIED BY THE FOLLOWING DOCUMENTATION.
     - (1) CERTIFICATE OF COMPLIANCE WITH ND 1015404, CLASS 3.

3. DESIGN:
   - A. STORAGE: THE CATALYST SHALL BE STORED IN CLOSED CONTAINERS AT TEMPERATURES OF 70°F OR LESS UPON RECEIVING FROM VENDOR.
   - B. SHELF LIFE: WHEN STORED AT 70°F OR LESS THE AS RECEIVED MATERIAL SHALL HAVE A SHELF LIFE OF AT LEAST 12 MONTHS.
   - C. DESCRIPTION: THE CURING AGENT AS DESCRIBED HEREIN CONSISTS OF A ORGANOMETALLIC COMPOUND AND INERT FILLERS IN A SILICONE POLYMER, CONTAINING STANNOUS OCTOATE AS ITS ACTIVE INGREDIENT, IT IS A FAST CURE (15 MINUTES TO 4 HOURS), LIGHT TAN PASTE.
   - D. CURE TIME: 15 MINUTES TO 4 HOURS-FAST CURE.
   - E. APPLICATION: THIS CATALYST IS INTENDED TO BE MIXED WITH ENCAPSULANTS IN THE PROPORTION OF 1 PART CURING AGENT TO 10 PARTS ENCAPSULANT (BY WEIGHT) AND CURED AT ROOM TEMPERATURE IN FROM 15 MINUTES TO 4 HOURS.

PROCURE ONLY FROM APPROVED SOURCES AS LISTED IN ND 1002034 FOR THIS DRAWING.

1005010

QTY REQD	PART OR IDENTIFYING NO.	MATERIAL OR NOTES	NOMENCLATURE OR DESCRIPTION	FIND NO.

LIST OF MATERIALS

NEXT ASSY	USED ON

APPLICATION

UNLESS OTHERWISE SPECIFIED
DIMENSIONS ARE IN INCHES
CAPACITOR VALUES ARE IN μf
RESISTOR VALUES ARE IN OHMS
TOLERANCES ON
FRACTIONS DECIMALS ANGLES
± ± ±
DO NOT SCALE THIS DRAWING

MATERIAL
SEE NOTE

MIT
INSTRUMENTATION LAB
CAMBRIDGE, MASS.

MANNED SPACECRAFT CENTER
HOUSTON, TEXAS

		DATE
DRAWN	R. F. Smith	1-18-67
CHECKED	HSM/ J. Lawton	1-19-67
APPROVED	A. Hamel	1/20/67
APPROVED		
APPROVED [redacted] CCB		2/23/67
APPROVED MSC		2/4/67

CURING AGENT

SPECIFICATION CONTROL DRAWING

CODE IDENT NO.	SIZE	DRAWING NO.
80230	C	1005010

SCALE NONE

SHEET 1 OF 1

MODERN BLUE PRINT CO., INC. 02840

NOTICE – WHEN GOVERNMENT DRAWINGS, SPECIFICATIONS, OR OTHER DATA ARE USED FOR ANY PURPOSE OTHER THAN IN CONNECTION WITH A DEFINITELY RELATED GOVERNMENT PROCUREMENT OPERATION, THE UNITED STATES GOVERNMENT THEREBY INCURS NO RESPONSIBILITY NOR ANY OBLIGATION WHATSOEVER; AND THE FACT THAT THE GOVERNMENT MAY HAVE FORMULATED, FURNISHED, OR IN ANY WAY SUPPLIED THE SAID DRAWINGS, SPECIFICATIONS OR OTHER DATA IS NOT TO BE REGARDED BY IMPLICATION OR OTHERWISE AS IN ANY MANNER LICENSING THE HOLDER OR ANY OTHER PERSON OR CORPORATION, OR CONVEYING ANY RIGHTS OR PERMISSION TO MANUFACTURE, USE, OR SELL ANY PATENTED INVENTION THAT MAY IN ANY WAY BE RELATED THERETO.

REVISIONS

SYM	ZONE	DESCRIPTION	DR	CHK	DATE	APPROVED
		ORIGINATED AND RELEASED PER TDRR 33080			23 FEB 67	

REQUIREMENTS:

1. GENERAL:

   A. INTERPRET DRAWING IN ACCORDANCE WITH STANDARDS PRESCRIBED BY MIL-D-70327.

   B. SUPPLIER SHALL CONFORM TO THE QUALITY ASSURANCE PROVISIONS CONTAINED IN ND 1015404, CLASS 3.

   C. PREPARATION FOR DELIVERY SHALL BE IN ACCORDANCE WITH ND 1002215, CLASS II.

      (1) MARKING OF SHIPPING CONTAINERS SHALL CONFORM TO THE MARKING OF UNIT AND INTERMEDIATE PACKAGES AND THE METHODS OF MARKING AS SPECIFIED IN ND 1002215 AND SHALL INCLUDE EXPIRATION DATE.

2. ACCEPTANCE AND INSPECTION (SAMPLING)*

   A. PHYSICAL PROPERTIES:

      (1) COLOR: LIGHT BLUE

      (2) CONSISTENCY: PASTE

   B. VENDOR SUPPLIED DATA: EACH SHIPMENT OF MATERIAL SHALL BE ACCOMPANIED BY THE FOLLOWING DOCUMENTATION.

      (1) CERTIFICATE OF COMPLIANCE WITH ND 1015404, CLASS 3.

3. DESIGN:

   A. STORAGE: THE CATALYST SHALL BE STORED IN CLOSED CONTAINERS AT TEMPERATURES OF 70°F OR LESS UPON RECEIVING FROM VENDOR.

   B. SHELF LIFE: WHEN STORED AT 70°F OR LESS THE AS RECEIVED MATERIAL SHALL HAVE A SHELF LIFE OF AT LEAST 12 MONTHS.

   C. DESCRIPTION: THE CURING AGENT AS DESCRIBED HEREIN CONSISTS OF A ORGANOMETALLIC COMPOUND AND INERT FILLERS IN A SILICONE POLYMER, CONTAINING DIBUTYL TIN DILAURATE AS ITS ACTIVE INGREDIENT, IT IS A STANDARD RATE OF CURE (APPROXIMATELY 6 HOURS), LIGHT BLUE PASTE.

   D. CURE TIME: 6 HOURS - STANDARD CURE.

   E. APPLICATION: THIS CATALYST IS INTENDED TO BE MIXED WITH ENCAPSULANTS IN THE PROPORTION OF 1 PART CURING AGENT TO 10 PARTS ENCAPSULANT (BY WEIGHT) AND CURED AT ROOM TEMPERATURE IN APPROXIMATELY 6 HOURS.

PROCURE ONLY FROM APPROVED SOURCES AS LISTED IN ND 1002034 FOR THIS DRAWING.

QTY REQD	PART OR IDENTIFYING NO.	MATERIAL OR NOTES	NOMENCLATURE OR DESCRIPTION	FIND NO.

LIST OF MATERIALS

NEXT ASSY	USED ON

APPLICATION

UNLESS OTHERWISE SPECIFIED
DIMENSIONS ARE IN INCHES
CAPACITOR VALUES ARE IN μf
RESISTOR VALUES ARE IN OHMS
TOLERANCES ON
FRACTIONS ± DECIMALS ± ANGLES ±
DO NOT SCALE THIS DRAWING

MATERIAL
SEE NOTE

MIT
INSTRUMENTATION LAB
CAMBRIDGE, MASS.

		DATE
DRAWN	C.F. Smith	1-18-67
CHECKED		1-19-67
APPROVED		1/20/67
APPROVED	Eldon C Hall	20 Feb 67
APPROVED [redacted] CCB		2/23/67
APPROVED MSC		2/14/67

MANNED SPACECRAFT CENTER
HOUSTON, TEXAS

CURING AGENT
SPECIFICATION CONTROL DRAWING

CODE IDENT NO.	SIZE	DRAWING NO.
80230	C	1005011

SCALE NONE SHEET 1 OF 1

1005011

NOTICE — WHEN GOVERNMENT DRAWINGS, SPECIFICATIONS, OR OTHER DATA ARE USED FOR ANY PURPOSE OTHER THAN IN CONNECTION WITH A DEFINITELY RELATED GOVERNMENT PROCUREMENT OPERATION, THE UNITED STATES GOVERNMENT THEREBY INCURS NO RESPONSIBILITY NOR ANY OBLIGATION WHATSOEVER; AND THE FACT THAT THE GOVERNMENT MAY HAVE FORMULATED, FURNISHED, OR IN ANY WAY SUPPLIED THE SAID DRAWINGS, SPECIFICATIONS, OR OTHER DATA IS NOT TO BE REGARDED BY IMPLICATION OR OTHERWISE AS IN ANY MANNER LICENSING THE HOLDER OR ANY OTHER PERSON OR CORPORATION, OR CONVEYING ANY RIGHTS OR PERMISSION TO MANUFACTURE, USE, OR SELL ANY PATENTED INVENTION THAT MAY IN ANY WAY BE RELATED THERETO.

REVISIONS

ZONE	LTR	DESCRIPTION	DATE	APPROVED
	A	REPLACES REVISION (-) WITH CHANGE PER TDRR 38037	25 FEB 70	JJJ

NOTES:

1. GENERAL REQUIREMENTS:
   - A. INTERPRET DRAWING IN ACCORDANCE WITH STANDARDS PRESCRIBED BY MIL-D-70327.
   - B. SUPPLIERS SHALL CONFORM TO THE QUALITY ASSURANCE PROVISIONS CONTAINED IN ND 1015404, CLASS 3.
   - C. PREPARATION FOR DELIVERY: PREPARATION FOR DELIVERY SHALL BE IN ACCORDANCE WITH ND 1002215, CLASS 2, CODE 2.
   - D. MARKING: UNIT PACKAGES AND EXTERIOR SHIPPING CONTAINERS SHALL BE MARKED IN ACCORDANCE WITH ND 1002215 WITH THE NASA PART NUMBER (DRAWING NUMBER, DASH NUMBER AND REVISION LETTER) MANUFACTURER'S NAME AND/OR SYMBOL, LOT CODE, DATE OF MANUFACTURE AND SERIAL NUMBER.

2. ACCEPTANCE AND INSPECTION:
   - A. MECHANICAL REQUIREMENTS: DIMENSIONS AND TOLERANCES PER FIGURE 1, FIGURE 2, AND TABLE I.
   - B. ELECTRICAL REQUIREMENTS: INSULATION RESISTANCE PER MIL-STD-202, METHOD 302.

3. DESIGN:
   - A. FRAME MATERIAL: DIALLYLPHTHALATE PER MIL-M-14, TYPE SDG.
   - B. FRAME INSULATION RESISTANCE: 10K MEGOHMS AT 100 VDC PER MIL-STD-202, METHOD 302, LEAD TO ADJACENT LEAD.
   - C. CONTACT LEAD: MOLDED IN WIRE LEADS OF COMMERCIALLY PURE, WELDABLE GRADE A NICKEL PER MIL-STD-1276, TYPE N-1.
   - D. LEAD WORKMANSHIP: THE LEADS SHALL BE UNIFORM IN QUALITY AND TEMPER, CLEAN, SOUND, SMOOTH AND FREE FROM INJURIOUS MATERIAL, SCRAPES, LAPS, CRACKS, TWISTS, TOOL MARKS, SCALE, DAMAGED ENDS, WELD SCORED, PITS, GALLS, AND OTHER DEFECTS WHICH ARE NOT IN ACCORDANCE WITH THE BEST PRACTICES FOR HIGH QUALITY MATERIALS.
   - E. LEAD FATIQUE: LEADS SHALL BE CAPABLE OF WITHSTANDING THE FOLLOWING TEST: THE UNIT SHALL BE HELD IN A VERTICAL POSITION WITH A 2 OUNCE WEIGHT SUSPENDED FROM THE LEAD TO BE TESTED. TWO CYCLES OF BENDING SHALL BE PERFORMED. A CYCLE CONSISTING OF MOVING THE BODY OF THE UNIT, 45 DEGREES FROM THE VERTICAL IN ONE DIRECTION, AND BACK 45 DEGREES TO THE ORIGINAL POSITION. NO MECHANICAL DAMAGE SHALL BE EVIDENCED AFTER THE TEST.
   - F. LEAD TENSION: EACH LEAD SHALL BE CAPABLE OF WITHSTANDING AN AXIAL PULL OF 1 POUND FOR A PERIOD OF 30 SECONDS. NO MECHANICAL DAMAGE SHALL BE EVIDENCED AFTER THE TEST.
   - G. FRAME WORKMANSHIP: THE FRAME SHALL BE FREE OF MOLD FLASH.

TABLE I

DASH NO.	A ±.010	B ±.010	C ±.010	FLATPACK SIZE	NO. OF LEADS	D MIN	D MAX	FIGURE NO.
-1	.450	.325	.050	1/8 x 1/4	10	.135	.155	1
-2	.500	.475	.075	1/4 x 1/4	10	.270	.300	1
-3	.450	.325	.050	1/8 x 1/4	14	.135	.155	1
-4	.500	.475	.075	1/4 x 1/4	14	.270	.300	1
-5	.500	—	.075	1/4 x 1/4	14	.280	.290	2

UNLESS OTHERWISE SPECIFIED
DIMENSIONS ARE IN INCHES
TOLERANCES ON
2 PLACE DECIMALS + −
3 PLACE DECIMALS + −
ANGLES + −
DO NOT SCALE THIS DRAWING
MATERIAL
APPROVAL

MIT
INSTRUMENTATION LAB
CAMBRIDGE, MASS.
DRAWN S.TARFICAS DATE 17 OCT 67
CHECKED A.W.MORRISSON 18 NOV 67
G.E. IVES 25 OCT 67
APPROVAL ELDEN C. HALL 25 OCT 67
CONTRACT
NASA APPROVAL A.C.METZGER 5 JUN 68
MIT APPROVAL E. AUSTIN

MANNED
SPACECRAFT CENTER
HOUSTON, TEXAS

FRAME, MOUNTING, FLATPACK

SPECIFICATION CONTROL DRAWING

SIZE C
CODE IDENT NO. 80230
1005020
SCALE
SHEET 1 OF 3

NOTICE – WHEN GOVERNMENT DRAWINGS, SPECIFICATIONS, OR OTHER DATA ARE USED FOR ANY PURPOSE OTHER THAN IN CONNECTION WITH A DEFINITELY RELATED GOVERNMENT PROCUREMENT OPERATION, THE UNITED STATES GOVERNMENT THEREBY INCURS NO RESPONSIBILITY NOR ANY OBLIGATION WHATSOEVER; AND THE FACT THAT THE GOVERNMENT MAY HAVE FORMULATED, FURNISHED, OR IN ANY WAY SUPPLIED THE SAID DRAWINGS, SPECIFICATIONS OR OTHER DATA IS NOT TO BE REGARDED BY IMPLICATION OR OTHERWISE AS IN ANY MANNER LICENSING THE HOLDER OR ANY OTHER PERSON OR CORPORATION, OR CONVEYING ANY RIGHTS OR PERMISSION TO MANUFACTURE, USE, OR SELL ANY PATENTED INVENTION THAT MAY IN ANY WAY BE RELATED THERETO.

REVISIONS

SYM	ZONE	DESCRIPTION	DR	CHK	DATE	APPROVED
–		ORIGINATED PER TDRR 36295			6 JUN 68	
A		REVISED PER TDRR 38037	JJJ		25 FEB 70	

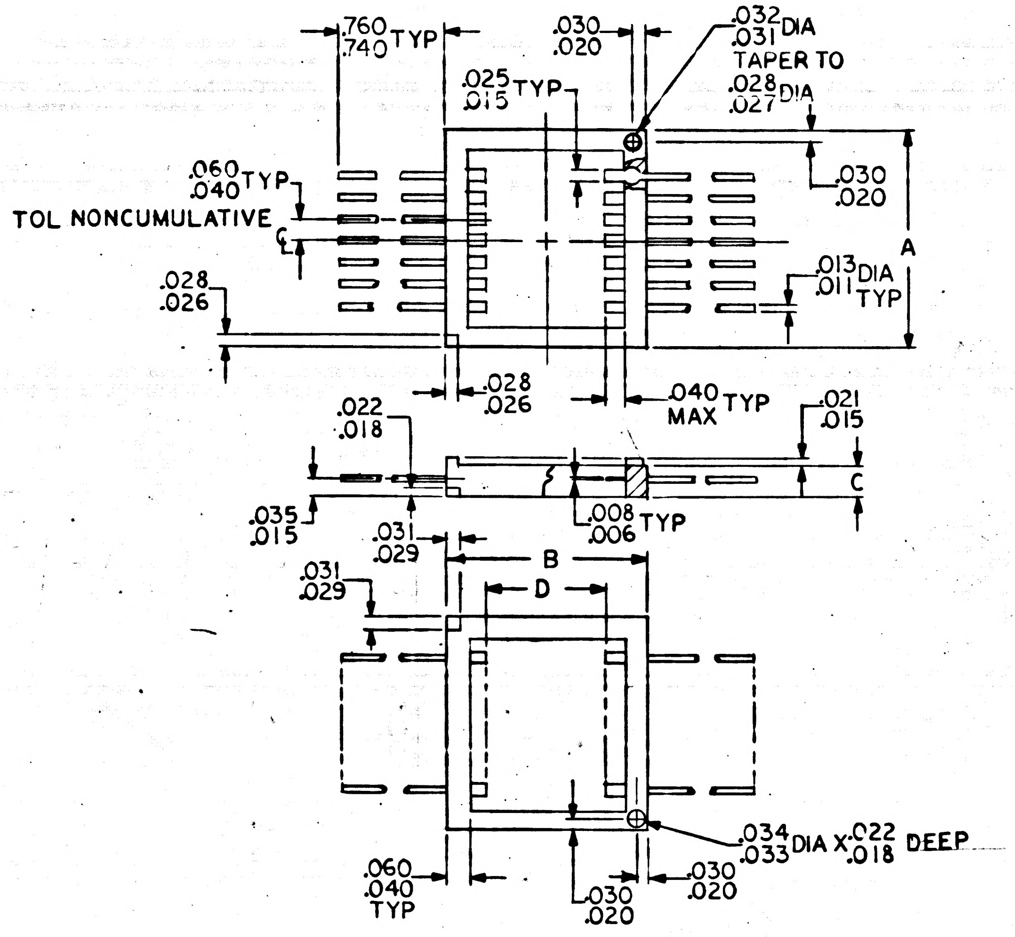

.760 .740 TYP
.030 .020
.032 .031 DIA TAPER TO .028 .027 DIA
.025 .015 TYP
.060 .040 TYP
TOL NONCUMULATIVE
℄
.030 .020
A
.013 .011 DIA TYP
.028 .026
.028 .026
.040 MAX TYP
.022 .018
.021 .015
C
.035 .015
.031 .029
.008 .006 TYP
B
D
.031 .029
.034 .033 DIA X .022 .018 DEEP
.060 .040 TYP
.030 .020
.030 .020

FIGURE 1

QTY REQD	PART OR IDENTIFYING NO.	MATERIAL OR NOTES	NOMENCLATURE OR DESCRIPTION	FIND NO.

LIST OF MATERIALS

NEXT ASSY	USED ON

APPLICATION

UNLESS OTHERWISE SPECIFIED
DIMENSIONS ARE IN INCHES
CAPACITOR VALUES ARE IN μf
RESISTOR VALUES ARE IN OHMS
TOLERANCES ON
FRACTIONS ± DECIMALS ± ANGLES ±
DO NOT SCALE THIS DRAWING

MATERIAL
SEE NOTE

MIT
INSTRUMENTATION LAB
CAMBRIDGE, MASS.

DRAWN	J. DelVecchio	12 OCT 67
CHECKED		17 OCT 67
APPROVED		25 Oct 67
APPROVED	Eldon C Hall	25 Oct 67
APPROVED		
APPROVED MSC		1/5/68
		DATE

MANNED SPACECRAFT CENTER
HOUSTON, TEXAS

FRAME, MOUNTING, FLAT PACK

SPECIFICATION CONTROL DRAWING

CODE IDENT NO.	SIZE	DRAWING NO.
80230	C	1005020

SCALE SHEET 2 OF 3

1005020 A

NOTICE — WHEN GOVERNMENT DRAWINGS, SPECIFICATIONS, OR OTHER DATA ARE USED FOR ANY PURPOSE OTHER THAN IN CONNECTION WITH A DEFINITELY RELATED GOVERNMENT PROCUREMENT OPERATION, THE UNITED STATES GOVERNMENT THEREBY INCURS NO RESPONSIBILITY NOR ANY OBLIGATION WHATSOEVER; AND THE FACT THAT THE GOVERNMENT MAY HAVE FORMULATED, FURNISHED, OR IN ANY WAY SUPPLIED THE SAID DRAWINGS, SPECIFICATIONS OR OTHER DATA IS NOT TO BE REGARDED BY IMPLICATION OR OTHERWISE AS IN ANY MANNER LICENSING THE HOLDER OR ANY OTHER PERSON OR CORPORATION, OR CONVEYING ANY RIGHTS OR PERMISSION TO MANUFACTURE, USE, OR SELL ANY PATENTED INVENTION THAT MAY IN ANY WAY BE RELATED THERETO.

REVISIONS

ZONE	LTR	DESCRIPTION	DATE	APPROVED
	A	THIS SHEET ADDED PER TDRR 38037	25 FEB 70	JJJ

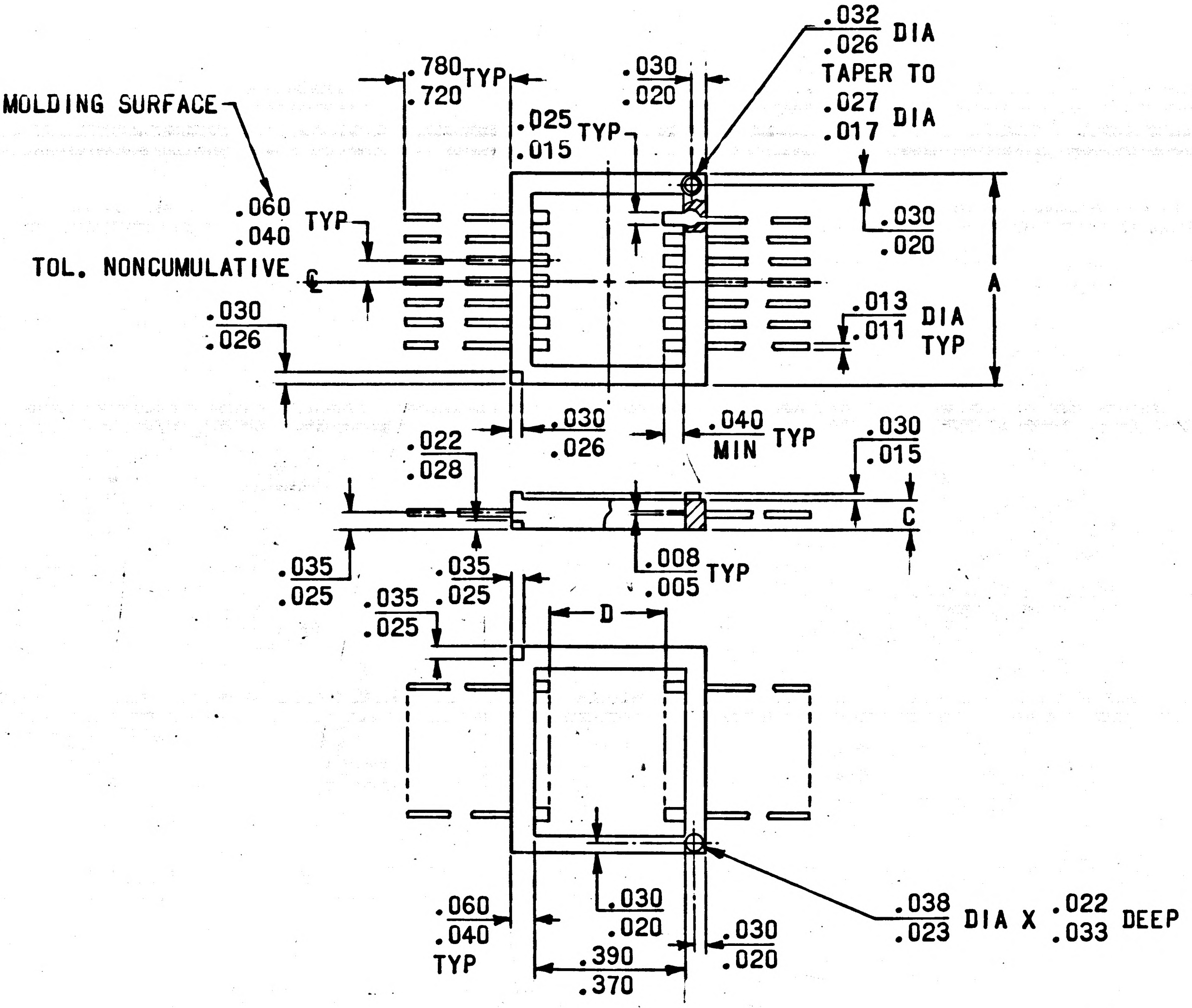
.780
.720 TYP
.030
.020
AT MOLDING SURFACE
.025
.015 TYP
.032
.026 DIA
TAPER TO
.027
.017 DIA
.060
.040 TYP
TOL. NONCUMULATIVE
℄
.030
.020
A
.030
.026
.013
.011 DIA TYP
.030
.026
.040 MIN TYP
.030
.015
.022
.028
C
.008
.005 TYP
.035
.025
.035
.025
.035
.025
D
.060
.040 TYP
.030
.020
.390
.370
.030
.020
.038
.023 DIA X .022
.033 DEEP

FIGURE 2

THIS SHEET ADDED

UNLESS OTHERWISE SPECIFIED
DIMENSIONS ARE IN INCHES
TOLERANCES ON

2 PLACE DECIMALS	3 PLACE DECIMALS	ANGLES
+	+	+
−	−	−

DO NOT SCALE THIS DRAWING

MATERIAL
SEE NOTES

APPROVAL

M I T
INSTRUMENTATION LAB
CAMBRIDGE MASS

DRAWN J. Janowiak DATE 25 FEB 70
CHECKED STELMA 26 FEB 70
APPROVAL
CONTRACT
NASA APPROVAL
MIT APPROVAL

MANNED
SPACECRAFT CENTER
HOUSTON, TEXAS

FRAME, MOUNTING, FLATPACK

SPECIFICATION CONTROL DRAWING

SIZE	CODE IDENT NO.	
C	80230	1005020

SCALE
SHEET 3 OF 3

MIL-1082C D

NOTICE – WHEN GOVERNMENT DRAWINGS, SPECIFICATIONS, OR OTHER DATA ARE USED FOR ANY PURPOSE OTHER THAN IN CONNECTION WITH A DEFINITELY RELATED GOVERNMENT PROCUREMENT OPERATION, THE UNITED STATES GOVERNMENT THEREBY INCURS NO RESPONSIBILITY NOR ANY OBLIGATION WHATSOEVER; AND THE FACT THAT THE GOVERNMENT MAY HAVE FORMULATED, FURNISHED, OR IN ANY WAY SUPPLIED THE SAID DRAWINGS, SPECIFICATIONS OR OTHER DATA IS NOT TO BE REGARDED BY IMPLICATION OR OTHERWISE AS IN ANY MANNER LICENSING THE HOLDER OR ANY OTHER PERSON OR CORPORATION, OR CONVEYING ANY RIGHTS OR PERMISSION TO MANUFACTURE, USE, OR SELL ANY PATENTED INVENTION THAT MAY IN ANY WAY BE RELATED THERETO.

REVISIONS

SYM	ZONE	DESCRIPTION	DR	CHK	DATE	APPROVED
–		ORIGINATED PER TD RR 36295			6 JUNE 6[illegible]	

NOTES:

1. GENERAL REQUIREMENTS:
   - A. INTERPRET DRAWING IN ACCORDANCE WITH STANDARDS PRESCRIBED BY MIL-D-70327.
   - B. SUPPLIERS SHALL CONFORM TO THE QUALITY ASSURANCE PROVISIONS CONTAINED IN ND 1015404 CLASS 3.
   - C. PREPARATION FOR DELIVERY: PREPARATION FOR DELIVERY SHALL BE IN ACCORDANCE WITH ND 1002215, CLASS 2, CODE 2.
   - D. MARKING: UNIT PACKAGES AND EXTERIOR SHIPPING CONTAINERS SHALL BE MARKED IN ACCORDANCE WITH ND 1002215 WITH THE NASA PART NUMBER (DRAWING NUMBER, DASH NUMBER AND REVISION LETTER) MANUFACTURERS NAME AND/OR SYMBOL, LOT CODE, DATE OF MANUFACTURE AND SERIAL NUMBER.
2. ACCEPTANCE AND INSPECTION:
   - A. MECHANICAL REQUIREMENTS: DIMENSIONS AND TOLERANCES PER FIGURE I. AND TABLE 1.
   - B. ELECTRICAL REQUIREMENTS: INSULATION RESISTANCE PER MIL-STD-202, METHOD 302.
3. DESIGN:
   - A. MATERIAL: DIALLYLPHTHALATE PER MIL-M-14, TYPE SDG.
   - B. INSULATION RESISTANCE: 10K MEGOHMS AT 100 VDC PER MIL-STD-202, METHOD 302.
   - C. CONTACT LEAD: MOLDED IN WIRE LEADS OF COMMERCIALLY PURE, WELDABLE GRADE A NICKEL PER MIL-STD-1276, TYPE N-1.
   - D. LEAD WORKMANSHIP: THE LEADS SHALL BE UNIFORM IN QUALITY AND TEMPER, CLEAN, SOUND, SMOOTH AND FREE FROM INJURIOUS MATERIAL. SCRAPES, LAPS, CRACKS, TWISTS, SCALE, DAMAGED ENDS, WELD SCORED, PITS, GALLS, AND OTHER DEFECTS WHICH ARE NOT IN ACCORDANCE WITH THE BEST PRACTICES FOR HIGH QUALITY MATERIALS.
   - E. LEAD FATIQUE: LEADS SHALL BE CAPABLE OF WITHSTANDING THE FOLLOWING TEST: THE UNIT SHALL BE HELD IN A VERTICAL POSITION WITH A 2 OUNCE WEIGHT SUSPENDED FROM THE LEAD TO BE TESTED. TWO CYCLES OF BENDING SHALL BE PERFORMED. A CYCLE CONSISTING OF MOVING THE BODY OF THE UNIT, 45 DEGREES FROM THE VERTICAL IN ONE DIRECTION, AND BACK 45 DEGREES TO THE ORIGINAL POSITION. NO MECHANICAL DAMAGE SHALL BE EVIDENCED AFTER THE TEST.
   - F. LEAD TENSION: EACH LEAD SHALL BE CAPABLE OF WITHSTANDING AN AXIAL PULL OF 1 POUND FOR A PERIOD OF 30 SECONDS. NO MECHANICAL DAMAGE SHALL BE EVIDENCED AFTER THE TEST.

TABLE I

Dash No.	A ±.010	B ±.010	C ±.010	Flatpack Size	No. Of Leads	D MIN	D MAX
-1	.450	.325	.050	1/8 X 1/4	10	.135	.155
-2	.500	.475	.075	1/4 X 1/4	10	.270	.300
-3	.450	.325	.050	1/8 X 1/4	14	.135	.155
-4	.500	.475	.075	1/4 X 1/4	14	.270	.350

QTY REQD	PART OR IDENTIFYING NO.	MATERIAL OR NOTES	NOMENCLATURE OR DESCRIPTION	FIND NO.

LIST OF MATERIALS

NEXT ASSY	USED ON

APPLICATION

UNLESS OTHERWISE SPECIFIED
DIMENSIONS ARE IN INCHES
CAPACITOR VALUES ARE IN μf
RESISTOR VALUES ARE IN OHMS
TOLERANCES ON
FRACTIONS ± DECIMALS ± ANGLES ±
DO NOT SCALE THIS DRAWING

MATERIAL

MIT
INSTRUMENTATION LAB
CAMBRIDGE, MASS.

MANNED SPACECRAFT CENTER
HOUSTON, TEXAS

DRAWN S. Tafilias [illegible]
CHECKED [illegible] 15 Nov 67
APPROVED [illegible] 25 Oct 67
APPROVED Eldon C. Hall 25 Oct 67
APPROVED [illegible]
APPROVED MSC 6/5/68
DATE

FRAME, MOUNTING, FLAT PACK

SPECIFICATION CONTROL DRAWING

CODE IDENT NO.	SIZE	DRAWING NO.
80230	C	1005020

SCALE
SHEET 1 OF 2

1005020

MODERN BLUE PRINT CO., INC. 02840

NOTICE – WHEN GOVERNMENT DRAWINGS, SPECIFICATIONS, OR OTHER DATA ARE USED FOR ANY PURPOSE OTHER THAN IN CONNECTION WITH A DEFINITELY RELATED GOVERNMENT PROCUREMENT OPERATION, THE UNITED STATES GOVERNMENT THEREBY INCURS NO RESPONSIBILITY NOR ANY OBLIGATION WHATSOEVER, AND THE FACT THAT THE GOVERNMENT MAY HAVE FORMULATED, FURNISHED, OR IN ANY WAY SUPPLIED THE SAID DRAWINGS, SPECIFICATIONS OR OTHER DATA IS NOT TO BE REGARDED BY IMPLICATION OR OTHERWISE AS IN ANY MANNER LICENSING THE HOLDER OR ANY OTHER PERSON OR CORPORATION, OR CONVEYING ANY RIGHTS OR PERMISSION TO MANUFACTURE, USE, OR SELL ANY PATENTED INVENTION THAT MAY IN ANY WAY BE RELATED THERETO.

REVISIONS

SYM	ZONE	DESCRIPTION	DR	CHK	DATE	APPROVED
–		ORIGINATED PER TDRR 36295			6 JUN 68	

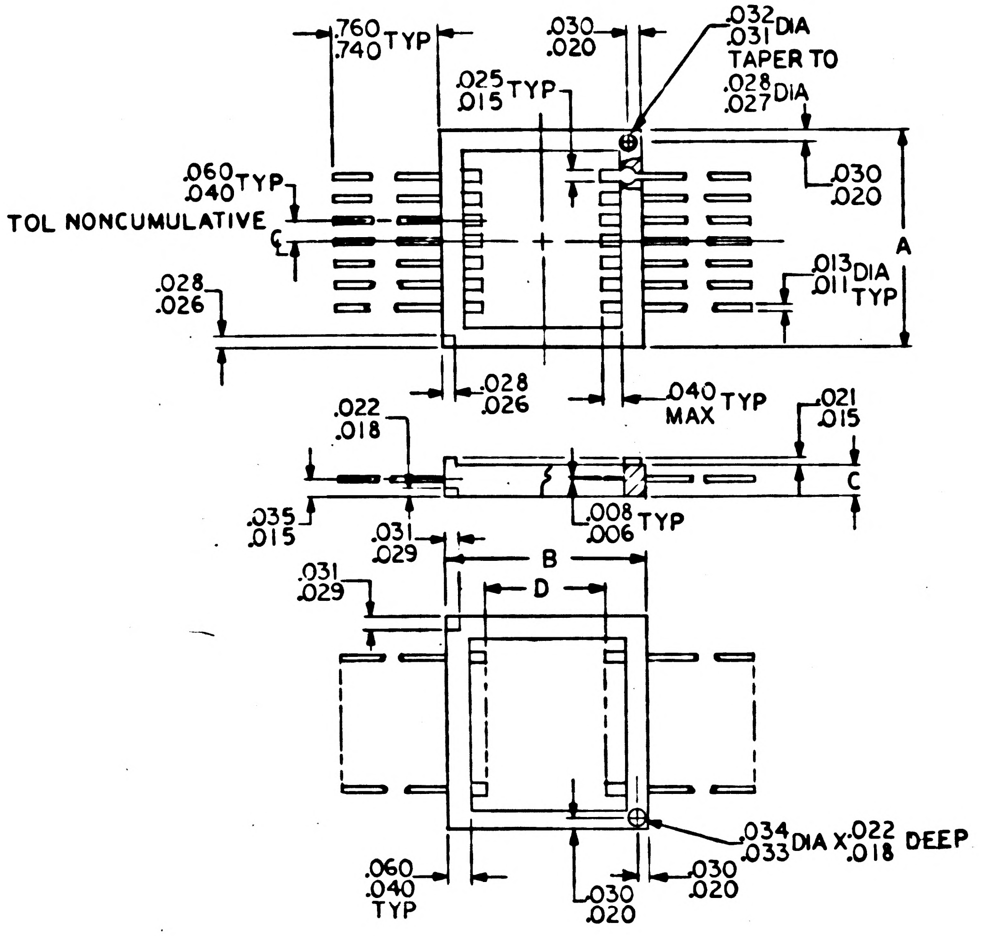
.760
.740 TYP
.030
.020
.032
.031 DIA
TAPER TO
.028
.027 DIA
.025
.015 TYP
.060
.040 TYP
TOL NONCUMULATIVE
℄
.030
.020
A
.013
.011 DIA
TYP
.028
.026
.028
.026
.040
MAX TYP
.021
.015
.022
.018
C
.035
.015
.008
.006 TYP
.031
.029
B
.031
.029
D
.034
.033 DIA X .022
.018 DEEP
.060
.040
TYP
.030
.020
.030
.020

FIGURE 1

QTY REQD	PART OR IDENTIFYING NO.	MATERIAL OR NOTES	NOMENCLATURE OR DESCRIPTION	FIND NO.

LIST OF MATERIALS

NEXT ASSY	USED ON
APPLICATION	

UNLESS OTHERWISE SPECIFIED
DIMENSIONS ARE IN INCHES
CAPACITOR VALUES ARE IN µf
RESISTOR VALUES ARE IN OHMS
TOLERANCES ON
FRACTIONS ± DECIMALS ± ANGLES ±
DO NOT SCALE THIS DRAWING

MATERIAL

SEE NOTE

MIT
INSTRUMENTATION LAB
CAMBRIDGE, MASS.

DRAWN		12 OCT 67
CHECKED		17 OCT 67
APPROVED		25 Oct 67
APPROVED		25 Oct 67
APPROVED		
APPROVED MSC		1/5/68
		DATE

MANNED SPACECRAFT CENTER
HOUSTON, TEXAS

FRAME, MOUNTING, FLAT PACK

SPECIFICATION CONTROL DRAWING

CODE IDENT NO.	SIZE	DRAWING NO.
80230	C	1005020
SCALE		SHEET 2 OF 2

MODERN BLUE PRINT CO., INC. 02840

NOTICE – WHEN GOVERNMENT DRAWINGS, SPECIFICATIONS, OR OTHER DATA ARE USED FOR ANY PURPOSE OTHER THAN IN CONNECTION WITH A DEFINITELY RELATED GOVERNMENT PROCUREMENT OPERATION, THE UNITED STATES GOVERNMENT THEREBY INCURS NO RESPONSIBILITY NOR ANY OBLIGATION WHATSOEVER; AND THE FACT THAT THE GOVERNMENT MAY HAVE FORMULATED, FURNISHED, OR IN ANY WAY SUPPLIED THE SAID DRAWINGS, SPECIFICATIONS OR OTHER DATA IS NOT TO BE REGARDED BY IMPLICATION OR OTHERWISE AS IN ANY MANNER LICENSING THE HOLDER OR ANY OTHER PERSON OR CORPORATION, OR CONVEYING ANY RIGHTS OR PERMISSION TO MANUFACTURE, USE, OR SELL ANY PATENTED INVENTION THAT MAY IN ANY WAY BE RELATED THERETO.

REVISIONS TDRR 35063						
SYM	ZONE	DESCRIPTION	DR	CHK	DATE	APPROVED

REQUIREMENTS:

1. GENERAL:
   - A. INTERPRET DRAWING IN ACCORDANCE WITH STANDARDS PRESCRIBED BY MIL-D-70327.
   - B. SUPPLIER SHALL CONFORM TO THE QUALITY ASSURANCE PROVISIONS AS CONTAINED IN ND1015404 CLASS III
   - C. MARKING: UNITS SHALL BE MARKED PER ND 1002019 WITH THE NASA PART ~~NUMBER (DRAWING~~ NUMBER, REVISION LETTER AND DASH NUMBER). DO NOT MARK FACE SURFACE OR LIGHT AREA.
   - D. PREPARATION FOR DELIVERY SHALL BE IN ACCORDANCE WITH ND 1002215 CLASS I, CODE 3.
     - (1) MARKING OF SHIPPING CONTAINERS SHALL CONFORM TO THE MARKING OF UNIT AND INTERMEDIATE OACKAGES AND METHODS OF MARKING AS SPECIFIED IN ND 1002215.
   - E. WHEN SUBJECTED TO THE ENVIRONMENTAL REQUIREMENTS OF ND 1002056, UNITS SHALL NOT EXPERIENCE MORE THAN 20% CHANGE OF PHOTOMETRIC PARAMETERS, AND SHALL EXHIBIT NO TOXIC OUTGASSING.
2. ACCEPTANCE AND INSPECTION: 100%
   - A. MARKING AND PREPARATION FOR DELIVERY AS SPECIFIED ABOVE. AND IN TABLE I.
   - B. DIMENSIONS AND TOLERANCES AS SPECIFIED HEREIN.
   - C. LIGHT DISTRIBUTION THROUGH MARKING: 33% MINIMUM LIGHT TRANSMISSION WHEN BACKLIGHTED WITH AN EL LAMP PER SCD 1006340 LOCATED DIRECTLY BEHIND THE BACK SURFACE OF THE CAP.
   - D. VENDOR SUPPLIED DATA: EACH SHIPMENT OF PARTS SHALL BE ACCOMPANIED BY THE FOLLOWING DOCUMENTATION.
     - (1) A CERTIFICATE OF COMPLIANCE WITH THE MATERIAL REQUIREMENTS SPECIFIED HEREIN.
     - (2) A CERTIFICATE OF COMPLIANCE WITH MIL-Q-9858.
3. DESIGN:
   - A. MATERIAL: ALUMINUM ALLOY FRAME, FILL CHARACTERS WITH FILLED STYCAST EPOXY.
   - B. FINISH:
     - (1) BACKGROUND SHALL BE 1012543-011 BLACK COATING PER ND1002277, COLOR NO. 37038 PER FED-STD-595. CHARACTERS NON-ILLUMINATED, TO APPEAR WHITE COLOR NO. 37875 PER FED-STD-595.
     - (2) ALUMINUM COMPONENTS TO BE ANODIZED PER MIL-A-8625 TYPE II NOT DYED (THICKNESS OF ANODIC COATING TO BE .0003 - .0004.
   - C. MARKINGS: PER TABLE I SHALL BE GORTON NORMAL WITH
     - 1. PROPORTIONS PER ND 1002122 TYPE II, CLASS 1 EXCEPT AS NOTED:
       - (a) CHARACTER HEIGHT TO BE MEASURED AS OVERALL HEIGHT.
       - (b) LINE STROKE WIDTH TO BE .030 FOR .250 HIGH CHARACTERS.
       - (c) LINE STROKE WIDTH TO BE .022 FOR .125 HIGH CHARACTERS.
   - D. COLOR: WHEN BACKLIGHTED PER 2.0, COLOR SHALL BE WHITE, WITH COLOR COORDINATES X = .330 ± .030, Y = .330 ± .030, PER CIE CHROMACITY DIAGRAM.
   - E. CONTRAST: WHITE COLOR IN 3B MAY BE REDUCED IN SATURATION PROVIDED A MINIMUM CONTRAST OF 5 UNITS BETWEEN BLACK BACKGROUND AND UNLIGHTED CHARACTER WHEN MEASURED IN ACCORDANCE WITH MIL-P-7788. FOR CONTRAST MEASUREMENT THE CAP MAY BE BACKED WITH AN EL LAMP PER SCD 1006340 SPACED 0.2 INCHES AWAY.
   - F. GLOSS: SHALL NOT EXCEED 5 UNITS ON EXTERIOR SURFACES, AS MEASURED PER ASTM METHOD D523.

TABLE I

DASH NO.	MARKING	HEIGHT
-001	VERB	.125
-002	NOUN	↑
-003	ENTR	
-004	CLR	
-005	PRO	
-006	KEY REL	↓
-007	RSET	.125
-008	+	.250
-009	-	↑
-010	0	
-011	1	
-012	2	
-013	3	
-014	4	
-015	5	
-016	6	
-017	7	
-018	8	↓
-019	9	.250

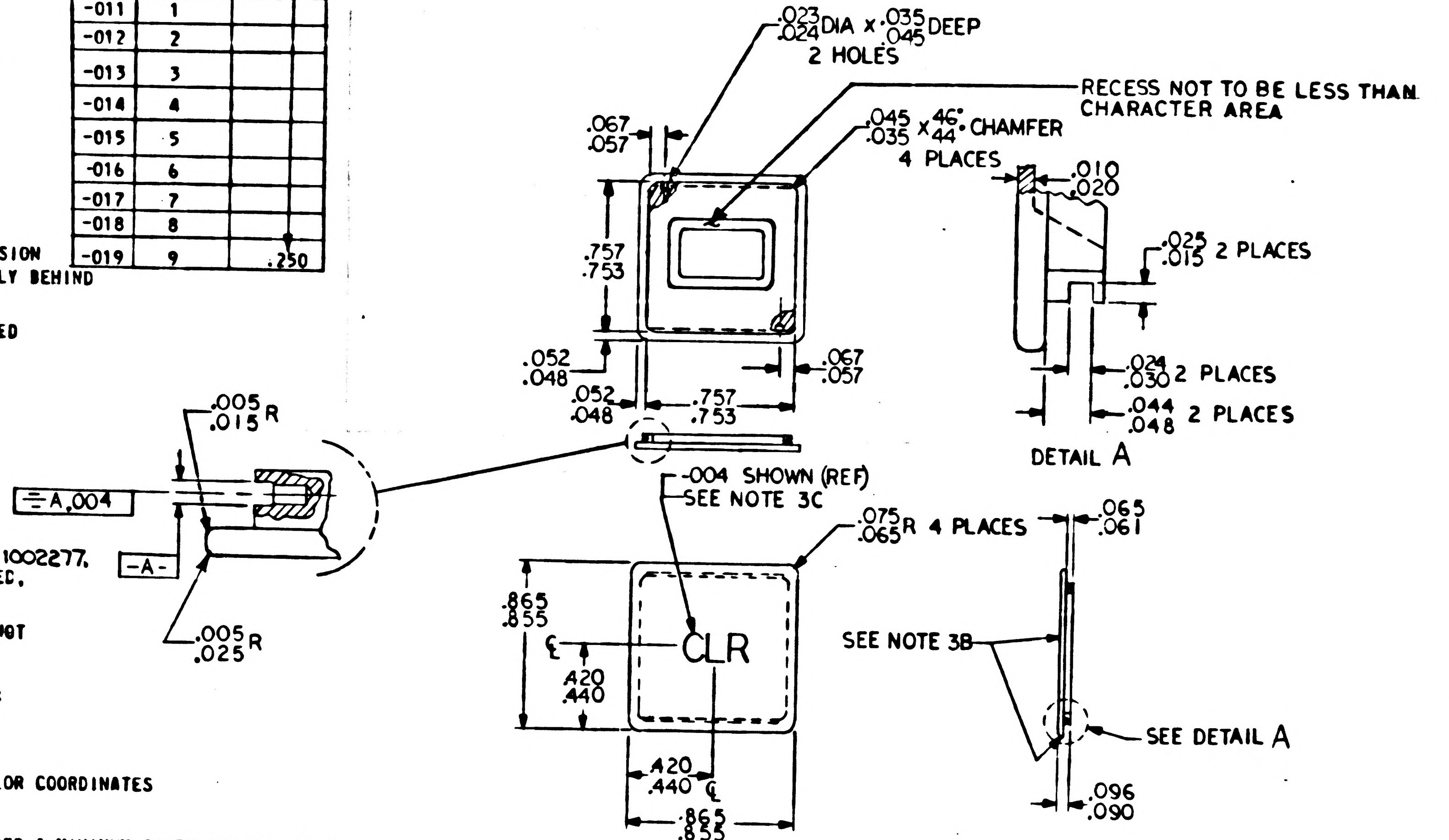

PROCURE ONLY FROM APPROVED SOURCES LISTED IN ND 1002034 FOR THIS DRAWING.

QTY REQD	PART OR IDENTIFYING NO.	MATERIAL OR NOTES	NOMENCLATURE OR DESCRIPTION	FIND NO.

LIST OF MATERIALS

NEXT ASSY	USED ON
2003898	
2003999	
2003896	

APPLICATION

UNLESS OTHERWISE SPECIFIED
DIMENSIONS ARE IN INCHES
CAPACITOR VALUES ARE IN µf
RESISTOR VALUES ARE IN OHMS
TOLERANCES ON
FRACTIONS ± DECIMALS ± ANGLES ±
DO NOT SCALE THIS DRAWING

MATERIAL
SEE NOTE

MIT
INSTRUMENTATION LAB
CAMBRIDGE, MASS.

		DATE
DRAWN		28 Oct 67
CHECKED		2 Nov 67
APPROVED	Eldon C Hall	6 Nov 67
APPROVED	MIT	6 Nov 67
APPROVED		11/6/67
APPROVED MSC		

MANNED SPACECRAFT CENTER
HOUSTON, TEXAS

CAP, ENGRAVED, FILLED
SPECIFICATION CONTROL DRAWING

CODE IDENT NO.	SIZE	DRAWING NO.
80230	C	1005022

SCALE NONE SHEET 1 OF 1

1005022

MODERN BLUE PRINT CO., INC. 02840

NOTICE – WHEN GOVERNMENT DRAWINGS, SPECIFICATIONS, OR OTHER DATA ARE USED FOR ANY PURPOSE OTHER THAN IN CONNECTION WITH A DEFINITELY RELATED GOVERNMENT PROCUREMENT OPERATION, THE UNITED STATES GOVERNMENT THEREBY INCURS NO RESPONSIBILITY NOR ANY OBLIGATION WHATSOEVER; AND THE FACT THAT THE GOVERNMENT MAY HAVE FORMULATED, FURNISHED, OR IN ANY WAY SUPPLIED THE SAID DRAWINGS, SPECIFICATIONS, OR OTHER DATA IS NOT TO BE REGARDED BY IMPLICATION OR OTHERWISE AS IN ANY MANNER LICENSING THE HOLDER OR ANY OTHER PERSON OR CORPORATION, OR CONVEYING ANY RIGHTS OR PERMISSION TO MANUFACTURE, USE, OR SELL ANY PATENTED INVENTION THAT MAY IN ANY WAY BE RELATED THERETO.

REVISIONS						
SYM	ZONE	DESCRIPTION	DR	CHK	DATE	APPROVED
		INITIAL RELEASE CLASS A PER TCRR 36704			8/20/68	SNG

REQUIREMENTS:

1. GENERAL:
   - A. INTERPRET DRAWING IN ACCORDANCE WITH THE STANDARDS PRESCRIBED BY MIL-D-70327.
   - B. SUPPLIER SHALL CONFORM TO THE QUALITY ASSURANCE PROVISIONS CONTAINED IN ND 1015404, CLASS 2.
   - C. UNITS SHALL BE CAPABLE OF MEETING ALL QUALIFICATION REQUIREMENTS OF ND 1002056.
   - D. PART MARKING: PARTS SHALL BE PERMANENTLY AND LEGIBLY MARKED IN ACCORDANCE WITH ND 1002019 WITH THE MANUFACTURER'S NAME AND/OR SYMBOL, LOT CODE OR NUMBER TERMINAL IDENTIFICATION AND NASA PART NUMBER (DRAWING NUMBER) AND REVISION LETTER.
   - E. PREPARATION FOR DELIVERY SHALL BE IN ACCORDANCE WITH ND 1002215, CLASS I, CODE 1.
     - (1) MARKING OF SHIPPING CONTAINERS SHALL CONFORM TO THE MARKING OF UNIT AND INTERMEDIATE PACKAGES AND THE METHODS OF MARKING AS SPECIFIED IN ND 1002215.

2. ACCEPTANCE AND INSPECTION: 100% EXCEPT AS OTHERWISE NOTED.
   - A. MECHANICAL AND PHYSICAL PROPERTIES:
     - (1) DIMENSIONS: AS DELINEATED HEREIN.
     - (2) SURFACE ROUGHNESS: 125√ UNLESS OTHERWISE SPECIFIED.
     - (3) MARKING: AS SPECIFIED IN NOTES 1.D AND 1.E. NO MARKING SHALL APPEAR ON THE 32√ AREA.
     - (4) PANEL COLOR AND MARKING: SAMPLE

       COLOR, ENERGIZED: CROSS HATCHED LEGEND AREAS TO BE YELLOW. ALL OTHER LEGEND AREAS TO BE WHITE.

       MARKING; LEGEND: LEGENDS SHALL BE AS SHOWN ON DRAWING. CHARACTERS SHALL BE GORTON CONDENSED WITH PROPORTIONS PER ND 1002122, TYPE II, CLASS 2. THE OVERALL HEIGHT OF CHARACTERS SHALL BE .156. THE LINE STROKE WIDTH SHALL BE .025/.030. LEGEND SHALL BE CENTERED ON DISPLAY FACE PLATE. FILL SHALL BE BLACK COLOR NO. 37038 PER FED-STD-595 AND SHALL BE OPAQUE WHEN LEGEND IS ENERGIZED.
     - (5) BRIGHTNESS: LEGEND BACKGROUNDS SHALL HAVE A BRIGHTNESS LEVEL OF 15 ± 3 FOOT-LAMBERTS AT 5.0 ± 0.05 VDC. THE LEGENDS MUST BE READABLE (WHEN ILLUMINATED) UNDER AN AMBIENT 50 FOOT CANDLE ILLUMINATION.
     - (6) ISOLATION: THERE SHALL BE NO LIGHT LEAKAGE FROM LIT TO UNLIT LEGEND AREAS. PAINT SHALL NOT BE DEEMED AN ADEQUATE LIGHT BLOCK.
     - (7)* MAXIMUM HOLE DIAMETER DIMENSIONS INDICATED ARE APPLICABLE FROM SURFACE TO .190 DEPTH ONLY. (SEE DETAIL A).
   - B. ELECTRICAL CHARACTERISTICS:
     - (1) POWER DISSIPATION:

       YELLOW DISPLAYS: 0.180 AMPERES ± 15% AT 5.0 ±.0.1 VDC.

       WHITE DISPLAYS: 0.225 AMPERES ±15% AT 5.0 ± 0.1 VDC.
     - (2) DIELECTRIC WITHSTANDING VOLTAGE: 200 ± 25 VRMS AT 60 CPS FOR 5 SECONDS APPLIED TO THE TERMINALS OF AN INDIVIDUAL LAMP CIRCUIT SHORTED TOGETHER AND ANY OTHER SIMILARLY SHORTED LAMP CIRCUIT TERMINAL AND BETWEEN ALL TERMINALS (EXCEPT 15) SHORTED TOGETHER AND THE CASE.
     - (3) INSULATION RESISTANCE: 100 MEGOHMS MINIMUM AT 100 VDC AT SEA LEVEL, 70° ± 10° F, 50% RELATIVE HUMIDITY MAXIMUM, BETWEEN THE TERMINALS OF ANY INDIVIDUAL LAMP CIRCUIT SHORTED TOGETHER AND ANY OTHER SIMILARLY SHORTED LAMP CIRCUIT TERMINAL AND BETWEEN ALL TERMINALS (EXCEPT 15) SHORTED TOGETHER AND THE CASE.

NOTE APPLICATION	
DASH NO.	APPLICABLE NOTES
-001	PARAGRAPHS 1 THROUGH 7

PROCURE ONLY FROM APPROVED SOURCES LISTED IN ND 1002034 FOR THIS DRAWING.

QTY REQD	PART OR IDENTIFYING NO.	MATERIAL OR NOTES	NOMENCLATURE OR DESCRIPTION	FIND NO.

LIST OF MATERIALS

NEXT ASSY	USED ON
APPLICATION	

UNLESS OTHERWISE SPECIFIED
DIMENSIONS ARE IN INCHES
CAPACITOR VALUES ARE IN μf
RESISTOR VALUES ARE IN OHMS
TOLERANCES ON
FRACTIONS DECIMALS ANGLES
± ± ±
DO NOT SCALE THIS DRAWING

MATERIAL

MIT
INSTRUMENTATION LAB
CAMBRIDGE, MASS.

DRAWN
CHECKED 12 Aug 68
APPROVED Eldon C Hall 12 Aug 68
APPROVED D.G. Hoag 12 Aug 68
APPROVED ~~MSC~~ CCB 8/20/68
APPROVED MSC
DATE

MANNED SPACECRAFT CENTER
HOUSTON, TEXAS

INDICATOR
STATUS/CAUTION
SPECIFICATION CONTROL DRAWING

CODE IDENT NO. 80230
SIZE C
DRAWING NO. 1005025
SCALE NONE
SHEET 1 OF 3

NOTICE – WHEN GOVERNMENT DRAWINGS, SPECIFICATIONS, OR OTHER DATA ARE USED FOR ANY PURPOSE OTHER THAN IN CONNECTION WITH A DEFINITELY RELATED GOVERNMENT PROCUREMENT OPERATION, THE UNITED STATES GOVERNMENT THEREBY INCURS NO RESPONSIBILITY NOR ANY OBLIGATION WHATSOEVER; AND THE FACT THAT THE GOVERNMENT MAY HAVE FORMULATED, FURNISHED, OR IN ANY WAY SUPPLIED THE SAID DRAWINGS, SPECIFICATIONS OR OTHER DATA IS NOT TO BE REGARDED BY IMPLICATION OR OTHERWISE AS IN ANY MANNER LICENSING THE HOLDER OR ANY OTHER PERSON OR CORPORATION, OR CONVEYING ANY RIGHTS OR PERMISSION TO MANUFACTURE, USE, OR SELL ANY PATENTED INVENTION THAT MAY IN ANY WAY BE RELATED THERETO.

REVISIONS

SYM	ZONE	DESCRIPTION	DR	CHK	DATE	APPROVED
		INITIAL RELEASE CLASS A PER TDRR 36704			8/20/68	SNB

REQUIREMENTS: (CONTINUED)

3. DESIGN:

A. OPERATING LIFE: 4000 HOURS MINIMUM AT POWER DISSIPATION PER NOTE 2.B.(1) AT 70° ± 10° F AMBIENT TEMPERATURE.

B. MATERIAL: ALL MATERIAL SHALL BE CAPABLE OF MEETING THE REQUIREMENTS OF THIS DRAWING AND EXHIBIT NO TOXICITY.

(1) PLASTIC FACE PLATE: ACRYLIC SHEET PLASTIC PER MIL-P-5425, FINISH A.

(2) CASE: ALUMINUM ALLOY.

C. FINISHES:

(1) ALUMINUM CASE: CHROMATE TREAT PER MIL-C-5541.

(2) PAINT SURFACES MARKED "A" AND TOP BORDER AREA (EXCLUDING THE SURFACE OF PANELS) GREY EPOXY ENAMEL PER ND 1002279 USING 1008809-1.

(3) FINAL COAT SURFACES MARKED "A" AND TOP BORDER AREA (EXCLUDING THE SURFACE OF PANELS) PER ND 1002277 USING 1012543-003.

D. TERMINALS AND INSULATORS: SHALL MEET THE REQUIREMENTS OF ND 1002136.

E. PANEL COLORS: (REF.NOTE 2.A.(4)) YELLOW COLOR TO BE AVIATION YELLOW AND WHITE COLOR TO BE AVIATION WHITE PER MIL-C-2505C. COLOR COORDINATES SHALL REMAIN WITHIN THE LIMITS OF THE SPECIFIED AVIATION COLORS WHEN ENERGIZED FROM 5.0 THROUGH 3.0 VDC. THE X - COORDINATE FOR THE AVIATION WHITE DISPLAYS SHALL NOT EXCEED X = .560 WHEN ENERGIZED FROM 5.0 THROUGH 2.0 VDC.

COLOR, UNENERGIZED: LEGEND BACKGROUND TO BE LOW REFLECTIVE, DIFFUSE, NEUTRAL GREY WHEN NOT ENERGIZED. CONTRAST BETWEEN BLACK CHARACTERS AND UNLIGHTED BACKGROUND SHALL BE BETWEEN 2 TO 4 UNITS IN ACCORDANCE WITH MIL-P-7788. EXCEPT CONTRAST, $C = \frac{B_1 - B_2}{B_2}$

SURFACE GLOSS: THE DISPLAY AREAS SHALL HAVE A SURFACE GLOSS OF 5 UNITS OR LESS AS MEASURED PER MIL-P- 7788 WHEN IN THE UNENERGIZED CONDITION.

F. LAMPS: EACH OF THE 14 LEGEND AREAS SHALL BE ILLUMINATED BY 3 LAMPS PARALLEL WIRED AS SHOWN IN THE SCHEMATIC. YELLOW DISPLAY LAMPS TO BE MS 24367-680. WHITE DISPLAY LAMPS TO BE MS 24367-713.

G. WHEN MOUNTED ON A SUITABLE FIXTURE, THE UNIT SHALL BE CAPABLE OF WITHSTANDING A PRESSURE OF 15 PSIA OF HELIUM APPLIED AGAINST THE 32 AREA, WHEN THE EXTERNAL PRESSURE IS REDUCED TO 1" HG EQUIVALENT PRESSURE: WHEN SUBJECTED TO THIS DIFFERENTIAL PRESSURE, THE UNIT SHALL EXHIBIT A LEAK RATE OF NO MORE THAN 1×10^{-5} ATM CC/SEC OVER THE TEMPERATURE RANGE OF -10°C TO +82°C.

4. NOTE: THIS UNIT IS TO BE MOUNTED ON A HEAT SINK WHEN LEGENDS ARE ENERGIZED FOR PERIODS LONGER THAN TWO (2) MINUTES. A SATISFACTORY HEAT SINK CAN BE AN ALUMINUM OR BRASS PLATE 10" X 10" X 1/8" WITH A CENTERED RECTANGULAR OPENING FOR MOUNTING THE UNIT.

5. CONSTRUCTION:

A. BULBS TO BE USED SHALL MEET THE REQUIREMENTS OF MS 24367, AND SHALL BE SCREENED FOR THE FOLLOWING DEFECTS:

(1) SURFACE CRACKS.

(2) SCRATCHES AND TOOL MARKS.

(3) RAW UNPOLISHED GLASS EDGES IN FINAL SEAL AREA.

BULBS WHICH EXHIBIT THESE DEFECTS SHALL NOT BE USED IN DISPLAYS SUPPLIED TO THIS SPECIFICATION.

B. BULBS SHALL BE CONFORMALLY COATED WITH A SOFT SETTING PLASTIC BEFORE EMBEDMENT TO RELIEVE POTTING STRESS ON BULBS. THE PLASTIC AND/OR SOLVENTS SHALL BE AS NEGOTIATED PER ND 1015404, CLASS NO. 2.

6. VENDOR SUPPLIED DOCUMENTATION:
THE VENDOR SHALL RECORD AND SUPPLY CERTIFICATES OF COMPLIANCE DATA FOR THE FOLLOWING READINGS ON EACH DISPLAY

A. BRIGHTNESS PER PARAGRAPH 2.A.(5)
B. POWER DISSIPATION PER PARAGRAPH 2.B(1).
C. DIELECTRIC WITHSTANDING VOLTAGE PER PARAGRAPH 2.B(2).
D. INSULATION RESISTANCE TEST PER PARAGRAPH 2.B(3).
E. ISOLATION PER PARAGRAPH 2.A(6).
F. PANEL COLOR AND MARKING PER PARAGRAPH 2.A(4).

7. BULB BURN-IN: BULBS SHALL BE BURNT-IN FOR A MINIMUM OF 300 HOURS, AT 5.0 VDC.

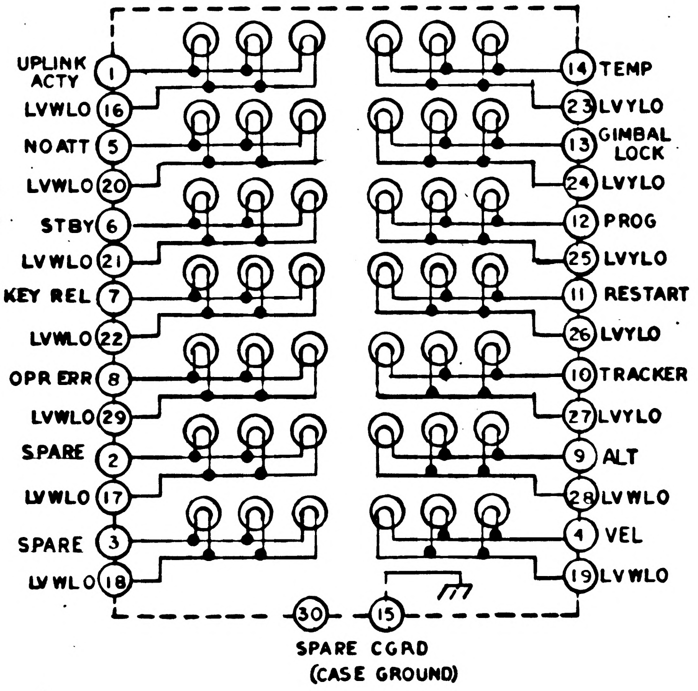

QTY REQD	PART OR IDENTIFYING NO.	MATERIAL OR NOTES	NOMENCLATURE OR DESCRIPTION	FIND NO.

LIST OF MATERIALS

NEXT ASSY	USED ON
APPLICATION	

UNLESS OTHERWISE SPECIFIED
DIMENSIONS ARE IN INCHES
CAPACITOR VALUES ARE IN µf
RESISTOR VALUES ARE IN OHMS
TOLERANCES ON
FRACTIONS ± DECIMALS ± ANGLES ±
DO NOT SCALE THIS DRAWING

MATERIAL

MIT
INSTRUMENTATION LAB
CAMBRIDGE, MASS.

DRAWN
CHECKED 12Aug68
APPROVED Elden C Hall 12Aug68
APPROVED D. G. Hoag 12Aug68
APPROVED CCB 8/20/68
APPROVED MSC
DATE

MANNED SPACECRAFT CENTER
HOUSTON, TEXAS

INDICATOR
STATUS/CAUTION
SPECIFICATION CONTROL DRAWING

CODE IDENT NO.	SIZE	DRAWING NO.
80230	C	1005025

SCALE NONE
SHEET 2 OF 3

NOTICE – WHEN GOVERNMENT DRAWINGS, SPECIFICATIONS, OR OTHER DATA ARE USED FOR ANY PURPOSE OTHER THAN IN CONNECTION WITH A DEFINITELY RELATED GOVERNMENT PROCUREMENT OPERATION, THE UNITED STATES GOVERNMENT THEREBY INCURS NO RESPONSIBILITY NOR ANY OBLIGATION WHATSOEVER; AND THE FACT THAT THE GOVERNMENT MAY HAVE FORMULATED, FURNISHED, OR IN ANY WAY SUPPLIED THE SAID DRAWINGS, SPECIFICATIONS OR OTHER DATA IS NOT TO BE REGARDED BY IMPLICATION OR OTHERWISE AS IN ANY MANNER LICENSING THE HOLDER OR ANY OTHER PERSON OR CORPORATION, OR CONVEYING ANY RIGHTS OR PERMISSION TO MANUFACTURE, USE, OR SELL ANY PATENTED INVENTION THAT MAY IN ANY WAY BE RELATED THERETO.

REVISIONS TDRR 36704

SYM	ZONE	DESCRIPTION	DR	CHK	DATE	APPROVED
					8/20/68	SMB

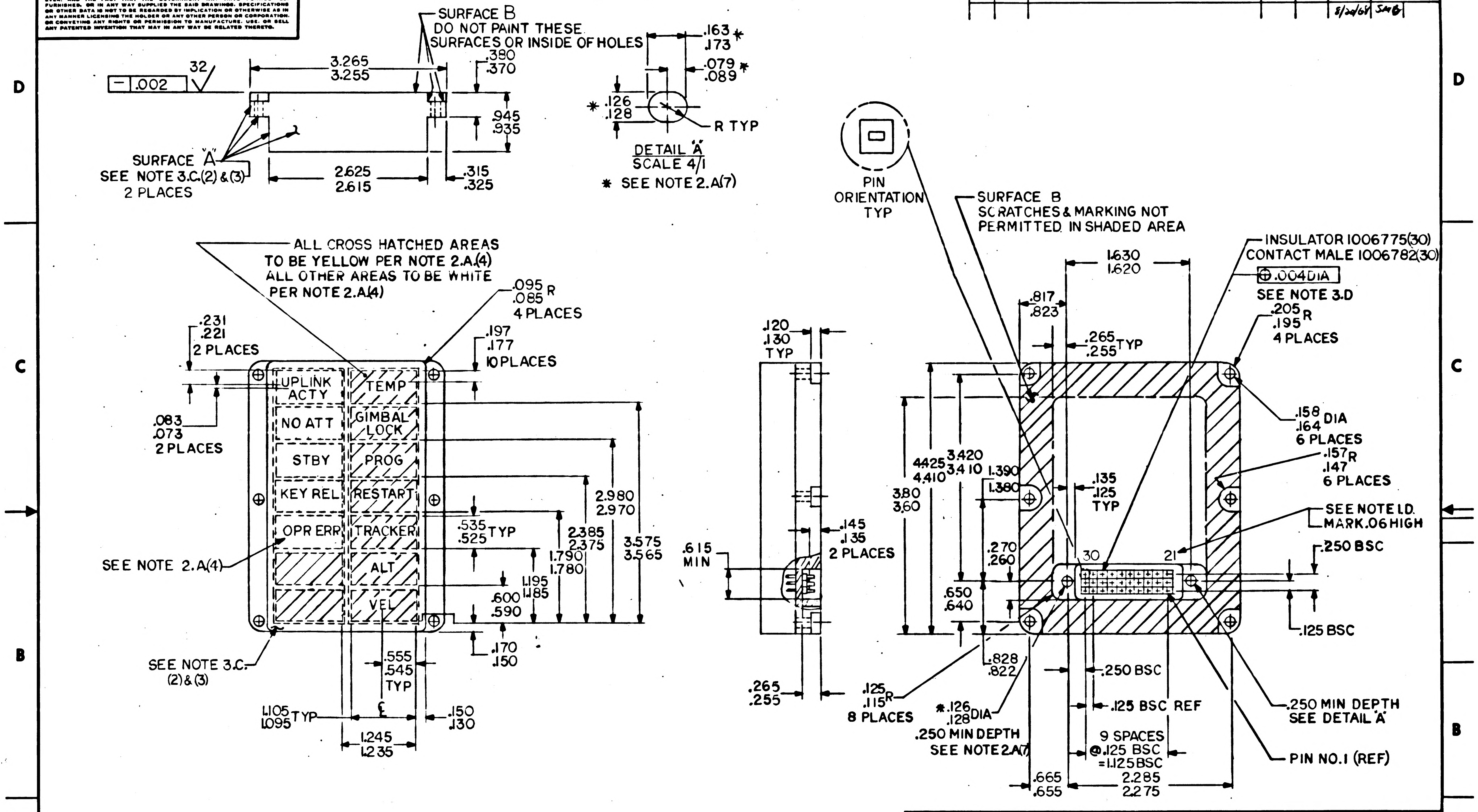
SURFACE B
DO NOT PAINT THESE SURFACES OR INSIDE OF HOLES
32
.002
3.265
3.255
.380
.370
.945
.935
SURFACE "A"
SEE NOTE 3.C.(2) & (3)
2 PLACES
2.625
2.615
.315
.325
.163
.173 *
.079
.089 *
* .126
.128
R TYP
DETAIL "A"
SCALE 4/1
* SEE NOTE 2.A(7)
PIN ORIENTATION TYP
SURFACE B
SCRATCHES & MARKING NOT PERMITTED IN SHADED AREA
ALL CROSS HATCHED AREAS TO BE YELLOW PER NOTE 2.A.(4)
ALL OTHER AREAS TO BE WHITE PER NOTE 2.A.(4)
.095
.085 R
4 PLACES
.231
.221
2 PLACES
.197
.177
10 PLACES
.083
.073
2 PLACES
UPLINK ACTY
TEMP
NO ATT
GIMBAL LOCK
STBY
PROG
KEY REL
RESTART
OPR ERR
TRACKER
ALT
VEL
.535
.525 TYP
2.980
2.970
2.385
2.375
3.575
3.565
1.790
1.780
1.195
1.185
.600
.590
.170
.150
SEE NOTE 2.A(4)
SEE NOTE 3.C.(2) & (3)
.555
.545
TYP
1.105
1.095 TYP
℄
.150
.130
1.245
1.235
.120
.130
TYP
.615 MIN
.145
.135
2 PLACES
.265
.255
1.630
1.620
.817
.823
.265
.255 TYP
INSULATOR 1006775(30)
CONTACT MALE 1006782(30)
⊕ .004 DIA
SEE NOTE 3.D
.205
.195 R
4 PLACES
4.425
4.410
3.420
3.410
1.390
1.380
3.80
3.60
.135
.125
TYP
.158
.164 DIA
6 PLACES
.157
.147 R
6 PLACES
SEE NOTE 1.D.
MARK .06 HIGH
30
21
.270
.260
.250 BSC
.650
.640
.125 BSC
.828
.822
.125
.115 R
8 PLACES
* .126
.128 DIA
.250 MIN DEPTH
SEE NOTE 2.A(7)
.250 BSC
.125 BSC REF
9 SPACES
@ .125 BSC
= 1.125 BSC
.665
.655
2.285
2.275
.250 MIN DEPTH
SEE DETAIL "A"
PIN NO.1 (REF)

QTY REQD	PART OR IDENTIFYING NO.	MATERIAL OR NOTES	NOMENCLATURE OR DESCRIPTION	FIND NO.

LIST OF MATERIALS

NEXT ASSY	USED ON
APPLICATION	

UNLESS OTHERWISE SPECIFIED
DIMENSIONS ARE IN INCHES
CAPACITOR VALUES ARE IN µf
RESISTOR VALUES ARE IN OHMS
TOLERANCES ON
FRACTIONS DECIMALS ANGLES
± ± ±
DO NOT SCALE THIS DRAWING

MATERIAL

MIT
INSTRUMENTATION LAB
CAMBRIDGE, MASS.

DRAWN		24 Jul 68
CHECKED		12Aug68
APPROVED	Ellen C Hall	12Aug68
APPROVED	D G Hoag	12Aug68
APPROVED ~~NET~~ CCB	S	8/20/68
APPROVED MSC		9/12/68
		DATE

MANNED SPACECRAFT CENTER
HOUSTON, TEXAS

INDICATOR
STATUS/CAUTION
SPECIFICATION CONTRCL DRAWING

CODE IDENT NO.	SIZE	DRAWING NO.
80230	C	1005025
SCALE 1/1		SHEET 3 OF 3

NOTICE — WHEN GOVERNMENT DRAWINGS, SPECIFICATIONS, OR OTHER DATA ARE USED FOR ANY PURPOSE OTHER THAN IN CONNECTION WITH A DEFINITELY RELATED GOVERNMENT PROCUREMENT OPERATION, THE UNITED STATES GOVERNMENT THEREBY INCURS NO RESPONSIBILITY NOR ANY OBLIGATION WHATSOEVER; AND THE FACT THAT THE GOVERNMENT MAY HAVE FORMULATED, FURNISHED, OR IN ANY WAY SUPPLIED THE SAID DRAWINGS, SPECIFICATIONS OR OTHER DATA IS NOT TO BE REGARDED BY IMPLICATION OR OTHERWISE AS IN ANY MANNER LICENSING THE HOLDER OR ANY OTHER PERSON OR CORPORATION, OR CONVEYING ANY RIGHTS OR PERMISSION TO MANUFACTURE, USE, OR SELL ANY PATENTED INVENTION THAT MAY IN ANY WAY BE RELATED THERETO.

1005700 A

REVISIONS 09789

SYM	DESCRIPTION	DATE	APPROVAL
A	REVISED PER TDRR 11478		

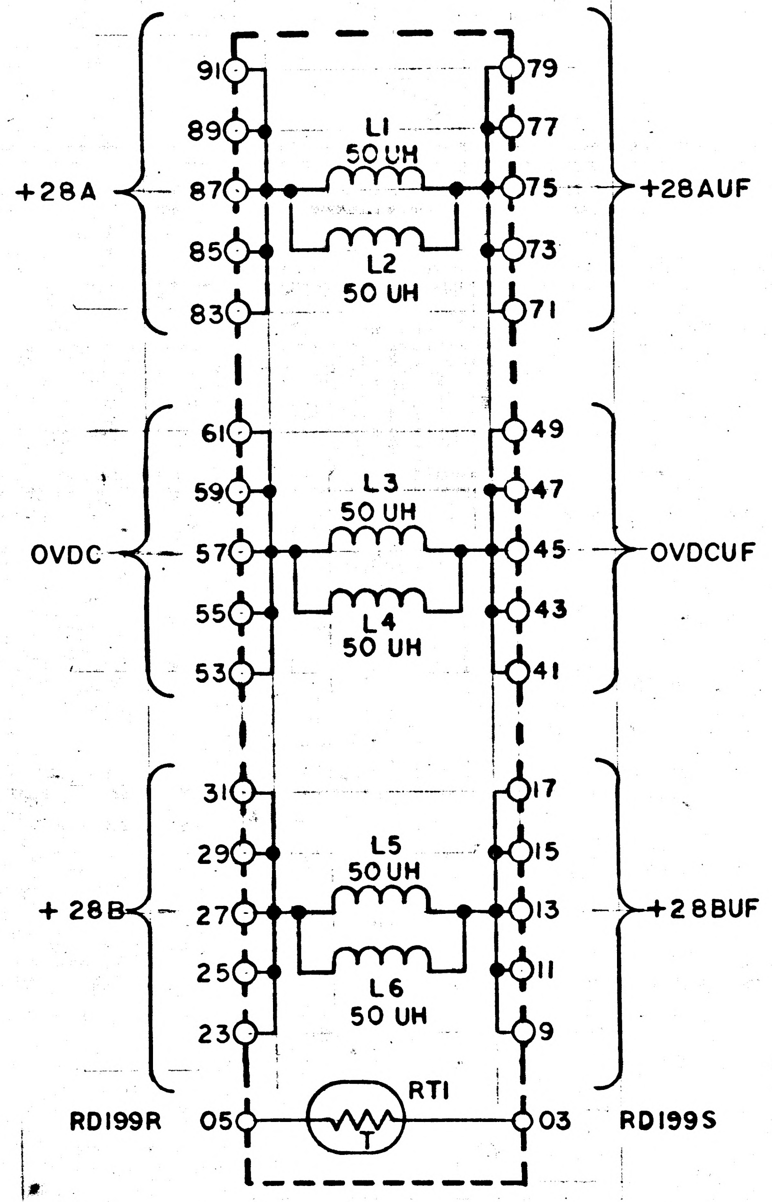

REF DES	PART NO.	DESCRIPTION	VALUE
L1	1006798	INDUCTOR	50UH
L2	↓	↓	↓
L3	↓	↓	↓
L4	↓	↓	↓
L5	↓	↓	↓
L6	↓	↓	↓
RT1	1006712-3	THERMISTOR	5000Ω

REF DWG:
FILTER MODULE
DRAWING NO. 1003704

NOTES
1. INTERPRET DRAWING IN ACCORDANCE WITH STANDARDS PRESCRIBED BY MIL-D-70327

MASTER

QTY REQD	PART OR IDENTIFYING NO.	NOMENCLATURE OR DESCRIPTION	FIND NO.

LIST OF MATERIALS

NEXT ASSY	USED ON
APPLICATION	

UNLESS OTHERWISE SPECIFIED DIMENSIONS ARE IN INCHES
TOLERANCES ON
FRACTIONS ± — DECIMALS ± — ANGLES ± —
DO NOT SCALE THIS DRAWING
MATERIAL —
HEAT TREATMENT —
FINAL FINISH —

MIT
INSTRUMENTATION LAB
CAMBRIDGE, MASS.
DWG. NO. CONTRACT
DRAWN R.B. Stegmen DATE 1 JUN 64
CHECKED L.T. Berkeley 1 June 64
APPROVAL
APPROVAL Eldon C Hall 1 June 64
NASA APPROVAL 6/2/64
MIT APPROVAL 6/2/64

MANNED SPACECRAFT CENTER
HOUSTON, TEXAS

SCHEMATIC,
FILTER MODULE

CODE IDENT NO.	SIZE	NASA DRAWING NO.
—	C	1005700

SCALE — WT — SHEET 1 OF 1

INCHES
0 1 2
PHOTOGRAPHIC SCALE ONLY

1005700

REVISIONS 09789			
SYM	DESCRIPTION	DATE	APPROVAL

NOTICE — WHEN GOVERNMENT DRAWINGS, SPECIFICATIONS, OR OTHER DATA ARE USED FOR ANY PURPOSE OTHER THAN IN CONNECTION WITH A DEFINITELY RELATED GOVERNMENT PROCUREMENT OPERATION, THE UNITED STATES GOVERNMENT THEREBY INCURS NO RESPONSIBILITY NOR ANY OBLIGATION WHATSOEVER; AND THE FACT THAT THE GOVERNMENT MAY HAVE FORMULATED, FURNISHED OR IN ANY WAY SUPPLIED THE SAID DRAWINGS, SPECIFICATIONS OR OTHER DATA IS NOT TO BE REGARDED BY IMPLICATION OR OTHERWISE AS IN ANY MANNER LICENSING THE HOLDER OR ANY OTHER PERSON OR CORPORATION, OR CONVEYING ANY RIGHTS OR PERMISSION TO MANUFACTURE, USE, OR SELL ANY PATENTED INVENTION THAT MAY IN ANY WAY BE RELATED THERETO.

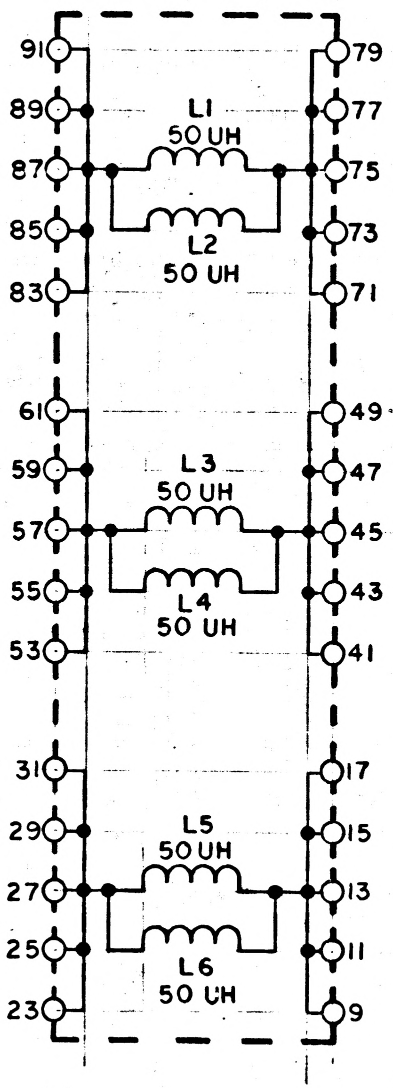

REF DES	PART NO.	DESCRIPTION	VALUE
L1	1006798	INDUCTOR	50UH
L2			
L3			
L4			
L5			
L6	↓	↓	↓

REF DWG:
FILTER MODULE
DRAWING NO. 1003797

NOTES

1. INTERPRET DRAWING IN ACCORDANCE WITH STANDARDS PRESCRIBED BY MIL-D-70327

MASTER

QTY REQD	PART OR IDENTIFYING NO.	NOMENCLATURE OR DESCRIPTION	FIND NO.

LIST OF MATERIALS

NEXT ASSY	USED ON
APPLICATION	

UNLESS OTHERWISE SPECIFIED DIMENSIONS ARE IN INCHES
TOLERANCES ON
FRACTIONS ± — DECIMALS ± — ANGLES ± —
DO NOT SCALE THIS DRAWING
MATERIAL —
HEAT TREATMENT —
FINAL FINISH —

MIT INSTRUMENTATION LAB
CAMBRIDGE, MASS.
DWG. NO. CONTRACT

DRAWN R.B. Stogner DATE 1 JUN 64
CHECKED L.E. Berkeley 1 June 64
APPROVAL
APPROVAL Eldon C Hall 1 June 64
NASA APPROVAL 6/2/64
MIT APPROVAL 6/2/64

MANNED SPACECRAFT CENTER
HOUSTON, TEXAS

SCHEMATIC, FILTER MODULE

CODE IDENT NO. —
SIZE C
NASA DRAWING NO. 1005700
SCALE —
WT —
SHEET 1 OF 1

INCHES
0 1 2
PHOTOGRAPHIC SCALE ONLY

SYM	DESCRIPTION	DATE	APPROVAL
REVISIONS 11730			
A	REVISED PER TDRR 11775	11/17/64	

NOTICE — WHEN GOVERNMENT DRAWINGS, SPECIFICATIONS, OR OTHER DATA ARE USED FOR ANY PURPOSE OTHER THAN IN CONNECTION WITH A DEFINITELY RELATED GOVERNMENT PROCUREMENT OPERATION, THE UNITED STATES GOVERNMENT THEREBY INCURS NO RESPONSIBILITY NOR ANY OBLIGATION WHATSOEVER; AND THE FACT THAT THE GOVERNMENT MAY HAVE FORMULATED, FURNISHED, OR IN ANY WAY SUPPLIED THE SAID DRAWINGS, SPECIFICATIONS, OR OTHER DATA IS NOT TO BE REGARDED BY IMPLICATION OR OTHERWISE AS IN ANY MANNER LICENSING THE HOLDER OR ANY OTHER PERSON OR CORPORATION, OR CONVEYING ANY RIGHTS OR PERMISSION TO MANUFACTURE, USE, OR SELL ANY PATENTED INVENTION THAT MAY IN ANY WAY BE RELATED THERETO.

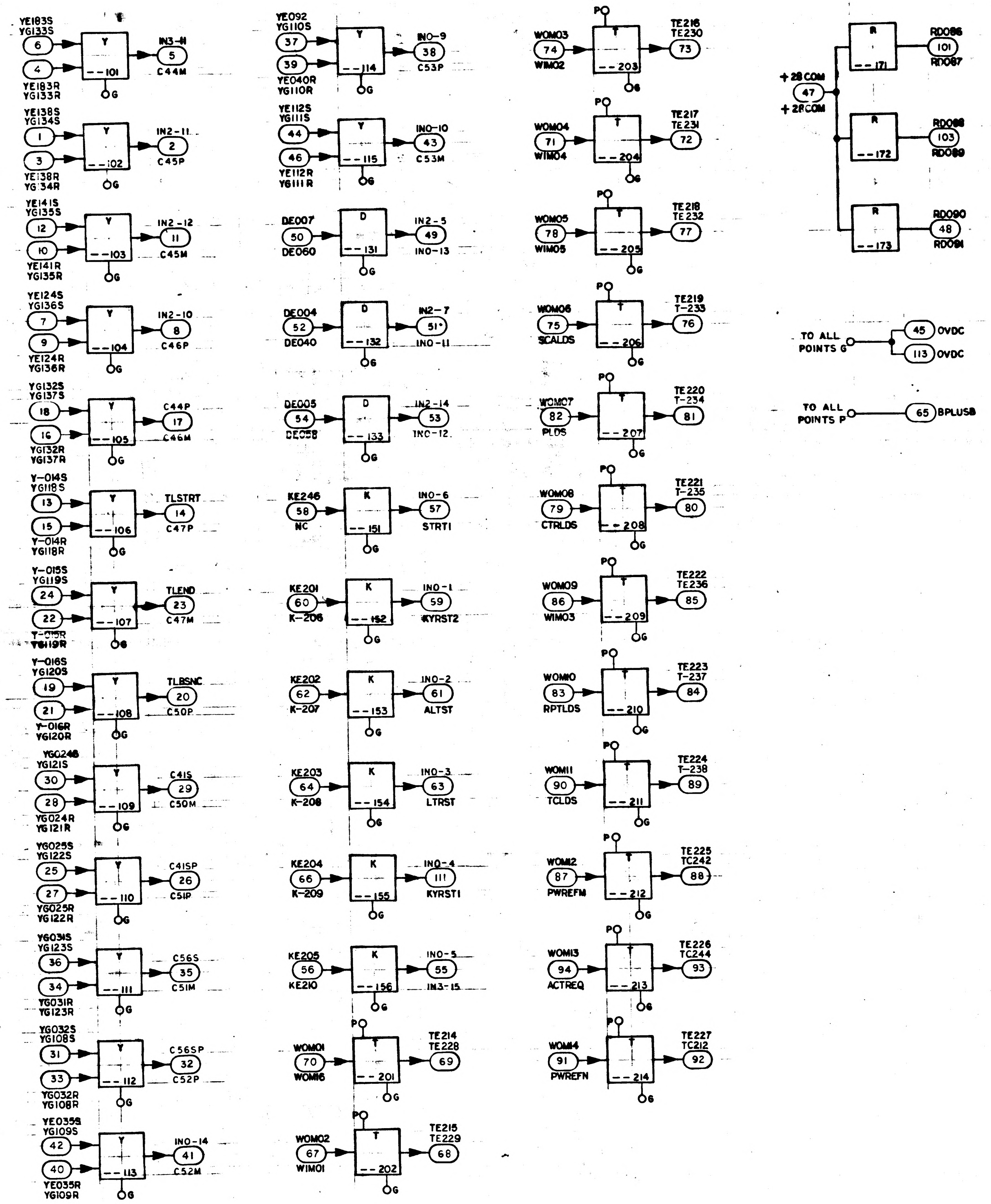
YE183S YG133S 6 4 YE183R YG133R Y --101 G IN3-11 5 C44M
YE138S YG134S 1 3 YE138R YG134R Y --102 G IN2-11 2 C45P
YE141S YG135S 12 10 YE141R YG135R Y --103 G IN2-12 11 C45M
YE124S YG136S 7 9 YE124R YG136R Y --104 G IN2-10 8 C46P
YG132S YG137S 18 16 YG132R YG137R Y --105 G C44P 17 C46M
Y-014S YG118S 13 15 Y-014R YG118R Y --106 G TLSTRT 14 C47P
Y-015S YG119S 24 22 Y-015R YG119R Y --107 G TLEND 23 C47M
Y-016S YG120S 19 21 Y-016R YG120R Y --108 G TLBSNC 20 C50P
YG024S YG121S 30 28 YG024R YG121R Y --109 G C41S 29 C50M
YG025S YG122S 25 27 YG025R YG122R Y --110 G C41SP 26 C51P
YG031S YG123S 36 34 YG031R YG123R Y --111 G C56S 35 C51M
YG032S YG108S 31 33 YG032R YG108R Y --112 G C56SP 32 C52P
YE035S YG109S 42 40 YE035R YG109R Y --113 G IN0-14 41 C52M
YE092 YG110S 37 39 YE040R YG110R Y --114 G IN0-9 38 C53P
YE112S YG111S 44 46 YE112R YG111R Y --115 G IN0-10 43 C53M
DE007 50 DE060 D --131 G IN2-5 49 IN0-13
DE004 52 DE040 D --132 G IN2-7 51* IN0-11
DE005 54 DE058 D --133 G IN2-14 53 IN0-12
KE246 58 NC K --151 G IN0-6 57 STRT1
KE201 60 K-206 K --152 G IN0-1 59 KYRST2
KE202 62 K-207 K --153 G IN0-2 61 ALTST
KE203 64 K-208 K --154 G IN0-3 63 LTRST
KE204 66 K-209 K --155 G IN0-4 111 KYRST1
KE205 56 KE210 K --156 G IN0-5 55 IN3-15
P WOM01 70 WOM16 T --201 G TE214 TE228 69
P WOM02 67 WIM01 T --202 G TE215 TE229 68
P WOM03 74 WIM02 T --203 G TE216 TE230 73
P WOM04 71 WIM04 T --204 G TE217 TE231 72
P WOM05 78 WIM05 T --205 G TE218 TE232 77
P WOM06 75 SCALDS T --206 G TE219 T-233 76
P WOM07 82 PLDS T --207 G TE220 T-234 81
P WOM08 79 CTRLDS T --208 G TE221 T-235 80
P WOM09 86 WIM03 T --209 G TE222 TE236 85
P WOM10 83 RPTLDS T --210 G TE223 T-237 84
P WOM11 90 TCLDS T --211 G TE224 T-238 89
P WOM12 87 PWREFM T --212 G TE225 TC242 88
P WOM13 94 ACTREQ T --213 G TE226 TC244 93
P WOM14 91 PWREFN T --214 G TE227 TC212 92
+28 COM 47 +28COM
R --171 RD086 101 RD087
R --172 RD088 103 RD089
R --173 RD090 48 RD091
TO ALL POINTS G 45 OVDC 113 OVDC
TO ALL POINTS P 65 BPLUSB

SCHEMATICS

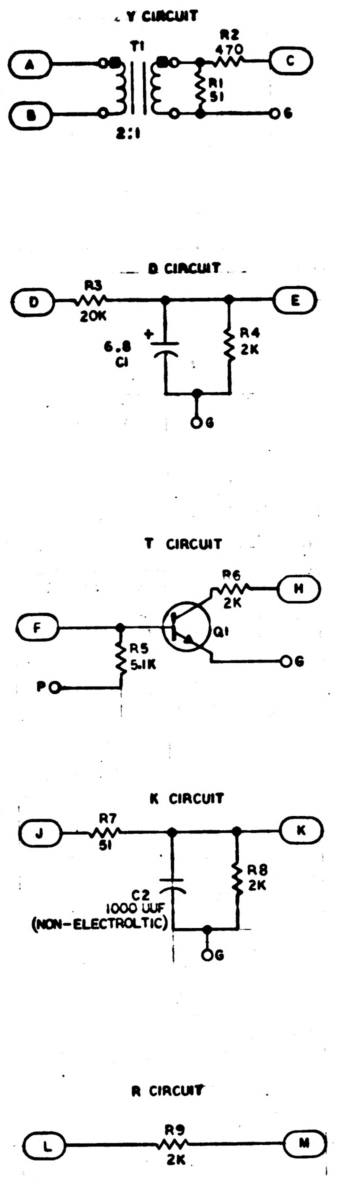
Y CIRCUIT
A
B
T1
2:1
R2 470
R1 51
C
G
D CIRCUIT
D
R3 20K
6.8 C1
R4 2K
E
G
T CIRCUIT
F
P
R5 5.1K
Q1
R6 2K
H
G
K CIRCUIT
J
R7 51
C2 1000 UUF (NON-ELECTROLTIC)
R8 2K
K
G
R CIRCUIT
L
R9 2K
M

SYMBOLS

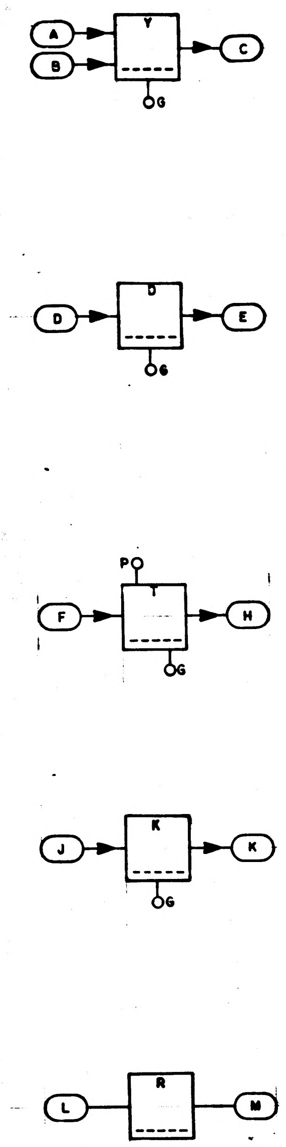
A
B
Y
C
G
D
D
E
G
P
F
T
H
G
J
K
K
G
L
R
M

REF DES	PART NO.	DESCRIPTION	VALUE	TOL	RATING
R1	1006750-1	RESISTOR	51	± 2%	1/4 W
R2	-24		470		
R3	-63		20K		
R4	-39		2K		
R5	-49		5.1K		
R6	-39		2K		
R7	-1				
R8	-39		2K		
R9	-39		2K		
C1	1006755 -2	CAPACITOR	6.8	±10 %	6 VDC
C2	1006777 -24	CAPACITOR	1000 UUF	±10 %	100 V
Q1	1006752	TRANSISTOR			
T1	1006762-2	TRANSFORMER			

REF DWG: INTERFACE MODULE ASSY
A19 OR A39
DWG NO. 1003708

NOTES
1. INTERPRET DRAWING IN ACCORDANCE WITH STANDARDS PRESCRIBED BY MIL-D-70327
2. CIRCUIT NUMBERS FOR COMPUTER POSITION 19 ARE PREFIXED BY 71
3. CIRCUIT NUMBERS FOR COMPUTER POSITION 39 ARE PREFIXED BY 73
4. UPPER SIGNAL NAME USED IN COMPUTER POSISTION 19
5. LOWER SIGNAL NAME USED IN COMPUTER POSISTION 39
6. UNLESS OTHERWISE SPECIFIED:
   A. RESISTOR VALUES ARE EXPRESSED IN OHMS
   B. CAPACITOR VALUES ARE EXPRESSED IN MICROFARADS

MASTER

QTY REQD	PART OR IDENTIFYING NO.	NOMENCLATURE OR DESCRIPTION	FIND NO.

LIST OF MATERIALS

NEXT ASSY | USED ON
APPLICATION

UNLESS OTHERWISE SPECIFIED
DIMENSIONS ARE IN INCHES
TOLERANCES ON
FRACTIONS ± — DECIMALS ± — ANGLES ± —
DO NOT SCALE THIS DRAWING
MATERIAL
HEAT TREATMENT
FINAL FINISH

MIT
INSTRUMENTATION LAB
CAMBRIDGE, MASS
DWG NO. CONTRACT
DRAWN R.B. DATE 5JUN64
CHECKED
APPROVAL
APPROVAL
NASA APPROVAL
MIT APPROVAL

MANNED SPACECRAFT CENTER
HOUSTON, TEXAS

FLOW DIAGRAM & SCHEMATIC
INTERFACE MODULE
A19 OR A39

CODE IDENT NO. — | SIZE E | NASA DRAWING NO. 1003701
SCALE — | WT — | SHEET 1 OF 1

NOTICE — WHEN GOVERNMENT DRAWINGS, SPECIFICATIONS, OR OTHER DATA ARE USED FOR ANY PURPOSE OTHER THAN IN CONNECTION WITH A DEFINITELY RELATED GOVERNMENT PROCUREMENT OPERATION, THE UNITED STATES GOVERNMENT THEREBY INCURS NO RESPONSIBILITY NOR ANY OBLIGATION WHATSOEVER; AND THE FACT THAT THE GOVERNMENT MAY HAVE FORMULATED, FURNISHED, OR IN ANY WAY SUPPLIED THE SAID DRAWINGS, SPECIFICATIONS, OR OTHER DATA IS NOT TO BE REGARDED BY IMPLICATION OR OTHERWISE AS IN ANY MANNER LICENSING THE HOLDER OR ANY OTHER PERSON OR CORPORATION, OR CONVEYING ANY RIGHTS OR PERMISSION TO MANUFACTURE, USE, OR SELL ANY PATENTED INVENTION THAT MAY IN ANY WAY BE RELATED THERETO.

REVISIONS

SYM	DESCRIPTION	DATE	APPROVAL

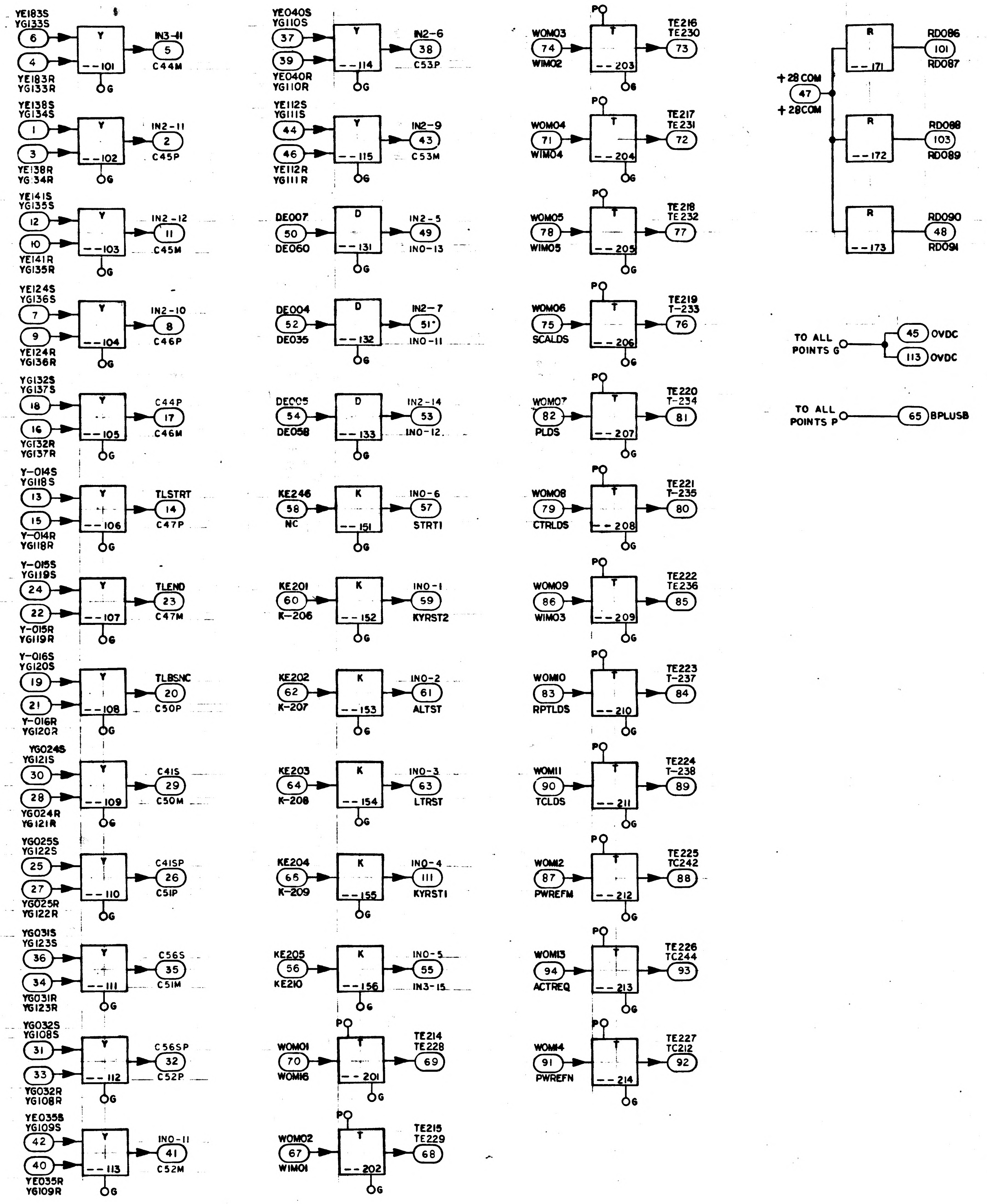

YE183S YG133S 6 4 Y 101 IN3-11 5 C44M YE183R YG133R G
YE138S YG134S 1 3 Y 102 IN2-11 2 C45P YE138R YG134R
YE141S YG135S 12 10 Y 103 IN2-12 11 C45M YE141R YG135R
YE124S YG136S 7 9 Y 104 IN2-10 8 C46P YE124R YG136R
YG132S YG137S 18 16 Y 105 C44P 17 C46M YG132R YG137R
Y-014S YG118S 13 15 Y 106 TLSTRT 14 C47P Y-014R YG118R
Y-015S YG119S 24 22 Y 107 TLEND 23 C47M Y-015R YG119R
Y-016S YG120S 19 21 Y 108 TLBSNC 20 C50P Y-016R YG120R
YG024S YG121S 30 28 Y 109 C41S 29 C50M YG024R YG121R
YG025S YG122S 25 27 Y 110 C41SP 26 C51P YG025R YG122R
YG031S YG123S 36 34 Y 111 C56S 35 C51M YG031R YG123R
YG032S YG108S 31 33 Y 112 C56SP 32 C52P YG032R YG108R
YE035S YG109S 42 40 Y 113 IN0-11 41 C52M YE035R YG109R
YE040S YG110S 37 39 Y 114 IN2-6 38 C53P YE040R YG110R
YE112S YG111S 44 46 Y 115 IN2-9 43 C53M YE112R YG111R
DE007 50 DE060 D 131 IN2-5 49 IN0-13
DE004 52 DE035 D 132 IN2-7 51 IN0-11
DEC05 54 DE058 D 133 IN2-14 53 IN0-12
KE246 58 NC K 151 IN0-6 57 STRT1
KE201 60 K-206 K 152 IN0-1 59 KYRST2
KE202 62 K-207 K 153 IN0-2 61 ALTST
KE203 64 K-208 K 154 IN0-3 63 LTRST
KE204 66 K-209 K 155 IN0-4 111 KYRST1
KE205 56 KE210 K 156 IN0-5 55 IN3-15
WOM01 70 WOM16 T 201 TE214 TE228 69
WOM02 67 WIM01 T 202 TE215 TE229 68
WOM03 74 WIM02 T 203 TE216 TE230 73
WOM04 71 WIM04 T 204 TE217 TE231 72
WOM05 78 WIM05 T 205 TE218 TE232 77
WOM06 75 SCALDS T 206 TE219 T-233 76
WOM07 82 PLDS T 207 TE220 T-234 81
WOM08 79 CTRLDS T 208 TE221 T-235 80
WOM09 86 WIM03 T 209 TE222 TE236 85
WOM10 83 RPTLDS T 210 TE223 T-237 84
WOM11 90 TCLDS T 211 TE224 T-238 89
WOM12 87 PWREFM T 212 TE225 TC242 88
WOM13 94 ACTREQ T 213 TE226 TC244 93
WOM14 91 PWREFN T 214 TE227 TC212 92
P G
+28 COM 47 +28 COM
R 171 RD086 101 RD087
R 172 RD088 103 RD089
R 173 RD090 48 RD091
TO ALL POINTS G 45 OVDC 113 OVDC
TO ALL POINTS P 65 BPLUSB

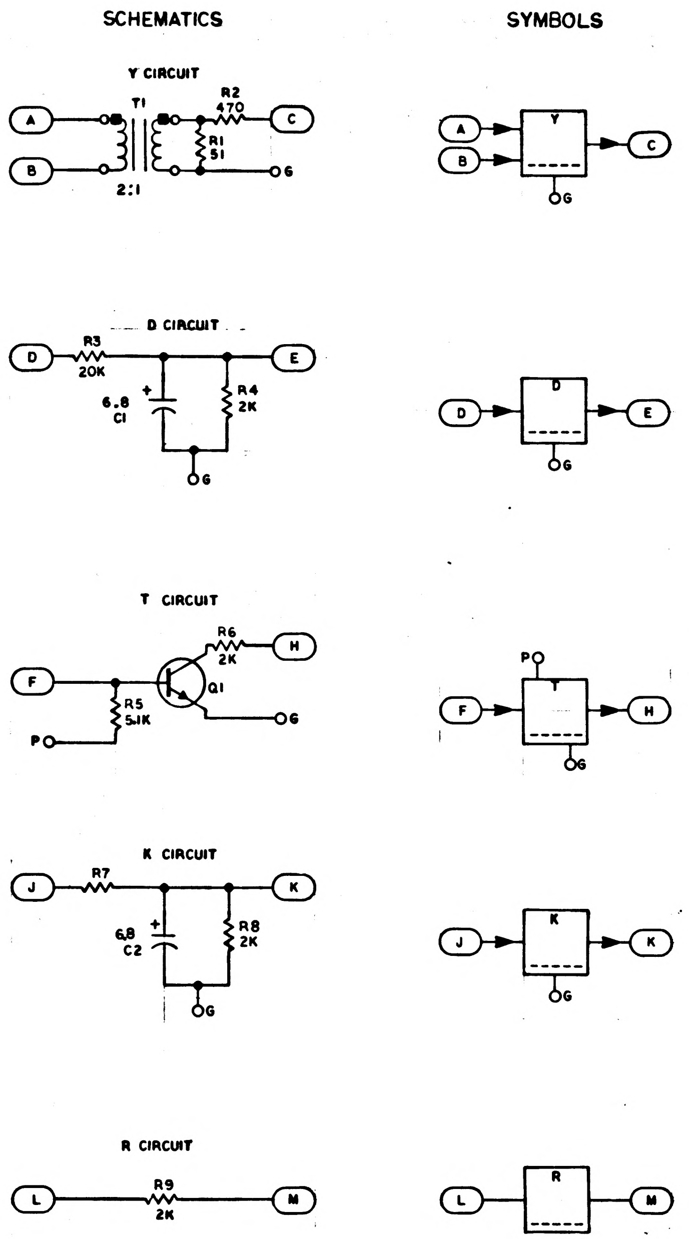

SCHEMATICS
SYMBOLS
Y CIRCUIT
A B T1 2:1 R2 470 R1 51 C G
Y
D CIRCUIT
D R3 20K 6.8 C1 + R4 2K E G
D
T CIRCUIT
F R5 5.1K P R6 2K H Q1 G
T
K CIRCUIT
J R7 6.8 C2 + R8 2K K G
K
R CIRCUIT
L R9 2K M
R

REF DES	PART NO.	DESCRIPTION	VALUE	TOL	RATING
R1	1006750 -1	RESISTOR	51	± 2%	1/4 W
R2	-24		470		
R3	-63		20K		
R4	-39		2K		
R5	-49		5.1K		
R6	-39		2K		
R7	—				
R8	-39		2K		
R9	-39		2K		
C1	1006755 -2	CAPACITOR	6.8	±10 %	6 VDC
C2	1006755 -2	CAPACITOR	6.8	±10 %	6 VDC
Q1	1006752	TRANSISTOR			
T1	1006762-2	TRANSFORMER			

REF DWG: INTERFACE MODULE ASSY
A19 OR A39
DWG NO. 1003708

NOTES
1. INTERPRET DRAWING IN ACCORDANCE WITH STANDARDS PRESCRIBED BY MIL-D-70327
2. CIRCUIT NUMBERS FOR COMPUTER POSITION 19 ARE PREFIXED BY 71
3. CIRCUIT NUMBERS FOR COMPUTER POSITION 39 ARE PREFIXED BY 73
4. UPPER SIGNAL NAME USED IN COMPUTER POSISTION 19
5. LOWER SIGNAL NAME USED IN COMPUTER POSISTION 39
6. UNLESS OTHERWISE SPECIFIED:
   A. RESISTOR VALUES ARE EXPRESSED IN OHMS
   B. CAPACITOR VALUES ARE EXPRESSED IN MICROFARADS

MASTER

QTY REQD	PART OR IDENTIFYING NO.	NOMENCLATURE OR DESCRIPTION	FIND NO.

LIST OF MATERIALS

NEXT ASSY	USED ON

APPLICATION

UNLESS OTHERWISE SPECIFIED
DIMENSIONS ARE IN INCHES
TOLERANCES ON
FRACTIONS ± — DECIMALS ± — ANGLES ± —
DO NOT SCALE THIS DRAWING
MATERIAL
HEAT TREATMENT
FINAL FINISH

MIT
INSTRUMENTATION LAB
Cambridge, Mass
DWG NO. CONTRACT
DRAWN R.B. [illegible] DATE 5 JUN 64
CHECKED [illegible] 26 JUN 64
APPROVAL
APPROVAL Eldon C. Hall
NASA APPROVAL [illegible] 4/0/6
MIT APPROVAL [illegible] 5/20/64

MANNED SPACECRAFT CENTER
HOUSTON, TEXAS

FLOW DIAGRAM & SCHEMATIC
INTERFACE MODULE
A19 OR A39

CODE IDENT NO. —
SIZE E
NASA DRAWING NO. 1005701
SCALE — WT — SHEET 1 OF

NOTICE — WHEN GOVERNMENT DRAWINGS, SPECIFICATIONS, OR OTHER DATA ARE USED FOR ANY PURPOSE OTHER THAN IN CONNECTION WITH A DEFINITELY RELATED GOVERNMENT PROCUREMENT OPERATION, THE UNITED STATES GOVERNMENT THEREBY INCURS NO RESPONSIBILITY NOR ANY OBLIGATION WHATSOEVER AND THE FACT THAT THE GOVERNMENT MAY HAVE FORMULATED, FURNISHED, OR IN ANY WAY SUPPLIED THE SAID DRAWINGS, SPECIFICATIONS OR OTHER DATA IS NOT TO BE REGARDED BY IMPLICATION OR OTHERWISE AS IN ANY MANNER LICENSING THE HOLDER OR ANY OTHER PERSON OR CORPORATION, OR CONVEYING ANY RIGHTS OR PERMISSION TO MANUFACTURE, USE, OR SELL ANY PATENTED INVENTION THAT MAY IN ANY WAY BE RELATED THERETO

SYM	REVISIONS 10614 DESCRIPTION	DATE	APPROVAL

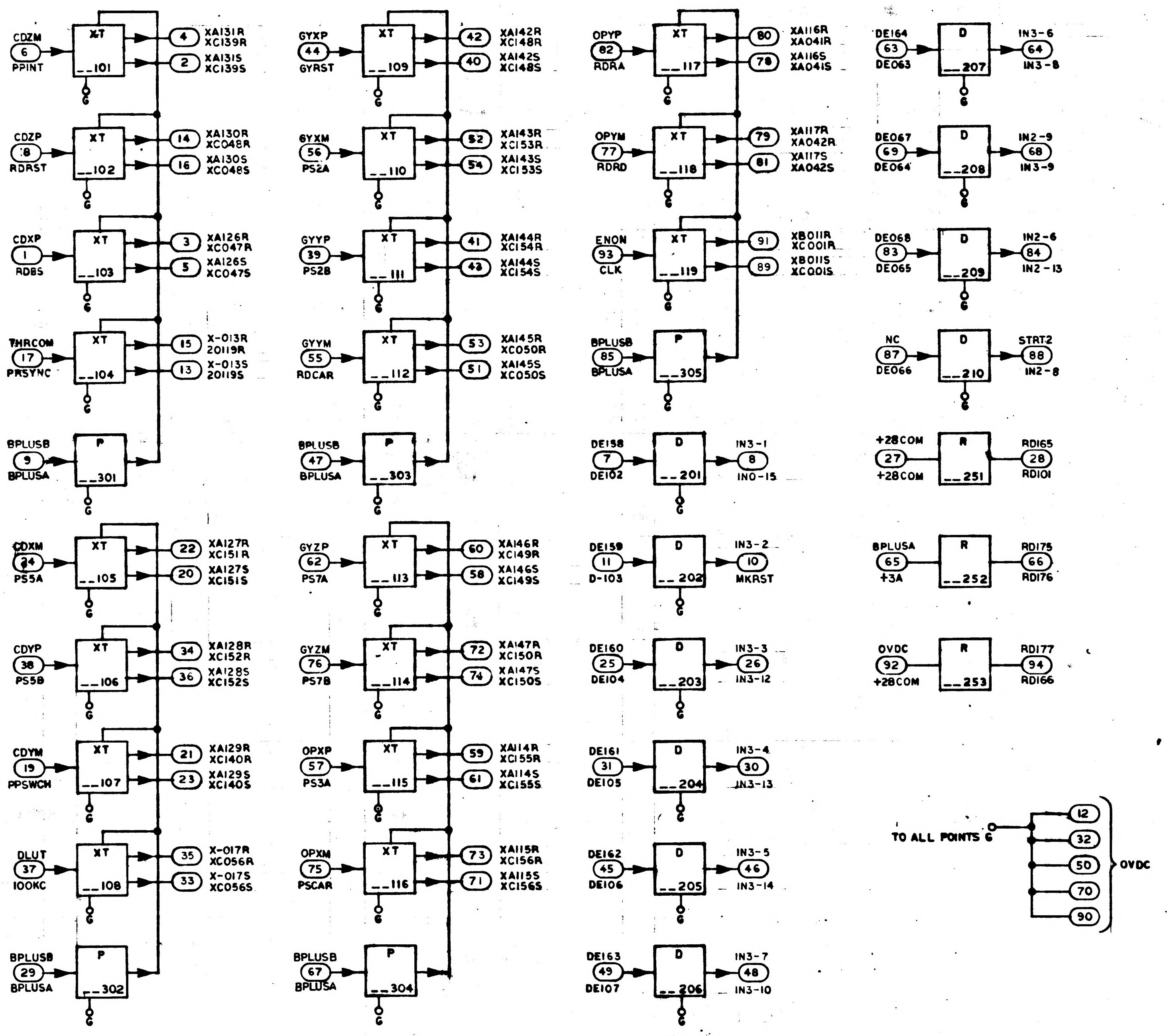
CDZM 6 PPINT XT __101 G 4 XA131R XC139R 2 XA131S XC139S
CDZP 8 RDRST XT __102 14 XA130R XC048R 16 XA130S XC048S
CDXP 1 RDBS XT __103 3 XA126R XC047R 5 XA126S XC047S
THRCOM 17 PRSYNC XT __104 15 X-013R 20119R 13 X-013S 20119S
BPLUSB 9 BPLUSA P __301
CDXM 34 PS5A XT __105 22 XA127R XC151R 20 XA127S XC151S
CDYP 38 PS5B XT __106 34 XA128R XC152R 36 XA128S XC152S
CDYM 19 PPSWCH XT __107 21 XA129R XC140R 23 XA129S XC140S
DLUT 37 100KC XT __108 35 X-017R XC056R 33 X-017S XC056S
BPLUSB 29 BPLUSA P __302
GYXP 44 GYRST XT __109 42 XA142R XC148R 40 XA142S XC148S
GYXM 56 PS2A XT __110 52 XA143R XC153R 54 XA143S XC153S
GYYP 39 PS2B XT __111 41 XA144R XC154R 43 XA144S XC154S
GYYM 55 RDCAR XT __112 53 XA145R XC050R 51 XA145S XC050S
BPLUSB 47 BPLUSA P __303
GYZP 62 PS7A XT __113 60 XA146R XC149R 58 XA146S XC149S
GYZM 76 PS7B XT __114 72 XA147R XC150R 74 XA147S XC150S
OPXP 57 PS3A XT __115 59 XA114R XC155R 61 XA114S XC155S
OPXM 75 PSCAR XT __116 73 XA115R XC156R 71 XA115S XC156S
BPLUSB 67 BPLUSA P __304
OPYP 82 RDRA XT __117 80 XA116R XA041R 78 XA116S XA041S
OPYM 77 RDRD XT __118 79 XA117R XA042R 81 XA117S XA042S
ENON 93 CLK XT __119 91 XB011R XC001R 89 XB011S XC001S
BPLUSB 85 BPLUSA P __305
DE158 7 DE102 D __201 8 IN3-1 IN0-15
DE159 11 D-103 D __202 10 IN3-2 MKRST
DE160 25 DE104 D __203 26 IN3-3 IN3-12
DE161 31 DE105 D __204 30 IN3-4 IN3-13
DE162 45 DE106 D __205 46 IN3-5 IN3-14
DE163 49 DE107 D __206 48 IN3-7 IN3-10
DE164 63 DE063 D __207 64 IN3-6 IN3-8
DE067 69 DE064 D __208 68 IN2-9 IN3-9
DE068 83 DE065 D __209 84 IN2-6 IN2-13
NC 87 DE066 D __210 88 STRT2 IN2-8
+28COM 27 +28COM R __251 28 RD165 RD101
BPLUSA 65 +3A R __252 66 RD175 RD176
OVDC 92 +28COM R __253 94 RD177 RD166
TO ALL POINTS G 12 32 50 70 90 OVDC

SCHEMATIC

SYMBOLS

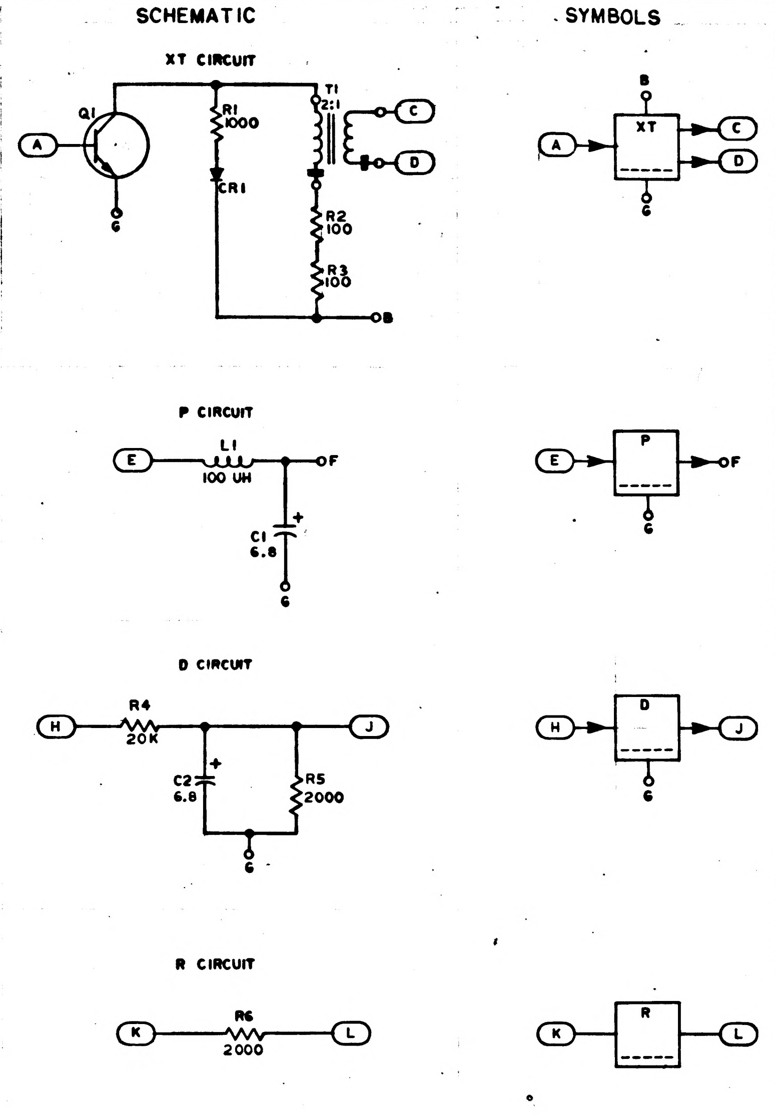
XT CIRCUIT
A Q1 G R1 1000 CR1 T1 2:1 C D R2 100 R3 100 B
XT A B C D G
P CIRCUIT
E L1 100 UH F C1 6.8 + G
P E F G
D CIRCUIT
H R4 20K J C2 6.8 + R5 2000 G
D H J G
R CIRCUIT
K R6 2000 L
R K L

REF DES	PART NO.	DESCRIPTION	VALUE	TOL	RATING
R 1	1006750 — 32	RESISTOR	1000	± 2%	1/4 W
R 2	— 8		100		
R 3	— 8		100		
R 4	—63		20K		
R 5	—39		2000		
R 6	—39		2000		
C 1	1006755-79	CAPACITOR	6.8	± 10%	35VDC
C 2	1006755-2	CAPACITOR	6.8	± 10%	6 VDC
CR1	1006751	DIODE			
L1	1010406-6	COIL	100 UH	± 10%	
Q1	1006752	TRANSISTOR			
T1	1006762-2	TRANSFORMER			

REF DWG: INTERFACE MODULE ASSY A20 OR A40 DWG NO. 1003709

NOTES:
1. INTERPRET DRAWING IN ACCORDANCE WITH STANDARDS PRESCRIBED BY MIL-D-70327
2. CIRCUIT NUMBERS FOR COMPUTER POSITION A20 ARE PREFIXED BY 72
3. CIRCUIT NUMBERS FOR COMPUTER POSITION A40 ARE PREFIXED BY 74
4. UPPER SIGNAL NAME USED IN COMPUTER POSITION A20 AND WILL HAVE B POWER
5. LOWER SIGNAL NAME USED IN COMPUTER POSITION A40 AND WILL HAVE A POWER
6. UNLESS OTHERWISE SPECIFIED:
   A. RESISTOR VALUES ARE EXPRESSED IN OHMS
   B. CAPACITOR VALUES ARE EXPRESSED IN MICROFARADS

MASTER

QTY REQD	PART OR IDENTIFYING NO.	NOMENCLATURE OR DESCRIPTION	FIND NO.

LIST OF MATERIALS

NEXT ASSY	USED ON
APPLICATION	

UNLESS OTHERWISE SPECIFIED
DIMENSIONS ARE IN INCHES
TOLERANCES ON
FRACTIONS ± — DECIMALS ± — ANGLES ± —
DO NOT SCALE THIS DRAWING
MATERIAL —
HEAT TREATMENT —
FINAL FINISH —

MIT
INSTRUMENTATION LAB
CAMBRIDGE, MASS
DWG NO. CONTRACT
DRAWN L. De Salvo DATE 5 Jun 64
CHECKED E. Sundstrom 23 Jun 64
APPROVAL D. 3 Bowels 29 June 64
APPROVAL Eldon C. Hall 29 June 64
NASA APPROVAL 4/29/64
MIT APPROVAL 4/29/64

MANNED SPACECRAFT CENTER
HOUSTON, TEXAS

FLOW DIAGRAM & SCHEMATIC INTERFACE MODULE A20 OR A40

CODE IDENT NO. — SIZE E NASA DRAWING NO. 1005702
SCALE — WT — SHEET 1 OF 1

NOTICE — WHEN GOVERNMENT DRAWINGS, SPECIFICATIONS, OR OTHER DATA ARE USED FOR ANY PURPOSE OTHER THAN IN CONNECTION WITH A DEFINITELY RELATED GOVERNMENT PROCUREMENT OPERATION, THE UNITED STATES GOVERNMENT THEREBY INCURS NO RESPONSIBILITY NOR ANY OBLIGATION WHATSOEVER; AND THE FACT THAT THE GOVERNMENT MAY HAVE FORMULATED, FURNISHED, OR IN ANY WAY SUPPLIED THE SAID DRAWINGS, SPECIFICATIONS OR OTHER DATA IS NOT TO BE REGARDED BY IMPLICATION OR OTHERWISE AS IN ANY MANNER LICENSING THE HOLDER OR ANY OTHER PERSON OR CORPORATION, OR CONVEYING ANY RIGHTS OR PERMISSION TO MANUFACTURE, USE, OR SELL ANY PATENTED INVENTION THAT MAY IN ANY WAY BE RELATED THERETO.

REVISIONS			
SYM	DESCRIPTION	DATE	APPROVAL
A	REVISED PER TDRR /2301		

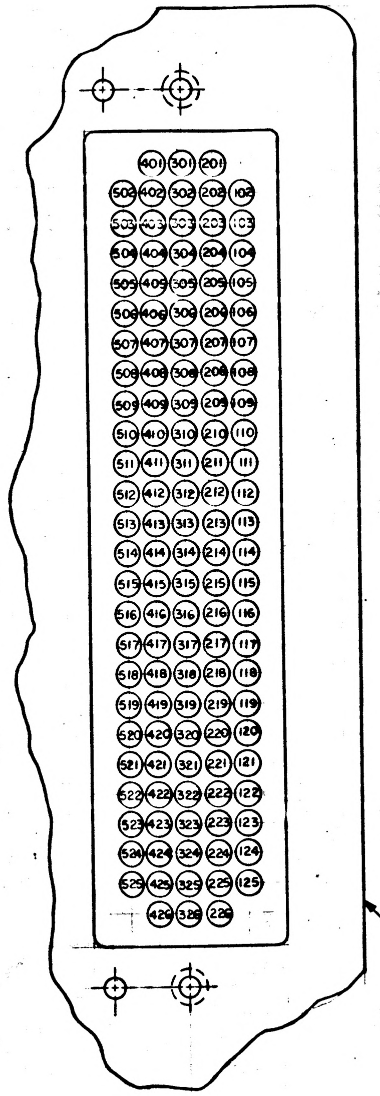
401 501 201
502 402 302 202 102
503 403 303 203 103
504 404 304 204 104
505 405 305 205 105
506 406 306 206 106
507 407 307 207 107
508 408 308 208 108
509 409 309 209 109
510 410 310 210 110
511 411 311 211 111
512 412 312 212 112
513 413 313 213 113
514 414 314 214 114
515 415 315 215 115
516 416 316 216 116
517 417 317 217 117
518 418 318 218 118
519 419 319 219 119
520 420 320 220 120
521 421 321 221 121
522 422 322 222 122
523 423 323 223 123
524 424 324 224 124
525 425 325 225 125
426 326 226

VIEW FROM MODULE SIDE OF END CONNECTOR

502	MWQG
503	MWSG
504	MWXG
505	MWYG
506	MWZG
507	M25CPS
508	CNTRL1
509	CNTRL2
510	MTHI
511	MTLO
512	ALGA
513	STRT 1
514	STRT 2
515	
516	
517	
518	
519	
520	
521	
522	
523	
524	BPLUSA
525	+3A

401	MT12
402	MWAG
403	MWALPG
404	MWBG
405	MWBKG
406	MWG4
407	MWG5
408	MWG6
409	MWLPG
410	MWL01
411	MWL02
412	MWL03
413	MWL04
414	MWL05
415	MWL06
416	MWL07
417	MWL08
418	MWL09
419	MWL10
420	MWL11
421	MWL12
422	MWL13
423	MWL14
424	MWL15
425	MWL16
426	0VDC

301	MSHANC
302	MSHINC
303	MSQ13
304	MSQ14
305	MSQ15
306	MSQ16
307	MSTP
308	MSTPIT/
309	MSTRT
310	MST1
311	MST2
312	MTCAL-NU
313	MTCSA/
314	MTCSAI
315	MT01
316	MT02
317	MT03-NU
318	MT04-NU
319	MT05-NU
320	MT06
321	MT07
322	MT08
323	MT09-NU
324	MT10
325	MT11
326	0VDC

201	MD2
202	MGOJAM
203	MIIP
204	MINHL
205	MINKL
206	MLINC
207	MLOAD
208	MMINC
209	MNHNC
210	MNHRPT
211	MNHSBF-NU
212	MNISQ
213	MOINC
214	MONPAR/-NU
215	MPAL/
216	MPARBS
217	MPGT
218	MPINC
219	MQ1
220	MQ2/
221	MREAD
222	MRGG
223	MRPTAL-NU
224	MRPTR
225	MSBSTP
226	0VDC

102	NOT AVAILABLE
103	NOT AVAILABLE
104	MBAL/-NU
105	MBR1
106	MBR2
107	MB2
108	MCTRAL-NU
109	MCTROR
110	MDT01
111	MDT02
112	MDT03
113	MDT04
114	MDT05
115	MDT06
116	MDT07
117	MDT08
118	MDT09
119	MDT10
120	MDT11
121	MDT12
122	MDT13
123	MDT14
124	MDT15
125	MDT16

NOTES:
1. INTERPRET DRAWING IN ACCORDANCE WITH STANDARDS PRESCRIBED BY MIL-D-70327
2. NU NOT USED BY CTS

MASTER

QTY REQD	PART OR IDENTIFYING NO.	NOMENCLATURE OR DESCRIPTION	FIND NO.
LIST OF MATERIALS			

NEXT ASSY	USED ON
APPLICATION	

UNLESS OTHERWISE SPECIFIED
DIMENSIONS ARE IN INCHES
TOLERANCES ON
FRACTIONS ± DECIMALS ± ANGLES ±
DO NOT SCALE THIS DRAWING
MATERIAL
HEAT TREATMENT
FINAL FINISH

MIT
INSTRUMENTATION LAB
CAMBRIDGE, MASS.
DWG. NO. CONTRACT
DRAWN J. Goodge DATE 4 Aug 64
CHECKED 10AUG64
APPROVAL Donald 17 Aug 64
APPROVAL Eldon C Hall 17 Aug 64
NASA APPROVAL
MIT APPROVAL

MANNED SPACECRAFT CENTER
HOUSTON, TEXAS

SIGNAL PIN ASSIGNMENT
TEST CONNECTOR "A 50"

CODE IDENT NO. | SIZE D | NASA DRAWING NO. 1005703
SCALE NONE | WT | SHEET OF 1

INCHES
0 2
PHOTOGRAPHIC SCALE ONLY

8 7 6 5 4 3 2 1

REVISIONS 11776			
SYM	DESCRIPTION	DATE	APPROVAL

NOTICE — WHEN GOVERNMENT DRAWINGS, SPECIFICATIONS, OR OTHER DATA ARE USED FOR ANY PURPOSE OTHER THAN IN CONNECTION WITH A DEFINITELY RELATED GOVERNMENT PROCUREMENT OPERATION, THE UNITED STATES GOVERNMENT THEREBY INCURS NO RESPONSIBILITY NOR ANY OBLIGATION WHATSOEVER; AND THE FACT THAT THE GOVERNMENT MAY HAVE FORMULATED, FURNISHED, OR IN ANY WAY SUPPLIED THE SAID DRAWINGS, SPECIFICATIONS OR OTHER DATA IS NOT TO BE REGARDED BY IMPLICATION OR OTHERWISE AS IN ANY MANNER LICENSING THE HOLDER OR ANY OTHER PERSON OR CORPORATION, OR CONVEYING ANY RIGHTS OR PERMISSION TO MANUFACTURE, USE, OR SELL ANY PATENTED INVENTION THAT MAY IN ANY WAY BE RELATED THERETO.

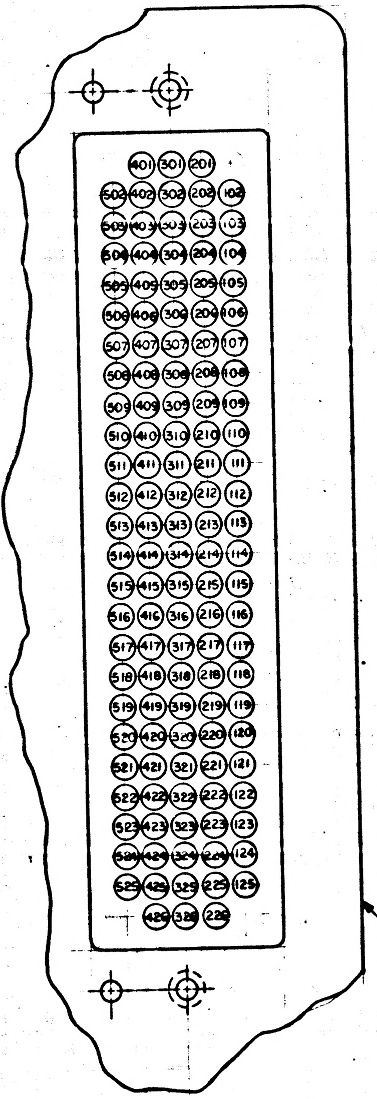
401 301 201
502 402 302 202 102
503 403 303 203 103
504 404 304 204 104
505 405 305 205 105
506 406 306 206 106
507 407 307 207 107
508 408 308 208 108
509 409 309 209 109
510 410 310 210 110
511 411 311 211 111
512 412 312 212 112
513 413 313 213 113
514 414 314 214 114
515 415 315 215 115
516 416 316 216 116
517 417 317 217 117
518 418 318 218 118
519 419 319 219 119
520 420 320 220 120
521 421 321 221 121
522 422 322 222 122
523 423 323 223 123
524 424 324 224 124
525 425 325 225 125
426 326 226

VIEW FROM MODULE SIDE OF END CONNECTOR

502	MWQG
503	MWSG
504	MWXG
505	MWYG
506	MWZG
507	M25CPS
508	CNTRL1
509	CNTRL2
510	MTHI
511	MTLO
512	ALGA
513	
514	
515	
516	
517	
518	
519	
520	
521	
522	
523	
524	BPLUSA
525	+3A

401	MT12
402	MWAG
403	MWALPG
404	MWBG
405	MWBKG
406	MWG4
407	MWG5
408	MWG6
409	MWLPG
410	MWL01
411	MWL02
412	MWL03
413	MWL04
414	MWL05
415	MWL06
416	MWL07
417	MWL08
418	MWL09
419	MWL10
420	MWL11
421	MWL12
422	MWL13
423	MWL14
424	MWL15
425	MWL16
426	OVDC

301	MSHANC
302	MSHINC
303	MSQ13
304	MSQ14
305	MSQ15
306	MSQ16
307	MSTP
308	MSTPIT/
309	MSTRT
310	MST1
311	MST2
312	MTCAL-NU
313	MTCSA/
314	MTCSA1
315	MT01
316	MT02
317	MT03-NU
318	MT04-NU
319	MT05-NU
320	MT06
321	MT07
322	MT08
323	MT09-NU
324	MT10
325	MT11
326	OVDC

201	MD2
202	MGOJAM
203	MIIP
204	MINHL
205	MINKL
206	MLINC
207	MLOAD
208	MMINC
209	MNHNC
210	MNHRPT
211	MNHSBF-NU
212	MNISQ
213	MOINC
214	MONPAR/-NU
215	MPAL/
216	MPARBS
217	MPGT
218	MPINC
219	MQ1
220	MQ2/
221	MREAD
222	MRGG
223	MRPTAL-NU
224	MRPTR
225	MSBSTP
226	OVDC

102	NOT AVAILABLE
103	NOT AVAILABLE
104	MBAL/-NU
105	MBR1
106	MBR2
107	MB2
108	MCTRAL-NU
109	MCTROR
110	MDT01
111	MDT02
112	MDT03
113	MDT04
114	MDT05
115	MDT06
116	MDT07
117	MDT08
118	MDT09
119	MDT10
120	MDT11
121	MDT12
122	MDT13
123	MDT14
124	MDT15
125	MDT16

NOTES:
1. INTERPRET DRAWING IN ACCORDANCE WITH STANDARDS PRESCRIBED BY MIL-D-70327
2. NU NOT USED BY CTS

MASTER

QTY REQD	PART OR IDENTIFYING NO.	NOMENCLATURE OR DESCRIPTION	FIND NO.
LIST OF MATERIALS			

NEXT ASSY	USED ON
APPLICATION	

UNLESS OTHERWISE SPECIFIED DIMENSIONS ARE IN INCHES
TOLERANCES ON
FRACTIONS ± DECIMALS ± ANGLES ±
DO NOT SCALE THIS DRAWING
MATERIAL
HEAT TREATMENT
FINAL FINISH

MIT INSTRUMENTATION LAB
CAMBRIDGE, MASS.
DWG. NO. CONTRACT
DRAWN J. Conley DATE 4 Aug 64
CHECKED R. [illegible] 10 AUG 64
APPROVAL Donald [illegible] 17 Aug 64
APPROVAL Eldon C. Hall 12 Aug 64
NASA APPROVAL [illegible]
MIT APPROVAL [illegible]

MANNED SPACECRAFT CENTER
HOUSTON, TEXAS

SIGNAL PIN ASSIGNMENT
TEST CONNECTOR "A 50"

CODE IDENT NO. ——
SIZE D
NASA DRAWING NO. 1005703
SCALE NONE
WT
SHEET 1 OF 1

INCHES
0 1 2

1005703

REVISIONS			
SYM	DESCRIPTION	DATE	APPROVAL
A	REVISED PER TDRR 18784		

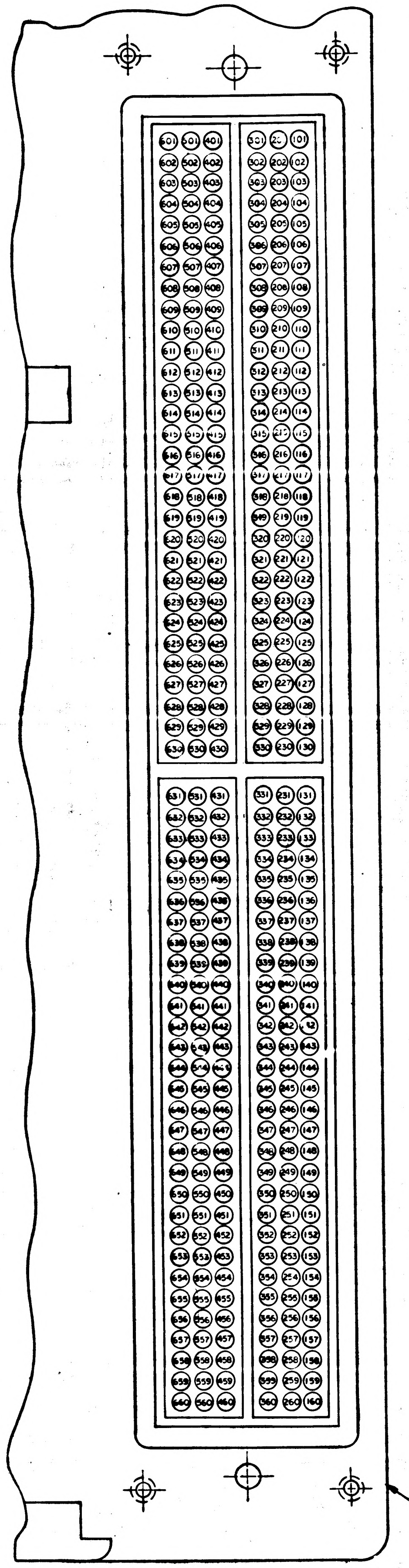

VIEW FROM MODULE SIDE OF END CONNECTOR

601		501		401	WD169	301	WD169	201	WD169	101	WD169	CABLE GROUP I
602		502	WD240	402	WD167	302	WD167	202	WD167	102	WD167	
603	WD241	503	WD243	403	WD168	303	WD168	203	WD168	103	WD168	
604	WD251	504	WD239	404	WD170	304	WD170	204	WD170	104	WD170	
605	KE201	505	KE202	405	KE203	305	KE204	205	KE205	105	K-207	CABLE GROUP III
606		506		406		306		206		106		
607	K-206	507	KE246	407	KE210	307	K-208	207	WD248	107	K-209	
608		508		408		308		208	WD249	108		
609	WD250 NOTE 2	509		409		309		209	WD181 NOTE 3	109		
610	W-211	510	TC212	410	WD213	310	TE214	210	TE215	110	W-247	
611	TE216	511	TE217	411	TE218	311	TE219	211	TE220	111	TE221	CABLE GROUP II
612	TE222	512	TE223	412	TE224	312	TE225	212	TE226	112	TE227	
613	TE228	513	TE229	413	TE230	313	TE231	213	TE232	113	T-233	
614	T-234	514	T-235	414	TE236	314	T-237	214	T-238	114	TC244	
615	[illegible]	515		415	[illegible] NOTE 4	315	[illegible] NOTE 5	215	[illegible] NOTE 2	115		
616	Y-014S	516	Y-015S	416	YG118S	316	YG119S	216	YG120S	116	YG121S	
617	Y-014R	517	Y-015R	417	YG118R	317	YG119R	217	YG120R	117	YG121R	
618	Y-016S	518	YE035S NC NOTE 6	418	YG122S	318	YG123S	218	YG132S	118	YG133S	CABLE GROUP V
619	Y-016R	519	YE035R NC NOTE 6	419	YG122R	319	YG123R	219	YG132R	119	YG133R	
620	YG024S	520	YG025S	420	YG134S	320	YG135S	220	YG136S	120	YG137S	
621	YG024R	521	YG025R	421	YG134R	321	YG135R	221	YG136R	121	YG137R	
622	YG031S NC NOTE 6	522	YG032S NC NOTE 6	422	YG108S	322	YG109S	222	YE183S	122	YE124S	
623	YG031R NC NOTE 6	523	YG032R NC NOTE 6	423	YG108R	323	YG109R	223	YE183R	123	YE124R	
624	YE092S NC NOTE 6	524	YE112S NC NOTE 6	424	YG110S	324	YG111S	224	YE138S	124	~~YE141S~~	
625	YE092R NC NOTE 6	525	YE112R NC NOTE 6	425	YG110R	325	YG111R	225	YE138R	125	YE141R	
626	RD086	526	RD087	426	RD088 NC NOTE 6	326		226		126		
627	RD089 NC NOTE 6	527	RD090	427	RD091 NC NOTE 6	327	RD175	227	RD176	127	RD177	
628	DE004	528	DE005	428	DE007	328	RD101	228	RD166 NC NOTE 6	128	RD165	
629	DE058	529	DE060	429	DE063 NC NOTE 6	329	DE102	229	DE105	129	DE158	
630	DE064 NC NOTE 6	530	DE065	430	DE066	330	D-103	230	DE106	130	DE159	CABLE GROUP IV
631	DE067	531	DE068	431	DE040	331	DE104	231	DE107	131	DE160	
632		532		432		332	DE161	232	DE162	132	DE163	
633		533		433	WD180	333	WD178 NOTE 2	233		133	DE164	
634	XB011S	534	X-017S	434	XA114S	334	XA115S	234	XA126S	134	XA127S	
635	XB011R	535	X-017R	435	XA114R	335	XA115R	235	XA126R	135	XA127R	
636	XA041S NC NOTE 6	536	XA042S NC NOTE 6	436	XA116S	336	XA117S	236	XA128S	136	XA129S	
637	XA041R NC NOTE 6	537	XA042R NC NOTE 6	437	XA116R	337	XA117R	237	XA128R	137	XA129R	
638	XA047S NC NOTE 6	538	XC048S NC NOTE 6	438	XA142S	338	XA143S	238	XA130S	138	XA131S	
639	XA047R NC NOTE 6	539	XC048R NC NOTE 6	439	XA142R	339	XA143R	239	XA130R	139	XA131R	CABLE GROUP VI
640	XC050S NC NOTE 6	540	XC056S	440	XA144S	340	XA145S	240	XA146S	140	XA147S	
641	XC050R NC NOTE 6	541	XC056R	441	XA144R	341	XA145R	241	XA146R	141	XA147R	
642	XB013S NC NOTE 6	542	SF026C	442	XC149S	342	XC150S	242	XC151S	142	XC152S	
643	XB013R NC NOTE 6	543	SF026S	443	XC149R	343	XC150R	243	XC151R	143	XC152R	
644	XC001S	544		444	XC153S	344	XC154S	244	XC155S	144	XC156S	
645	XC001R	545		445	XC153R	345	XC154R	245	XC155R	145	XC156R	
646		546		446	XA148S	346	XC139S	246	XC140S	146	SF157C	
647		547		447	XA148R	347	XC139R	247	XC140R	147	SF157S	
648		548		448		348		248		148		
649		549		449		349		249		149	RD199S	
650		550		450		350		250		150	RD199R	
651		551		451		351		251		151		
652		552		452		352		252		152		
653		553		453		353		253		153		
654		554		454		354		254		154		
655		555		455		355		255		155		
656		556		456		356		256		156		
657		557		457		357		257		157		
658	NOT AVAILABLE	558	NOT AVAILABLE	458	NOT AVAILABLE	358	NOT AVAILABLE	258		158		
659	NOT AVAILABLE	559	NOT AVAILABLE	459	NOT AVAILABLE	359	NOT AVAILABLE	259		159		
660		560		460		360		260		160		

NOTES

1. INTERPRET DRAWING IN ACCORDANCE WITH STANDARDS PRESCRIBED BY MIL-D-70327.
2. THE SHIELDS OF CABLE GROUP III (PIN 609), OF ALL G/N Y CIRCUITS (PIN 215), OF G/N D INPUTS (PIN 333), AND PIN 433 ARE CONNECTED TO 0VDC.
3. THE RETURNS OF CABLE GROUP III WILL BE TIED TO PIN 209.
4. THE RETURNS OF CABLE GROUP II GOING TO MAIN DSKY WILL BE TIED TO PIN 415.
5. THE RETURNS OF CABLE GROUP II GOING TO NAV DSKY WILL BE TIED TO PIN 315.
6. NC SIGNALS ARE "REFERENCE ONLY" AND ARE NOT TO BE TESTED.

MASTER

QTY REQD	PART OR IDENTIFYING NO.	NOMENCLATURE OR DESCRIPTION	FIND NO.

LIST OF MATERIALS

NEXT ASSY	USED ON
APPLICATION	

UNLESS OTHERWISE SPECIFIED
DIMENSIONS ARE IN INCHES
TOLERANCES ON
FRACTIONS ± DECIMALS ± ANGLES ±
DO NOT SCALE THIS DRAWING
MATERIAL
HEAT TREATMENT
FINAL FINISH

MIT
INSTRUMENTATION LAB
CAMBRIDGE, MASS
DWG. NO. CONTRACT
DRAWN DATE 7AUG64
CHECKED 7AUG64
APPROVAL 7 Aug 64
APPROVAL 7 Aug 64
NASA APPROVAL
MIT APPROVAL

MANNED SPACECRAFT CENTER
HOUSTON, TEXAS

SIGNAL PIN ASSIGNMENT
INTERFACE CONNECTOR "J"

CODE IDENT NO. —
SIZE E
NASA DRAWING NO. 1005704
SCALE NONE
WT —
SHEET 1 OF 1

NOTICE - WHEN GOVERNMENT DRAWINGS, SPECIFICATIONS, OR OTHER DATA ARE USED FOR ANY PURPOSE OTHER THAN IN CONNECTION WITH A DEFINITELY RELATED GOVERNMENT PROCUREMENT OPERATION, THE UNITED STATES GOVERNMENT THEREBY INCURS NO RESPONSIBILITY NOR ANY OBLIGATION WHATSOEVER; AND THE FACT THAT THE GOVERNMENT MAY HAVE FORMULATED, FURNISHED, OR IN ANY WAY SUPPLIED THE SAID DRAWINGS, SPECIFICATIONS, OR OTHER DATA IS NOT TO BE REGARDED BY IMPLICATION OR OTHERWISE AS IN ANY MANNER LICENSING THE HOLDER OR ANY OTHER PERSON OR CORPORATION, OR CONVEYING ANY RIGHTS OR PERMISSION TO MANUFACTURE, USE, OR SELL ANY PATENTED INVENTION THAT MAY IN ANY WAY BE RELATED THERETO.

REVISIONS 11776			
SYM	DESCRIPTION	DATE	APPROVAL
A	REVISED PER TDRR [illegible]	[illegible]	
B	REVISED PER TDRR 1362[illegible]	12/24/64	

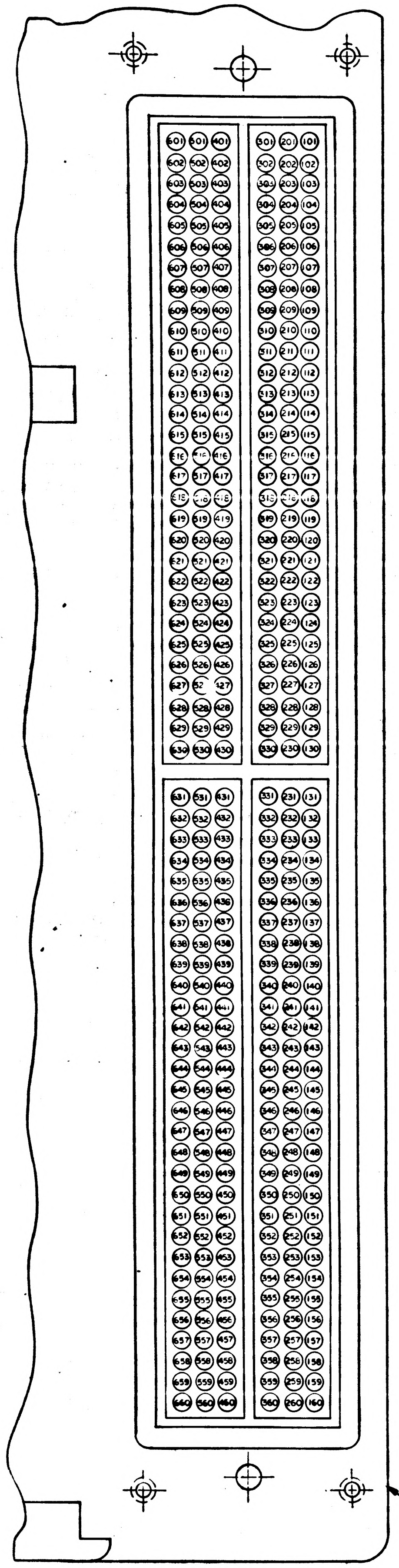

VIEW FROM MODULE SIDE OF END CONNECTOR

601		501		401		301		201		101		CABLE GROUP I
602		502	WD240	402		302		202		102		
603	WD241	503	WD243	403		303		203		103		
604	WD251	504	WD239	404		304		204		104		
605	KE201	505	KE202	405	KE203	305	KE204	205	KE205	105	K-207	
606		506		406		306		206		106		CABLE GROUP III
607	K-206	507	KE246	407	KE210	307	K-208	207	WD248	107	K-209	
608		508		408		308		208	WD249	108		
609	WD250 NOTE 2	509		409		309		209	WD181 NOTE 3	109		
610	W-211	510	TC212	410	WD213	310	TE214	210	TE215	110	W-247	
611	TE216	511	TE217	411	TE218	311	TE219	211	TE220	111	TE221	CABLE GROUP II
612	TE222	512	TE223	412	TE224	312	TE225	212	TE226	112	TE227	
613	TE228	513	TE229	413	TE230	313	TE231	213	TE232	113	T-233	
614	T-234	514	T-235	414	TE236	314	T-237	214	T-238	114	TC244	
615	TC242	515		415	WD434 NOTE 4	315	WD330 NOTE 5	215	WD179 NOTE 2	115		
616	Y-014S	516	Y-015S	416	YG118S	316	YG119S	216	YG120S	116	YG121S	
617	Y-014R	517	Y-015R	417	YG118R	317	YG119R	217	YG120R	117	YG121R	
618	Y-016S	518	YE035S NC NOTE 6	418	YG122S	318	YG123S	218	YG132S	118	YG133S	CABLE GROUP V
619	Y-016R	519	YE035R NC NOTE 6	419	YG122R	319	YG123R	219	YG132R	119	YG133R	
620	YG024S	520	YG025S	420	YG134S	320	YG135S	220	YG136S	120	YG137S	
621	YG024R	521	YG025R	421	YG134R	321	YG135R	221	YG136R	121	YG137R	
622	YG031S NC NOTE 6	522	YG032S NC NOTE 6	422	YG108S	322	YG109S	222	YE183S	122	YE124S	
623	YG031R NC NOTE 6	523	YG032R NC NOTE 6	423	YG108R	323	YG109R	223	YE183R	123	YE124R	
624	YE092S NC NOTE 6	524	YE112S NC NOTE 6	424	YG110S	324	YG111S	224	YE138S	124	YE141S	
625	YE092R NC NOTE 6	525	YE112R NC NOTE 6	425	YG110R	325	YG111R	225	YE138R	125	YE141R	
626	RD086	526	RD087	426	RD088	326		226		126		
627	RD089	527	RD090	427	RD091	327	RD175	227	RD176	127	RD177	
628	DE004	528	DE005	428	DE007	328	RD101	228	RD166	128	RD165	
629	DE058	529	DE060	429	DE063 NC NOTE 6	329	DE102	229	DE105	129	DE158	
630	DE064 NC NOTE 6	530	DE065	430	DE066	330	D-103	230	DE106	130	DE159	CABLE GROUP IV
631	DE067	531	DE068	431	DE040	331	DE104	231	DE107	131	DE160	
632		532		432		332	DE161	232	DE162	132	DE163	
633		533		433	WD180 NOTE 2	333	WD178 NOTE 2	233		133	DE164	
634	XB011S	534	X-017S	434	XA114S	334	XA115S	234	XA126S	134	XA127S	
635	XB011R	535	X-017R	435	XA114R	335	XA115R	235	XA126R	135	XA127R	
636	XA041S NC NOTE 6	536	XA042S NC NOTE 6	436	XA116S	336	XA117S	236	XA128S	136	XA129S	
637	XA041R NC NOTE 6	537	XA042R NC NOTE 6	437	XA116R	337	XA117R	237	XA128R	137	XA129R	
638	XA047S NC NOTE 6	538	XC048S NC NOTE 6	438	XA142S	338	XA143S	238	XA130S	138	XA131S	
639	XA047R NC NOTE 6	539	XC048R NC NOTE 6	439	XA142R	339	XA143R	239	XA130R	139	XA131R	CABLE GROUP VI
640	XC050S NC NOTE 6	540	XC056S	440	XA144S	340	XA145S	240	XA146S	140	XA147S	
641	XC050R NC NOTE 6	541	XC056R	441	XA144R	341	XA145R	241	XA146R	141	XA147R	
642	XB013S NC NOTE 6	542	SF026C	442	XC149S	342	XC150S	242	XC151S	142	XC152S	
643	XB013R NC NOTE 6	543	SF026S	443	XC149R	343	XC150R	243	XC151R	143	XC152R	
644	XC001S	544		444	XC153S	344	XC154S	244	XC155S	144	XC156S	
645	XC001R	545		445	XC153R	345	XC154R	245	XC155R	145	XC156R	
646		546		446	XA148S	346	XC139S	246	XC140S	146	SF157C	
647		547		447	XA148R	347	XC139R	247	XC140R	147	SF157S	
648		548		448		348		248		148	SF157T	
649		549		449		349		249		149	RD199S	
650		550		450		350		250		150	RD199R	
651		551		451		351		251		151		
652		552		452		352		252		152		
653		553		453		353		253		153		
654		554		454		354		254		154		
655		555		455		355		255		155		
656		556		456		356		256		156		
657		557		457		357		257		157		
658		558		458		358		258	NOT AVAILABLE	158	NOT AVAILABLE	
659		559		459		359		259		159		
660		560		460		360		260		160		

NOTES

1. INTERPRET DRAWING IN ACCORDANCE WITH STANDARDS PRESCRIBED BY MIL-D-70327.
2. THE SHIELDS OF CABLE GROUP III (PIN 609), OF ALL G/N Y CIRCUITS (PIN 215), OF G/N D INPUTS (PIN 333), AND PIN 433 ARE CONNECTED TO OVDC.
3. THE RETURNS OF CABLE GROUP III WILL BE TIED TO PIN 209.
4. THE RETURNS OF CABLE GROUP II GOING TO MAIN DSKY WILL BE TIED TO PIN 415.
5. THE RETURNS OF CABLE GROUP II GOING TO NAV DSKY WILL BE TIED TO PIN 315.
6. NC SIGNALS ARE "REFERENCE ONLY" AND ARE NOT TO BE TESTED.

MASTER

QTY REQD	PART OR IDENTIFYING NO.	NOMENCLATURE OR DESCRIPTION	FIND NO.

LIST OF MATERIALS

NEXT ASSY	USED ON

APPLICATION

UNLESS OTHERWISE SPECIFIED
DIMENSIONS ARE IN INCHES
TOLERANCES ON
FRACTIONS ± DECIMALS ± ANGLES ±
DO NOT SCALE THIS DRAWING
MATERIAL
HEAT TREATMENT
FINAL FINISH

MIT
INSTRUMENTATION LAB
CAMBRIDGE, MASS
DWG NO. CONTRACT

DRAWN E. Pellerin DATE 7AUG64
CHECKED 7AUG64
APPROVAL Donald J. 7 Aug 64
APPROVAL Eldon C. Hall 7 Aug 64
NASA APPROVAL
MIT APPROVAL

MANNED SPACECRAFT CENTER
HOUSTON, TEXAS

SIGNAL PIN ASSIGNMENT
INTERFACE CONNECTOR "J"

CODE IDENT NO. —
SIZE E
NASA DRAWING NO. 1005704
SCALE NONE
WT
SHEET 1 OF 1

NOTICE – WHEN GOVERNMENT DRAWINGS, SPECIFICATIONS OR OTHER DATA ARE USED FOR ANY PURPOSE OTHER THAN IN CONNECTION WITH A DEFINITELY RELATED GOVERNMENT PROCUREMENT OPERATION, THE UNITED STATES GOVERNMENT THEREBY INCURS NO RESPONSIBILITY NOR ANY OBLIGATION WHATSOEVER, AND THE FACT THAT THE GOVERNMENT MAY HAVE FORMULATED, FURNISHED OR IN ANY WAY SUPPLIED THE SAID DRAWINGS, SPECIFICATIONS OR OTHER DATA IS NOT TO BE REGARDED BY IMPLICATION OR OTHERWISE AS IN ANY MANNER LICENSING THE HOLDER OR ANY OTHER PERSON OR CORPORATION, OR CONVEYING ANY RIGHTS OR PERMISSION TO MANUFACTURE, USE, OR SELL ANY PATENTED INVENTION THAT MAY IN ANY WAY BE RELATED THERETO

REVISIONS			
SYM	DESCRIPTION	DATE	APPROVAL

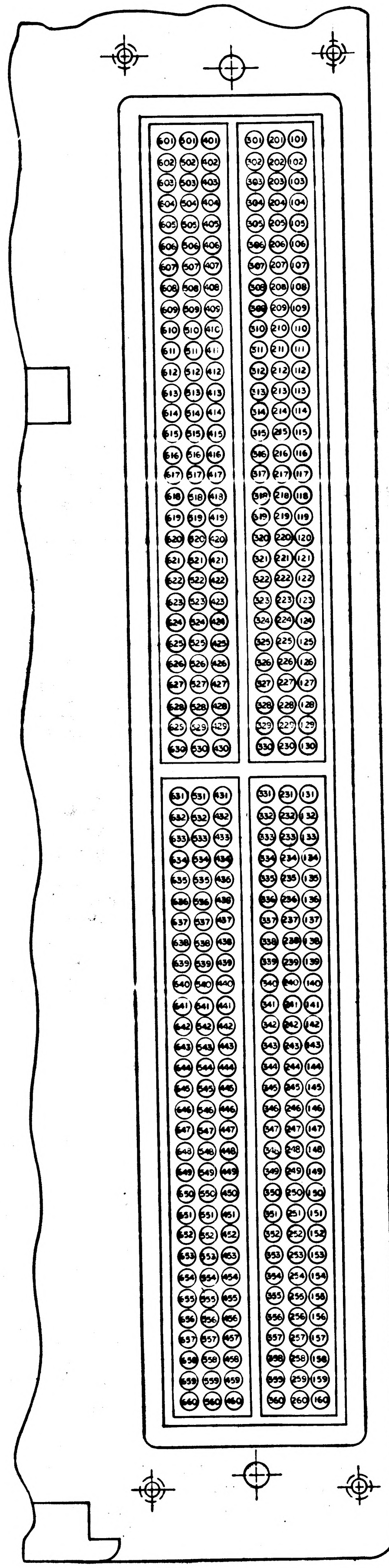

VIEW FROM MODULE SIDE OF END CONNECTOR

601		501		401	WD169	301	WD169	201	WD169	101	WD169	CABLE GROUP I
602		502	WD240	402	WD167	302	WD167	202	WD167	102	WD167	
603	WD241	503	WD243	403	WD168	303	WD168	203	WD168	103	WD168	
604	WD251	504	WD239	404	WD170	304	WD170	204	WD170	104	WD170	
605	KE201	505	KE202	405	KE203	305	KE204	205	KE205	105	K-207	CABLE GROUP III
606		506		406		306		206		106		
607	K-206	507	KE246	407	KE210	307	K-208	207	WD248	107	K-209	
608		508		408		308		208	WD249	108		
609	WD250 NOTE 2	509		409		309		209	WD181 NOTE 3	109		
610	WD211	510	TC212	410	WD213	310	TE214	210	TE215	110	WD247	
611	TE216	511	TE217	411	TE218	311	TE219	211	TE220	111	TE221	CABLE GROUP II
612	TE222	512	TE223	412	TE224	312	TE225	212	TE226	112	TE227	
613	TE228	513	TE229	413	TE230	313	TE231	213	TE232	113	T-233	
614	T-234	514	T-235	414	TE236	314	T-237	214	T-238	114	TC244	
615	TC242	515		415	WD434 NOTE 4	315	WD330 NOTE 5	215	WD179 NOTE 2	115		
616	Y-014S	516	Y-015S	416	YG118S	316	YG119S	216	YG120S	116	YG121S	
617	Y-014R	517	Y-015R	417	YG118R	317	YG119R	217	YG120R	117	YG121R	
618	Y-016S	518	YE035S NC NOTE 6	418	YG122S	318	YG123S	218	YG132S	118	YG133S	CABLE GROUP V
619	Y-016R	519	YE035R NC NOTE 6	419	YG122R	319	YG123R	219	YG132R	119	YG133R	
620	YG024S	520	YG025S	420	YG134S	320	YG135S	220	YG136S	120	YG137S	
621	YG024R	521	YG025R	421	YG134R	321	YG135R	221	YG136R	121	YG137R	
622	YG031S NC NOTE 6	522	YG032S NC NOTE 6	422	YG108S	322	YG109S	222	YE183S	122	YE124S	
623	YG031R NC NOTE 6	523	YG032R NC NOTE 6	423	YG108R	323	YG109R	223	YE183R	123	YE124R	
624	YE092S NC NOTE 6	524	YE112S NC NOTE 6	424	YG110S	324	YG111S	224	YE138S	124	YE141S	
625	YE092R NC NOTE 6	525	YE112R NC NOTE 6	425	YG110R	325	YG111R	225	YE138R	125	YE141R	
626	RD086 NC NOTE 6	526	RD087 NC NOTE 6	426	RD088 NC NOTE 6	326	RD171	226	RD172	126	RD173	
627	RD089 NC NOTE 6	527	RD090NC NOTE 6	427	RD091 NC NOTE 6	327	RD175	227	RD176	127	RD177	
628	DE004 NC NOTE 6	528	DE005 NC NOTE 6	428	DE007 NC NOTE 6	328	RD101	228	RD166 NC NOTE 6	128	RD165	
629	DE058 NC NOTE 6	529	DE060 NC NOTE 6	429	DE063 NC NOTE 6	329	DE102	229	DE105	129	DE158	
630	DE064 NC NOTE 6	530	DE065 NC NOTE 6	430	DE066 NC NOTE 6	330	D-103	230	DE106	130	DE159	CABLE GROUP IV
631	DE067 NC NOTE 6	531	DE068 NC NOTE 6	431	DE040 NC NOTE 6	331	DE104	231	DE107	131	DE160	
632		532		432		332	DE161	232	DE162	132	DE163	
633		533		433	WD180NC NOTE 2 & 6	333	WD178 NOTE 2	233		133	DE164	
634	XB011S	534	X-017S	434	XA114S	334	XA115S	234	XA126S	134	XA127S	
635	XB011R	535	X-017R	435	XA114R	335	XA115R	235	XA126R	135	XA127R	
636	XA041S NC NOTE 6	536	XA042S NC NOTE 6	436	XA116S	336	XA117S	236	XA128S	136	XA129S	
637	XA041R NC NOTE 6	537	XA042R NC NOTE 6	437	XA116R	337	XA117R	237	XA128R	137	XA129R	
638	XA047S NC NOTE 6	538	XC048S NC NOTE 6	438	XA142S	338	XA143S	238	XA130S	138	XA131S	
639	XA047R NC NOTE 6	539	XC048R NC NOTE 6	439	XA142R	339	XA143R	239	XA130R	139	XA131R	CABLE GROUP VI
640	XC050S NC NOTE 6	540	XC056S	440	XA144S	340	XA145S	240	XA146S	140	XA147S	
641	XC050R NC NOTE 6	541	XC056R	441	XA144R	341	XA145R	241	XA146R	141	XA147R	
642	XB013S NC NOTE 6	542	SF026C	442	XC149S	342	XC150S	242	XC151S	142	XC152S	
643	XB013R NC NOTE 6	543	SF026S	443	XC149R	343	XC150R	243	XC151R	143	XC152R	
644	XC001S	544		444	XC153S	344	XC154S	244	XC155S	144	XC156S	
645	XC001R	545		445	XC153R	345	XC154R	245	XC155R	145	XC156R	
646		546		446	XA148S	346	XC139S	246	XC140S	146	SF157C	
647		547		447	XA148R	347	XC139R	247	XC140R	147	SF157S	
648		548		448		348		248		148		
649		549		449		349		249		149	RD199S	
650		550		450		350		250		150	RD199R	
651		551		451		351		251		151		
652		552		452		352		252		152		
653		553		453		353		253		153		
654		554		454		354		254		154		
655		555		455		355		255		155		
656		556		456		356		256		156		
657		557		457		357		257		157		
658	NOT AVAILABLE	558	NOT AVAILABLE	458	NOT AVAILABLE	358	NOT AVAILABLE	258		158		
659	NOT AVAILABLE	559	NOT AVAILABLE	459	NOT AVAILABLE	359	NOT AVAILABLE	259		159		
660		560		460		360		260		160		

NOTES

1. INTERPRET DRAWING IN ACCORDANCE WITH STANDARDS PRESCRIBED BY MIL-D-70327.
2. THE SHIELDS OF CABLE GROUP III (PIN 609), OF ALL G/N Y CIRCUITS (PIN 215), OF G/N D INPUTS (PIN 333), AND PIN 433 ARE CONNECTED TO OVDC.
3. THE RETURNS OF CABLE GROUP III WILL BE TIED TO PIN 209.
4. THE RETURNS OF CABLE GROUP II GOING TO MAIN DSKY WILL BE TIED TO PIN 415.
5. THE RETURNS OF CABLE GROUP II GOING TO NAV DSKY WILL BE TIED TO PIN 315.
6. NC SIGNALS ARE "REFERENCE ONLY" AND ARE NOT TO BE TESTED.

MASTER

QTY REQD	PART OR IDENTIFYING NO.	NOMENCLATURE OR DESCRIPTION	FIND NO.

LIST OF MATERIALS

NEXT ASSY	USED ON
APPLICATION	

UNLESS OTHERWISE SPECIFIED
DIMENSIONS ARE IN INCHES
TOLERANCES ON
FRACTIONS ± DECIMALS ± ANGLES ±
DO NOT SCALE THIS DRAWING
MATERIAL
HEAT TREATMENT
FINAL FINISH

MIT
INSTRUMENTATION LAB
CAMBRIDGE, MASS
DWG NO. CONTRACT
DRAWN DATE
CHECKED
APPROVAL
APPROVAL
NASA APPROVAL
MIT APPROVAL

MANNED SPACECRAFT CENTER
HOUSTON, TEXAS

SIGNAL PIN ASSIGNMENT
INTERFACE CONNECTOR "J"

CODE IDENT NO. SIZE E NASA DRAWING NO. 1005704
SCALE NONE WT SHEET 1 OF 1

NOTICE — WHEN GOVERNMENT DRAWINGS, SPECIFICATIONS, OR OTHER DATA ARE USED FOR ANY PURPOSE OTHER THAN IN CONNECTION WITH A DEFINITELY RELATED GOVERNMENT PROCUREMENT OPERATION, THE UNITED STATES GOVERNMENT THEREBY INCURS NO RESPONSIBILITY NOR ANY OBLIGATION WHATSOEVER; AND THE FACT THAT THE GOVERNMENT MAY HAVE FORMULATED, FURNISHED, OR IN ANY WAY SUPPLIED THE SAID DRAWINGS, SPECIFICATIONS, OR OTHER DATA IS NOT TO BE REGARDED BY IMPLICATION OR OTHERWISE AS IN ANY MANNER LICENSING THE HOLDER OR ANY OTHER PERSON OR CORPORATION, OR CONVEYING ANY RIGHTS OR PERMISSION TO MANUFACTURE, USE, OR SELL ANY PATENTED INVENTION THAT MAY IN ANY WAY BE RELATED THERETO.

REVISIONS			
SYM	DESCRIPTION	DATE	APPROVAL

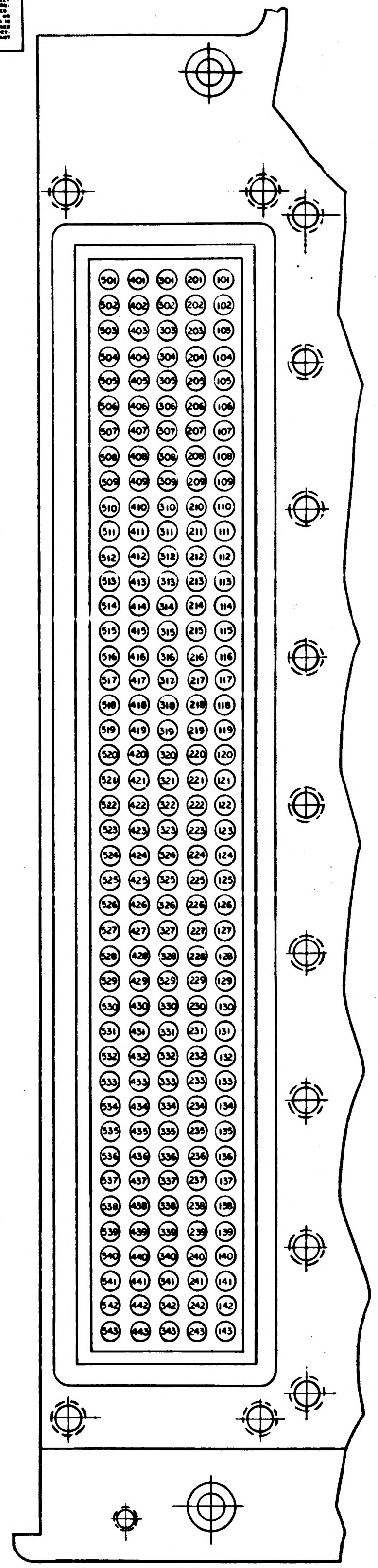

501	+28AUF	401	+28AUF	301	+28AUF	201	+28AUF	101	+28COM
502	OVDCUF	402	OVDCUF	302	OVDCUF	202	OVDCUF	102	
503	+28BUF	403	+28BUF	303	+28BUF	203	+28BUF	103	+28COM
504	OVDC	404	OVDC	304	OVDC	204	OVDC	104	OVDC
505	OVDC	405	OVDC	305	OVDC	205	OVDC	105	OVDC
506	+3B	406	+3B	306	+3B	206	+3B	106	+3B
507	+3B	407	+3B	307	+3B	207	+3B	107	+3B
508	OVDC	408	OVDC	308	OVDC	208	OVDC	108	
509	+3A	409	+3A	309	+3A	209	+3A	109	
510	BPLUSB	410	BPLUSB	310	BPLUSA	210	BPLUSA	110	
511	CLOCK	411	OVDC	311	OVDC	211	YB0E	111	YB1E
512	YB2E	412	YB3E	312	YB4E	212	OVDC	112	YB5E
513	YB6E	413	OVDC	313	YB7E	213	YT0E	113	YT1E
514	YT2E	414	YT3E	314	SA01	214	OVDC	114	SA02
515	SA03	415	OVDC	315	SA04	215	XB0E	115	XB1E
516	XB2E	416	XB3E	316	XB4E	216	OVDC	116	XB5E
517	XB6E	417	OVDC	317	XB7E	217	XT0E	117	XT1E
518	XT2E	418	XT3E	318	SA05	218	OVDC	118	SA06
519	SA07	419	OVDC	319	SA08	219	GEM01	119	GEM02
520	GEM03	420	GEM04	320	GEM13	220	OVDC	120	GEM14
521	GEM15	421	OVDC	321	GEM16	221	ZID	121	RSTKX/
522	WEX/	422	REX/	322	SA09	222	OVDC	122	SA10
523	SA11	423	OVDC	323	SA12	223	GEM05	123	GEM06
524	GEM07	424	GEM08	324	GEM09	224	OVDC	124	GEM10
525	GEM11	425	OVDC	325	GEM12	225	SETEK	125	RSTKY/
526	WEY/	426	REY/	326	SA13	226	OVDC	126	SA14
527	SA15	427	OVDC	327	SA16	227	SD00	127	SD01
528	SD02	428	SD03	328	SD04	228	OVDC	128	SD05
529	SD06	429	OVDC	329	SD07	229	SBF	129	SBE
530	IL05	430	IL05/	330	IL06	230	OVDC	130	IL06/
531	IL07	431	OVDC	331	IL07/	231	ILP	131	ILP/
532	SETC/	432	SETD/	332	RGENVX	232	OVDC	132	RSTRP/
533	IHENV	433	OVDC	333	IL01	233	IL01/	133	IL02
534	IL02/	434	IL03	334	IL03/	234	OVDC	134	IL04
535	IL04/	435	OVDC	335	SETA/	235	SETB/	135	OVDC
536	RPG1	436	RPG2	336	STRT2	236	OVDC	136	STRT1
537	RPG3	437	OVDC	337	RPG4	237	OVDC	137	Q2A
538	RPG5	438	RPG6	338	SCAS10	238	OVDC	138	SCALOK
539		439	OVDC	339	OVDC	239	MYCLMP	139	OVDC
540		440		340	RD173	240	RD172	140	RD171
541	OVDC	441	OVDC	341	MT01	241	MTHI	141	MTLO
542	20119S	442	CNTRL1	342	CNTRL2	242	SF026C	142	SF026S
543	SF157C	443	SF157S	343	OVDC	243	RD199R	143	RD199S

FOR INFORMATION ONLY
CLASS B RELEASE TDR NO. 10306

MASTER

QTY REQD	PART OR IDENTIFYING NO.	NOMENCLATURE OR DESCRIPTION	FIND NO

LIST OF MATERIALS

NEXT ASSY	USED ON
APPLICATION	

UNLESS OTHERWISE SPECIFIED
DIMENSIONS ARE IN INCHES
TOLERANCES ON
FRACTIONS ± — DECIMALS ± — ANGLES ± —
DO NOT SCALE THIS DRAWING
MATERIAL —
HEAT TREATMENT —
FINAL FINISH —

MIT
INSTRUMENTATION LAB
CAMBRIDGE, MASS
DWG. NO. CONTRACT
DRAWN W. Horgan DATE 8-16-66
CHECKED
APPROVAL
APPROVAL
NASA APPROVAL
MIT APPROVAL

MANNED SPACECRAFT CENTER
HOUSTON, TEXAS

SIGNAL PIN ASSIGNMENT
COMPUTER MODULE
B60 CONNECTOR

CODE IDENT NO.
SIZE E
NASA DRAWING NO. 1005705
SCALE NONE
WT —
SHEET 1 OF 1

NOTICE — WHEN GOVERNMENT DRAWINGS, SPECIFICATIONS, OR OTHER DATA ARE USED FOR ANY PURPOSE OTHER THAN IN CONNECTION WITH A DEFINITELY RELATED GOVERNMENT PROCUREMENT OPERATION, THE UNITED STATES GOVERNMENT THEREBY INCURS NO RESPONSIBILITY NOR ANY OBLIGATION WHATSOEVER; AND THE FACT THAT THE GOVERNMENT MAY HAVE FORMULATED, FURNISHED, OR IN ANY WAY SUPPLIED THE SAID DRAWINGS, SPECIFICATIONS OR OTHER DATA IS NOT TO BE REGARDED BY IMPLICATION OR OTHERWISE AS IN ANY MANNER LICENSING THE HOLDER OR ANY OTHER PERSON OR CORPORATION, OR CONVEYING ANY RIGHTS OR PERMISSION TO MANUFACTURE, USE, OR SELL ANY PATENTED INVENTION THAT MAY IN ANY WAY BE RELATED THERETO.

REVISIONS TDRR 18306			
SYM	DESCRIPTION	DATE	APPROVAL
A	REVISED AND UPGRADED TO CLASS A PER TDRR 12778	13 Sept 68	WK.

IN BITS

IN BIT	NAME	INTERFACE SIGNAL	
IN0-1	KEY CODE 1 (KEYRUPT)	KE201	
IN0-2	KEY CODE 2 (KEYRUPT)	KE202	
IN0-3	KEY CODE 3 (KEYRUPT)	KE203	
IN0-4	KEY CODE 4 (KEYRUPT)	KE204	
IN0-5	KEY CODE 5 (KEYRUPT)	KE205	
IN0-6	BLOCK UPLNK	SD246	
IN0-7	INHIBIT UPSYNC		
IN0-8	SPARE		
IN0-9	SPARE	YE092 NC	
IN0-10	SPARE	YE112 NC	
IN0-11	G/N ATT. CONTROL MODE	DE040	
IN0-12	G/N ΔV MODE	DE058	SEE NOTE 1
IN0-13	G/N ENTRY MODE	DE060	
IN0-14	SPARE	YE035 NC	
IN0-15	MARK (KEYRUPT)	KE102	
IN1	COUNTER (24 HR)		
IN2-1	1600PPS		
IN2-2	800PPS		
IN2-3	400PPS		
IN2-4	200PPS		
IN2-5	LIFT OFF	DE007	
IN2-6	GUID. RELEASE	DE068	
IN2-7	SATURN ULLAGE	DE004	SEE NOTE 1
IN2-8	S IV B SEPARATE	DE066	
IN2-9	SM/CM SEPARATE	DE067	
IN2-10	CDU FAIL	YE124	
IN2-11	PIPA FAIL	YE138	
IN2-12	IMU FAIL	YE141	
IN2-13	SCS ΔV MODE	DF065	SEE NOTE 1
IN2-14	G/N MONITOR MODE	DE005	
IN2-15	PARITY		
IN3-1	K1	KE158	
IN3-2	K2	KE159	
IN3-3	K3	KE160	
IN3-4	K4	KE161	
IN3-5	K12	KE162	
IN3-6	TRN SW	KE164	
IN3-7	K5	KE163	
IN3-8	SPARE	DE063 NC	SEE NOTE 1
IN3-9	SPARE	DE064 NC	
IN3-10	OPT MODE SW3	KE107	
IN3-11	STAR PRES	YE183	
IN3-12	ZERO OPT	KE104	
IN3-13	SEXTANT ON	KE105 NC	SEE NOTE 1
IN3-14	OPT MODE SW2	KE106	
IN3-15	OR OF C1-C33	KE210	

OUT BITS

OUT BIT	NAME	INTERFACE SIGNAL	
OUT0-1	RLYBIT 1	TE214	
OUT0-2	RLYBIT 2	TE215	
OUT0-3	RLYBIT 3	TE216	
OUT0-4	RLYBIT 4	TE217	
OUT0-5	RLYBIT 5	TE218	
OUT0-6	RLYBIT 6	TE219	
OUT0-7	RLYBIT 7	TE220	
OUT0-8	RLYBIT 8	TE221	
OUT0-9	RLYBIT 9	TE222	
OUT0-10	RLYBIT 10	TE223	
OUT0-11	RLYBIT 11	TE224	
OUT0-12	RLYWD 1	TE225	
OUT0-13	RLYWD 2	TE226	
OUT0-14	RLYWD 3	TE227	
OUT0-15	RLYWD 4	TE228	
OUT1-1	PROGRAM ALARM	T-229	
OUT1-2	COMP. ACTIVITY	T-230	
OUT1-3	KEY RLSE	T-236	
OUT1-4	TEL. ALARM	T-231	
OUT1-5	PRGM CHECK FALL	T-232	
OUT1-6	SPARE		
OUT1-7	RUPT TRAP RESET (RUPT 2)		
OUT1-8	SPARE		
OUT1-9	I D WORD		
OUT1-10	BLOCK ENDPULSE		
OUT1-11	SPARE		
OUT1-12	SPARE		
OUT1-13	ENGINE ON	XB011	
OUT1-14	SPARE	XB013 NC	SEE NOTE 1
OUT1-15	SPARE	XB012 NC	

OUT BIT	NAME	
OUT2-1	RADAR C	OUTCR 3
OUT2-2	RADAR B	
OUT2-3	RADAR A	
OUT2-4	THRUST	OUTCR 2
OUT2-5	OPT Y	
OUT2-6	OPT X	
OUT2-7	+	
OUT2-8	-	
OUT2-9	Z	OUTCR 1
OUT2-10	Y	
OUT2-11	X	
OUT2-12	GYRO	
OUT2-13	CDU	
OUT2-14	+	
OUT2-15	-	
OUT3	SPARE (INPUT OR OUTPUT)	
OUT4-1 OUT4-2 | | | | | | OUT4-16	16 BITS FOR DOWN LNK DATA	

NOTE:

1. NC SIGNIFIES THAT THE SIGNALS ARE NOT WIRED TO [illegible] CONNECTORS 05A5P3 AND 05A3P1

MASTER

QTY REQD	PART OR IDENTIFYING NO.	NOMENCLATURE OR DESCRIPTION	FIND NO.

LIST OF MATERIALS

NEXT ASSY	USED ON

APPLICATION

UNLESS OTHERWISE SPECIFIED
DIMENSIONS ARE IN INCHES
TOLERANCES ON
FRACTIONS ± ___ DECIMALS ± ___ ANGLES ± ___
DO NOT SCALE THIS DRAWING
MATERIAL ___
HEAT TREATMENT ___
FINAL FINISH ___

MIT
INSTRUMENTATION LAB.
CAMBRIDGE, MASS.
DWG. NO. CONTRACT
DRAWN Kasan DATE 6/26/68
CHECKED
APPROVAL E. Duggan LTR
APPROVAL Ellen C. [illegible]
NASA APPROVAL [illegible] 5/1/68
MIT APPROVAL D. Hoag [illegible]

MANNED SPACECRAFT CENTER
HOUSTON, TEXAS

INPUT-OUTPUT BIT ASSIGNMENTS

CODE IDENT NO. —
SIZE D
NASA DRAWING NO. 1005706
SCALE —
WT ___
SHEET 1 OF 1

1005706 A

INCHES

NOTICE — WHEN GOVERNMENT DRAWINGS, SPECIFICATIONS, OR OTHER DATA ARE USED FOR ANY PURPOSE OTHER THAN IN CONNECTION WITH A DEFINITELY RELATED GOVERNMENT PROCUREMENT OPERATION, THE UNITED STATES GOVERNMENT THEREBY INCURS NO RESPONSIBILITY NOR ANY OBLIGATION WHATSOEVER; AND THE FACT THAT THE GOVERNMENT MAY HAVE FORMULATED, FURNISHED, OR IN ANY WAY SUPPLIED THE SAID DRAWINGS, SPECIFICATIONS OR OTHER DATA IS NOT TO BE REGARDED BY IMPLICATION OR OTHERWISE AS IN ANY MANNER LICENSING THE HOLDER OR ANY OTHER PERSON OR CORPORATION, OR CONVEYING ANY RIGHTS OR PERMISSION TO MANUFACTURE, USE, OR SELL ANY PATENTED INVENTION THAT MAY IN ANY WAY BE RELATED THERETO.

REVISIONS			
SYM	DESCRIPTION	DATE	APPROVAL

IN BITS

IN BIT	NAME	INTERFACE SIGNAL	
IN0-1	KEY CODE 1 (KEYRUPT)	KE201	
IN0-2	KEY CODE 2 (KEYRUPT)	KE202	
IN0-3	KEY CODE 3 (KEYRUPT)	KE203	
IN0-4	KEY CODE 4 (KEYRUPT)	KE204	
IN0-5	KEY CODE 5 (KEYRUPT)	KE205	
IN0-6	BLOCK UPLNK	SD246	
IN0-7	INHIBIT UPSYNC		
IN0-8	SPARE		
IN0-9	SPARE	YE092 NC	SEE NOTE 1
IN0-10	SPARE	YE112 NC	
IN0-11	SPARE	DE040 NC	
IN0-12	SPARE	DE058 NC	
IN0-13	SPARE	DE060 NC	
IN0-14	SPARE	YE035 NC	
IN0-15	MARK (KEYRUPT)	KE102	
IN1	COUNTER (24 HR)		
IN2-1	1600PPS		
IN2-2	800PPS		
IN2-3	400PPS		
IN2-4	200PPS		
IN2-5	SPARE	DE007 NC	SEE NOTE 1
IN2-6	SPARE RPT2	DE068 NC	
IN2-7	SPARE	DE004 NC	
IN2-8	SPARE	DE066 NC	
IN2-9	SPARE	DE067 NC	
IN2-10	CDU FAIL	YE124	
IN2-11	PIPA FAIL	YE138	
IN2-12	IMU FAIL	YE141	
IN2-13	SPARE	DE065 NC	SEE NOTE 1
IN2-14	SPARE	DE005 NC	
IN2-15	PARITY		
IN3-1	K1	KE158	
IN3-2	K2	KE159	
IN3-3	K3	KE160	
IN3-4	K4	KE161	
IN3-5	K12	KE162	
IN3-6	TRN SW	KE164	
IN3-7	K5	KE163	
IN3-8	SPARE	DE063 NC	SEE NOTE 1
IN3-9	SPARE	DE064 NC	
IN3-10	OPT MODE SW3	KE107	
IN3-11	STAR PRES	YE183	
IN3-12	ZERO OPT	KE104	
IN3-13	SEXTANT ON	KE105 NC	SEE NOTE 1
IN3-14	OPT MODE SW2	KE106	
IN3-15	OR OF C1-C33	KE210	

OUT BITS

OUT BIT	NAME	INTERFACE SIGNAL	
OUT0-1	RLYBIT 1	TE214	
OUT0-2	RLYBIT 2	TE215	
OUT0-3	RLYBIT 3	TE216	
OUT0-4	RLYBIT 4	TE217	
OUT0-5	RLYBIT 5	TE218	
OUT0-6	RLYBIT 6	TE219	
OUT0-7	RLYBIT 7	TE220	
OUT0-8	RLYBIT 8	TE221	
OUT0-9	RLYBIT 9	TE222	
OUT0-10	RLYBIT 10	TE223	
OUT0-11	RLYBIT 11	TE224	
OUT0-12	RLYWD 1	TE225	
OUT0-13	RLYWD 2	TE226	
OUT0-14	RLYWD 3	TE227	
OUT0-15	RLYWD 4	TE228	
OUT1-1	PROGRAM ALARM	T-229	
OUT1-2	COMP. ACTIVITY	T-230	
OUT1-3	KEY RLSE	T-236	
OUT1-4	TEL. ALARM	T-231	
OUT1-5	PRGM CHECK FALL	T-232	
OUT1-6	SPARE		
OUT1-7	RUPT TRAP RESET (RUPT 2)		
OUT1-8	SPARE		
OUT1-9	I D WORD		
OUT1-10	BLOCK ENDPULSE		
OUT1-11	SPARE		
OUT1-12	SPARE		
OUT1-13	ENGINE ON	XB011	
OUT1-14	SPARE	XB013 NC	SEE NOTE 1
OUT1-15	SPARE	XB012 NC	
OUT2-1	RADAR C	OUTCR 3	
OUT2-2	RADAR B		
OUT2-3	RADAR A		
OUT2-4	THRUST	OUTCR 2	
OUT2-5	OPT Y		
OUT2-6	OPT X		
OUT2-7	+		
OUT2-8	-		
OUT2-9	Z	OUTCR 1	
OUT2-10	Y		
OUT2-11	X		
OUT2-12	GYRO		
OUT2-13	CDU		
OUT2-14	+		
OUT2-15	-		
OUT3	SPARE (INPUT OR OUTPUT)		
OUT4-1 OUT4-2 | | | | | | OUT4-16	16 BITS FOR DOWN LNK DATA		

FOR INFORMATION ONLY
CLASS B RELEASE TDR NO. 12306

NOTE:

1. NC SIGNIFIES THAT THE SIGNALS ARE NOT WIRED TO CONNECTORS 05A5P3 AND 05A3P1

MASTER

QTY REQD	PART OR IDENTIFYING NO.	NOMENCLATURE OR DESCRIPTION	FIND NO.
LIST OF MATERIALS			

NEXT ASSY	USED ON
APPLICATION	

UNLESS OTHERWISE SPECIFIED
DIMENSIONS ARE IN INCHES
TOLERANCES ON
FRACTIONS ± ___ DECIMALS ± ___ ANGLES ± ___
DO NOT SCALE THIS DRAWING
MATERIAL ___
HEAT TREATMENT ___
FINAL FINISH ___

MIT
INSTRUMENTATION LAB
CAMBRIDGE, MASS.
DWG. NO. CONTRACT
DRAWN Karen DATE
CHECKED
APPROVAL [illegible] LAB
APPROVAL [illegible]
NASA APPROVAL [illegible]
MIT APPROVAL [illegible]

MANNED SPACECRAFT CENTER
HOUSTON, TEXAS

INPUT-OUTPUT BIT ASSIGNMENTS

CODE IDENT NO. —
SIZE D
NASA DRAWING NO. 1005706
SCALE —
WT —
SHEET 1 OF 1

A	1005707

REVISIONS 13788			
SYM	DESCRIPTION	DATE	APPROVAL
A	REVISED PER TDRR 14367	1-2-69	WK

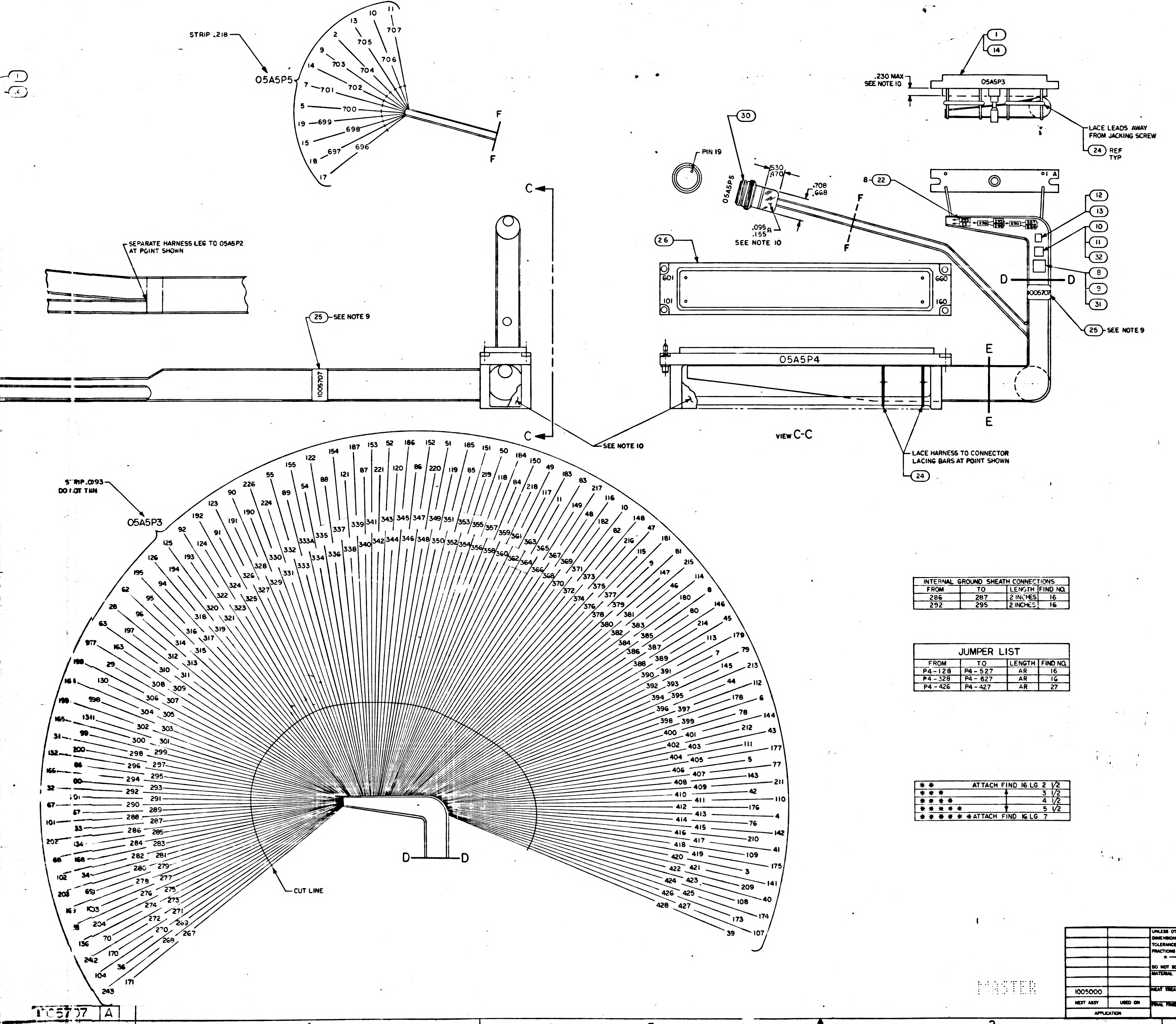

STRIP .218
05A5P5
10 11 13 707 2 705 706 9 703 704 14 702 7 701 5 700 19 699 698 15 697 696 18 17
F
F
SEPARATE HARNESS LEG TO 05A5P2 AT POINT SHOWN
25 SEE NOTE 9
1005707
C
C
SEE NOTE 10
PIN 19
30
05A5P5
.530 .470
.708 .668
.095 .155
SEE NOTE 10
F
F
26
601 101 660 160
05A5P4
VIEW C-C
E
E
LACE HARNESS TO CONNECTOR LACING BARS AT POINT SHOWN
24
1
14
.230 MAX SEE NOTE 10
05A5P3
LACE LEADS AWAY FROM JACKING SCREW
24 REF TYP
8 22
12 13 10 11 32 8 9 31
D D
1005707
25 SEE NOTE 9
STRIP .093 DO NOT TIN
05A5P3
CUT LINE
D D

INTERNAL GROUND SHEATH CONNECTIONS			
FROM	TO	LENGTH	FIND NO.
286	287	2 INCHES	16
292	295	2 INCHES	16

JUMPER LIST			
FROM	TO	LENGTH	FIND NO.
P4-128	P4-527	AR	16
P4-328	P4-627	AR	16
P4-426	P4-427	AR	27

* *	ATTACH FIND 16 LG	2 1/2
* * *	↕	3 1/2
* * * *		4 1/2
* * * * *		5 1/2
* * * * * *	ATTACH FIND 16 LG	7

	QTY REQD	PART OR IDENTIFYING NO.	NOMENCLATURE OR DESCRIPTION	FIND NO.
	1	1010815-244	CONNECTOR, PLUG ELEC	33
	☒	1005799	WIRING DIAGRAM	REF
	AR	SEE NOTE 14	INSULATION SLEEVING	32
	AR	SEE NOTE 13	INSULATION SLEEVING	31
	1	1010771-113	CONNECTOR, PLUG ELECTRICAL	30
*	22	1010789-007	WIRE ELEC, AWG 22 BLK	29
*	11	1010789-006	WIRE ELEC, AWG 22 YEL	28
*	.5	1006757-8	WIRE ELEC, NICKEL, ROUND	27
	1	1003731	CONNECTOR ASSY, 360 CONTACTS	26
	2	MS18035-1	BAND MARKER, CABLE	25
	AR	1012507-001	TAPE, LACING	24
	4	1010402-2	SLEEVE, SOLDER	23
	13	1010402-1	SLEEVE, SOLDER	22
*	4	1010789-005	WIRE ELEC, AWG 24, 4 COND TWISTED	21
*	15	1010789-004	WIRE ELEC, AWG 24, 3 COND TWISTED	20
*	20	1010789-003	WIRE ELEC, AWG 24, 2 COND TWISTED	19
*	364	1010789-017	WIRE ELEC, AWG 26, 2 COND TWISTED	18
*	3.5	1010789-001	WIRE ELEC, AWG 24, YEL	17
*	152	1010789-016	WIRE ELEC, AWG 26, YEL	16
*	18	1010789-015	WIRE ELEC, AWG 26, 2 COND SHIELDED	15
	732	1010738-5	CONTACT, ELEC, PIN	14
	4	1000242-14	FERRULE, ELEC	13
	4	1000243-23	FERRULE, ELEC	2
	4	1000242-26	FERRULE, ELEC	1
	4	1000243-21	FERRULE, ELEC	10
	4	1000242-33	FERRULE, ELEC	9
	4	1000243-37	FERRULE, ELEC	8
*	3.7	SEE NOTE 3	SLEEVING	7
*	3.8	SEE NOTE 3	SLEEVING	6
*	4	SEE NOTE 3	SLEEVING	5
*	4	SEE NOTE 4	WIRE, BRAID	4
*	3.6	SEE NOTE 4	WIRE, BRAID	3
*	3.5	SEE NOTE 4	WIRE, BRAID	2
	2	1010815-144	CONNECTOR, PLUG ELEC	1

LIST OF MATERIALS

1005000	
NEXT ASSY	USED ON
APPLICATION	

UNLESS OTHERWISE SPECIFIED
DIMENSIONS ARE IN INCHES
TOLERANCES ON
FRACTIONS ± — DECIMALS XXX ±.010 ANGLES ± —
DO NOT SCALE THIS DRAWING
MATERIAL —
HEAT TREATMENT —
FINAL FINISH —

MIT
INSTRUMENTATION LAB
Cambridge, Mass
DWG. NO. CONTRACT
DRAWN Tom Williams DATE 6 OCT 67
CHECKED L. Pizzaruso Aug 22 1968
APPROVAL
APPROVAL E C Hall
NASA APPROVAL W S Rhine 1-2-69
MIT APPROVAL

MANNED SPACECRAFT CENTER
HOUSTON, TEXAS

WIRING HARNESS,
AGC TO PSA & G/N TO SPACECRAFT

CODE IDENT NO. — SIZE J NASA DRAWING NO. 1005707
SCALE 1/1 WT — SHEET 1 OF 3

1005707 A

MASTER

3H

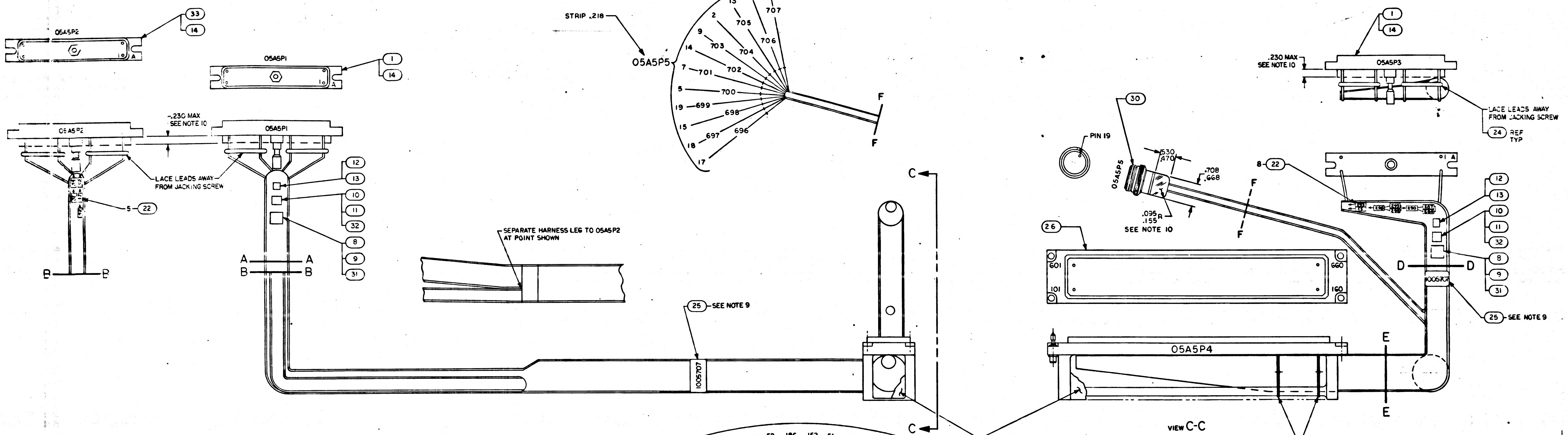

O5A5P2
33
14
O5A5P1
1
14
.230 MAX
SEE NOTE 10
LACE LEADS AWAY FROM JACKING SCREW
5
22
12
13
10
11
32
8
9
31
A
B
STRIP .218
O5A5P5
F
SEPARATE HARNESS LEG TO O5A5P2 AT POINT SHOWN
25 SEE NOTE 9
1005707
C
SEE NOTE 10
O5A5P3
.230 MAX
SEE NOTE 10
LACE LEADS AWAY FROM JACKING SCREW
24 REF TYP
PIN 19
30
.530
.470
.708
.668
.095
.155 R
SEE NOTE 10
O5A5P5
8
22
26
601
101
660
160
D
E
O5A5P4
25 SEE NOTE 9
VIEW C-C
LACE HARNESS TO CONNECTOR LACING BARS AT POINT SHOWN
24

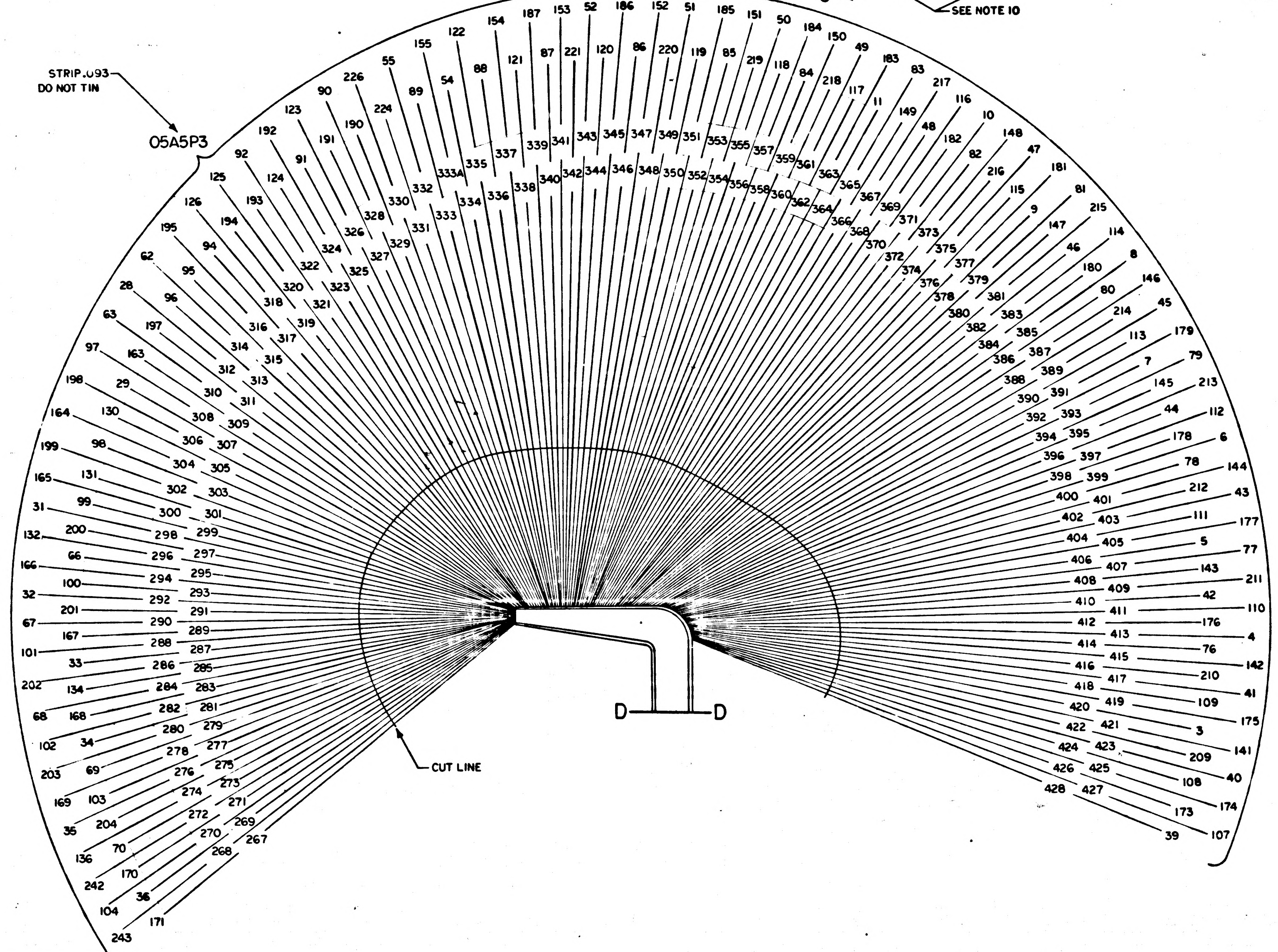

STRIP .093
DO NOT TIN
O5A5P3
CUT LINE
D
D

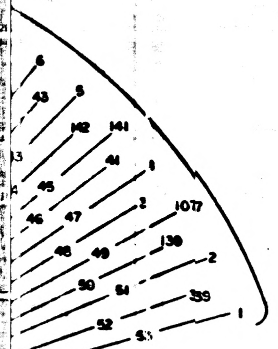

INTERNAL GROUND SHEATH CONNECTIONS			
FROM	TO	LENGTH	FIND NO.
286	287	2 INCHES	16
292	295	2 INCHES	16

JUMPER LIST			
FROM	TO	LENGTH	FIND NO.
P4-128	P4-527	AR	16
P4-328	P4-627	AR	16
P4-426	P4-427	AR	27

* *	ATTACH FIND 16 LG 2 1/2
* * *	3 1/2
* * * *	4 1/2
* * * * *	5 1/2
* * * * * *	ATTACH FIND 16 LG 7

	1	10108
	╳	10057
	AR	SEE N
	AR	SEE N
	1	10107
*	22	10107
*	11	10107
*	.5	10067
	1	10037
	2	MS183
	AR	101250
	4	10104
	13	101040
*	4	101078
*	15	101078
*	20	101071
*	364	10107
*	3.5	10107
*	152	10107
*	18	10107
	[illegible]	[illegible]
	4	10002
	4	10002
	4	10003
	4	10002
	4	10002
	4	[illegible]
*	37	SEE N
*	38	SEE N
*	4	SEE N
*	4	SEE N
*	3.6	SEE N
*	3.5	SEE
	2	10108
	QTY REQD	

MASTER

1005000	
NEXT ASSY	USED ON
APPLICATION	

UNLESS OTHERWISE SPECIFIED
DIMENSIONS ARE IN INCHES
TOLERANCES ON
FRACTIONS DECIMALS ANGLES
± — .XXX±.010 ± —
DO NOT SCALE THIS DRAWING
MATERIAL
HEAT TREATMENT
FINAL FINISH

DRAWN
CHECKED
APPROVAL
APPROVAL

1005707 A

NOTICE — WHEN GOVERNMENT DRAWINGS, SPECIFICATIONS, OR OTHER DATA ARE USED FOR ANY PURPOSE OTHER THAN IN CONNECTION WITH A DEFINITELY RELATED GOVERNMENT PROCUREMENT OPERATION, THE UNITED STATES GOVERNMENT THEREBY INCURS NO RESPONSIBILITY NOR ANY OBLIGATION WHATSOEVER; AND THE FACT THAT THE GOVERNMENT MAY HAVE FORMULATED, FURNISHED, OR IN ANY WAY SUPPLIED THE SAID DRAWINGS, SPECIFICATIONS OR OTHER DATA IS NOT TO BE REGARDED BY IMPLICATION OR OTHERWISE AS IN ANY MANNER LICENSING THE HOLDER OR ANY OTHER PERSON OR CORPORATION, OR CONVEYING ANY RIGHTS OR PERMISSION TO MANUFACTURE, USE, OR SELL ANY PATENTED INVENTION THAT MAY IN ANY WAY BE RELATED THERETO

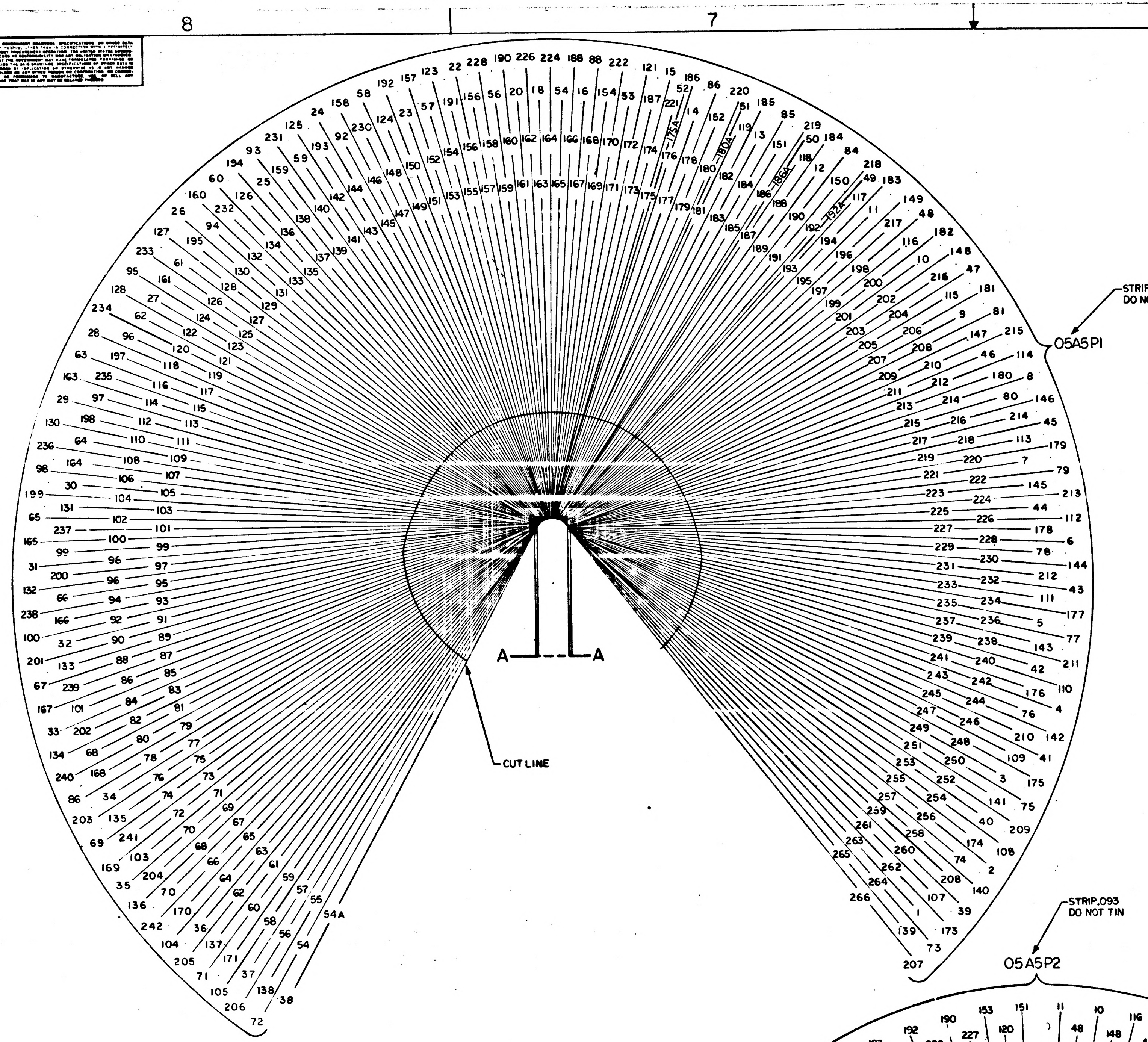
STRIP.093
DO NOT TIN
05A5P1
A — A
CUT LINE
54A

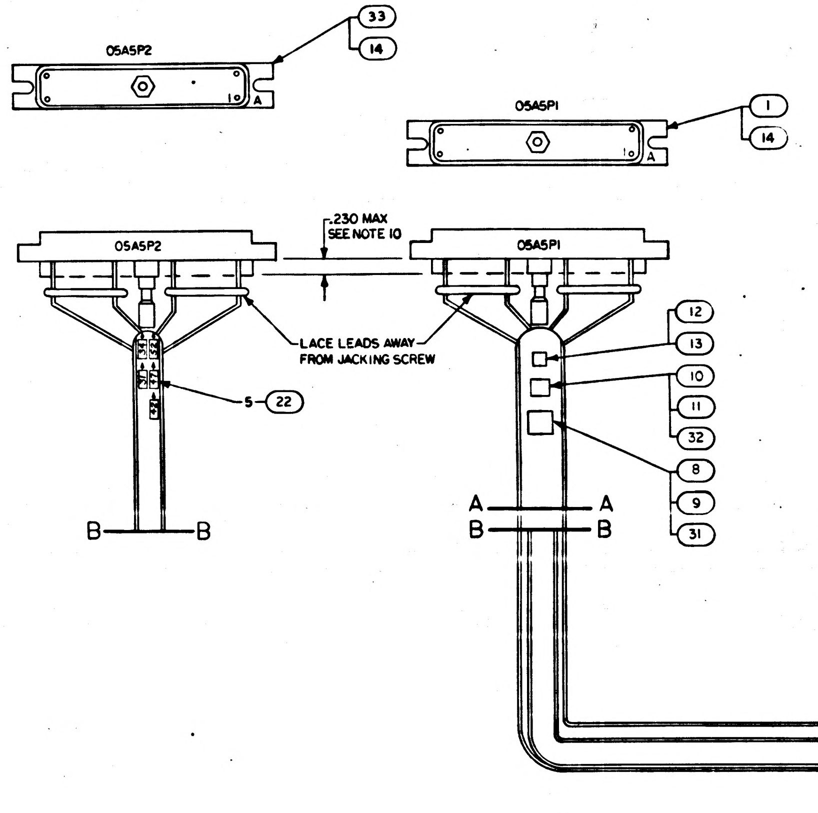
05A5P2
33
14
05A5P1
1
14
.230 MAX
SEE NOTE 10
LACE LEADS AWAY FROM JACKING SCREW
5
22
12
13
10
11
32
8
9
31
A — A
B — B

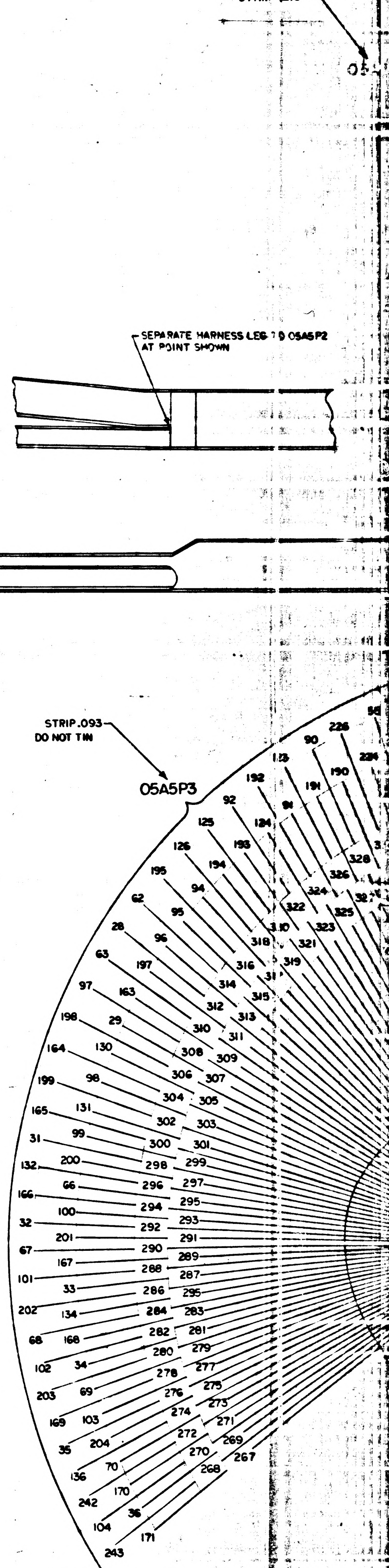
STRIP .218
SEPARATE HARNESS LEG TO 05A5P2 AT POINT SHOWN
STRIP.093
DO NOT TIN
05A5P3

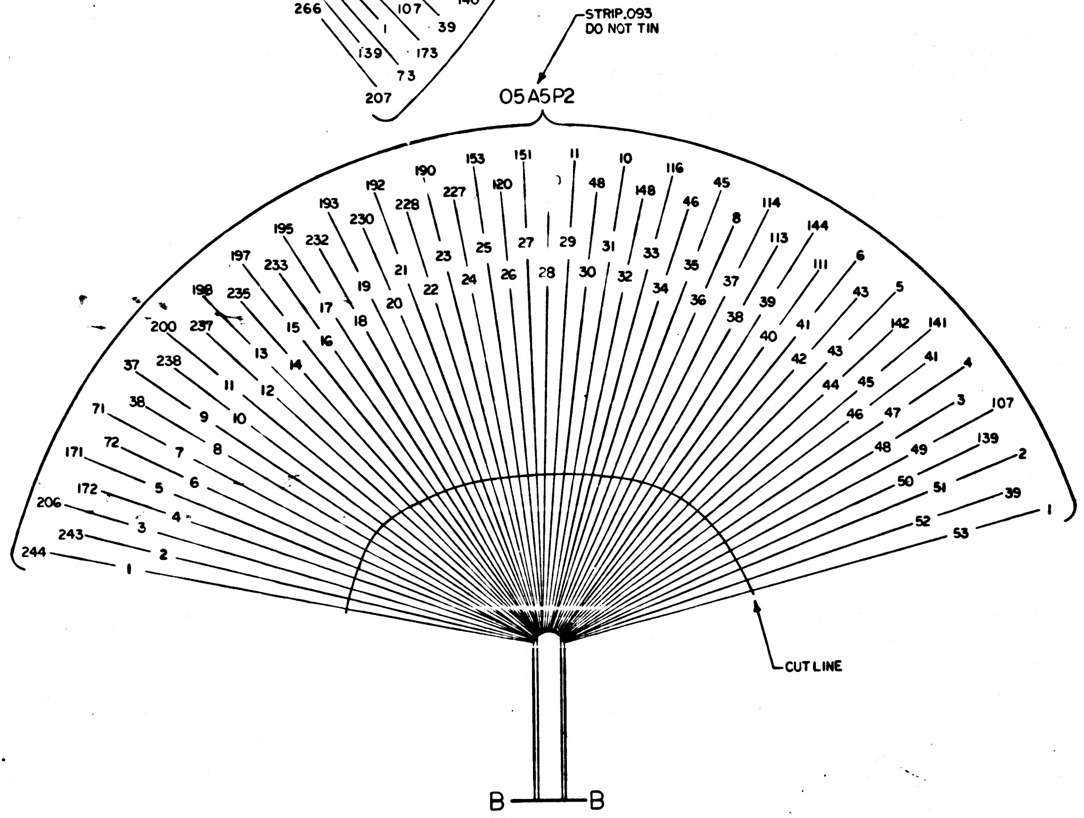
STRIP.093
DO NOT TIN
05A5P2
CUT LINE
B — B

NOTES

1. INTERPRET DRAWING IN ACCORDANCE WITH STANDARDS PRESCRIBED BY MIL-D-70327
2. FOR SYMBOL FABRICATION AND REQUIRED TESTS SEE ND1002032
3. MIL-I-631 TYPE F, FORM U, GRADE A, CLASS I, CATAGORY I. FOR FIND NO.5 AWG 5/8 FOR FIND NO.6 AWG 3/8, FOR FIND NO.7 AWG 2
4. QQ-B-575 FOR FIND NO.2 BRAID SIZE 1/2, AWG 30 FOR FIND NO.3 BRAID SIZE 1/4, AWG 36 FOR FIND NO.4 BRAID SIZE 5/32
5. * DENOTES LENGTH IN FEET
6. FEED WIRES THROUGH BRAID AND SLEEVING SLEEVING TO COVER FERRULES AT BOTH ENDS OF CABLES
7. INSTALL CRIMP STYLE TERMINALS IN ACCORDANCE WITH ND1002206
8. AR DENOTES AS REQUIRED
9. MARK .100/.060 HIGH PER ND1002019 USING BLACK MARKING INK 1006271-10
10. ENCAPSULATE INDICATED AREA PER ND1002009 METHOD E, MOUNTING SURFACES OF CONNECTORS MUST NOT BE ENCAPSULATED
11. FOR INTERCONNECTING OF GROUND SHEATH CONNECTIONS SEE INTERNAL GROUND SHEATH CONNECTION CHART
12. TRIM AND DRESS ALL CONNECTOR LEADS AT ASSEMBLY
13. CENTER TWO (2) PIECES 1.5 LONG OF FIND NO.31 (MIL-I-23053, CLASS I, COLOR BLACK, SIZE 7/16) UNDER FIND NO.8
14. CENTER ONE (1) PIECE 1.5 LONG OF FIND NO.32 (MIL-I-23053, CLASS I, COLOR BLACK, SIZE NO.4) UNDER FIND NO.10
15. TEST PER FTM 1005707

REVISIONS 13???			
SYM	DESCRIPTION	DATE	APPROVAL
A	REVISED PER TDRR 14344	11/6/64	WR

1005707 A

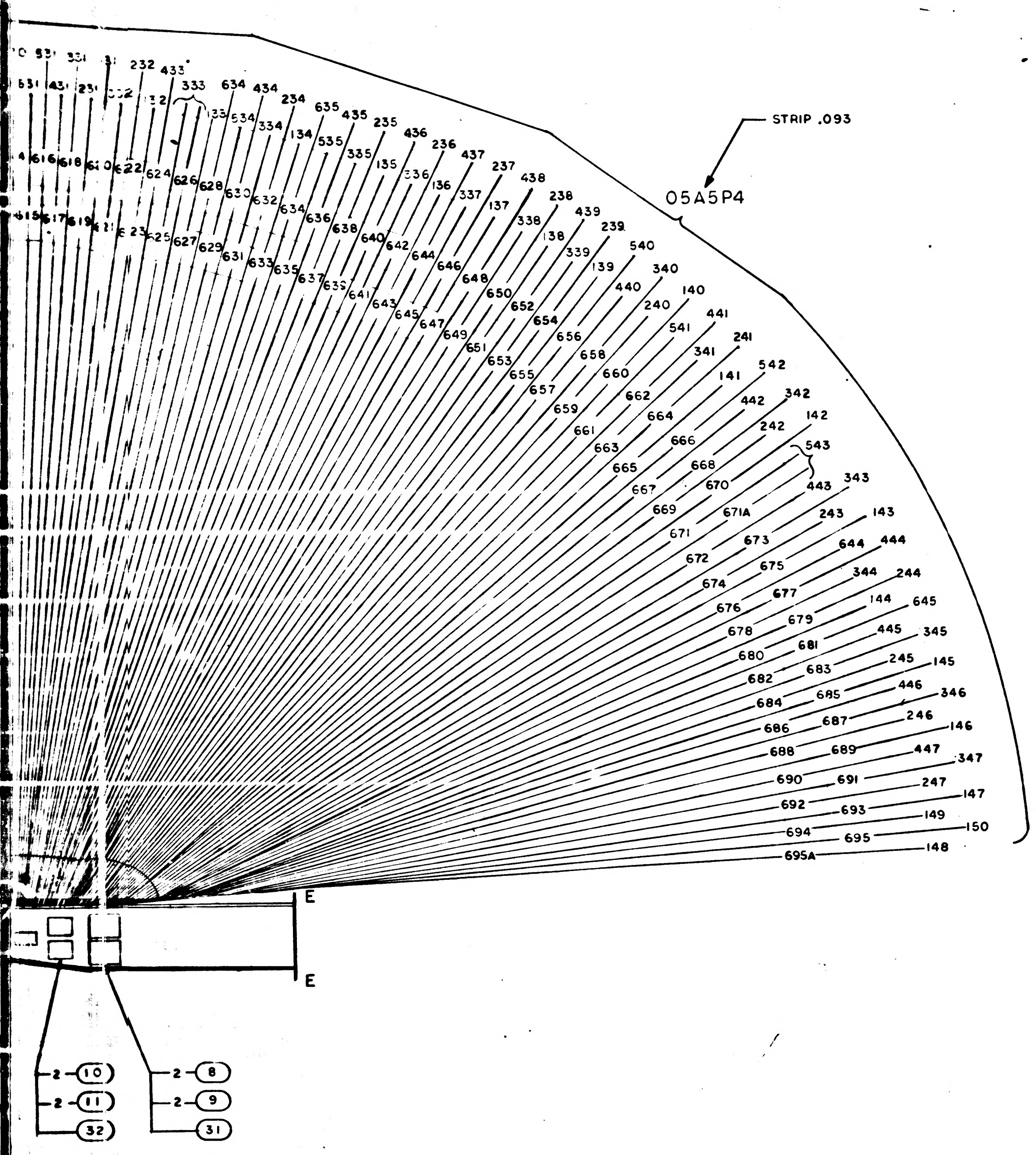

STRIP .093
05A5P4
531 431 231 232 433 333 634 434 234 635 435 235 436 236 437 237 438 238 439 239 540 340 140 441 241 542 342 142 543 343 143 444 244 645 345 145 346 146 347 147 149 150 148
616 618 622 624 626 628 630 632 634 636 638 640 642 644 646 648 650 652 654 656 658 660 662 664 666 668 670 671A 673 675 677 679 681 683 685 687 689 691 693 695
617 619 625 627 629 631 633 635 637 639 641 643 645 647 649 651 653 655 657 659 661 663 665 667 669 671 672 674 676 678 680 682 684 686 688 690 692 694 695A
133 534 334 134 535 335 135 336 136 337 137 338 138 339 139 440 240 541 341 141 442 242 443 243 644 344 144 445 245 446 246 447 247
E
E
2 10
2 11
32
2 8
2 9
31

MASTER

		UNLESS OTHERWISE SPECIFIED DIMENSIONS ARE IN INCHES TOLERANCES ON FRACTIONS ± DECIMALS ± ANGLES ± DO NOT SCALE THIS DRAWING
		MATERIAL
		HEAT TREATMENT
NEXT ASSY	USED ON	FINAL FINISH
APPLICATION		

QTY REQD	PART OR IDENTIFYING NO.	NOMENCLATURE OR DESCRIPTION	FIND NO.
LIST OF MATERIALS			

MIT INSTRUMENTATION LAB
CAMBRIDGE, MASS

DRAWN A. Di Lao DATE OCT 64
CHECKED
APPROVAL
APPROVAL E C Hall
NASA APPROVAL 11-4-64
MIT APPROVAL 11/4/64

MANNED SPACECRAFT CENTER
HOUSTON, TEXAS

WIRING HARNESS,
AGC TO PSA & G/N TO SPACECRAFT

CODE IDENT NO. — SIZE J NASA DRAWING NO. 1005707
SCALE 1/1 WT — SHEET 2 OF 3

1005707 A

24

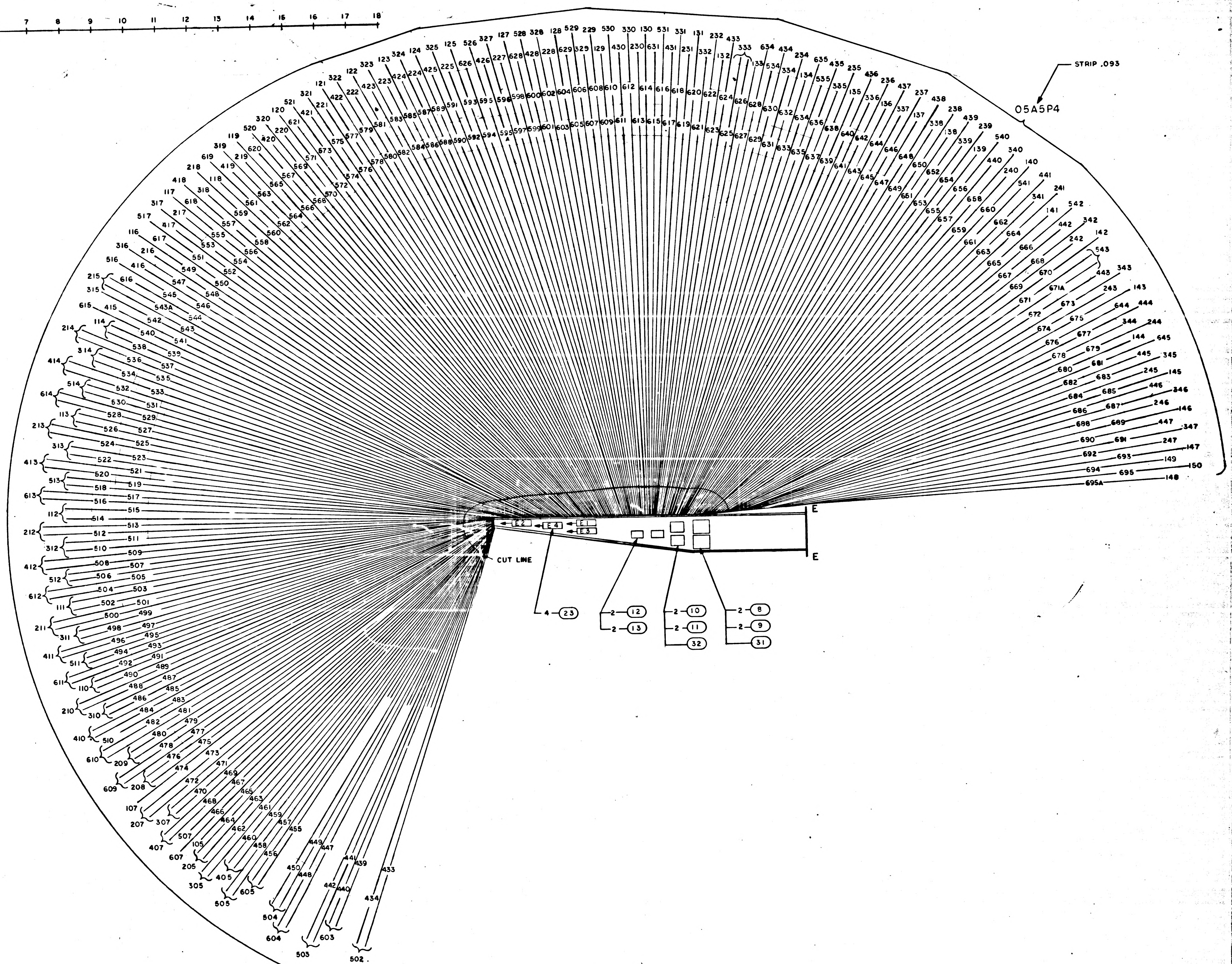
STRIP .093
05A5P4
E
E
E1
E2
E3
E4
CUT LINE
4 — 23
2 — 12
2 — 13
2 — 10
2 — 11
32
2 — 8
2 — 9
31

1005707 A

REVISIONS 1378P			
SYM	DESCRIPTION	DATE	APPROVAL
A	REVISED PER TDRR 14344	11/6/64	LK

1005707 A

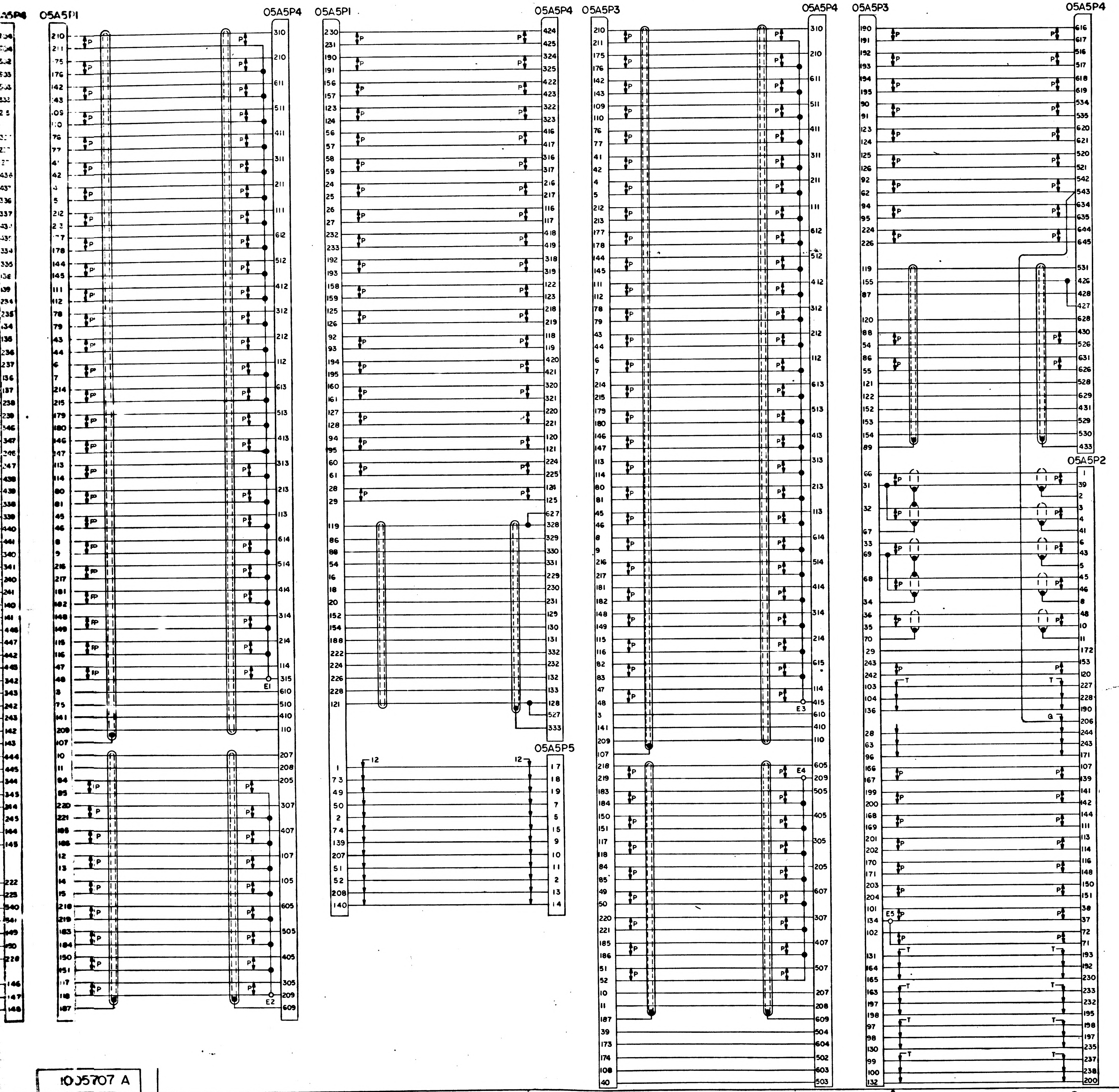

MASTER

QTY REQD	PART OR IDENTIFYING NO.	NOMENCLATURE OR DESCRIPTION	FIND NO

LIST OF MATERIALS

NEXT ASSY	USED ON
APPLICATION	

UNLESS OTHERWISE SPECIFIED DIMENSIONS ARE IN INCHES
TOLERANCES ON
FRACTIONS ± — DECIMALS ± — ANGLES ± —
DO NOT SCALE THIS DRAWING
MATERIAL
HEAT TREATMENT
FINAL FINISH

MIT
INSTRUMENTATION LAB
CAMBRIDGE, MASS
DRAWN J. Goodyear DATE 9 Oct 64
CHECKED
APPROVAL
APPROVAL
NASA APPROVAL W J Rhine
MIT APPROVAL

MANNED SPACECRAFT CENTER
HOUSTON, TEXAS

WIRING HARNESS,
AGC TO PSA & G/N TO SPACECRAFT

CODE IDENT NO. —
SIZE J
NASA DRAWING NO. 1005707
SCALE NONE
WT —
SHEET 3 OF 3

3H

1005707 A

ASSEMBLY INFORMATION CHART

FROM		DESCRIPTION			TO	
REMARKS	RUN NO.	COLOR	AWG	FIND NO.	RUN NO.	REMARKS
	7	YEL	24	19	E5	
	6	RED			282	
	8	YEL	24	19	288	
	9	RED			E5	
	E5	YEL	24	17	285	
	19	YEL	24	20	301	
	21	RED			304	
	20	GRN			300	
	16	YEL			309	
	18	RED			311	
	17	GRN			306	
	13	YEL			308	
	15	RED			303	
	14	GRN			305	
	12	YEL			299	
	10	RED			293	
	11	GRN			296	
	22	YEL			270	
	23	RED			274	
	24	GRN			277	
	54A	YEL			695A	
	57	RED			693	
	63	GRN			689	
	3	YEL	24	21	671A	
	1	RED			312	
	2	GRN			310	
	5	BRN			313	
	4	YEL	24	17	307	
	53	YEL	26	15	295	SEE NOTE II
	52	RED			298	
****	51	SHLD				
	48	YEL			292	
	47	RED			298	
****	46	SHLD			290	*****
	41	YEL			287	SEE NOTE II
	42	RED			279	
	43	SHLD				
	35	YEL			284	
	34	RED			279	
****	36	SHLD			281	*****
	30	YEL			269	SEE NOTE II
	31	RED			276	
****	29	SHLD			273	
	263	YEL	22	28	696	TWIST 12 CONDUCTORS TOGETHER
	264				697	
	186A				701	
	192A				699	
	265				703	
	266				706	
	175A				704	
	180A				707	
	256	BLK		29	700	
	257				698	
	258				702	
	259				705	

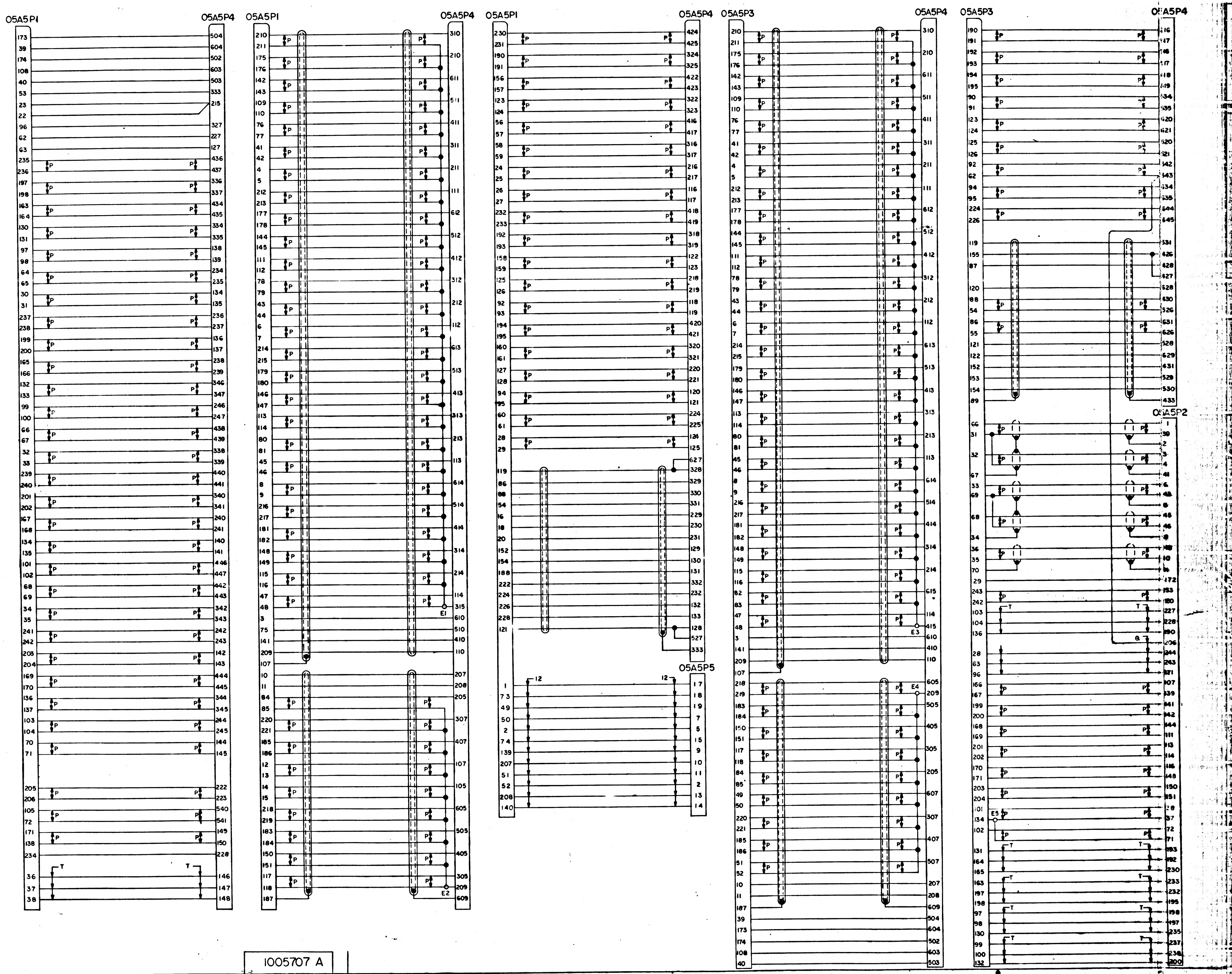
05A5P1
05A5P4
05A5P1
05A5P4
05A5P1
05A5P4
05A5P3
05A5P4
05A5P3
05A5P4
05A5P5
05A5P2
E1
E2
E3
E4
E5

1005707 A

ASSEMBLY INFORMATION CHART

FROM		DESCRIPTION			TO	
REMARKS	RUN NO.	COLOR	AWG	FIND NO.	RUN NO.	REMARKS
ATTACH FIND NO. 2 LG 29 1/4 FIND NO. 5 LG 29 1/2 AND FIND NO. 8 & 9 SEE NOTE 6	245	YEL	26	18	487	
	238	RED			E1	
	248	YEL			489	
	241	RED			E1	
	244	YEL			493	
	237	RED			E1	
	247	YEL			495	
	240	RED			E1	
	243	YEL			497	
	236	RED			E1	
	246	YEL			499	
	239	RED			E1	
	242	YEL			501	
	235	RED			E1	
	231	YEL			503	
	224	RED			E1	
	234	YEL			505	
	227	RED			E1	
	230	YEL			507	
	223	RED			E1	
	233	YEL			509	
	226	RED			E1	
	229	YEL			511	
	222	RED			E1	
	232	YEL			513	
	225	RED			E1	
	228	YEL			515	
	221	RED			E1	
	217	YEL			517	
	210	RED			E1	
	220	YEL			519	
	213	RED			E1	
	216	YEL			521	
	209	RED			E1	
	219	YEL			523	
	212	RED			E1	
	215	YEL			525	
	208	RED			E1	
	218	YEL			527	
	211	RED			E1	
	214	YEL			529	
	207	RED			E1	
	203	YEL			531	
	197	RED			E1	
	206	YEL			533	
	200	RED			E1	
	202	YEL			535	
	196	RED			E1	
	205	YEL			537	
	199	RED			E1	
	204	YEL			539	
	198	RED			E1	
	E1	YEL		16	542	***
	249				481	
	250				483	
	251				485	
	252				491	
****	261	SHLD				
ATTACH FIND NO. 2 LG 9 FIND NO. 5 LG 9 1/4 AND FIND NO. 8 & 9 SEE NOTE 6	416	YEL	26	18	486	
	409	RED			E3	
	419	YEL			488	
	412	RED			E3	
	415	YEL			492	
	408	RED			E3	
	418	YEL			494	
	411	RED			E3	
	414	YEL			496	
	407	RED			E3	
	417	YEL			498	
	410	RED			E3	
	413	YEL			500	
	406	RED			E3	
	402	YEL			502	
	395	RED			E3	
	405	YEL			504	
	398	RED			E3	
	401	YEL			506	
	394	RED			E3	
	404	YEL			508	
	397	RED			E3	
	400	YEL			510	
	393	RED			E3	
	403	YEL			512	
	396	RED			E3	
	399	YEL			514	
	392	RED			E3	
	388	YEL			516	
	381	RED			E3	
	391	YEL			518	
	384	RED			E3	
	387	YEL			520	
	380	RED			E3	
	390	YEL			522	
	383	RED			E3	
	386	YEL			524	
	379	RED			E3	
	389	YEL			526	
	382	RED			E3	
	385	YEL			528	
	378	RED			E3	
	374	YEL			530	
	367	RED			E3	
	377	YEL			532	
	370	RED			E3	
	373	YEL			534	
	366	RED			E3	
	376	YEL			536	
	369	RED			E3	
	372	YEL			540	
	365	RED			E3	
	375	YEL			538	
	368	RED			E3	
	E3	YEL		16	541	***
	420				482	
	421				484	
	422				490	
****	427	SHLD				

ASSEMBLY INFORMATION CHART

FROM		DESCRIPTION			TO	
REMARKS	RUN NO.	COLOR	AWG	FIND NO.	RUN NO.	REMARKS
ATTACH FIND NO. 3 LG 30 1/2 FIND NO. 6 LG 30 3/4 AND FIND NO. 10 & 11 SEE NOTE 6	201	YEL	26	16	473	
	195	YEL		16	475	
	190	YEL		18	463	
	184	RED			E2	
	180	YEL			471	
	175	RED			E2	
	182	YEL			469	
	176	RED			E2	
	189	YEL			474	
	183	RED			E2	
	177	YEL			465	
	174	RED			E2	
	192	YEL			455	
	186	RED			E2	
	194	YEL			457	
	188	RED			E2	
	191	YEL			459	
	185	RED			E2	
	193	YEL			461	
	187	RED			E2	
	E2	YEL		16	479	**
***	173	SHLD		16	477	******
ATTACH FIND NO. 3 LG 10 FIND NO. 6 LG 10 1/4 AND FIND NO. 10 & 11 SEE NOTE 6	360	YEL	26	18	456	
	354	RED			E4	
	363	YEL			458	
	357	RED			E4	
	359	YEL			460	
	353	RED			E4	
	362	YEL			462	
	356	RED			E4	
	358	YEL			464	
	352	RED			E4	
	361	YEL			466	
	355	RED			E4	
	348	YEL			470	
	342	RED			E4	
	351	YEL			468	
	345	RED			E4	
	349	YEL			467	
	343	RED			E4	
	371	YEL		16	472	
	364	YEL			476	
	E4	YEL			480	**
***	339	SHLD			478	******
ATTACH FIND NO. 4 LG 11 FIND NO. 7 LG 11 1/4 AND FIND NO. 12 & 13 SEE NOTE 6	181	YEL	26	16	602	
	178				607	
	168				612	
	165				618	
	167				608	
	163				613	
	161				619	
	179				609	
	169				614	
	166				620	
	170				621	
	164				622	
	162				623	
	158				627	
	172				604	
		SHLD			626	**
ATTACH FIND NO. 4 LG 11 FIND NO. 7 LG 11 1/4 AND FIND NO. 12 & 13 SEE NOTE 6 ***	350	YEL	26	16	616	
	333A				595A	
	340				601	
	344				599	
	338				600	
	335				605	
	347				617	
	341				606	
	337				610	
	336	YEL		18	611	
	334	RED			595	
	346	YEL		18	615	
	332	RED			594	
	333	SHLD		16	624	**
	115	YEL	26	18	640	
	108	RED			644	
	117	YEL			641	
	111	RED			645	
	114	YEL			630	
	107	RED			636	
	110	YEL			631	
	103	RED			637	
	113	YEL			651	
	106	RED			655	
	109	YEL			632	
	102	RED			638	
	105	YEL			633	
	98	RED			639	
	101	YEL			642	
	94	RED			646	
	104	YEL			643	
	97	RED			647	
	100	YEL			650	
	93	RED			654	
	96	YEL			687	
	89	RED			691	
	99	YEL			688	
	92	RED			692	
	95	YEL			648	
	88	RED			652	
	91	YEL			649	
	84	RED			653	
	87	YEL			657	
	80	RED			662	
	90	YEL			658	
	83	RED			663	
	86	YEL			659	
	79	RED			664	
	82	YEL			660	
	75	RED			665	

ASSEMBLY INFORMATION CHART

FROM		DESCRIPTION			TO	
REMARKS	RUN NO.	COLOR	AWG	FIND NO.	RUN NO.	REMARKS
	81	YEL	26	18	667	
	74	RED			672	
	77	YEL			668	
	70	RED			673	
	73	YEL			669	
	66	RED			674	
	76	YEL			670	
	69	RED			675	
	72	YEL			677	
	65	RED			682	
	68	YEL			678	
	61	RED			683	
	71	YEL			679	
	64	RED			684	
	67	YEL			680	
	60	RED			685	
	85	YEL			686	
	78	RED			690	
	62	YEL			580	
	56	RED			584	
	58	YEL			656	
	54	RED			661	
	59	YEL			694	
	55	RED			695	
	147	YEL			586	
	140	RED			590	
	160	YEL			587	
	155	RED			591	
	157	YEL			578	
	152	RED			582	
	154	YEL			579	
	149	RED			583	
	159	YEL			546	
	153	RED			552	
	148	YEL			547	
	141	RED			553	
	144	YEL			548	
	137	RED			554	
	130	YEL			549	
	123	RED			555	
	133	YEL			557	
	126	RED			562	
	150	YEL			558	
	143	RED			563	
	146	YEL			581	
	139	RED			585	
	142	YEL			559	
	135	RED			564	
	145	YEL			560	
	138	RED			565	
	136	YEL			568	
	129	RED			574	
	132	YEL			569	
	125	RED			575	
	128	YEL			570	
	122	RED			576	
	131	YEL			571	
	124	RED			577	
	134	YEL			588	
	127	RED			592	
	118	YEL			589	
	112	RED			593	
	329	YEL			544	
	327	RED			550	
	324	YEL			545	
	321	RED			551	
	319	YEL			556	
	316	RED			561	
	328	YEL			629	
	325	RED			635	
	326	YEL			566	
	323	RED			572	
	320	YEL			567	
	318	RED			573	
	322	YEL			666	
	314	RED			671	
	317	YEL			628	
	315	RED			634	
	331	YEL			676	
	330	RED			681	
	25	YEL			268	
	26	RED			272	
	50	YEL			289	
	49	RED			294	
	45	YEL			302	
	44	RED			297	
	40	YEL			278	
	39	RED			283	
	38	YEL			291	
	37	RED			286	
	32	YEL			267	
	33	RED			271	
	27	YEL			275	
	28	RED			280	
	260	YEL	26	17	449	
	262				447	
	255				433	
	254				439	
	253				441	
	171				625	
	151				543	
	156				543A	
	119				596	
	121				597	
	116				598	
	426				450	
	428				448	
	425				434	
	424				440	
	423				442	
	120				603	

ASSEMBLY INFORMATION CHART

FROM		DESCRIPTION			TO	
REMARKS	RUN NO.	COLOR	AWG	FIND NO.	RUN NO.	REMARKS
	7	YEL	24	19	E5	
	6	RED			282	
	8	YEL	24	19	288	
	9	RED			E5	
	E5	YEL	24	17	285	
	19	YEL	24	20	301	
	21	RED			304	
	20	GRN			300	
	16	YEL			309	
	18	RED			311	
	17	GRN			306	
	13	YEL			308	
	15	RED			303	
	14	GRN			305	
	12	YEL			299	
	10	RED			293	
	11	GRN			296	
	22	YEL			270	
	23	RED			274	
	24	GRN			277	
	54A	YEL			695A	
	57	RED			693	
	63	GRN			689	
	3	YEL	24	21	671A	
	1	RED			312	
	2	GRN			310	
	5	BRN			313	
	4	YEL	24	17	307	
	53	YEL	26	15	295	
	52	RED			298	SEE NOTE 11
****	51	SHLD				
	48	YEL			292	
	47	RED			298	
****	46	SHLD			290	*****
	41	YEL			287	
	42	RED			279	
	43	SHLD				SEE NOTE 11
	35	YEL			284	
	34	RED			279	
****	36	SHLD			281	*****
	30	YEL			269	SEE NOTE 11
	31	RED			276	
****	29	SHLD			273	
	263	YEL	22	28	696	
	264				697	
	186A				701	
	192A				699	
	265				703	
	266				706	TWIST 12 CONDUCTORS TOGETHER
	175A				704	
	180A				707	
	256	BLK		29	700	
	257				698	
	258				702	
	259				705	

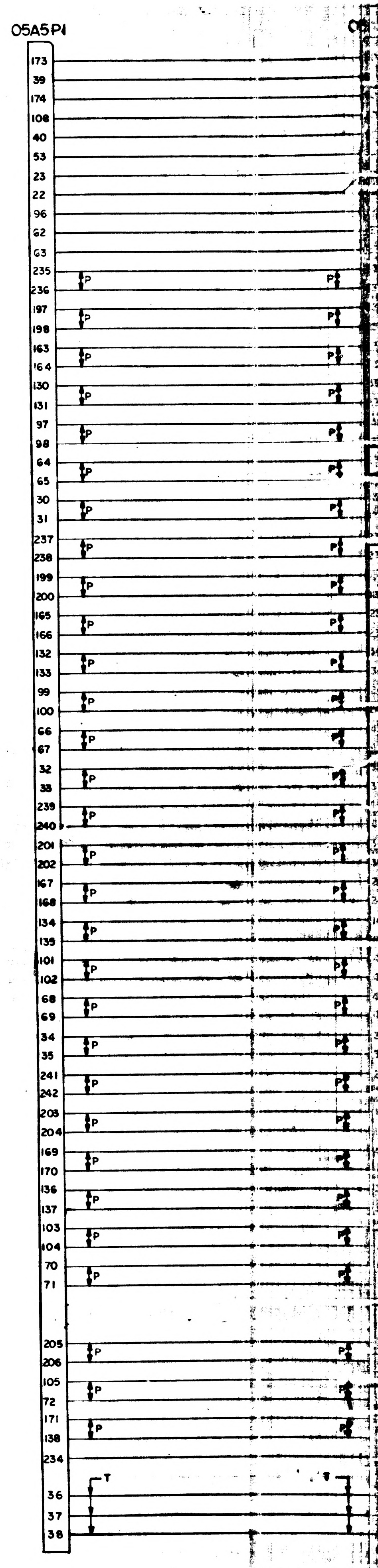

	1005707	B

SYM	DESCRIPTION	DATE	APPROVAL
	REVISIONS 13788		
A	REVISED PER TDRR 14344		WR
B	REPLACED WITH CHANGE BY REV C PER TDRR 16535 DR R. [illegible] CHK R.H.E.	3/22/65	

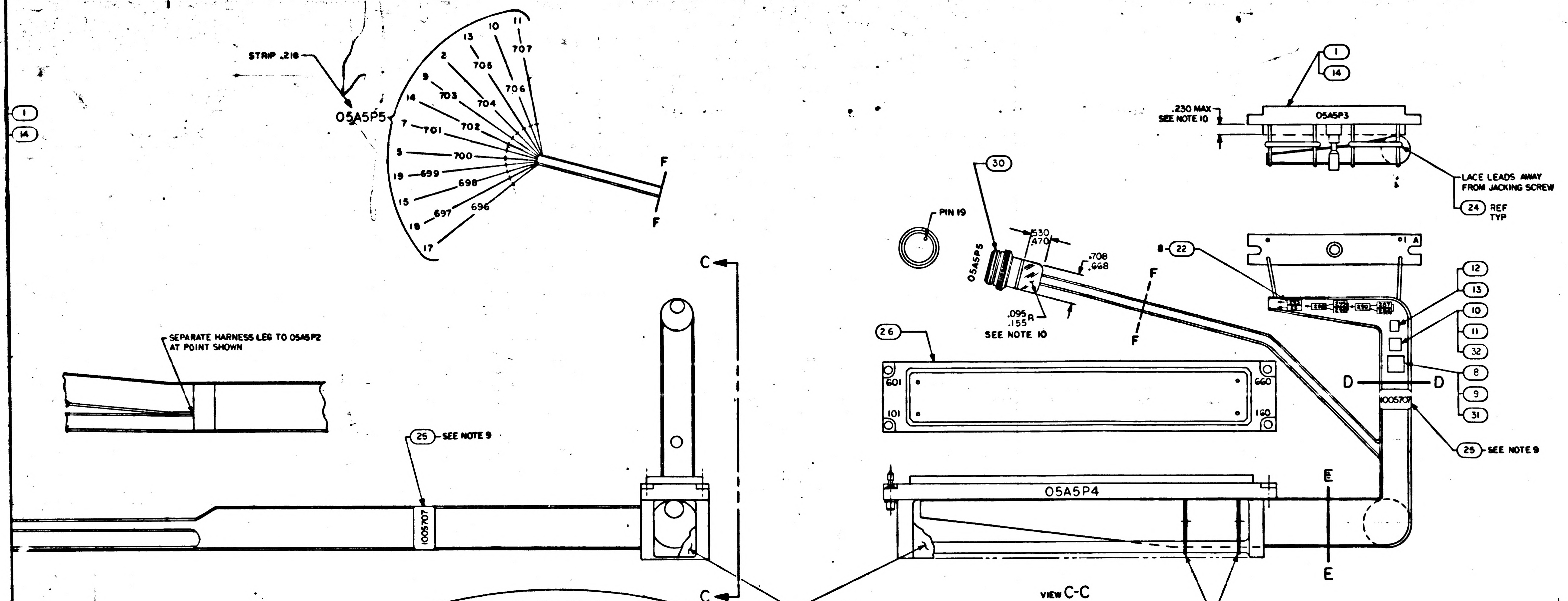
STRIP .218
05A5P5
F
F
1
14
PIN 19
30
05A5P5
.530
.470
.708
.668
.095
.155
SEE NOTE 10
8-22
F
F
26
601
660
101
120
D
D
1005707
25 SEE NOTE 9
05A5P4
E
E
VIEW C-C
LACE HARNESS TO CONNECTOR LACING BARS AT POINT SHOWN
24
05A5P3
.230 MAX
SEE NOTE 10
1
14
LACE LEADS AWAY FROM JACKING SCREW
24 REF TYP
12
13
10
11
32
8
9
31
SEPARATE HARNESS LEG TO 05A5P2 AT POINT SHOWN
25 SEE NOTE 9
1005707
C
C
SEE NOTE 10

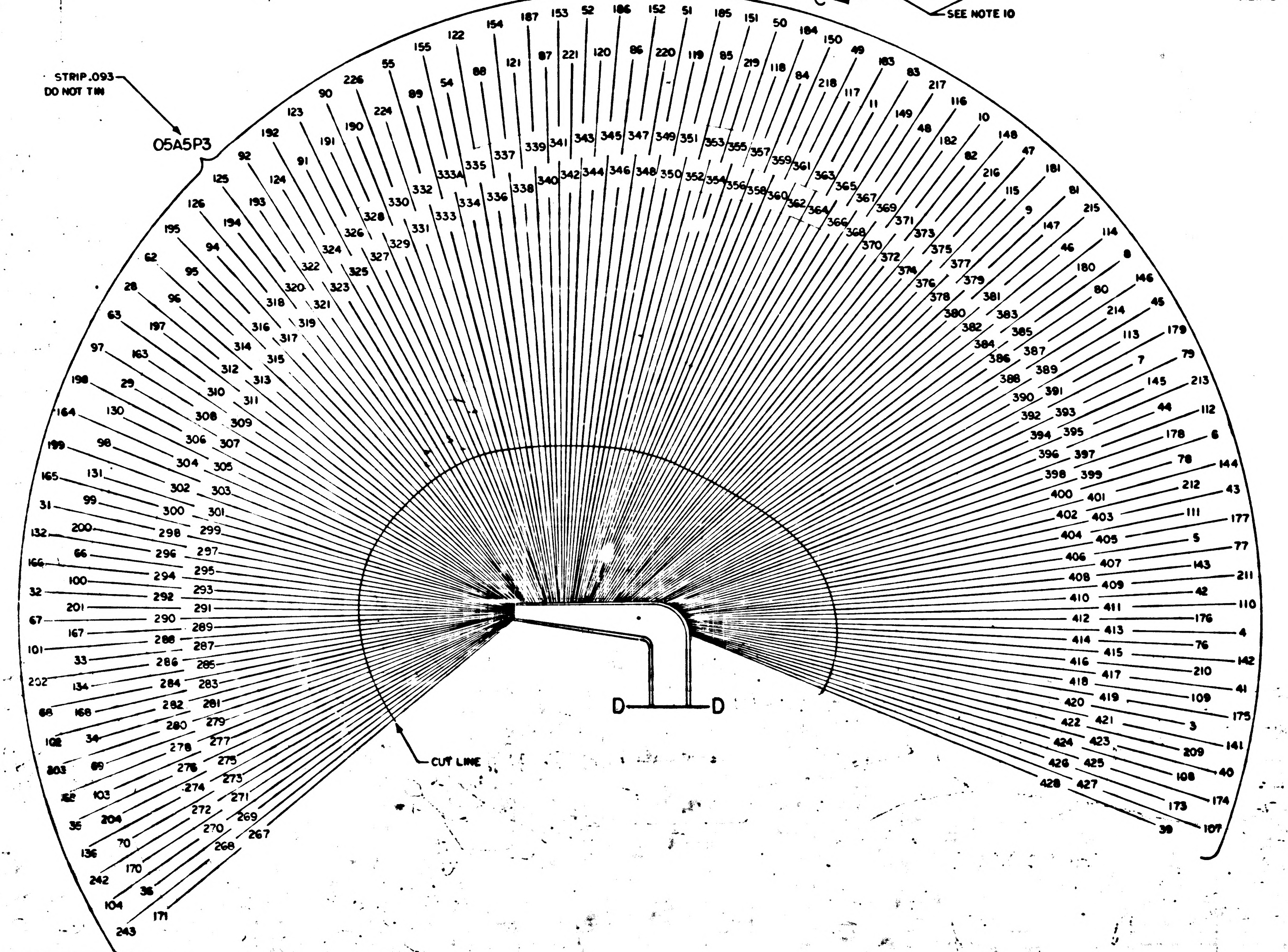
STRIP .093
DO NOT TIN
05A5P3
CUT LINE
D
D

INTERNAL GROUND SHEATH CONNECTIONS			
FROM	TO	LENGTH	FIND NO.
286	287	2 INCHES	16
292	295	2 INCHES	16

JUMPER LIST

FROM	TO	LENGTH	FIND NO.
P4-128	P4-527	AR	16
P4-328	P4-627	AR	16
P4-426	P4-427	AR	27

* *	ATTACH FIND 16 LG 2 1/2
* * *	3 1/2
* * * *	4 1/2
* * * * *	5 1/2
* * * * * *	ATTACH FIND 16 LG 7

Ⓑ REPLACED WITH CHANGE BY REV C

	QTY REQD	PART OR IDENTIFYING NO.	NOMENCLATURE OR DESCRIPTION	FIND NO.
	1	1010815-244	CONNECTOR, PLUG ELEC	33
	☒	1005799	WIRING DIAGRAM	REF
	AR	SEE NOTE 14	INSULATION SLEEVING	32
	AR	SEE NOTE 13	INSULATION SLEEVING	31
	1	1010771-113	CONNECTOR, PLUG ELECTRICAL	30
*	22	1010789-007	WIRE ELEC, AWG 22 BLK	29
*	11	1010789-006	WIRE ELEC, AWG 22 YEL	28
*	.5	1006757-8	WIRE ELEC, NICKEL, ROUND	27
	1	1003731	CONNECTOR ASSY, 360 CONTACTS	26
	2	MS18035-1	BAND MARKER, CABLE	25
	AR	1012507-001	TAPE, LACING	24
	4	1010402-2	SLEEVE, SOLDER	23
	13	1010402-1	SLEEVE, SOLDER	22
*	4	1010789-005	WIRE ELEC, AWG 24, 4 COND TWISTED	21
*	15	1010789-004	WIRE ELEC, AWG 24, 3 COND TWISTED	20
*	20	1010789-003	WIRE ELEC, AWG 24, 2 COND TWISTED	19
*	364	1010789-017	WIRE ELEC, AWG 26, 2 COND TWISTED	18
*	3.5	1010789-001	WIRE ELEC, AWG 24, YEL	17
*	152	1010789-016	WIRE ELEC, AWG 26, YEL	16
*	18	1010789-015	WIRE ELEC AWG 26, 2 COND SHIELDED	15
	732	1010738-5	CONTACT, ELEC, PIN	14
	4	1000242-14	FERRULE, ELEC	13
	4	1000243-23	FERRULE, ELEC	12
	4	1000242-26	FERRULE, ELEC	11
	4	1000243-21	FERRULE, ELEC	10
	4	1000242-33	FERRULE, ELEC	9
	4	1000243-37	FERRULE, ELEC	8
*	3.7	SEE NOTE 3	SLEEVING	7
*	3.8	SEE NOTE 3	SLEEVING	6
*	4	SEE NOTE 3	SLEEVING	5
*	4	SEE NOTE 4	WIRE, BRAID	4
*	3.6	SEE NOTE 4	WIRE, BRAID	3
*	3.5	SEE NOTE 4	WIRE, BRAID	2
	2	1010815-144	CONNECTOR, PLUG ELEC.	1

LIST OF MATERIALS

1005707 C

MASTER

1005000	
NEXT ASSY	USED ON
APPLICATION	

UNLESS OTHERWISE SPECIFIED DIMENSIONS ARE IN INCHES
TOLERANCES ON
FRACTIONS ± — DECIMALS XXX ±.010 ANGLES ± —
DO NOT SCALE THIS DRAWING
MATERIAL —
HEAT TREATMENT —
FINAL FINISH —

MIT INSTRUMENTATION LAB
CAMBRIDGE, MASS.
DRAWN [illegible] DATE [illegible]
CHECKED [illegible]
APPROVAL
APPROVAL E.C. Hall [illegible]
NASA APPROVAL W. J. [illegible] 12-4-64
MIT APPROVAL [illegible]

MANNED SPACECRAFT CENTER
HOUSTON, TEXAS

WIRING HARNESS,
AGC TO PSA & G/N TO SPACECRAFT

CODE IDENT NO. — SIZE J NASA DRAWING NO. 1005707
SCALE 1/1 WT — SHEET 1 OF 3

1005707	B

1373

B	1005707	

A	REVISED PER TD
B	REPLACED WIT BY REV C PER DR R. [illegible] CH

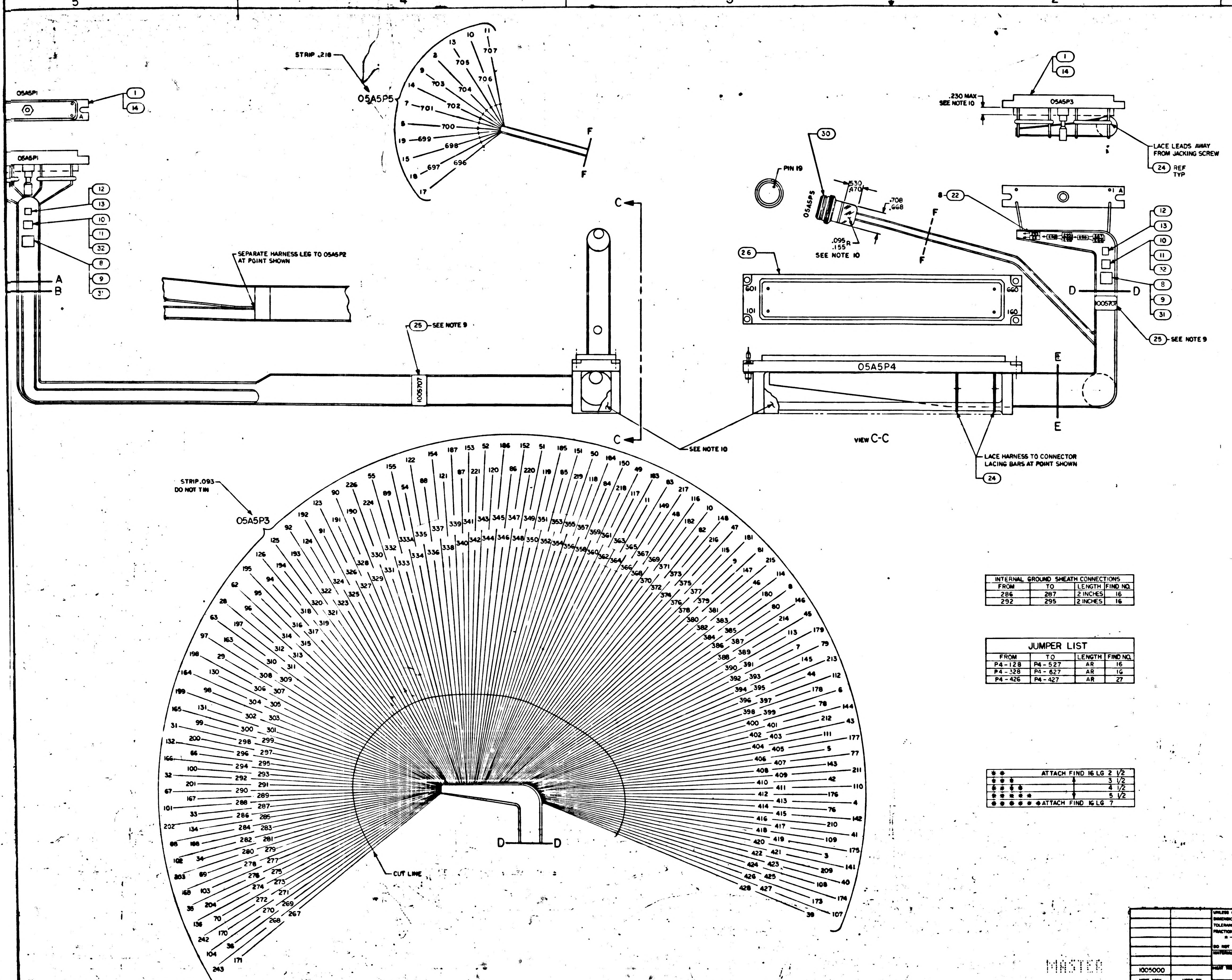

5
4
3
2
05A5P1
1
14
A
12
13
10
11
32
8
9
31
A
B
STRIP .218
05A5P5
13
10
11
707
3
705
706
9
703
704
14
7
701
702
5
700
19
699
698
15
697
696
16
17
F
F
SEPARATE HARNESS LEG TO 05A5P2 AT POINT SHOWN
25 SEE NOTE 9
1005707
C
C
SEE NOTE 10
PIN 19
30
05A5P5
.530
.470
.708
.668
.095 R
.155
SEE NOTE 10
26
601
101
660
160
F
F
8-22
05A5P3
.230 MAX
SEE NOTE 10
LACE LEADS AWAY FROM JACKING SCREW
24 REF TYP
D
D
1005707
25 SEE NOTE 9
05A5P4
E
E
VIEW C-C
LACE HARNESS TO CONNECTOR LACING BARS AT POINT SHOWN
24
STRIP .093 DO NOT TIN
05A5P3
CUT LINE
D
D

INTERNAL GROUND SHEATH CONNECTIONS			
FROM	TO	LENGTH	FIND NO.
286	287	2 INCHES	16
292	295	2 INCHES	16

JUMPER LIST			
FROM	TO	LENGTH	FIND NO.
P4-128	P4-527	AR	16
P4-328	P4-627	AR	16
P4-426	P4-427	AR	27

* *	ATTACH FIND 16 LG 2 1/2
* * *	3 1/2
* * * *	4 1/2
* * * * *	5 1/2
* * * * * *	ATTACH FIND 16 LG 7

Ⓑ REPLACED WITH CHANG

	QTY REQD	PART OR IDENTIFYING NO.	
	1	1010815-244	CONNECTOR,
	☒	1005799	WIRING DIAG
	AR	SEE NOTE 14	INSULATION S
	AR	SEE NOTE 13	INSULATION S
	1	1010771-113	CONNECTOR, R
*	22	1010789-007	WIRE ELEC, AW
*	11	1010789-006	WIRE ELEC, AW
*	.5	1006757-8	WIRE ELEC, NIC
	1	1003731	CONNECTOR AS
	2	MS18035-1	BAND MARKER, C
	AR	1012507-001	TAPE, LACING
	4	1010402-2	SLEEVE, SOLDE
	13	1010402-1	SLEEVE, SOLDE
*	4	1010789-005	WIRE ELEC, AW
*	15	1010789-004	WIRE ELEC, AW
*	20	1010789-003	WIRE ELEC, AW
*	364	1010789-017	WIRE ELEC, AW
*	3.5	1010789-001	WIRE ELEC, AW
*	152	1010789-016	WIRE ELEC, AW
*	18	1010789-015	WIRE ELEC, AW
	732	1010738-5	CONTACT, ELEC
	4	1000242-14	FERRULE, ELEC
	4	1000243-23	FERRULE, EL
	4	1000242-26	FERRULE, EL
	4	1000243-21	FERRULE, EL
	4	1000242-33	FERRULE, ELEC
	4	1000243-37	FERRULE, ELEC
*	3.7	SEE NOTE 3	SLEEVING
*	3.8	SEE NOTE 3	SLEEVING
*	4	SEE NOTE 3	SLEEVING
*	4	SEE NOTE 4	WIRE, BRAID
*	3.6	SEE NOTE 4	WIRE, BRAID
*	3.5	SEE NOTE 4	WIRE, BRAID
	2	1010815-144	CONNECTOR,

LIST OF MATERIALS

1005000	
NEXT ASSY	USED ON
APPLICATION	

UNLESS OTHERWISE SPECIFIED DIMENSIONS ARE IN INCHES
TOLERANCES ON
FRACTIONS ± — DECIMALS XXX ± .010 ANGLES ± —
DO NOT SCALE THIS DRAWING
MATERIAL —
HEAT TREATMENT —
FINAL FINISH —

MIT
INSTRUMENTATION LAB
CAMBRIDGE, MASS
DRAWN Tom Gilham DATE [illegible]
CHECKED [illegible] Aug 22 1964
APPROVAL
APPROVAL E C Hall [illegible]
NASA APPROVAL W. [illegible] 12-4-64
MIT APPROVAL [illegible]

MANNED S
WIRI
AGC TO PSA & G/
CODE IDENT NO. —
SIZE J
SCALE 1/1
WT —

MASTER

1005707 B

1005707 B F273

SHEET 1

[illegible]

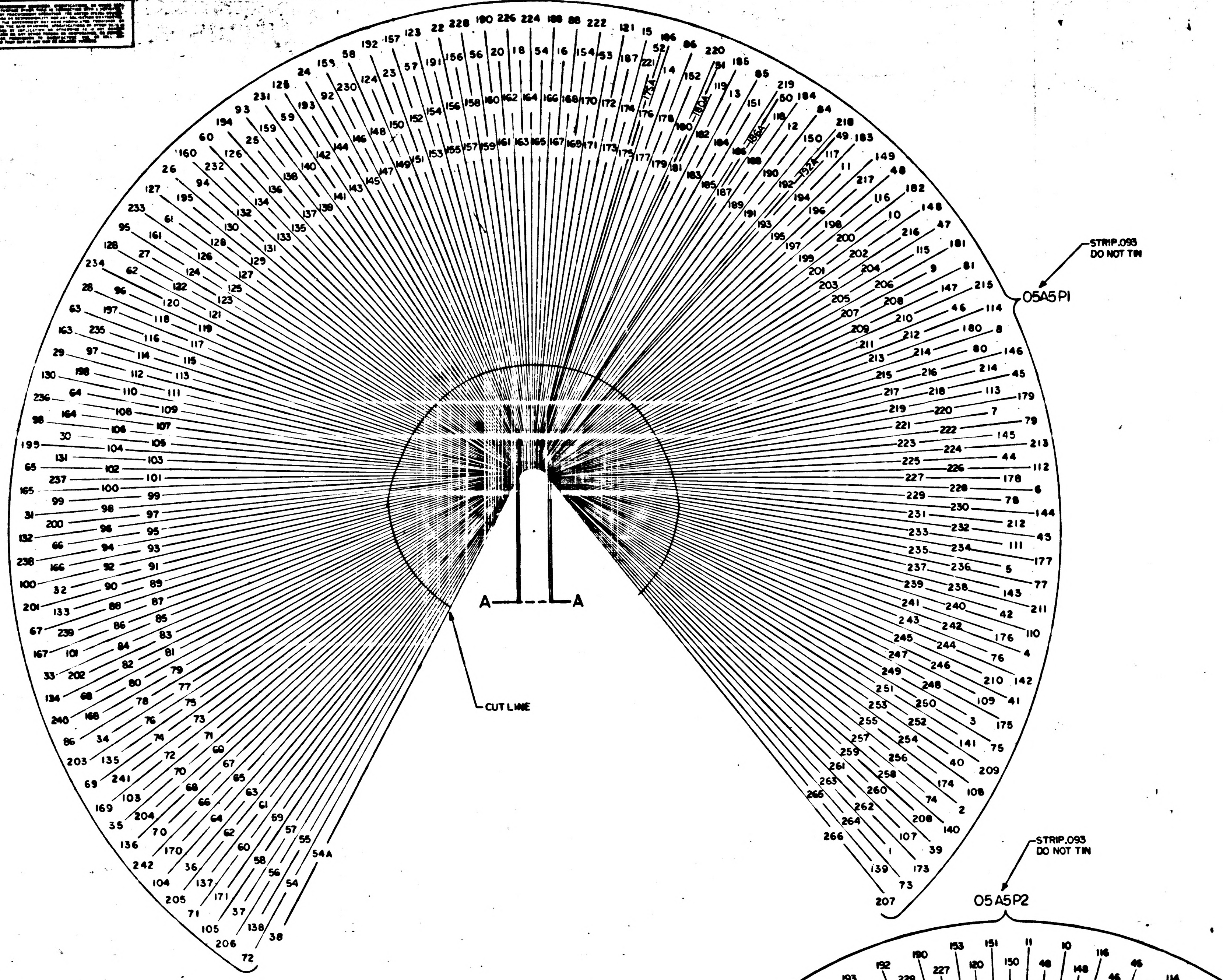
05A5P1
STRIP .093
DO NOT TIN
CUT LINE
A
A

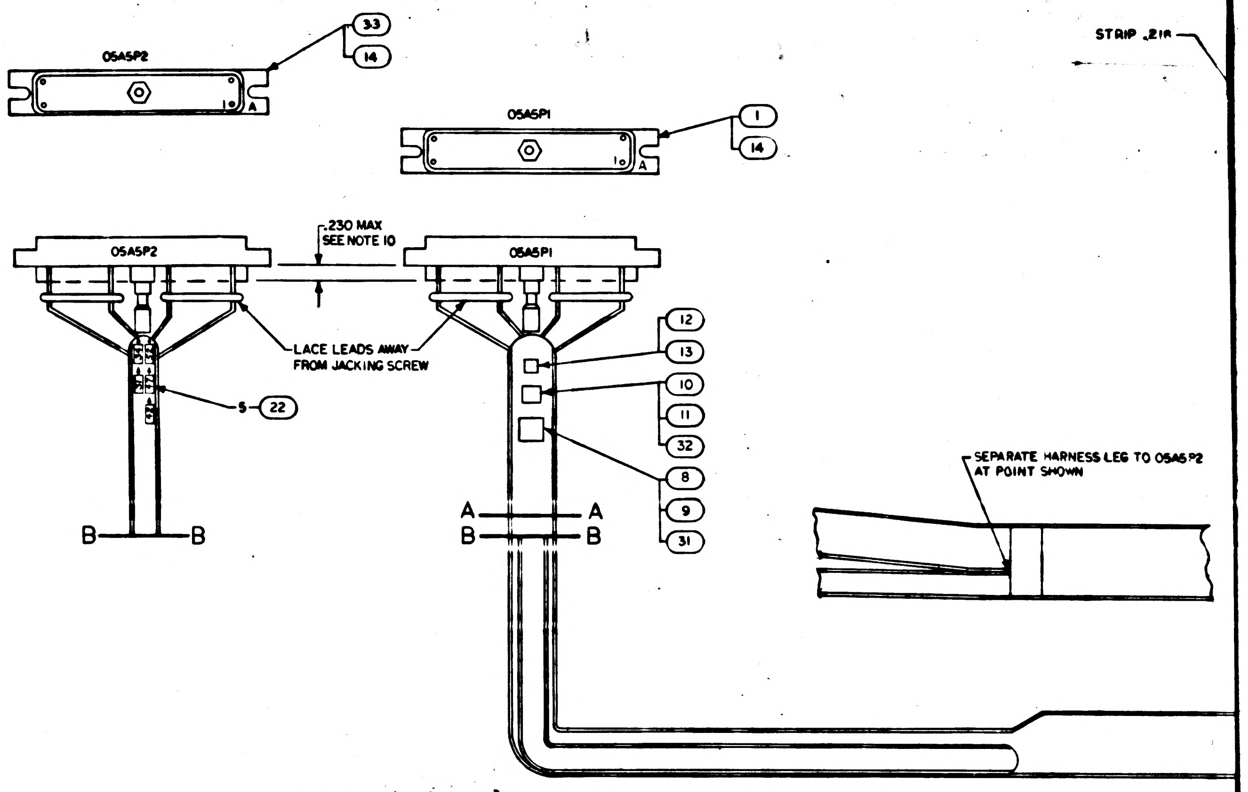
05A5P2
33
14
05A5P1
1
14
.230 MAX
SEE NOTE 10
05A5P2
05A5P1
LACE LEADS AWAY FROM JACKING SCREW
5
22
12
13
10
11
32
8
9
31
A
A
B
B
B
B
STRIP .218
SEPARATE HARNESS LEG TO 05A5P2 AT POINT SHOWN

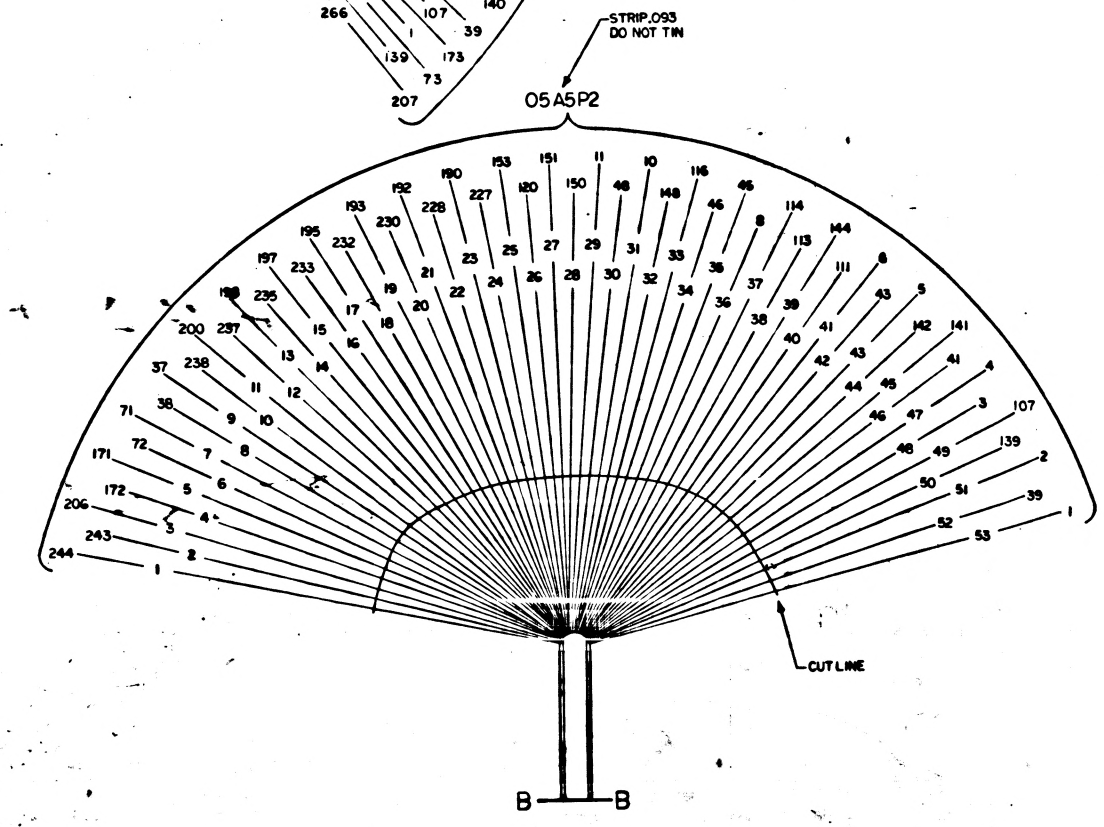
STRIP .093
DO NOT TIN
05A5P2
CUT LINE
B
B

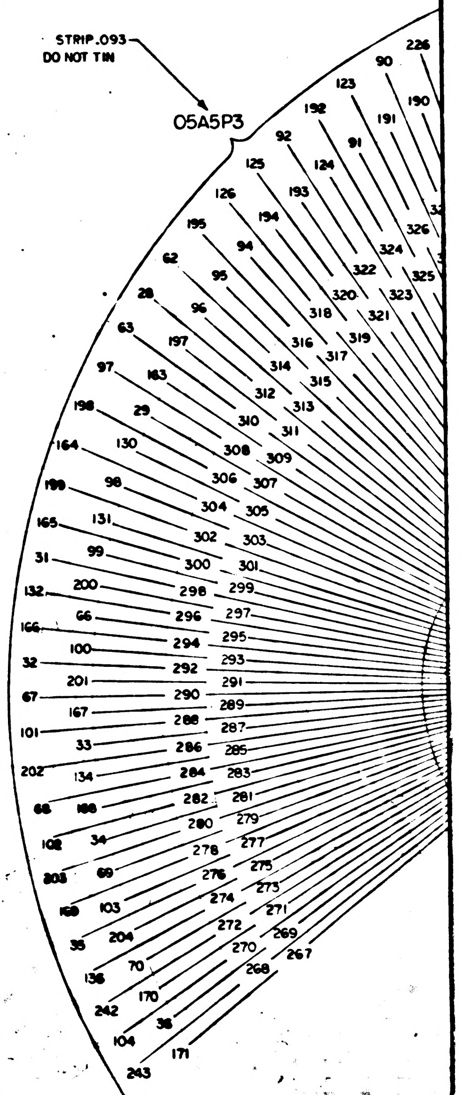
STRIP .093
DO NOT TIN
05A5P3

NOTES

1. INTERPRET DRAWING IN ACCORDANCE WITH STANDARDS PRESCRIBED BY MIL-D-70327
2. FOR SYMBOL FABRICATION AND REQUIRED TESTS SEE ND1002032
3. MIL-I-631 TYPE F, FORM U, GRADE A, CLASS 1, CATAGORY L FOR FIND NO.5 AWG 5/8 FOR FIND NO.6 AWG 3/8, FOR FIND NO.7 AWG 2
4. QQ-B-575 FOR FIND NO.2 BRAID SIZE 1/2, AWG 30 FOR FIND NO.3 BRAID SIZE 1/4, AWG 36 FOR FIND NO.4 BRAID SIZE 5/32
5. ⊕ DENOTES LENGTH IN FEET
6. FEED WIRES THROUGH BRAID AND SLEEVING SLEEVING TO COVER FERRULES AT BOTH ENDS OF CABLES
7. INSTALL CRIMP STYLE TERMINALS IN ACCORDANCE WITH ND1002206
8. AR DENOTES AS REQUIRED
9. MARK .100/.060 HIGH PER ND1002019 USING BLACK MARKING INK 1006271-10
10. ENCAPSULATE INDICATED AREA PER ND1002009 METHOD E, MOUNTING SURFACES OF CONNECTORS MUST NOT BE ENCAPSULATED
11. FOR INTERCONNECTING OF GROUND SHEATH CONNECTIONS SEE INTERNAL GROUND SHEATH CONNECTION CHART
12. TRIM AND DRESS ALL CONNECTOR LEADS AT ASSEMBLY
13. CENTER TWO (2) PIECES 1.5 LONG OF FIND NO.31 (MIL-I-23053, CLASS 1, COLOR BLACK, SIZE 7/16) UNDER FIND NO.8
14. CENTER ONE (1) PIECE 1.5 LONG OF FIND NO.32 (MIL-I-23053, CLASS 1, COLOR BLACK, SIZE NO.4) UNDER FIND NO.10
15. TEST PER FTM 1005707

SHEET 1

REVISIONS			
SYM	DESCRIPTION	DATE	APPROVAL
A	REVISED PER TDRR 13344	11/14/68	
B	REPLACED WITH CHANGE BY REV C PER TDRR 16535 DR R. Guilard CHK	3/24/69	

1005707 B

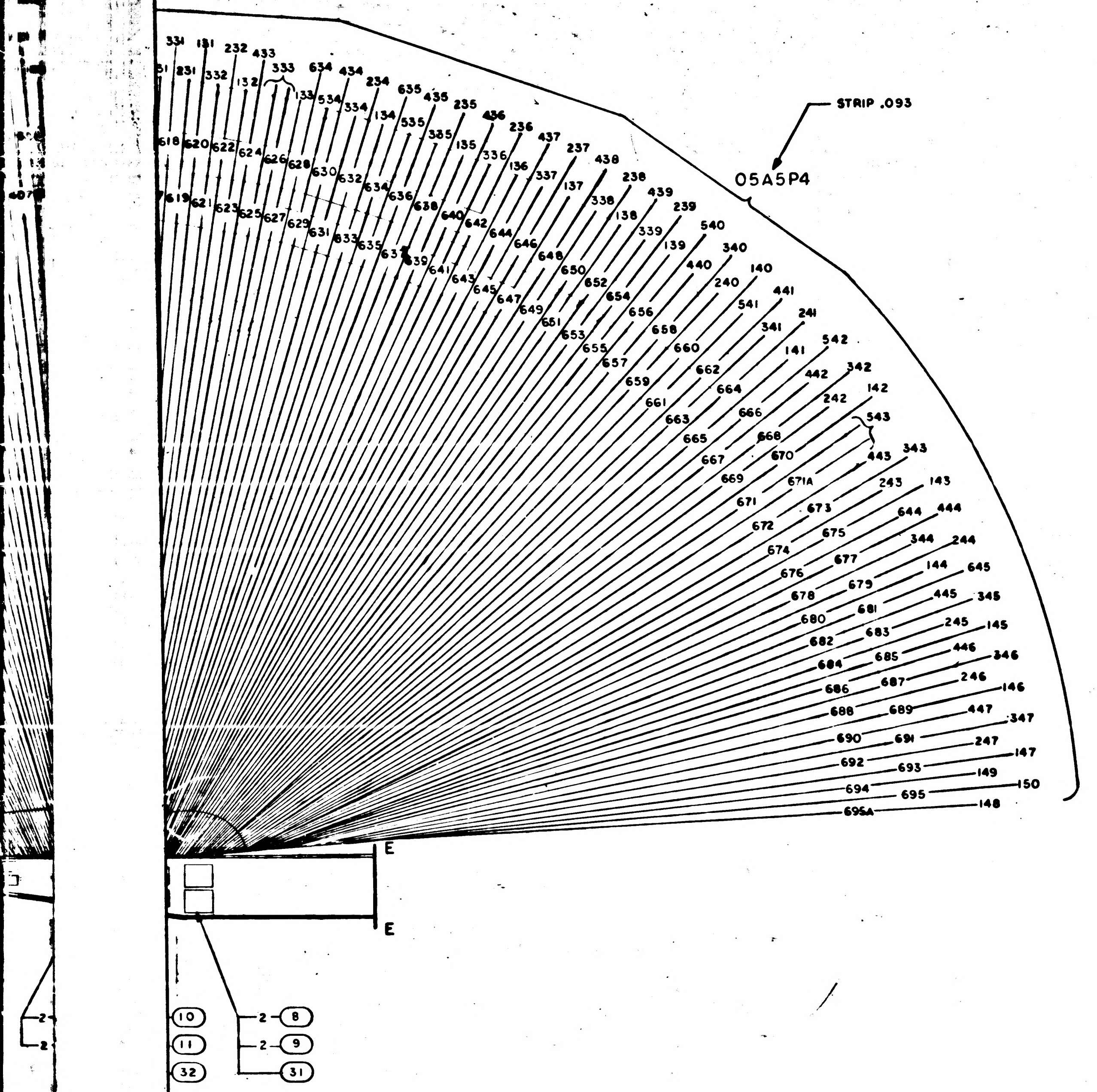

STRIP .093
05A5P4
331 131 232 433 333 634 434 234 635 435 235 436 236 437 237 438 238 439 239 540 340 140 441 241 542 342 142 543 343 143 444 244 645 345 145 346 146 347 147 150 148
231 332 132 133 534 334 134 535 335 135 336 136 337 137 338 138 339 139 440 240 541 341 141 442 242 443 243 644 344 144 445 245 446 246 447 247 149
618 620 622 624 626 628 630 632 634 636 638 640 642 644 646 648 650 652 654 656 658 660 662 664 666 668 670 671A 673 675 677 679 681 683 685 687 689 691 693 695
619 621 623 625 627 629 631 633 635 637 639 641 643 645 647 649 651 653 655 657 659 661 663 665 667 669 671 672 674 676 678 680 682 684 686 688 690 692 694 695A
E
E
2 8
2 9
31
10
11
32
2
2

Ⓑ REPLACED WITH CHANGE BY REV C

QTY REQD	PART OR IDENTIFYING NO.	NOMENCLATURE OR DESCRIPTION	FIND NO.

LIST OF MATERIALS

UNLESS OTHERWISE SPECIFIED DIMENSIONS ARE IN INCHES
TOLERANCES ON
FRACTIONS ± DECIMALS ± ANGLES ±
DO NOT SCALE THIS DRAWING
MATERIAL
HEAT TREATMENT
FINAL FINISH

NEXT ASSY | USED ON
APPLICATION

MIT
INSTRUMENTATION LAB
CAMBRIDGE, MASS
DRAWN A. Bi Lay DATE
CHECKED
APPROVAL
APPROVAL E C Hall
NASA APPROVAL 11-4-64
MIT APPROVAL

MANNED SPACECRAFT CENTER
HOUSTON, TEXAS

WIRING HARNESS, AGC TO PSA & G/N TO SPACECRAFT

CODE IDENT NO. — SIZE J NASA DRAWING NO. 1005707
SCALE 1/1 WT — SHEET 2 OF 3

MASTER

1005707 B

1005707 B

E2/2

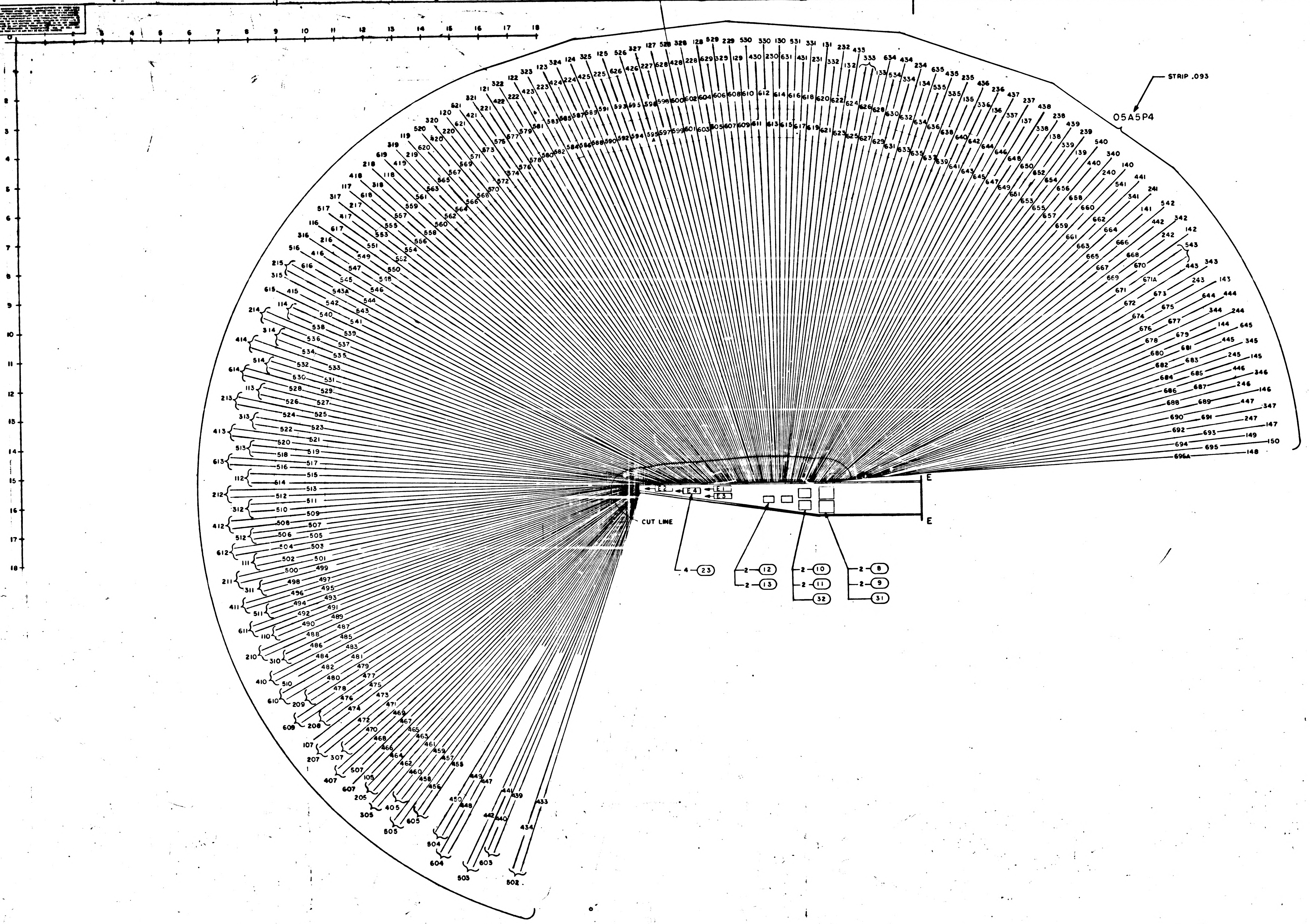
STRIP .093
05A5P4
CUT LINE
E
E
E4
E1
E3
E2
4 — 23
2 — 12
2 — 13
2 — 10
2 — 11
32
2 — 8
2 — 9
31

1005707 B

SHEET 2

REVISIONS 13			
SYM	DESCRIPTION	DATE	APPROVAL
A	REVISED PER TDRR 143vu	11/16/64	WK
B	REPLACED WITH CHANGE BY REV C PER TDRR 16535 DR R. Zeichel CHK R.A.E.	3/23/65	

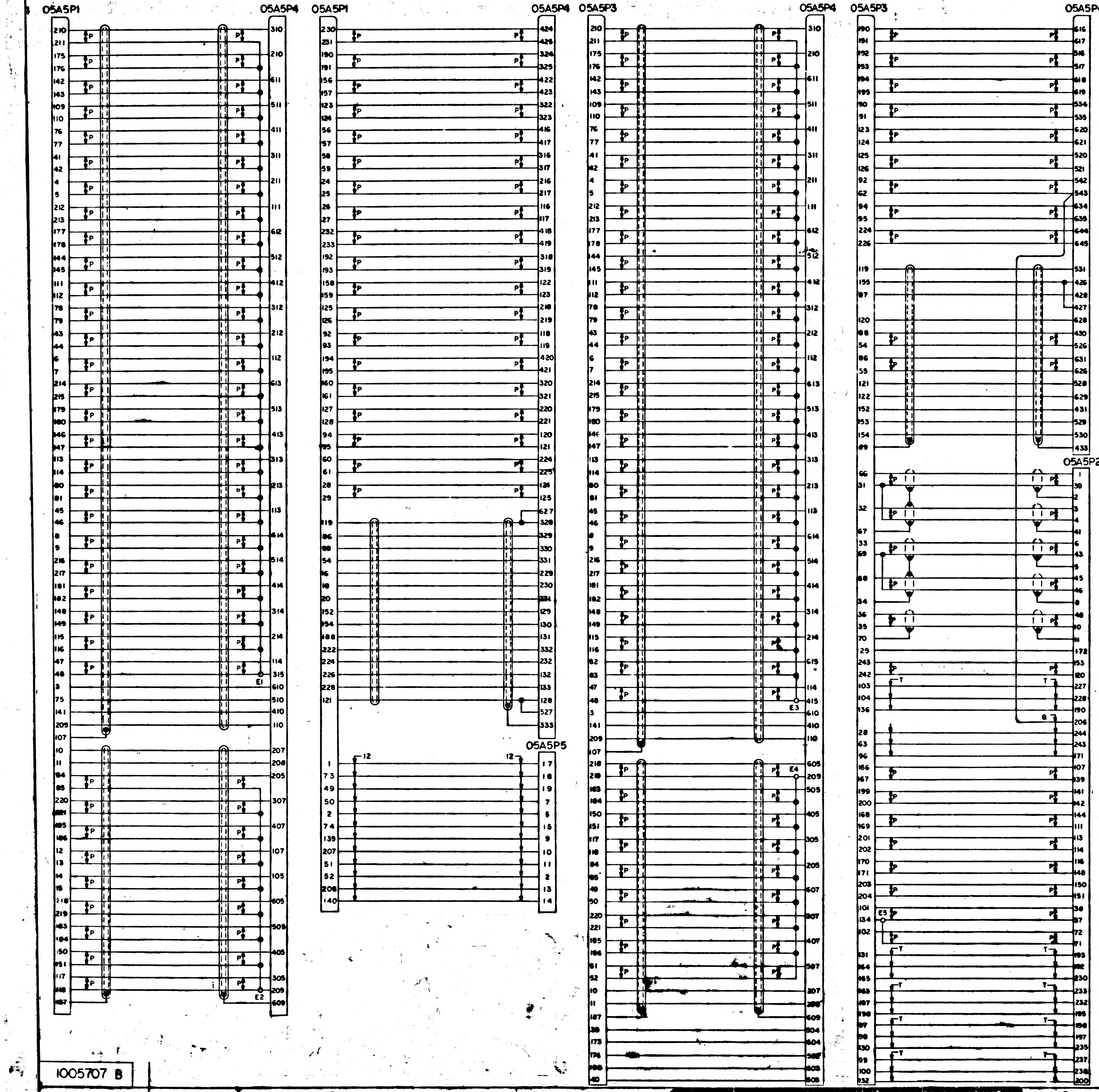

05A5P1
05A5P4
05A5P1
05A5P4
05A5P3
05A5P4
05A5P3
05A5P4
05A5P2
05A5P5
E1
E2
E3
E4
E5
P
T
12

Ⓑ REPLACED WITH CHANGE BY REV C

QTY REQD	PART OR IDENTIFYING NO.	NOMENCLATURE OR DESCRIPTION	FIND NO.

LIST OF MATERIALS

NEXT ASSY	USED ON

APPLICATION

UNLESS OTHERWISE SPECIFIED
DIMENSIONS ARE IN INCHES
TOLERANCES ON
FRACTIONS ± — DECIMALS ± — ANGLES ± —
DO NOT SCALE THIS DRAWING
MATERIAL
HEAT TREATMENT
FINAL FINISH

MIT
INSTRUMENTATION LAB
CAMBRIDGE, MASS

DRAWN DATE Oct 64
CHECKED
APPROVAL
APPROVAL
NASA APPROVAL
MIT APPROVAL

MANNED SPACECRAFT CENTER
HOUSTON, TEXAS

WIRING HARNESS,
AGC TO PSA & G/N TO SPACECRAFT

CODE IDENT NO. —
SIZE J
NASA DRAWING NO. 1005707
SCALE NONE
WT
SHEET 3 OF 3

3/3

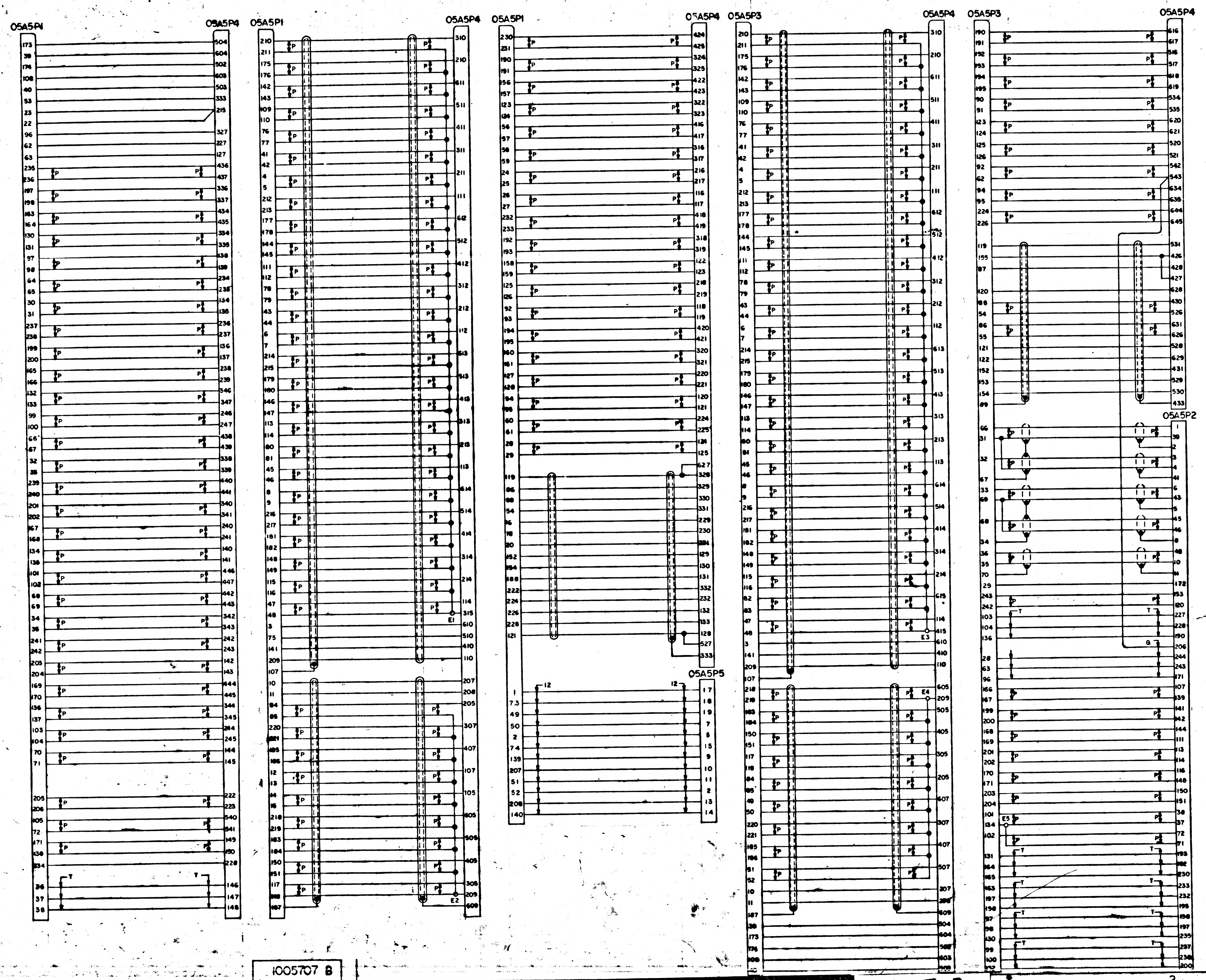
05A5P1
05A5P4
05A5P1
05A5P4
05A5P1
05A5P4
05A5P3
05A5P4
05A5P3
05A5P4
05A5P2
05A5P5
E1
E2
E3
E4
E5
P
T
12

UNLESS OTHERWISE SPECIFIED
DIMENSIONS ARE IN INCHES
TOLERANCES ON
FRACTIONS DECIMALS
DO NOT SCALE THIS DRAWING
MATERIAL
HEAT TREATMENT
FINAL FINISH
NEXT ASSY USED ON
APPLICATION

9 8 7 6

D C B A

ASSEMBLY INFORMATION CHART

FROM		DESCRIPTION			TO	
REMARKS	RUN NO.	COLOR	AWG	FIND NO.	RUN NO.	REMARKS
	245	YEL	26	18	487	
	238	RED			E1	
	248	YEL			489	
	241	RED			E1	
	244	YEL			493	
	237	RED			E1	
	247	YEL			495	
	240	RED			E1	
	243	YEL			497	
	236	RED			E1	
	246	YEL			499	
	239	RED			E1	
	242	YEL			501	
	235	RED			E1	
	231	YEL			503	
	224	RED			E1	
	234	YEL			505	
	227	RED			E1	
	230	YEL			507	
	223	RED			E1	
	233	YEL			509	
	226	RED			E1	
	229	YEL			511	
	222	RED			E1	
	232	YEL			513	
	225	RED			E1	
ATTACH FIND NO. 2 LG 29 1/4 FIND NO. 5 LG 29 1/2 AND FIND NO. 8 & 9 SEE NOTE 6	228	YEL			515	
	221	RED			E1	
	217	YEL			517	
	210	RED			E1	
	220	YEL			519	
	213	RED			E1	
	216	YEL			521	
	209	RED			E1	
	219	YEL			523	
	212	RED			E1	
	215	YEL			525	
	208	RED			E1	
	218	YEL			527	
	211	RED			E1	
	214	YEL			529	
	207	RED			E1	
	203	YEL			531	
	197	RED			E1	
	206	YEL			533	
	200	RED			E1	
	202	YEL			535	
	196	RED			E1	
	205	YEL			537	
	199	RED			E1	
	204	YEL			539	
	198	RED			E1	
	E1	YEL		16	542	***
	249				481	
	250				483	
	251				485	
	252				491	
****	261	SHLD				
	416	YEL	26	18	486	
	409	RED			E3	
	419	YEL			488	
	412	RED			E3	
	415	YEL			492	
	408	RED			E3	
	418	YEL			494	
	411	RED			E3	
	414	YEL			496	
	407	RED			E3	
	417	YEL			498	
	410	RED			E3	
	413	YEL			500	
	406	RED			E3	
	402	YEL			502	
	395	RED			E3	
	405	YEL			504	
	398	RED			E3	
	401	YEL			506	
	394	RED			E3	
	404	YEL			508	
ATTACH FIND NO. 2 LG 9 FIND NO. 5 LG 9 1/4 AND FIND NO. 8 & 9 SEE NOTE 6	397	RED			E3	
	400	YEL			510	
	393	RED			E3	
	403	YEL			512	
	396	RED			E3	
	399	YEL			514	
	392	RED			E3	
	388	YEL			516	
	381	RED			E3	
	391	YEL			518	
	384	RED			E3	
	387	YEL			520	
	380	RED			E3	
	390	YEL			522	
	383	RED			E3	
	386	YEL			524	
	379	RED			E3	
	389	YEL			526	
	382	RED			E3	
	385	YEL			528	
	378	RED			E3	
	374	YEL			530	
	367	RED			E3	
	377	YEL			532	
	370	RED			E3	
	373	YEL			534	
	366	RED			E3	
	376	YEL			536	
	369	RED			E3	
	372	YEL			540	
	365	RED			E3	
	375	YEL			538	
	368	RED			E3	
	E3	YEL		16	541	***
	420				482	
	421				484	
	422				490	
****	427	SHLD				

ASSEMBLY INFORMATION CHART

FROM		DESCRIPTION			TO	
REMARKS	RUN NO.	COLOR	AWG	FIND NO.	RUN NO.	REMARKS
	201	YEL	26	16	473	
	195	YEL		16	475	
	190	YEL		18	463	
	184	RED			E2	
	180	YEL			471	
	175	RED			E2	
ATTACH FIND NO. 3 LG 30 1/2 FIND NO. 6 LG 30 3/4 AND FIND NO. 10 & 11 SEE NOTE 6	182	YEL			469	
	176	RED			E2	
	189	YEL			474	
	183	RED			E2	
	177	YEL			465	
	174	RED			E2	
	192	YEL			455	
	186	RED			E2	
	194	YEL			457	
	188	RED			E2	
	191	YEL			459	
	185	RED			E2	
	193	YEL			461	
	187	RED			E2	
	E2	YEL		16	479	**
***	173	SHLD		16	477	******
	360	YEL	26	18	456	
	354	RED			E4	
	363	YEL			458	
	357	RED			E4	
	359	YEL			460	
	353	RED			E4	
	362	YEL			462	
	356	RED			E4	
	358	YEL			464	
ATTACH FIND NO. 3 LG 10 FIND NO. 6 LG 10 1/4 AND FIND NO. 10 & 11 SEE NOTE 6	352	RED			E4	
	361	YEL			466	
	355	RED			E4	
	348	YEL			470	
	342	RED			E4	
	351	YEL			468	
	345	RED			E4	
	349	YEL			467	
	343	RED			E4	
	371	YEL		16	472	
	364	YEL			476	
	E4	YEL			480	**
***	339	SHLD			478	******
	181	YEL	26	16	602	
	178				607	
	168				612	
	165				618	
	167				608	
ATTACH FIND NO. 4 LG 11 FIND NO. 7 LG 11 1/4 AND FIND NO. 12 & 13 SEE NOTE 6	163				613	
	161				619	
	179				609	
	169				614	
	166				620	
	170				621	
	164				622	
	162				623	
	158				627	
	172				604	
		SHLD			626	**
	350	YEL	26	16	616	
	333A				595A	
	340				601	
	344				599	
	338				600	
ATTACH FIND NO. 4 LG 11 FIND NO. 7 LG 11 1/4 AND FIND NO. 12 & 13 SEE NOTE 6 ***	335				605	
	347				617	
	341				606	
	337				610	
	336	YEL		18	611	
	334	RED			595	
	346	YEL		18	615	
	332	RED			594	
	333	SHLD		16	624	**
	115	YEL	26	18	640	
	108	RED			644	
	117	YEL			641	
	111	RED			645	
	114	YEL			630	
	107	RED			636	
	110	YEL			631	
	103	RED			637	
	113	YEL			651	
	106	RED			655	
	109	YEL			632	
	102	RED			638	
	105	YEL			633	
	98	RED			639	
	101	YEL			642	
	94	RED			646	
	104	YEL			643	
	97	RED			647	
	100	YEL			650	
	93	RED			654	
	96	YEL			687	
	89	RED			691	
	99	YEL			688	
	92	RED			692	
	95	YEL			648	
	88	RED			652	
	91	YEL			649	
	84	RED			653	
	87	YEL			657	
	80	RED			662	
	90	YEL			658	
	83	RED			663	
	86	YEL			659	
	79	RED			664	
	82	YEL			660	
	75	RED			665	

ASSEMBLY INFORMATION CHART

FROM		DESCRIPTION			TO	
REMARKS	RUN NO.	COLOR	AWG	FIND NO.	RUN NO.	REMARKS
	81	YEL	26	18	667	
	74	RED			672	
	77	YEL			668	
	70	RED			673	
	73	YEL			669	
	66	RED			674	
	76	YEL			670	
	69	RED			675	
	72	YEL			677	
	65	RED			682	
	68	YEL			678	
	61	RED			683	
	71	YEL			679	
	64	RED			684	
	67	YEL			680	
	60	RED			685	
	85	YEL			686	
	78	RED			690	
	62	YEL			580	
	56	RED			584	
	58	YEL			656	
	54	RED			661	
	59	YEL			694	
	55	RED			695	
	147	YEL			586	
	140	RED			590	
	160	YEL			587	
	155	RED			591	
	157	YEL			578	
	152	RED			582	
	154	YEL			579	
	149	RED			583	
	159	YEL			546	
	153	RED			552	
	148	YEL			547	
	141	RED			553	
	144	YEL			548	
	137	RED			554	
	130	YEL			549	
	123	RED			555	
	133	YEL			557	
	126	RED			562	
	150	YEL			558	
	143	RED			563	
	146	YEL			581	
	139	RED			585	
	142	YEL			559	
	135	RED			564	
	145	YEL			560	
	138	RED			565	
	136	YEL			568	
	129	RED			574	
	132	YEL			569	
	125	RED			575	
	128	YEL			570	
	122	RED			576	
	131	YEL			571	
	124	RED			577	
	134	YEL			588	
	127	RED			592	
	118	YEL			589	
	112	RED			593	
	329	YEL			544	
	327	RED			550	
	324	YEL			545	
	321	RED			551	
	319	YEL			556	
	316	RED			561	
	328	YEL			629	
	325	RED			635	
	326	YEL			565	
	323	RED			572	
	320	YEL			567	
	318	RED			573	
	322	YEL			666	
	314	RED			671	
	317	YEL			628	
	315	RED			634	
	331	YEL			676	
	330	RED			681	
	25	YEL			268	
	26	RED			272	
	50	YEL			289	
	49	RED			294	
	46	YEL			302	
	44	RED			297	
	40	YEL			278	
	39	RED			283	
	38	YEL			291	
	37	RED			286	
	32	YEL			267	
	33	RED			271	
	27	YEL			275	
	28	RED			280	
	260	YEL	26	17	449	
	262				447	
	255				433	
	254				439	
	253				441	
	171				625	
	151				543	
	156				543A	
	119				596	
	121				597	
	116				598	
	426				450	
	428				448	
	425				434	
	424				440	
	423				442	
	120				603	

ASSEMBLY INFORMATION CHART

FROM		DESCRIPTION			TO	
REMARKS	RUN NO.	COLOR	AWG	FIND NO.	RUN NO.	REMARKS
	7	YEL	24	19	E5	
	6	RED			282	
	8	YEL	24	19	288	
	9	RED			E5	
	E5	YEL	24	17	285	
	19	YEL	24	20	301	
	21	RED			304	
	20	GRN			300	
	16	YEL			309	
	18	RED			311	
	17	GRN			306	
	13	YEL			308	
	15	RED			303	
	14	GRN			305	
	12	YEL			299	
	10	RED			293	
	11	GRN			296	
	22	YEL			270	
	23	RED			274	
	24	GRN			277	
	54A	YEL			695A	
	57	RED			693	
	63	GRN			689	
	3	YEL	24	21	671A	
	1	RED			312	
	2	GRN			310	
	5	BRN			313	
	4	YEL	24	17	307	
	53	YEL	26	15	295	SEE NOTE 11
	52	RED			298	
****	51	SHLD				
	48	YEL			292	
	47	RED			298	
****	46	SHLD			290	*****
	41	YEL			287	
	42	RED			279	SEE NOTE 11
	43	SHLD				
	35	YEL			284	
	34	RED			279	
****	36	SHLD			281	*****
	30	YEL			269	SEE NOTE 11
	31	RED			276	
****	29	SHLD			273	
	263	YEL	22	28	696	
	264				697	
	186A				701	
	192A				699	
	265				703	
	266				706	TWIST 12 CONDUCTORS TOGETHER
	175A				704	
	180A				707	
	256	BLK		29	700	
	257				698	
	268				702	
	269				705	

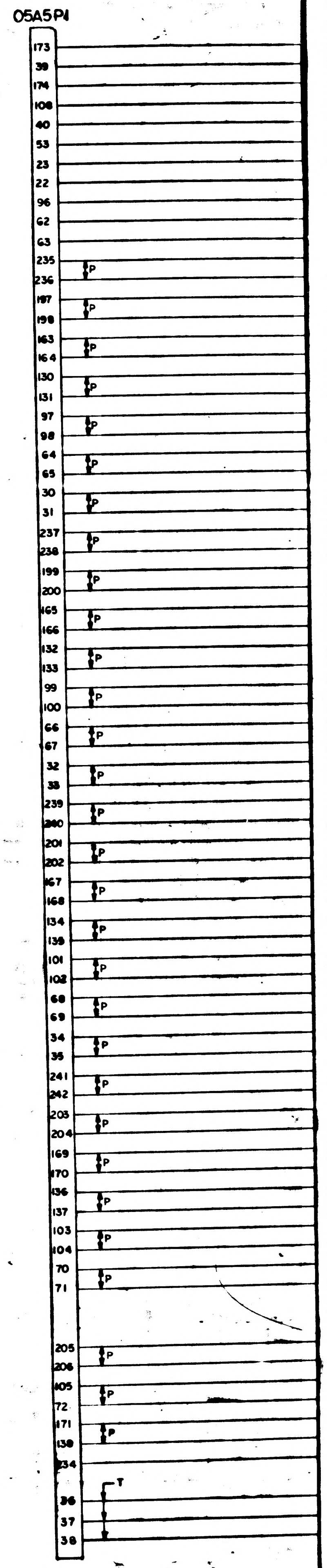

1005707 B

SHEET 3

SYM	DESCRIPTION	DATE	APPROVAL
C	REPLACES REV B WITH CHANGES PER TDRR 16535	4/29/64	

1005707 C

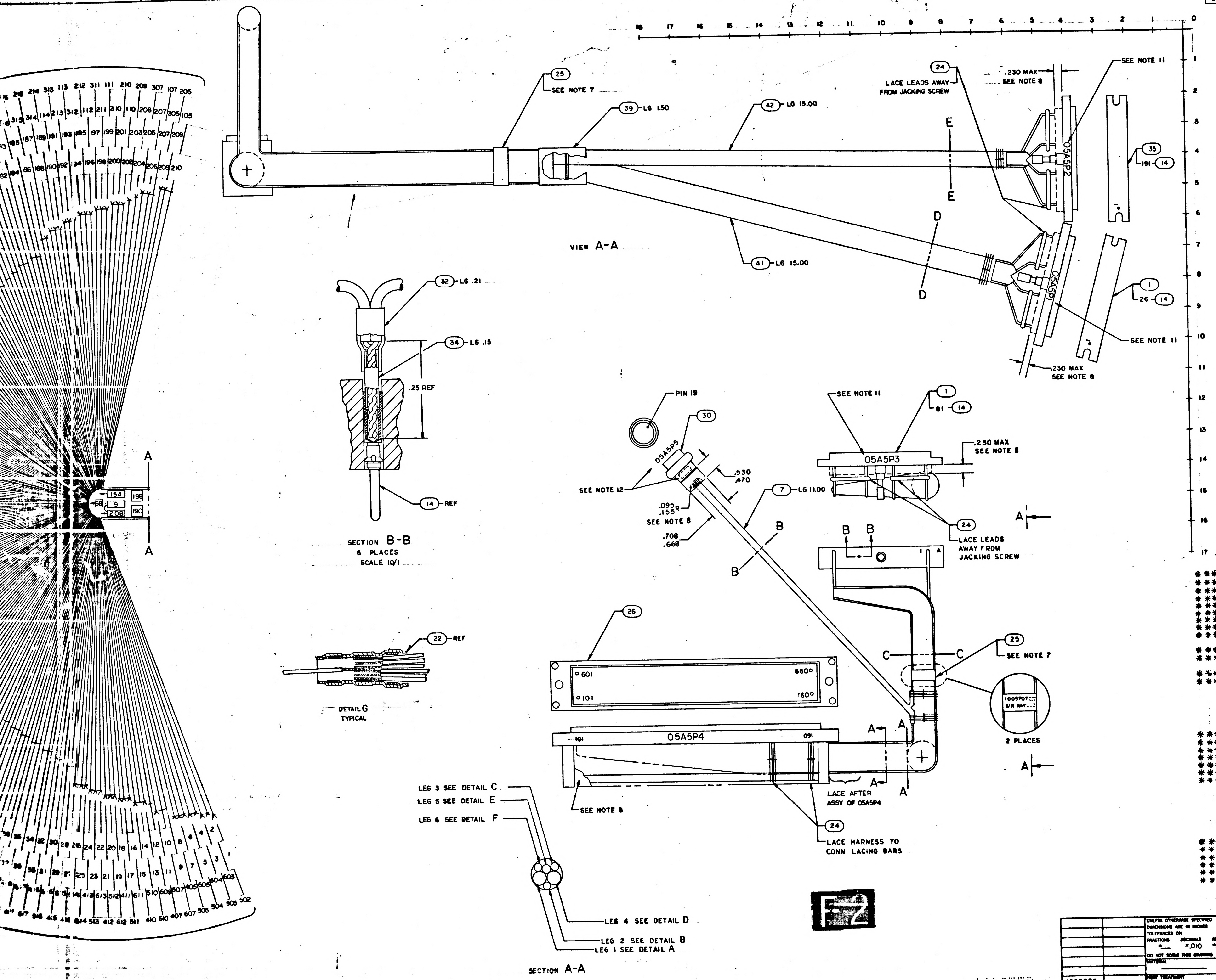

VIEW A-A
SEE NOTE 7
LG 1.50
LG 15.00
LACE LEADS AWAY FROM JACKING SCREW
.230 MAX
SEE NOTE 8
SEE NOTE 11
05A5P2
05A5P1
E
D
191
26
SECTION B-B
6 PLACES
SCALE 10/1
LG .21
LG .15
.25 REF
REF
PIN 19
05A5P5
SEE NOTE 12
.530
.470
.095
.155R
.708
.668
LG 11.00
05A5P3
81
LACE LEADS AWAY FROM JACKING SCREW
DETAIL G
TYPICAL
601
660
101
160
05A5P4
LACE AFTER ASSY OF 05A5P4
SEE NOTE 8
LACE HARNESS TO CONN LACING BARS
1005707
S/N RAY
2 PLACES
LEG 3 SEE DETAIL C
LEG 5 SEE DETAIL E
LEG 6 SEE DETAIL F
LEG 4 SEE DETAIL D
LEG 2 SEE DETAIL B
LEG 1 SEE DETAIL A
SECTION A-A
F-2
MASTER

© REPLACES REV B WITH CHANGES

	QTY REQD	PART OR IDENTIFYING NO.	NOMENCLATURE OR DESCRIPTION	FIND NO.
		1005799	WIRING DIAGRAM	REF
	2	1000242-26	FERRULE, ELEC	44
	2	1000243-27	FERRULE, ELEC	43
* * *	1.5	SEE NOTE 3	SLEEVING	42
* * *	1.5	SEE NOTE 3	SLEEVING	41
* * *	3.5	SEE NOTE 3	SLEEVING	40
* * *	.2	1006322-025	INSULATION, SLEEVING	39
* * *	.5	1006322-022	INSULATION, SLEEVING	38
* * *	.5	1006322-018	INSULATION, SLEEVING	37
* * *	4.3	1006322-007	INSULATION, SLEEVING	36
* * *	.5	1006322-019	INSULATION, SLEEVING	35
* * *	.2	1006322-001	INSULATION, SLEEVING	34
	1	1010815-244	CONNECTOR, PLUG ELEC	33
* * *	.2	1006322-004	INSULATION, SLEEVING	32
* * *	.5	1006322-020	INSULATION, SLEEVING	31
	1	1010771-013	CONNECTOR, PLUG ELEC	30
* * *	22	1010789-007	WIRE ELEC, AWG 22 BLK	29
* * *	11	1010789-006	WIRE ELEC, AWG 22 YEL	28
				~~27~~
	1	1003731	CONNECTOR ASSY, 360 CONTACTS	26
	2	MS18035-1-2	BAND MARKER, CABLE	25
	AR	1012507-003	TAPE, LACING	24
	10	1010402-2	SLEEVE, SOLDER	23
	17	1010402-1	SLEEVE, SOLDER	22
* * *	4	1010789-005	WIRE ELEC AWG 24, 4 COND TWISTED	21
* * *	15	1010789-004	WIRE ELEC AWG 24, 3 COND TWISTED	20
* * *	20	1010789-003	WIRE ELEC AWG 24, 2 COND TWISTED	19
* * *	364	1010789-017	WIRE ELEC AWG 26, 2 COND TWISTED	18
* * *	3.5	1010789-001	WIRE ELEC AWG 24, YEL	17
* * *	170	1010789-016	WIRE ELEC AWG 26, YEL	16
* * *	18	1010789-015	WIRE ELEC AWG 26, 2 COND SHIELDED	15
	732	1010738-5	CONTACT, ELEC, PIN	14
	2	1000242-37	FERRULE, ELEC	13
	2	1000243-41	FERRULE, ELEC	12
	4	1000242-32	FERRULE, ELEC	11
	4	1000243-34	FERRULE, ELEC	10
	4	1000242-29	FERRULE, ELEC	9
	4	1000243-31	FERRULE, ELEC	8
* * *	3.5	SEE NOTE 3	SLEEVING	7
* * *	3.5	SEE NOTE 3	SLEEVING	6
* * *	3.5	SEE NOTE 3	SLEEVING	5
* * *	3.5	SEE NOTE 4	WIRE, BRAID	4
* * *	3.5	SEE NOTE 4	WIRE, BRAID	3
* * *	3.5	SEE NOTE 4	WIRE, BRAID	2
	2	1010815-144	CONNECTOR, PLUG ELEC	1

LIST OF MATERIALS

1005707 C

1005000		UNLESS OTHERWISE SPECIFIED DIMENSIONS ARE IN INCHES TOLERANCES ON FRACTIONS ± DECIMALS ±.010 ANGLES ±	MIT INSTRUMENTATION LAB CAMBRIDGE, MASS.	MANNED SPACECRAFT CENTER HOUSTON, TEXAS
NEXT ASSY	USED ON	DO NOT SCALE THIS DRAWING	DRAWN C. Maggi DATE 15 FEB 64	WIRING. HARNESS AGC TO PSA & G/N TO SPACECRAFT
APPLICATION		MATERIAL	CHECKED	
		HEAT TREATMENT	APPROVAL	
		FINAL FINISH	APPROVAL	
			NASA APPROVAL	CODE IDENT NO. —— SIZE J DRAWING NO. 1005707
			MIT APPROVAL	SCALE 1/1 WT —— SHEET 1 OF 4

7 6 5 4

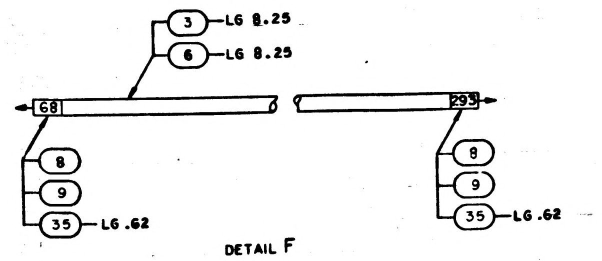
3 LG 8.25
6 LG 8.25
68
293
8
9
35 LG .62
8
9
35 LG .62

DETAIL F
LEG 6
SCALE NONE

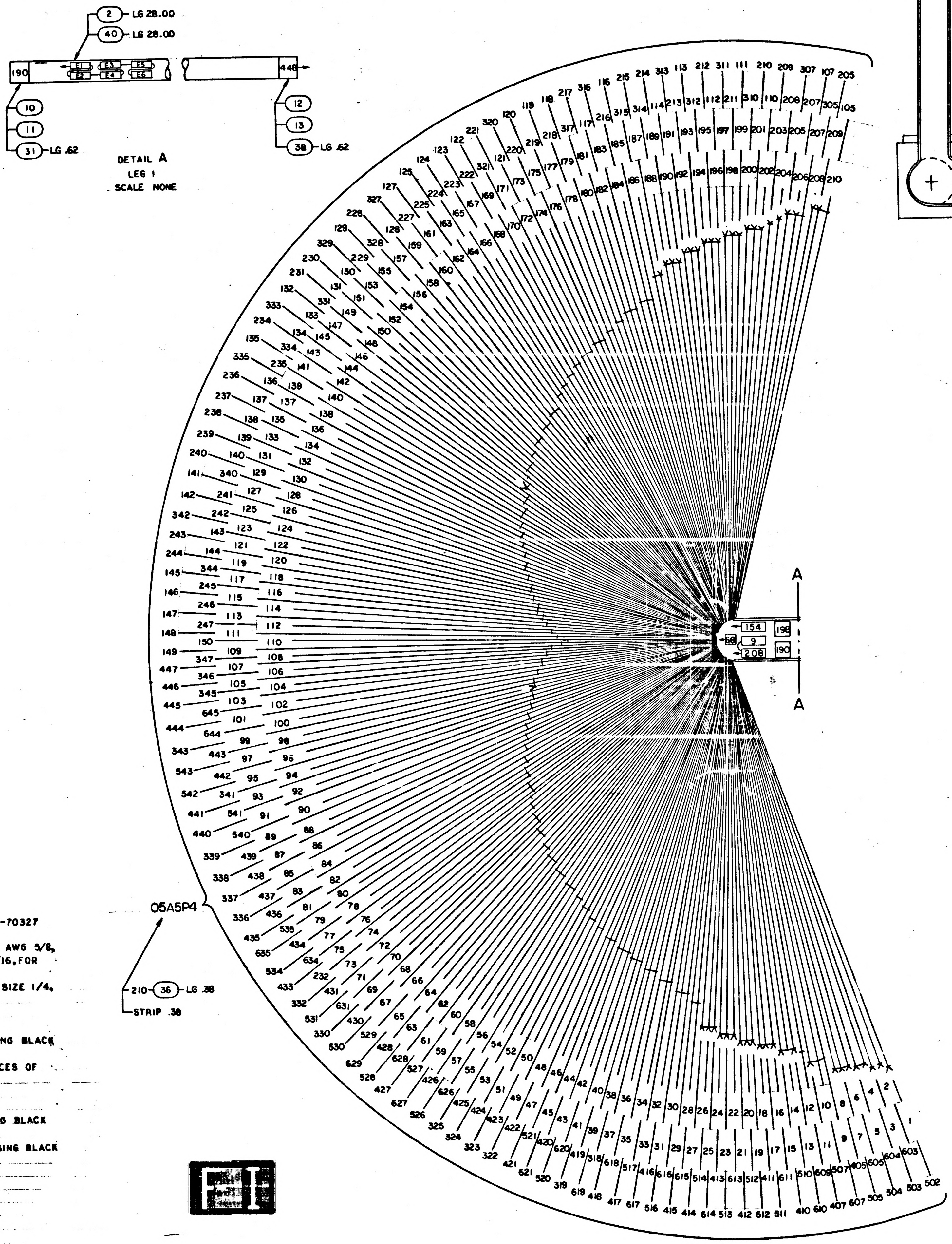
2 LG 28.00
40 LG 28.00
190
E1 E3 E5
E2 E4 E6
448
10
11
31 LG .62
12
13
38 LG .62

DETAIL A
LEG 1
SCALE NONE

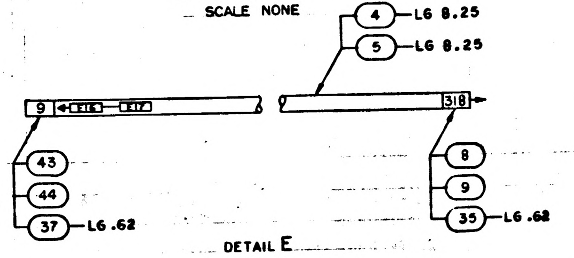
4 LG 8.25
5 LG 8.25
9
E16 E17
318
43
44
37 LG .62
8
9
35 LG .62

DETAIL E
LEG 5
SCALE NONE

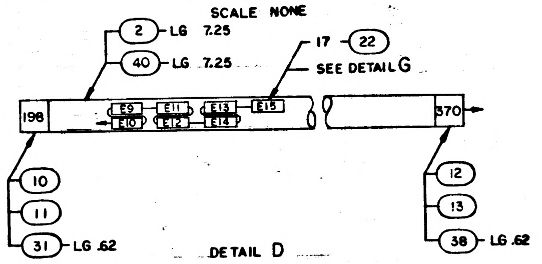
2 LG 7.25
40 LG 7.25
17 22
SEE DETAIL G
198
E9 E11 E13 E15
E10 E12 E14
370
10
11
31 LG .62
12
13
38 LG .62

DETAIL D
LEG 4
SCALE NONE

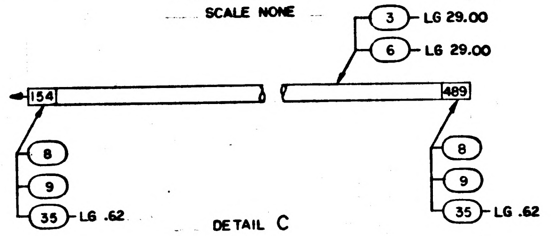
3 LG 29.00
6 LG 29.00
154
489
8
9
35 LG .62
8
9
35 LG .62

DETAIL C
LEG 3
SCALE NONE

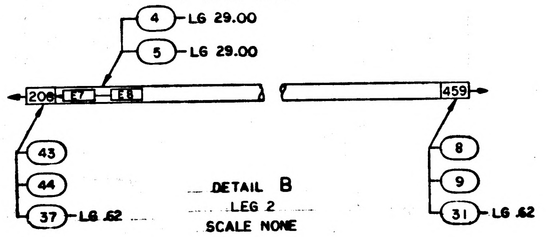
4 LG 29.00
5 LG 29.00
208
E7 E8
459
43
44
37 LG .62
8
9
31 LG .62

DETAIL B
LEG 2
SCALE NONE

NOTES
1. INTERPRET DRAWING IN ACCORDANCE WITH STANDARDS PRESCRIBED BY MIL-D-70327
2. FOR FABRICATION SEE ND 1002032
3. MIL-I-631 TYPE F, FORM U$_a$, GRADE A, CLASS 1, CATAGORY 1, FOR FIND NO.5 AWG 5/8, FOR FIND NO.40 AWG 3/8. FOR FIND NO.41 AWG 1 IN., FOR FIND NO.6 AWG 7/16, FOR FIND NO.7 AWG 2, FOR FIND NO.42 AWG 1/2
4. QQ-B-575 FOR FIND NO.2 BRAID SIZE 1/2, AWG 34, FOR FIND NO.3 BRAID SIZE 1/4, AWG 34, FOR FIND NO.4 BRAID SIZE 3/8, AWG 36
5. ✱✱✱ DENOTES LENGTH IN FEET
6. INSTALL CRIMP STYLE TERMINALS IN ACCORDANCE WITH ND 1002206
7. MARK .100/.060 HIGH PER ND 1002019 AND ND 1002122 TYPE II CLASS 1, USING BLACK MARKING INK 1006271-11 AND SERIALIZE PER ND 1002023
8. ENCAPSULATE INDICATED AREA PER ND 1002009 METHOD E, MOUNTING SURFACES OF CONNECTORS MUST NOT BE ENCAPSULATED
9. TEST PER FTM 1005707
10. SOLDER PER ND 1002071, EXCEPT AS SHOWN
11. MARK .200/.180 HIGH PER ND 1002019 AND ND 1002122 TYPE II CLASS 1, USING BLACK MARKING INK 1006271-11. CENTRALIZE AS SHOWN.
12. MARK .070/.050 HIGH PER ND 1002019 AND ND 1002122 TYPE II CLASS 2, USING BLACK MARKING INK 1006271-11. CENTRALIZE AS SHOWN
13. ● SEE INTERNAL CONNECTION CHART
14. ●● ATTACH FIND NO. 29
15. ✱ DENOTES TWO CONNECTIONS TO ONE PIN
16. ✱✱ DENOTES TWO CONNECTIONS TO ONE PIN, SEE SECTION B-B
17. PARTIAL REFERENCE DESIGNATIONS ARE SHOWN: FOR COMPLETE DESIGNATIONS PREFIX 'P' NOS. IN RUN CHART WITH 05A5
18. NUMBERS PRECEDING BALLOONS DENOTES QUANTITIES

05A5P4
210
36
LG .38
STRIP .38
A
A
154
196
9
68
208
190

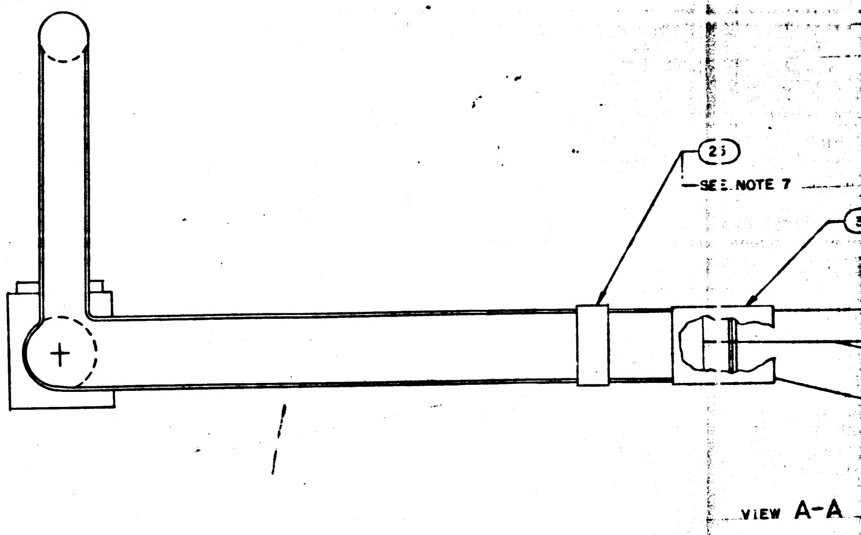
23
SEE NOTE 7

VIEW A-A

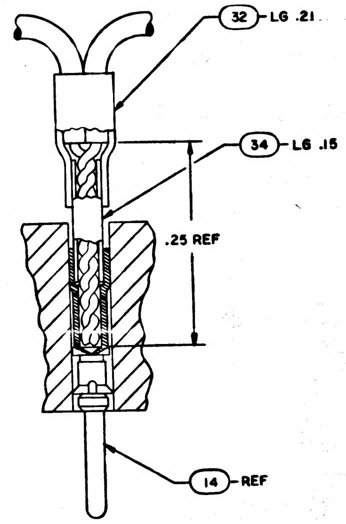
32 LG .21
34 LG .15
.25 REF
14 REF

SECTION B-B
6 PLACES
SCALE 10/1

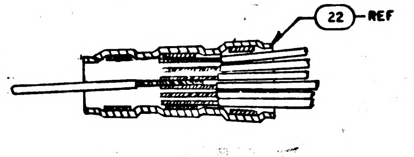

DETAIL G
TYPICAL

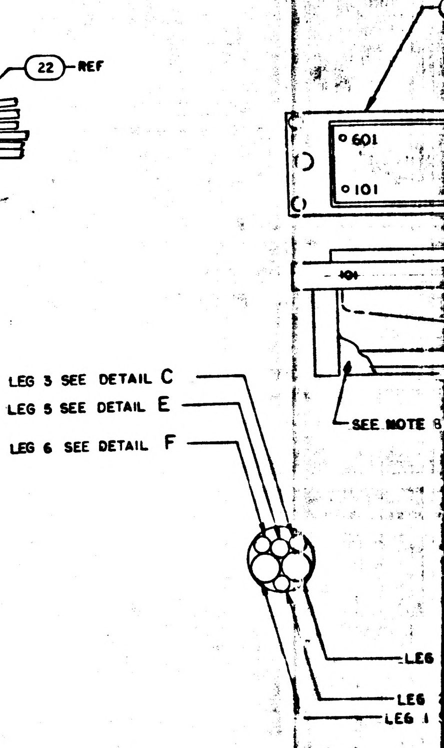
601
101
SEE NOTE 8
LEG 3 SEE DETAIL C
LEG 5 SEE DETAIL E
LEG 6 SEE DETAIL F
LEG
LEG
LEG 1

SECTION A-A

7 6 5 4

SYM	DESCRIPTION	DATE	APPROVAL
C	REPLACES REV B WITH CHANGES PER TDRR 16535	[illegible]	

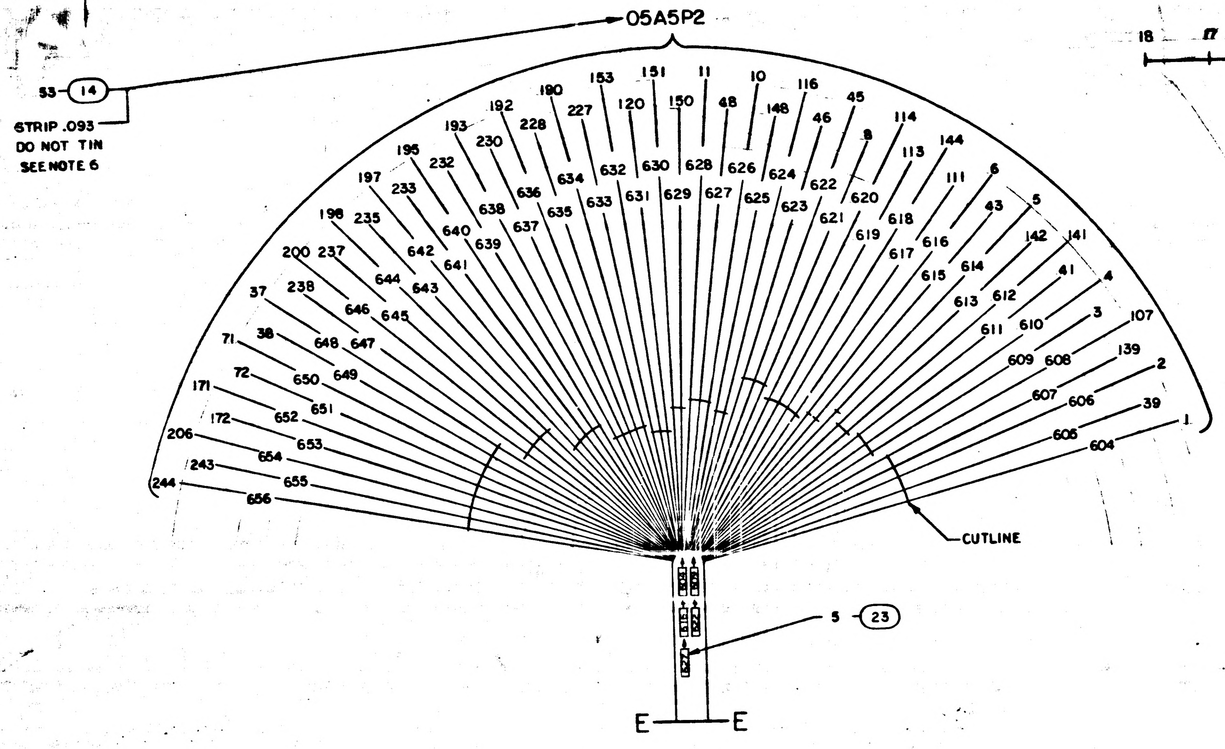
05A5P2
53-(14)
STRIP .093
DO NOT TIN
SEE NOTE 6
CUTLINE
5-(23)
E—E

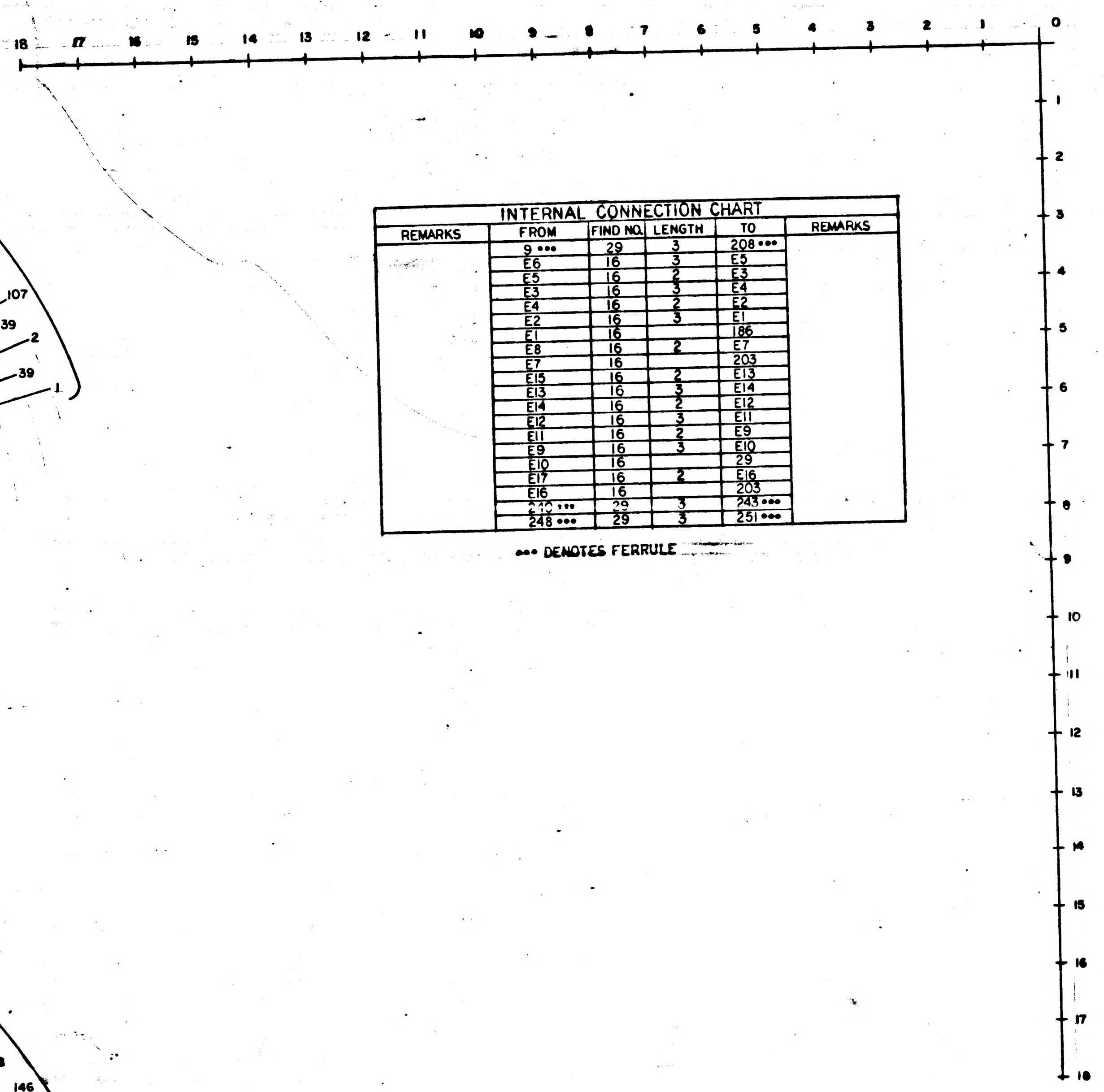
18 17 16 15 14 13 12 11 10 9 8 7 6 5 4 3 2 1 0
1 2 3 4 5 6 7 8 9 10 11 12 13 14 15 16 17 18

INTERNAL CONNECTION CHART

REMARKS	FROM	FIND NO.	LENGTH	TO	REMARKS
	9 •••	29	3	208 •••	
	E6	16	3	E5	
	E5	16	2	E3	
	E3	16	3	E4	
	E4	16	2	E2	
	E2	16	3	E1	
	E1	16		186	
	E8	16	2	E7	
	E7	16		203	
	E15	16	2	E13	
	E13	16	3	E14	
	E14	16	2	E12	
	E12	16	3	E11	
	E11	16	2	E9	
	E9	16	3	E10	
	E10	16		29	
	E17	16	2	E16	
	E16	16		203	
	240 •••	29	3	243 •••	
	248 •••	29	3	251 •••	

••• DENOTES FERRULE

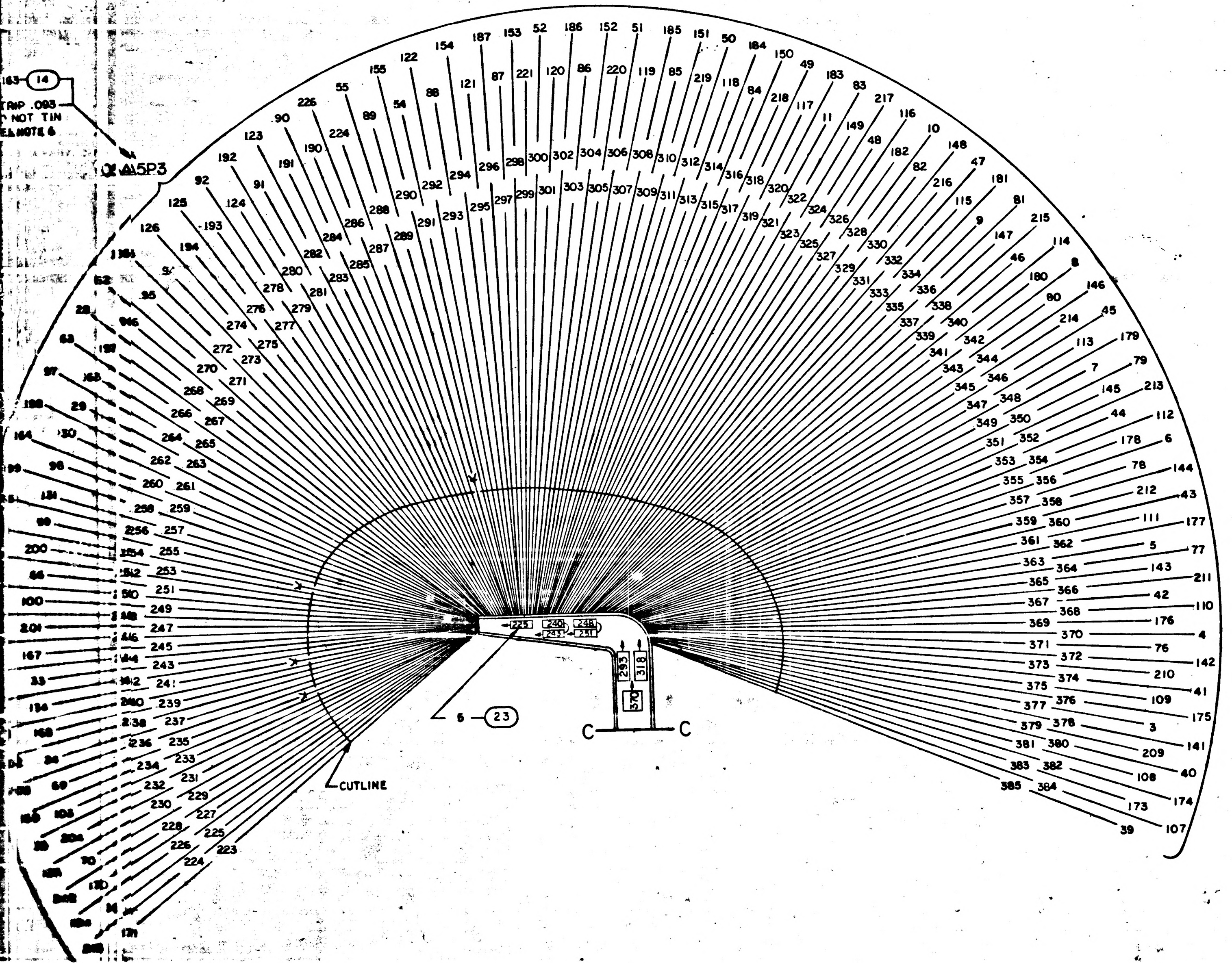
163-(14)
STRIP .093
DO NOT TIN
SEE NOTE 6
A5P3
CUTLINE
5-(23)
C—C

Ⓒ REPLACES REV B WITH CHANGES

MASTER

QTY REQD	PART OR IDENTIFYING NO.	NOMENCLATURE OR DESCRIPTION	FIND NO.

LIST OF MATERIALS

UNLESS OTHERWISE SPECIFIED
DIMENSIONS ARE IN INCHES
TOLERANCES ON
FRACTIONS ± — DECIMALS ±.010 ANGLES ± —
DO NOT SCALE THIS DRAWING
MATERIAL
HEAT TREATMENT
FINAL FINISH

NEXT ASSY | USED ON
APPLICATION

MIT
INSTRUMENTATION LAB
CAMBRIDGE, MASS
DRAWN C. Meggs DATE 15 FEB 65
CHECKED
APPROVAL
APPROVAL
NASA APPROVAL
MIT APPROVAL

MANNED SPACECRAFT CENTER
HOUSTON, TEXAS

WIRING HARNESS
AGC TO PSA & G/N TO SPACECRAFT

CODE IDENT NO. — SIZE J NASA DRAWING NO. 1005707
SCALE 1/1 WT — SHEET 2 OF 4

NOTICE — WHEN GOVERNMENT DRAWINGS, SPECIFICATIONS, OR OTHER DATA ARE USED FOR ANY PURPOSE OTHER THAN IN CONNECTION WITH A DEFINITELY RELATED GOVERNMENT PROCUREMENT OPERATION, THE UNITED STATES GOVERNMENT THEREBY INCURS NO RESPONSIBILITY NOR ANY OBLIGATION WHATSOEVER; AND THE FACT THAT THE GOVERNMENT MAY HAVE FORMULATED, FURNISHED, OR IN ANY WAY SUPPLIED THE SAID DRAWINGS, SPECIFICATIONS, OR OTHER DATA IS NOT TO BE REGARDED BY IMPLICATION OR OTHERWISE AS IN ANY MANNER LICENSING THE HOLDER OR ANY OTHER PERSON OR CORPORATION, OR CONVEYING ANY RIGHTS OR PERMISSION TO MANUFACTURE, USE, OR SELL ANY PATENTED INVENTION THAT MAY IN ANY WAY BE RELATED THERETO.

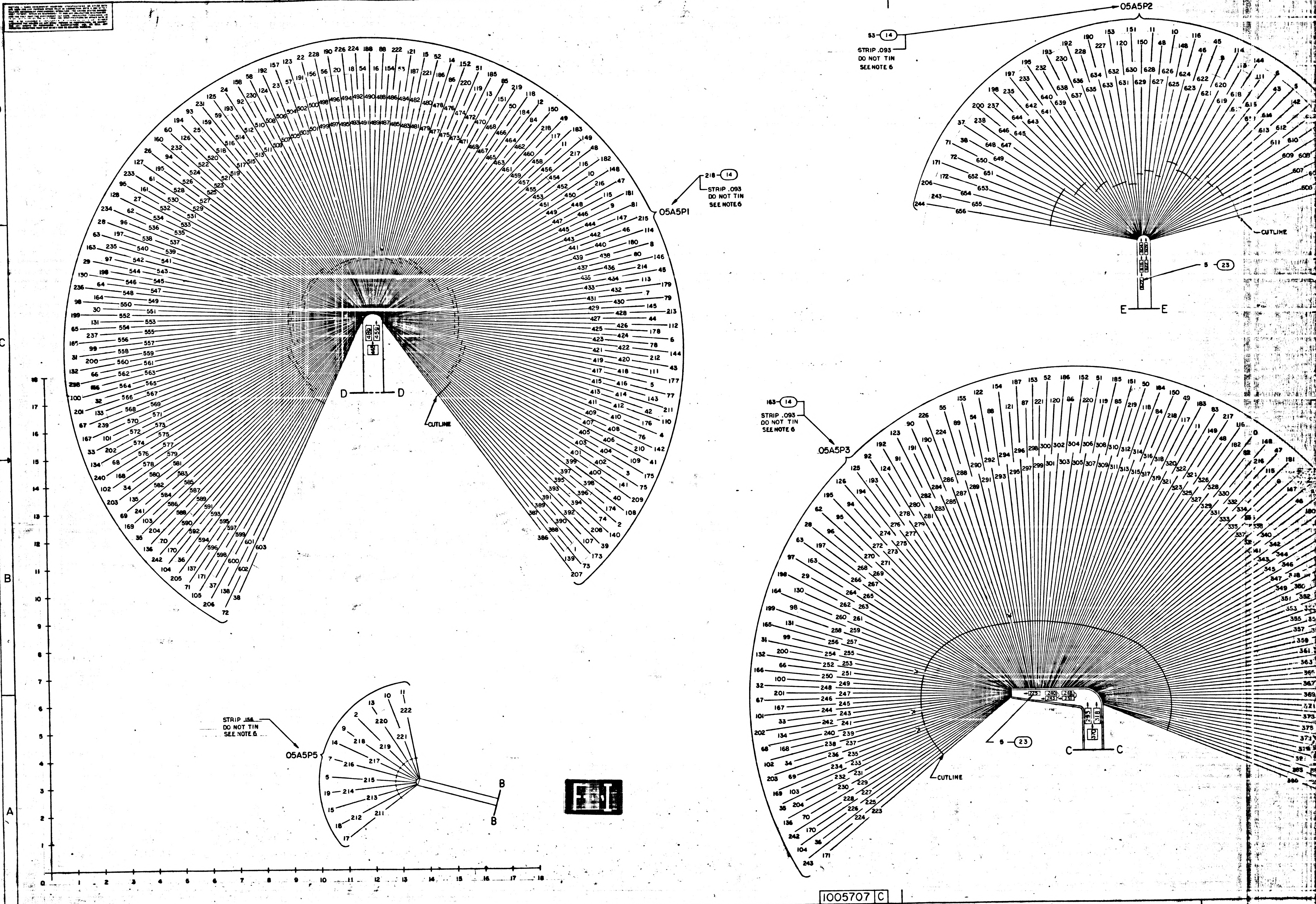
7
6
5
4
D
C
B
A
05A5P1
218 — 14
STRIP .093
DO NOT TIN
SEE NOTE 6
D — D
CUTLINE
05A5P2
53 — 14
STRIP .093
DO NOT TIN
SEE NOTE 6
5 — 23
E — E
CUTLINE
05A5P3
163 — 14
STRIP .093
DO NOT TIN
SEE NOTE 6
5 — 23
C — C
CUTLINE
05A5P5
STRIP .156
DO NOT TIN
SEE NOTE 6
B — B
0
1
2
3
4
5
6
7
8
9
10
11
12
13
14
15
16
17
18

1005707 C

SYM	DESCRIPTION	DATE	APPROVAL
C	REPLACES REV B WITH CHANGES PER TDRR 16535	[illegible]	

CHART

RUN NO.	DESTINATION	REMARKS
190	P4-114	*
	E1	●
185	P4-214	*
	E1	●
188	P4-314	*
	E1	●
27	P4-414	*
	E1	●
26	P4-514	*
	E1	●
193	P4-113	*
	E2	●
192	P4-213	*
	E2	●
191	P4-313	*
	E2	●
25	P4-614	*
	E2	●
196	P4-112	*
	E3	●
24	P4-413	*
	E3	●
23	P4-513	*
	E3	●
22	P4-613	*
	E3	●
195	P4-212	*
	E4	●
194	P4-312	* LEG 1
	E4	●
21	P4-412	*
	E4	●
20	P4-512	*
	E4	●
198	P4-211	*
	E5	●
197	P4-311	*
	E5	●
19	P4-612	*
	E5	●
199	P4-111	*
	E5	●
18	P4-411	*
	E6	●
17	P4-511	*
	E6	●
16	P4-611	*
	E6	●
201	P4-210	*
	E6	●
200	P4-310	*
	E6	●
13	P4-610	*
14	P4-510	
15	P4-410	*
202	P4-110	*
208	P4-305	*
	E7	●
8	P4-405	*
	E7	●
7	P4-505	*
	E7	●
6	P4-605	*
	E7	●
207	P4-107	
	E8	● LEG 2
210	P4-105	
	E8	●
209	P4-205	*
	E8	●
11	P4-407	*
	E8	●
205	P4-307	*
	E8	●
206	P4-207	*
204	P4-208	
12	P4-609	●, ● ●
154	P4-229	
151	-230	
149	-231	
148	-331	
153	-329	
69	-330	
156	-328	
59	-627	
158	-128	LEG 3
60	-527	
155	-129	
152	-130	
56	-131	
73	-332	
74	-232	
147	-132	
[illegible]	-133	
43	P4-333	● ●,*

ASSEMBLY INFORMATION CHART

	FROM		DESCRIPTION			TO		
REMARKS	DESTINATION	RUN NO.	COLOR	AWG	FIND NO.	RUN NO.	DESTINATION	REMARKS
	P1-235	541	YEL	26	18	82	P4-436	
	P1-236	548	RED			84	P4-437	
	P4-336	83	YEL			539	P1-197	
	P4-337	85	RED			545	P1-198	
	P1-163	542	YEL			78	P4-434	
	P1-164	549	RED			81	P4-435	
	P4-334	142	YEL			546	P1-130	
	P4-335	139	RED			553	P1-131	
	P1-97	543	YEL			134	P4-138	
	P1-98	550	RED			132	P4-139	
	P4-234	143	YEL			547	P1-64	
	P4-235	140	RED			554	P1-65	
	P1-30	551	YEL			144	P4-134	
	P1-31	558	RED			141	P4-135	
	P4-236	137	YEL			555	P1-237	
	P4-237	135	RED			562	P1-238	
	P1-199	552	YEL			138	P4-136	
	P1-200	559	RED			136	P4-137	
	P4-238	133	YEL			556	P1-165	
	P4-239	131	RED			563	P1-166	
	P1-132	560	YEL			106	P4-346	
	P1-133	567	RED			108	P4-347	
	P4-246	114	YEL			557	P1-99	
	P4-247	112	RED			564	P1-100	
	P1-66	561	YEL			86	P4-438	
	P1-67	568	RED			88	P4-439	
	P4-338	87	YEL			565	P1-32	
	P4-339	89	RED			572	P1-33	
	P1-239	569	YEL			91	P4-440	
	P1-240	576	RED			93	P4-441	
	P4-340	128	YEL			566	P1-201	
	P4-341	94	RED			573	P1-202	
	P1-167	570	YEL			129	P4-240	
	P1-168	577	RED			126	P4-241	
	P4-140	130	YEL			574	P1-134	
	P4-141	127	RED			581	P1-135	
	P1-101	571	YEL			105	P4-446	
	P1-102	578	RED			107	P4-447	
	P4-442	96	YEL			575	P1-68	
	P4-443	98	RED			582	P1-69	
	P1-34	579	YEL			123	P4-342	
	P1-35	586	RED			99	P4-343	
	P4-242	124	YEL			583	P1-241	
	P4-243	121	RED			590	P1-242	
	P1-203	580	YEL			125	P4-142	
	P1-204	587	RED			122	P4-143	
	P4-444	101	YEL			584	P1-169	
	P4-445	103	RED			591	P1-170	
	P1-136	588	YEL			118	P4-344	
	P1-137	595	RED			104	P4-345	
	P4-244	119	YEL			585	P1-103	
	P4-245	116	RED			592	P1-104	
	P1-70	589	YEL			120	P4-144	
	P1-71	596	RED			117	P4-145	
	P4-222	168	YEL			594	P1-205	
	P4-223	166	RED			600	P1-206	
	P1-105	598	YEL			90	P4-540	
	P1-72	602	RED			92	P4-541	
	P4-149	109	YEL			597	P1-171	
	P4-150	110	RED			601	P1-138	
	P1-28	538	YEL			165	P4-124	
	P1-29	544	RED			163	P4-125	
	P4-224	164	YEL			522	P1-60	
	P4-225	162	RED			529	P1-61	
	P1-94	525	YEL			175	P4-120	
	P1-95	532	RED			172	P4-121	
	P4-220	174	YEL			528	P1-127	
	P4-221	171	RED			534	P1-128	
	P1-160	524	YEL			173	P4-320	
	P1-161	531	RED			170	P4-321	
	P4-420	44	YEL			520	P1-194	
	P4-421	47	RED			527	P1-195	
	P1-92	511	YEL			179	P4-118	
	P1-93	518	RED			177	P4-119	
	P4-218	178	YEL			514	P1-125	
	P4-219	176	RED			521	P1-126	
	P1-158	510	YEL			169	P4-122	
	P1-159	517	RED			167	P4-123	
	P4-318	38	YEL			506	P1-192	
	P4-319	41	RED			513	P1-193	
	P1-232	523	YEL			37	P4-418	
	P1-233	530	RED			40	P4-419	
	P4-116	185	YEL			526	P1-26	
	P4-117	182	RED			533	P1-27	
	P1-24	512	YEL			184	P4-216	
	P1-25	519	RED			181	P4-217	
	P4-316	183	YEL			508	P1-58	
	P4-317	180	RED			515	P1-59	
	P1-56	497	YEL			32	P4-416	
	P1-57	503	RED			35	P4-417	
	P4-322	49	YEL			502	P1-123	
	P4-323	51	RED			507	P1-124	
	P1-156	499	YEL			48	P4-422	
	P1-157	504	RED			50	P4 423	
	P4-324	53	YEL			496	P1-190	
	P4-325	55	RED			501	P1-191	
	P1-230	509	YEL			52	P4-424	
	P1-231	516	RED			54	P4-425	
	P4-620	42	YEL			282	P3-123	
	P4-621	45	RED			279	P3-124	
	P3-125	276	YEL			43	P4-520	
	P3-126	274	RED			46	P4-521	
	P4-534	77	YEL			284	P3-90	
	P4-535	80	RED			281	P3-91	
	P3-194	275	YEL			36	P4-618	
	P3-195	272	RED			39	P4-619	
	P4-516	31	YEL			280	P3-192	
	P4-517	34	RED			277	P3-193	
	P3-190	285	YEL	26	18	30	P4-616	
	P3-191	283	RED			33	P4-617	

ASSEMBLY INFORMATION CHART

	FROM		DESCRIPTION			TO		
REMARKS	DESTINATION	RUN NO.	COLOR	AWG	FIND NO.	RUN NO.	DESTINATION	REMARKS
	P4-634	76	YEL	26	18	273	P3-94	
	P4-635	79	RED			271	P3-95	
	P3-92	278	YEL			95	P4-542	
	P3-62	270	RED			97	P4-543	*
	P4-644	100	YEL			287	P3-224	
	P4-645	102	RED			286	P3-226	
	P3-199	258	YEL			612	P2-141	
	P3-200	253	RED			613	P2-142	
	P2-107	608	YEL			250	P3-166	
	P2-139	607	RED			245	P3-167	
	P3-168	239	YEL			618	P2-144	
	P3-169	234	RED			617	P2-111	
	P2-113	619	YEL			247	P3-201	
	P2-114	620	RED			242	P3-202	
	P3-170	227	YEL			624	P2-116	
	P3-171	223	RED			625	P2-148	
	P2-150	629	YEL			236	P3-203	
	P2-151	630	RED			231	P3-204	
	P3-243	224	YEL	26	18	632	P2-153	
	P3-242	228	RED			631	P2-120	
	P3-39	385	YEL	26	16	5	P4-504	*
*	P4-604	4				383	P3-173	
	P3-174	382				1	P4-502	●
*	P4-603	2				381	P3-108	
	P3-40	380				3	P4-508	●
	P4-228	157				536	P1-234	
	P1-62	535				159	P4-327	
	P4-227	160				537	P1-96	
	P1-63	540				161	P4-127	
●	P4-215	187				500	P1-22	
	P1-23	505				107	P4-215	●
*	P4-333	145				485	P1-53	
	P1-40	399				3	P4-503	●
*	P4-603	2				398	P1-108	
	P1-174	397				1	P4-502	●
●	P4-604	4				392	P1-39	
	P1-173	390	YEL	26	16	5	P4-504	*
	P2-172	653	YEL	24	17	263	P3-29	
	P3-101	244	RED	24	19	649	P2-38	
● *	P3-134	241	YEL			648	P2-37	
	P2-72	651	RED	24	19	238	P3-102	
	P2-71	650	YEL			241	P3-134	● ●
	P3-103	233	YEL	24	20	633	P2-227	
	P3-104	226	RED			635	P2-228	
	P3-136	230	GRN			634	P2-190	
	P2-193	638	YEL	24	20	257	P3-131	
	P2-192	636	RED			260	P3-164	
	P2-230	637	GRN			256	P3-165	
	P3-163	265	YEL	24	20	641	P2-233	
	P3-197	267	RED			639	P2-232	
	P3-198	262	GRN			640	P2-195	
	P2-198	644	YEL	24	20	264	P3-97	
	P2-197	642	RED			259	P3-98	
	P2-235	643	GRN			261	P3-130	
	P3-99	255	YEL	24	20	645	P2-237	
	P3-100	249	RED			647	P2-238	
	P3-132	252	GRN			646	P2-200	
	P1-36	593	YEL	24	20	115	P4-146	
	P1-37	599	RED			113	P4-147	
	P1-38	603	GRN			111	P4-148	
	P2-206	654	YEL	24	21	97	P4-543	*
	P2-244	656	RED			268	P3-28	
	P2-243	655	GRN			266	P3-63	
	P2-171	652	BRN			269	P3-96	
	P2-1	604	YEL	26	15	251	P3-66	
	P2-39	605	RED			254	P3-31	* ●
● ●	P2-2	606	SHLD					●
	P3-32	248	YEL	26	15	609	P2-3	
* *	P3-31	254	RED			610	P2-4	
● ●,●	P3-67	246	SHLD			611	P2-41	● ●
	P2-6	616	YEL	26	15	243	P3-33	
	P2-43	615	RED			235	P3-69	* ●
● ●	P2-5	614	SHLD					●
	P3-68	240	YEL	26	15	622	P2-45	
* *	P3-69	235	RED			623	P2-46	
● ●,●	P3-34	237	SHLD			621	P2-8	● ●
	P2-48	627	YEL	26	15	225	P3-36	
	P2-10	626	RED			232	P3-35	
● ●	P2-11	628	SHLD			229	P3-70	● ●
	P1-1	389	YEL	22	28	211	P5-17	TWIST 12 WIRES TOGETHER
	P1-73	388				212	P5-18	
	P1-49	460				214	P5-19	
	P1-50	467				216	P5-7	
	P1-2	396				215	P5-5	
	P1-74	395				213	P5-15	
	P1-139	387				218	P5-9	
	P1-207	386	YEL		28	221	P5-10	
	P1-51	474	BLK		29	222	P5-11	
	P1-52	480	BLK			219	P5-2	
	P1-208	393	BLK			220	P5-13	
	P1-140	394	BLK	22	29	217	P5-14	

Ⓒ REPLACES REV B WITH CHANGES

QTY REQD	PART OR IDENTIFYING NO.	NOMENCLATURE OR DESCRIPTION	FIND NO

LIST OF MATERIALS

NEXT ASSY	USED ON

APPLICATION

UNLESS OTHERWISE SPECIFIED
DIMENSIONS ARE IN INCHES
TOLERANCES ON
FRACTIONS ± DECIMALS ± ANGLES ±
DO NOT SCALE THIS DRAWING
MATERIAL
HEAT TREATMENT
FINAL FINISH

MIT
INSTRUMENTATION LAB
CAMBRIDGE, MASS.
DRAWN DATE
CHECKED
APPROVAL
APPROVAL
NASA APPROVAL
MIT APPROVAL

MANNED SPACECRAFT CENTER
HOUSTON, TEXAS

WIRING HARNESS
AGC TO PSA & G/N TO SPACECRAFT

CODE IDENT NO. — SIZE J NASA DRAWING NO. 1005707
SCALE NONE WT — SHEET 3 OF 4

1005707 C

F-2

MASTER

[illegible]

ASSEMBLY INFORMATION CHART

FROM			DESCRIPTION			TO		
REMARKS	DESTINATION	RUN NO.	COLOR	AWG	FIND NO.	RUN NO.	DESTINATION	REMARKS
	P3-4	370	YEL	26	18	198	P4-211	*
	-5	363	RED				E13	●
	-41	374	YEL	↑	↑	197	P4-311	*
	-42	367	RED				E13	●
	-76	371	YEL			18	P4-411	*
	-77	364	RED				E13	●
	-212	359	YEL			199	P4-111	*
	-213	352	RED				E13	●
	-109	375	YEL			17	P4-511	*
	-110	368	RED				E14	●
	-142	372	YEL			16	P4-611	*
	-143	365	RED				E14	●
	-175	376	YEL			201	P4-210	*
	-176	369	RED				E14	●
	-210	373	YEL			200	P4-310	*
	-211	366	RED				E14	●
	-78	357	YEL			194	P4-312	*
	-79	350	RED				E12	●
	-111	361	YEL			21	P4-412	*
	-112	354	RED				E12	●
	-144	358	YEL			20	P4-512	*
	-145	351	RED				E12	●
	-177	362	YEL			19	P4-612	*
	-178	355	RED				E12	●
	-6	356	YEL			196	P4-112	*
	-7	349	RED				E11	●
	-43	360	YEL			195	P4-212	*
	-44	353	RED				E11	●
	-179	348	YEL			23	P4-513	* LEG 4
	-180	341	RED				E11	●
	-214	345	YEL			22	P4-613	*
	-215	338	RED				E11	●
	[illegible]	[illegible]	YEL			193	P4-113	*
	-46	339	RED				E10	●
	-80	343	YEL			192	P4-213	*
	-81	336	RED				E10	●
	-113	347	YEL			191	P4-313	*
	-114	340	RED				E10	●
	-146	344	YEL			24	P4-413	*
	-147	337	RED				E10	●
	-8	342	YEL			25	P4-614	*
	-9	335	RED				E9	●
	-148	330	YEL			188	P4-314	*
	-149	323	RED				E9	●
	-181	334	YEL			27	P4-414	*
	-182	327	RED				E9	●
	-216	331	YEL			26	P4-514	*
	-217	324	RED				E9	●
	-47	332	YEL			190	P4-114	*
	-48	325	RED				E15	●
	-82	329	YEL			28	P4-615	
	-83	322	RED		↓		E15	●
	-115	333	YEL		18	189	P4-214	*
	-116	326	RED				E15	●
	-3	377	YEL		16	13	P4-610	*
	-141	378	YEL	↓	16	15	P4-410	*
	-209	379	YEL	26	16	202	P4-110	*
●●	P3-107	384	SHLD					
	P3-49	318	YEL	26	18	9	P4-607	
	-50	312	RED				E16	●
	-51	306	YEL	↑	↑	10	P4-507	
	-52	300	RED				E16	●
	-185	308	YEL			11	P4-407	*
	-186	302	RED				E16	●
	-220	305	YEL			205	P4-307	*
	-221	299	RED				E16	●
	-84	315	YEL			209	P4-205	* LEG 5
	-85	309	RED				E17	●
	-117	319	YEL			208	P4-305	*
	-118	313	RED				E17	●
	-150	316	YEL			8	P4-405	*
	-151	310	RED				E17	●
	-183	320	YEL			7	P4-505	*
	-184	314	RED		↓		E17	●
	-218	317	YEL		18	6	P4-605	*
	-219	311	RED				E17	●
	-10	328	YEL	↓	16	206	P4-207	*
	-11	321	YEL	26	16	204	P4-208	*
●●	P3-187	296	SHLD					●
	P3-88	293	YEL	26	18	68	P4-430	
	-54	291	RED			57	-526	
	-86	303	YEL	↑	18	70	-631	
	-55	288	RED			56	-626	
	-87	297	YEL		16	64	-428	
	-119	307	↑		↑	71	-531	
	-120	301				62	-628	
	-121	295				63	-528	LEG 6
	-122	292				65	-629	
	-152	304				72	-431	
	-153	298				66	-529	
	-154	294				67	-530	
** {	-155	290	↓	↓	↓	58	-426	
	-155	290	YEL	26	16	61	-427	
●●	P3-89	289	SHLD			75	P4-433	●●

ASSEMBLY INFORMATION CHART

FROM			DESCRIPTION			TO		
REMARKS	DESTINATION	RUN NO.	COLOR	AWG	FIND NO.	RUN NO.	DESTINATION	REMARKS
	P1-47	448	YEL	26	18	190	P4-114	*
	-48	454	RED				E1	●
	-115	447	YEL	↑	↑	189	P4-214	*
	-116	453	RED				E1	●
	-148	450	YEL			188	P4-314	*
	-149	456	RED				E1	●
	-181	446	YEL			27	P4-414	*
	-182	452	RED				E1	●
	-216	449	YEL			26	P4-514	*
	-217	[illegible]	RED				E1	●
	-45	434	YEL			193	P4-113	*
	-46	441	RED				E2	●
	-80	437	YEL			192	P4-213	*
	-81	444	RED				E2	●
	-113	433	YEL			191	P4-313	*
	-114	440	RED				E2	●
	-8	438	YEL			25	P4-614	*
	-9	445	RED				E2	●
	-6	424	YEL			196	P4-112	*
	-7	431	REL				E3	●
	-146	436	YED			24	P4-413	*
	-147	443	RED				E3	●
	-179	432	YEL			23	P4-513	*
	-180	439	RED				E3	●
	-214	435	YEL			22	P4-613	*
	-215	442	RED				E3	●
	-43	420	YEL			195	P4-212	*
	-44	427	RED				E4	●
	-78	423	YEL			194	P4-312	* LEG 1
	-79	430	RED				E4	●
	-111	419	YEL			21	P4-412	*
	-112	426	RED				E4	●
	-144	422	YEL			20	P4-512	*
	-145	429	RED				E4	●
	-4	410	YEL			198	P4-211	*
	-5	417	RED				E5	●
	-41	406	YEL			197	P4-311	*
	-42	413	RED				E5	●
	-177	418	YEL			19	P4-612	*
	-178	425	RED				E5	●
	-212	421	YEL			199	P4-111	*
	-213	428	RED				E5	●
	-76	409	YEL			18	P4-411	*
	-77	416	RED				E6	●
	-109	405	YEL			17	P4-511	*
	-110	412	RED				E6	●
	-142	408	YEL			16	P4-611	*
	-143	415	RED				E6	●
	-175	404	YEL			201	P4-210	*
	-176	411	RED		↓		E6	●
	-210	407	YEL		18	200	P4-310	*
	-211	414	RED				E6	●
	-3	403	YEL		16	13	P4-610	*
	-75	402	YEL		16	14	P4-510	
	-141	401	YEL	↓	16	15	P4-410	*
	209	400	YEL	26	16	202	P4-110	*
●●	P1-107	391	SHLD					
	P1-117	459	YEL	26	18	208	P4-305	*
	-118	466	RED				E7	●
	-150	462	YEL	↑	↑	8	P4-405	*
	-151	469	RED				E7	●
	-183	458	YEL			7	P4-505	*
	-184	465	RED				E7	●
	-218	461	YEL			6	P4-605	*
	-219	468	RED				E7	●
	-12	464	YEL			207	P4-107	
	-13	471	RED				E8	● LEG 2
	-14	478	YEL			210	P4-105	
	-15	482	RED				E8	●
	-84	463	YEL			209	P4-205	*
	-85	470	RED				E8	●
	-185	472	YEL			11	P4-407	*
	-186	479	RED		↓		E8	●
	-220	475	YEL		18	205	P4-307	*
	-221	481	RED				E8	●
	-10	451	YEL	↓	16	206	P4-207	*
	-11	457	YEL	26	16	204	P4-208	
●●	P1-187	483	SHLD			12	P4-609	●,●●
	P1-16	489	YEL	26	16	154	P4-229	
	-18	493	↑	↑	↑	151	-230	
	-20	495				149	-231	
	-54	491				148	-331	
	-86	477				153	-329	
	-88	488				69	-330	
** {	-119	473				156	-328	
	-119	473				59	-627	
** {	-121	484				158	-128	LEG 3
	-121	484				60	-527	
	-152	476				155	-129	
	-154	487				152	-130	
	-188	490				150	-131	
	-222	486				73	-332	
	-224	492				74	-232	
	-226	494	↓	↓	↓	147	-132	
	P1-228	498	YEL	26	16	146	-133	
			SHLD			145	P4-333	●●,*

ASSEMBLY INFORMATION CHART

FROM			DESCRIPTION			TO		
REMARKS	DESTINATION	RUN NO.	COLOR	AWG	FIND NO.	RUN NO.	DESTINATI	REMARKS
	P1-235	541	YEL	26	18	82	P4-436	
	P1-236	548	RED			84	P4-437	
	P4-336	83	YEL	↑	↑	539	P1-197	
	P4-337	85	RED			545	P1-198	
	P1-163	542	YEL			78	P4-43	
	P1-164	549	RED			81	P4-435	
	P4-334	142	YEL			546	P1-30	
	P4-335	139	RED			553	P1-31	
	P1-97	543	YEL			134	P4-138	
	P1-98	550	RED			132	P4-1	
	P4-234	143	YEL			547	P1-64	
	P4-235	140	RED			554	P1-65	
	P1-30	551	YEL			144	P4-34	
	P1-31	558	RED			141	P4-35	
	P4-236	137	YEL			555	P1-237	
	P4-237	135	RED			562	P1-23	
	P1-199	552	YEL			38	P4-36	
	P1-200	559	RED			36	P4-37	
	P4-238	133	YEL			556	P1-65	
	P4-239	131	RED			563	P1-66	
	P1-132	560	YEL			106	P4-34	
	P1-133	567	RED			108	P4-34	
	P4-246	114	YEL			557	P1-99	
	P4-247	112	RED			564	P1-10	
	P1-66	561	YEL			86	P4-43	
	P1-67	568	RED			88	P4-43	
	P4-338	87	YEL			565	P1-32	
	P4-339	89	RED			572	P1-33	
	P1-239	569	YEL			91	P4-44	
	P1-240	576	RED			93	P4-44	
	P4-340	128	YEL			566	[illegible]	
	P4-341	94	RED			573	P1-20	
	P1-167	570	YEL			129	P4-24	
	P1-168	577	RED			[illegible]	[illegible]	
	P4-140	130	YEL			574	P1-134	
	P4-141	127	RED			581	P1-135	
	P1-101	571	YEL			105	P4-44	
	P1-102	578	RED			107	P4-44	
	P4-442	96	YEL			575	P1-68	
	P4-443	98	RED			582	P1-59	
	P1-34	579	YEL			123	P4-34	
	P1-35	586	RED			99	P4-345	
	P4-242	124	YEL			583	P1-24	
	P4-243	121	RED			590	P1-24	
	P1-203	580	YEL			125	P4-142	
	P1-204	587	RED			122	P4-14	
	P4-444	101	YEL			584	P1-16	
	P4-445	103	RED			591	P1-17	
	P1-136	588	YEL			118	[illegible]	
	P1-137	595	RED			104	[illegible]	
	P4-244	119	YEL			585	P1-108	
	P4-245	116	RED			592	P1-10	
	P1-70	589	YEL			120	P4-14	
	P1-71	596	RED			117	P4-145	
	P4-222	168	YEL			594	P1-205	
	P4-223	166	RED			600	P1-206	
	P1-105	598	YEL			90	P4-54	
	P1-72	602	RED			92	P4-54	
	P4-149	109	YEL			597	P1-17	
	P4-150	110	RED			601	P1-1	
	P1-28	538	YEL			165	P4-1	
	P1-29	544	RED			163	P4-12	
	P4-224	164	YEL			522	P1-6	
	P4-225	162	RED			529	P1-61	
	P1-94	525	YEL			175	P4-120	
	P1-95	532	RED			172	P4-12	
	P4-220	174	YEL			528	P1-12	
	P4-221	171	RED			534	P1-12	
	P1-160	524	YEL			173	[illegible]	
	P1-161	531	RED			170	[illegible]	
	P4-420	44	YEL			520	P1-19	
	P4-421	47	RED			527	P1-1	
	P1-92	511	YEL			179	P4-11	
	P1-93	518	RED			177	P4-11	
	P4-218	178	YEL			514	P1-12	
	P4-219	176	RED			521	P1-12	
	P1-158	510	YEL			169	P4-12	
	P1-159	517	RED			167	P4-12	
	P4-318	38	YEL			506	P1-19	
	P4-319	41	RED			513	P1-19	
	P1-232	523	YEL			37	P4-4	
	P1-233	530	RED			40	P4-4	
	P4-116	185	YEL			526	P1-2	
	P4-117	182	RED			533	P1-2	
	P1-24	512	YEL			184	P4-21	
	P1-25	519	RED			181	P4-217	
	P4-316	183	YEL			508	P1-5	
	P4-317	180	RED			515	P1-5	
	P1-56	497	YEL			32	P4-4	
	P1-57	503	RED			35	P4-4	
	P4-322	49	YEL			502	P1-12	
	P4-323	51	RED			507	P1-12	
	P1-156	499	YEL			48	P4-4	
	P1-157	504	RED			50	P4-4	
	P4-324	53	YEL			496	P1-15	
	P4-325	55	RED			501	P1-15	
	P1-230	509	YEL			52	P4-4	
	P1-231	516	RED			54	P4-4	
	P4-620	42	YEL			282	P3-12	
	P4-621	45	RED			279	P3-12	
	P3-125	276	YEL			43	P4-5	
	P3-126	274	RED			46	P4-5	
	P4-534	77	YEL			284	P3-	
	P4-535	80	RED			281	[illegible]	
	P3-194	275	YEL			[illegible]	P4-618	
	P3-195	272	RED			39	[illegible]	
	P4-516	31	YEL			280	[illegible]	
	P4-517	34	RED	↓	↓	277	[illegible]	
	P3-190	285	YEL	26	18	30	[illegible]	
	P3-191	283	RED			33	[illegible]	

REVISIONS			
SYM	DESCRIPTION	DATE	APPROVAL
C	REPLACES REV B WITH CHANGES PER TDRR 16535	7/2/65	

1005707 C

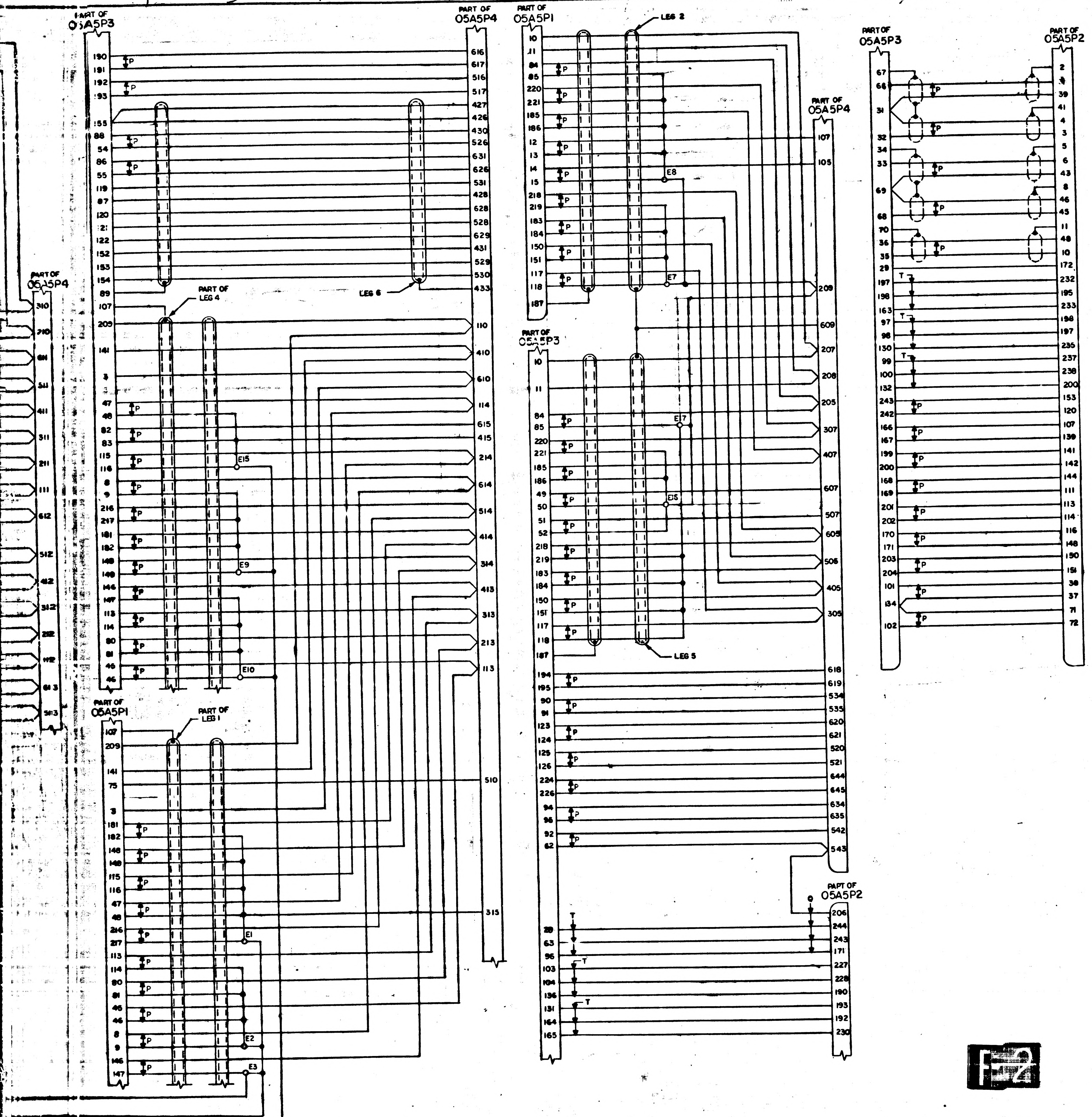

PART OF 05A5P3
PART OF 05A5P4
PART OF 05A5P1
PART OF 05A5P4
PART OF 05A5P3
PART OF 05A5P2
PART OF 05A5P4
PART OF 05A5P1
PART OF 05A5P3
PART OF 05A5P2
LEG 2
LEG 6
PART OF LEG 4
PART OF LEG 1
LEG 5
E1
E2
E3
E7
E8
E9
E10
E15
P
T

Ⓒ REPLACES REV B WITH CHANGES

F-2

MASTER

QTY REQD	PART OR IDENTIFYING NO.	NOMENCLATURE OR DESCRIPTION	FIND NO.

LIST OF MATERIALS

NEXT ASSY	USED ON
APPLICATION	

UNLESS OTHERWISE SPECIFIED
DIMENSIONS ARE IN INCHES
TOLERANCES ON
FRACTIONS ± — DECIMALS ± — ANGLES ± —
DO NOT SCALE THIS DRAWING
MATERIAL —
HEAT TREATMENT —
FINAL FINISH —

M I T
INSTRUMENTATION LAB
CAMBRIDGE, MASS
DRAWN DATE 12 Feb 65
CHECKED 16 Feb 65
APPROVAL
APPROVAL 23 Feb 65
NASA APPROVAL
MIT APPROVAL 24 Feb 65

MANNED SPACECRAFT CENTER
HOUSTON, TEXAS

WIRING HARNESS
AGC TO PSA & G/N TO SPACECRAFT

CODE IDENT NO. —
SIZE J
NASA DRAWING NO 1005707
SCALE NONE
WT —
SHEET 4 OF 4

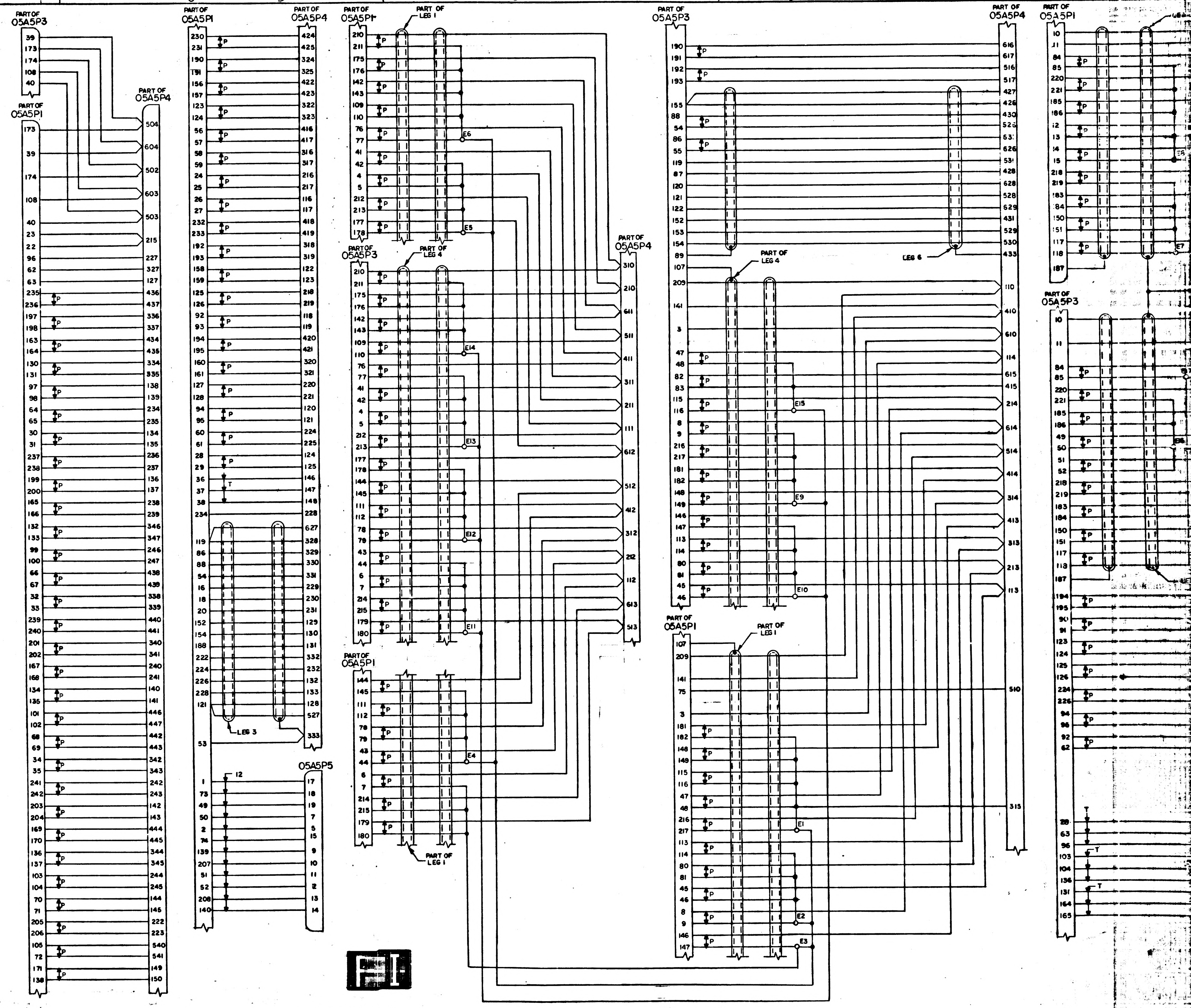
PART OF 05A5P3
PART OF 05A5P1
PART OF 05A5P4
PART OF 05A5P1
PART OF 05A5P4
PART OF 05A5P1
PART OF LEG 1
PART OF 05A5P3
PART OF LEG 4
PART OF 05A5P4
PART OF 05A5P1
PART OF LEG 1
PART OF 05A5P3
PART OF 05A5P4
PART OF LEG 4
LEG 6
PART OF 05A5P1
PART OF LEG 1
PART OF 05A5P4
PART OF 05A5P1
PART OF 05A5P3
LEG 3
05A5P5
P
T
E1
E2
E3
E4
E5
E6
E9
E10
E11
E12
E13
E14
E15
E7
12

1005707 C

1005707	D

SYM	DESCRIPTION	DATE	APPROVAL
C	REPLACES REV B WITH CHANGES PER TDRR 16535	2/29/6[illegible]	[illegible]
D	REVISED PER TDRR 16708 DR R. [illegible] CHK [illegible]	3/24/6[illegible]	[illegible]

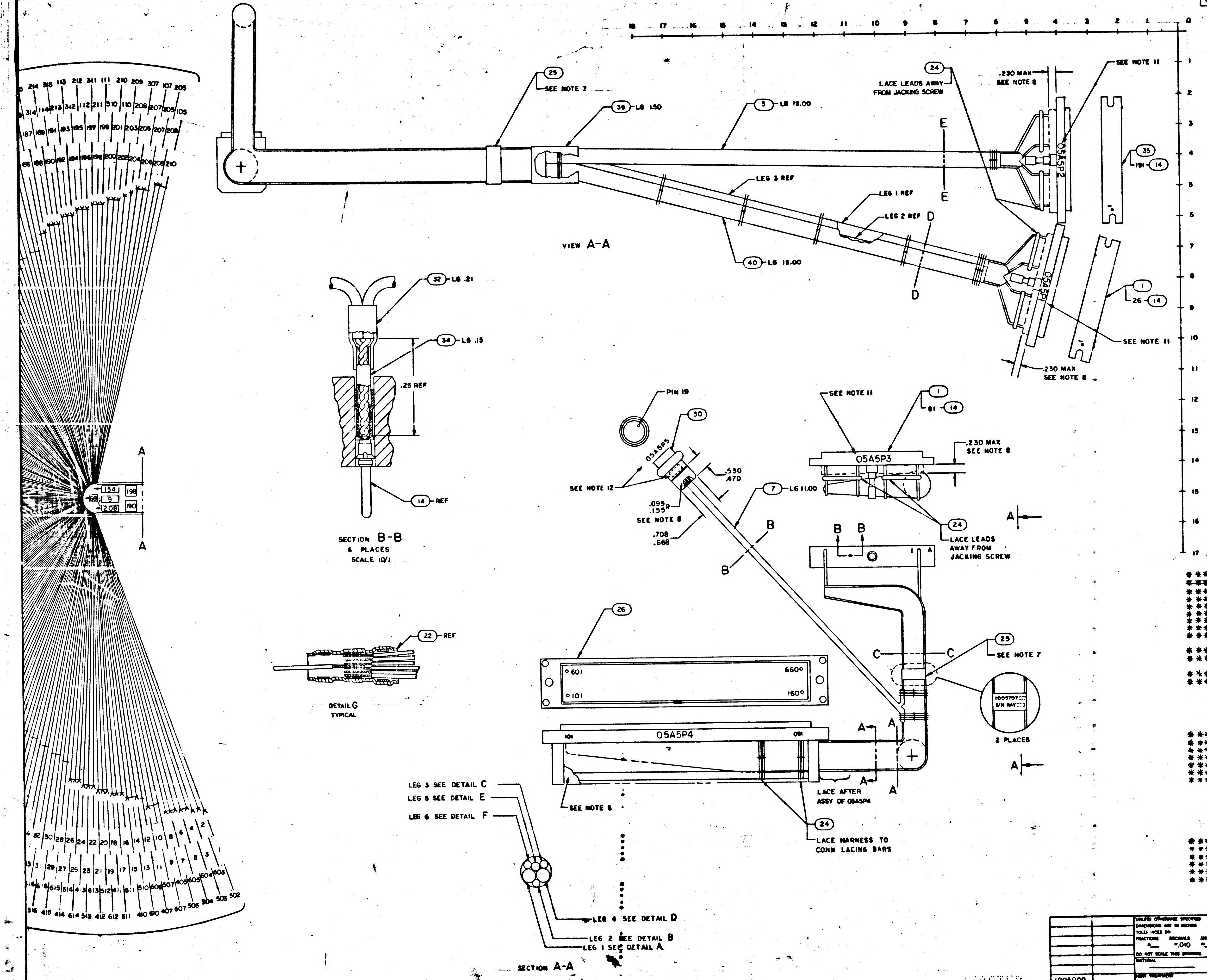

VIEW A-A
SECTION B-B
6 PLACES
SCALE 10/1
DETAIL G
TYPICAL
SECTION A-A
SEE NOTE 7
LG 1.50
LG 15.00
LEG 3 REF
LEG 1 REF
LEG 2 REF
LACE LEADS AWAY FROM JACKING SCREW
.230 MAX
SEE NOTE 8
SEE NOTE 11
05A5P2
05A5P1
05A5P3
05A5P4
05A5P5
PIN 19
SEE NOTE 12
.530
.470
.095
.155 R
.708
.668
LG 11.00
LG .21
LG .15
.25 REF
REF
LACE AFTER ASSY OF 05A5P4
LACE HARNESS TO CONN LACING BARS
2 PLACES
LEG 3 SEE DETAIL C
LEG 5 SEE DETAIL E
LEG 6 SEE DETAIL F
LEG 4 SEE DETAIL D
LEG 2 SEE DETAIL B
LEG 1 SEE DETAIL A
1005707
S/N RAY
601
660
101
160

© REPLACES REV B WITH CHANGES

	☒	1005799	WIRING DIAGRAM	REF
	2	1000242-26	FERRULE, ELEC	44
	2	1000243-27	FERRULE, ELEC	43
***	4	SEE NOTE 3	SLEEVING	42
~~***~~	~~1.5~~	~~SEE NOTE 3~~	~~SLEEVING~~	~~41~~
***	5	SEE NOTE 3	SLEEVING	40
***	.2	1006322-025	INSULATION, SLEEVING	39
***	.5	1006322-022	INSULATION, SLEEVING	38
***	.5	1006322-018	INSULATION, SLEEVING	37
***	4.3	1006322-007	INSULATION, SLEEVING	36
***	.5	1006322-019	INSULATION, SLEEVING	35
***	.2	1006322-001	INSULATION, SLEEVING	34
	1	1010815-244	CONNECTOR, PLUG ELEC	33
***	.2	1006322-004	INSULATION, SLEEVING	32
***	.5	1006322-020	INSULATION, SLEEVING	31
	1	1010771-013	CONNECTOR, PLUG ELEC	30
***	22	1010789-007	WIRE ELEC, AWG 22 BLK	29
***	11	1010789-006	WIRE ELEC, AWG 22 YEL	28
				~~27~~
	1	1003731	CONNECTOR ASSY, 360 CONTACTS	26
	2	MS18035-1-2	BAND MARKER, CABLE	25
	AR	1012507-003	TAPE, LACING	24
	10	1010402-2	SLEEVE, SOLDER	23
	17	1010402-1	SLEEVE, SOLDER	22
***	4	1010789-005	WIRE ELEC AWG 24, 4 COND TWISTED	21
***	15	1010789-004	WIRE ELEC AWG 24, 3 COND TWISTED	20
***	20	1010789-003	WIRE ELEC AWG 24, 2 COND TWISTED	19
***	364	1010789-017	WIRE ELEC AWG 26, 2 COND TWISTED	18
***	3.5	1010789-001	WIRE ELEC AWG 24, YEL	17
***	170	1010789-016	WIRE ELEC AWG 26, YEL	16
***	18	1010789-015	WIRE ELEC AWG 26, 2 COND SHIELDED	15
	732	1010738-5	CONTACT, ELEC, PIN	14
	2	1000242-37	FERRULE, ELEC	13
	2	1000243-41	FERRULE, ELEC	12
	4	1000242-32	FERRULE, ELEC	11
	4	1000243-34	FERRULE, ELEC	10
	4	1000242-29	FERRULE, ELEC	9
	4	1000243-31	FERRULE, ELEC	8
***	3.5	SEE NOTE 3	SLEEVING	7
***	3.5	SEE NOTE 3	SLEEVING	6
***	2	SEE NOTE 3	SLEEVING	5
***	3.5	SEE NOTE 4	WIRE, BRAID	4
***	3.5	SEE NOTE 4	WIRE, BRAID	3
***	3.5	SEE NOTE 4	WIRE, BRAID	2
	2	1010815-144	CONNECTOR, PLUG ELEC	1
	QTY REQD	PART OR IDENTIFYING NO.	NOMENCLATURE OR DESCRIPTION	FIND NO.

LIST OF MATERIALS

1005000	
NEXT ASSY	USED ON
APPLICATION	

UNLESS OTHERWISE SPECIFIED
DIMENSIONS ARE IN INCHES
TOLERANCES ON
FRACTIONS ± DECIMALS ±.010 ANGLES ±
DO NOT SCALE THIS DRAWING
MATERIAL
HEAT TREATMENT
FINAL FINISH

MIT
INSTRUMENTATION LAB
CAMBRIDGE, MASS
DRAWN C. [illegible] DATE 15 FEB [illegible]
CHECKED [illegible]
APPROVAL
APPROVAL [illegible]
NASA APPROVAL [illegible]

MANNED SPACECRAFT CENTER
HOUSTON, TEXAS

WIRING HARNESS
AGC TO PSA & G/N TO SPACECRAFT

CODE IDENT NO. —— SIZE J NASA DRAWING NO. 1005707
SCALE 1/1 WT —— SHEET 1 OF 4

1005707 D

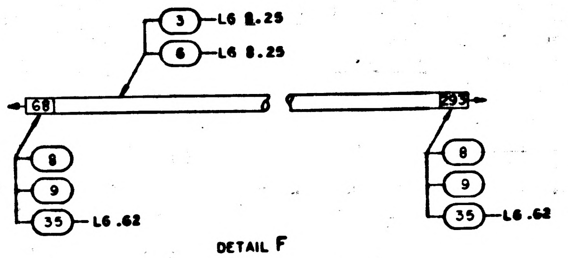

3 LG 8.25
6 LG 8.25
68
293
8
9
35 LG .62
8
9
35 LG .62

DETAIL F
LEG 6
SCALE NONE

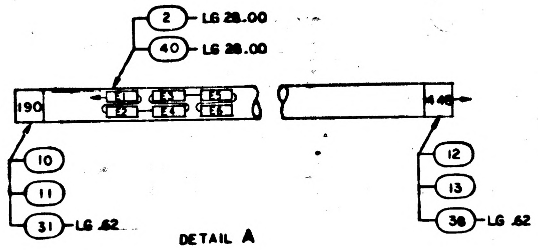

2 LG 28.00
40 LG 28.00
190
E1 E3 E5
E2 E4 E6
448
10
11
31 LG .62
12
13
38 LG .62

DETAIL A
LEG 1
SCALE NONE

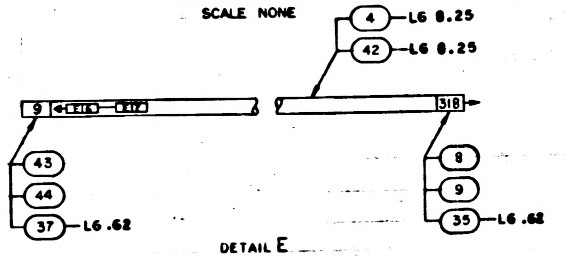

4 LG 8.25
42 LG 8.25
9
E16 E17
318
43
44
37 LG .62
8
9
35 LG .62

DETAIL E
LEG 5
SCALE NONE

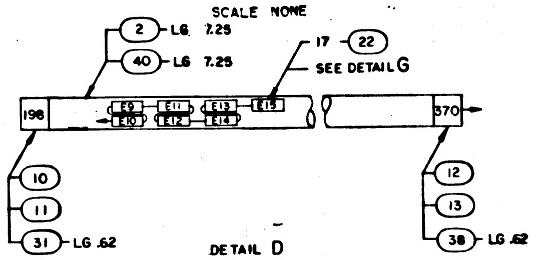

2 LG 7.25
40 LG 7.25
17 22 SEE DETAIL G
198
E9 E11 E13 E15
E10 E12 E14
370
10
11
31 LG .62
12
13
38 LG .62

DETAIL D
LEG 4
SCALE NONE

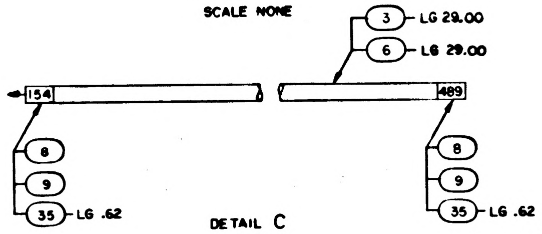

3 LG 29.00
6 LG 29.00
154
489
8
9
35 LG .62
8
9
35 LG .62

DETAIL C
LEG 3
SCALE NONE

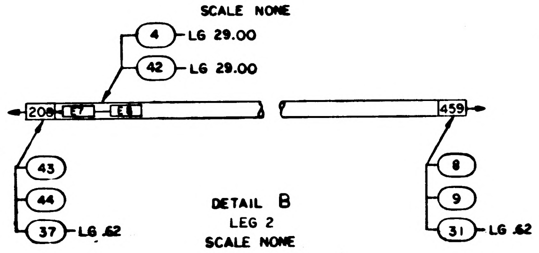

4 LG 29.00
42 LG 29.00
208
E7 E8
459
43
44
37 LG .62
8
9
31 LG .62

DETAIL B
LEG 2
SCALE NONE

NOTES

1. INTERPRET DRAWING IN ACCORDANCE WITH STANDARDS PRESCRIBED BY MIL-D-70327
2. FOR FABRICATION SEE ND 1002032
3. MIL-I-631 TYPE F, FORM U_a, GRADE A, CLASS I, CATAGORY I, FOR FIND NO.5 AWG 5/8, FOR FIND NO.40 AWG 3/8 ~~FOR FIND NO.41 AWG 1 IN.~~, FOR FIND NO.6 AWG 7/16, FOR FIND NO.7 AWG 2, FOR FIND NO.42 AWG 1/2
4. QQ-B-575 FOR FIND NO.2 BRAID SIZE 1/2, AWG 34, FOR FIND NO.3 BRAID SIZE 1/4, AWG 36, FOR FIND NO.4 BRAID SIZE 3/8, AWG 34
5. ✱✱✱ DENOTES LENGTH IN FEET
6. INSTALL CRIMP STYLE TERMINALS IN ACCORDANCE WITH ND 1002206
7. MARK .100/.060 HIGH PER ND 1002019 AND ND 1002122 TYPE II CLASS I, USING BLACK MARKING INK 1006271-11 AND SERIALIZE PER ND 1002023
8. ENCAPSULATE INDICATED AREA PER ND 1002009 METHOD E, MOUNTING SURFACES OF CONNECTORS MUST NOT BE ENCAPSULATED
9. TEST PER FTM 1005707
10. SOLDER PER ND 1002071, EXCEPT AS SHOWN
11. MARK .200/.180 HIGH PER ND 1002019 AND ND 1002122 TYPE II CLASS I, USING BLACK MARKING INK 1006271-11. CENTRALIZE AS SHOWN.
12. MARK .070/.050 HIGH PER ND 1002019 AND ND 1002122 TYPE II CLASS 2, USING BLACK MARKING INK 1006271-11. CENTRALIZE AS SHOWN
13. ● SEE INTERNAL CONNECTION CHART
14. ●● ATTACH FIND NO. 29
15. ✱ DENOTES TWO CONNECTIONS TO ONE PIN
16. ✱✱ DENOTES TWO CONNECTIONS TO ONE PIN, SEE SECTION B-B
17. PARTIAL REFERENCE DESIGNATIONS ARE SHOWN: FOR COMPLETE DESIGNATIONS PREFIX 'P' NOS. IN RUN CHART WITH 05A5
18. NUMBERS PRECEDING BALLOONS DENOTES QUANTITIES

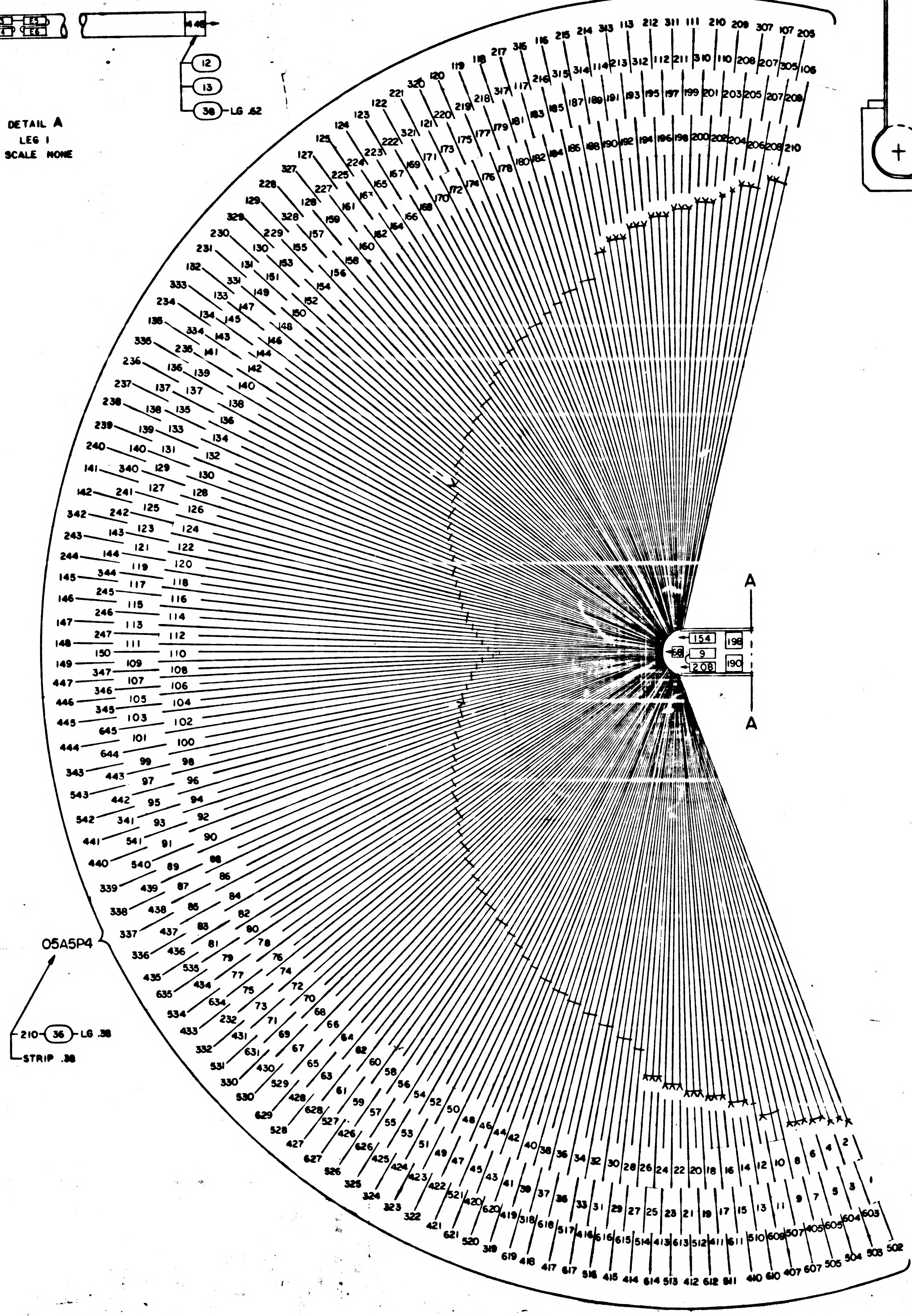

05A5P4
210 36 LG .38
STRIP .38
A
A
154
9
208
198
190
68

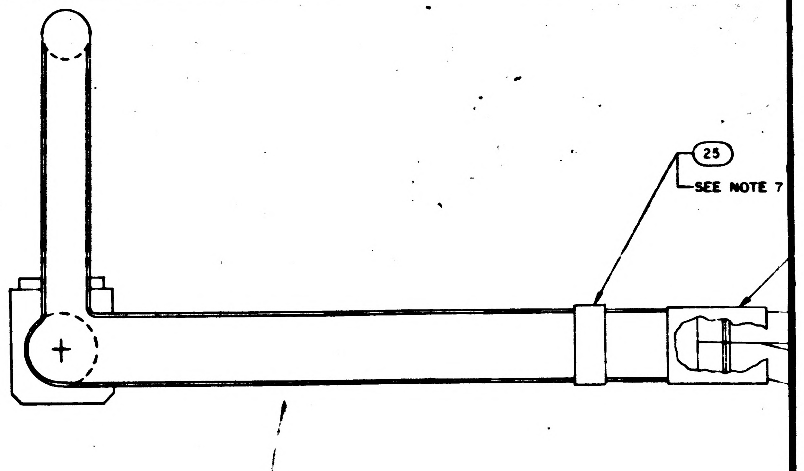

25
SEE NOTE 7
VIEW

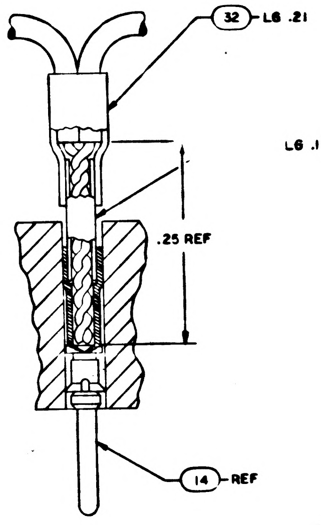

32 LG .21
LG .15
.25 REF
14 REF

SECTION B-B
6 PLACES
SCALE 10/1

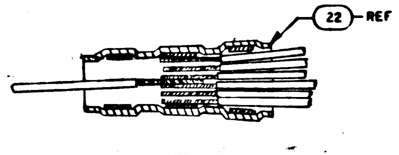

DETAIL G
TYPICAL

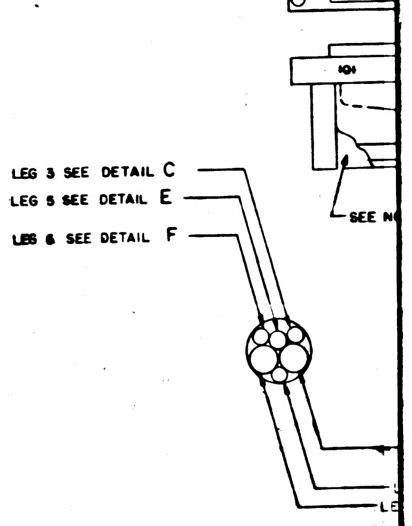

601
101
101
LEG 3 SEE DETAIL C
LEG 5 SEE DETAIL E
LEG 6 SEE DETAIL F
SEE N
SEE N

SECTION A-A

1005707 D

SHEET 1

	REVISIONS		
C	REPLACES REV B WITH CHANGES PER TDRR 16535	7/24/63	WR
Ⓜ D	REVISED PER TDRR 16708 DR R. Zink CHK R.H.E.	3/24/64	

1005707 D

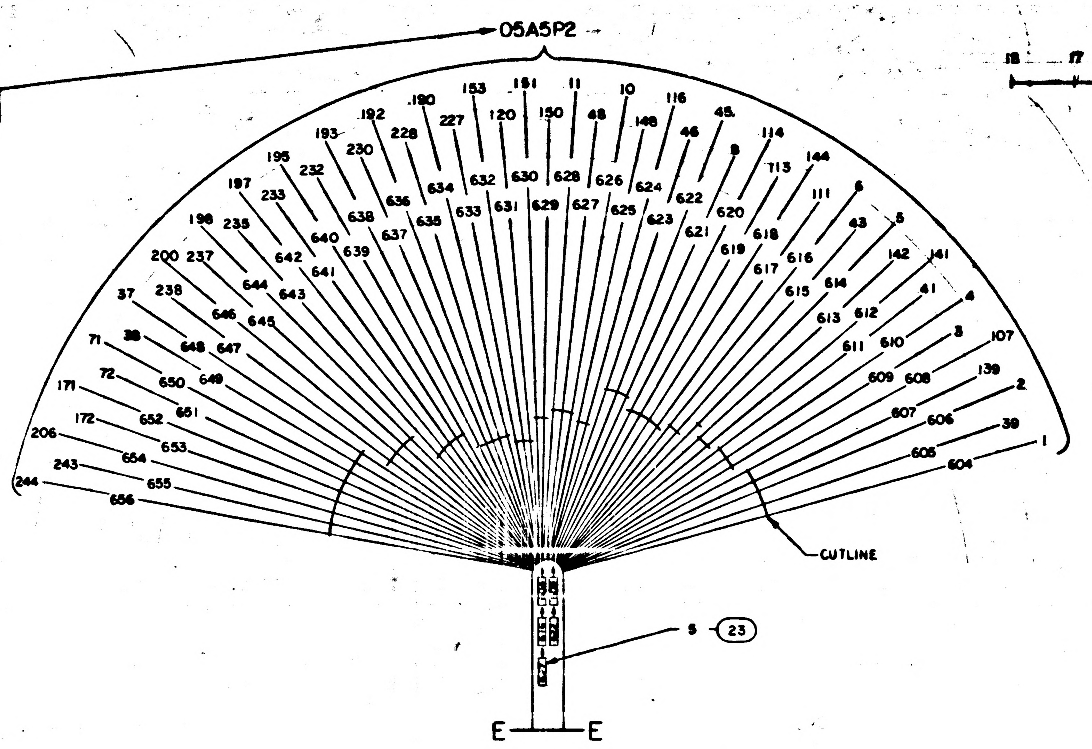

INTERNAL CONNECTION CHART					
REMARKS	FROM	FIND NO.	LENGTH	TO	REMARKS
	9 •••	29	3	208 •••	
	E6	16	3	E5	
	E5	16	2	E3	
	E3	16	3	E4	
	E4	16	2	E2	
	E2	16	3	E1	
	E1	16		186	
	E8	16	2	E7	
	E7	16		203	
	E15	16	2	E13	
	E13	16	3	E14	
	E14	16	2	E12	
	E12	16	3	E11	
	E11	16	2	E9	
	E9	16	3	E10	
	E10	16		29	
	E17	16	2	E16	
	E16	16		203	
	240 •••	29	3	243 •••	
	248 •••	29	3	251 •••	

••• DENOTES FERRULE

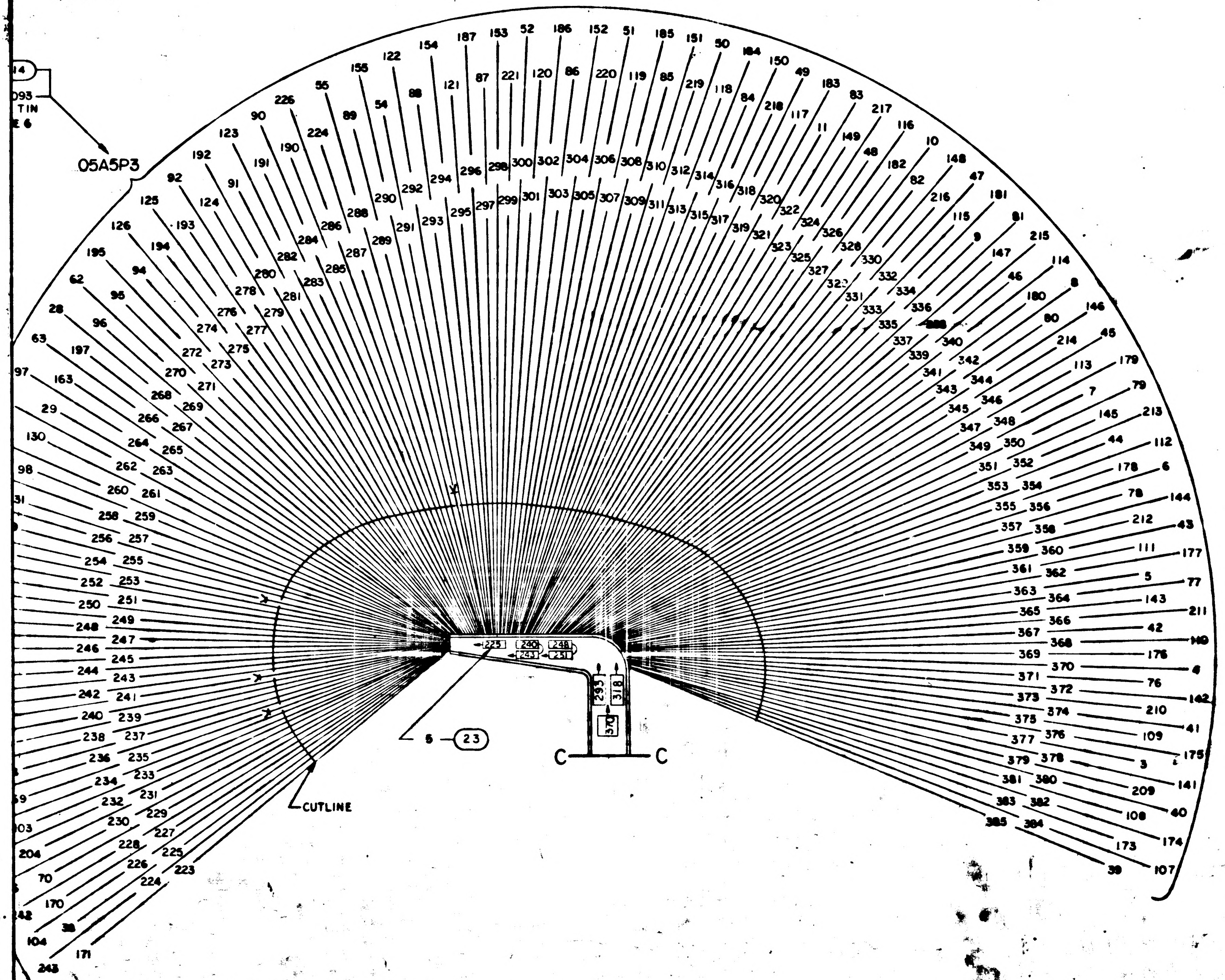

Ⓒ REPLACES REV B WITH CHANGES

MASTER

QTY REQD	PART OR IDENTIFYING NO.	NOMENCLATURE OR DESCRIPTION	FIND NO.

LIST OF MATERIALS

NEXT ASSY	USED ON
APPLICATION	

UNLESS OTHERWISE SPECIFIED
DIMENSIONS ARE IN INCHES
TOLERANCES ON
FRACTIONS ± — DECIMALS ±.010 ANGLES ± —
DO NOT SCALE THIS DRAWING
MATERIAL
HEAT TREATMENT
FINAL FINISH

MIT
INSTRUMENTATION LAB
CAMBRIDGE, MASS
DRAWN C. Maggio DATE 15 FEB 63
CHECKED
APPROVAL
APPROVAL
NASA APPROVAL
MIT APPROVAL

MANNED SPACECRAFT CENTER
HOUSTON, TEXAS

WIRING HARNESS
AGC TO PSA & G/N TO SPACECRAFT

CODE IDENT NO. —
SIZE J
NASA DRAWING NO. 1005707
SCALE 1/1
WT
SHEET 2 OF 4

1005707 D

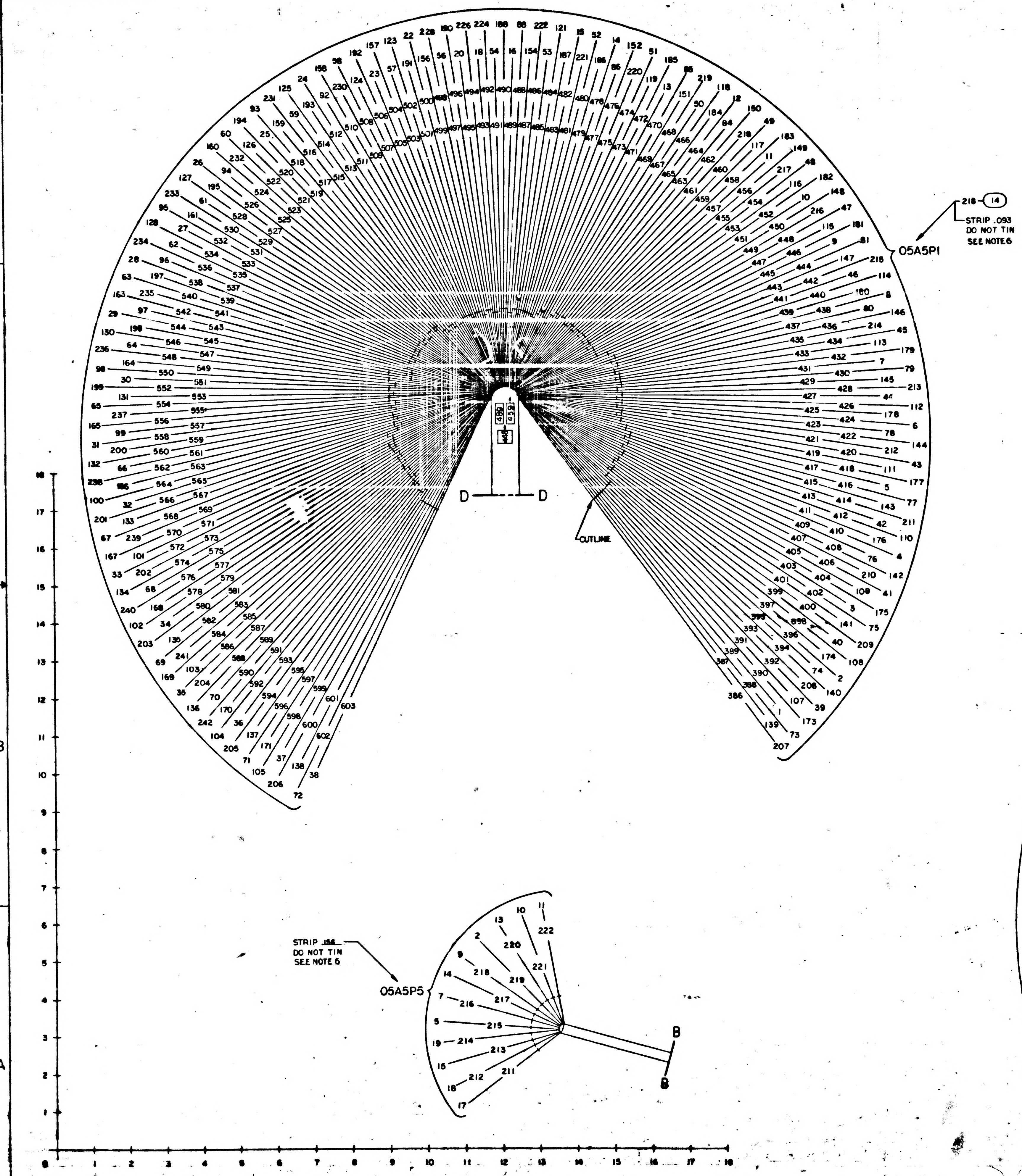
05A5P1
218 — 14
STRIP .093
DO NOT TIN
SEE NOTE 6
CUTLINE
D — D
05A5P5
STRIP .156
DO NOT TIN
SEE NOTE 6
B — B
0 1 2 3 4 5 6 7 8 9 10 11 12 13 14 15 16 17 18

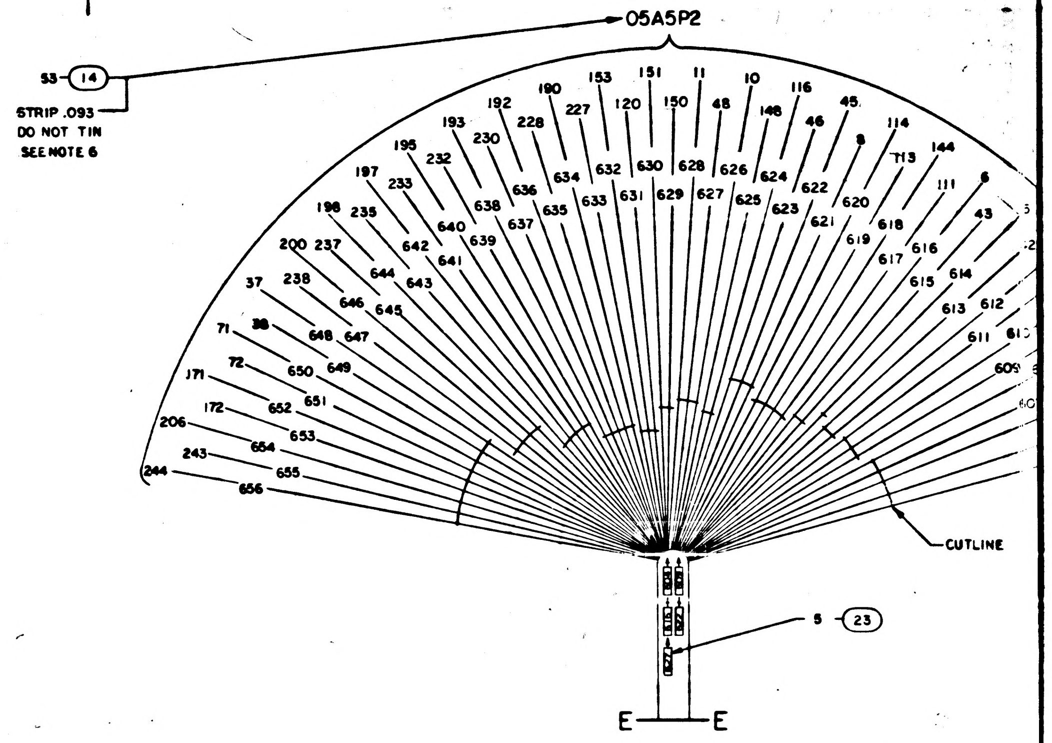
05A5P2
53 — 14
STRIP .093
DO NOT TIN
SEE NOTE 6
CUTLINE
5 — 23
E — E

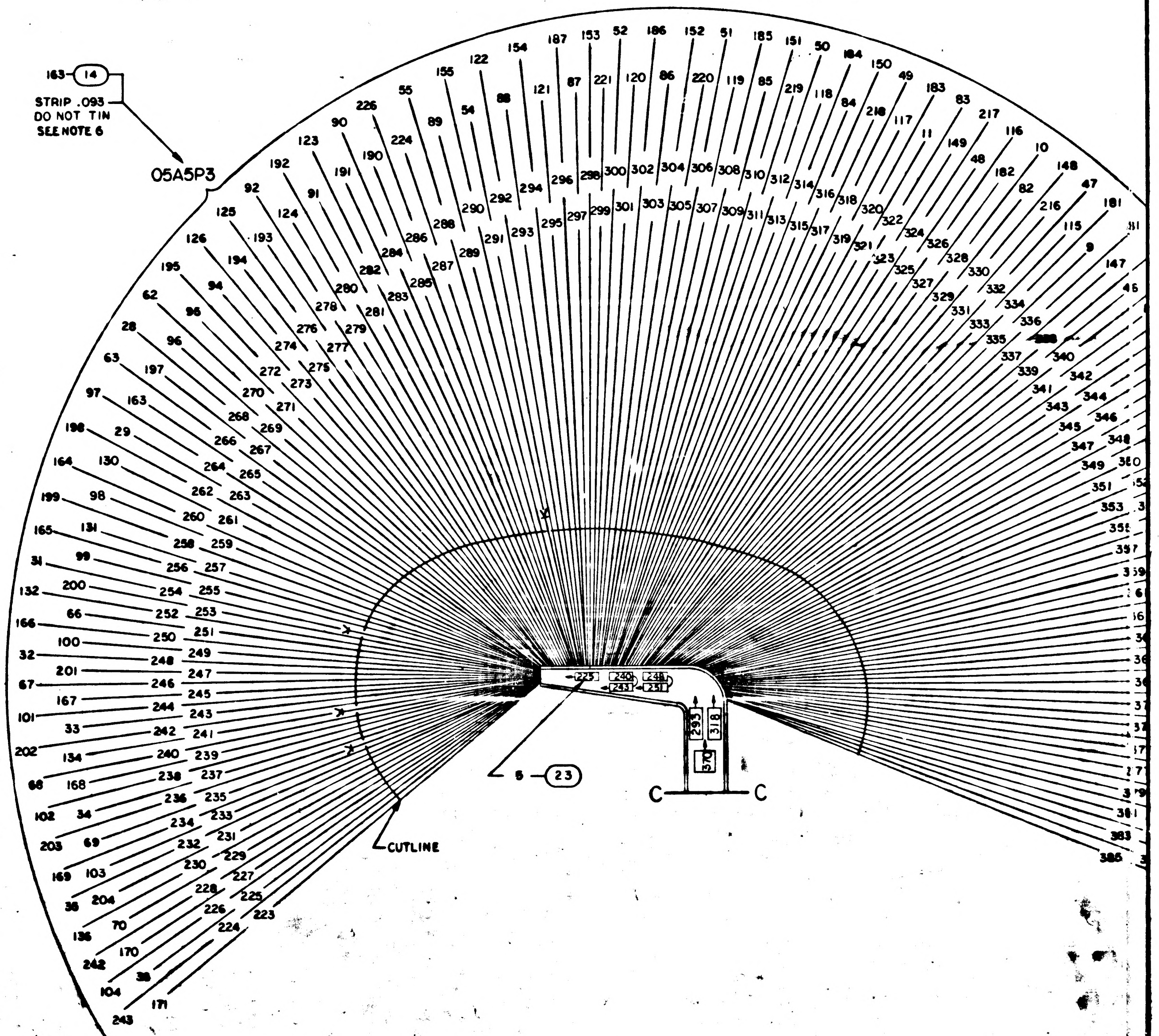
163 — 14
STRIP .093
DO NOT TIN
SEE NOTE 6
05A5P3
CUTLINE
5 — 23
C — C

1005707 D

SHEET 2

ASSEMBLY INFORMATION CHART

DESCRIPTION

ASSEMBLY INFORMATION CHART

DESCRIPTION

Ⓒ REPLACES REV B WITH CHANGES

ASSEMBLY INFORMATION CHART

	FROM		DESCRIPTION			TO		
REMARKS	DESTINATION	RUN NO.	COLOR	AWG	FIND NO.	RUN NO.	DESTINATION	REMARKS
	P3-4	370	YEL	26	18	198	P4-211	*
	-5	363	RED				E13	●
	-41	374	YEL			197	P4-311	*
	-42	367	RED				E13	●
	-76	371	YEL			18	P4-411	*
	-77	364	RED				E13	●
	-212	359	YEL			199	P4-111	*
	-213	352	RED				E13	●
	-109	375	YEL			17	P4-511	*
	-110	368	RED				E14	●
	-142	372	YEL			16	P4-611	*
	-143	365	RED				E14	●
	-175	376	YEL			201	P4-210	*
	-176	369	RED				E14	●
	-210	373	YEL			200	P4-310	*
	-211	366	RED				E14	●
	-78	357	YEL			194	P4-312	*
	-79	350	RED				E12	●
	-111	361	YEL			21	P4-412	*
	-112	354	RED				E12	●
	-144	358	YEL			20	P4-512	*
	-145	351	RED				E12	●
	-177	362	YEL			19	P4-612	*
	-178	355	RED				E12	●
	-6	356	YEL			196	P4-112	*
	-7	349	RED				E11	●
	-43	360	YEL			195	P4-212	*
	-44	353	RED				E11	●
	-179	348	YEL			23	P4-513	* LEG 4
	-180	341	RED				E11	●
	-214	345	YEL			22	P4-613	*
	-215	338	RED				E11	●
	-45	346	YEL			193	P4-113	*
	-46	339	RED				E10	●
	-80	343	YEL			192	P4-213	*
	-91	336	RED				E10	●
	-113	347	YEL			191	P4-313	*
	-114	340	RED				E10	●
	-146	344	YEL			24	P4-413	*
	-147	337	RED				E10	●
	-8	342	YEL			25	P4-614	*
	-9	335	RED				E9	●
	-148	330	YEL			188	P4-314	*
	-149	323	RED				E9	●
	-181	334	YEL			27	P4-414	*
	-182	327	RED				E9	●
	-216	331	YEL			26	P4-514	*
	-217	324	RED				E9	●
	-47	332	YEL			190	P4-114	*
	-48	325	RED				E15	●
	-82	329	YEL			28	P4-615	
	-83	322	RED				E15	●
	-115	333	YEL		18	189	P4-214	*
	-116	326	RED				E15	●
	-3	377	YEL		16	13	P4-610	*
	-141	378	YEL		16	15	P4-410	*
	-209	379	YEL	26	16	202	P4-110	*
●●	P3-107	384	SHLD					
	P3-49	318	YEL	26	18	9	P4-607	
	-50	312	RED				E16	●
	-51	306	YEL			10	P4-507	
	-52	300	RED				E16	●
	-185	308	YEL			11	P4-407	*
	-186	302	RED				E16	●
	-220	305	YEL			205	P4-307	*
	-221	299	RED				E16	●
	-84	315	YEL			209	P4-205	* LEG 5
	-85	309	RED				E17	●
	-117	319	YEL			208	P4-305	*
	-118	313	RED				E17	●
	-150	316	YEL			8	P4-405	*
	-151	310	RED				E17	●
	-183	320	YEL			7	P4-505	*
	-184	314	RED				E17	●
	-218	317	YEL		18	6	P4-605	*
	-219	311	RED				E17	●
	-10	328	YEL		16	206	P4-207	*
	-11	321	YEL	26	16	204	P4-208	*
●●	P3-187	296	SHLD					●
	P3-88	293	YEL	26	18	68	P4-430	
	-54	291	RED			57	-526	
	-86	303	YEL		18	70	-631	
	-55	288	RED			56	-626	
	-87	297	YEL		16	64	-428	
	-119	307				71	-531	
	-120	301				62	-628	
	-121	295				63	-528	LEG 6
	-122	292				65	-629	
	-152	304				72	-431	
	-153	298				66	-529	
	-154	294				67	-530	
** {	-155	290				58	-426	
	-155	290	YEL	26	16	61	-427	
●●	P3-89	289	SHLD			75	P4-433	●●

ASSEMBLY INFORMATION CHART

	FROM		DESCRIPTION			TO		
REMARKS	DESTINATION	RUN NO.	COLOR	AWG	FIND NO.	RUN NO.	DESTINATION	REMARKS
	P1-47	448	YEL	26	18	190	P4-114	*
	-48	454	RED				E1	●
	-115	447	YEL			189	P4-214	*
	-116	453	RED				E1	●
	-148	450	YEL			188	P4-314	*
	-149	456	RED				E1	●
	-181	446	YEL			27	P4-414	*
	-182	452	RED				E1	●
	-216	449	YEL			26	P4-514	*
	-217	455	RED				E1	●
	-45	434	YEL			193	P4-113	*
	-46	441	RED				E2	●
	-80	437	YEL			192	P4-213	*
	-81	444	RED				E2	●
	-113	433	YEL			191	P4-313	*
	-114	440	RED				E2	●
	-8	438	YEL			25	P4-614	*
	-9	445	RED				E2	●
	-6	424	YEL			196	P4-112	*
	-7	431	REL				E3	●
	-146	436	YED			24	P4-413	*
	-147	443	RED				E3	●
	-179	432	YEL			23	P4-513	*
	-180	439	RED				E3	●
	-214	435	YEL			22	P4-613	*
	-215	442	RED				E3	●
	-43	420	YEL			195	P4-212	*
	-44	427	RED				E4	●
	-78	423	YEL			194	P4-312	* LEG 1
	-79	430	RED				E4	●
	-111	419	YEL			21	P4-412	*
	-112	426	RED				E4	●
	-144	422	YEL			20	P4-512	*
	-145	429	RED				E4	●
	-4	410	YEL			198	P4-211	*
	-5	417	RED				E5	●
	-41	406	YEL			197	P4-311	*
	-42	413	RED				E5	●
	-177	418	YEL			19	P4-612	*
	-178	425	RED				E5	●
	-212	421	YEL			199	P4-111	*
	-213	428	RED				E5	●
	-76	409	YEL			18	P4-411	*
	-77	416	RED				E6	●
	-109	405	YEL			17	P4-511	*
	-110	412	RED				E6	●
	-142	408	YEL			16	P4-611	*
	-143	415	RED				E6	●
	-175	404	YEL			201	P4-210	*
	-176	411	RED				E6	●
	-210	407	YEL		18	200	P4-310	*
	-211	414	RED				E6	●
	-3	403	YEL		16	13	P4-610	*
	-75	402	YEL		16	14	P4-510	
	-141	401	YEL		16	15	P4-410	*
	209	400	YEL	26	16	202	P4-110	*
●●	P1-107	391	SHLD					
	P1-117	459	YEL	26	18	208	P4-305	*
	-118	466	RED				E7	●
	-150	462	YEL			8	P4-405	*
	-151	469	RED				E7	●
	-183	458	YEL			7	P4-505	*
	-184	465	RED				E7	●
	-218	461	YEL			6	P4-605	*
	-219	468	RED				E7	●
	-12	464	YEL			207	P4-107	
	-13	471	RED				E8	●
	-14	478	YEL			210	P4-105	LEG 2
	-15	482	RED				E8	●
	-84	463	YEL			209	P4-205	*
	-85	470	RED				E8	●
	-185	472	YEL			11	P4-407	*
	-186	479	RED				E8	●
	-220	475	YEL		18	205	P4-307	*
	-221	481	RED				E8	●
	-10	451	YEL		16	206	P4-207	*
	-11	457	YEL	26	16	204	P4-208	
●●	P1-187	483	SHLD			12	P4-609	●, ●●
	P1-16	489	YEL	26	16	154	P4-229	
	-18	493				151	-230	
	-20	495				149	-231	
	-54	491				148	-331	
	-86	477				153	-329	
	-88	488				69	-330	
** {	-119	473				156	-328	
	-119	473				59	-627	
●* {	-121	484				158	-128	LEG 3
	-121	484				60	-527	
	-152	476				155	-129	
	-154	487				152	-130	
	-188	490				150	-131	
	-222	496				73	-332	
	-224	492				74	-232	
	-226	494				147	-132	
	P1-228	498	YEL	26	16	146	-133	
			SHLD			145	P4-333	●●,*

ASSEMBLY INFORMATION CHART

	FROM		DESCRIPTION			TO		
REMARKS	DESTINATION	RUN NO.	COLOR	AWG	FIND NO.	RUN NO.	DESTINATION	REMARKS
	P1-235	541	YEL	26	18	82	P4-436	
	P1-236	548	RED			84	P4-437	
	P4-336	83	YEL			539	P1-197	
	P4-337	85	RED			545	P1-198	
	P1-163	542	YEL			78	P4-434	
	P1-164	549	RED			81	P4-435	
	P4-334	142	YEL			546	P1-130	
	P4-335	139	RED			553	P1-131	
	P1-97	543	YEL			134	P4-138	
	P1-98	550	RED			132	P4-139	
	P4-234	143	YEL			547	P1-64	
	P4-235	140	RED			554	P1-65	
	P1-30	551	YEL			144	P4-134	
	P1-31	558	RED			141	P4-135	
	P4-236	137	YEL			555	P1-237	
	P4-237	135	RED			562	P1-238	
	P1-199	552	YEL			138	P4-36	
	P1-200	559	RED			136	P4-37	
	P4-238	133	YEL			556	P1-165	
	P4-239	131	RED			563	P1-166	
	P1-132	560	YEL			106	P4-346	
	P1-133	567	RED			108	P4-347	
	P4-246	114	YEL			557	P1-99	
	P4-247	112	RED			564	P1-100	
	P1-66	561	YEL			86	P4-438	
	P1-67	568	RED			88	P4-439	
	P4-338	87	YEL			565	P1-32	
	P4-339	89	RED			572	P1-33	
	P1-239	569	YEL			91	P4-440	
	P1-240	576	RED			93	P4-441	
	P4-340	128	YEL			566	P1-201	
	P4-341	94	RED			573	P1-202	
	P1-167	570	YEL			129	P4-240	
	P1-168	577	RED			126	P4-241	
	P4-140	130	YEL			574	P1-134	
	P4-141	127	RED			581	P1-135	
	P1-101	571	YEL			105	P4-446	
	P1-102	578	RED			107	P4-447	
	P4-442	96	YEL			575	P1-68	
	P4-443	98	RED			582	P1-69	
	P1-34	579	YEL			123	P4-342	
	P1-35	586	RED			99	P4-343	
	P4-242	124	YEL			583	P1-241	
	P4-243	121	RED			590	P1-242	
	P1-203	580	YEL			125	P4-142	
	P1-204	587	RED			122	P4-143	
	P4-444	101	YEL			584	P1-169	
	P4-445	103	RED			591	P1-170	
	P1-136	588	YEL			118	P4-344	
	P1-137	595	RED			104	P4-345	
	P4-244	119	YEL			585	P1-103	
	P4-245	116	RED			592	P1-104	
	P1-70	589	YEL			120	P4-144	
	P1-71	596	RED			117	P4-145	
	P4-222	168	YEL			594	P1-205	
	P4-223	166	RED			600	P1-206	
	P1-105	598	YEL			90	P4-540	
	P1-72	602	RED			92	P4-541	
	P4-149	109	YEL			597	P1-171	
	P4-150	110	RED			601	P1-138	
	P1-28	538	YEL			165	P4-124	
	P1-29	544	RED			163	P4-125	
	P4-224	164	YEL			522	P1-60	
	P4-225	162	RED			529	P1-61	
	P1-94	525	YEL			175	P4-120	
	P1-95	532	RED			172	P4-121	
	P4-220	174	YEL			528	P1-127	
	P4-221	171	RED			534	P1-128	
	P1-160	524	YEL			173	P4-320	
	P1-161	531	RED			170	P4-321	
	P4-420	44	YEL			520	P1-194	
	P4-421	47	RED			527	P1-195	
	P1-92	511	YEL			179	P4-118	
	P1-93	518	RED			177	P4-119	
	P4-218	178	YEL			514	P1-125	
	P4-219	176	RED			521	P1-126	
	P1-158	510	YEL			169	P4-122	
	P1-159	517	RED			167	P4-123	
	P4-318	38	YEL			506	P1-192	
	P4-319	41	RED			513	P1-193	
	P1-232	523	YEL			37	P4-418	
	P1-233	530	RED			40	P4-419	
	P4-116	185	YEL			526	P1-26	
	P4-117	182	RED			533	P1-27	
	P1-24	512	YEL			184	P4-216	
	P1-25	519	RED			181	P4-217	
	P4-316	183	YEL			508	P1-58	
	P4-317	180	RED			515	P1-59	
	P1-56	497	YEL			32	P4-416	
	P1-57	503	RED			35	P4-417	
	P4-322	49	YEL			502	P1-123	
	P4-323	51	RED			507	P1-124	
	P1-156	499	YEL			48	P4-422	
	P1-157	504	RED			50	P4 423	
	P4-324	53	YEL			496	P1-190	
	P4-325	55	RED			501	P1-191	
	P1-230	509	YEL			52	P4-424	
	P1-231	516	RED			54	P4-425	
	P4-620	42	YEL			282	P3-123	
	P4-621	45	RED			279	P3-124	
	P3-125	276	YEL			43	P4-520	
	P3-126	274	RED			46	P4-521	
	P4-534	77	YEL			284	P3-90	
	P4-535	80	RED			281	P3-91	
	P3-194	275	YEL			36	P4-618	
	P3-195	272	RED			39	P4-619	
	P4-516	31	YEL			280	P3-192	
	P4-517	34	RED			277	P3-193	
	P3-190	285	YEL	26	18	30	P4-616	
	P3-191	283	RED			33	P4-617	

1005707 D

SYM	DESCRIPTION	DATE	APPROVAL
C	REPLACES REV B WITH CHANGES PER TDRR 16535	3/2	
Ⓜ D	REVISED PER TDRR 16708 DR R. [illegible] CHK [illegible]	3/22/6	

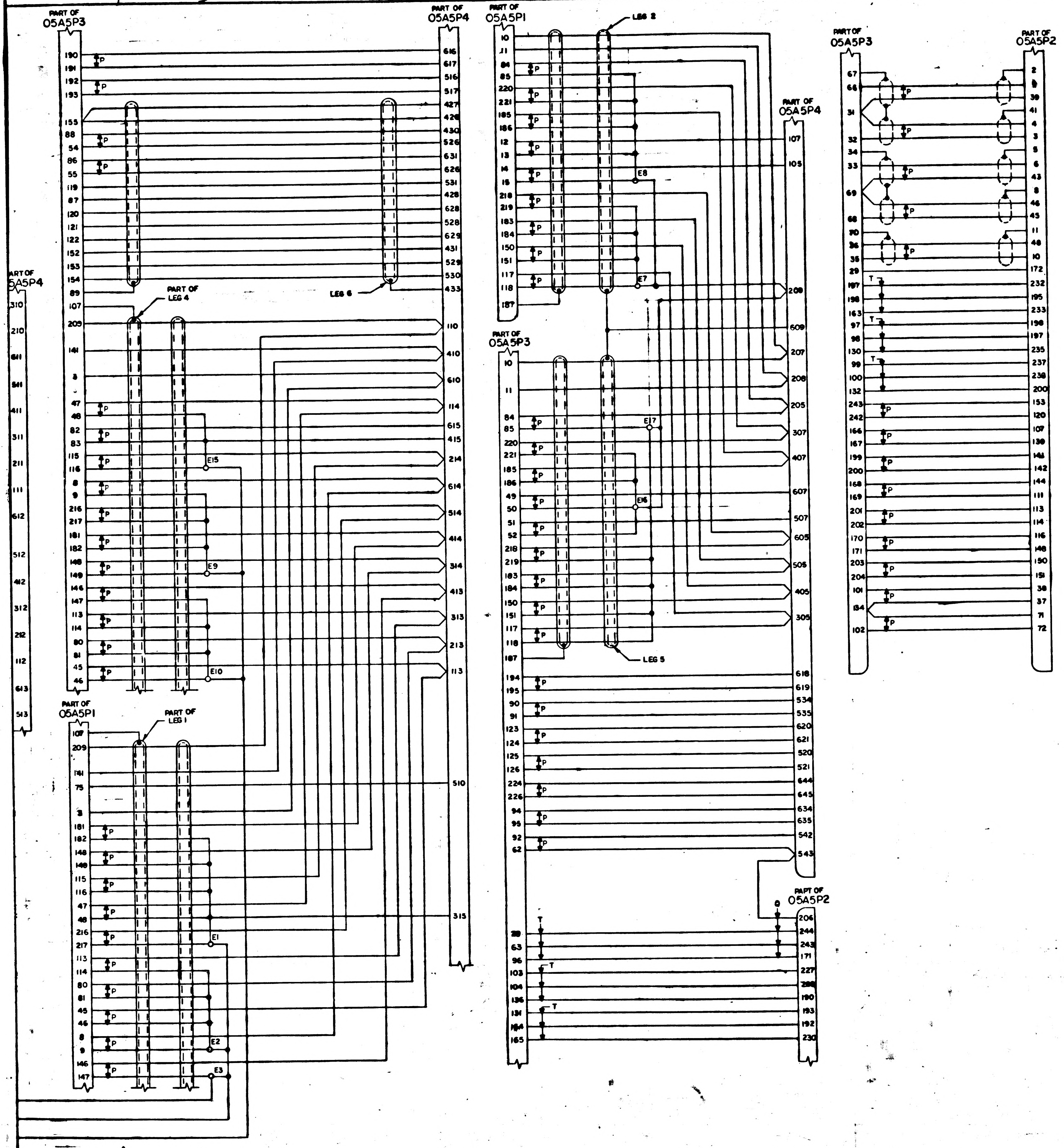

PART OF 05A5P3
PART OF 05A5P4
PART OF 05A5P1
PART OF 05A5P4
PART OF 05A5P3
PART OF 05A5P4
PART OF 05A5P3
PART OF 05A5P2
PART OF 05A5P1
PART OF 05A5P2
LEG 2
LEG 6
PART OF LEG 4
LEG 5
PART OF LEG 1
E1
E2
E3
E7
E8
E9
E10
E15
E16
E17
P
T

Ⓒ REPLACES REV B WITH CHANGES

QTY REQD	PART OR IDENTIFYING NO.	NOMENCLATURE OR DESCRIPTION	FIND NO

LIST OF MATERIALS

UNLESS OTHERWISE SPECIFIED
DIMENSIONS ARE IN INCHES
TOLERANCES ON
FRACTIONS ± — DECIMALS ± — ANGLES ± —
DO NOT SCALE THIS DRAWING
MATERIAL —
HEAT TREATMENT —
FINAL FINISH —

NEXT ASSY | USED ON
APPLICATION

M I T
INSTRUMENTATION LAB
CAMBRIDGE, MASS

DRAWN [illegible] DATE [illegible]
CHECKED [illegible]
APPROVAL
APPROVAL [illegible]
NASA APPROVAL [illegible]
MIT APPROVAL [illegible]

MANNED SPACECRAFT CENTER
HOUSTON, TEXAS

WIRING HARNESS
AGC TO PSA & G/N TO SPACECRAFT

CODE IDENT NO. —
SIZE J
NASA DRAWING NO 1005707
SCALE NONE
WT —
SHEET 4 OF 4

MASTER

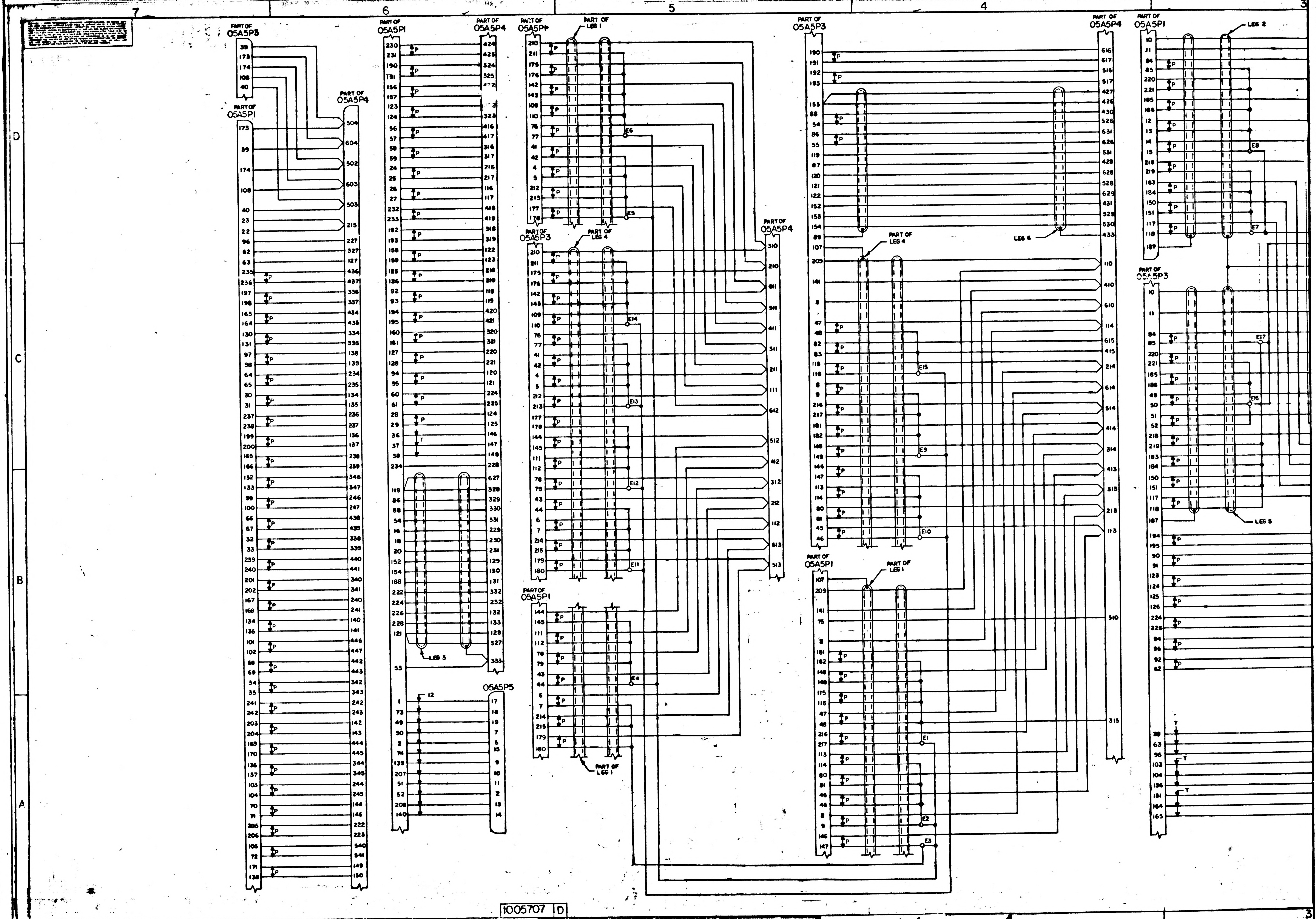
7
6
5
4
3
D
C
B
A
PART OF 05A5P3
PART OF 05A5P1
PART OF 05A5P4
PART OF 05A5P1
PART OF 05A5P4
PART OF 05A5P1
PART OF LEG 1
PART OF 05A5P3
PART OF LEG 4
PART OF 05A5P1
PART OF LEG 1
PART OF 05A5P4
PART OF 05A5P3
PART OF LEG 4
PART OF 05A5P1
PART OF LEG 1
PART OF 05A5P4
PART OF 05A5P1
LEG 2
LEG 6
PART OF 05A5P3
LEG 5
LEG 3
05A5P5
E1
E2
E3
E4
E5
E6
E7
E8
E9
E10
E11
E12
E13
E14
E15
E16
E17
P
T
12
1005707 D

1005707 D

SHEET 4

SYM	DESCRIPTION	DATE	APPROVAL
C	REPLACES REV B WITH CHANGES PER TDRR 16535	2/29/64	
D	REVISED PER TDRR 16708 DR R. Linebad CHK R.H.E.	3/24/65	
E	REVISED PER TDRR 17260 DR Kalkenpson CHK		

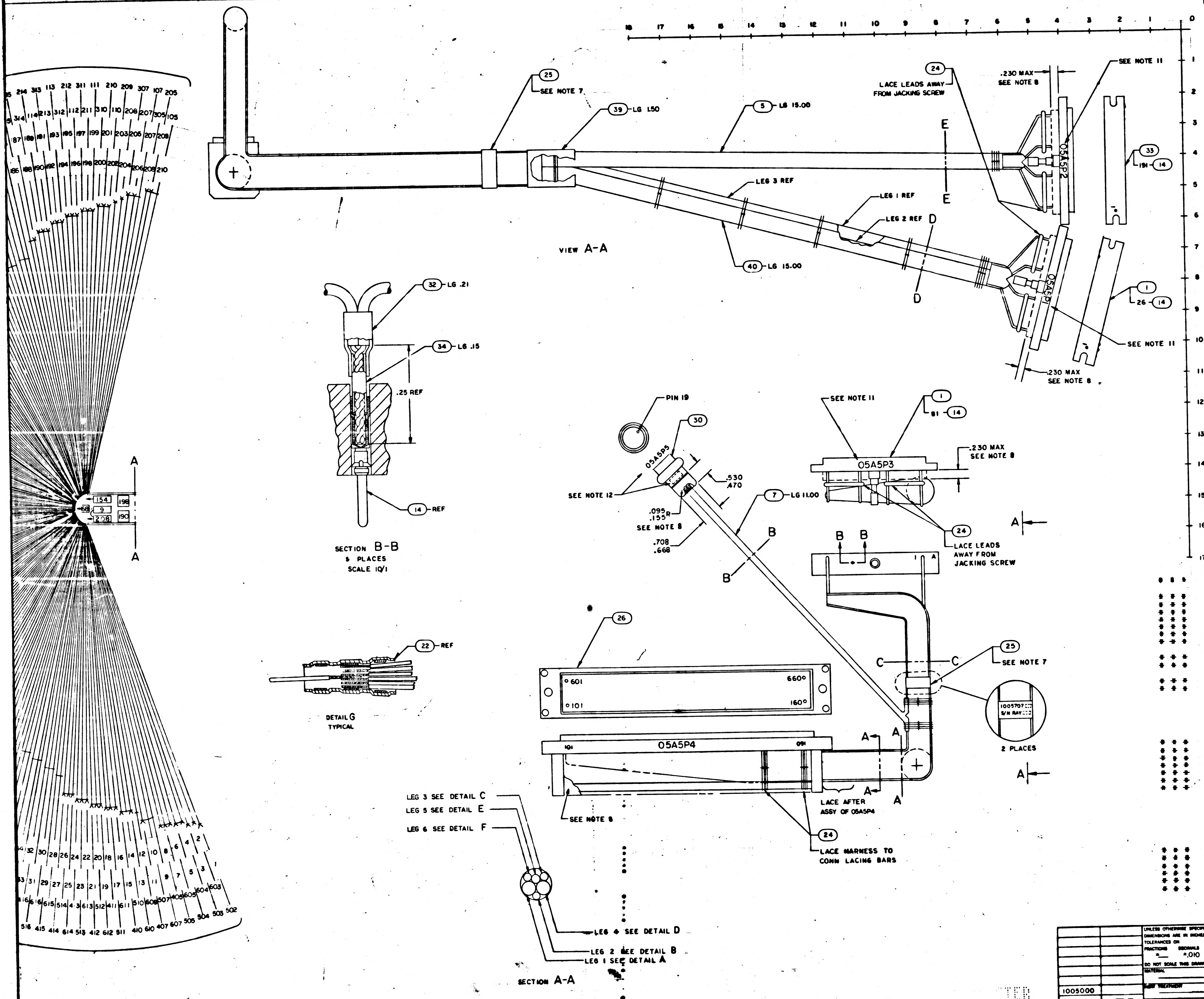

4
3
2
1
18 17 16 15 14 13 12 11 10 9 8 7 6 5 4 3 2 1 0
1 2 3 4 5 6 7 8 9 10 11 12 13 14 15 16 17
25 SEE NOTE 7
39 LG 1.50
5 LG 15.00
24 LACE LEADS AWAY FROM JACKING SCREW
.230 MAX SEE NOTE 8
SEE NOTE 11
E
E
05A5P2
33 191 14
LEG 3 REF
LEG 1 REF
LEG 2 REF
D
D
VIEW A-A
40 LG 15.00
05A5P1
1 26 14
SEE NOTE 11
.230 MAX SEE NOTE 8
32 LG .21
34 LG .15
.25 REF
14 REF
SECTION B-B
5 PLACES
SCALE 10/1
A
A
154 198
9
208 190
PIN 19
30
05A5P5
SEE NOTE 12
.530 .470
.095 .155 R
SEE NOTE 8
.708 .668
7 LG 11.00
B
B
SEE NOTE 11
1 81 14
.230 MAX SEE NOTE 8
05A5P3
24 LACE LEADS AWAY FROM JACKING SCREW
B B
A
C C
25 SEE NOTE 7
1005707 S/N RAY
2 PLACES
A
22 REF
DETAIL G TYPICAL
26
601 660
101 160
05A5P4
101 160
A A
A
SEE NOTE 8
LACE AFTER ASSY OF 05A5P4
24 LACE HARNESS TO CONN LACING BARS
LEG 3 SEE DETAIL C
LEG 5 SEE DETAIL E
LEG 6 SEE DETAIL F
LEG 4 SEE DETAIL D
LEG 2 SEE DETAIL B
LEG 1 SEE DETAIL A
SECTION A-A

Ⓒ REPLACES REV B WITH CHANGES

QTY REQD	QTY REQD	PART OR IDENTIFYING NO.	NOMENCLATURE OR DESCRIPTION	FIND NO
		1005799	WIRING DIAGRAM	REF
2	2	1000242-26	FERRULE, ELEC	44
2	2	1000243-27	FERRULE, ELEC	43
4	4	SEE NOTE 3	SLEEVING	42
	~~1.5~~	~~SEE NOTE 3~~	~~SLEEVING~~	~~41~~
5	5	SEE NOTE 3	SLEEVING	40
.2	.2	1006322-025	INSULATION, SLEEVING	39
.5	.5	1006322-022	INSULATION, SLEEVING	38
.5	.5	1006322-018	INSULATION, SLEEVING	37
4.3	4.3	1006322-007	INSULATION, SLEEVING	36
.5	.5	1006322-019	INSULATION, SLEEVING	35
.2	.2	1006322-001	INSULATION, SLEEVING	34
1	1	1010815-244	CONNECTOR, PLUG ELEC	33
.2	.2	1006322-004	INSULATION, SLEEVING	32
.5	.5	1006322-020	INSULATION, SLEEVING	31
1	1	1010771-013	CONNECTOR, PLUG ELEC	30
22	22	1010789-007	WIRE ELEC, AWG 22 BLK	29
11	11	1010789-006	WIRE ELEC, AWG 22 YEL	28
				~~27~~
1	1	1003731	CONNECTOR ASSY, 360 CONTACTS	26
2	2	MS18035-1-2	BAND MARKER, CABLE	25
AR	AR	1012507-003	TAPE, LACING	24
10	10	1010402-2	SLEEVE, SOLDER	23
18	17	1010402-1	SLEEVE, SOLDER	22
4	4	1010789-005	WIRE ELEC AWG 24, 4 COND TWISTED	21
15	15	1010789-004	WIRE ELEC AWG 24, 3 COND TWISTED	20
20	20	1010789-003	WIRE ELEC AWG 24, 2 COND TWISTED	19
364	364	1010789-017	WIRE ELEC AWG 26, 2 COND TWISTED	18
3.5	3.5	1010789-001	WIRE ELEC AWG 24, YEL	17
170	170	1010789-016	WIRE ELEC AWG 26, YEL	16
18	18	1010789-015	WIRE ELEC AWG 26, 2 COND SHIELDED	15
732	732	1010738-5	CONTACT, ELEC, PIN	14
2	2	1000242-37	FERRULE, ELEC	13
2	2	1000243-41	FERRULE, ELEC	12
4	4	1000242-32	FERRULE, ELEC	11
4	4	1000243-34	FERRULE, ELEC	10
4	4	1000242-29	FERRULE, ELEC	9
4	4	1000243-31	FERRULE, ELEC	8
3.5	3.5	SEE NOTE 3	SLEEVING	7
3.5	3.5	SEE NOTE 3	SLEEVING	6
2	2	SEE NOTE 3	SLEEVING	5
3.5	3.5	SEE NOTE 4	WIRE, BRAID	4
3.5	3.5	SEE NOTE 4	WIRE, BRAID	3
3.5	3.5	SEE NOTE 4	WIRE, BRAID	2
2	2	1010815-144	CONNECTOR, PLUG ELEC	1
011	000	LIST OF MATERIALS		

1005000		
NEXT ASSY	USED ON	
APPLICATION		

UNLESS OTHERWISE SPECIFIED DIMENSIONS ARE IN INCHES
TOLERANCES ON
FRACTIONS ± DECIMALS ±.010 ANGLES ±
DO NOT SCALE THIS DRAWING
MATERIAL
HEAT TREATMENT
FINAL FINISH

MIT INSTRUMENTATION LAB
CAMBRIDGE, MASS
DRAWN C. Morgan DATE 15 FEB 64
CHECKED
APPROVAL
APPROVAL
NASA APPROVAL
MIT APPROVAL

MANNED SPACECRAFT CENTER
HOUSTON, TEXAS

WIRING HARNESS
AGC TO PSA & G/N TO SPACECRAFT

CODE IDENT NO. 80230 SIZE J NASA DRAWING NO. 1005707
SCALE 1/1 WT SHEET 1 OF 4

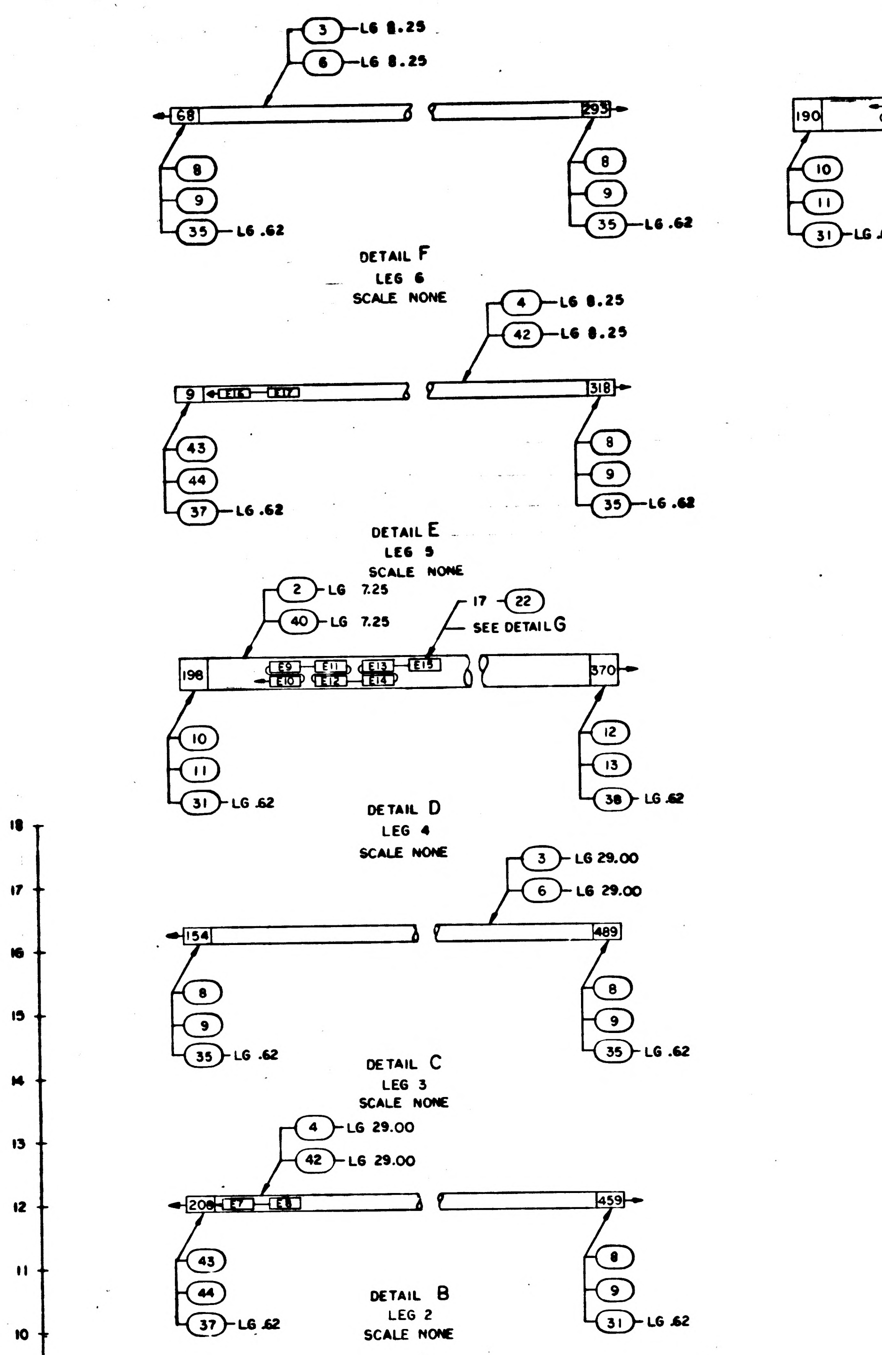

3 LG 8.25
6 LG 8.25
68
295
8
9
35 LG .62
DETAIL F
LEG 6
SCALE NONE
4 LG 8.25
42 LG 8.25
9
318
43
44
37 LG .62
DETAIL E
LEG 5
SCALE NONE
2 LG 7.25
40 LG 7.25
17 22 SEE DETAIL G
196
370
10
11
31 LG .62
12
13
38 LG .62
DETAIL D
LEG 4
SCALE NONE
3 LG 29.00
6 LG 29.00
154
489
DETAIL C
LEG 3
SCALE NONE
4 LG 29.00
42 LG 29.00
208
459
DETAIL B
LEG 2
SCALE NONE

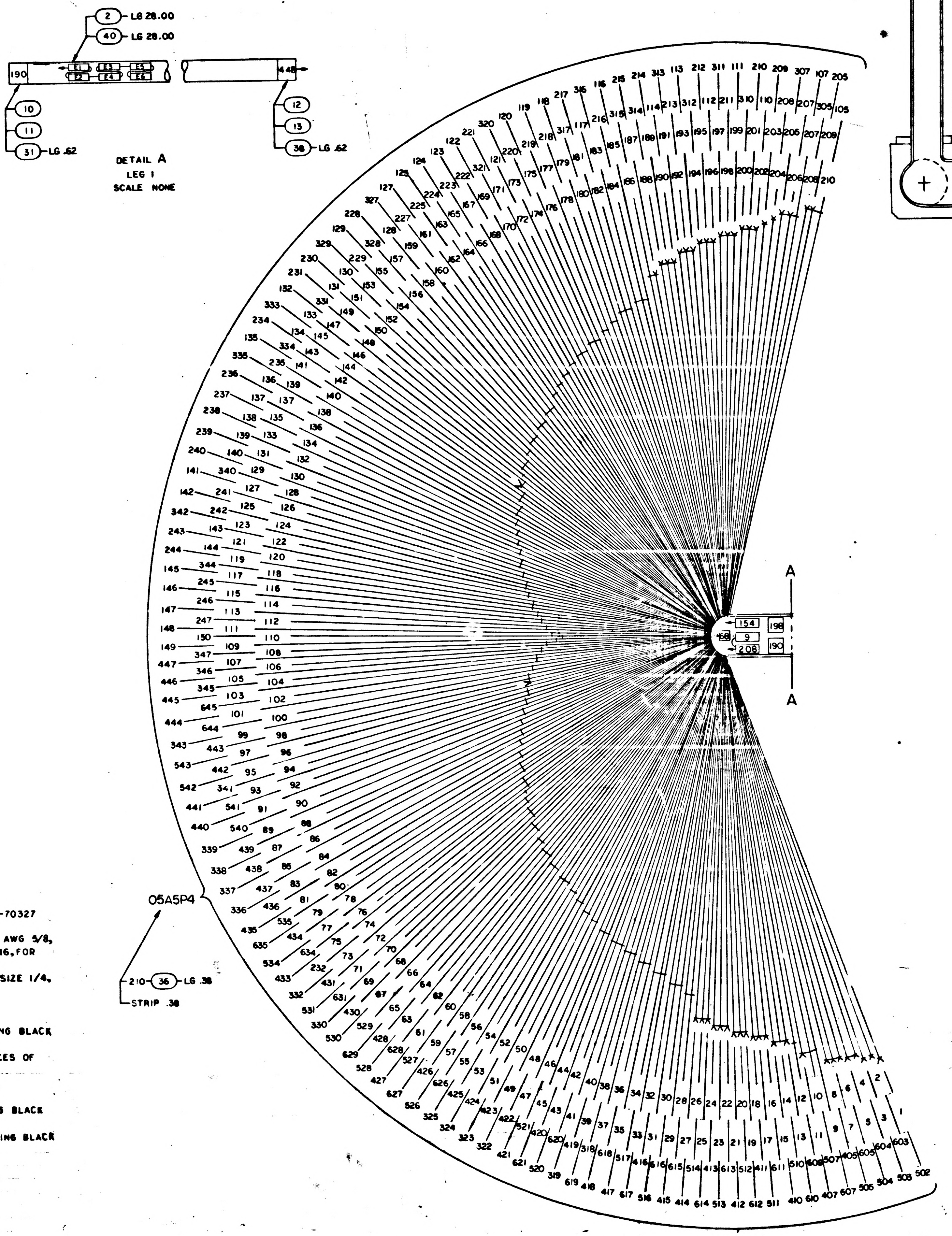

2 LG 28.00
40 LG 28.00
190
448
10
11
31 LG .62
12
13
38 LG .62
DETAIL A
LEG 1
SCALE NONE
05A5P4
210 36 LG .38
STRIP .38
A
A

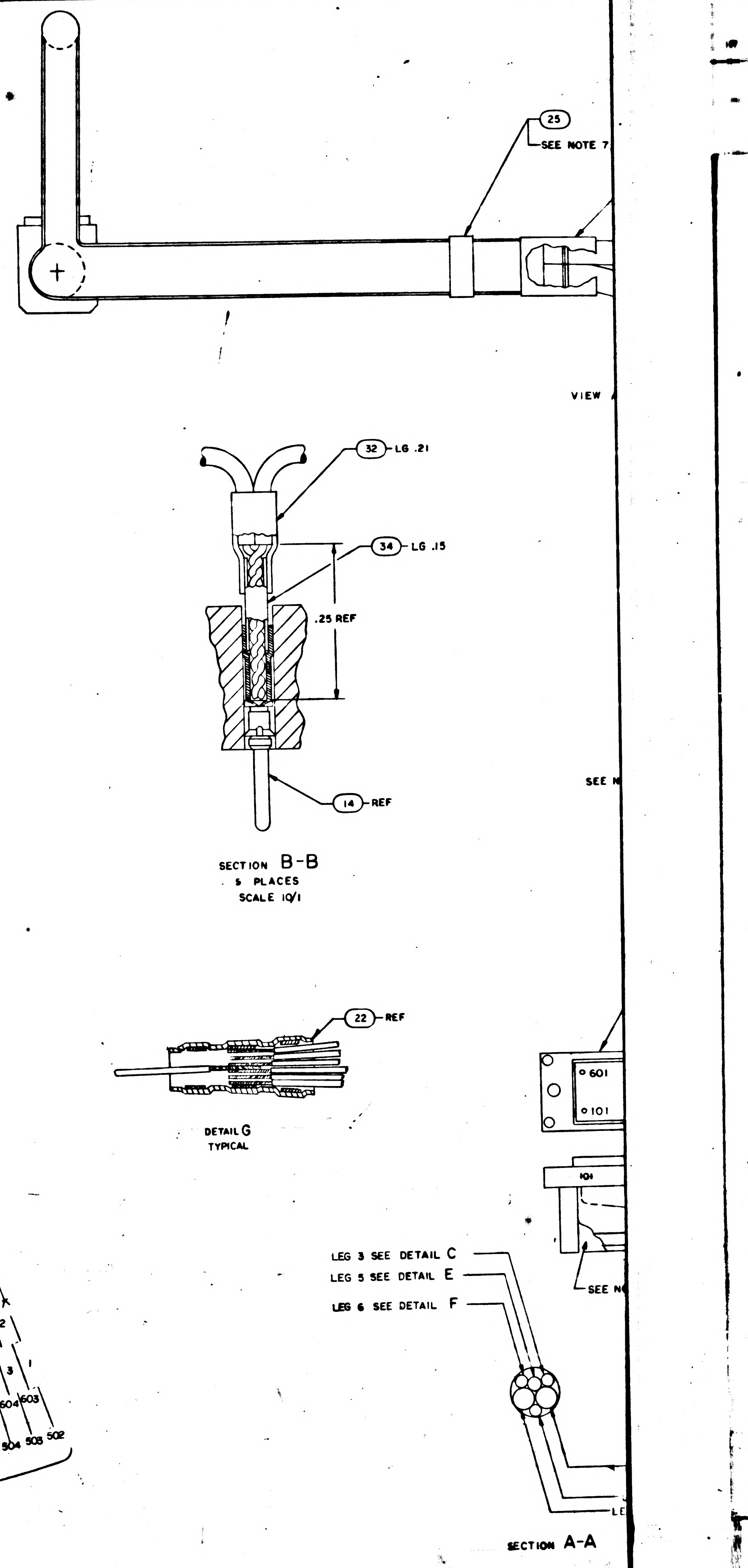

25
SEE NOTE 7
VIEW
32 LG .21
34 LG .15
.25 REF
14 REF
SECTION B-B
5 PLACES
SCALE 10/1
22 REF
DETAIL G
TYPICAL
601
101
LEG 3 SEE DETAIL C
LEG 5 SEE DETAIL E
LEG 6 SEE DETAIL F
SECTION A-A

NOTES

1. INTERPRET DRAWING IN ACCORDANCE WITH STANDARDS PRESCRIBED BY MIL-D-70327
2. FOR FABRICATION SEE ND 1002032
3. MIL-I-631 TYPE F, FORM U_a, GRADE A, CLASS 1, CATAGORY 1, FOR FIND NO.5 AWG 5/8, FOR FIND NO.40 AWG 3/8 ~~FOR FIND NO.41 AWG 1 1/8~~, FOR FIND NO.6 AWG 7/16, FOR FIND NO.7 AWG 2, FOR FIND NO.42 AWG 1/2
4. QQ-B-575 FOR FIND NO.2 BRAID SIZE 1/2, AWG 34, FOR FIND NO.3 BRAID SIZE 1/4, AWG 36, FOR FIND NO.4 BRAID SIZE 3/8, AWG 34
5. ✱ ✱ ✱ DENOTES LENGTH IN FEET
6. INSTALL CRIMP STYLE TERMINALS IN ACCORDANCE WITH ND 1002206
7. MARK .100/.060 HIGH PER ND 1002019 AND ND 1002122 TYPE II CLASS 1, USING BLACK MARKING INK 1006271-11 AND SERIALIZE PER ND 1002023
8. ENCAPSULATE INDICATED AREA PER ND 1002009 METHOD E, MOUNTING SURFACES OF CONNECTORS MUST NOT BE ENCAPSULATED
9. TEST PER FTM 1005707
10. SOLDER PER ND 1002071, EXCEPT AS SHOWN
11. MARK .200/.180 HIGH PER ND 1002019 AND ND 1002122 TYPE II CLASS 1, USING BLACK ~~MARKING INK 1006271-11. CENTRALIZE AS SHOWN.~~
12. MARK .070/.050 HIGH PER ND 1002019 AND ND 1002122 TYPE II CLASS 2, USING BLACK MARKING INK 1006271-11. CENTRALIZE AS SHOWN
13. ● SEE INTERNAL CONNECTION CHART
14. ●● ATTACH FIND NO. 29
15. ✱ DENOTES TWO CONNECTIONS TO ONE PIN
16. ✱✱ DENOTES TWO CONNECTIONS TO ONE PIN, SEE SECTION B-B
17. PARTIAL REFERENCE DESIGNATIONS ARE SHOWN: FOR COMPLETE DESIGNATIONS PREFIX 'P' NOS. IN RUN CHART WITH 05A5
18. NUMBERS PRECEDING BALLOONS DENOTES QUANTITIES

1005707 E

SHEET 1

SYM	DESCRIPTION	DATE	APPROVAL
C	REPLACES REV B WITH CHANGES PER TDRR 16535	7/29/65	
D	REVISED PER TDRR 16708 DR R. [illegible] CHK [illegible]	3/22/66	
E	REVISED PER TDRR 17260 DR K.W. [illegible] CHK [illegible]		

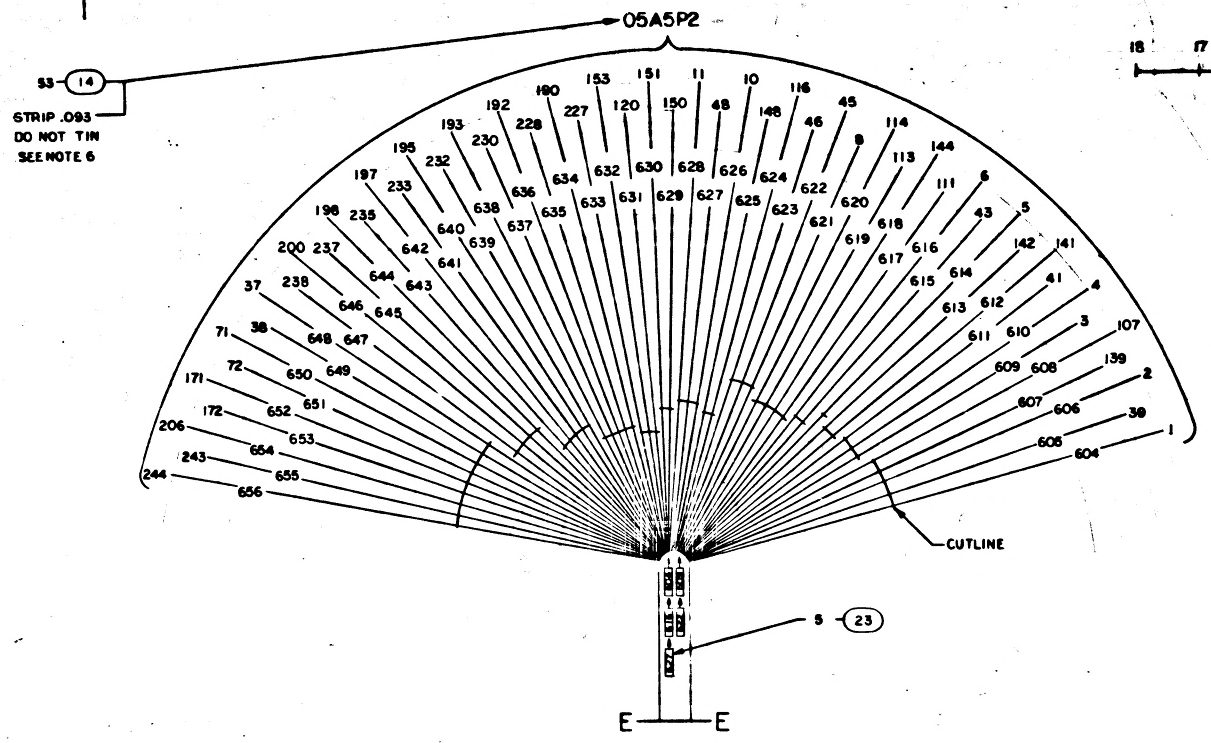
05A5P2
S3-14
STRIP .093
DO NOT TIN
SEE NOTE 6
CUTLINE
5-23
E
E

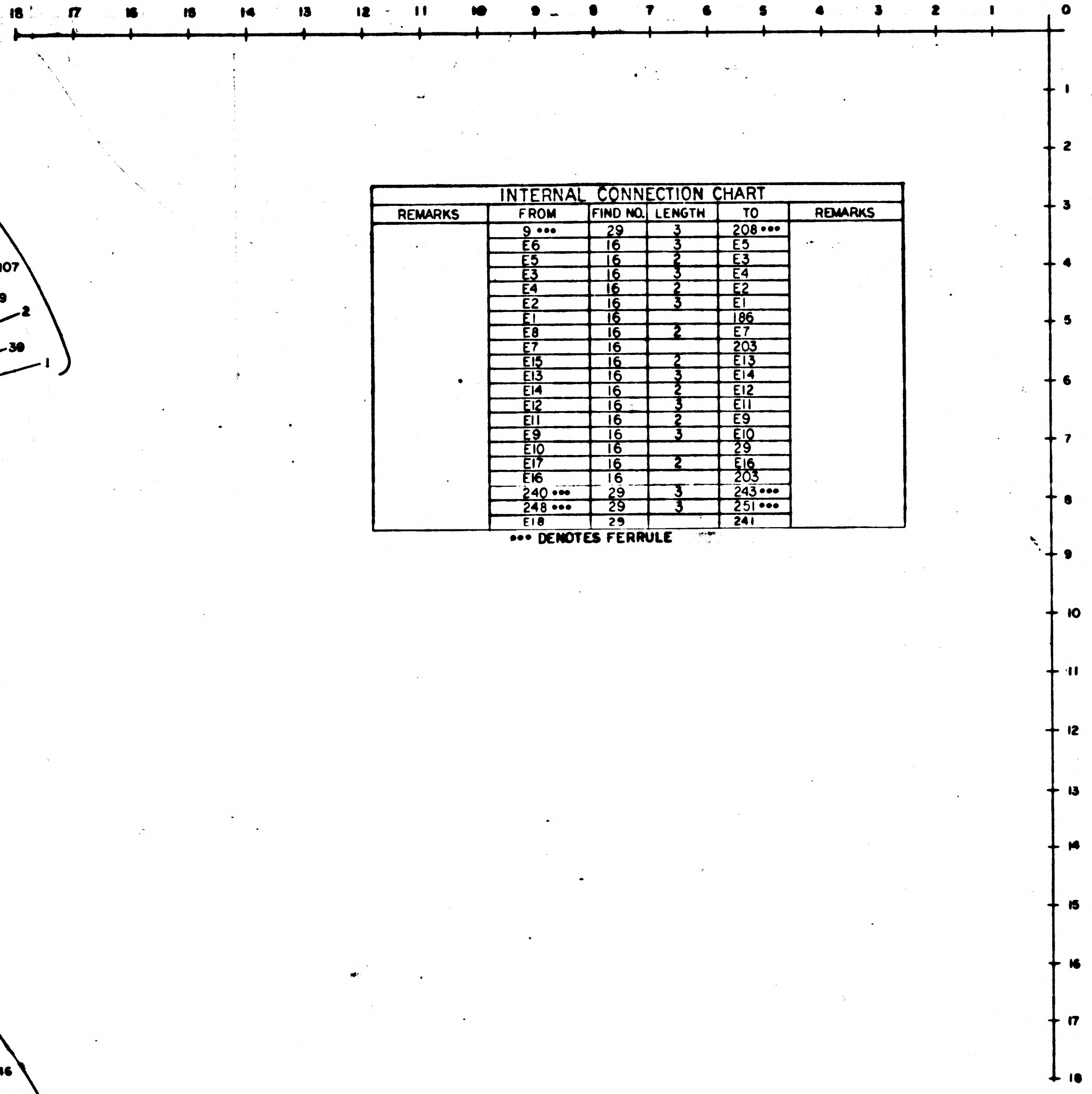
18
17
16
15
14
13
12
11
10
9
8
7
6
5
4
3
2
1
0

INTERNAL CONNECTION CHART

REMARKS	FROM	FIND NO.	LENGTH	TO	REMARKS
	9 •••	29	3	208 •••	
	E6	16	3	E5	
	E5	16	2	E3	
	E3	16	3	E4	
	E4	16	2	E2	
	E2	16	3	E1	
	E1	16		186	
	E8	16	2	E7	
	E7	16		203	
	E15	16	2	E13	
	E13	16	3	E14	
	E14	16	2	E12	
	E12	16	3	E11	
	E11	16	2	E9	
	E9	16	3	E10	
	E10	16		29	
	E17	16	2	E16	
	E16	16		203	
	240 •••	29	3	243 •••	
	248 •••	29	3	251 •••	
	E18	29		241	

••• DENOTES FERRULE

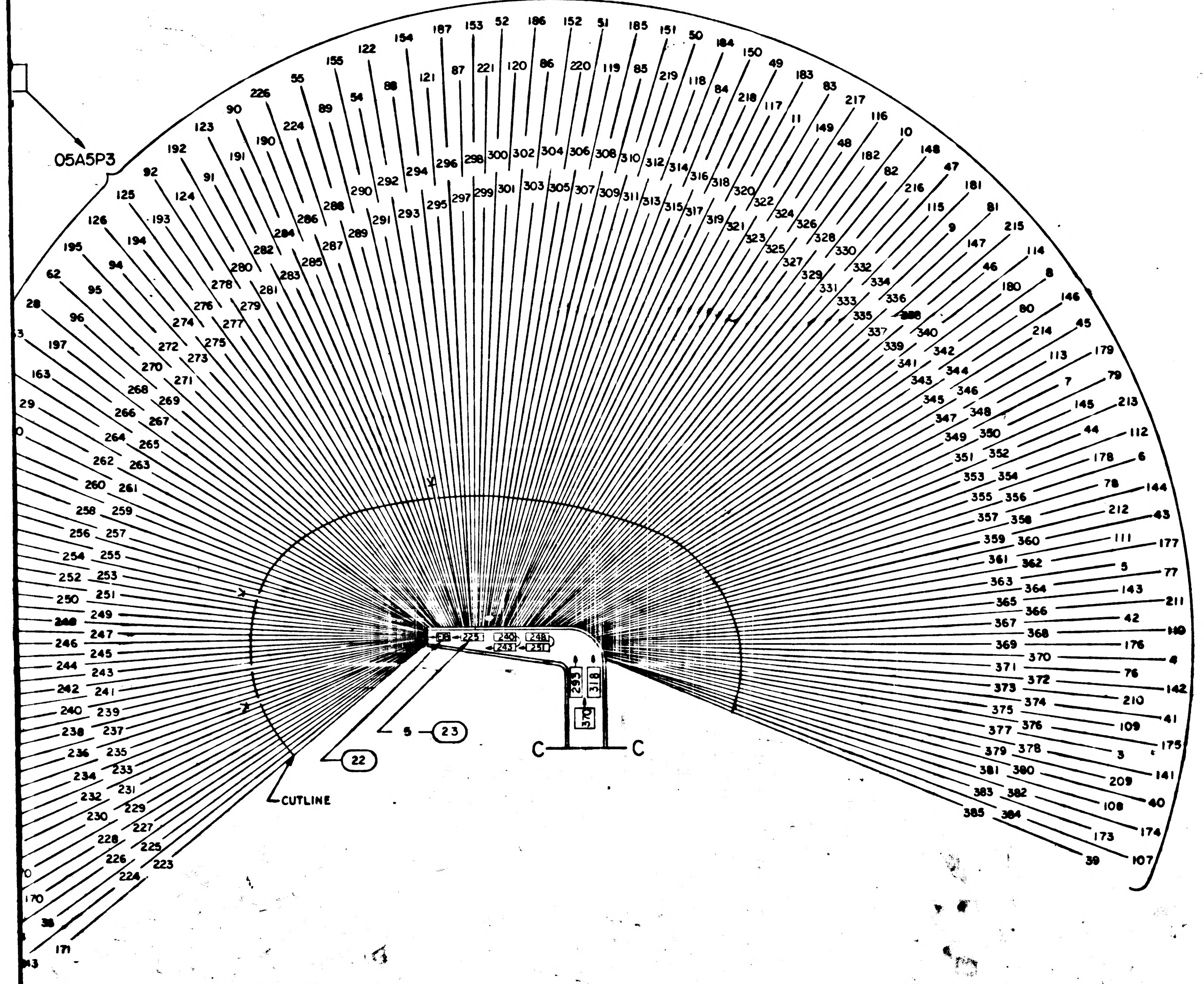
05A5P3
CUTLINE
22
5-23
C
C

Ⓒ REPLACES REV B WITH CHANGES

QTY REQD	PART OR IDENTIFYING NO.	NOMENCLATURE OR DESCRIPTION	FIND NO

LIST OF MATERIALS

NEXT ASSY	USED ON
APPLICATION	

UNLESS OTHERWISE SPECIFIED
DIMENSIONS ARE IN INCHES
TOLERANCES ON
FRACTIONS ± — DECIMALS ±.010 ANGLES ± —
DO NOT SCALE THIS DRAWING
MATERIAL
HEAT TREATMENT
FINAL FINISH

MIT INSTRUMENTATION LAB
DRAWN [illegible] DATE 15 FEB 65
CHECKED [illegible]
APPROVAL
APPROVAL [illegible]
NASA APPROVAL [illegible]
MIT APPROVAL [illegible]

MANNED SPACECRAFT CENTER
HOUSTON, TEXAS

WIRING HARNESS
AGC TO PSA & G/N TO SPACECRAFT

CODE IDENT NO. 80230 SIZE J NASA DRAWING NO. 1005707
SCALE 1/1 WT SHEET 2 OF 4

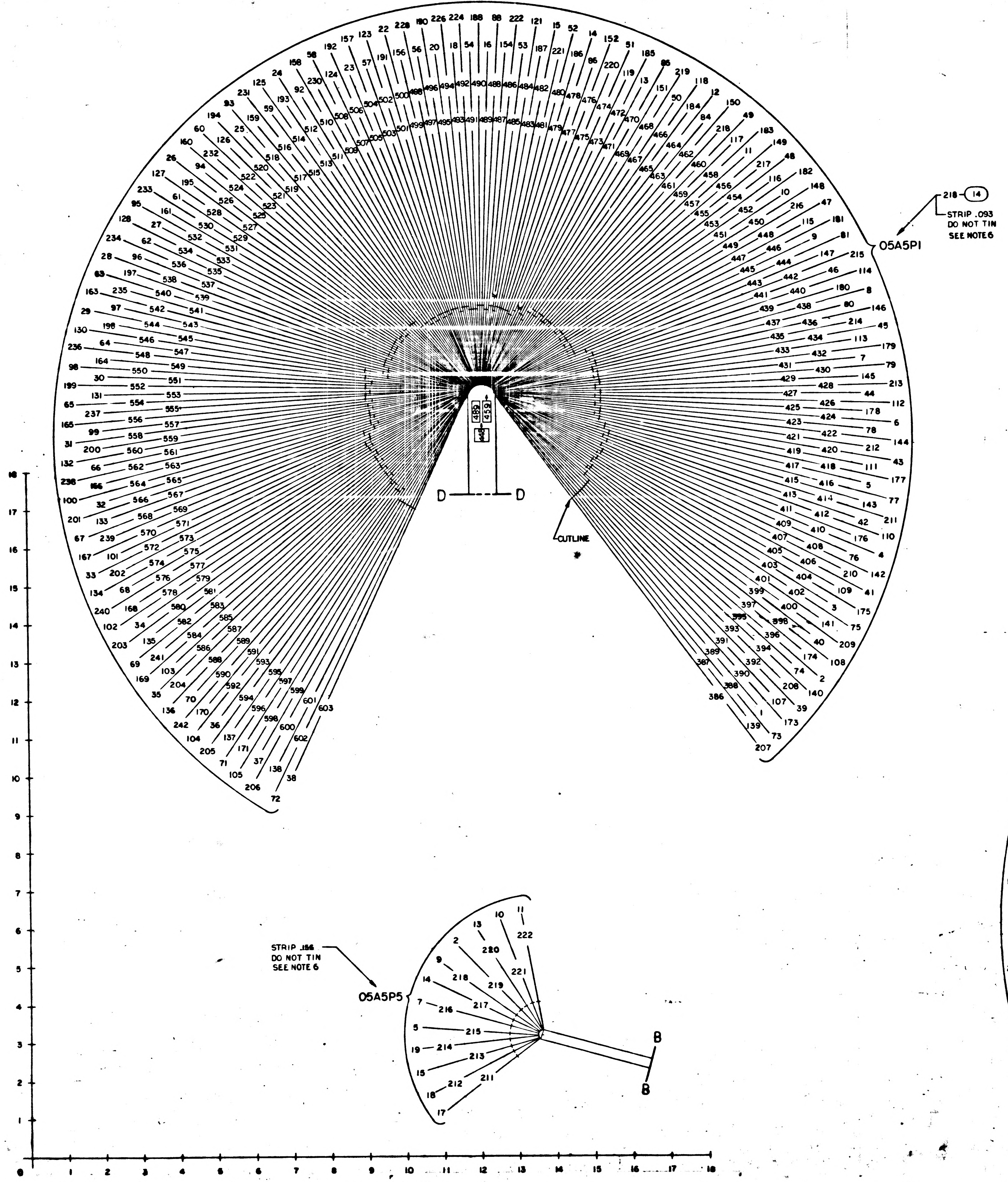
05A5P1
218 (14)
STRIP .093
DO NOT TIN
SEE NOTE 6
489
459
D D
CUTLINE
STRIP .186
DO NOT TIN
SEE NOTE 6
05A5P5
B B
0 1 2 3 4 5 6 7 8 9 10 11 12 13 14 15 16 17 18

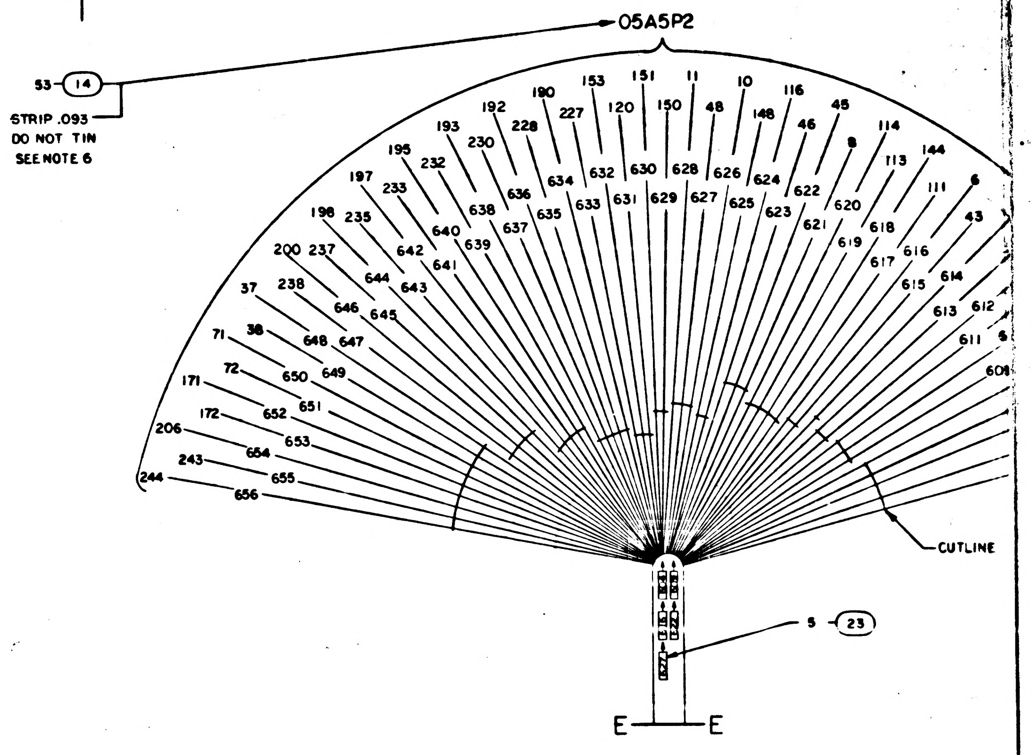
05A5P2
53 (14)
STRIP .093
DO NOT TIN
SEE NOTE 6
CUTLINE
5 (23)
E E

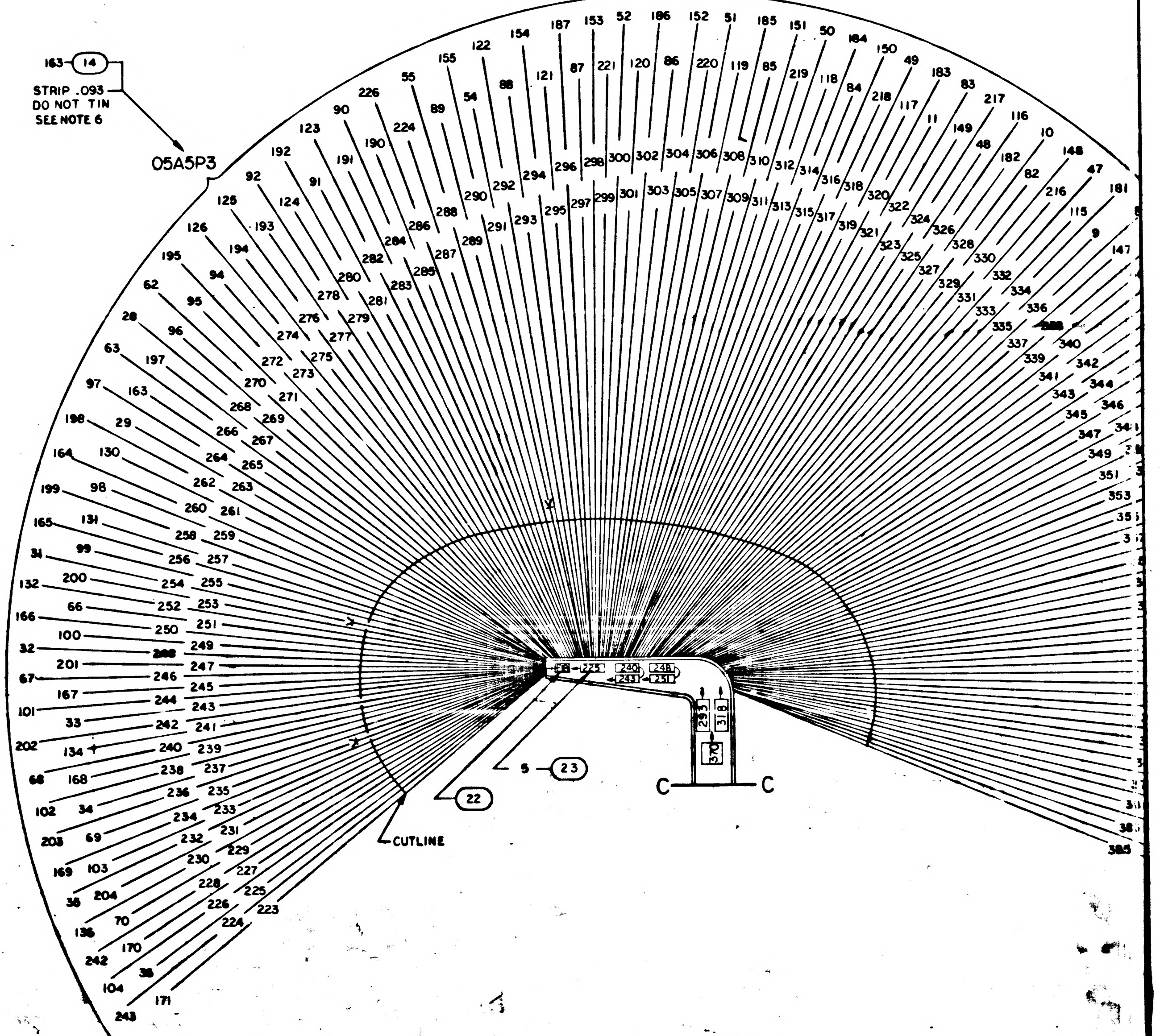
163 (14)
STRIP .093
DO NOT TIN
SEE NOTE 6
05A5P3
CUTLINE
5 (23)
(22)
C C

1005707 E

SHEET 2

1005707 E F 1/2

TO	
ST.NATION	REMARKS
P4-114	*
E1	●
P4-214	*
E1	●
P4-314	*
E1	●
P4-414	*
E1	●
P4-514	*
E1	●
P4-113	*
E2	●
P4-213	*
E2	●
P4-313	*
E2	●
P4-614	*
E2	●
P4-112	*
E3	●
P4-413	*
E3	●
P4-513	*
E3	●
P4-613	*
E3	●
P4-212	*
E4	●
P4-312	* LEG 1
E4	●
P4-412	*
E4	●
P4-512	*
E4	●
P4-211	*
E5	●
P4-311	*
E5	●
P4-612	*
E5	●
P4-111	*
E5	●
P4-411	*
E6	●
P4-511	*
E6	●
P4-611	*
E6	●
P4-210	*
E6	●
P4-310	*
E6	●
P4-610	*
P4-510	
P4-410	*
P4-110	*
P4-305	*
E7	●
P4-405	*
E7	●
P4-505	*
E7	●
P4-[illegible]05	*
E7	●
P4-107	
E8	● LEG 2
P4-105	
E8	●
P4-205	*
E8	●
P4-407	*
E8	●
P4-307	*
E8	●
P4 207	*
P4-208	
P4-609	●, ●●
P4-229	
-230	
-23	
-331	
-329	
-330	
-328	
-427	
-28	LEG 3
-5[illegible]	
-2[illegible]	
-130	
-3	
-332	
-232	
-32	
-33	
P4-333	●●,*

ASSEMBLY INFORMATION CHART

	FROM		DESCRIPTION			TO		
REMARKS	DESTINATION	RUN NO.	COLOR	AWG	FIND NO.	RUN NO.	DESTINATION	REMARKS
	P1-235	541	YEL	26	18	82	P4-436	
	P1-236	548	RED			84	P4-437	
	P4-336	83	YEL			539	P1-197	
	P4-337	85	RED			545	P1-198	
	P1-163	542	YEL			78	P4-434	
	P1-164	549	RED			81	P4-435	
	P4-334	142	YEL			546	P1-130	
	P4-335	139	RED			553	P1-131	
	P1-97	543	YEL			134	P4-138	
	P1-98	550	RED			132	P4-139	
	P4-234	143	YEL			547	P1-64	
	P4-235	140	RED			554	P1-65	
	P1-30	551	YEL			144	P4-134	
	P1-31	558	RED			141	P4-135	
	P4-236	137	YEL			555	P1-237	
	P4-237	135	RED			562	P1-238	
	P1-199	552	YEL			138	P4-136	
	P1-200	559	RED			136	P4-137	
	P4-238	133	YEL			556	P1-165	
	P4-239	131	RED			563	P1-166	
	P1-132	560	YEL			106	P4-346	
	P1-133	567	RED			108	P4-347	
	P4-246	114	YEL			557	P1-99	
	P4-247	112	RED			564	P1-100	
	P1-66	561	YEL			86	P4-438	
	P1-67	568	RED			88	P4-439	
	P4-338	87	YEL			565	P1-32	
	P4-339	89	RED			572	P1-33	
	P1-239	569	YEL			91	P4-440	
	P1-240	576	RED			93	P4-441	
	P4-340	128	YEL			566	P1-201	
	P4-341	94	RED			573	P1-202	
	P1-167	570	YEL			129	P4-240	
	P1-168	577	RED			126	P4-241	
	P4-140	130	YEL			574	P1-134	
	P4-141	127	RED			581	P1-135	
	P1-101	571	YEL			105	P4-446	
	P1-102	578	RED			107	P4-447	
	P4-442	96	YEL			575	P1-68	
	P4-443	98	RED			582	P1-69	
	P1-34	579	YEL			123	P4-342	
	P1-35	586	RED			99	P4-343	
	P4-242	124	YEL			583	P1-241	
	P4-243	121	RED			590	P1-242	
	P1-203	580	YEL			125	P4-142	
	P1-204	587	RED			122	P4-143	
	P4-444	101	YEL			584	P1-169	
	P4-445	103	RED			591	P1-170	
	P1-136	588	YEL			118	P4-344	
	P1-137	595	RED			104	P4-345	
	P4-244	119	YEL			585	P1-103	
	P4-245	116	RED			592	P1-104	
	P1-70	589	YEL			120	P4-144	
	P1-71	596	RED			117	P4-145	
	P4-222	168	YEL			594	P1-205	
	P4-223	166	RED			600	P1-206	
	P1-105	598	YEL			90	P4-540	
	P1-72	602	RED			92	P4-541	
	P4-149	109	YEL			597	P1-171	
	P4-150	110	RED			601	P1-138	
	P1-28	538	YEL			165	P4-124	
	P1-29	544	RED			163	P4-125	
	P4-224	164	YEL			522	P1-60	
	P4-225	162	RED			529	P1-61	
	P1-94	525	YEL			175	P4-120	
	P1-95	532	RED			172	P4-121	
	P4-220	174	YEL			528	P1-127	
	P4-221	171	RED			534	P1-128	
	P1-160	524	YEL			173	P4-320	
	P1-161	531	RED			170	P4-321	
	P4-420	44	YEL			520	P1-194	
	P4-421	47	RED			527	P1-195	
	P1-92	511	YEL			179	P4-118	
	P1-93	518	RED			177	P4-119	
	P4-218	178	YEL			514	P1-125	
	P4-219	176	RED			521	P1-126	
	P1-158	510	YEL			169	P4-122	
	P1-159	517	RED			167	P4-123	
	P4-318	38	YEL			506	P1-192	
	P4-319	41	RED			513	P1-193	
	P1-232	523	YEL			37	P4-418	
	P1-233	530	RED			40	P4-419	
	P4-116	185	YEL			526	P1-26	
	P4-117	182	RED			533	P1-27	
	P1-24	512	YEL			184	P4-216	
	P1-25	519	RED			181	P4-217	
	P4-316	183	YEL			508	P1-58	
	P4-317	180	RED			515	P1-59	
	P1-56	497	YEL			32	P4-416	
	P1-57	503	RED			35	P4-417	
	P4-322	49	YEL			502	P1-123	
	P4-323	51	RED			507	P1-124	
	P1-156	499	YEL			48	P4-422	
	P1-157	504	RED			50	P4 423	
	P4-324	53	YEL			496	P1-190	
	P4-325	55	RED			501	P1-191	
	P1-230	509	YEL			52	P4-424	
	P1-231	516	RED			54	P4-425	
	P4-620	42	YEL			282	P3-123	
	P4-621	45	RED			279	P3-124	
	P3-125	276	YEL			43	P4-520	
	P3-126	274	RED			46	P4-521	
	P4-534	77	YEL			284	P3-90	
	P4-535	80	RED			281	P3-91	
	P3-194	275	YEL			36	P4-618	
	P3-195	272	RED			39	P4-619	
	P4-516	31	YEL			280	P3-192	
	P4-517	34	RED			277	P3-193	
	P3-190	285	YEL	26	18	30	P4-616	
	P3-191	283	RED			33	P4-617	

ASSEMBLY INFORMATION CHART

	FROM		DESCRIPTION			TO		
REMARKS	DESTINATION	RUN NO.	COLOR	AWG	FIND NO.	RUN NO.	DESTINATION	REMARKS
	P4-634	76	YEL	26	18	273	P3-94	
	P4-635	79	RED			271	P3-95	
	P3-92	278	YEL			95	P4-542	
	P3-62	270	RED			97	P4-543	*
	P4-644	100	YEL			287	P3-224	
	P4-645	102	RED			286	P3-226	
	P3-199	258	YEL			612	P2-141	
	P3-200	253	RED			613	P2-142	
	P2-107	608	YEL			250	P3-166	
	P2-139	607	RED			245	P3-167	
	P3-168	239	YEL			618	P2-144	
	P3-169	234	RED			617	P2-111	
	P2-113	619	YEL			247	P3-201	
	P2-114	620	RED			242	P3-202	
	P3-170	227	YEL			624	P2-116	
	P3-171	223	RED			625	P2-148	
	P2-150	629	YEL			236	P3-203	
	P2-151	630	RED			231	P3-204	
	P3-243	224	YEL	26	18	632	P2-153	
	P3-242	228	RED			631	P2-120	
	P3-39	385	YEL	26	16	5	P4-504	*
*	P4-604	4				383	P3-173	
	P3-174	382				1	P4-502	*
●	P4-603	2				381	P3-108	
	P3-40	380				3	P4-503	●
	P4-228	157				536	P1-234	
	P1-62	535				159	P4-327	
	P4-227	160				537	P1-96	
	P1-63	540				161	P4-127	
●	P4-215	187				500	P1-22	
	P1-23	505				187	P4-215	*
*	P4-333	145				485	P1-53	
	P1-40	399				3	P4-503	● 4
●	P4-603	2				398	P1-108	
	P1-174	397				1	P4-502	*
●	P4-604	4				392	P1-39	
	P1-173	390	YEL	26	16	5	P4-504	*
	P2-172	653	YEL	24	17	263	P3-29	
	P3-101	244	RED	24	19	649	P2-38	
●	P3-134	E18	YEL			648	P2-37	
	P2-72	651	RED	24	19	238	P3-102	
	P2-71	650	YEL			E18	P3-134	●
	P3-103	233	YEL	24	20	633	P2-227	
	P3-104	226	RED			635	P2-228	
	P3-136	230	GRN			634	P2-190	
	P2-193	638	YEL	24	20	257	P3-131	
	P2-192	636	RED			260	P3-164	
	P2-230	637	GRN			256	P3-165	
	P3-163	265	YEL	24	20	641	P2-233	
	P3-197	267	RED			639	P2-232	
	P3-198	262	GRN			640	P2-195	
	P2-198	644	YEL	24	20	264	P3-97	
	P2-197	642	RED			259	P3-98	
	P2-235	643	GRN			261	P3-130	
	P3-99	255	YEL	24	20	645	P2-237	
	P3-100	249	RED			647	P2-238	
	P3-132	252	GRN			646	P2-200	
	P1-36	593	YEL	24	20	115	P4-146	
	P1-37	599	RED			113	P4-147	
	P1-38	603	GRN			111	P4-148	
	P2-206	654	YEL	24	21	97	P4-543	*
	P2-244	656	RED			268	P3-28	
	P2-243	655	GRN			266	P3-63	
	P2-171	652	BRN			269	P3-96	
	P2-1	604	YEL	26	15	251	P3-66	
	P2-39	605	RED			254	P3-31	* *
●●	P2-2	606	SHL			246	P3-67	●●,●
	P3-32	248	YEL	26	15	609	P2-3	
**	P3-31	254	RED			610	P2-4	
			SHLD			611	P2-41	●●
	P2-6	616	YEL	26	15	243	P3-33	
	P2-43	615	RED			235	P3-69	* *
●●	P2-5	614	SHLD			237	P3-34	●●,●
	P3-68	240	YEL	26	15	622	P2-45	
**	P3-69	235	RED			623	P2-46	
			SHLD			621	P2-8	●●
	P2-48	627	YEL	26	15	225	P3-36	
	P2-10	626	RED			232	P3-35	
●●	P2-11	628	SHLD			229	P3-70	●●
	P1-1	389	YEL	22	28	211	P5-17	TWIST 12 WIRES TOGETHER
	P1-73	388				212	P5-18	
	P1-49	460				214	P5-19	
	P1-50	467				216	P5-7	
	P1-2	396				215	P5-5	
	P1-74	395				213	P5-15	
	P1-139	387				218	P5-9	
	P1-207	386	YEL		28	221	P5-10	
	P1-51	474	BLK		29	222	P5-11	
	P1-52	480	BLK			219	P5-2	
	P1-208	393	BLK			220	P5-13	
	P1-140	394	BLK	22	29	217	P5-14	

Ⓒ REPLACES REV B WITH CHANGES

1005707 E

REVISIONS			
SYM	DESCRIPTION	DATE	APPROVED
C	REPLACES REV B WITH CHANGES PER TDRR		
Ⓜ D	REVISED PER TDRR 16708 DR CHK		
Ⓜ E	REVISED PER TDRR 17260 DR CHK		

QTY REQD	PART OR IDENTIFYING NO.	NOMENCLATURE OR DESCRIPTION	FIND NO.

LIST OF MATERIALS

NEXT ASSY | USED ON

APPLICATION

UNLESS OTHERWISE SPECIFIED
DIMENSIONS ARE IN INCHES
TOLERANCES ON
FRACTIONS ± DECIMALS ± ANGLES ±
DO NOT SCALE THIS DRAWING
MATERIAL
HEAT TREATMENT
FINAL FINISH

MIT
INSTRUMENTATION LAB
CAMBRIDGE, MASS.
DRAWN DATE
CHECKED
APPROVAL
APPROVAL
NASA APPROVAL
MIT APPROVAL

MANNED SPACECRAFT CENTER
HOUSTON, TEXAS

WIRING HARNESS
AGC TO PSA & G/N TO SPACECRAFT

CODE IDENT NO. 80230
SIZE J
NASA DRAWING NO. 1005707
SCALE NONE
WT
SHEET 3 OF 4

1005707 E

ASSEMBLY INFORMATION CHART

	FROM		DESCRIPTION			TO		
REMARKS	DESTINATION	RUN NO.	COLOR	AWG	FIND NO.	RUN NO.	DESTINATION	REMARKS
	P3-4	370	YEL	26	18	198	P4-211	*
	-5	363	RED				E13	●
	-41	374	YEL			197	P4-311	*
	-42	367	RED				E13	●
	-76	371	YEL			18	P4-411	*
	-77	364	RED				E13	●
	-212	359	YEL			199	P4-111	*
	-213	352	RED				E13	●
	-109	375	YEL			17	P4-511	*
	-110	368	RED				E14	●
	-142	372	YEL			16	P4-611	*
	-143	365	RED				E14	●
	-175	376	YEL			201	P4-210	*
	-176	369	RED				E14	●
	-210	373	YEL			200	P4-310	*
	-211	366	RED				E14	●
	-78	357	YEL			194	P4-312	*
	-79	350	RED				E12	●
	-111	361	YEL			21	P4-412	*
	-112	354	RED				E12	●
	-144	358	YEL			20	P4-512	*
	-145	351	RED				E12	●
	-177	362	YEL			19	P4-612	*
	-178	355	RED				E12	●
	-6	356	YEL			196	P4-112	*
	-7	349	RED				E11	●
	-43	360	YEL			195	P4-212	*
	-44	353	RED				E11	●
	-179	348	YEL			23	P4-513	* LEG 4
	-180	341	RED				E11	●
	-214	345	YEL			22	P4-613	*
	-215	338	RED				E11	●
	-45	346	YEL			193	P4-113	*
	-46	339	RED				E10	●
	-80	343	YEL			192	P4-213	*
	-81	336	RED				E10	●
	-113	347	YEL			191	P4-313	*
	-114	340	RED				E10	●
	-146	344	YEL			24	P4-413	*
	-147	337	RED				E10	●
	-8	342	YEL			25	P4-614	*
	-9	335	RED				E9	●
	-148	330	YEL			188	P4-314	*
	-149	323	RED				E9	●
	-181	334	YEL			27	P4-414	*
	-182	327	RED				E9	●
	-216	331	YEL			26	P4-514	*
	-217	324	RED				E9	●
	-47	332	YEL			190	P4-114	*
	-48	325	RED				E15	●
	-82	329	YEL			28	P4-615	
	-83	322	RED				E15	●
	-115	333	YEL		18	189	P4-214	*
	-116	326	RED				E15	●
	-3	377	YEL		16	13	P4-610	*
	-141	378	YEL		16	15	P4-410	*
	-209	379	YEL	26	16	202	P4-110	*
●●	P3-107	384	SHLD					
	P3-49	318	YEL	26	18	9	P4-607	
	-50	312	RED				E16	●
	-51	306	YEL			10	P4-507	
	-52	300	RED				E16	●
	-185	308	YEL			11	P4-407	*
	-186	302	RED				E16	●
	-220	305	YEL			205	P4-307	*
	-221	299	RED				E16	● LEG 5
	-84	315	YEL			209	P4-205	*
	-85	309	RED				E17	●
	-117	319	YEL			208	P4-305	*
	-118	313	RED				E17	●
	-150	316	YEL			8	P4-405	*
	-151	310	RED				E17	●
	-183	320	YEL			7	P4-505	*
	-184	314	RED				E17	●
	-218	317	YEL		18	6	P4-605	*
	-219	311	RED				E17	●
	-10	328	YEL		16	206	P4-207	*
	-11	321	YEL	26	16	204	P4-208	*
●●	P3-187	296	SHLD					●
	P3-88	293	YEL	26	18	68	P4-430	
	-54	291	RED			57	-526	
	-86	303	YEL		18	70	-631	
	-55	288	RED			56	-626	
	-87	297	YEL		16	64	-428	
	-119	307				71	-531	
	-120	301				62	-628	
	-121	295				63	-528	LEG 6
	-122	292				65	-629	
	-152	304				72	-431	
	-153	298				66	-529	
	-154	294				67	-530	
**	-155	290				58	-426	
	-155	290	YEL	26	16	61	-427	
●●	P3-89	289	SHLD			75	P4-433	●●

ASSEMBLY INFORMATION CHART

	FROM		DESCRIPTION			TO		
REMARKS	DESTINATION	RUN NO.	COLOR	AWG	FIND NO.	RUN NO.	DESTINATION	REMARKS
	P1-47	448	YEL	26	18	190	P4-114	*
	-48	454	RED				E1	●
	-115	447	YEL			189	P4-214	*
	-116	453	RED				E1	●
	-148	450	YEL			188	P4-314	*
	-149	456	RED				E1	●
	-181	446	YEL			27	P4-414	*
	-182	452	RED				E1	●
	-216	449	YEL			26	P4-514	*
	-217	458	RED				E1	●
	-45	434	YEL			193	P4-113	*
	-46	441	RED				E2	●
	-80	437	YEL			192	P4-213	*
	-81	444	RED				E2	●
	-113	433	YEL			191	P4-313	*
	-114	440	RED				E2	●
	-8	438	YEL			25	P4-614	*
	-9	445	RED				E2	●
	-6	424	YEL			196	P4-112	*
	-7	431	REL				E3	●
	-146	436	YED			24	P4-413	*
	-147	443	RED				E3	●
	-179	432	YEL			23	P4-513	*
	-180	439	RED				E3	●
	-214	435	YEL			22	P4-613	*
	-215	442	RED				E3	●
	-43	420	YEL			195	P4-212	*
	-44	427	RED				E4	●
	-78	423	YEL			194	P4-312	* LEG 1
	-79	430	RED				E4	●
	-111	419	YEL			21	P4-412	*
	-112	426	RED				E4	●
	-144	422	YEL			20	P4-512	*
	-145	429	RED				E4	●
	-4	410	YEL			198	P4-211	*
	-5	417	RED				E5	●
	-41	406	YEL			197	P4-311	*
	-42	413	RED				E5	●
	-177	418	YEL			19	P4-612	*
	-178	425	RED				E5	●
	-212	421	YEL			199	P4-111	*
	-213	428	RED				E5	●
	-76	409	YEL			18	P4-411	*
	-77	416	RED				E6	●
	-109	405	YEL			17	P4-511	*
	-110	412	RED				E6	●
	-142	408	YEL			16	P4-611	*
	-143	415	RED				E6	●
	-175	404	YEL			201	P4-210	*
	-176	411	RED				E6	●
	-210	407	YEL		18	200	P4-310	*
	-211	414	RED				E6	●
	-3	403	YEL		16	13	P4-610	*
	-75	402	YEL		16	14	P4-510	
	-141	401	YEL		16	15	P4-410	*
	209	400	YEL	26	16	202	P4-110	*
●●	P1-107	391	SHLD					
	P1-117	459	YEL	26	18	208	P4-305	*
	-118	466	RED				E7	●
	-150	462	YEL			8	P4-405	*
	-151	469	RED				E7	●
	-183	458	YEL			7	P4-505	*
	-184	465	RED				E7	●
	-218	461	YEL			6	P4-[illegible]05	*
	-219	468	RED				E[illegible]	●
	-12	464	YEL			207	P4-107	
	-13	471	RED				E8	●
	-14	478	YEL			210	P4-105	
	-15	482	RED				E8	● LEG 2
	-84	463	YEL			209	P4-205	*
	-85	470	RED				E8	●
	-185	472	YEL			11	P4-407	*
	-186	479	RED				E8	●
	-220	475	YEL		18	205	P4-307	*
	-221	481	RED				E8	●
	-10	451	YEL		16	206	P4-207	*
	-11	457	YEL	26	16	204	P4-208	
●●	P1-187	483	SHLD			12	P4-609	●, ●●
	P1-16	489	YEL	26	16	154	P4-229	
	-18	493				151	-230	
	-20	495				149	-231	
	-54	491				148	-331	
	-86	477				153	-329	
	-88	488				69	-330	
**	-119	473				156	-328	
	-119	473				59	-627	
**	-121	484				158	-128	LEG 3
	-121	484				60	-527	
	-152	476				155	-129	
	-154	487				152	-130	
	-188	490				150	-131	
	-222	486				73	-332	
	-224	492				74	-232	
	-226	494				147	-132	
	P1-228	498	YEL	26	16	146	-133	
			SHLD			145	P4-333	●●,*

ASSEMBLY INFORMATION CHART

	FROM		DESCRIPTION			TO		
REMARKS	DESTINATION	RUN NO.	COLOR	AWG	FIND NO.	RUN NO.	DESTINATION	REMAR
	P1-235	541	YEL	26	18	82	P4-436	
	P1-236	548	RED			84	P4-437	
	P4-336	83	YEL			539	P1-197	
	P4-337	85	RED			545	P1-198	
	P1-163	542	YEL			78	P4-434	
	P1-164	549	RED			81	P4-435	
	P4-334	142	YEL			546	P1-130	
	P4-335	139	RED			553	P1-131	
	P1-97	543	YEL			134	P4-138	
	P1-98	550	RED			132	P4-139	
	P4-234	143	YEL			547	P1-64	
	P4-235	140	RED			554	P1-65	
	P1-30	551	YEL			144	P4-134	
	P1-31	558	RED			141	P4-135	
	P4-236	137	YEL			555	P1-237	
	P4-237	135	RED			562	P1-238	
	P1-199	552	YEL			138	P4-136	
	P1-200	559	RED			136	P4-137	
	P4-238	133	YEL			556	P1-165	
	P4-239	131	RED			563	P1-166	
	P1-132	560	YEL			106	P4-346	
	P1-133	567	RED			108	P4-347	
	P4-246	114	YEL			557	P1-99	
	P4-247	112	RED			564	P1-100	
	P1-66	561	YEL			86	P4-438	
	P1-67	568	RED			88	P4-439	
	P4-338	87	YEL			565	P1-32	
	P4-339	89	RED			572	P1-33	
	P1-239	569	YEL			91	P4-440	
	P1-240	576	RED			93	P4-441	
	P4-340	128	YEL			566	P1-201	
	P4-341	94	RED			573	P1-202	
	P1-167	570	YEL			129	P4-240	
	P1-168	577	RED			126	P4-241	
	P4-140	130	YEL			574	P1-134	
	P4-141	127	RED			581	P1-135	
	P1-101	571	YEL			105	P4-446	
	P1-102	578	RED			107	P4-447	
	P4-442	96	YEL			575	P1-68	
	P4-443	98	RED			582	P1-69	
	P1-34	579	YEL			123	P4-342	
	P1-35	586	RED			99	P4-343	
	P4-242	124	YEL			583	P1-241	
	P4-243	121	RED			590	P1-242	
	P1-203	580	YEL			125	P4-142	
	P1-204	587	RED			122	P4-143	
	P4-444	101	YEL			584	P1-169	
	P4-445	103	RED			591	P1-170	
	P1-136	588	YEL			118	P4-344	
	P1-137	595	RED			104	P4-345	
	P4-244	119	YEL			585	P1-103	
	P4-245	116	RED			592	P1-104	
	P1-70	589	YEL			120	P4-144	
	P1-71	596	RED			117	P4-145	
	P4-222	168	YEL			594	P1-205	
	P4-223	166	RED			600	P1-206	
	P1-105	598	YEL			90	P4-540	
	P1-72	602	RED			92	P4-541	
	P4-149	109	YEL			597	P1-171	
	P4-150	110	RED			601	P1-138	
	P1-28	538	YEL			165	P4-124	
	P1-29	544	RED			163	P4-125	
	P4-224	164	YEL			522	P1-60	
	P4-225	162	RED			529	P1-61	
	P1-94	525	YEL			175	P4-120	
	P1-95	532	RED			172	P4-121	
	P4-220	174	YEL			528	P1-127	
	P4-221	171	RED			534	P1-128	
	P1-160	524	YEL			173	P4-320	
	P1-161	531	RED			170	P4-321	
	P4-420	44	YEL			520	P1-194	
	P4-421	47	RED			527	P1-195	
	P1-92	511	YEL			179	P4-118	
	P1-93	518	RED			177	P4-119	
	P4-218	178	YEL			514	P1-125	
	P4-219	176	RED			521	P1-126	
	P1-158	510	YEL			169	P4-122	
	P1-159	517	RED			167	P4-123	
	P4-318	38	YEL			506	P1-192	
	P4-319	41	RED			513	P1-193	
	P1-232	523	YEL			37	P4-418	
	P1-233	530	RED			40	P4-419	
	P4-116	185	YEL			526	P1-26	
	P4-117	182	RED			533	P1-27	
	P1-24	512	YEL			184	P4-216	
	P1-25	519	RED			181	P4-217	
	P4-316	183	YEL			508	P1-58	
	P4-317	180	RED			515	P1-59	
	P1-56	497	YEL			32	P4-416	
	P1-57	503	RED			35	P4-417	
	P4-322	49	YEL			502	P1-123	
	P4-323	51	RED			507	P1-124	
	P1-156	499	YEL			48	P4-422	
	P1-157	504	RED			50	P4 423	
	P4-324	53	YEL			496	P1-190	
	P4-325	55	RED			501	P1-191	
	P1-230	509	YEL			52	P4-424	
	P1-231	516	RED			54	P4-425	
	P4-620	42	YEL			282	P3-123	
	P4-621	45	RED			279	P3-124	
	P3-125	276	YEL			43	P4-520	
	P3-126	274	RED			46	P4-521	
	P4-534	77	YEL			284	P3-90	
	P4-535	60	RED			281	P3-91	
	P3-194	275	YEL			36	P4-618	
	P3-195	272	RED			39	P4-619	
	P4-516	31	YEL			280	P3-92	
	P4-517	34	RED			277	P3-193	
	P3-190	285	YEL	26	18	30	P4-616	
	P3-191	283	RED			33	P4-617	

D

C

B

A

1005707 E

SHEET 3

1005707 E

SYM	DESCRIPTION	DATE	APPROVAL
C	REPLACES REV B WITH CHANGES PER TDRR 16535	3/2/	
D	REVISED PER TDRR 16708 DR R. CHK	3/22/6	
E	REVISED PER TDRR 17260 DR CHK R.L.B.		

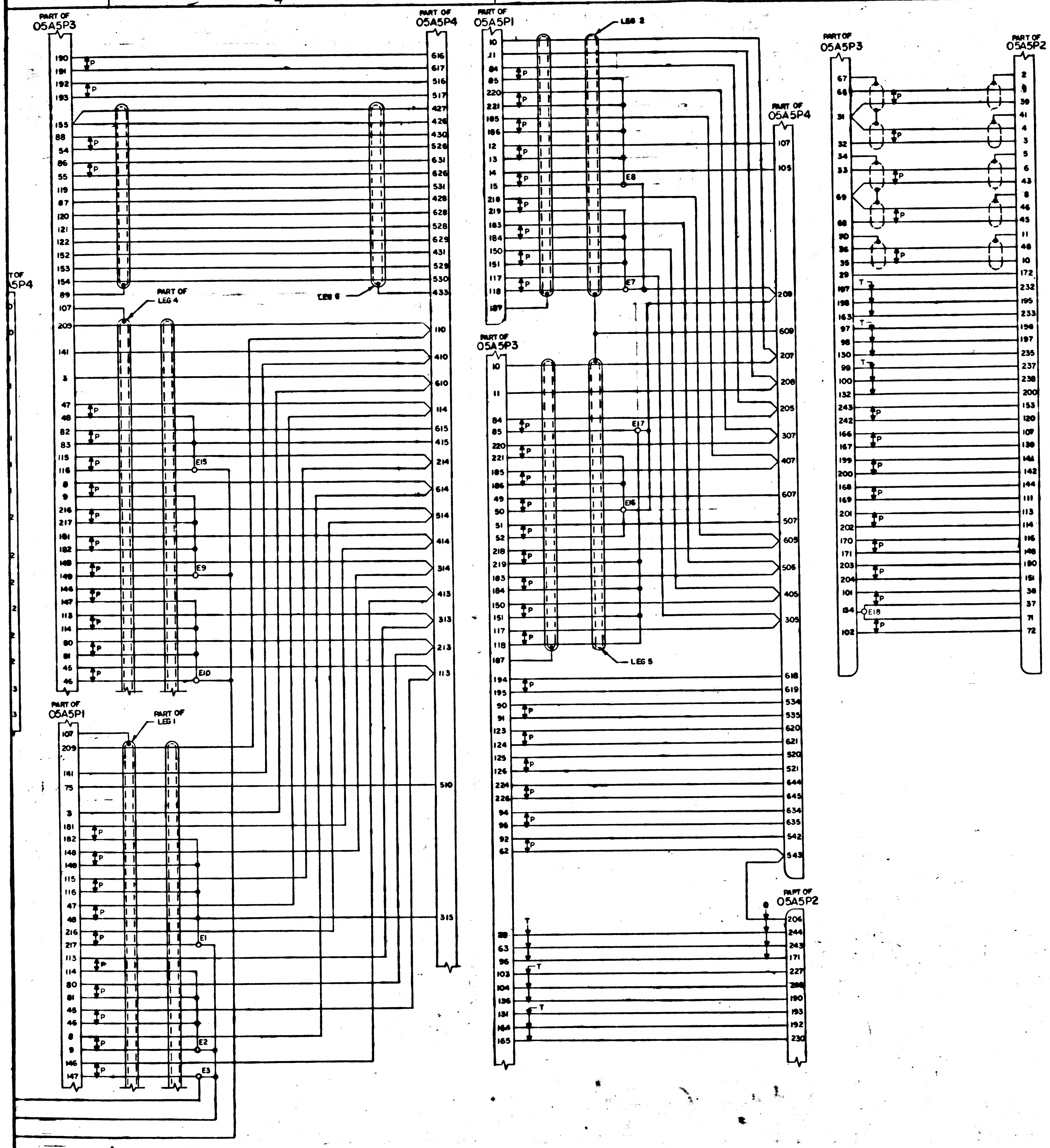

4
3
2
PART OF 05A5P3
PART OF 05A5P4
PART OF 05A5P1
LEG 2
PART OF 05A5P4
PART OF 05A5P3
PART OF 05A5P2
PART OF LEG 4
LEG 6
PART OF 05A5P3
LEG 5
PART OF 05A5P1
PART OF LEG 1
PART OF 05A5P2
E1
E2
E3
E7
E8
E9
E10
E15
E16
E17
E18
P
T

Ⓒ REPLACES REV B WITH CHANGES

QTY REQD	PART OR IDENTIFYING NO.	NOMENCLATURE OR DESCRIPTION	FIND NO.

LIST OF MATERIALS

NEXT ASSY	USED ON

APPLICATION

UNLESS OTHERWISE SPECIFIED
DIMENSIONS ARE IN INCHES
TOLERANCES ON
FRACTIONS ± — DECIMALS ± — ANGLES ± —
DO NOT SCALE THIS DRAWING
MATERIAL
HEAT TREATMENT
FINAL FINISH

M I T
INSTRUMENTATION LAB
CAMBRIDGE, MASS
DRAWN DATE
CHECKED
APPROVAL
APPROVAL
NASA APPROVAL
MIT APPROVAL

MANNED SPACECRAFT CENTER
HOUSTON, TEXAS

WIRING HARNESS
AGC TO PSA & G/N TO SPACECRAFT

CODE IDENT NO. 80230
SIZE J
NASA DRAWING NO. 1005707
SCALE NONE
SHEET 4 OF 4

1005707 E

MASTER

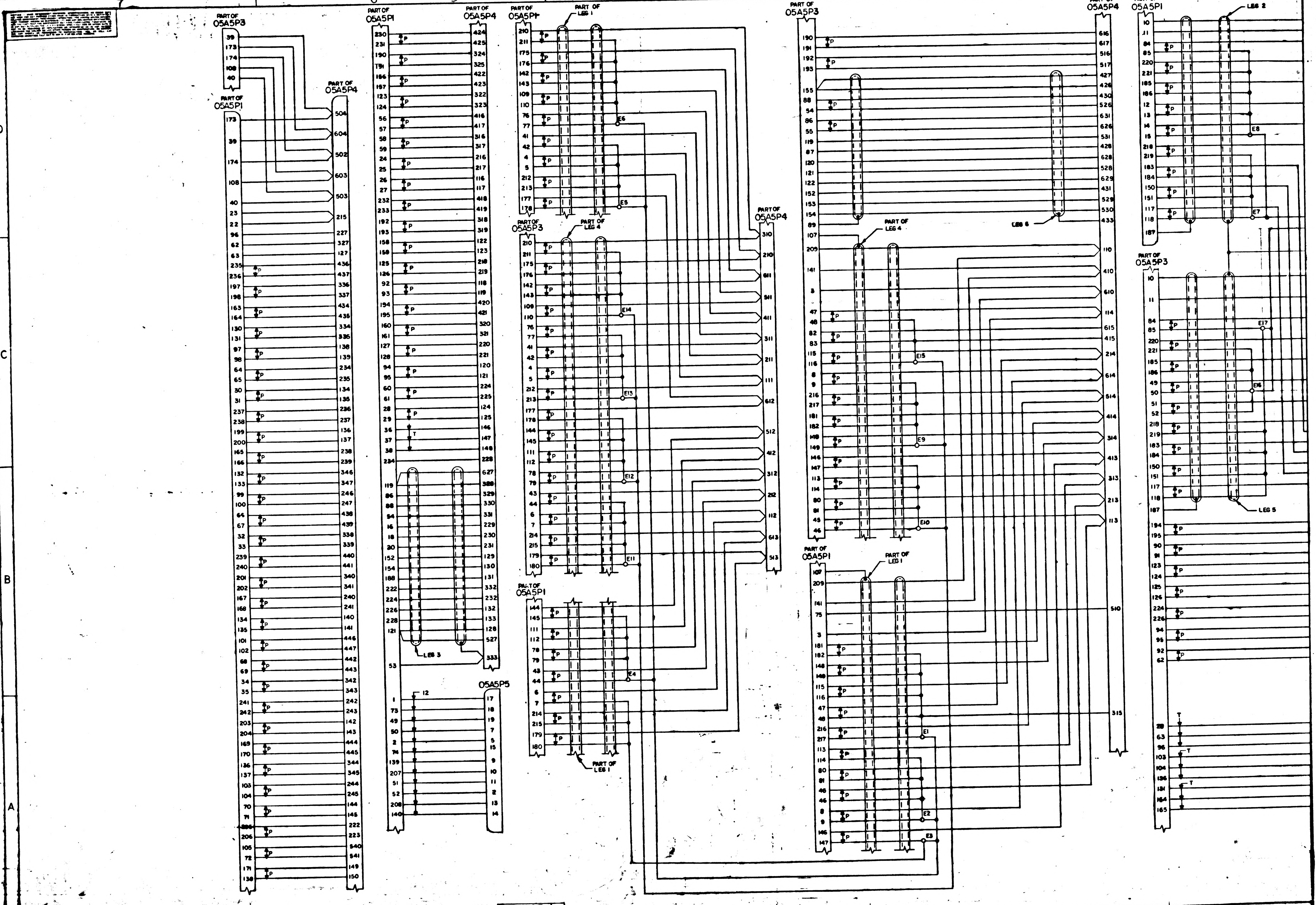
7
6
5
4
D
C
B
A
PART OF 05A5P3
PART OF 05A5P1
PART OF 05A5P4
PART OF 05A5P1
PART OF 05A5P4
PART OF 05A5P1
PART OF LEG 1
PART OF 05A5P3
PART OF LEG 4
PART OF 05A5P1
PART OF LEG 1
PART OF 05A5P4
PART OF 05A5P3
PART OF LEG 4
PART OF 05A5P1
PART OF LEG 1
PART OF 05A5P4
PART OF 05A5P1
LEG 2
PART OF 05A5P3
LEG 3
LEG 5
LEG 6
05A5P5
E1
E2
E3
E4
E5
E6
E7
E8
E9
E10
E11
E12
E13
E14
E15
E16
E17
P
T

1005707 E

SHEET 4

1005707	REVISIONS
SYM	DESCRIPTION	DATE	APPROVAL

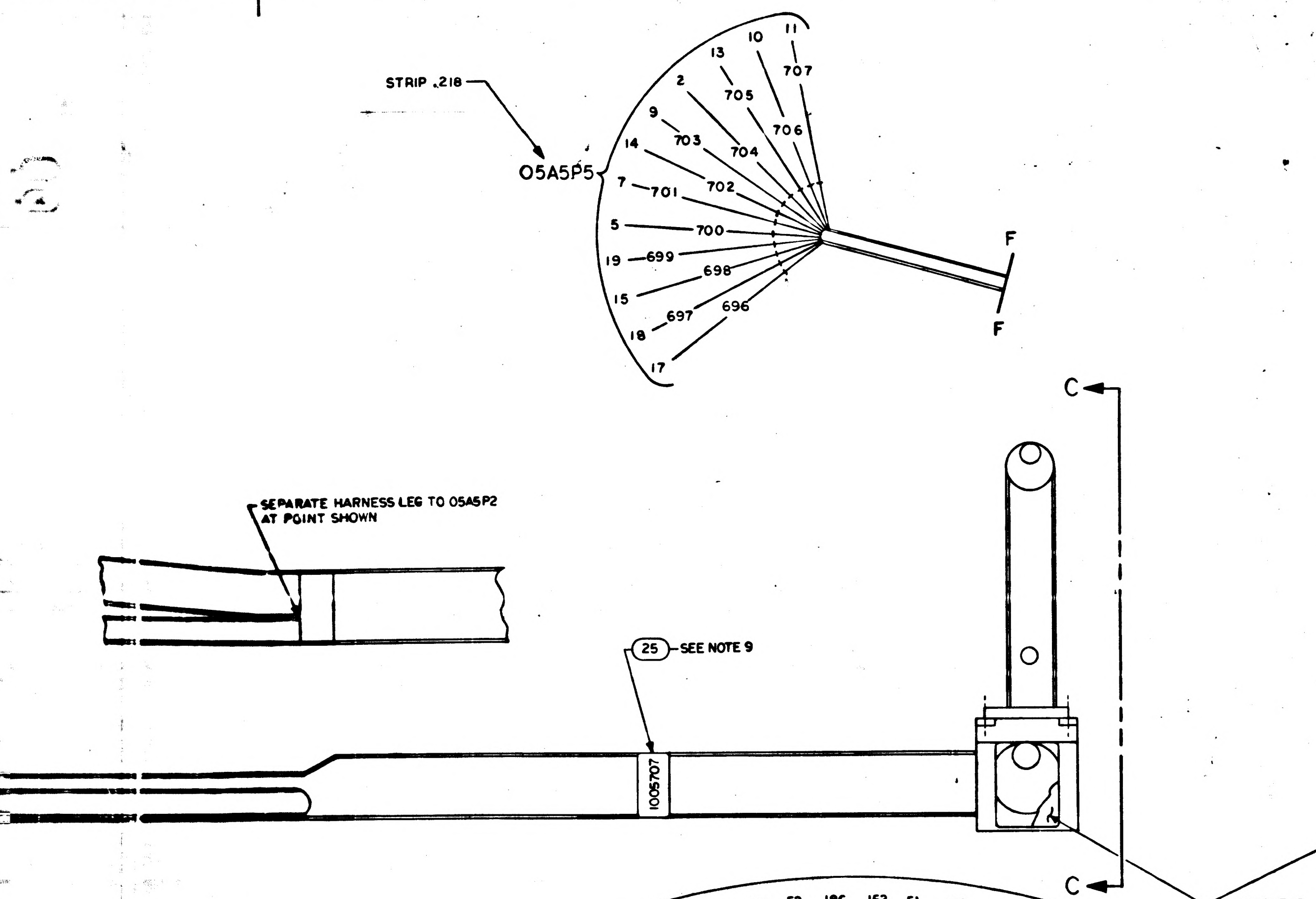
STRIP .218
05A5P5
13
10
11
707
2
705
706
9
703
704
14
702
7
701
5
700
19
699
698
15
697
696
18
17
F
F
SEPARATE HARNESS LEG TO 05A5P2 AT POINT SHOWN
25 SEE NOTE 9
1005707
C
C

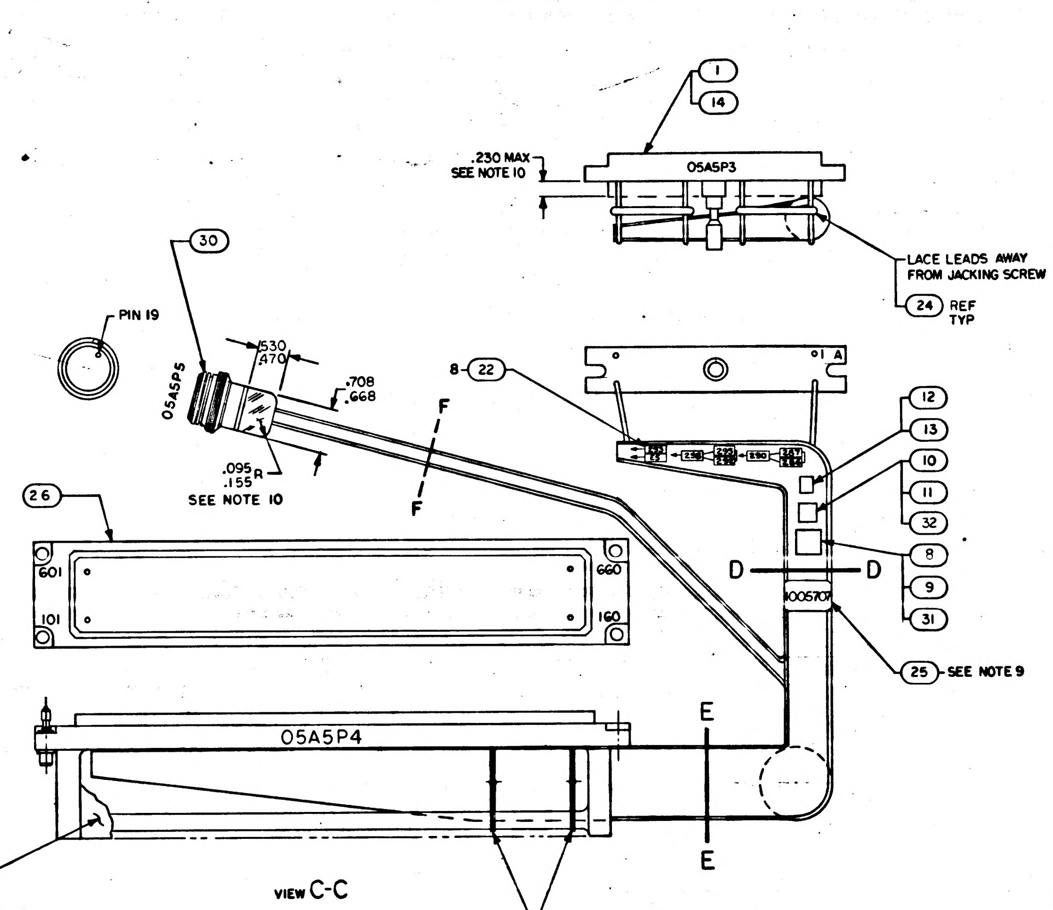
1
14
.230 MAX
SEE NOTE 10
05A5P3
LACE LEADS AWAY FROM JACKING SCREW
24 REF TYP
PIN 19
30
.530
.470
05A5P5
.708
.668
.095
.155 R
SEE NOTE 10
F
F
8-22
12
13
10
11
32
8
9
31
D
D
1005707
25 SEE NOTE 9
26
601
101
660
160
05A5P4
E
E
SEE NOTE 10
VIEW C-C
LACE HARNESS TO CONNECTOR LACING BARS AT POINT SHOWN
24

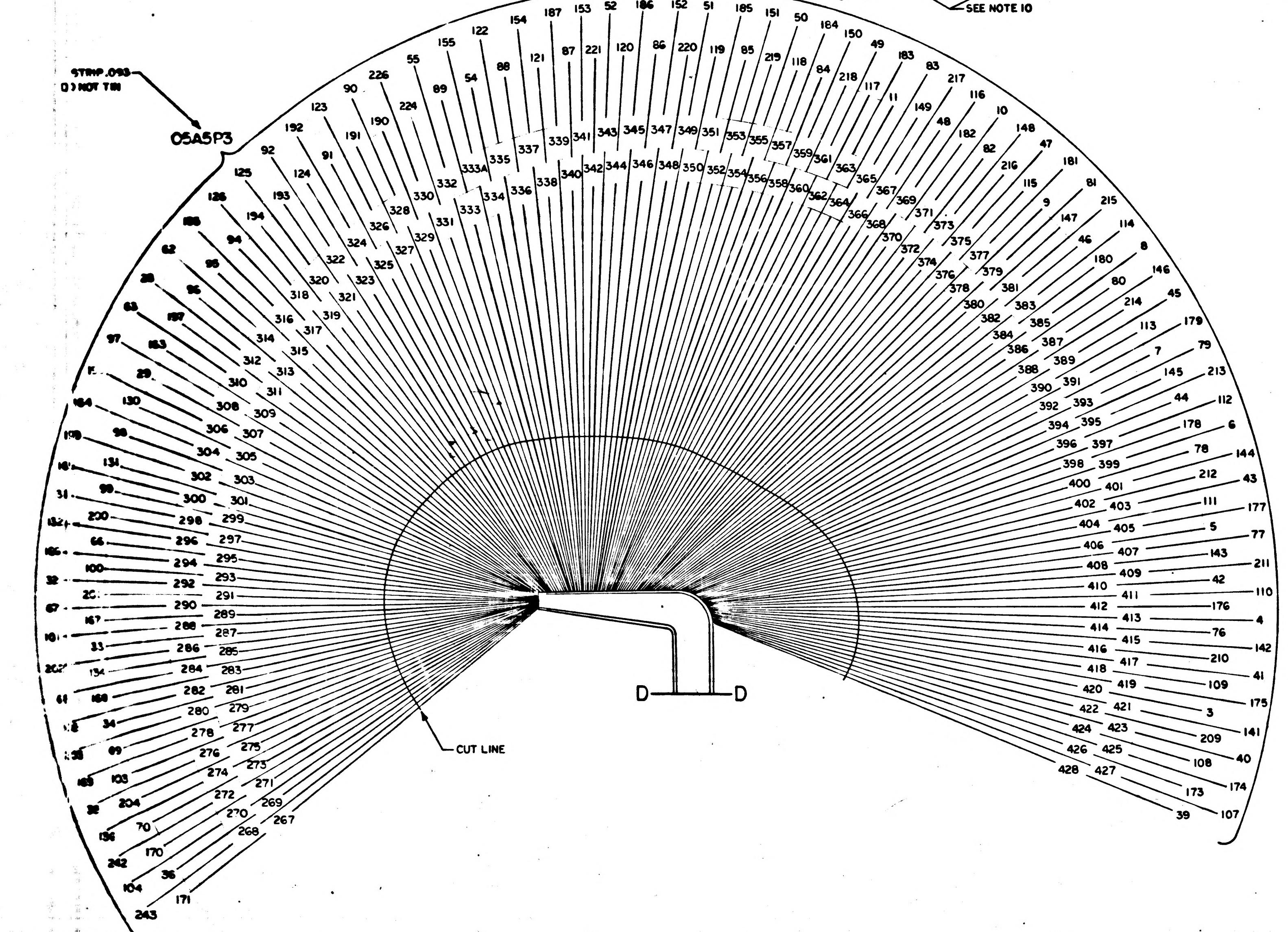
STRIP .093
DO NOT TIN
05A5P3
CUT LINE
D
D

INTERNAL GROUND SHEATH CONNECTIONS			
FROM	TO	LENGTH	FIND NO.
286	287	2 INCHES	16
292	295	2 INCHES	16

JUMPER LIST			
FROM	TO	LENGTH	FIND NO.
P4-128	P4-527	AR	16
P4-328	P4-627	AR	16
P4-426	P4-427	AR	27

* *	ATTACH FIND 16 LG 2 1/2
* * *	3 1/2
* * * *	4 1/2
* * * * *	5 1/2
* * * * * *	ATTACH FIND 16 LG 7

	QTY REQD	PART OR IDENTIFYING NO.	NOMENCLATURE OR DESCRIPTION	FIND NO.
	☒	1005799	WIRING DIAGRAM	REF
	AR	SEE NOTE 14	INSULATION SLEEVING	32
	AR	SEE NOTE 13	INSULATION SLEEVING	31
	1	1010771-113	CONNECTOR, PLUG ELECTRICAL	30
*	22	1010789-007	WIRE ELEC, AWG 22 BLK	29
*	11	1010789-006	WIRE ELEC, AWG 22 YEL	28
*	.5	1006757-8	WIRE ELEC, NICKEL, ROUND	27
	1	1003731	CONNECTOR ASSY, 360 CONTACTS	26
	2	MS18035-1	BAND MARKER, CABLE	25
	AR	1012507-001	TAPE, LACING	24
	4	1010402-2	SLEEVE, SOLDER	23
	13	1010402-1	SLEEVE, SOLDER	22
*	4	1010789-005	WIRE ELEC, AWG 24, 4 COND TWISTED	21
*	15	1010789-004	WIRE ELEC, AWG 24, 3 COND TWISTED	20
*	20	1010789-003	WIRE ELEC, AWG 24, 2 COND TWISTED	19
*	364	1010789-017	WIRE ELEC, AWG 26, 2 COND TWISTED	18
*	3.5	1010789-001	WIRE ELEC, AWG 24, YEL	17
*	152	1010789-01[illegible]	WIRE ELEC, AWG 26, YEL	16
*	18	1010789-015	WIRE ELEC, AWG 26, 2 COND SHIELDED	15
	732	1010738-5	CONTACT, ELEC, PIN	14
	4	1000242-14	FERRULE, ELEC	13
	4	1000243-23	FERRULE, ELEC	12
	4	1000242-26	FERRULE, ELEC	11
	4	1000243-21	FERRULE, ELEC	10
	4	1000242-33	FERRULE, ELEC	9
	4	1000243-37	FERRULE, ELEC	8
*	3.7	SEE NOTE 3	SLEEVING	7
*	3.8	SEE NOTE 3	SLEEVING	6
*	4	SEE NOTE 3	SLEEVING	5
*	4	SEE NOTE 4	WIRE, BRAID	4
*	3.6	SEE NOTE 4	WIRE, BRAID	3
*	3.5	SEE NOTE 4	WIRE, BRAID	2
	3	1010818-244	CONNECTOR, PLUG ELEC	1

LIST OF MATERIALS

1005000	
NEXT ASSY	USED ON
APPLICATION	

UNLESS OTHERWISE SPECIFIED
DIMENSIONS ARE IN INCHES
TOLERANCES ON
FRACTIONS ± — DECIMALS XXX±.010 ANGLES ± —
DO NOT SCALE THIS DRAWING
MATERIAL —
HEAT TREATMENT —
FINAL FINISH —

MIT
INSTRUMENTATION LAB
CAMBRIDGE, MASS.

DRAWN [illegible] DATE 6 OCT 69
CHECKED [illegible] 22 OCT 69
APPROVAL
APPROVAL EC Hall 4 Nov 69
NASA APPROVAL W J [illegible] 12-4-69
MIT APPROVAL [illegible]

MANNED SPACECRAFT CENTER
HOUSTON, TEXAS

WIRING HARNESS,
AGC TO PSA & G/N TO SPACECRAFT

CODE IDENT NO. — SIZE J NASA DRAWING NO. 1005707
SCALE 1/1 WT — SHEET 1 OF 3

MASTER

F3

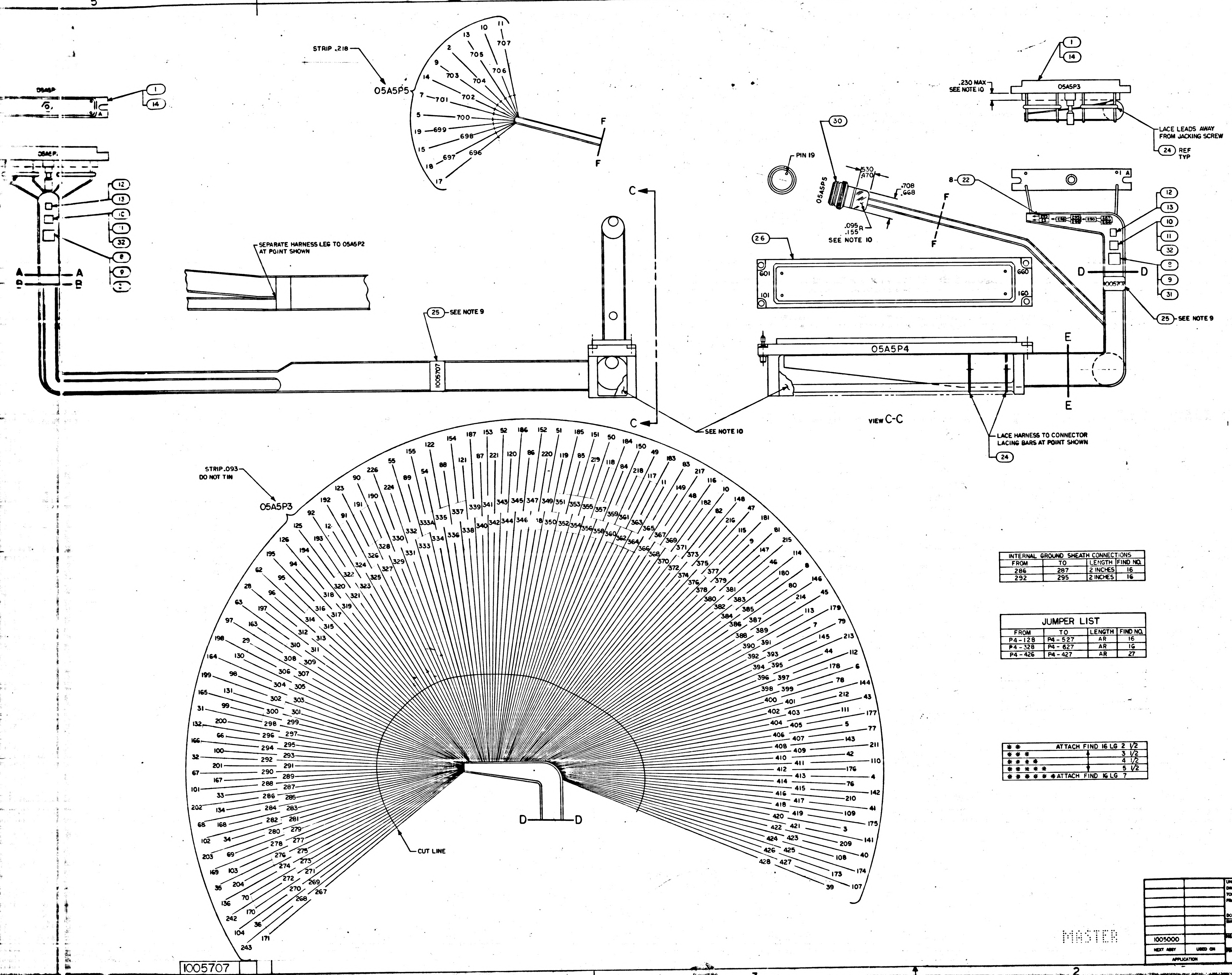
05A5P
1
14
05A5P
12
13
10
11
32
8
9
31
A A
B B
SEPARATE HARNESS LEG TO 05A5P2 AT POINT SHOWN
25 SEE NOTE 9
1005707
STRIP .218
05A5P5
10 11 13 707 2 705 706 9 703 704 14 702 7 701 5 700 19 699 698 15 697 696 18 17
F
F
C
C
SEE NOTE 10
1
14
.230 MAX SEE NOTE 10
05A5P3
LACE LEADS AWAY FROM JACKING SCREW
24 REF TYP
30
PIN 19
05A5P5
.530 .470
.708 .668
.095 .155 R
SEE NOTE 10
F
F
8-22
12
13
10
11
32
8
9
31
D D
26
601 660
101 160
1005707
25 SEE NOTE 9
05A5P4
E
E
VIEW C-C
LACE HARNESS TO CONNECTOR LACING BARS AT POINT SHOWN
24
STRIP .093 DO NOT TIN
05A5P3
CUT LINE
D D

INTERNAL GROUND SHEATH CONNECTIONS			
FROM	TO	LENGTH	FIND NO.
286	287	2 INCHES	16
292	295	2 INCHES	16

JUMPER LIST			
FROM	TO	LENGTH	FIND NO.
P4-128	P4-527	AR	16
P4-328	P4-627	AR	16
P4-426	P4-427	AR	27

* *	ATTACH FIND 16 LG 2 1/2
* * *	3 1/2
* * * *	4 1/2
* * * * *	5 1/2
* * * * * *	ATTACH FIND 16 LG 7

	QTY REQD	PART OR IDENTIFYING NO.	NOMENCLATURE OR DESCRIPTION	FIND NO.
	☒	1005799	WIRING DIAGRAM	REF
	AR	SEE NOTE 14	INSULATION SLEEVING	32
	AR	SEE NOTE 13	INSULATION SLEEVING	31
	1	1010771-113	CONNECTOR, PLUG ELECTRICAL	30
*	22	1010789-007	WIRE ELEC, AWG 22 BLK	[illegible]
*	11	1010789-006	WIRE ELEC, AWG 22 YEL	28
*	.5	1006757-8	WIRE ELEC, NICKEL, ROUND	27
	1	1003731	CONNECTOR ASSY, 360 CONTACTS	26
	2	MS18035-1	BAND MARKER, CABLE	25
	AR	1012507-001	TAPE, LACING	24
	4	1010402-2	SLEEVE, SOLDER	23
	13	1010402-1	SLEEVE, SOLDER	22
*	4	1010789-005	WIRE ELEC, AWG 24, 4 COND TWISTED	21
*	15	1010789-004	WIRE ELEC, AWG 24, 3 COND TWISTED	20
*	20	1010789-003	WIRE ELEC, AWG 24, 2 COND TWISTED	19
*	364	1010789-017	WIRE ELEC, AWG 26, 2 COND TWISTED	18
*	3.5	1010789-001	WIRE ELEC, AWG 24, YEL	17
*	152	1010789-016	WIRE ELEC, AWG 26, YEL	16
*	18	1010789-015	WIRE ELEC, AWG 26, 2 COND SHIELDED	15
	732	1010738-5	CONTACT, ELEC, PIN	14
	4	1000242-14	FERRULE, ELEC	[illegible]
	4	1000243-23	FERRULE, ELEC	12
	4	1000242-26	FERRULE, ELEC	11
	4	1000243-21	FERRULE, ELEC	10
	4	1000242-33	FERRULE, ELEC	9
	4	1000243-37	FERRULE, ELEC	8
*	3.7	SEE NOTE 3	SLEEVING	[illegible]
*	3.8	SEE NOTE 3	SLEEVING	6
*	4	SEE NOTE 3	SLEEVING	5
*	4	SEE NOTE 4	WIRE, BRAID	4
*	3.6	SEE NOTE 4	WIRE, BRAID	3
*	3.5	SEE NOTE 4	WIRE, BRAID	2
	3	1010818-244	CONNECTOR, PLUG ELEC	1

LIST OF MATERIALS

1005000	
NEXT ASSY	USED ON
APPLICATION	

UNLESS OTHERWISE SPECIFIED
DIMENSIONS ARE IN INCHES
TOLERANCES ON
FRACTIONS ± — DECIMALS XXX±.010 ANGLES ± —
DO NOT SCALE THIS DRAWING
MATERIAL —
HEAT TREATMENT —
FINAL FINISH —

MIT
INSTRUMENTATION LAB
CAMBRIDGE, MASS.
DRAWN [illegible] DATE 6 OCT 64
CHECKED [illegible] 22 OCT 64
APPROVAL
APPROVAL E C Hall
NASA APPROVAL W S [illegible] 1-6-4-69
MIT APPROVAL

MANNED SPACECRAFT CENTER
HOUSTON, TEXAS

WIRING HARNESS,
AGC TO PSA & G/N TO SPACECRAFT

CODE IDENT NO. —
SIZE J
NASA DRAWING NO. 1005707
SCALE 1/1
WT —
SHEET 1 OF 1

MASTER

NOTICE — WHEN GOVERNMENT DRAWINGS, SPECIFICATIONS, OR OTHER DATA ARE USED FOR ANY PURPOSE OTHER THAN IN CONNECTION WITH A DEFINITELY RELATED GOVERNMENT PROCUREMENT OPERATION, THE UNITED STATES GOVERNMENT THEREBY INCURS NO RESPONSIBILITY NOR ANY OBLIGATION WHATSOEVER; AND THE FACT THAT THE GOVERNMENT MAY HAVE FORMULATED, FURNISHED, OR IN ANY WAY SUPPLIED THE SAID DRAWINGS, SPECIFICATIONS, OR OTHER DATA IS NOT TO BE REGARDED BY IMPLICATION OR OTHERWISE AS IN ANY MANNER LICENSING THE HOLDER OR ANY OTHER PERSON OR CORPORATION, OR CONVEYING ANY RIGHTS OR PERMISSION TO MANUFACTURE, USE, OR SELL ANY PATENTED INVENTION THAT MAY IN ANY WAY BE RELATED THERETO.

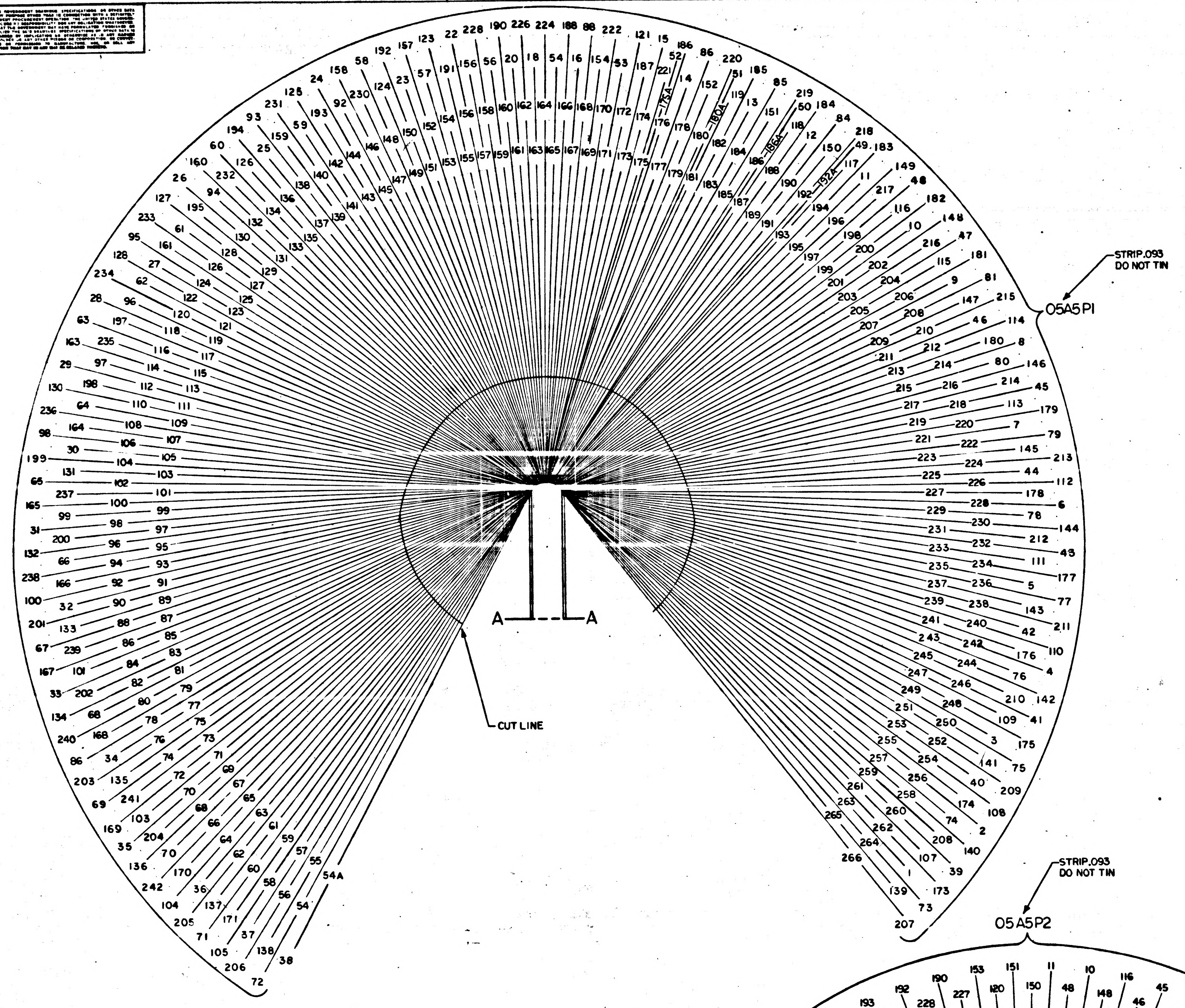

STRIP .093
DO NOT TIN
05A5P1
A
A
CUT LINE

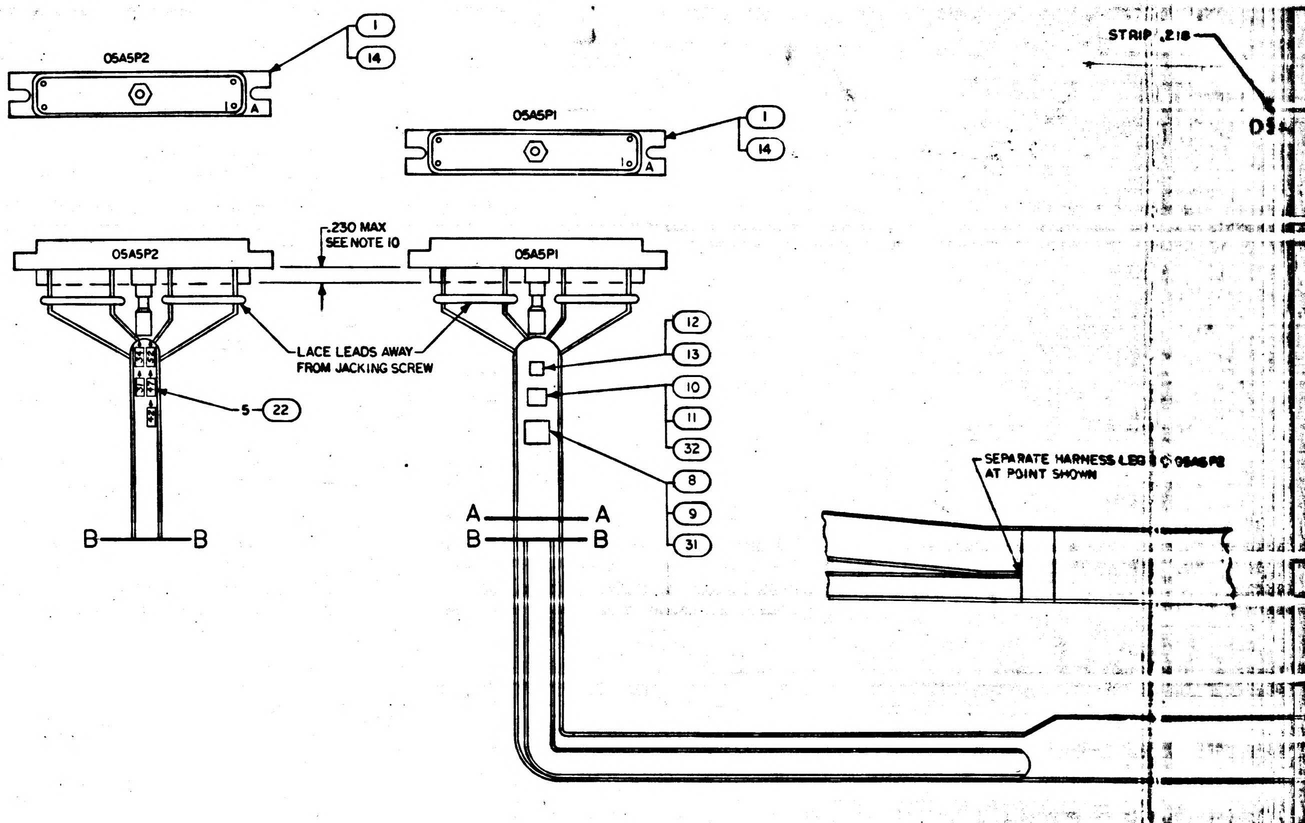

05A5P2
05A5P1
1
14
1
14
.230 MAX
SEE NOTE 10
LACE LEADS AWAY
FROM JACKING SCREW
5
22
12
13
10
11
32
8
9
31
A
A
B
B
B
B
STRIP .218
SEPARATE HARNESS LEG
AT POINT SHOWN

STRIP.093
DO NOT TIN

05A5P2

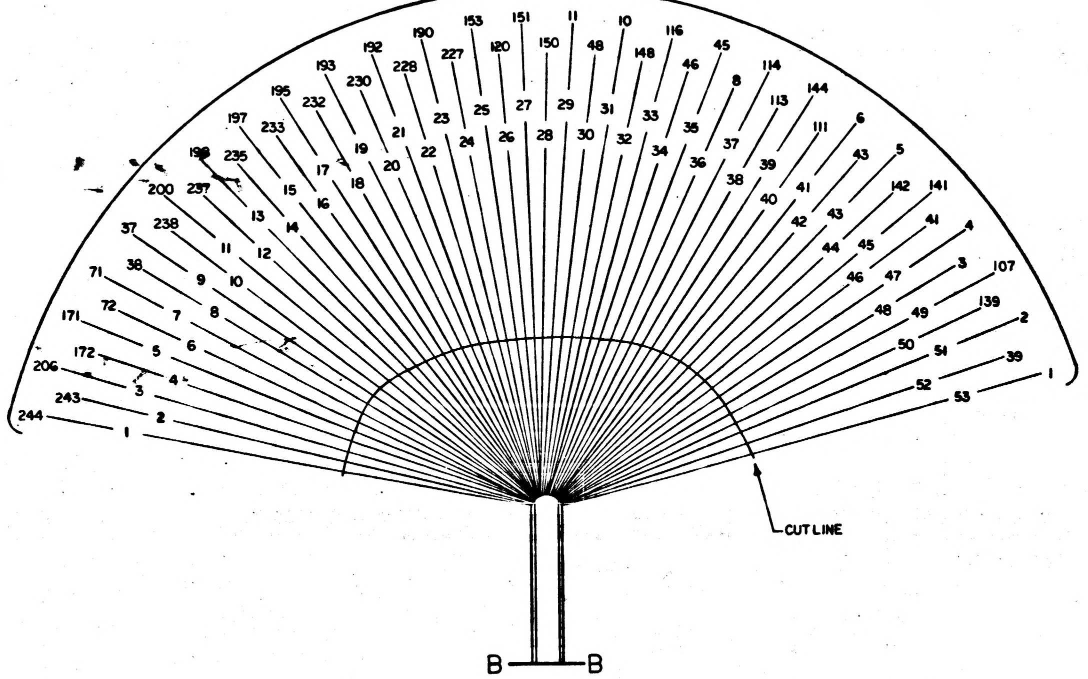

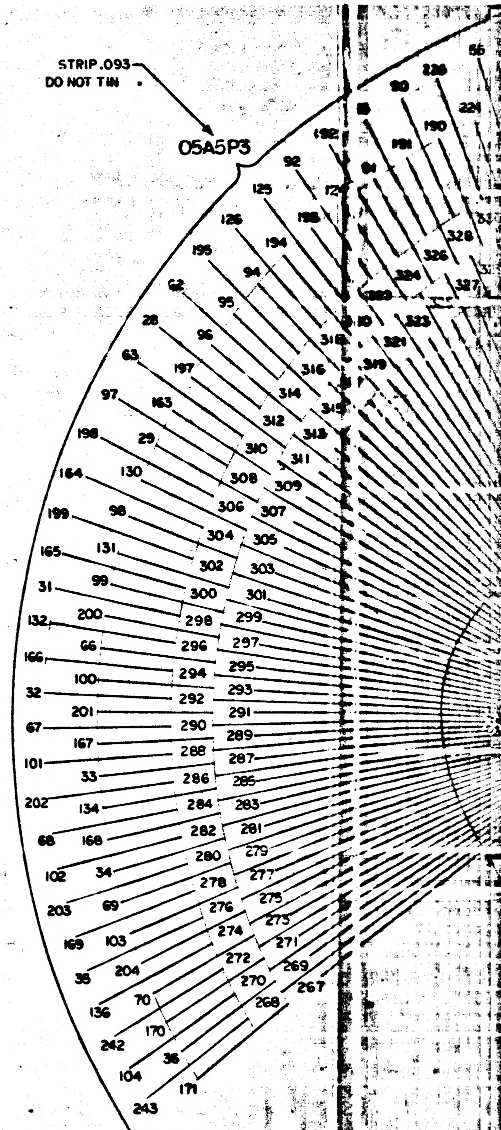

STRIP.093
DO NOT TIN
05A5P3

NOTES

1. INTERPRET DRAWING IN ACCORDANCE WITH STANDARDS PRESCRIBED BY MIL-D-70327
2. FOR SYMBOL FABRICATION AND REQUIRED TESTS SEE ND1002032
3. MIL-I-631 TYPE F, FORM U, GRADE A, CLASS 1, CATAGORY 1, FOR FIND NO.5 AWG 5/8 FOR FIND NO.6 AWG 3/8, FOR FIND NO.7 AWG 2
4. QQ-B-575 FOR FIND NO.2 BRAID SIZE 1/2, AWG 30 FOR FIND NO.3 BRAID SIZE 1/4, AWG 36 FOR FIND NO.4 BRAID SIZE 5/32
5. * DENOTES LENGTH IN FEET
6. FEED WIRES THROUGH BRAID AND SLEEVING SLEEVING TO COVER FERRULES AT BOTH ENDS OF CABLES
7. INSTALL CRIMP STYLE TERMINALS IN ACCORDANCE WITH ND1002206
8. AR DENOTES AS REQUIRED
9. MARK .100/.060 HIGH PER ND1002019 USING BLACK MARKING INK 1006271-10
10. ENCAPSULATE INDICATED AREA PER ND1002009 METHOD E, MOUNTING SURFACES OF CONNECTORS MUST NOT BE ENCAPSULATED
11. FOR INTERCONNECTING OF GROUND SHEATH CONNECTIONS SEE INTERNAL GROUND SHEATH CONNECTION CHART
12. TRIM AND DRESS ALL CONNECTOR LEADS AT ASSEMBLY
13. CENTER TWO (2) PIECES 1.5 LONG OF FIND NO.31 (MIL-I-23053, CLASS 1, COLOR BLACK, SIZE 7/16) UNDER FIND NO.8
14. CENTER ONE (1) PIECE 1.5 LONG OF FIND NO.32 (MIL-I-23053, CLASS 1, COLOR BLACK, SIZE NO.4) UNDER FIND NO.10
15. TEST PER FTM 1005707

SYM	DESCRIPTION	DATE	APPROVAL

REVISIONS 3477

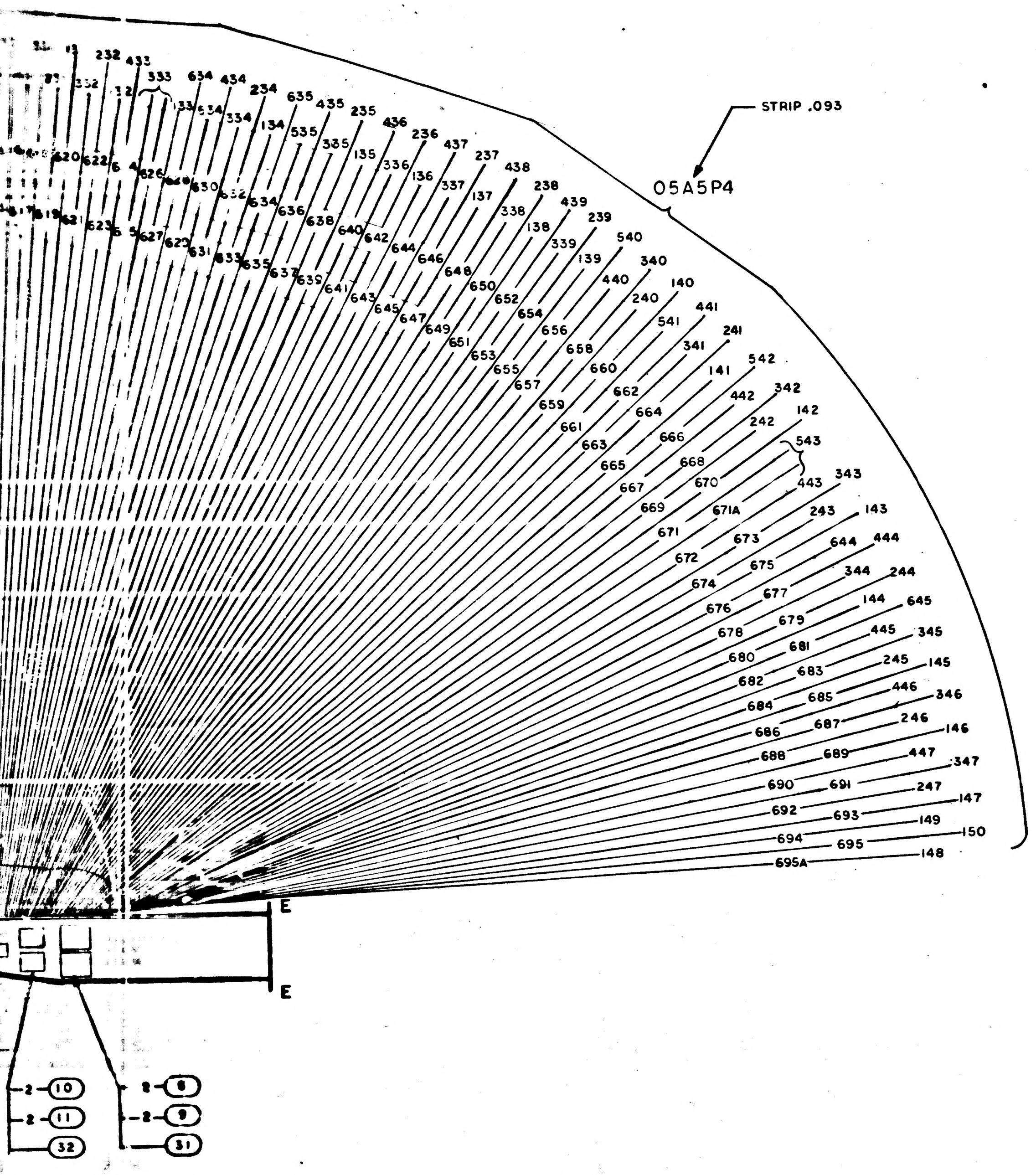
STRIP .093
05A5P4
695A
695
148
694
150
149
693
692
147
247
691
690
347
447
689
688
146
246
687
686
685
684
346
446
683
682
145
245
681
680
345
445
679
678
645
144
677
676
244
344
444
644
675
674
673
672
143
243
443
343
671
671A
670
669
668
667
543
666
665
142
242
664
342
442
663
662
661
542
141
660
659
658
657
241
341
541
441
656
655
654
653
140
240
340
440
540
652
651
650
649
648
139
339
239
439
538
138
238
438
338
237
437
137
337
236
436
136
336
135
335
235
435
535
134
234
334
434
634
534
133
333
433
232
E
E
2
10
2
11
32
8
2
9
31

D

C

B

A

1005707

MASTER

QTY REQD	PART OR IDENTIFYING NO.	NOMENCLATURE OR DESCRIPTION	FIND NO.

LIST OF MATERIALS

NEXT ASSY	USED ON

APPLICATION

UNLESS OTHERWISE SPECIFIED
DIMENSIONS ARE IN INCHES
TOLERANCES ON
FRACTIONS ± DECIMALS ± ANGLES ±
DO NOT SCALE THIS DRAWING
MATERIAL
HEAT TREATMENT
FINAL FINISH

MIT
INSTRUMENTATION LAB
CAMBRIDGE, MASS.
DRAWN A. Di Lag DATE OCT 64
CHECKED
APPROVAL
APPROVAL E C Hall
NASA APPROVAL 11-4-64
MIT APPROVAL 11/4/64

MANNED SPACECRAFT CENTER
HOUSTON, TEXAS

WIRING HARNESS,
AGC TO PSA & G/N TO SPACECRAFT

CODE IDENT NO. —
SIZE J
NASA DRAWING NO. 1005707
SCALE 1/1
WT —
SHEET 2 OF 3

24

F-2

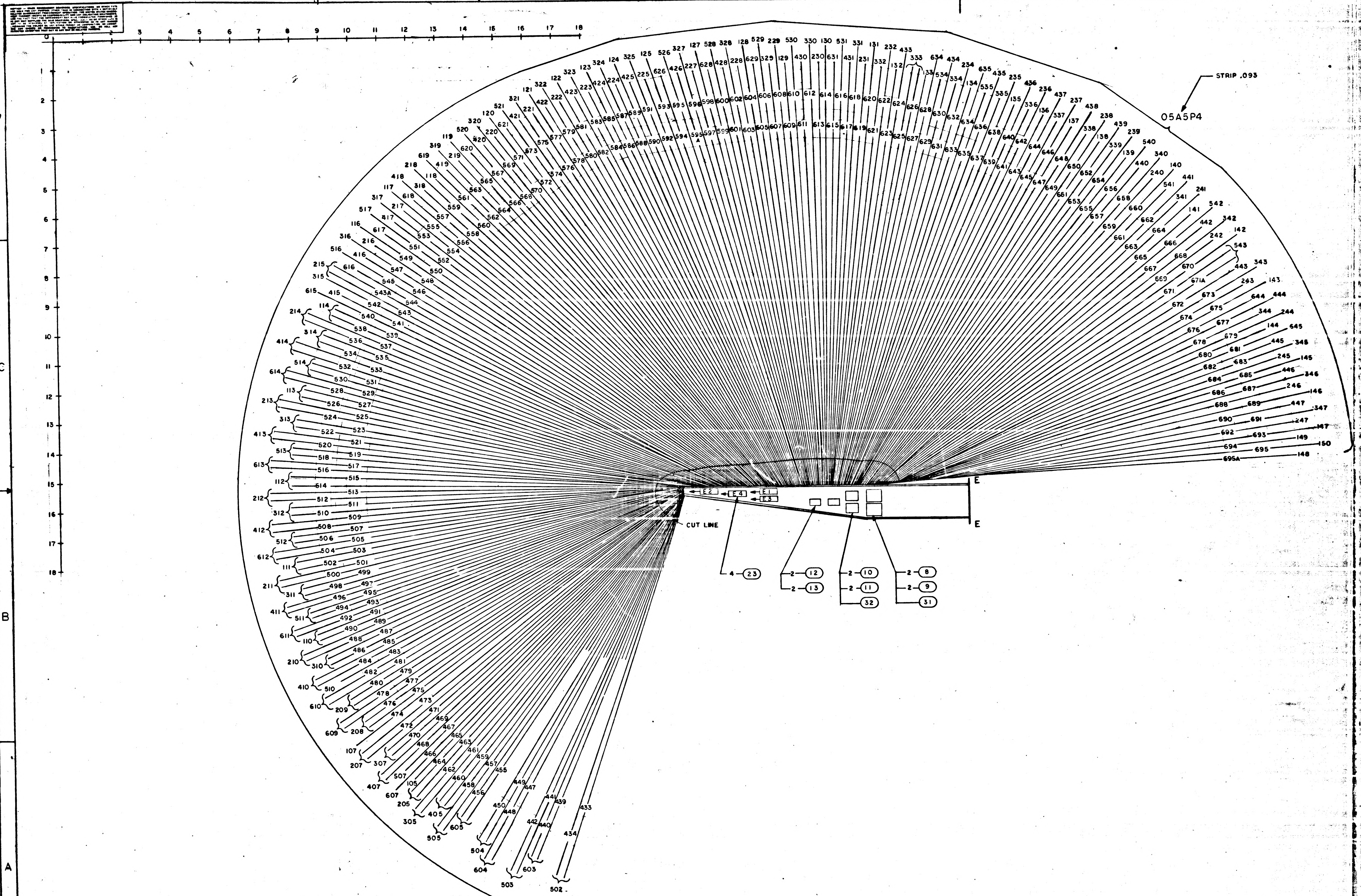
STRIP .093
05A5P4
E
E
E1
E2
E3
E4
CUT LINE
4-(23)
2-(12)
2-(13)
2-(10)
2-(11)
(32)
2-(8)
2-(9)
(31)

1005707

1005707

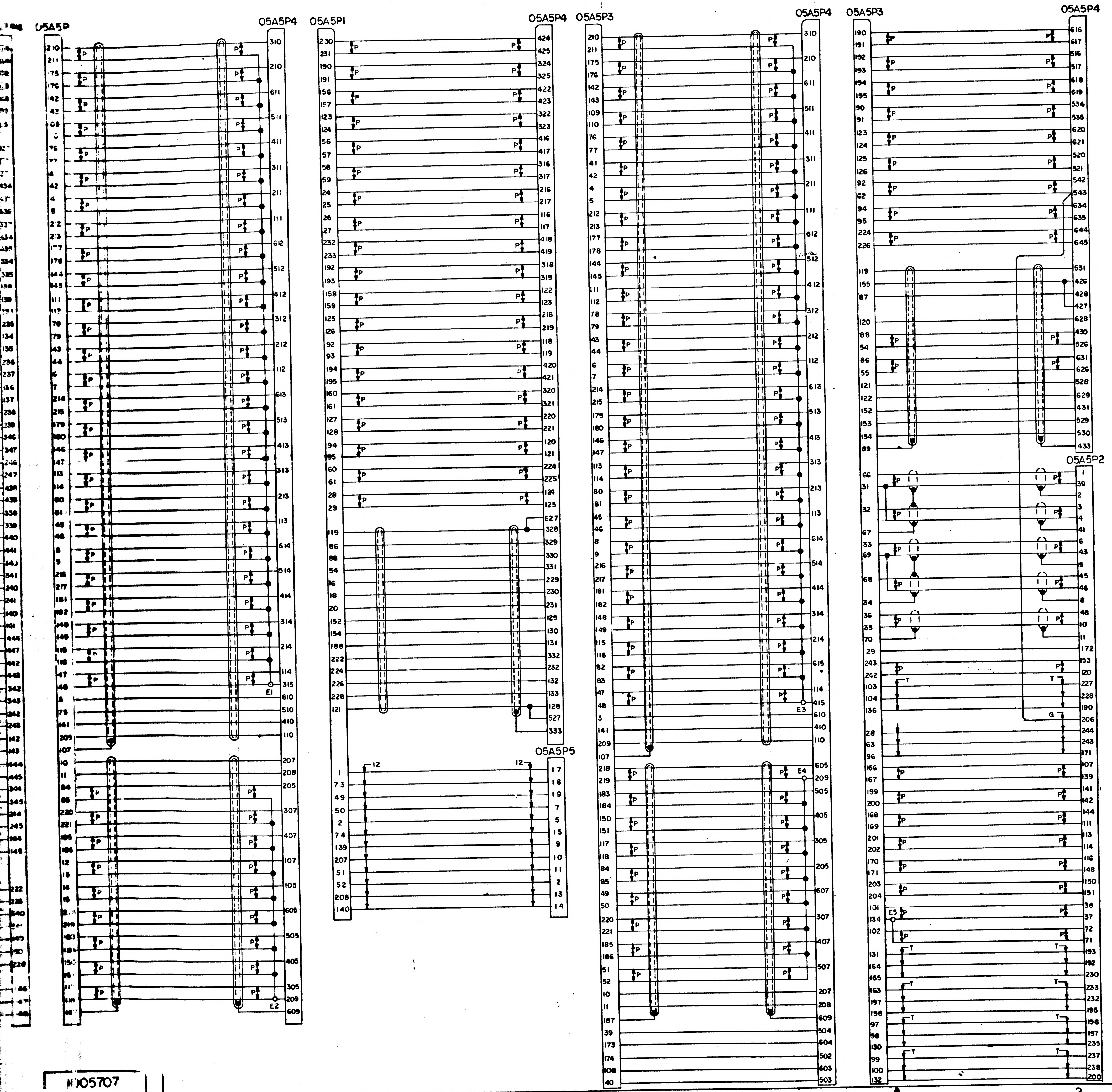
05A5P
05A5P4
05A5P1
05A5P4
05A5P3
05A5P4
05A5P3
05A5P4
05A5P2
05A5P5
E1
E2
E3
E4
E5
P
T
G
12

MASTER

QTY REQD	PART OR IDENTIFYING NO.	NOMENCLATURE OR DESCRIPTION	FIND NO.

LIST OF MATERIALS

NEXT ASSY	USED ON

APPLICATION

UNLESS OTHERWISE SPECIFIED DIMENSIONS ARE IN INCHES
TOLERANCES ON
FRACTIONS ± DECIMALS ± ANGLES ±
DO NOT SCALE THIS DRAWING
MATERIAL
HEAT TREATMENT
FINAL FINISH

MIT INSTRUMENTATION LAB
CAMBRIDGE, MASS
DRAWN J. Connelly DATE Oct 64
CHECKED
APPROVAL
APPROVAL E C Hall
NASA APPROVAL W J Rhine 12-4-64
MIT APPROVAL

MANNED SPACECRAFT CENTER
HOUSTON, TEXAS

WIRING HARNESS,
AGC TO PSA & G/N TO SPACECRAFT

CODE IDENT NO. —— SIZE J NASA DRAWING NO. 1005707
SCALE NONE WT —— SHEET 3 OF 3

1005707

F3

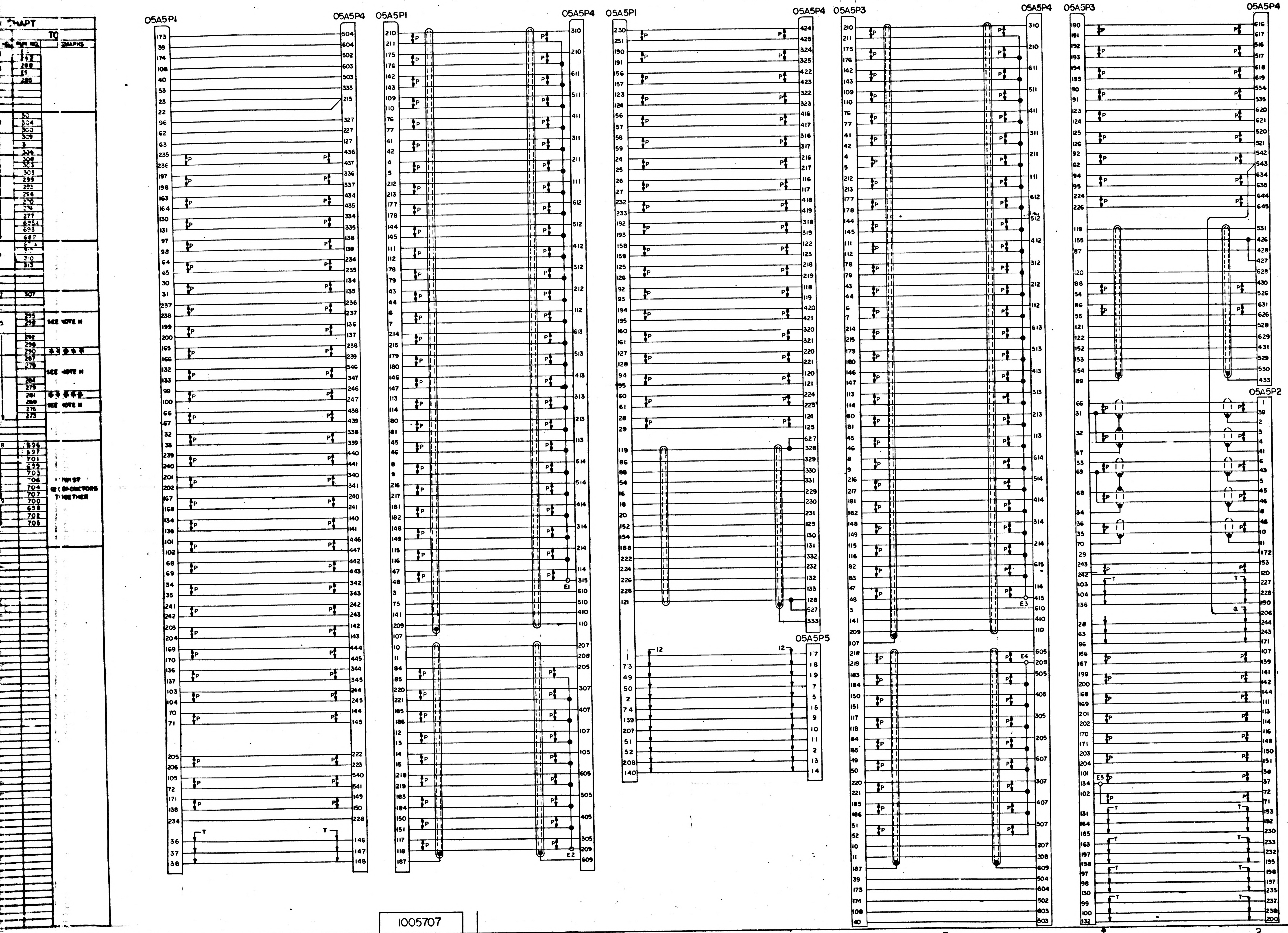
CHART
TO
PIN NO.
REMARKS
SEE NOTE H
SEE NOTE H
SEE NOTE H
TWIST 12 CONDUCTORS TOGETHER
05A5P1
05A5P4
05A5P1
05A5P4
05A5P1
05A5P4
05A5P3
05A5P4
05A5P3
05A5P4
05A5P2
05A5P5
E1
E2
E3
E4
E5
P
T
12
12

MASTER

1005707

F2

ASSEMBLY INFORMATION CHART

FROM		DESCRIPTION			TO	
REMARKS	RUN NO.	COLOR	AWG	FIND NO.	RUN NO.	REMARKS
ATTACH FIND NO. 2 LG 29 1/4 FIND NO. 5 LG 29 1/2 AND FIND NO. 8 & 9 SEE NOTE 6	245	YEL	26	18	487	
	238	RED			E1	
	248	YEL			489	
	241	RED			E1	
	244	YEL			493	
	237	RED			E1	
	247	YEL			495	
	240	RED			E1	
	243	YEL			497	
	236	RED			E1	
	246	YEL			499	
	239	RED			E1	
	242	YEL			501	
	235	RED			E1	
	231	YEL			503	
	224	RED			E1	
	234	YEL			505	
	227	RED			E1	
	230	YEL			507	
	223	RED			E1	
	233	YEL			509	
	226	RED			E1	
	229	YEL			511	
	222	RED			E1	
	232	YEL			513	
	225	RED			E1	
	228	YEL			515	
	221	RED			E1	
	217	YEL			517	
	210	RED			E1	
	220	YEL			519	
	213	RED			E1	
	216	YEL			521	
	209	RED			E1	
	219	YEL			523	
	212	RED			E1	
	215	YEL			525	
	208	RED			E1	
	218	YEL			527	
	211	RED			E1	
	214	YEL			529	
	207	RED			E1	
	203	YEL			531	
	197	RED			E1	
	206	YEL			533	
	200	RED			E1	
	202	YEL			535	
	196	RED			E1	
	205	YEL			537	
	199	RED			E1	
	204	YEL			539	
	198	RED			E1	
	E1	YEL		16	542	***
	249				481	
	250				483	
	251				485	
	252				491	
****	261	SHLD				
ATTACH FIND NO. 2 LG 9 FIND NO. 5 LG 9 1/4 AND FIND NO. 8 & 9 SEE NOTE 6	416	YEL	26	18	486	
	409	RED			E3	
	419	YEL			488	
	412	RED			E3	
	415	YEL			492	
	408	RED			E3	
	418	YEL			494	
	411	RED			E3	
	414	YEL			496	
	407	RED			E3	
	417	YEL			498	
	410	RED			E3	
	413	YEL			500	
	406	RED			E3	
	402	YEL			502	
	395	RED			E3	
	405	YEL			504	
	398	RED			E3	
	401	YEL			506	
	394	RED			E3	
	404	YEL			508	
	397	RED			E3	
	400	YEL			510	
	393	RED			E3	
	403	YEL			512	
	396	RED			E3	
	399	YEL			514	
	392	RED			E3	
	388	YEL			516	
	381	RED			E3	
	391	YEL			518	
	384	RED			E3	
	387	YEL			520	
	380	RED			E3	
	390	YEL			522	
	383	RED			E3	
	386	YEL			524	
	379	RED			E3	
	389	YEL			526	
	382	RED			E3	
	385	YEL			528	
	378	RED			E3	
	374	YEL			530	
	367	RED			E3	
	377	YEL			532	
	370	RED			E3	
	373	YEL			534	
	366	RED			E3	
	376	YEL			536	
	369	RED			E3	
	372	YEL			540	
	365	RED			E3	
	375	YEL			538	
	368	RED			E3	
	E3	YEL		16	541	***
	420				482	
	421				484	
	422				490	
****	427	SHLD				

ASSEMBLY INFORMATION CHART

FROM		DESCRIPTION			TO	
REMARKS	RUN NO.	COLOR	AWG	FIND NO.	RUN NO.	REMARKS
ATTACH FIND NO. 3 LG 30 1/2 FIND NO. 6 LG 30 3/4 AND FIND NO. 10 & 11 SEE NOTE 6	201	YEL	26	16	473	
	195	YEL		16	475	
	190	YEL		18	463	
	184	RED			E2	
	180	YEL			471	
	175	RED			E2	
	182	YEL			469	
	176	RED			E2	
	189	YEL			474	
	183	RED			E2	
	177	YEL			465	
	174	RED			E2	
	192	YEL			455	
	186	RED			E2	
	194	YEL			457	
	188	RED			E2	
	191	YEL			459	
	185	RED			E2	
	193	YEL			461	
	187	RED			E2	
	E2	YEL		16	479	**
***	173	SHLD		16	477	******
ATTACH FIND NO. 3 LG 10 FIND NO. 6 LG 10 1/4 AND FIND NO. 10 & 11 SEE NOTE 6	360	YEL	26	18	456	
	354	RED			E4	
	363	YEL			458	
	357	RED			E4	
	359	YEL			460	
	353	RED			E4	
	362	YEL			462	
	356	RED			E4	
	358	YEL			464	
	352	RED			E4	
	361	YEL			466	
	355	RED			E4	
	348	YEL			470	
	342	RED			E4	
	351	YEL			468	
	345	RED			E4	
	349	YEL			467	
	343	RED			E4	
	371	YEL		16	472	
	364	YEL			476	
	E4	YEL			480	**
***	339	SHLD			478	******
ATTACH FIND NO. 4 LG 11 FIND NO. 7 LG 11 1/4 AND FIND NO. 12 & 3 SEE NOTE 6	181	YEL	26	16	602	
	178				607	
	168				612	
	165				618	
	167				608	
	163				613	
	161				619	
	179				609	
	169				614	
	166				620	
	170				621	
	164				622	
	162				623	
	158				627	
	172				604	
		SHLD			626	**
ATTACH FIND NO. 4 LG 11 FIND NO. 7 LG 11 1/4 AND FIND NO. 12 & 13 SEE NOTE 6 ***	350	YEL	26	16	616	
	333A				595A	
	340				601	
	344				599	
	338				600	
	335				605	
	347				617	
	341				606	
	337				610	
	336	YEL		18	611	
	334	RED			595	
	346	YEL		18	615	
	332	RED			594	
	333	SHLD		16	624	**
	115	YEL	26	18	640	
	108	RED			644	
	117	YEL			641	
	111	RED			645	
	114	YEL			630	
	107	RED			636	
	110	YEL			631	
	103	RED			637	
	113	YEL			651	
	106	RED			655	
	109	YEL			632	
	102	RED			638	
	105	YEL			633	
	98	RED			639	
	101	YEL			642	
	94	RED			646	
	104	YEL			643	
	97	RED			647	
	100	YEL			650	
	93	RED			654	
	96	YEL			687	
	89	RED			691	
	99	YEL			688	
	92	RED			692	
	95	YEL			648	
	88	RED			652	
	91	YEL			649	
	84	RED			653	
	87	YEL			657	
	80	RED			662	
	90	YEL			658	
	83	RED			663	
	86	YEL			659	
	79	RED			664	
	82	YEL			660	
	75	RED			665	

ASSEMBLY INFORMATION CHART

FROM		DESCRIPTION			TO	
REMARKS	RUN NO.	COLOR	AWG	FIND NO.	RUN NO.	REMARKS
	81	YEL	26	18	667	
	74	RED			672	
	77	YEL			668	
	70	RED			673	
	73	YEL			669	
	66	RED			674	
	76	YEL			670	
	69	RED			675	
	72	YEL			677	
	65	RED			682	
	68	YEL			678	
	61	RED			683	
	71	YEL			679	
	64	RED			684	
	67	YEL			680	
	60	RED			685	
	85	YEL			686	
	78	RED			690	
	62	YEL			580	
	56	RED			584	
	58	YEL			656	
	54	RED			661	
	59	YEL			694	
	55	RED			695	
	147	YEL			586	
	140	RED			590	
	160	YEL			587	
	155	RED			591	
	157	YEL			578	
	152	RED			582	
	154	YEL			579	
	149	RED			583	
	159	YEL			546	
	153	RED			552	
	148	YEL			547	
	141	RED			553	
	144	YEL			548	
	137	RED			554	
	130	YEL			549	
	123	RED			555	
	133	YEL			557	
	126	RED			562	
	150	YEL			558	
	143	RED			563	
	146	YEL			581	
	139	RED			585	
	142	YEL			559	
	135	RED			564	
	145	YEL			560	
	138	RED			565	
	136	YEL			568	
	129	RED			574	
	132	YEL			569	
	125	RED			575	
	128	YEL			570	
	122	RED			576	
	131	YEL			571	
	124	RED			577	
	134	YEL			588	
	127	RED			592	
	118	YEL			589	
	112	RED			593	
	329	YEL			544	
	327	RED			550	
	324	YEL			545	
	321	RED			551	
	319	YEL			556	
	316	RED			561	
	328	YEL			629	
	325	RED			635	
	326	YEL			566	
	323	RED			572	
	320	YEL			567	
	318	RED			573	
	322	YEL			666	
	314	RED			671	
	317	YEL			628	
	315	RED			634	
	331	YEL			676	
	330	RED			681	
	25	YEL			268	
	26	RED			272	
	50	YEL			289	
	49	RED			294	
	45	YEL			302	
	44	RED			297	
	40	YEL			278	
	39	RED			283	
	38	YEL			291	
	37	RED			286	
	32	YEL			267	
	33	RED			271	
	27	YEL			275	
	28	RED			280	
	260	YEL	26	17	449	
	262				447	
	255				433	
	254				439	
	253				441	
	171				625	
	151				543	
	156				543A	
	119				596	
	121				597	
	116				598	
	426				450	
	428				448	
	425				434	
	424				440	
	423				442	
	120				603	

ASSEMBLY INFORMATION CHART

FROM		DESCRIPTION			TO	
REMARKS	RUN NO.	COLOR	AWG	FIND NO.	RUN NO.	REMARKS
	7	YEL	24	19	E5	
	6	RED			282	
	8	YEL	24	19	288	
	9	RED			E5	
	E5	YEL	24	17	285	
	19	YEL	24	20	301	
	21	RED			304	
	20	GRN			300	
	16	YEL			309	
	18	RED			311	
	17	GRN			306	
	13	YEL			308	
	15	RED			303	
	14	GRN			305	
	12	YEL			299	
	10	RED			293	
	11	GRN			296	
	22	YEL			270	
	23	RED			274	
	24	GRN			277	
	54A	YEL			695A	
	57	RED			693	
	63	GRN			689	
	3	YEL	24	21	671A	
	1	RED			312	
	2	GRN			310	
	5	BRN			313	
	4	YEL	24	17	307	
	53	YEL	26	15	295	
	52	RED			298	SEE NOTE 11
****	51	SHLD				
	48	YEL			292	
	47	RED			298	
****	46	SHLD			290	*****
	41	YEL			287	
	42	RED			279	
	43	SHLD				SEE NOTE 11
	35	YEL			284	
	34	RED			279	
****	36	SHLD			281	*****
	30	YEL			269	SEE NOTE 11
	31	RED			276	
****	29	SHLD			273	
	263	YEL	22	28	696	TWIST 12 CONDUCTORS TOGETHER
	264				697	
	186A				701	
	192A				699	
	265				703	
	266				706	
	175A				704	
	180A				707	
	256	BLK		29	700	
	257				698	
	258				702	
	259				705	

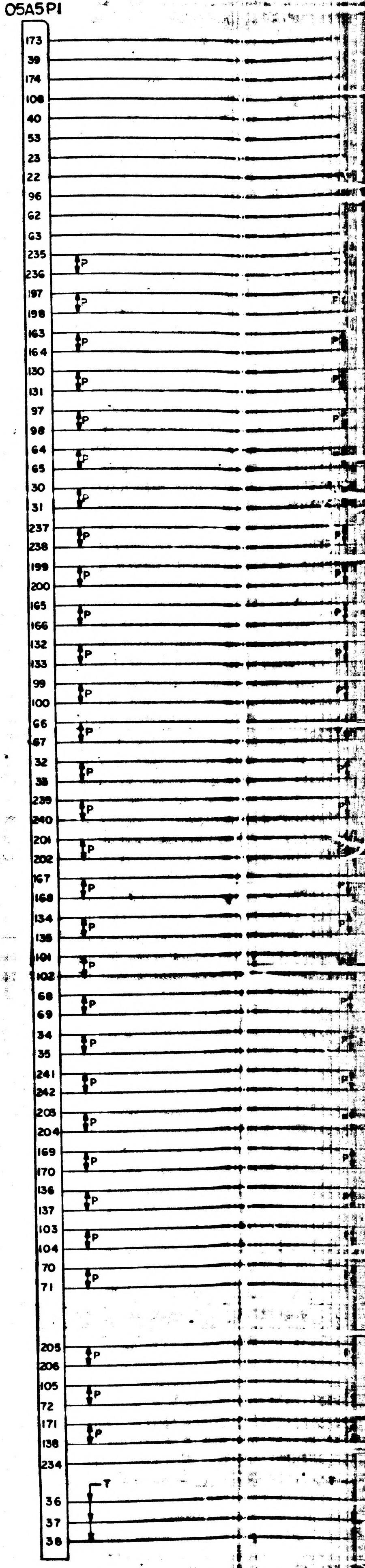

NOTICE — WHEN GOVERNMENT DRAWINGS, SPECIFICATIONS, OR OTHER DATA ARE USED FOR ANY PURPOSE OTHER THAN IN CONNECTION WITH A DEFINITELY RELATED GOVERNMENT PROCUREMENT OPERATION, THE UNITED STATES GOVERNMENT THEREBY INCURS NO RESPONSIBILITY NOR ANY OBLIGATION WHATSOEVER, AND THE FACT THAT THE GOVERNMENT MAY HAVE FORMULATED, FURNISHED, OR IN ANY WAY SUPPLIED THE SAID DRAWINGS, SPECIFICATIONS OR OTHER DATA IS NOT TO BE REGARDED BY IMPLICATION OR OTHERWISE AS IN ANY MANNER LICENSING THE HOLDER OR ANY OTHER PERSON OR CORPORATION, OR CONVEYING ANY RIGHTS OR PERMISSION TO MANUFACTURE, USE, OR SELL ANY PATENTED INVENTION THAT MAY IN ANY WAY BE RELATED THERETO

REVISIONS 12777			
SYM	DESCRIPTION	DATE	APPROVAL
A	REVISED PER TDRR 13323		

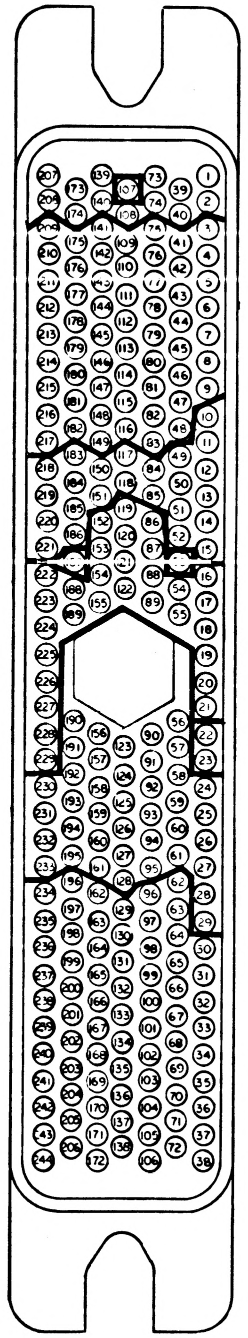

MALE PLUG
CONTACT SIDE

207	168
208	170
209	247
210	214 SIG
211	214 RET.
212	221 SIG.
213	221 RET.
214	228 SIG.
215	228 RET
216	235 SIG
217	235 RET
218	201 SIG
219	201 RET
220	208 SIG
221	208 RET.
222	161
223	
224	162
225	
226	163
227	
228	164
229	
230	110 SIG.
231	110 RET.
232	122 SIG.
233	122 RET.
234	
235	116 SIG.
236	116 RET.
237	128 SIG.
238	128 RET.
239	144 SIG.
240	144 RET.
241	151 SIG
242	151 RET.
243	
244	NOT AVAILABLE FOR USE

173	239
174	240
175	215 SIG.
176	215 RET
177	222 SIG.
178	222 RET.
179	229 SIG.
180	229 RET.
181	236 SIG.
182	236 RET.
183	202 SIG.
184	202 RET.
185	210 SIG.
186	210 RET.
187	250
188	160
189	
190	111 SIG
191	111 RET.
192	123 SIG.
193	123 RET.
194	134 SIG.
195	134 RET.
196	
197	117 SIG.
198	117 RET.
199	129 SIG.
200	129 RET.
201	145 SIG.
202	145 RET
203	152 SIG
204	152 RET.
205	183 SIG
206	183 RET

139	168
140	170
141	215
142	216 SIG.
143	216 RET.
144	223 SIG.
145	223 RET.
146	230 SIG.
147	230 RET.
148	237 SIG.
149	237 RET.
150	203 SIG.
151	203 RET.
152	158
153	
154	159
155	
156	108 SIG.
157	108 RET.
158	124 SIG.
159	124 RET.
160	135 SIG.
161	135 RET.
162	
163	114 SIG.
164	114 RET.
165	130 SIG.
166	130 RET.
167	146 SIG.
168	146 RET.
169	153 SIG.
170	153 RET.
171	199 SIG
172	NOT AVAILABLE FOR USE

107	245
108	241
109	217 SIG.
110	217 RET.
111	224 SIG.
112	224 RET.
113	231 SIG.
114	231 RET.
115	238 SIG.
116	238 RET.
117	204 SIG.
118	204 RET.
119	101-166
120	
121	165-090
122	
123	109 SIG.
124	109 RET.
125	132 SIG.
126	132 RET.
127	[illegible] SIG.
128	136 RET.
129	
130	115 SIG.
131	115 RET.
132	139 SIG.
133	139 RET.
134	147 SIG.
135	147 RET.
136	154 SIG.
137	154 RET.
138	199 RET

73	167
74	169
75	212
76	218 SIG.
77	218 RET.
78	225 SIG.
79	225 RET.
80	232 SIG.
81	232 RET.
82	242 SIG.
83	242 RET.
84	205 SIG.
85	205 RET.
86	102
87	
88	103
89	
90	
91	
92	133 SIG.
93	133 RET.
94	137 SIG.
95	137 RET.
96	175
97	131 SIG.
98	131 RET.
99	140 SIG.
100	140 RET.
101	148 SIG.
102	148 RET.
103	155 SIG.
104	155 RET.
105	056 SIG
106	NOT AVAILABLE FOR USE

39	251
40	243
41	219 SIG.
42	219 RET.
43	226 SIG.
44	226 RET.
45	233 SIG.
46	233 RET.
47	244 SIG.
48	244 RET.
49	
50	
51	
52	
53	178
54	104
55	
56	118 SIG.
57	118 RET.
58	119 SIG.
59	119 RET.
60	138 SIG.
61	138 RET
62	176
63	177
64	126 SIG.
65	126 RET.
66	142 SIG.
67	142 RET.
68	149 SIG.
69	149 RET.
70	156 SIG.
71	156 RET.
72	056 RET

1	167
2	169
3	211
4	220 SIG.
5	220 RET.
6	227 SIG.
7	227 RET.
8	234 SIG.
9	234 RET.
10	248
11	249
12	209 SIG.
13	209 RET.
14	207 SIG.
15	207 RET.
16	105
17	
18	106
19	
20	107
21	
22	179
23	180
24	120 SIG.
25	120 RET.
26	121 SIG.
27	121 RET.
28	141 SIG.
29	141 RET.
30	127 SIG.
31	127 RET.
32	143 SIG.
33	143 RET.
34	150 SIG.
35	150 RET.
36	157 SIG.
37	157 RET.
38	NOT AVAILABLE FOR USE

CABLE GROUP I NOT SHIELDED

CABLE GROUP II SHIELDED

CABLE GROUP III SHIELDED

CABLE GROUP IV SHIELDED

CABLE GROUP V SHIELDED

CABLE GROUP VI NOT SHIELDED

NOTE
1. INTERPRET DRAWING IN ACCORDANCE WITH STANDARDS PRESCRIBED BY MIL-D-70327

QTY REQD	PART OR IDENTIFYING NO.	NOMENCLATURE OR DESCRIPTION	FIND NO.

LIST OF MATERIALS

1005707	
NEXT ASSY	USED ON
APPLICATION	

UNLESS OTHERWISE SPECIFIED
DIMENSIONS ARE IN INCHES
TOLERANCES ON
FRACTIONS ± DECIMALS ± ANGLES ±
DO NOT SCALE THIS DRAWING
MATERIAL
HEAT TREATMENT
FINAL FINISH

MIT
INSTRUMENTATION LAB
CAMBRIDGE MASS
DWG NO CONTRACT
DRAWN Karan DATE 9/17/64
CHECKED A Butz 9/17/64
APPROVAL
APPROVAL Eldon C Hall 18 Sept 64
NASA APPROVAL W J Rhine 9-22-64
MIT APPROVAL W Kupfer 22 Sep 64

MANNED SPACECRAFT CENTER
HOUSTON, TEXAS

SIGNAL PIN ASSIGNMENT
05A5P1 CONNECTOR-(AGC TOP SA)

CODE IDENT NO. —
SIZE D
NASA DRAWING NO 1005716
SCALE NONE
WT
SHEET 1 OF 1

INCHES
0 1 2
PHOTOGRAPHIC SCALE ONLY

NOTICE — WHEN GOVERNMENT DRAWINGS SPECIFICATIONS OR OTHER DATA ARE USED FOR ANY PURPOSE OTHER THAN IN CONNECTION WITH A DEFINITELY RELATED GOVERNMENT PROCUREMENT OPERATION THE UNITED STATES GOVERNMENT THEREBY INCURS NO RESPONSIBILITY NOR ANY OBLIGATION WHATSOEVER AND THE FACT THAT THE GOVERNMENT MAY HAVE FORMULATED FURNISHED OR IN ANY WAY SUPPLIED THE SAID DRAWINGS SPECIFICATIONS OR OTHER DATA IS NOT TO BE REGARDED BY IMPLICATION OR OTHERWISE AS IN ANY MANNER LICENSING THE HOLDER OR ANY OTHER PERSON OR CORPORATION OR CONVEYING ANY RIGHTS OR PERMISSION TO MANUFACTURE USE OR SELL ANY PATENTED INVENTION THAT MAY IN ANY WAY BE RELATED THERETO

REVISIONS 12777

SYM	DESCRIPTION	DATE	APPROVAL
A	REVISED PER TDRR 13323		TNK
B	REVISED PER TDRR 13568	10/8/64	WR

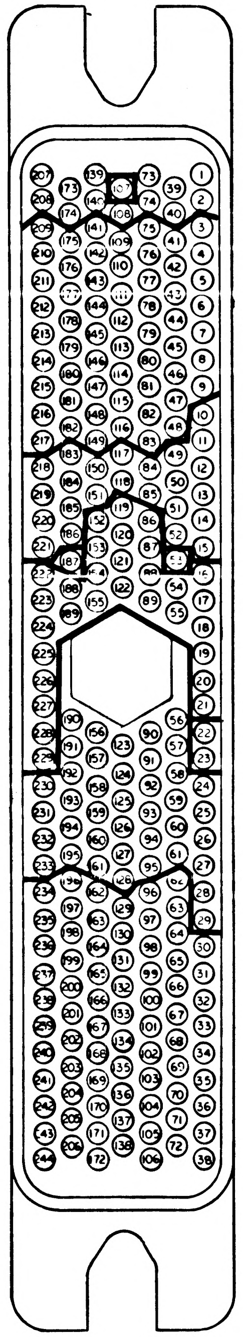

MALE PLUG
CONTACT SIDE

207	168
208	170
209	247
210	214 SIG
211	214 RET.
212	221 SIG.
213	221 RET.
214	228 SIG
215	228 RET
216	235 SIG
217	235 RET
218	201 SIG
219	201 RET
220	208 SIG
221	208 RET
222	161
223	
224	162
225	
226	163
227	
228	164
229	
230	110 SIG.
231	110 RET.
232	122 SIG.
233	122 RET.
234	
235	116 SIG.
236	116 RET.
237	128 SIG.
238	128 RET.
239	144 SIG.
240	144 RET.
241	151 SIG
242	151 RET.
243	
244	NOT AVAILABLE FOR USE

173	239
174	240
175	215 SIG
176	215 RET.
177	222 SIG.
178	222 RET.
179	229 SIG.
180	229 RET.
181	236 SIG.
182	236 RET
183	202 SIG
184	202 RET
185	210 SIG.
186	210 RET
187	250
188	160
189	
190	111 SIG
191	111 RET.
192	123 SIG.
193	123 RET.
194	134 SIG.
195	134 RET.
196	
197	117 SIG.
198	117 RET.
199	129 SIG.
200	129 RET.
201	145 SIG.
202	145 RET
203	152 SIG
204	152 RET.
205	183 SIG
206	183 RET

139	168
140	170
141	213
142	216 SIG.
143	216 RET.
144	223 SIG.
145	223 RET.
146	230 SIG.
147	230 RET.
148	237 SIG.
149	237 RET
150	203 SIG.
151	203 RET
152	158
153	
154	159
155	
156	108 SIG.
157	108 RET.
158	124 SIG.
159	124 RET.
160	135 SIG.
161	135 RET.
162	
163	114 SIG.
164	114 RET.
165	130 SIG.
166	130 RET.
167	146 SIG.
168	146 RET.
169	153 SIG.
170	153 RET.
171	199 SIG
172	NOT AVAILABLE FOR USE

107	245
108	241
109	217 SIG.
110	217 RET.
111	224 SIG.
112	224 RET.
113	231 SIG.
114	231 RET.
115	238 SIG.
116	238 RET.
117	204 SIG.
118	204 RET.
119	101-166
120	
121	165-090
122	
123	109 SIG.
124	109 RET.
125	132 SIG.
126	132 RET.
127	136 SIG.
128	136 RET.
129	
130	115 SIG.
131	115 RET.
132	139 SIG.
133	139 RET.
134	147 SIG.
135	147 RET.
136	154 SIG.
137	154 RET.
138	199 RET

73	167
74	169
75	212
76	218 SIG.
77	218 RET.
78	225 SIG.
79	225 RET.
80	232 SIG.
81	232 RET.
82	242 SIG.
83	242 RET.
84	205 SIG.
85	205 RET.
86	102
87	
88	103
89	
90	
91	
92	133 SIG.
93	133 RET.
94	137 SIG.
95	137 RET.
96	175
97	131 SIG.
98	131 RET.
99	140 SIG.
100	140 RET.
101	148 SIG.
102	148 RET.
103	155 SIG.
104	155 RET.
105	056 SIG
106	NOT AVAILABLE FOR USE

39	251
40	243
41	219 SIG.
42	219 RET.
43	226 SIG.
44	226 RET.
45	233 SIG.
46	233 RET.
47	244 SIG.
48	244 RET.
49	167
50	167
51	168
52	168
53	178
54	104
55	
56	118 SIG.
57	118 RET.
58	119 SIG.
59	119 RET.
60	138 SIG.
61	138 RET.
62	176
63	177
64	126 SIG.
65	126 RET.
66	142 SIG.
67	142 RET.
68	149 SIG.
69	149 RET.
70	156 SIG.
71	156 RET.
72	056 RET

1	167	CABLE GROUP I NOT SHIELDED
2	169	
3	211	
4	220 SIG.	
5	220 RET.	
6	227 SIG.	CABLE GROUP II SHIELDED
7	227 RET.	
8	234 SIG.	
9	234 RET.	
10	248	
11	249	
12	209 SIG.	CABLE GROUP III SHIELDED
13	209 RET.	
14	207 SIG.	
15	207 RET.	
16	105	
17		
18	106	CABLE GROUP IV SHIELDED
19		
20	107	
21		
22	179	
23	180	
24	120 SIG.	
25	120 RET.	
26	121 SIG.	CABLE GROUP V SHIELDED
27	121 RET.	
28	141 SIG.	
29	141 RET.	
30	127 SIG.	
31	127 RET.	
32	143 SIG.	
33	143 RET.	
34	150 SIG.	CABLE GROUP VI NOT SHIELDED
35	150 RET.	
36	157 SIG.	
37	157 RET.	
38	157 T	

NOTE
1. INTERPRET DRAWING IN ACCORDANCE WITH STANDARDS PRESCRIBED BY MIL-D-70327

QTY REQD	PART OR IDENTIFYING NO.	NOMENCLATURE OR DESCRIPTION	FIND NO.

LIST OF MATERIALS

NEXT ASSY	USED ON
1005707	

APPLICATION

UNLESS OTHERWISE SPECIFIED DIMENSIONS ARE IN INCHES
TOLERANCES ON
FRACTIONS ± DECIMALS ± ANGLES ±
DO NOT SCALE THIS DRAWING
MATERIAL
HEAT TREATMENT
FINAL FINISH

MIT
INSTRUMENTATION LAB
CAMBRIDGE MASS
DWG NO CONTRACT
DRAWN Karoay DATE 9/17/64
CHECKED A Butz 9/17/64
APPROVAL
APPROVAL Eldon C Hall 14 Sept 64
NASA APPROVAL W J Rhine 9-22-64
MIT APPROVAL W Kupfer 22 Sep 64

MANNED SPACECRAFT CENTER
HOUSTON, TEXAS

SIGNAL PIN ASSIGNMENT
05A5P1 CONNECTOR-(AGC TOPSA)

CODE IDENT NO. —
SIZE D
NASA DRAWING NO 1005716
SCALE NONE
WT
SHEET 1 OF 1

NOTICE — WHEN GOVERNMENT DRAWINGS, SPECIFICATIONS, OR OTHER DATA ARE USED FOR ANY PURPOSE OTHER THAN IN CONNECTION WITH A DEFINITELY RELATED GOVERNMENT PROCUREMENT OPERATION, THE UNITED STATES GOVERNMENT THEREBY INCURS NO RESPONSIBILITY NOR ANY OBLIGATION WHATSOEVER; AND THE FACT THAT THE GOVERNMENT MAY HAVE FORMULATED, FURNISHED, OR IN ANY WAY SUPPLIED THE SAID DRAWINGS, SPECIFICATIONS, OR OTHER DATA IS NOT TO BE REGARDED BY IMPLICATION OR OTHERWISE AS IN ANY MANNER LICENSING THE HOLDER OR ANY OTHER PERSON OR CORPORATION, OR CONVEYING ANY RIGHTS OR PERMISSION TO MANUFACTURE, USE, OR SELL ANY PATENTED INVENTION THAT MAY IN ANY WAY BE RELATED THERETO.

REVISIONS 12777			
SYM	DESCRIPTION	DATE	APPROVAL

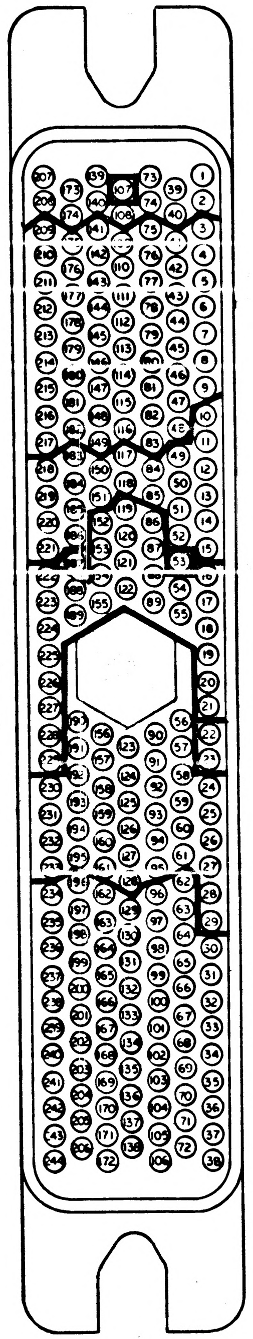

MALE PLUG
CONTACT SIDE

207	168
208	170
205	247
210	214 SIG
211	214 RET.
212	221 SIG.
213	221 RET.
214	228 SIG
215	228 RET
216	235 SIG
217	235 RET
218	201 SIG
219	201 RET
220	208 SIG
221	208 RET
222	161 SIG.
223	161 RET.
224	162 SIG.
225	162 RET.
226	163 SIG.
227	163 RET.
228	164 SIG.
229	164 RET.
230	110 SIG.
231	110 RET.
232	122 SIG.
233	122 RET
234	166
235	116 SIG.
236	116 RET.
237	128 SIG.
238	128 RET.
239	144 SIG.
240	144 RET.
241	151 SIG.
242	151 RET.
243	
244	NOT AVAILABLE FOR USE

173	239
174	240
175	215 SIG
176	215 RET.
177	222 SIG.
178	222 RET.
179	229 SIG.
180	229 RET.
181	236 SIG.
182	236 RET.
183	202 SIG.
184	202 RET.
185	210 SIG.
186	210 RET.
187	250
188	160 SIG.
189	160 RET.

190	111 SIG
191	111 RET.
192	123 SIG.
193	123 RET.
194	134 SIG.
195	134 RET.
196	
197	117 SIG.
198	117 RET.
199	129 SIG.
200	129 RET.
201	145 SIG.
202	145 RET
203	152 SIG.
204	152 RET.
205	183 SIG
206	183 RET

139	168
140	170
141	213
142	216 SIG.
143	216 RET.
144	223 SIG.
145	223 RET.
146	230 SIG.
147	230 RET.
148	237 SIG.
149	237 RET.
150	203 SIG.
151	203 RET.
152	158 SIG.
153	158 RET.
154	159 SIG.
155	159 RET.

156	108 SIG.
157	108 RET.
158	124 SIG.
159	124 RET.
160	135 SIG.
161	135 RET.
162	
163	114 SIG.
164	114 RET.
165	130 SIG.
166	130 RET.
167	146 SIG.
168	146 RET.
169	153 SIG.
170	153 RET.
171	191-SIG
172	NOT AVAILABLE FOR USE

107	245
108	241
109	217 SIG.
110	217 RET.
111	224 SIG.
112	224 RET.
113	231 SIG.
114	231 RET.
115	238 SIG.
116	238 RET.
117	204 SIG.
118	204 RET.
119	101 SIG.
120	101 RET.
121	165 SIG.
122	165 RET.

123	109 SIG.
124	109 RET.
125	132 SIG.
126	132 RET.
127	136 SIG.
128	136 RET.
129	
130	115 SIG.
131	115 RET.
132	139 SIG.
133	139 RET.
134	147 SIG.
135	147 RET.
136	154 SIG.
137	154 RET.
138	191 RET

73	167
74	169
75	212
76	218 SIG.
77	218 RET.
78	225 SIG.
79	225 RET.
80	232 SIG.
81	232 RET.
82	242 SIG.
83	242 RET.
84	205 SIG.
85	205 RET.
86	102 SIG.
87	102 RET.
88	103 SIG.
89	103 RET.

90	112 SIG.
91	112 RET.
92	133 SIG.
93	133 RET.
94	137 SIG.
95	137 RET.
96	175
97	131 SIG.
98	131 RET.
99	140 SIG.
100	140 RET.
101	148 SIG.
102	148 RET.
103	155 SIG.
104	155 RET.
105	056 SIG
106	NOT AVAILABLE FOR USE

39	239
40	243
41	219 SIG.
42	219 RET.
43	226 SIG.
44	226 RET.
45	233 SIG.
46	233 RET.
47	244 SIG.
48	244 RET.
49	
50	
51	
52	
53	178
54	104 SIG.
55	104 RET.

56	118 SIG.
57	118 RET.
58	119 SIG.
59	119 RET.
60	138 SIG.
61	138 RET.
62	176
63	177
64	126 SIG.
65	126 RET.
66	142 SIG.
67	142 RET.
68	149 SIG.
69	149 RET.
70	156 SIG.
71	156 RET.
72	056 RET

1	167
2	169
3	211
4	220 SIG.
5	220 RET.
6	227 SIG.
7	227 RET.
8	234 SIG.
9	234 RET.
10	248
11	249
12	209 SIG.
13	209 RET.
14	207 SIG.
15	207 RET.
16	105 SIG.
17	105 RET.
18	106 SIG.
19	106 RET.
20	107 SIG.
21	107 RET.
22	179
23	180
24	120 SIG.
25	120 RET.
26	121 SIG.
27	121 RET.
28	141 SIG.
29	141 RET.
30	127 SIG.
31	127 RET.
32	143 SIG.
33	143 RET.
34	150 SIG.
35	150 RET.
36	157 SIG.
37	157 RET.
38	NOT AVAILABLE FOR USE

CABLE GROUP I NOT SHIELDED

CABLE GROUP II SHIELDED

CABLE GROUP III SHIELDED

CABLE GROUP IV SHIELDED

CABLE GROUP V SHIELDED

CABLE GROUP VI NOT SHIELDED

NOTE
1. INTERPRET DRAWING IN ACCORDANCE WITH STANDARDS PRESCRIBED BY MIL-D-70327

MASTER

QTY REQD	PART OR IDENTIFYING NO.	NOMENCLATURE OR DESCRIPTION	FIND NO.
LIST OF MATERIALS			

1005707	
NEXT ASSY	USED ON
APPLICATION	

UNLESS OTHERWISE SPECIFIED
DIMENSIONS ARE IN INCHES
TOLERANCES ON
FRACTIONS ± DECIMALS ± ANGLES ±
DO NOT SCALE THIS DRAWING
MATERIAL
HEAT TREATMENT
FINAL FINISH

MIT
INSTRUMENTATION LAB
CAMBRIDGE, MASS
DWG NO CONTRACT
DRAWN Kanzer DATE 9/17/64
CHECKED A Bertolino 9/4/64
APPROVAL
APPROVAL Elhc Hall 4 Sept 64
NASA APPROVAL W J Rhine 9-22-64
MIT APPROVAL W Kupfer 22 Sep 64

MANNED SPACECRAFT CENTER
HOUSTON, TEXAS

SIGNAL PIN ASSIGNMENT
05A5P1 CONNECTOR-(AGC TO PSA)

CODE IDENT NO. —
SIZE D
NASA DRAWING NO. 1005716
SCALE NONE
WT
SHEET 1 OF 1

NOTICE — WHEN GOVERNMENT DRAWINGS, SPECIFICATIONS, OR OTHER DATA ARE USED FOR ANY PURPOSE OTHER THAN IN CONNECTION WITH A DEFINITELY RELATED GOVERNMENT PROCUREMENT OPERATION, THE UNITED STATES GOVERNMENT THEREBY INCURS NO RESPONSIBILITY NOR ANY OBLIGATION WHATSOEVER, AND THE FACT THAT THE GOVERNMENT MAY HAVE FORMULATED, FURNISHED, OR IN ANY WAY SUPPLIED THE SAID DRAWINGS, SPECIFICATIONS OR OTHER DATA IS NOT TO BE REGARDED BY IMPLICATION OR OTHERWISE AS IN ANY MANNER LICENSING THE HOLDER OR ANY OTHER PERSON OR CORPORATION, OR CONVEYING ANY RIGHTS OR PERMISSION TO MANUFACTURE, USE, OR SELL ANY PATENTED INVENTION THAT MAY IN ANY WAY BE RELATED THERETO.

REVISIONS /2777			
SYM	DESCRIPTION	DATE	APPROVAL

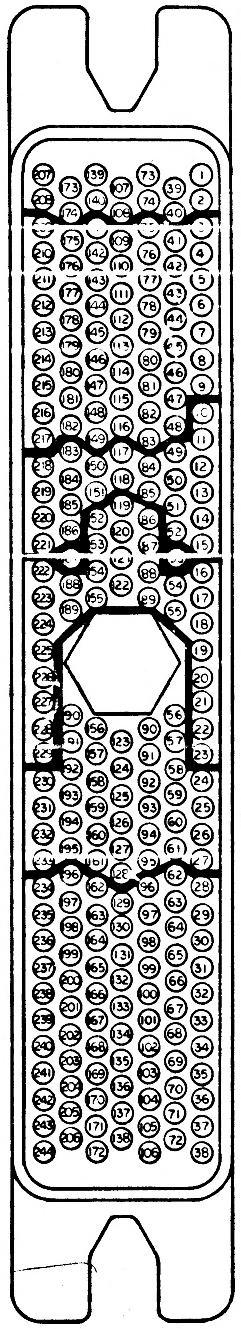

MALE RECEPTACLE
CONTACT SIDE
NORMAL POLARIZATION

1	NOT AVAILABLE FOR USE
2	NOT AVAILABLE FOR USE
3	211
4	220 SIG
5	220 RET
6	227 SIG
7	227 RET
8	234 SIG
9	234 RET
10	248
11	249
12	
13	
14	
15	
16	54 SIG
17	
18	54 RET
19	
20	
21	
22	
23	
24	
25	
26	
27	
28	ERROR DETECT LIGHT
29	S/C LAMP TEST
30	
31	ROLL ERROR OFFSET LO
32	ROLL ERROR BODY HI
33	YAW ERROR BODY HI
34	YAW ERROR SHLD
35	PITCH ERROR LO
36	PITCH ERROR HI
37	
38	NOT AVAILABLE FOR USE

CABLE GROUP VI (pins 24–27)

39	239
40	243
41	219 SIG
42	219 RET
43	226 SIG
44	226 RET
45	233 SIG
46	233 RET
47	244 SIG
48	244 RET
49	206 SIG
50	206 RET
51	246 SIG
52	246 RET
53	
54	R87
55	R86
56	17 SHLD NC
57	
58	
59	
60	
61	
62	OVDC SP CRAFT (26 RET)
63	IMU TEMP LIGHT
64	
65	
66	ROLL ERROR OFFSET HI
67	ROLL ERROR SHLD
68	YAW ERROR OFFSET HI
69	YAW ERROR BODY LO
70	PITCH ERROR SHLD
71	NOT AVAILABLE FOR USE
72	

73	NOT AVAILABLE FOR USE
74	
75	212
76	218 SIG
77	218 RET
78	225 SIG
79	225 RET
80	232 SIG
81	232 RET
82	242 SIG
83	242 RET
84	205 SIG
85	205 RET
86	067
87	007
88	066
89	180
90	17 SIG
91	17 RET
92	26 SIG
93	
94	11 SIG
95	11 RET
96	GIMBAL LOCK LIGHT
97	MIN IMPULSE + YAW
98	MIN IMPULSE - YAW
99	MIN IMPULSE TOG SW
100	MIN IMPULSE ENABLE
101	S/C WARN LIGHT
102	S/C CAUT LIGHT
103	LOCK CDU RELAY CONT
104	FINE ALIGN RELAY CONT
105	
106	NOT AVAILABLE FOR USE

107	245
108	241
109	217 SIG
110	217 RET
111	224 SIG
112	224 RET
113	231 SIG
114	231 RET
115	238 SIG
116	238 RET
117	204 SIG
118	204 RET
119	068
120	004
121	005
122	058
123	24 SIG
124	24 RET
125	25 SIG
126	25 RET
127	
128	11 SHLD NC
129	
130	MIN IMPULSE YAW
131	MIN IMPULSE + ROLL
132	MIN IMPULSE EN RET
133	
134	+28 VDC SPACECRAFT
135	
136	IMU MODE RELAY COMM
137	NOT AVAILABLE FOR USE
138	

139	NOT AVAILABLE FOR USE
140	
141	213
142	216 SIG
143	216 RET
144	223 SIG
145	223 RET
146	230 SIG
147	230 RET
148	237 SIG
149	237 RET
150	203 SIG
151	203 RET
152	040
153	060
154	065
155	
156	.4 SHLD NC
157	24 SHLD NC
158	15 SHLD NC
159	25 SHLD NC
160	16 SHLD NC
161	
162	
163	MIN IMPULSE + PITCH
164	MIN IMPULSE - ROLL
165	MIN IMPULSE ROLL
166	SIN AOG 1X LO(S2)
167	SIN AOG 1X HI(S4)
168	SIN AMG 1X LO(S2)
169	SIN AMG 1X HI(S4)
170	SIN AIG 1X LO(S2)
171	SIN AIG 1X HI(S4)
172	NOT AVAILABLE FOR USE

173	251
174	240
175	215 SIG
176	215 RET
177	222 SIG
178	222 RET
179	229 SIG
180	229 RET
181	236 SIG
182	236 RET
183	202 SIG
184	202 RET
185	210 SIG
186	210 RET
187	250
188	
189	
190	14 SIG
191	14 RET
192	15 SIG
193	15 RET
194	16 SIG
195	16 RET
196	
197	MIN IMPULSE - PITCH
198	MIN IMPULSE PITCH
199	COS AOG 1X HI(S3)
200	COS AOG 1X LO(S1)
201	COS AMG 1X HI(S3)
202	COS AMG 1X LO(S1)
203	COS AIG 1X LO(S1)
204	COS AIG 1X HI(S3)
205	NOT AVAILABLE FOR USE
206	

207	NOT AVAILABLE FOR USE
208	
209	247
210	214 SIG
211	214 RET
212	221 SIG
213	221 RET
214	228 SIG
215	228 RET
216	235 SIG
217	235 RET
218	201 SIG
219	201 RET
220	208 SIG
221	208 RET
222	
223	
224	1 SIG
225	1 SHLD NC
226	1 RET
227	
228	
229	
230	
231	
232	
233	
234	
235	
236	
237	
238	
239	
240	
241	
242	IMU 28V 800CPS LO
243	IMU 28V 800CPS HI
244	NOT AVAILABLE FOR USE

CABLE GROUP I NOT SHIELDED

CABLE GROUP II SHIELDED

CABLE GROUP III SHIELDED

CABLE GROUP IV NOT SHIELDED

CABLE GROUP V SHIELDED

NOTES
1. INTERPRET DRAWING IN ACCORDANCE WITH STANDARDS PRESCRIBED BY MIL-D-70327

MASTER

QTY REQD	PART OR IDENTIFYING NO.	NOMENCLATURE OR DESCRIPTION	FIND NO.
LIST OF MATERIALS			

1005707	
NEXT ASSY	USED ON
APPLICATION	

UNLESS OTHERWISE SPECIFIED
DIMENSIONS ARE IN INCHES
TOLERANCES ON
FRACTIONS ± DECIMALS ± ANGLES ±
DO NOT SCALE THIS DRAWING
MATERIAL
HEAT TREATMENT
FINAL FINISH

MIT
INSTRUMENTATION LAB
CAMBRIDGE, MASS.
DRAWN DATE 2/17/64
CHECKED 2/17/64
APPROVAL
APPROVAL
NASA APPROVAL 2-22-64
MIT APPROVAL
MIT APPROVAL 2/22/64

MANNED SPACECRAFT CENTER
HOUSTON, TEXAS

SIGNAL PIN ASSIGNMENT
05A5P3 CONNECTOR (G&N TO C/M)

CODE IDENT NO. —
SIZE D
NASA DRAWING NO. 1005717
SCALE NONE
WT
SHEET 1 OF 1

INCHES

REV	DESCRIPTION	DATE	APPROVAL
A	REPLACED WITH CHANGES BY REV B PER TDRR 17889 DR J.P. Leonard CHK R.H.E.	5/10/65	

1005727 A

JUMPER LIST			
FROM	TO	LENGTH	FIND NO.
P4 - 122	P4 - 527	AR	10
P4 - 328	P4 - 627	AR	10
P4 - 426	P4 - 427	AR	10

INTERNAL GROUND SHEATHS CONNECTIONS			
FROM	TO	LENGTH	FIND NO.
555	558	AR	13
563	566	AR	13

**	ATTACH FIND 10 LG AR
***	ATTACH FIND 13 LG AR

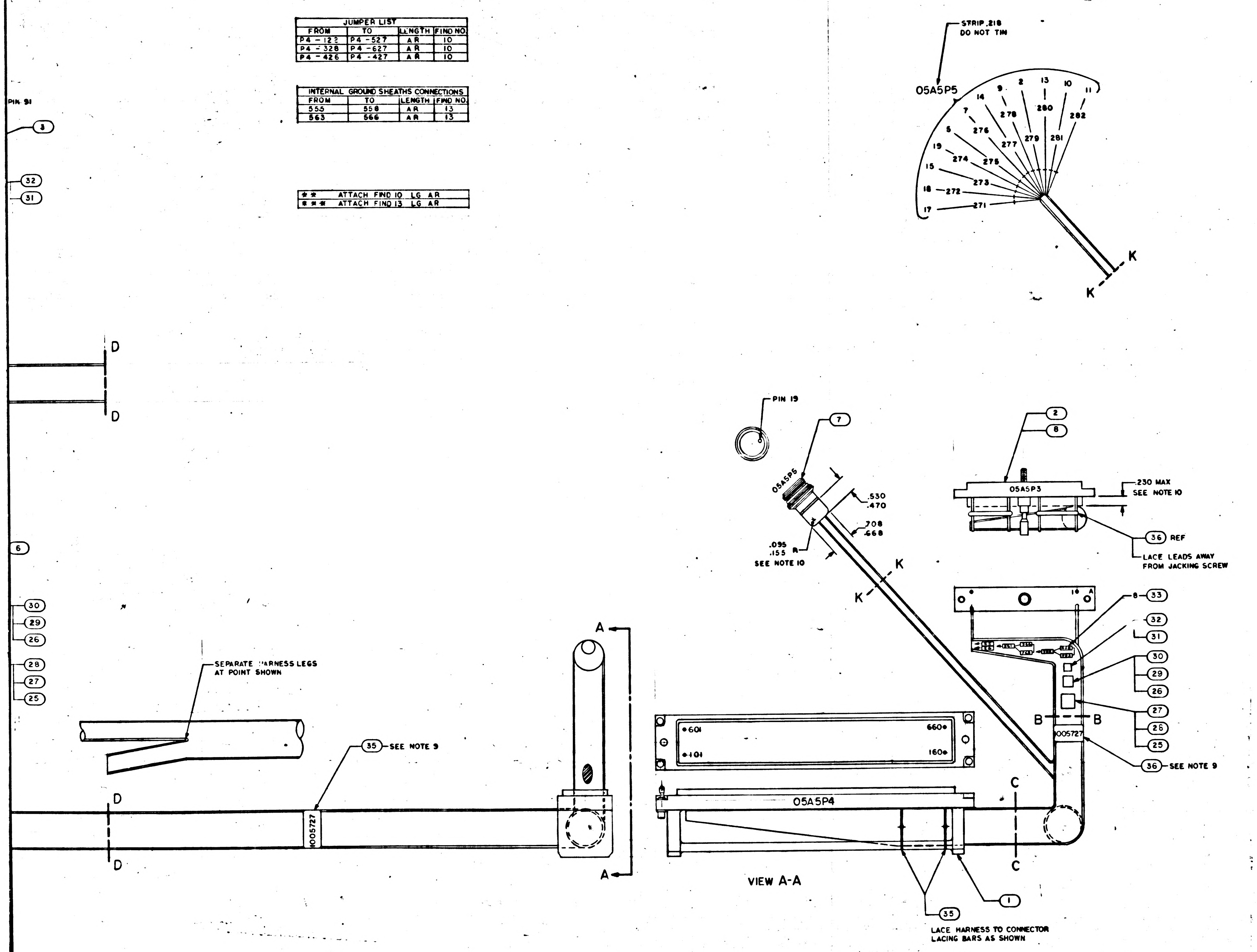

PIN 91
3
32
31
STRIP .218
DO NOT TIN
05A5P5
9
2
13
10
11
14
280
7
278
282
5
276
277
279
281
19
274
275
15
273
18
272
17
271
K
K
D
D
PIN 19
7
05A5P6
.530
.470
.708
.668
.095
.155 R
SEE NOTE 10
K
K
2
8
05A5P3
.230 MAX
SEE NOTE 10
36 REF
LACE LEADS AWAY
FROM JACKING SCREW
8
33
32
31
30
29
26
27
28
25
B
B
1005727
36 SEE NOTE 9
6
30
29
26
28
27
25
SEPARATE HARNESS LEGS
AT POINT SHOWN
35 SEE NOTE 9
1005727
D
D
A
A
601
660
101
160
05A5P4
C
C
VIEW A-A
35
1
LACE HARNESS TO CONNECTOR
LACING BARS AS SHOWN

Ⓐ REPLACED WITH CHANGE BY REV B

QTY REQD	PART OR IDENTIFYING NO.	NOMENCLATURE OR DESCRIPTION	FIND NO.
☒	1005798	WIRING DIAGRAM	REF
2	MS18035-1	BAND MARKER, CABLE	36
AR	1012507 -001	TAPE, LACING	35
4	1010402 - 2	SLEEVE, SOLDER	34
13	1010402 - 1	SLEEVE, SOLDER	33
4	1000242-14	FERRULE, ELEC	32
4	1000243-23	FERRULE, ELEC	31
4	1000242-26	FERRULE, ELEC	30
4	1000243-21	FERRULE, ELEC	29
4	1000242-33	FERRULE, ELEC	28
4	1000243-37	FERRULE, ELEC	27
AR	SEE NOTE 14	INSULATION, ELEC	26
AR	SEE NOTE 13	INSULATION, ELEC	25
* 3.7	SEE NOTE 3	INSULATION, ELEC	24
** 3.6	SEE NOTE 3	INSULATION, ELEC	23
*** 3.5	SEE NOTE 3	INSULATION, ELEC	22
* 3.7	SEE NOTE 4	WIRE, BRAID	21
** 3.6	SEE NOTE 4	WIRE, BRAID	20
*** 3.5	SEE NOTE 4	WIRE, BRAID	19
AR	1010789 - 007	WIRE, ELEC, AWG 22, BLK	18
AR	1010789 - 006	WIRE, ELEC, AWG 22, YEL	17
AR	1010789 - 010	WIRE, ELEC, AWG 22, 4 COND TWISTED	16
AR	1010789 - 009	WIRE, ELEC, AWG 22, 3 COND, TWISTED	15
AR	1010789 - 008	WIRE, ELEC, AWG 22, 2 COND, TWISTED	14
AR	1010789 - 002	WIRE, ELEC, AWG 24, BLK	13
AR	1010789 - 003	WIRE, ELEC, AWG 24, 2 COND, TWISTED	12
AR	1010789 - 012	WIRE, ELEC, AWG 24, 2 COND, SHLD	11
AR	1010789 - 016	WIRE, ELEC, AWG 26, YEL	10
AR	1010789 - 017	WIRE, ELEC, AWG 26, 2 COND, TWISTED	9
244	1010738-5	CONTACT, ELEC, PIN	8
1	1010771 - 013	CONNECTOR, PLUG, ELEC	7
1	1010771 - 101	CONNECTOR, PLUG, ELEC	6
1	1010771 - 102	CONNECTOR, PLUG, ELEC	5
1	1010771 - 103	CONNECTOR, PLUG, ELEC	4
1	1010771 - 104	CONNECTOR, PLUG, ELEC	3
1	1010815 - 144	CONNECTOR, PLUG, ELEC	2
1	1003731	CONNECTOR ASSY, 360 CONTACTS	1

LIST OF MATERIALS

1005727 A

1015000	
NEXT ASSY	USED ON
APPLICATION	

UNLESS OTHERWISE SPECIFIED
DIMENSIONS ARE IN INCHES
TOLERANCES ON
FRACTIONS ± — DECIMALS .XXX ± .010 ANGLES ± —
DO NOT SCALE THIS DRAWING
MATERIAL
HEAT TREATMENT
FINAL FINISH

MIT
INSTRUMENTATION LAB
CAMBRIDGE, MASS
DWG NO. CONTRACT
DRAWN A. D. Lee DATE 30 NOV 64
CHECKED
APPROVAL
APPROVAL
NASA APPROVAL
MIT APPROVAL

MANNED SPACECRAFT CENTER
HOUSTON, TEXAS

WIRING HARNESS,
AGC TO PSA & G/N TO SPACECRAFT

CODE IDENT NO. —
SIZE J
NASA DRAWING NO. 1005727
SCALE 1/1
WT
SHEET 1 OF 3

MFS11K

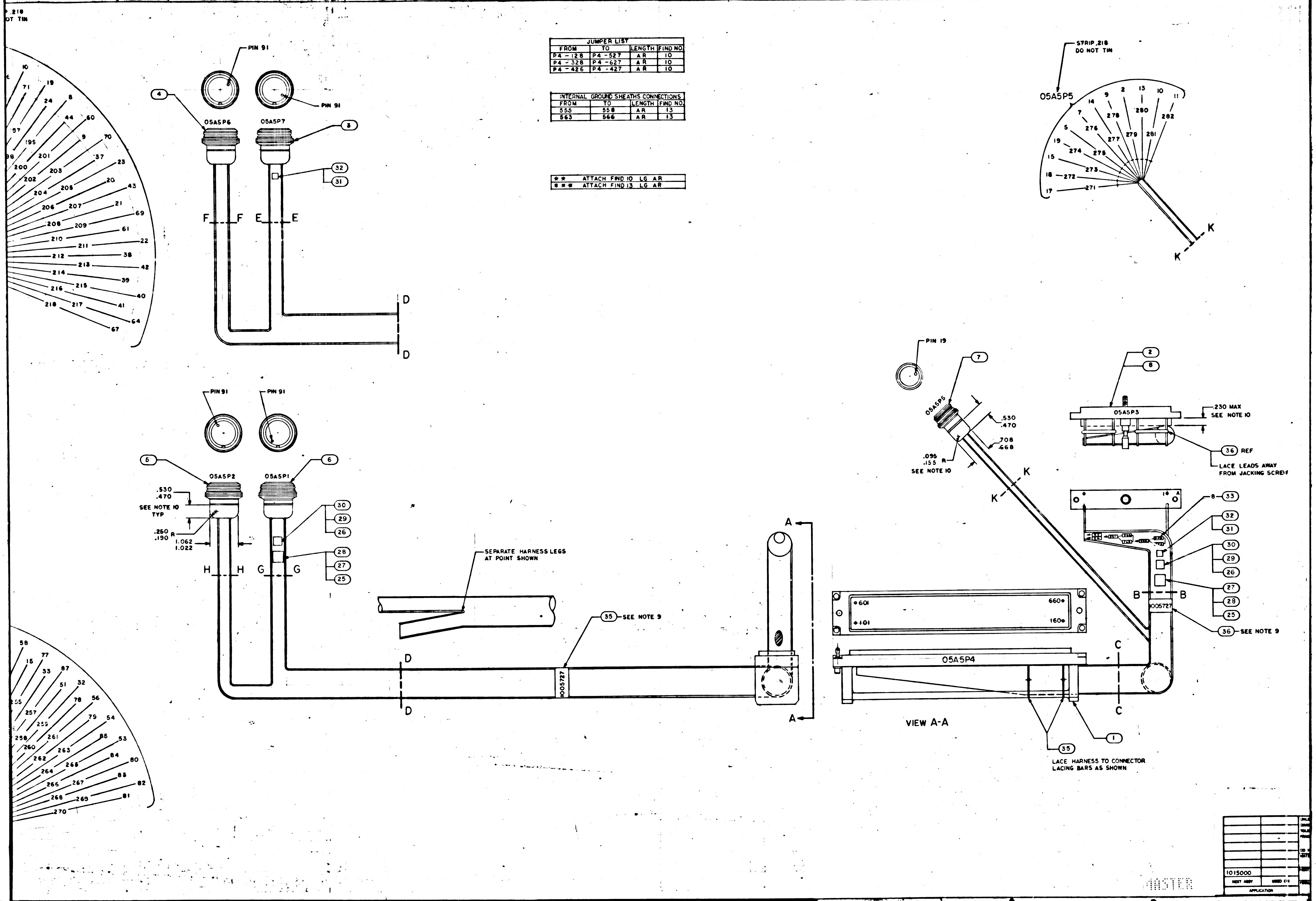
5
4
3
2
.218
OT TIN
PIN 91
PIN 91
4
8
05A5P6
05A5P7
32
31
F F E E
D
D
PIN 91
PIN 91
5
6
05A5P2
05A5P1
.530
.470
SEE NOTE 10
TYP
.250
.190 R
1.062
1.022
30
29
26
28
27
25
H H G G
SEPARATE HARNESS LEGS
AT POINT SHOWN
35 SEE NOTE 9
1005727
D
D
A
A
STRIP .218
DO NOT TIN
05A5P5
K
K
PIN 19
7
05A5P5
.530
.470
.708
.668
.095
.155 R
SEE NOTE 10
K
K
2
8
.230 MAX
SEE NOTE 10
05A5P3
36 REF
LACE LEADS AWAY
FROM JACKING SCREW
8 33
32
31
30
29
26
27
28
25
B B
1005727
36 SEE NOTE 9
601
101
660
160
05A5P4
C
C
VIEW A-A
35
1
LACE HARNESS TO CONNECTOR
LACING BARS AS SHOWN
1015000
NEXT ASSY
USED ON
APPLICATION
MASTER

JUMPER LIST			
FROM	TO	LENGTH	FIND NO.
P4 - 128	P4 - 527	A R	10
P4 - 328	P4 - 627	A R	10
P4 - 426	P4 - 427	A R	10

INTERNAL GROUND SHEATHS CONNECTIONS			
FROM	TO	LENGTH	FIND NO.
555	558	A R	13
563	566	A R	13

* *	ATTACH FIND 10 LG AR
* * *	ATTACH FIND 13 LG AR

1005727 A F 2/3

SHEET 1

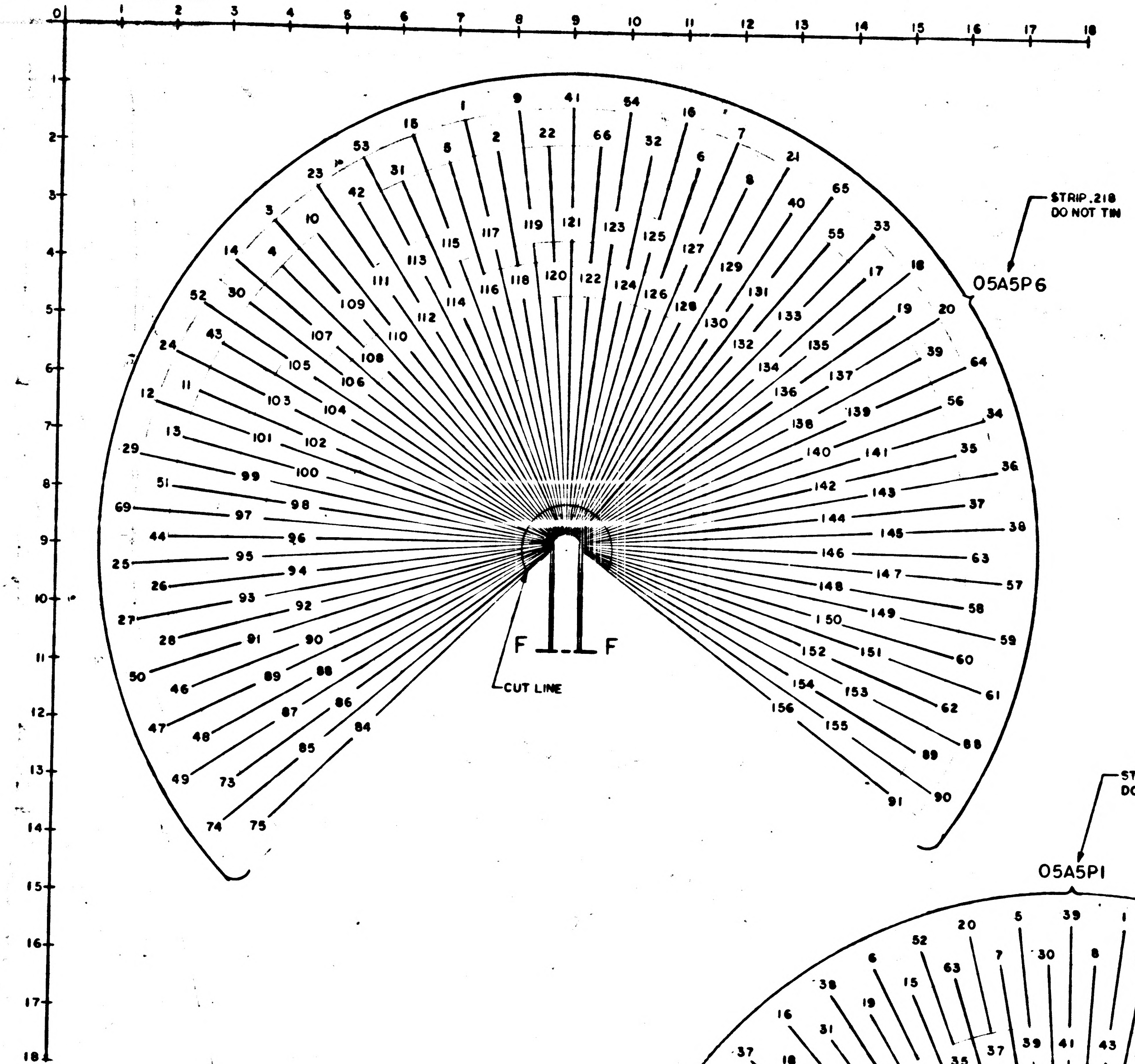

STRIP .218
DO NOT TIN
05A5P6
F
F
CUT LINE

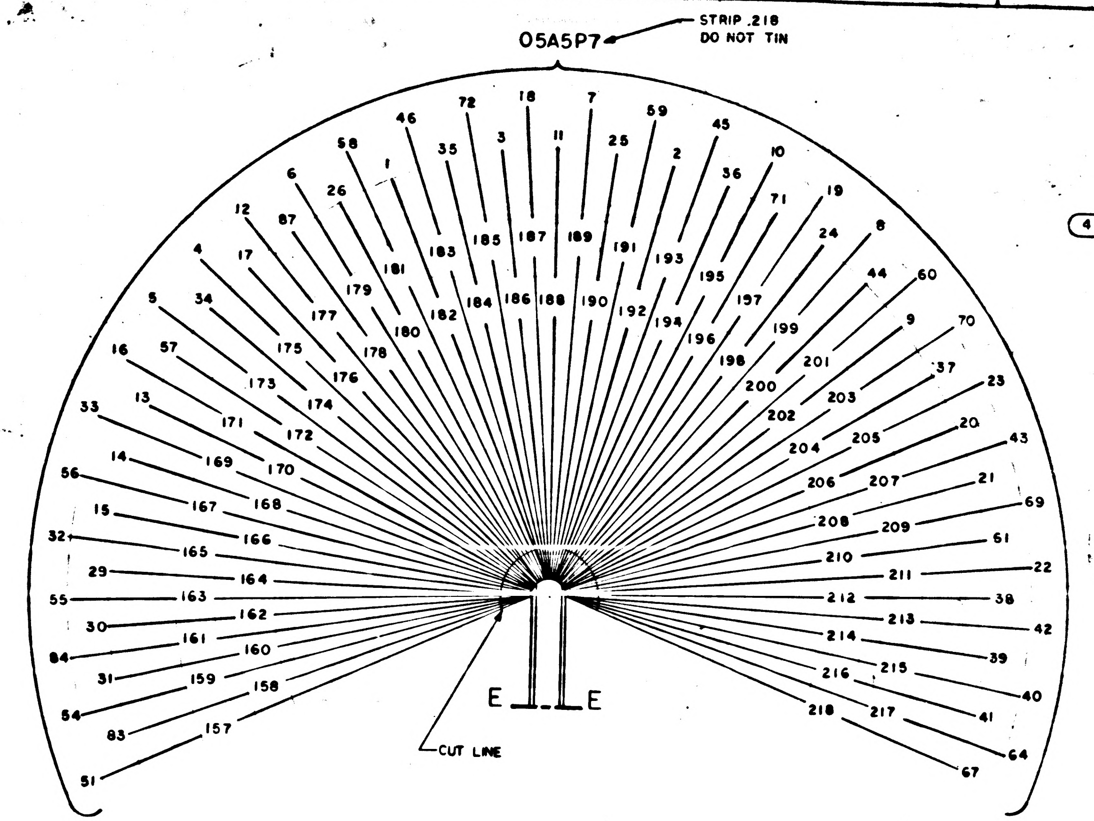

05A5P7
STRIP .218
DO NOT TIN
E
E
CUT LINE

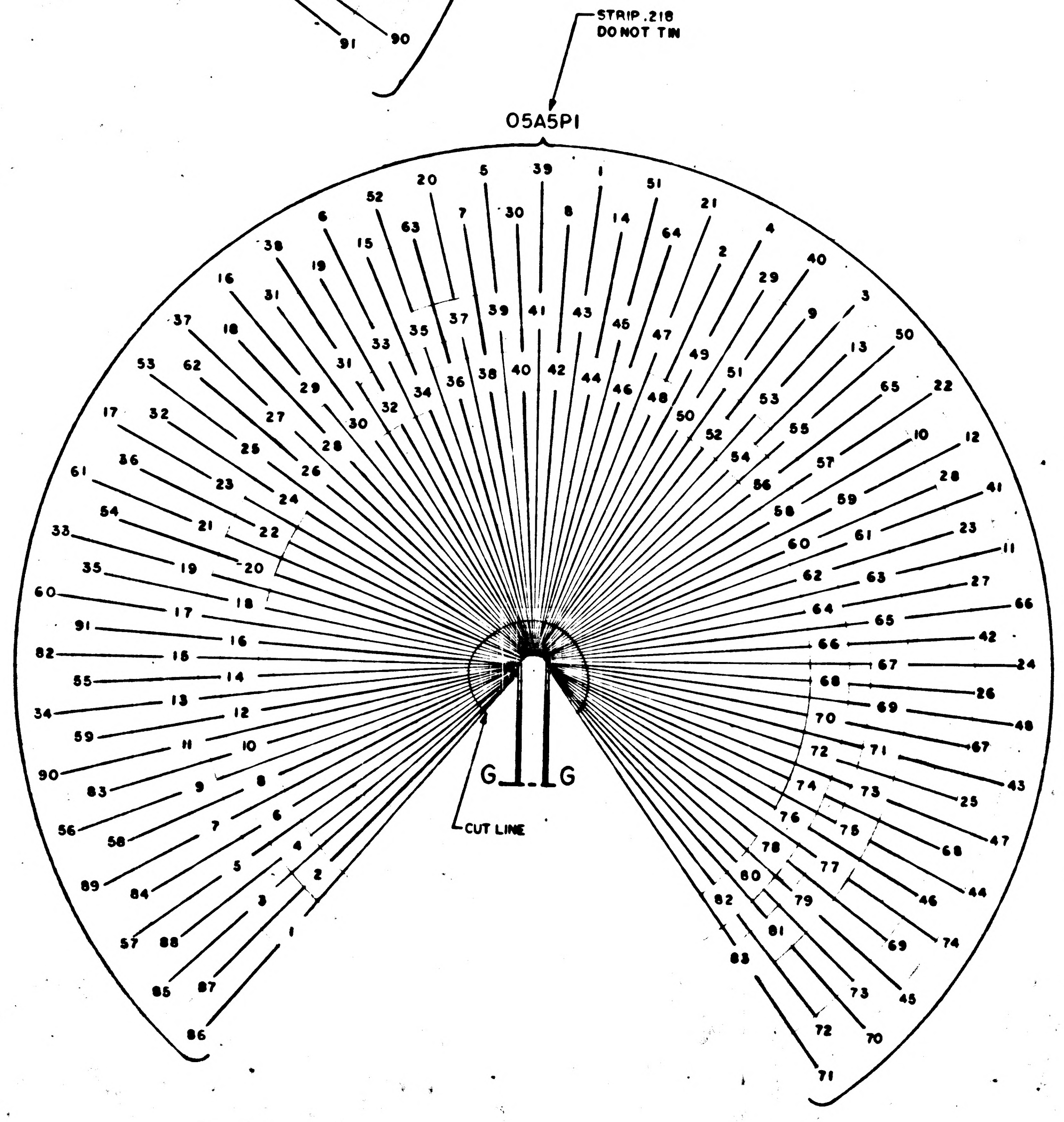

STRIP .218
DO NOT TIN
05A5P1
G
G
CUT LINE

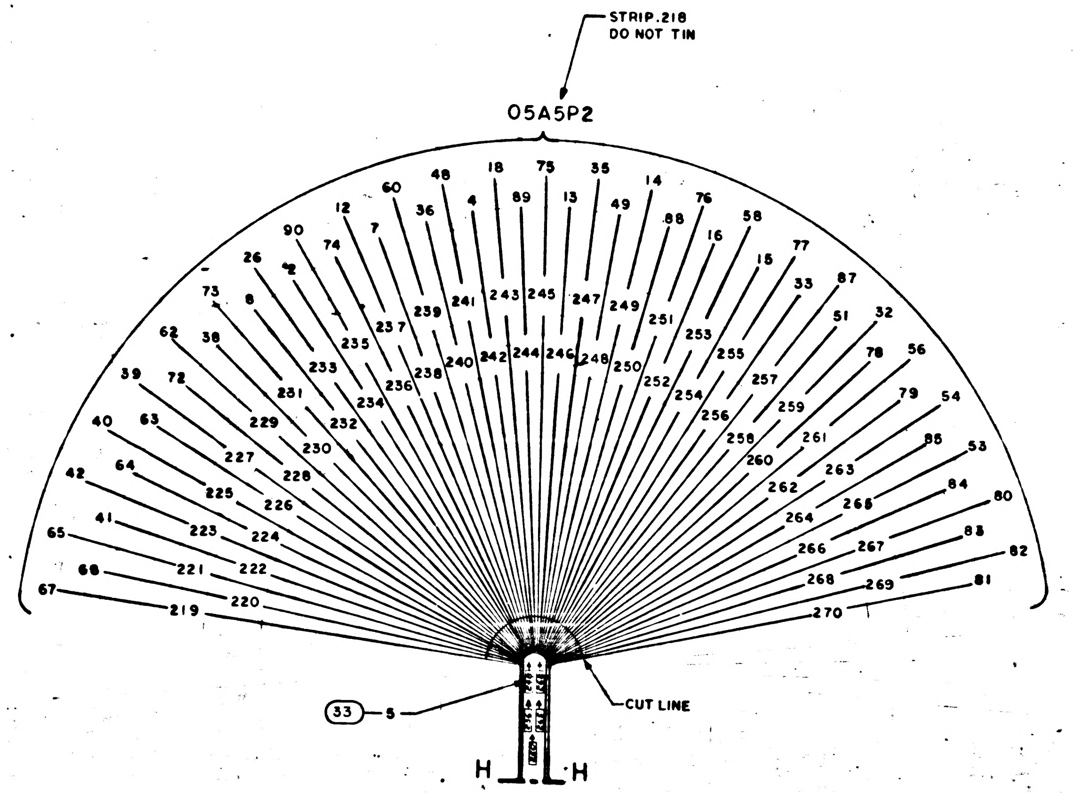

STRIP .218
DO NOT TIN
05A5P2
33
5
CUT LINE
H
H

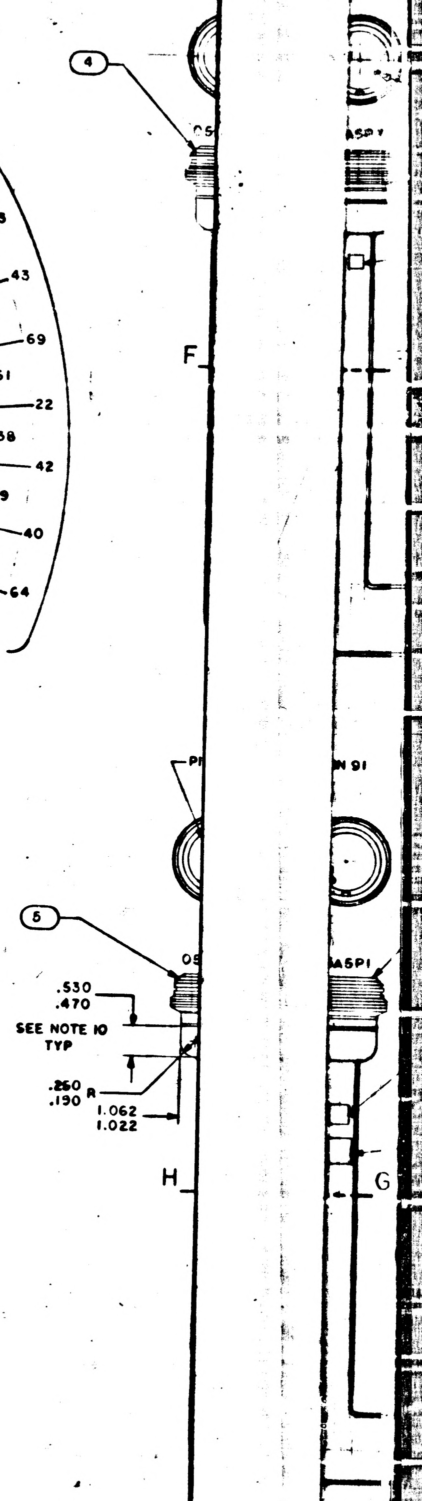

4
5
.530
.470
SEE NOTE 10
TYP
.250
.190
R
1.062
1.022
F
H
G

NOTES:

1. INTERPRET DRAWING IN ACCORDANCE WITH STANDARDS PRESCRIBED BY MIL-D-70327
2. FOR SYMBOL FABRICATION AND REQUIRED TESTS SEE ND 1002032
3. MIL-I-631 TYPE F, FORM U$_2$, GRADE A CLASS I, CATEGORY I FOR FIND NO. 22 AWG 5/8 FOR FIND NO.23 AWG 3/8 FOR FIND NO.24 AWG 2
4. QQ-B 575 FOR FIND NO.19 BRAID SIZE 1/2, AWG 30 FOR FIND NO.20 BRAID SIZE 1/4 AWG 36 FOR FIND NO.21 BRAID SIZE 5/32
5. ✱ DENOTES LENGTH IN FEET
6. FEED WIRES THROUGH BRAID AND SLEEVING. SLEEVING TO COVER FERRULES AT BOTH ENDS OF CABLES
7. INSTALL CRIMP STYLE TERMINALS IN ACCORDANCE WITH ND1002206
8. AR DENOTES AS REQUIRED
9. MARK .100/.060 HIGH PER ND1002019 USING BLACK MARKING INK 006271-10
10. ENCAPSULATE INDICATED AREA PER ND1002009 METHOD E, MOUNTING SURFACES OF CONNECTORS MUST NOT BE ENCAPSULATED
11. FOR INTERCONNECTING OF GROUND SHEATH CONNECTIONS SEE INTERNAL GROUND SHEATH CONNECTION CHART
12. TRIM AND DRESS ALL CONNECTOR LEADS AT ASSEMBLY
13. CENTER TWO (2) PIECES 1.5 LONG OF FIND NO.25 (MIL-I-23053, CLASS 1, COLOR BLACK, SIZE 7/16) UNDER FIND NO. 27
14. CENTER ONE (1) PIECE 1.5 LONG OF FIND NO.26 (MIL-I-23053, CLASS 1, COLOR BLACK SIZE NO. 4) UNDER FIND NO. 29
15. TEST PER FTM 1005707

1005727	A

REVISIONS 18830			
SYM	DESCRIPTION	DATE	APPROVAL
A	REPLACED WITH CHANGES BY REV B PER TDRR 17889 DR J.P. CHK		

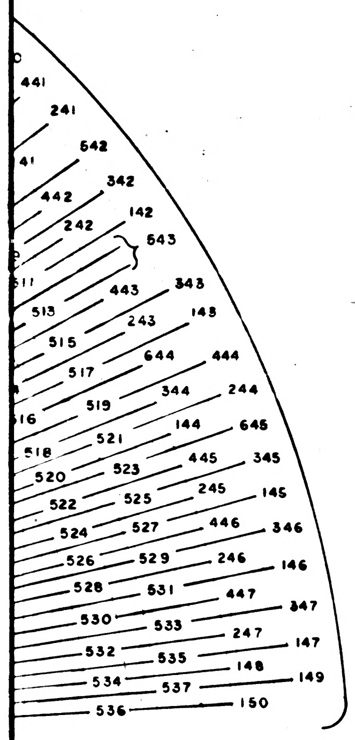

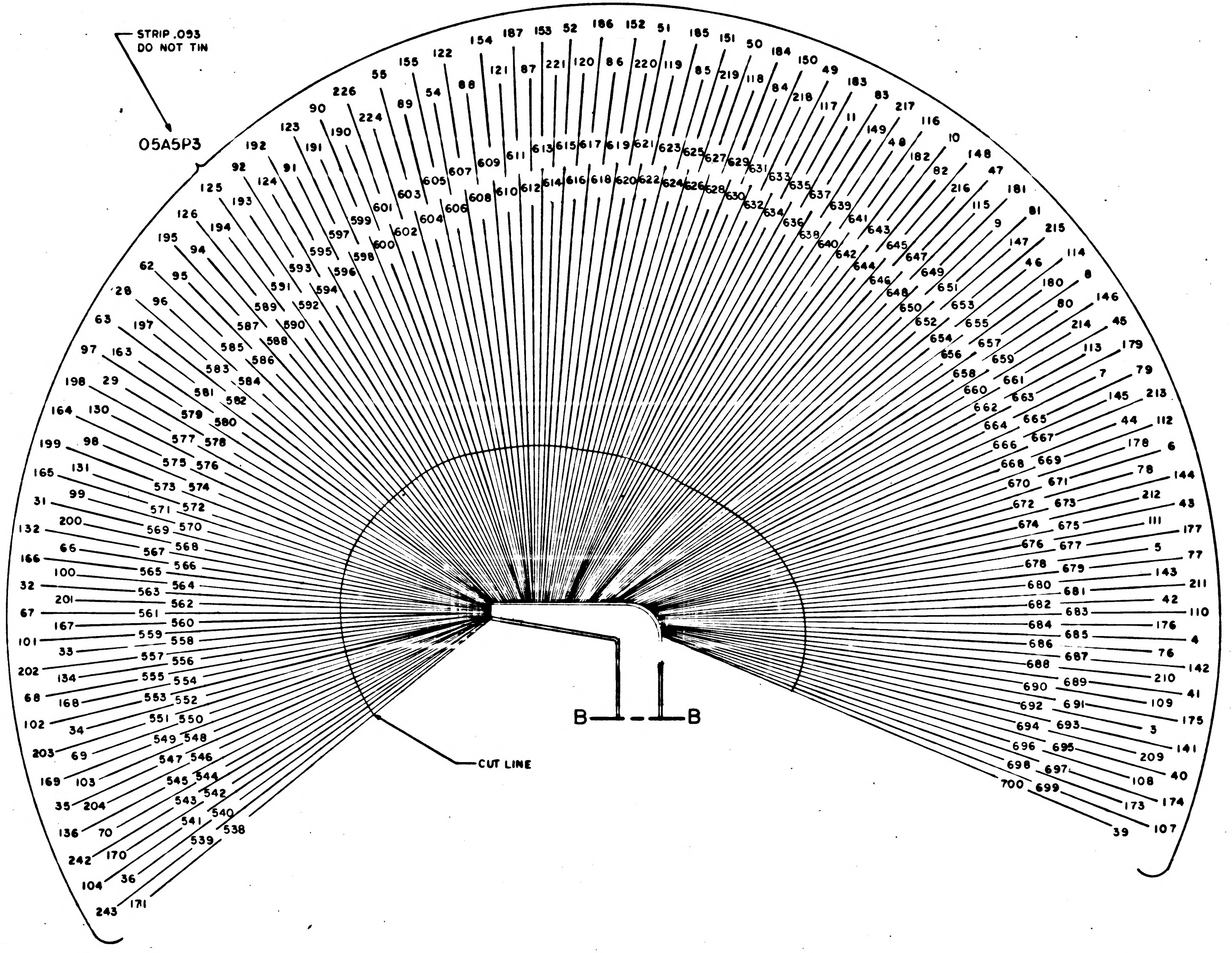

Ⓐ REPLACED WITH CHANGE BY REV B

QTY REQD	PART OR IDENTIFYING NO.	NOMENCLATURE OR DESCRIPTION	FIND NO

LIST OF MATERIALS

UNLESS OTHERWISE SPECIFIED DIMENSIONS ARE IN INCHES
TOLERANCES ON
FRACTIONS ± — DECIMALS XXX ±.010 ANGLES ± —
DO NOT SCALE THIS DRAWING
MATERIAL
HEAT TREATMENT
FINAL FINISH

NEXT ASSY | USED ON
APPLICATION

MIT INSTRUMENTATION LAB
CAMBRIDGE, MASS.
DRAWN Q. D. Leo DATE
CHECKED
APPROVAL
APPROVAL
NASA APPROVAL
MIT APPROVAL 15 Dec 64

MANNED SPACECRAFT CENTER
HOUSTON, TEXAS

WIRING HARNESS,
AGC TO PSA & G/N TO SPACECRAFT

CODE IDENT NO. —
SIZE J
NASA DRAWING NO. 1005727
SCALE 1/1
WT
SHEET 2 OF

MASTER

1005727	A

F-3/3

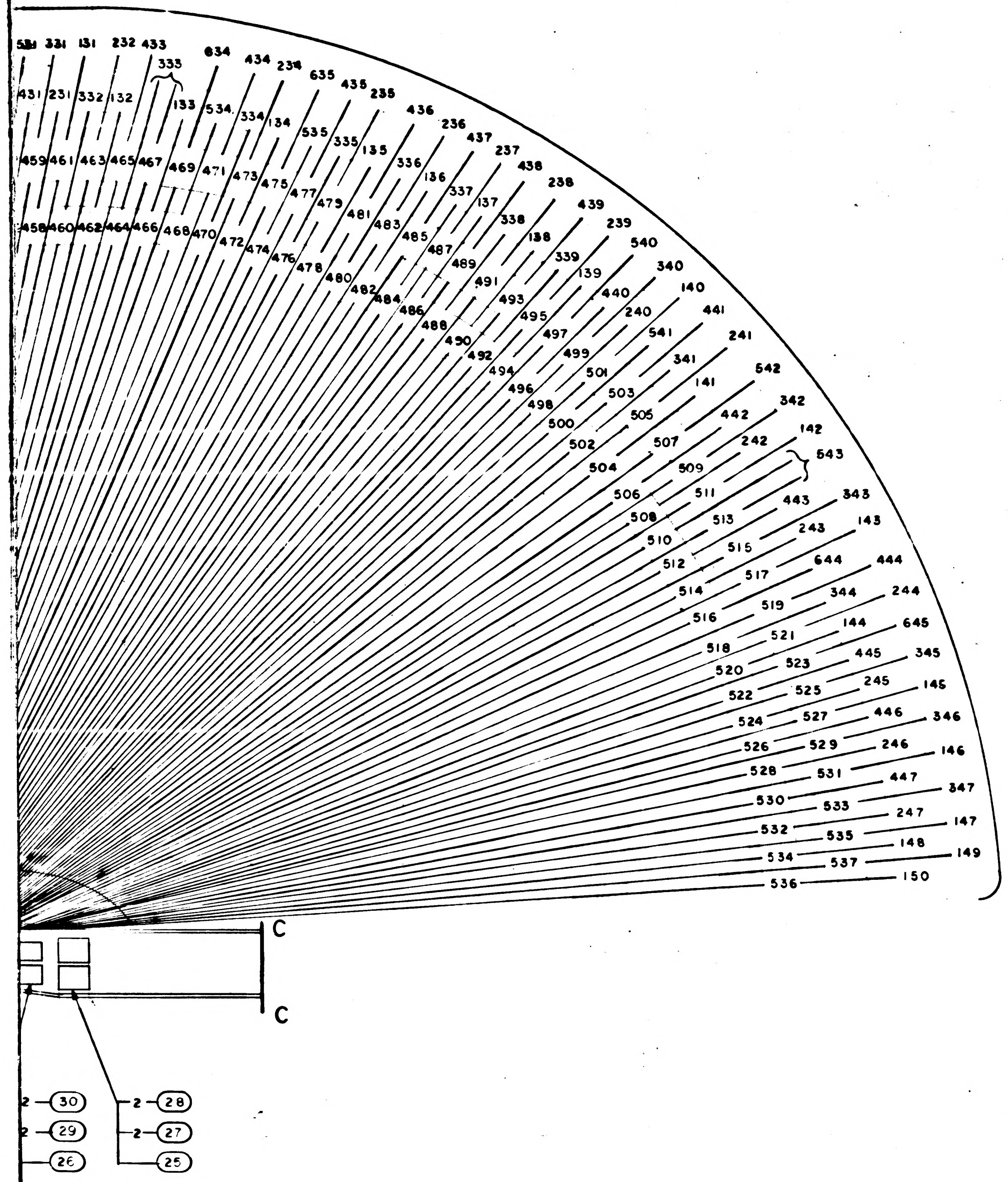
C
C
2 (30)
2 (29)
(26)
2 (28)
2 (27)
(25)

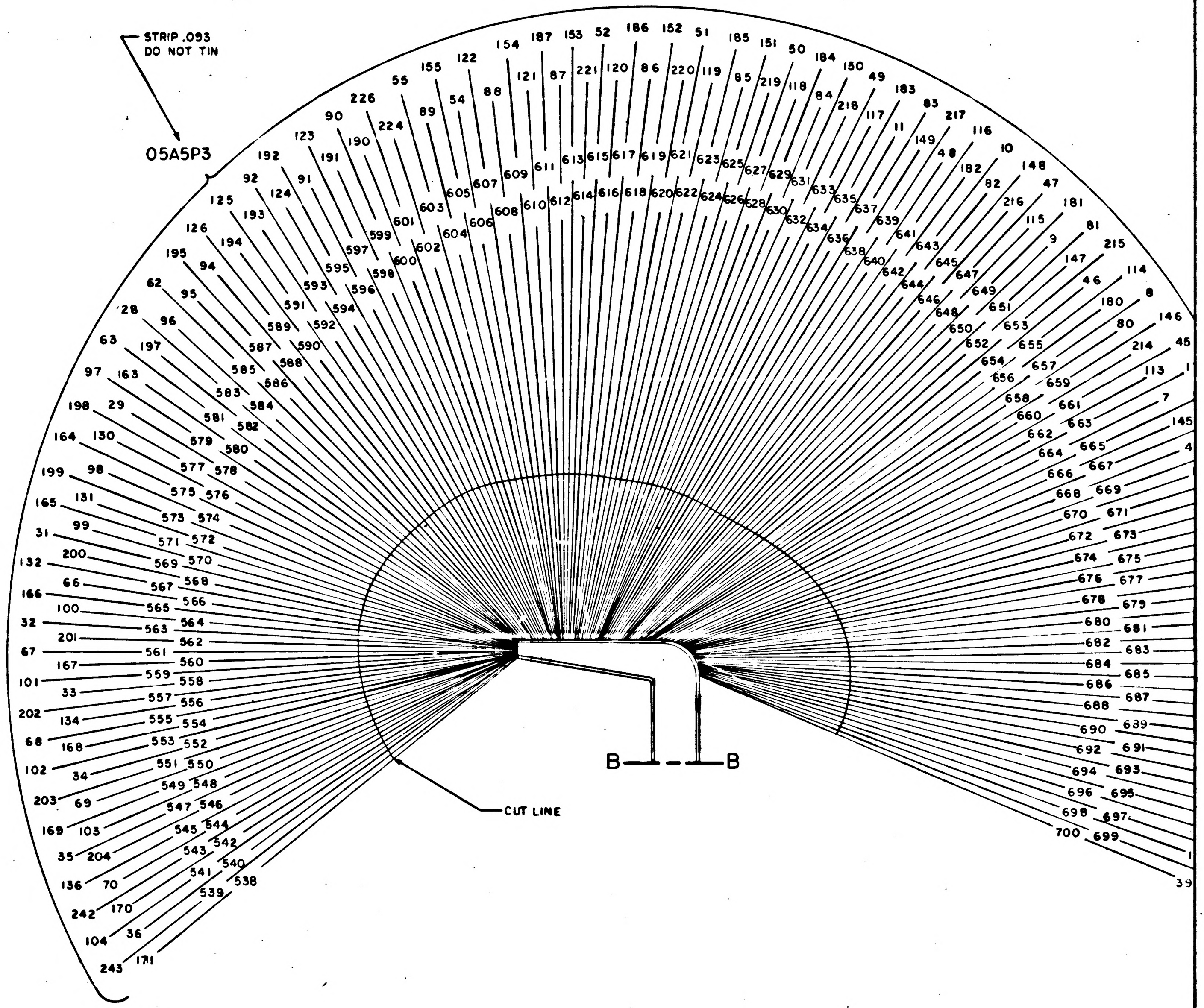
STRIP .093
DO NOT TIN
05A5P3
CUT LINE
B
B

NEXT ASSY	USED ON
APPLICATION	

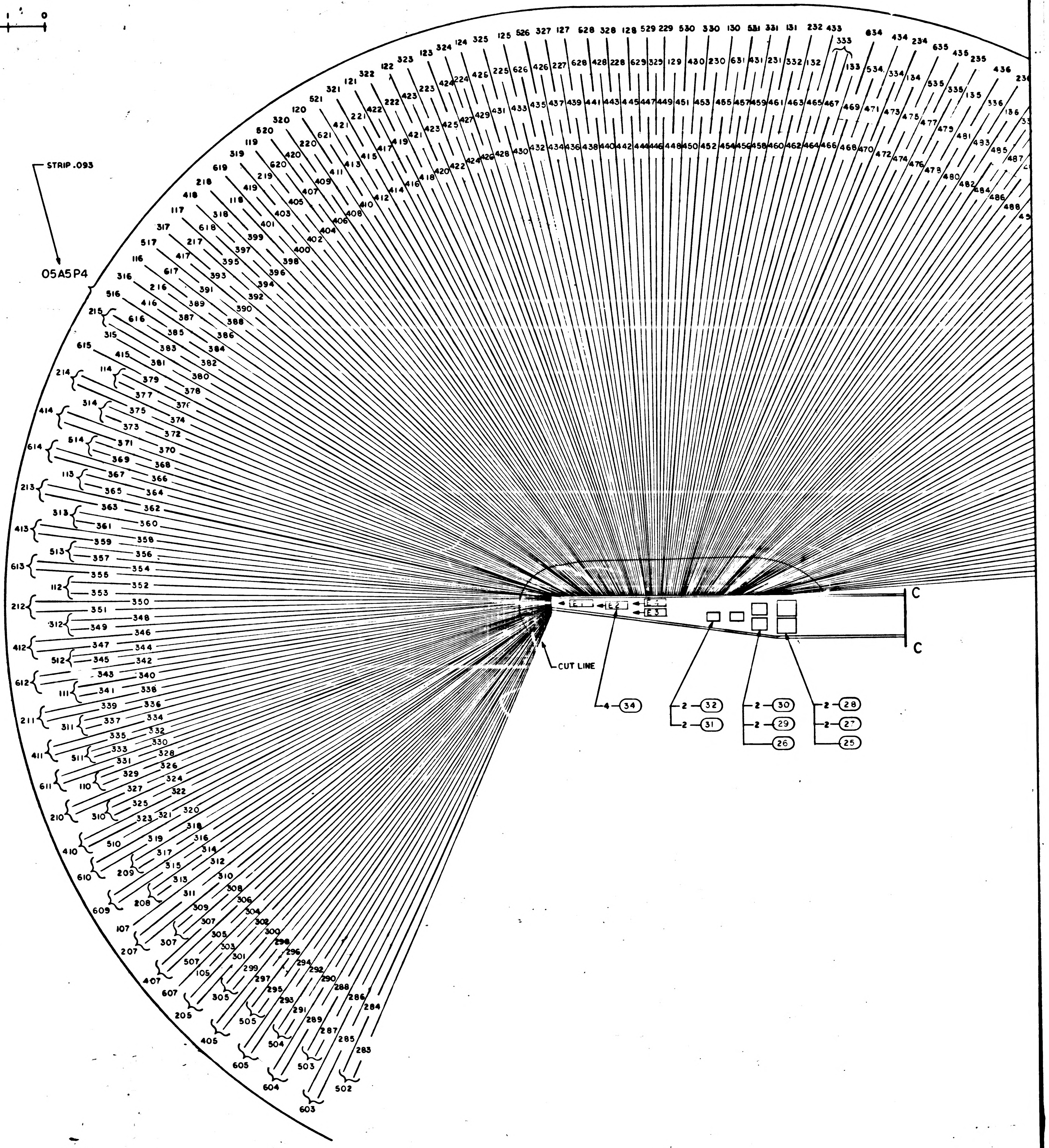
STRIP .093
05A5P4
CUT LINE
C
C
4 -(34)
2 -(32)
2 -(31)
2 -(30)
2 -(29)
(26)
2 -(28)
2 -(27)
(25)
E3

1005727 A

SHEET 2

SYM	DESCRIPTION	DATE	APPROVAL
A	REPLACED WITH CHANGES BY REV B PER TDRR 17889 DR J.P. Garand CHK R.E.K.	5/ /65	

1005727 A

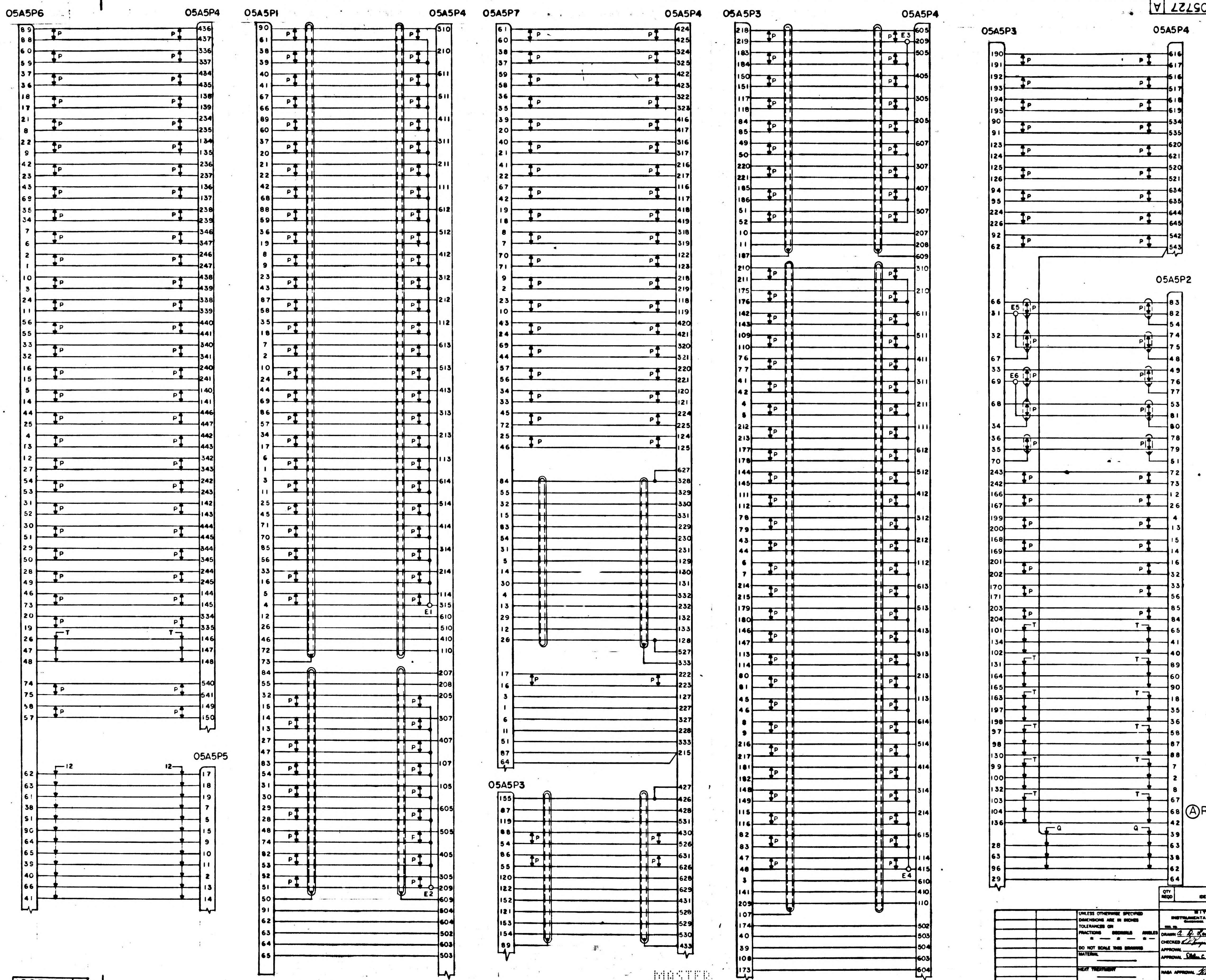

05A5P6
05A5P4
05A5P1
05A5P4
05A5P7
05A5P4
05A5P3
05A5P4
05A5P3
05A5P4
05A5P2
05A5P5
05A5P3
E1
E2
E3
E4
E5
E6
P
T
Q
12

Ⓐ REPLACED WITH CHANGE BY REV B

QTY REQD	PART OR IDENTIFYING NO.	NOMENCLATURE OR DESCRIPTION	FIND NO

LIST OF MATERIALS

NEXT ASSY	USED ON
APPLICATION	

UNLESS OTHERWISE SPECIFIED DIMENSIONS ARE IN INCHES
TOLERANCES ON
FRACTIONS ± — DECIMALS ± — ANGLES ± —
DO NOT SCALE THIS DRAWING
MATERIAL
HEAT TREATMENT
FINAL FINISH

MIT INSTRUMENTATION LAB
CAMBRIDGE, MASS
DRAWN A. D. Rao DATE 30 Nov 64
CHECKED
APPROVAL
APPROVAL
NASA APPROVAL
MIT APPROVAL

MANNED SPACECRAFT CENTER
HOUSTON, TEXAS

WIRING HARNESS,
AGC TO PSA & G/N TO SPACECRAFT

CODE IDENT NO. —
SIZE J
NASA DRAWING NO. 1005727
SCALE —
WT
SHEET 3 OF 3

1005727 A

MASTER

E3/23

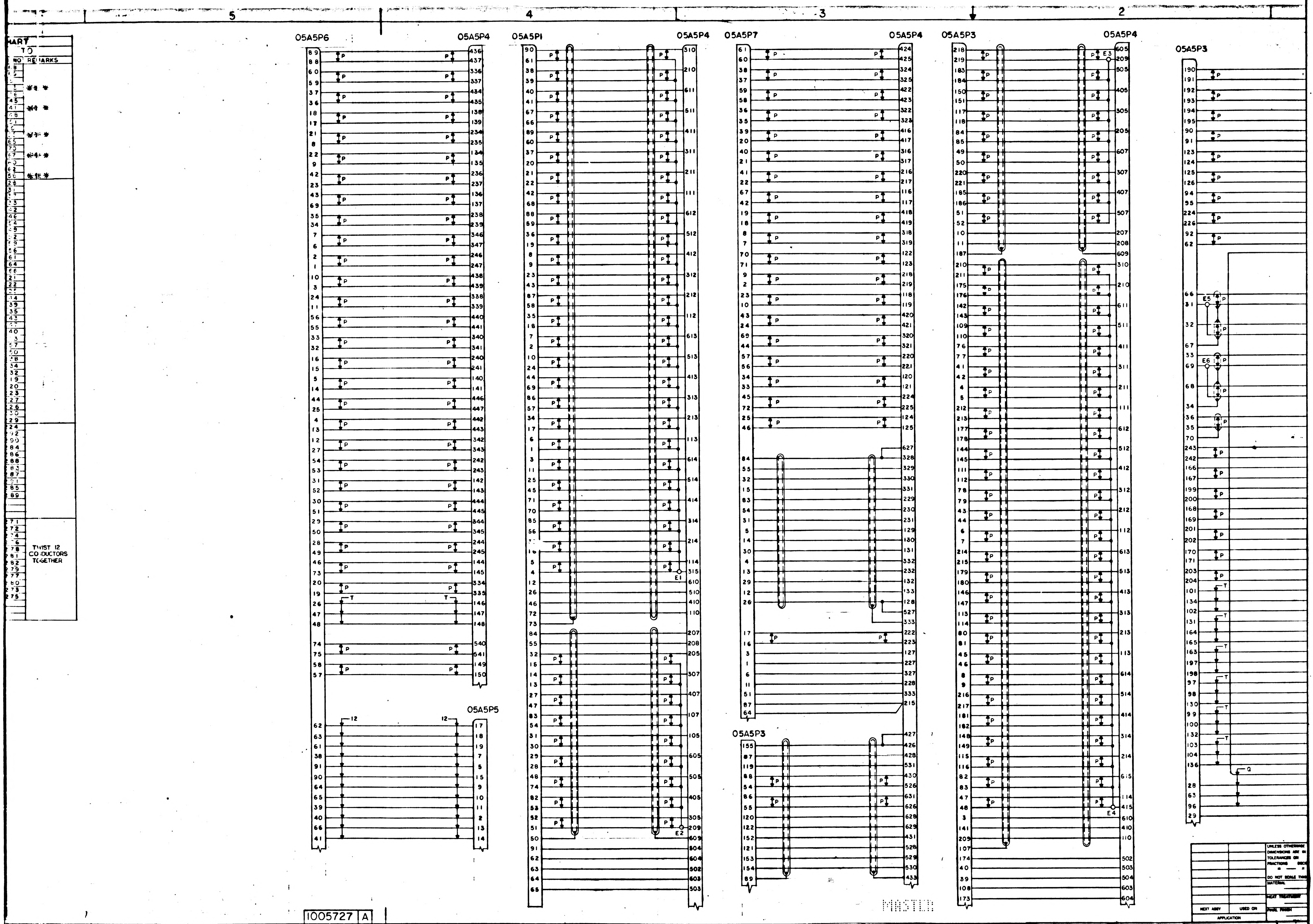

5
4
3
2
MARK
TO
NO
REMARKS
TWIST 12 CONDUCTORS TOGETHER
05A5P6
05A5P4
05A5P5
05A5P1
05A5P4
05A5P7
05A5P4
05A5P3
05A5P3
05A5P4
05A5P3
P
T
12
E1
E2
E3
E4
E5
E6
Q
UNLESS OTHERWISE
DIMENSIONS ARE IN
TOLERANCES ON
FRACTIONS
DO NOT SCALE THIS
MATERIAL
HEAT TREATMENT
FINAL FINISH
NEXT ASSY
USED ON
APPLICATION
MASTER

1005727 A

SHEET 3

2

1005727 A E2/3

ASSEMBLY INFORMATION CHART

FROM		DESCRIPTION			TO	
REMARKS	RUN NO.	COLOR	AWG	FIND NO.	RUN NO.	REMARKS
	11	YEL	26	9	324	
	21	RED			E1	
	31	YEL			326	
	41	RED			E1	
	51	YEL			330	
	61	RED			E1	
	70	YEL			332	
	65	RED			E1	
	7	YEL			334	
	17	RED			E1	
	27	YEL			336	
	37	RED			E1	
	47	YEL			338	
	57	RED			E1	
	66	YEL			340	
	74	RED			E1	
	4	YEL			342	
	12	RED			E1	
ATTACH FIND NO. 19 LG 29 FIND NO. 22 LG 29 & FIND 27,28 SEE NOTE 6	22	YEL			344	
	32	RED			E1	
	42	YEL			346	
	52	RED			E1	
	62	YEL			348	
	71	RED			E1	
	2	YEL			350	
	8	RED			E1	
	18	YEL			352	
	28	RED			E1	
	38	YEL			354	
	48	RED			E1	
	58	YEL			356	
	67	RED			E1	
	75	YEL			358	
	78	RED			E1	
	1	YEL			360	
	5	RED			E1	
	13	YEL			362	
	23	RED			E1	
	33	YEL			364	
	43	RED			E1	
	53	YEL			366	
	63	RED			E1	
	72	YEL			368	
	79	RED			E1	
	83	YEL			370	
	81	RED			E1	
	3	YEL			372	
	9	RED			E1	
	19	YEL			374	
	29	RED			E1	
	39	YEL		9	376	
	49	RED			E1	
**	E1	YEL		10	381	
	59				320	
	68				321	
	76				322	
	82	YEL			328	
**	80	SHLD				
	24	YEL	26	9	302	
	34	RED			E2	
	44	YEL			308	
	54	RED			E2	
ATTACH FIND NO. 20 LG 30 1/2 FIND NO. 23 LG 30 1/2 & FIND 29,30 SEE NOTE 6	64	YEL			306	
	73	RED			E2	
	10	YEL			312	
	20	RED			E2	
	30	YEL			303	
	40	RED			E2	
	50	YEL			294	
	60	RED			E2	
	69	YEL			296	
	77	RED			E2	
	15	YEL			298	
	25	RED			E2	
	35	YEL		9	300	
	45	RED			E2	
**	E2	YEL		10	318	
	6	YEL		10	310	
	14	YEL		10	314	
**	55	SHLD			316	**
	632	YEL	26	9	293	
	626	RED			E3	
ATTACH FIND NO. 20 LG 9 3/4 FIND NO. 23 LG 9 3/4 & FIND 29,30 SEE NOTE 6	635	YEL			295	
	629	RED			E3	
	631	YEL			297	
	625	RED			E3	
	634	YEL			299	
	628	RED			E3	
	630	YEL			301	
	624	RED			E3	
	633	YEL			304	
	627	RED			E3	
	620	YEL			309	
	614	RED			E3	
	623	YEL			307	
	617	RED			E3	
	621	YEL		9	305	
	615	RED			E3	
	643	YEL		10	311	
	636	YEL		10	313	
**	E3	YEL		10	317	
**	611	SHLD			315	**

ASSEMBLY INFORMATION CHART

FROM		DESCRIPTION			TO	
REMARKS	RUN NO.	COLOR	AWG	FIND NO.	RUN NO.	REMARKS
	688	YEL	26	9	325	
	681	RED			E4	
	691	YEL			327	
	684	RED			E4	
	687	YEL			331	
	680	RED			E4	
	690	YEL			333	
	683	RED			E4	
	686	YEL			335	
	679	RED			E4	
	689	YEL			337	
	682	RED			E4	
	685	YEL			339	
	678	RED			E4	
	674	YEL			341	
	667	RED			E4	
	677	YEL			343	
	670	RED			E4	
	673	YEL			345	
	666	RED			E4	
	676	YEL			347	
ATTACH FIND NO. 19 LG 10 3/4 FIND NO. 22 LG 10 3/4 & FIND 27,28 SEE NOTE 6	669	RED			E4	
	672	YEL			349	
	665	RED			E4	
	675	YEL			351	
	668	RED			E4	
	671	YEL			353	
	664	RED			E4	
	660	YEL			355	
	653	RED			E4	
	663	YEL			357	
	656	RED			E4	
	659	YEL			359	
	652	RED			E4	
	662	YEL			361	
	655	RED			E4	
	658	YEL			363	
	651	RED			E4	
	661	YEL			365	
	654	RED			E4	
	657	YEL			367	
	650	RED			E4	
	646	YEL			369	
	639	RED			E4	
	649	YEL			371	
	642	RED			E4	
	645	YEL			373	
	638	RED			E4	
	648	YEL			375	
	641	RED			E4	
	644	YEL			379	
	637	RED			E4	
	647	YEL		9	377	
	640	RED			E4	
	692	YEL		10	319	
	693	YEL		10	323	
	694	YEL		10	329	
**	E4	YEL		10	378	
**	699	SHLD				
	210	YEL	26	9	424	
	201	RED			428	
	212	YEL			427	
	204	RED			431	
	191	YEL			416	
	181	RED			420	
	194	YEL			419	
	184	RED			423	
	214	YEL			384	
	206	RED			390	
	215	YEL			387	
	208	RED			393	
	216	YEL			386	
	211	RED			392	
	218	YEL			389	
	213	RED			395	
	197	YEL			397	
	187	RED			400	
	199	YEL			396	
	189	RED			403	
	203	YEL			421	
	196	RED			425	
	202	YEL			399	
	192	RED			402	
	205	YEL			398	
	195	RED			405	
	207	YEL			406	
	198	RED			412	
	209	YEL			409	
	200	RED			415	
	172	YEL			408	
	167	RED			414	
	174	YEL			411	
	169	RED			417	
	193	YEL			426	
	185	RED			430	
	190	YEL			429	
	183	RED			433	
	176	YEL			418	
	171	RED			422	
	600	YEL			382	
	598	RED			388	
	595	YEL			385	
	592	RED			391	
	590	YEL			394	
	587	RED			401	
	599	YEL			468	
	596	RED			474	
	597	YEL			404	
	594	RED			410	
	591	YEL			407	
	589	RED			413	
	588	YEL			469	
	586	RED			475	
	602	YEL			516	
	601	RED			523	
	593	YEL			507	
	585	RED			510	

ASSEMBLY INFORMATION CHART

FROM		DESCRIPTION			TO	
REMARKS	RUN NO.	COLOR	AWG	FIND NO.	RUN NO.	REMARKS
	154	YEL	26	9	481	
	153	RED			485	
	150	YEL			480	
	149	RED			484	
	144	YEL			471	
	143	RED			477	
	135	YEL			490	
	134	RED			494	
	129	YEL			473	
	128	RED			479	
	120	YEL			472	
	119	RED			478	
	112	YEL			483	
	111	RED			487	
	104	YEL			482	
	97	RED			486	
	142	YEL			491	
	141	RED			495	
	127	YEL			529	
	126	RED			533	
	118	YEL			528	
	117	RED			532	
	110	YEL			489	
	109	RED			493	
	103	YEL			488	
	102	RED			492	
	140	YEL			496	
	132	RED			503	
	133	YEL			499	
	124	RED			502	
	125	YEL			498	
	115	RED			505	
	116	YEL			501	
	107	RED			504	
	96	YEL			526	
	95	RED			530	
	108	YEL			506	
	100	RED			512	
	101	YEL			509	
	93	RED			515	
	123	YEL			508	
	113	RED			514	
	114	YEL			511	
	105	RED			517	
	106	YEL			519	
	98	RED			522	
	99	YEL			518	
	91	RED			525	
	92	YEL			521	
	87	RED			524	
	90	YEL			520	
	86	RED			527	
	137	YEL			470	
	136	RED			476	
	85	YEL			497	
	84	RED			500	
	148	YEL	26	9	537	
	147	RED			536	
	94	YEL	22	15	531	
	89	RED			535	
	88	GRN			534	
	161	YEL	26	10	443	
	163				446	
	165				453	ATTACH FIND NO. 21 LG 32 FIND NO. 24 LG 32 & FIND 31,32 SEE NOTE 6
	166				459	
	158				449	
	159				452	
	160				458	
	173				448	
	168				455	
	162				461	
	175				460	
	170				463	
	164				462	
	177				466	
	180	YEL			445	
		SHLD			464	**
	608	YEL	26	9	450	
ATTACH FIND NO. 21 LG 10 3/4 FIND NO. 24 LG 10 3/4 & FIND 31,32 SEE NOTE 6	606	RED			435	
	618	YEL	26	9	454	
	603	RED			432	
	605	YEL	26	10	434	
	612				440	
	622				457	
	616				438	
	607				444	
	619				456	
	610				441	
	613				447	
	609	YEL			451	
**	604	SHLD			465	**
	186	YEL	26	10	439	
	182				436	
	179				437	
	188				442	
	157				467	
	178				380	
	217				383	

ASSEMBLY INFORMATION CHART

FROM		DESCRIPTION			TO	
REMARKS	RUN NO.	COLOR	AWG	FIND NO.	RUN NO.	REMARKS
SEE NOTE 11	566	YEL	24	11	268	
	E5	RED			269	
***	569				E5	
		SHLD			263	***
	563	YEL			236	
	E5	RED			245	
***	561	SHLD			241	***
SEE NOTE 11	558	YEL			248	
	E6	RED			251	
***	550				E6	
		SHLD			255	***
	555	YEL			265	
	E6	RED			270	
***	552	SHLD			267	***
	540	YEL			260	
	547	RED			262	
***	544	SHLD			258	***
	539	YEL		12	228	
	543	RED			231	
	565	YEL			237	
	560	RED			233	
	573	YEL			242	
	568	RED			246	
	554	YEL			254	
	549	RED			249	
	562	YEL			252	
	557	RED			259	
	542	YEL			256	
	538	RED			261	
	551	YEL	22	14	264	
	546	RED			266	
	559	YEL	22	15	221	
	556	RED			222	
	553	GRN			225	
	572	YEL			244	
	575	RED			239	
	571	GRN			235	
	580	YEL			243	
	582	RED			247	
	577	GRN			240	
	579	YEL			253	
	574	RED			257	
	576	GRN			250	
	570	YEL			238	
	564	RED			234	
	567	GRN			232	
	548	YEL			219	
	541	RED			220	
	545	GRN			223	
	513	YEL	22	16	227	
	583	RED			226	
	581	GRN			230	
	584	BRN			229	
	578	YEL	22	17	224	
	16				292	
	26				290	
	36				284	
	46				286	
	56				288	
	697				283	
	695				287	
	700				291	
	696				285	
	698				289	
	152	YEL	22	17	271	
	146				272	
	151				274	
	145				276	TWIST 12 CONDUCTORS TOGETHER
	139				278	
	131				281	
	138				282	
	130	YEL		17	279	
	121	BLK		18	277	
	122				280	
	155				273	
	156				275	

1005727 B

REVISIONS						
SYM	ZONE	DESCRIPTION	DR	CHK	DATE	APPROVED
B		REPLACES REVA WITH CHANGE PER TDRR 12889				

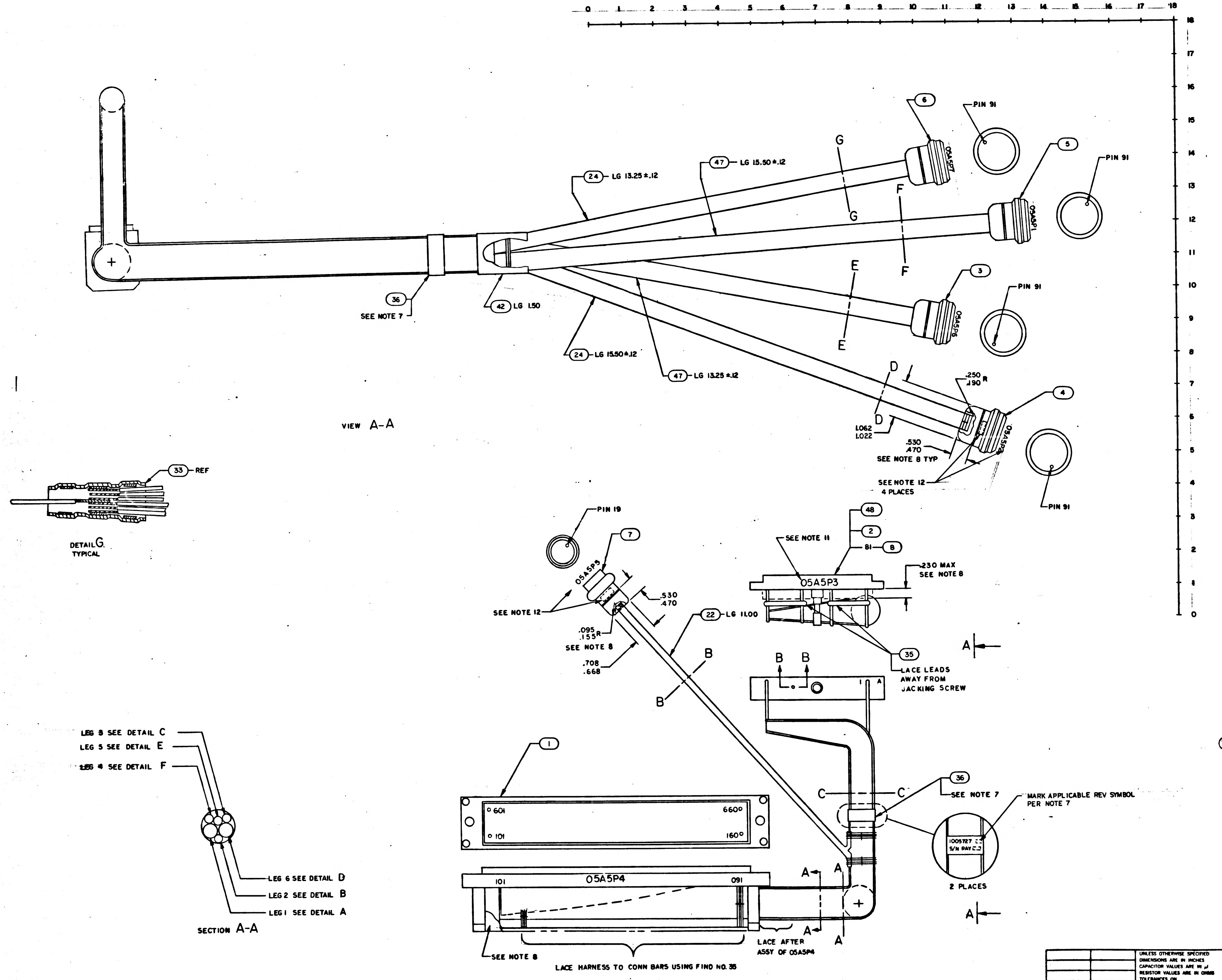

0
1
2
3
4
5
6
7
8
9
10
11
12
13
14
15
16
17
18
6
PIN 91
05A5P7
5
PIN 91
05A5P1
3
PIN 91
05A5P6
4
PIN 91
05A5P2
G
G
F
F
E
E
D
D
47 LG 15.50±.12
24 LG 13.25±.12
24 LG 15.50±.12
47 LG 13.25±.12
42 LG 1.50
36 SEE NOTE 7
.250 .190 R
1.062 1.022
.530 .470 SEE NOTE 8 TYP
SEE NOTE 12 4 PLACES
VIEW A-A
33 REF
DETAIL G TYPICAL
PIN 19
7
05A5P5
SEE NOTE 12
.530 .470
.095 .155 R
SEE NOTE 8
.708 .668
22 LG 11.00
B
B
48
2
81 8
SEE NOTE 11
05A5P3
.230 MAX SEE NOTE 8
35
LACE LEADS AWAY FROM JACKING SCREW
A
B B
1 A
LEG 3 SEE DETAIL C
LEG 5 SEE DETAIL E
LEG 4 SEE DETAIL F
LEG 6 SEE DETAIL D
LEG 2 SEE DETAIL B
LEG 1 SEE DETAIL A
SECTION A-A
1
601
660
101
160
05A5P4
101
091
C C
36 SEE NOTE 7
MARK APPLICABLE REV SYMBOL PER NOTE 7
1005727 S/N RAY
2 PLACES
A A
A A
A
SEE NOTE 8
LACE AFTER ASSY OF 05A5P4
LACE HARNESS TO CONN BARS USING FIND NO. 35

Ⓑ REPLACES REVA WITH CHANGE

1005727 B

MASTER

QTY REQD	PART OR IDENTIFYING NO.	MATERIAL OR NOTES	NOMENCLATURE OR DESCRIPTION	FIND NO.

LIST OF MATERIALS

1C05000	
NEXT ASSY	USED ON
APPLICATION	

UNLESS OTHERWISE SPECIFIED
DIMENSIONS ARE IN INCHES
CAPACITOR VALUES ARE IN μf
RESISTOR VALUES ARE IN OHMS
TOLERANCES ON
FRACTIONS ± DECIMALS ±.010 ANGLES ±
DO NOT SCALE THIS DRAWING
MATERIAL

MIT
INSTRUMENTATION LAB
CAMBRIDGE, MASS

DRAWN B Katsuba
CHECKED A. Cuggiano
APPROVED
APPROVED
APPROVED MIT W Kupfer
APPROVED MSC
DATE

MANNED SPACECRAFT CENTER
HOUSTON, TEXAS

WIRING HARNESS
AGC TO PSA & G/N TO SPACECRAFT

CODE IDENT NO.
SIZE J
DRAWING NO. 1005727
SCALE
SHEET OF 4

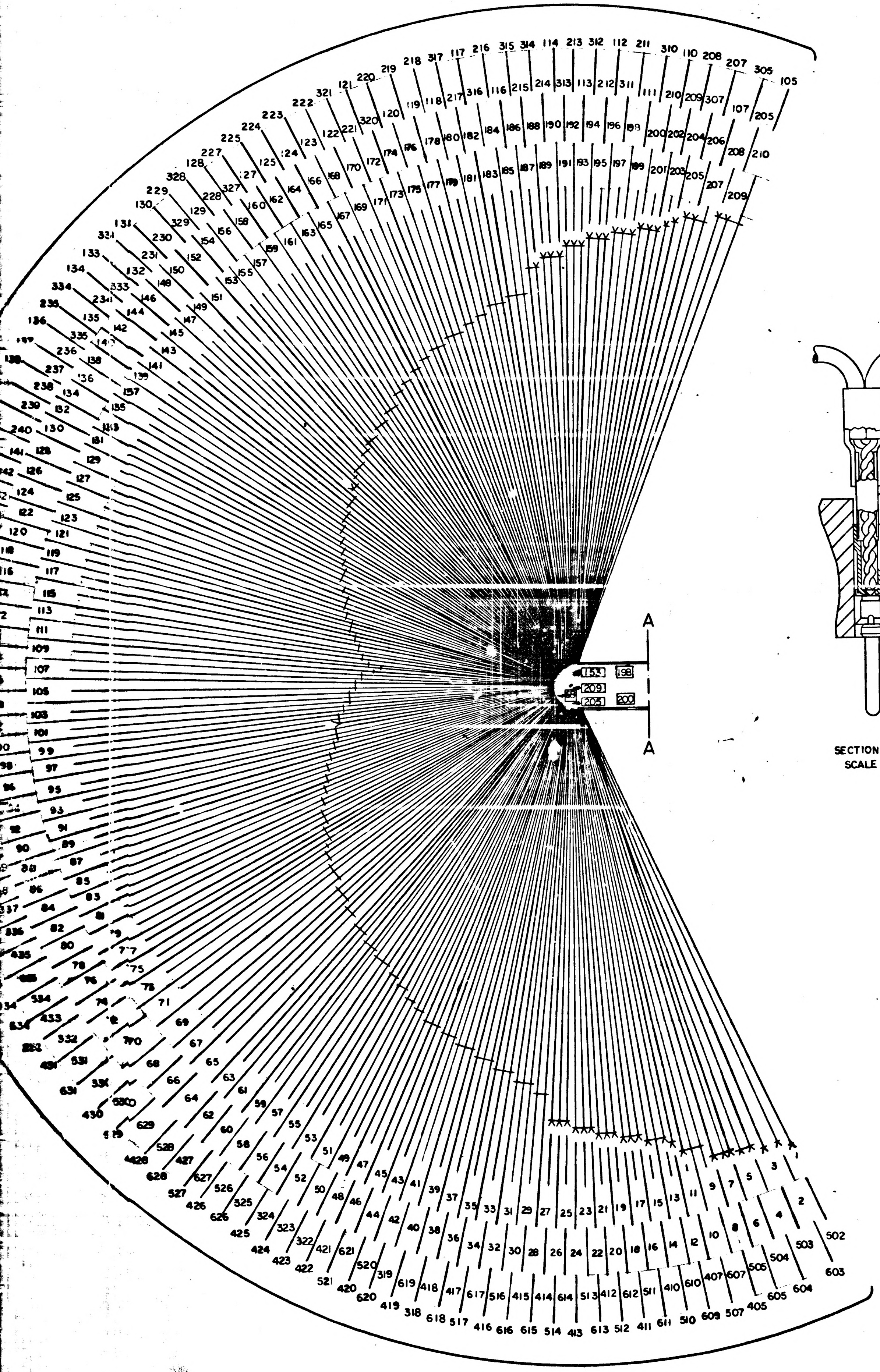
A
A
153
198
209
205
200

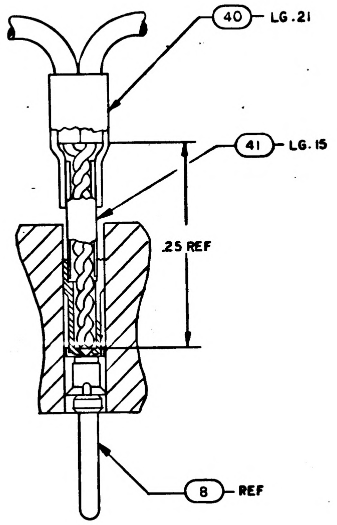
40 LG .21
41 LG .15
.25 REF
8 REF

SECTION B-B
SCALE 10/1

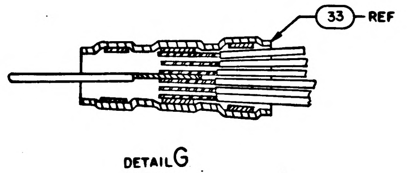

DETAIL G
TYPICAL

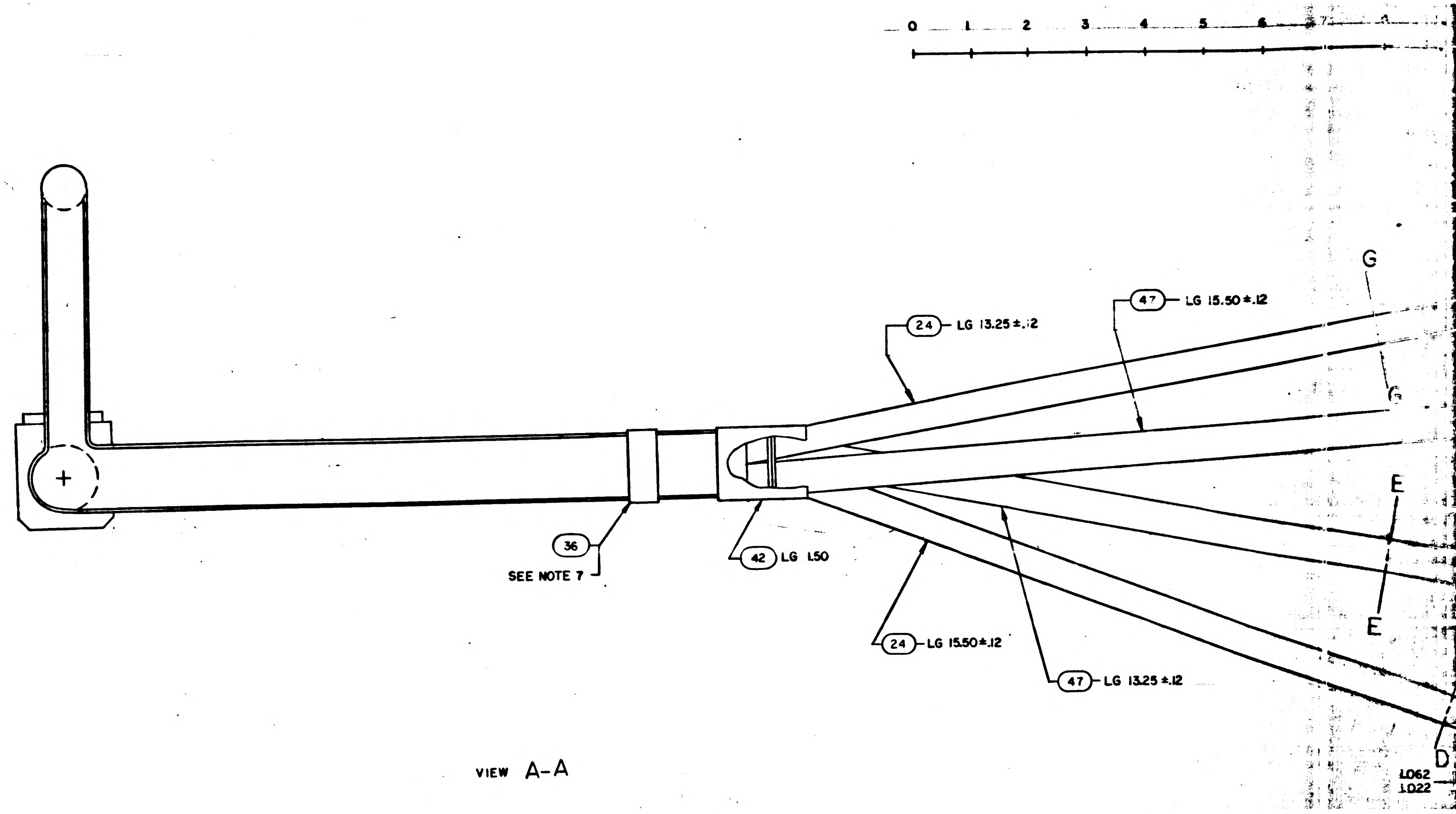
0 1 2 3 4 5 6
G
24 LG 13.25 ±.12
47 LG 15.50 ±.12
E
E
36
SEE NOTE 7
42 LG 1.50
24 LG 15.50 ±.12
47 LG 13.25 ±.12
D
1.062
1.022

VIEW A-A

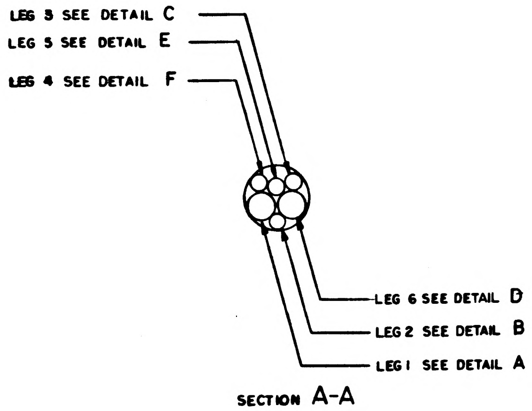
LEG 3 SEE DETAIL C
LEG 5 SEE DETAIL E
LEG 4 SEE DETAIL F
LEG 6 SEE DETAIL D
LEG 2 SEE DETAIL B
LEG 1 SEE DETAIL A

SECTION A-A

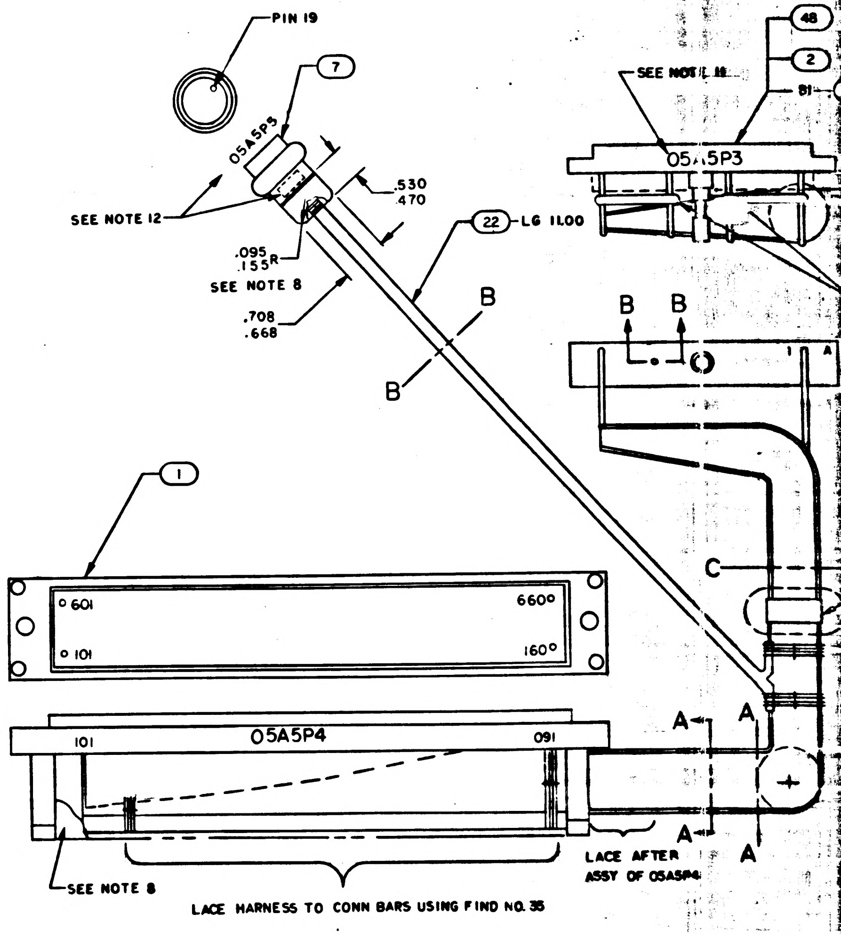
PIN 19
7
05A5P5
SEE NOTE 12
.530
.470
.095
.155R
SEE NOTE 8
.708
.668
22 LG 11.00
B
B
B B
48
2
SEE NOTE 11
05A5P3
C
1
601
660
101
160
101
05A5P4
091
A
A
A
A
SEE NOTE 8
LACE HARNESS TO CONN BARS USING FIND NO. 35
LACE AFTER ASSY OF 05A5P4

NOTICE - WHEN GOVERNMENT DRAWINGS, SPECIFICATIONS, OR OTHER DATA ARE USED FOR ANY PURPOSE OTHER THAN IN CONNECTION WITH A DEFINITELY RELATED GOVERNMENT PROCUREMENT OPERATION, THE UNITED STATES GOVERNMENT THEREBY INCURS NO RESPONSIBILITY NOR ANY OBLIGATION WHATSOEVER, AND THE FACT THAT THE GOVERNMENT MAY HAVE FORMULATED, FURNISHED, OR IN ANY WAY SUPPLIED THE SAID DRAWINGS, SPECIFICATIONS OR OTHER DATA IS NOT TO BE REGARDED BY IMPLICATION OR OTHERWISE AS IN ANY MANNER LICENSING THE HOLDER OR ANY OTHER PERSON OR CORPORATION, OR CONVEYING ANY RIGHTS OR PERMISSION TO MANUFACTURE, USE, OR SELL ANY PATENTED INVENTION THAT MAY IN ANY WAY BE RELATED THERETO.

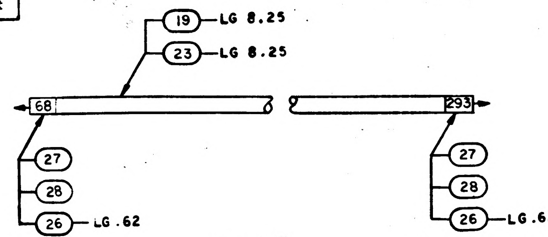
19 — LG 8.25
23 — LG 8.25
68
293
27
28
26 — LG .62
27
28
26 — LG .62

DETAIL F
LEG 4
SCALE NONE

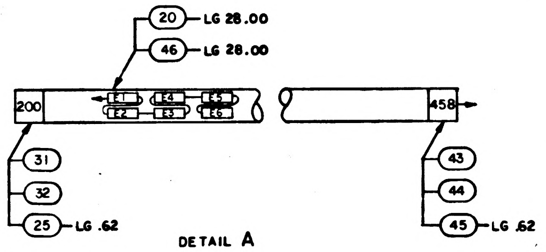
20 — LG 28.00
46 — LG 28.00
200
E1 E4 E5
E2 E3 E6
458
31
32
25 — LG .62
43
44
45 — LG .62

DETAIL A
LEG 1
SCALE NONE

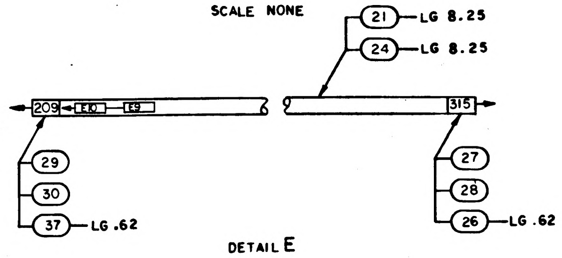
21 — LG 8.25
24 — LG 8.25
209
E10 E9
315
29
30
37 — LG .62
27
28
26 — LG .62

DETAIL E
LEG 5
SCALE NONE

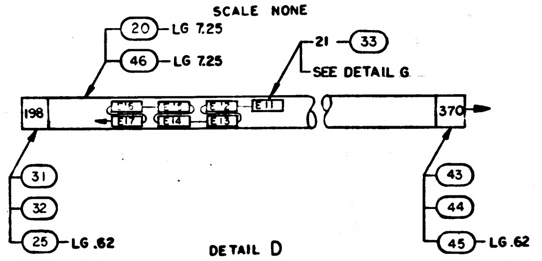
20 — LG 7.25
46 — LG 7.25
21 — 33
SEE DETAIL G
198
E17 E14 E15 E11
370
31
32
25 — LG .62
43
44
45 — LG .62

DETAIL D
LEG 6
SCALE NONE

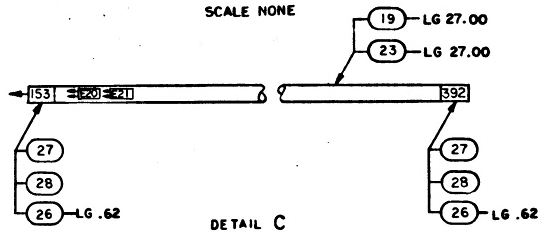
19 — LG 27.00
23 — LG 27.00
153
E20 E21
392
27
28
26 — LG .62
27
28
26 — LG .62

DETAIL C
LEG 3
SCALE NONE

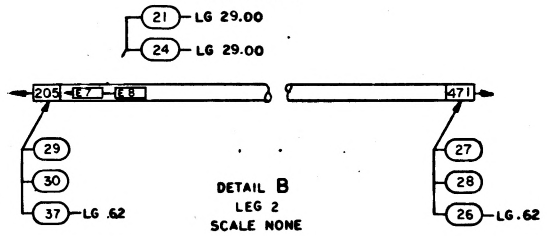
21 — LG 29.00
24 — LG 29.00
205
E7 E8
471
29
30
37 — LG .62
27
28
26 — LG .62

DETAIL B
LEG 2
SCALE NONE

NOTES

1. INTERPRET DRAWING IN ACCORDANCE WITH STANDARDS PRESCRIBED BY MIL-D-70327
2. FOR FABRICATION SEE ND 1002032
3. MIL-I-631 TYPE F, FORM U_2, GRADE A, CLASS 1, CATAGORY 1, FOR FIND NO.47 AWG 5/8 FOR FIND NO. 46 AWG 7/8, FOR FIND NO.24 AWG 1/2, FOR FIND NO. 23 AWG 7/16 FOR FIND NO.22 AWG 2.
4. QQ-B-575 FOR FIND NO.20 BRAID SIZE 1/2, AWG 34, FOR FIND NO.19 BRAID SIZE 1/4 AWG 36, FOR FIND NO.21 BRAID SIZE 3/8, AWG 34
5. ✱✱✱ DENOTES LENGTH IN FEET
6. INSTALL CRIMP STYLE TERMINALS IN ACCORDANCE WITH ND 1002206
7. MARK .100/.060 HIGH PER ND 1002019 AND ND 1002122 TYPE II CLASS 1, USING BLACK MARKING INK 1006271-11 AND SERIALIZE PER ND 1002023
8. ENCAPSULATE INDICATED AREA PER ND 1002009 METHOD E WITH PRIMER, MOUNTING SURFACES OF CONNECTORS MUST NOT BE ENCAPSULATED
9. TEST PER FTM 1005707
10. SOLDER PER ND 1002071, EXCEPT AS SHOWN
11. MARK .200/.180 HIGH PER ND 1002019 AND ND 1002122 TYPE II CLASS 1, USING BLACK MARKING INK 1006271-11. CENTRALIZE AS SHOWN.
12. MARK .070/.050 HIGH PER ND 1002019 AND ND 1002122 TYPE II CLASS 2, USING BLACK MARKING INK 1006271-11. CENTRALIZE AS SHOWN
13. ● SEE INTERNAL CONNECTION CHART
14. ●● ATTATCH FIND NO.18
15. ✱ DENOTES TWO CONNECTIONS TO ONE PIN
16. ✱✱ DENOTES TWO CONNECTIONS TO ONE PIN SEE SECTION B-B
17. PARTIAL REFERENCE DESIGNATIONS ARE SHOWN: FOR COMPLETE DESIGNATIONS PREFIX P NOS. IN RUN CHART WITH 05A5
18. NUMBERS PRECEDING BALLOONS DENOTE QUANTITIES

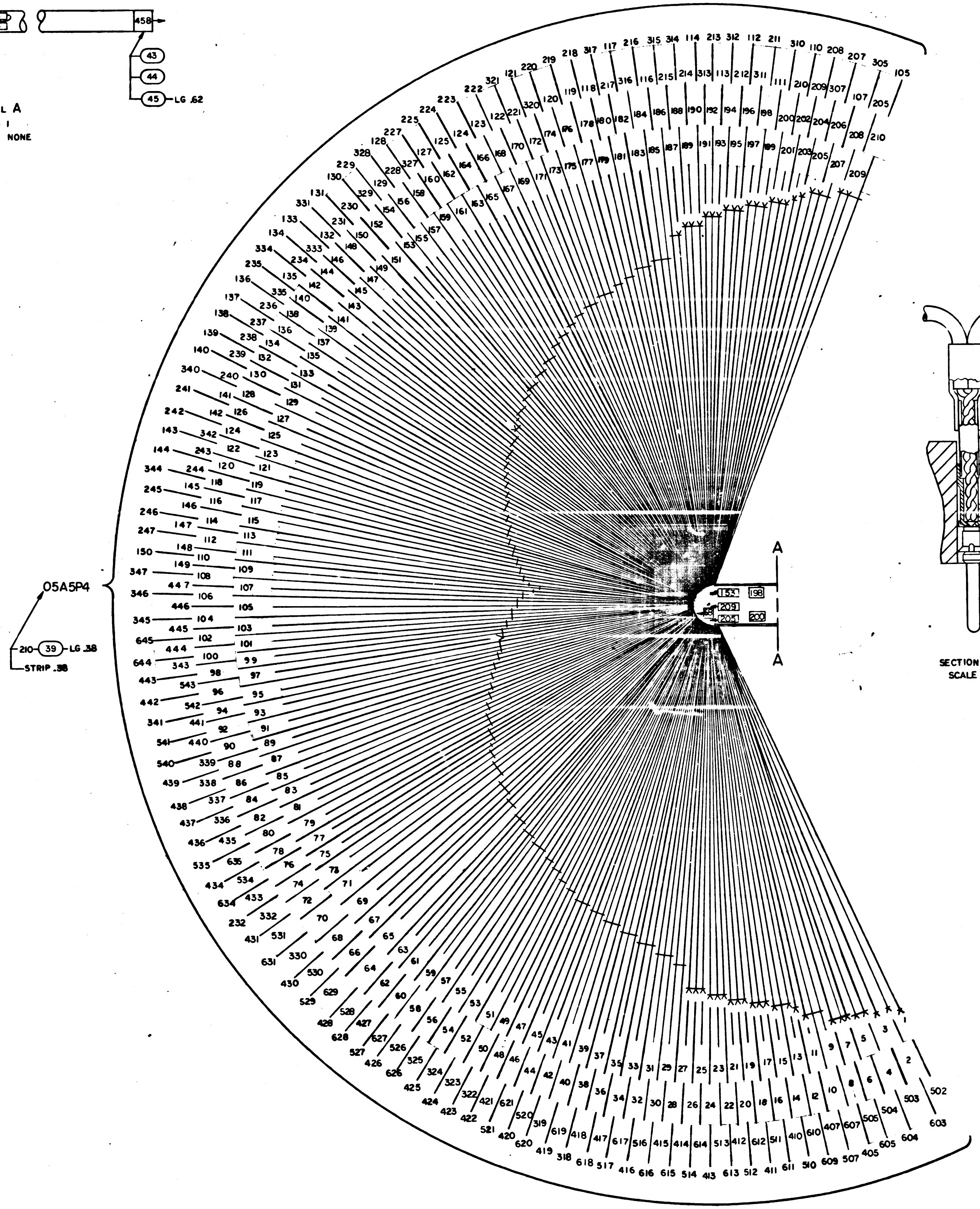
05A5P4
210 — 39 — LG .38
STRIP .38
A
A
153
198
209
205
200

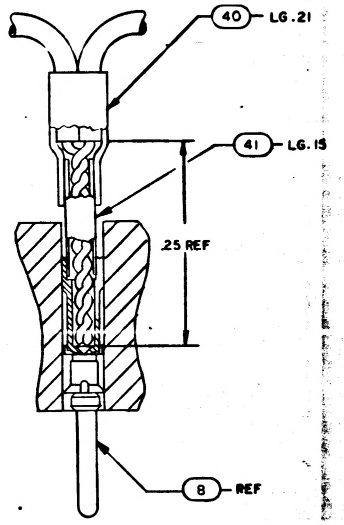
40 — LG .21
41 — LG .15
.25 REF
8 — REF

SECTION B-B
SCALE 10/1

SYM	ZONE	DESCRIPTION	DR	CHK	DATE	APPROVED
B		REPLACES REV A WITH CHANGE PER TDRR 17889				

1005727 B

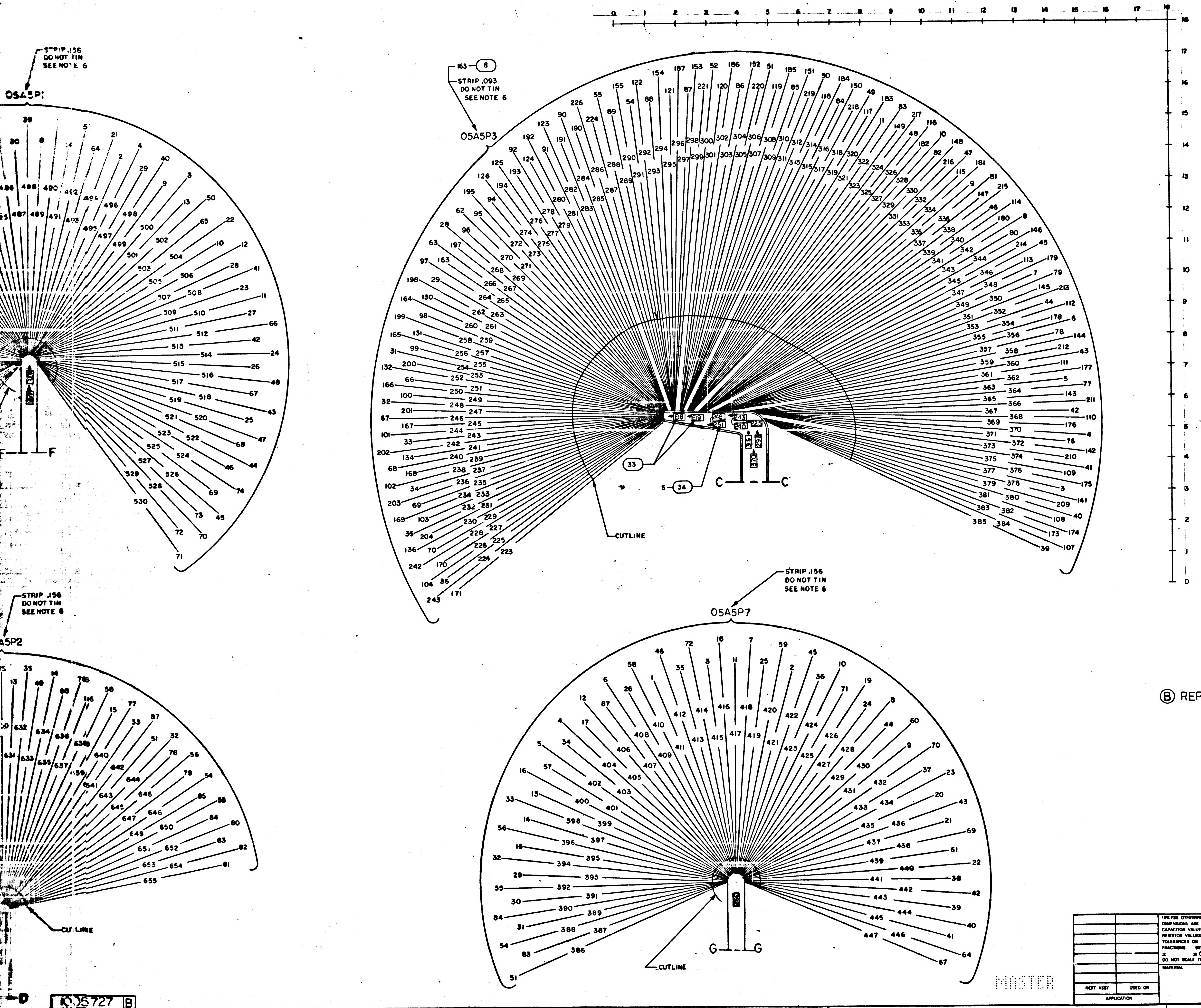

STRIP .156 DO NOT TIN SEE NOTE 6
05A5P1
F — F
STRIP .156 DO NOT TIN SEE NOTE 6
05A5P2
CUTLINE
163 — 8
STRIP .093 DO NOT TIN SEE NOTE 6
05A5P3
33
5 — 34
C — C
CUTLINE
STRIP .156 DO NOT TIN SEE NOTE 6
05A5P7
G — G
CUTLINE

Ⓑ REPLACES REV A WITH CHANGE

MASTER

QTY REQD	PART OR IDENTIFYING NO.	MATERIAL OR NOTES	NOMENCLATURE OR DESCRIPTION	FIND NO.

LIST OF MATERIALS

NEXT ASSY	USED ON
APPLICATION	

UNLESS OTHERWISE SPECIFIED
DIMENSIONS ARE IN INCHES
CAPACITOR VALUES ARE IN µf
RESISTOR VALUES ARE IN OHMS
TOLERANCES ON
FRACTIONS ± DECIMALS ±.010 ANGLES ±
DO NOT SCALE THIS DRAWING
MATERIAL

MIT
INSTRUMENTATION LAB
CAMBRIDGE, MASS

DRAWN
CHECKED A. Caggiano
APPROVED
APPROVED C. Hall
APPROVED MIT
APPROVED MSC 3-2-65
DATE

MANNED SPACECRAFT CENTER
HOUSTON, TEXAS

WIRING HARNESS
AGC TO PSA & G/N SPACECRAFT

CODE IDENT NO. — SIZE J DRAWING NO. 1005727
SCALE 1/1 SHEET 2 OF 4

1005727 B

NOTICE – WHEN GOVERNMENT DRAWINGS, SPECIFICATIONS, OR OTHER DATA ARE USED FOR ANY PURPOSE OTHER THAN IN CONNECTION WITH A DEFINITELY RELATED GOVERNMENT PROCUREMENT OPERATION, THE UNITED STATES GOVERNMENT THEREBY INCURS NO RESPONSIBILITY NOR ANY OBLIGATION WHATSOEVER; AND THE FACT THAT THE GOVERNMENT MAY HAVE FORMULATED, FURNISHED, OR IN ANY WAY SUPPLIED THE SAID DRAWINGS, SPECIFICATIONS OR OTHER DATA IS NOT TO BE REGARDED BY IMPLICATION OR OTHERWISE AS IN ANY MANNER LICENSING THE HOLDER OR ANY OTHER PERSON OR CORPORATION, OR CONVEYING ANY RIGHTS OR PERMISSION TO MANUFACTURE, USE, OR SELL ANY PATENTED INVENTION THAT MAY IN ANY WAY BE RELATED THERETO.

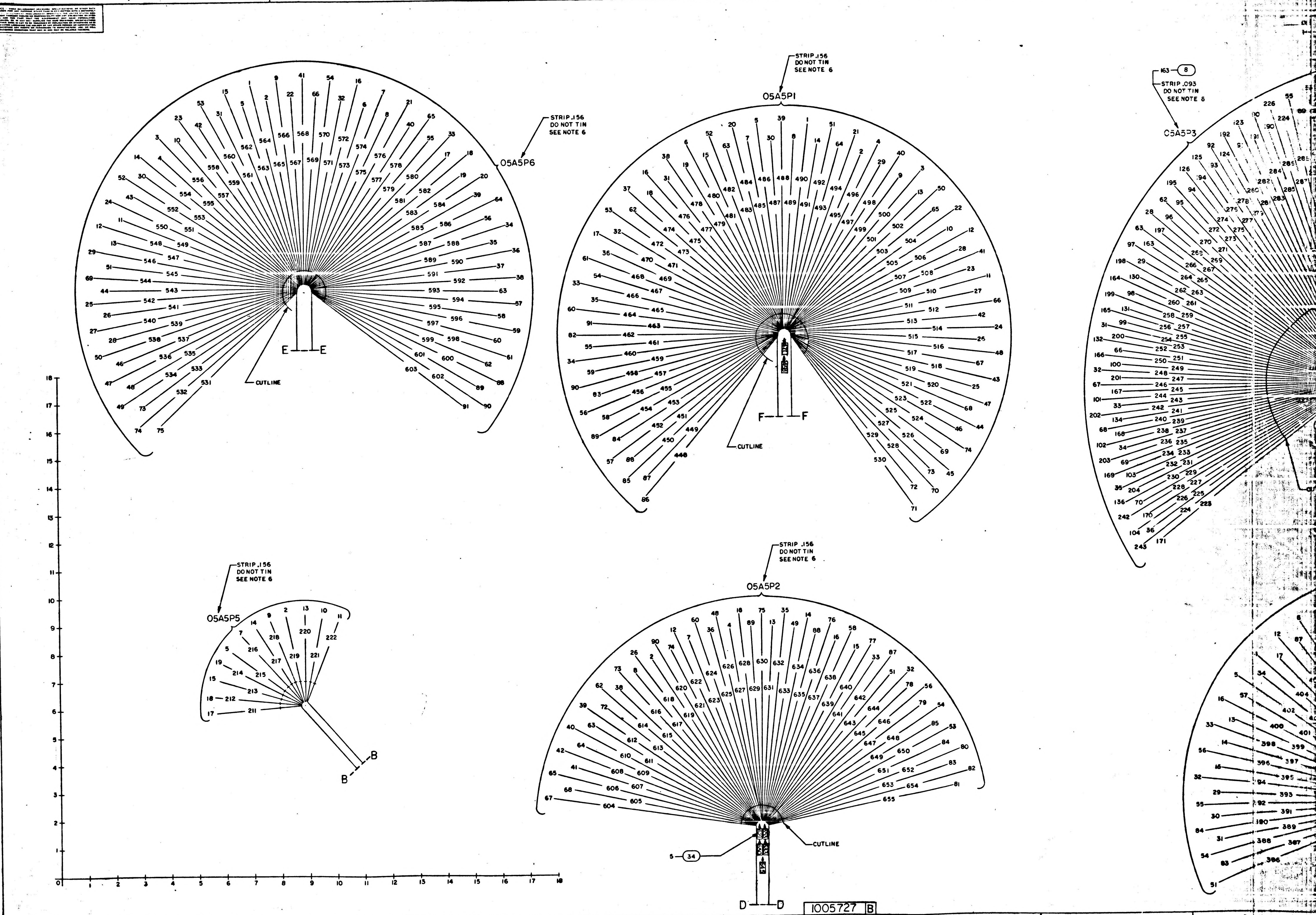

7
6
5
4
D
C
B
A
05A5P6
STRIP .156
DO NOT TIN
SEE NOTE 6
CUTLINE
E
E
05A5P1
STRIP .156
DO NOT TIN
SEE NOTE 6
CUTLINE
F
F
05A5P3
163
8
STRIP .093
DO NOT TIN
SEE NOTE 6
05A5P5
STRIP .156
DO NOT TIN
SEE NOTE 6
B
B
05A5P2
STRIP .156
DO NOT TIN
SEE NOTE 6
5
34
CUTLINE
D
D
0
1
2
3
4
5
6
7
8
9
10
11
12
13
14
15
16
17
18

1005727 B

TO		
RUN NO.	DESTINATION	REMARKS
[illegible]	P4-[illegible]	*
	E[illegible]	●
[illegible]	P4-[illegible]10	*
	E	●
[illegible]	P4-[illegible]	*
	E	●
17	P4-[illegible]	*
	E	●
[illegible]	P4-[illegible]	*
	E	●
97	P4-[illegible]	*
	E	●
188	P4-[illegible]	*
	E	●
192	P4-[illegible]	*
	E	●
19	P4-[illegible]12	*
	E	●
20	P4-[illegible]42	*
	E	●
21	P4-[illegible]12	*
	E	●
194	P4-[illegible]12	*
	E3	●
195	P4-212	* LEG 1
	E	●
196	P4-[illegible]12	*
	E	●
22	P4-[illegible]13	*
	E	●
23	P4-513	*
	E4	●
[illegible]	P4-413	*
	E	●
191	P4-313	*
	E	●
192	P4-[illegible]13	*
	E	●
193	P4-[illegible]13	*
	E	●
25	P4-[illegible]14	*
	E	●
190	P4-[illegible]14	*
	E5	●
189	P4-214	*
	E5	●
26	P4-[illegible]14	*
	E	●
27	P4-[illegible]14	*
	E	●
[illegible]	P4-[illegible]14	*
	E	●
13	P4-510	*
15	P4-[illegible]10	*
202	P4-[illegible]10	*
14	P4-510	*
209	P4-205	*
	E	●
205	P4-[illegible]	*
	E7	●
11	P4-[illegible]07	*
	E	●
207	P4-[illegible]07	
	E7	●
210	P4-[illegible]06	
	E	
6	P4-[illegible]05	* LEG 2
	E	●
7	P4-505	*
	E3	●
8	P4-405	*
	E	●
208	P4-305	*
	E	●
204	P4-208	*
206	P4-207	*
12	P4-509	*●●
153	P4-[illegible]29	
69	-330	
148	-[illegible]31	
154	-229	
151	-230	
149	-[illegible]31	
155	-[illegible]29	
152	-130	
150	-131	LEG 3
73	-332	
[illegible]	-232	
147	-[illegible]	
[illegible]	-[illegible]33	
	-[illegible]21	
	-[illegible]20	
145	P4-[illegible]35	●●,*

ASSEMBLY INFORMATION CHART

FROM			DESCRIPTION			TO		
REMARKS	DESTINATION	RUN NO.	COLOR	AWG	FIND NO.	RUN NO.	DESTINATION	REMARKS
	P6-89	601	YEL	26	9	82	P4-436	
	P6-88	602	RED			84	P4-437	
	P4-336	83	YEL			597	P6-60	
	P4-337	85	RED			596	P6-59	
	P6-37	591	YEL			78	P4-434	
	P6-36	590	RED			81	P4-435	
	P4-138	134	YEL			582	P6-18	
	P4-139	132	RED			581	P6-17	
	P6-21	576	YEL			143	P4-234	
	P6-8	575	RED			140	P4-235	
	P4-134	144	YEL			567	P6-22	
	P4-135	141	RED			566	P6-9	
	P6-42	559	YEL			137	P4-236	
	P6-23	558	RED			135	P4-237	
	P4-136	138	YEL			551	P6-43	
	P4-137	136	RED			544	P6-69	
	P6-35	589	YEL			133	P4-238	
	P6-34	588	RED			131	P4-239	
	P4-346	106	YEL			574	P6-7	
	P4-347	108	RED			573	P6-6	
	P6-2	565	YEL			114	P4-246	
	P6-1	564	RED			112	P4-247	
	P4-438	86	YEL			557	P6-10	
	P4-439	88	RED			556	P6-3	
	P6-24	550	YEL			87	P4-338	
	P6-11	549	RED			89	P4-339	
	P4-440	91	YEL			587	P6-56	
	P4-441	93	RED			579	P6-55	
	P6-33	580	YEL			128	P4-340	
	P6-32	571	RED			94	P4-341	
	P4-240	129	YEL			572	P6-16	
	P4-241	126	RED			562	P6-15	
	P6-5	563	YEL			130	P4-140	
	P6-14	554	RED			127	P4-141	
	P4-446	105	YEL			543	P6-44	
	P4-447	107	RED			542	P6-25	
	P6-4	555	YEL			96	P4-442	
	P6-13	547	RED			98	P4-443	
	P4-342	123	YEL			548	P6-12	
	P4-343	99	RED			540	P6-27	
	P6-54	570	YEL			124	P4-242	
	P6-53	560	RED			121	P4-243	
	P4-142	125	YEL			561	P6-31	
	P4-143	122	RED			552	P6-52	
	P6-30	553	YEL			101	P4-444	
	P6-51	545	RED			103	P4-445	
	P4-344	118	YEL			546	P6-29	
	P4-345	104	RED			538	P6-50	
	P6-28	539	YEL			119	P4-244	
	P6-49	534	RED			116	P4-245	
	P4-144	120	YEL			537	P6-46	
	P4-145	117	RED			533	P6-73	
	P6-20	584	YEL			142	P4-334	
	P6-19	583	RED			139	P4-335	
	P4-540	90	YEL			532	P6-74	
	P4-541	92	RED			531	P6-75	
	P6-58	595	YEL			109	P4-149	
	P6-57	594	RED			110	P4-150	
	P4-424	52	YEL			439	P7-61	
	P4-425	54	RED			430	P7-60	
	P7-38	441	YEL			53	P4-324	
	P7-37	433	RED			55	P4-325	
	P4-422	48	YEL			420	P7-59	
	P4-423	50	RED			410	P7-58	
	P7-36	423	YEL			49	P4-322	
	P7-35	413	RED			51	P4-323	
	P4-416	32	YEL			443	P7-39	
	P4-417	35	RED			435	P7-20	
	P7-40	444	YEL			183	P4-316	
	P7-21	437	RED			180	P4-317	
	P4-216	184	YEL			445	P7-41	
	P4-217	181	RED			440	P7-22	
	P7-67	447	YEL			185	P4-116	
	P7-42	442	RED			182	P4-117	
	P4-418	37	YEL			426	P7-19	
	P4-419	40	RED			416	P7-18	
	P7-8	428	YEL			38	P4-318	
	P7-7	418	RED			41	P4-319	
	P4-122	169	YEL			432	P7-70	
	P4-123	167	RED			425	P7-71	
	P7-9	431	YEL			178	P4-218	
	P7-2	421	RED			176	P4-219	
	P4-118	179	YEL			434	P7-23	
	P4-119	177	RED			424	P7-10	
	P7-43	436	YEL			44	P4-420	
	P7-24	427	RED			47	P4-421	
	P4-320	173	YEL			438	P7-69	
	P4-321	170	RED			429	P7-44	
	P7-57	401	YEL			174	P4-220	
	P7-56	396	RED			171	P4-221	
	P4-120	175	YEL			403	P7-34	
	P4-121	172	RED			398	P7-33	
	P7-45	422	YEL			164	P4-224	
	P7-72	414	RED			162	P4-225	
	P4-124	165	YEL			418	P7-25	
	P4-125	163	RED			412	P7-46	
	P7-17	405	YEL			168	P4-222	
	P7-16	400	RED			166	P4-223	
	P4-616	30	YEL			285	P3-190	
	P4-617	33	RED			283	P3-191	
	P3-192	280	YEL			31	P4-516	
	P3-193	277	RED			34	P4-517	
	P4-618	36	YEL			275	P3-194	
	P4-619	39	RED			272	P3-195	
	P3-90	284	YEL			77	P4-534	
	P3-91	281	RED			80	P4-535	
	P4-620	42	YEL			282	P3-123	
	P4-621	45	RED			279	P3-124	
	P3-125	276	YEL	26	9	43	P4-520	
	P3-128	274	RED			46	P4-521	

ASSEMBLY INFORMATION CHART

FROM			DESCRIPTION			TO		
REMARKS	DESTINATION	RUN NO.	COLOR	AWG	FIND NO.	RUN NO.	DESTINATION	REMARKS
	P4-634	76	YEL	26	9	273	P3-94	
	P4-635	79	RED			271	P3-95	
	P3-224	287	YEL	26	9	100	P4-644	
	P3-226	286	RED			102	P4-645	
	P4-542	95	YEL	26	9	278	P3-92	
*	P4-543	97	RED			270	P3-62	
	P7-51	386	YEL	26	10	145	P4-333	*
	P4-127	161				415	P7-3	
	P7-1	411				159	P4 327	
	P4-227	160				408	P7-6	
	P7-11	417				157	P4-228	
*	P4-215	187				407	P7-87	
	P7-64	446				187	P4-215	*
*	P4-502	1				382	P3-174	
	P3-40	380				3	P4-503	*
*	P4-504	5				385	P3-39	
	P3-108	381				2	P4-603	*
*	P4-604	4				383	P3-173	
	P1-63	483				1	P4-502	*
*	P4-503	3				503	P1-65	
	P1-91	463				5	P4-504	*
*	P4-603	2				493	P1-64	
	P1-62	473		26	10	4	P4-604	*
	P3-29	263	YEL	24	38	609	P2-64	
	P2-85	649	YEL	24	12	236	P3-203	
	P2-84	651	RED			231	P3-204	
	P3-243	224	YEL			613	P2-72	
	P3-242	228	RED			616	P2-73	
	P2-12	622	YEL			250	P3-166	
	P2-26	618	RED			245	P3-167	
	P3-199	258	YEL			627	P2-4	
	P3-200	253	RED			631	P2-13	
	P2-15	639	YEL			239	P3-168	
	P2-14	634	RED			234	P3-169	
	P3-201	247	YEL			637	P2-16	
	P3-202	242	RED			644	P2-32	
	P2-33	641	YEL	24	12	227	P3-170	
	P2-56	646	RED			223	P3-171	
	P3-101	244	YEL	22	15	606	P2-65	
	P3-134	241	RED			607	P2-41	
	P3-102	238	GRN			610	P2-40	
	P2-89	629	YEL			257	P3-131	
	P2-60	624	RED			260	P3-164	
	P2-90	620	GRN			256	P3-165	
	P3-163	265	YEL			628	P2-18	
	P3-197	267	RED			632	P2-35	
	P3-198	262	GRN			625	P2-36	
	P2-58	638	YEL			264	P3-97	
	P2-87	642	RED			259	P3-98	
	P2-88	635	GRN			261	P3-130	
	P3-99	255	YEL			623	P2-7	
	P3-100	249	RED			619	P2-2	
	P3-132	252	GRN			617	P2-8	
	P2-67	604	YEL			233	P3-103	
	P2-68	605	RED			226	P3-104	
	P2-42	608	GRN			230	P3-136	
	P6-26	541	YEL	22	15	115	P4-146	
	P6-47	536	RED			113	P4-147	
	P6-48	535	GRN			111	P4-148	
*	P4-543	97	YEL	22	16	612	P2-39	
	P3-28	268	RED			611	P2-63	
	P3-63	266	GRN			615	P2-38	
	P3-96	269	BRN			614	P2-62	
	P2-83	653	YEL	24	11	251	P3-66	
	-82	654	RED				E-18	●
●●	-54	648	SHLD			246	P3-67	●●
	-74	621	YEL			248	P3-32	
	-75	630	RED				E-18	●
●●	-48	626	SHLD					●
	-49	633	YEL			243	P3-33	
	-76	636	RED				E-19	●
●●	-77	640	SHLD			237	P3-34	●●
	-53	650	YEL			240	P3-68	
	-81	655	RED				E-19	●
●●	-80	652	SHLD					●
	-78	645	YEL	24	11	225	P3-36	
	-79	647	RED			232	P3-35	
●●	P2-51	643	SHLD			229	P3-70	●●
	P5-17	211	YEL	22	17	599	P6-62	TWIST 12 WIRES TOGETHER
	-18	212				593	-63	
	-19	214				598	-61	
	-7	216				592	-38	
	-9	218				586	-64	
	-10	221				578	-65	
	-11	222				585	-39	
	-2	219	YEL		17	577	-40	
	-5	215	BLK		18	603	-91	
	-15	213	BLK			602	-90	
	-13	220	BLK			569	-66	
	P5-14	217	BLK	22	18	568	P6-41	

1005727 B

REVISIONS

SYM	ZONE	DESCRIPTION	LR	CHK	DATE	APPROVED
B		REPLACES REVA WITH CHANGES PER TDRR 19889				

INTERNAL CONNECTION CHART

REMARKS	FROM	FIND NO.	LENGTH	TO	REMARKS
	E9	18	3.00	E10	
	E10		—	203	*
	E8		2.00	E7	
	E7		—	203	*
	E6		3.00	E5	
	E5		2.00	E4	
	E4		3.00	E3	
	E3		2.00	E2	
	E2		3.00	E1	
	E1		—	186	
	E11		3.00	E12	
	E12		3.00	E13	
	E13		3.00	E14	
	E14		3.00	E15	
	E15		2.00	E16	
	E16		3.00	E17	
	E17		—	29	
	E18		—	254	
	E19		—	235	
	251 ●●●		3.00	248 ●●●	
	240 ●●●	18	3.00	243 ●●●	
	E20	10	—	156	
	E20	10	—	59	
	E21	10	—	158	
	E21	10	—	60	

●●● DENOTES FERRULE

Ⓑ REPLACES REVA WITH CHANGE

QTY REQD	PART OR IDENTIFYING NO.	MATERIAL OR NOTES	NOMENCLATURE OR DESCRIPTION	FIND NO.

LIST OF MATERIALS

NEXT ASSY	USED ON

APPLICATION

UNLESS OTHERWISE SPECIFIED
DIMENSIONS ARE IN INCHES
CAPACITOR VALUES ARE IN μf
RESISTOR VALUES ARE IN OHMS
TOLERANCES ON
FRACTIONS DECIMALS ANGLES
± ± ±
DO NOT SCALE THIS DRAWING

MATERIAL

MIT
INSTRUMENTATION LAB
CAMBRIDGE, MASS

DRAWN
CHECKED
APPROVED
APPROVED
APPROVED MIT
APPROVED MSC
DATE

MANNED SPACECRAFT CENTER
HOUSTON, TEXAS

WIRING HARNESS
AGC TO PSA & G/N TO SPACECRAFT

CODE IDENT NO. —
SIZE J
DRAWING NO. 1005727
SCALE NONE
SHEET 3 OF 4

MASTER

1005727 B

ASSEMBLY INFORMATION CHART

FROM			DESCRIPTION			TO		
REMARKS	DESTINATION	RUN NO.	COLOR	AWG	FIND NO.	RUN NO.	DESTINATION	REMARKS
	P3-4	370	YEL	26	9	198	P4-211	*
	-5	363	RED				E12	●
	-212	359	YEL			199	P4-111	*
	-213	352	RED				E12	●
	-177	362	YEL			19	P4-612	*
	-178	355	RED				E12	●
	-41	374	YEL			197	P4-311	*
	-42	367	RED				E12	●
	-210	373	YEL			200	P4-310	*
	-211	366	RED				E11	●
	-175	376	YEL			201	P4-210	*
	-176	369	RED				E11	●
	-142	372	YEL			16	P4-611	*
	-143	365	RED				E11	●
	-109	375	YEL			17	P4-511	*
	-110	368	RED				E11	●
	-76	371	YEL			18	P4-411	*
	-77	364	RED				E11	●
	-144	358	YEL			20	P4-512	*
	-145	351	RED				E13	●
	-111	361	YEL			21	P4-412	*
	-112	354	RED				E13	●
	-78	357	YEL			194	P4-312	*
	-79	350	RED				E13	●
	-43	360	YEL			195	P4-212	*
	-44	353	RED				E13	●
	-6	356	YEL			196	P4-112	* LEG 6
	-7	349	RED				E14	●
	-214	345	YEL			22	P4-613	*
	-215	338	RED				E14	●
	-179	348	YEL			23	P4-513	*
	-180	341	RED				E14	●
	-146	344	YEL			24	P4-413	*
	-147	337	RED				E14	●
	-113	347	YEL			191	P4-313	*
	-114	340	RED				E15	●
	-80	343	YEL			192	P4-213	*
	-81	336	RED				E15	●
	-45	346	YEL			193	P4-113	*
	-46	339	RED				E15	●
	-8	342	YEL			25	P4-614	*
	-9	335	RED				E15	●
	-216	331	YEL			26	P4-514	*
	-217	324	RED				E16	●
	-181	334	YEL			27	P4-414	*
	-182	327	RED				E16	●
	-148	330	YEL			188	P4-314	*
	-149	323	RED				E16	●
	-47	332	YEL			190	P4-114	*
	-48	325	RED				E17	●
	-82	329	YEL			28	P4-615	
	-83	322	RED				E17	●
	-115	333	YEL		9	189	P4-214	*
	-116	326	RED				E17	●
	-3	377	YEL		10	13	P4-610	*
	-141	378	YEL		10	15	P4-410	*
	-209	379	YEL	26	10	202	P4-110	*
●●	P3-107	384	SHLD					
	P3-84	315	YEL	26	9	209	P4-205	*
	-85	309	RED				E9	●
	-220	305	YEL			205	P4-307	*
	-221	299	RED				E9	●
	-185	308	YEL			11	P4-407	*
	-186	302	RED				E9	●
	-218	317	YEL			6	P4-605	*
	-219	311	RED				E9	●
	-183	320	YEL			7	P4-505	*
	-184	314	RED				E10	●
	-150	316	YEL			8	P4-405	*
	-151	310	RED				E10	● LEG 5
	-117	319	YEL			208	P4-305	*
	-118	313	RED				E10	●
	-49	318	YEL			9	P4-607	
	-50	312	RED				E10	●
	-51	306	YEL		9	10	P4-507	
	-52	300	RED				E10	●
	-11	321	YEL		10	204	P4-208	*
	-10	328	YEL	26	10	206	P4-207	*
●●	P3-187	296	SHLD			12	P4-609	*,●●
	P3-88	293	YEL	26	9	68	P4-430	
	-54	291	RED			57	-526	
	-86	303	YEL		9	70	-631	
	-55	288	RED			56	-626	
	-87	297	YEL		10	64	-428	
	-119	307				71	-531	
	-120	301				62	-628	LEG 4
	-122	292				65	-629	
	-152	304				72	-431	
	-121	295				63	-528	
	-153	298				66	-529	
	-154	294				67	-530	
**	-155	290				61	-427	
	-155	290	YEL	26	10	58	-426	
●●	P3-89	289	SHLD			75	P4-433	●●

ASSEMBLY INFORMATION CHART

FROM			DESCRIPTION			TO		
REMARKS	DESTINATION	RUN NO.	COLOR	AWG	FIND NO.	RUN NO.	DESTINATION	REMARKS
	P1-90	458	YEL	26	9	200	P4-310	*
	-61	468	RED				E1	●
	-38	478	YEL			201	P4-210	*
	-39	488	RED				E1	●
	-40	498	YEL			16	P4-611	*
	-41	508	RED				E1	●
	-67	517	YEL			17	P4-511	*
	-66	512	RED				E1	●
	-89	454	YEL			18	P4-411	*
	-60	464	RED				E1	●
	-37	474	YEL			197	P4-311	*
	-20	484	RED				E2	●
	-21	494	YEL			198	P4-211	*
	-22	504	RED				E2	●
	-42	513	YEL			199	P4-111	*
	-68	521	RED				E2	●
	-88	451	YEL			19	P4-612	*
	-59	459	RED				E2	●
	-36	469	YEL			20	P4-512	*
	-19	479	RED				E3	●
	-8	489	YEL			21	P4-412	*
	-9	499	RED				E3	●
	-23	509	YEL			194	P4-312	*
	-43	518	RED				E3	●
	-87	449	YEL			195	P4-212	* LEG 1
	-58	455	RED				E3	●
	-35	465	YEL			196	P4-112	*
	-18	475	RED				E4	●
	-7	485	YEL			22	P4-613	*
	-2	495	RED				E4	●
	-10	505	YEL			23	P4-513	*
	-24	514	RED				E4	●
	-44	522	YEL			24	P4-413	*
	-69	525	RED				E4	●
	-86	448	YEL			191	P4-313	*
	-57	452	RED				E5	●
	-34	460	YEL			192	P4-213	*
	-17	470	RED				E5	●
	-6	480	YEL			193	P4-113	*
	-1	490	RED				E5	●
	-3	500	YEL			25	P4-614	*
	-11	510	RED				E5	●
	-5	486	YEL			190	P4-114	*
	-4	496	RED				E6	●
	-33	466	YEL			189	P4-214	*
	-16	476	RED				E6	●
	-25	519	YEL			26	P4-514	*
	-45	526	RED				E6	●
	-71	530	YEL			27	P4-414	*
	-70	528	RED				E6	●
	-85	450	YEL		9	188	P4-314	*
	-56	456	RED				E6	●
	-12	506	YEL		10	13	P4-610	*
	-46	523	YEL		10	15	P4-410	*
	-72	529	YEL		10	202	P4-110	*
	-26	515	YEL	26	10	14	P4-510	*
●●	P1-73	527	SHLD					
	P1-32	471	YEL	26	9	209	P4-205	*
	-15	481	RED				E7	●
	-14	491	YEL			205	P4-307	*
	-13	501	RED				E7	●
	-27	511	YEL			11	P4-407	*
	-47	520	RED				E7	●
	-83	457	YEL			207	P4-107	
	-54	467	RED				E7	●
	-31	477	YEL			210	P4-105	
	-30	487	RED				E7	●
	-29	497	YEL			6	P4-605	* LEG 2
	-28	507	RED				E8	●
	-48	516	YEL			7	P4-505	*
	-74	524	RED				E8	●
	-82	462	YEL			8	P4-405	*
	-53	472	RED				E8	●
	-52	482	YEL		9	208	P4-305	*
	-51	492	RED				E8	●
	-55	461	YEL		10	204	P4-208	*
	-84	453	YEL	26	10	206	P4-207	*
●●	P1-50	502	SHLD			12	P4-609	*●●
	P7-55	392	YEL	26	10	153	P4-329	
	-32	394				69	-330	
	-15	395				148	-331	
	-83	387				154	-229	
	-54	388				151	-230	
	-31	389				149	-231	
	-5	402				155	-129	
	-14	397				152	-130	LEG 3
	-30	391				150	-131	
	-4	404				73	-332	
	-13	399				74	-232	
	-29	393				147	-132	
	-12	406				146	-133	
	-26	409					-E21	
	P7-84	390	YEL	26	10		-E20	
					SHLD	145	P4-333	●●,*

ASSEMBLY INFORMATION CHART

FROM			DESCRIPTION			TO		
REMARKS	DESTINATION	RUN NO.	COLOR	AWG	FIND NO.	RUN NO	DESTINATION	REMARKS
	P6-89	601	YEL	26	9	82	P4-436	
	P6-88	602	RED			84	P4-437	
	P4-336	83	YEL			597	P6-60	
	P4-337	85	RED			596	P6-59	
	P6-37	591	YEL			78	P4-434	
	P6-36	590	RED			81	P4-435	
	P4-138	134	YEL			582	P6-18	
	P4-139	132	RED			581	P6-17	
	P6-21	576	YEL			143	P4-234	
	P6-8	575	RED			140	P4-235	
	P4-134	144	YEL			567	P6-22	
	P4-135	141	RED			566	P6-9	
	P6-42	559	YEL			137	P4-236	
	P6-23	558	RED			135	P4-237	
	P4-136	138	YEL			551	P6-43	
	P4-137	136	RED			544	P6-69	
	P6-35	589	YEL			133	P4-238	
	P6-34	588	RED			131	P4-239	
	P4-346	106	YEL			574	P6-7	
	P4-347	108	RED			573	P6-6	
	P6-2	565	YEL			114	P4-246	
	P6-1	564	RED			112	P4-247	
	P4-438	86	YEL			557	P6-10	
	P4-439	88	RED			556	P6-3	
	P6-24	550	YEL			87	P4-338	
	P6-11	549	RED			89	P4-339	
	P4-440	91	YEL			587	P6-56	
	P4-441	93	RED			579	P6-55	
	P6-33	580	YEL			128	P4-340	
	P6-32	571	RED			94	P4-341	
	P4-240	129	YEL			572	P6-16	
	P4-241	126	RED			562	P6-15	
	P6-5	563	YEL			130	P4-140	
	P6-14	554	RED			127	P4-141	
	P4-446	105	YEL			543	P6-44	
	P4-447	107	RED			542	P6-25	
	P6-4	555	YEL			96	P4-442	
	P6-13	547	RED			98	P4-443	
	P4-342	123	YEL			548	P6-12	
	P4-343	99	RED			540	P6-27	
	P6-54	570	YEL			124	P4-242	
	P6-53	560	RED			121	P4-243	
	P4-142	125	YEL			561	P6-31	
	P4-143	122	RED			552	P6-52	
	P6-30	553	YEL			101	P4-444	
	P6-51	545	RED			103	P4-445	
	P4-344	118	YEL			546	P6-29	
	P4-345	104	RED			538	P6-50	
	P6-28	539	YEL			119	P4-244	
	P6-49	534	RED			116	P4-245	
	P4-144	120	YEL			537	P6-46	
	P4-145	117	RED			533	P6-73	
	P6-20	584	YEL			142	P4-334	
	P6-19	583	RED			139	P4-335	
	P4-540	90	YEL			532	P6-74	
	P4-541	92	RED			531	P6-75	
	P6-58	595	YEL			109	P4-149	
	P6-57	594	RED			110	P4-150	
	P4-424	52	YEL			439	P7-61	
	P4-425	54	RED			430	P7-60	
	P7-38	441	YEL			53	P4-324	
	P7-37	433	RED			55	P4-325	
	P4-422	48	YEL			420	P7-59	
	P4-423	50	RED			410	P7-58	
	P7-36	423	YEL			49	P4-322	
	P7-35	413	RED			51	P4-323	
	P4-416	32	YEL			443	P7-39	
	P4-417	35	RED			435	P7-20	
	P7-40	444	YEL			183	P4-316	
	P7-21	437	RED			180	P4-317	
	P4-216	184	YEL			445	P7-41	
	P4-217	181	RED			440	P7-22	
	P7-67	447	YEL			185	P4-116	
	P7-42	442	RED			182	P4-117	
	P4-418	37	YEL			426	P7-19	
	P4-419	40	RED			416	P7-18	
	P7-8	428	YEL			38	P4-318	
	P7-7	418	RED			41	P4-319	
	P4-122	169	YEL			432	P7-70	
	P4-123	167	RED			425	P7-71	
	P7-9	431	YEL			178	P4-218	
	P7-2	421	RED			176	P4-219	
	P4-118	179	YEL			434	P7-23	
	P4-119	177	RED			424	P7-10	
	P7-43	436	YEL			44	P4-420	
	P7-24	427	RED			47	P4-421	
	P4-320	173	YEL			438	P7-69	
	P4-321	170	RED			429	P7-44	
	P7-57	401	YEL			174	P4-220	
	P7-56	396	RED			171	P4-221	
	P4-120	175	YEL			403	P7-34	
	P4-121	172	RED			398	P7-33	
	P7-45	422	YEL			164	P4-224	
	P7-72	414	RED			162	P4-225	
	P4-124	165	YEL			418	P7-25	
	P4-125	163	RED			412	P7-46	
	P7-17	405	YEL			168	P4-222	
	P7-16	400	RED			166	P4-223	
	P4-616	30	YEL			285	P3-190	
	P4-617	33	RED			283	P3-191	
	P3-192	280	YEL			31	P4-516	
	P3-193	277	RED			34	P4-517	
	P4-618	36	YEL			275	P3-194	
	P4-619	39	RED			272	P3-195	
	P3-90	284	YEL			77	P4-534	
	P3-91	281	RED			80	P4-535	
	P4-620	42	YEL			282	P3-123	
	P4-621	45	RED			279	P3-124	
	P3-125	276	YEL	26	9	43	P4-520	
	P3-126	274	RED			46	P4-521	

1005727 B

SYM	ZONE	DESCRIPTION	DR	CHK	DATE	APPROVED
B		REPLACES REV A WITH CHANGES PER TDRR 17889				

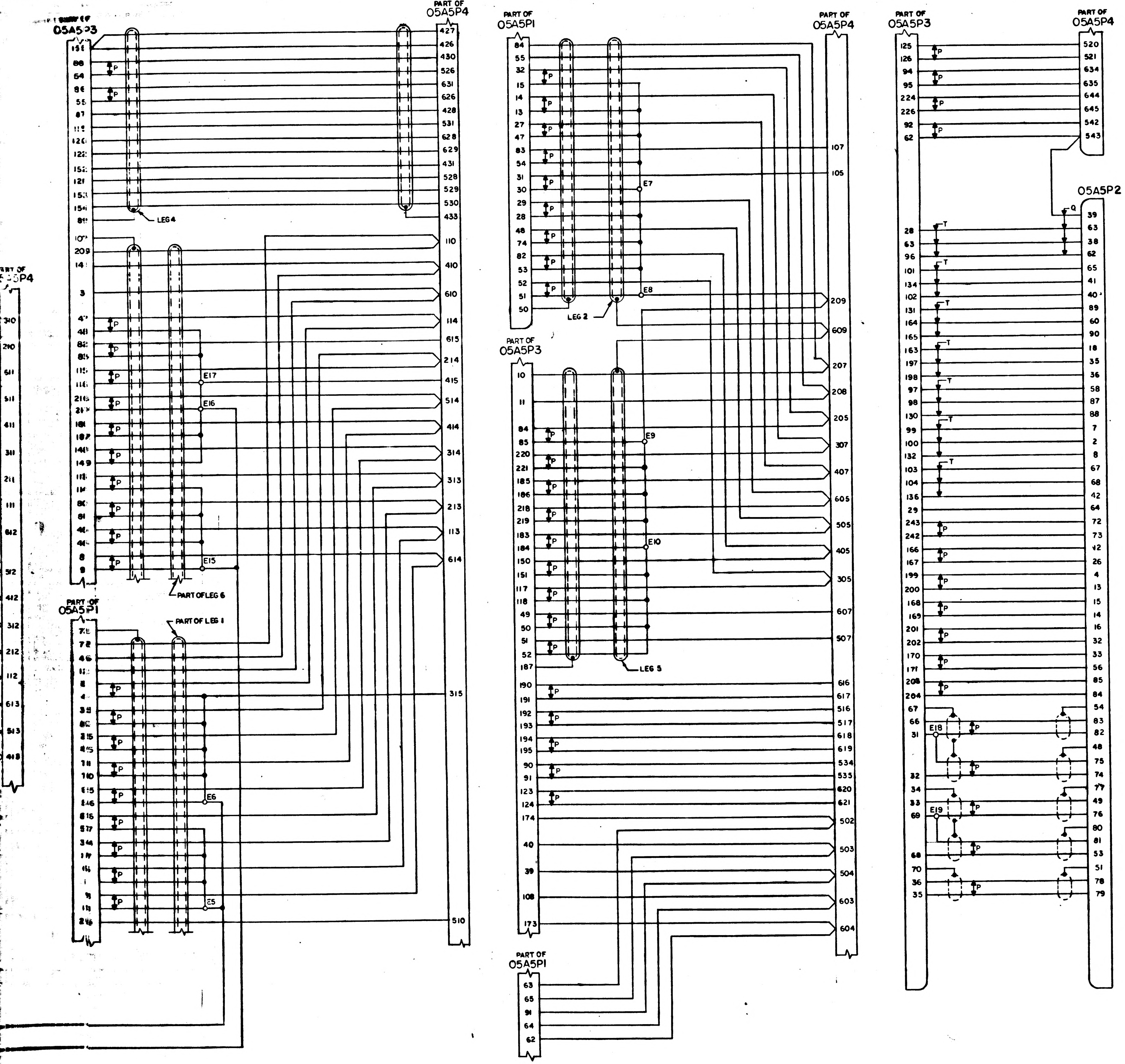

Ⓑ REPLACES REV A WITH CHANGE

	QTY REQD	PART OR IDENTIFYING NO.	MATERIAL OR NOTES	NOMENCLATURE OR DESCRIPTION	FIND NO.
	☒	1005798		WIRING DIAGRAM	REF
	1	1010812-1		SEAL, RUBBER	48
***	4	SEE NOTE 3		INSULATION, ELEC	47
***	3	SEE NOTE 3		INSULATION, ELEC	46
***	.5	1006322-022		INSULATION, ELEC	45
	2	1000242-37		FERRULE, ELEC	44
	2	1000243-41		FERRULE, ELEC	43
***	.2	1006322-025		INSULATION, ELEC	42
***	.2	1006322-001		INSULATION, ELEC	41
***	.2	1006322-004		INSULATION, ELEC	40
***	43	1006322-007		INSULATION, ELEC	39
***	3.5	1010789-001		WIRE, ELEC AWG 24 YEL	38
***	0.5	1006322-018		INSULATION, ELEC	37
	2	MS18035-1-2		BAND MARKER, CABLE	36
	AR	1012507-003		TAPE, LACING	35
	10	1010402 2		SLEEVE, SOLDER	34
	21	1010402-1		SLEEVE, SOLDER	33
	4	1000242-32		FERRULE, ELEC	32
	4	1000243-34		FERRULE, ELEC	31
	2	1000242-26		FERRULE, ELEC	30
	2	1000243-27		FERRULE, ELEC	29
	4	1000242-29		FERRULE ELEC	28
	4	1000243-31		FERRULE, ELEC	27
***	0.5	1006322-019		INSULATION, ELEC	26
***	1.0	1006322-020		INSULATION ELEC	25
***	7	SEE NOTE 3		INSULATION, ELEC	24
***	3.6	SEE NOTE 3		INSULATION, ELEC	23
***	3.5	SEE NOTE 3		INSULATION, ELEC	22
***	3.7	SEE NOTE 4		WIRE, BRAID	21
***	3.6	SEE NOTE 4		WIRE, BRAID	20
***	3.5	SEE NOTE 4		WIRE, BRAID	19
***	22	1010789-007		WIRE, ELEC, AWG 22, BLK	18
***	11	1010789-006		WIRE, ELEC, AWG 22, YEL	17
***	4	1010789-010		WIRE, ELEC, AWG 22, 4 COND, TW	16
***	3	1010789-009		WIRE, ELEC, AWG 22, 3 COND, TW	15
***	20	1010789-003		WIRE, ELEC, AWG 24 2 COND, TW	12
***	18	1010789-012		WIRE, ELEC, AWG 24, 2 COND, SHLD	11
***	170	1010789-016		WIRE, ELEC, AWG 26, YEL	10
***	365	1010789-017		WIRE, ELEC, AWG 26, 2 COND, TW	9
	244	1010738-5		CONTACT, ELEC, PIN	8
	1	1010771-013		CONNECTOR, PLUG, ELEC	7
	1	1010771-101		CONNECTOR, PLUG, ELEC	6
	1	1010771-102		CONNECTOR, PLUG, ELEC	5
	1	1010771-103		CONNECTOR, PLUG, ELEC	4
	1	1010771-104		CONNECTOR, PLUG, ELEC	3
	1	1010815-144		CONNECTOR, PLUG, ELEC	2
	1	1003731		CONNECTOR ASSY, 360 CONTACTS	1

LIST OF MATERIALS

NEXT ASSY	USED ON
1015000	

APPLICATION

UNLESS OTHERWISE SPECIFIED
DIMENSIONS ARE IN INCHES
CAPACITOR VALUES ARE IN µf
RESISTOR VALUES ARE IN OHMS
TOLERANCES ON
FRACTIONS ± DECIMALS ± ANGLES ±
DO NOT SCALE THIS DRAWING

MATERIAL

MIT
INSTRUMENTATION LAB
CAMBRIDGE, MASS

DRAWN [illegible]
CHECKED [illegible]
APPROVED
APPROVED [illegible]
APPROVED MIT [illegible]
APPROVED MSC [illegible]
DATE

MANNED SPACECRAFT CENTER
HOUSTON, TEXAS

WIRING HARNESS
AGC TO PSA & G/N TO SPACECRAFT

CODE IDENT NO. —
SIZE J
DRAWING NO. 1005727A
SCALE NONE
SHEET 4 OF 4

MASTER

1005727 B

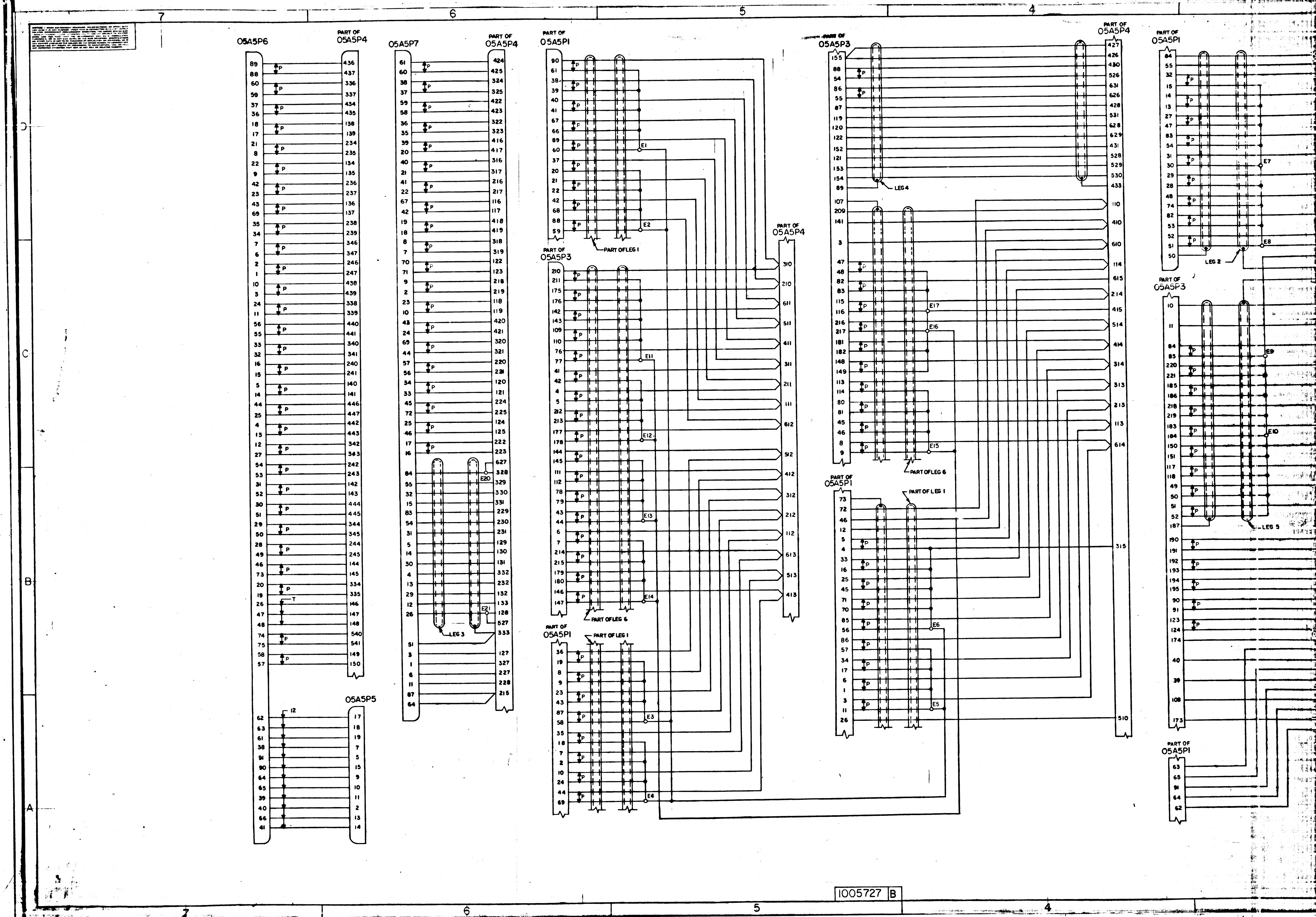

7
6
5
4
D
C
B
A
05A5P6
PART OF 05A5P4
05A5P7
PART OF 05A5P4
PART OF 05A5P1
PART OF 05A5P3
PART OF 05A5P1
PART OF 05A5P4
PART OF 05A5P3
PART OF 05A5P4
PART OF 05A5P1
PART OF 05A5P1
PART OF 05A5P3
PART OF 05A5P1
05A5P5
PART OF LEG 1
PART OF LEG 6
PART OF LEG 1
PART OF LEG 6
PART OF LEG 1
LEG 2
LEG 3
LEG 4
LEG 5
E1
E2
E3
E4
E5
E6
E7
E8
E9
E10
E11
E12
E13
E14
E15
E16
E17
E20
E21
P
T
12
1005727 B

1005727 C

REVISIONS						
SYM	ZONE	DESCRIPTION	DR	CHK	DATE	APPROVED
B		REPLACES REVA WITH CHANGE PER TDRR 17889				
C		REVISED PER TDRR 18696			5/27/65	

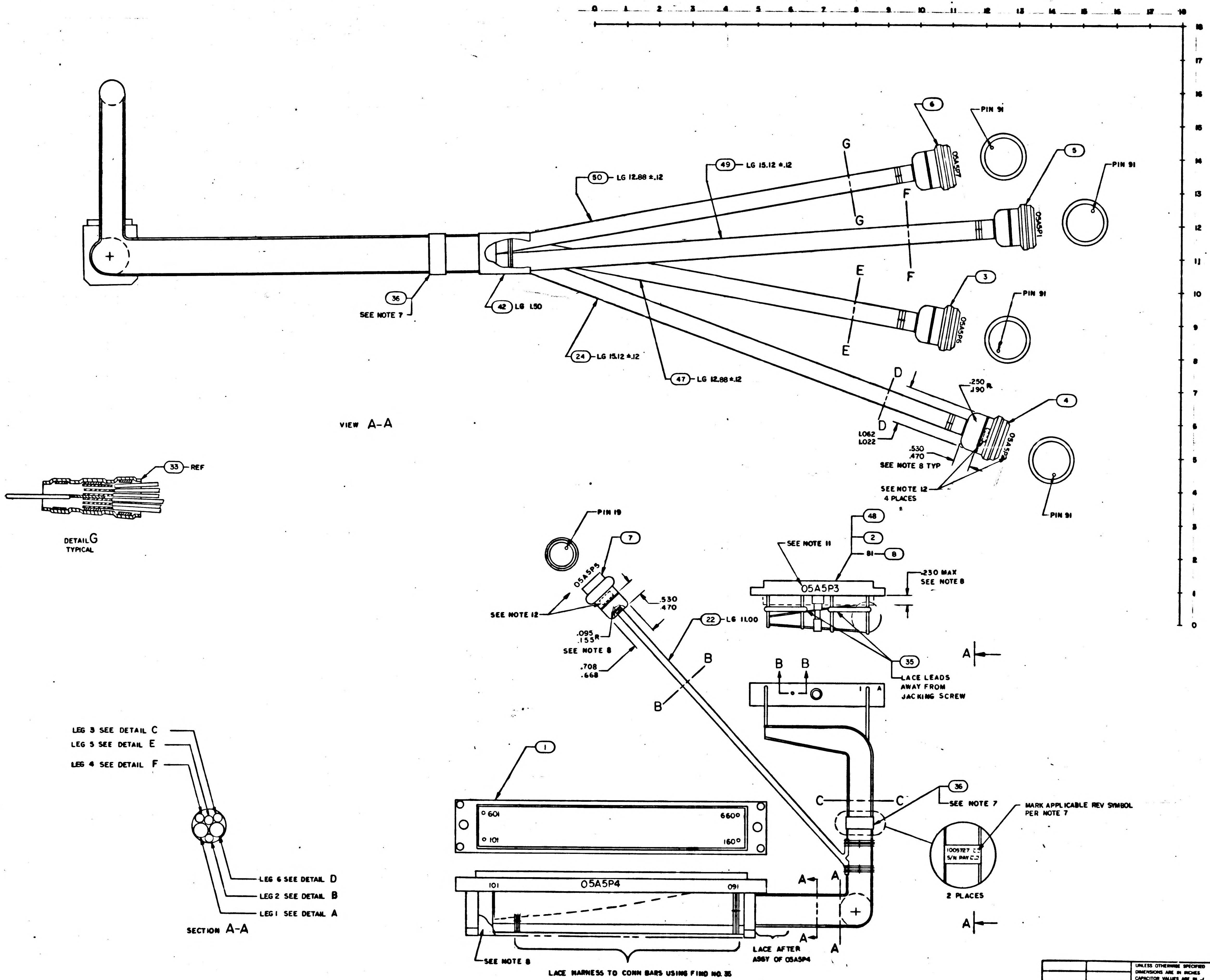
0 1 2 3 4 5 6 7 8 9 10 11 12 13 14 15 16 17 18
18 17 16 15 14 13 12 11 10 9 8 7 6 5 4 3 2 1 0
6
PIN 91
5
PIN 91
50 LG 12.88 ±.12
49 LG 15.12 ±.12
G
G
05A5P7
F
F
05A5P1
E
E
3
PIN 91
05A5P6
36
SEE NOTE 7
42 LG 1.50
24 LG 15.12 ±.12
47 LG 12.88 ±.12
D
D
.250
.190 R
4
1.062
1.022
.530
.470
SEE NOTE 8 TYP
05A5P2
SEE NOTE 12
4 PLACES
PIN 91
VIEW A-A
33 REF
DETAIL G
TYPICAL
PIN 19
7
05A5P5
SEE NOTE 12
.530
.470
.095
.155 R
SEE NOTE 8
.708
.668
22 LG 11.00
B
B
48
2
81 8
SEE NOTE 11
05A5P3
.230 MAX
SEE NOTE 8
35
LACE LEADS
AWAY FROM
JACKING SCREW
A
B B
1 A
LEG 3 SEE DETAIL C
LEG 5 SEE DETAIL E
LEG 4 SEE DETAIL F
LEG 6 SEE DETAIL D
LEG 2 SEE DETAIL B
LEG 1 SEE DETAIL A
SECTION A-A
1
601
660
101
160
05A5P4
101
091
C
C
36
SEE NOTE 7
MARK APPLICABLE REV SYMBOL
PER NOTE 7
1005727
S/N REV
2 PLACES
A
A
A
A
A
SEE NOTE 8
LACE HARNESS TO CONN BARS USING FIND NO. 35
LACE AFTER
ASSY OF 05A5P4

Ⓑ REPLACES REVA WITH CHANGE

1005727 C

MASTER

QTY REQD	PART OR IDENTIFYING NO.	MATERIAL OR NOTES	NOMENCLATURE OR DESCRIPTION	FIND NO.

LIST OF MATERIALS

1005000	
NEXT ASSY	USED ON
APPLICATION	

UNLESS OTHERWISE SPECIFIED
DIMENSIONS ARE IN INCHES
CAPACITOR VALUES ARE IN µf
RESISTOR VALUES ARE IN OHMS
TOLERANCES ON
FRACTIONS ± DECIMALS ±.010 ANGLES ±
DO NOT SCALE THIS DRAWING

MATERIAL

MIT
INSTRUMENTATION LAB
CAMBRIDGE MASS

DRAWN B.Kalanko
CHECKED A. Cappiano
APPROVED
APPROVED
APPROVED MIT
APPROVED MSC
DATE

MANNED SPACECRAFT CENTER
HOUSTON, TEXAS

WIRING HARNESS
AGC TO PSA & G/N TO SPACECRAFT

CODE IDENT NO. 80230
SIZE J
DRAWING NO. 1005727
SCALE 1/1
SHEET 1 OF 4

1005727 C

REV	ZONE	
B		REP CHA
C		REVI

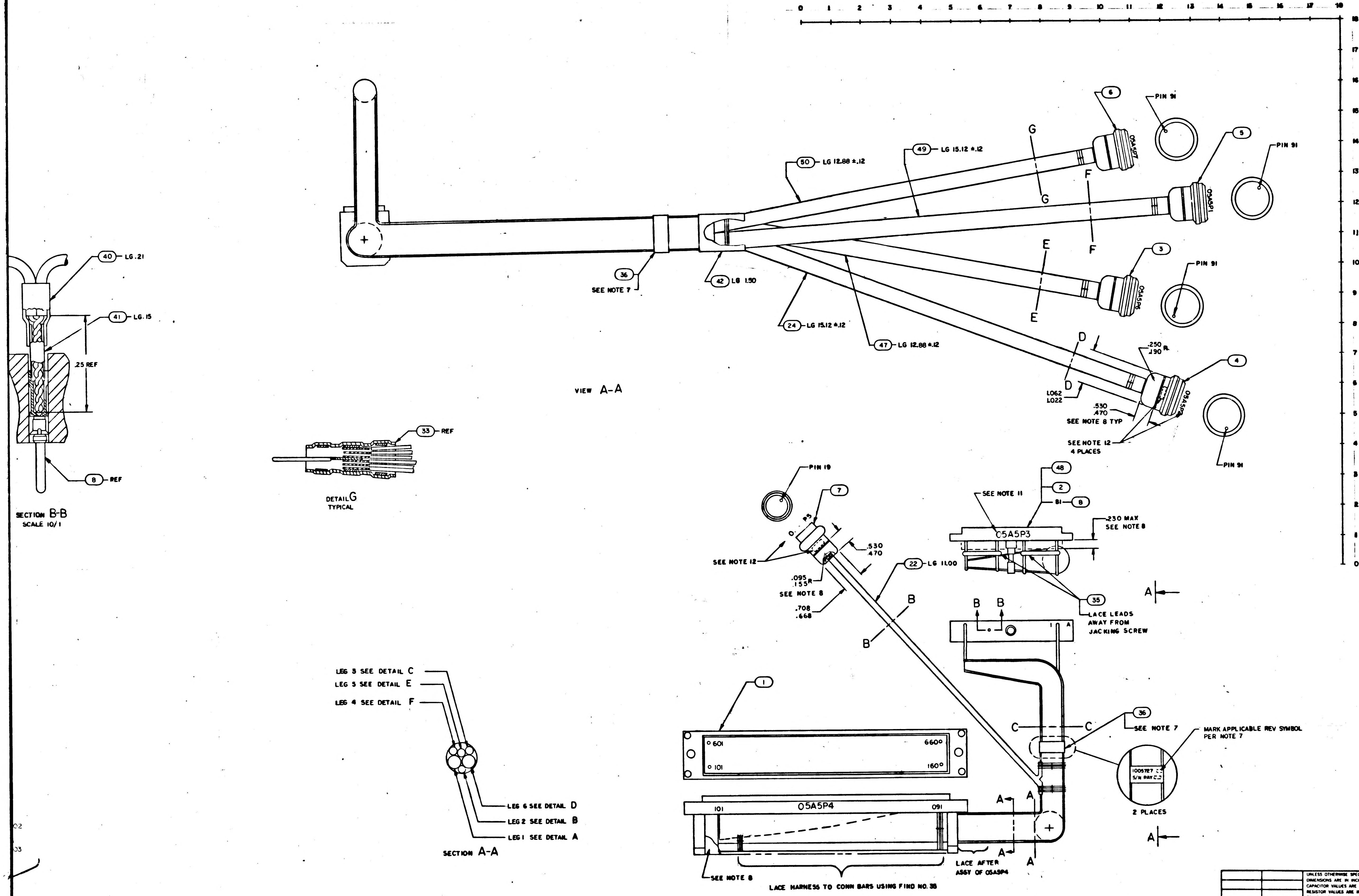
0 1 2 3 4 5 6 7 8 9 10 11 12 13 14 15 16 17 18
18 17 16 15 14 13 12 11 10 9 8 7 6 5 4 3 2 1 0
6
PIN 91
05A5P7
5
PIN 91
05A5P1
G
G
F
F
49 LG 15.12 ±.12
50 LG 12.88 ±.12
E
E
3
PIN 91
05A5P6
36 SEE NOTE 7
42 LG 1.90
24 LG 15.12 ±.12
47 LG 12.88 ±.12
D
D
.250 .190 R
4
1.062 1.022
.530 .470 SEE NOTE 8 TYP
SEE NOTE 12 4 PLACES
05A5P2
PIN 91
VIEW A-A
40 LG .21
41 LG .15
.25 REF
8 REF
SECTION B-B SCALE 10/1
33 REF
DETAIL G TYPICAL
PIN 19
7
SEE NOTE 12
.530 .470
22 LG 11.00
.095 .155 R
SEE NOTE 8
.708 .668
B
B
48
2
81 8
SEE NOTE 11
05A5P3
.230 MAX SEE NOTE 8
35
LACE LEADS AWAY FROM JACKING SCREW
A
B B
LEG 3 SEE DETAIL C
LEG 5 SEE DETAIL E
LEG 4 SEE DETAIL F
LEG 6 SEE DETAIL D
LEG 2 SEE DETAIL B
LEG 1 SEE DETAIL A
SECTION A-A
1
601
660
101
160
05A5P4
101
091
C C
36 SEE NOTE 7
MARK APPLICABLE REV SYMBOL PER NOTE 7
1005727
S/N
2 PLACES
A A
A A
A
LACE AFTER ASSY OF 05A5P4
SEE NOTE 8
LACE HARNESS TO CONN BARS USING FIND NO. 35

Ⓑ REPLACE

QTY REQD	PART OR IDENTIFYING NO.

1005000	
NEXT ASSY	USED ON
APPLICATION	

UNLESS OTHERWISE SPECIFIED
DIMENSIONS ARE IN INCHES
CAPACITOR VALUES ARE IN µf
RESISTOR VALUES ARE IN OHMS
TOLERANCES ON
FRACTIONS ± DECIMALS ±.010 ANGLES ±
DO NOT SCALE THIS DRAWING

MATERIAL

MIT
INSTRUMENTATION
CAMBRIDGE MASS

DRAWN B Kalajian
CHECKED A. Coggins
APPROVED
APPROVED
APPROVED MIT W. Ragan
APPROVED NASA

MASTER

1005727 C E 2/3

SHEET 1

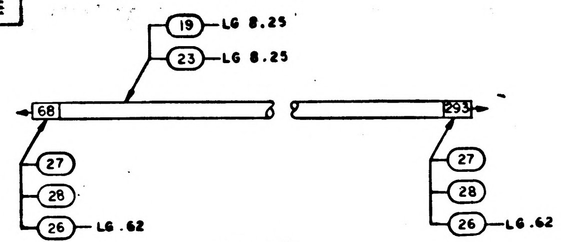

19 LG 8.25
23 LG 8.25
68
293
27
28
26 LG .62
27
28
26 LG .62

DETAIL F
LEG 4
SCALE NONE

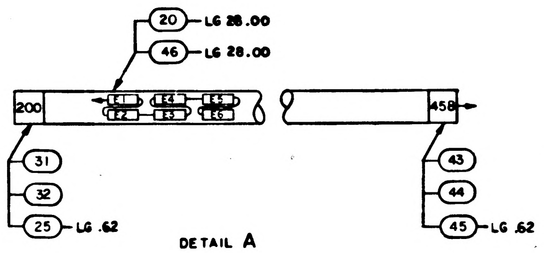

20 LG 28.00
46 LG 28.00
200
458
31
32
25 LG .62
43
44
45 LG .62

DETAIL A
LEG 1
SCALE NONE

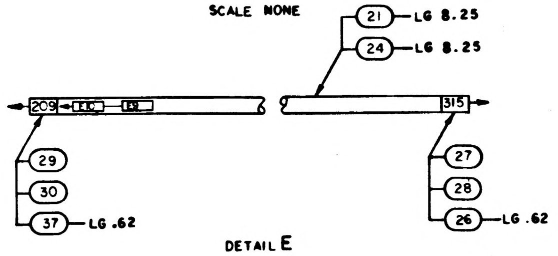

21 LG 8.25
24 LG 8.25
209
315
29
30
37 LG .62
27
28
26 LG .62

DETAIL E
LEG 5
SCALE NONE

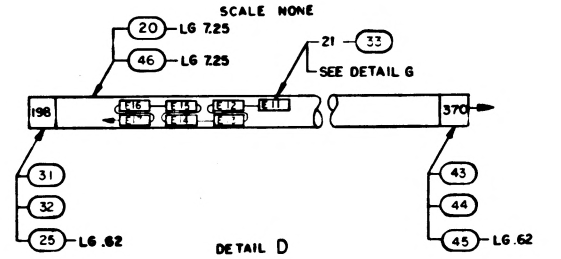

20 LG 7.25
46 LG 7.25
21 33
SEE DETAIL G
198
370
31
32
25 LG .62
43
44
45 LG .62

DETAIL D
LEG 6
SCALE NONE

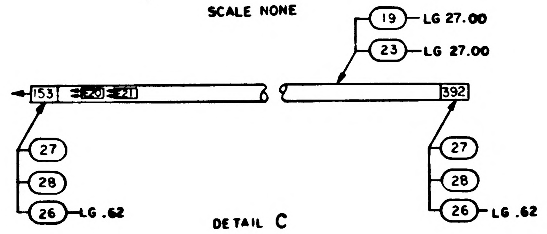

19 LG 27.00
23 LG 27.00
153
392
27
28
26 LG .62
27
28
26 LG .62

DETAIL C
LEG 3
SCALE NONE

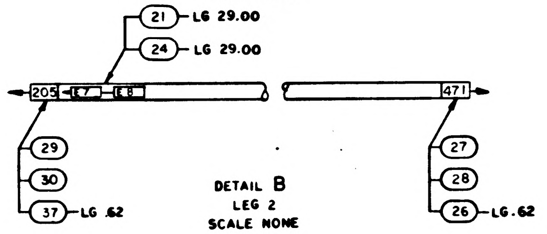

21 LG 29.00
24 LG 29.00
205
471
29
30
37 LG .62
27
28
26 LG .62

DETAIL B
LEG 2
SCALE NONE

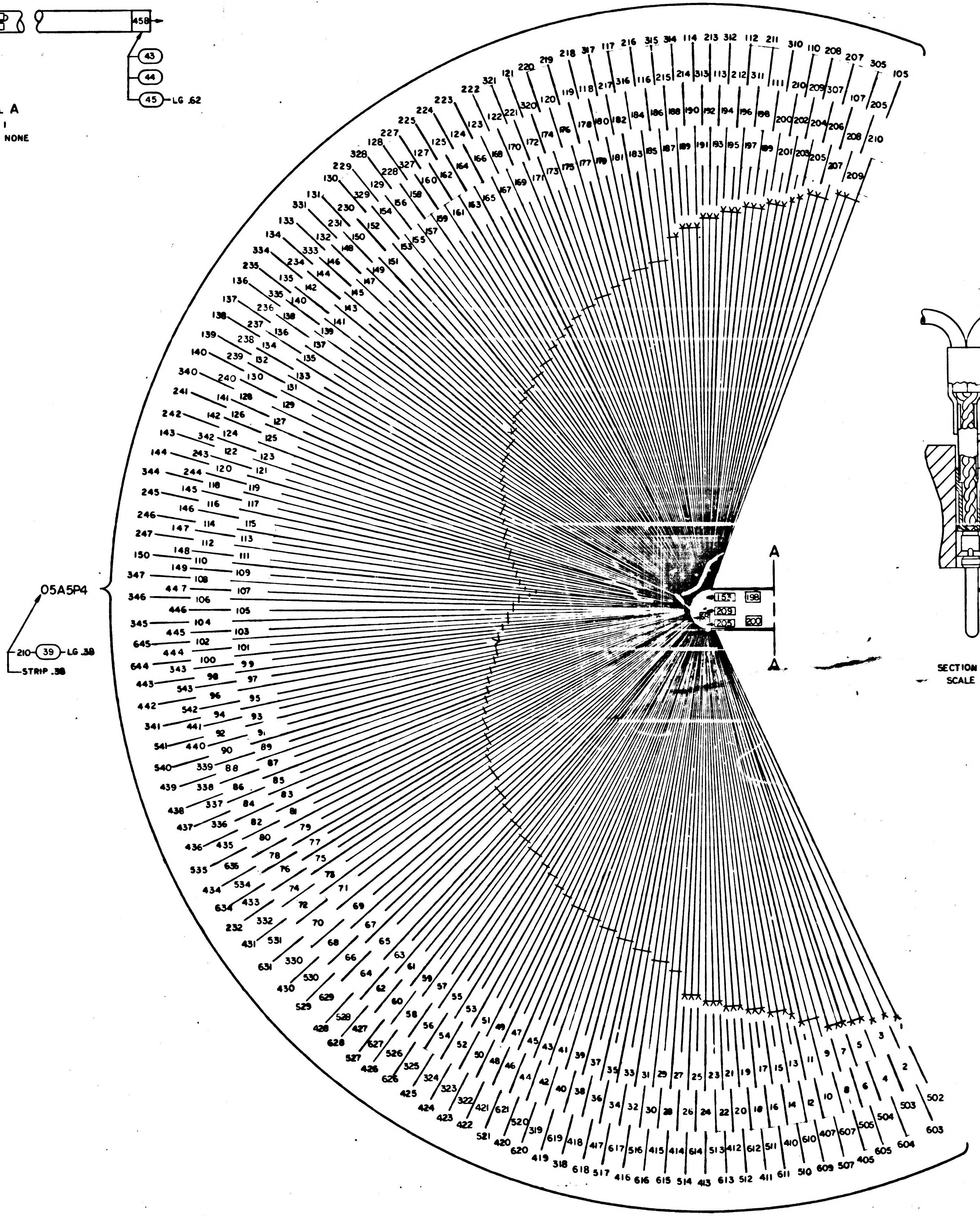

05A5P4
210 39 LG .38
STRIP .38
A
A
153
198
209
205
200

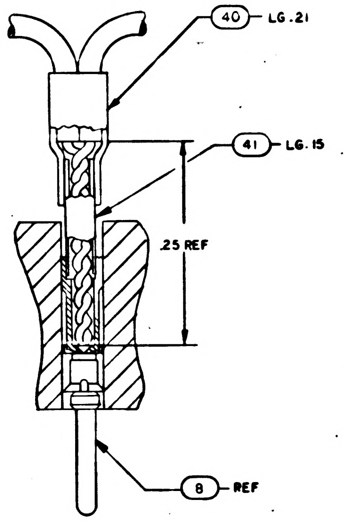

40 LG .21
41 LG .15
.25 REF
8 REF

SECTION B-B
SCALE 10/1

NOTES

1. INTERPRET DRAWING IN ACCORDANCE WITH STANDARDS PRESCRIBED BY MIL-D-70327
2. FOR FABRICATION SEE ND 1002032
3. MIL-I-631 TYPE F, FORM U_2, GRADE A, CLASS 1, CATAGORY 1, FOR FIND NO.47 AWG 5/8 FOR FIND NO. 46 AWG 7/8, FOR FIND NO.24 AWG 1/2, FOR FIND NO. 23 AWG 7/16 FOR FIND NO.22 AWG 2, FOR FIND NO. 49 AWG 1 1/4, FOR FIND NO. 50 AWG 3/4
4. QQ-B-575 FOR FIND NO.20 BRAID SIZE 1/2, AWG 34, FOR FIND NO.19 BRAID SIZE 1/4 AWG 36, FOR FIND NO.21 BRAID SIZE 3/8, AWG 34
5. * * * DENOTES LENGTH IN FEET
6. INSTALL CRIMP STYLE TERMINALS IN ACCORDANCE WITH ND 1002206
7. MARK .100/.060 HIGH PER ND 1002019 AND ND 1002122 TYPE II CLASS 1, USING BLACK MARKING INK 1006271-11 AND SERIALIZE PER ND 1002023
8. ENCAPSULATE INDICATED AREA PER ND 1002009 METHOD E WITH PRIMER, MOUNTING SURFACES OF CONNECTORS MUST NOT BE ENCAPSULATED
9. TEST PER FTM 1005707
10 SOLDER PER ND 1002071, USING SOLDER PER ND1002075 EXCEPT AS SHOWN
11. MARK .200/.180 HIGH PER ND 1002019 AND ND 1002122 TYPE II CLASS 1, USING BLACK MARKING INK 1006271-11. CENTRALIZE AS SHOWN.
12. MARK .070/.050 HIGH PER ND 1002019 AND ND 1002122 TYPE II CLASS 2, USING BLACK MARKING INK 1006271-11. CENTRALIZE AS SHOWN
13 ● SEE INTERNAL CONNECTION CHART
14. ●● ATTATCH FIND NO.18
15. * DENOTES TWO CONNECTIONS TO ONE PIN
16. ** DENOTES TWO CONNECTIONS TO ONE PIN SEE SECTION B-B
17. PARTIAL REFERENCE DESIGNATIONS ARE SHOWN: FOR COMPLETE DESIGNATIONS PREFIX P NOS. IN RUN CHART WITH 05A5
18. NUMBERS PRECEDING BALLOONS DENOTE QUANTITIES

SHEET 1

SYM	ZONE	DESCRIPTION	DR	CHK	DATE	APPROVED
REVISIONS						
B		REPLACES REV A WITH CHANGE PER TDRR 17889				
C		REVISED PER TDRR 18696				

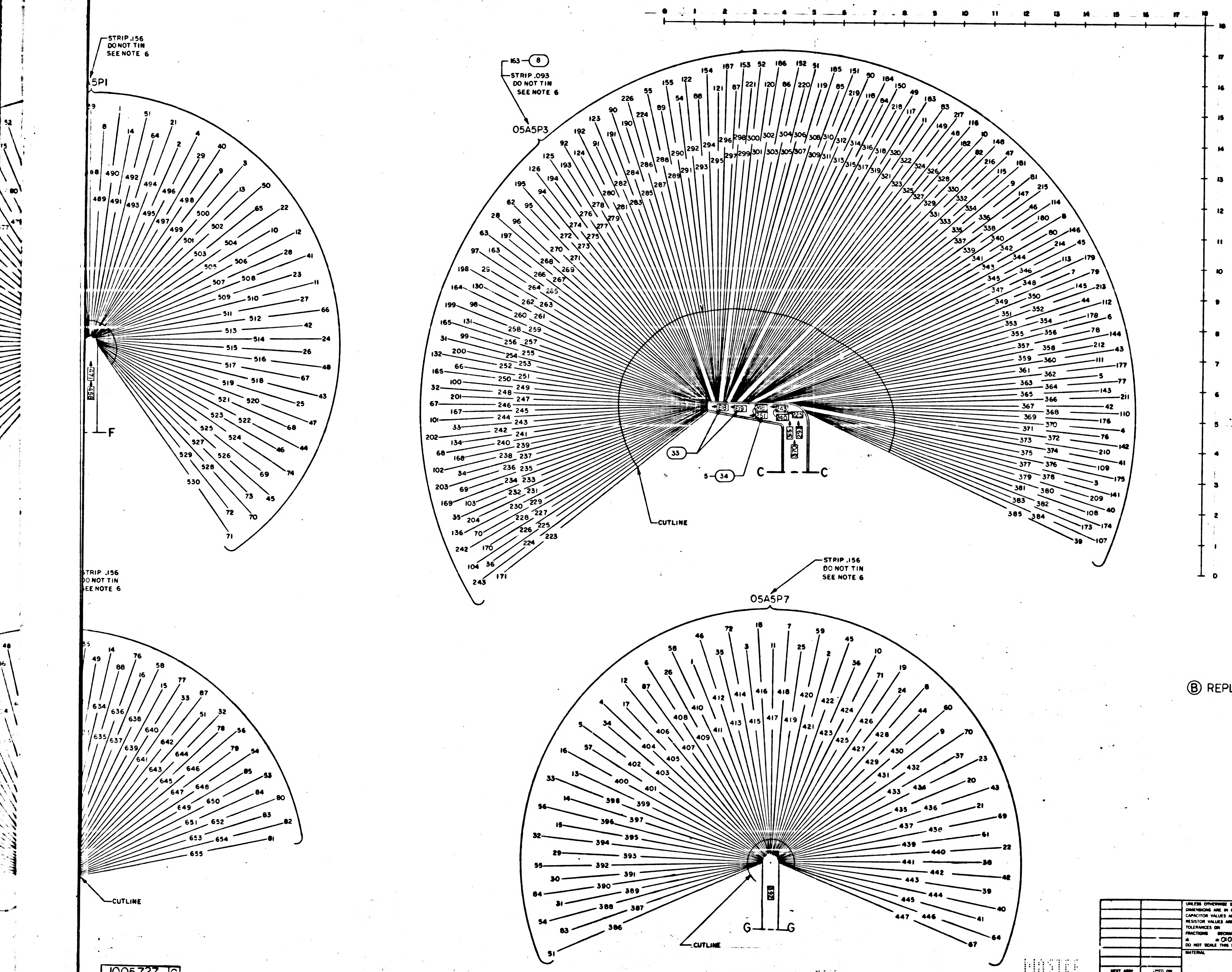

1005727 C
4
3
2
1
STRIP .156 DO NOT TIN SEE NOTE 6
5P1
F
163 — 8
STRIP .093 DO NOT TIN SEE NOTE 6
05A5P3
33
5 — 34
C — C
CUTLINE
STRIP .156 DO NOT TIN SEE NOTE 6
STRIP .156 DO NOT TIN SEE NOTE 6
05A5P7
CUTLINE
CUTLINE
G — G
1005727 C
0 1 2 3 4 5 6 7 8 9 10 11 12 13 14 15 16 17 18

Ⓑ REPLACES REV A WITH CHANGE

QTY REQD	PART OR IDENTIFYING NO.	MATERIAL OR NOTES	NOMENCLATURE OR DESCRIPTION	FIND NO.

LIST OF MATERIALS

UNLESS OTHERWISE SPECIFIED
DIMENSIONS ARE IN INCHES
CAPACITOR VALUES ARE IN μf
RESISTOR VALUES ARE IN OHMS
TOLERANCES ON
FRACTIONS ± DECIMALS ±.010 ANGLES ±
DO NOT SCALE THIS DRAWING
MATERIAL

NEXT ASSY	USED ON
APPLICATION	

MIT
INSTRUMENTATION LAB
CAMBRIDGE, MASS

MANNED SPACECRAFT CENTER
HOUSTON, TEXAS

DRAWN
CHECKED
APPROVED
APPROVED
APPROVED MIT
APPROVED MSC
DATE

WIRING HARNESS
AGC TO PSA & G/N SPACECRAFT

CODE IDENT NO.	SIZE	DRAWING NO.
80230	J	1005727

SCALE 1/1 SHEET 2 OF 4

1005727 C

MASTER

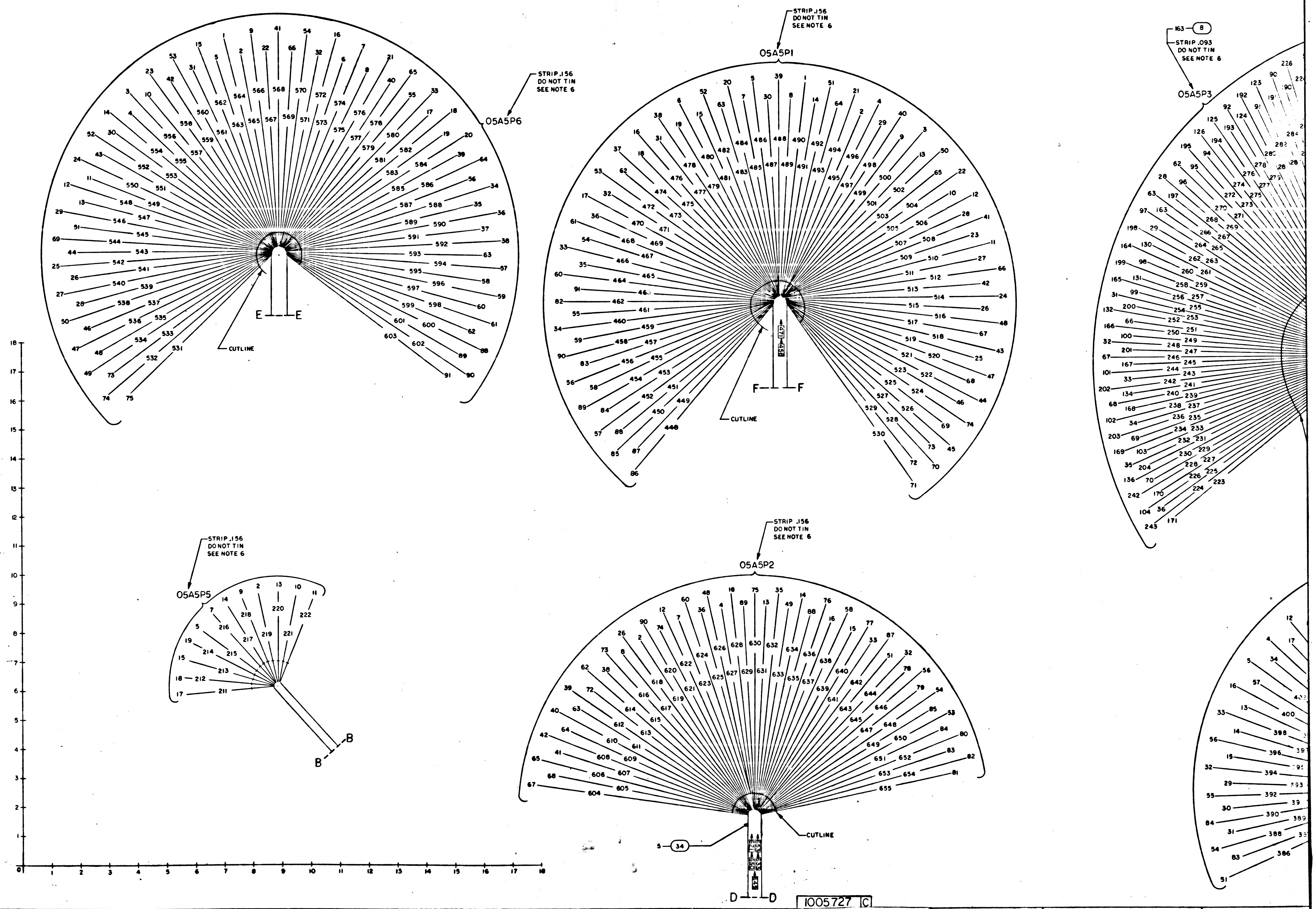

7
6
5
4
D
C
B
A
STRIP .156
DO NOT TIN
SEE NOTE 6
05A5P6
E
E
CUTLINE
STRIP .156
DO NOT TIN
SEE NOTE 6
05A5P1
F
F
CUTLINE
163
8
STRIP .093
DO NOT TIN
SEE NOTE 6
05A5P3
34
STRIP .156
DO NOT TIN
SEE NOTE 6
05A5P5
B
B
STRIP .156
DO NOT TIN
SEE NOTE 6
05A5P2
5
34
CUTLINE
D
D
0
1
2
3
4
5
6
7
8
9
10
11
12
13
14
15
16
17
18

1005727 C

SHEET 2

1005727 C F1/72

TO	
DESTINATION	REMARKS
P4-3.0	*
E1	●
P4-210	*
E1	●
P4-611	*
E1	●
P4-511	*
E1	●
P4-411	*
E1	●
P4-311	*
E2	●
P4-211	*
E2	●
P4-111	*
E2	●
P4-612	*
E2	●
P4-512	*
E3	●
P4-412	*
E3	●
P4-312	*
E3	●
P4-212	* LEG 1
E3	●
P4-112	*
E4	●
P4-613	*
E4	●
P4-513	*
E4	●
P4-413	*
E4	●
P4-313	*
E5	●
P4-213	*
E5	●
P4-113	*
E5	●
P4-614	*
E5	●
P4-114	*
E6	●
P4-214	*
E6	●
P4-514	*
E6	●
P4-414	*
E6	●
P4-314	*
E6	●
P4-610	*
P4-410	*
P4-110	*
P4-510	*
P4-205	*
E7	●
P4-307	*
E7	●
P4-407	*
E7	●
P4-107	
E7	●
P4-105	
E7	●
P4-605	* LEG 2
E8	●
P4-505	*
E8	●
P4-405	*
E8	●
P4-305	*
E8	●
P4-208	*
P4-207	*
P4-609	*●●
P4-329	
-330	
-331	
-229	
-230	
-231	
-129	
-130	LEG 3
-131	
-332	
-232	
-132	
-133	
-E2	
-E20	
P4-333	●●,*

ASSEMBLY INFORMATION CHART

FROM			DESCRIPTION			TO		
REMARKS	DESTINATION	RUN NO.	COLOR	AWG	FIND NO.	RUN NO	DESTINATION	REMARKS
	P6-89	601	YEL	26	9	82	P4-436	
	P6-88	602	RED			84	P4-437	
	P4-336	83	YEL			597	P6-60	
	P4-337	85	RED			596	P6-59	
	P6-37	591	YEL			78	P4-434	
	P6-36	590	RED			81	P4-435	
	P4-138	134	YEL			582	P6-18	
	P4-139	132	RED			581	P6-17	
	P6-21	576	YEL			143	P4-234	
	P6-8	575	RED			140	P4-235	
	P4-134	144	YEL			567	P6-22	
	P4-135	141	RED			566	P6-9	
	P6-42	559	YEL			137	P4-236	
	P6-23	558	RED			135	P4-237	
	P4-136	138	YEL			551	P6-43	
	P4-137	136	RED			544	P6-69	
	P6-35	589	YEL			133	P4-238	
	P6-34	588	RED			131	P4-239	
	P4-346	106	YEL			574	P6-7	
	P4-347	108	RED			573	P6-6	
	P6-2	565	YEL			114	P4-246	
	P6-1	564	RED			112	P4-247	
	P4-438	86	YEL			557	P6-10	
	P4-439	88	RED			556	P6-3	
	P6-24	550	YEL			87	P4-338	
	P6-11	549	RED			89	P4-339	
	P4-440	91	YEL			587	P6-56	
	P4-441	93	RED			579	P6-55	
	P6-33	580	YEL			128	P4-340	
	P6-32	571	RED			94	P4-341	
	P4-240	129	YEL			572	P6-16	
	P4-241	126	RED			562	P6-15	
	P6-5	563	YEL			130	P4-140	
	P6-14	554	RED			127	P4-141	
	P4-446	105	YEL			543	P6-44	
	P4-447	107	RED			542	P6-25	
	P6-4	555	YEL			96	P4-442	
	P6-13	547	RED			98	P4-443	
	P4-342	123	YEL			548	P6-12	
	P4-343	99	RED			540	P6-27	
	P6-54	570	YEL			124	P4-242	
	P6-53	560	RED			121	P4-243	
	P4-142	125	YEL			561	P6-31	
	P4-143	122	RED			552	P6-52	
	P6-30	553	YEL			101	P4-444	
	P6-51	545	RED			103	P4-445	
	P4-344	118	YEL			546	P6-29	
	P4-345	104	RED			538	P6-50	
	P6-28	539	YEL			119	P4-244	
	P6-49	534	RED			116	P4-245	
	P4-144	120	YEL			537	P6-46	
	P4-145	117	RED			533	P6-73	
	P6-20	584	YEL			142	P4-334	
	P6-19	583	RED			139	P4-335	
	P4-540	90	YEL			532	P6-74	
	P4-541	92	RED			531	P6-75	
	P6-58	595	YEL			109	P4-149	
	P6-57	594	RED			110	P4-150	
	P4-424	52	YEL			439	P7-61	
	P4-425	54	RED			430	P7-60	
	P7-38	441	YEL			53	P4-324	
	P7-37	433	RED			55	P4-325	
	P4-422	48	YEL			420	P7-59	
	P4-423	50	RED			410	P7-58	
	P7-36	423	YEL			49	P4-322	
	P7-35	413	RED			51	P4-323	
	P4-416	32	YEL			443	P7-39	
	P4-417	35	RED			435	P7-20	
	P7-40	444	YEL			183	P4-316	
	P7-21	437	RED			180	P4-317	
	P4-216	184	YEL			445	P7-41	
	P4-217	181	RED			440	P7-22	
	P7-67	447	YEL			185	P4-116	
	P7-42	442	RED			182	P4-117	
	P4-418	37	YEL			426	P7-19	
	P4-419	40	RED			416	P7-18	
	P7-8	428	YEL			38	P4-318	
	P7-7	418	RED			41	P4-319	
	P4-122	169	YEL			432	P7-70	
	P4-123	167	RED			425	P7-71	
	P7-9	431	YEL			178	P4-218	
	P7-2	421	RED			176	P4-219	
	P4-118	179	YEL			434	P7-23	
	P4-119	177	RED			424	P7-10	
	P7-43	436	YEL			44	P4-420	
	P7-24	427	RED			47	P4-421	
	P4-320	173	YEL			438	P7-69	
	P4-321	170	RED			429	P7-44	
	P7-57	401	YEL			174	P4-220	
	P7-56	396	RED			171	P4-221	
	P4-120	175	YEL			403	P7-34	
	P4-121	172	RED			398	P7-33	
	P7-45	422	YEL			164	P4-224	
	P7-72	414	RED			162	P4-225	
	P4-124	165	YEL			418	P7-25	
	P4-125	163	RED			412	P7-46	
	P7-17	405	YEL			168	P4-222	
	P7-16	400	RED			166	P4-223	
	P4-616	30	YEL			285	P3-190	
	P4-617	33	RED			283	P3-191	
	P3-192	280	YEL			31	P4-516	
	P3-193	277	RED			34	P4-517	
	P4-618	36	YEL			275	P3-194	
	P4-619	39	RED			272	P3-195	
	P3-90	284	YEL			77	P4-534	
	P3-91	281	RED			80	P4-535	
	P4-620	42	YEL			282	P3-123	
	P4-621	45	RED			279	P3-124	
	P3-125	276	YEL	26	9	43	P4-520	
	P3-126	274	RED			46	P4-521	

ASSEMBLY INFORMATION CHART

FROM			DESCRIPTION			TO		
REMARKS	DESTINATION	RUN NO.	COLOR	AWG	FIND NO.	RUN NO.	DESTINATION	REMARKS
	P4-634	76	YEL	26	9	273	P3-94	
	P4-635	79	RED			271	P3-95	
	P3-224	287	YEL	26	9	100	P4-644	
	P3-226	286	RED			102	P4-645	
	P4-542	95	YEL	26	9	278	P3 92	
*	P4-543	97	RED			270	P3 62	
	P7-51	386	YEL	26	10	145	P4-333	*
	P4-127	161				415	P7-3	
	P7-1	411				159	P4 327	
	P4-227	160				408	P7-6	
	P7-11	417				157	P4-228	
*	P4-215	187				407	P7-87	
	P7-64	446				187	P4-215	*
*	P4-502	1				382	P3-174	
	P3-40	380				3	P4-503	*
*	P4-504	5				385	P3-39	
	P3-108	381				2	P4-603	*
*	P4-604	4				383	P3-173	
	P1-63	483				1	P4-502	*
*	P4-503	3				503	P1-65	
	P1-91	463				5	P4-504	*
*	P4-603	2				493	P1-64	
	P1-62	473		26	10	4	P4-604	*
	P3-29	263	YEL	24	38	609	P2-64	
	P2-85	649	YEL	24	12	236	P3-203	
	P2-84	651	RED			231	P3-204	
	P3-243	224	YEL			613	P2-72	
	P3-242	228	RED			616	P2-73	
	P2-12	622	YEL			250	P3-166	
	P2-26	618	RED			245	P3-167	
	P3-199	258	YEL			627	P2-4	
	P3-200	253	RED			631	P2-13	
	P2-15	639	YEL			239	P3-168	
	P2-14	634	RED			234	P3-169	
	P3-201	247	YEL			637	P2-16	
	P3-202	242	RED			644	P2-32	
	P2-33	641	YEL	24	12	227	P3-170	
	P2-56	646	RED			223	P3-171	
	P3-101	244	YEL	22	15	606	P2-65	
	P3-134	241	RED			607	P2-41	
	P3-102	238	GRN			610	P2-40	
	P2-89	629	YEL			257	P3-131	
	P2-60	624	RED			260	P3-164	
	P2-90	620	GRN			256	P3-165	
	P3-163	265	YEL			628	P2-18	
	P3-197	267	RED			632	P2-35	
	P3-198	262	GRN			625	P2-36	
	P2-58	638	YEL			264	P3-97	
	P2-87	642	RED			259	P3-98	
	P2-98	635	GRN			261	P3-130	
	P3-99	255	YEL			623	P2-7	
	P3-100	249	RED			619	P2-2	
	P3-132	252	GRN			617	P2-8	
	P2-67	604	YEL			233	P3-103	
	P2-68	605	RED			226	P3-104	
	P2-42	608	GRN			230	P3-136	
	P6-26	541	YEL	22	15	115	P4-146	
	P6-47	536	RED			113	P4-147	
	P6-48	535	GRN			111	P4-148	
*	P4-543	97	YEL	22	16	612	P2-39	
	P3-28	268	RED			611	P2-63	
	P3-63	266	GRN			615	P2-38	
	P3-96	269	BRN			614	P2-62	
	P2-83	653	YEL	24	11	251	P3-66	
	-82	654	RED				E-18	●
●●	-54	648	SHLD			246	P3-67	●●
	-74	621	YEL			248	P3-32	
	-75	630	RED				E-18	●
●●	-48	626	SHLD					●
	-49	633	YEL			243	P3-33	
	-76	636	RED				E-19	●
●●	-77	640	SHLD			237	P3-34	●●
	-53	650	YEL			240	P3-68	
	-81	655	RED				E-19	●
●●	-80	652	SHLD					●
	-78	645	YEL	24	11	225	P3-36	
	-79	647	RED			232	P3-35	
●●	P2-51	643	SHLD			229	P3-70	●●
	P5-17	211	YEL	22	17	599	P6-62	TWIST 12 WIRES TOGETHER
	-18	212				593	-63	
	-19	214				598	-61	
	-7	216				592	-38	
	-9	218				586	-64	
	-10	221				578	-65	
	-11	222				585	-39	
	-2	219	YEL		17	577	-40	
	-5	215	BLK		18	603	-91	
	-15	213	BLK			602	-90	
	-13	220	BLK			569	-66	
	P5-14	217	BLK	22	18	568	P6-41	

1005727	C

REVISIONS						
SYM	ZONE	DESCRIPTION	DR	CHK	DATE	APPROVED
B		REPLACES REVA WITH CHANGES PER TDRR 19869				
C		REVISED PER TDRR 18696	W.E.K.		5/22/65	

INTERNAL CONNECTION CHART

REMARKS	FROM	FIND NO.	LENGTH	TO	REMARKS
	E9	18	3.00	E10	
	E10		—	203	*
	E8		2.00	E7	
	E7		—	203	*
	E6		3.00	E5	
	E5		2.00	E4	
	E4		3.00	E3	
	E3		2.00	E2	
	E2		3.00	E1	
	E1		—	186	
	E11		3.00	E12	
	E12		3.00	E13	
	E13		3.00	E14	
	E14		3.00	E15	
	E15		2.00	E16	
	E16		3.00	E17	
	E17		—	29	
	E18		—	254	
	E19		—	235	
	251 ●●●		3.00	248 ●●●	
	240 ●●●	18	3.00	243 ●●●	
	E20	10	—	156	
	E20	10	—	59	
	E21	10	—	158	
	E21	10	—	60	

●●● DENOTES FERRULE

1005727 C

Ⓑ REPLACES REVA WITH CHANGE

QTY REQD	PART OR IDENTIFYING NO.	MATERIAL OR NOTES	NOMENCLATURE OR DESCRIPTION	FIND NO.

LIST OF MATERIALS

NEXT ASSY	USED ON
APPLICATION	

UNLESS OTHERWISE SPECIFIED
DIMENSIONS ARE IN INCHES
CAPACITOR VALUES ARE IN μf
RESISTOR VALUES ARE IN OHMS
TOLERANCES ON
FRACTIONS ± DECIMALS ± ANGLES ±
DO NOT SCALE THIS DRAWING
MATERIAL

MIT
INSTRUMENTATION LAB
CAMBRIDGE MASS

DRAWN
CHECKED
APPROVED
APPROVED
APPROVED MIT
APPROVED MSC
DATE 3-26-65

MANNED SPACECRAFT CENTER
HOUSTON, TEXAS

WIRING HARNESS
AGC TO PSA & G/N TO SPACECRAFT

CODE IDENT NO. 80230
SIZE J
DRAWING NO. 1005727
SCALE NONE
SHEET 3 OF 4

MASTER

F 272

ASSEMBLY INFORMATION CHART

FROM			DESCRIPTION			TO		
REMARKS	DESTINATION	RUN NO.	COLOR	AWG	FIND NO.	RUN NO.	DESTINATION	REMARKS
	P3-4	370	YEL	26	9	198	P4-211	*
	-5	363	RED				E12	●
	-212	359	YEL			199	P4-111	*
	-213	352	RED				E12	●
	-177	362	YEL			19	P4-612	*
	-178	355	RED				E12	●
	-41	374	YEL			197	P4-311	*
	-42	367	RED				E12	●
	-210	373	YEL			200	P4-310	*
	-211	366	RED				E11	●
	-175	376	YEL			201	P4-210	*
	-176	369	RED				E11	●
	-142	372	YEL			16	P4-611	*
	-143	365	RED				E11	●
	-109	375	YEL			17	P4-511	*
	-110	368	RED				E11	●
	-76	371	YEL			18	P4-411	*
	-77	364	RED				E11	●
	-144	358	YEL			20	P4-512	*
	-145	351	RED				E13	●
	-111	361	YEL			21	P4-412	*
	-112	354	RED				E13	●
	-78	357	YEL			194	P4-312	*
	-79	350	RED				E13	●
	-43	360	YEL			195	P4-212	*
	-44	353	RED				E13	●
	-6	356	YEL			196	P4-112	* LEG 6
	-7	349	RED				E14	●
	-214	345	YEL			22	P4-613	*
	-215	338	RED				E14	●
	-179	348	YEL			23	P4-513	*
	-180	341	RED				E14	●
	-146	344	YEL			24	P4-413	*
	-147	337	RED				E14	●
	-113	347	YEL			191	P4-313	*
	-114	340	RED				E15	●
	-80	343	YEL			192	P4-213	*
	-81	336	RED				E15	●
	-45	346	YEL			193	P4-113	*
	-46	339	RED				E15	●
	-8	342	YEL			25	P4-614	*
	-9	335	RED				E15	●
	-216	331	YEL			26	P4-514	*
	-217	324	RED				E16	●
	-181	334	YEL			27	P4-414	*
	-182	327	RED				E16	●
	-148	330	YEL			188	P4-314	*
	-149	323	RED				E16	●
	-47	332	YEL			190	P4-114	*
	-48	325	RED				E17	●
	82	329	YEL			28	P4-615	
	-83	322	RED				E17	●
	-115	333	YEL		9	189	P4-214	*
	-116	326	RED				E17	●
	-3	377	YEL		10	13	P4-610	*
	-141	378	YEL		10	15	P4-410	*
	-209	379	YEL	26	10	202	P4-110	*
●●	P3-107	384	SHLD					
	P3-84	315	YEL	26	9	209	P4-205	*
	-85	309	RED				E9	●
	-220	305	YEL			205	P4-307	*
	-221	299	RED				E9	●
	-185	308	YEL			11	P4-407	*
	-186	302	RED				E9	●
	-218	317	YEL			6	P4-605	*
	-219	311	RED				E9	●
	-183	320	YEL			7	P4-505	*
	-184	314	RED				E10	●
	-150	316	YEL			8	P4-405	*
	-151	310	RED				E10	● LEG 5
	-117	319	YEL			208	P4-305	*
	-118	313	RED				E10	●
	-49	318	YEL			9	P4-607	
	-50	312	RED				E10	●
	-51	306	YEL		9	10	P4-507	
	-52	300	RED				E10	●
	-11	321	YEL		10	204	P4-208	*
	-10	328	YEL	26	10	206	P4-207	*
●●	P3-187	296	SHLD			12	P4-609	*,●●
	P3-88	293	YEL	26	9	68	P4-430	
	-54	291	RED			57	-526	
	-86	303	YEL		9	70	-631	
	-55	288	RED			56	-626	
	-87	297	YEL		10	64	-428	
	-119	307				71	-531	
	-120	301				62	-628	LEG 4
	-122	292				65	-629	
	-152	304				72	-431	
	-121	295				63	-528	
	-153	298				66	-529	
	-154	294				67	-530	
** {	-155	290				61	-427	
	-155	290	YEL	26	10	58	-426	
●●	P3-89	289	SHLD			75	P4-433	●●

ASSEMBLY INFORMATION CHART

FROM			DESCRIPTION			TO		
REMARKS	DESTINATION	RUN NO.	COLOR	AWG	FIND NO.	RUN NO.	DESTINATION	REMARKS
	P1-90	458	YEL	26	9	200	P4-310	*
	-61	468	RED				E1	●
	-38	478	YEL			201	P4-210	*
	-39	488	RED				E1	●
	-40	498	YEL			16	P4-611	*
	-41	508	RED				E1	●
	-67	517	YEL			17	P4-511	*
	-66	512	RED				E1	●
	-89	454	YEL			18	P4-411	*
	-60	464	RED				E1	●
	-37	474	YEL			197	P4-311	*
	-20	484	RED				E2	●
	-21	494	YEL			198	P4-211	*
	-22	504	RED				E2	●
	-42	513	YEL			199	P4-111	*
	-68	521	RED				E2	●
	-88	451	YEL			19	P4-612	*
	-59	459	RED				E2	●
	-36	469	YEL			20	P4-512	*
	-19	479	RED				E3	●
	-8	489	YEL			21	P4-412	*
	-9	499	RED				E3	●
	-23	509	YEL			194	P4-312	*
	-43	518	RED				E3	●
	-87	449	YEL			195	P4-212	* LEG 1
	-58	455	RED				E3	●
	-35	465	YEL			196	P4-112	*
	-18	475	RED				E4	●
	-7	485	YEL			22	P4-613	*
	-2	495	RED				E4	●
	-10	505	YEL			23	P4-513	*
	-24	514	RED				E4	●
	-44	522	YEL			24	P4-413	*
	-69	525	RED				E4	●
	-86	448	YEL			191	P4-313	*
	-57	452	RED				E5	●
	-34	460	YEL			192	P4-213	*
	-17	470	RED				E5	●
	-6	480	YEL			193	P4-113	*
	-1	490	RED				E5	●
	-3	500	YEL			25	P4-614	*
	-11	510	RED				E5	●
	-5	486	YEL			190	P4-114	*
	-4	496	RED				E6	●
	-33	466	YEL			189	P4-214	*
	-16	476	RED				E6	●
	-25	519	YEL			26	P4-514	*
	-45	526	RED				E6	●
	-71	530	YEL			27	P4-414	*
	-70	528	RED				E6	●
	-85	450	YEL		9	188	P4-314	*
	-56	456	RED				E6	●
	-12	506	YEL		10	13	P4-610	*
	-46	523	YEL		10	15	P4-410	*
	-72	529	YEL		10	202	P4-110	*
	-26	515	YEL	26	10	14	P4-510	*
●●	P1-73	527	SHLD					
	P1-32	471	YEL	26	9	209	P4-205	*
	-15	481	RED				E7	●
	-14	491	YEL			205	P4-307	*
	-13	501	RED				E7	●
	-27	511	YEL			11	P4-407	*
	-47	520	RED				E7	●
	-83	457	YEL			207	P4-107	
	-54	467	RED				E7	●
	-31	477	YEL			210	P4-105	
	-30	487	RED				E7	●
	-29	497	YEL			6	P4-605	* LEG 2
	-28	507	RED				E8	●
	-48	516	YEL			7	P4-505	*
	-74	524	RED				E8	●
	-82	462	YEL			8	P4-405	*
	-53	472	RED				E8	●
	-52	482	YEL		9	208	P4-305	*
	-51	492	RED				E8	●
	-55	461	YEL		10	204	P4-208	*
	-84	453	YEL	26	10	206	P4-207	*
●●	P1-50	502	SHLD			12	P4-609	*●●
	P7-55	392	YEL	26	10	153	P4-329	
	-32	394				69	-330	
	-15	395				148	-331	
	-83	387				154	-229	
	-54	388				151	-230	
	-31	389				149	-231	
	-5	402				155	-129	
	-14	397				152	-130	LEG 3
	-30	391				150	-131	
	-4	404				73	-332	
	-13	399				74	-232	
	-29	393				147	-132	
	-12	406				146	-133	
	-26	409					-E21	
	P7-84	390	YEL	26	10		-E20	
					SHLD	145	P4-333	●●,*

ASSEMBLY INFORMATION CHART

FROM			DESCRIPTION			TO		
REMARKS	DESTINATION	RUN NO.	COLOR	AWG	FIND NO.	RUN NO	DESTINATION	REMARK
	P6-89	601	YEL	26	9	82	P4-436	
	P6-88	602	RED			84	P4-437	
	P4-336	83	YEL			597	P6-60	
	P4-337	85	RED			596	P6-59	
	P6-37	591	YEL			78	P4-434	
	P6-36	590	RED			81	P4-435	
	P4-138	134	YEL			582	P6-18	
	P4-139	132	RED			581	P6-17	
	P6-21	576	YEL			143	P4-234	
	P6-8	575	RED			140	P4-235	
	P4-134	144	YEL			567	P6-22	
	P4-135	141	RED			566	P6-9	
	P6-42	559	YEL			137	P4-236	
	P6-23	558	RED			135	P4-237	
	P4-136	138	YEL			551	P6-43	
	P4-137	136	RED			544	P6-69	
	P6-35	589	YEL			133	P4-238	
	P6-34	588	RED			131	P4-239	
	P4-346	106	YEL			574	P6-7	
	P4-347	108	RED			573	P6-6	
	P6-2	565	YEL			114	P4-246	
	P6-1	564	RED			112	P4-247	
	P4-438	86	YEL			557	P6-10	
	P4-439	88	RED			556	P6-3	
	P6-24	550	YEL			87	P4-338	
	P6-11	549	RED			89	P4-339	
	P4-440	91	YEL			587	P6-56	
	P4-441	93	RED			579	P6-55	
	P6-33	580	YEL			128	P4-340	
	P6-32	571	RED			94	P4-341	
	P4-240	129	YEL			572	P6-16	
	P4-241	126	RED			562	P6-15	
	P6-5	563	YEL			130	P4-140	
	P6-14	554	RED			127	P4-141	
	P4-446	105	YEL			543	P6-44	
	P4-447	107	RED			542	P6-25	
	P6-4	555	YEL			96	P4-442	
	P6-13	547	RED			98	P4-443	
	P4-342	123	YEL			548	P6-12	
	P4-343	99	RED			540	P6-27	
	P6-54	570	YEL			124	P4-242	
	P6-53	560	RED			121	P4-243	
	P4-142	125	YEL			561	P6-31	
	P4-143	122	RED			552	P6-52	
	P6-30	553	YEL			101	P4-444	
	P6-51	545	RED			103	P4-445	
	P4-344	118	YEL			546	P6-29	
	P4-345	104	RED			538	P6-50	
	P6-28	539	YEL			119	P4-244	
	P6-49	534	RED			116	P4-245	
	P4-144	120	YEL			537	P6-46	
	P4-145	117	RED			533	P6-73	
	P6-20	584	YEL			142	P4-334	
	P6-19	583	RED			139	P4-335	
	P4-540	90	YEL			532	P6-74	
	P4-541	92	RED			531	P6-75	
	P6-58	595	YEL			109	P4-149	
	P6-57	594	RED			110	P4-150	
	P4-424	52	YEL			439	P7-61	
	P4-425	54	RED			430	P7-60	
	P7-38	441	YEL			53	P4-324	
	P7-37	433	RED			55	P4-325	
	P4-422	48	YEL			420	P7-59	
	P4-423	50	RED			410	P7-58	
	P7-36	423	YEL			49	P4-322	
	P7-35	413	RED			51	P4-323	
	P4-416	32	YEL			443	P7-39	
	P4-417	35	RED			435	P7-20	
	P7-40	444	YEL			183	P4-316	
	P7-21	437	RED			18C	P4-317	
	P4-216	184	YEL			445	P7-41	
	P4-217	181	RED			440	P7-22	
	P7-67	447	YEL			185	P4-116	
	P7-42	442	RED			182	P4-117	
	P4-418	37	YEL			426	P7-19	
	P4-419	40	RED			416	P7-18	
	P7-8	428	YEL			38	P4-318	
	P7-7	418	RED			41	P4-319	
	P4-122	169	YEL			432	P7-70	
	P4-123	167	RED			425	P7-71	
	P7-9	431	YEL			178	P4-218	
	P7-2	421	RED			176	P4-219	
	P4-118	179	YEL			434	P7-23	
	P4-119	177	RED			424	P7-10	
	P7-43	436	YEL			44	P4-420	
	P7-24	427	RED			47	P4-421	
	P4-320	173	YEL			438	P7-69	
	P4-321	170	RED			429	P7-44	
	P7-57	401	YEL			174	P4-220	
	P7-56	396	RED			171	P4-221	
	P4-120	175	YEL			403	P7-34	
	P4-121	172	RED			398	P7-33	
	P7-45	422	YEL			164	P4-224	
	P7-72	414	RED			162	P4-225	
	P4-124	165	YEL			418	P7-25	
	P4-125	163	RED			412	P7-46	
	P7-17	405	YEL			168	P4-222	
	P7-16	400	RED			166	P4-223	
	P4-616	30	YEL			285	P3-190	
	P4-617	33	RED			283	P3-191	
	P3-192	280	YEL			31	P4-516	
	P3-193	277	RED			34	P4-517	
	P4-618	36	YEL			275	P3-194	
	P4-619	39	RED			272	P3-195	
	P3-90	284	YEL			77	P4-534	
	P3-91	281	RED			80	P4-535	
	P4-620	42	YEL			282	P3-123	
	P4-621	45	RED			279	P3-124	
	P3-125	276	YEL	26	9	43	P4-520	
	P3-128	274	RED			46	P4-521	

REVISIONS								
SYM	ZONE	DESCRIPTION	DR	CHK	DATE	APPROVED		
B		REPLACES REV A WITH CHANGES PER TDRR 17889						
C		REVISED PER TDRR 18696			5/31/65			

Ⓑ REPLACES REV A WITH CHANGE

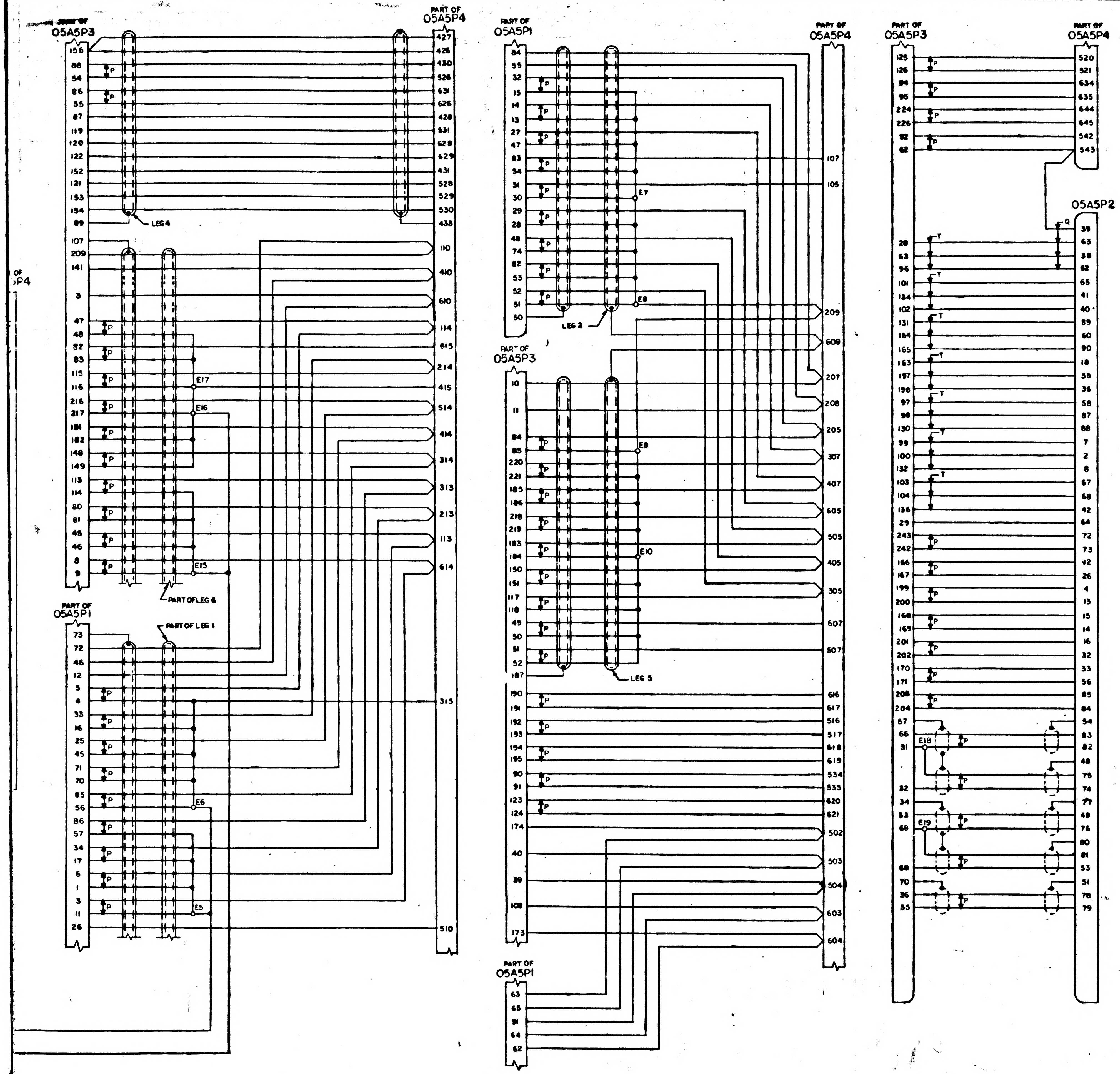

	QTY REQD	PART OR IDENTIFYING NO.	MATERIAL OR NOTES	NOMENCLATURE OR DESCRIPTION	FIND NO.
	☒	1005798		WIRING DIAGRAM	REF
* * *	1.2	SEE NOTE 3		INSULATION, ELEC	50
* * *	1.5	SEE NOTE 3		INSULATION, ELEC	49
	1	1010812-1		SEAL, RUBBER	48
* * *	4	SEE NOTE 3		INSULATION, ELEC	47
* * *	3	SEE NOTE 3		INSULATION, ELEC	46
* * *	.5	1006322-022		INSULATION, ELEC	45
	2	1000242-37		FERRULE, ELEC	44
	2	1000243-41		FERRULE, ELEC	43
* * *	.2	1006322-025		INSULATION, ELEC	42
* * *	.2	1006322-001		INSULATION, ELEC	41
* * *	.2	1006322-004		INSULATION, ELEC	40
* * *	43	1006322-007		INSULATION, ELEC	39
* * *	3.5	1010789-001		WIRE, ELEC AWG 24 YEL	38
* * *	0.5	1006322-018		INSULATION, ELEC	37
	2	MS18035-1-2		BAND MARKER, CABLE	36
	AR	1012507-003		TAPE, LACING	35
	10	1010402-2		SLEEVE, SOLDER	34
	21	1010402-1		SLEEVE, SOLDER	33
	2	1000242-32		FERRULE, ELEC	32
	2	1000243-34		FERRULE, ELEC	31
	2	1000242-26		FERRULE, ELEC	30
	2	1000243-27		FERRULE, ELEC	29
	6	1000242-29		FERRULE ELEC	28
	6	1000243-31		FERRULE, ELEC	27
* * *	0.5	1006322-019		INSULATION, ELEC	26
* * *	1.0	1006322-020		INSULATION ELEC	25
* * *	7	SEE NOTE 3		INSULATION, ELEC	24
* * *	3.6	SEE NOTE 3		INSULATION, ELEC	23
* * *	3.5	SEE NOTE 3		INSULATION, ELEC	22
* * *	3.7	SEE NOTE 4		WIRE, BRAID	21
* * *	3.6	SEE NOTE 4		WIRE, BRAID	20
* * *	3.5	SEE NOTE 4		WIRE, BRAID	19
* * *	22	1010789-007		WIRE, ELEC, AWG 22, BLK	18
* * *	11	1010789-006		WIRE, ELEC, AWG 22, YEL	17
* * *	4	1010789-010		WIRE, ELEC, AWG 22, 4 COND, TW	16
* * *	3	1010789-009		WIRE, ELEC, AWG 22, 3 COND, TW	15
* * *	20	1010789-003		WIRE, ELEC, AWG 24 2 COND, TW	12
* * *	18	1010789-012		WIRE, ELEC, AWG 24, 2 COND, SHLD	11
* * *	170	1010789-016		WIRE, ELEC, AWG 26, YEL	10
* * *	365	1010789-017		WIRE, ELEC, AWG 26, 2 COND, TW	9
	244	1010738-5		CONTACT, ELEC, PIN	8
	1	1010771-013		CONNECTOR, PLUG, ELEC	7
	1	1010771-101		CONNECTOR, PLUG, ELEC	6
	1	1010771-102		CONNECTOR, PLUG, ELEC	5
	1	1010771-103		CONNECTOR, PLUG, ELEC	4
	1	1010771-104		CONNECTOR, PLUG, ELEC	3
	1	1010815-144		CONNECTOR, PLUG, ELEC	2
	1	1003731		CONNECTOR ASSY, 360 CONTACTS	1

LIST OF MATERIALS

NEXT ASSY	USED ON	UNLESS OTHERWISE SPECIFIED DIMENSIONS ARE IN INCHES CAPACITOR VALUES ARE IN µf RESISTOR VALUES ARE IN OHMS TOLERANCES ON FRACTIONS ± DECIMALS ± ANGLES ± DO NOT SCALE THIS DRAWING	MIT INSTRUMENTATION LAB CAMBRIDGE, MASS	MANNED SPACECRAFT CENTER HOUSTON, TEXAS
APPLICATION		MATERIAL	DRAWN CHECKED APPROVED APPROVED APPROVED MIT APPROVED MSC	WIRING HARNESS AGC TO PSA & G/N TO SPACECRAFT
				CODE IDENT NO. 80230 · SIZE J · DRAWING NO. 1005727
			DATE	SCALE NONE · SHEET 4 OF 4

1005727 C

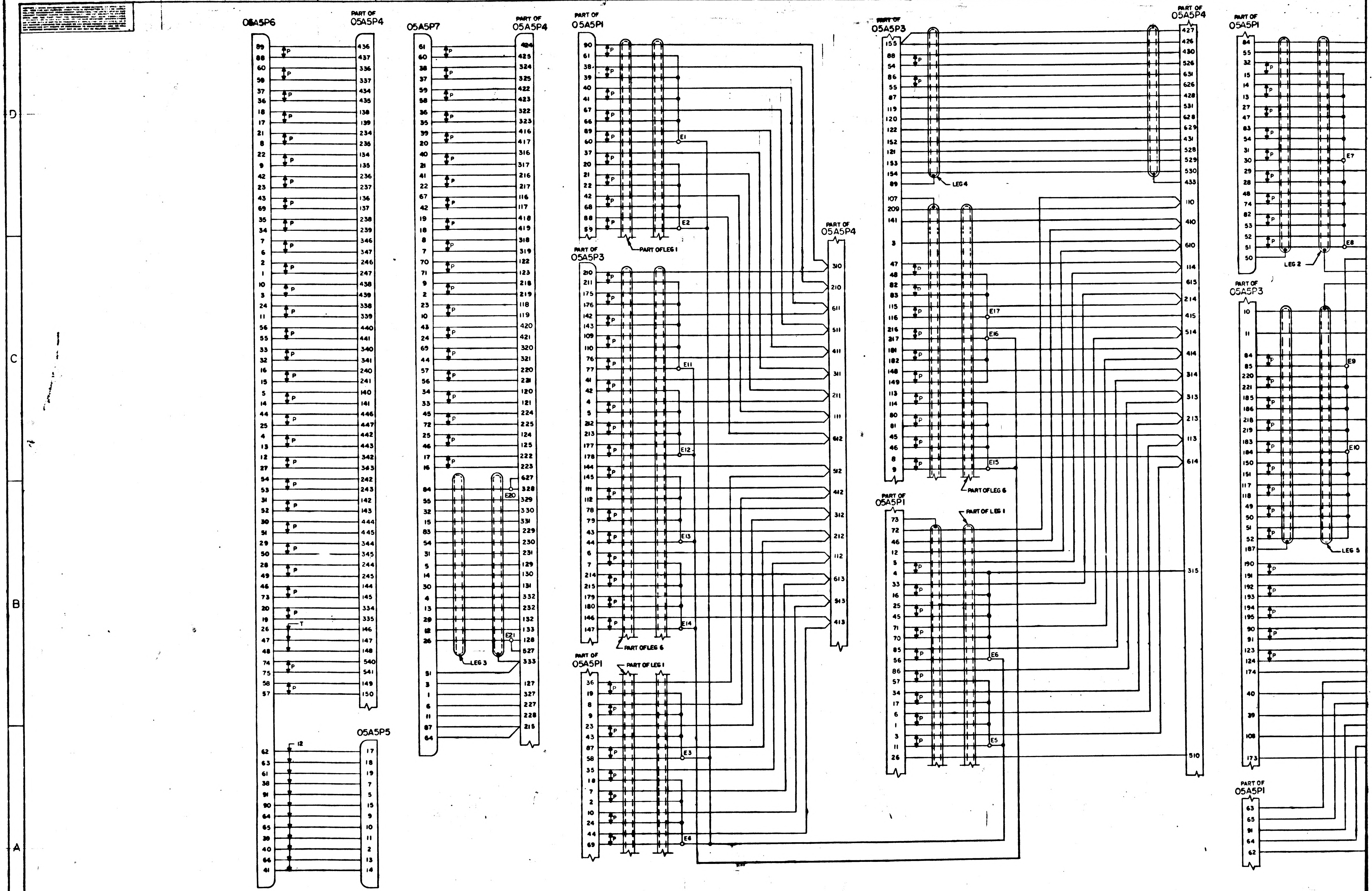
05A5P6
PART OF 05A5P4
05A5P7
PART OF 05A5P4
PART OF 05A5P1
PART OF LEG 1
PART OF 05A5P3
PART OF LEG 6
PART OF 05A5P1
PART OF LEG 1
PART OF 05A5P4
PART OF 05A5P3
LEG 4
PART OF LEG 6
PART OF 05A5P1
PART OF LEG 1
PART OF 05A5P4
PART OF 05A5P1
LEG 2
PART OF 05A5P3
LEG 5
PART OF 05A5P1
05A5P5
LEG 3
E1
E2
E3
E4
E5
E6
E7
E8
E9
E10
E11
E12
E13
E14
E15
E16
E17
E20
E21
P
T
12
7
6
5
4
D
C
B
A

1005727 C

SHEET 4

1005727 D

REVISIONS						
SYM	ZONE	DESCRIPTION	DR	CHK	DATE	APPROVED
B		REPLACES REVA WITH CHANGE PER TDRR 17889				
C		REVISED PER TDRR 18696			5/27/65	
D		REVISED PER TDRR 19757			28JUN65	

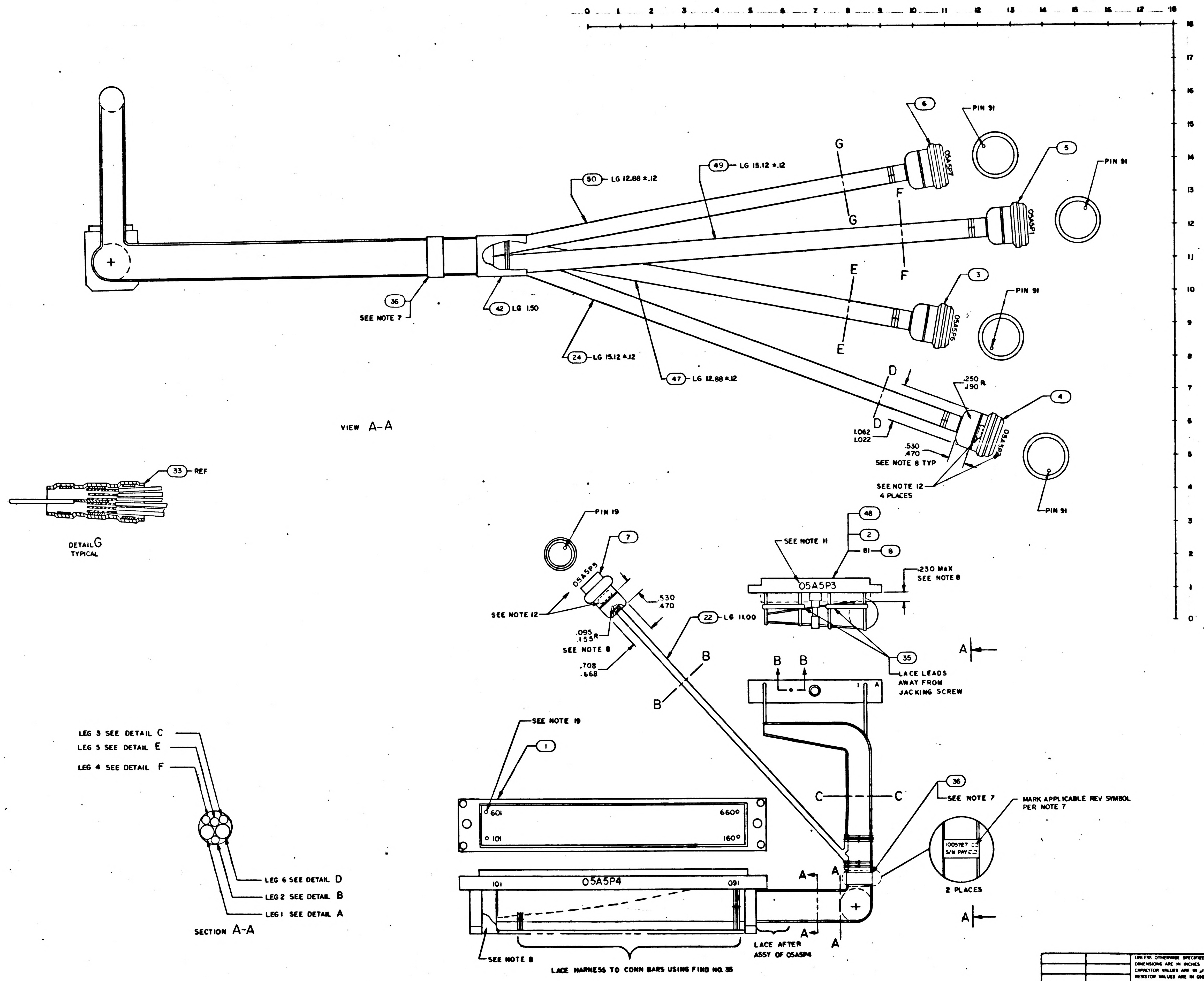

0 1 2 3 4 5 6 7 8 9 10 11 12 13 14 15 16 17 18
18 17 16 15 14 13 12 11 10 9 8 7 6 5 4 3 2 1 0
6
PIN 91
05A5P7
G
G
49 LG 15.12 ±.12
50 LG 12.88 ±.12
5
05A5P1
PIN 91
F
F
E
E
3
05A5P6
PIN 91
36
SEE NOTE 7
42 LG 1.50
24 LG 15.12 ±.12
47 LG 12.88 ±.12
D
D
.250
.190 R
4
05A5P8
1.062
1.022
.530
.470
SEE NOTE 8 TYP
SEE NOTE 12
4 PLACES
PIN 91
VIEW A-A
33 REF
DETAIL G
TYPICAL
PIN 19
7
05A5P5
SEE NOTE 12
.530
.470
.095
.155 R
SEE NOTE 8
.708
.668
22 LG 11.00
B
B
48
2
SEE NOTE 11
81 8
05A5P3
.230 MAX
SEE NOTE 8
35
LACE LEADS
AWAY FROM
JACKING SCREW
B B
A
SEE NOTE 19
1
601 660
101 160
C C
36
SEE NOTE 7
MARK APPLICABLE REV SYMBOL
PER NOTE 7
1005727
S/N PAY
2 PLACES
101 05A5P4 091
A A
A A
A
SEE NOTE 8
LACE HARNESS TO CONN BARS USING FIND NO. 35
LACE AFTER
ASSY OF 05A5P4
LEG 3 SEE DETAIL C
LEG 5 SEE DETAIL E
LEG 4 SEE DETAIL F
LEG 6 SEE DETAIL D
LEG 2 SEE DETAIL B
LEG 1 SEE DETAIL A
SECTION A-A

Ⓑ REPLACES REVA WITH CHANGE

QTY REQD	PART OR IDENTIFYING NO.	MATERIAL OR NOTES	NOMENCLATURE OR DESCRIPTION	FIND NO
LIST OF MATERIALS				

1005000	
NEXT ASSY	USED ON
APPLICATION	

UNLESS OTHERWISE SPECIFIED
DIMENSIONS ARE IN INCHES
CAPACITOR VALUES ARE IN µf
RESISTOR VALUES ARE IN OHMS
TOLERANCES ON
FRACTIONS DECIMALS ANGLES
± ±.010 ±
DO NOT SCALE THIS DRAWING
MATERIAL

MIT
INSTRUMENTATION LAB
CAMBRIDGE, MASS

MANNED SPACECRAFT CENTER
HOUSTON, TEXAS

DRAWN
CHECKED
APPROVED
APPROVED
APPROVED MIT
APPROVED MSC
DATE

WIRING HARNESS
AGC TO PSA & G/N TO SPACECRAFT

CODE IDENT NO. 80230
SIZE J
DRAWING NO. 1005727
SCALE 1/1
SHEET 1 OF 4

F3/3

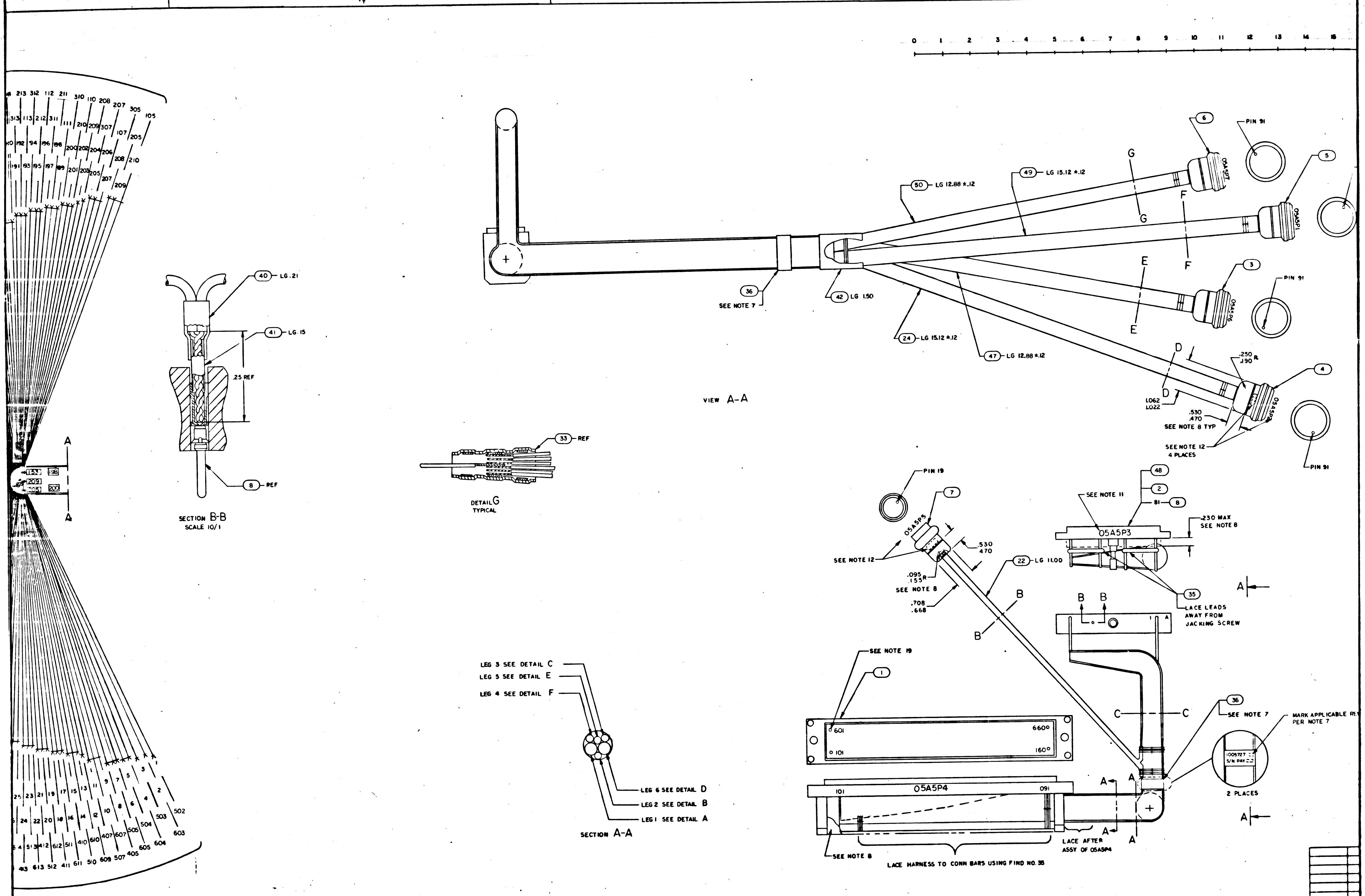
4
3
2
0 1 2 3 4 5 6 7 8 9 10 11 12 13 14 15
213 312 112 211 310 110 208 207 305 105
313 113 212 311 111 210 209 307 107 205
192 194 196 198 200 202 204 206 208 210
191 193 195 197 199 201 203 205 207 209
153 198 209 200
A
A
25 23 21 19 17 15 13 11 9 7 5 3 1
24 22 20 18 16 14 12 10 8 6 4 2
513 412 612 511 410 610 407 607 505 504 503 502
613 512 411 611 510 609 507 405 605 604 603
40 LG .21
41 LG .15
.25 REF
8 REF
SECTION B-B
SCALE 10/1
33 REF
DETAIL G
TYPICAL
VIEW A-A
36 SEE NOTE 7
42 LG 1.50
50 LG 12.88 ±.12
49 LG 15.12 ±.12
24 LG 15.12 ±.12
47 LG 12.88 ±.12
G
G
F
F
E
E
D
D
6
PIN 91
05A5P7
5
05A5P1
3
05A5P6
PIN 91
4
05A5P2
.250 R
.190
1.062
1.022
.530
.470
SEE NOTE 8 TYP
SEE NOTE 12
4 PLACES
PIN 91
PIN 19
7
05A5P5
SEE NOTE 12
.530
.470
.095
.155 R
SEE NOTE 8
.708
.668
22 LG 11.00
B
B
48
2
81 8
SEE NOTE 11
05A5P3
.230 MAX
SEE NOTE 8
35
LACE LEADS AWAY FROM JACKING SCREW
A
B B
B
SEE NOTE 19
1
601 660
101 160
C C
36
SEE NOTE 7
MARK APPLICABLE REV PER NOTE 7
1005727 S/N PAY
2 PLACES
A A A A A
05A5P4
101 091
LACE AFTER ASSY OF 05A5P4
SEE NOTE 8
LACE HARNESS TO CONN BARS USING FIND NO. 35
LEG 3 SEE DETAIL C
LEG 5 SEE DETAIL E
LEG 4 SEE DETAIL F
LEG 6 SEE DETAIL D
LEG 2 SEE DETAIL B
LEG 1 SEE DETAIL A
SECTION A-A
1005000
NEXT ASSY
APPLICATION

1005727 D E2/3

SHEET 1

2

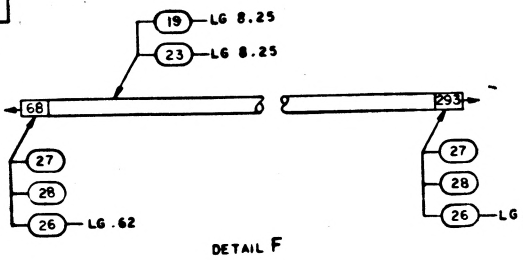

19 LG 8.25
23 LG 8.25
68
293
27
28
26 LG .62
27
28
26 LG .62

DETAIL F
LEG 4
SCALE NONE

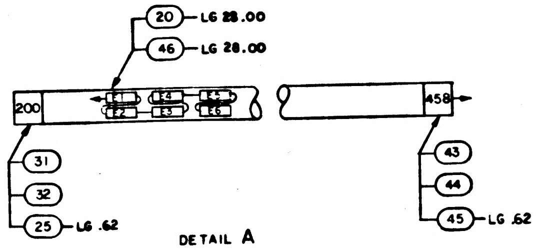

20 LG 28.00
46 LG 28.00
200
458
31
32
25 LG .62
43
44
45 LG .62

DETAIL A
LEG 1
SCALE NONE

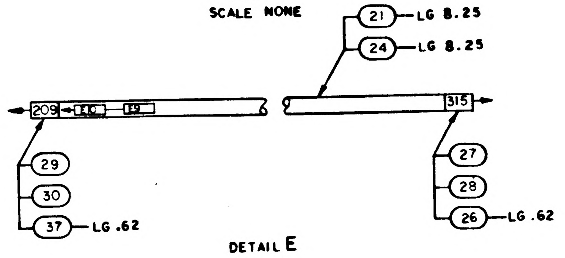

21 LG 8.25
24 LG 8.25
209
315
29
30
37 LG .62
27
28
26 LG .62

DETAIL E
LEG 5
SCALE NONE

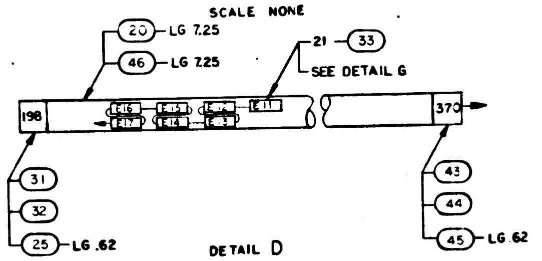

20 LG 7.25
46 LG 7.25
21 33
SEE DETAIL G
198
370
31
32
25 LG .62
43
44
45 LG .62

DETAIL D
LEG 6
SCALE NONE

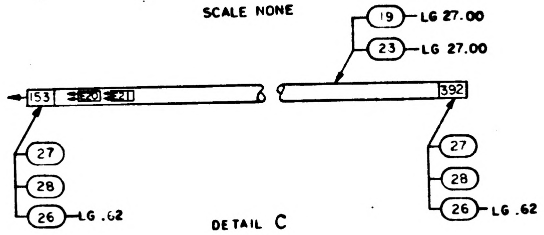

19 LG 27.00
23 LG 27.00
153
392
27
28
26 LG .62
27
28
26 LG .62

DETAIL C
LEG 3
SCALE NONE

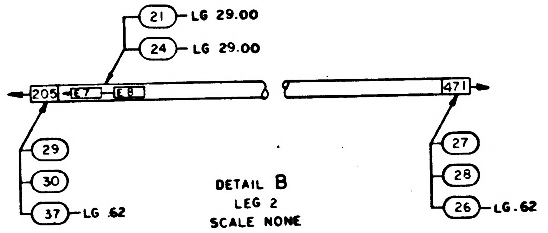

21 LG 29.00
24 LG 29.00
205
471
29
30
37 LG .62
27
28
26 LG .62

DETAIL B
LEG 2
SCALE NONE

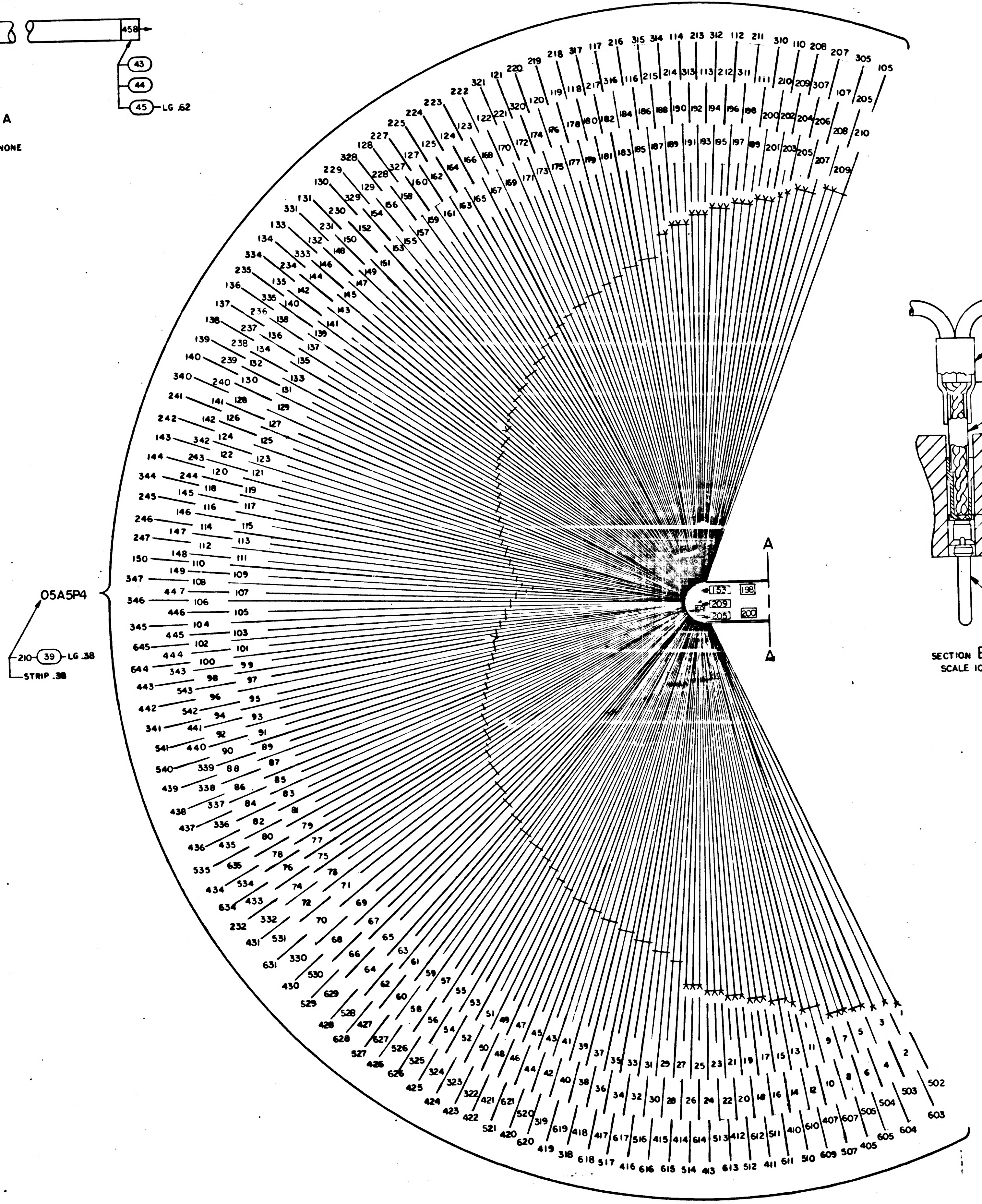

05A5P4
210 39 LG .38
STRIP .38
A
A
152
198
209
205
200

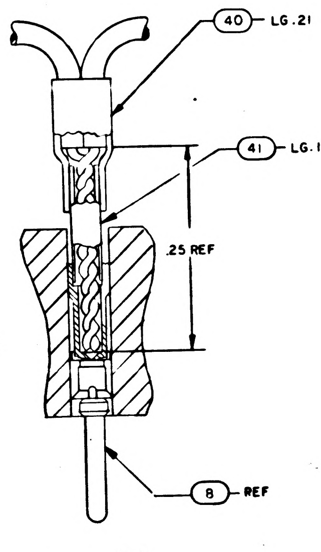

40 LG .21
41 LG .15
.25 REF
8 REF

SECTION B-B
SCALE 10/1

NOTES

1. INTERPRET DRAWING IN ACCORDANCE WITH STANDARDS PRESCRIBED BY MIL-D-70327
2. FOR FABRICATION SEE ND 1002032
3. MIL-I-631 TYPE F, FORM U_2, GRADE A, CLASS 1, CATAGORY 1, FOR FIND NO.47 AWG 5/8 FOR FIND NO. 46 AWG 7/8, FOR FIND NO.24 AWG 1/2, FOR FIND NO. 23 AWG 7/16 FOR FIND NO.22 AWG 2, FOR FIND NO. 49 AWG 1 1/4, FOR FIND NO. 50 AWG 3/4
4. QQ-B-575 FOR FIND NO.20 BRAID SIZE 1/2, AWG 34, FOR FIND NO.19 BRAID SIZE 1/4 AWG 36, FOR FIND NO.21 BRAID SIZE 3/8, AWG 34
5. ✱✱✱ DENOTES LENGTH IN FEET
6. INSTALL CRIMP STYLE TERMINALS IN ACCORDANCE WITH ND 1002206
7. MARK .100/.060 HIGH GOTHIC PER ND1002019, USING BLACK MARKING INK 1006271-11 AND SERIALIZE PER ND 1002023
8. ENCAPSULATE INDICATED AREA PER ND 1002009 METHOD E WITH PRIMER, MOUNTING SURFACES OF CONNECTORS MUST NOT BE ENCAPSULATED
9. TEST PER FTM 1005707
10 SOLDER PER ND 1002071, USING SOLDER PER ND1002075 EXCEPT AS SHOWN
11. MARK .200/.180 HIGH PER ND 1002019 AND ND 1002122 TYPE II CLASS 1, USING BLACK MARKING INK 1006271-11. CENTRALIZE AS SHOWN.
12. MARK .070/.050 HIGH PER ND 1002019 AND ND 1002122 TYPE II CLASS 2, USING BLACK MARKING INK 1006271-11. CENTRALIZE AS SHOWN
13 ● SEE INTERNAL CONNECTION CHART
14. ●● ATTATCH FIND NO. 18
15. ✱ DENOTES TWO CONNECTIONS TO ONE PIN
16. ✱✱ DENOTES TWO CONNECTIONS TO ONE PIN SEE SECTION B-B
17. PARTIAL REFERENCE DESIGNATIONS ARE SHOWN: FOR COMPLETE DESIGNATIONS PREFIX P NOS. IN RUN CHART WITH 05A5
18. NUMBERS PRECEDING BALLOONS DENOTE QUANTITIES
19. SEAL TERMINALS TO CONNECTOR, PER ND1002004, TYPE VI

SHEET 1

1005727 D

SYM	ZONE	DESCRIPTION	DR	CHK	DATE	APPROVED
B		REPLACES REV A WITH CHANGE PER TDRR 17889				
C		REVISED PER TDRR 18696				
D		REVISED PER TDRR 19757			20 JUNE 6	

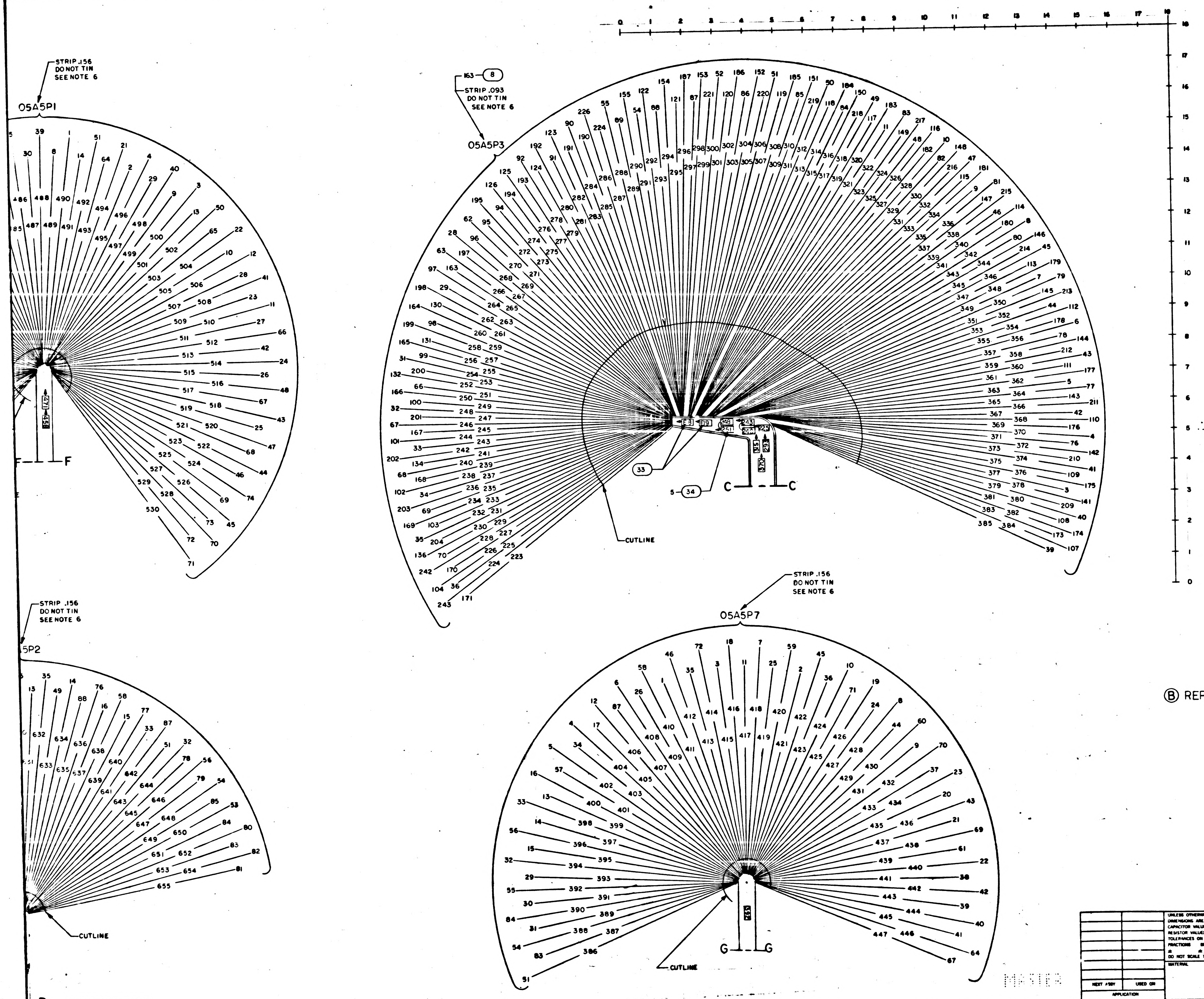

0 1 2 3 4 5 6 7 8 9 10 11 12 13 14 15 16 17 18
17 16 15 14 13 12 11 10 9 8 7 6 5 4 3 2 1 0
STRIP .156
DO NOT TIN
SEE NOTE 6
05A5P1
F — F
163 — 8
STRIP .093
DO NOT TIN
SEE NOTE 6
05A5P3
33
5 — 34
C — C
CUTLINE
STRIP .156
DO NOT TIN
SEE NOTE 6
05A5P7
G — G
CUTLINE
STRIP .156
DO NOT TIN
SEE NOTE 6
5P2
CUTLINE

Ⓑ REPLACES REV A WITH CHANGE

QTY REQD	PART OR IDENTIFYING NO.	MATERIAL OR NOTES	NOMENCLATURE OR DESCRIPTION	FIND NO

LIST OF MATERIALS

NEXT ASSY	USED ON
APPLICATION	

UNLESS OTHERWISE SPECIFIED
DIMENSIONS ARE IN INCHES
CAPACITOR VALUES ARE IN μf
RESISTOR VALUES ARE IN OHMS
TOLERANCES ON
FRACTIONS DECIMALS ANGLES
± ±.010 ±
DO NOT SCALE THIS DRAWING

MATERIAL

MIT
INSTRUMENTATION LAB
CAMBRIDGE MASS

MANNED SPACECRAFT CENTER
HOUSTON, TEXAS

DRAWN P. Linfield
CHECKED A. Coggins
APPROVED
APPROVED
APPROVED MIT
APPROVED MSC 3-28-69
DATE

WIRING HAPNESS
AGC TO PSA & G/N SPACECPAFT

CODE IDENT NO. 80230
SIZE J
DRAWING NO. 1005727
SCALE 1/1
SHEET 2

MASTER

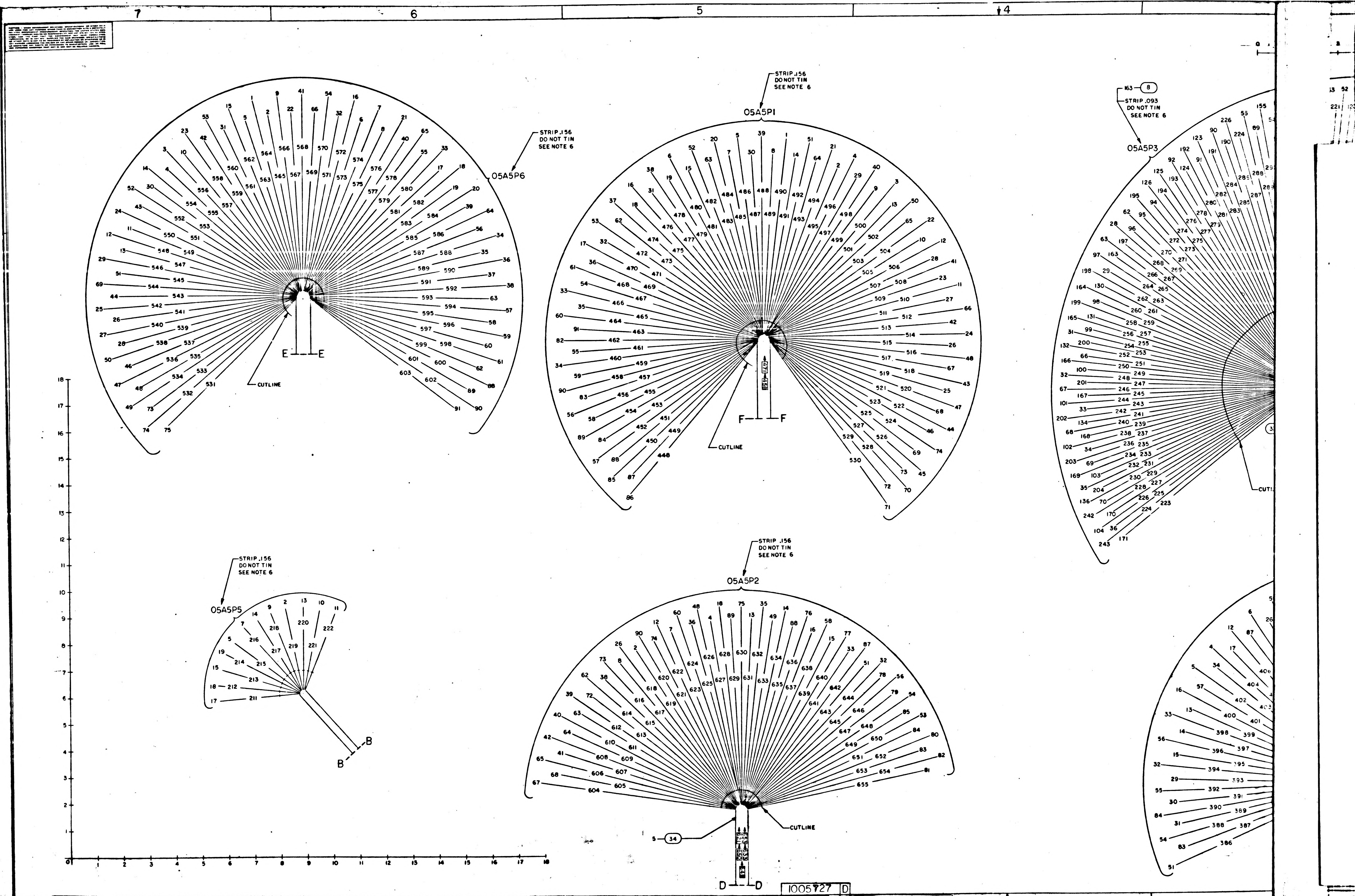

7
6
5
4
STRIP .156
DO NOT TIN
SEE NOTE 6
05A5P6
E
E
CUTLINE
STRIP .156
DO NOT TIN
SEE NOTE 6
05A5P1
F
F
CUTLINE
163 — 8
STRIP .093
DO NOT TIN
SEE NOTE 6
05A5P3
CUTLINE
STRIP .156
DO NOT TIN
SEE NOTE 6
05A5P5
B
B
STRIP .156
DO NOT TIN
SEE NOTE 6
05A5P2
5 — 34
CUTLINE
D
D
0
1
2
3
4
5
6
7
8
9
10
11
12
13
14
15
16
17
18

1005727 D

1005727-D E1/2

SHEET 2

REVISIONS						
SYM	ZONE	DESCRIPTION	DR	CHK	DATE	APPROVED
B		REPLACES REVA WITH CHANGES PER TDRR 19869				
C		REVISED PER TDRR 18696			5/21/65	
D		REVISED PER TDRR 19757			28JUN65	

RT

TO	
DESTINATION	REMARKS
P4-310	*
E1	●
P4-210	*
E1	●
P4-611	*
E1	●
P4-511	*
E1	●
P4-411	*
E1	●
P4-311	*
E2	●
P4-211	*
E2	●
P4-111	*
E2	●
P4-612	*
E2	●
P4-512	*
E3	●
P4-412	*
E3	●
P4-312	*
E3	●
P4-212	* LEG 1
E3	●
P4-112	*
E4	●
P4 613	*
E4	●
P4-513	*
E4	●
P4-413	*
E4	●
P4-313	*
E5	●
P4-213	*
E5	●
P4-113	*
E5	●
P4-614	*
E5	●
P4-114	*
E6	●
P4-214	*
E6	●
P4-514	*
E6	●
P4-414	*
E6	●
P4-314	*
E6	●
P4-610	*
P4-410	*
P4-110	*
P4-510	*
P4-205	*
E7	●
P4-307	*
E7	●
P4-407	*
E7	●
P4-107	
E7	●
P4-105	
E7	●
P4-605	* LEG 2
E8	●
P4-505	*
E8	●
P4-405	*
E8	●
P4-305	*
E8	●
P4-208	*
P4-207	*
P4-609	*●●
P4-329	
-330	
-331	
-229	
-230	
-231	
-129	
-130	LEG 3
-131	
-332	
-232	
-132	
-133	
-E21	
-E20	
P4-333	●●,*

ASSEMBLY INFORMATION CHART

FROM			DESCRIPTION			TO		
REMARKS	DESTINATION	RUN NO.	COLOR	AWG	FIND NO.	RUN NO	DESTINATION	REMARKS
	P6-89	601	YEL	26	9	82	P4-436	
	P6-88	602	RED			84	P4-437	
	P4-336	83	YEL			597	P6-60	
	P4-337	85	RED			596	P6-59	
	P6-37	591	YEL			78	P4-434	
	P6-36	590	RED			81	P4-435	
	P4-138	134	YEL			582	P6-18	
	P4-139	132	RED			581	P6-17	
	P6-21	576	YEL			143	P4-234	
	P6-8	575	RED			140	P4-235	
	P4-134	144	YEL			567	P6-22	
	P4-135	141	RED			566	P6-9	
	P6-42	559	YEL			137	P4-236	
	P6-23	558	RED			135	P4-237	
	P4-136	138	YEL			551	P6-43	
	P4-137	136	RED			544	P6-69	
	P6-35	589	YEL			133	P4-238	
	P6-34	588	RED			131	P4-239	
	P4-346	106	YEL			574	P6-7	
	P4-347	108	RED			573	P6-6	
	P6-2	565	YEL			114	P4-246	
	P6-1	564	RED			112	P4-247	
	P4-438	86	YEL			557	P6-10	
	P4-439	88	RED			556	P6-3	
	P6-24	550	YEL			87	P4-338	
	P6-11	549	RED			89	P4-339	
	P4-440	91	YEL			587	P6-56	
	P4-441	93	RED			579	P6-55	
	P6-33	580	YEL			128	P4-340	
	P6-32	571	RED			94	P4-341	
	P4-240	129	YEL			572	P6-16	
	P4-241	126	RED			562	P6-15	
	P6-5	563	YEL			130	P4-140	
	P6-14	554	RED			127	P4-141	
	P4-446	105	YEL			543	P6-44	
	P4-447	107	RED			542	P6-25	
	P6-4	555	YEL			96	P4-442	
	P6-13	547	RED			98	P4-443	
	P4-342	123	YEL			548	P6-12	
	P4-343	99	RED			540	P6-27	
	P6-54	570	YEL			124	P4-242	
	P6-53	560	RED			121	P4-243	
	P4-142	125	YEL			561	P6-31	
	P4-143	122	RED			552	P6-52	
	P6-30	553	YEL			101	P4-444	
	P6-51	545	RED			103	P4-445	
	P4-344	118	YEL			546	P6-29	
	P4-345	104	RED			538	P6-50	
	P6-28	539	YEL			119	P4-244	
	P6-49	534	RED			116	P4-245	
	P4-144	120	YEL			537	P6-46	
	P4-145	117	RED			533	P6-73	
	P6-20	584	YEL			142	P4-334	
	P6-19	583	RED			139	P4-335	
	P4-540	90	YEL			532	P6-74	
	P4-541	92	RED			531	P6-75	
	P6-58	595	YEL			109	P4-149	
	P6-57	594	RED			110	P4-150	
	P4-424	52	YEL			439	P7-61	
	P4-425	54	RED			430	P7-60	
	P7-38	441	YEL			53	P4-324	
	P7-37	433	RED			55	P4-325	
	P4-422	48	YEL			420	P7-59	
	P4-423	50	RED			410	P7-58	
	P7-36	423	YEL			49	P4-322	
	P7-35	413	RED			51	P4-323	
	P4-416	32	YEL			443	P7-39	
	P4-417	35	RED			435	P7-20	
	P7-40	444	YEL			183	P4-316	
	P7-21	437	RED			180	P4-317	
	P4-216	184	YEL			445	P7-41	
	P4-217	181	RED			440	P7-22	
	P7-67	447	YEL			185	P4-116	
	P7-42	442	RED			182	P4-117	
	P4-418	37	YEL			426	P7-19	
	P4-419	40	RED			416	P7-18	
	P7-8	428	YEL			38	P4-318	
	P7-7	418	RED			41	P4-319	
	P4-122	169	YEL			432	P7-70	
	P4-123	167	RED			425	P7-71	
	P7-9	431	YEL			178	P4-218	
	P7-2	421	RED			176	P4-219	
	P4-118	179	YEL			434	P7-23	
	P4-119	177	RED			424	P7-10	
	P7-43	436	YEL			44	P4-420	
	P7-24	427	RED			47	P4-421	
	P4-320	173	YEL			438	P7-69	
	P4-321	170	RED			429	P7-44	
	P7-57	401	YEL			174	P4-220	
	P7-56	396	RED			171	P4-221	
	P4-120	175	YEL			403	P7-34	
	P4-121	172	RED			398	P7-33	
	P7-45	422	YEL			164	P4-224	
	P7-72	414	RED			162	P4-225	
	P4-124	165	YEL			418	P7-25	
	P4-125	163	RED			412	P7-46	
	P7-17	405	YEL			168	P4-222	
	P7-16	400	RED			166	P4-223	
	P4-616	30	YEL			285	P3-190	
	P4-617	33	RED			283	P3-191	
	P3-192	280	YEL			31	P4-516	
	P3-193	277	RED			34	P4-517	
	P4-618	36	YEL			275	P3-194	
	P4-619	39	RED			272	P3-195	
	P3-90	284	YEL			77	P4-534	
	P3-91	281	RED			80	P4-535	
	P4-620	42	YEL			282	P3-123	
	P4-621	45	RED			279	P3-124	
	P3-125	276	YEL	26	9	43	P4-520	
	P3-126	274	RED			46	P4-521	

ASSEMBLY INFORMATION CHART

FROM			DESCRIPTION			TO		
REMARKS	DESTINATION	RUN NO.	COLOR	AWG	FIND NO.	RUN NO.	DESTINATION	REMARKS
	P4-634	76	YEL	26	9	273	P3-94	
	P4-635	79	RED			271	P3-95	
	P3-224	287	YEL	26	9	100	P4-644	
	P3-226	286	RED			102	P4-645	
	P4-542	95	YEL	26	9	278	P3 92	
*	P4-543	97	RED			270	P3-62	
	P7-51	386	YEL	26	10	145	P4-333	*
	P4-27	161				415	P7-3	
	P7-1	411				159	P4 327	
	P4-227	160				408	P7-6	
	P7-11	417				157	P4-228	
*	P4-215	187				407	P7-87	
	P7-64	446				187	P4-215	*
*	P4-502	1				382	P3-174	
	P3-40	380				3	P4-503	*
*	P4-504	5				385	P3-39	
	P3-108	381				2	P4-603	*
*	P4-604	4				383	P3-173	
	P1-63	483				1	P4-502	*
*	P4-503	3				503	P1-65	
	P1-91	463				5	P4-504	*
*	P4-603	2				493	P1-64	
	P1-62	473		26	10	4	P4-604	*
	P3-29	263	YEL	24	38	609	P2-64	
	P2-85	649	YEL	24	12	236	P3-203	
	P2-84	651	RED			231	P3-204	
	P3-243	224	YEL			613	P2-72	
	P3 242	228	RED			616	P2-73	
	P2-12	622	YEL			250	P3-166	
	P2-26	618	RED			245	P3-167	
	P3-199	258	YEL			627	P2-4	
	P3-200	253	RED			631	P2-13	
	P2-15	639	YEL			239	P3-168	
	P2-14	634	RED			234	P3-169	
	P3-201	247	YEL			637	P2-16	
	P3-202	242	RED			644	P2-32	
	P2-33	641	YEL	24	12	227	P3-170	
	P2-56	646	RED			223	P3 171	
	P3-101	244	YEL	22	15	606	P2-65	
	P3-134	241	RED			607	P2-41	
	P3-102	238	GRN			610	P2-40	
	P2-89	629	YEL			257	P3-131	
	P2-60	624	RED			260	P3-164	
	P2-90	620	GRN			256	P3-165	
	P3-163	265	YEL			628	P2-18	
	P3-197	267	RED			632	P2-35	
	P3-98	262	GRN			625	P2-36	
	P2 58	638	YEL			264	P3-97	
	P2-87	642	RED			259	P3-98	
	P2-88	635	GRN			261	P3-130	
	P3-99	255	YEL			623	P2-7	
	P3-100	249	RED			619	P2-2	
	P3-132	252	GRN			617	P2-8	
	P2-67	604	YEL			233	P3-103	
	P2-68	605	RED			226	P3-104	
	P2-42	608	GRN			230	P3-136	
	P6-26	541	YEL	22	15	115	P4-146	
	P6-47	536	RED			113	P4-147	
	P6-48	535	GRN			111	P4-148	
*	P4-543	97	YEL	22	16	612	P2-39	
	P3-28	268	RED			611	P2-63	
	P3-63	266	GRN			615	P2-38	
	P3-96	269	BRN			614	P2-62	
	P2-83	653	YEL	24	11	251	P3-66	
	-82	654	RED				E-18	●
●●	-54	648	SHLD			246	P3-67	●●
	-74	621	YEL			248	P3-32	
	-75	630	RED				E-18	●
●●	-48	626	SHLD					●
	-49	633	YEL			243	P3-33	
	-76	636	RED				E-19	●
●●	-77	640	SHLD			237	P3-34	●●
	-53	650	YEL			240	P3-68	
	-81	655	RED				E-19	●
●●	-80	652	SHLD					●
	-78	645	YEL	24	11	225	P3-36	
	-79	647	RED			232	P3-35	
●●	P2-51	643	SHLD			229	P3-70	●●
	P5-17	211	YEL	22	17	599	P6-62	TWIST 12 WIRES TOGETHER
	-18	212				593	-63	
	-19	214				598	-61	
	-7	216				592	-38	
	-9	218				586	-64	
	-10	221				578	-65	
	-11	222				585	-39	
	-2	219	YEL		17	577	-40	
	-5	215	BLK		18	603	-91	
	-15	213	BLK			602	-90	
	-13	220	BLK			569	-66	
	P5-14	217	BLK	22	18	568	P6-41	

INTERNAL CONNECTION CHART

REMARKS	FROM	FIND NO.	LENGTH	TO	REMARKS
	E9	18	3.00	E10	
	E10		—	203	*
	E8		2.00	E7	
	E7		—	203	*
	E6		3.00	E5	
	E5		2.00	E4	
	E4		3.00	E3	
	E3		2.00	E2	
	E2		3.00	E1	
	E1		—	186	
	E11		3.00	E12	
	E12		3.00	E13	
	E13		3.00	E14	
	E14		3.00	E15	
	E15		2.00	E16	
	E16		3.00	E17	
	E17		—	29	
	E18		—	254	
	E19		—	235	
	251 ●●●		3.00	248 ●●●	
	240 ●●●	18	3.00	243 ●●●	
	E20	10	—	156	
	E20	10	—	59	
	E21	10	—	158	
	E21	10	—	60	

●●● DENOTES FERRULE

Ⓑ REPLACES REVA WITH CHANGE.

QTY REQD	PART OR IDENTIFYING NO.	MATERIAL OR NOTES	NOMENCLATURE OR DESCRIPTION	FIND NO.

LIST OF MATERIALS

NEXT ASSY	USED ON
APPLICATION	

UNLESS OTHERWISE SPECIFIED
DIMENSIONS ARE IN INCHES
CAPACITOR VALUES ARE IN μf
RESISTOR VALUES ARE IN OHMS
TOLERANCES ON
FRACTIONS DECIMALS ANGLES
± ± ±
DO NOT SCALE THIS DRAWING

MATERIAL

MIT
INSTRUMENTATION LAB
CAMBRIDGE MASS

DRAWN
CHECKED
APPROVED
APPROVED
APPROVED MIT
APPROVED MSC
DATE 7-26-65

MANNED SPACECRAFT CENTER
HOUSTON, TEXAS

WIRING HARNESS
AGC TO PSA & G/N TO SPACECRAFT

CODE IDENT NO.	SIZE	DRAWING NO.
80230	J	1005727

SCALE NONE
SHEET 3 OF 4

1005727

F 2/2

MASTER

7 6 5 4

D

C

B

A

ASSEMBLY INFORMATION CHART

FROM			DESCRIPTION			TO		
REMARKS	DESTINATION	RUN NO.	COLOR	AWG	FIND NO.	RUN NO.	DESTINATION	REMARKS
	P3-4	370	YEL	26	9	198	P4-211	*
	-5	363	RED				E12	●
	-212	359	YEL			199	P4-111	*
	-213	352	RED				E12	●
	-177	362	YEL			19	P4-612	*
	-178	355	RED				E12	●
	-41	374	YEL			197	P4-311	*
	-42	367	RED				E12	●
	-210	373	YEL			200	P4-310	*
	-211	366	RED				E11	●
	-175	376	YEL			201	P4-210	*
	-176	369	RED				E11	●
	-142	372	YEL			16	P4-611	*
	-143	365	RED				E11	●
	-109	375	YEL			17	P4-511	*
	-110	368	RED				E11	●
	-76	371	YEL			18	P4-411	*
	-77	364	RED				E11	●
	-144	358	YEL			20	P4-512	*
	-145	351	RED				E13	●
	-111	361	YEL			21	P4-412	*
	-112	354	RED				E13	●
	-78	357	YEL			194	P4-312	*
	-79	350	RED				E13	●
	-43	360	YEL			195	P4-212	*
	-44	353	RED				E13	●
	-6	356	YEL			196	P4-112	* LEG 6
	-7	349	RED				E14	●
	-214	345	YEL			22	P4-613	*
	-215	338	RED				E14	●
	-179	348	YEL			23	P4-513	*
	-180	341	RED				E14	●
	-146	344	YEL			24	P4-413	*
	-147	337	RED				E14	●
	-113	347	YEL			191	P4-313	*
	-114	340	RED				E15	●
	-80	343	YEL			192	P4-213	*
	-81	336	RED				E15	●
	-45	346	YEL			193	P4-113	*
	-46	339	RED				E15	●
	-8	342	YEL			25	P4-614	*
	-9	335	RED				E15	●
	-216	331	YEL			26	P4-514	*
	-217	324	RED				E16	●
	-181	334	YEL			27	P4-414	*
	-182	327	RED				E16	●
	-148	330	YEL			188	P4-314	*
	-149	323	RED				E16	●
	-47	332	YEL			190	P4-114	*
	-48	325	RED				E17	●
	-82	329	YEL			28	P4-615	
	-83	322	RED				E17	●
	-115	333	YEL		9	189	P4-214	*
	-116	326	RED				E17	●
	-3	377	YEL		10	13	P4-610	*
	-141	378	YEL		10	15	P4-410	*
	-209	379	YEL	26	10	202	P4-110	*
●●	P3-107	384	SHLD					
	P3-84	315	YEL	26	9	209	P4-205	*
	-85	309	RED				E9	●
	-220	305	YEL			205	P4-307	*
	-221	299	RED				E9	●
	-185	308	YEL			11	P4-407	*
	-186	302	RED				E9	●
	-218	317	YEL			6	P4-605	*
	-219	311	RED				E9	●
	-183	320	YEL			7	P4-505	*
	-184	314	RED				E10	●
	-150	316	YEL			8	P4-405	*
	-151	310	RED				E10	● LEG 5
	-117	319	YEL			208	P4-305	*
	-118	313	RED				E10	●
	-49	318	YEL			9	P4-607	
	-50	312	RED				E10	●
	-51	306	YEL		9	10	P4-507	
	-52	300	RED				E10	●
	-11	321	YEL		10	204	P4-208	*
	-10	328	YEL	26	10	206	P4-207	*
●●	P3-187	296	SHLD			12	P4-609	*,●●
	P3-88	293	YEL	26	9	68	P4-430	
	-54	291	RED			57	-526	
	-86	303	YEL		9	70	-631	
	-55	288	RED			56	-626	
	-87	297	YEL		10	64	-428	
	-119	307				71	-531	
	-120	301				62	-628	
	-122	292				65	-629	LEG 4
	-152	304				72	-431	
	-121	295				63	-528	
	-153	298				66	-529	
	-154	294				67	-530	
**	-155	290				61	-427	
	-155	290	YEL	26	10	58	-426	
●●	P3-89	289	SHLD			75	P4-433	●●

ASSEMBLY INFORMATION CHART

FROM			DESCRIPTION			TO		
REMARKS	DESTINATION	RUN NO.	COLOR	AWG	FIND NO.	RUN NO.	DESTINATION	REMARKS
	P1-90	458	YEL	26	9	200	P4-310	*
	-61	468	RED				E1	●
	-38	478	YEL			201	P4-210	*
	-39	488	RED				E1	●
	-40	498	YEL			16	P4-611	*
	-41	508	RED				E1	●
	-67	517	YEL			17	P4-511	*
	-66	512	RED				E1	●
	-89	454	YEL			18	P4-411	*
	-60	464	RED				E1	●
	-37	474	YEL			197	P4-311	*
	-20	484	RED				E2	●
	-21	494	YEL			198	P4-211	*
	-22	504	RED				E2	●
	-42	513	YEL			199	P4-111	*
	-68	521	RED				E2	●
	-88	451	YEL			19	P4-612	*
	-59	459	RED				E2	●
	-36	469	YEL			20	P4-512	*
	-19	479	RED				E3	●
	-8	489	YEL			21	P4-412	*
	-9	499	RED				E3	●
	-23	509	YEL			194	P4-312	*
	-43	518	RED				E3	●
	-87	449	YEL			195	P4-212	* LEG 1
	-58	455	RED				E3	●
	-35	465	YEL			196	P4-112	*
	-18	475	RED				E4	●
	-7	485	YEL			22	P4-613	*
	-2	495	RED				E4	●
	-10	505	YEL			23	P4-513	*
	-24	514	RED				E4	●
	-44	522	YEL			24	P4-413	*
	-69	525	RED				E4	●
	-86	448	YEL			191	P4-313	*
	-57	452	RED				E5	●
	-34	460	YEL			192	P4-213	*
	-17	470	RED				E5	●
	-6	480	YEL			193	P4-113	*
	-1	490	RED				E5	●
	-3	500	YEL			25	P4-614	*
	-11	510	RED				E5	●
	-5	486	YEL			190	P4-114	*
	-4	496	RED				E6	●
	-33	466	YEL			189	P4-214	*
	-16	476	RED				E6	●
	-25	519	YEL			26	P4-514	*
	-45	526	RED				E6	●
	-71	530	YEL			27	P4-414	*
	-70	528	RED				E6	●
	-85	450	YEL		9	188	P4-314	*
	-56	456	RED				E6	●
	-12	506	YEL		10	13	P4-610	*
	-46	523	YEL		10	15	P4-410	*
	-72	529	YEL		10	202	P4-110	*
	-26	515	YEL	26	10	14	P4-510	*
●●	P1-73	527	SHLD					
	P1-32	471	YEL	26	9	209	P4-205	*
	-15	481	RED				E7	●
	-14	491	YEL			205	P4-307	*
	-13	501	RED				E7	●
	-27	511	YEL			11	P4-407	*
	-47	520	RED				E7	●
	-83	457	YEL			207	P4-107	
	-54	467	RED				E7	●
	-31	477	YEL			210	P4-105	
	-30	487	RED				E7	●
	-29	497	YEL			6	P4-605	* LEG 2
	-28	507	RED				E8	●
	-48	516	YEL			7	P4-505	*
	-74	524	RED				E8	●
	-82	462	YEL			8	P4-405	*
	-53	472	RED				E8	●
	-52	482	YEL		9	208	P4-305	*
	-51	492	RED				E8	●
	-55	461	YEL		10	204	P4-208	*
	-84	453	YEL	26	10	206	P4-207	*
●●	P1-50	502	SHLD			12	P4-609	*●●
	P7-55	392	YEL	26	10	153	P4-329	
	-32	394				69	-330	
	-15	395				148	-331	
	-83	387				154	-229	
	-54	388				151	-230	
	-31	389				149	-231	
	-5	402				155	-129	
	-14	397				152	-130	LEG 3
	-30	391				150	-131	
	-4	404				73	-332	
	-13	399				74	-232	
	-29	393				147	-132	
	-12	406				146	-133	
	-26	409					-E21	
	P7-84	390	YEL	26	10		-E20	
					SHLD	145	P4-333	●●,*

ASSEMBLY INFORMATION CHART

FROM			DESCRIPTION			TO		
REMARKS	DESTINATION	RUN NO.	COLOR	AWG	FIND NO.	RUN NO	DESTINATION	REMARKS
	P6-89	601	YEL	26	9	82	P4-436	
	P6-88	602	RED			84	P4-437	
	P4-336	83	YEL			597	P6-60	
	P4-337	85	RED			596	P6-59	
	P6-37	591	YEL			78	P4-434	
	P6-36	590	RED			81	P4-435	
	P4-138	134	YEL			582	P6-18	
	P4-139	132	RED			581	P6-17	
	P6-21	576	YEL			143	P4-234	
	P6-8	575	RED			140	P4-235	
	P4-134	144	YEL			567	P6-22	
	P4-135	141	RED			566	P6-9	
	P6-42	559	YEL			137	P4-236	
	P6-23	558	RED			135	P4-237	
	P4-136	138	YEL			551	P6-43	
	P4-137	136	RED			544	P6-69	
	P6-35	589	YEL			133	P4-238	
	P6-34	588	RED			131	P4-239	
	P4-346	106	YEL			574	P6-7	
	P4-347	108	RED			573	P6-6	
	P6-2	565	YEL			114	P4-246	
	P6-1	564	RED			112	P4-247	
	P4-438	86	YEL			557	P6-10	
	P4-439	88	RED			556	P6-3	
	P6-24	550	YEL			87	P4-338	
	P6-11	549	RED			89	P4-339	
	P4-440	91	YEL			587	P6-56	
	P4-441	93	RED			579	P6-55	
	P6-33	580	YEL			128	P4-340	
	P6-32	571	RED			94	P4-341	
	P4-240	129	YEL			572	P6-16	
	P4-241	126	RED			562	P6-15	
	P6-5	563	YEL			130	P4-140	
	P6-14	554	RED			127	P4-141	
	P4-446	105	YEL			543	P6-44	
	P4-447	107	RED			542	P6-25	
	P6-4	555	YEL			96	P4-442	
	P6-13	547	RED			98	P4-443	
	P4-342	123	YEL			548	P6-12	
	P4-343	99	RED			540	P6-27	
	P6-54	570	YEL			124	P4-242	
	P6-53	560	RED			121	P4-243	
	P4-142	125	YEL			561	P6-31	
	P4-143	122	RED			552	P6-52	
	P6-30	553	YEL			101	P4-444	
	P6-51	545	RED			103	P4-445	
	P4-344	118	YEL			546	P6-29	
	P4-345	104	RED			538	P6-50	
	P6-28	539	YEL			119	P4-244	
	P6-49	534	RED			116	P4-245	
	P4-144	120	YEL			537	P6-46	
	P4-145	117	RED			533	P6-73	
	P6-20	584	YEL			142	P4-334	
	P6-19	583	RED			139	P4-335	
	P4-540	90	YEL			532	P6-74	
	P4-541	92	RED			531	P6-75	
	P6-58	595	YEL			109	P4-149	
	P6-57	594	RED			110	P4-150	
	P4-424	52	YEL			439	P7-61	
	P4-425	54	RED			430	P7-60	
	P7-38	441	YEL			53	P4-324	
	P7-37	433	RED			55	P4-325	
	P4-422	48	YEL			420	P7-59	
	P4-423	50	RED			410	P7-58	
	P7-36	423	YEL			49	P4-322	
	P7-35	413	RED			51	P4-323	
	P4-416	32	YEL			443	P7-39	
	P4-417	35	RED			435	P7-20	
	P7-40	444	YEL			183	P4-316	
	P7-21	437	RED			180	P4-317	
	P4-216	184	YEL			445	P7-41	
	P4-217	181	RED			440	P7-22	
	P7-67	447	YEL			185	P4-116	
	P7-42	442	RED			182	P4-117	
	P4-418	37	YEL			426	P7-19	
	P4-419	40	RED			416	P7-18	
	P7-8	428	YEL			38	P4-318	
	P7-7	418	RED			41	P4-319	
	P4-122	169	YEL			432	P7-70	
	P4-123	167	RED			425	P7-71	
	P7-9	431	YEL			178	P4-218	
	P7-2	421	RED			176	P4-219	
	P4-118	179	YEL			434	P7-23	
	P4-119	177	RED			424	P7-10	
	P7-43	436	YEL			44	P4-420	
	P7-24	427	RED			47	P4-421	
	P4-320	173	YEL			438	P7-69	
	P4-321	170	RED			429	P7-44	
	P7-57	401	YEL			174	P4-220	
	P7-56	396	RED			171	P4-221	
	P4-120	175	YEL			403	P7-34	
	P4-121	172	RED			398	P7-33	
	P7-45	422	YEL			164	P4-224	
	P7-72	414	RED			162	P4-225	
	P4-124	165	YEL			418	P7-25	
	P4-125	163	RED			412	P7-46	
	P7-17	405	YEL			168	P4-222	
	P7-16	400	RED			166	P4-223	
	P4-616	30	YEL			285	P3-190	
	P4-617	33	RED			283	P3-191	
	P3-192	280	YEL			31	P4-516	
	P3-193	277	RED			34	P4-517	
	P4-618	36	YEL			275	P3-194	
	P4-619	39	RED			272	P3-195	
	P3-90	284	YEL			77	P4-534	
	P3-91	281	RED			80	P4-535	
	P4-620	42	YEL			282	P3-123	
	P4-621	45	RED			279	P3-124	
	P3-125	276	YEL	26	9	43	P4-520	
	P3-128	274	RED			46	P4-521	

1005727 D

SYM	ZONE	DESCRIPTION	DR	CHK	DATE	APPROVED
B		REPLACES REVA WITH CHANGES PER TDRR 17889				
C		REVISED PER TDRR 18696			5/20/65	
D		REVISED PER TDRR 19757				

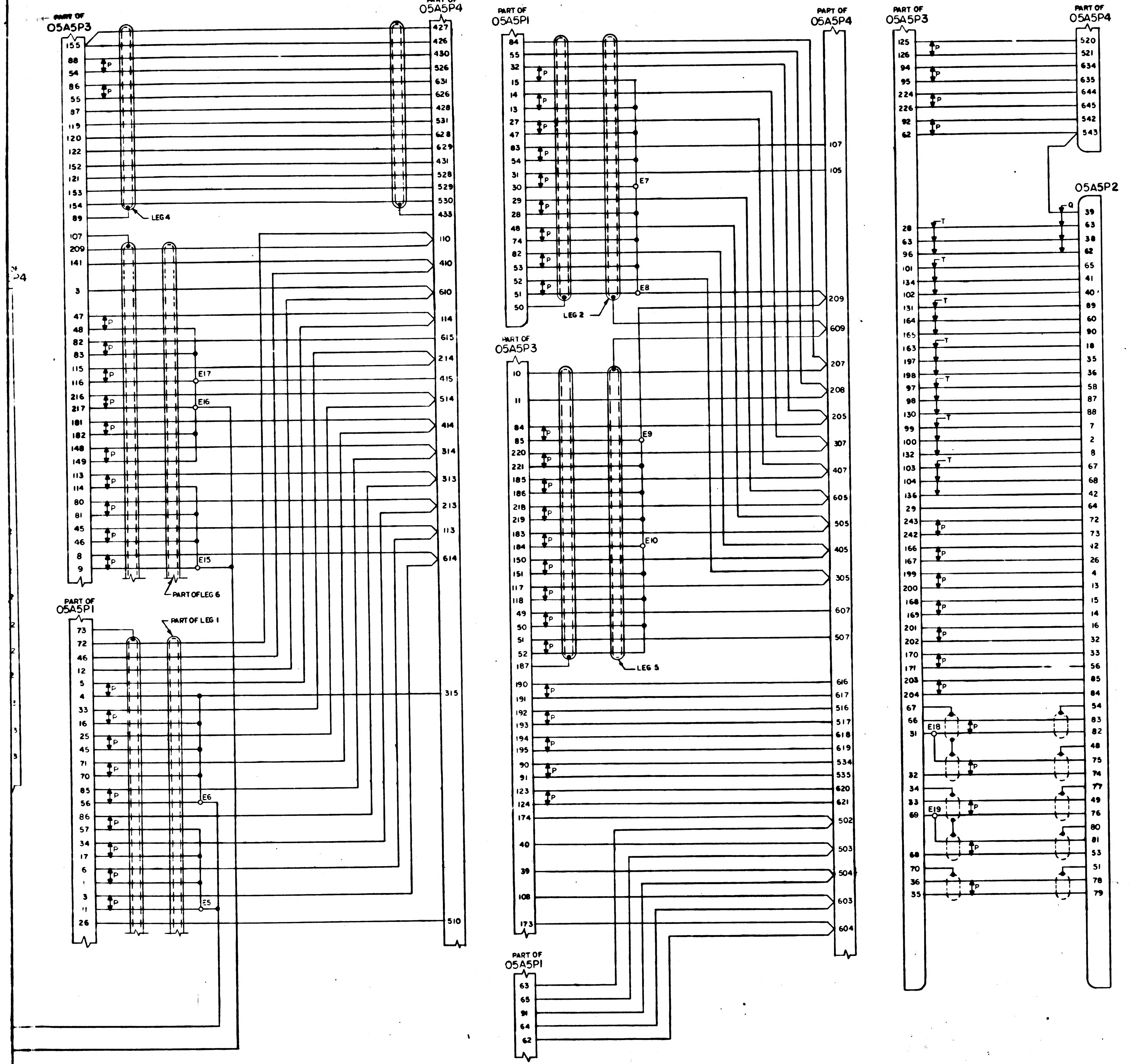

Ⓑ REPLACES REV A WITH CHANGE

	QTY REQD	PART OR IDENTIFYING NO.	MATERIAL OR NOTES	NOMENCLATURE OR DESCRIPTION	FIND NO.
	☒	1005798		WIRING DIAGRAM	REF
* * *	1.2	SEE NOTE 3		INSULATION, ELEC	50
* * *	1.5	SEE NOTE 3		INSULATION, ELEC	49
	1	1010812-1		SEAL, RUBBER	48
* * *	4	SEE NOTE 3		INSULATION, ELEC	47
* * *	3	SEE NOTE 3		INSULATION, ELEC	46
* * *	.5	1006322-022		INSULATION, ELEC	45
	2	1000242-37		FERRULE, ELEC	44
	2	1000243-41		FERRULE, ELEC	43
* * *	.2	1006322-025		INSULATION, ELEC	42
* * *	.2	1006322-001		INSULATION, ELEC	41
* * *	.2	1006322-004		INSULATION, ELEC	40
* * *	43	1006322-007		INSULATION, ELEC	39
* * *	3.5	1010789-001		WIRE, ELEC AWG 24 YEL	38
* * *	0.5	1006322-018		INSULATION, ELEC	37
	2	MS18035-1-2		BAND MARKER, CABLE	36
	AR	1012507-003		TAPE, LACING	35
	10	1010402 2		SLEEVE, SOLDER	34
	21	1010402-1		SLEEVE, SOLDER	33
	2	1000242-32		FERRULE, ELEC	32
	2	1000243-34		FERRULE, ELEC	31
	2	1000242-26		FERRULE, ELEC	30
	2	1000243-27		FERRULE. ELEC	29
	6	1000242-29		FERRULE ELEC	28
	6	1000243-31		FERRULE, ELEC	27
* * *	0.5	1006322-019		INSULATION, ELEC	26
* * *	1.0	1006322-020		INSULATION ELEC	25
* * *	7	SEE NOTE 3		INSULATION, ELEC	24
* * *	3.6	SEE NOTE 3		INSULATION, ELEC	23
* * *	3.5	SEE NOTE 3		INSULATION, ELEC	22
* * *	3.7	SEE NOTE 4		WIRE, BRAID	21
* * *	3.6	SEE NOTE 4		WIRE, ~~BRAID~~	20
* * *	3.5	SEE NOTE 4		WIRE, BRAID	19
* * *	22	1010789-007		WIRE, ELEC. AWG 22, BLK	18
* * *	11	1010789-006		WIRE, ELEC, AWG 22, YEL	17
* * *	4	1010789-010		WIRE, ELEC, AWG 22, 4 COND, TW	16
* * *	3	1010789-009		WIRE, ELEC, AWG 22, 3 COND, TW	15
* * *	20	1010789-003		WIRE, ELEC, AWG 24 2 COND, TW	12
* * *	18	1010789-012		WIRE, ELEC, AWG 24, 2 COND, SHLD	11
* * *	170	1010789-016		WIRE, ELEC, AWG 26, YEL	10
* * *	365	1010789-017		WIRE, ELEC, AWG 26, 2 COND, TW	9
	244	1010738-5		CONTACT, ELEC, PIN	8
	1	1010771-013		CONNECTOR, PLUG, ELEC	7
	1	1010771-101		CONNECTOR, PLUG, ELEC	6
	1	1010771-102		CONNECTOR, PLUG, ELEC	5
	1	1010771-103		CONNECTOR, PLUG, ELEC	4
	1	1010771-104		CONNECTOR, PLUG, ELEC	3
	1	1010815-144		CONNECTOR, PLUG, ELEC	2
	1	1003731		CONNECTOR ASSY, 360 CONTACTS	1

LIST OF MATERIALS

NEXT ASSY	USED ON

APPLICATION

UNLESS OTHERWISE SPECIFIED
DIMENSIONS ARE IN INCHES
CAPACITOR VALUES ARE IN μf
RESISTOR VALUES ARE IN OHMS
TOLERANCES ON
FRACTIONS DECIMALS ANGLES
± ± ±
DO NOT SCALE THIS DRAWING

MATERIAL

MIT
INSTRUMENTATION LAB
CAMBRIDGE, MASS

MANNED SPACECRAFT CENTER
HOUSTON, TEXAS

DRAWN
CHECKED A. Caggiano
APPROVED
APPROVED
APPROVED MIT
APPROVED MSC
DATE

WIRING HARNESS
AGC TO PSA & G/N TO SPACECRAFT

CODE IDENT NO. 80230
SIZE J
DRAWING NO. 1005727
SCALE NONE
SHEET 4 OF 4

F 2/2

MASTER

1005727 D

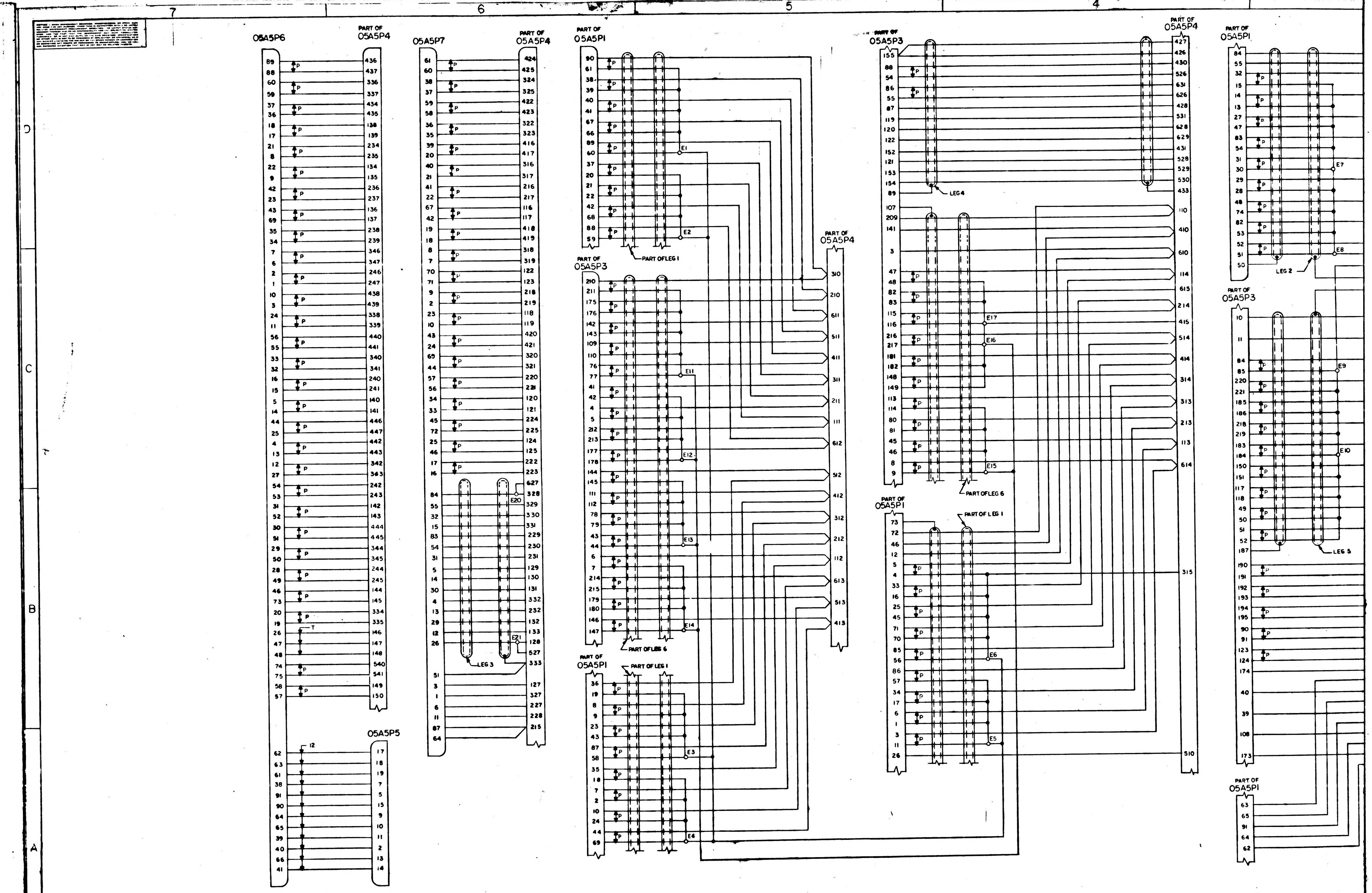
7
6
5
4
D
C
B
A
05A5P6
PART OF 05A5P4
05A5P7
PART OF 05A5P4
PART OF 05A5P1
PART OF 05A5P3
PART OF 05A5P4
PART OF 05A5P3
PART OF 05A5P4
PART OF 05A5P1
PART OF 05A5P1
PART OF 05A5P3
PART OF 05A5P1
PART OF 05A5P3
PART OF 05A5P1
05A5P5
P
T
12
LEG 1
LEG 2
LEG 3
LEG 4
LEG 5
PART OF LEG 1
PART OF LEG 6
E1
E2
E3
E4
E5
E6
E7
E8
E9
E10
E11
E12
E13
E14
E15
E16
E17
E20
E21

1005727 D E1/2

SHEET 4

REVISIONS			
SYM	DESCRIPTION	DATE	APPROVAL

1005727

JUMPER LIST			
FROM	TO	LENGTH	FIND NO.
P4 - 128	P4 - 527	AR	10
P4 - 328	P4 - 627	AR	10
P4 - 426	P4 - 427	AR	10

INTERNAL GROUND SHEATHS CONNECTIONS			
FROM	TO	LENGTH	FIND NO.
555	558	AR	13
563	566	AR	13

**	ATTACH FIND 10 LG AR
***	ATTACH FIND 13 LG AR

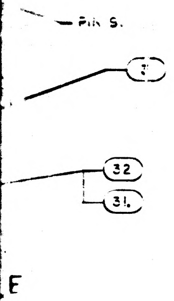

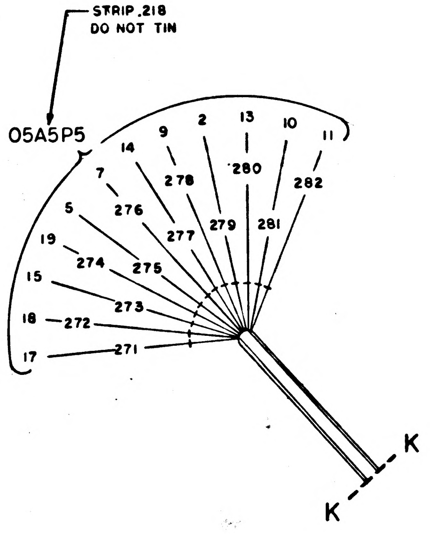
STRIP .218
DO NOT TIN
05A5P5
9
2
13
10
11
14
7
278
280
282
5
276
277
279
281
19
274
275
15
273
18
272
17
271
K
K

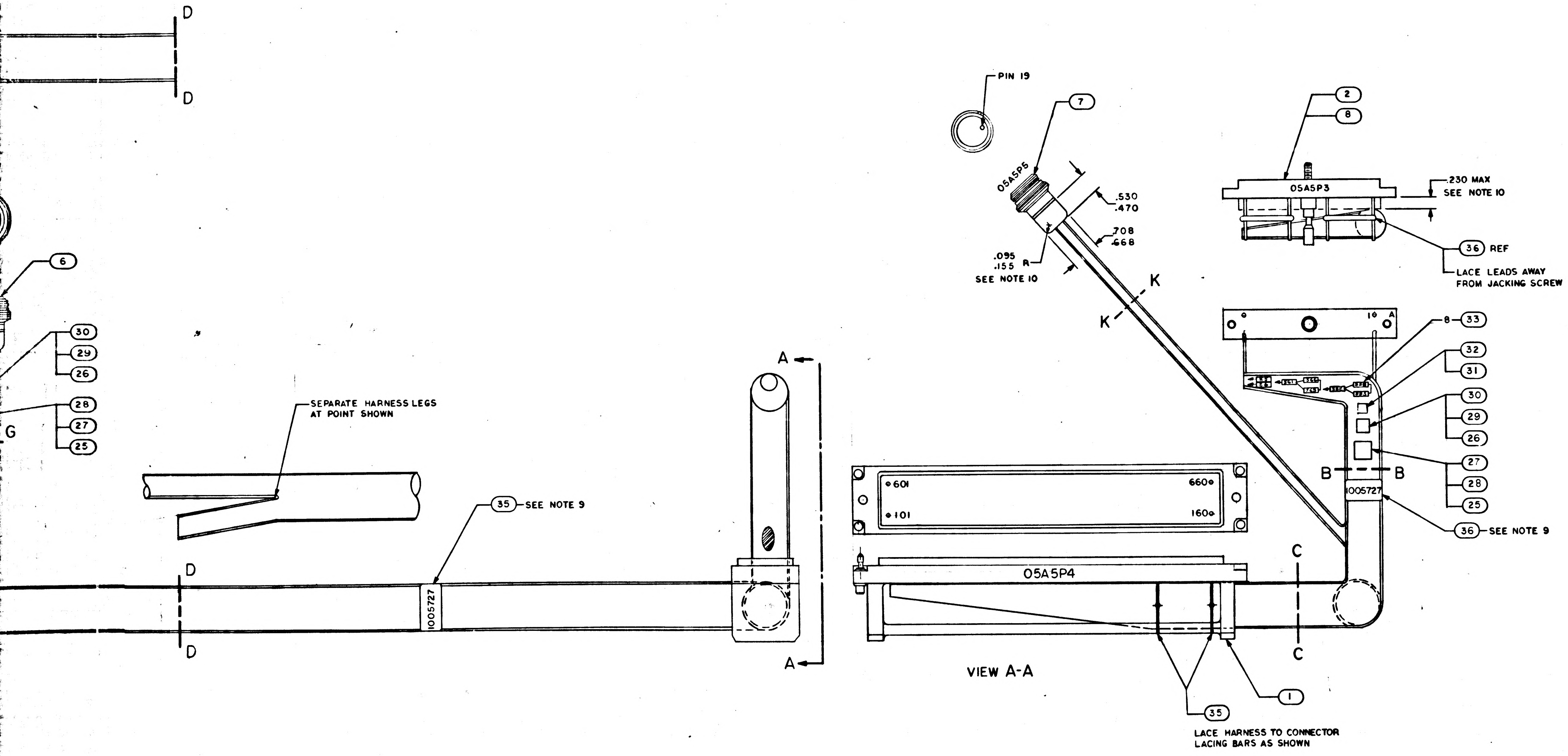
D
D
PIN 19
7
05A5P5
.530
.470
.708
.668
.095
.155
R
SEE NOTE 10
K
K
2
8
05A5P3
.230 MAX
SEE NOTE 10
36 REF
LACE LEADS AWAY FROM JACKING SCREW
6
30
29
26
28
27
25
G
8
33
32
31
30
29
26
27
28
25
B
B
1005727
36 SEE NOTE 9
SEPARATE HARNESS LEGS AT POINT SHOWN
35 SEE NOTE 9
A
A
D
D
1005727
601
660
101
160
05A5P4
C
C
VIEW A-A
35
1
LACE HARNESS TO CONNECTOR LACING BARS AS SHOWN

☒	1005798	WIRING DIAGRAM	REF
2	MS18035-1	BAND MARKER, CABLE	36
AR	1012507 -001	TAPE, LACING	35
4	1010402 - 2	SLEEVE, SOLDER	34
13	1010402 - 1	SLEEVE, SOLDER	33
4	1000242-14	FERRULE, ELEC	32
4	1000243-23	FERRULE, ELEC	31
4	1000242-26	FERRULE, ELEC	30
4	1000243-21	FERRULE, ELEC	29
4	1000242-33	FERRULE, ELEC	28
4	1000243-37	FERRULE, ELEC	27
AR	SEE NOTE 14	INSULATION, ELEC	26
AR	SEE NOTE 13	INSULATION, ELEC	25
* 3.7	SEE NOTE 3	INSULATION, ELEC	24
* 3.6	SEE NOTE 3	INSULATION, ELEC	23
* 3.5	SEE NOTE 3	INSULATION, ELEC	22
* 3.7	SEE NOTE 4	WIRE, BRAID	21
* 3.6	SEE NOTE 4	WIRE, BRAID	20
* 3.5	SEE NOTE 4	WIRE, BRAID	19
AR	1010789 - 007	WIRE, ELEC, AWG 22, BLK	18
AR	1010789 - 006	WIRE, ELEC, AWG 22, YEL	17
AR	1010789 - 010	WIRE, ELEC, AWG 22, 4 COND TWISTED	16
AR	1010789 - 009	WIRE, ELEC, AWG 22, 3 COND, TWISTED	15
AR	1010789 - 008	WIRE, ELEC, AWG 22, 2 COND, TWISTED	14
AR	1010789 - 002	WIRE, ELEC, AWG 24, BLK	13
AR	1010789 - 003	WIRE, ELEC, AWG 24, 2 COND, TWISTED	12
AR	1010789 - 012	WIRE, ELEC, AWG 24, 2 COND, SHLD	11
AR	1010789 - 016	WIRE, ELEC, AWG 26, YEL	10
AR	1010789 - 017	WIRE, ELEC, AWG 26, 2 COND, TWISTED	9
244	1010738 - 5	CONTACT, ELEC, PIN	8
1	1010771 - 013	CONNECTOR, PLUG, ELEC	7
1	1010771 - 101	CONNECTOR, PLUG, ELEC	6
1	1010771 - 102	CONNECTOR, PLUG, ELEC	5
1	1010771 - 103	CONNECTOR, PLUG, ELEC	4
1	1010771 - 104	CONNECTOR, PLUG, ELEC	3
1	1010815 - 144	CONNECTOR, PLUG, ELEC	2
1	1003731	CONNECTOR ASSY, 360 CONTACTS	1
QTY REQD	PART OR IDENTIFYING NO.	NOMENCLATURE OR DESCRIPTION	FIND NO

LIST OF MATERIALS

1005727

		UNLESS OTHERWISE SPECIFIED DIMENSIONS ARE IN INCHES TOLERANCES ON FRACTIONS ± — DECIMALS XXX ±.010 ANGLES ± — DO NOT SCALE THIS DRAWING	MIT INSTRUMENTATION LAB CAMBRIDGE, MASS	MANNED SPACECRAFT CENTER HOUSTON, TEXAS
		MATERIAL	DRAWN A. D. Lee DATE 30 NOV 64 CHECKED 11 DEC 64 APPROVAL APPROVAL 14 Dec 64	WIRING HARNESS, AGC TO PSA & G/N TO SPACECRAFT
1015000		HEAT TREATMENT	NASA APPROVAL	CODE IDENT NO. — SIZE J NASA DRAWING NO. 1005727
NEXT ASSY	USED ON	FINAL FINISH	MIT APPROVAL 15 Feb 65	SCALE 1/1 WT — SHEET 1 OF 3
APPLICATION				

MASTER

(34)

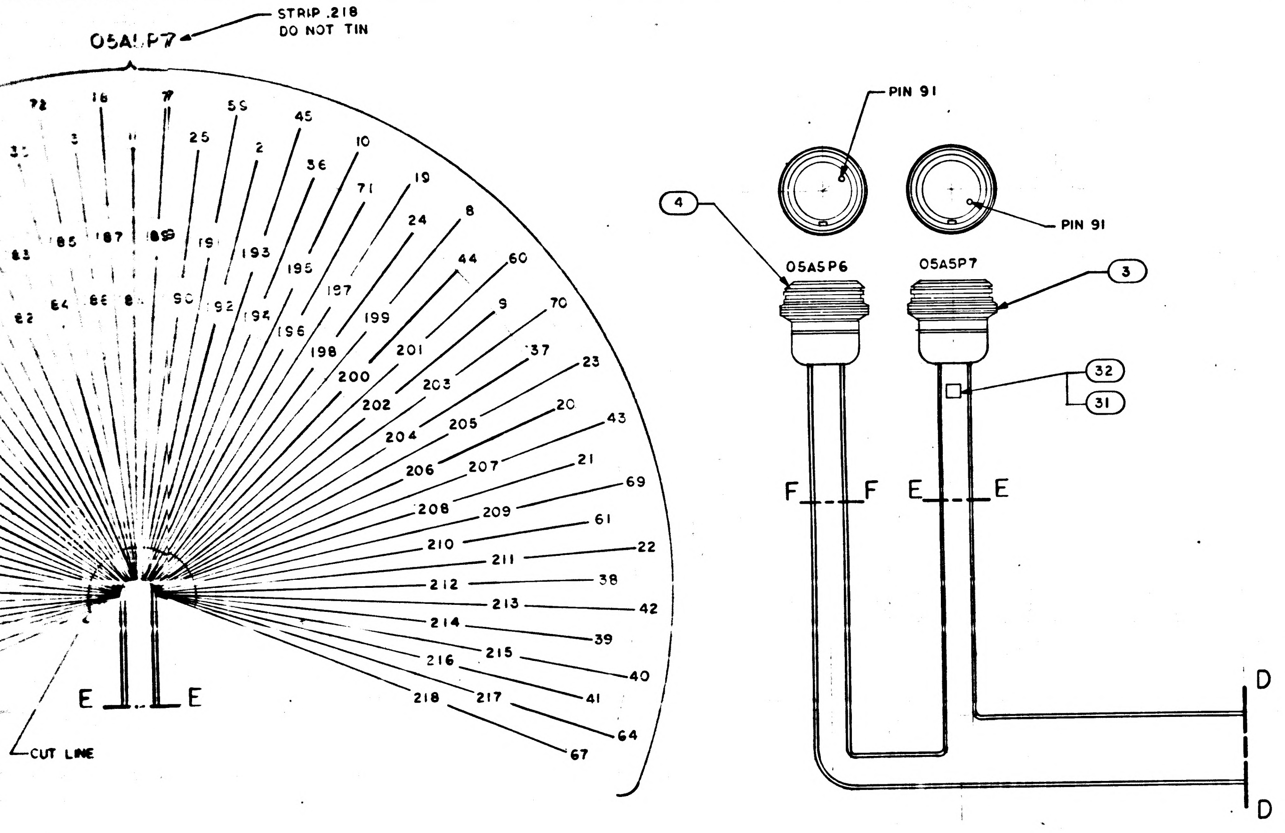
05A5P7
STRIP .218
DO NOT TIN
E
E
CUT LINE
PIN 91
PIN 91
4
05A5P6
05A5P7
3
32
31
F F
E E
D
D
72 16 77 55 45 10 19 8 60 70 23 43 69 22 42 40 64 67
25 2 36 71 24 44 9 37 20 21 61 38 39 41
185 187 189 19 193 195 197 199 201 203 205 207 209 211 213 215 217
196 198 200 202 204 206 208 210 212 214 216 218

JUMPER LIST			
FROM	TO	LENGTH	FIND NO.
P4 – 128	P4 – 527	A R	10
P4 – 328	P4 – 627	A R	10
P4 – 426	P4 – 427	A R	10

INTERNAL GROUND SHEATHS CONNECTIONS			
FROM	TO	LENGTH	FIND NO.
555	558	A R	13
563	566	A R	13

**	ATTACH FIND 10 LG AR
***	ATTACH FIND 13 LG AR

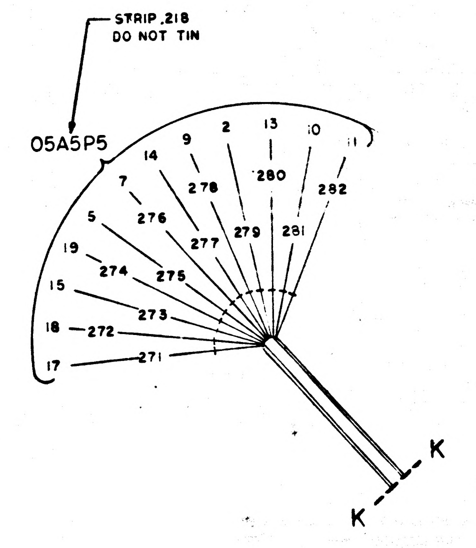
STRIP .218
DO NOT TIN
05A5P5
9 2 13 10 11
14 278 280 282
7 276 277 279 281
5 274 275
19 273
15 272
18 271
17
K
K

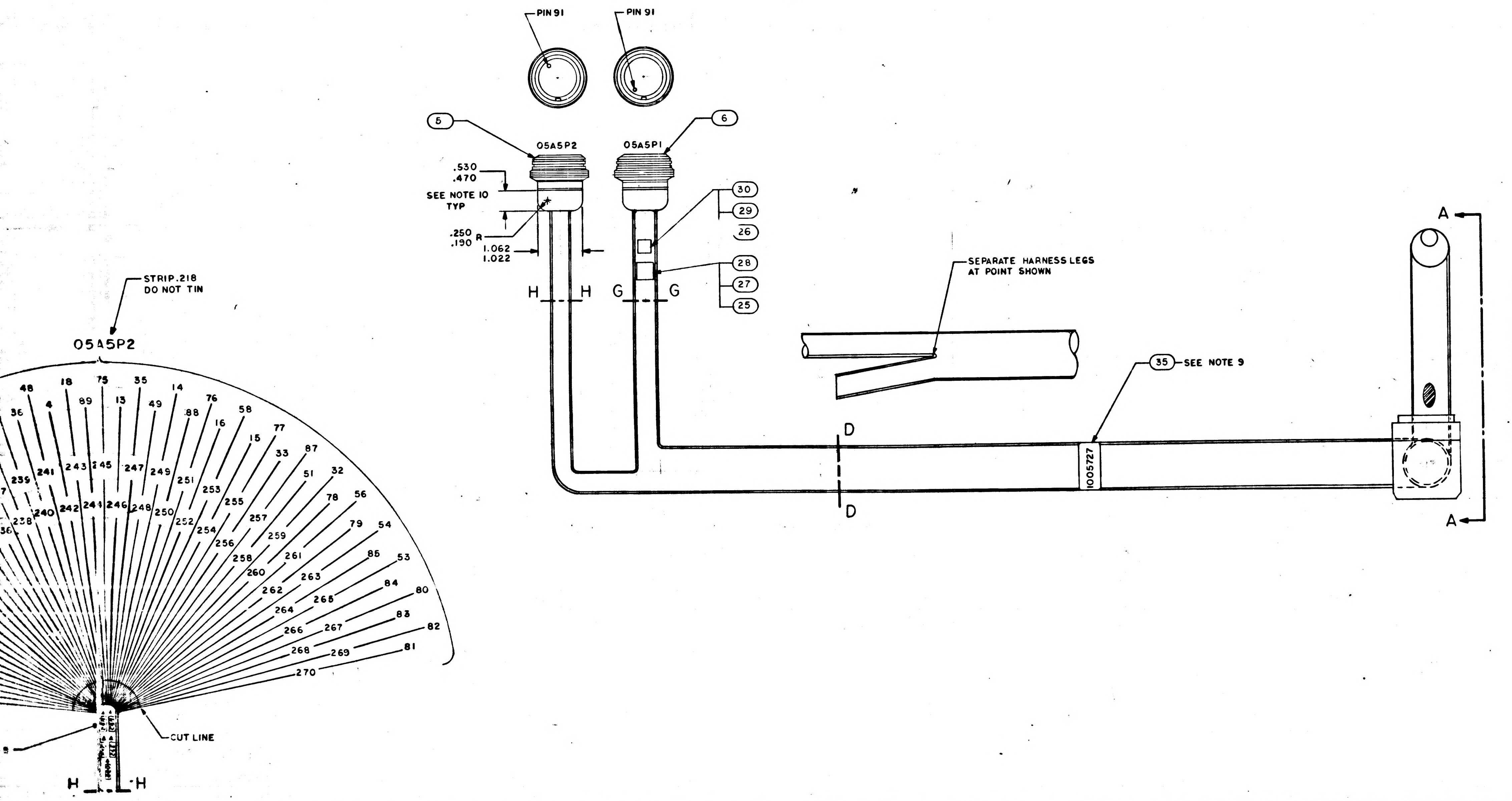
STRIP .218
DO NOT TIN
05A5P2
CUT LINE
H H
PIN 91
PIN 91
5
6
05A5P2
05A5P1
.530
.470
SEE NOTE 10
TYP
.250
.190 R
1.062
1.022
H H
G G
30
29
26
28
27
25
SEPARATE HARNESS LEGS
AT POINT SHOWN
35 SEE NOTE 9
1005727
D
D
A
A
48 18 75 35 14 76 58 77 87 32 56 54 53 80 82 81
36 4 89 13 49 88 16 15 33 51 78 79 85 84 83
241 243 245 247 249 251 253 255 257 259 261 263 265 267 269
239 240 242 244 246 248 250 252 254 256 258 260 262 264 266 268 270
238 236

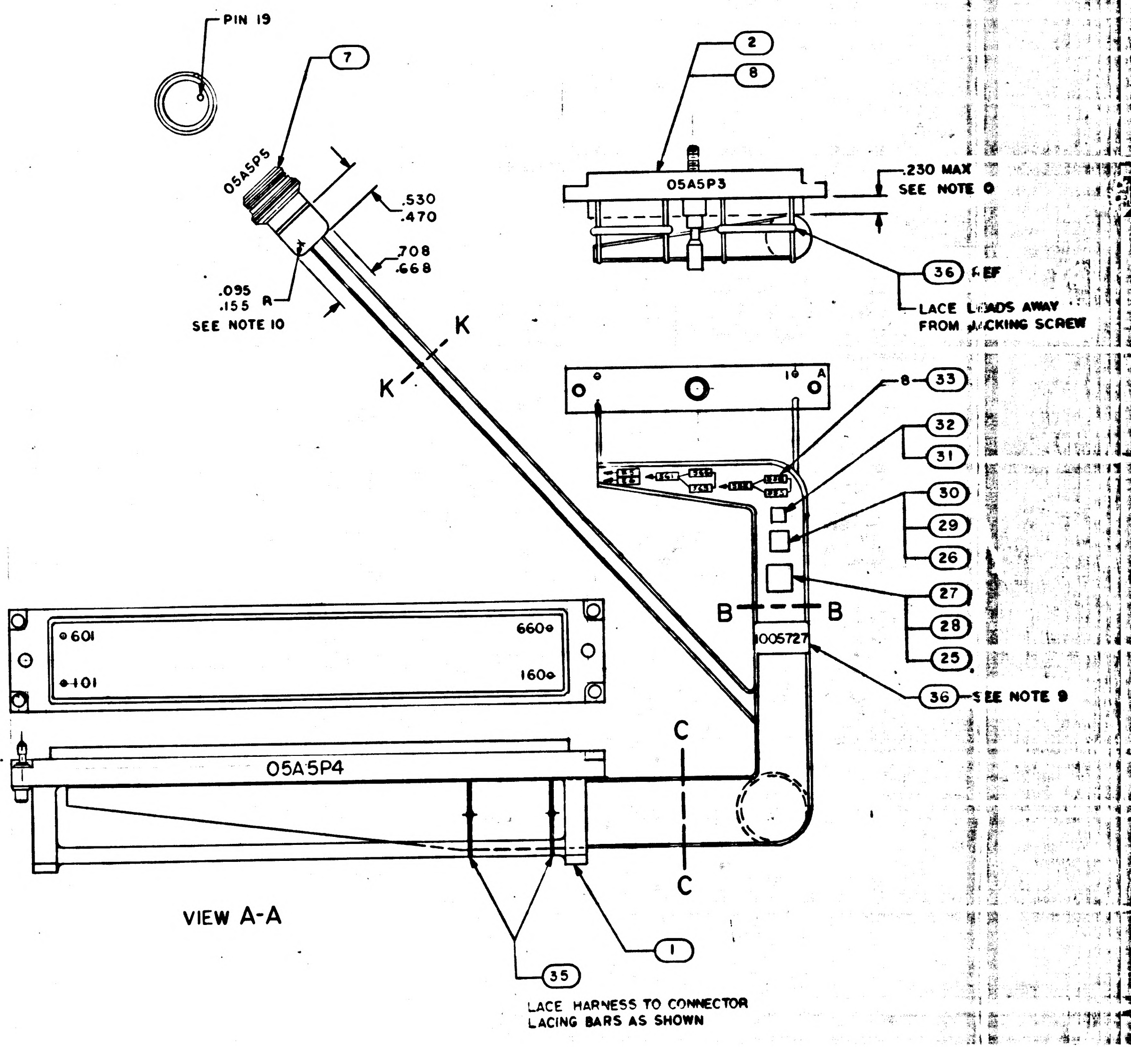
PIN 19
7
05A5P5
.530
.470
.708
.668
.095
.155 R
SEE NOTE 10
K
K
2
8
05A5P3
.230 MAX
SEE NOTE 9
36 REF
LACE LEADS AWAY
FROM JACKING SCREW
8 33
32
31
30
29
26
27
28
25
B B
1005727
36 SEE NOTE 9
C
C
•601 660•
•401 160•
05A5P4
VIEW A-A
35
1
LACE HARNESS TO CONNECTOR
LACING BARS AS SHOWN

MASTER

1015C00	
NEXT ASSY	USED ON
APPLICATION	

NOTICE — WHEN GOVERNMENT DRAWINGS, SPECIFICATIONS, OR OTHER DATA ARE USED FOR ANY PURPOSE OTHER THAN IN CONNECTION WITH A DEFINITELY RELATED GOVERNMENT PROCUREMENT OPERATION, THE UNITED STATES GOVERNMENT THEREBY INCURS NO RESPONSIBILITY NOR ANY OBLIGATION WHATSOEVER; AND THE FACT THAT THE GOVERNMENT MAY HAVE FORMULATED, FURNISHED, OR IN ANY WAY SUPPLIED THE SAID DRAWINGS, SPECIFICATIONS, OR OTHER DATA IS NOT TO BE REGARDED BY IMPLICATION OR OTHERWISE AS IN ANY MANNER LICENSING THE HOLDER OR ANY OTHER PERSON OR CORPORATION, OR CONVEYING ANY RIGHTS OR PERMISSION TO MANUFACTURE, USE, OR SELL ANY PATENTED INVENTION THAT MAY IN ANY WAY BE RELATED THERETO.

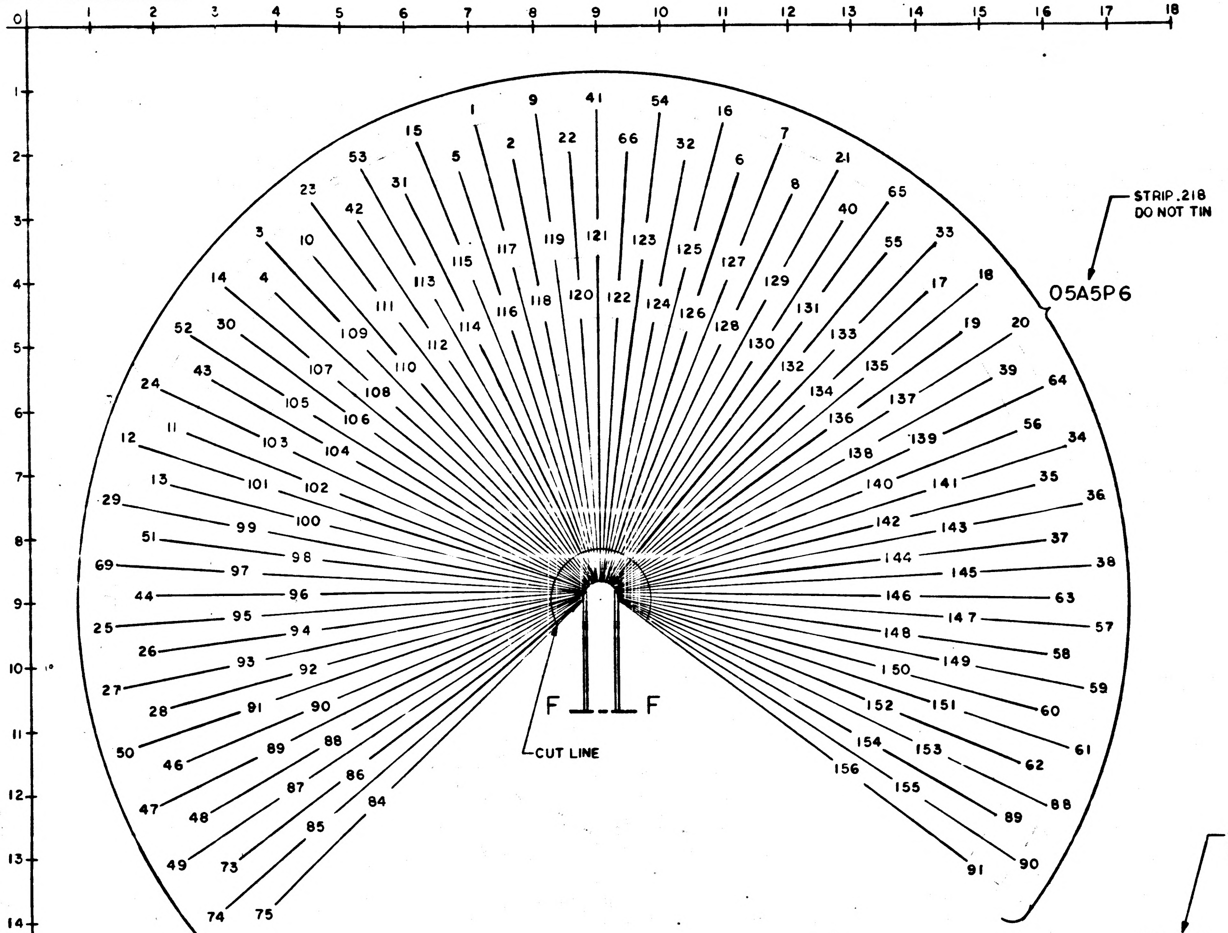
0 1 2 3 4 5 6 7 8 9 10 11 12 13 14 15 16 17 18
STRIP .218
DO NOT TIN
05A5P6
F
F
CUT LINE

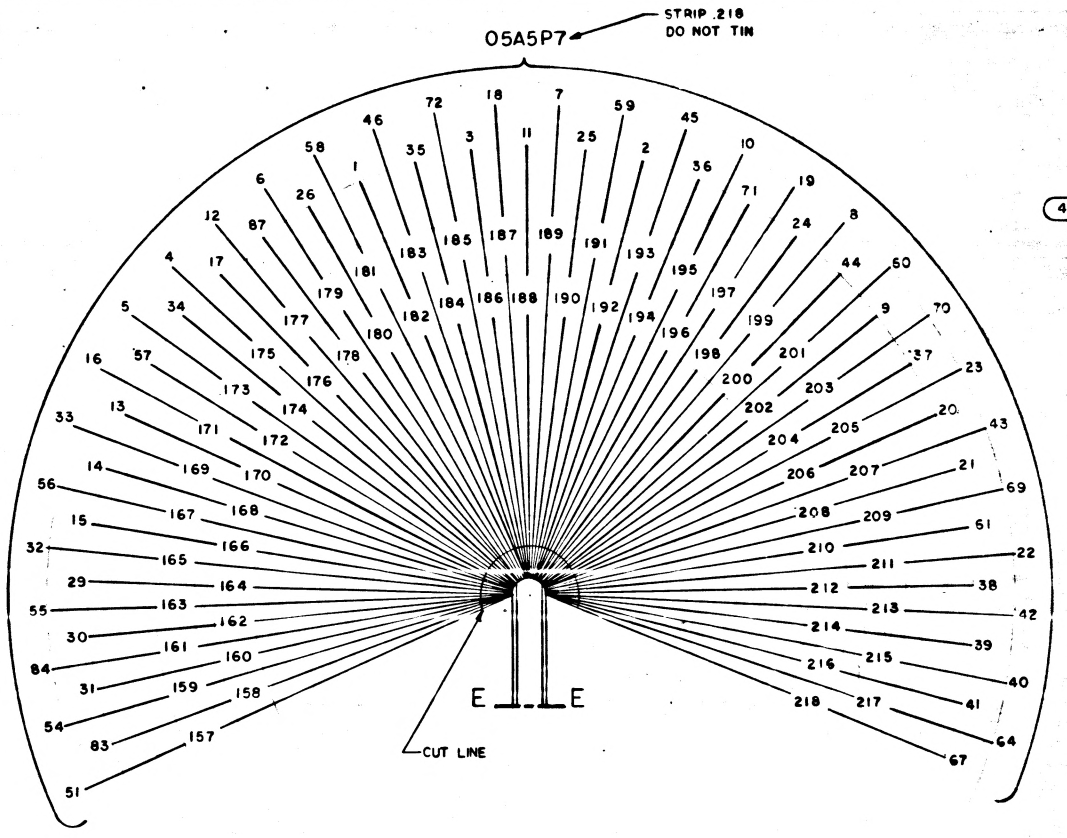
05A5P7
STRIP .218
DO NOT TIN
E
E
CUT LINE

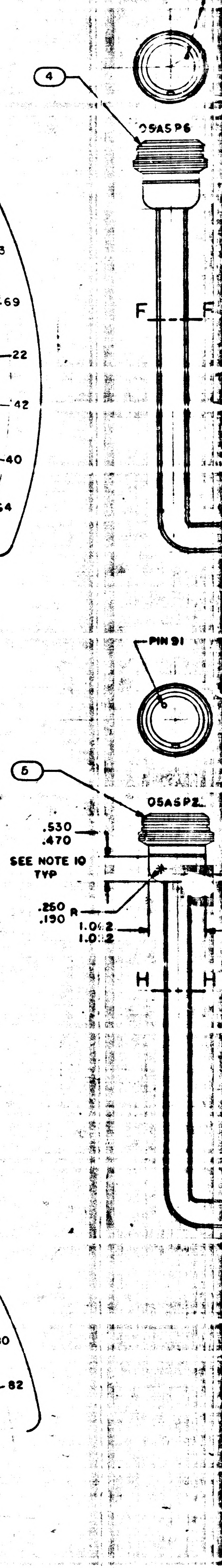
4
05A5P6
F
PIN 91
5
05A5P2
.530
.470
SEE NOTE 10
TYP
.250 R
.190
1.062
1.032
H

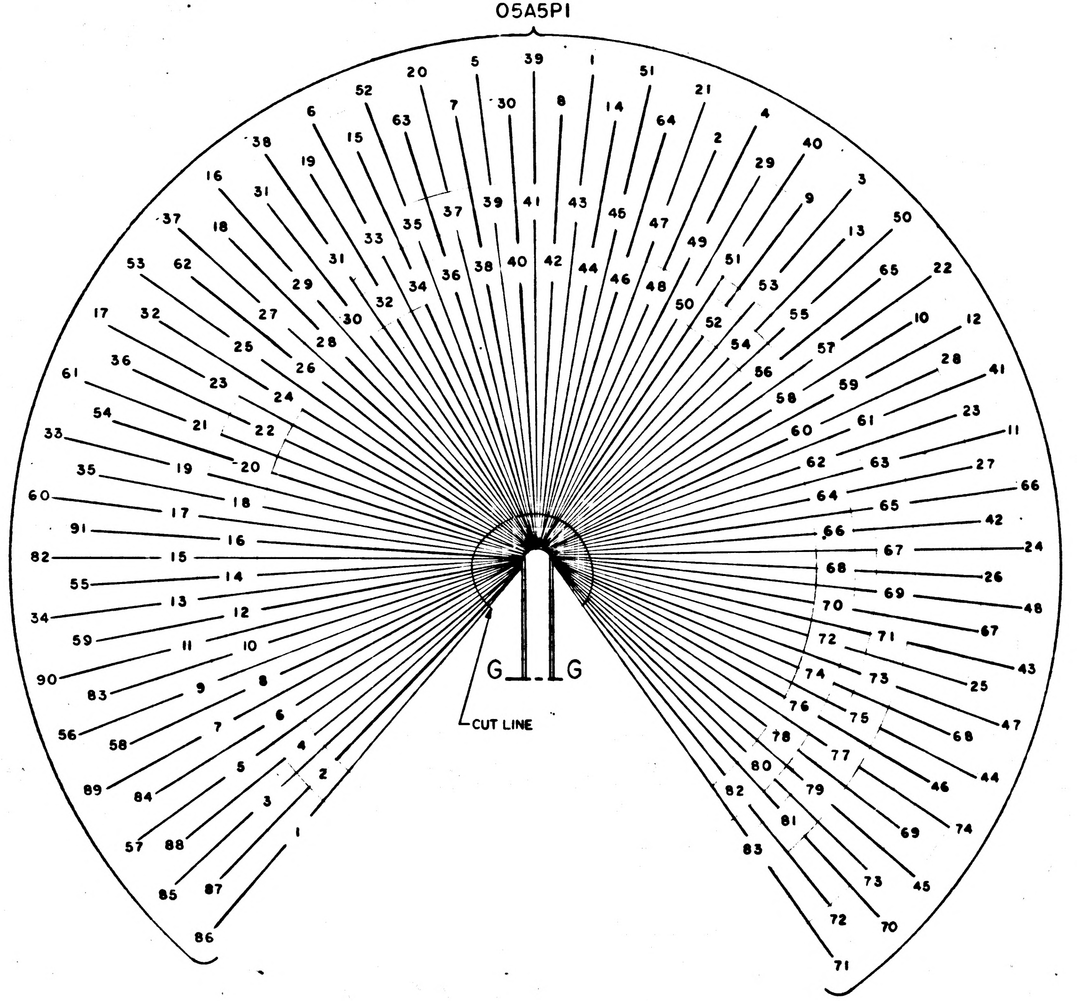
STRIP .218
DO NOT TIN
05A5P1
G
G
CUT LINE

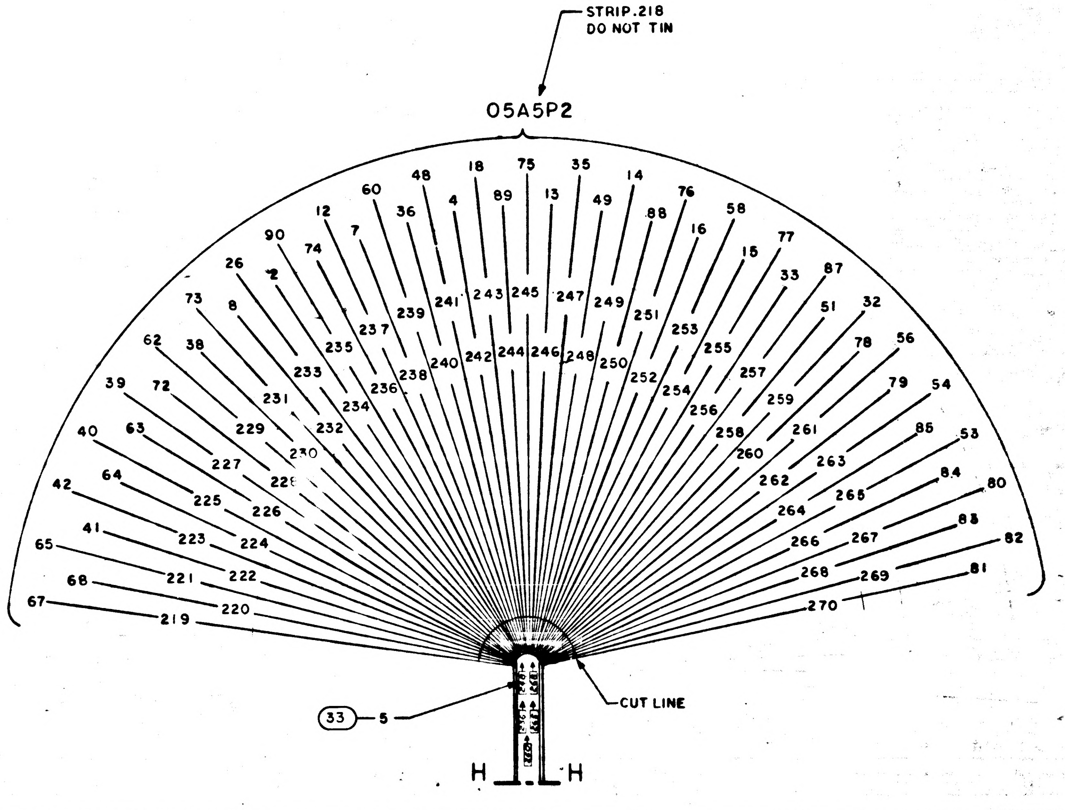
STRIP .218
DO NOT TIN
05A5P2
33
5
CUT LINE
H
H

NOTES:

1. INTERPRET DRAWING IN ACCORDANCE WITH STANDARDS PRESCRIBED BY MIL-D-70327
2. FOR SYMBOL FABRICATION AND REQUIRED TESTS SEE ND 1002032
3. MIL-I-631 TYPE F, FORM U_8, GRADE A CLASS I, CATEGORY I FOR FIND NO. 22 AWG 5/8 FOR FIND NO. 23 AWG 3/8 FOR FIND NO. 24 AWG 2
4. QQ-B 575 FOR FIND NO. 19 BRAID SIZE 1/2, AWG 30 FOR FIND NO. 20 BRAID SIZE 1/4 AWG 36 FOR FIND NO. 21 BRAID SIZE 5/32
5. * DENOTES LENGTH IN FEET
6. FEED WIRES THROUGH BRAID AND SLEEVING. SLEEVING TO COVER FERRULES AT BOTH ENDS OF CABLES
7. INSTALL CRIMP STYLE TERMINALS IN ACCORDANCE WITH ND1002206
8. AR DENOTES AS REQUIRED
9. MARK .100/.060 HIGH PER ND1002019 USING BLACK MARKING INK 1006271-10
10. ENCAPSULATE INDICATED AREA PER ND1002009 METHOD E, MOUNTING SURFACES OF CONNECTORS MUST NOT BE ENCAPSULATED
11. FOR INTERCONNECTING OF GROUND SHEATH CONNECTIONS SEE INTERNAL GROUND SHEATH CONNECTION CHART
12. TRIM AND DRESS ALL CONNECTOR LEADS AT ASSEMBLY
13. CENTER TWO (2) PIECES 1.5 LONG OF FIND NO. 25 (MIL-I-23053, CLASS 1, COLOR BLACK, SIZE 7/16) UNDER FIND NO. 27
14. CENTER ONE (1) PIECE 1.5 LONG OF FIND NO. 26 (MIL-I-23053, CLASS 1, COLOR BLACK SIZE NO. 4) UNDER FIND NO. 29
15. TEST PER FTM 1005707

1005727

REVISIONS			
SYM	DESCRIPTION	DATE	APPROVAL

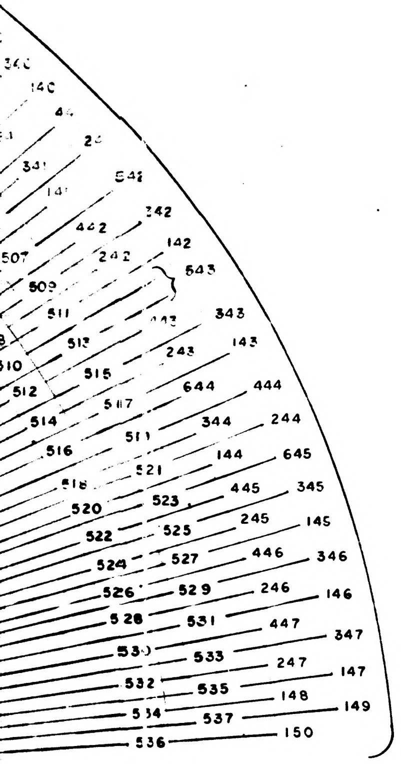

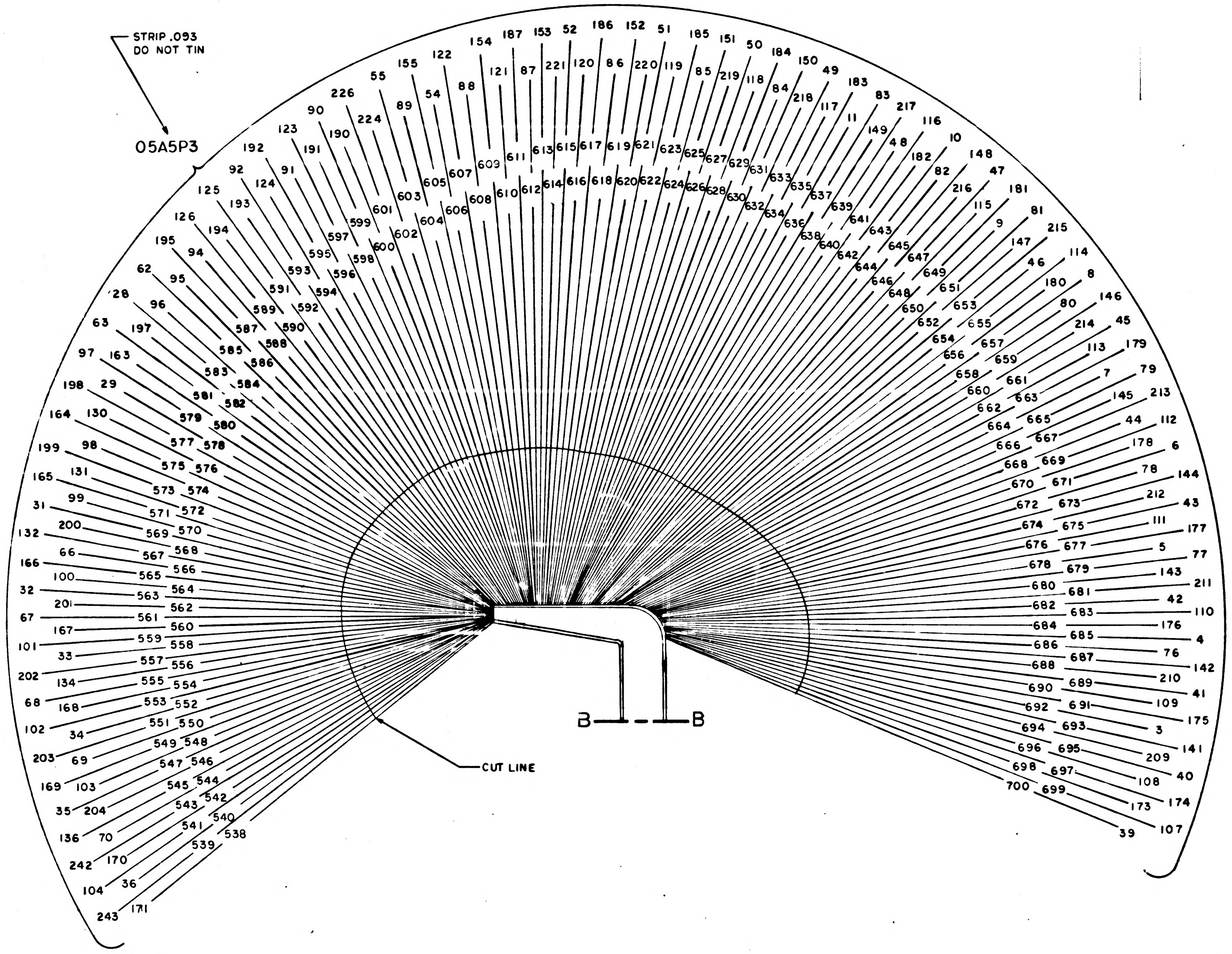

D
C
B
A

1005727

QTY REQD	PART OR IDENTIFYING NO.	NOMENCLATURE OR DESCRIPTION	FIND NO

LIST OF MATERIALS

NEXT ASSY	USED ON
APPLICATION	

UNLESS OTHERWISE SPECIFIED
DIMENSIONS ARE IN INCHES
TOLERANCES ON
FRACTIONS ± — DECIMALS XXX±.010 ANGLES ± —
DO NOT SCALE THIS DRAWING
MATERIAL
HEAT TREATMENT
FINAL FINISH

MIT
INSTRUMENTATION LAB
CAMBRIDGE, MASS
DWG NO CONTRACT
DRAWN A. D. Leo DATE 30 Nov 64
CHECKED R. R. Kingsbury 11 Dec 64
APPROVAL
APPROVAL Eldon C Hall 14 Dec 64
NASA APPROVAL
MIT APPROVAL 15 Dec 64

MANNED SPACECRAFT CENTER
HOUSTON, TEXAS

WIRING HARNESS,
AGC TO PSA & G/N TO SPACECRAFT

CODE IDENT NO. —— SIZE J NASA DRAWING NO. 1005727
SCALE 1/1 WT —— SHEET 2 OF 3

6 5 4 3 2

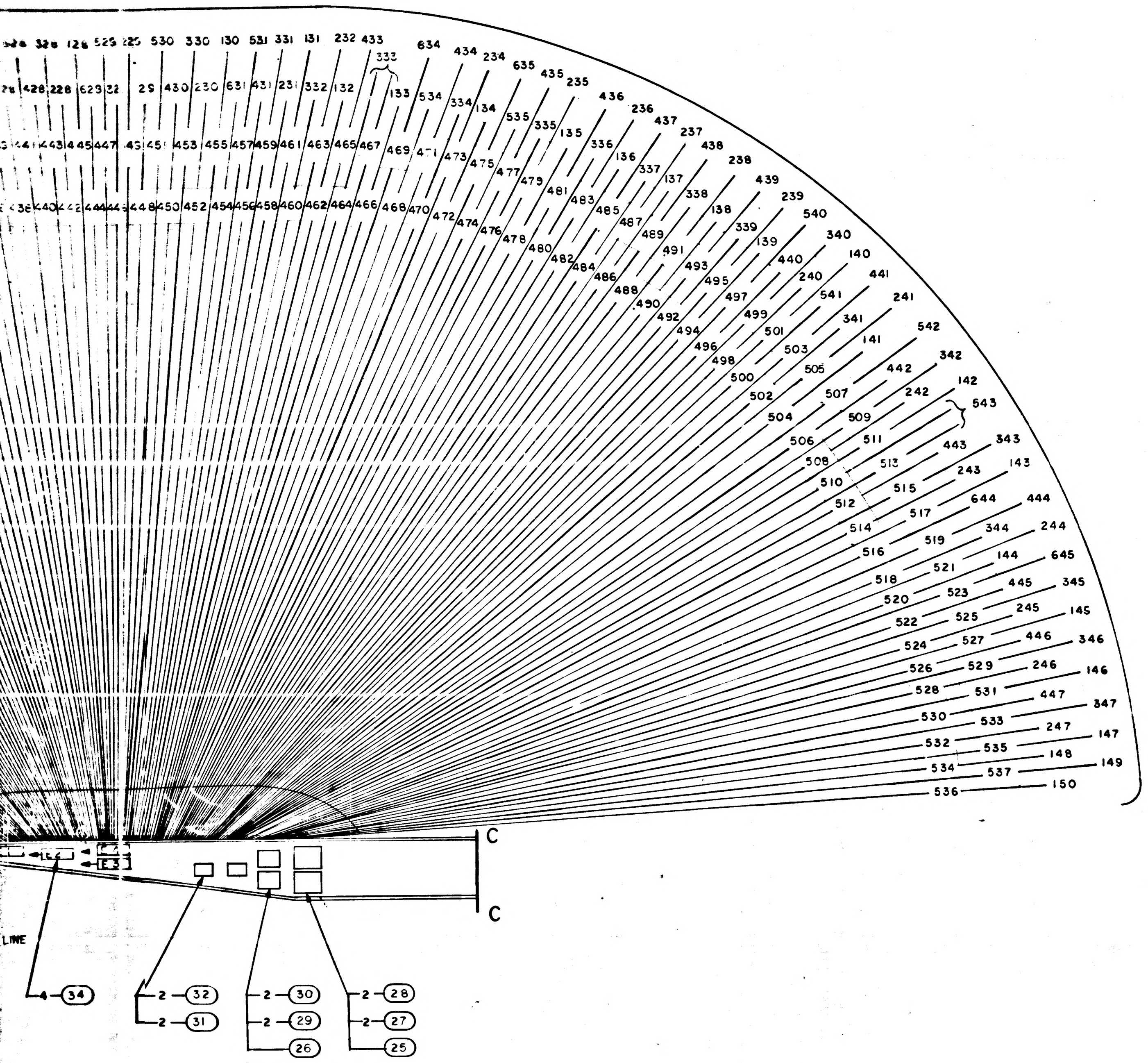

C
C
LINE
4 (34)
2 (32)
2 (31)
2 (30)
2 (29)
(26)
2 (28)
2 (27)
(25)

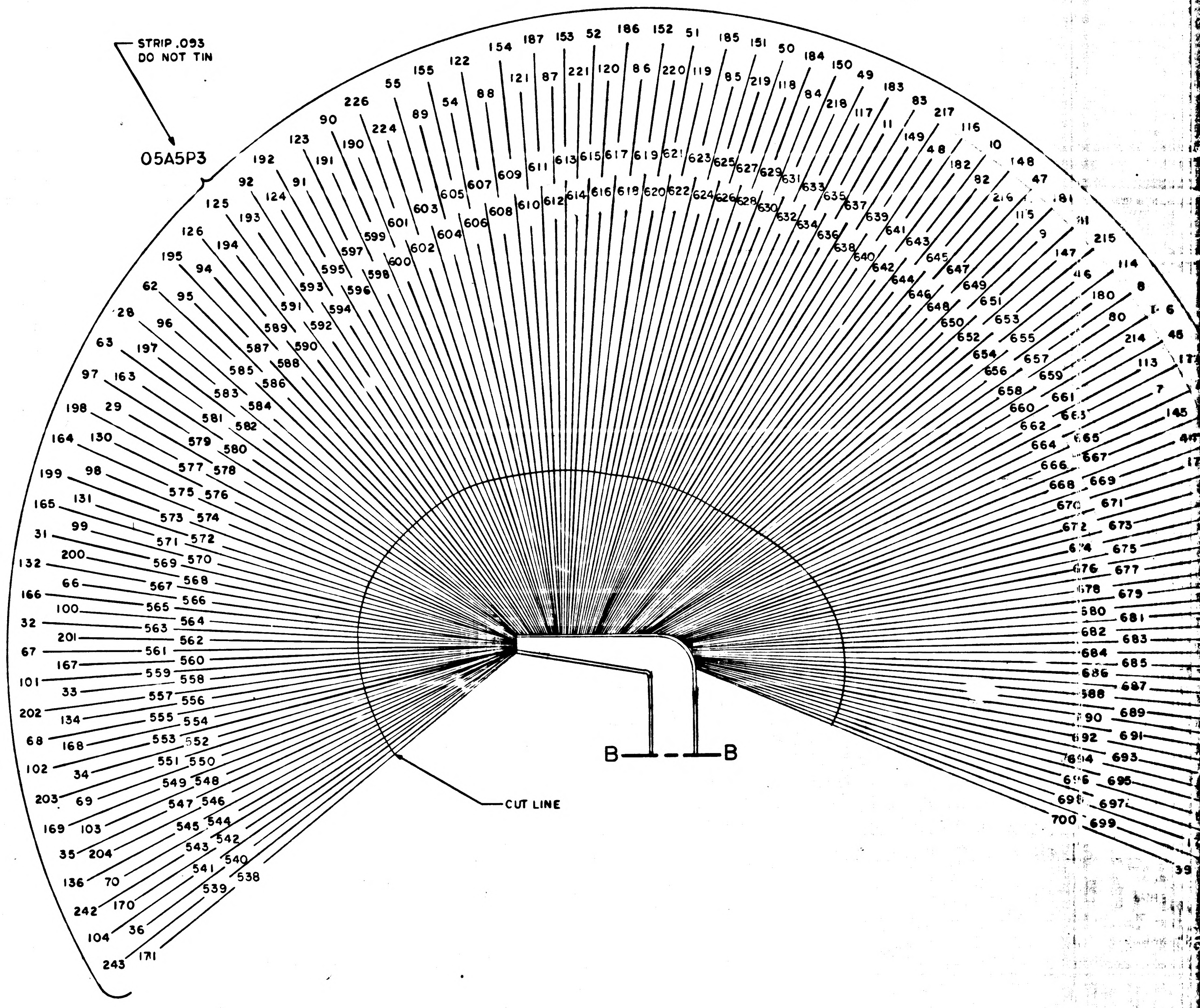

STRIP .093
DO NOT TIN
05A5P3
CUT LINE
B
B

MASTER

6 5 4 3 2

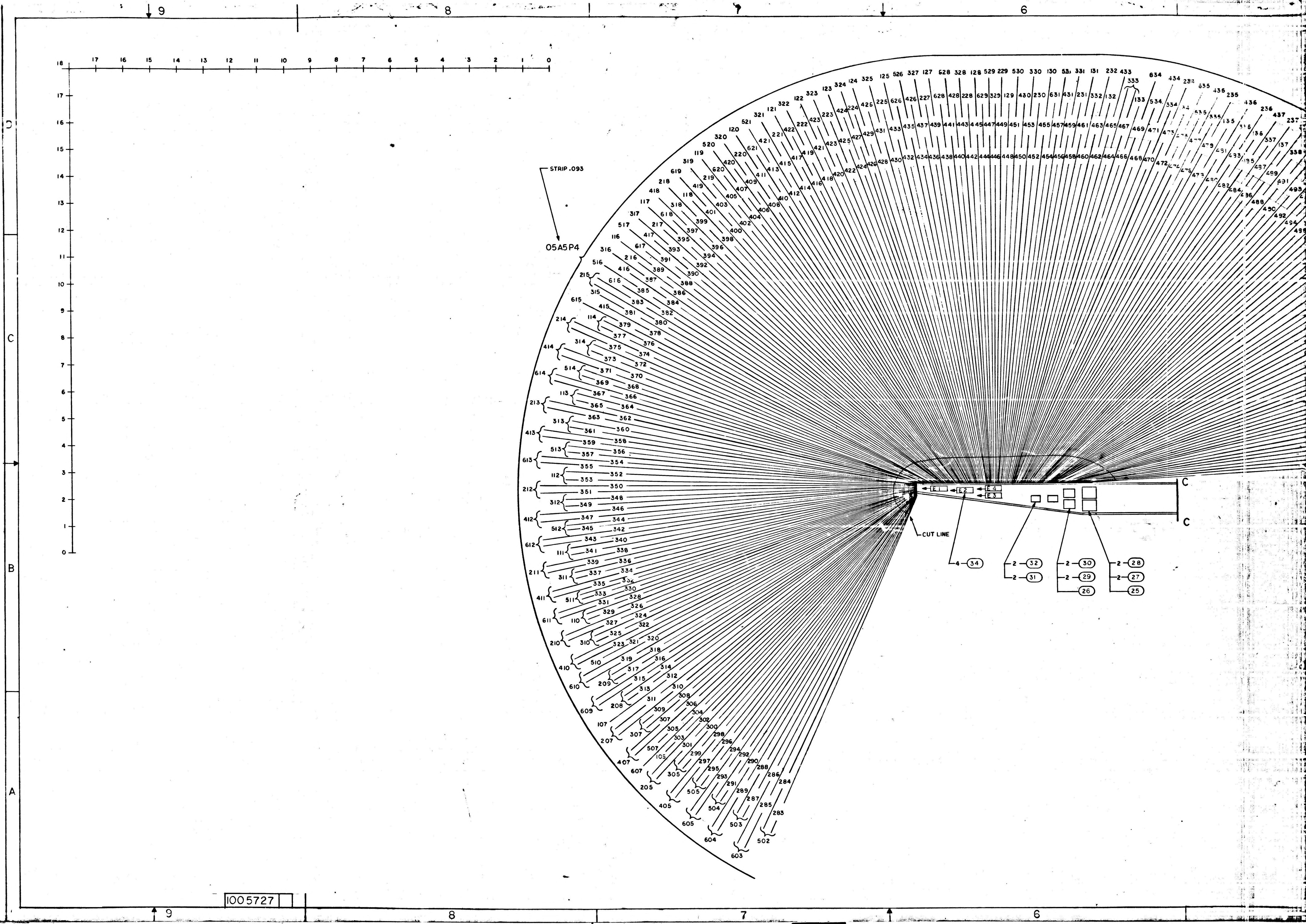
9
8
7
6
D
C
B
A
18
17
16
15
14
13
12
11
10
9
8
7
6
5
4
3
2
1
0
STRIP .093
05A5P4
CUT LINE
E1
E2
E3
E4
C
C
4 — 34
2 — 32
2 — 31
2 — 30
2 — 29
26
2 — 28
2 — 27
25

1005727

1005727

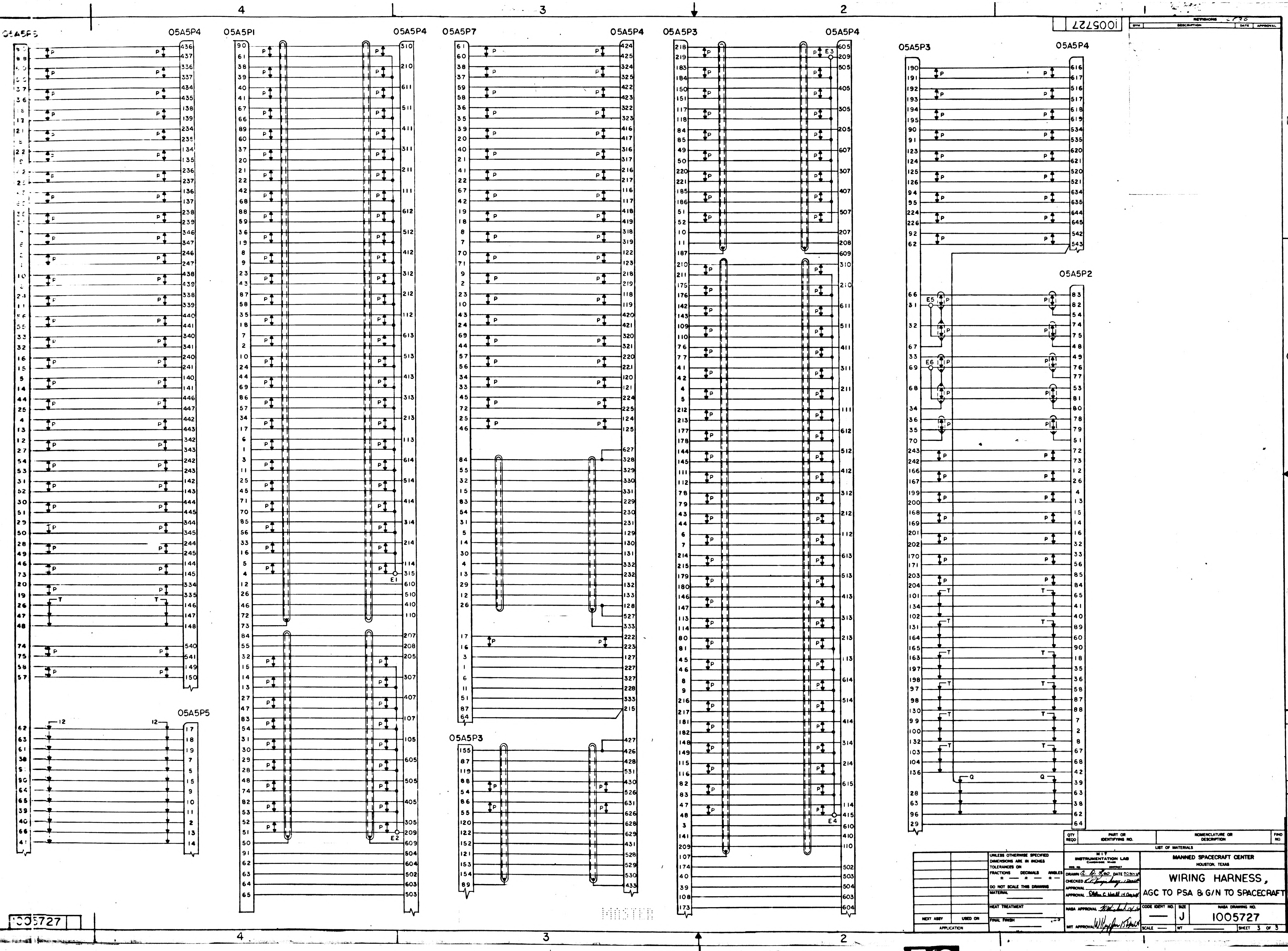
4
3
2
1
D
C
B
A
05A5P5
05A5P4
05A5P1
05A5P4
05A5P7
05A5P4
05A5P3
05A5P4
05A5P3
05A5P4
05A5P2
05A5P5
05A5P3
E1
E2
E3
E4
E5
E6
P
T
Q
12
REVISIONS
SYM
DESCRIPTION
DATE
APPROVAL
MASTER

QTY REQD	PART OR IDENTIFYING NO.	NOMENCLATURE OR DESCRIPTION	FIND NO.

LIST OF MATERIALS

NEXT ASSY	USED ON

APPLICATION

UNLESS OTHERWISE SPECIFIED
DIMENSIONS ARE IN INCHES
TOLERANCES ON
FRACTIONS ± — DECIMALS ± — ANGLES ± —
DO NOT SCALE THIS DRAWING
MATERIAL
HEAT TREATMENT
FINAL FINISH

MIT
INSTRUMENTATION LAB
CAMBRIDGE, MASS
DWG. NO.
CONTRACT
DRAWN A. Di Leo DATE 30 Nov 64
CHECKED
APPROVAL
APPROVAL Eldon C. Hall 14 Dec 64
NASA APPROVAL
MIT APPROVAL

MANNED SPACECRAFT CENTER
HOUSTON, TEXAS

WIRING HARNESS,
AGC TO PSA & G/N TO SPACECRAFT

CODE IDENT NO. —
SIZE J
NASA DRAWING NO. 1005727
SCALE —
WT
SHEET 3 OF 3

1005727

1005727

ASSEMBLY INFORMATION CHART

OM		DESCRIPTION			TO	
S	RUN NO	COLOR	AWG	FIND NO.	RUN NO.	REMARKS
E 1	566	YEL	24	11	268	
	E5	RED			269	
* *	569				E5	
		SHLD			263	***
	563	YEL			236	
	E5	RED			245	
*	561	SHLD			241	***
E	558	YEL			248	
	E6	RED			251	
*	550				E6	
		SHLD			255	***
	555	YEL			265	
	E6	RED			270	
*	552	SHLD			267	***
	540	YEL			260	
	547	RED			262	
*	544	SHLD			258	***
	[illegible]	YEL		12	228	
	543	RED			231	
	565	YEL			237	
	560	RED			233	
	573	YEL			242	
	558	RED			246	
	554	YEL			254	
	549	RED			249	
	562	YEL			252	
	557	RED			259	
	542	YEL			256	
	538	RED			261	
	551	YEL	22	14	264	
	546	RED			266	
	559	YEL	22	15	221	
	556	RED			222	
	553	GRN			225	
	572	YEL			244	
	575	RED			239	
	571	GRN			235	
	580	YEL			243	
	582	RED			247	
	577	GRN			240	
	579	YEL			253	
	574	RED			257	
	576	GRN			250	
	570	YEL			238	
	564	RED			234	
	567	GRN			232	
	548	YEL			219	
	541	RED			220	
	545	GRN			223	
	513	YEL	22	16	227	
	583	RED			226	
	581	GRN			230	
	584	GRN			229	
	578	YEL	22	17	224	
	16				292	
	26				290	
	36				284	
	46				286	
	56				288	
	697				283	
	695				287	
	700				291	
	696				285	
	698				289	
	152	YEL	22	17	271	
	146				272	
	151				274	
	145				276	
	139				278	TWIST 12 CONDUCTORS TOGETHER
	131				281	
	138				282	
	130	YEL		17	279	
	121	BLK		18	277	
	122				280	
	155				273	
	156				275	

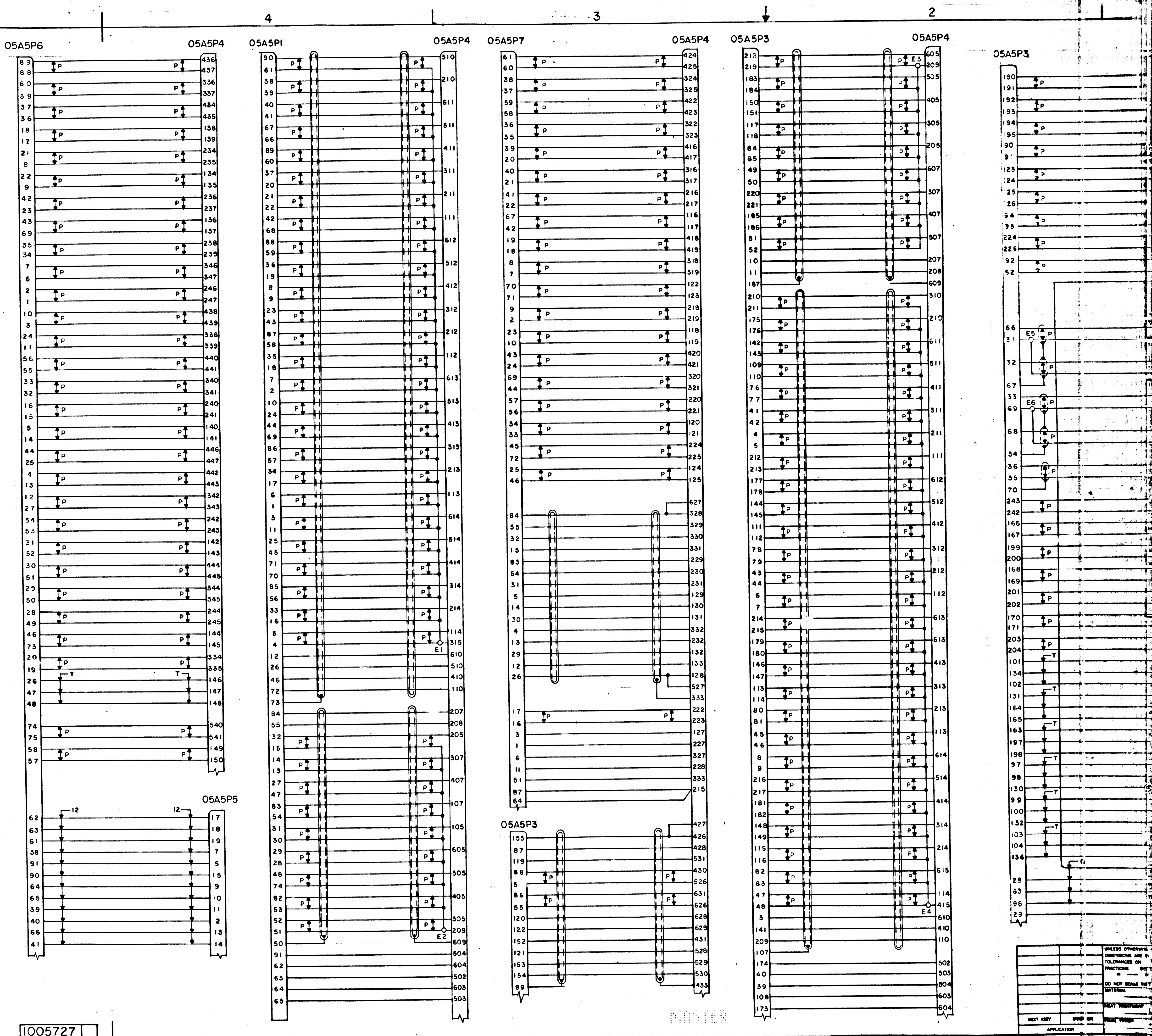
6
5
4
3
2
05A5P6
05A5P4
05A5P1
05A5P4
05A5P7
05A5P4
05A5P3
05A5P4
05A5P3
05A5P5
05A5P3
P
T
12
E1
E2
E3
E4
E5
E6
NEXT ASSY
USED ON
APPLICATION
UNLESS OTHERWISE
DIMENSIONS ARE IN
TOLERANCES ON
FRACTIONS
DO NOT SCALE THIS
MATERIAL
HEAT TREATMENT
FINAL PROTECTIVE

1005727

MASTER

F2

NOTICE — WHEN GOVERNMENT DRAWINGS, SPECIFICATIONS, OR OTHER DATA ARE USED FOR ANY PURPOSE OTHER THAN IN CONNECTION WITH A DEFINITELY RELATED GOVERNMENT PROCUREMENT OPERATION, THE UNITED STATES GOVERNMENT THEREBY INCURS NO RESPONSIBILITY NOR ANY OBLIGATION WHATSOEVER; AND THE FACT THAT THE GOVERNMENT MAY HAVE FORMULATED, FURNISHED, OR IN ANY WAY SUPPLIED THE SAID DRAWINGS, SPECIFICATIONS, OR OTHER DATA IS NOT TO BE REGARDED BY IMPLICATION OR OTHERWISE AS IN ANY MANNER LICENSING THE HOLDER OR ANY OTHER PERSON OR CORPORATION, OR CONVEYING ANY RIGHTS OR PERMISSION TO MANUFACTURE, USE, OR SELL ANY PATENTED INVENTION THAT MAY IN ANY WAY BE RELATED THERETO.

P1

ASSEMBLY INFORMATION CHART

FROM		DESCRIPTION			TO	
REMARKS	RUN NO.	COLOR	AWG	FIND NO.	RUN NO.	REMARKS
	11	YEL	26	9	324	
	21	RED			E1	
	31	YEL			326	
	41	RED			E1	
	51	YEL			330	
	61	RED			E1	
	70	YEL			332	
	65	RED			E1	
	7	YEL			334	
	17	RED			E1	
	27	YEL			336	
	37	RED			E1	
	47	YEL			338	
	57	RED			E1	
	66	YEL			340	
	74	RED			E1	
	4	YEL			342	
	12	RED			E1	
ATTACH FIND NO. 19 LG 29 FIND NO. 22 LG 29 & FIND 27,28 SEE NOTE 6	22	YEL			344	
	32	RED			E1	
	42	YEL			346	
	52	RED			E1	
	62	YEL			348	
	71	RED			E1	
	2	YEL			350	
	8	RED			E1	
	18	YEL			352	
	26	RED			E1	
	38	YEL			354	
	48	RED			E1	
	58	YEL			356	
	67	RED			E1	
	75	YEL			358	
	78	RED			E1	
	1	YEL			360	
	5	RED			E1	
	13	YEL			362	
	23	RED			E1	
	33	YEL			364	
	43	RED			E1	
	53	YEL			366	
	63	RED			E1	
	72	YEL			368	
	79	RED			E1	
	83	YEL			370	
	81	RED			E1	
	3	YEL			372	
	9	RED			E1	
	19	YEL			374	
	29	RED			E1	
	39	YEL		9	376	
	49	RED			E1	
**	E1	YEL		10	381	
	59				320	
	68				321	
	76				322	
	82	YEL			328	
**	80	SHLD				
	24	YEL	26	9	302	
	34	RED			E2	
	44	YEL			308	
	54	RED			E2	
ATTACH FIND NO. 20 LG 30 1/2 FIND NO. 23 LG 30 1/2 & FIND 29,30 SEE NOTE 6	64	YEL			306	
	73	RED			E2	
	10	YEL			312	
	20	RED			E2	
	30	YEL			303	
	40	RED			E2	
	50	YEL			294	
	60	RED			E2	
	69	YEL			296	
	77	RED			E2	
	15	YEL			298	
	25	RED			E2	
	35	YEL		9	300	
	45	RED			E2	
**	E2	YEL		10	318	
	6	YEL		10	310	
	14	YEL		10	314	
**	55	SHLD			316	**
	632	YEL	26	9	293	
	626	RED			E3	
ATTACH FIND NO. 20 LG 9 3/4 FIND NO. 23 LG 9 3/4 & FIND 29,30 SEE NOTE 6	635	YEL			295	
	629	RED			E3	
	631	YEL			297	
	625	RED			E3	
	634	YEL			299	
	628	RED			E3	
	630	YEL			301	
	624	RED			E3	
	633	YEL			304	
	627	RED			E3	
	620	YEL			309	
	614	RED			E3	
	623	YEL			307	
	617	RED			E3	
	621	YEL		9	305	
	615	RED			E3	
	643	YEL		10	311	
	636	YEL		10	313	
**	E3	YEL		10	317	
**	611	SHLD			315	**

ASSEMBLY INFORMATION CHART

FROM		DESCRIPTION			TO	
REMARKS	RUN NO.	COLOR	AWG	FIND NO.	RUN NO.	REMARKS
	688	YEL	26	9	325	
	681	RED			E4	
	691	YEL			327	
	684	RED			E4	
	687	YEL			331	
	680	RED			E4	
	690	YEL			333	
	683	RED			E4	
	686	YEL			335	
	679	RED			E4	
	689	YEL			337	
	682	RED			E4	
	685	YEL			339	
	678	RED			E4	
	674	YEL			341	
	667	RED			E4	
	677	YEL			343	
	670	RED			E4	
	673	YEL			345	
	666	RED			E4	
	676	YEL			347	
ATTACH FIND NO. 19 LG 10 3/4 FIND NO. 22 LG 10 3/4 & FIND 27,28 SEE NOTE 6	669	RED			E4	
	672	YEL			349	
	665	RED			E4	
	675	YEL			351	
	668	RED			E4	
	671	YEL			353	
	664	RED			E4	
	660	YEL			355	
	653	RED			E4	
	663	YEL			357	
	656	RED			E4	
	659	YEL			359	
	652	RED			E4	
	662	YEL			361	
	655	RED			E4	
	658	YEL			363	
	651	RED			E4	
	661	YEL			365	
	654	RED			E4	
	657	YEL			367	
	650	RED			E4	
	646	YEL			369	
	639	RED			E4	
	649	YEL			371	
	642	RED			E4	
	645	YEL			373	
	638	RED			E4	
	648	YEL			375	
	641	RED			E4	
	644	YEL			379	
	637	RED			E4	
	647	YEL		9	377	
	640	RED			E4	
	692	YEL		10	319	
	693	YEL		10	323	
	694	YEL		10	329	
**	E4	YEL		10	378	
**	699	SHLD				
	210	YEL	26	9	424	
	201	RED			428	
	212	YEL			427	
	204	RED			431	
	191	YEL			416	
	181	RED			420	
	194	YEL			419	
	184	RED			423	
	214	YEL			384	
	206	RED			390	
	215	YEL			387	
	208	RED			393	
	216	YEL			386	
	211	RED			392	
	218	YEL			389	
	213	RED			395	
	197	YEL			397	
	187	RED			400	
	199	YEL			396	
	189	RED			403	
	203	YEL			421	
	196	RED			425	
	202	YEL			399	
	192	RED			402	
	205	YEL			398	
	195	RED			405	
	207	YEL			406	
	198	RED			412	
	209	YEL			409	
	200	RED			415	
	172	YEL			408	
	167	RED			414	
	174	YEL			411	
	169	RED			417	
	193	YEL			426	
	185	RED			430	
	190	YEL			429	
	183	RED			433	
	176	YEL			418	
	171	RED			422	
	600	YEL			382	
	598	RED			388	
	595	YEL			385	
	592	RED			391	
	590	YEL			394	
	587	RED			401	
	599	YEL			468	
	596	RED			474	
	597	YEL			404	
	594	RED			410	
	591	YEL			407	
	589	RED			413	
	588	YEL			469	
	586	RED			475	
	602	YEL			516	
	601	RED			523	
	593	YEL			507	
	585	RED			510	

ASSEMBLY INFORMATION CHART

FROM		DESCRIPTION			TO	
REMARKS	RUN NO.	COLOR	AWG	FIND NO.	RUN NO.	REMARKS
	154	YEL	26	9	481	
	153	RED			485	
	150	YEL			480	
	149	RED			484	
	144	YEL			471	
	143	RED			477	
	135	YEL			490	
	134	RED			494	
	129	YEL			473	
	128	RED			479	
	120	YEL			472	
	119	RED			478	
	112	YEL			483	
	111	RED			487	
	104	YEL			482	
	97	RED			486	
	142	YEL			491	
	141	RED			495	
	127	YEL			529	
	126	RED			533	
	118	YEL			528	
	117	RED			532	
	110	YEL			489	
	109	RED			493	
	103	YEL			488	
	102	RED			492	
	140	YEL			496	
	132	RED			503	
	133	YEL			499	
	124	RED			502	
	125	YEL			498	
	115	RED			505	
	116	YEL			501	
	107	RED			504	
	96	YEL			526	
	95	RED			530	
	108	YEL			506	
	100	RED			512	
	101	YEL			509	
	93	RED			515	
	123	YEL			508	
	113	RED			514	
	114	YEL			511	
	105	RED			517	
	106	YEL			519	
	98	RED			522	
	99	YEL			518	
	91	RED			525	
	92	YEL			521	
	87	RED			524	
	90	YEL			520	
	86	RED			527	
	137	YEL			470	
	136	RED			476	
	85	YEL			497	
	84	RED			500	
	148	YEL	26	9	537	
	147	RED			536	
	94	YEL	22	15	531	
	89	RED			535	
	88	GRN			534	
	161	YEL	26	10	443	
	163				446	
	165				453	ATTACH FIND NO. 21 LG 32 FIND NO. 24 LG 32 & FIND 31,32 SEE NOTE 6
	166				459	
	158				449	
	159				452	
	160				458	
	173				448	
	168				455	
	162				461	
	175				460	
	170				463	
	164				462	
	177				466	
	180	YEL			445	
		SHLD			464	**
	608	YEL	26	9	450	
ATTACH FIND NO. 21 LG 10 3/4 FIND NO. 24 LG 10 3/4 & FIND 31,32 SEE NOTE 6	606	RED			435	
	618	YEL	26	9	454	
	603	RED			432	
	605	YEL	26	10	434	
	612				440	
	622				457	
	616				438	
	607				444	
	619				456	
	610				441	
	613				447	
	609	YEL			451	
**	604	SHLD			465	**
	186	YEL	26	10	439	
	182				436	
	179				437	
	188				442	
	157				467	
	178				380	
	217				383	

ASSEMBLY INFORMATION CHART

FROM		DESCRIPTION			TO	
REMARKS	RUN NO.	COLOR	AWG	FIND NO.	RUN NO.	REMARKS
SEE NOTE 11	566	YEL	24	11	268	
	E5	RED			269	
***	569				E5	
		SHLD			263	***
	563	YEL			236	
	E5	RED			245	
***	561	SHLD			241	***
SEE NOTE 11	558	YEL			248	
	E6	RED			251	
***	550				E6	
		SHLD			255	***
	555	YEL			265	
	E6	RED			270	
***	552	SHLD			267	***
	540	YEL			260	
	547	RED			262	
***	544	SHLD			258	***
	539	YEL		12	228	
	543	RED			231	
	565	YEL			237	
	560	RED			233	
	573	YEL			242	
	568	RED			246	
	554	YEL			254	
	549	RED			249	
	562	YEL			252	
	557	RED			259	
	542	YEL			256	
	538	RED			261	
	551	YEL	22	14	264	
	546	RED			266	
	559	YEL	22	15	221	
	556	RED			222	
	553	GRN			225	
	572	YEL			244	
	575	RED			239	
	571	GRN			235	
	580	YEL			243	
	582	RED			247	
	577	GRN			240	
	579	YEL			253	
	574	RED			257	
	576	GRN			250	
	570	YEL			238	
	564	RED			234	
	567	GRN			232	
	548	YEL			219	
	541	RED			220	
	545	GRN			223	
	513	YEL	22	16	227	
	583	RED			226	
	581	GRN			230	
	584	BRN			229	
	578	YEL	22	17	224	
	16				292	
	26				290	
	36				284	
	46				286	
	56				288	
	697				283	
	695				287	
	700				291	
	696				285	
	698				289	
	152	YEL	22	17	271	
	146				272	
	151				274	
	145				276	
	139				278	TWIST 12 CONDUCTORS TOGETHER
	131				281	
	138				282	
	130	YEL		17	279	
	121	BLK		18	277	
	122				280	
	155				273	
	156				275	

REVISIONS 18286						
SYM	ZONE	DESCRIPTION	DR	CHK	DATE	APPROVED
A		REVISED PER TDRR 20410	C.D.		9/8/65	

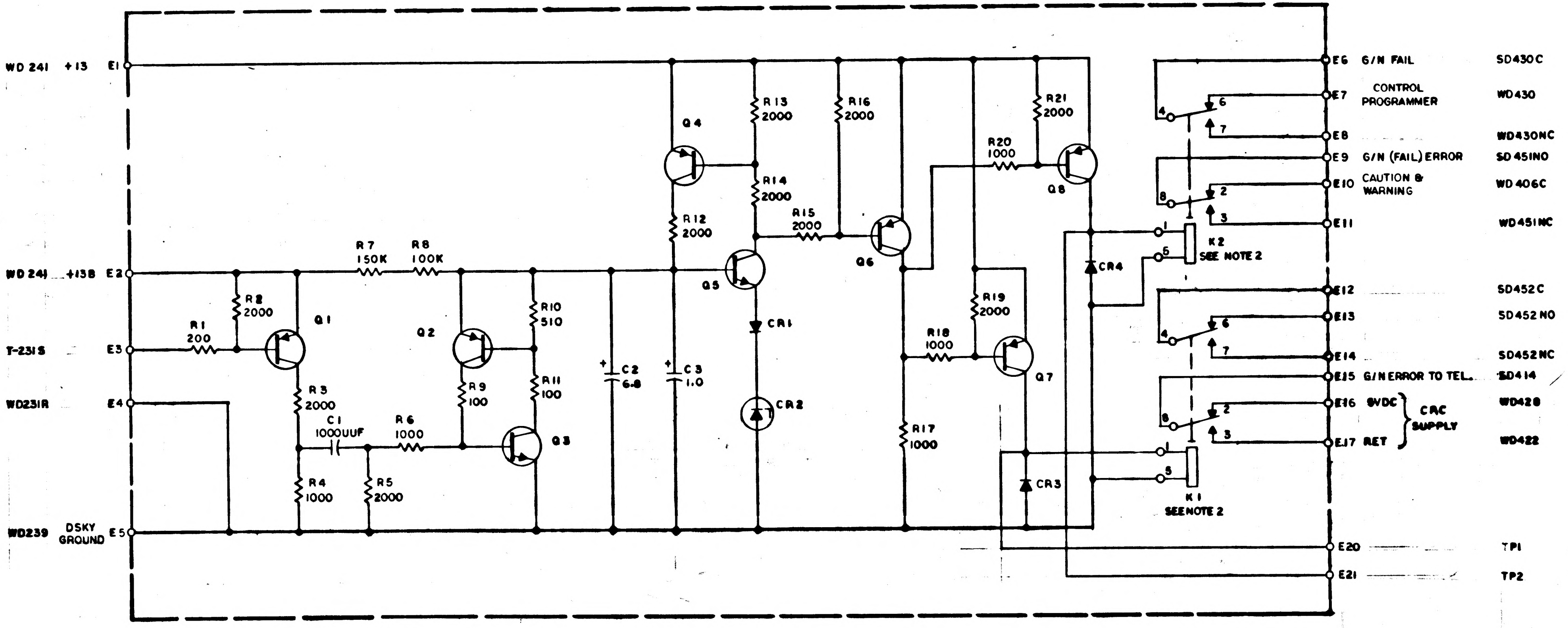
WD 241 +13 E1
WD 241 +13B E2
T-231S E3
WD231R E4
WD239 DSKY GROUND E5
R1 200
R2 2000
R3 2000
R4 1000
R5 2000
C1 1000UUF
R6 1000
R7 150K
R8 100K
R9 100
R10 510
R11 100
Q1
Q2
Q3
C2 6.8
C3 1.0
Q4
R12 2000
Q5
CR1
CR2
R13 2000
R14 2000
R15 2000
R16 2000
Q6
R17 1000
R18 1000
R19 2000
Q7
CR3
R20 1000
R21 2000
Q8
CR4
K2 SEE NOTE 2
K1 SEENOTE 2
E6 G/N FAIL SD430C
E7 CONTROL PROGRAMMER WD430
E8 WD430NC
E9 G/N (FAIL) ERROR SD451NO
E10 CAUTION & WARNING WD406C
E11 WD451NC
E12 SD452C
E13 SD452NO
E14 SD452NC
E15 G/N ERROR TO TEL. SD414
E16 8VDC CRC SUPPLY WD428
E17 RET WD422
E20 TP1
E21 TP2

REF DES	PART NO.	DESCRIPTION	VALUE	TOL	RATING
R1	1006750-15	RESISTOR	200	±2%	1/4 W
R2	-39		2000		
R3	-39		2000		
R4	-32		1000		
R5	-39		2000		
R6	-32		1000		
R7	-84		150K		
R8	-80		100K		
R9	-8		100		
R10	-25		510		
R11	-8		100		
R12	-39		2000		
R13	-39		2000		
R14	-39		2000		
R15	-39		2000		
R16	-39		2000		
R17	-32		1000		
R18	-32		1000		
R19	-39		2000		
R20	-32		1000		
R21	1006750-39	RESISTOR	2000	±2%	1/4 W
C1	1006793-7	CAPACITOR	1000UUF	±2%	500VDC
C2	1006755-79	CAPACITOR	6.8	±10%	35VDC
C3	1006755-69	CAPACITOR	1.0	±10%	35VDC
CR1	1006751	DIODE			
CR2	1006838	DIODE			
CR3	1006751	DIODE			
CR4	1006751	DIODE			
Q1	1006753	TRANSISTOR			
Q2	1006753				
Q3	1006752				
Q4	1006753				
Q5	1006752				
Q6	1006753				
Q7	1006753				
Q8	1006753	TRANSISTOR			
K1	1006815-2	RELAY			
K2	1006815-2	RELAY			

NOTES:

1. INTERPRED DRAWING IN ACCORDANCE WITH STANDARDS PRESCRIBED BY MIL-D-70327
2. RELAY SHOWN IN THE POSITION THAT INDICATE FAIL (DEENERGIZED)

REF DWG:
G & N FAILURE DETECT ASSY
DWG - NO.

QTY REQD	PART OR IDENTIFYING NO.	MATERIAL OR NOTES	NOMENCLATURE OR DESCRIPTION	FIND NO.

LIST OF MATERIALS

NEXT ASSY	USED ON

APPLICATION

UNLESS OTHERWISE SPECIFIED
DIMENSIONS ARE IN INCHES
CAPACITOR VALUES ARE IN µf
RESISTOR VALUES ARE IN OHMS
TOLERANCES ON
FRACTIONS DECIMALS ANGLES
± — ± — ± —
DO NOT SCALE THIS DRAWING

MATERIAL

MIT
INSTRUMENTATION LAB
CAMBRIDGE, MASS.

DRAWN A. Di Leo 9 Aug 65
CHECKED
APPROVED
APPROVED 9 Aug 65
APPROVED MIT W Kupfer 13 Sep 65
APPROVED MSC 9-8-65
DATE

MANNED SPACECRAFT CENTER
HOUSTON, TEXAS

SCHEMATIC,
G&N FAILURE DETECT

CODE IDENT NO. —
SIZE E
DRAWING NO. 1005730
SCALE —
SHEET 1 OF 1

1005730 A

NOTICE – WHEN GOVERNMENT DRAWINGS, SPECIFICATIONS, OR OTHER DATA ARE USED FOR ANY PURPOSE OTHER THAN IN CONNECTION WITH A DEFINITELY RELATED GOVERNMENT PROCUREMENT OPERATION THE UNITED STATES GOVERNMENT THEREBY INCURS NO RESPONSIBILITY NOR ANY OBLIGATION WHATSOEVER; AND THE FACT THAT THE GOVERNMENT MAY HAVE FORMULATED, FURNISHED, OR IN ANY WAY SUPPLIED THE SAID DRAWINGS, SPECIFICATIONS, OR OTHER DATA IS NOT TO BE REGARDED BY IMPLICATION OR OTHERWISE AS IN ANY MANNER LICENSING THE HOLDER OR ANY OTHER PERSON OR CORPORATION, OR CONVEYING ANY RIGHTS OR PERMISSION TO MANUFACTURE, USE, OR SELL ANY PATENTED INVENTION THAT MAY IN ANY WAY BE RELATED THERETO.

REVISIONS 18286

SYM	ZONE	DESCRIPTION	DR	CHK	DATE	APPROVED
A		REVISED PER TDRR 20410	a.D.			
B		REVISED PER TDRR 21345	a.A			

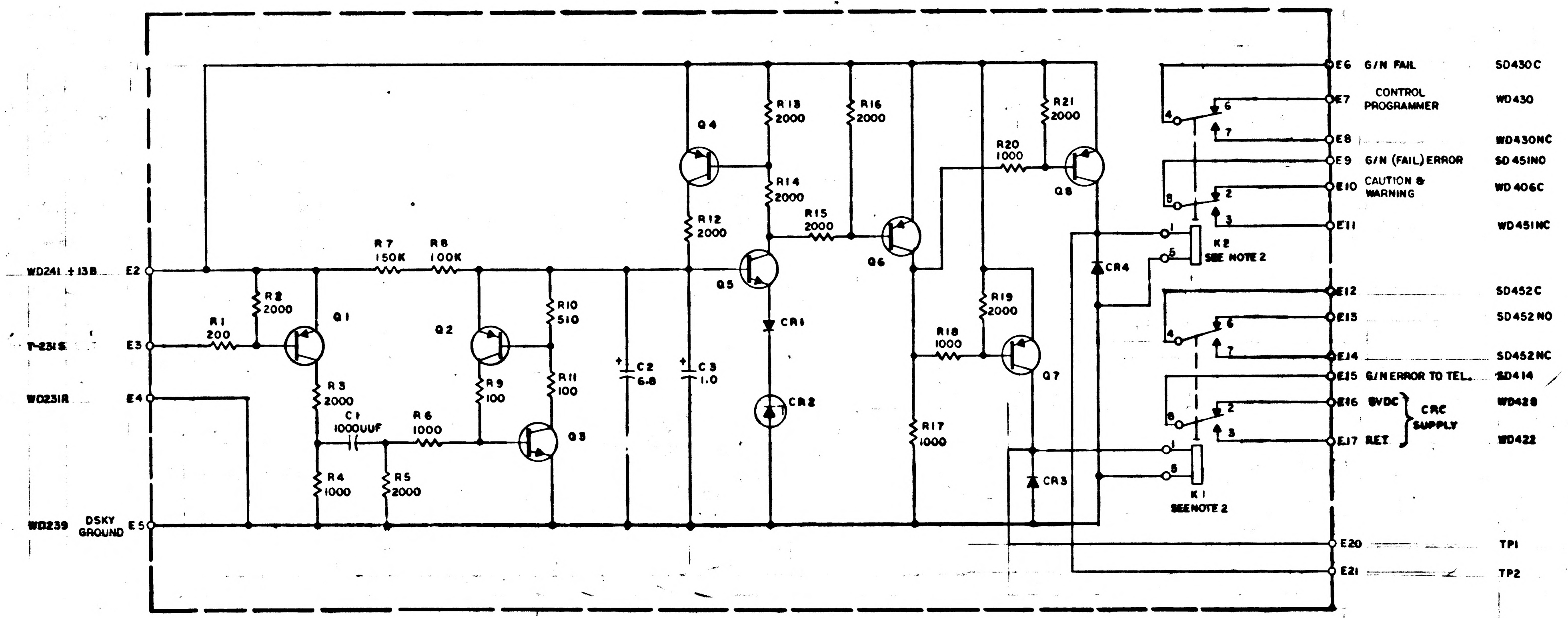
WD241 +13B
E2
T-231S
E3
WD231R
E4
WD239
DSKY GROUND
E5
R1 200
R2 2000
Q1
R3 2000
C1 1000UUF
R4 1000
R5 2000
R6 1000
R7 150K
R8 100K
Q2
R9 100
R10 510
R11 100
Q3
C2 6.8
C3 1.0
Q4
R12 2000
Q5
CR1
CR2
R13 2000
R14 2000
R15 2000
R16 2000
Q6
R17 1000
R18 1000
R19 2000
Q7
CR3
R20 1000
R21 2000
Q8
CR4
K2 SEE NOTE 2
K1 SEE NOTE 2
1
5
4
6
7
8
2
3
E6 G/N FAIL
E7 CONTROL PROGRAMMER
E8
E9 G/N (FAIL) ERROR
E10 CAUTION & WARNING
E11
E12
E13
E14
E15 G/N ERROR TO TEL.
E16 8VDC
E17 RET
CRC SUPPLY
E20
E21
SD430C
WD430
WD430NC
SD451NO
WD406C
WD451NC
SD452C
SD452NO
SD452NC
SD414
WD428
WD422
TP1
TP2

REF DES	PART NO.	DESCRIPTION	VALUE	TOL	RATING
R1	1006750 - 15	RESISTOR	200	±2%	1/4 W
R2	- 39		2000		
R3	- 39		2000		
R4	- 32		1000		
R5	- 39		2000		
R6	- 32		1000		
R7	- 84		150 K		
R8	- 80		100 K		
R9	- 8		100		
R10	- 25		510		
R11	- 8		100		
R12	- 39		2000		
R13	- 39		2000		
R14	- 39		2000		
R15	- 39		2000		
R16	1006750 - 39		2000		1/4W
R17	1006760 - 32		1000		1/2W
R18	1006750 - 32		1000		1/4W
R19	- 39		2000		
R20	- 32		1000		
R21	1006750 - 39	RESISTOR	2000	±2%	1/4 W
C1	1006793 - 7	CAPACITOR	1000UUF	±2%	500VDC
C2	1006755 - 79	CAPACITOR	6.8	±10%	35VDC
C3	1006755 - 69	CAPACITOR	1.0	±10%	35VDC
CR1	1006751	DIODE			
CR2	1006838	DIODE			
CR3	1006751	DIODE			
CR4	1006751	DIODE			
Q1	1006753	TRANSISTOR			
Q2	1006753				
Q3	1006752				
Q4	1006753				
Q5	1006752				
Q6	1006753				
Q7	1006753				
Q8	1006753	TRANSISTOR			
K1	1006815 - 2	RELAY			
K2	1006815 - 2	RELAY			

NOTES:

1. INTERPRET DRAWING IN ACCORDANCE WITH STANDARDS PRESCRIBED BY MIL-D-70327
2. RELAY SHOWN IN THE POSITION THAT INDICATE FAIL (DEENERGIZED)

REF DWG:
- G&N FAILURE DETECT ASSY
DWG - NO. 1003220

QTY REQD	PART OR IDENTIFYING NO.	MATERIAL OR NOTES	NOMENCLATURE OR DESCRIPTION	FIND NO.

LIST OF MATERIALS

NEXT ASSY	USED ON

APPLICATION

UNLESS OTHERWISE SPECIFIED
DIMENSIONS ARE IN INCHES
CAPACITOR VALUES ARE IN μf
RESISTOR VALUES ARE IN OHMS
TOLERANCES ON
FRACTIONS DECIMALS ANGLES
± —— ± —— ± ——
DO NOT SCALE THIS DRAWING

MATERIAL
——

MIT
INSTRUMENTATION LAB
CAMBRIDGE, MASS.

DRAWN a. Di Leo
CHECKED
APPROVED
APPROVED
APPROVED MIT
APPROVED MSC
DATE

MANNED SPACECRAFT CENTER
HOUSTON, TEXAS

SCHEMATIC,
G&N FAILURE DETECT

CODE IDENT NO. ——
SIZE E
DRAWING NO. 1005730
SCALE ——
SHEET 1 OF 1

REVISIONS 18286					
SYM	ZONE	DESCRIPTION	DR	CHK	DATE	APPROVED

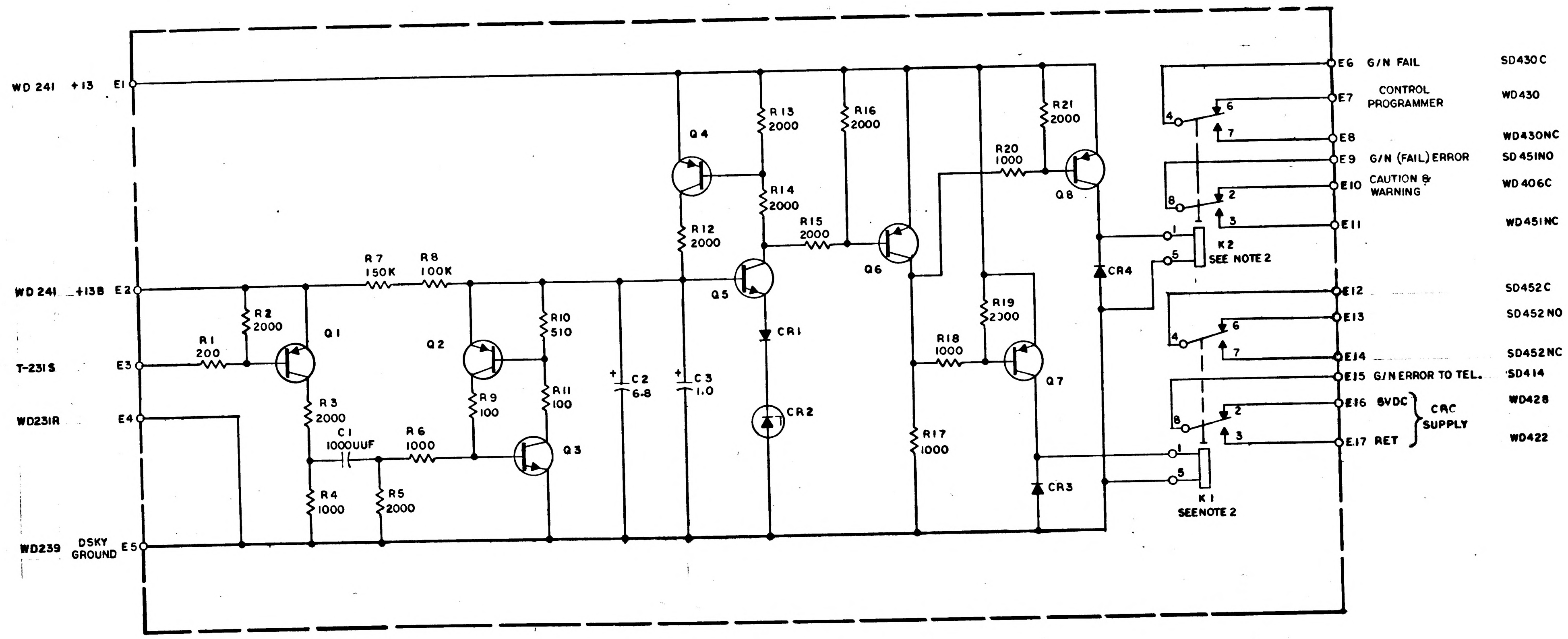
WD 241 +13 E1
WD 241 +13B E2
T-231S E3
WD231R E4
WD239 DSKY GROUND E5
R1 200
R2 2000
Q1
R3 2000
C1 1000UUF
R4 1000
R5 2000
R6 1000
R7 150K
R8 100K
Q2
R9 100
Q3
R10 510
R11 100
C2 6.8
C3 1.0
Q4
R12 2000
R13 2000
R14 2000
Q5
CR1
CR2
R15 2000
R16 2000
Q6
R17 1000
R18 1000
R19 2000
Q7
CR3
R20 1000
R21 2000
Q8
CR4
K2 SEE NOTE 2
K1 SEENOTE 2
E6 G/N FAIL SD430C
E7 CONTROL PROGRAMMER WD430
E8 WD430NC
E9 G/N (FAIL) ERROR SD451NO
E10 CAUTION & WARNING WD406C
E11 WD451NC
E12 SD452C
E13 SD452NO
E14 SD452NC
E15 G/N ERROR TO TEL. SD414
E16 5VDC
E17 RET
CRC SUPPLY
WD428
WD422

REF DES	PART NO.	DESCRIPTION	VALUE	TOL	RATING
R1	1006750-15	RESISTOR	200	±2%	1/4 W
R2	-39		2000		
R3	-39		2000		
R4	-32		1000		
R5	-39		2000		
R6	-32		1000		
R7	-84		150K		
R8	-80		100K		
R9	-8		100		
R10	-25		510		
R11	-8		100		
R12	-39		2000		
R13	-39		2000		
R14	-39		2000		
R15	-39		2000		
R16	-39		2000		
R17	-32		1000		
R18	-32		1000		
R19	-39		2000		
R20	-32		1000		
R21	1006750-39	RESISTOR	2000	±2%	1/4 W
C1	1006793-7	CAPACITOR	1000UUF	±2%	500VDC
C2	1006755-79	CAPACITOR	6.8	±10%	35VDC
C3	1006755-69	CAPACITOR	1.0	±10%	35VDC
CR1	1006751	DIODE			
CR2	1006838	DIODE			
CR3	1006751	DIODE			
CR4	1006751	DIODE			
Q1	1006753	TRANSISTOR			
Q2	1006753				
Q3	1006752				
Q4	1006753				
Q5	1006752				
Q6	1006753				
Q7	1006753				
Q8	1006753	TRANSISTOR			
K1	1006815-2	RELAY			
K2	1006815-2	RELAY			

NOTES:

1. INTERPRED DRAWING IN ACCORDANCE WITH STANDARDS PRESCRIBED BY MIL-D-70327
2. RELAY SHOWN IN THE POSITION THAT INDICATE FAIL (DEENERGIZED)

REF DWG:
G&N FAILURE DETECT ASSY
DWG - NO.

QTY REQD	PART OR IDENTIFYING NO.	MATERIAL OR NOTES	NOMENCLATURE OR DESCRIPTION	FIND NO.

LIST OF MATERIALS

NEXT ASSY	USED ON
APPLICATION	

UNLESS OTHERWISE SPECIFIED
DIMENSIONS ARE IN INCHES
CAPACITOR VALUES ARE IN μf
RESISTOR VALUES ARE IN OHMS
TOLERANCES ON
FRACTIONS ± — DECIMALS ± — ANGLES ± —
DO NOT SCALE THIS DRAWING

MATERIAL

MIT
INSTRUMENTATION LAB
CAMBRIDGE, MASS.

DRAWN A. Di Leo 9 MAR 65
CHECKED
APPROVED
APPROVED Ell C Hall 9 Apr '65
APPROVED MIT 13 Apr 65
APPROVED MSC 4-13-65
DATE

MANNED SPACECRAFT CENTER
HOUSTON, TEXAS

SCHEMATIC,
G&N FAILURE DETECT

CODE IDENT NO. —
SIZE E
DRAWING NO. 1005730
SCALE —
SHEET 1 OF 1

NOTICE - WHEN GOVERNMENT DRAWINGS, SPECIFICATIONS, OR OTHER DATA ARE USED FOR ANY PURPOSE OTHER THAN IN CONNECTION WITH A DEFINITELY RELATED GOVERNMENT PROCUREMENT OPERATION, THE UNITED STATES GOVERNMENT THEREBY INCURS NO RESPONSIBILITY NOR ANY OBLIGATION WHATSOEVER; AND THE FACT THAT THE GOVERNMENT MAY HAVE FORMULATED, FURNISHED, OR IN ANY WAY SUPPLIED THE SAID DRAWINGS, SPECIFICATIONS OR OTHER DATA IS NOT TO BE REGARDED BY IMPLICATION OR OTHERWISE AS IN ANY MANNER LICENSING THE HOLDER OR ANY OTHER PERSON OR CORPORATION, OR CONVEYING ANY RIGHTS OR PERMISSION TO MANUFACTURE, USE, OR SELL ANY PATENTED INVENTION THAT MAY IN ANY WAY BE RELATED THERETO.

REVISIONS 18256

SYM	ZONE	DESCRIPTION	DR	CHK	DATE	APPROVED
A		REPLACED WITH CHANGE BY REV B PER TDRR 21345		R.A.E.	9/13/65	

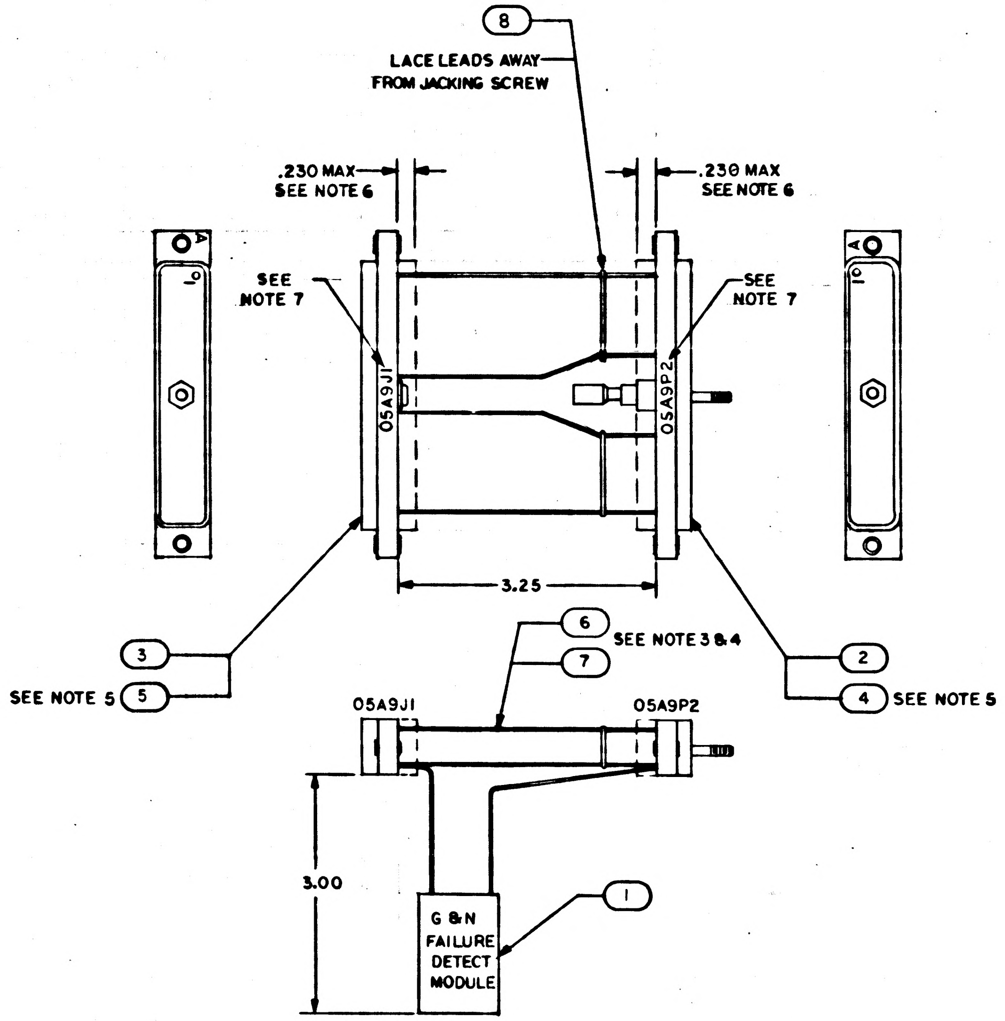

Ⓐ REPLACED WITH CHANGE BY REV B

NOTES:

1. INTERPRET DRAWING IN ACCORDANCE WITH STANDARDS PRESCRIBED BY MIL-D-70327
2. FOR FABRICATION AND REQUIRED TESTS SEE ND 1002032
3. FOR WIRING OF 05A9J1, 05A9P2 AND MODULE SEE WIRING DIAGRAM NO. 1006184
4. STRIP ALL WIRES .09 DO NOT TIN
5. INSTALL FIND NO. 4 AND FIND NO. 5 PER ND1002206
6. ENCAPSULATE INDICATED AREA PER ND 1002009 METHOD E. MOUNTING SURFACES OF CONNECTORS MUST NOT BE ENCAPSULATED
7. MARK .140/.100 HIGH PER ND 1002019. CENTRALIZE AS SHOWN
8. COMPLETED ASSEMBLY SHALL BE TESTED IN ACCORDANCE WITH AND SHALL MEET ALL THE REQUIREMENTS OF PS 1005731

QTY REQD	PART OR IDENTIFYING NO.	NOMENCLATURE OR DESCRIPTION	FIND NO.
☒	1006184	WIRING DIAGRAM	REF
AR	1012507-003	TAPE, LACING	8
AR	1010789-016	WIRE ELEC AWG 26 YEL	7
AR	1010789-017	WIRE ELEC AWG 26, 2 COND TWISTED	6
149	1010738-5	CONTACT, ELEC, PIN	5
136	1010738-5	CONTACT, ELEC, SOCKET	4
1	1010817-1	CONNECTOR, PLUG ELEC	3
1	1010818-1	CONNECTOR, RECEPTACLE ELEC	2
1	1003209-011	G&N FAILURE DETECT MODULE	1
-011	LIST OF MATERIALS		

1003210	
NEXT ASSY	USED ON
APPLICATION	

UNLESS OTHERWISE SPECIFIED
DIMENSIONS ARE IN INCHES
CAPACITOR VALUES ARE IN µf
RESISTOR VALUES ARE IN OHMS
TOLERANCES ON
FRACTIONS ± — DECIMALS ±.020 ANGLES ± —
DO NOT SCALE THIS DRAWING

MATERIAL
—

MIT
INSTRUMENTATION LAB
CAMBRIDGE, MASS.

DRAWN a. Di Leo 9 [illegible] 65
CHECKED [illegible]
APPROVED
APPROVED Eldon C Hall 9 Jul 65
APPROVED MIT 13 Sep 65
APPROVED MSC 4-13-65
DATE

MANNED SPACECRAFT CENTER
HOUSTON, TEXAS

G&N FAILURE DETECT CABLE ASSY

CODE IDENT NO.	SIZE	DRAWING NO.
80230	D	1005731
SCALE 1:1		SHEET 1 OF 1

REVISIONS						
SYM	ZONE	DESCRIPTION	DR	CHK	DATE	APPROVED
B		REPLACES REV A WITH CHANGE PER TDRR 21345			[illegible]/65	

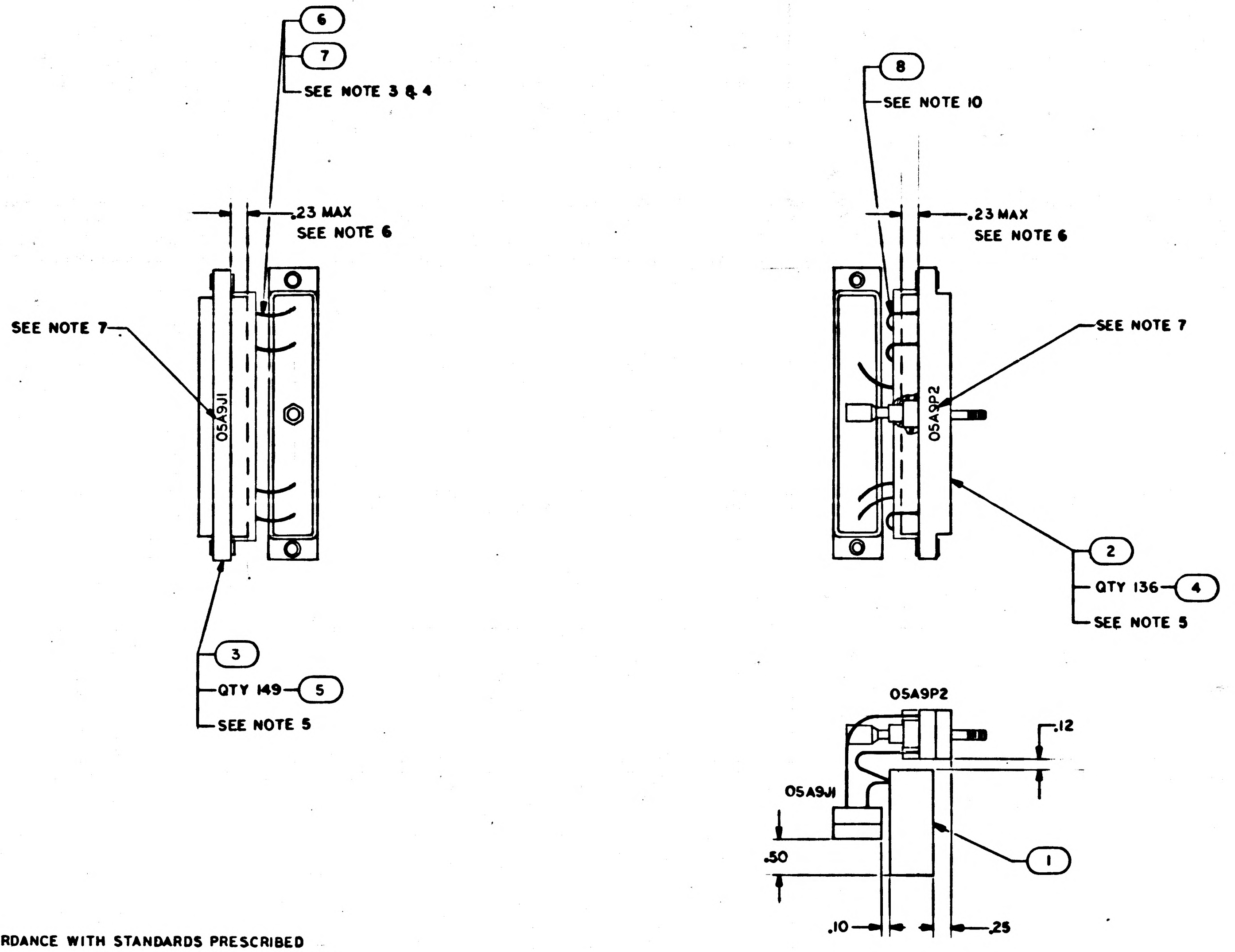

Ⓑ REPLACES REV A WITH CHANGE

NOTES

1. INTERPRET DRAWING IN ACCORDANCE WITH STANDARDS PRESCRIBED BY MIL-D-70327
2. FOR FABRICATION SEE ND1002032
3. FOR WIRING OF 05A9J1, 05A9P2 AND MODULE SEE WIRING DIAGRAM NO. 1006184
4. STRIP ALL WIRES .19 DO NOT TIN
5. INSTALL CRIMP STYLE TERMINALS IN ACCORDANCE WITH ND1002206
6. ENCAPSULATE INDICATED AREA PER ND1002009 METHOD E. MOUNTING SURFACES OF CONNECTORS MUST NOT BE ENCAPSULATED
7. MARK .200/.180 HIGH PER ND1002019 AND 1002122 TYPE II, CLASS I USING BLACK MARKING INK 1006271-10 CENTRALIZE AS SHOWN
8. TEST PER FTM1005707
9. AR DENOTES AS REQUIRED
10. LACE LEADS AWAY FROM JACKING SCREW

QTY REQD	PART OR IDENTIFYING NO.	MATERIAL OR NOTES	NOMENCLATURE OR DESCRIPTION	FIND NO.
☒	1006184		WIRING DIAGRAM	REF
AR	1012507-003		TAPE, LACING	8
AR	1010789-016		WIRE, ELEC, AWG 26 YEL	7
AR	1010789-017		WIRE, ELEC, AWG 26, 2 COND TWISTED	6
149	1010738-5		CONTACT, ELEC PIN	5
136	1010738-6		CONTACT, ELEC SOCKET	4
1	1010817-1		CONNECTOR, PLUG ELEC	3
1	1010818-1		CONNECTOR, RECEPTACLE ELEC	2
1	1003217		G & N FAILURE DETECT MODULE	1

LIST OF MATERIALS

1003220	
NEXT ASSY	USED ON
APPLICATION	

UNLESS OTHERWISE SPECIFIED
DIMENSIONS ARE IN INCHES
CAPACITOR VALUES ARE IN μf
RESISTOR VALUES ARE IN OHMS
TOLERANCES ON
FRACTIONS ± DECIMALS ±.03 ANGLES ±
DO NOT SCALE THIS DRAWING
MATERIAL

MIT
INSTRUMENTATION LAB
CAMBRIDGE, MASS.

DRAWN
CHECKED
APPROVED
APPROVED
APPROVED MIT
APPROVED MSC
DATE

MANNED SPACECRAFT CENTER
HOUSTON, TEXAS

G & N FAILURE DETECT
CABLE ASSY

CODE IDENT NO. 80230
SIZE D
DRAWING NO. 1005731
SCALE 1/1
SHEET 1 OF 1

NOTICE - WHEN GOVERNMENT DRAWINGS, SPECIFICATIONS, OR OTHER DATA ARE USED FOR ANY PURPOSE OTHER THAN IN CONNECTION WITH A DEFINITELY RELATED GOVERNMENT PROCUREMENT OPERATION, THE UNITED STATES GOVERNMENT THEREBY INCURS NO RESPONSIBILITY NOR ANY OBLIGATION WHATSOEVER; AND THE FACT THAT THE GOVERNMENT MAY HAVE FORMULATED, FURNISHED, OR IN ANY WAY SUPPLIED THE SAID DRAWINGS, SPECIFICATIONS, OR OTHER DATA IS NOT TO BE REGARDED BY IMPLICATION OR OTHERWISE AS IN ANY MANNER LICENSING THE HOLDER OR ANY OTHER PERSON OR CORPORATION, OR CONVEYING ANY RIGHTS OR PERMISSION TO MANUFACTURE, USE, OR SELL ANY PATENTED INVENTION THAT MAY IN ANY WAY BE RELATED THERETO.

REVISIONS

SYM	ZONE	DESCRIPTION	DR	CHK	DATE	APPROVED
B		REPLACES REV A WITH CHANGE PER TDRR 21345			2/19/65	
C		REVISED PER TDRR 21580			7/9/65	

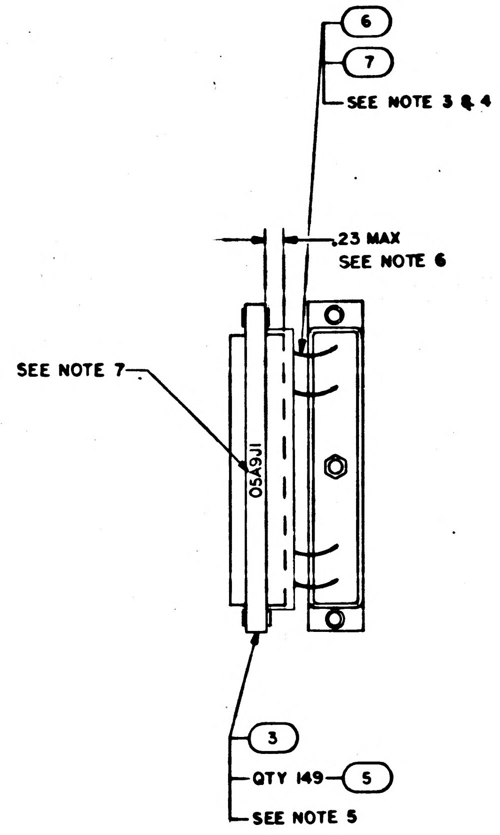

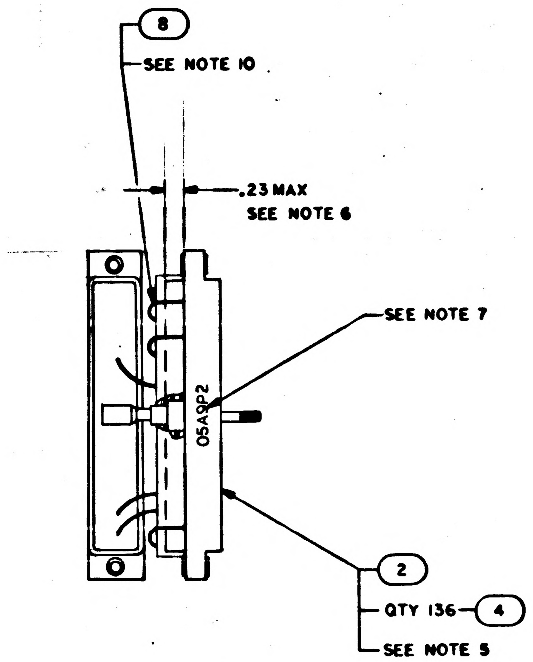

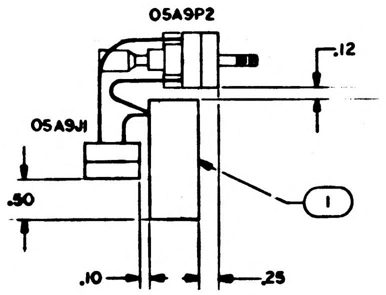

Ⓑ REPLACES REV A WITH CHANGE

NOTES

1. INTERPRET DRAWING IN ACCORDANCE WITH STANDARDS PRESCRIBED BY MIL-D-70327
2. FOR FABRICATION SEE ND1002032
3. FOR WIRING OF 05A9J1, 05A9P2 AND MODULE SEE WIRING DIAGRAM NO. 1006184
4. STRIP ALL WIRES .19 DO NOT TIN
5. INSTALL CRIMP STYLE TERMINALS IN ACCORDANCE WITH ND1002206
6. ENCAPSULATE INDICATED AREA PER ND1002009 METHOD E. MOUNTING SURFACES OF CONNECTORS MUST NOT BE ENCAPSULATED
7. MARK .200/.180 HIGH PER ND1002019 AND 1002122 TYPE II, CLASS I USING BLACK MARKING INK 1006271-10 CENTRALIZE AS SHOWN
8. TEST PER FTM1005707
9. AR DENOTES AS REQUIRED
10. LACE LEADS AWAY FROM JACKING SCREW

LIST OF MATERIALS

QTY REQD	PART OR IDENTIFYING NO.	MATERIAL OR NOTES	NOMENCLATURE OR DESCRIPTION	FIND NO.
☒	1006184		WIRING DIAGRAM	REF
AR	1012507-003		TAPE, LACING	8
AR	1010789-016		WIRE, ELEC, AWG 26 YEL	7
AR	1010789-017		WIRE, ELEC, AWG 26, 2 COND TWISTED	6
149	1010738-5		CONTACT, ELEC PIN	5
136	1010738-6		CONTACT, ELEC SOCKET	4
1	1010817-1		CONNECTOR, PLUG ELEC	3
1	1010818-1		CONNECTOR, RECEPTACLE ELEC	2
1	1003217		G & N FAILURE DETECT MODULE	1

1003220	
NEXT ASSY	USED ON
APPLICATION	

UNLESS OTHERWISE SPECIFIED
DIMENSIONS ARE IN INCHES
CAPACITOR VALUES ARE IN μf
RESISTOR VALUES ARE IN OHMS
TOLERANCES ON
FRACTIONS ± DECIMALS ±.03 ANGLES ±
DO NOT SCALE THIS DRAWING
MATERIAL

MIT
INSTRUMENTATION LAB
CAMBRIDGE, MASS.

DRAWN K W Simpson
CHECKED
APPROVED
APPROVED
APPROVED MIT
APPROVED MSC
DATE

MANNED SPACECRAFT CENTER
HOUSTON, TEXAS

G & N FAILURE DETECT
CABLE ASSY

CODE IDENT NO. 80230
SIZE D
DRAWING NO. 1005731
SCALE 1/1
SHEET 1 OF 1

NOTICE – WHEN GOVERNMENT DRAWINGS, SPECIFICATIONS, OR OTHER DATA ARE USED FOR ANY PURPOSE OTHER THAN IN CONNECTION WITH A DEFINITELY RELATED GOVERNMENT PROCUREMENT OPERATION, THE UNITED STATES GOVERNMENT THEREBY INCURS NO RESPONSIBILITY NOR ANY OBLIGATION WHATSOEVER; AND THE FACT THAT THE GOVERNMENT MAY HAVE FORMULATED, FURNISHED, OR IN ANY WAY SUPPLIED THE SAID DRAWINGS, SPECIFICATIONS, OR OTHER DATA IS NOT TO BE REGARDED BY IMPLICATION OR OTHERWISE AS IN ANY MANNER LICENSING THE HOLDER OR ANY OTHER PERSON OR CORPORATION, OR CONVEYING ANY RIGHTS OR PERMISSION TO MANUFACTURE, USE, OR SELL ANY PATENTED INVENTION THAT MAY IN ANY WAY BE RELATED THERETO.

REVISIONS

SYM	ZONE	DESCRIPTION	DR	CHK	DATE	APPROVED
B		REPLACES REV A WITH CHANGE PER TORR 21345			8/19/65	
C		REVISED PER TDRR 21580			7/9/65	
D		REVISED PER TDRR 22461			9/20/65	

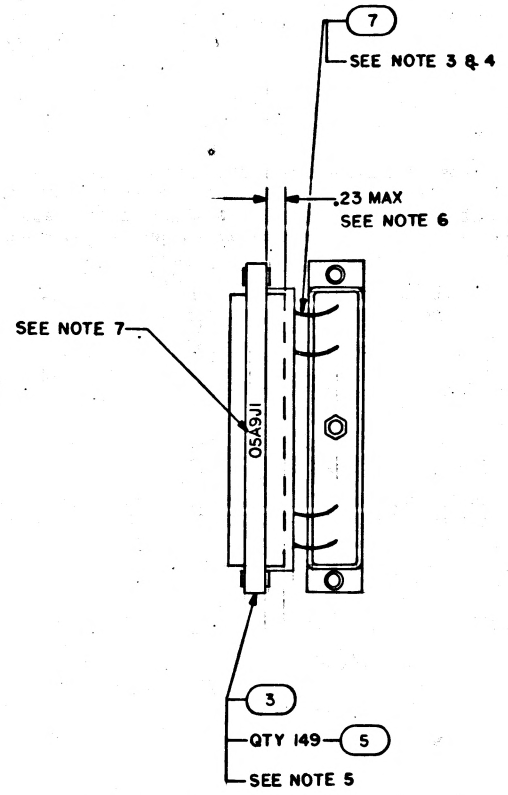

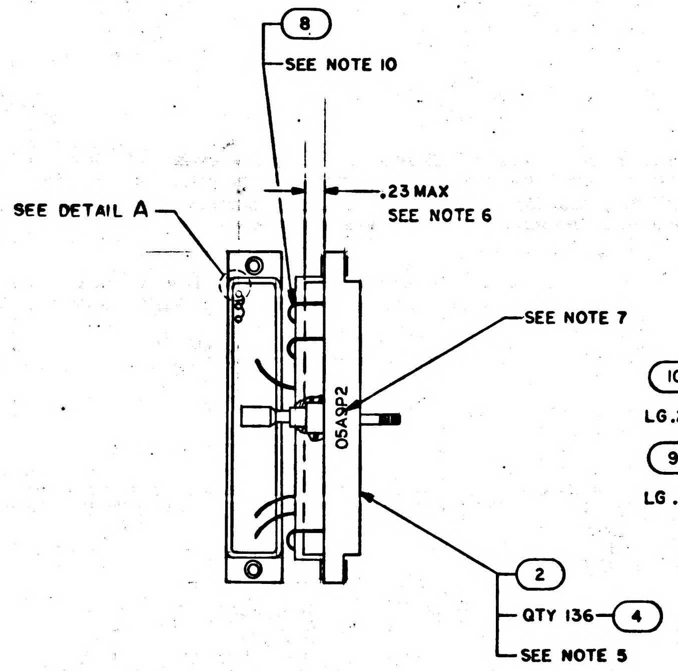

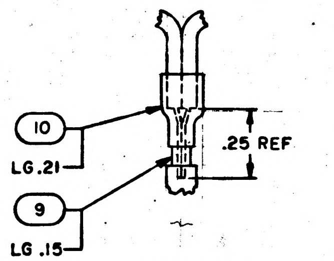

DETAIL A
TYP FOR DUAL CONNECTIONS
SCALE NONE

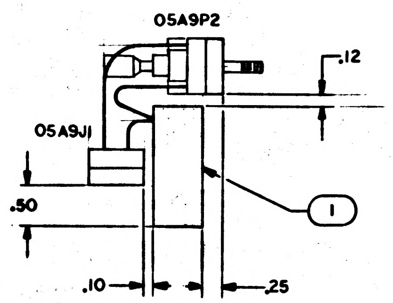

Ⓑ REPLACES REV A WITH CHANGE

NOTES

1. INTERPRET DRAWING IN ACCORDANCE WITH STANDARDS PRESCRIBED BY MIL-D-70327
2. FOR FABRICATION SEE ND1002032
3. FOR WIRING OF 05A9J1, 05A9P2 AND MODULE SEE WIRING DIAGRAM NO. 1006184
4. STRIP ALL WIRES .19 DO NOT TIN
5. INSTALL CRIMP STYLE TERMINALS IN ACCORDANCE WITH ND1002206
6. ENCAPSULATE INDICATED AREA PER ND1002009 METHOD E. MOUNTING SURFACES OF CONNECTORS MUST NOT BE ENCAPSULATED
7. MARK .200/.180 HIGH PER ND1002019 AND 1002122 TYPE II, CLASS I USING BLACK MARKING INK 1006271-10 CENTRALIZE AS SHOWN
8. TEST PER FTM1005707
9. AR DENOTES AS REQUIRED
10. LACE LEADS AWAY FROM JACKING SCREW

QTY REQD	PART OR IDENTIFYING NO.	MATERIAL OR NOTES	NOMENCLATURE OR DESCRIPTION	FIND NO.
☒	1006184		WIRING DIAGRAM	REF
AR	1006322-004		SLEEVING	10
AR	1006322-001		SLEEVING	9
AR	1012507-001		TAPE, LACING	8
AR	1010789-016		WIRE, ELEC, AWG 26 YEL	7
~~AR~~	~~1010789-017~~		~~WIRE, ELEC, AWG 26, 2 COND TWISTED~~	~~6~~
149	1010738-5		CONTACT, ELEC PIN	5
136	1010738-6		CONTACT, ELEC SOCKET	4
1	1010817-1		CONNECTOR, PLUG ELEC	3
1	1010818-1		CONNECTOR, RECEPTACLE ELEC	2
1	1003217		G & N FAILURE DETECT MODULE	1

LIST OF MATERIALS

1003220	
NEXT ASSY	USED ON

APPLICATION

UNLESS OTHERWISE SPECIFIED
DIMENSIONS ARE IN INCHES
CAPACITOR VALUES ARE IN µf
RESISTOR VALUES ARE IN OHMS
TOLERANCES ON
FRACTIONS ± DECIMALS ±.03 ANGLES ±
DO NOT SCALE THIS DRAWING

MATERIAL

MIT
INSTRUMENTATION LAB
CAMBRIDGE, MASS.

DRAWN
CHECKED
APPROVED
APPROVED
APPROVED MIT
NOT REQUIRED PER LETTER NASA PP7-65-612
DATE

MANNED SPACECRAFT CENTER
HOUSTON, TEXAS

G & N FAILURE DETECT
CABLE ASSY

CODE IDENT NO. 80230
SIZE D
DRAWING NO. 1005731
SCALE 1/1
SHEET 1 OF

NOTICE – WHEN GOVERNMENT DRAWINGS, SPECIFICATIONS, OR OTHER DATA ARE USED FOR ANY PURPOSE OTHER THAN IN CONNECTION WITH A DEFINITELY RELATED GOVERNMENT PROCUREMENT OPERATION, THE UNITED STATES GOVERNMENT THEREBY INCURS NO RESPONSIBILITY NOR ANY OBLIGATION WHATSOEVER; AND THE FACT THAT THE GOVERNMENT MAY HAVE FORMULATED, FURNISHED, OR IN ANY WAY SUPPLIED THE SAID DRAWINGS, SPECIFICATIONS OR OTHER DATA IS NOT TO BE REGARDED BY IMPLICATION OR OTHERWISE AS IN ANY MANNER LICENSING THE HOLDER OR ANY OTHER PERSON OR CORPORATION, OR CONVEYING ANY RIGHTS OR PERMISSION TO MANUFACTURE, USE, OR SELL ANY PATENTED INVENTION THAT MAY IN ANY WAY BE RELATED THERETO.

REVISIONS 18286						
SYM	ZONE	DESCRIPTION	DR	CHK	DATE	APPROVED

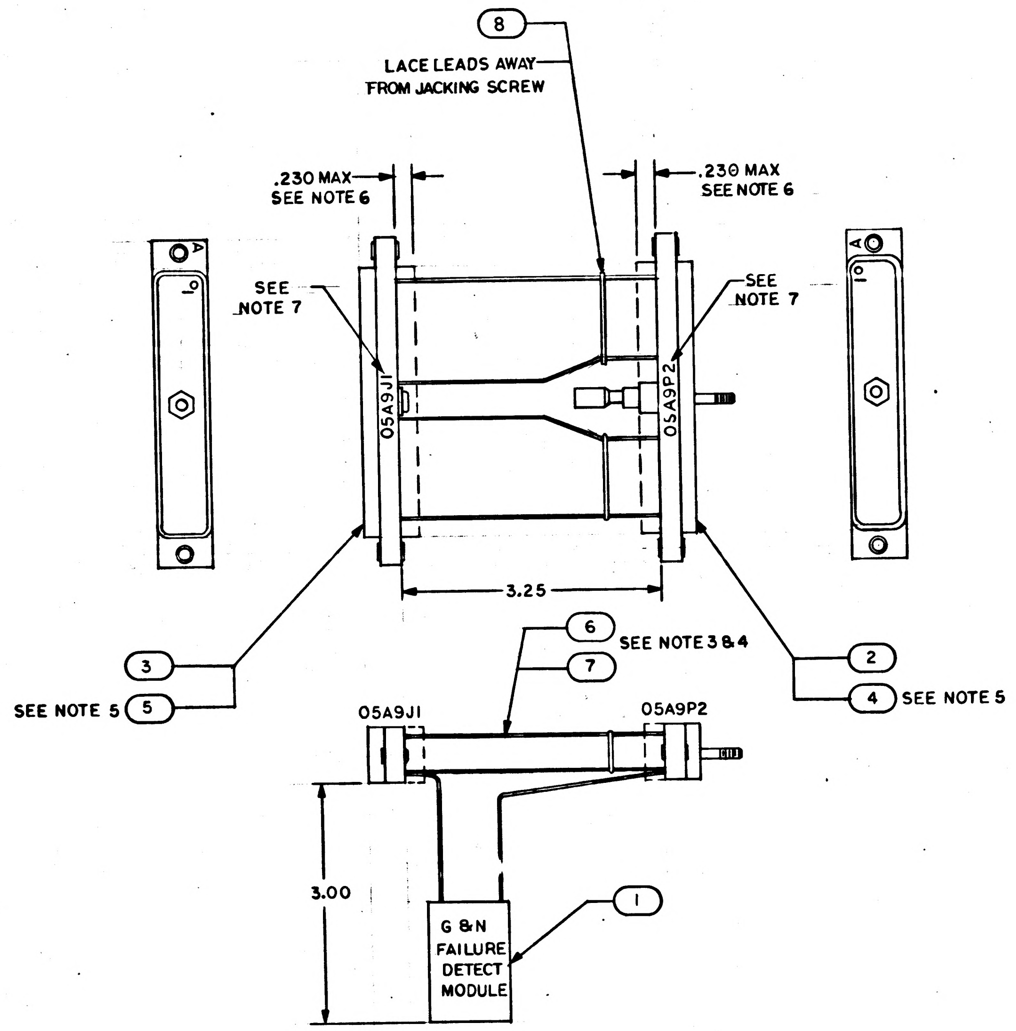

NOTES:

1. INTERPRET DRAWING IN ACCORDANCE WITH STANDARDS PRESCRIBED BY MIL-D-70327
2. FOR FABRICATION AND REQUIRED TESTS SEE ND 1002032
3. FOR WIRING OF 05A9J1, 05A9P2 AND MODULE SEE WIRING DIAGRAM NO. 1006184
4. STRIP ALL WIRES .09 DO NOT TIN
5. INSTALL FIND NO. 4 AND FIND NO. 5 PER ND 1002206
6. ENCAPSULATE INDICATED AREA PER ND 1002009 METHOD E. MOUNTING SURFACES OF CONNECTORS MUST NOT BE ENCAPSULATED
7. MARK .140/.100 HIGH PER ND 1002019. CENTRALIZE AS SHOWN
8. COMPLETED ASSEMBLY SHALL BE TESTED IN ACCORDANCE WITH AND SHALL MEET ALL THE REQUIREMENTS OF PS 1005731

☒	1006184	WIRING DIAGRAM	REF
AR	1012507-003	TAPE, LACING	8
AR	1010789-016	WIRE ELEC AWG 26 YEL	7
AR	1010789-017	WIRE ELEC AWG 26, 2 COND TWISTED	6
149	1010738-5	CONTACT, ELEC, PIN	5
136	1010738-6	CONTACT, ELEC, SOCKET	4
1	1010817-1	CONNECTOR, PLUG ELEC	3
1	1010818-1	CONNECTOR, RECEPTACLE ELEC	2
1	1003209-011	G & N FAILURE DETECT MODULE	1
QTY REQD	PART OR IDENTIFYING NO.	NOMENCLATURE OR DESCRIPTION	FIND NO.
-011	LIST OF MATERIALS		

1003210	
NEXT ASSY	USED ON
APPLICATION	

UNLESS OTHERWISE SPECIFIED
DIMENSIONS ARE IN INCHES
CAPACITOR VALUES ARE IN μf
RESISTOR VALUES ARE IN OHMS
TOLERANCES ON
FRACTIONS ± — DECIMALS ±.020 ANGLES ± —
DO NOT SCALE THIS DRAWING

MATERIAL
——

MIT
INSTRUMENTATION LAB
CAMBRIDGE, MASS.

DRAWN	a. Di Leo	7 APRIL 65
CHECKED	R. Lirdanis	8 APR 65
APPROVED		
APPROVED	Eldon C Hall	9 April 65
APPROVED MIT		13 Apr 65
APPROVED MSC		4-13-65
		DATE

MANNED SPACECRAFT CENTER
HOUSTON, TEXAS

G & N FAILURE DETECT CABLE ASSY

CODE IDENT NO.	SIZE	DRAWING NO.
80230	D	1005731
SCALE 1:1		SHEET 1 OF 1

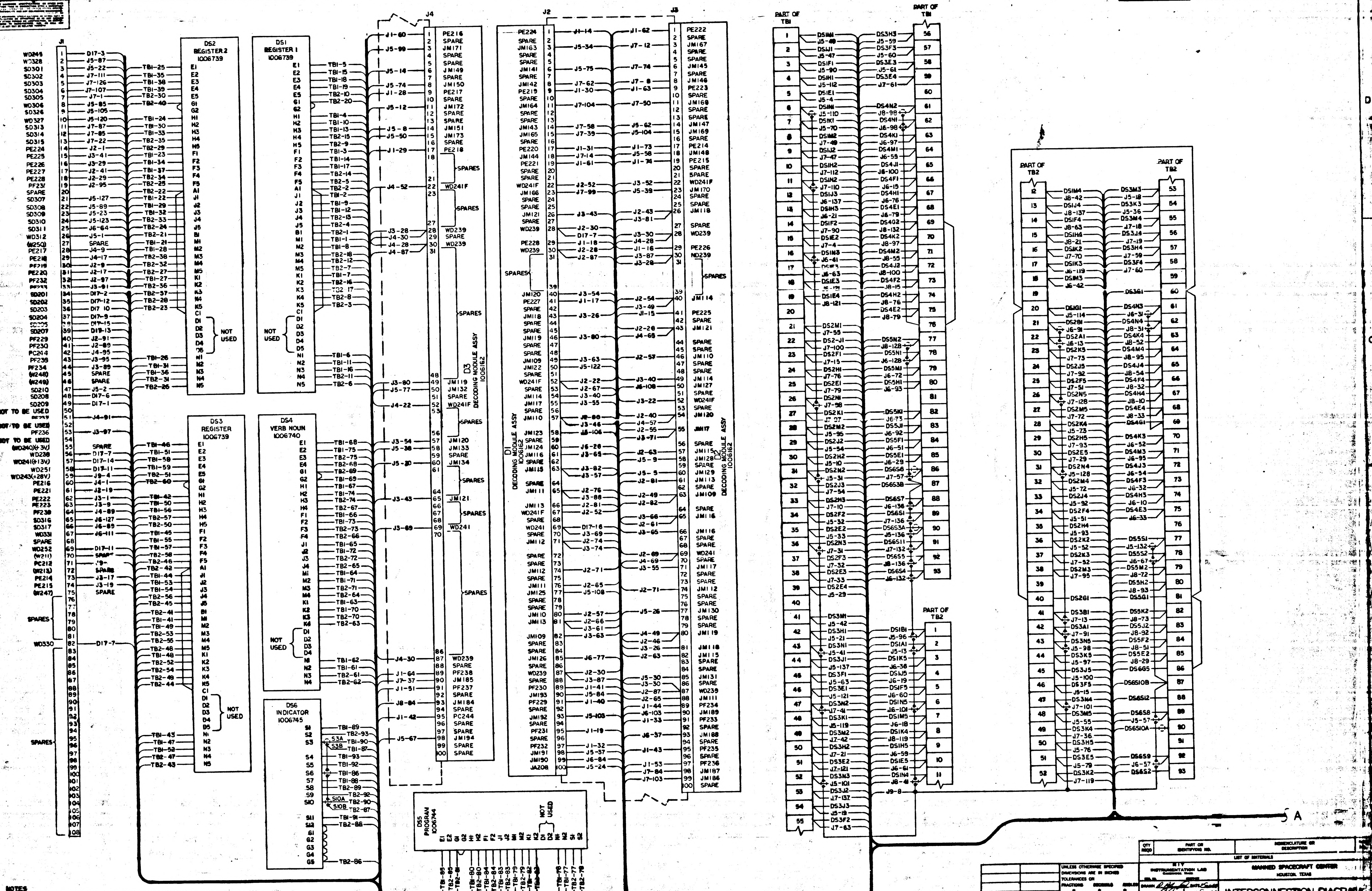
J1
DS2 REGISTER 2 1006739
DS1 REGISTER 1 1006739
DS3 REGISTER 1006739
DS4 VERB NOUN 1006740
DS6 INDICATOR 1006745
DS5 PROGRAM 1006744
J4
J2
J3
D3 DECODING MODULE ASSY 1006162
D1 DECODING MODULE ASSY 1006162
DECODING MODULE ASSY 1006162
PART OF TB1
PART OF TB2
NOT USED
SPARES
SPARE
A

NOTES
1. PARTIAL REFERENCE DESIGNATIONS ARE SHOWN, PREFIX THE DESIGNATION WITH UNIT NUMBER OR ASSEMBLY DESIGNATION OR BOTH
2. INTERPRET DRAWING IN ACCORDANCE WITH STANDARDS PRESCRIBED BY MIL-D-70327

REFERENCES
1. 1003706 NAV DSKY ASSY

QTY REQD	PART OR IDENTIFYING NO.	NOMENCLATURE OR DESCRIPTION

LIST OF MATERIALS

1003706
NEXT ASSY | USED ON
APPLICATION

UNLESS OTHERWISE SPECIFIED DIMENSIONS ARE IN INCHES
TOLERANCES ON FRACTIONS ± DECIMALS ± ANGLES ±
DO NOT SCALE THIS DRAWING
MATERIAL
HEAT TREATMENT
FINAL FINISH

MIT INSTRUMENTATION LAB
CAMBRIDGE, MASS.
DRAWN DATE 2 Sep 64
CHECKED 4 Sep 64
APPROVAL Sept 15/64
APPROVAL
NASA APPROVAL 9-22-67
MIT APPROVAL
MIT APPROVAL

MANNED SPACECRAFT CENTER
HOUSTON, TEXAS

INTERCONNECTION DIAGRAM
AGC DSKY, NAV 100 SERIES

CODE IDENT NO. —
SIZE J
NASA DRAWING NO. 1005750
SCALE NONE

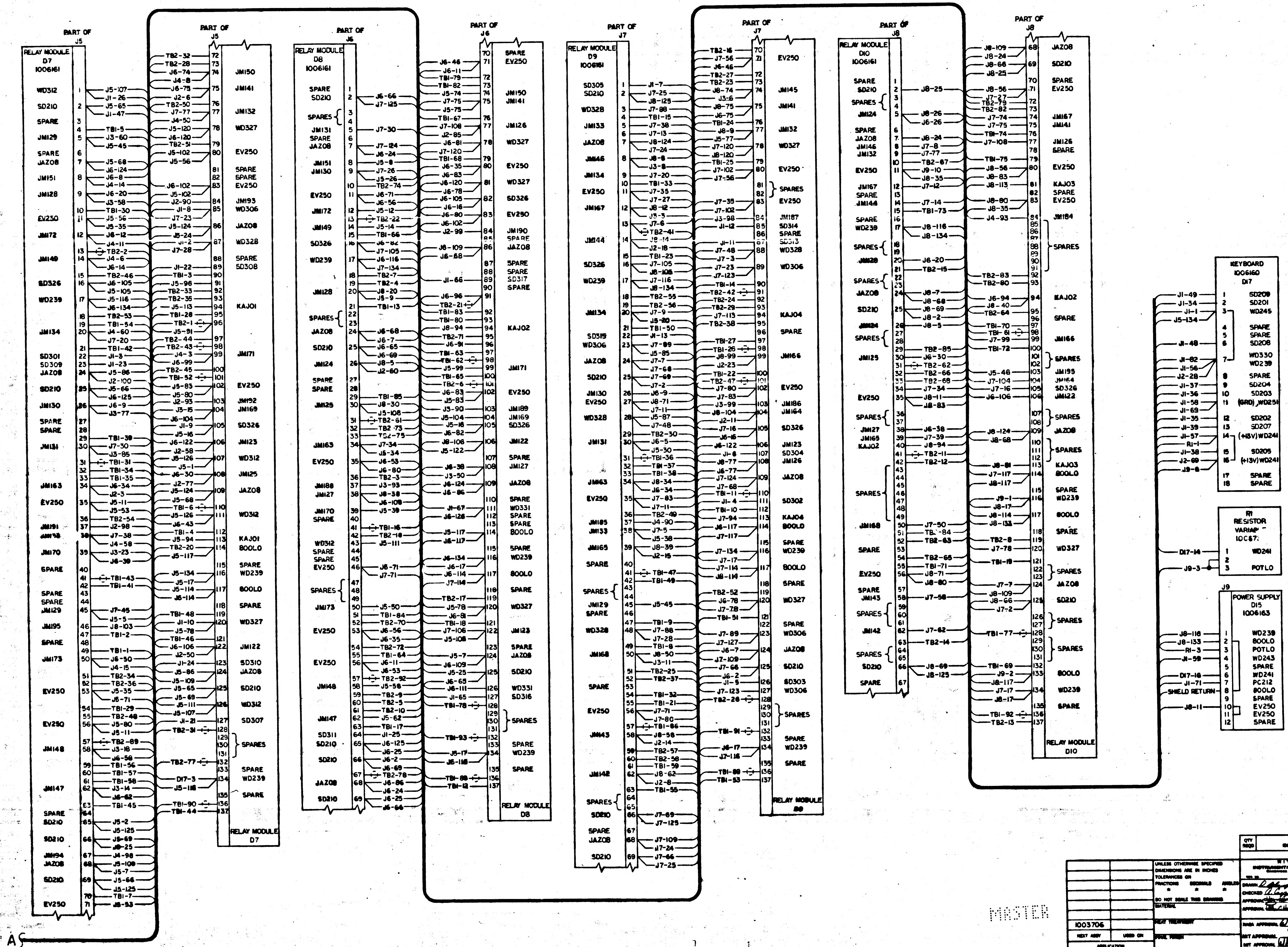
PART OF J5
RELAY MODULE D7 1006161
PART OF J6
RELAY MODULE D8 1006161
PART OF J7
RELAY MODULE D9 1006161
PART OF J8
RELAY MODULE D10 1006161
KEYBOARD 1006160 D17
R1 RESISTOR VARIAB 10C87
J9
POWER SUPPLY D15 1006163
SHIELD RETURN
SPARES
A

MASTER

QTY REQD	PART OR IDENTIFYING NO.	NOMENCLATURE OR DESCRIPTION	FIND NO.

LIST OF MATERIALS

1003706	
NEXT ASSY	USED ON
APPLICATION	

UNLESS OTHERWISE SPECIFIED
DIMENSIONS ARE IN INCHES
TOLERANCES ON
FRACTIONS ± DECIMALS ± ANGLES ±
DO NOT SCALE THIS DRAWING
MATERIAL
HEAT TREATMENT
FINAL FINISH

MIT
INSTRUMENTATION LAB
CAMBRIDGE, MASS.

DRAWN DATE
CHECKED
APPROVAL
APPROVAL
NASA APPROVAL
MIT APPROVAL
MIT APPROVAL

MANNED SPACECRAFT CENTER
HOUSTON, TEXAS

INTERCONNECTION DIAGRAM
AGC DSKY, NAV 100 SERIES

CODE IDENT NO. —
SIZE J
NASA DRAWING NO. 1005750
SCALE NONE
WT
SHEET 2 OF 2

—	1005753		REVISIONS	13266

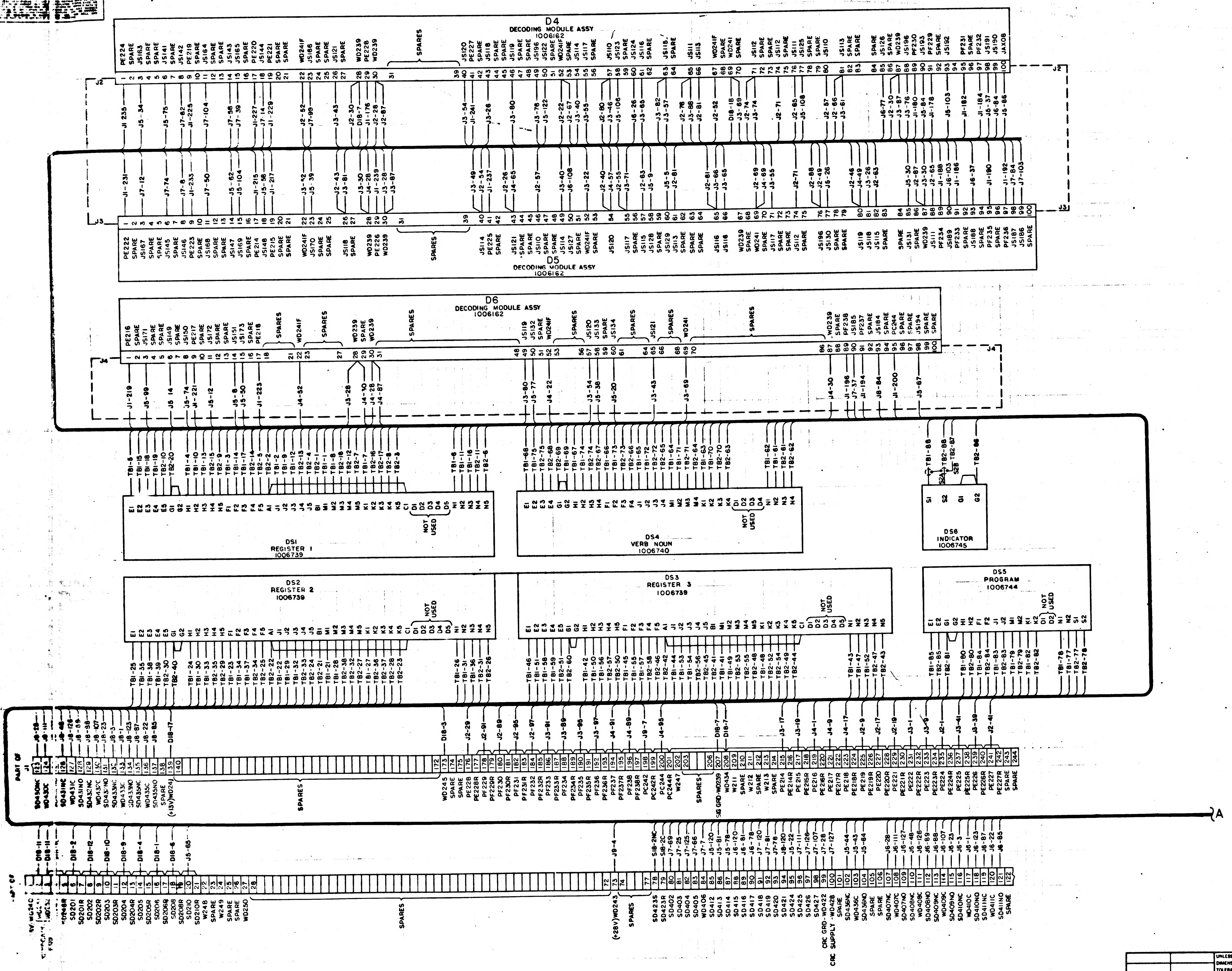

D4
DECODING MODULE ASSY
1006162
D5
DECODING MODULE ASSY
1006162
D6
DECODING MODULE ASSY
1006162
J2
J3
J4
SPARES
DS1
REGISTER 1
1006739
DS4
VERB NOUN
1006740
DS6
INDICATOR
1006745
DS2
REGISTER 2
1006739
DS3
REGISTER 3
1006739
DS5
PROGRAM
1006744
NOT USED
PART OF J1
A

NOTES

1. PARTIAL REFERENCE DESIGNATIONS ARE SHOWN. PREFIX THE DESIGNATION WITH UNIT NUMBER OR ASSEMBLY DESIGNATION OR BOTH
2. INTERPRET DRAWING IN ACCORDANCE WITH STANDARDS PRESCRIBED BY MIL-D-70327

REFERENCES:
1003707 MAIN DSKY ASSY

MASTER

QTY REQD	PART OR IDENTIFYING NO.	NOMENCLATURE OR DESCRIPTION	FIND NO.

LIST OF MATERIALS

NEXT ASSY	USED ON
APPLICATION	

UNLESS OTHERWISE SPECIFIED
DIMENSIONS ARE IN INCHES
TOLERANCES ON
FRACTIONS ± DECIMALS ± ANGLES ±
DO NOT SCALE THIS DRAWING
MATERIAL
HEAT TREATMENT
FINAL FINISH

MIT
INSTRUMENTATION LAB
CAMBRIDGE, MASS.
DRAWN DATE 9SEP64
CHECKED A. Coppins 16 Sep 64
APPROVAL Sept 30/64
APPROVAL
NASA APPROVAL W J Rhine 10-6-64
MIT APPROVAL
MIT APPROVAL

MANNED SPACECRAFT CENTER
HOUSTON, TEXAS

INTERCONNECTION DIAGRAM
AGC DSKY, MAIN

CODE IDENT NO. —
SIZE J
NASA DRAWING NO. 1005753
SCALE NONE
WT
SHEET 1 OF 2

1005753-

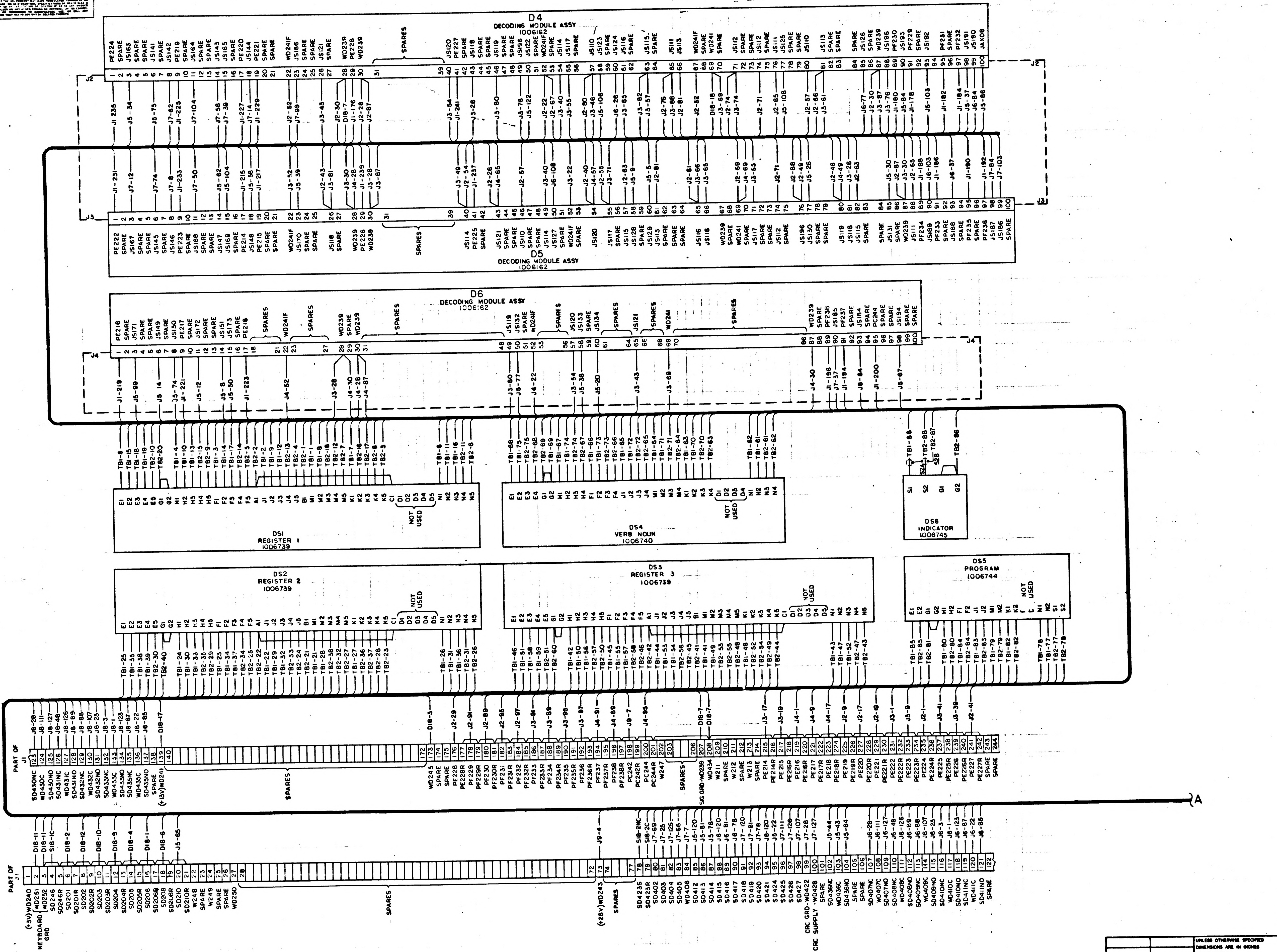
D4
DECODING MODULE ASSY
1006162
D5
DECODING MODULE ASSY
1006162
D6
DECODING MODULE ASSY
1006162
J2
J3
J4
SPARES
DS1
REGISTER 1
1006739
DS4
VERB NOUN
1006740
DS6
INDICATOR
1006745
DS2
REGISTER 2
1006739
DS3
REGISTER 3
1006739
DS5
PROGRAM
1006744
NOT USED
PART OF J1
KEYBOARD GRD
(+3V) WD240
(+15V) WD241
(+28V) WD243
SG GRD-WD239
CRC GRD-WD422
CRC SUPPLY -WD428
A

NOTES
1. PARTIAL REFERENCE DESIGNATIONS ARE SHOWN. PREFIX THE DESIGNATION WITH UNIT NUMBER OR ASSEMBLY DESIGNATION OR BOTH
2. INTERPRET DRAWING IN ACCORDANCE WITH STANDARDS PRESCRIBED BY MIL-D-70327

REFERENCES:
1003707 MAIN DSKY ASSY

MASTER

QTY REQD	PART OR IDENTIFYING NO.		NOMENCLATURE OR DESCRIPTION

LIST OF MATERIAL

NEXT ASSY	USED ON
APPLICATION	

UNLESS OTHERWISE SPECIFIED
DIMENSIONS ARE IN INCHES
TOLERANCES ON
FRACTIONS ± DECIMALS ± ANGLES ±
DO NOT SCALE THIS DRAWING
MATERIAL
HEAT TREATMENT
FINAL FINISH

MIT
INSTRUMENTATION LAB
CAMBRIDGE MASS
DRAWN DATE
CHECKED
APPROVAL
APPROVAL
NASA APPROVAL 10-6-64
MIT APPROVAL
MIT APPROVAL

MANNE SPACECRAFT CENTE
HOUSTON, TEXAS

INTERCONNECTION DIA
AGC DSKY, MAIN

CODE IDENT NO. —
SIZE J
1005753
SCALE NONE
WT

1005753

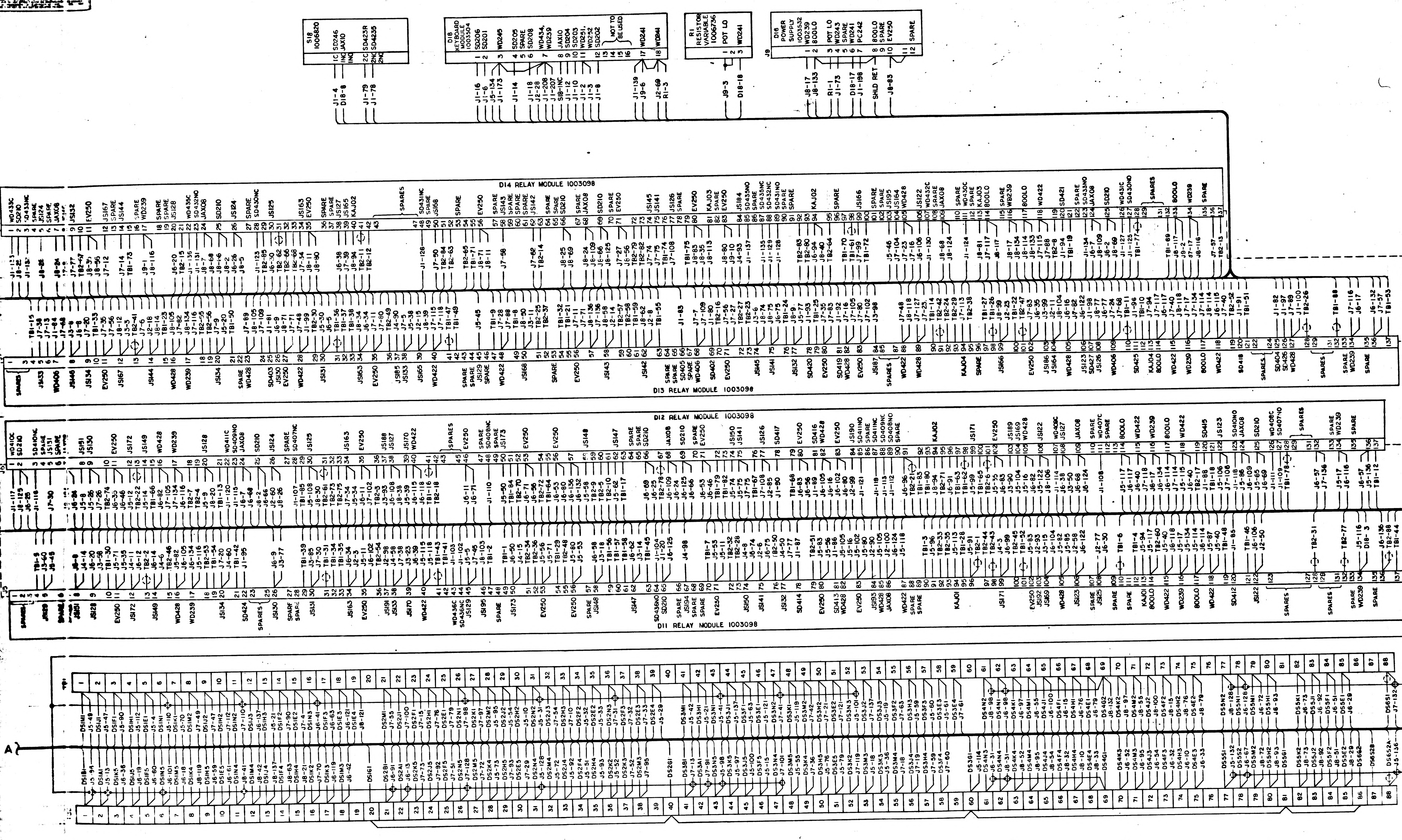

S18 1006820
D18 KEYBOARD MODULE 1003504
R1 RESISTOR VARIABLE 1006756
D16 POWER SUPPLY 1003532
NOT TO BE USED
D14 RELAY MODULE 1003098
D13 RELAY MODULE 1003098
D12 RELAY MODULE 1003098
D11 RELAY MODULE 1003098
TB1
TB2
J9
A

QTY REQD	PART OR IDENTIFYING NO.	NOMENCLATURE OR DESCRIPTION	FIND NO

LIST OF MATERIALS

NEXT ASSY	USED ON

APPLICATION

UNLESS OTHERWISE SPECIFIED DIMENSIONS ARE IN INCHES
TOLERANCES ON
FRACTIONS ± DECIMALS ± ANGLES ±
DO NOT SCALE THIS DRAWING
MATERIAL
HEAT TREATMENT
FINAL FINISH

MIT INSTRUMENTATION LAB
CAMBRIDGE, MASS
DRAWN DATE 9 SEP 64
CHECKED A. Caggiano 16 Sep 64
APPROVAL Sept 30/64
APPROVAL Hall 2 Oct 64
NASA APPROVAL 10-6-64
MIT APPROVAL
MIT APPROVAL

MANNED SPACECRAFT CENTER
HOUSTON, TEXAS

INTERCONNECTION DIAGRAM
AGC DSKY, MAIN

CODE IDENT NO. —
SIZE J
NASA DRAWING NO. 1005753
SCALE NONE
WT
SHEET 2 OF 2

MASTER

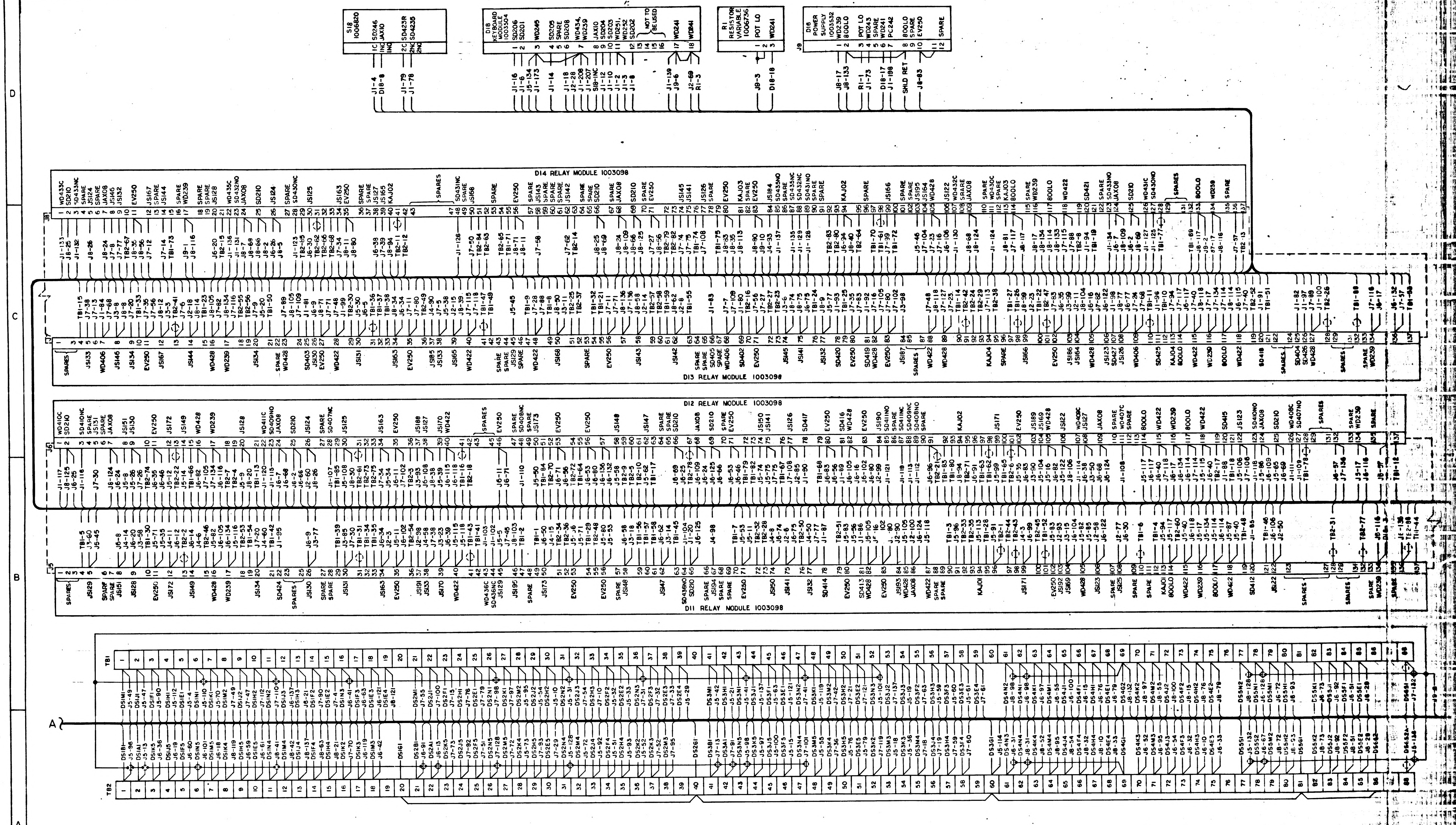
S18 1006820
D18 KEYBOARD MODULE 1003504
NOT TO BE USED
R1 RESISTOR VARIABLE 1006736
POT LO
J9
D16 POWER SUPPLY 1001532
D14 RELAY MODULE 1003098
D13 RELAY MODULE 1003098
D12 RELAY MODULE 1003098
D11 RELAY MODULE 1003098
SPARES
TB1
TB2
J1
J6
J5
A
B
C
D
1005753

QTY REQD	PART OR IDENTIFYING NO.	NOMENCLATURE OR DESCRIPTION

LIST OF MATERIALS

UNLESS OTHERWISE SPECIFIED
DIMENSIONS ARE IN INCHES
TOLERANCES ON
FRACTIONS ± DECIMALS ± ANGLES ±
DO NOT SCALE THIS DRAWING
MATERIAL
HEAT TREATMENT
FINAL FINISH

NEXT ASSY | USED ON
APPLICATION

MIT
INSTRUMENTATION LAB
CAMBRIDGE MASS

DRAWN DATE 9 SEP 64
CHECKED 16 Sep 64
APPROVAL Sept 30/64
APPROVAL Ellen C Hall 2 Oct 64
NASA APPROVAL 10-6-64
MIT APPROVAL
MIT APPROVAL

MANNED SPACECRAFT CENTER
HOUSTON, TEXAS

INTERCONNECTION DIAG
AGC DSKY, MAIN

CODE IDENT NO. —
SIZE J
SCALE NONE

MASTER

—	1005756

REVISIONS 14667			
SYM	DESCRIPTION	DATE	APPROVAL

OTICE — WHEN GOVERNMENT DRAWINGS, SPECIFICATIONS, OR OTHER DATA
RE USED FOR ANY PURPOSE OTHER THAN IN CONNECTION WITH A DEFINITELY
ELATED GOVERNMENT PROCUREMENT OPERATION, THE UNITED STATES GOVERN-
ENT THEREBY INCURS NO RESPONSIBILITY NOR ANY OBLIGATION WHATSOEVER;
ND THE FACT THAT THE GOVERNMENT MAY HAVE FORMULATED, FURNISHED, OR
ANY WAY SUPPLIED THE SAID DRAWINGS, SPECIFICATIONS OR OTHER DATA IS
OT TO BE REGARDED BY IMPLICATION OR OTHERWISE AS IN ANY MANNER
CENSING THE HOLDER OR ANY OTHER PERSON OR CORPORATION, OR CONVEY-
G ANY RIGHTS OR PERMISSION TO MANUFACTURE, USE, OR SELL ANY
ATENTED INVENTION THAT MAY IN ANY WAY BE RELATED THERETO.

REF DESIGNATION	PART NO.	DESCRIPTION	VALUE	TOL	RATING
R1	1006750	RESISTOR	SEE TABLE	±2%	1/4W
R2	1006750	RESISTOR	SEE TABLE	±2%	1/4W
C1	1006793-19	CAPACITOR	.0033	±2%	500V
C2	1006755-134	CAPACITOR	22	±10%	50 VDC
Q1	1010376-1	TRANSISTOR			
Q2	1010269-2	TRANSISTOR	SEE NOTE 3		
Q3	1010269-2	TRANSISTOR			
Q4	1010376-1	TRANSISTOR			
CR1	1006751	DIODE			
CR2	1006751	DIODE			
CR3	1006751	DIODE			
CR4	1006751	DIODE			
L1	1010406-7	COIL	8.2UH		
L2	1006726	REACTOR			
T1	1010291-4	TRANSFORMER			
T2	1010291-4	TRANSFORMER			

R1	
PART NO.	VALUE
1006750 -41	2400
-42	2700
-43	3000
-44	3300
-45	3600
-46	3900
-47	4300
1006750 -48	4700

R2	
PART NO.	VALUE
1006750 -19	300
-22	390
-25	510
-27	620
-28	680
-29	750
-30	820
-31	910
-32	1000
-34	1200
1006750 -36	1500

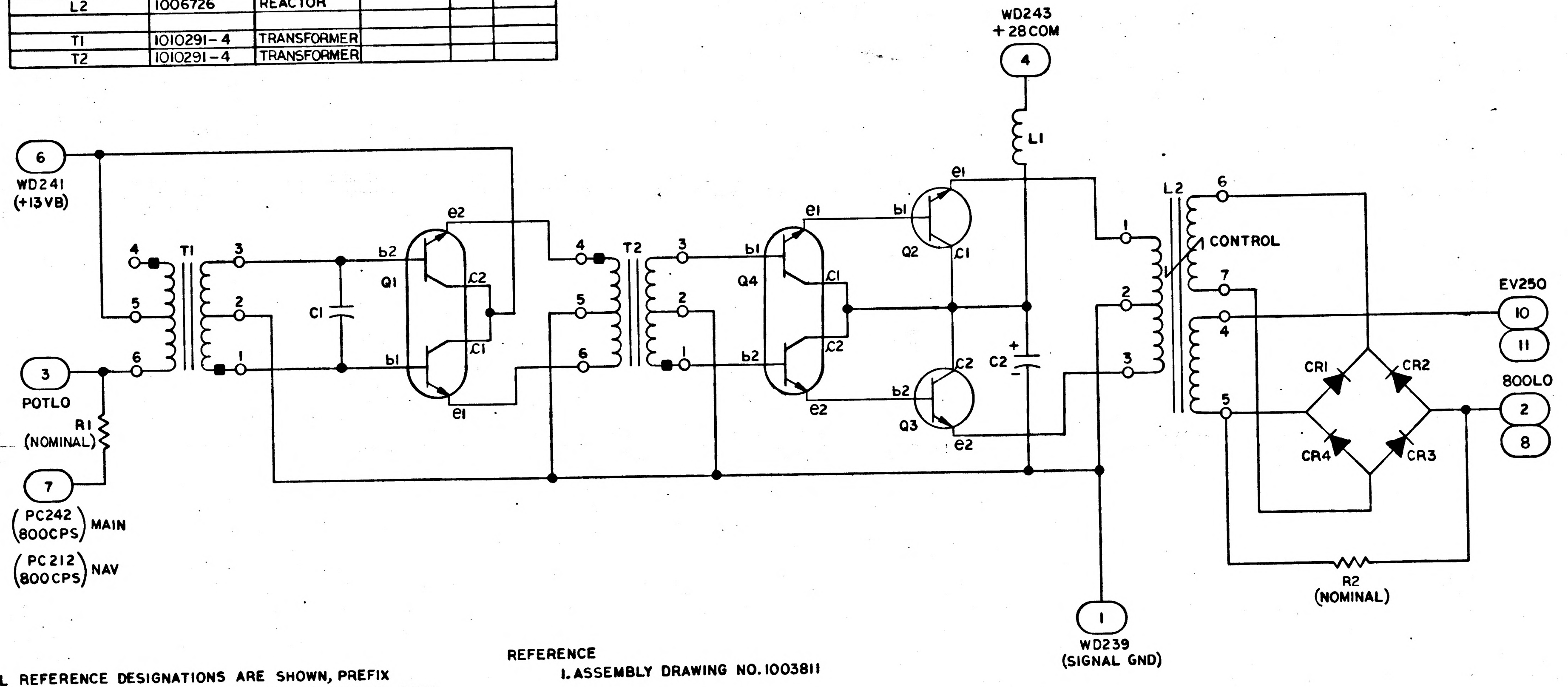

NOTES
1. PARTIAL REFERENCE DESIGNATIONS ARE SHOWN, PREFIX THEM WITH UNIT NUMBER OR ASSEMBLY DESIGNATION OR BOTH
2. INTERPRET DRAWING IN ACCORDANCE WITH STANDARDS PRESCRIBED BY MIL-D-70327
3. Q2 AND Q3 ARE MATCHED PAIRS
4. RESISTORS ARE IN OHMS UNLESS OTHERWISE SPECIFIED
5. CAPACITORS ARE IN UFD UNLESS OTHERWISE SPECIFIED

REFERENCE
1. ASSEMBLY DRAWING NO. 1003811

MASTER

QTY REQD	PART OR IDENTIFYING NO.	NOMENCLATURE OR DESCRIPTION	FIND NO.
LIST OF MATERIALS			

NEXT ASSY	USED ON
APPLICATION	

UNLESS OTHERWISE SPECIFIED DIMENSIONS ARE IN INCHES
TOLERANCES ON
FRACTIONS ± DECIMALS ± ANGLES ±
DO NOT SCALE THIS DRAWING
MATERIAL
HEAT TREATMENT
FINAL FINISH

MIT
INSTRUMENTATION LAB
CAMBRIDGE, MASS
DWG. NO. CONTRACT
DRAWN D. Belanger DATE 5 Nov 64
CHECKED R. Edwards 16 Nov 64
APPROVAL K. Jansson Nov 18/64
APPROVAL C Hall 4 Dec 64
NASA APPROVAL
MIT APPROVAL W Kupfer 8 Dec 64

MANNED SPACECRAFT CENTER
HOUSTON, TEXAS

SCHEMATIC
POWER SUPPLY ASSEMBLY
AGC DSKY MAIN & NAV 100 SERIES

CODE IDENT NO.	SIZE	NASA DRAWING NO.	
—	D	1005756	
SCALE NONE	WT		SHEET 1 OF 1

INCHES
0 1 2
PHOTOGRAPHIC SCALE ONLY

NOTICE — WHEN GOVERNMENT DRAWINGS, SPECIFICATIONS, OR OTHER DATA ARE USED FOR ANY PURPOSE OTHER THAN IN CONNECTION WITH A DEFINITELY RELATED GOVERNMENT PROCUREMENT OPERATION, THE UNITED STATES GOVERNMENT THEREBY INCURS NO RESPONSIBILITY NOR ANY OBLIGATION WHATSOEVER; AND THE FACT THAT THE GOVERNMENT MAY HAVE FORMULATED, FURNISHED, OR IN ANY WAY SUPPLIED THE SAID DRAWINGS, SPECIFICATIONS OR OTHER DATA IS NOT TO BE REGARDED BY IMPLICATION OR OTHERWISE AS IN ANY MANNER LICENSING THE HOLDER OR ANY OTHER PERSON OR CORPORATION, OR CONVEYING ANY RIGHTS OR PERMISSION TO MANUFACTURE, USE, OR SELL ANY PATENTED INVENTION THAT MAY IN ANY WAY BE RELATED THERETO.

1005777 | A

REVISIONS			
SYM	DESCRIPTION	DATE	APPROVAL
A	REVISED PER TDRR 12250	9/1/64	L.H.B.

COMPUTER 100 SERIES WIRE LIST

FOR INFORMATION ONLY

CLASS B RELEASE TDR No. 12034 DATE

QTY REQD	PART OR IDENTIFYING NO.	NOMENCLATURE OR DESCRIPTION	FIND NO.

LIST OF MATERIALS

NEXT ASSY	USED ON
APPLICATION	

UNLESS OTHERWISE SPECIFIED
DIMENSIONS ARE IN INCHES
TOLERANCES ON
FRACTIONS ± DECIMALS ± ANGLES ±
DO NOT SCALE THIS DRAWING
MATERIAL
HEAT TREATMENT
FINAL FINISH

MIT
INSTRUMENTATION LAB
CAMBRIDGE, MASS.
DWG. NO. CONTRACT
DRAWN P. J. Berkeley DATE 7/24/64
CHECKED
APPROVAL
APPROVAL Eldon C Hall 8/21/64
NASA APPROVAL 8/25/64
MIT APPROVAL W Kupfer 3 Sep 64

MANNED SPACECRAFT CENTER
HOUSTON, TEXAS

COMPUTER WIRE LIST

CODE IDENT NO.
SIZE C
NASA DRAWING NO. 1005777
SCALE
WT
SHEET OF

MASTER

INCHES
0 1 2
PHOTOGRAPHIC SCALE ONLY

NOTICE — WHEN GOVERNMENT DRAWINGS, SPECIFICATIONS, OR OTHER DATA ARE USED FOR ANY PURPOSE OTHER THAN IN CONNECTION WITH A DEFINITELY RELATED GOVERNMENT PROCUREMENT OPERATION, THE UNITED STATES GOVERNMENT THEREBY INCURS NO RESPONSIBILITY NOR ANY OBLIGATION WHATSOEVER; AND THE FACT THAT THE GOVERNMENT MAY HAVE FORMULATED, FURNISHED, OR IN ANY WAY SUPPLIED THE SAID DRAWINGS, SPECIFICATIONS OR OTHER DATA IS NOT TO BE REGARDED BY IMPLICATION OR OTHERWISE AS IN ANY MANNER LICENSING THE HOLDER OR ANY OTHER PERSON OR CORPORATION, OR CONVEYING ANY RIGHTS OR PERMISSION TO MANUFACTURE, USE, OR SELL ANY PATENTED INVENTION THAT MAY IN ANY WAY BE RELATED THERETO.

1005777 B

REVISIONS 12434

SYM	DESCRIPTION	DATE	APPROVAL
A	REVISED PER TDRR 12250	9/1/64	I.H.O.
B	REVISED PER TDRR 13462	10/14/64	10/14

COMPUTER 100 SERIES WIRE LIST

QTY REQD	PART OR IDENTIFYING NO.	NOMENCLATURE OR DESCRIPTION	FIND NO.

LIST OF MATERIALS

NEXT ASSY	USED ON
APPLICATION	

UNLESS OTHERWISE SPECIFIED
DIMENSIONS ARE IN INCHES
TOLERANCES ON
FRACTIONS ± DECIMALS ± ANGLES ±
DO NOT SCALE THIS DRAWING
MATERIAL
HEAT TREATMENT
FINAL FINISH

MIT
INSTRUMENTATION LAB
CAMBRIDGE, MASS.
DWG. NO. CONTRACT

DRAWN DATE 7/24/64
CHECKED
APPROVAL
APPROVAL Eldon C Hall 8/21/64
NASA APPROVAL 8/25/64
MIT APPROVAL 3 Sep 64

MANNED SPACECRAFT CENTER
HOUSTON, TEXAS

COMPUTER WIRE LIST

CODE IDENT NO.
SIZE C
NASA DRAWING NO. 1005777
SCALE
WT
SHEET OF

MASTER

INCHES
0 1 2
PHOTOGRAPHIC SCALE ONLY

1005777 B

4 3 2 1

NOTICE — WHEN GOVERNMENT DRAWINGS, SPECIFICATIONS, OR OTHER DATA ARE USED FOR ANY PURPOSE OTHER THAN IN CONNECTION WITH A DEFINITELY RELATED GOVERNMENT PROCUREMENT OPERATION, THE UNITED STATES GOVERNMENT THEREBY INCURS NO RESPONSIBILITY NOR ANY OBLIGATION WHATSOEVER; AND THE FACT THAT THE GOVERNMENT MAY HAVE FORMULATED, FURNISHED, OR IN ANY WAY SUPPLIED THE SAID DRAWINGS, SPECIFICATIONS OR OTHER DATA IS NOT TO BE REGARDED BY IMPLICATION OR OTHERWISE AS IN ANY MANNER LICENSING THE HOLDER OR ANY OTHER PERSON OR CORPORATION, OR CONVEYING ANY RIGHTS OR PERMISSION TO MANUFACTURE, USE, OR SELL ANY PATENTED INVENTION THAT MAY IN ANY WAY BE RELATED THERETO.

1005777 C

REVISIONS 12034

SYM	DESCRIPTION	DATE	APPROVAL
A	REVISED PER TDRR 12250	9/1/64	L.H.B. JW
B	REVISED PER TDRR 13462	10/14/64	10/14 JW
C	REVISED PER TDRR 14347	11/16/64	WK

COMPUTER 100 SERIES WIRE LIST

QTY REQD	PART OR IDENTIFYING NO.	NOMENCLATURE OR DESCRIPTION	FIND NO.

LIST OF MATERIALS

NEXT ASSY	USED ON
APPLICATION	

UNLESS OTHERWISE SPECIFIED DIMENSIONS ARE IN INCHES
TOLERANCES ON
FRACTIONS ± DECIMALS ± ANGLES ±
DO NOT SCALE THIS DRAWING
MATERIAL
HEAT TREATMENT
FINAL FINISH

MIT
INSTRUMENTATION LAB
CAMBRIDGE, MASS.
DWG. NO. CONTRACT
DRAWN P. J. Batcheler DATE 7/21/64
CHECKED
APPROVAL
APPROVAL Eldon C Hall 8/21/64
NASA APPROVAL 8/25/64
MIT APPROVAL W Kupfer 3 Sep 64

MANNED SPACECRAFT CENTER
HOUSTON, TEXAS

COMPUTER WIRE LIST

CODE IDENT NO.
SIZE C
NASA DRAWING NO. 1005777
SCALE
WT
SHEET 1 OF 1

MASTER

4 3 2 1

INCHES
0 1 2
PHOTOGRAPHIC SCALE ONLY

NOTICE — WHEN GOVERNMENT DRAWINGS, SPECIFICATIONS, OR OTHER DATA ARE USED FOR ANY PURPOSE OTHER THAN IN CONNECTION WITH A DEFINITELY RELATED GOVERNMENT PROCUREMENT OPERATION, THE UNITED STATES GOVERNMENT THEREBY INCURS NO RESPONSIBILITY NOR ANY OBLIGATION WHATSOEVER; AND THE FACT THAT THE GOVERNMENT MAY HAVE FORMULATED, FURNISHED, OR IN ANY WAY SUPPLIED THE SAID DRAWINGS, SPECIFICATIONS OR OTHER DATA IS NOT TO BE REGARDED BY IMPLICATION OR OTHERWISE AS IN ANY MANNER LICENSING THE HOLDER OR ANY OTHER PERSON OR CORPORATION, OR CONVEYING ANY RIGHTS OR PERMISSION TO MANUFACTURE, USE, OR SELL ANY PATENTED INVENTION THAT MAY IN ANY WAY BE RELATED THERETO.

1005777 D

REVISIONS 12034

SYM	DESCRIPTION	DATE	APPROVAL
A	REVISED PER TDRR 12250	9/1/64	
B	REVISED PER TDRR 13462	10/14/64	
C	REVISED PER TDRR 14347	11/6/64	
D	REVISED PER TDRR 14768 DR CHK	2/1/65	

COMPUTER 100 SERIES WIRE LIST

MASTER

QTY REQD	PART OR IDENTIFYING NO.	NOMENCLATURE OR DESCRIPTION	FIND NO.

LIST OF MATERIALS

NEXT ASSY	USED ON

APPLICATION

UNLESS OTHERWISE SPECIFIED
DIMENSIONS ARE IN INCHES
TOLERANCES ON
FRACTIONS ± DECIMALS ± ANGLES ±
DO NOT SCALE THIS DRAWING

MATERIAL

HEAT TREATMENT

FINAL FINISH

MIT
INSTRUMENTATION LAB
CAMBRIDGE, MASS.
DWG. NO. CONTRACT

DRAWN DATE 7/24/64
CHECKED
APPROVAL
APPROVAL Edwin C Hall 8/21/64
NASA APPROVAL 8/25/64
MIT APPROVAL

MANNED SPACECRAFT CENTER
HOUSTON, TEXAS

COMPUTER WIRE LIST

CODE IDENT NO.
SIZE C
NASA DRAWING NO. 1005777
SCALE
WT
SHEET 1 OF 1

1005777

REVISIONS 12034			
SYM	DESCRIPTION	DATE	APPROVAL

NOTICE — WHEN GOVERNMENT DRAWINGS, SPECIFICATIONS, OR OTHER DATA ARE USED FOR ANY PURPOSE OTHER THAN IN CONNECTION WITH A DEFINITELY RELATED GOVERNMENT PROCUREMENT OPERATION, THE UNITED STATES GOVERNMENT THEREBY INCURS NO RESPONSIBILITY NOR ANY OBLIGATION WHATSOEVER; AND THE FACT THAT THE GOVERNMENT MAY HAVE FORMULATED, FURNISHED, OR IN ANY WAY SUPPLIED THE SAID DRAWINGS, SPECIFICATIONS OR OTHER DATA IS NOT TO BE REGARDED BY IMPLICATION OR OTHERWISE AS IN ANY MANNER LICENSING THE HOLDER OR ANY OTHER PERSON OR CORPORATION, OR CONVEYING ANY RIGHTS OR PERMISSION TO MANUFACTURE, USE, OR SELL ANY PATENTED INVENTION THAT MAY IN ANY WAY BE RELATED THERETO.

COMPUTER 100 SERIES WIRE LIST

FOR INFORMATION ONLY

CLASS B RELEASE TDR No.________ DATE

MASTER

QTY REQD	PART OR IDENTIFYING NO.	NOMENCLATURE OR DESCRIPTION	FIND NO.

LIST OF MATERIALS

NEXT ASSY	USED ON
APPLICATION	

UNLESS OTHERWISE SPECIFIED
DIMENSIONS ARE IN INCHES
TOLERANCES ON
FRACTIONS ± DECIMALS ± ANGLES ±
DO NOT SCALE THIS DRAWING
MATERIAL
HEAT TREATMENT
FINAL FINISH

MIT
INSTRUMENTATION LAB
CAMBRIDGE, MASS.
DWG. NO.
CONTRACT
DRAWN P. J. Berkeley DATE 7/21/64
CHECKED
APPROVAL
APPROVAL Eldon C Hall 8/21/64
NASA APPROVAL 8/25/64
MIT APPROVAL W Kupfer 3 Sep 64

MANNED SPACECRAFT CENTER
HOUSTON, TEXAS

COMPUTER WIRE LIST

CODE IDENT NO.
SIZE C
NASA DRAWING NO. 1005777
SCALE
WT
SHEET OF

INCHES
0 1 2
PHOTOGRAPHIC SCALE ONLY

NOTICE — WHEN GOVERNMENT DRAWINGS, SPECIFICATIONS, OR OTHER DATA ARE USED FOR ANY PURPOSE OTHER THAN IN CONNECTION WITH A DEFINITELY RELATED GOVERNMENT PROCUREMENT OPERATION THE UNITED STATES GOVERNMENT THEREBY INCURS NO RESPONSIBILITY NOR ANY OBLIGATION WHATSOEVER; AND THE FACT THAT THE GOVERNMENT MAY HAVE FORMULATED, FURNISHED, OR IN ANY WAY SUPPLIED THE SAID DRAWINGS, SPECIFICATIONS OR OTHER DATA IS NOT TO BE REGARDED BY IMPLICATION OR OTHERWISE AS IN ANY MANNER LICENSING THE HOLDER OR ANY OTHER PERSON OR CORPORATION, OR CONVEYING ANY RIGHTS OR PERMISSION TO MANUFACTURE, USE, OR SELL ANY PATENTED INVENTION THAT MAY IN ANY WAY BE RELATED THERETO.

REVISIONS 12034

SYM	DESCRIPTION	DATE	APPROVAL
A	REVISED PER TDRR 14349	11/16/64	WK.

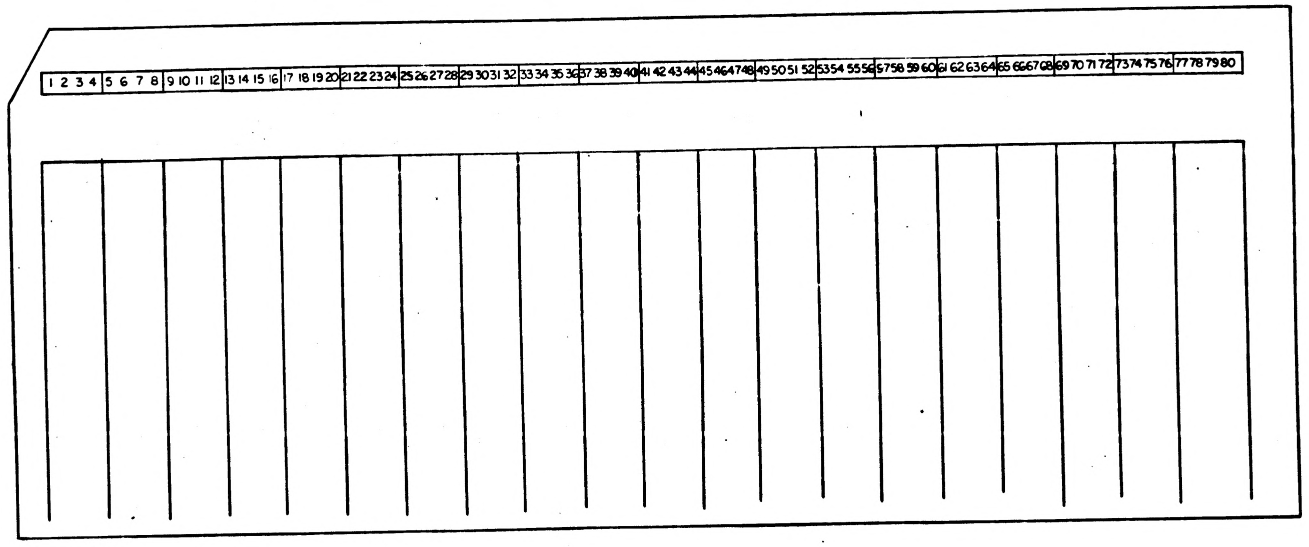

NOTES

1. INTERPRET DRAWING IN ACCORDANCE WITH STANDARDS PRESCRIBED BY MIL-D-70327
2. CARD COLUMNS USAGE

CARD COLUMNS	USAGE
2 — 7	CARD SEQUENCE NUMBER, IN DECIMAL
9 — 22 USAGE	BINARY MACHINE DATA, IN THE FORMAT DESCRIBED BY A GARDNER-DENVER CO. DRAWING NUMBER 800384, REVISION A, FOR THEIR MODEL 14F-15X15X.125 WIRE WRAP MACHINE
27 — 33	SIGNAL NAME.
34 — 35	WIRE NUMBER IN CHAIN FOR SIGNAL
36 — 42	NAME OF PIN WRAPPED BY A TOOL
43 — 49	NAME OF PIN WRAPPED BY B TOOL
50	WIRE PATTERN CODE NUMBER
51	TABLE ROTATIONAL POSITION
52	PALLET LONGITUDINAL POSITION
53	A TOOL Z LEVEL
54	B TOOL Z LEVEL
55 — 57	A TOOL X, IN DECIMAL
58 — 60	Y1, IN DECIMAL
61 — 63	B TOOL X, IN DECIMAL
64 — 66	Y2, IN DECIMAL
67 — 69	Y3, IN DECIMAL
70 — 72	Y4, IN DECIMAL
73 — 79	NASA DRAWING NUMBER OF COVER SHEET FOR DECK
80	REVISION LETTER TO DRAWING NUMBER

MASTER

QTY REQD	PART OR IDENTIFYING NO.	NOMENCLATURE OR DESCRIPTION	FIND NO.

LIST OF MATERIALS

NEXT ASSY	USED ON

APPLICATION

UNLESS OTHERWISE SPECIFIED DIMENSIONS ARE IN INCHES
TOLERANCES ON
FRACTIONS ± DECIMALS ± ANGLES ±
DO NOT SCALE THIS DRAWING
MATERIAL
HEAT TREATMENT
FINAL FINISH

MIT INSTRUMENTATION LAB
CAMBRIDGE, MASS
DWG. NO. CONTRACT
DRAWN DATE 21 Aug 64
CHECKED
APPROVAL
APPROVAL Eldon C. Hall 8/21/64
NASA APPROVAL
MIT APPROVAL 25 Aug 64

MANNED SPACECRAFT CENTER
HOUSTON, TEXAS

WIREWRAP CARD DECK — TRAY A

CODE IDENT NO. —
SIZE D
NASA DRAWING NO. 1005778
SCALE NONE
WT
SHEET 1 OF 1

NOTICE — WHEN GOVERNMENT DRAWINGS, SPECIFICATIONS, OR OTHER DATA ARE USED FOR ANY PURPOSE OTHER THAN IN CONNECTION WITH A DEFINITELY RELATED GOVERNMENT PROCUREMENT OPERATION, THE UNITED STATES GOVERNMENT THEREBY INCURS NO RESPONSIBILITY NOR ANY OBLIGATION WHATSOEVER; AND THE FACT THAT THE GOVERNMENT MAY HAVE FORMULATED, FURNISHED, OR IN ANY WAY SUPPLIED THE SAID DRAWINGS, SPECIFICATIONS OR OTHER DATA IS NOT TO BE REGARDED BY IMPLICATION OR OTHERWISE AS IN ANY MANNER LICENSING THE HOLDER OR ANY OTHER PERSON OR CORPORATION, OR CONVEYING ANY RIGHTS OR PERMISSION TO MANUFACTURE, USE, OR SELL ANY PATENTED INVENTION THAT MAY IN ANY WAY BE RELATED THERETO.

REVISIONS 12034			
SYM	DESCRIPTION	DATE	APPROVAL

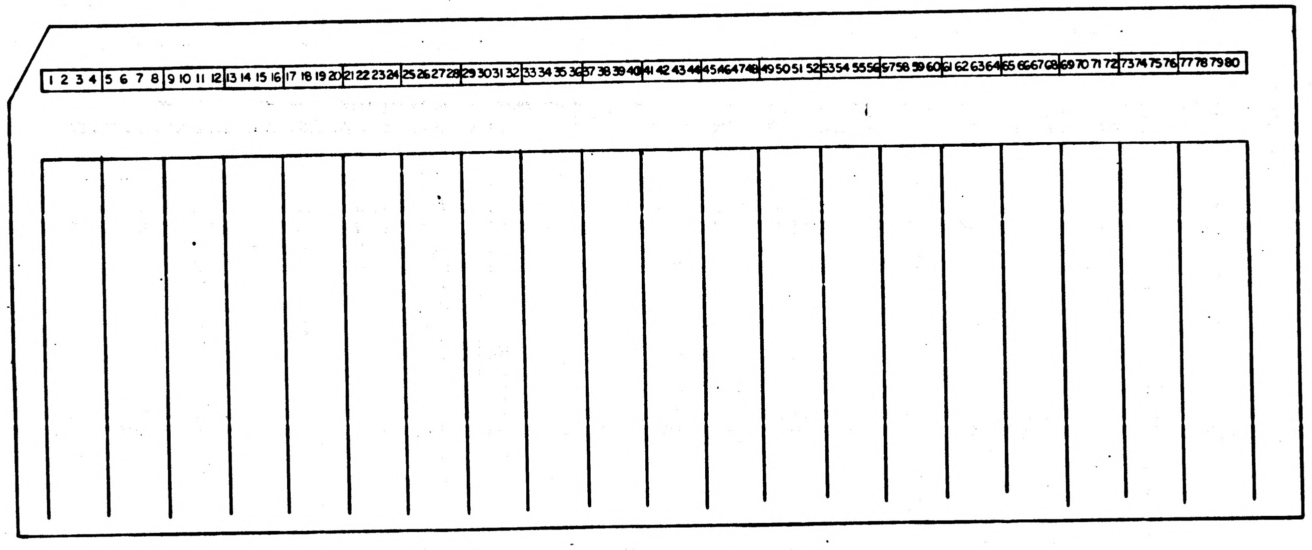

FOR INFORMATION ONLY

CLASS B RELEASE TDR No.________ DATE

NOTES

1. INTERPRET DRAWING IN ACCORDANCE WITH STANDARDS PRESCRIBED BY MIL-D-70327
2. CARD COLUMNS USAGE

CARD COLUMNS	USAGE
2 — 7	CARD SEQUENCE NUMBER, IN DECIMAL
9 — 22 USAGE —	BINARY MACHINE DATA, IN THE FORMAT DESCRIBED BY A GARDNER-DENVER CO. DRAWING NUMBER 800384, REVISION A, FOR THEIR MODEL 14F-15X15X.125 WIRE WRAP MACHINE
27— 33	SIGNAL NAME.
34—35	WIRE NUMBER IN CHAIN FOR SIGNAL
36—42	NAME OF PIN WRAPPED BY A TOOL
43—49	NAME OF PIN WRAPPED BY B TOOL
50	WIRE PATTERN CODE NUMBER
51	TABLE ROTATIONAL POSITION
52	PALLET LONGITUDINAL POSITION
53	A TOOL Z LEVEL
54	B TOOL Z LEVEL
55—57	A TOOL X, IN DECIMAL
58—60	Y1, IN DECIMAL
61—63	B TOOL X, IN DECIMAL
64— 66	Y2, IN DECIMAL
67— 69	Y3, IN DECIMAL
70—72	Y4, IN DECIMAL
73—79	NASA DRAWING NUMBER OF COVER SHEET FOR DECK
80	REVISION LETTER TO DRAWING NUMBER

MASTER

QTY REQD	PART OR IDENTIFYING NO.	NOMENCLATURE OR DESCRIPTION	FIND NO.

LIST OF MATERIALS

NEXT ASSY	USED ON
APPLICATION	

UNLESS OTHERWISE SPECIFIED DIMENSIONS ARE IN INCHES
TOLERANCES ON
FRACTIONS ± DECIMALS ± ANGLES ±
DO NOT SCALE THIS DRAWING
MATERIAL
HEAT TREATMENT
FINAL FINISH

MIT INSTRUMENTATION LAB
CAMBRIDGE, MASS.
DWG. NO. CONTRACT
DRAWN J.E. [illegible] DATE 21 Aug 6[illegible]
CHECKED C. F. Batalden [illegible]
APPROVAL
APPROVAL Eldon C. Hall 8/21/64
NASA APPROVAL [illegible] 8/[illegible]
MIT APPROVAL W Kupfer 28 Aug 64

MANNED SPACECRAFT CENTER
HOUSTON, TEXAS

WIREWRAP CARD
DECK — TRAY A

CODE IDENT NO. — SIZE D NASA DRAWING NO. 1005778
SCALE NONE WT SHEET 1 OF 1

1005778

INCHES 0 1 2

NOTICE — WHEN GOVERNMENT DRAWINGS, SPECIFICATIONS, OR OTHER DATA ARE USED FOR ANY PURPOSE OTHER THAN IN CONNECTION WITH A DEFINITELY RELATED GOVERNMENT PROCUREMENT OPERATION, THE UNITED STATES GOVERNMENT THEREBY INCURS NO RESPONSIBILITY NOR ANY OBLIGATION WHATSOEVER; AND THE FACT THAT THE GOVERNMENT MAY HAVE FORMULATED, FURNISHED, OR IN ANY WAY SUPPLIED THE SAID DRAWINGS, SPECIFICATIONS OR OTHER DATA IS NOT TO BE REGARDED BY IMPLICATION OR OTHERWISE AS IN ANY MANNER LICENSING THE HOLDER OR ANY OTHER PERSON OR CORPORATION, OR CONVEYING ANY RIGHTS OR PERMISSION TO MANUFACTURE, USE, OR SELL ANY PATENTED INVENTION THAT MAY IN ANY WAY BE RELATED THERETO.

REVISIONS 12034

SYM	DESCRIPTION	DATE	APPROVAL
A	REVISED PER TDRR 14346	11/12/64	WK

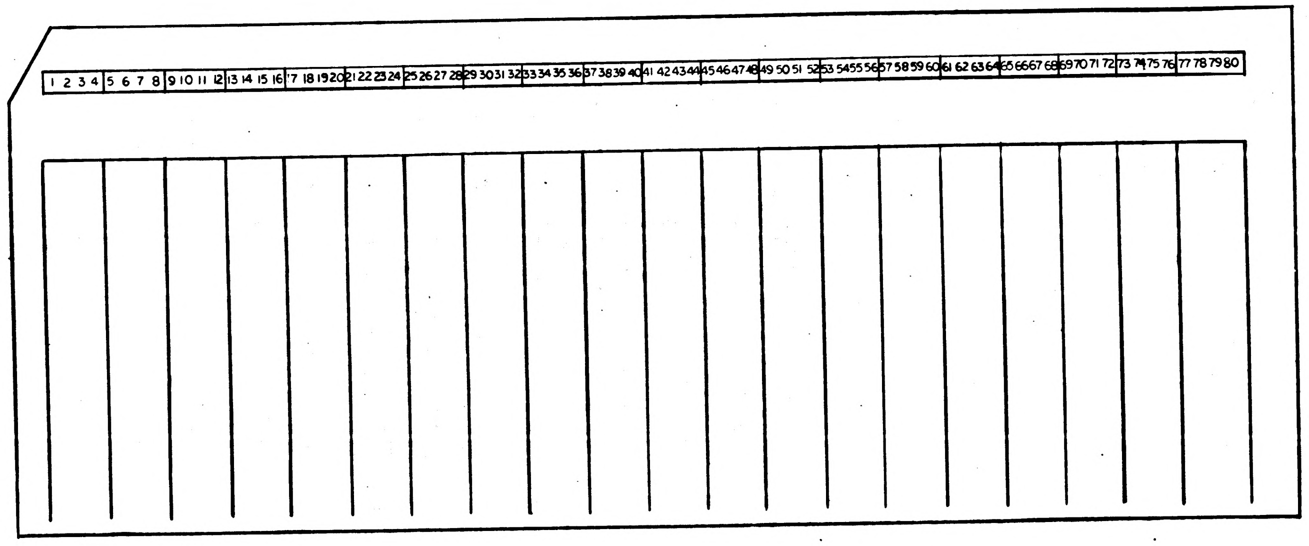

NOTES

1 INTERPRET DRAWING IN ACCORDANCE WITH STANDARDS PRESCRIBED BY MIL-D-70327

2

CARD COLUMNS	USAGE
2 – 7	CARD SEQUENCE NUMBER, IN DECIMAL
9 – 22 USAGE	BINARY MACHINE DATA, IN THE FORMAT DESCRIBED BY A GARDNER-DENVER CO. DRAWING NUMBER 800384 REVISION A, FOR THEIR MODEL 14F-15X15X.125 WIRE WRAP MACHINE
27 – 33	SIGNAL NAME
34 – 35	WIRE NUMBER IN CHAIN FOR SIGNAL
36 – 42	NAME OF PIN WRAPPED BY A TOOL
43 – 49	NAME OF PIN WRAPPED BY B TOOL
50	WIRE PATTERN CODE NUMBER
51	TABLE ROTATIONAL POSITION
52	PALLET LONGITUDINAL POSITION
53	A TOOL Z LEVEL
54	B TOOL Z LEVEL
55 – 57	A TOOL X, IN DECIMAL
58 – 60	Y1, IN DECIMAL
61 – 63	B TOOL X, IN DECIMAL
64 – 66	Y2, IN DECIMAL
67 – 69	Y3, IN DECIMAL
70 – 72	Y4, IN DECIMAL
73 – 79	NASA DRAWING NUMBER OF COVER SHEET FOR DECK
80	REVISION LETER TO DRAWING NUMBER

MASTER

QTY REQD	PART OR IDENTIFYING NO.	NOMENCLATURE OR DESCRIPTION	FIND NO.

LIST OF MATERIALS

NEXT ASSY	USED ON

APPLICATION

UNLESS OTHERWISE SPECIFIED DIMENSIONS ARE IN INCHES
TOLERANCES ON
FRACTIONS ± ___ DECIMALS ± ___ ANGLES ± ___
DO NOT SCALE THIS DRAWING
MATERIAL ___
HEAT TREATMENT ___
FINAL FINISH ___

MIT INSTRUMENTATION LAB
CAMBRIDGE, MASS.
DWG. NO. CONTRACT
DRAWN DATE
CHECKED
APPROVAL
APPROVAL Ellen C Hall 8/21/64
NASA APPROVAL
MIT APPROVAL W Kupfer 2 Sep 64

MANNED SPACECRAFT CENTER
HOUSTON, TEXAS

WIREWRAP CARD
DECK-TRAY B

CODE IDENT NO.	SIZE	NASA DRAWING NO.
———	D	1005779

SCALE NONE WT ——— SHEET 1 OF 1

NOTICE — WHEN GOVERNMENT DRAWINGS, SPECIFICATIONS, OR OTHER DATA ARE USED FOR ANY PURPOSE OTHER THAN IN CONNECTION WITH A DEFINITELY RELATED GOVERNMENT PROCUREMENT OPERATION, THE UNITED STATES GOVERNMENT THEREBY INCURS NO RESPONSIBILITY NOR ANY OBLIGATION WHATSOEVER; AND THE FACT THAT THE GOVERNMENT MAY HAVE FORMULATED, FURNISHED, OR IN ANY WAY SUPPLIED THE SAID DRAWINGS, SPECIFICATIONS OR OTHER DATA IS NOT TO BE REGARDED BY IMPLICATION OR OTHERWISE AS IN ANY MANNER LICENSING THE HOLDER OR ANY OTHER PERSON OR CORPORATION, OR CONVEYING ANY RIGHTS OR PERMISSION TO MANUFACTURE, USE, OR SELL ANY PATENTED INVENTION THAT MAY IN ANY WAY BE RELATED THERETO.

REVISIONS 12034

SYM	DESCRIPTION	DATE	APPROVAL
A	REVISED PER TDRR 14348	[illegible]	WK
B	REVISED PER TDRR 14769 DR [illegible] CHK [illegible]	2/1/65	[illegible]

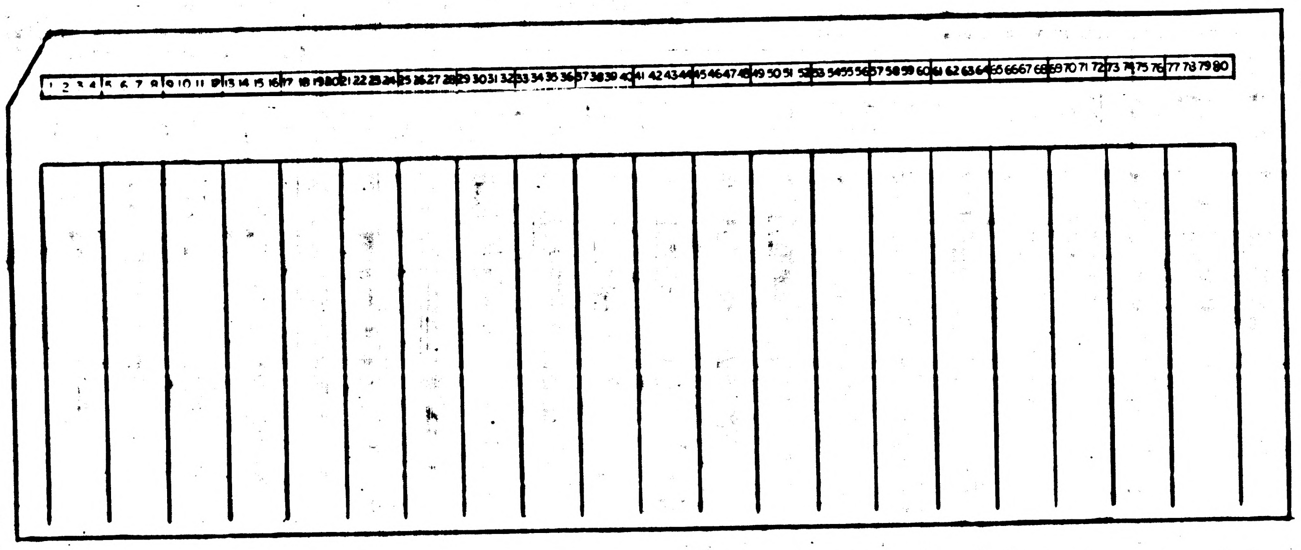

NOTES

1. INTERPRET DRAWING IN ACCORDANCE WITH STANDARDS PRESCRIBED BY MIL-D-70327
2.

CARD COLUMNS	USAGE
2 – 7	CARD SEQUENCE NUMBER, IN DECIMAL
9 – 22 USAGE	BINARY MACHINE DATA, IN THE FORMAT DESCRIBED BY A GARDNER-DENVER CO. DRAWING NUMBER 800384 REVISION A, FOR THEIR MODEL 14F-15X15X.125 WIRE WRAP MACHINE
27 – 33	SIGNAL NAME
34 – 35	WIRE NUMBER IN CHAIN FOR SIGNAL
36 – 42	NAME OF PIN WRAPPED BY A TOOL
43 – 49	NAME OF PIN WRAPPED BY B TOOL
50	WIRE PATTERN CODE NUMBER
51	TABLE ROTATIONAL POSITION
52	PALLET LONGITUDINAL POSITION
53	A TOOL Z LEVEL
54	B TOOL Z LEVEL
55 – 57	A TOOL X, IN DECIMAL
58 – 60	Y1, IN DECIMAL
61 – 63	B TOOL X, IN DECIMAL
64 – 66	Y2, IN DECIMAL
67 – 69	Y3, IN DECIMAL
70 – 72	Y4, IN DECIMAL
73 – 79	NASA DRAWING NUMBER OF COVER SHEET FOR DECK
80.	REVISION LETER TO DRAWING NUMBER

MASTER

QTY REQD	PART OR IDENTIFYING NO.	NOMENCLATURE OR DESCRIPTION	FIND NO.

LIST OF MATERIALS

NEXT ASSY	USED ON

APPLICATION

UNLESS OTHERWISE SPECIFIED DIMENSIONS ARE IN INCHES
TOLERANCES ON
FRACTIONS ± DECIMALS ± ANGLES ±
DO NOT SCALE THIS DRAWING
MATERIAL
HEAT TREATMENT
FINAL FINISH

MIT INSTRUMENTATION LAB
CAMBRIDGE, MASS
DRAWN [illegible] DATE [illegible]
CHECKED [illegible]
APPROVAL
APPROVAL [illegible] 8/21/64
NASA APPROVAL [illegible]
MIT APPROVAL [illegible]

MANNED SPACECRAFT CENTER
HOUSTON, TEXAS

WIREWRAP CARD
DECK-TRAY B

CODE IDENT NO. —
SIZE D
NASA DRAWING NO. 1005779
SCALE NONE
WT —
SHEET 1 OF 1

NOTICE — WHEN GOVERNMENT DRAWINGS, SPECIFICATIONS, OR OTHER DATA ARE USED FOR ANY PURPOSE OTHER THAN IN CONNECTION WITH A DEFINITELY RELATED GOVERNMENT PROCUREMENT OPERATION THE UNITED STATES GOVERNMENT THEREBY INCURS NO RESPONSIBILITY NOR ANY OBLIGATION WHATSOEVER; AND THE FACT THAT THE GOVERNMENT MAY HAVE FORMULATED, FURNISHED, OR IN ANY WAY SUPPLIED THE SAID DRAWINGS, SPECIFICATIONS OR OTHER DATA IS NOT TO BE REGARDED BY IMPLICATION OR OTHERWISE AS IN ANY MANNER LICENSING THE HOLDER OR ANY OTHER PERSON OR CORPORATION, OR CONVEYING ANY RIGHT, OR PERMISSION TO MANUFACTURE, USE, OR SELL ANY PATENTED INVENTION THAT MAY IN ANY WAY BE RELATED THERETO.

REVISIONS 12034

SYM	DESCRIPTION	DATE	APPROVAL
A	REVISED PER TDRR 14348	11/2/64	WK
B	REVISED PER TDRR 14769 DR CHK	2/1/65	
C	REVISED PER TDRR 16351 DR CHK	3/13/65	

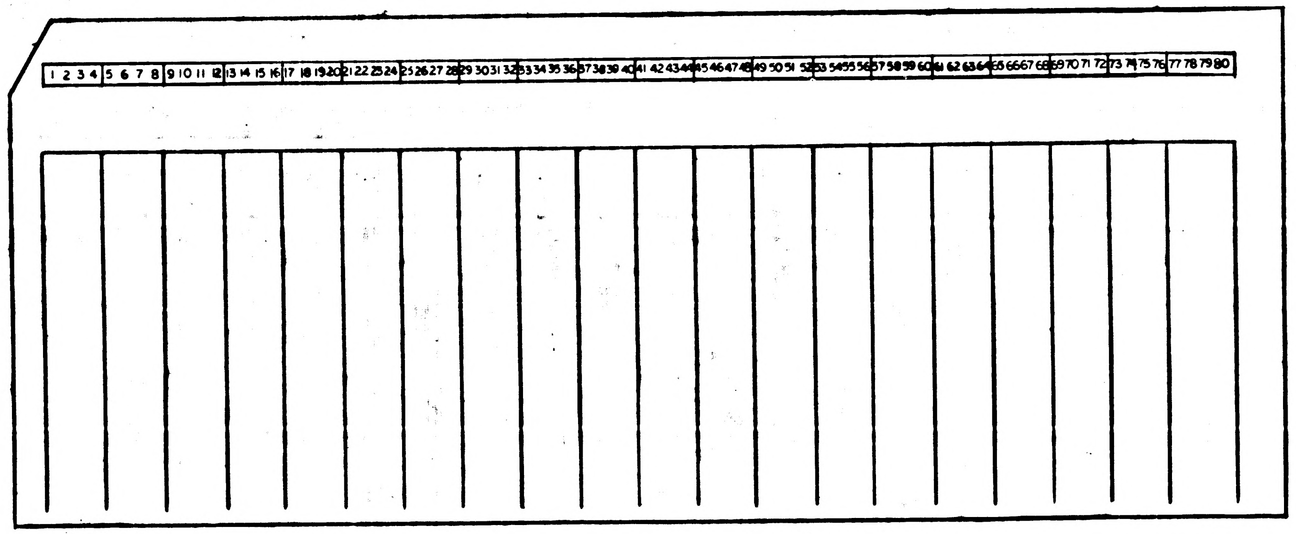

DWG REV	DECK REV	TDRR	SYS EFF
B	B	14769	RAY 110
✳ C	B	16351	RAY 110

✳ PERFORM CHANGES MANUALLY USING DECK INDICATED

NOTES

1 INTERPRET DRAWING IN ACCORDANCE WITH STANDARDS PRESCRIBED BY MIL-D-70327

2

CARD COLUMNS	USAGE
2 - 7	CARD SEQUENCE NUMBER, IN DECIMAL
9 - 22 USAGE	BINARY MACHINE DATA, IN THE FORMAT DESCRIBED BY A GARDNER-DENVER CO. DRAWING NUMBER 800384 REVISION A, FOR THEIR MODEL 14F-15X15X.125 WIRE WRAP MACHINE
27 - 33	SIGNAL NAME
34 - 35	WIRE NUMBER IN CHAIN FOR SIGNAL
36 - 42	NAME OF PIN WRAPPED BY A TOOL
43 - 49	NAME OF PIN WRAPPED BY B TOOL
50	WIRE PATTERN CODE NUMBER
51	TABLE ROTATIONAL POSITION
52	PALLET LONGITUDINAL POSITION
53	A TOOL Z LEVEL
54	B TOOL Z LEVEL
55 - 57	A TOOL X, IN DECIMAL
58 - 60	Y1, IN DECIMAL
61 - 63	B TOOL X, IN DECIMAL
64 - 66	Y2, IN DECIMAL
67 - 69	Y3, IN DECIMAL
70 - 72	Y4, IN DECIMAL
73 - 79	NASA DRAWING NUMBER OF COVER SHEET FOR DECK
80	REVISION LETER TO DRAWING NUMBER

MASTER

QTY REQD	PART OR IDENTIFYING NO.	NOMENCLATURE OR DESCRIPTION	FIND NO.

LIST OF MATERIALS

NEXT ASSY	USED ON
APPLICATION	

UNLESS OTHERWISE SPECIFIED DIMENSIONS ARE IN INCHES
TOLERANCES ON
FRACTIONS ± DECIMALS ± ANGLES ±
DO NOT SCALE THIS DRAWING
MATERIAL
HEAT TREATMENT
FINAL FINISH

MIT INSTRUMENTATION LAB
CAMBRIDGE, MASS.
DWG. NO. CONTRACT
DRAWN DATE
CHECKED
APPROVAL
APPROVAL 8/21/64
NASA APPROVAL
MIT APPROVAL

MANNED SPACECRAFT CENTER
HOUSTON, TEXAS

WIREWRAP CARD
DECK-TRAY B

CODE IDENT NO. —
SIZE D
NASA DRAWING NO. 1005779
SCALE NONE
WT —
SHEET 1 OF 1

NOTICE — WHEN GOVERNMENT DRAWINGS, SPECIFICATIONS, OR OTHER DATA ARE USED FOR ANY PURPOSE OTHER THAN IN CONNECTION WITH A DEFINITELY RELATED GOVERNMENT PROCUREMENT OPERATION, THE UNITED STATES GOVERNMENT THEREBY INCURS NO RESPONSIBILITY NOR ANY OBLIGATION WHATSOEVER; AND THE FACT THAT THE GOVERNMENT MAY HAVE FORMULATED, FURNISHED, OR IN ANY WAY SUPPLIED THE SAID DRAWINGS, SPECIFICATIONS OR OTHER DATA IS NOT TO BE REGARDED BY IMPLICATION OR OTHERWISE AS IN ANY MANNER LICENSING THE HOLDER OR ANY OTHER PERSON OR CORPORATION, OR CONVEYING ANY RIGHTS OR PERMISSION TO MANUFACTURE, USE, OR SELL ANY PATENTED INVENTION THAT MAY IN ANY WAY BE RELATED THERETO.

REVISIONS 12034			
SYM	DESCRIPTION	DATE	APPROVAL

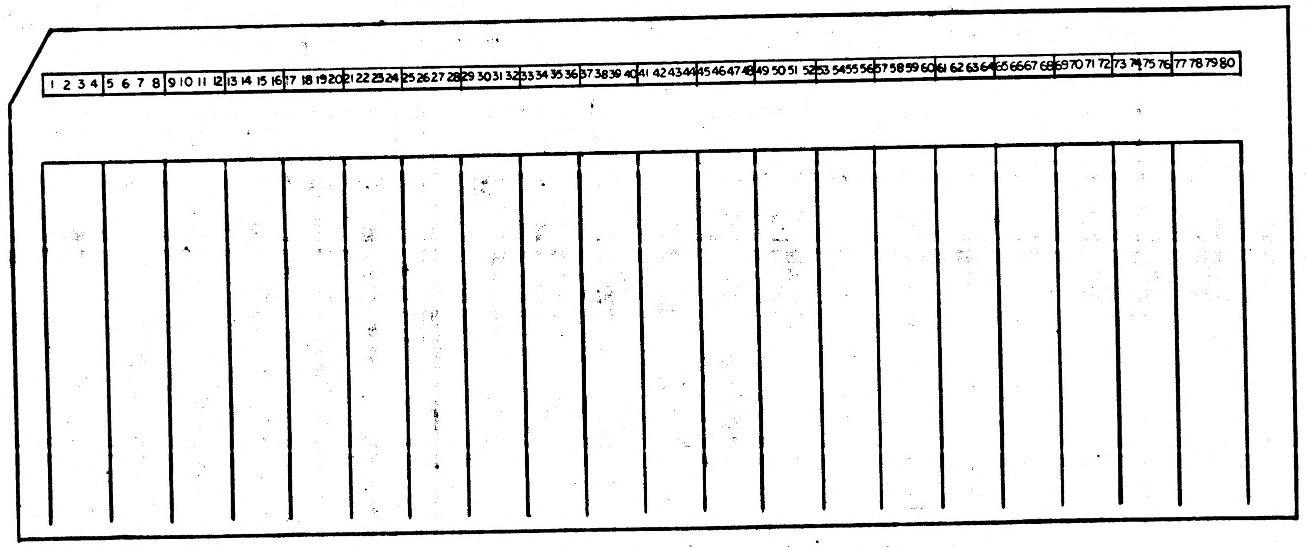

FOR INFORMATION ONLY

CLASS B RELEASE TDR No.________ DATE

NOTES

1 INTERPRET DRAWING IN ACCORDANCE WITH STANDARDS PRESCRIBED BY MIL-D-70327

2

CARD COLUMNS	USAGE
2 — 7	CARD SEQUENCE NUMBER, IN DECIMAL
9 — 22 USAGE	BINARY MAC[illegible]E DATA, IN THE FORMAT DESCRIBED BY A GARDNER-DENVER CO. DRAWING NUMBER 800384 REVISION A, FOR THEIR MODEL 14F-15X15X.125 WIRE WRAP MACHINE
27 — 33	SIGNAL NAME
34 — 35	WIRE NUMBER IN CHAIN FOR SIGNAL
36 — 42	NAME OF PIN WRAPPED BY A TOOL
43 — 49	NAME OF PIN WRAPPED BY B TOOL
50	WIRE PATTERN CODE NUMBER
51	TABLE ROTATIONAL POSITION
52	PALLET LONGITUDINAL POSITION
53	A TOOL Z LEVEL
54	B TOOL Z LEVEL
55 — 57	A TOOL X, IN DECIMAL
58 — 60	Y1, IN DECIMAL
61 — 63	B TOOL X, IN DECIMAL
64 — 66	Y2, IN DECIMAL
67 — 69	Y3, IN DECIMAL
70 — 72	Y4, IN DECIMAL
73 — 79	NASA DRAWING NUMBER OF COVER SHEET FOR DECK
80	REVISION LETER TO DRAWING NUMBER

MASTER

QTY REQD	PART OR IDENTIFYING NO.	NOMENCLATURE OR DESCRIPTION	FIND NO.

LIST OF MATERIALS

NEXT ASSY	USED ON

APPLICATION

UNLESS OTHERWISE SPECIFIED DIMENSIONS ARE IN INCHES
TOLERANCES ON
FRACTIONS ± ___ DECIMALS ± ___ ANGLES ± ___
DO NOT SCALE THIS DRAWING
MATERIAL
HEAT TREATMENT
FINAL FINISH

MIT
INSTRUMENTATION LAB
CAMBRIDGE, MASS.
DWG. NO. CONTRACT
DRAWN [illegible] DATE [illegible]
CHECKED [illegible]
APPROVAL
APPROVAL Eldon C Hall 8/21/64
NASA APPROVAL [illegible]
MIT APPROVAL [illegible] 25 Aug 64

MANNED SPACECRAFT CENTER
HOUSTON, TEXAS

WIREWRAP CARD
DECK-TRAY B

CODE IDENT NO. ———
SIZE D
NASA DRAWING NO. 1005779
SCALE NONE
WT
SHEET 1 OF 1

REVISIONS	20557
1005780	–

COMPONENT LIST					
[illegible]	TOL	[illegible]	REF DESIGNATION	PART NO.	DESCRIPTION
			CR1 THRU CR81	1006751	DIODE
			K6, K12, K18	1006815-2	RELAY
			K1 THRU K5	1006772-1	▲
			K7 THRU K11	1006772-1	
			K13 THRU K17	1006772-1	▼
			K19 THRU K42	1006772-1	RELAY
[illegible]	±2%	[illegible]	R1, R2	1006750-72	RESISTOR

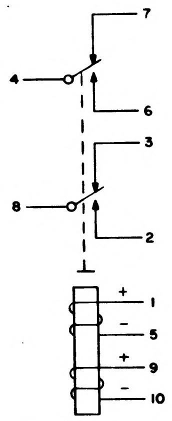
7
4
6
3
8
2
+
1
–
5
+
9
–
10

CKT FOR LATCHING RELAYS K1 THRU K5, K7 THRU K11, K13 THRU K17 & K19 THRU K42
TO SWITCH AND LATCH FROM POSITION SHOWN APPLY PLUS VOLTAGE ON PIN 10

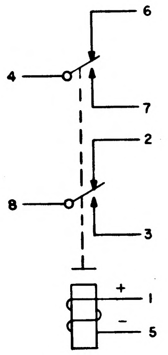

RELAY CKT FOR K6, K12 & K18
(TO SWITCH FROM POSITION SHOWN APPLY PLUS VOLTAGE ON PIN 1)

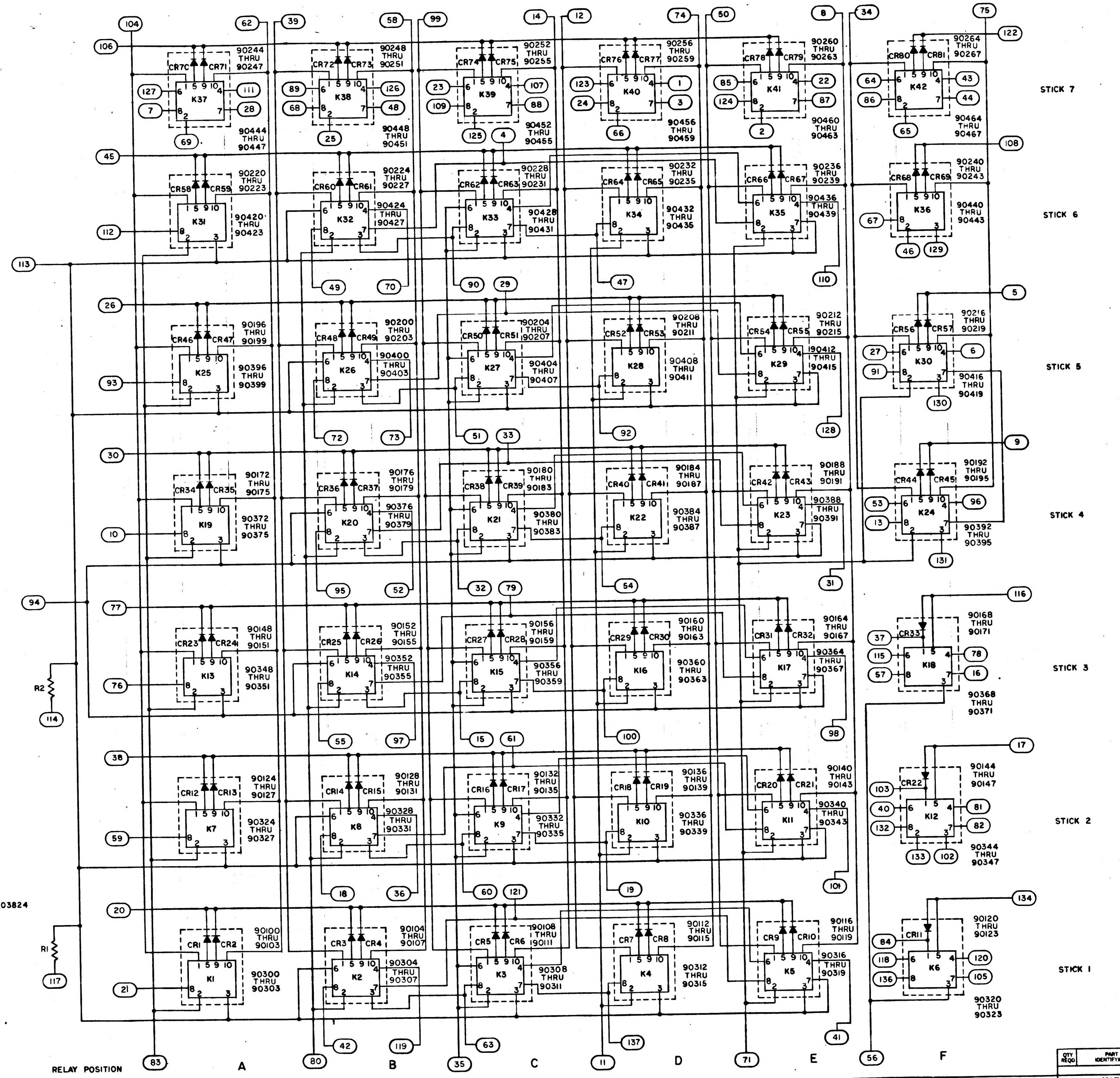
STICK 7
STICK 6
STICK 5
STICK 4
STICK 3
STICK 2
STICK 1
K37
K38
K39
K40
K41
K42
K31
K32
K33
K34
K35
K36
K25
K26
K27
K28
K29
K30
K19
K20
K21
K22
K23
K24
K13
K14
K15
K16
K17
K18
K7
K8
K9
K10
K11
K12
K1
K2
K3
K4
K5
K6
R1
R2
RELAY POSITION
A
B
C
D
E
F

NOTES
1. PARTIAL REFERENCE DESIGNATIONS ARE SHOWN PREFIX THEM WITH UNIT NUMBER OR ASSEMBLY DESIGNATION OR BOTH

REFERENCES
1. ASSEMBLY DWG 1003824

QTY REQD	PART OR IDENTIFYING NO.	MATERIAL OR NOTES	NOMENCLATURE OR DESCRIPTION	FIND NO.

LIST OF MATERIALS

UNLESS OTHERWISE SPECIFIED
DIMENSIONS ARE IN INCHES
CAPACITOR VALUES ARE IN µf
RESISTOR VALUES ARE IN OHMS
TOLERANCES ON
FRACTIONS ± DECIMALS ± ANGLES ±
DO NOT SCALE THIS DRAWING
MATERIAL

NEXT ASSY | USED ON
APPLICATION

MIT
INSTRUMENTATION LAB
CAMBRIDGE MASS

DRAWN W.O. Clement
CHECKED R. Edward 27 Feb 65
APPROVED
APPROVED Eldon C. Hall
APPROVED MIT
APPROVED MSC 7/2
DATE

MANNED SPACECRAFT CENTER
HOUSTON, TEXAS

SCHEMATIC
RELAY MODULE ASSEMBLY D7-D14
AGC DSKY NAV & MAIN

CODE IDENT NO. 80230 | SIZE J | DRAWING NO. 1005780
SCALE NONE | SHEET 1 OF 1

1005780

NOTICE — WHEN GOVERNMENT DRAWINGS, SPECIFICATIONS, OR OTHER DATA ARE USED FOR ANY PURPOSE OTHER THAN IN CONNECTION WITH A DEFINITELY RELATED GOVERNMENT PROCUREMENT OPERATION, THE UNITED STATES GOVERNMENT THEREBY INCURS NO RESPONSIBILITY NOR ANY OBLIGATION WHATSOEVER; AND THE FACT THAT THE GOVERNMENT MAY HAVE FORMULATED, FURNISHED, OR IN ANY WAY SUPPLIED THE SAID DRAWINGS, SPECIFICATIONS, OR OTHER DATA IS NOT TO BE REGARDED BY IMPLICATION OR OTHERWISE AS IN ANY MANNER LICENSING THE HOLDER OR ANY OTHER PERSON OR CORPORATION, OR CONVEYING ANY RIGHTS OR PERMISSION TO MANUFACTURE, USE, OR SELL ANY PATENTED INVENTION THAT MAY IN ANY WAY BE RELATED THERETO.

— 1005780

REVISIONS 20567

COMPONENT LIST					
VALUE	TOL	RATING	REF DESIGNATION	PART NO.	DESCRIPTION
			CR1 THRU CR81	1006751	DIODE
			K6,K12,K18	1006815-2	RELAY
			K1 THRU K5	1006772-1	
			K7 THRU K11	1006772-1	
			K13 THRU K17	1006772-1	
			K19 THRU K42	1006772-1	RELAY
47K	±2%	1/4 W	R1, R2	100675072	RESISTOR

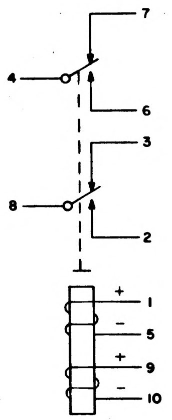
7
4
6
3
8
2
1
5
9
10

CKT FOR LATCHING RELAYS K1 THRU K5, K7 THRU K11, K13 THRU K17 & K19 THRU K42
TO SWITCH AND LATCH FROM POSITION SHOWN
APPLY PLUS VOLTAGE ON PIN 10

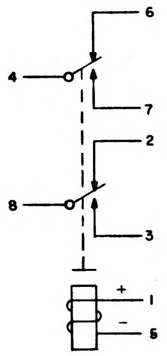

RELAY CKT FOR K6, K12 & K18
(TO SWITCH FROM POSITION SHOWN
APPLY PLUS VOLTAGE ON PIN 1)

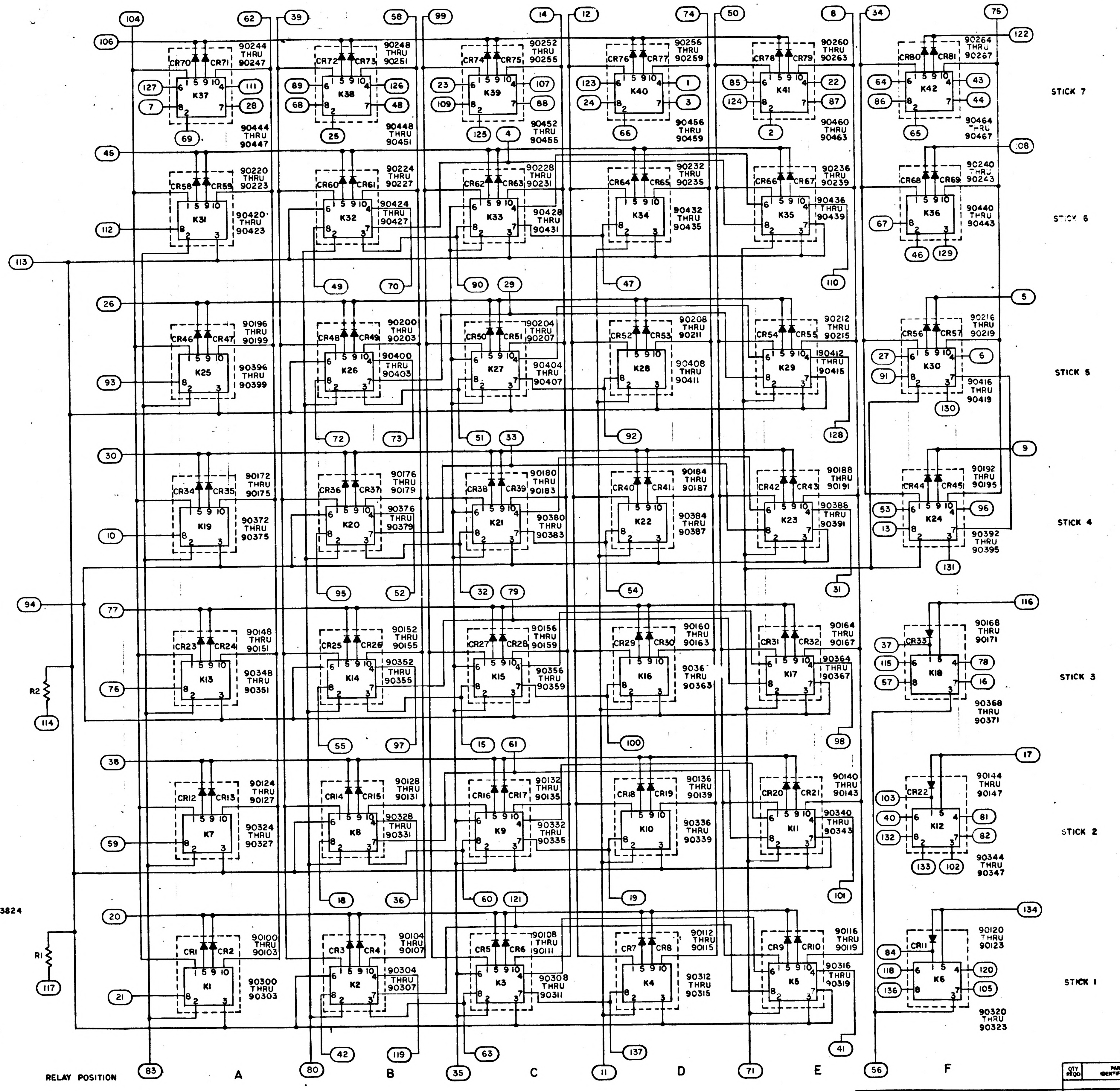
K37
K38
K39
K40
K41
K42
K31
K32
K33
K34
K35
K36
K25
K26
K27
K28
K29
K30
K19
K20
K21
K22
K23
K24
K13
K14
K15
K16
K17
K18
K7
K8
K9
K10
K11
K12
K1
K2
K3
K4
K5
K6
R1
R2
STICK 7
STICK 6
STICK 5
STICK 4
STICK 3
STICK 2
STICK 1
RELAY POSITION
A
B
C
D
E
F

2#

NOTES
1. PARTIAL REFERENCE DESIGNATIONS ARE SHOWN PREFIX THEM WITH UNIT NUMBER OR ASSEMBLY DESIGNATION OR BOTH

REFERENCES
1. ASSEMBLY DWG 1003824

MASTER

QTY REQD	PART OR IDENTIFYING NO.	MATERIAL OR NOTES	NOMENCLATURE OR DESCRIPTION

LIST OF MATERIAL

NEXT ASSY	USED ON

APPLICATION

UNLESS OTHERWISE SPECIFIED
DIMENSIONS ARE IN INCHES
CAPACITOR VALUES ARE IN μf
RESISTOR VALUES ARE IN OHMS
TOLERANCES ON
FRACTIONS ± DECIMALS ± ANGLES ±
DO NOT SCALE THIS DRAWING

MATERIAL

MIT
INSTRUMENTATION LAB
CAMBRIDGE MASS

DRAWN D.Q. Clement
CHECKED R. Edward
APPROVED
APPROVED Eldon Hall
APPROVED MIT W Kupfer
APPROVED MSC
DATE 7/2

MANNED SPACECRAFT CENTER
HOUSTON, TEXAS

SCHEMATIC
RELAY MODULE ASSEMBLY
AGC [illegible] NAV & MAIN

CODE IDENT NO. 80230
SIZE J
DRAWING NO. 1005780
SCALE NONE

REVISIONS 24773			
SYM	DESCRIPTION	DATE	APPROVAL
—	RELEASED PER TDRR		

1005785 —

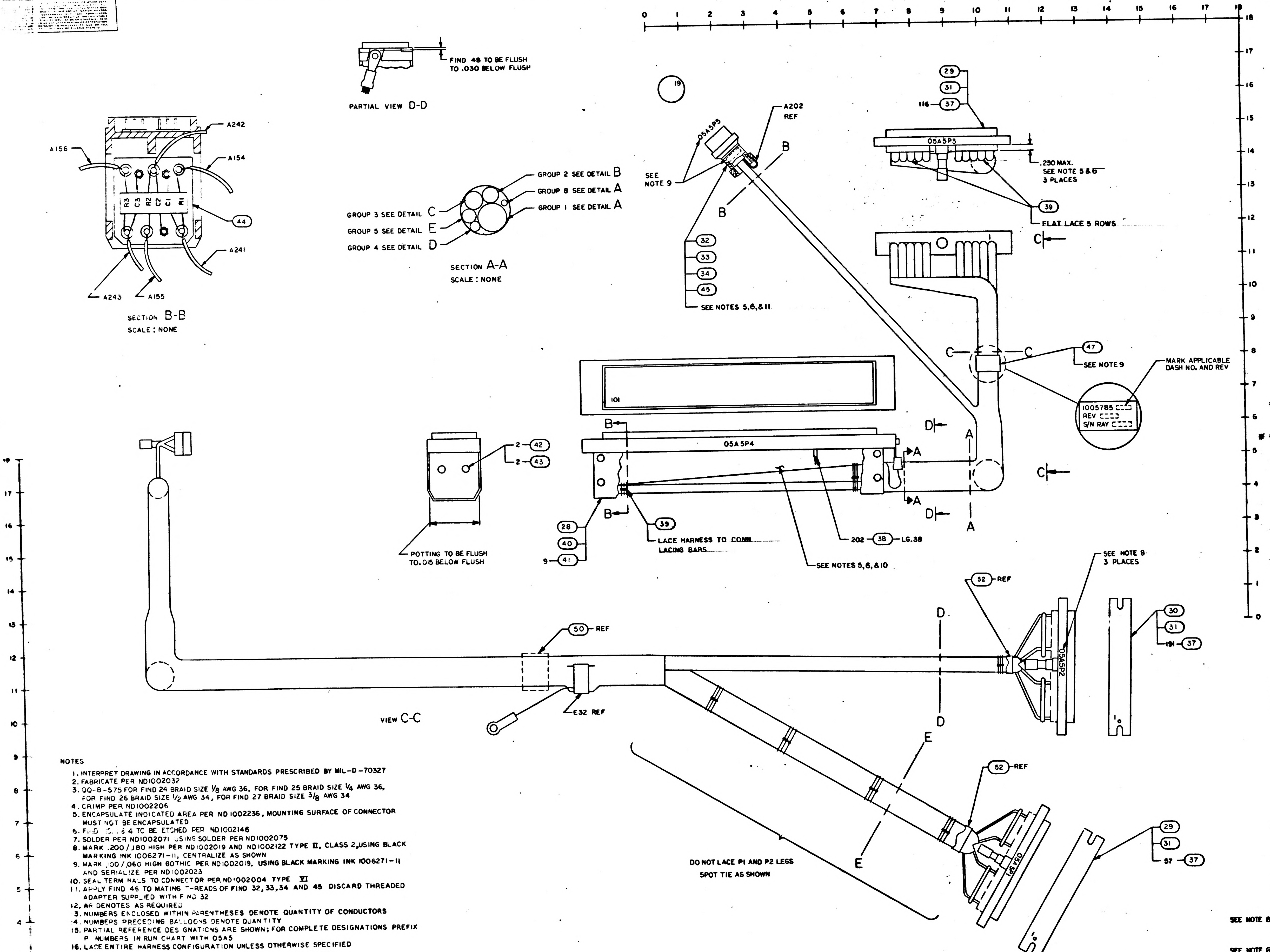

FIND 48 TO BE FLUSH TO .030 BELOW FLUSH
PARTIAL VIEW D-D
A242
A156
A154
R3 C3 R2 C2 C1 R1
44
A241
A243
A155
SECTION B-B
SCALE: NONE
GROUP 2 SEE DETAIL B
GROUP 8 SEE DETAIL A
GROUP 1 SEE DETAIL A
GROUP 3 SEE DETAIL C
GROUP 5 SEE DETAIL E
GROUP 4 SEE DETAIL D
SECTION A-A
SCALE: NONE
19
05A5P5
A202 REF
B
SEE NOTE 9
32
33
34
45
SEE NOTES 5,6,& 11
29
31
116 37
05A5P3
.230 MAX.
SEE NOTE 5 & 6
3 PLACES
39
FLAT LACE 5 ROWS
C
47
SEE NOTE 9
MARK APPLICABLE DASH NO. AND REV
1005785
REV
S/N RAY
101
05A5P4
2 42
2 43
28
40
9 41
POTTING TO BE FLUSH TO .015 BELOW FLUSH
LACE HARNESS TO CONN. LACING BARS
202 38 L6.38
SEE NOTES 5,6,& 10
A
D
52 REF
SEE NOTE 8 3 PLACES
05A5P2
30
31
191 37
50 REF
E32 REF
VIEW C-C
E
52 REF
05A5P1
29
31
57 37

DO NOT LACE P1 AND P2 LEGS SPOT TIE AS SHOWN

NOTES

1. INTERPRET DRAWING IN ACCORDANCE WITH STANDARDS PRESCRIBED BY MIL-D-70327
2. FABRICATE PER ND1002032
3. QQ-B-575 FOR FIND 24 BRAID SIZE 1/8 AWG 36, FOR FIND 25 BRAID SIZE 1/4 AWG 36, FOR FIND 26 BRAID SIZE 1/2 AWG 34, FOR FIND 27 BRAID SIZE 3/8 AWG 34
4. CRIMP PER ND1002206
5. ENCAPSULATE INDICATED AREA PER ND1002236, MOUNTING SURFACE OF CONNECTOR MUST NOT BE ENCAPSULATED
6. FIND [illegible] & 4 TO BE ETCHED PER ND1002146
7. SOLDER PER ND1002071 USING SOLDER PER ND1002075
8. MARK .200/.180 HIGH PER ND1002019 AND ND1002122 TYPE II, CLASS 2, USING BLACK MARKING INK 1006271-11, CENTRALIZE AS SHOWN
9. MARK .100/.060 HIGH GOTHIC PER ND1002019, USING BLACK MARKING INK 1006271-11 AND SERIALIZE PER ND1002023
10. SEAL TERMINALS TO CONNECTOR PER ND1002004 TYPE VI
11. APPLY FIND 46 TO MATING THREADS OF FIND 32,33,34 AND 45 DISCARD THREADED ADAPTER SUPPLIED WITH FIND 32
12. AR DENOTES AS REQUIRED
13. NUMBERS ENCLOSED WITHIN PARENTHESES DENOTE QUANTITY OF CONDUCTORS
14. NUMBERS PRECEDING BALLOONS DENOTE QUANTITY
15. PARTIAL REFERENCE DESIGNATIONS ARE SHOWN; FOR COMPLETE DESIGNATIONS PREFIX P NUMBERS IN RUN CHART WITH 05A5
16. LACE ENTIRE HARNESS CONFIGURATION UNLESS OTHERWISE SPECIFIED
17. ✱✱ FIND 50 IS TO BE SUPPLIED AND IDENTIFIED PER ND1002019
18. TAPE ENTIRE BRAIDED CONFIGURATION USING FIND 52
19. MIL-T-23594, TYPE I, WIDTH 1/2
20. MIL-I-631, TYPE F, FORM U2, GRADE A, CLASS I, CATEGORY I, AWG SIZE NO.3

	QTY REQD	PART OR IDENTIFYING NO.	NOMENCLATURE OR DESCRIPTION	FIND NO
✱	0.2	SEE NOTE 20	INSULATION, ELEC	53
	A R	SEE NOTE 19	TAPE, PRESSURE SENSITIVE	52
	1	1000243-31	FERRULLE, ELEC.	51
✱✱	1	1010400-5	CLAMP, CABLE	50
	1	MS25036-12	TERMINAL, LUG	49
	1	MS25036-11	TERMINAL, LUG	48
	1	MS18035-1-2	STRAP, CABLE	47
	AR	MIL-S-22473 GRADE C	SEALING COMPOUND	46
	1	1004782-002	ADAPTER, CONNECTOR	45
	1	1003562-011	TERMINAL BLOCK ASSEMBLY	44
	2	MS35333-70	WASHER, LOCK	43
	2	1006783-19	SCREW, BUTTON HD.	42
	9	1006783-18	SCREW, BUTTON HD.	41
	1	1004868	COVER	40
	A R	1012507-003	TAPE, LACING	39
✱	6.5	1006322-007	INSULATION, SLEEVE	38
	732	1010738-5	CONTACT, ELEC, PIN	37
	15	1010402-2	SLEEVE, SOLDER	36
	2	1010402-3	SLEEVE, SOLDER	35
	1	MS16995-2	SCREW, CAP	34
	1	1004781-002	CLAMP, CONNECTOR	33
	1	1010771-013	CONNECTOR, PLUG	32
	3	1010812-1	SEAL, RUBBER	31
	1	1010815-244	CONNECTOR, PLUG	30
	2	1010815-144	CONNECTOR, PLUG	29
	1	1003731-011	CONNECTOR ASSEMBLY	28
✱	6.0	SEE NOTE 3	WIRE, BRAID	27
✱	4.0	SEE NOTE 3	WIRE, BRAID	26
✱	8.0	SEE NOTE 3	WIRE, BRAID	25
✱	3.0	SEE NOTE 3	WIRE, BRAID	24
	2	1000242-33	FERRULE, ELEC.	23
	4	1000242-29	FERRULE, ELEC.	22
	2	1000242-27	FERRULE, ELEC.	21
	2	1000242-36	FERRULE, ELEC.	20
	2	1000242-30	FERRULE, ELEC.	19
	3	1000242-38	FERRULE, ELEC.	18
	1	1006384-003	FERRULE, ELEC.	17
	2	1000243-37	FERRULE, ELEC.	16
	3	1000243-22	FERRULE, ELEC.	15
	2	1000243-21	FERRULE, ELEC.	14
	2	1000243-40	FERRULE, ELEC.	13
	2	1000243-34	FERRULE, ELEC.	12
	2	1000243-38	FERRULE, ELEC.	11
✱	20.0	1010789-001	WIRE, ELEC. AWG 24 (YEL)	10
✱	4.0	1010789-003	WIRE, ELEC. AWG 24 (2 COND TWIST)	9
✱	10.0	1010789-015	WIRE, ELEC. AWG 26 (2 COND SHLD)	8
✱	10.0	1010789-004	WIRE, ELEC. AWG 24 (3 COND TWIST)	7
✱	4.0	1010789-005	WIRE, ELEC. AWG 24 (4 COND TWIST)	6
✱	30.0	1010789-006	WIRE, ELEC. AWG 22 (YEL)	5
SEE NOTE 6 ✱	20.0	1010416-13	WIRE, ELEC. AWG 26 (RED)	4
✱	20.0	1010789-007	WIRE, ELEC. AWG 22 (BLK)	3
✱	250.	1010789-017	WIRE, ELEC. AWG 26 (2 COND TWIST)	2
SEE NOTE 6 ✱	280.	1010416-15	WIRE, ELEC. AWG 26 (YEL)	

-011 LIST OF MATERIALS

✱ DENOTES LENGTH IN FEET

NEXT ASSY	USED ON	UNLESS OTHERWISE SPECIFIED DIMENSIONS ARE IN INCHES TOLERANCES ON FRACTIONS ± DECIMALS ± ANGLES ±	MIT INSTRUMENTATION LAB Cambridge Mass.
APPLICATION		MATERIAL	DRAWN [illegible] DATE [illegible] CHECKED C Maynard [illegible] APPROVAL APPROVAL Eldon C Hall 17 [illegible]
		HEAT TREATMENT	NASA APPROVAL R. C. METZGER MIT APPROVAL [illegible] MIT APPROVAL
		FINAL FINISH	

MANNED SPACECRAFT CENTER
HOUSTON, TEXAS

WIRING HARNESS
AGC TO PSA & G/N TO SPACECRAFT

CODE IDENT NO	SIZE	NASA DRAWING NO
80230	J	1005785
SCALE 1/1	WT	SHEET 1 OF 5

1005785 —

MASTER

F2

1005785 —

SYM	ZONE	DESCRIPTION	DR	CHK	DATE	APPROVED
—		RELEASED PER TDRR				

REVISIONS 24773

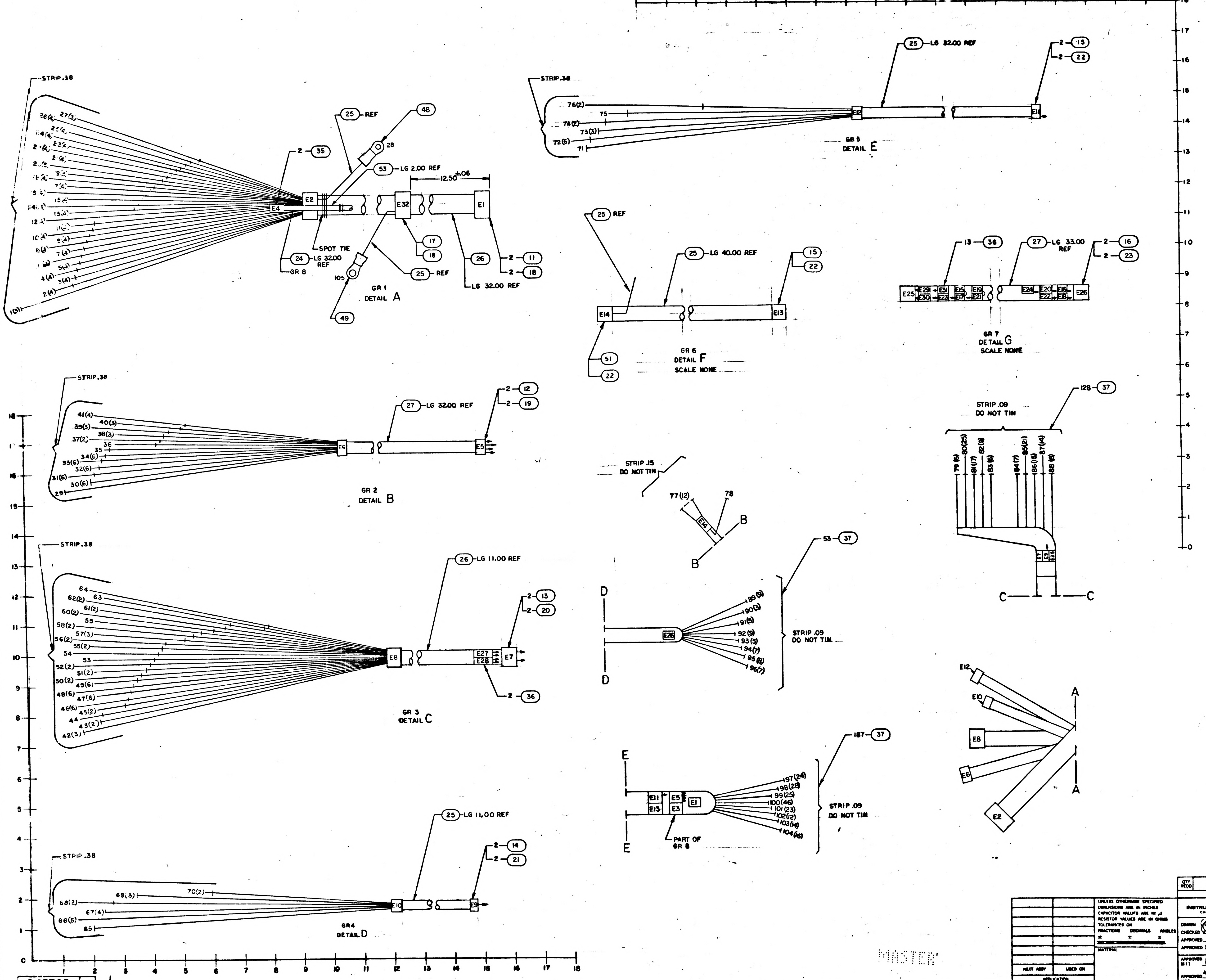

STRIP .38
E4
E2
2 — 35
25 — REF
48
28
53 — LG 2.00 REF
12.50 ±.06
E32
E1
17
18
24 — LG 32.00 REF
GR 8
SPOT TIE
105
25 — REF
26
LG 32.00 REF
2 — 11
2 — 18
49
GR 1
DETAIL A
STRIP .38
76(2)
75
74(2)
73(3)
72(6)
71
25 — LG 32.00 REF
2 — 15
2 — 22
E12
E11
GR 5
DETAIL E
25 REF
25 — LG 40.00 REF
15
22
E14
E13
51
22
GR 6
DETAIL F
SCALE NONE
13 — 36
27 — LG 33.00 REF
2 — 16
2 — 23
E25
E29
E30
E31
E23
E15
E17
E19
E21
E24
E20
E22
E16
E18
E26
GR 7
DETAIL G
SCALE NONE
STRIP .38
41(4)
40(3)
39(3)
38(3)
37(2)
36
35
34(6)
33(6)
32(6)
31(6)
30(6)
29
E6
27 — LG 32.00 REF
E5
2 — 12
2 — 19
GR 2
DETAIL B
STRIP .15
DO NOT TIN
77(12)
78
E14
B
B
128 — 37
STRIP .09
DO NOT TIN
79(6)
80(21)
81(17)
82(18)
83(6)
84(7)
85(21)
86(18)
87(14)
88(6)
E7
E9
E25
C
C
STRIP .38
64
63
62(2)
61(2)
60(2)
59
58(2)
57(3)
56(2)
55(2)
54
53
52(2)
51(2)
50(2)
49(6)
48(6)
47(6)
46(6)
45(2)
44
43(2)
42(3)
26 — LG 11.00 REF
E8
E27
E28
E7
2 — 13
2 — 20
2 — 36
GR 3
DETAIL C
53 — 37
D
D
E26
89(9)
90(9)
91(9)
92(9)
93(9)
94(7)
95(8)
96(7)
STRIP .09
DO NOT TIN
E12
E10
E8
E6
E2
A
A
187 — 37
E
E
E11
E5
E13
E3
E1
97(24)
98(28)
99(25)
100(46)
101(23)
102(12)
103(14)
104(16)
STRIP .09
DO NOT TIN
PART OF
GR 8
STRIP .38
69(3)
70(2)
68(2)
67(4)
66(5)
65
25 — LG 11.00 REF
E10
E9
2 — 14
2 — 21
GR4
DETAIL D
MASTER

QTY REQD	PART OR IDENTIFYING NO.	MATERIAL OR NOTES	NOMENCLATURE OR DESCRIPTION	FIND NO.

LIST OF MATERIALS

UNLESS OTHERWISE SPECIFIED
DIMENSIONS ARE IN INCHES
CAPACITOR VALUES ARE IN µf
RESISTOR VALUES ARE IN OHMS
TOLERANCES ON
FRACTIONS ± DECIMALS ± ANGLES ±

MATERIAL

NEXT ASSY	USED ON
APPLICATION	

MIT
INSTRUMENTATION LAB
CAMBRIDGE, MASS

MANNED SPACECRAFT CENTER
HOUSTON, TEXAS

DRAWN 3 NOV 65
CHECKED 4 NOV 65
APPROVED
APPROVED 17 Nov 65
APPROVED MIT W. Kupfer 21 Nov 65
A. C. METZGER
APPROVED MSC
DATE

WIRING HARNESS
AGC TO PSA & G/N TO SPACECRAFT

CODE IDENT NO 80230
SIZE J
DRAWING NO 1005785
SCALE 1/1
SHEET 2 OF 5

1005785 —

F-2

REVISIONS 24773			
SYM	DESCRIPTION	DATE	APPROVAL
—	RELEASED PER TDRR		

ASSEMBLY INFORMATION CHART

FROM				DESCRIPTION			TO		
REMARKS	COND IDENT	STA NO.	DES	COLOR	AWG	FIND NO.	STA NO.	DES	REMARKS
	A1	15	P4-436	YEL	26	2	99	P1-235	PART OF GROUP 1 SEE DETAIL A
		16	↑-437	RED	↑		↑	↑-236	
	A2	15	-336	YEL		↑		-197	↑
		16	-337	RED				-198	
	A3	13	-434	YEL				-163	
		14	-435	RED			↓	-164	
	A4	13	-334	YEL			99	-130	
		14	-335	RED			98	-131	
	A5	17	-138	YEL			99	-97	
		18	-139	RED			99	-98	
	A6	13	-234	YEL			99	-64	
		4	-235	RED			98	-65	
	A7	3	-134	YEL			99	-30	
		14	-135	RED			98	-31	
	A8	15	-236	YEL			↑	-237	
		16	-237	RED				-238	
	A9	15	-136	YEL				-199	
		16	-137	RED				-200	
	A10	17	-238	YEL				-165	
		18	-239	RED				-166	
	A11	25	-346	YEL				-132	
		26	-347	RED				-133	
	A12	25	-246	YEL				-99	
		26	-247	RED				-100	
	A13	17	-438	YEL				-66	
		18	-439	RED				-67	
	A14	17	-338	YEL				-32	
		18	-339	RED				-33	
	A15	19	-440	YEL				-239	
		20	-441	RED				-240	
	A16	19	-340	YEL				-201	
		20	-341	RED				-202	
	A17	19	-240	YEL				-167	
		20	-241	RED			↓	-168	
	A18	19	-140	YEL			98	-134	
		20	-141	RED			97	-135	
	A19	25	-446	YEL			98	-101	
		26	-447	RED			98	-102	
	A20	21	-442	YEL			98	-68	
		22	-443	RED			97	-69	
	A21	21	-342	YEL			98	-34	
		22	-343	RED			97	-35	
	A22	21	-242	YEL			↑	-241	
		22	-243	RED				-242	
	A23	21	-142	YEL				-203	
		22	-143	RED				-204	
	A24	23	-444	YEL				-169	
		24	-445	RED				-170	
	A25	23	-344	YEL				-136	
		24	-345	RED				-137	
	A26	23	-244	YEL				-103	
		24	-245	RED				-104	
	A27	23	-144	YEL				-70	
		24	-145	RED				-71	
	A28	8	-222	YEL				-205	
		9	-223	RED				-206	
	A29	19	-540	YEL				-105	
		20	-541	RED				-72	
	A30	27	-149	YEL			↓	-171	
		27	-150	RED			97	-138	
	A31	10	-424	YEL			100	-230	
		11	-425	RED			↑	-231	
	A32	10	-324	YEL				-190	
		11	-325	RED				-191	
	A33	8	-422	YEL				-156	
		9	-423	RED				-157	
	A34	8	-322	YEL				-123	
		9	-323	RED				-124	
	A35	2	-416	YEL				-56	
		3	-417	RED				-57	
	A36	2	-316	YEL				-58	
		3	-317	RED				-59	
	A37	2	-216	YEL				-24	
		3	-217	RED			↓	-25	
	A38	2	-116	YEL			100	-26	
		3	-117	RED			99	-27	
	A39	4	-418	YEL			100	-232	
		5	-419	RED			99	-233	
	A40	4	-318	YEL			100	-192	
		5	-319	RED			↑	-193	
	A41	8	-122	YEL				-158	
		9	-123	RED				-159	
	A42	4	-218	YEL				-125	
		5	-219	RED		↓		-126	↓
	A43	4	↓-118	YEL	↓	2	↓	↓-92	PART OF GROUP 1 SEE DETAIL A
		5	P4-119	RED	26		100	P1-93	

⚠ DENOTES TWO CONNECTIONS TO 1 TERMINAL

ASSEMBLY INFORMATION CHART

FROM				DESCRIPTION			TO		
REMARKS	COND IDENT	STA NO.	DES	COLOR	AWG	FIND NO.	STA NO.	DES	REMARKS
	A44	6	P4-420	YEL	26	2	100	P1-194	PART OF GROUP 1 SEE DETAIL A
		7	-421	RED	↑		99	↑-195	
	A45	6	-320	YEL		↑	100	-160	↑
		7	-321	RED			99	-161	
	A46	6	-220	YEL			99	-127	
		7	-221	RED			99	-128	
	A47	6	-120	YEL			100	-94	
		7	-121	RED			99	-95	
	A48	10	-224	YEL			100	-60	
		11	-225	RED		↓	99	-61	
	A49	10	-124	YEL		2	99	-28	
		11	-125	RED			99	-29	
⚠	A50	1	-603	YEL		1	104	-108	
⚠	A51	1	-503	↑		↑	104	-40	
	A52	1	-502				104	-174	
	A53	12	-227				99	-96	
	A54	12	-327				99	-62	
	A55	12	-127	↓	↓	↓	99	↓-63	
	A56	12	P4-228	YEL	26	1	99	P1-234	
			E2	SHLD				E1	
	A57	28	P4-SHELL	SHLD		25		E2	
	A58		E32	SHLD		25	105	GRD	↓
									PART OF
									GROUP 1
									SEE DETAIL A
⚠	A59	34	P4-114	YEL	26	2	102	P1-47	GROUP 2 SEE DETAIL B
↑		35	↑-315	RED	↑		101	↑-48	
	A60	34	-214	YEL		2	102	-115	↑
		29	-504	RED			101	-116	
↓	A61	36	-627	YEL		1	100	-17	
⚠	A62	37	-328	↑		↑	101	-119	
	A63	38	-329				101	-86	
	A64	39	-330				100	-88	
	A65	40	-331				↑	-54	
	A66	38	-229					-16	
	A67	39	-230				↓	-18	
	A68	40	-231				100	-20	
	A69	38	-129				101	-152	
	A70	39	-130				100	-154	
	A71	40	-131				↑	-188	
	A72	41	-332					-222	
	A73	41	-232					-224	
	A74	41	-132					-226	
	A75	41	-133				↓	-228	
⚠	A76	37	-128				100	-121	
↑	A77	30	-310				103	-210	
	A78	30	-210				↑	-175	
	A79	31	-611					-142	
	A80	↑	-511					-109	
	A81		-411					-76	
	A82		-311					-41	
	A83	↓	-211					-4	
	A84	31	-111					-212	
	A85	32	-612					-177	
	A86	↑	-512					-144	
	A87		-412					-111	
	A88		-312					-78	
	A89	↓	-212				↓	-43	
	A90	32	-112				103	-6	
	A91	33	-613				102	-214	
	A92	33	-513				↑	-179	
	A93	34	-614					-8	
	A94	↑	-514					-216	
	A95	↓	-414					-181	
	A96	34	-314					-148	
	A97	33	-413					-146	
	A98	↑	-313					-113	
↓	A99	↓	-213				↓	-80	
⚠	A100	33	-113				102	-45	
	A101	30	-510				104	-75	
	A102	↑	-110				↑	-209	
	A103	↓	↓-410	↓	↓	↓	↓	↓-141	
	A104	30	P4-610	YEL	26	1	104	P1-3	
			E6	SHLD				E5	
	A105		E5	BLK	22	3	100	P1-53	
	A106		↑	↑	↑	↑	100	↑-23	↓
	A107		↓	↓	↓	↓	100	↓-22	GROUP 2
	A108		E5	BLK	22	3	104	P1-107	SEE DETAIL B

ASSEMBLY INFORMATION CHART

FROM				DESCRIPTION			TO		
REMARKS	COND IDENT	STA NO.	DES	COLOR	AWG	FIND NO.	STA NO.	DES	REMARKS
	A109	53	P4-618	YEL	26	2	82	P3-194	GROUP 3 SEE DETAIL C
		54	↑-619	RED	↑		82	↑-195	
	A110	61	-534	YEL		↑	83	-90	↑
		62	-535	RED			83	-91	
	A111	55	-620	YEL			83	-123	
		56	-621	RED			82	-124	
	A112	55	-520	YEL			82	-125	
		56	-521	RED			82	-126	
	A113	63	-644	YEL			84	-224	
		64	-645	RED			83	-226	
	A114	61	-634	YEL			82	-94	
		62	-635	RED			82	-95	
	A115	51	-616	YEL			83	-190	
		52	-617	RED			83	-191	
	A116	51	-516	YEL			82	-192	
		52	-517	RED			82	-193	
	A117	59	-430	YEL			84	-88	
		57	-526	RED		↓	84	-54	
	A118	60	-631	YEL		2	85	-86	
		57	-626	RED			84	-55	
⚠	A119	57	-426	YEL		1	84	-155	
	A120	60	-531	↑		↑	85	-119	
	A121	58	-428				85	-87	
	A122	58	-628				85	-120	
⚠	A123	49	-114				86	-47	
↑	A124	50	-315				↑	-48	
	A125	49	-214					-115	
	A126	44	-504					-116	
	A127	49	-614					-8	
	A128	↑	-514					-216	
	A129	↓	-414					-181	
	A130	49	-314				↓	-148	
	A131	48	-413				86	-146	
	A132	↑	-313				87	-113	
↓	A133	↓	-213				86	-80	
⚠	A134	48	-113				87	↓-45	
	A135	50	-615				86	P3-82	
⚠	A136	43	-603					E27	
↑	A137	43	-503					E28	
	A138	48	-513				87	P3-179	
	A139	45	-310				87	↑-210	
	A140	45	-210				88	-175	
	A141	46	-611				87	-142	
	A142	↑	-511				88	-109	
	A143		-411				87	-76	
	A144		-311				88	-41	
	A145	↓	-211				87	-4	
	A146	46	-111				↑	-212	
	A147	47	-612					-177	
	A148	↑	-512					-144	
	A149		-412					-111	
	A150		-312					-78	
	A151	↓	-212				↓	-43	
↓	A152	47	↓-112		↓	↓	87	-6	
⚠	A153	48	P4-613		26	1	86	-214	
	A154	42	R1		24	10	84	-122	
	A155	42	R2		24	10	85	-152	
	A156	42	R3		24	10	85	-153	
	A157		E27		26	1	88	-75	
	A158		E27		↑	1	↑	-3	
	A159		E28	↓	↓	1	↓	↓-209	
	A160		E28	YEL	26	1	88	P3-141	↓
			E8	SHLD				E7	
	A161		E7	BLK	22	3	88	P3-107	GROUP 3
	A162		E7	BLK	22	3	84	P3-89	SEE DETAIL C
⚠	A163	70	P4-433	RED	26	4	85	P3-50	GROUP 4 SEE DETAIL D
↑	A164	69	↑-415	↑	↑	↑	↑	↑-85	
	A165	69	-415					-186	↑
	A166	69	-215					-221	
	A167	68	-209					-219	
	A168	70	-333					-184	
	A169	65	-604					-151	
↓	A170	68	-609	↓		↓		-118	
⚠	A171	67	-407	RED		4		-185	
	A172	67	-507	YEL		1		-51	
⚠	A173	66	-205	↑		↑	↓	-84	
↑	A174	67	-307				85	-220	
	A175	67	-607				86	-49	
	A176	66	-605				85	-218	
	A177	↑	-505				86	-183	
↓	A178	↓	↓-405	↓	↓	↓	85	↓-150	
⚠	A179	66	P4-305	YEL	26	1	86	P3-117	
			E10	SHLD				E9	
	A180		E9	BLK	22	3	85	P3-187	↓
									GROUP 4
									SEE DETAIL D

MASTER

QTY REQD	PART OR IDENTIFYING NO.	NOMENCLATURE OR DESCRIPTION	FIND NO

LIST OF MATERIALS

NEXT ASSY	USED ON
APPLICATION	

UNLESS OTHERWISE SPECIFIED
DIMENSIONS ARE IN INCHES
TOLERANCES ON
FRACTIONS ± DECIMALS ± ANGLES ±
DO NOT SCALE THIS DRAWING
MATERIAL
HEAT TREATMENT
FINAL FINISH

MIT
INSTRUMENTATION LAB
CAMBRIDGE MASS
DWG NO CONTRACT
DRAWN A.J. Bisow DATE 1965
CHECKED W. Kayamol 1965
APPROVAL
APPROVAL Edw. O'Neill 12 Dec 68
NASA APPROVAL R. C. METZGER
MIT APPROVAL
MIT APPROVAL

MANNED SPACECRAFT CENTER
HOUSTON, TEXAS

WIRING HARNESS
AGC TO PSA & G/N TO SPACECRAFT

CODE IDENT NO. 80230
SIZE J
NASA DRAWING NO. 1005785
SCALE NONE
WT
SHEET 3 OF 5

F-2

1005785 –

REVISIONS 24773			
SYM	DESCRIPTION	DATE	APPROVAL
–	RELEASED PER TDRR		

ASSEMBLY INFORMATION CHART

FROM				DESCRIPTION			TO		
REMARKS	COND IDENT	STA NO.	DES	COLOR	AWG	FIND NO.	STA NO.	DES	REMARKS
△1	A181	72	P4-205	YEL	26	2	101	P1-84	GROUP 5 SEE DETAIL E
		76	-433	RED				-85	
△1	A182	73	-307	YEL				-220	
		73	-407	RED				-185	
△1	A183	73	-107	YEL				-12	
		75	-215	RED				-13	
	A184	72	-605	YEL				-218	
		76	-333	RED				-219	
	A185	72	-505	YEL				-183	
		71	-604	RED				-184	
	A186	72	-405	YEL				-150	
		74	-609	RED				-151	
△1	A187	72	-305	YEL		2		-117	
		74	-209	RED				-118	
	A188	72	P4-105	YEL	26	1	101	P1-14	
			E12	SHLD				E11	
	A189		E11	BLK	22	3	100	P1-187	
									GROUP 5
									SEE DETAIL E
TWIST TOGETHER	A190	77	P5-17	YEL	22	5	104	P1-1	GROUP 6 SEE DETAIL F
	A191		-18				104	-73	
	A192		-19				101	-49	
	A193		-7				101	-50	
	A194		-5				104	-2	
	A195		-15					-74	
	A196		-9					-139	
	A197		-10	YEL		5	104	-207	
	A198		-11	BLK		3	101	-51	
	A199		-2				100	-52	
	A200		-13				104	-208	
	A201	77	P5-14	BLK	22	3	104	P1-140	
			E14	SHLD				E13	
	A202	78	P5-SHELL	SHLD		25		E14	
TWIST									GROUP 6
TOGETHER									SEE DETAIL F
	A203	96	P2-1	YEL	26	8	80	P3-66	PART OF GROUP 7 SEE DETAIL G
		96	P2-39	RED				E29	
			E16	SHLD				E15	
	A204	96	P2-3	YEL			80	P3-32	
		95	P2-4	RED				E29	
			E18	SHLD				E17	
	A205	95	P2-6	YEL			80	P3-33	
		95	P2-43	RED				E30	
			E20	SHLD				E19	
	A206	94	P2-45	YEL			80	P3-68	
		94	P2-46	RED				E30	
			E22	SHLD				E21	
	A207	93	P2-48	YEL		8	79	P3-36	
		94	P2-10	RED	26		80	P3-35	
			E24	SHLD				E23	
	A208	91	P2-233	YEL	24	7	81	P3-163	
		92	-232	RED				-197	
		91	-195	GRN				-198	
	A209		-198	YEL				-97	
			-197	RED				-98	
		91	-235	GRN				-130	
	A210	90	-237	YEL			81	-99	
		90	-238	RED			80	-100	
		90	-200	GRN			80	-132	
	A211	92	-227	YEL			80	-103	
			-228	RED			79	-104	
			-190	GRN			80	-136	
	A212		-193	YEL			81	-131	
			-192	RED		7		-164	
		92	-230	GRN				-165	
	A213	89	-206	YEL				-62	
			-244	RED		6		-28	
			-243	GRN				-63	
		89	-171	BRN	24		81	-96	
	A214	92	-153	YEL	26	2	79	-243	
		92	-120	RED			79	-242	
	A215	96	-107	YEL			80	-166	
		96	-139	RED			80	-167	
	A216	96	-141	YEL			81	-199	
		95	-142	RED			80	-200	
	A217	95	-144	YEL				-168	
		95	-111	RED				-169	
	A218	94	-113	YEL				-201	
		94	-114	RED			80	-202	
	A219	93	-116	YEL			79	-170	
		94	-148	RED			79	-171	
	A220	93	-150	YEL		2	80	-203	
		93	-151	RED	26		80	P3-204	PART OF
	A221	89	-71	YEL	24	9		E31	GROUP 7
		89	P2-72	RED	24		80	P3-102	SEE DETAIL G

△1 DENOTES TWO CONNECTIONS TO 1 TERMINAL

△2 DENOTES JUMPER

ASSEMBLY INFORMATION CHART

FROM				DESCRIPTION			TO		
REMARKS	COND IDENT	STA NO.	DES	COLOR	AWG	FIND NO.	STA NO.	DES	REMARKS
	A222	89	P2-37	YEL	24	10		E31	PART OF GROUP 7 SEE DETAIL G
	A223	89	P2-172	YEL	24	10	81	P3-29	
	A224	89	P2-38	YEL	24	10	80	P3-101	
			E26	SHLD				E25	
	A225	25	P4-146	YEL	24	7	97	P1-36	GROUP 8 SEE DETAIL A
	A226	26	P4-147	RED	24		97	P1-37	
	A227	27	P4-148	GRN	24		97	P1-38	
			E4	SHLD				E3	
	A228		E29	RED	26	4	81	P3-31	
	A229		E30	RED	26	4	80	P3-69	
	A230		E31	YEL	24	10	80	P3-134	
	A231		E15	BLK	22	3		E17	
	A232		E17				80	P3-67	
	A233		E19					E21	
	A234		E21				80	P3-34	
	A235		E23				80	P3-70	
	A236	96	P2-2					E16	
	A237	95	P2-41					E18	
	A238	95	P2-5					E20	
	A239	94	P2-8					E22	
	A240	93	P2-11	BLK	22	3		E24	
△2	A241		R1,C1	YEL	24	10		P4-629	
	A242		R2,C2		24	10		-431	
	A243		R3,C3		24	10		-529	
△1	A244		P4-426		26	1		-427	
△1	A245		P4-128		26	1		-527	
△2 △1	A246		P4-627	YEL	26	1		P4-328 △1	

QTY REQD	PART OR IDENTIFYING NO.	NOMENCLATURE OR DESCRIPTION	FIND NO

LIST OF MATERIALS

NEXT ASSY	USED ON
APPLICATION	

UNLESS OTHERWISE SPECIFIED
DIMENSIONS ARE IN INCHES
TOLERANCES ON
FRACTIONS ± DECIMALS ± ANGLES ±
DO NOT SCALE THIS DRAWING
MATERIAL
HEAT TREATMENT
FINAL FINISH

MIT
INSTRUMENTATION LAB
CAMBRIDGE, MASS.
DWG NO CONTRACT
DRAWN G.J. Bivon DATE
CHECKED
APPROVAL
APPROVAL 17 Dec 65
NASA APPROVAL A. C. METZGER
MIT APPROVAL 4 Dec 65
MIT APPROVAL

MANNED SPACECRAFT CENTER
HOUSTON, TEXAS

WIRING HARNESS
AGC TO PSA & G/N TO SPACECRAFT

CODE IDENT NO 80230 SIZE J NASA DRAWING NO 1005785
SCALE NONE WT SHEET 4 OF 5

MASTER

1005785 –

F-2

REVISIONS 24773						
SYM	ZONE	DESCRIPTION	DR	CHK	DATE	APPROVED
	—	RELEASED PER TDRR				

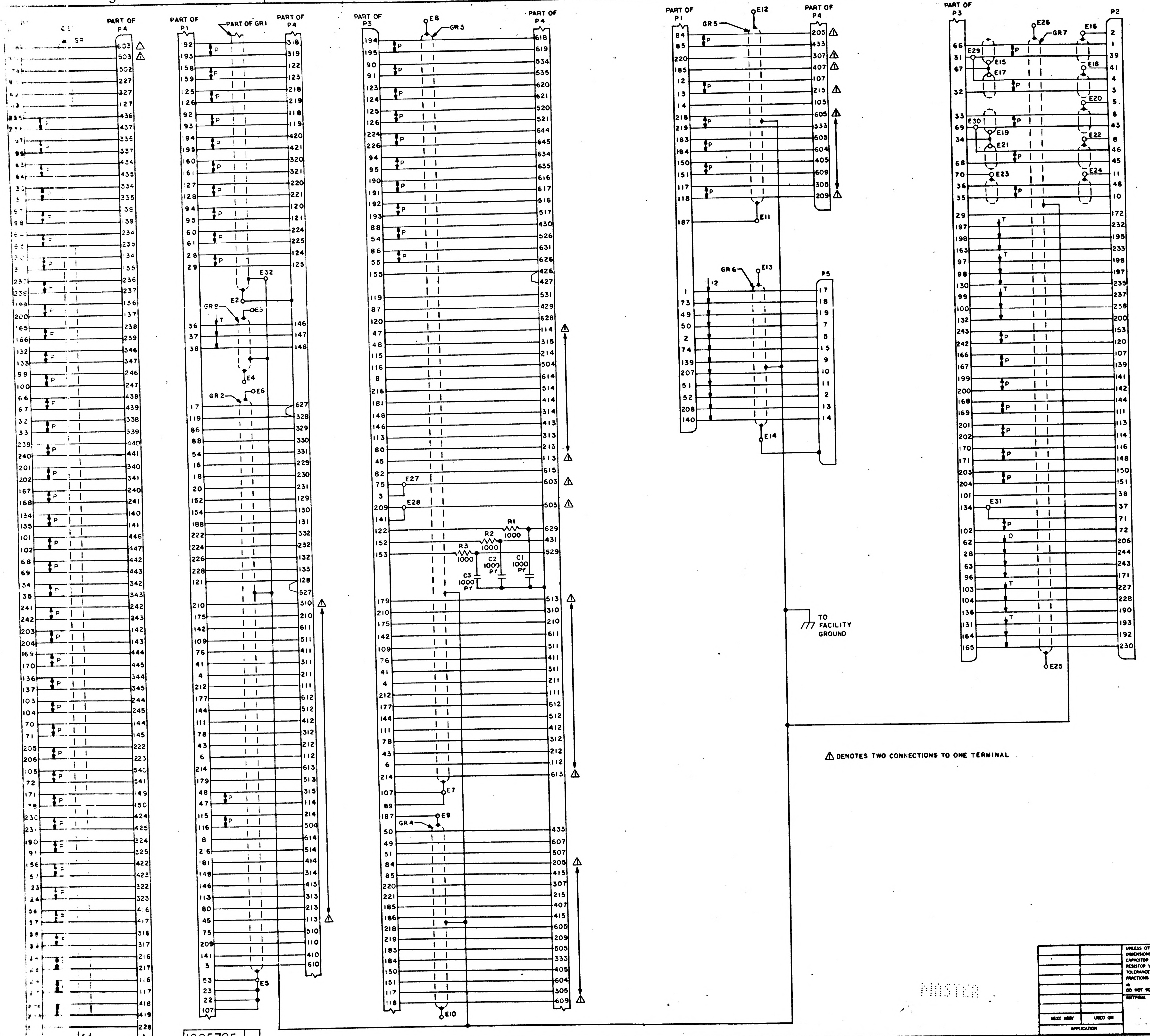

PART OF P4
PART OF P1
PART OF GR1
PART OF P3
PART OF P4
PART OF P1
PART OF P4
PART OF P3
P2
P5
GR1
GR2
GR3
GR4
GR5
GR6
GR7
GR8
E2
E3
E4
E5
E6
E7
E8
E9
E10
E11
E12
E13
E14
E15
E16
E17
E18
E19
E20
E21
E22
E23
E24
E25
E26
E27
E28
E29
E30
E31
E32
R1 1000
R2 1000
R3 1000
C1 1000 Pf
C2 1000 Pf
C3 1000 Pf
P
T
TO FACILITY GROUND

⚠ DENOTES TWO CONNECTIONS TO ONE TERMINAL

MASTER

QTY REQD	PART OR IDENTIFYING NO.	MATERIAL OR NOTES	NOMENCLATURE OR DESCRIPTION	FIND NO.
LIST OF MATERIALS				

NEXT ASSY	USED ON
APPLICATION	

UNLESS OTHERWISE SPECIFIED
DIMENSIONS ARE IN INCHES
CAPACITOR VALUES ARE IN μf
RESISTOR VALUES ARE IN OHMS
TOLERANCES ON
FRACTIONS DECIMALS ANGLES
± ± ±
DO NOT SCALE THIS DRAWING
MATERIAL

MIT
INSTRUMENTATION LAB
CAMBRIDGE, MASS

DRAWN A.J. Biron 29 OCT 65
CHECKED 31 OCT 65
APPROVED
APPROVED
APPROVED MIT
APPROVED MSC
DATE

MANNED SPACECRAFT CENTER
HOUSTON, TEXAS

WIRING HARNESS
AGC TO PSA & G/N TO SPACECRAFT

CODE IDENT NO 80230
SIZE J
DRAWING NO. 1005785
SCALE NONE
SHEET 5 OF 5

1005785 —

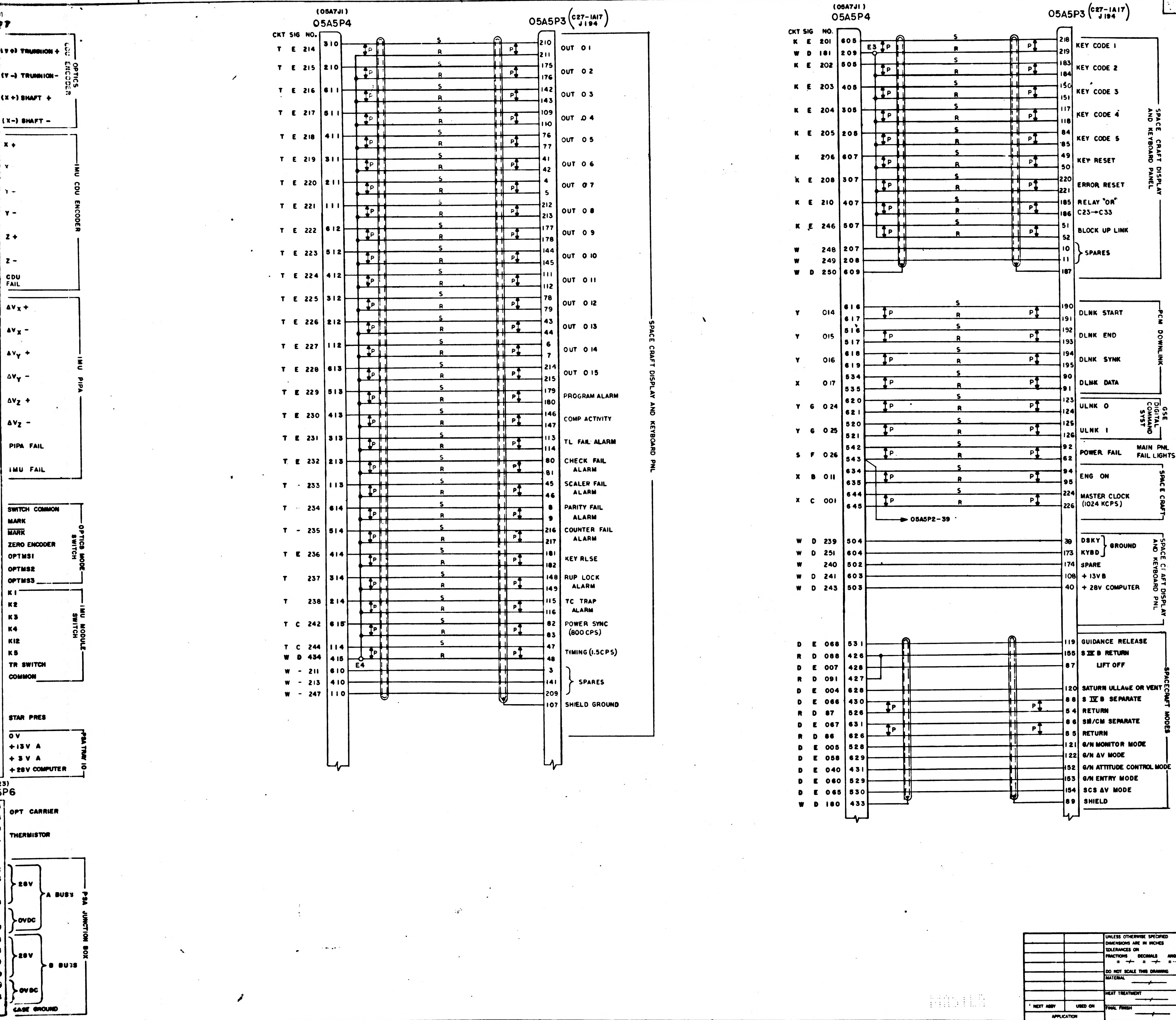
(Y+) TRUNNION +
(Y −) TRUNNION −
(X +) SHAFT +
(X −) SHAFT −
OPTICS CDU ENCODER
X +
Y +
Y −
Z +
Z −
CDU FAIL
IMU CDU ENCODER
ΔVX +
ΔVX −
ΔVY +
ΔVY −
ΔVZ +
ΔVZ −
PIPA FAIL
IMU FAIL
IMU PIPA
SWITCH COMMON
MARK
MARK
ZERO ENCODER
OPTMS1
OPTMS2
OPTMS3
OPTICS MODE SWITCH
K1
K2
K3
K4
K12
K5
TR SWITCH
COMMON
IMU MODULE SWITCH
STAR PRES
0 V
+13 V A
+ 3 V A
+28V COMPUTER
PSA TRAY 10
P6
OPT CARRIER
THERMISTOR
28V
0VDC
A BUSS
28V
0VDC
B BUSS
CASE GROUND
PSA JUNCTION BOX
(05A7J1)
05A5P4
05A5P3 (C27-1A17 J194)
CKT SIG NO.
T E 214 310 — 210 211 OUT 01
T E 215 210 — 175 176 OUT 02
T E 216 611 — 142 143 OUT 03
T E 217 511 — 109 110 OUT 04
T E 218 411 — 76 77 OUT 05
T E 219 311 — 41 42 OUT 06
T E 220 211 — 4 5 OUT 07
T E 221 111 — 212 213 OUT 08
T E 222 612 — 177 178 OUT 09
T E 223 512 — 144 145 OUT 010
T E 224 412 — 111 112 OUT 011
T E 225 312 — 78 79 OUT 012
T E 226 212 — 43 44 OUT 013
T E 227 112 — 6 7 OUT 014
T E 228 613 — 214 215 OUT 015
T E 229 513 — 179 180 PROGRAM ALARM
T E 230 413 — 146 147 COMP ACTIVITY
T E 231 313 — 113 114 TL FAIL ALARM
T E 232 213 — 80 81 CHECK FAIL ALARM
T - 233 113 — 45 46 SCALER FAIL ALARM
T - 234 614 — 8 9 PARITY FAIL ALARM
T - 235 514 — 216 217 COUNTER FAIL ALARM
T E 236 414 — 181 182 KEY RLSE
T 237 314 — 148 149 RUP LOCK ALARM
T 238 214 — 115 116 TC TRAP ALARM
T C 242 615 — 82 83 POWER SYNC (800 CPS)
T C 244 114 — 47 TIMING (1.5CPS)
W D 434 415 — 48
E4
W - 211 610 — 3
W - 213 410 — 141
W - 247 110 — 209
SPARES
107 SHIELD GROUND
S
R
P
SPACE CRAFT DISPLAY AND KEYBOARD PNL
(05A7J1)
05A5P4
05A5P3 (C27-1A17 J194)
CKT SIG NO.
K E 201 605 — 218 KEY CODE 1
W D 181 209 — 219
E3
K E 202 505 — 183 184 KEY CODE 2
K E 203 405 — 150 151 KEY CODE 3
K E 204 305 — 117 118 KEY CODE 4
K E 205 205 — 84 85 KEY CODE 5
K 206 607 — 49 50 KEY RESET
K E 208 307 — 220 221 ERROR RESET
K E 210 407 — 185 186 RELAY "OR" C23→C33
K E 246 507 — 51 52 BLOCK UP LINK
W 248 207 — 10
W 249 208 — 11
SPARES
W D 250 609 — 187
SPACE CRAFT DISPLAY AND KEYBOARD PANEL
Y 014 616 617 — 190 191 DLNK START
Y 015 516 517 — 192 193 DLNK END
Y 016 618 619 — 194 195 DLNK SYNK
X 017 534 535 — 90 91 DLNK DATA
PCM DOWNLINK
Y G 024 620 621 — 123 124 ULNK 0
Y G 025 520 521 — 125 126 ULNK 1
GSE DIGITAL COMMAND SYST
S F 026 542 543 — 92 62 POWER FAIL
MAIN PNL FAIL LIGHTS
X B 011 634 635 — 94 95 ENG ON
X C 001 644 645 — 224 226 MASTER CLOCK (1024 KCPS)
SPACE CRAFT
05A5P2-39
W D 239 504 — 39 DSKY
W D 251 604 — 173 KYBD
GROUND
W 240 502 — 174 SPARE
W D 241 603 — 108 + 13V B
W D 243 503 — 40 + 28V COMPUTER
SPACE CRAFT DISPLAY AND KEYBOARD PNL
D E 068 531 — 119 GUIDANCE RELEASE
R D 088 426 — 155 S IV B RETURN
D E 007 428 — 87 LIFT OFF
R D 091 427
D E 004 628 — 120 SATURN ULLAGE OR VENT
D E 066 430 — 88 S IV B SEPARATE
R D 87 526 — 54 RETURN
D E 067 631 — 86 SM/CM SEPARATE
R D 86 626 — 55 RETURN
D E 005 528 — 121 G/N MONITOR MODE
D E 058 629 — 122 G/N ΔV MODE
D E 040 431 — 152 G/N ATTITUDE CONTROL MODE
D E 060 529 — 153 G/N ENTRY MODE
D E 065 530 — 154 SCS ΔV MODE
W D 180 433 — 89 SHIELD
SPACECRAFT MODES

1005798

REVISIONS

SYM	DESCRIPTION	DATE	APPROVAL

QTY REQD	PART OR IDENTIFYING NO.	NOMENCLATURE OR DESCRIPTION	FIND NO.

LIST OF MATERIALS

NEXT ASSY	USED ON

APPLICATION

UNLESS OTHERWISE SPECIFIED DIMENSIONS ARE IN INCHES
TOLERANCES ON
FRACTIONS ± — DECIMALS ± — ANGLES ± —
DO NOT SCALE THIS DRAWING
MATERIAL —
HEAT TREATMENT —
FINAL FINISH —

MIT INSTRUMENTATION LAB
CAMBRIDGE MASS
DRAWN D. Lee DATE
CHECKED
APPROVAL D J Bowler 12/11/64
APPROVAL Eldon C Hall 14 Dec 64
NASA APPROVAL
MIT APPROVAL 15 Dec 64

MANNED SPACECRAFT CENTER
HOUSTON, TEXAS

WIRING DIAGRAM
AGC TO PSA & G/N TO SPACECRAFT

CODE IDENT NO. —
SIZE J
NASA DRAWING NO. 1005798
SCALE —
WT —
SHEET 1 OF 2

1005798

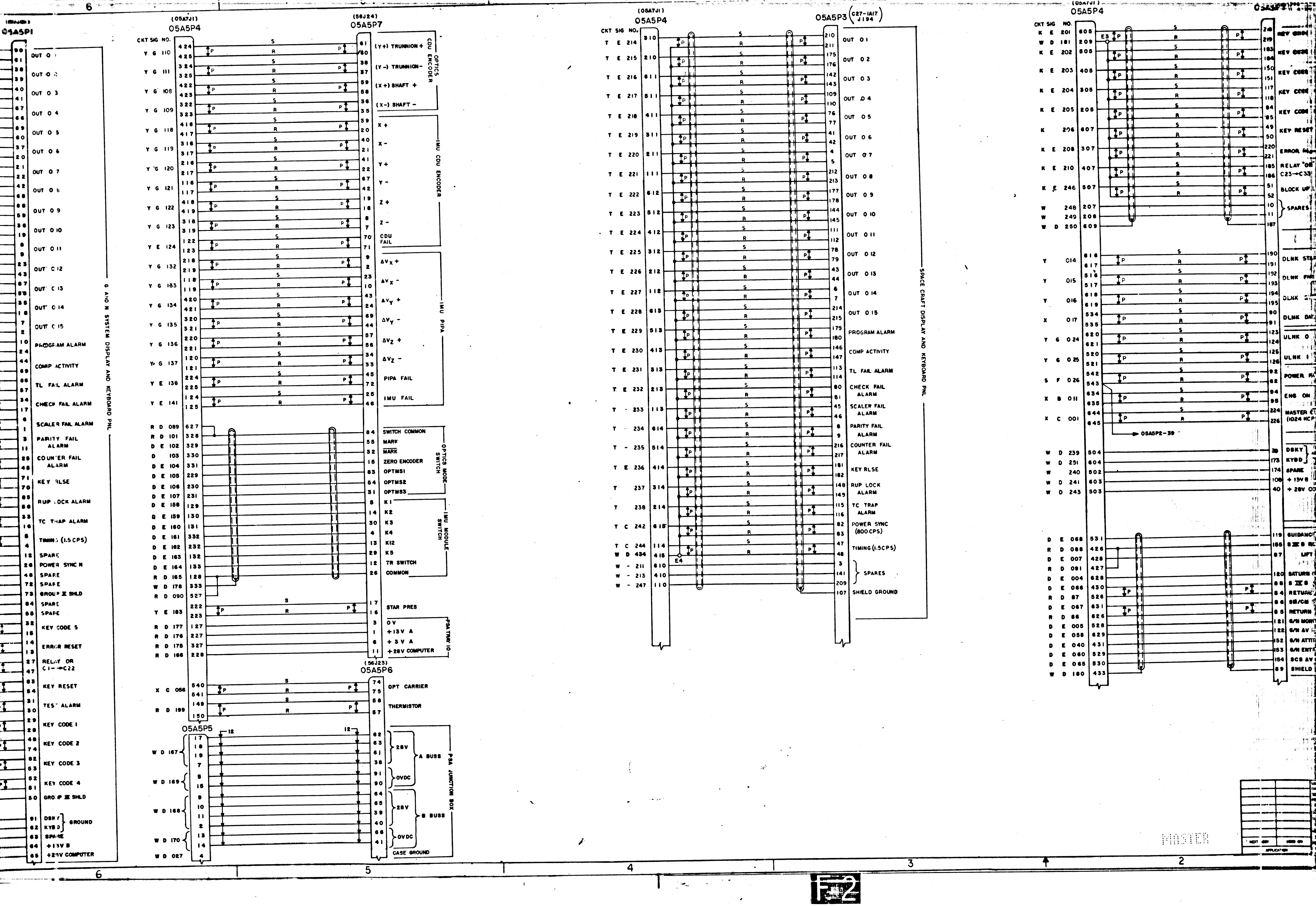
05A5P1
OUT 0 1
OUT 0 2
OUT 0 3
OUT 0 4
OUT 0 5
OUT 0 6
OUT 0 7
OUT 0 8
OUT 0 9
OUT 0 10
OUT 0 11
OUT C 12
OUT C 13
OUT C 14
OUT C 15
PROGRAM ALARM
COMP ACTIVITY
TL FAIL ALARM
CHECK FAIL ALARM
SCALER FAIL ALARM
PARITY FAIL ALARM
COUNTER FAIL ALARM
KEY RLSE
RUP LOCK ALARM
TC TRAP ALARM
TIMING (1.5CPS)
SPARE
POWER SYNC N
SPARE
SPARE
GROUP II SHLD
SPARE
SPARE
KEY CODE 5
ERROR RESET
RELAY OR C1→C22
KEY RESET
TEST ALARM
KEY CODE 1
KEY CODE 2
KEY CODE 3
KEY CODE 4
GROUP III SHLD
DSKY
KYBD
GROUND
SPARE
+13V B
+28V COMPUTER
G AND N SYSTEM DISPLAY AND KEYBOARD PNL
(05A7J1)
05A5P4
CKT SIG NO.
(56J24)
05A5P7
(Y+) TRUNNION +
(Y-) TRUNNION -
(X+) SHAFT +
(X-) SHAFT -
OPTICS CDU ENCODER
X +
X -
Y +
Y -
Z +
Z -
CDU FAIL
IMU CDU ENCODER
ΔVX +
ΔVX -
ΔVY +
ΔVY -
ΔVZ +
ΔVZ -
PIPA FAIL
IMU FAIL
IMU PIPA
SWITCH COMMON
MARK
MARK
ZERO ENCODER
OPTMS1
OPTMS2
OPTMS3
OPTICS MODE SWITCH
K1
K2
K3
K4
K12
K5
TR SWITCH
COMMON
IMU MODULE SWITCH
STAR PRES
0V
+13V A
+3V A
+28V COMPUTER
PSA TRAY 10
(56J23)
05A5P6
OPT CARRIER
THERMISTOR
05A5P5
28V
0VDC
A BUSS
28V
0VDC
B BUSS
CASE GROUND
PSA JUNCTION BOX
S
R
P
12
(05A7J1)
05A5P4
CKT SIG NO.
05A5P3 (C27-1A17 J194)
OUT 0 1
OUT 0 2
OUT 0 3
OUT 0 4
OUT 0 5
OUT 0 6
OUT 0 7
OUT 0 8
OUT 0 9
OUT 0 10
OUT 0 11
OUT 0 12
OUT 0 13
OUT 0 14
OUT 0 15
PROGRAM ALARM
COMP ACTIVITY
TL FAIL ALARM
CHECK FAIL ALARM
SCALER FAIL ALARM
PARITY FAIL ALARM
COUNTER FAIL ALARM
KEY RLSE
RUP LOCK ALARM
TC TRAP ALARM
POWER SYNC (800CPS)
TIMING (1.5CPS)
SPARES
SHIELD GROUND
SPACE CRAFT DISPLAY AND KEYBOARD PNL
E4
(05A7J1)
05A5P4
CKT SIG NO.
E3
05A5P2-39
KEY CODE
KEY CODE
KEY CODE
KEY CODE
KEY CODE
KEY RESET
ERROR
RELAY OR C23→C33
BLOCK UP
SPARES
DLNK STAR
DLNK END
DLNK
DLNK DAT
ULNK 0
ULNK 1
POWER
ENG ON
MASTER (1024 KCP
DSKY
KYBD
SPARE
+13V B
+28V
GUIDANCE
S II B
LIFT
SATURN
S IV B
RETURN
SIB/CM
RETURN
G/N MONIT
G/N AV
G/N ATTIT
G/N ENTR
SCS AV
SHIELD
MASTER
6
5
4
3
2
E2

NOTES

1. INTERPRET DRAWING IN ACCORDANCE WITH STANDARDS PRESCRIBED BY MIL-D-70327
2. DRAWINGS FOR REFERENCE: INTERCONNECTION DIAGRAM, APOLLO GUIDANCE EQUIPMENT, LOWER EQUIPMENT BAY PSA FAMILY TREE
3. REFER TO DRAWINGS LISTED IN NOTE 2 FOR LISTING OF OTHER PSA JUNCTION BOX INTERCONNECTION WIRING DRAWINGS AND DEFINITION OF REFERENCE NUMBERS
4. NUMBERS IN CONDUCTORS GIVE DESTINATION OF THAT CONDUCTOR
5. ① INTERFACE CONNECTIONS CONTROLLED BY ICD'S LISTED BELOW

MH01-01020-216	MH01-01037-216
-01024-416	-01038-216
-01026-216	-01046-416
-01028-416	-01057-216
MH01-01030-200	-01278-216
	-01279-216
	MH01-01280-216

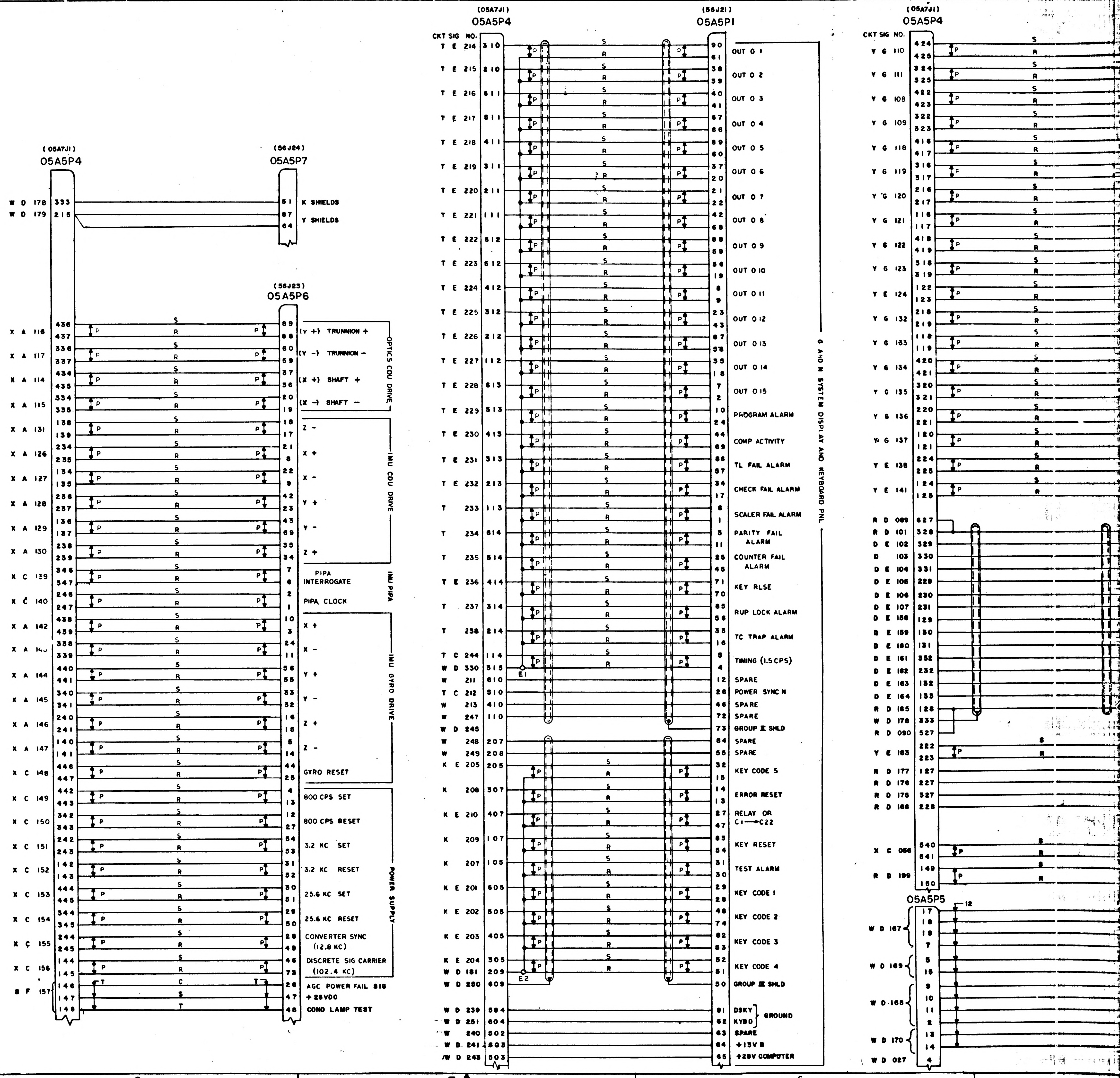
(05A7J1)
05A5P4
(56J24)
05A5P7
K SHIELDS
Y SHIELDS
(56J23)
05A5P6
(Y +) TRUNNION +
(Y -) TRUNNION -
(X +) SHAFT +
(X -) SHAFT -
OPTICS CDU DRIVE
Z -
X +
X -
Y +
Y -
Z +
IMU CDU DRIVE
PIPA INTERROGATE
PIPA CLOCK
IMU PIPA
X +
X -
Y +
Y -
Z +
Z -
GYRO RESET
IMU GYRO DRIVE
800 CPS SET
800 CPS RESET
3.2 KC SET
3.2 KC RESET
25.6 KC SET
25.6 KC RESET
CONVERTER SYNC (12.8 KC)
DISCRETE SIG CARRIER (102.4 KC)
POWER SUPPLY
AGC POWER FAIL SIG
+28VDC
COND LAMP TEST
CKT SIG NO.
(05A7J1)
05A5P4
(56J21)
05A5P1
OUT O 1
OUT O 2
OUT O 3
OUT O 4
OUT O 5
OUT O 6
OUT O 7
OUT O 8
OUT O 9
OUT O 10
OUT O 11
OUT O 12
OUT O 13
OUT O 14
OUT O 15
PROGRAM ALARM
COMP ACTIVITY
TL FAIL ALARM
CHECK FAIL ALARM
SCALER FAIL ALARM
PARITY FAIL ALARM
COUNTER FAIL ALARM
KEY RLSE
RUP LOCK ALARM
TC TRAP ALARM
TIMING (1.5 CPS)
SPARE
POWER SYNC N
SPARE
SPARE
GROUP II SHLD
SPARE
SPARE
KEY CODE 5
ERROR RESET
RELAY OR C1→C22
KEY RESET
TEST ALARM
KEY CODE 1
KEY CODE 2
KEY CODE 3
KEY CODE 4
GROUP III SHLD
DSKY
KYBD
GROUND
SPARE
+13V B
+28V COMPUTER
G AND N SYSTEM DISPLAY AND KEYBOARD PNL
E1
E2
(05A7J1)
05A5P4
CKT SIG NO.
05A5P5
S
R
P
T
C

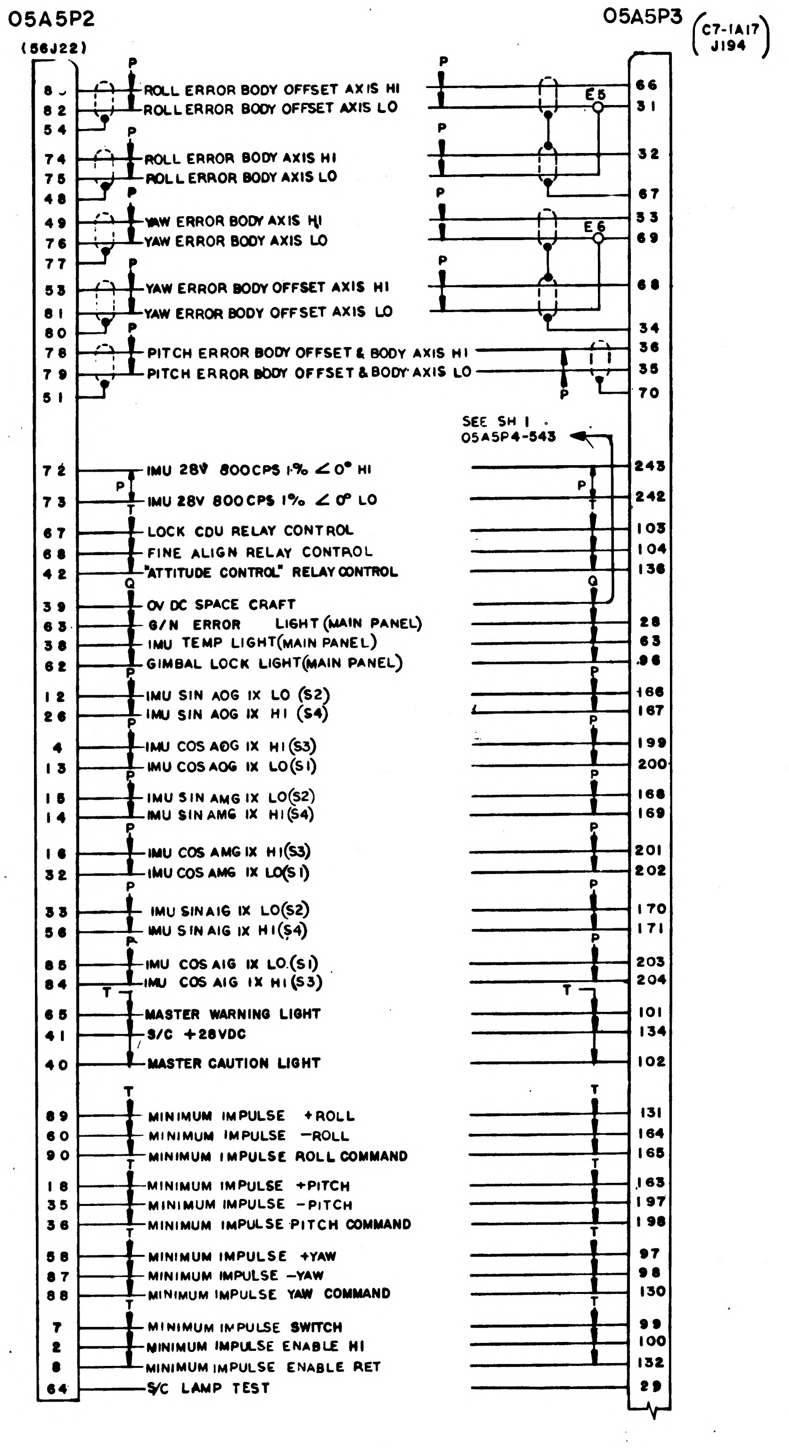
05A5P2
(56J22)
05A5P3
(C7-1A17 J194)
8
82
54
74
75
48
49
76
77
53
81
80
78
79
51
72
73
67
68
42
39
63
38
62
12
26
4
13
15
14
16
32
33
56
85
84
65
41
40
89
60
90
18
35
36
58
87
88
7
2
8
64
ROLL ERROR BODY OFFSET AXIS HI
ROLL ERROR BODY OFFSET AXIS LO
ROLL ERROR BODY AXIS HI
ROLL ERROR BODY AXIS LO
YAW ERROR BODY AXIS HI
YAW ERROR BODY AXIS LO
YAW ERROR BODY OFFSET AXIS HI
YAW ERROR BODY OFFSET AXIS LO
PITCH ERROR BODY OFFSET & BODY AXIS HI
PITCH ERROR BODY OFFSET & BODY AXIS LO
SEE SH 1
05A5P4-543
IMU 28V 800CPS 1% ∠0° HI
IMU 28V 800CPS 1% ∠0° LO
LOCK CDU RELAY CONTROL
FINE ALIGN RELAY CONTROL
"ATTITUDE CONTROL" RELAY CONTROL
OV DC SPACE CRAFT
G/N ERROR LIGHT (MAIN PANEL)
IMU TEMP LIGHT (MAIN PANEL)
GIMBAL LOCK LIGHT (MAIN PANEL)
IMU SIN AOG IX LO (S2)
IMU SIN AOG IX HI (S4)
IMU COS AOG IX HI (S3)
IMU COS AOG IX LO (S1)
IMU SIN AMG IX LO (S2)
IMU SIN AMG IX HI (S4)
IMU COS AMG IX HI (S3)
IMU COS AMG IX LO (S1)
IMU SIN AIG IX LO (S2)
IMU SIN AIG IX HI (S4)
IMU COS AIG IX LO (S1)
IMU COS AIG IX HI (S3)
MASTER WARNING LIGHT
S/C +28VDC
MASTER CAUTION LIGHT
MINIMUM IMPULSE +ROLL
MINIMUM IMPULSE −ROLL
MINIMUM IMPULSE ROLL COMMAND
MINIMUM IMPULSE +PITCH
MINIMUM IMPULSE −PITCH
MINIMUM IMPULSE PITCH COMMAND
MINIMUM IMPULSE +YAW
MINIMUM IMPULSE −YAW
MINIMUM IMPULSE YAW COMMAND
MINIMUM IMPULSE SWITCH
MINIMUM IMPULSE ENABLE HI
MINIMUM IMPULSE ENABLE RET
S/C LAMP TEST
66
31
32
67
33
69
68
34
36
35
70
243
242
103
104
136
28
63
96
166
167
199
200
168
169
201
202
170
171
203
204
101
134
102
131
164
165
163
197
198
97
98
130
99
100
132
29
E5
E6
P
T
Q

1005798

REVISIONS
SYM DESCRIPTION DATE APPROVAL

QTY REQD | PART OR IDENTIFYING NO. | NOMENCLATURE OR DESCRIPTION | FIND NO
LIST OF MATERIALS

UNLESS OTHERWISE SPECIFIED
DIMENSIONS ARE IN INCHES
TOLERANCES ON
FRACTIONS DECIMALS ANGLES
± ± ±
DO NOT SCALE THIS DRAWING
MATERIAL —
HEAT TREATMENT —
FINAL FINISH —

NEXT ASSY | USED ON
APPLICATION

M I T
INSTRUMENTATION LAB
CAMBRIDGE MASS
DRAWN
CHECKED
APPROVAL
APPROVAL
NASA APPROVAL
MIT APPROVAL

MANNED SPACECRAFT CENTER
HOUSTON, TEXAS

WIRING DIAGRAM,
AGC TO PSA & G/N TO SPACECRAFT

CODE IDENT NO. — SIZE J NASA DRAWING NO. 1005798
SCALE — WT SHEET 2 OF 2

1005798

SYM	DESCRIPTION	DATE	APPROVAL
A	REVISED PER TDRR 13685		

1005799 A

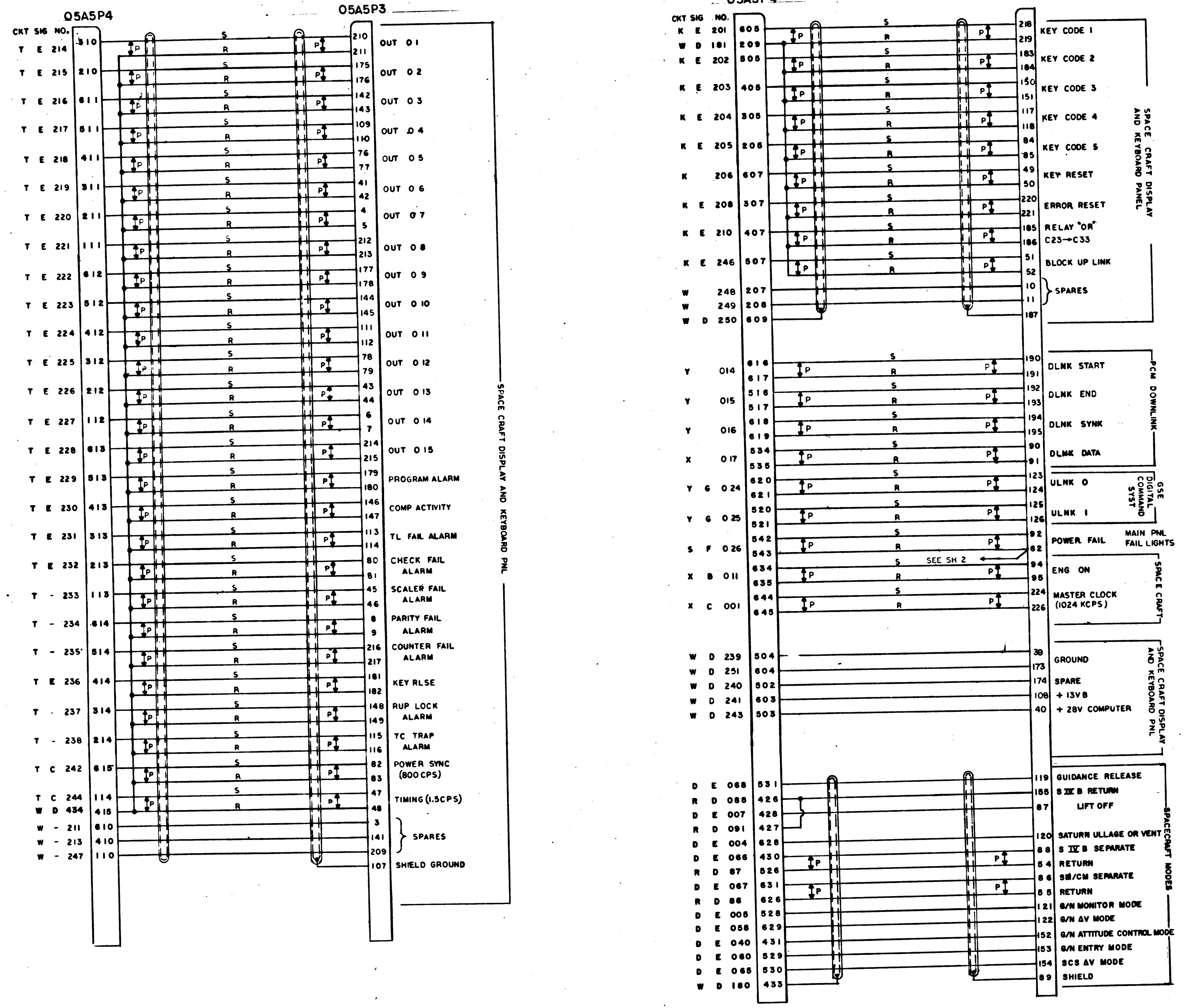

O5A5P4
O5A5P3
CKT SIG NO.
S
R
P
OUT 01
OUT 02
OUT 03
OUT 04
OUT 05
OUT 06
OUT 07
OUT 08
OUT 09
OUT 010
OUT 011
OUT 012
OUT 013
OUT 014
OUT 015
PROGRAM ALARM
COMP ACTIVITY
TL FAIL ALARM
CHECK FAIL ALARM
SCALER FAIL ALARM
PARITY FAIL ALARM
COUNTER FAIL ALARM
KEY RLSE
RUP LOCK ALARM
TC TRAP ALARM
POWER SYNC (800 CPS)
TIMING (1.5CPS)
SPARES
SHIELD GROUND
SPACE CRAFT DISPLAY AND KEYBOARD PNL
KEY CODE 1
KEY CODE 2
KEY CODE 3
KEY CODE 4
KEY CODE 5
KEY RESET
ERROR RESET
RELAY "OR" C23→C33
BLOCK UP LINK
SPARES
SPACE CRAFT DISPLAY AND KEYBOARD PANEL
DLNK START
DLNK END
DLNK SYNK
DLNK DATA
PCM DOWNLINK
ULNK 0
ULNK 1
GSE DIGITAL COMMAND SYST
POWER FAIL
MAIN PNL FAIL LIGHTS
SEE SH 2
ENG ON
MASTER CLOCK (1024 KCPS)
SPACE CRAFT
GROUND
SPARE
+ 13VB
+ 28V COMPUTER
SPACE CRAFT DISPLAY AND KEYBOARD PNL
GUIDANCE RELEASE
S IV B RETURN
LIFT OFF
SATURN ULLAGE OR VENT
S IV B SEPARATE
RETURN
SM/CM SEPARATE
RETURN
G/N MONITOR MODE
G/N ΔV MODE
G/N ATTITUDE CONTROL MODE
G/N ENTRY MODE
SCS ΔV MODE
SHIELD
SPACECRAFT MODES

QTY REQD	PART OR IDENTIFYING NO.	NOMENCLATURE OR DESCRIPTION	FIND NO

LIST OF MATERIALS

NEXT ASSY | USED ON
APPLICATION

UNLESS OTHERWISE SPECIFIED DIMENSIONS ARE IN INCHES
TOLERANCES ON
FRACTIONS ± — DECIMALS ± — ANGLES ± —
DO NOT SCALE THIS DRAWING
MATERIAL —
HEAT TREATMENT —
FINAL FINISH —

MIT
INSTRUMENTATION LAB
CAMBRIDGE, MASS.

DRAWN Q. D. Lee DATE
CHECKED
APPROVAL
APPROVAL Eldon C Hall 18 Sept 64
NASA APPROVAL W. J. Rhine 9-22-64
MIT APPROVAL W Kupfer 22 Sept

MANNED SPACECRAFT CENTER
HOUSTON, TEXAS

WIRING DIAGRAM
AGC TO PSA & G/N TO SPACECRAFT

CODE IDENT NO. — | SIZE J | NASA DRAWING NO. 1005799
SCALE — | WT — | SHEET 1 OF 2

1005799 A

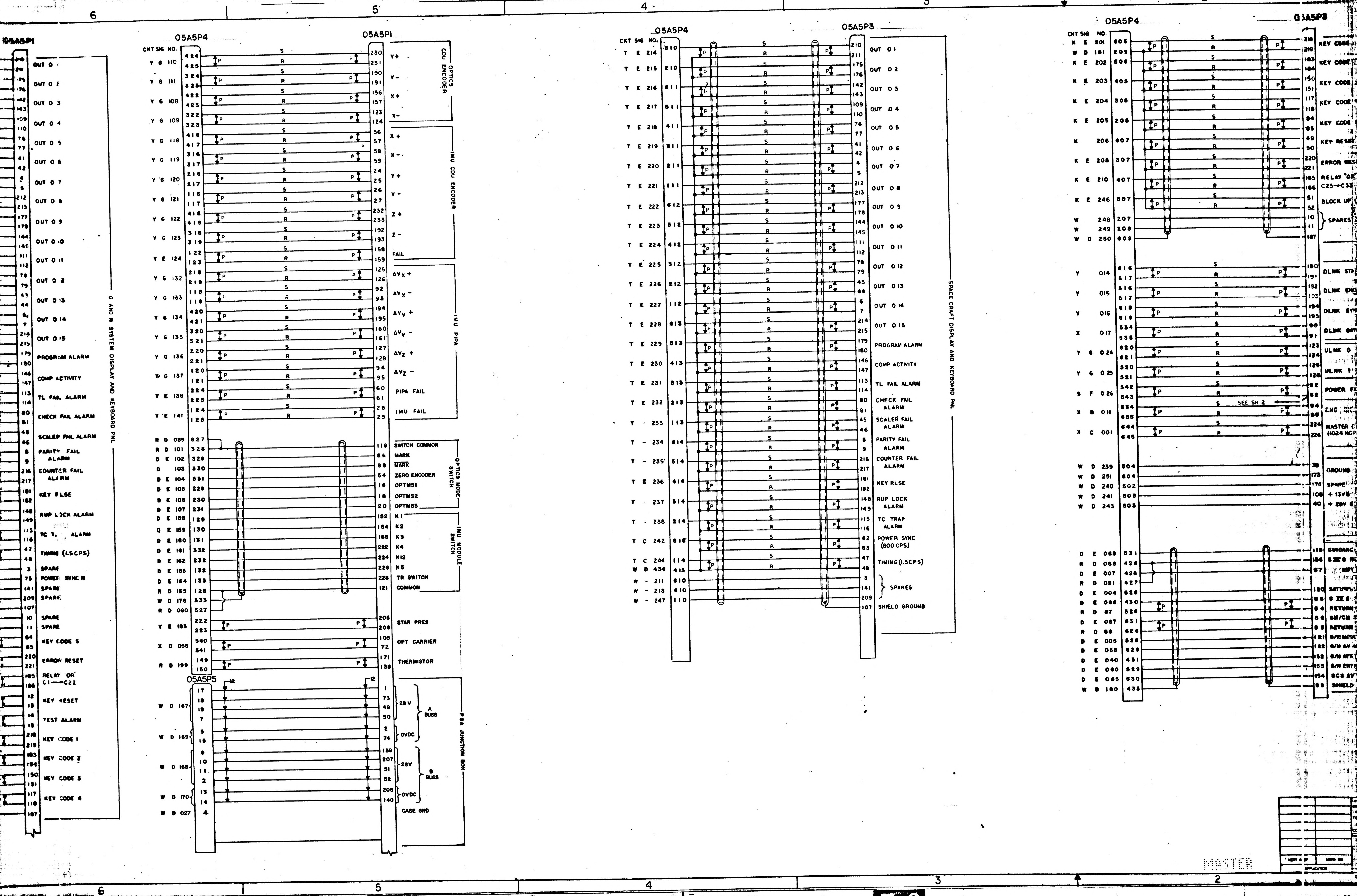
05A5P1
05A5P4
05A5P3
05A5P5
CKT SIG NO.
OUT 0 1
OUT 0 2
OUT 0 3
OUT 0 4
OUT 0 5
OUT 0 6
OUT 0 7
OUT 0 8
OUT 0 9
OUT 0 10
OUT 0 11
OUT 0 12
OUT 0 13
OUT 0 14
OUT 0 15
PROGRAM ALARM
COMP ACTIVITY
TL FAIL ALARM
CHECK FAIL ALARM
SCALER FAIL ALARM
PARITY FAIL ALARM
COUNTER FAIL ALARM
KEY RLSE
RUP LOCK ALARM
TC TRAP ALARM
TIMING (1.5CPS)
SPARE
POWER SYNC N
KEY CODE 5
ERROR RESET
RELAY 'OR' C1→C22
KEY RESET
TEST ALARM
KEY CODE 1
KEY CODE 2
KEY CODE 3
KEY CODE 4
G AND N SYSTEM DISPLAY AND KEYBOARD PNL
Y+
Y-
X+
X-
OPTICS CDU ENCODER
Z+
Z-
FAIL
IMU CDU ENCODER
ΔVx +
ΔVx -
ΔVy +
ΔVy -
ΔVz +
ΔVz -
PIPA FAIL
IMU FAIL
IMU PIPA
SWITCH COMMON
MARK
ZERO ENCODER
OPTMS1
OPTMS2
OPTMS3
OPTICS MODE SWITCH
K1
K2
K3
K4
K12
K5
TR SWITCH
COMMON
IMU MODULE SWITCH
STAR PRES
OPT CARRIER
THERMISTOR
28V
OVDC
A BUSS
B BUSS
CASE GND
PSA JUNCTION BOX
S
R
P
POWER SYNC (800 CPS)
SPARES
SHIELD GROUND
SPACE CRAFT DISPLAY AND KEYBOARD PNL
KEY CODE
KEY RESET
ERROR RESET
RELAY 'OR' C23→C33
BLOCK UP
SPARES
DLNK STA
DLNK END
DLNK SYN
ULNK
POWER FA
SEE SH 2
ENG
MASTER C (1024 KCPS)
GROUND
SPARE
+ 13VB
+ 28V
GUIDANCE
SATURN
RETURN
SHIELD
6
5
4
3
2
MASTER
F-2

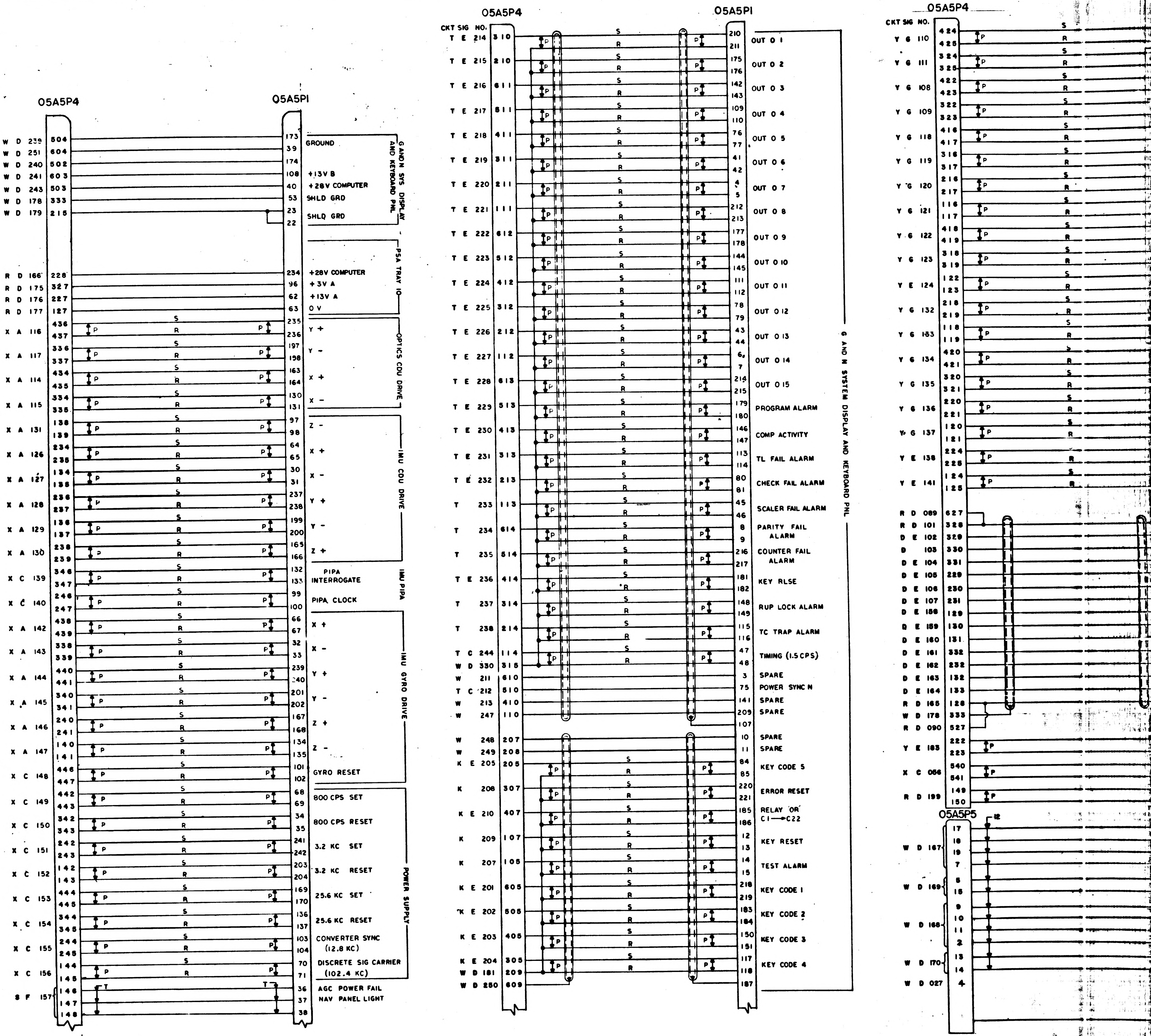

05A5P4
05A5PI
CKT SIG NO.
GROUND
+13V B
+28V COMPUTER
SHLD GRD
G AND N SYS DISPLAY AND KEYBOARD PNL
+28V COMPUTER
+3V A
+13V A
0 V
PSA TRAY 10
Y +
Y -
X +
X -
OPTICS CDU DRIVE
Z -
X +
X -
Y +
Y -
Z +
IMU CDU DRIVE
PIPA INTERROGATE
PIPA CLOCK
IMU PIPA
X +
X -
Y +
Y -
Z +
Z -
IMU GYRO DRIVE
GYRO RESET
800 CPS SET
800 CPS RESET
3.2 KC SET
3.2 KC RESET
25.6 KC SET
25.6 KC RESET
CONVERTER SYNC (12.8 KC)
DISCRETE SIG CARRIER (102.4 KC)
POWER SUPPLY
AGC POWER FAIL
NAV PANEL LIGHT
OUT 0 1
OUT 0 2
OUT 0 3
OUT 0 4
OUT 0 5
OUT 0 6
OUT 0 7
OUT 0 8
OUT 0 9
OUT 0 10
OUT 0 11
OUT 0 12
OUT 0 13
OUT 0 14
OUT 0 15
PROGRAM ALARM
COMP ACTIVITY
TL FAIL ALARM
CHECK FAIL ALARM
SCALER FAIL ALARM
PARITY FAIL ALARM
COUNTER FAIL ALARM
KEY RLSE
RUP LOCK ALARM
TC TRAP ALARM
TIMING (1.5 CPS)
SPARE
POWER SYNC N
SPARE
SPARE
SPARE
SPARE
KEY CODE 5
ERROR RESET
RELAY 'OR' C1→C22
KEY RESET
TEST ALARM
KEY CODE 1
KEY CODE 2
KEY CODE 3
KEY CODE 4
G AND N SYSTEM DISPLAY AND KEYBOARD PNL
05A5P5

NOTES

1. INTERPRET DRAWING IN ACCORDANCE WITH STANDARDS PRESCRIBED BY MIL-D-70327
2. DRAWINGS FOR REFERENCE: INTERCONNECTION DIAGRAM, APOLLO GUIDANCE EQUIPMENT, LOWER EQUIPMENT BAY PSA FAMILY TREE
3. REFER TO DRAWINGS LISTED IN NOTE 2 FOR LISTING OF OTHER PSA JUNCTION BOX INTERCONNECTION WIRING DRAWINGS AND DEFINITION OF REFERENCE NUMBERS
4. NUMBERS IN CONDUCTORS GIVE DESTINATION OF THAT CONDUCTOR

1005799 A

SYM	DESCRIPTION	DATE	APPROVAL
	REVISIONS 12779		
A	REVISED PER TDRR 13685	9/4/64	

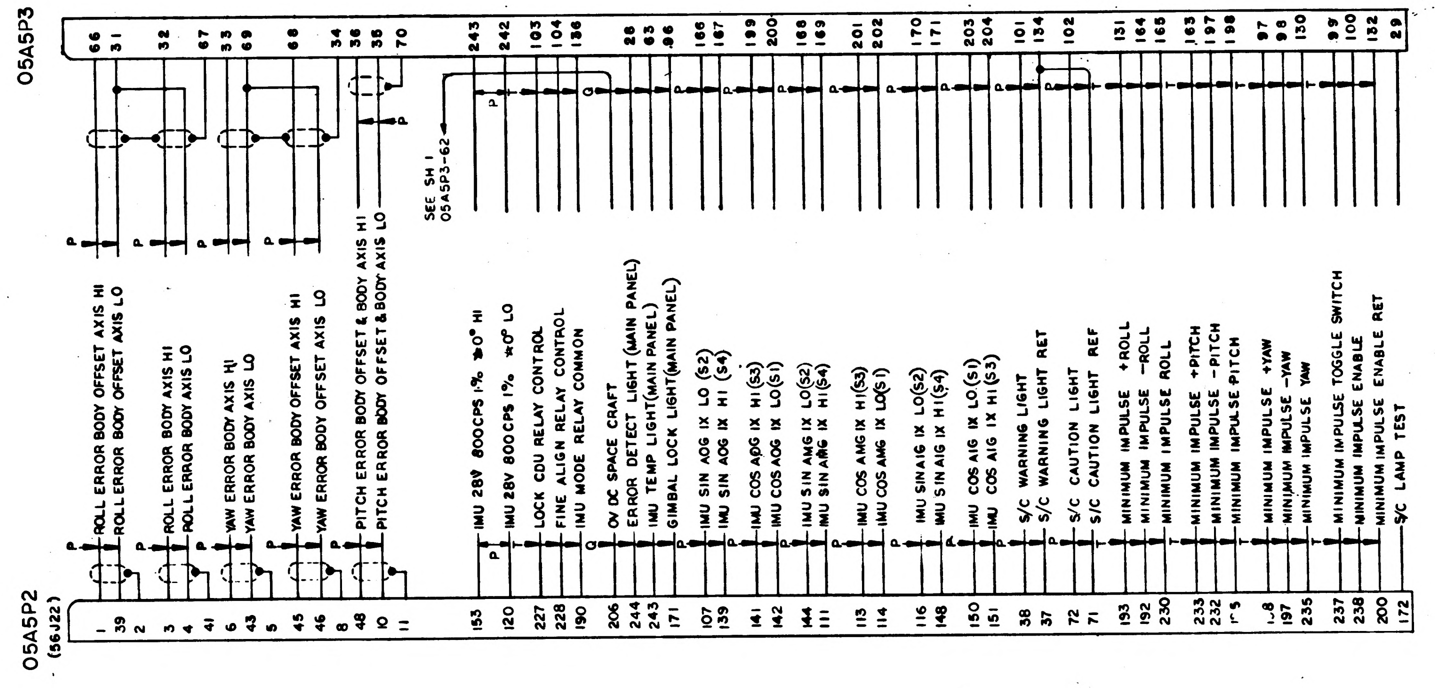

05A5P2
(56J22)
05A5P3
1 / 66 ROLL ERROR BODY OFFSET AXIS HI
39 / 31 ROLL ERROR BODY OFFSET AXIS LO
2
3 / 32 ROLL ERROR BODY AXIS HI
4 ROLL ERROR BODY AXIS LO
41 / 67
6 / 33 YAW ERROR BODY AXIS HI
43 / 69 YAW ERROR BODY AXIS LO
5
45 / 68 YAW ERROR BODY OFFSET AXIS HI
46 YAW ERROR BODY OFFSET AXIS LO
8 / 34
48 / 36 PITCH ERROR BODY OFFSET & BODY AXIS HI
10 / 35 PITCH ERROR BODY OFFSET & BODY AXIS LO
11 / 70
SEE SH 1
05A5P3-62
153 / 243 IMU 28V 800CPS 1% ★0° HI
120 / 242 IMU 28V 800CPS 1% ★0° LO
227 / 103 LOCK CDU RELAY CONTROL
228 / 104 FINE ALIGN RELAY CONTROL
190 / 136 IMU MODE RELAY COMMON
206 0V DC SPACE CRAFT
244 / 28 ERROR DETECT LIGHT (MAIN PANEL)
243 / 63 IMU TEMP LIGHT (MAIN PANEL)
171 / 96 GIMBAL LOCK LIGHT (MAIN PANEL)
107 / 166 IMU SIN AOG IX LO (S2)
139 / 167 IMU SIN AOG IX HI (S4)
141 / 199 IMU COS AOG IX HI (S3)
142 / 200 IMU COS AOG IX LO (S1)
144 / 168 IMU SIN AMG IX LO (S2)
111 / 169 IMU SIN AMG IX HI (S4)
113 / 201 IMU COS AMG IX HI (S3)
114 / 202 IMU COS AMG IX LO (S1)
116 / 170 IMU SIN AIG IX LO (S2)
148 / 171 IMU SIN AIG IX HI (S4)
150 / 203 IMU COS AIG IX LO (S1)
151 / 204 IMU COS AIG IX HI (S3)
38 / 101 S/C WARNING LIGHT
37 / 134 S/C WARNING LIGHT RET
72 / 102 S/C CAUTION LIGHT
71 S/C CAUTION LIGHT REF
193 / 131 MINIMUM IMPULSE +ROLL
192 / 164 MINIMUM IMPULSE −ROLL
230 / 165 MINIMUM IMPULSE ROLL
233 / 163 MINIMUM IMPULSE +PITCH
232 / 197 MINIMUM IMPULSE −PITCH
198 MINIMUM IMPULSE PITCH
97 MINIMUM IMPULSE +YAW
197 / 98 MINIMUM IMPULSE −YAW
235 / 130 MINIMUM IMPULSE YAW
237 / 99 MINIMUM IMPULSE TOGGLE SWITCH
238 / 100 MINIMUM IMPULSE ENABLE
200 / 132 MINIMUM IMPULSE ENABLE RET
172 / 29 S/C LAMP TEST
P
Q
T

QTY REQD	PART OR IDENTIFYING NO.	NOMENCLATURE OR DESCRIPTION	FIND NO.

LIST OF MATERIALS

NEXT ASSY	USED ON
APPLICATION	

UNLESS OTHERWISE SPECIFIED DIMENSIONS ARE IN INCHES
TOLERANCES ON
FRACTIONS ± — DECIMALS ± — ANGLES ± —
DO NOT SCALE THIS DRAWING
MATERIAL —
HEAT TREATMENT —
FINAL FINISH —

MIT INSTRUMENTATION LAB
CAMBRIDGE, MASS
DRAWN A. D. Lee DATE
CHECKED
APPROVAL
APPROVAL Eldon C Hall
NASA APPROVAL W. J. Rhine 9-22-64
MIT APPROVAL

MANNED SPACECRAFT CENTER
HOUSTON, TEXAS

WIRING DIAGRAM
AGC TO PSA & G/N TO SPACECRAFT

CODE IDENT NO. —
SIZE J
NASA DRAWING NO. 1005799
SCALE —
WT
SHEET 2 OF 2

1005799 A

SYM	DESCRIPTION	DATE	APPROVAL
A	REVISED PER TDRR 13685	10/9/64	
B	REVISED PER TDRR 16534 DR S.Q. Clement CHK	3/13/65	

1005799 B

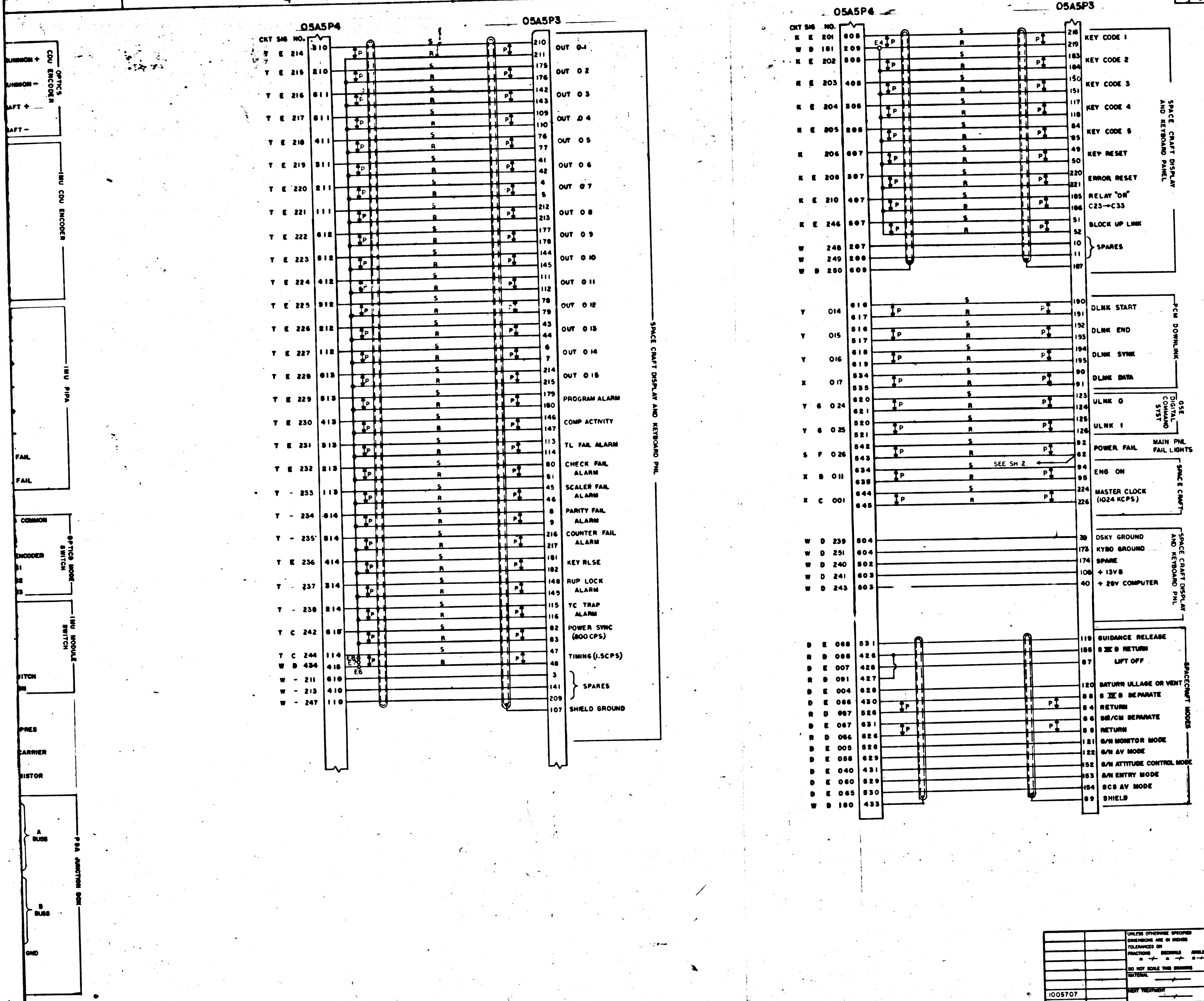

05A5P4
05A5P3
CKT SIG NO.
OPTICS CDU ENCODER
IMU CDU ENCODER
IMU PIPA
OPTICS MODE SWITCH
IMU MODULE SWITCH
PSA JUNCTION BOX
A BUSS
B BUSS
GND
OUT 0 1
OUT 0 2
OUT 0 3
OUT 0 4
OUT 0 5
OUT 0 6
OUT 0 7
OUT 0 8
OUT 0 9
OUT 0 10
OUT 0 11
OUT 0 12
OUT 0 13
OUT 0 14
OUT 0 15
PROGRAM ALARM
COMP ACTIVITY
TL FAIL ALARM
CHECK FAIL ALARM
SCALER FAIL ALARM
PARITY FAIL ALARM
COUNTER FAIL ALARM
KEY RLSE
RUP LOCK ALARM
TC TRAP ALARM
POWER SYNC (800 CPS)
TIMING (1.5CPS)
SPARES
SHIELD GROUND
SPACE CRAFT DISPLAY AND KEYBOARD PNL
KEY CODE 1
KEY CODE 2
KEY CODE 3
KEY CODE 4
KEY CODE 5
KEY RESET
ERROR RESET
RELAY "OR" C23→C33
BLOCK UP LINK
SPARES
SPACE CRAFT DISPLAY AND KEYBOARD PANEL
DLNK START
DLNK END
DLNK SYNK
DLNK DATA
PCM DOWNLINK
ULNK 0
ULNK 1
GSE DIGITAL COMMAND SYST
POWER FAIL
MAIN PNL FAIL LIGHTS
SEE SH 2
ENG ON
MASTER CLOCK (1024 KCPS)
SPACE CRAFT
DSKY GROUND
KYBD GROUND
SPARE
+ 13VB
+ 28V COMPUTER
SPACE CRAFT DISPLAY AND KEYBOARD PNL
GUIDANCE RELEASE
S IV B RETURN
LIFT OFF
SATURN ULLAGE OR VENT
S IV B SEPARATE
RETURN
SM/CM SEPARATE
RETURN
G/N MONITOR MODE
G/N AV MODE
G/N ATTITUDE CONTROL MODE
G/N ENTRY MODE
SCS AV MODE
SHIELD
SPACECRAFT MODES
4
3
2
D
C
B
A

QTY REQD	PART OR IDENTIFYING NO.	NOMENCLATURE OR DESCRIPTION	FIND NO.

LIST OF MATERIALS

UNLESS OTHERWISE SPECIFIED DIMENSIONS ARE IN INCHES
TOLERANCES ON
FRACTIONS ± — DECIMALS ± — ANGLES ± —
DO NOT SCALE THIS DRAWING
MATERIAL —
HEAT TREATMENT —
FINAL FINISH —

1005707 | NEXT ASSY | USED ON
APPLICATION

MIT INSTRUMENTATION LAB
CAMBRIDGE, MASS.
DRAWN
CHECKED
APPROVAL
APPROVAL
NASA APPROVAL 4-22-64

MANNED SPACECRAFT CENTER
HOUSTON, TEXAS

WIRING DIAGRAM
AGC TO PSA & G/N TO SPACECRAFT

CODE IDENT NO. — | SIZE J | NASA DRAWING NO. 1005799
SCALE — | WT — | SHEET 1 OF 2

1005799 B

F3/3

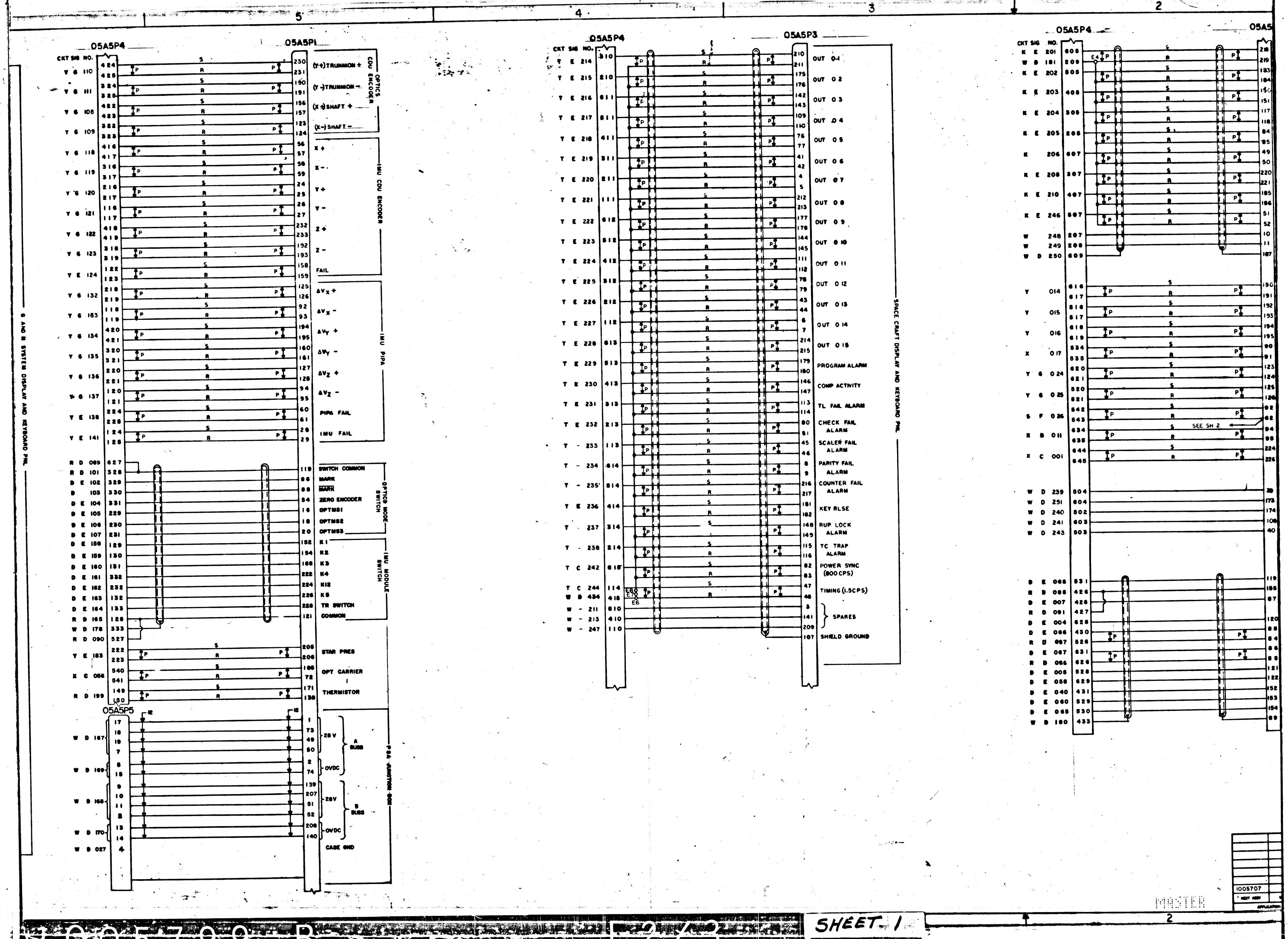
5
4
3
2
05A5P4
05A5P1
05A5P3
05A5P5
CKT SIG NO.
(Y+) TRUNNION +
(Y−) TRUNNION −
(X+) SHAFT +
(X−) SHAFT −
OPTICS CDU ENCODER
X +
X −
Y +
Y −
Z +
Z −
FAIL
IMU CDU ENCODER
ΔVX +
ΔVX −
ΔVY +
ΔVY −
ΔVZ +
ΔVZ −
PIPA FAIL
IMU FAIL
IMU PIPA
SWITCH COMMON
MARK
MARK
ZERO ENCODER
OPTMS1
OPTMS2
OPTMS3
OPTICS MODE SWITCH
K1
K2
K3
K4
K12
K8
TR SWITCH
COMMON
IMU MODULE SWITCH
STAR PRES
OPT CARRIER
THERMISTOR
28V
0VDC
A BUSS
28V
0VDC
B BUSS
PSA JUNCTION BOX
CASE GND
G AND N SYSTEM DISPLAY AND KEYBOARD PNL
OUT 0 1
OUT 0 2
OUT 0 3
OUT 0 4
OUT 0 5
OUT 0 6
OUT 0 7
OUT 0 8
OUT 0 9
OUT 0 10
OUT 0 11
OUT 0 12
OUT 0 13
OUT 0 14
OUT 0 15
PROGRAM ALARM
COMP ACTIVITY
TL FAIL ALARM
CHECK FAIL ALARM
SCALER FAIL ALARM
PARITY FAIL ALARM
COUNTER FAIL ALARM
KEY RLSE
RUP LOCK ALARM
TC TRAP ALARM
POWER SYNC (800 CPS)
TIMING (1.5 CPS)
SPARES
SHIELD GROUND
SPACE CRAFT DISPLAY AND KEYBOARD PNL
SEE SH 2
E4
E5
E6
P
S
R
12
1005707
NEXT ASSY
APPLICATION
MASTER
SHEET 1

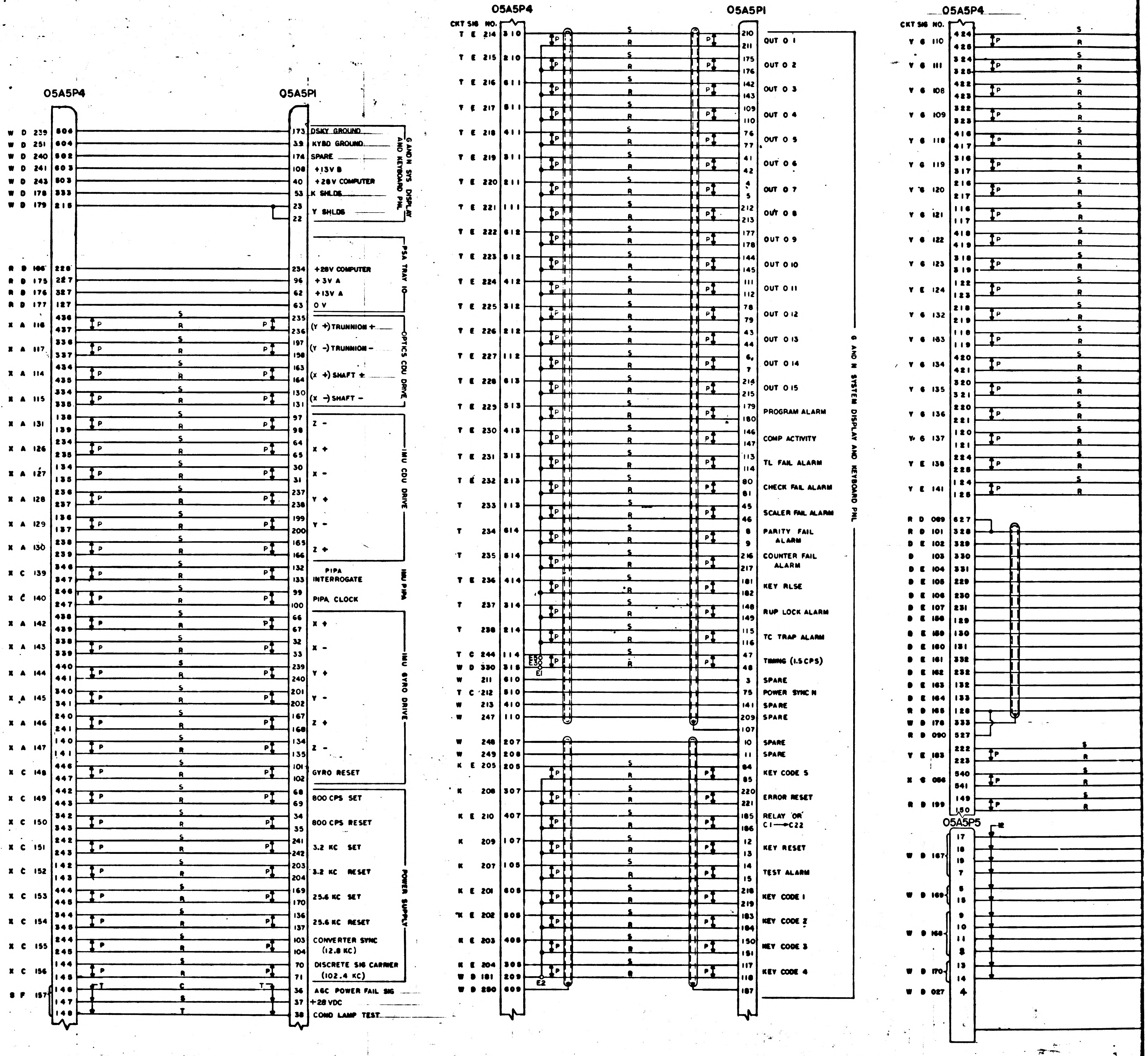
05A5P4
05A5P1
05A5P5
CKT SIG NO.
DSKY GROUND
KYBD GROUND
SPARE
+13V B
+28V COMPUTER
K SHLDS
Y SHLDS
G AND N SYS DISPLAY AND KEYBOARD PNL
+28V COMPUTER
+3V A
+13V A
0 V
PSA TRAY 10
(Y +) TRUNNION +
(Y −) TRUNNION −
(X +) SHAFT +
(X −) SHAFT −
OPTICS CDU DRIVE
Z −
X +
X −
Y +
Y −
Z +
IMU CDU DRIVE
PIPA INTERROGATE
PIPA CLOCK
IMU PIPA
X +
X −
Y +
Y −
Z +
Z −
GYRO RESET
IMU GYRO DRIVE
800 CPS SET
800 CPS RESET
3.2 KC SET
3.2 KC RESET
25.6 KC SET
25.6 KC RESET
CONVERTER SYNC (12.8 KC)
DISCRETE SIG CARRIER (102.4 KC)
POWER SUPPLY
AGC POWER FAIL SIG
+28 VDC
COND LAMP TEST
OUT 0 1
OUT 0 2
OUT 0 3
OUT 0 4
OUT 0 5
OUT 0 6
OUT 0 7
OUT 0 8
OUT 0 9
OUT 0 10
OUT 0 11
OUT 0 12
OUT 0 13
OUT 0 14
OUT 0 15
PROGRAM ALARM
COMP ACTIVITY
TL FAIL ALARM
CHECK FAIL ALARM
SCALER FAIL ALARM
PARITY FAIL ALARM
COUNTER FAIL ALARM
KEY RLSE
RUP LOCK ALARM
TC TRAP ALARM
TIMING (1.5CPS)
SPARE
POWER SYNC N
SPARE
SPARE
SPARE
SPARE
KEY CODE 5
ERROR RESET
RELAY 'OR' C1→C22
KEY RESET
TEST ALARM
KEY CODE 1
KEY CODE 2
KEY CODE 3
KEY CODE 4
G AND N SYSTEM DISPLAY AND KEYBOARD PNL
E2
E1
E50
P
S
R
C
T

NOTES

1. INTERPRET DRAWING IN ACCORDANCE WITH STANDARDS PRESCRIBED BY MIL-D-70327
2. DRAWINGS FOR REFERENCE: INTERCONNECTION DIAGRAM, APOLLO GUIDANCE EQUIPMENT, LOWER EQUIPMENT BAY PSA FAMILY TREE
3. REFER TO DRAWINGS LISTED IN NOTE 2 FOR LISTING OF OTHER PSA JUNCTION BOX INTERCONNECTION WIRING DRAWINGS AND DEFINITION OF REFERENCE NUMBERS
4. NUMBERS IN CONDUCTORS GIVE DESTINATION OF THAT CONDUCTOR
5. ① INTERFACE CONNECTIONS CONTROLLED BY ICD'S LISTED BELOW

MH01-01020-216
-01024-416
-01026-216
-01028-416
-01030-200
-01037-216
-01038-216
-01046-416
-01057-216
-01278-216
-01279-216
MH01-01280-216

SHEET 1

1005799 B

REVISIONS 12799

SYM	DESCRIPTION	DATE	APPROVAL
A	REVISED PER TDRR 13685	12/4/64	
B	REVISED PER TDRR 16534 DR D.Q. Clement CHK C.C.E.	3/3/65	

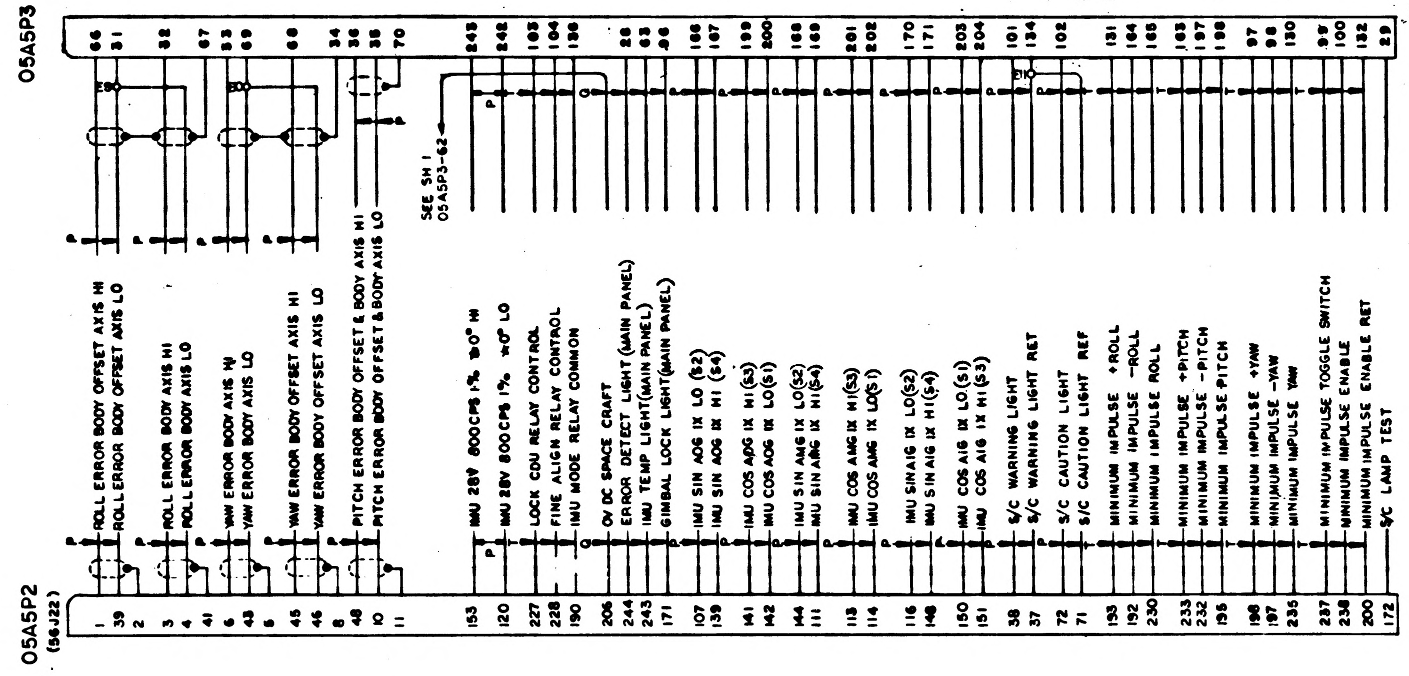

05A5P3
66 31 32 67 33 69 68 34 36 35 70 245 242 103 104 136 28 63 96 166 167 199 200 168 169 201 202 170 171 203 204 101 134 102 131 164 165 163 197 198 97 98 130 99 100 132 29
E9
SEE SH 1
05A5P3-62
P
Q
T
ROLL ERROR BODY OFFSET AXIS HI
ROLL ERROR BODY OFFSET AXIS LO
ROLL ERROR BODY AXIS HI
ROLL ERROR BODY AXIS LO
YAW ERROR BODY AXIS HI
YAW ERROR BODY AXIS LO
YAW ERROR BODY OFFSET AXIS HI
YAW ERROR BODY OFFSET AXIS LO
PITCH ERROR BODY OFFSET & BODY AXIS HI
PITCH ERROR BODY OFFSET & BODY AXIS LO
IMU 28V 800CPS 1% 0° HI
IMU 28V 800CPS 1% 0° LO
LOCK CDU RELAY CONTROL
FINE ALIGN RELAY CONTROL
IMU MODE RELAY COMMON
0V DC SPACE CRAFT
ERROR DETECT LIGHT (MAIN PANEL)
IMU TEMP LIGHT (MAIN PANEL)
GIMBAL LOCK LIGHT (MAIN PANEL)
IMU SIN AOG IX LO (S2)
IMU SIN AOG IX HI (S4)
IMU COS AOG IX HI (S3)
IMU COS AOG IX LO (S1)
IMU SIN AMG IX LO (S2)
IMU SIN AMG IX HI (S4)
IMU COS AMG IX HI (S3)
IMU COS AMG IX LO (S1)
IMU SIN AIG IX LO (S2)
IMU SIN AIG IX HI (S4)
IMU COS AIG IX LO (S1)
IMU COS AIG IX HI (S3)
S/C WARNING LIGHT
S/C WARNING LIGHT RET
S/C CAUTION LIGHT
S/C CAUTION LIGHT REF
MINIMUM IMPULSE +ROLL
MINIMUM IMPULSE -ROLL
MINIMUM IMPULSE ROLL
MINIMUM IMPULSE +PITCH
MINIMUM IMPULSE -PITCH
MINIMUM IMPULSE PITCH
MINIMUM IMPULSE +YAW
MINIMUM IMPULSE -YAW
MINIMUM IMPULSE YAW
MINIMUM IMPULSE TOGGLE SWITCH
MINIMUM IMPULSE ENABLE
MINIMUM IMPULSE ENABLE RET
S/C LAMP TEST
05A5P2
(56J22)
1 39 2 3 4 41 6 43 5 45 46 8 48 10 11 153 120 227 228 190 206 244 243 171 107 139 141 142 144 111 113 114 116 148 150 151 38 37 72 71 193 192 230 233 232 195 196 197 235 237 238 200 172

QTY REQD	PART OR IDENTIFYING NO.	NOMENCLATURE OR DESCRIPTION	FIND NO

LIST OF MATERIALS

NEXT ASSY	USED ON
APPLICATION	

UNLESS OTHERWISE SPECIFIED DIMENSIONS ARE IN INCHES
TOLERANCES ON
FRACTIONS ± — DECIMALS ± — ANGLES ± —
DO NOT SCALE THIS DRAWING
MATERIAL —
HEAT TREATMENT —
FINAL FINISH —

MIT INSTRUMENTATION LAB
CAMBRIDGE, MASS.
DRAWN A. Dixon DATE
CHECKED
APPROVAL
APPROVAL Eldon C. Hall
NASA APPROVAL W.G. Kline 12-22-64
MIT APPROVAL

MANNED SPACECRAFT CENTER
HOUSTON, TEXAS

WIRING DIAGRAM
AGC TO PSA & G/N TO SPACECRAFT

CODE IDENT NO. —
SIZE J
NASA DRAWING NO. 1005799
SCALE — WT
SHEET 2 OF 2

1005799 B

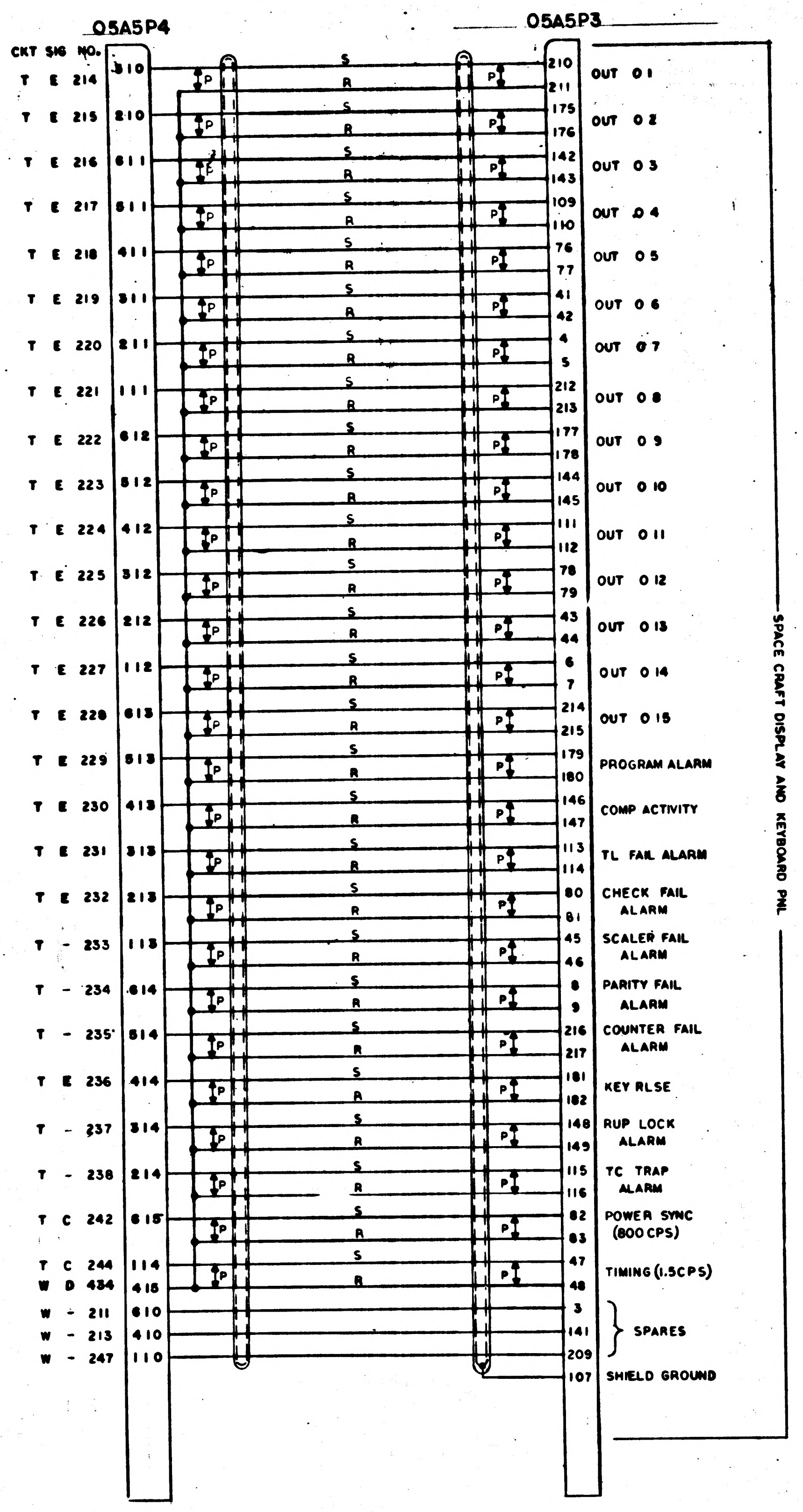
05A5P4
05A5P3
CKT SIG NO.
T E 214 | 310 | 210 211 | OUT 0 1
T E 215 | 210 | 175 176 | OUT 0 2
T E 216 | 611 | 142 143 | OUT 0 3
T E 217 | 511 | 109 110 | OUT 0 4
T E 218 | 411 | 76 77 | OUT 0 5
T E 219 | 311 | 41 42 | OUT 0 6
T E 220 | 211 | 4 5 | OUT 0 7
T E 221 | 111 | 212 213 | OUT 0 8
T E 222 | 612 | 177 178 | OUT 0 9
T E 223 | 512 | 144 145 | OUT 0 10
T E 224 | 412 | 111 112 | OUT 0 11
T E 225 | 312 | 78 79 | OUT 0 12
T E 226 | 212 | 43 44 | OUT 0 13
T E 227 | 112 | 6 7 | OUT 0 14
T E 228 | 613 | 214 215 | OUT 0 15
T E 229 | 513 | 179 180 | PROGRAM ALARM
T E 230 | 413 | 146 147 | COMP ACTIVITY
T E 231 | 313 | 113 114 | TL FAIL ALARM
T E 232 | 213 | 80 81 | CHECK FAIL ALARM
T - 233 | 113 | 45 46 | SCALER FAIL ALARM
T - 234 | 614 | 8 9 | PARITY FAIL ALARM
T - 235 | 514 | 216 217 | COUNTER FAIL ALARM
T E 236 | 414 | 181 182 | KEY RLSE
T - 237 | 314 | 148 149 | RUP LOCK ALARM
T - 238 | 214 | 115 116 | TC TRAP ALARM
T C 242 | 615 | 82 83 | POWER SYNC (800 CPS)
T C 244 | 114 | 47 | TIMING (1.5CPS)
W D 434 | 415 | 48
W - 211 | 610 | 3
W - 213 | 410 | 141
W - 247 | 110 | 209
SPARES
107 SHIELD GROUND
S
R
P
SPACE CRAFT DISPLAY AND KEYBOARD PNL

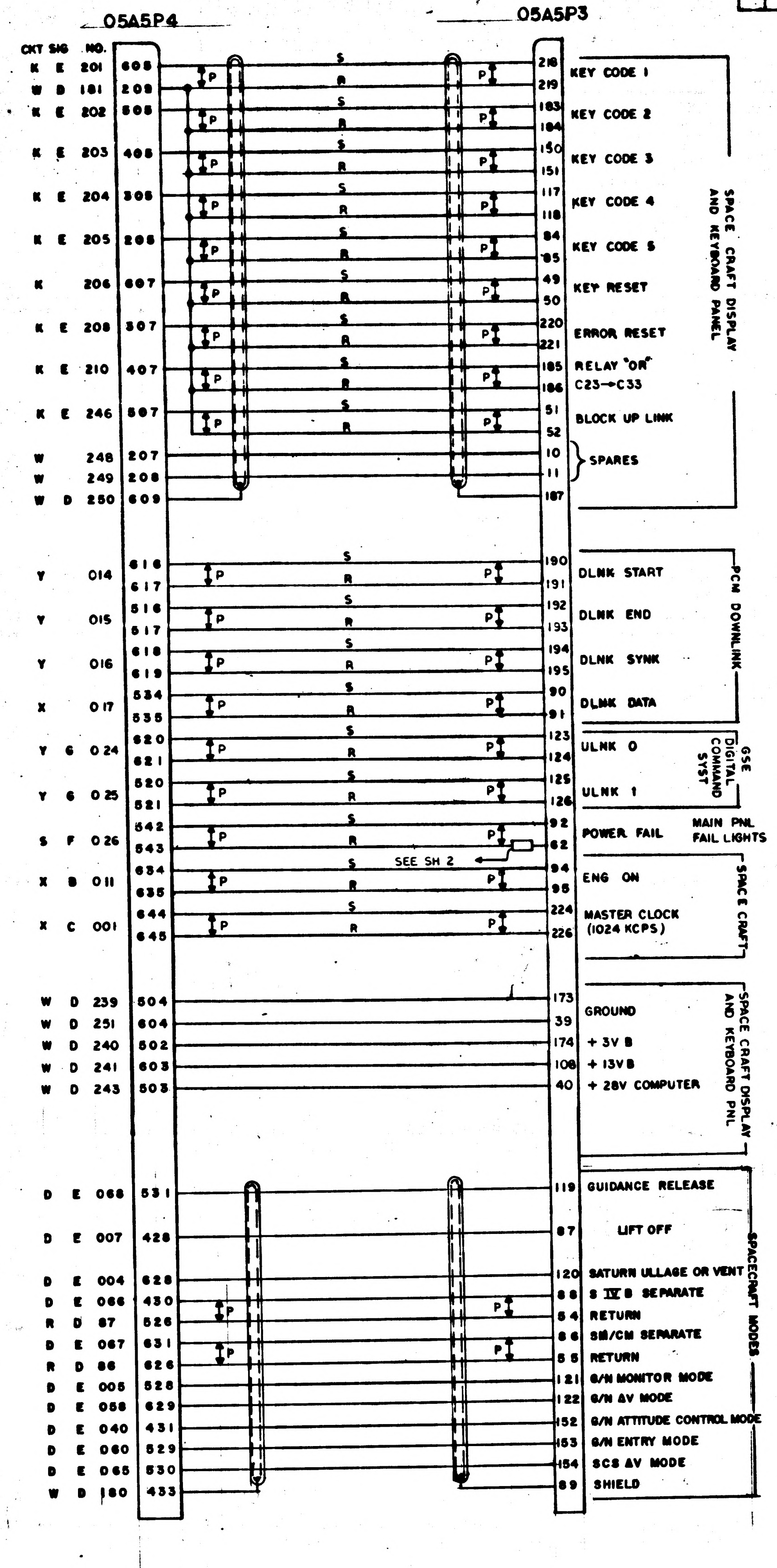
05A5P4
05A5P3
CKT SIG NO.
K E 201 | 605 | 218 | KEY CODE 1
W D 181 | 209 | 219
K E 202 | 505 | 183 184 | KEY CODE 2
K E 203 | 405 | 150 151 | KEY CODE 3
K E 204 | 305 | 117 118 | KEY CODE 4
K E 205 | 205 | 84 85 | KEY CODE 5
K 206 | 607 | 49 50 | KEY RESET
K E 208 | 507 | 220 221 | ERROR RESET
K E 210 | 407 | 185 186 | RELAY "OR" C23→C33
K E 246 | 507 | 51 52 | BLOCK UP LINK
W 248 | 207 | 10
W 249 | 208 | 11
SPARES
W D 250 | 609 | 187
SPACE CRAFT DISPLAY AND KEYBOARD PANEL
Y 014 | 616 617 | 190 191 | DLNK START
Y 015 | 516 517 | 192 193 | DLNK END
Y 016 | 618 619 | 194 195 | DLNK SYNK
X 017 | 534 535 | 90 91 | DLNK DATA
PCM DOWNLINK
Y 6 024 | 620 621 | 123 124 | ULNK 0
Y 6 025 | 520 521 | 125 126 | ULNK 1
GSE DIGITAL COMMAND SYST
S F 026 | 542 543 | 92 62 | POWER FAIL
MAIN PNL FAIL LIGHTS
SEE SH 2
X B 011 | 634 635 | 94 95 | ENG ON
X C 001 | 644 645 | 224 226 | MASTER CLOCK (1024 KCPS)
SPACE CRAFT
W D 239 | 504 | 173 | GROUND
W D 251 | 604 | 39
W D 240 | 502 | 174 | + 3V B
W D 241 | 603 | 108 | + 13V B
W D 243 | 503 | 40 | + 28V COMPUTER
SPACE CRAFT DISPLAY AND KEYBOARD PNL
D E 068 | 531 | 119 | GUIDANCE RELEASE
D E 007 | 428 | 87 | LIFT OFF
D E 004 | 628 | 120 | SATURN ULLAGE OR VENT
D E 066 | 430 | 88 | S IV B SEPARATE
R D 87 | 526 | 54 | RETURN
D E 067 | 631 | 86 | SM/CM SEPARATE
R D 86 | 626 | 55 | RETURN
D E 005 | 528 | 121 | G/N MONITOR MODE
D E 058 | 629 | 122 | G/N ΔV MODE
D E 040 | 431 | 152 | G/N ATTITUDE CONTROL MODE
D E 060 | 529 | 153 | G/N ENTRY MODE
D E 065 | 530 | 154 | SCS ΔV MODE
W D 180 | 433 | 89 | SHIELD
SPACECRAFT MODES
S
R
P

QTY REQD	PART OR IDENTIFYING NO.	NOMENCLATURE OR DESCRIPTION	FIND NO.

LIST OF MATERIALS

NEXT ASSY	USED ON
APPLICATION	

UNLESS OTHERWISE SPECIFIED
DIMENSIONS ARE IN INCHES
TOLERANCES ON
FRACTIONS ± — DECIMALS ± — ANGLES ± —
DO NOT SCALE THIS DRAWING
MATERIAL —
HEAT TREATMENT —
FINAL FINISH —

MIT
INSTRUMENTATION LAB
CAMBRIDGE, MASS.
DRAWN
CHECKED
APPROVAL
APPROVAL
NASA APPROVAL 9-22-6
MIT APPROVAL

MANNED SPACECRAFT CENTER
HOUSTON, TEXAS

WIRING DIAGRAM
AGC TO PSA & G/N TO SPACECRAFT

CODE IDENT NO. —
SIZE J
NASA DRAWING NO. 1005799
SCALE —
WT —
SHEET 1 OF 2

MASTER

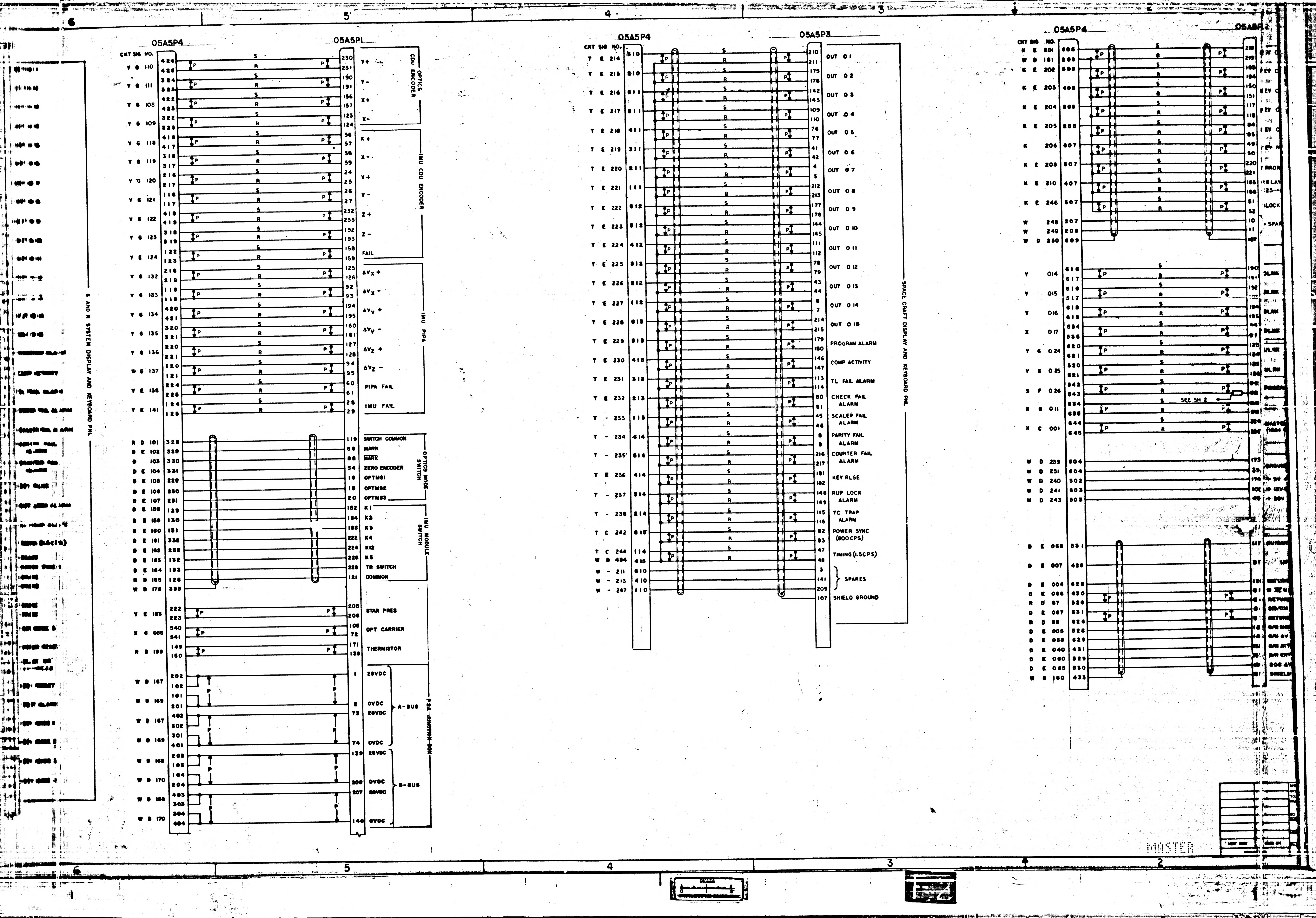

6
5
4
3
2
05A5P4
05A5P1
05A5P4
05A5P3
05A5P4
05A5P2
CKT SIG NO.
G AND N SYSTEM DISPLAY AND KEYBOARD PNL
OPTICS CDU ENCODER
IMU CDU ENCODER
IMU PIPA
OPTICS MODE SWITCH
IMU MODULE SWITCH
PSA JUNCTION BOX
A-BUS
B-BUS
Y+
Y-
X+
X-
Z+
Z-
FAIL
ΔVx+
ΔVx-
ΔVy+
ΔVy-
ΔVz+
ΔVz-
PIPA FAIL
IMU FAIL
SWITCH COMMON
MARK
MARK
ZERO ENCODER
OPTMS1
OPTMS2
OPTMS3
K1
K2
K3
K4
K12
K5
TR SWITCH
COMMON
STAR PRES
OPT CARRIER
THERMISTOR
28VDC
0VDC
SPACE CRAFT DISPLAY AND KEYBOARD PNL
OUT 01
OUT 02
OUT 03
OUT 04
OUT 05
OUT 06
OUT 07
OUT 08
OUT 09
OUT 010
OUT 011
OUT 012
OUT 013
OUT 014
OUT 015
PROGRAM ALARM
COMP ACTIVITY
TL FAIL ALARM
CHECK FAIL ALARM
SCALER FAIL ALARM
PARITY FAIL ALARM
COUNTER FAIL ALARM
KEY RLSE
RUP LOCK ALARM
TC TRAP ALARM
POWER SYNC (800 CPS)
TIMING (1.5CPS)
SPARES
SHIELD GROUND
SEE SH 2
S
R
P
MASTER

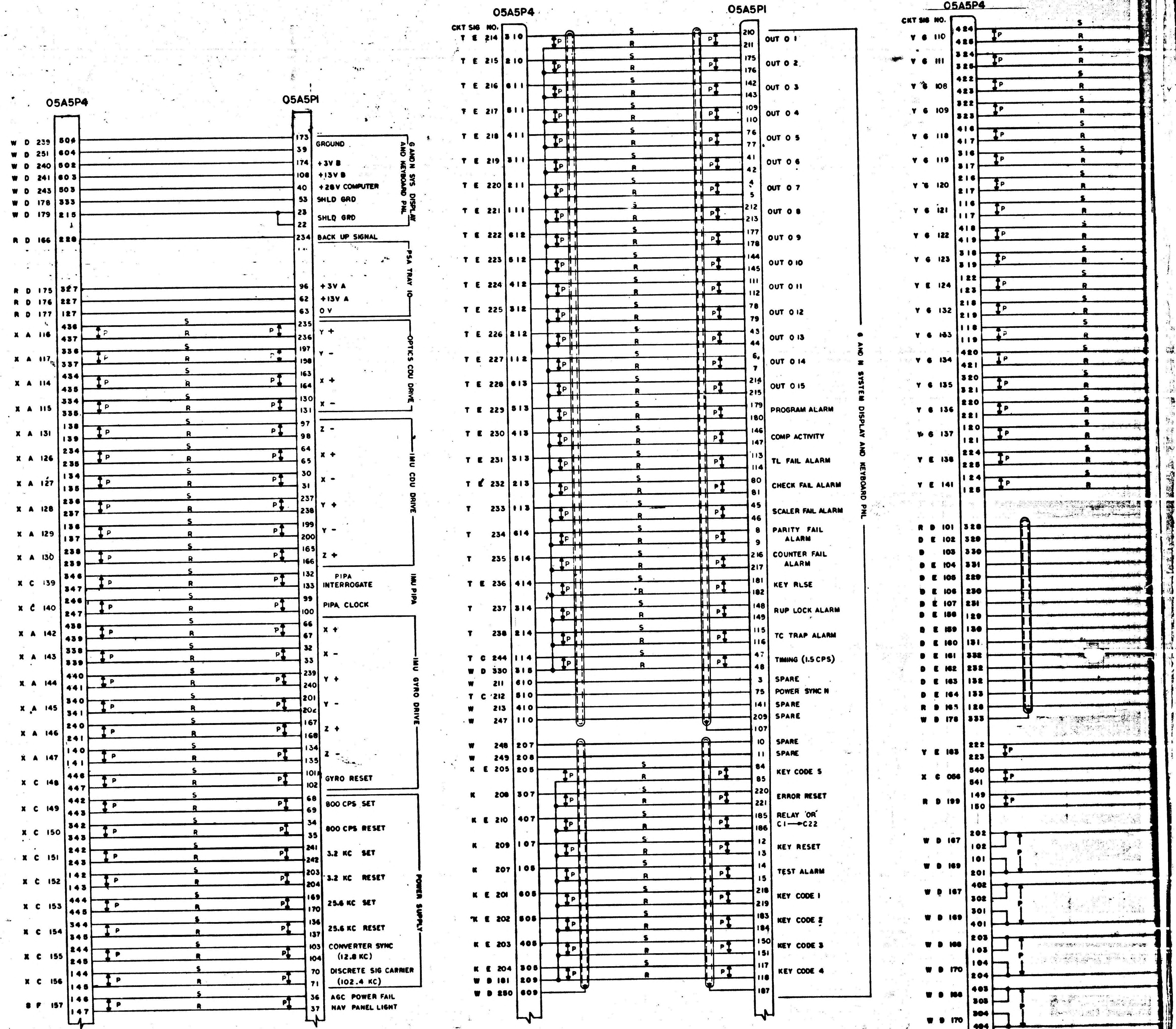
05A5P4
05A5P1
CKT SIG NO.
GROUND
+3V B
+13V B
+28V COMPUTER
SHLD GRD
SHLD GRD
G AND N SYS DISPLAY AND KEYBOARD PNL
BACK UP SIGNAL
+3V A
+13V A
0 V
PSA TRAY 10
Y +
Y −
X +
X −
OPTICS CDU DRIVE
Z −
X +
X −
Y +
Y −
Z +
IMU CDU DRIVE
PIPA INTERROGATE
PIPA CLOCK
IMU PIPA
X +
X −
Y +
Y −
Z +
Z −
GYRO RESET
IMU GYRO DRIVE
800 CPS SET
800 CPS RESET
3.2 KC SET
3.2 KC RESET
25.6 KC SET
25.6 KC RESET
CONVERTER SYNC (12.8 KC)
DISCRETE SIG CARRIER (102.4 KC)
POWER SUPPLY
AGC POWER FAIL
NAV PANEL LIGHT
OUT 0 1
OUT 0 2
OUT 0 3
OUT 0 4
OUT 0 5
OUT 0 6
OUT 0 7
OUT 0 8
OUT 0 9
OUT 0 10
OUT 0 11
OUT 0 12
OUT 0 13
OUT 0 14
OUT 0 15
PROGRAM ALARM
COMP ACTIVITY
TL FAIL ALARM
CHECK FAIL ALARM
SCALER FAIL ALARM
PARITY FAIL ALARM
COUNTER FAIL ALARM
KEY RLSE
RUP LOCK ALARM
TC TRAP ALARM
TIMING (1.5 CPS)
SPARE
POWER SYNC N
SPARE
SPARE
SPARE
SPARE
KEY CODE 5
ERROR RESET
RELAY 'OR' C1→C22
KEY RESET
TEST ALARM
KEY CODE 1
KEY CODE 2
KEY CODE 3
KEY CODE 4
G AND N SYSTEM DISPLAY AND KEYBOARD PNL
S
R
P

NOTES

1. INTERPRET DRAWING IN ACCORDANCE WITH STANDARDS PRESCRIBED BY MIL-D-70327
2. DRAWINGS FOR REFERENCES: INTERCONNECTION DIAGRAM, APOLLO GUIDANCE EQUIPMENT, LOWER EQUIPMENT BAY PSA FAMILY TREE
3. REFER TO DRAWINGS LISTED IN NOTE 2 FOR LISTING OF OTHER PSA JUNCTION BOX INTERCONNECTION WIRING DRAWINGS AND DEFINITION OF REFERENCE NUMBERS
4. NUMBERS IN CONDUCTORS GIVE DESTINATION OF THAT CONDUCTOR

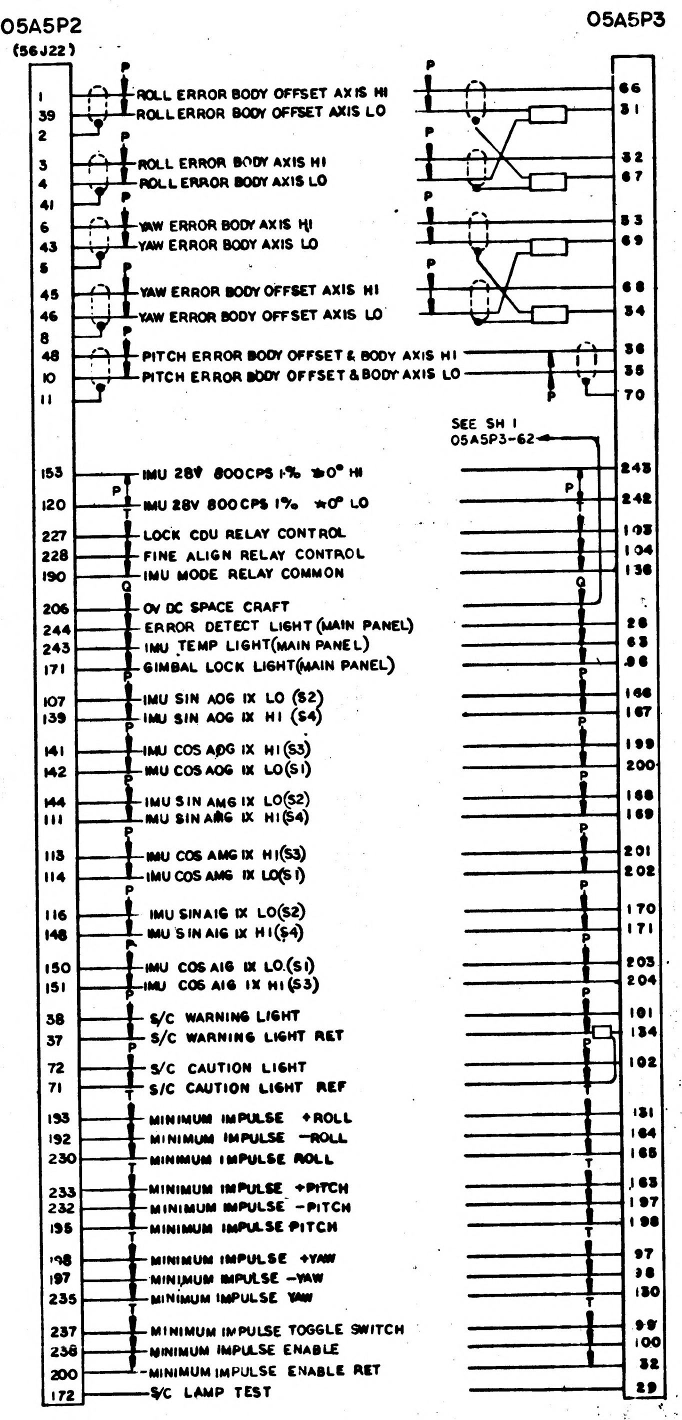
05A5P2
(56J22)
05A5P3
1 ROLL ERROR BODY OFFSET AXIS HI 66
39 ROLL ERROR BODY OFFSET AXIS LO 31
2
3 ROLL ERROR BODY AXIS HI 32
4 ROLL ERROR BODY AXIS LO 67
41
6 YAW ERROR BODY AXIS HI 53
43 YAW ERROR BODY AXIS LO 69
5
45 YAW ERROR BODY OFFSET AXIS HI 68
46 YAW ERROR BODY OFFSET AXIS LO 34
8
48 PITCH ERROR BODY OFFSET & BODY AXIS HI 36
10 PITCH ERROR BODY OFFSET & BODY AXIS LO 35
11 70
SEE SH 1
05A5P3-62
153 IMU 28V 800CPS 1% ✱0° HI 243
120 IMU 28V 800CPS 1% ✱0° LO 242
227 LOCK CDU RELAY CONTROL 103
228 FINE ALIGN RELAY CONTROL 104
190 IMU MODE RELAY COMMON 136
206 0V DC SPACE CRAFT
244 ERROR DETECT LIGHT (MAIN PANEL) 28
243 IMU TEMP LIGHT (MAIN PANEL) 63
171 GIMBAL LOCK LIGHT (MAIN PANEL) 96
107 IMU SIN AOG 1X LO (S2) 166
139 IMU SIN AOG 1X HI (S4) 167
141 IMU COS AOG 1X HI (S3) 199
142 IMU COS AOG 1X LO (S1) 200
144 IMU SIN AMG 1X LO (S2) 168
111 IMU SIN AMG 1X HI (S4) 169
113 IMU COS AMG 1X HI (S3) 201
114 IMU COS AMG 1X LO (S1) 202
116 IMU SIN AIG 1X LO (S2) 170
148 IMU SIN AIG 1X HI (S4) 171
150 IMU COS AIG 1X LO (S1) 203
151 IMU COS AIG 1X HI (S3) 204
38 S/C WARNING LIGHT 101
37 S/C WARNING LIGHT RET 134
72 S/C CAUTION LIGHT 102
71 S/C CAUTION LIGHT REF
193 MINIMUM IMPULSE +ROLL 131
192 MINIMUM IMPULSE -ROLL 164
230 MINIMUM IMPULSE ROLL 165
233 MINIMUM IMPULSE +PITCH 163
232 MINIMUM IMPULSE -PITCH 197
195 MINIMUM IMPULSE PITCH 198
198 MINIMUM IMPULSE +YAW 97
197 MINIMUM IMPULSE -YAW 98
235 MINIMUM IMPULSE YAW 130
237 MINIMUM IMPULSE TOGGLE SWITCH 99
238 MINIMUM IMPULSE ENABLE 100
200 MINIMUM IMPULSE ENABLE RET 32
172 S/C LAMP TEST 29
P
Q
T

MIT INSTRUMENTATION LAB

MANNED SPACECRAFT CENTER
HOUSTON, TEXAS

LIST OF MATERIALS

WIRING DIAGRAM
AGC TO PSA & G/N TO SPACECRAFT

J

1005799

SHEET 2 OF 2

MASTER